https://truckmanualshub.com/

Model 7833
High Speed Landoll (HSL)
Operator's Manual

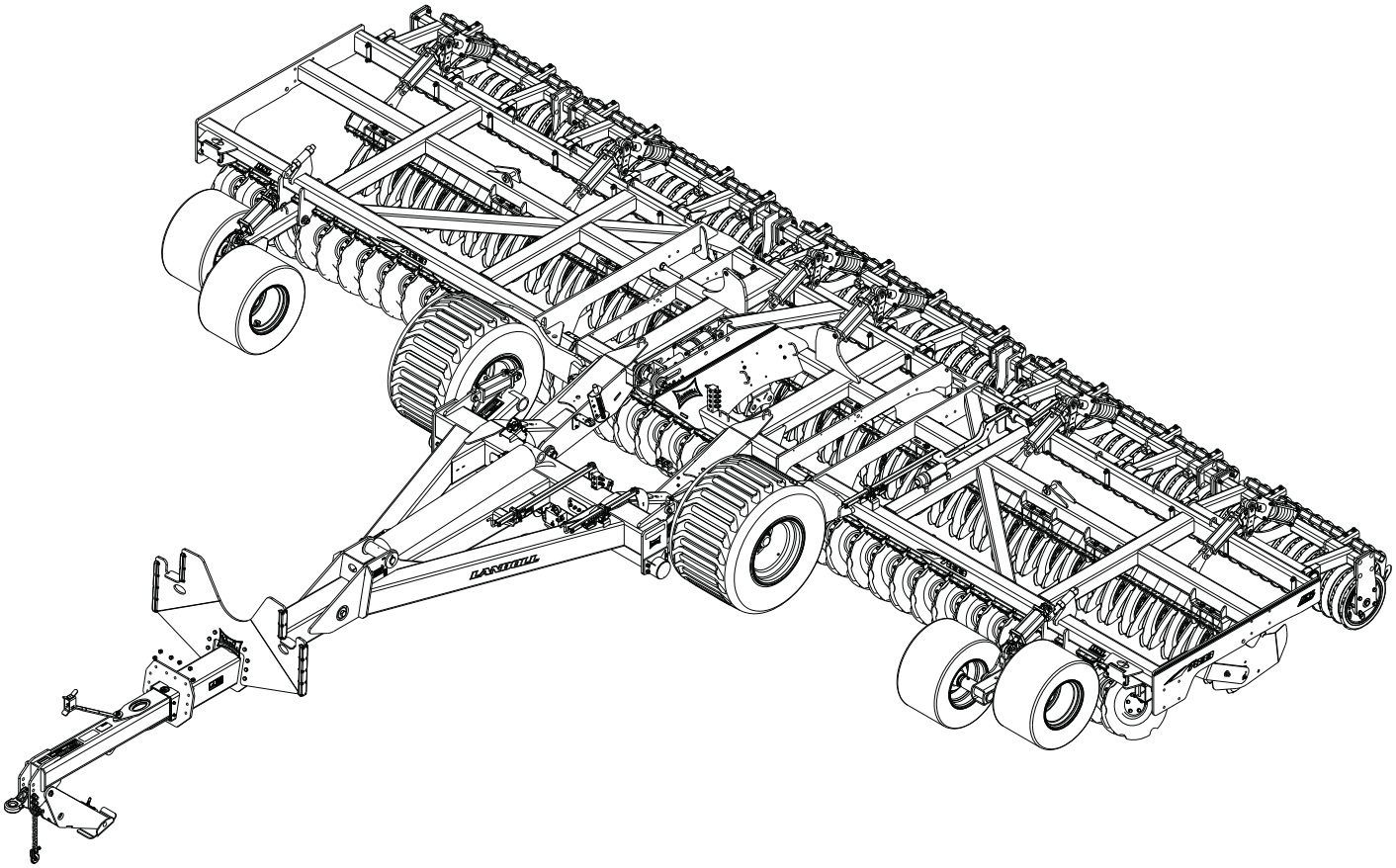

LANDOLL CORPORATION
1900 North Street
Marysville, Kansas 66508
(785) 562-5381
800-428-5655 ~ WWW.LANDOLL.COM

F-894-0919 **09/2019 - Present**

https://truckmanualshub.com/

Manuals for “*enter equipment name here*”

Manual Number	Manual Name
F-894	Operator’s Manual
F-895	Parts Manual

https://truckmanualshub.com/

Table of Contents

1 Introduction and Safety Information

Understanding Safety Statements 1-2

Transporting Safety 1-2

Attaching, Detaching and Storage 1-3

Attaching the HSL to the Tractor 1-3

Maintenance Safety 1-3

Prepare for Emergencies 1-3

High Pressure Fluid Safety 1-4

Protective Equipment 1-4

Hydraulic Tongue Jack 1-4

Chemical Safety 1-4

Tire Safety 1-4

Safety Chain 1-4

2 Standard Specifications

Model Specifications 2-1

7833 High Speed Landoll (HSL) 2-1

Tire Inflation Recommended 2-1

Recommended Torque Specification For Lug Bolts and Nuts 2-1

General Torque Specifications (rev. 4/97) 2-2

Hydraulic Fitting Torque Specifications 2-3

Parker Brand Fittings 2-3

Gates Brand Fittings 2-3

Aeroquip Brand Fittings 2-3

3 Assembly Instructions

Unloading the HSL and Final Assembly 3-1

Unfolding the HSL 3-2

Final Assembly 3-3

4 Operation and Maintenance

Unfolding the 7833 HSL 4-3

Folding the 7833 HSL 4-3

Synchronizing and Leveling Front Gauge Points 4-3

Synchronizing Rear Gauge/Finishing Feature Cylinders 4-5

Front to Rear Adjustment for Conventionally Operated HSL 4-5

Front to Rear Adjustment for the Tilt Controlled HSL 4-6

Lateral Adjustment of Rear Gang Assemblies 4-6

https://truckmanualshub.com/

Adjusting the Blade Leveler 4-8
Operating Speed 4-9
Wing Hydraulic Down Pressure 4-9
Operating Depths and Adjustments for Conventionally Operated HSL 4-9
Operating Depths and Adjustments for the Tilt Control Operated HSL 4-10
Operating the HSL with GPS 4-11
Turning On the Headland 4-12
Draft Compensator System for the Conventionally Operated HSL 4-12
Replacing the Disc Hub Bearing 4-13
Lubrication Maintenance 4-14
Rubber Roller Scraper Adjustment 4-15

5 Troubleshooting Guide

https://truckmanualshub.com/

Introduction and Safety Information

The Landoll Model 7833 High Speed Landoll (HSL) is a quality product designed to give years of trouble free performance. By following each section of this manual, your system will perform as designed for you and your operation.

Chapter 1 Gives basic instructions on the use of this manual and understanding the safety statements.

Chapter 2 Gives product specifications for the equipment. These specifications supply lengths and measures for your equipment. A Standard Bolt Torque Table is provided to give guidelines for bolt torques to be used when servicing this product.

Chapter 3 Contains assembly instructions for your 7833 High Speed Landoll (HSL). When these procedures are correctly followed, your equipment should provide you years of trouble-free operation and service.

Chapter 4 Instructs how to operate your equipment before using it, and describes adjustments needed. Gives practical advice for the care and maintenance of your Landoll equipment. Drawings in this section locate adjustment points on the equipment.

IF YOU HAVE ANY QUESTIONS CONTACT:
LANDOLL CORPORATION
1900 NORTH STREET
MARYSVILLE, KANSAS 66508

PHONE # (785) 562-5381 or (800) 428-5655
OR
FAX # (888) 527-3909

Chapter 5 Is a troubleshooting guide to aid in diagnosing and solving problems with the High Speed Landoll ()

Parts Manual Is a separate manual showing the various assemblies, sub-assemblies, and systems. Refer to that manual when ordering Landoll replacement parts. Order parts from your Landoll dealer.

Warranty The Warranty Registration form is included with the product documents. Fill it out and mail it within 15 days of purchase.
NOTE: IMPROPER ASSEMBLY, MODIFICATION, OR MAINTENANCE OF YOUR LANDOLL MACHINE CAN VOID YOUR WARRANTY.

Comments Address comments or questions regarding this publication to:

LANDOLL CORPORATION
ATTENTION: PUBLICATIONS - DEPT. 55
1900 NORTH STREET
MARYSVILLE, KANSAS 66508

https://truckmanualshub.com/

Understanding Safety Statements

You will find various types of safety information on the following pages and on the machine signs (decals) attached to the machine. This section explains their meaning.

The Safety Alert Symbol means **ATTENTION! YOUR SAFETY IS INVOLVED!**

NOTE

Means that failure to follow these instructions could cause damage to the equipment or cause it to operate improperly.

IMPORTANT

Special notice - read and thoroughly understand.

CAUTION

Caution means serious equipment or other property damage can occur if instructions on this label are not properly followed.

WARNING

Warning means serious injury or death can occur if safety measures or instructions on this label are not properly followed.

DANGER

Danger means a life-threatening situation exists. Death can occur if safety measures or instructions on this label are not properly followed.

NOTE

Make sure you read and understand the information contained in this manual and on the machine signs (decals) before you attempt to operate or maintain this machine.

The safety statements contained in this manual relate to the operation of the Model 7833 High Speed Landoll (HSL) Decal Safety.

- Examine safety decals and be sure you have the correct safety decals for the implement.
- Keep these signs clean so they can be observed readily. It is important to keep these decals cleaned more frequently than the implement. Wash with soap and water or a cleaning solution as required.
- Replace decals that become damaged or lost. Also, be sure that any new implement components installed during repair include decals which are assigned to them by the manufacturer.
- When applying decals to the implement, be sure to clean the surface to remove any dirt or residue. Where possible, sign placement should protect the sign from abrasion, damage, or obstruction from mud, dirt, oil etc.

DANGER

- **Do not allow anyone to ride on the tractor or implement. Riders could be struck by foreign objects or thrown from the implement.**
- **Never allow children to operate equipment.**
- **Keep bystanders away from implement during operation.**

Transporting Safety

IMPORTANT

It is the responsibility of the owner/operator to comply with all state and local laws.

When transporting the implement on a road or highway, use adequate warning symbols, reflectors, lights and slow moving vehicle sign as required. Slow moving tractors and towed implements can create a hazard when driven on public roads. They are difficult to see, especially at night.

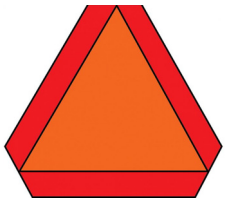

- Do not tow an implement that, when fully loaded, weighs more than 1.5 times the weight of the towing vehicle.
- Carry reflectors or flags to mark the tractor and implement in case of breakdown on the road.
- Do not transport at speeds over 20 MPH under good conditions. Never travel at a speed which does not allow adequate control of steering and stopping.
- Use a tractor heavier than the implement.

https://truckmanualshub.com/

- Avoid sudden stops or turns because the weight of the implement may cause the operator to lose control of the tractor.
- Use caution when towing behind articulated steering tractors; fast or sharp turns may cause the implement to shift sideways.
- Keep clear of overhead power lines and other obstructions when transporting. Know the transport height and width of your implement.

Attaching, Detaching and Storage

DANGER

- **Do not stand between the tractor and implement when attaching or detaching implement unless both are not moving.**
- **Chock the tires of the implement so it will not roll when unhitched from the tractor.**
- **Store in an area where children do not play.**

IMPORTANT

Never store the HSL with it's weight on the disc blades.

Attaching the HSL to the Tractor

1. Line the tractor up with the and back up close enough to attach the hydraulic couplers, but not too close to interfere with the hitch.
2. Connect the hydraulic jack couplers (the 1/4" hose lines) to the tractor so the hitch height can be adjusted.
   - This circuit will be the lowest priority circuit of all.
3. With the hitch height adjusted, continue to back the tractor up and drop the hitch pin in.
   - For "wheeled" tractors, it is standard for the hitch pin to be 1 inch behind the rear extremity of the rear tractor tires.
   - "Track" tractors can vary from this standard and it may be desirable to have your hitch extended.

IMPORTANT

Please consult your dealer if the hitch point is forward of the rear extremity of your tracks.

4. Finish connecting the hydraulic couplers:
   - Highest priority, and most accessible control, "Red" circuit, machine tilt circuit.
   - Second priority, "Blue" circuit, front gauge wheels and depth control.
   - Third priority, "Black" circuit, rear reel control.
   - Fourth priority, "Yellow" circuit, wing fold circuit.

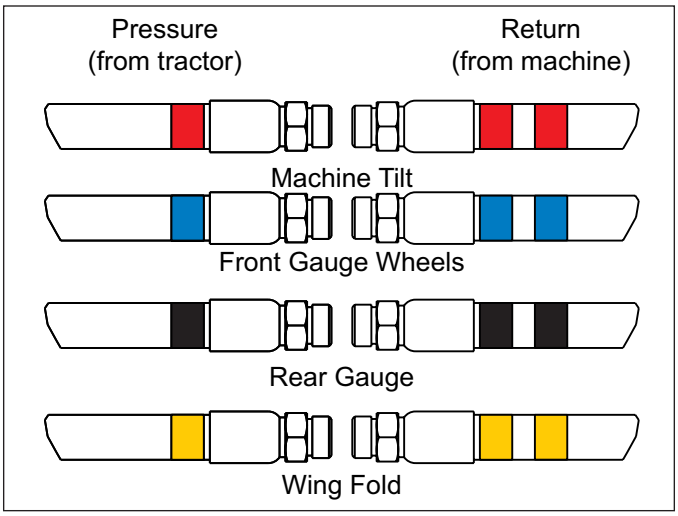

Figure 1-1: Hose Identification

5. Connect the safety warning lights.
6. Raise the hydraulic jack.
7. Unhook the HSL by reversing the procedure called out above.

Maintenance Safety

DANGER

Do not make adjustments or lubricate implement while it is in motion.

- Understand the procedure before doing the work.
- Use proper tools and equipment.
- Make sure all moving parts have stopped.
- Block the implement so it will not roll when working on or under it to prevent injury.

Prepare for Emergencies

- Keep a first aid kit and fire extinguisher handy.
- Keep emergency numbers for doctor, ambulance, hospital, and fire department near the phone.

https://truckmanualshub.com/

High Pressure Fluid Safety

DANGER

- **Hydraulic oil can be under very high pressure.**
- **A pinhole leak is not easily seen and if it pierces the skin, it can cause injury and possible death.**
- **Any fluid injected into the skin under high pressure should be considered a medical emergency despite a normal appearance of the skin.**
- **Medical attention should be administered immediately.**

CAUTION

- **Relieve all pressure from the hydraulic system before attempting to service it.**
- **Make sure all hydraulic lines are tight before starting the system.**

Protective Equipment

- Wear protective clothing and equipment.
- Wear clothing and equipment appropriate for the job. Avoid loose fitting clothing.

- Prolonged exposure to loud noise can cause hearing impairment or hearing loss; wear suitable hearing protection, such as earmuffs or earplugs.

Hydraulic Tongue Jack

CAUTION

Operate the jack slowly.

Always make certain the jack leg is completely retracted after the has been hooked to the tractor and before moving the.

Chemical Safety

WARNING

- **Agricultural chemicals can be dangerous. Improper use can seriously injure persons, animals, plants, soil and property.**
- **Read chemical manufacturer's instructions and store or dispose of unused chemicals as specified.**
- **Handle chemicals with care and avoid inhaling smoke from any type of chemical fire.**
- **Store or dispose of unused chemicals as specified by the chemical manufacturer.**

Tire Safety

- Tire changing can be dangerous and should be performed by trained personnel using correct tools and equipment.
- When inflating tires, use a clip-on chuck and extension hose long enough to allow you to stand to one side, not in front of or over the tire assembly. Use a safety cage if available.
- When removing and installing wheels use wheel-handling equipment adequate for the weight involved.

Safety Chain

- Use a chain with a strength rating equal to or greater than the gross weight of towed machinery, in accordance with ASAE S338.2 specifications.
- If two or more implements are pulled in tandem, a larger chain may be required. Chain capacity must be greater then the TOTAL weight of all towed implements.
  - A second chain should be used between each implement.
- Attach the chain to the tractor drawbar support or specified anchor location. Allow only enough slack in the chain to permit turning. The distance from hitch pin to attachment point or intermediate support point should not exceed 9 inches.
- Replace the chain if any links or end fittings are broken, stretched or damaged.

Do not use a safety chain for towing.

https://truckmanualshub.com/

Standard Specifications

Model Specifications

7833 High Speed Landoll (HSL)

Model Number	Working Width	Transport Width	Number of Blades 24” Front & Rear	Hitch Weight (Transport)	Estimated Weight
7833-25	25’	13’ 2”	30 Front - 30 Rear	4,900 LBS.	21,070 LBS.
7833-30	30’	13’ 2”	36 Front - 36 Rear	5,400 LBS.	25,000 LBS.
7833-35	35’	13’ 10”	42 Front - 42 Rear	7,860 LBS.	28,875 LBS.
7833-40	40’	13’ 10”	48 Front - 48 Rear	8,270 LBS.	31,560 LBS.

Tire Inflation Recommended

Tire Size	Tire Manufacturer	Ply/Load Rating	Inflation Pressure (Psi)	Model
710/40R22.5	Goodyear	Load Rating 168/156 - 12,300LBS.	46 psi max. 40 psi recommended	7833-25, 7833-30
32/1550X16.5	Galaxy	Load Range G/14Ply	115 psi max. 40 psi recommended	7833-25, 7833-30 Wings
800/40R22.5	Goodyear	Load Rating 168/156 - 15,700LBS.	45 psi max. 40 psi recommended	7833-35, 7833-40
500/16.5	Goodyear	Load Range G/14Ply	73 psi max. 45 psi recommended	7833-35, 7833-40 Wings

Recommended Torque Specification For Lug Bolts and Nuts

Bolt Size	Torque (FT. LBS.)
M22 Stud w/ 2 piece flange nut	50 - 90 FT. LBS/ Sequence 1 450-500 FT. LBS/ Sequence 2

https://truckmanualshub.com/

General Torque Specifications (rev. 4/97)

TORQUE SPECIFIED IN FOOT POUNDS - This chart provides tightening torques for general purpose applications when special torques are not specified on process or drawing. Assembly torques apply to plated nuts and cap-screws assembled without supplemental lubrication (as received condition). They do not apply if special graphite moly-disulfide or other extreme pressure lubricants are used. When fasteners are dry (solvent cleaned) add 33% to as received condition torque. Bolt head identification marks indicate grade and may vary from manufacturer to manufacturer. Thick nuts must be used on grade 8 caps-crews. Use value in [parentheses] if using prevailing torque nuts.

UNC SIZE	SAE Grade 2	SAE Grade 5	SAE Grade 8	UNF SIZE	SAE Grade 2	SAE Grade 5	SAE Grade 8
1/4-20	4 [5]	6 [7]	9 [11]	1/4-28	5 [6]	7 [9]	10 [12]
5/16-18	8 [10]	13 [13]	18 [22]	5/16-24	9 [11]	14 [17]	20 [25]
3/8-16	15 [19]	23 [29]	35 [42]	3/8-24	17 [21]	25 [31]	35 [44]
7/16-14	24 [30]	35 [43]	55 [62]	7/16-20	27 [34]	40 [50]	60 [75]
1/2-13	35 [43]	55 [62]	80 [100]	1/2-20	40 [50]	65 [81]	90 [112]
9/16-12	55 [62]	80 [100]	110 [137]	9/16-18	60 [75]	90 [112]	130 [162]
5/8-11	75 [94]	110 [137]	170 [212]	5/8-18	85 [106]	130 [162]	180 [225]
3/4/10	130 [162]	200 [250]	280 [350]	3/4-16	150 [188]	220 [275]	320 [400]
7/8-9	125 [156]	320 [400]	460 [575]	7/8-14	140 [175]	360 [450]	500 [625]
1-8	190 [237]	408 [506]	680 [850]	1-14	210 [263]	540 [675]	760 [950]
1-1/8-7	270 [337]	600 [750]	960 [1200]	1-1/8-12	300 [375]	660 [825]	1080 [1350]
1-1/4-7	380 [475]	840 [1050	1426 [1782]	1-1/4-12	420 [525]	920 [1150]	1500 [1875]
1-3/8-6	490 [612]	1010 [1375]	1780 [2225]	1-3/8-12	560 [700]	1260 [1575]	2010 [2512]
1-1/2-6	650 [812]	1460 [1825]	2360 [2950]	1-1/2-12	730 [912]	1640 [2050]	2660 [3325]
1-3/4-5	736 [920]	1651 [2063]	2678 [3347]	1-3/4-12	920 [1150]	2063 [2579]	3347 [4183]

METRIC:
Coarse thread metric class 10.9 fasteners and class 10.0 nuts and through hardened flat washers, phosphate coated, Rockwell “C” 38-45. Use value in [parentheses] if using prevailing torque nuts.

Nominal thread diameter (mm)	Newton Meters (Standard Torque)	Foot Pounds (Standard Torque)	Nominal Thread Diameter (mm)	Newton Meters (Standard Torque)	Foot Pounds (Standard Torque
6	10 [14]	7 [10]	20	385 [450]	290 [335]
7	16 [22]	12 [16]	24	670 [775]	500 [625]
8	23 [32]	17 [24]	27	980 [1105]	730 [825]
10	46 [60]	34 [47]	30	1330 [1470]	990 [1090]
12	80 [125]	60 [75]	33	1790 [1950]	1340 [1450]
14	125 [155]	90 [115]	36	2325 [2515]	1730 [1870]
16	200 [240]	150 [180]	39	3010 [3210]	2240 [2380]
18	275 [330]	205 [245]			

https://truckmanualshub.com/

Hydraulic Fitting Torque Specifications

TORQUE IS SPECIFIED IN FOOT POUNDS- 37° JIC, ORS, & ORB (REV. 10/97)
This chart provides tightening torques for hydraulic fitting applications when special torques are not specified on process or drawing. ASSEMBLY TORQUES APPLY TO PLATED CARBON STEEL AND STAINLESS STEEL FITTINGS ASSEMBLED WITHOUT SUPPLEMENTAL LUBRICATION (AS RECEIVED CONDITION. They do not apply if special graphite moly-disulfide or other extreme pressure lubricants are used. Brass fittings and adapters - 65% of the torque value for steel, stainless steel, aluminum, and monel - threads are to be lubricated.

Parker Brand Fittings

Dash Size	37 Degree JIC	O-Ring (ORS)	O-Ring Boss (ORB)
-4	11-13	15-17	13-15
-5	14-16	----------	21-23
-6	20-22	34-36	25-29
-8	43-47	58-62	40-44
-10	55-65	100-110	58-62
-12	80-90	134-146	75-85
-16	115-125	202-218	109-121
-20	160-180	248-272	213-237
-24	185-215	303-327	238-262
-32	250-290	----------	310-340

Gates Brand Fittings

Dash Size	37 Degree JIC	O-Ring (ORS)	O-Ring Boss (ORB)
-4	10-11	10-12	14-16
-5	13-15	----------	----------
-6	17-19	18-20	24-26
-8	34-38	32-40	37-44
-10	50-56	46-56	50-60
-12	70-78	65-80	75-83
-14	----------	65-80	----------
-16	94-104	92-105	111-125
-20	124-138	125-140	133-152
-24	156-173	150-180	156-184
-32	219-243	----------	----------

Aeroquip Brand Fittings

Dash Size	37 Degree JIC	O-Ring (ORS)	O-Ring Boss (ORB)
-4	11-12	10-12	14-16
-5	15-16	----------	16-20
-6	18-20	18-20	24-26
-8	38-42	32-35	50-60
-10	57-62	46-50	75-80
-12	79-87	65-70	125-135
-14	----------	----------	160-180
-16	108-113	92-100	200-220
-20	127-133	125-140	210-280
-24	158-167	150-165	270-360
-32	245-258	----------	----------

https://truckmanualshub.com/

Table provided for general use.

NOTES:

https://truckmanualshub.com/

Assembly Instructions

It is very important that your new 7833 High Speed Landoll (HSL) be properly assembled, adjusted and lubricated before use. Illustrations in this section show proper assembly procedures. Remove paint from grease fittings. Replace any grease fittings that are damaged or missing. Be sure to return screws, clips, etc., to their original locations.

To ensure alignment of assemblies, **leave the nuts loose until completion** of final assembly. Use lock washers or flat washers as specified. Spread all cotter pins.

After completion of final assembly, tighten all nuts evenly to prevent misalignment, distortion or binding. Tighten all screws and nuts to the recommended torques shown in ***"General Torque Specifications (rev. 4/97)" on page 2-2***.

DANGER

Disc blades are extremely sharp. Exercise extreme care when working on or near disc blades. Do not allow discs to roll over or fall onto any bodily part. Do not allow wrenches to slip when working near disc blades. Never push wrenches toward disc blades. Do not climb over machine above disc blades. Failure to stay clear of disc blade edges can cause serious personal injury or death.

WARNING

Do not attempt to lift heavy parts (such as the frame, disc gangs, rockshaft, and pull hitch) manually. Use a hoist or a fork lift to move these parts into position.

DANGER

To prevent accidental lowering:

- **All hydraulically elevated equipment must be locked out using the cylinder lockouts.**
- **Lower equipment to the ground while servicing or when it is idle.**

Failure to take measures to prevent accidental lowering may result in serious personal injury or death.

CAUTION

Be sure to bleed the hydraulic system of all air in lines after installation. Failure to bleed the system of all air can result in improper machine operation.

Unloading the HSL and Final Assembly

In most cases the 7833 has come to you with the main wheels and tires shipped loose due to shipping width, restrictions.

1. Install the main wheels and tires to the hitch rockshaft hubs. ***See Figure 3-2***
2. Due to the being a towed implement the tire tread is typically installed opposite of that of a tread where power would be applied through it.

NOTE

There is a protruding step on the hub pilot. The wheel center plate must fit over the hub pilot and then bottom out against the hub flange. Failure to get the wheel properly positioned against the hub face will cause the wheel to loosen and cause damage to the hub and/or wheel.

3. With the tire and wheel assembly correctly positioned against the hub, begin to tighten the flange nuts sequentially as shown below.

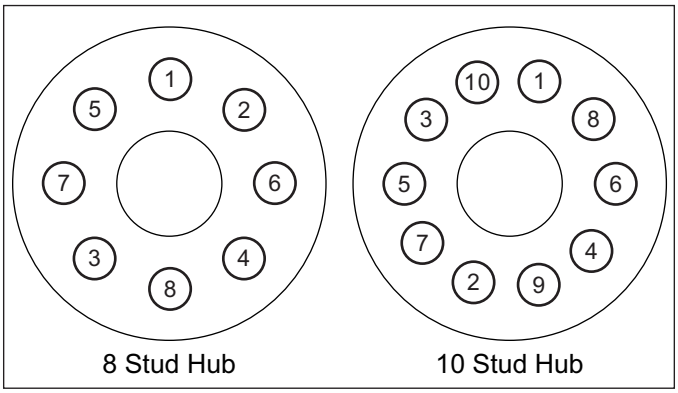

Figure 3-1: Lug Nut Tightening Sequence

4. Re-check the positioning of the wheel relative to the hub and proceed by tightening the lug nut assemblies sequentially to 450 to 500 foot pounds.

https://truckmanualshub.com/

DECAL - 3-573-010210

TORQUE SPECIFICATIONS FOR PILOT MOUNTED DISC WHEELS

DANGER

Read and Understand the installation, service and safety instructions manual before installing or servicing the hub. Failure to do so may result in personal injury or death, and may result in a compromise of your vehicle's safety through loss or failure of a wheel or compromise of the braking system.

Use a torque wrench to assure proper torque, failure to do so will compromise your products service, life and safety. Under torque and over torque can cause thread and/or nut damage, and may result in the loss of a wheel.

Recheck torque after the first 50 to 100 miles of service. Parts may seat naturally, causing the torque to drop. Proper torque is essential for the service, life and safety of this product.

8 AND 10 STUD HUBS
Applies to M22 X 1.5 studs/two piece flange nut.

All threads are right hand metric.

First Tighten Flange Nuts to 50ft. lb. Using sequence shown.

Check Disc-Wheel for proper positioning on pads and proper seating against flange.

Then Tighten Flange Nuts to recommended torque using sequence shown.

RECOMMENDED TORQUE: 450-500FT. LBS.

3-573-010210

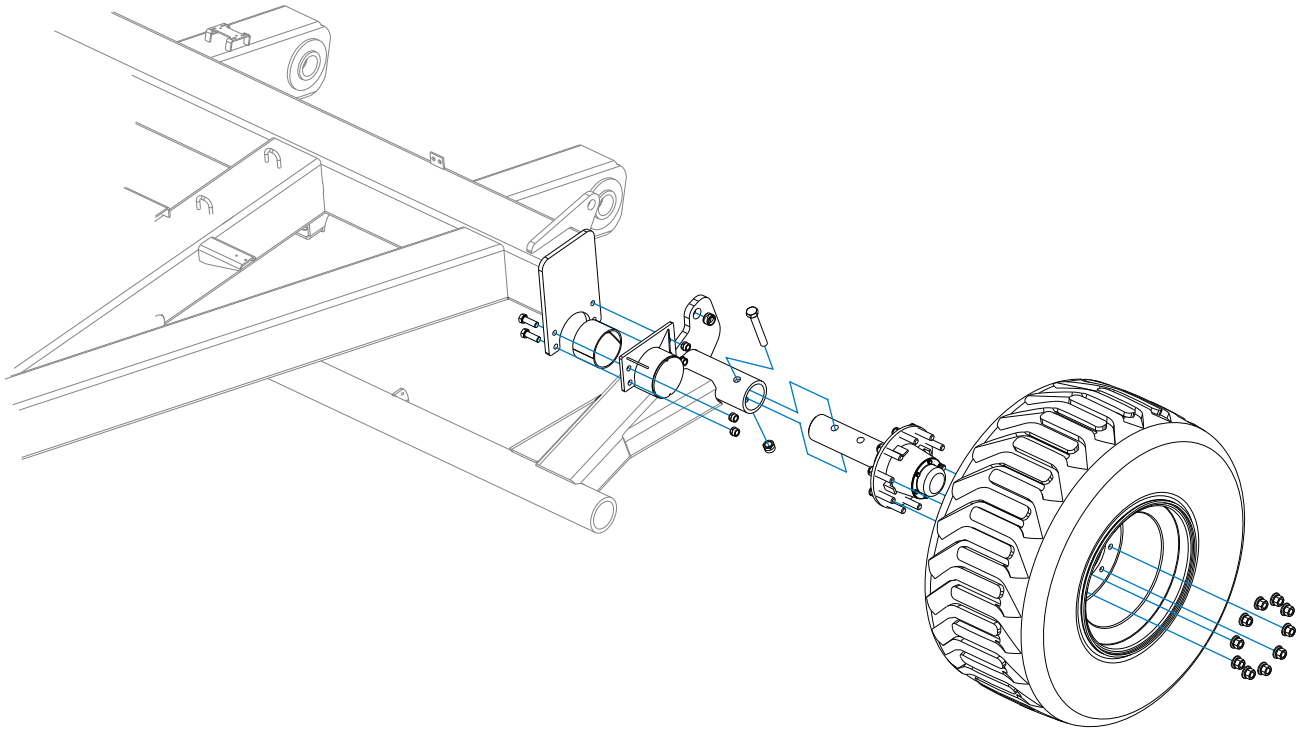

Figure 3-2: Tire and Wheel Installation

Unfolding the HSL

WARNING

Always unfold the 7833 on a level surface and away from overhead power lines. Keep bystanders and pets clear of the area.

1. Tip the top of the center section reward far enough to lift the wing frames several inches above the wing rest saddles located on the hitch. The center section is tilted backward by extending the large cylinder located over the hitch (circuit with red hose wrap.)

CAUTION

Do not lift the wing assemblies more than a few inches above the wing rest saddles when the wing assemblies are folded forward.

2. With the wing frames just above the wing rest saddles, open the wing assemblies up far enough so that when lowered, they will clear the wing frame rests located on the hitch. The wing assemblies are opened (un-folded) by extending the wing fold cylinders (circuit with yellow hose wrap.)

https://truckmanualshub.com/

3. Once **both** of the wing assemblies are clear of the wing rests laterally, lower the wing assemblies so that the wing gauge wheel tires contact the ground or are in the proximity of the ground. This can be accomplished by tilting the center section, top forward (circuit with red hose wrap.)
4. With the wing gauge wheels in the proximity of the ground, continue opening the wing assemblies by extending the wing fold cylinders until the wing assemblies are aligned with the center section assembly (circuit with yellow hose wrap.)
5. When the wing assemblies are aligned with the center section, extend the large tilt cylinder located above the hitch, until the center and wing assemblies are at rest on the ground.

Final Assembly

The 7833 HSL has been almost completely assembled at the factory. The one exception is that the rear gauge assemblies will most likely need to be attached to the HSL in the field.

NOTE

Consult the Parts Manual section on "Rear Gauges" to avoid assembling them incorrectly. Some of the rear gauge rockshafts are the same apparent width, but may be different in other ways relative to the final assembly.

1. Once the rear gauge rock shaves are in place, secure the rock shaft bearings with the 3/4-10 x 12 hex screws provided. Torque the nuts to approximately two hundred foot pounds (200 ft/lb) (***See Figure 3-3***.)
2. Once the rear gauge rock shafts are in place secure them to the rear gauge cylinders with the pins provided.
3. The rock shaft immediately to the left of center of the machine has a special step pin that connects the rock shaft spring assembly to the cylinder at that same location. Please consult the parts manual for the correct assembly sequence. This is true for all product built after 4-1-2018.

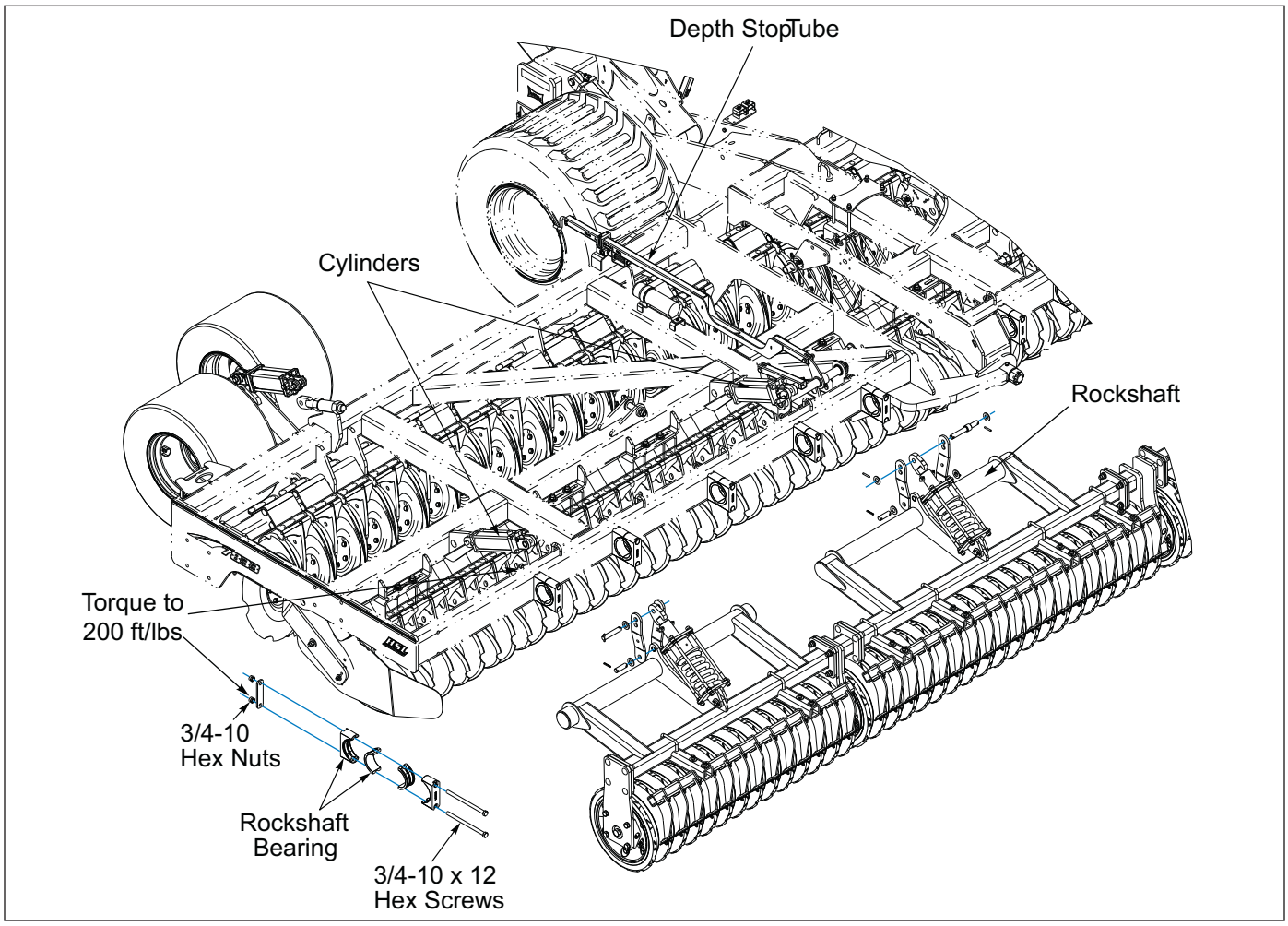

Figure 3-3: Rear Gauge Assembly

https://truckmanualshub.com/

Table provided for general use.

NOTES:

https://truckmanualshub.com/

Operation and Maintenance

DANGER

- **Never allow anyone to ride on the 7833 High Speed Landoll (HSL) at any time.**
- **Allowing a person to ride on the machine can inflict serious personal injury or death to that person.**

DANGER

- **Disc blades are extremely sharp.**
- **Exercise extreme care when working on or near disc blades.**
- **Do not allow discs to roll over or fall onto any bodily part.**
- **Do not allow wrenches to slip when working near disc blades.**
- **Never push wrenches toward disc blades.**
- **Do not climb over machine above disc blades.**
- **Failure to stay clear of disc blade edges can cause serious personal injury or death.**

WARNING

- **All hydraulically elevated equipment must have cylinder lockouts installed or be lowered to the ground, when servicing or when equipment is idle.**
- **Failure to take preventive measures against accidental lowering can result in serious personal injury.**

DANGER

- **Always lock the tractor drawbar in the center position when transporting the unit.**
- **Failure to do so can result in serious injury or death and cause damage to the equipment.**

DANGER

- **When transporting the unit, place cylinder lockouts in the transport lock position after fully extending the cylinders.**
- **Insert the lockout pins to secure the cylinder lockouts.**
- **Failure to lockout the cylinders can cause the unit to settle during transport, which can result in serious injury or death and cause damage to the equipment.**

CAUTION

- **When transporting farm implements on public roads, it is the responsibility of the operator to abide by state and local laws concerning wide loads, speed, safety emblems and safety lighting equipment.**
- **Drive at safe speeds. Particularly when rounding corners, crossing rough ground or driving on hillsides, to prevent tipping the tractor.**

Product Description and Operation

The High Speed Landoll (HSL) is a non-tradition tillage tool. It is extremely versatile and can be used in lieu of traditional primary tillage tools or may be used in final seeding and planting preparations.

- The HSL can be employed at depths as shallow as 1-1/2 to 2 inches or as deep as 4-1/2. It is most efficiently used from 2 inches to 3-1/2 inches deep. It can be adjusted to eradicate virtually all weeds.
- The HSL is capable of incorporating high amounts of plant residue. It leaves a firm, reconsolidated soil profile for conservation of not only the soil itself, but the moisture in the soil profile.

The HSL is comprised of two rows of disc blades; each individually mounted on a spring torsion type mount. The row units rotate per field conditions and in response to the work being done and upon encountering obstacles in the soil.

https://truckmanualshub.com/

- As the individual units rotates, the resistance to rotation increases as the degree of rotation increases.
- The front row fractures soil to the left side of each of the front blades, while the rear row fractures soil to the right side of each of the rear blades.
- As a result, each blade, in each row is moving soil in the same direction as the others in that row. Because of this, the HSL creates and maintains a level field.

The HSL has two depth gauges. One is directly in front of the HSL machine, and one is directly behind it. The main wheels and tires on the hitch, and the wing gauge wheels and tires on the wing frames provide the forward most depth gauge. The rear depth gauge is provided by the reel/roller system the HSL was purchased with. The rear gauge is available in three major types of different offerings. ***See Figure 4-1***

1. It is available as a twenty-one inch (21”) chevron reel.
2. It is available in one of two different styles as a twenty-three and a half inch (23-1/2”) four leaf and fixed hemisphere spring wheel reel.
3. It is available as a twenty-one inch (21”) corrugated rubber roller.

The depth of both the front and rear depth gauges is controlled independently of each other. The front and rear gauge depth controls are located on the hitch and the left-hand wing frame respectively. Each utilizes a master and slave hydraulic cylinder system.

For machines modified with tilt control and then built after 03/01/2018, the depth control is realized exclusively off of the front main wheels and tires on the hitch in combination with the wing gauge wheels and tires on the wing frames. Since the rear reel is no longer required for ultimate depth control the down pressure applied to it can be adjusted to fit the conditions. Machines modified for tilt control can be easily and quickly converted back into conventional machines with depth reads front and rear.

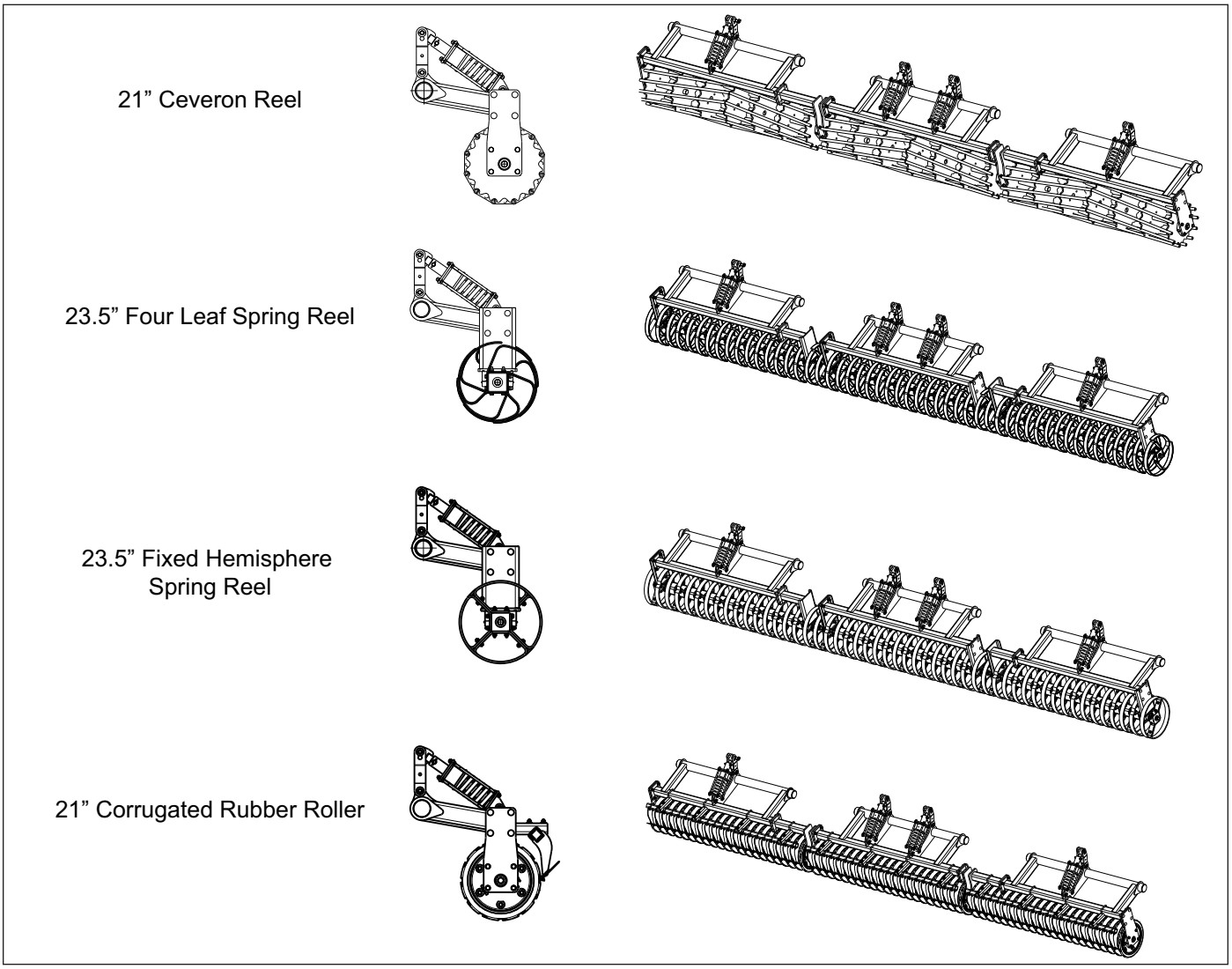

Figure 4-1: Rear Gauge and Roller Assemblies

https://truckmanualshub.com/

Unfolding the 7833 HSL

WARNING

Always unfold the 7833 on a level surface and away from overhead power lines. Keep bystanders and pets clear of the area.

1. Tip the top of the center section rearward far enough to lift the wing frames several inches above the wing rest saddles located on the hitch. The center section is tilted backward by extending the large cylinder located over the hitch (circuit with red hose wrap.)

CAUTION

Do not lift the wing assemblies more than a few inches above the wing rest saddles when the wing assemblies are folded forward.

2. With the wing frames just above the wing rest saddles open the wing assemblies up far enough so that when lowered, they will clear the wing frame rests located on the hitch. The wing assemblies are opened (unfolded) by extending the wing fold cylinders (circuit with yellow hose wrap.)
3. Once **both** of the wing assemblies are clear of the wing rests laterally, lower the wing assemblies so that the wing gauge wheel tires contact the ground or are in the proximity of the ground. This can be accomplished by tilting the center section, top forward (circuit with red hose wrap.)
4. With the wing gauge wheels in the proximity of the ground continue opening the wing assemblies by extending the wing fold cylinders until the wing assemblies are aligned with the center section assembly (circuit with yellow hose wrap.)
5. When the wing assemblies are **aligned** with the center section extend the large tilt cylinder located above the hitch. The large tilt cylinder needs to be extended completely until the cylinder rod end is in the middle of the mast slot for field operation.

IMPORTANT

Not extending the tilt cylinder completely will inhibit the HSL from being able to rotate (front to rear) in the field and may in certain conditions hold the rear of the machine out of the ground. Extending the tilt cylinder completely also insures that the draft compensator system can work correctly.

Machines equipped with tilt control will either have lock out hardware installed in the mast slot or they will have a urethane draft cushion. The lock out hardware creates a rigid hitch while the urethane cushion creates a semi rigid hitch. One or the other, is required for the tilt controlled system, since the tracking is controlled by the tilt cylinder.

Folding the 7833 HSL

WARNING

Always fold the 7833 on a level surface and away from overhead power lines. Keep bystanders and pets clear of the area.

1. Tilt the center section and wing assemblies by raising the rear of the HSL upward until it is completely upright. The center section is tilted upright by retracting the large tilt cylinder located over the hitch (circuit with red hose wrap.)
2. Fold the wing assemblies forward by retracting the wing fold cylinders. Keep the wing gauge wheels in the proximity of the ground for safety. Fold the wing assemblies forward until they are approximately one foot away from the wing rests (circuit with yellow hose wrap.)
3. Tip the center section top rearward far enough to lift the wing frames several inches above the wing rest saddles located on the hitch. The center section is tilted backward by extending the large cylinder located over the hitch (circuit with red hose wrap.)
4. With the wing assemblies just above the wing rest saddles, further retract the wing fold cylinders to position the wing assemblies over the wing rest saddles (circuit with yellow hose wrap.
5. With the wing assemblies over the wing rest saddles, lower the wing assemblies into the wing rest saddles by further retracting the large tilt cylinder over the hitch. Retract the large tilt cylinder until the wings are at rest in the wing rest saddles (circuit with red hose wrap.)

Synchronizing and Leveling Front Gauge Points

The front gauge is comprised of the main wheels and tires on the hitch frame and the gauge wheels and tires on the wing frames. The 7833 comes standard with walking beam wing front gauge wheels.

https://truckmanualshub.com/

IMPORTANT

Make sure the front gauges are synchronized and leveled to enable the HSL to work the soil to uniform depth of cut, across the entire machine.

The HSL has been adjusted prior to being shipped, but it is appropriate to re-check it. Please consult the following instructions and diagrams to check, or to re-set the synchronization and levelness of the front gauges should that become necessary. ***See Figure 4-2***

NOTE

You will need the open end 2-5/8" wrench stored just inside of the hitch left side brace tube, should adjustment be necessary.

Follow the steps below when setting the front gauges.

1. Retract the four (4) front gauge cylinders completely. There are two (2) cylinders on the main hitch. There is one (1) additional cylinder on each of the two (2) wing frames.
   - Check that all of the polished chrome of the cylinder rods is retracted into the cylinder body.
   - This procedure will require that the front gauge depth control (on the hitch frame) is adjusted to its most extreme depth setting.
   - If the cylinder rods are for some reason not completely retracted, then fully extend the front gauge cylinders until they are fully extended and continue extending them for an additional five (5) to ten (10) seconds after they appear to be fully extended. This procedure will re-synchronize all of the gauge cylinders. It is a good practice to re-synchronize the front gauge cylinders once or twice daily by extending them completely and holding the circuit control in the extend position for an additional five (5) to ten (10) seconds.
2. The wheels and tires of the main frame hitch are not adjustable. Leveling the front of the HSL from side to side is accomplished by adjusting the wing front gauge point. With the four (4) front gauge point cylinders completely retracted, place a long straight edge across the top of the center section frame. Measure from the top of the hitch rockshaft spindle bushings to the top of the top center section frame. Confirm the distance to be approximately 3-1/4.
3. For machines that have Goodyear 500/16.5 wing gauge tires adjust the wing front gauge cylinder, base end mount so that the distance from the wing frame top, to the top of the wing gauge walking beam is 6" more than the measurement confirmed in the previous step. If the measurement in step two was observed to be 3-1/4 inches, the wing gauge cylinder base end mount will need to be adjusted until the distance from the top of the wing frame to the top of the wing gauge walking beam is 9-1/4 inches (3-1/4 + 6 = 9-1/4) when the cylinder is completely retracted. If the wing gauge tires are Galaxy 32/1550 x 16.5, then wing gauge cylinder, base end mount, will need to be adjusted until the distance from the top of the wing frame to the top of the wing gauge walking beam is 5-5/8 inches more than the measurement confirmed in step No. 2. So if the measurement in step two was observed to be 3-1/4 inches, the wing gauge cylinder base end mount will need to be adjusted until the distance from the top of the wing frame, to the top of the wing gauge walking beam, is 8-7/8 inches (3-1/4 + 5-5/8 = 8-7/8) when the cylinder is completely retracted. If the wing gauge wheel tires are BKT 410/50R16.5, then make the proper adjustments so that distance from the top of the wing frame to the top of the wing gauge walking beam is 5-7/8 inches more than the measurement confirmed in step No. 2. So, if the measurement in step two was observed to be 3-1/4 inches, then adjustments will need to be made so that the distance from the top of the wing frame to the top of the wing gauge walking beam is 9-1/8 inches (3-1/4 + 5-7/8 = 9-1/8) when the cylinder is completely retracted.
4. Repeat this procedure for the other side wing of the HSL.
5. The final dimension can be affected by several factors, including tire inflation, machine width, and the wing down pressure setting. Expect the hitch tires to squat slightly more than wing front gauge tires. The final setting should be determined from field observations. One of the simplest ways to observe if the HSL is operating at a uniform working depth across the entire machine, is to stop abruptly when making a pass through a flat area and look along the front or rear edge of the wing and center frames and check for alignment. Checking the working depth across the width of the machine is also recommended.

https://truckmanualshub.com/

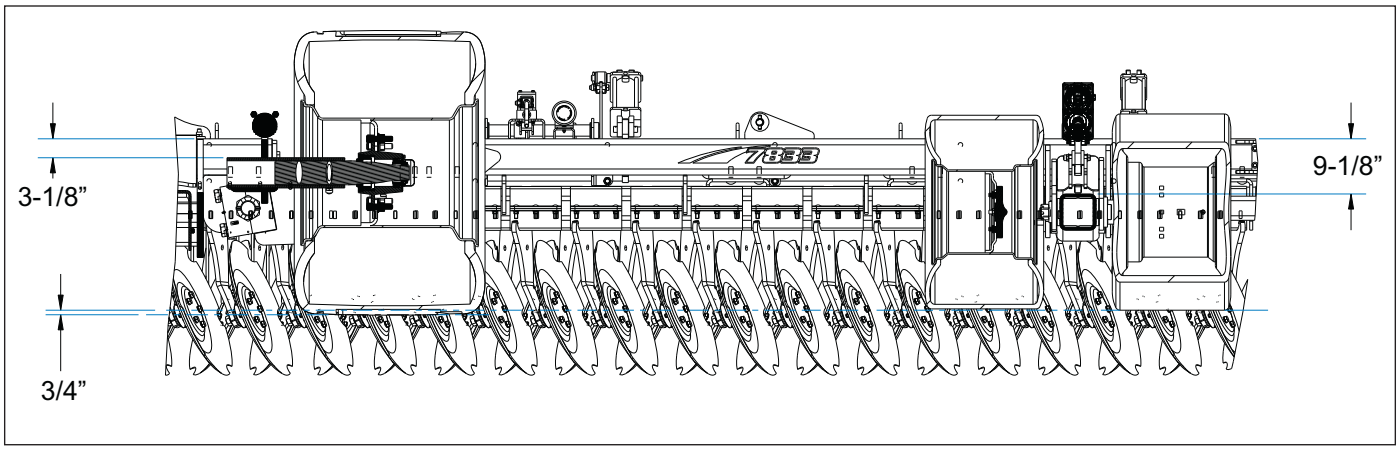

Figure 4-2: Synchronizing and Leveling Front Gauge Points

Synchronizing Rear Gauge/Finishing Feature Cylinders

The rear gauge/finishing feature is operated with a master and slave cylinder system. The rear gauge/finishing feature will maintain a uniform relationship to the center and wing sections by design when the cylinders are synchronized. Conventionally operated HSL machines use the rear reels as a depth control while the machines with tilt control can use the rear reels either for depth limitation or as a finishing feature with the down pressure adaptable.

1. Synchronize the master and slave cylinders by fully extending the cylinders in this circuit.(Black Coded Circuit)
2. Maintain the hydraulic controls in the extend mode for an additional five (5) to ten (10) seconds.

IMPORTANT

It is highly recommended that the operator re-set the hydraulic cylinders that control both the front and rear depth gauges once or twice daily while operating the HSL.

3. Once the master slave system is re-set, return to the original depth setting. To assure a consistent working depth this practice should be carried out Once or Twice daily.

Front to Rear Adjustment for Conventionally Operated HSL

The HSL is most effective when it runs or tracks straight behind the tractor. Only when the HSL is consistently tracking straight, can the correct lateral adjustment of the rear gangs be determined.
(*See Figure 4-3* and Figure 4-4) for lateral adjustment of the rear gangs.

- When the HSL is tracking straight, all the blades have the correct angles of attack, relative to the soil.
- When the HSL is tracking straight, the relationship between the front and rear blades remains consistent.
- Tracking straight behind the tractor and running level are not one and the same for the HSL. It is not uncommon to see the HSL go through the field with the front of the frame slightly lower than the rear of the frame. This is because the front blades do more work in breaking up the soil. Therefore, the rotation of the shanks on their torsion mounts in the front is slightly more than those in the rear. The resulting scenario is that the HSL may appear to run a little downhill.

The front disc units would have the HSL track to the tractors right side if they were dominate. In the same way the rear disc units would have the HSL track to the left side of the tractor if they were dominate.

1. If the HSL tracks to the **left side** of the tractor, the operator should either raise the rear of the machine slightly or lower the front.
2. If the HSL is tracking to the **right side** of the tractor, the operator should slightly lower the rear or raise the front. Tracking straight is a prerequisite to fine tune the lateral adjustment of the gang assemblies.

https://truckmanualshub.com/

It is always desirable to start the HSL at a shallow depth and then subsequently adjust it from that point. The amount of plant residue buried is a function of machine depth and speed. Operating the HSL at greater depths will naturally bury more plant residue. However, increasing the speed of the HSL will also bury more plant residue. Therefore, if operating at greater depths comes at the sacrifice of speed, it may not be the most desirable choice to run deeper.

NOTE

The 7833 HSL is most effective at speeds of eight miles per hour or greater. If field conditions permit, a speed of nine or ten miles per hour is very desirable.

NOTE

If plugging occurs reduce the working depth until the issue has been remedied. The HSL can produce a "blacker" field in just a few inches of working depth, than a convectional machine at approximately twice the depth.

Front to Rear Adjustment for the Tilt Controlled HSL

Unlike the conventionally operated HSL, the tilt controlled HSL has only one adjustment for the front to rear adjustment, "tilt control". The tilt control is an adjustable mechanical control that stops the extension of the tilt cylinder (the large cylinder on the hitch) at the discretion of the operator. The adjustment for the tilt control is on the left hand side of the hitch assembly. The markings on the adjustment tube call out the "rear gang" and has arrows indicating which direction the rear gang will go relative to the front gang. "A" is the deepest setting while "G" is the shallowest setting. Typically start out in the mid-range and then adjust the control from that point.

The front row disc units would cause the HSL to track to the tractors right hand side if they were dominant. In the same way the rear disc units would cause the HSL to track to the tractors left hand side if they were dominant.

1. If the HSL is tracking to the left side of the tractor the operator will need to raise the rear gang relative to the front gang because the rear gang is dominating, and the system is not in equilibrium. The rear gang is raised by rotating the tilt control hand crank counter clockwise. The tilt cylinder will need to be retracted a bit to make this adjustment.
2. If the HSL is tracking to the right side of the tractor the operator will need to lower the rear gang relative to the front gang because the front gang is dominating, and the system is not in equilibrium. The rear gang is lowered by rotating the tilt control hand crank clockwise.

The tilt control has very high resolution. Each turn of the adjustment crank will move the rear gang about 3/32 inch (.092) more than it moves the front gang in a given direction. Eleven (11) rounds will move the back gang one (1) inch more in a given direction than it will the front gang. Changing the depth of operation **will not** typically require any adjustment of the tilt control. Changing the amount of down pressure on the rear reels may require adjusting the tilt control to regain true tracking.

It is always desirable to start the HSL at a shallow depth and then subsequently adjust it from that point. The amount of plant residue buried is a function of machine depth and speed. Operating the HSL at greater depths will naturally bury more plant residue. However, increasing the speed of the HSL will also bury more plant residue. Therefore, if operating at greater depths comes at the sacrifice of speed, it may not be the most desirable choice to run deeper.

NOTE

The 7833 HSL is most effective at speeds of eight miles per hour or greater. If field conditions permit, a speed of nine or ten miles per hour is very desirable.

NOTE

If plugging occurs reduce the working depth until the issue has been remedied. The HSL can produce a "blacker" field in just a few inches of working depth, than a convectional machine at approximately twice the depth.

Lateral Adjustment of Rear Gang Assemblies

The front row of disc blades are fixed in position laterally. They are designed to only rotate in place around their torsion mounts.

- The rear row of blades are mounted on gangbar weldments which can be adjusted laterally. The gangbars are secured with 3/4-10 carriage bolts extending through slotted brackets. The gang assemblies can be adjusted to the right or left several inches. The gang bar adjustment brackets, (Landoll Part Numbers 187631 and 195279) are designed to simplify adjusting the gangs laterally.
- The HSL is initially set at the factory to a setting of 10 inches from the outside of the center section left side plate to the outer edge of the left rear disc unit clamp. ***See Figure 4-3*** for product purchased with the compound angled shank option, or the vertical shank option. For the 17-7 hybrid option this setting increases to 14 inches.

https://truckmanualshub.com/

1. When adjusting the rear disc gangs laterally, it is best to set the center gang first and then sequentially set the rear gangs on the wing assemblies secondarily.
2. When adjusting the center section rear gang assembly, it may be necessary to first adjust the wing gang assembly in the direction the adjustment is being made.
3. While the typical row unit spacing is 10”, the spacing between the row units at the fold break is approximately 10-3/8”.
   - Once the center section rear gang assembly is adjusted and secured in place, the wing rear gang assemblies should be set relative to the center section rear gang assembly.
4. The wing rear gang assemblies should be adjusted so the first row unit adjacent to the nearest center section rear row unit is 10-3/8” on center from it. ***See Figure 4-4***

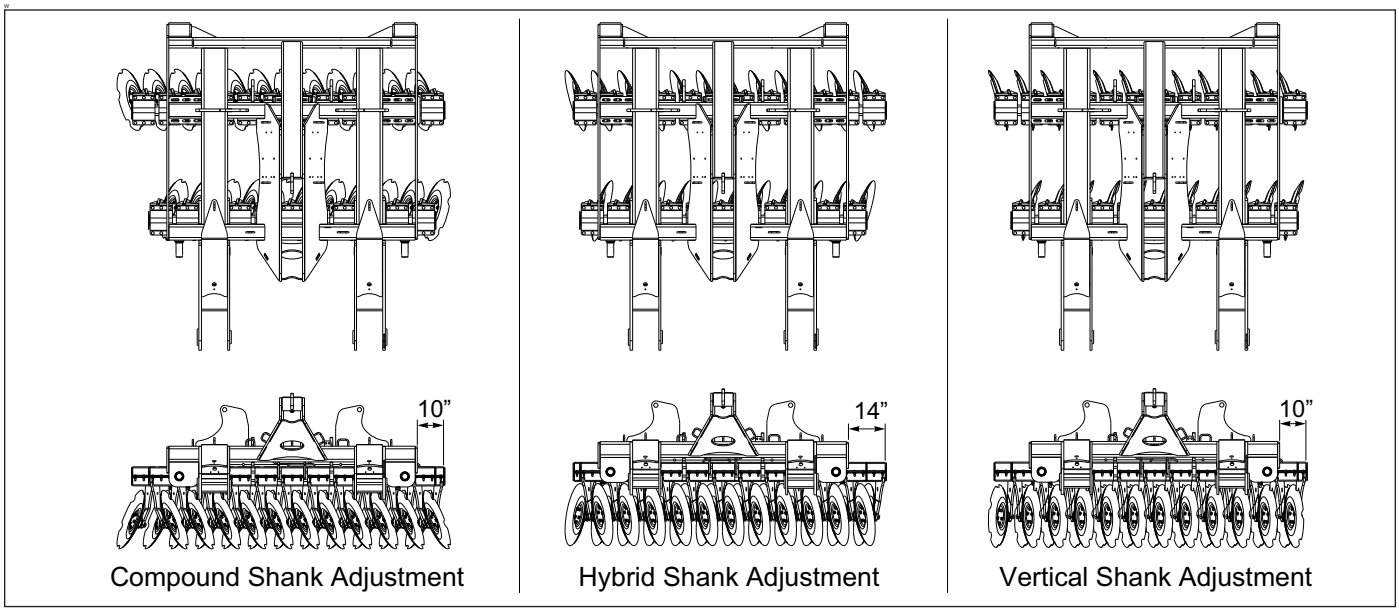

Figure 4-3: Lateral Adjustment of Gang Assemblies (1 of 2)

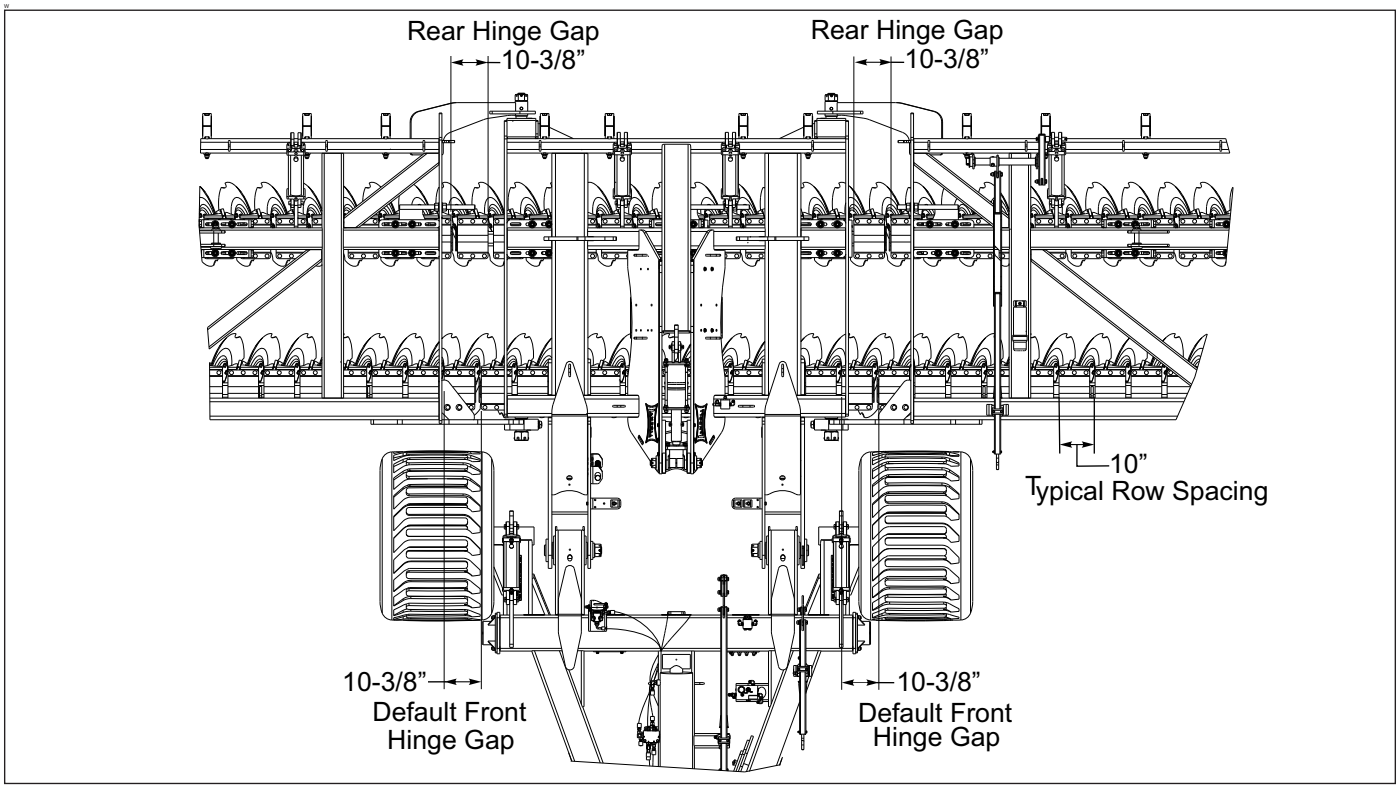

Figure 4-4: Lateral Adjustment of Gang Assemblies (2 of 2)

https://truckmanualshub.com/

Adjusting the Blade Leveler

Without the blade leveler, it is inherent that the left rear corner blade of the machine would leave a small divot because there is not any dirt flow to fill the void left by the left rear blade. The “Blade Leveler” re-directs soil from a single twenty-four inch cover disc blade. It redirects soil into the area mentioned above. The Blade Leveler is adjustable in height, in angle, as well as laterally.

The performance of the blade leveler is a function of both speed and field conditions (loose dirt present.)

1. It is best to initially adjust the blade leveler to ride at ground level, with the bottom edge parallel to the ground. If it is set to high the loose dirt will escape underneath of the blade and not be delivered to where it is needed.
2. If the ground speed will be ten miles per hour or more, gap the blade leveler laterally a bit further left of the left end cap of the left rear gang for most working conditions. For most working conditions, it is most effective when positioned approximately 1” to 1-1/2” to the left of the left rear gangbars left side end cap. *See Figure 4-5*

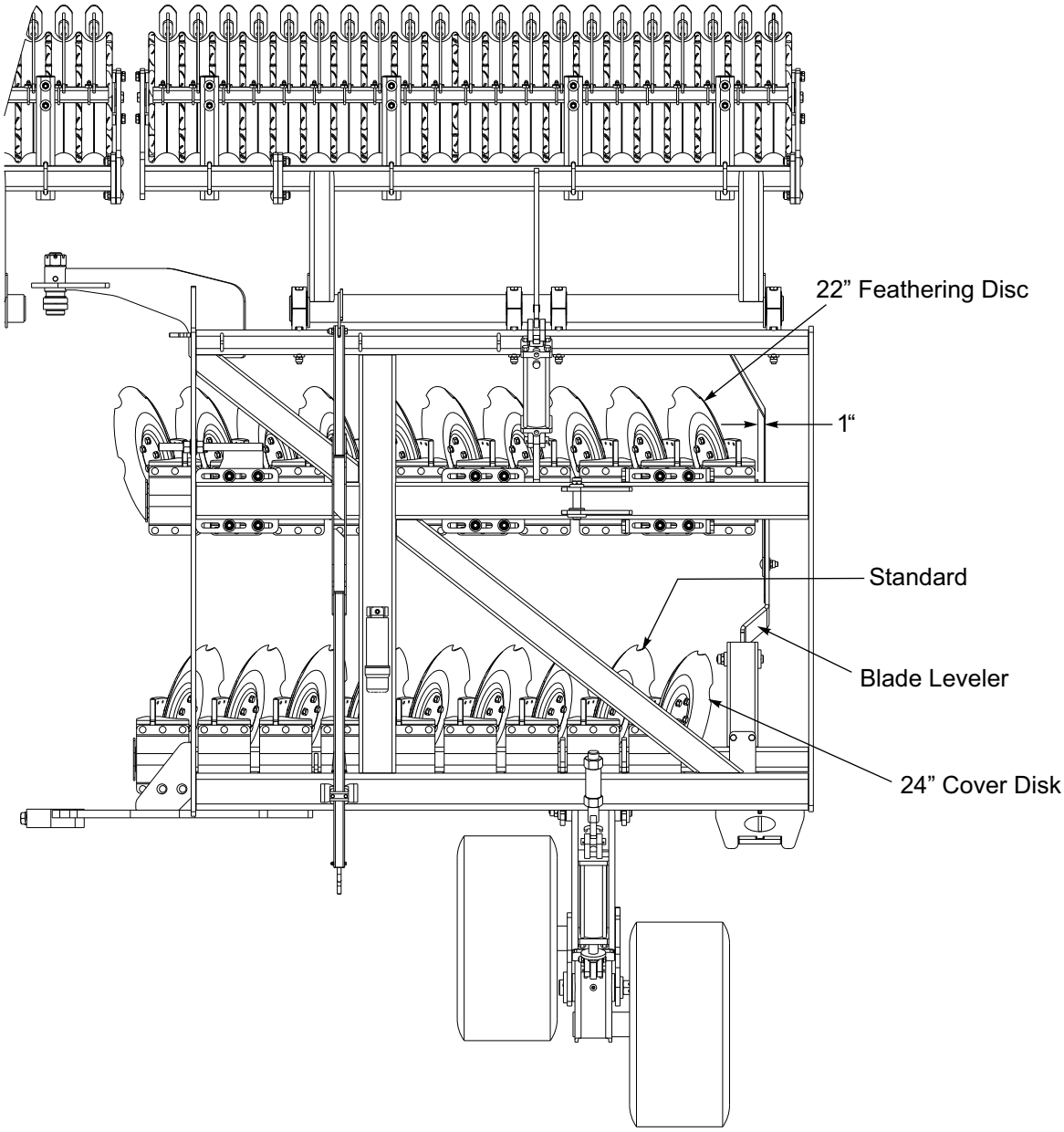

Figure 4-5: Adjusting The Blade Leveler (Compound & Shanks Shown)

https://truckmanualshub.com/

Operating Speed

The operating speed is very significant to the performance of the HSL. It requires some speed to make it work correctly and efficiently.

1. The minimum operating speed should be approximately 7-1/2 to 8 miles per hour unless the goal is to minimize the percent of crop residue being buried.
2. Maximum operating speed recommended is approximately 12 miles per hour.

The amount of crop residue that is buried is a function of the operating speed.

- The higher the speed of operation of the HSL, the greater the percent of crop residue that will be buried.
- The slower the speed of operation of the HSL, the greater the percentage of crop residue left on the surface.

When operating the HSL, higher speed can be a substitute for operating deeper. On the other hand, in some cases, it is desirable to reduce the percentage of crop residue buried. In such cases the operator will need to reduce the speed of operation. Typically the 8 to 10 miles per hour window of operating speed will yield the most desirable results.

Wing Hydraulic Down Pressure

The 7833 HSL comes equipped with hydraulic wing down pressure. The hydraulic wing down pressure is incorporated in the wing fold system. The hydraulic wing down pressure transfers weight from the heavier center section out into the outer portions and tips of the wing assemblies. The wing down pressure system assures that the active down force each disc unit is equal. The hydraulic wing down pressure manifold is located on the left side of the hitch, just inside the frame.

The hydraulic wing down pressure system needs to be run continuously when the 7833 HSL is working in the field.

- It is recommended that the wing fold circuit (coded with the yellow hose wrap) be connected to a tractor circuit in which the flow has been reduced to approximately twenty percent (20%) of its full capacity.
- Turning the flow volume down will supply an adequate flow to the down pressure system and simultaneously prevent excessive buildup of heat or loss of power.
- The down side to turning the flow down is that the fold and unfold functions will be slowed down.

The wing down pressure is a function of geometry and a “set it and forget it” setting. The design intent of the hydraulic wing down pressure is to evenly distribute the weight of the heavier center section evenly across the entire machine. For that reason adjusting the down pressure is not recommended. It has been correctly set at the factory. The pressure setting is adjustable; however, the maximum pressure should never exceed 1500 psi (the cylinder rods are subject to buckling above 1500 psi). If adjustment becomes necessary, loosen the lock nut on the “PRV” cartridge and adjust it clockwise for higher pressure and counter clockwise for lower pressure. Please reference the following table for the recommended settings.

7833 Hydraulic Wing Down Pressure Settings

Model	Hydraulic Wing Down Pressure Settings
7833-25	450 psi
7833-30	650 psi
7833-35	875 psi
7833-40	1,150 psi

Operating Depths and Adjustments for Conventionally Operated HSL

The conventionally operated HSL has two (2) single point depth controls, one for the front row of disc units and one for the rear row of disc units. ***See Figure 4-6***

As previously discussed, the front row depth setting is adjusted independently of the rear. The relationship between the front and rear will determine if the HSL tracks straight behind the tractor. Typically the two will not be set the same. Operating the conventional HSL requiring balancing the front and rear operating depths to make the HSL track straight. The front and rear depth settings not only control operating depths, but the tracking as well.

- Both depth gauges are independently adjustable.
- Both have their deepest setting correlate to the gauge cylinders being completely retracted. Typically the front gauges will need to be set slightly deeper than the rear because the front disc row is doing more work than the rear is.

IMPORTANT

Do not be concerned when the front and rear gauge indexes are set differently for optimum operation.

https://truckmanualshub.com/

The optimum working depth is considered to be 2 to 3-1/2 inches. The HSL can work on either side of this range with good performance and results; but typically the 2 to 3-1/2 inch depth range is the most efficient work depth. Working depth adjustments should always be made in conjunction with considerations of operating speed.

The HSL can bury as much plant debris in a relatively shallow working depth as conventional machines can at considerable deeper operating depths because of the mixing action inherent to the HSL if operating speed is maintained.

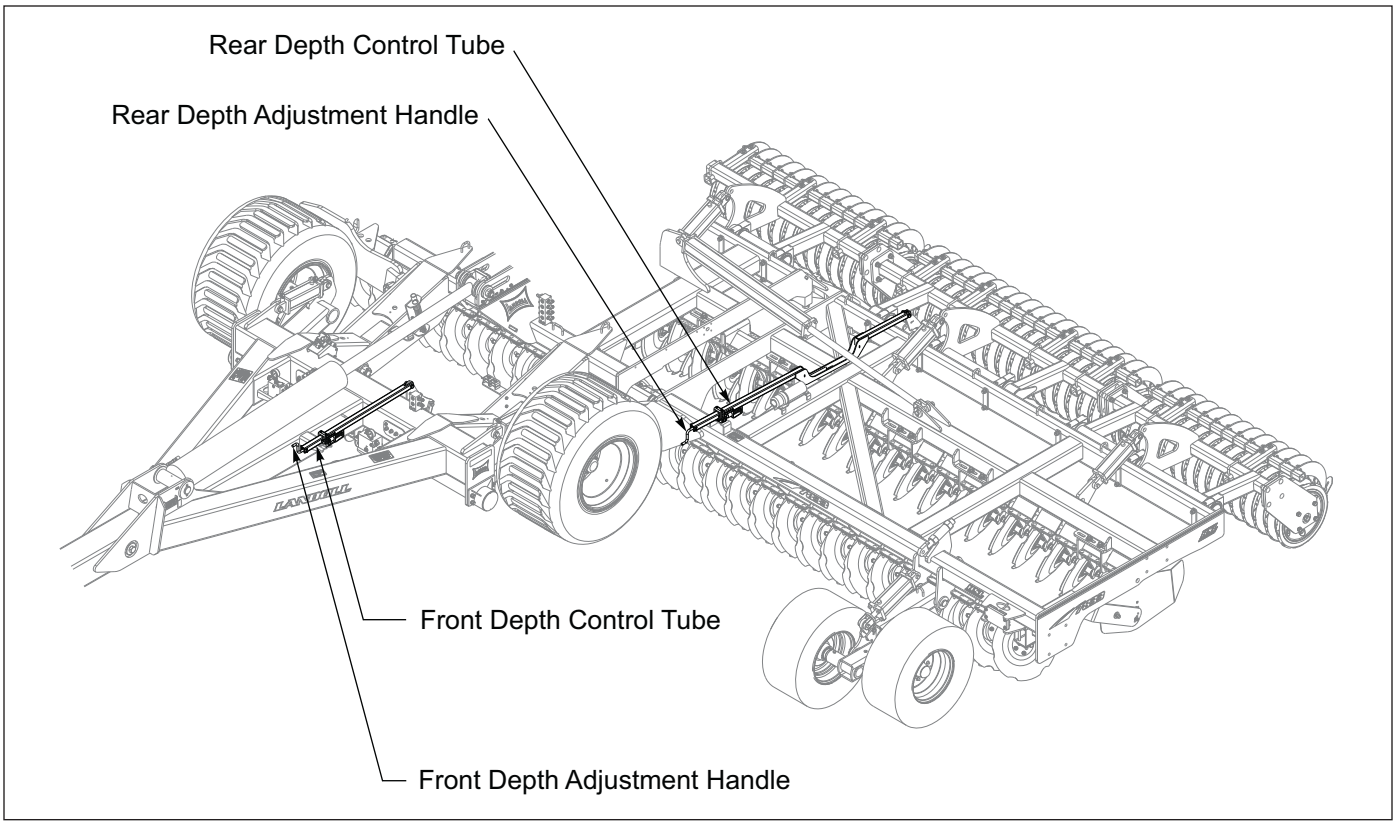

Figure 4-6: Operating Depths and Adjustments for Conventionally Operated HSL

Operating Depths and Adjustments for the Tilt Control Operated HSL

The tilt control operated HSL is simpler to operate than the conventionally operated HSL. The tilt controlled HSL has only one single point depth control for the entire machine. It located just to the left of center on the hitch. ***See Figure 4-7***

Every rotation of the control crank adjusts the working depth by a ¼ inch, or four (4) turns to an inch of operating depth. The tilt cylinder combined with the tilt control system, control the operating depth of the rear row of disc units relative to the front row of disc units (see the previous section “Front to Rear Adjustment for the Tilt Controlled HSL”). Therefore, only one overall depth control is required.

While there is only one single point depth control, the rear reels play a major role in the final performance of the HSL. If the down pressure on the reels becomes too extensive it will have an adverse effect on the overall system. If too much down pressure is applied to the rear reels they will hold the rear row of disc units out of the ground. This will cause the HSL to track to the left hand side. Typically, when this is the case, the operator will observe that the rear urethane spring in the draft cushion assembly will be slightly ballooned. Too much down pressure on the rear reels can also lead to bouncing. On the other hand, too little down pressure will cause the machine to have decreased stability in the field. Too little down pressure also tends to leave a less desirable field finish and does not reconstitute the soil profile to an optimum level.

https://truckmanualshub.com/

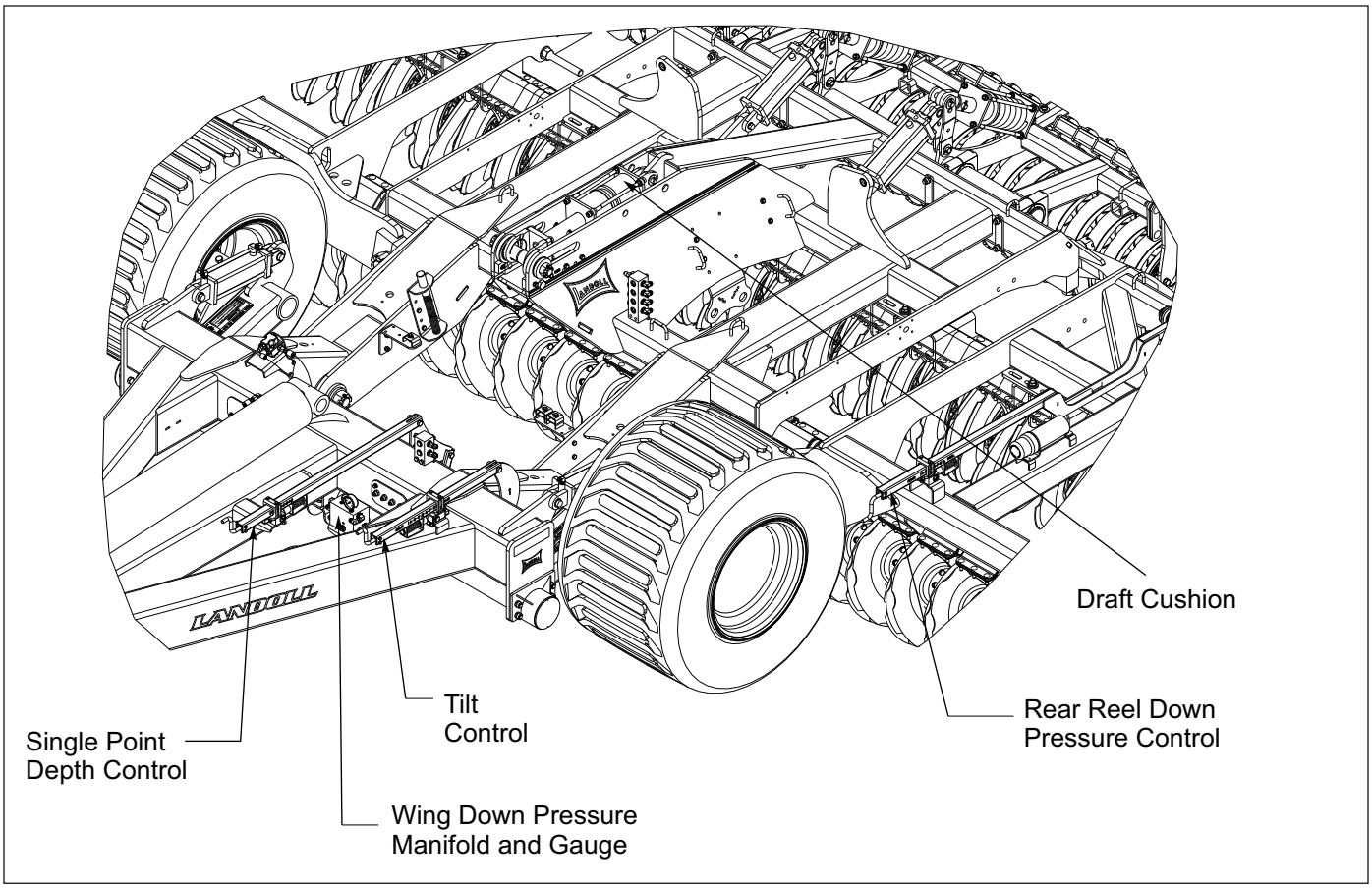

Figure 4-7: Operating Depths and Adjustments

Operating the HSL with GPS

Operating the HSL with the assistance of GPS can be beneficial in several ways and is recommended.

The actual working width of the Landoll HSL is about 4” less than the name plate value. Because of structural symmetry, the 7833 HSL is off set to the right hand side approximately four (4) inches. The right hand side of the HSL will work one half of the name plate width, while the left hand side will work approximately 4” less.

GPS Guidance			
Model	**Working Width**	**GPS Swath (When Turning Right)**	**GPS Swath (When Turning Left)**
7833-25	296 inches	300 inches	292 inches
7833-30	356 inches	360 inches	352 inches
7833-35	416 inches	420 inches	412 inches
7833-40	476 inches	480 inches	472 inches

- When operating the Landoll HSL with the assistance of GPS guidance, set the swath width to the label width in inches; less ten (10) inches.
- For a more precise and efficient setting, set your GPS guidance per the listings in the table.
- When the GPS is set up to correctly to reflect the distance worked either side of center, including the offset, it becomes very easy to see if the HSL is tracking straight by the distance overlapped.
- When the GPS guidance is set correctly and the Landoll HSL is tracking straight, there will be minimal overlap on either side, and no skips.
- GPS guidance also helps out when turning narrower units on the headland. It becomes more efficient when turning at higher speeds to not have to turn back in, for what would be the next adjacent pass; but instead work a rotation where one or two passes are skipped to be completed later.

https://truckmanualshub.com/

Turning On the Headland

The recommended turning procedure for the 7833 HSL on the headland is to tilt the rear of the machine upward (red circuit), so that the weight of the entire machine is riding on the front gauge wheels and tires.

1. Tilt the rear up only far enough that all of the blades disengage the dirt. Tilting the HSL much over ten (10) to fifteen (15) degrees while turning on the headland exposes the wing fold cylinders and the machine at large, to possible damage as well as lengthens the time it takes to turn around.
2. Tilt the HSL rear up only enough to get the blades out of the dirt. Setting the tilt up on a timer can be beneficial. Once the turn is completed lower the HSL back into the field by reversing the tilt cylinder (red circuit) until it is fully extended. The large tilt cylinder must always be fully extended during field operation. Having the tilt cylinder fully extended in the field allows:
   - The HSL full rotation over its lateral axis, ten (10) degrees either side of running level, front to rear.
   - Is required to allow the Draft Compensator System to operate by design.

IMPORTANT

When lowering the HSL back into working mode, it is imperative the large tilt cylinder be fully extended. If the large cylinder is not fully extended, the main body of the HSL will not be free to rotate fore to aft and follow the lay of the land.

Draft Compensator System for the Conventionally Operated HSL

The draft compensator system is designed to allow the 7830 series HSL to operate with equal down pressure on the front and rear gangs. Because of the compactness (front to rear) of the HSL, there can be a tendency for the rear gangs to pull up if it were not for the action of the draft compensator circuit.

The draft compensator system is designed to utilize a closed circuit, comprised of a single acting cylinder, powered by a nitrogen gas filled accumulator. The single acting cylinder pushes against the hitch top link; a pre-set amount relative to the size of your HSL.

The draft compensation system functions as a mechanical spring but has a relatively flat force curve over the entire distance of the tilt slot, unlike a mechanical spring.

The result is that the HSL is free to roll over its lateral axis ten (10) degrees forward or ten (10) degrees reward relative to the lay of the land, and simultaneously maintain equal down pressure on the front and rear gangs.

The circuit pressure has been set at the factory and should not be plugged into the tractor unless:

1. The operator desires to adjust the circuit.
2. There is for some reason a volume of oil that has been lost from the otherwise closed circuit.
3. Because of temperature changes or operating factors, the circuit needs to be maintained. When the circuit is plugged into the tractor there is always a risk of a change in oil volume in the circuit. After the draft compensation circuit is adjusted or maintained, it should always be un-plugged from the tractor immediately following the adjustment.

CAUTION

The draft compensation hydraulic circuit should be respected as should all hydraulic circuits. The draft compensator circuit however is connected to a significant source of stored energy. Even when the tractor is shut down and or disconnected, there are potentially several gallon of hydraulic oil stored at high to very high pressure. Be sure that you understand the circuit and the dangers it presents before opening any of the hoses or adapter fittings.

- The pressure gauge indicating the stored energy within the system should be checked daily when the draft comp cylinder is fully extended (mast cylinder pin is at its most forward position in the mast slots.)
- The pressure in the system should be maintained at or above 1,100 psi depending on the requirements for your size and model.
- The folding and unfolding operations depend on the draft compensator cylinder holding the tilt cylinder rod end into the forward most (and or lowest) position of the slot in the mast plates when unfolding. The pressure of the draft compensation circuit should stay relatively constant but will vary some due to temperature changes. The nitrogen gas that powers the circuit is an inert gas and its volume and subsequent pressure is subject to the ambient temperature.

https://truckmanualshub.com/

- During periods of increasing and or decreasing temperatures, circuit maintenance maybe required. The draft compensator circuit will require maintenance if the pressure is too high or too low. To maintain the circuit, first adjust the tractors flow on the circuit being used to approximately 20%. Then connect the circuit to the tractor and operate it until the indicated pressure stabilizes at the desired target setting. If the pressure rises to 3,000 psi, you are operating the circuit in reverse and you will need to reverse the direction of flow and operate the circuit until the pressure has stabilized at the desired target setting.
- Always keep the valve labeled “VALV” turned OFF when maintaining and operating the draft comp circuit.

NOTE

The draft comp pressure should always be checked when the draft comp cylinder is fully extended (mast pin fully forward). The draft comp pressure will increase as the large tilt cylinder fully extends, causing the draft comp cylinder to partially or completely retract.

Typically, the draft compensation circuit will not require any attention other than a quick glance and note of the stored pressure once a day. ***See Table*** for those times your draft compensator circuit needs to be maintained. These pressures are a good place to start. Never run the HSL draft compensator at less than 1,100 psi or more than 2000 psi. You may find that your HSL operates better at a slightly higher or lower pressure, depending on your working depth, soil type, soil condition, and other considerations.

NOTE

The Tilt Controlled HSL is not compatible with the Draft Compensator System.

7833 Draft Hydraulic Settings

Model	MAX* Draft Comp Pressure Setting (When Cylinder Is Fully Extended)
7833-25	1,100 psi.
7833-30	1,300 psi.
7833-35	1,500 psi.
7833-40	1,700 psi.

Replacing the Disc Hub Bearing

1. The replacement hub and bearing assembly is available as a pre-assembled assembly, Landoll 185742 for your convenience. Should you choose, the wear parts are also available in a kit to re-build the disc hub. Landoll kit 219945 includes the essential wear parts to rebuild a disc hub in the field. When rebuilding disc hubs in the field it is highly recommended that you obtain a die, Landoll 218733, to assist in the proper assembly of the components in the hub assembly. Landoll Corporation will not accept responsibility for, or warranty hub assemblies re-built in the field.
2. Clean the O-Ring groove and the surfaces between the hub face and the correlating disc surface. Failure to clean the surfaces mentioned above, can cause the disc blade to loosen and cause water to infiltrate the bearing area.
3. Always replace the 1-8 flanged top lock nut, (Landoll Part No. 174732.)
4. Use 242 Loctite (Blue) when assembling the spindle nut
5. Always torque the flange top lock nut to approximately 200-250 foot pounds of torque.

NOTE

Inadequate torquing of the disc hub (<120 ft/lb.) flanged top lock nut will cause premature bearing failure. Over torquing can also lead to premature bearing failure.

https://truckmanualshub.com/

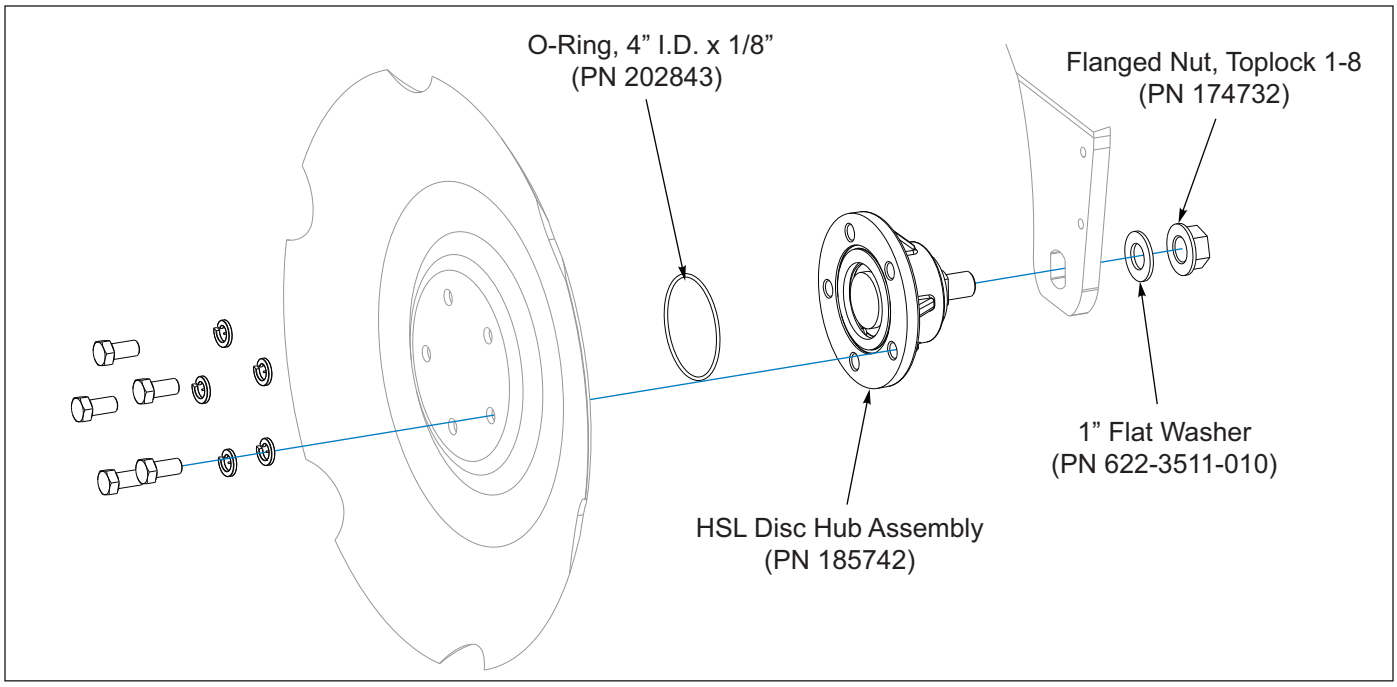

Figure 4-8: Disc Hub Bearing

Lubrication Maintenance

1. The 7833 HSL features a maintenance free double tapered roller bearing in each disc hub (Landoll Part No. 174526). The maintenance free double tapered bearing is protected by a life time lubricated five lip seal (Landoll Part No. 185757) on the hub’s spindle side **(*See Figure 4-8*.)** The joint between the disc blade and the hub face is sealed with an O-ring that is compressed in a groove in the hub and seals against the disk. Should it become necessary for a disc hub bearing to be replaced there are two avenues available. Landoll Parts Department offers a complete bearing assembly ready to install (Landoll Part No. 185742). They also offer the component parts required (please reference the parts manual.)
   - **Complete hub assembly (Landoll PN 185742), ready to install.**
   - **Rebuild kit (Landoll PN 219945) with all required components.**
     - The rebuild kit comes with instructions (PN 219946)
     - Installation of the HSL hub rebuild kit requires a die (PN 218733) to set the bearing and seals.
2. When lubricating the HSL, SAE multi-purpose EP grease, or EP grease with 3-5% molybdenum sulfide is recommended. Wipe soil from fittings before greasing. Replace any lost or broken fittings immediately.
3. The wing gauge wheel hubs and the reel bearings are equipped with seals that will let grease pass and not harm the seal. Regular lubrication will maintain a full grease cavity and help purge any contaminants. Grease the bearings before long periods of storage to prevent moisture buildup within the bearing cavity.
4. The table below specifies the number and the period of lubrication points on the 7833 HSL. Proper maintenance of your machine will, under normal operating conditions, help to keep it operating at its peak performance for an extended period of time. Proper maintenance is also a condition to keep your warranty in good status.

https://truckmanualshub.com/

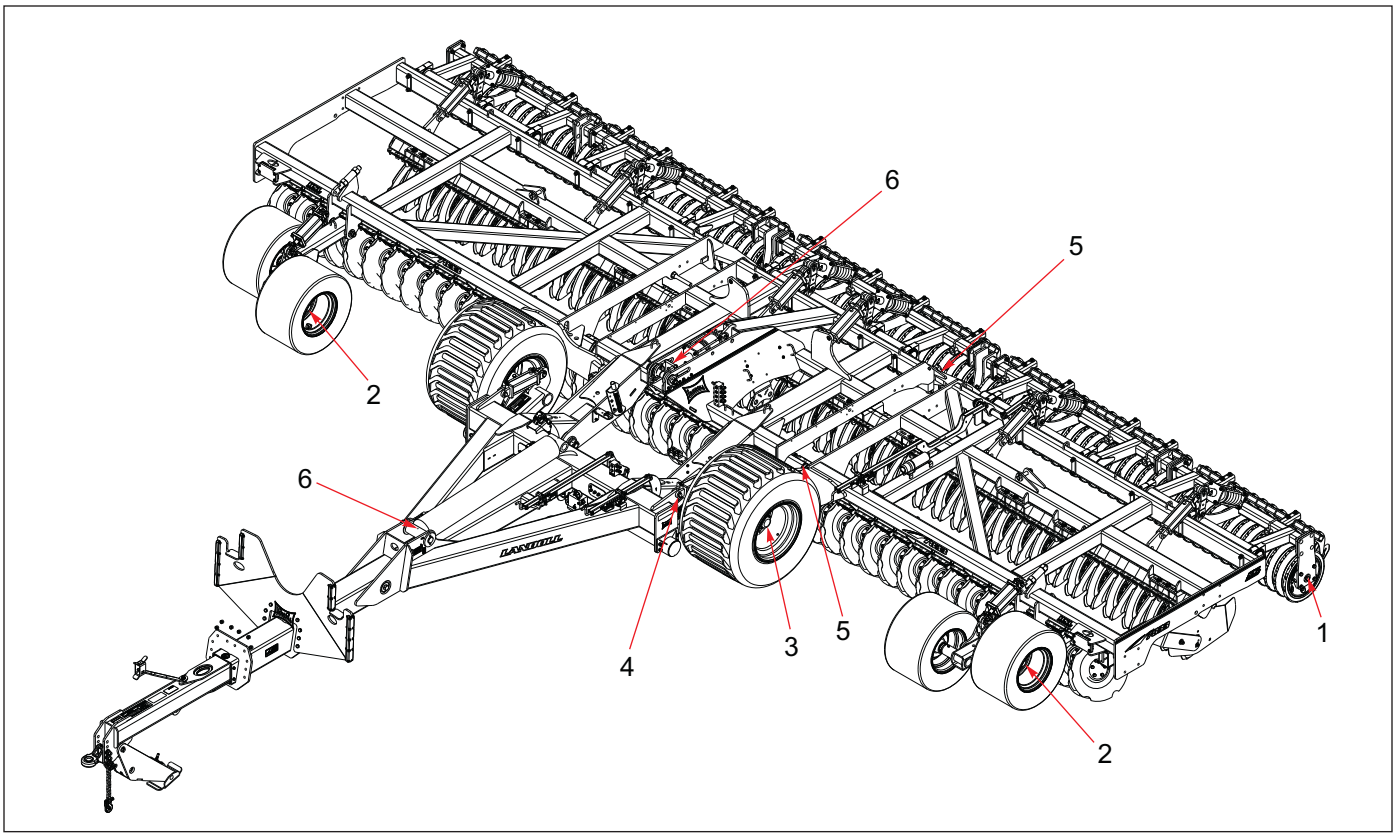

Figure 4-9: Lubrication Schedule

Lubrication Table			
ITEM	**DESCRIPTION**	**NO. OF LUBE POINTS**	**INTERVAL (Hours Unless Stated)**
1	Reel Bearings	2 per Reel Section	10
2	Wing Wheel Hubs	1 each	50
3	Center Section Wheel Hubs	(2) Check and Re-pack	250-500
4	Center Section/Hitch Pivot	2 each	10
5	Center Section/Wing Frame Fold (FRONT)	2 each	10
	Center Section/Wing Frame Fold (REAR)	2 each	10
6	Main Tilt Cylinder	2 each	50

Rubber Roller Scraper Adjustment

The roller scrapers should be adjusted so that they have an adequate clearance from the rubber roller grooves but not excessive (***See Figure*** **.**) If the clearance exceeds a 1/4 inch, plugging may occur. 5/32 to 1/4” clearance is optimum.

- The rubber rollers are subject to some irregularity in diameter, especially during initial use or when returning to duty after have set for a period.
- It is always a good idea to rotate the rubber rollers after making adjustments to assure an adequate clearance between the roller and the scrapers.
- The scrappers will require adjustment periodically as they wear to maintain the proper clearance.

https://truckmanualshub.com/

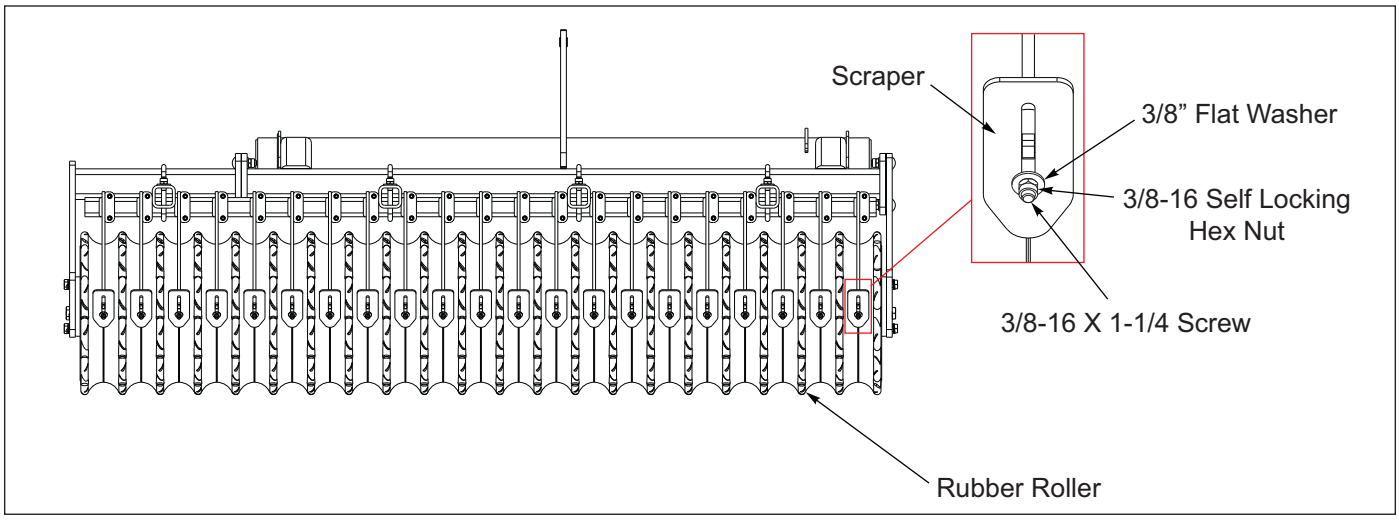

Figure 4-10: Rubber Roller Scraper Adjustment

https://truckmanualshub.com/

Chapter 5

Troubleshooting Guide

The Troubleshooting Guide, shown below, is included to help you quickly locate problems that can occur when using your 7833 High Speed Landoll (HSL). Follow all the safety precautions stated in the previous sections when making any adjustments to your machine.

PROBLEM	PROBABLE CAUSE	SOLUTION
Disc plugs or pushes.	Operating too deep.	Shallow up the depth gauges.
	Operating speed to slow.	• Reduce tillage depth. • Increase ground speed.
	Excessive amount of dirt collected on the discs.	Field conditions too damp.
	Foreign object caught between the bland and shank, or blade and frame.	Remove the object. If this happens repeatedly with vertical shanks, consider installing scrapers.
	Disc hub bearing frozen.	Replace the bearing and hub assembly.
	Depth gauge cylinders (front and/or rear) out of synchronization.	Synchronize cylinders by holding hydraulic circuit in extended position for 5 to 10 seconds after full extension.
	Front wing gauge wheels not level with center section.	See ***"Synchronizing and Leveling Front Gauge Points" on page 4-3***.
	Rear depth gauge reel/roller bearing frozen.	Replace the bearing assembly.
Disc tracking to the left behind tractor.	Rear gangs too deep relative to the front.	• Raise the rear of the HSL. • Lower the front of the HSL.
Disc tracking to the right behind tractor.	Front gangs too deep relative to the rear.	• Raise the front of the HSL. • Lower the rear of the HSL.
Leaving a valley on the left rear corner.	Leveling board too high; dirt flowing beneath it.	• Lower leveling board. • Make lower extremity of the leveling board parallel with the ground.
	Cover disc not generating enough loose dirt.	• Move cover disc towards leveling board. • Replace 22" blade with 24" blade. • Use compound angle disc shank in place of a vertical shank.
Floor cut has grooves or ridges.	HSL is not tracking straight behind tractor.	See previous guides on "tracking to the left or right".
Floor cut has ridges.	Rear gangs out of adjustment relative to the front disc unit.	Adjust rear gang to the left slightly less than the average width of the ridge top.

https://truckmanualshub.com/

PROBLEM	PROBABLE CAUSE	SOLUTION
Floor cut has grooves.	Rear gangs out of adjustment relative to the front disc unit.	Adjust rear gang to the right slightly less than the average width of the groove bottoms.
Machine bounces in the field.	Field conditions too rough for operating speed.	Reduce operating speed. Work twice if necessary.
	Draft comp pressure is too low.	Increase draft comp pressure 200 - 300 psi relative to the recommended setting.
	Draft comp circuit out of adjustment.	Increase draft comp pressure 200 - 300 psi relative to the recommended setting.
	Floor cut irregular.	Adjust rear gangs laterally.
	Air is trapped in the gauge cylinders.	Remove air from the cylinders by holding hydraulic circuit in extend position for 5 to 10 seconds after full extension.
Uneven operating depth.	Wing frame(s) not operating at uniform depths.	See ***"Synchronizing and Leveling Front Gauge Points" on page 4-3***.
	Rear gauge points out of synchronization.	Synchronize cylinders by holding hydraulic circuit in extended position for 5 to 10 seconds after full extension.
	Hydraulic wing down pressure is not operating (correctly).	Make certain that the indicator gauge is showing the recommended pressure and the flow is not excessive.
	Hydraulic wing down pressure is too high and center section is too light.	Reduce wing down pressure.
	Hydraulic wing down pressure is too low and the wing tips are too light.	Increase wing down pressure.
Rear gauge points not uniform.	Rear gauge points out of synchronization.	Synchronize cylinders by holding hydraulic circuit in extended position for 5 to 10 seconds after full extension.
	Cylinder leaking internally.	Repair/replace cylinder.
Machine does not hold consistent working depth.	Rear gauge point limit valve leaking.	Replace rear limit valve (on left-hand wing frame).
	Front gauge point limit valve leaking.	Replace front limit valve (on hitch).
	Front and/or rear gauge points out of synchronization.	Synchronize cylinders by holding hydraulic circuit in extended position for 5 to 10 seconds after full extension.
Wings fold too slowly.	Restrictors are not properly installed.	Smart restrictor fittings should be installed in wing cylinder base end points.
Wings fold too fast.	Restrictors not properly installed.	Black restrictor fittings should be installed in the rod ends of wing cylinders.

https://truckmanualshub.com/

PROBLEM	PROBABLE CAUSE	SOLUTION
Tilt cylinder does not fully extent after lowering machine into working position.	Circuit controls in the tractor are not properly set up.	Consult the operator's manual for the tractor. Increase timer setting to fully stroke the tilt cylinder.
Wing tip operating shallow.	Hydraulic wind down pressure is too low or not operating.	Increase/turn on wing down pressure.
	Wing fold down cylinders leaking internally.	Repair or replace wing fold cylinder.
Gauge point cylinders not fully extending.	Gauge point cylinders not synchronized.	Synchronize cylinders by holding hydraulic circuit in extended position for 5 to 10 seconds after full extension.
	Gauge point cylinders not installed in proper series.	Install cylinders in decreasing diameters as distance from center increases.
	Hoses not properly connected.	Check hose routing against schematics (found in parts manual).
Machine will not unfold (raise wing frames out of transport saddles).	Tractor valve not working.	Try a different tractor circuit known to work.
	Limit valve on hitch safety circuit not closing b-pass circuit.	• Confirm spring plunger to be depressing limit valve plunder when folded forward. • Hitch safety circuit limit valve leaking and needs replaced.
Machine will not tilt (rear upward) or fold.	Tractor valve not working.	Try a different tractor circuit known to work.
	Check valve on hitch safety circuit not closing; leaking.	• Clean check valve. • Replace check valve.
Machine will not unfold (raise wing frames out of transport saddles).	Tractor valve not working.	Try a different tractor circuit known to work.
Machine will not fold or unfold (both wing frames out of transport saddles).	Tractor valve not working.	Try a different tractor circuit known to work.
	Hoses not properly connected.	Check hose routing against schematics (found in parts manual).
Hydraulic depth control limit valve not working.	Hoses not properly connected.	Check hose routing against schematics (found in parts manual).

https://truckmanualshub.com/

PROBLEM	PROBABLE CAUSE	SOLUTION
	Depth stop contracts limit valve does not close off flow.	• Clean check valve. • Replace check valve.
	Machine will raise by not lower.	Check limit valve and manifold for correct plumbing.
Wheel bearing failure.	Seals not properly installed.	Triple lip seal should be installed with lips points outward away from the hub.
Draft comp pressure goes to 3000 psi during maintenance adjustment.	Draft comp maintenance is hooked up in reverse at the tractor.	Reverse the couplers at the tractor.
	Tractor circuit is flooding the draft comp circuit.	Turn the flow down at the tractor for the draft comp circuit to <20%.
Draft comp pressure stays too low during maintenance adjustment.	Manual by-pass valve is open.	Close by-pass valve by rotating clock-wise to stop.

https://truckmanualshub.com/

Document Control Revision Log:

Date	Form #	New/Updated	Improvement(s): Description and Comments
02/2017	F-894-0217	New	Initial Release
09/09/2019	F-894-0919	Update	Update to new format - GG

https://truckmanualshub.com/

Equipment from Landoll Corporation is built to exacting standards ensured by ISO 9001 registration at all Landoll manufacturing facilities.

Model 7833
High Speed Landoll (HSL)
Operator's Manual

LANDOLL CORPORATION
1900 North Street
Marysville, Kansas 66508
(785) 562-5381
800-428-5655 ~ WWW.LANDOLL.COM

Copyright 2019. Landoll Corporation
"All rights reserved, including the right to reproduce this material or portions thereof in any form."