https://truckmanualshub.com/

MECALAC

OPERATING INSTRUCTIONS
SWING SHOVEL LOADER

GB

AS 50

MECALAC Baumaschinen GmbH Am Friedrichsbrunnen 2 D-24782 Büdelsdorf
Telefon (+49) (0)4331/351-325 Internet: www.mecalac.de
Telefax (+49)(0)4331/351-404 E-Mail: info@mecalac.de

https://truckmanualshub.com/

You will find the

spare parts documentation

online at:

https://www.mecalac.de/abm_doc/

Log in as final customer and specify the **FIN** number (truck identification number) of your **MECALAC** truck. When you already own an **MECALAC** truck, you can also view the spare parts documentation here. To do so, please specify the **FIN** number of this truck.
If required, you can print the documentation.

https://truckmanualshub.com/

Introduction

Preface

MECALAC's swivel shovel loader, articulated loader and loader excavator with backhoe are machines included in **MECALAC's** vast product range covering a wide variety of working tasks.

Decades of experience in the construction of earthmoving machines, the wide range of attachments available as well as modern production facilities, careful testing and highest quality demand guarantee the highest degree of reliability of your **MECALAC** machine.

The extent of documentation delivered by the manufacturer includes the following:

- Equipment operating instructions
- Engine operating instructions
- Equipment spare parts list
- Equipment spare parts list
- EC conformity declaration

Operation instructions

The operation instruction contains all the information which the user requires for operation and maintenance.

In the "Maintenance" section, all maintenance work and operation tests are described which can be carried out by trained personnel. Repairs on a larger scale which may only be carried out by specialized personnel or by personnel authorized and trained by the manufacturer, in particular those units subject to the Motor Vehicle Construction and Use Regulations and the Regulations for the Prevention of Accidents, are not described.

Due to the construction modifications reserved by the manufacturer, there may be differences in the figures; however, this has no influence on the technical contents.

How to handle this manual

Explanations

- The designation "left" and "right" is to be seen from the driver's seat in driving direction.
- Optional equipment means: not fitted in series.

Information about illustrations

- (3-35)
  means: chapter 3, fig. 35
- (3-35/1)
  means: chapter 3, fig. 35, item 1
- (3-35/arrow)
  means: chapter 3, fig. 35, ←

https://truckmanualshub.com/

Abbreviations used:

UVV = Unfallverhütungsvorschrift (Accident Prevention Regulations)

StVZO = Straßenverkehrzulassungsordnung (German Traffic Regulations)

Edition: 01.2012

https://truckmanualshub.com/

Table of contents

1 Fundamental safety instructions

1.1 Warnings and symbols ..... 1 - 2
1.2 Use of the loader as authorized ..... 1 - 2
1.3 Organizational measures ..... 1 - 2
1.4 Selection of personnel and necessary qualifications ..... 1 - 3
1.5 Safety information for certain operating phases ..... 1 - 4
1.5.1 Normal operation ..... 1 - 4
1.5.2 Special work within the exploitation of the machine and elimination of defects during process of work; disposal ..... 1 - 7
1.6 Instructions regarding special categories of danger ..... 1 - 9
1.6.1 Electrical energy ..... 1 - 9
1.6.2 Hydraulic systems ..... 1 - 10
1.6.3 Noise ..... 1 - 10
1.6.4 Oil, grease and other chemical substances ..... 1 - 11
1.6.5 Gas, dust, steam, smoke ..... 1 - 11
1.7 Transport and towing; restart ..... 1 - 11
1.8 Safety information for the contractor or the contractor's authorized personnel ..... 1 - 12
1.8.1 Organizational measures ..... 1 - 12
1.8.2 Selection of personnel and necessary qualification; additional duties ..... 1 - 12

2 Signs

3 Protection against theft

3.1 Identifying features on the loader ..... 3 - 2
3.2 Parking the loader ..... 3 - 2
3.3 Transponder for drive-away interlock ..... 3 - 3

4 Description

4.1 Overview ..... 4 - 2
4.2 Loader ..... 4 - 3
4.3 Changing a wheel ..... 4 - 6
4.4 Controls ..... 4 - 8
4.5 Instrument panel ..... 4 - 9

5 Operation

5.1 Pre-use check ..... 5 - 2
5.2 Starting up ..... 5 - 2
5.2.1 Starting the diesel engine ..... 5 - 2
5.2.2 Winter operation ..... 5 - 3
5.2.2.1 Fuel ..... 5 - 3
5.2.2.2 Changing the engine oil ..... 5 - 4
5.2.2.3 Changing the oil in the hydraulic system ..... 5 - 4
5.2.2.4 Anti-freezing agent for the windshield washer system ..... 5 - 4
5.2.3 Driving the loader on public roads ..... 5 - 4
5.2.4 Working with the loader ..... 5 - 5
5.2.5 Heating and ventilation system ..... 5 - 7
5.2.5.1 Adjusting the amount of air ..... 5 - 7
5.2.5.2 Switching on the heater ..... 5 - 7
5.3 Stopping loader operation ..... 5 - 8
5.3.1 Parking the loader ..... 5 - 8
5.3.2 Switching off the diesel engine ..... 5 - 8
5.3.3 Switching off the heating and ventilation system ..... 5 - 8
5.3.4 Leaving the loader ..... 5 - 8
5.4 Adjusting the operator's seat ..... 5 - 9
5.5 Switching the steering ..... 5 - 9

https://truckmanualshub.com/

6 Attachments

6.1 Mounting and dismounting attachments without hydraulic connections ..... 6 - 2
6.1.1 Standard/lightweight bucket ..... 6 - 2
6.1.2 Fork-lift attachment ..... 6 - 3
6.1.3 Lifting hook ..... 6 - 4
6.2 Mounting and dismounting attachments with a hydraulic connection ..... 6 - 4
6.2.1 Multi-purpose bucket ..... 6 - 4
6.3 Using other attachments ..... 6 - 6

7 Rescue, towing, lashing, lifting by crane

7.1 Rescue, towing, lashing ..... 7 - 2
7.1.1 Rescuing/towing of the loader if the engine or drive has failed ..... 7 - 2
7.1.1.1 Towing the swivel loader when the engine has failed ..... 7 - 2
7.1.1.2 Towing the swing shovel loader when the drive has failed ..... 7 - 4
7.2 Lifting by crane ..... 7 - 5

8 Maintenance

8 Maintenance plan ..... 8 - 1
8.1 Maintenance notes ..... 8 - 3
8.2 Maintenance work ..... 8 - 4
8.2.1 Checking the engine oil level ..... 8 - 4
8.2.2 Checking the oil level in the axles ..... 8 - 4
8.2.2.1 Rear axle ..... 8 - 4
8.2.2.2 Planetetary gear ..... 8 - 4
8.2.2.3 Front axle ..... 8 - 4
8.2.3 Changing the oil in the distribution gear ..... 8 - 5
8.2.4 Checking the oil level in the hydraulic oil reservoir ..... 8 - 5
8.2.5 Changing the engine oil ..... 8 - 5
8.2.6 Changing the oil in the axles ..... 8 - 6
8.2.6.1 Rear axle ..... 8 - 6
8.2.6.2 Planetary gear ..... 8 - 7
8.2.6.3 Front axle ..... 8 - 7
8.2.7 Changing the oil in the hydraulic system ..... 8 - 8
8.2.8 Changing the backflow suction filter insert/suction strainer ..... 8 - 9
8.2.9 Maintaining/replacing the air filter ..... 8 - 9
8.2.10 Changing the safety cartridge ..... 8 - 10
8.2.11 Replacing the fuel filter ..... 8 - 11
8.2.12 Exchanging the starter battery ..... 8 - 11
8.2.13 Maintaining/replacing the fresh air filter ..... 8 - 11
8.2.14 Checking/adjusting the parking brake ..... 8 - 12
8.2.15 Checking/adjusting the service brake ..... 8 - 13
8.3 Lubrication points ..... 8 - 13
8.3.1 Rear axle pivot bolt ..... 8 - 13
8.3.2 Rear axle ..... 8 - 14
8.3.3 Front axle ..... 8 - 14
8.3.4 Bucket motor ..... 8 - 14
8.3.5 Ball rotary connection ..... 8 - 15
8.3.6 Driver cabin door ..... 8 - 15
8.3.7 Engine hood ..... 8 - 15
8.3.8 Multi-purpose bucket ..... 8 - 16

9 Malfunctions, causes and remedies

10 Diagrams

10.1 Wiring diagram ..... 10 - 1
10.2 Hydraulic circuit diagram ..... 10 - 4

https://truckmanualshub.com/

11 Technical data (loader)

11.1 Loader ..... 11 - 2
11.2 Engine ..... 11 - 2
11.3 Starter ..... 11 - 2
11.4 Alternator ..... 11 - 2
11.5 Hydrostatic drive unit ..... 11 - 2
11.6 Axle loads ..... 11 - 2
11.7 Tires ..... 11 - 3
11.8 Steering system ..... 11 - 3
11.9 Brake system ..... 11 - 3
11.10 Electrical system ..... 11 - 3
11.11 Hydraulic system ..... 11 - 3
11.11.1 Swivel mechanism 11 - 3
11.11.2 Stabilizers ..... 11 - 3
11.12 Fuel supply system ..... 11 - 4
11.13 Heating and ventilation system ..... 11 - 4
11.14 Full flow suction filter ..... 11 - 4
11.15 Electrical contamination indicator ..... 11 - 4
11.16 Oil cooler with thermostat control ..... 11 - 4
11.17 Noise emission ..... 11 - 4

12 Technical data (Attachments)

12 Attachments ..... 12 - 2
12.1 Buckets ..... 12 - 2
12.2 Fork-lift attachment ..... 12 - 4
12.4 Lifting hook ..... 12 - 6

13 Additional options, modifications, notes on inspection for loaders

13.1 Additional options ..... 13 - 2
13.2 Modifications ..... 13 - 2

https://truckmanualshub.com/

https://truckmanualshub.com/

Safety regulations

https://truckmanualshub.com/

1 Fundamental safety instructions

1.1 Warnings and symbols

In this operation manual the following designations or symbols are used for important information.

NOTE

Special information for the economical use of the machine.

CAUTION

Special information for necessities and prohibitions for avoiding damages.

DANGER

Information or necessities and prohibitions for prevention of damage to persons or extensive damage to goods.

1.2 Use of the loader as authorized

1.2.1 This machine was designed according to the state of the art and recognized safety rules. Nevertheless the use of the machine may cause danger for the user or third parties or impairments to the machine or other real values.

1.2.2 The machine and attachments may only be used in a technical non-objectionable condition, taking all safety regulations especially with regard to the operating manuals (machine and engine). In particular defects which could have a detrimental effect on the safety of the machine should be eliminated immediately.

1.2.3 The machine is determined exclusively for the purposes described in this operating manual. Any other utilization is not permitted. The manufacturer is not liable for any damage caused in this connection. The user solely carries the risk.

The authorized use of the machine also requires the observation of the operating manual (machine and engine) as well as the observation of the inspection and maintenance conditions.

1.3 Organizational measures

1.3.1 The operating manual (machine and engine) must be available at all times and at the site where the machine is in operating condition.

https://truckmanualshub.com/

1.3.2 In addition to the operating manual (machine and engine) the general applicable and other binding regulations for the prevention of accidents (especially the safety regulations of the German Trade Association - VBG 40) as well as the regulations for environment protection must be observed and the personnel must be accordingly instructed. Traffic regulations must also be observed.

1.3.3 The personnel in charge of working with the machine must read the operating manual (machine and engine) before start of work, especially the chapter concerning safety precautions.
This also applies to personnel working occasionally with the machine, e.g. during maintenance work.

1.3.4 The driver must wear a seat belt during operation.

1.3.5 Personnel working with the machine must not wear long flowing hair, loose clothing or jewelry including rings as this could cause injuries by getting caught up or pulled in by the machine.

1.3.6 All safety and danger plates on the machine must be observed.

1.3.7 All safety and danger plates must be attached to the machine and must be kept in legible condition.

1.3.8 In case of modifications to the machine, especially in case of damages or changes in the operating behavior of the machine which could influence the safety of the machine, stop the machine immediately and inform the competent person in charge about the incident.

1.3.9 Without the manufacturer's consent, do not make any modifications or conversions to the machine which could affect safety. This also applies to the installation and adjustment of safety devices, valves and welding work to supporting parts.

1.3.10 Check hydraulic system, especially hydraulic pipes, at regular intervals for defects. Immediately eliminate any defects found.

1.3.11 The prescribed inspection periods set down in the operating manual (machine and engine) and the maintenance plan must be observed.

1.4 Selection of personnel and necessary qualifications

Fundamental obligations

1.4.1 The machine may only be driven and maintained by personnel selected by the employer for this purpose.

https://truckmanualshub.com/

These persons must:

- have attained the age of 18 years,
- be physically and intellectually suitable,
- have been instructed in the operation or maintenance of the machine and must have demonstrated their ability to their employer,
- must be expected to carry out the work conveyed to them in diligent manner.

1.4.2 Electrical work on the machine may only be carried out by a qualified electrician or persons supervised by a qualified electrician according to the electrotechnical regulations.

1.4.3 Only qualified specialists may carry out work on the transmission mechanism and to the hydraulic system.

1.4.4 Only personnel with special experience and the necessary know-how are permitted to carry out work on the hydraulic system.

1.5 Safety Information for Certain Operating Phases

1.5.1 Normal Operation

1.5.1.1 Other persons must not be transported!

1.5.1.2 Start and drive the machine from the driver's seat only!

1.5.1.3 During starting and switching-off operation observe the control lamps according to the operation manual (machine and engine)!

1.5.1.4 Before commencing work/driving check brakes, steering, signal lights and lights for their functioning!

1.5.1.5 Before moving the machine always check that the attachments are safely stowed so that no accident may occur!

1.5.1.6 Before commencing work make yourself familiar with the working environment. This means observing obstacles on the working site, quality and resistance of the soil ground, undertaking the necessary protection precautions between the building site and the public traffic.

1.5.1.7 Before starting the machine make sure that no person is endangered by the machine!

1.5.1.8 Take measures so that the machine can be operated in a safe and functional manner. The machine may only be operated when all safety devices, e. g. detachable safety devices, sound-absorption, exist and function.

https://truckmanualshub.com/

1.5.1.9 Avoid any work operation which appears to be dangerous!

1.5.1.10 Persons must not be carried in the working equipment, e.g.in the attachments!

1.5.1.11 The operator may only carry out work with the machine when no persons are in the danger zone.
The danger zone means that area near the machine where persons may be injured

- by work-induced movements of the machine,
- by work attachments and devices,
- by loads swiveling out,
- by loads falling down,
- by attachments falling down from the machine.

1.5.1.12 In case of danger to persons the operator must give appropriate warning signs. It may be necessary to stop work.

1.5.1.13 In case of functional defects stop machine immediately and safeguard it. Eliminate defects immediately!

1.5.1.14 Check machine at least once every shift for external visible damage and defects with regard to any changes and to the operating behavior of the engine. Report any defects or changes immediately to the person in charge. If necessary stop the machine immediately and safeguard it.

1.5.1.15 The driver may only slew the attachments overhead driving, operating and working areas if these areas are suitably safeguarded by protective roofing. These protection roofs must offer appropriate safety against loads and goods falling down. In case of doubt, it should be assumed that they are **not** protective roofs.

1.5.1.16 When driving, the attachment is to be kept as close to the ground as possible.

1.5.1.17 Please observe the applicable traffic regulations when driving on public roads, paths or open spaces. The machine must be brought into roadworthy condition in beforehand.

1.5.1.18 In general, switch on lights in poor visibility and during darkness.

1.5.1.19 If lights of the machine are not adequate for the safe execution of certain work, additional lighting must be provided on the working site, especially at dumping points.

1.5.1.20 Should the driver's sight of his driving and working area be restricted due to work-induced influences, he must be given guidance or he must safeguard the working area by a firm barrier.

https://truckmanualshub.com/

1.5.1.21 The person giving guidance must be a reliable person and must be informed about his tasks before commencement of the work.

1.5.1.22 The driver and guide must agree on signals for communication. These signals may only be given by the driver and guide.

1.5.1.23 The guide must be easily recognizable e.g. by wearing warning clothing and must always be in the driver's field of vision.

1.5.1.24 When passing subways, bridges, tunnels, electrical overhead lines make sure that there is adequate clearance!

1.5.1.25 Keep good clearance when working at the edge of quarries, pits, rubbish dumps and embankments to eliminate any danger of the machine plunging down. The contractor or his deputy must stipulate the distance from the edge taking the soil bearing capacity into consideration.

1.5.1.26 The machine may only be used at stationary dumping areas when firmly integrated installation are provided to prevent the machine from running or sliding down.

1.5.1.27 Avoid such work which could have detrimental effect on the stability of the machine.

The stability can be detrimented by:
- overloading,
- too soft ground,
- abrupt acceleration or deceleration of driving movement or working movement,
- reversing out of high driving speed,
- working on slopes,
- driving too quickly round sharp bends,
- driving the machine on rough terrain with the bucket arm swung.

1.5.1.28 Do not drive along slopes in traverse direction. Always carry working equipment and loads near the ground, especially when driving down slopes. Sudden cornering is forbidden!

1.5.1.29 On steep inclines and gradients, the load is to be carried on the uphill side.

1.5.1.30 Before the slope, reduce the speed and always adapt to the local conditions! Always adapt the speed of the machine to the environmental conditions when driving down slopes! Never change into low gear when driving on slopes but before entering the slope!

1.5.1.31 Reversing over a longer period must be avoided!

1.5.1.32 When leaving the machine always safeguard the machine to prevent it from unintentionally rolling away or prevent non-authorized persons from using it!

1.5.1.33 The driver must not leave the machine if the attachments are not lowered or safeguarded.

https://truckmanualshub.com/

1.5.1.34 During work-brakes and after work hours the driver should endeavor to leave the machine on good bearing soil and if possible on level ground and safeguard the machine to prevent it from unintentionally rolling away.

1.5.2 Special work within the exploitation of the machine and elimination of defects during process or work; disposal

1.5.2.1 The prescribed dates for adjustment work, maintenance work and inspections laid down in the operating manual (machine and engine) must be strictly observed. This also applies to details regarding the interchanging of parts/ part equipment. This work may only be executed by skilled personnel.

1.5.2.2 For all work concerning the operation, conversion or adjustment of the machine and its safety devices as well as inspection, maintenance and repair work please observe the switching and stopping operation in accordance with the operating manual (machine and engine) as well as the related instructions for maintenance work.

1.5.2.3 The engine must be switched off before maintenance or repair work is carried out.

1.5.2.4 The stability of the machine or the attachments must be guaranteed at all times during maintenance and repair work.

1.5.2.5 Maintenance and repair work may only be carried out when the attachment is set down on the ground or supported or when equivalent measures against un-intentional movement were taken.
During maintenance and repair work under the bucket arm:
- the bucket arm must be mechanically propped up, e.g. by inserting the bucket arm support (option) (1-1/ arrow).
- the ball block valve for working and additional hydraulic (1-2/arrow) must be closed.
- the swing mechanism must be blocked. Remove the blocking wedge out of the mounting (1-3/arrow), switch to swing blocking (1-4/arrow), and secure with spring pin.

1.5.2.6 If necessary, protect the maintenance area on a large scale.

1.5.2.7 The machine must be protected from unintentionally starting after it was switched off for maintenance and repair work:
- remove the ignition key
- attach warning sign at battery main switch.

This applies especially to works to the electrical equipment.

1.5.2.8 Individual pieces and large assemblies must be carefully secured to hoisting equipment when being substituted to avoid any damage. Only suitable and technical sound hoisting equipment may be used as well as crane equipment with adequate payload. Do not stand or work underneath suspended loads!

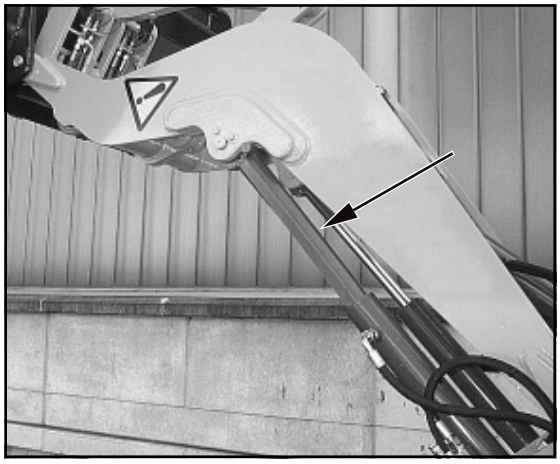

Figure 1-1

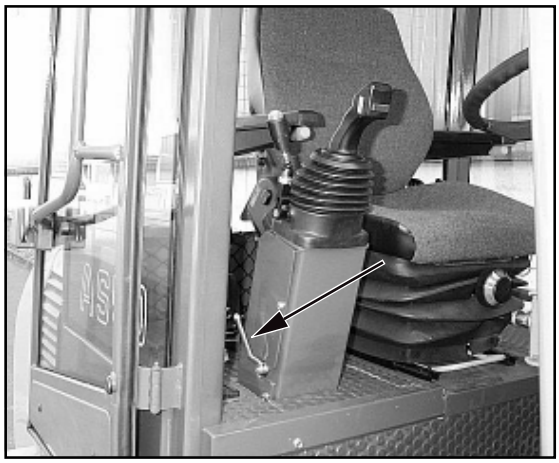

Figure 1-2

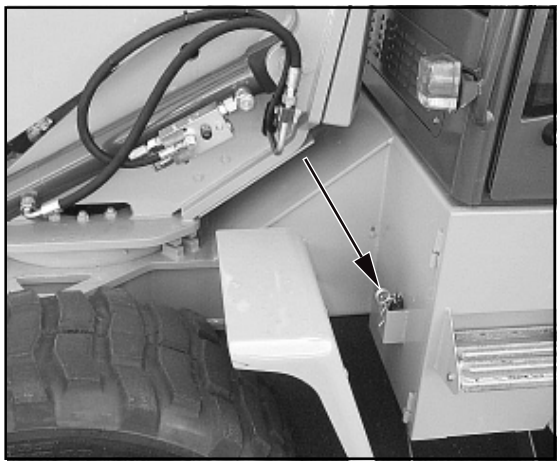

Figure 1-3

https://truckmanualshub.com/

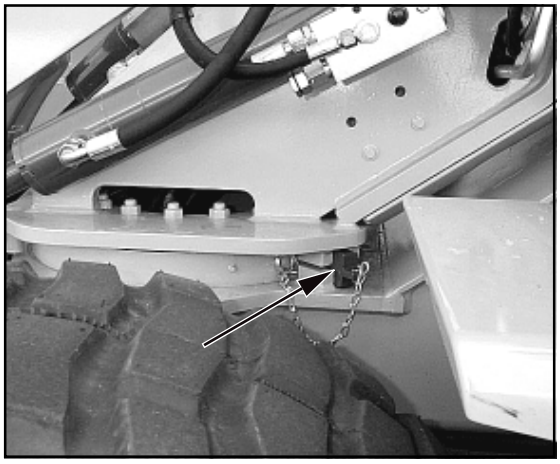

Figure 1-4

1.5.2.9 Only experienced personnel should be entrusted with the securing of loads!
Loads must be secured so that they cannot slip or fall down.

1.5.2.10 Attached loads may only be moved with the machine when the road is graded.

1.5.2.11 When working with hoisting equipment/elevators the slingers may only work with the approval of the driver and from the side of the boom. The driver may only give his consent if the machine is standing still and the working attachment is not being moved.

1.5.2.12 Persons assisting with the guidance of loads and slingers may only stay in visual or communication reach of the driver.

1.5.2.13 The operator must move the load as close to the ground as possible and avoid to swivel the load.

1.5.2.14 The operator may not move the load over the heads of persons.

1.5.2.15 In the case of erection work having to be carried out above normal human height, suitable safety ascent devices and working platforms must be used. Do not use engine parts as climbing and descending facilities. Use safety harnesses when working at very great heights.

All handles, steps, railings, podests, platforms, ladders must be kept free from dirt and ice.

1.5.2.16 Clean the machine, especially connections and screw connections before commencement of maintenance work and make sure that the machine is free from oil, fuel oil or dirt. Do not use aggressive detergents. Use lintless cleaning rags!

1.5.2.17 Before cleaning the machine with water or steam jet (high pressure cleaning unit) or with detergent protect all areas where water/ steam/ detergent may penetrate and affect the functions or safety of the machine by a suitable cover or by applying tape. In particular, such parts as engine components, e.g. injection pump, generator governor, starter are very delicate.

1.5.2.18 After cleaning completely remove all protection covering and tape.

1.5.2.19 After cleaning check all pipelines for fuel, engine oil and hydraulic oil for leakages, loose connections, abrased parts and damages. Eliminate defects immediately.

1.5.2.20 Always fasten screw connections after completion of maintenance and repair work.

1.5.2.21 Should it be necessary to dismantle safety devices during mounting, maintenance or repair work, these safety devices must be re-installed and checked carefully after completed maintenance and repair work.

https://truckmanualshub.com/

1.5.2.22 Make sure that fuel, accessory material and interchanged parts are safely disposed of with no danger to the environment.

1.5.2.23 The machine should be checked by a specialist before commissioning. In addition, it should be checked after essential modifications before it returns to service.

1.5.2.24 The machine must be checked by a specialist once a year. Furthermore, a specialist must check the machine whenever necessary because of operating conditions.

1.5.2.25 The test results must be recorded and kept in the archives at least until the following control date.

1.6 Instructions regarding special categories of danger

1.6.1 Electrical energy

1.6.1.1 Only use original fuses (mandatory current). Immediately switch off machine in case of breakdown of electrical supply.

1.6.1.2 When working near overhead lines and overhead wires, a safety clearance must be kept between the machine and its working equipment in order to prevent sparking over. The safety clearance depends on the nominal voltage of the overhead/wire line. This also applies to the distance between the lines and to the attachments and slung loads.

The following safety clearance must be observed, to meet the above mentioned requirement:

Nominal voltage				Safety clearance
(kilovolt)				(meter)
	up to	1 kV	1,0 m	
above	1 kV	up to	110 kV	3,0 m
above	110 kV	up to	220 kV	4,0 m
above	220 kV	up to	380 kV	5,0 m
unknown nominal voltage				5,0 m

When approaching overhead lines all working movements of the machine must be taken into consideration, e.g. the position of jibs, the swinging of ropes and the dimensions of slung loads.

In addition, attention must be paid to any roughness of soil which could cause an inclined position of the machine thus getting it closer to the overhead line. The fact that overhead lines may swing out during windy weather and may reduce the distance must also be taken into consideration.

https://truckmanualshub.com/

1.6.1.3 In the case of sparking over any work or movement must stop. Instructions to be followed:
bring the machine out of the danger area by lifting or lowering the attachments or by swiveling away or driving the machine out of the area. If this is not possible then the following rules must be observed:

- do not leave the driver's cabin
- warn persons standing near the machine not to approach or touch the machine
- give immediate instructions to have the power cut off
- leave the machine only when it is sure that the electricity in the damaged/contacted power line is switched off so that the line is dead!

1.6.1.4 Work on the electrical system or on the operating system may only be carried out by a skilled electrician or by personnel instructed or supervised by such trained electrician according to electrotechnical regulations.

1.6.1.5 The electrical installation of a machine must be reviewed/inspected at regular intervals. Any defects, e.g. loose connections or scorched cabling, must be eliminated immediately.

1.6.1.6 The cable must be disconnected from the negative pole of the battery before inspection, maintenance or repair of machine parts and components.

1.6.2 Hydraulic systems

1.6.2.1 Only experts may carry out work on the hydraulic system.

1.6.2.2 All pipelines, hoses and screw connections must be checked regularly for leakages and visible damages. Immediately eliminate such defects. Spurting hydraulic oil may cause injuries and fire.

1.6.2.3 Those hydraulic system segments which are to be opened must be made free of pressure before commencement of the repair work according to the assembly group description.

1.6.2.4 The hydraulic pipelines must be correctly laid and connected. Do not get the connections mixed up. The spare parts must be in an accordance with the technical requirements stipulated by the manufacturer. This is, of course, guaranteed when original spare parts are ordered.

1.6.3 Noise

Sound protection equipment must be in protective position during operation of the machine.

https://truckmanualshub.com/

1.6.4 Oil, grease and other chemical substances

1.6.4.1 The relevant safety regulations must be observed when using oil, grease or other chemical substances.

1.6.4.2 Caution when working with hot fuel and other accessory material (danger of burning and scalding).

1.6.4.3 Caution when working with brake fluid and battery acid.

TOXIC AND CAUSTIC!

1.6.4.4 Be careful when working with fuel.

FIRE HAZARD!

- Before refuel, switch off engine and remove ignition key.
- Do not refuel in a closed operating area.
- Never refuel near open fire or sparks.
- Do not smoke during refueling.
- Immediately wipe up spilled fuel.
- Keep machine free of fuel, oil and grease.

1.6.5 Gas, dust, steam, smoke

1.6.5.1 The machine may only be started and run in closed operating areas where there is sufficient ventilation.

The regulations for the respective working site must be strictly observed.

1.6.5.2 Only carry out welding, burning and grinding work on the machine when this is explicitly approved. Otherwise danger of fire and explosion!

1.6.5.3 Before carrying out welding, burning and grinding work clean the machine and its vicinity from combustibles and make sure that the room is adequately ventilated.

Explosion hazard!

1.7 Transport and towing, restart

1.7.1 The machine may only be towed if the brakes and steering function.

1.7.2 Towing may be carried out only by means of an adequately dimensioned towing bar in connection with towing devices.

1.7.3 When towing drive slowly. Persons must not remain near the towing bar.

https://truckmanualshub.com/

1.7.4 When the machine is loaded and transported the necessary auxiliary equipment must be fitted to prevent any unintended movement. The tires must be kept clean of mud, snow and ice so that the machine can drive on the ramp without danger of sliding.

1.7.5 Restart the machine strictly observing the regulations of the operating manual.

1.8 Safety information for the contractor or the contractor's authorized personnel

1.8.1 Organizational measures

1.8.1.1 We would like to emphasize that parts and accessories that are not supplied by us are also not tested and approved by us. Installation and/or use of such products can thus negatively affect the constructional qualities of your loader and thereby reduce the active and passive driving stability. The manufacturer cannot be held responsible for damage that results from the use of non-original parts and accessories.

1.8.1.2 Inform about the location/use of fire extinguishers (1-5/arrow) and first-aid kit (1-6/arrow).

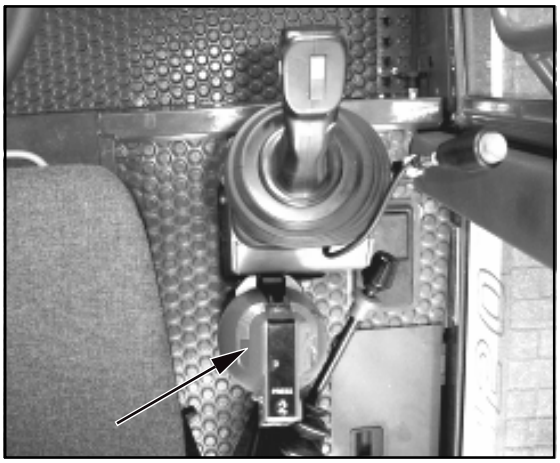

Figure 1-5

1.8.2 Selection of personnel, qualifications; additional duties

1.8.2.1 Only reliable persons are allowed to work on/with the machine. The minimum legal age must be observed.

1.8.2.2 Only employ trained or instructed personnel. Clearly define the competencies of the personnel regarding operation, installation, maintenance and repair work. Ensure that only authorized personnel may work on/ with the machine.

1.8.2.3 Determine the driver's responsibility regarding traffic regulations. Authorize him to refuse instructions given by third parties when these instructions are detrimental to the safety of the driver and the machine.

1.8.2.4 Personnel that are being trained are permitted to operate the loader only if they are under constant supervision of an experienced person authorized by the employer!

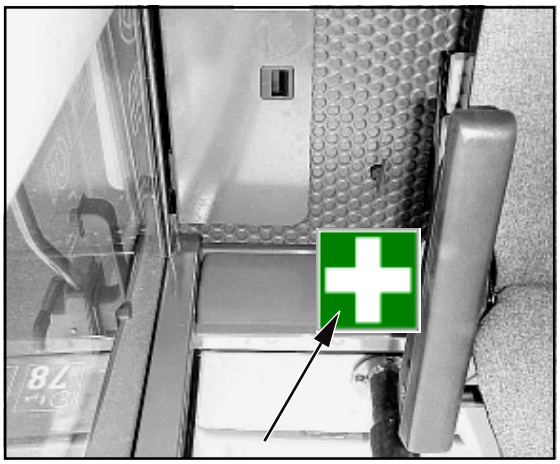

Figure 1-6

https://truckmanualshub.com/

Signs

https://truckmanualshub.com/

2 Signs

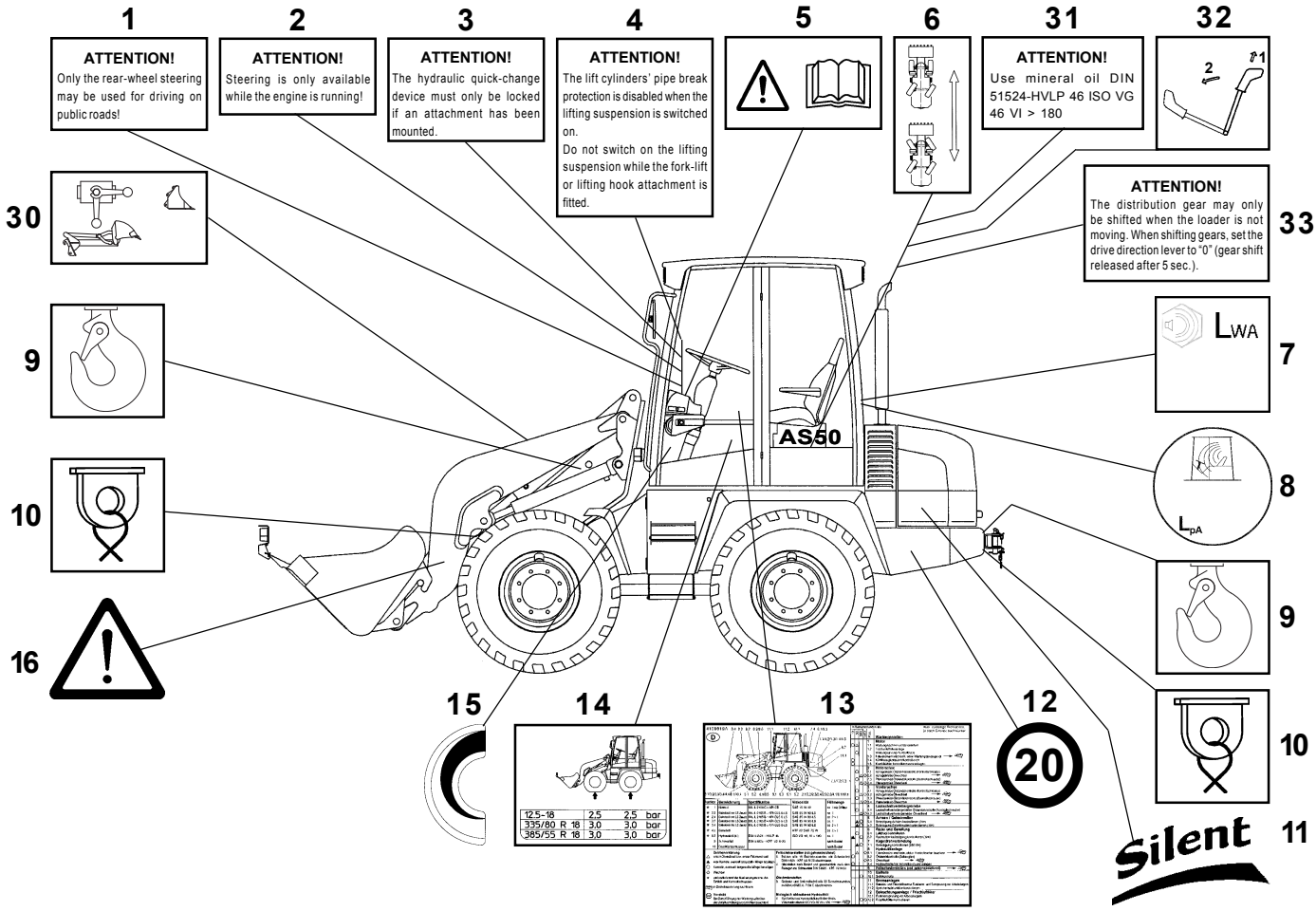

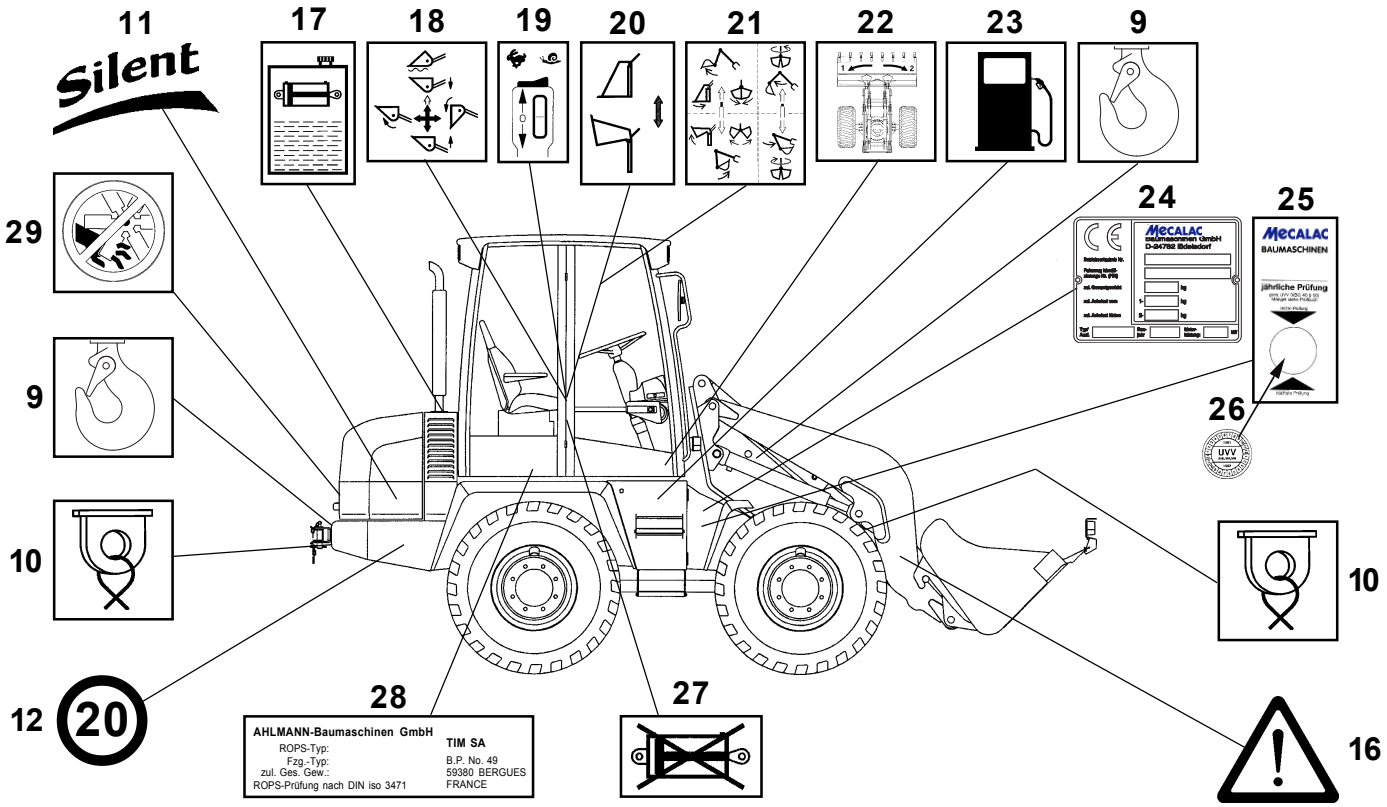

https://truckmanualshub.com/

1	Sign:	**ATTENTION!** - Only the rear-wheel steering may be used for driving on public roads!
2	Sign:	**ATTENTION!** - Steering is only available while the engine is running!
3	Sign:	**ATTENTION!** - The hydraulic quick-change device must only be locked if an attachment has been mounted.
4	Sign:	**» Only for loaders with pipe break protection «** **ATTENTION! -** The lift cylinders' pipe break protection is disabled when the lifting suspension is switched on. Do not switch on the lifting suspension while the fork-lift or lifting hook attachment is fitted.
5	Symbol:	Read and implement instructions in manual before commissioning. Ensure that all other users are aware of safety precautions!
6	Symbol:	Switch steering type (4-6/3) Rear wheel /Four wheel
7	Sign:	Noise level (Chp. 11.17)
8	Sign:	Accoustic pressure (Chp. 11.17)
9	Symbol:	Lifting hook
10	Symbol:	Lashing points
11	Sign:	Low noise emission equipment
12	Sign:	Max. speed
13	Sign:	Maintenance plan
14	Sign:	Tire pressure
15	Symbol:	Heater
16	Symbol:	Dangerous area, keep clear
17	Symbol:	Hydraulic oil tank
18	Symbol:	Manual lever for main hydraulics (4-7/2)
19	Symbol:	Hydraulic gear shift (4-7/1 and 4-7/3) Hare symbol - road Snail symbol - field Direction - forwards - 0 - reverse
20	Symbol:	Manual lever for auxilliary hydraulics (4-7/6)
21	Symbol:	**» Only for loaders with second auxiliary hydraulics circuit «** Manual lever for auxilliary hydraulics (4-7/6)
22	Symbol:	Swivel joint
23	Symbol:	Fuel tank
24	Type plate:	Machine (includes vehicle ID number)
25	Sign:	Annual inspection to TC standards
26	Sign:	TC plaque
27	Symbol:	Stop valve for main/auxilliary hydraulics - closed
28	Type plate:	Operator´s cabin
29	Symbol:	Do not open while engine is running
30	Symbol:	**» Only for loaders with front-end excavator «** Switching attachment (at the tip cylinder)
31	Sign:	Use mineral oil DIN 51524-HVLP 46 ISO VG 46 VI > 180
32	Symbol:	**» Only for loaders with second auxiliary hydraulics circuit «** Pilot valve fold-away
33	Sign:	**» Only for fast loaders «** **ATTENTION!** - The distribution gear may only be shifted when the loader is not moving. When shifting gears, set the drive direction lever to "0" (gear shift released after 5 sec.).

https://truckmanualshub.com/

https://truckmanualshub.com/

Protection against theft

https://truckmanualshub.com/

Figure 3-1

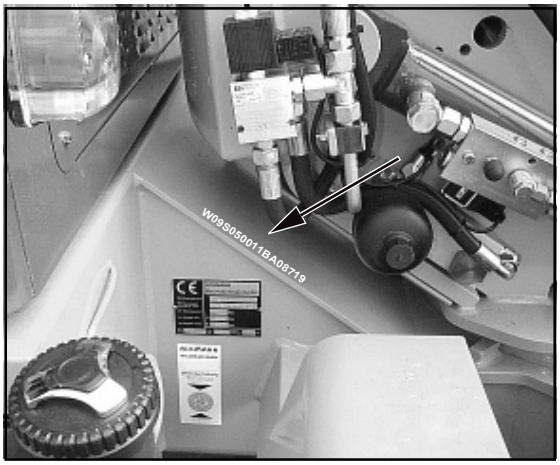

Figure 3-2

Figure 3-3

3 Protection against theft

Instances where construction machines were stolen have considerably increased in recent years.
To make it possible for the police, customs and other authorities to find and identify machines much faster, **MECALAC** construction machines are fitted with the following identifying features:

3.1 Identifying features on the loader

(1) Loader type plate (3-1/arrow). Among other details, the loader type plate also gives the 17-digit **FIN** number (truck identification number) starting with W09.
(2) The **FIN** number is also stamped into the front part (3-2/arrow) of the loader.
(3) ROPS plate (3-3/arrow).
This plate gives the name of the manufacturer as well as details on the ROPS type, the loader type and the permissible overall weight.

3.2 Parking the loader

(1) Turn the steering wheel fully to the left or the right.

(2) Apply the parking brake (4-7/4).

(3) Tip the quick-change device until
- the tines of the bucket,
- the tines of the fork-lift attachment or
- the boom of the lifting hook

is placed on the ground.

(4) Close the ball block valve for the working and auxiliary hydraulics (1-2/arrow).

(5) Set the drive switch (4-7/3) to "forward" or "reverse".

(6) Set hydraulic drive stage "I" (4-7/1).

(7) Remove the ignition key.

(8) Remove the battery main switch (4-6/6).

(9) Switch on the working lights (4-8/1). *

(10) Switch on the warning beacon (opt.) (4-8/11). *

(11) Switch on the hazard flasher (4-8/10). *

(12) Set the steering column switch (4-5/1) to "High beams". *

(13) Lock both doors.

(14) Lock the engine hood.

(15) Lock the tank lid.

* These measures are to make spectators aware of the unusually lit machine if it is hot-wired.

https://truckmanualshub.com/

3.3 Transponder for drive-away interlock

(Option)
The "transponder for drive-away interlock" is an electronic drive-away interlock that deactivates vital loader functions. If the transponder (e.g. a tag at the iginition key) is taken away from the receiver unit (in the immediate vicinity of the ignition lock), these vital functions are interrupted.

Advantages if an event insured against occurs:

The transponder for drive-away interlock meets the new, stricter requirements of the insurance companies.
Ask your insurance company for the appropriate details!

https://truckmanualshub.com/

https://truckmanualshub.com/

Description

https://truckmanualshub.com/

4 Description

4.1 Overview

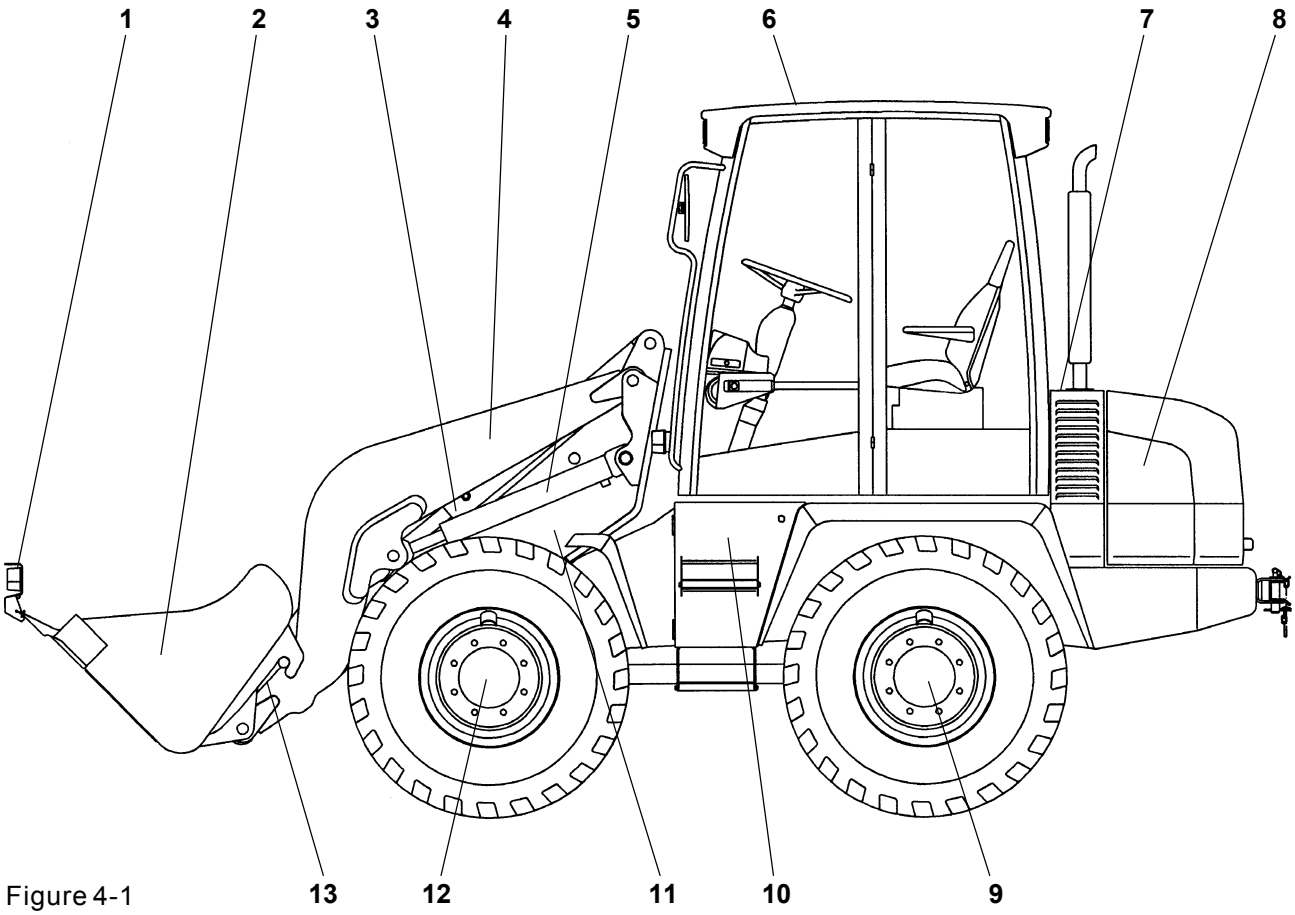

Figure 4-1

1 - Bucket protection
2 - Bucket/attachment
3 - Tip cylinder
4 - Bucket arm
5 - Lift cylinder
6 - Operator's cabin
7 - Hydraulic oil reservoir/filling cap
8 - Drive unit
9 - Rear axle
10 - Battery/tool compartment
11 - Revolving seat
12 - Front axle
13 - Quick-change device
14 - Fuel tank, ladder
right-hand side of vehicle (not shown)

https://truckmanualshub.com/

4.2 Loader

Undercarriage

The axial piston pump for the hydraulic drive is driven by the diesel engine. Pressure hoses for extremely high pressure connect the axial piston pump with the axial piston engine. The axial piston engine is flanged to the axle distribution gear. The torque of the axial piston engine is transmitted by the cardan shaft to the front and rear axles, both with planetary gears.

CAUTION

The maximum speed of the axial piston engine is governed by settings made at the factory. Any adjustment will render the warranty invalid.

The front axle is equipped with a wet lamella self-locking differential (locking value 45%).
As standard, the rear axle is delivered without a self-locking differential. A self-locking differential (locking value 45%) is special equipment.

Tires

The following tires are permitted:
12.5-18
15.5/55 R 18
and 335/80 R 18

All four tires are of equal size. For the travel direction, if available, see Figure 4-2.

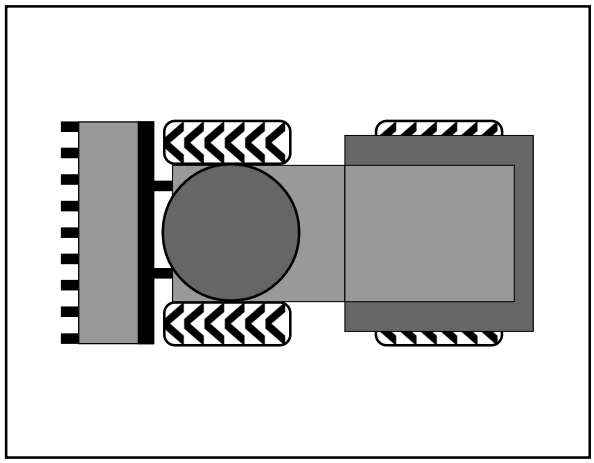

Figure 4-2

Steering system

The power for the hydrostatic steering system is supplied via a priority valve from a gear-type pump. With a minimum of effort on the steering wheel, the oil flow is directed by a steering unit into the steering cylinder.
Four-wheel and rear-wheel steering can be selected.

Emergency steering

The hydrostatic steering system can also be used in a limited way if the diesel engine fails. The loader can be steered using a considerable amount of manual effort.

NOTE

See chapter 7, “Towing the loader”.

Electrical system

consisting of:
2 main headlights, front
2 work lights, front
2 work lights, rear
Hazard flasher system

https://truckmanualshub.com/

Figure 4-3

Turn indicator lights
Contour lights
Brake lights
Tail lights
Interior lighting
License plate lights
(only for fast machines)
7-pole socket, front
Rear window heater
Signal horn
Wiper/washer, front and rear
Interval wiper, front
Back-up alarm (opt.)
Beacon light (opt.)
Radio (opt.)

(Opt. = optional features)

Battery

The battery/tool compartment contains a maintenance-free battery (4-3/arrow) according to DIN with an increased cold start performance. The batteries are to be kept clean and dry. Lightly grease the terminals with acid-free and acid-resistant grease.

CAUTION

Electric arc welding on the loader is to be only performed when the battery terminal connections have been disconnected.

First remove the negative terminal connection, then the positive. When reconnecting, proceed in reverse order.

Fuel supply system

The fuel tank is located on the right frame side bar. An electrical fuel gauge (4-8/7) in the operator's cabin monitors the fuel level in the tank. The filler neck is located on the right side in the cabin access area.

Air filter device

Dry air filter device with safety cartridge and dust discharge valve.

Lift and tip devices

- Two lift cylinders and
- one tip cylinder

are fed by two double-acting gear-type pumps via a control valve.
All movements of the bucket arm, the bucket, the attachments and the quick change device are controlled from the operator's seat by pilot valves. The pilot valves provide continuous speed control from "slow" to "fast".

https://truckmanualshub.com/

Swivel mechanism and axle support

Two single-acting swing cylinders are fed by a separate gear-type pump via a control valve. The revolving seat is connected with the cylinders by a chain drive. There is no play at all. The swivel and the lifting movements of the bucket arm can take place simultaneously and independently.

The bucket assembly can be swung 90° to the left or right.

When the bucket assembly is swivelled, the axle support is automatically switched on when the bucket arm setting is ca. 30°. The support cylinder on the load side, acting on the rear axle, is thus loaded with hydraulic pressure from the load pressure via the support valve; it acts counter to the swivelled load.

NOTE

The axle support is deactivated when the arm is swung back.

Float position

The loader is equipped with a floating position function. To use this, the hand lever (4-7/12) must be unlocked (1-2/ arrow) and must be pressed beyond its pressure point into the forward poisition. In this position, the hand lever is locked in and can be unlocked again by pressing it in the opposite direction.

DANGER

The floating position function must only be switched on in the lowermost bucket arm position.

NOTE

If the loader has a pipe break safety device, the floating position function is deactivated.

Pipe break safety device

(option)
A pipe break safety valve is installed underneath each lift and tip cylinder. In the event of a pipe or hose break in the lift and/or tip system, the movements of the bucket arm and the tipping rod are blocked until the damage is repaired.

ATTENTION

The lift cylinders' pipe break protection is disabled when the lifting suspension is switched on.

https://truckmanualshub.com/

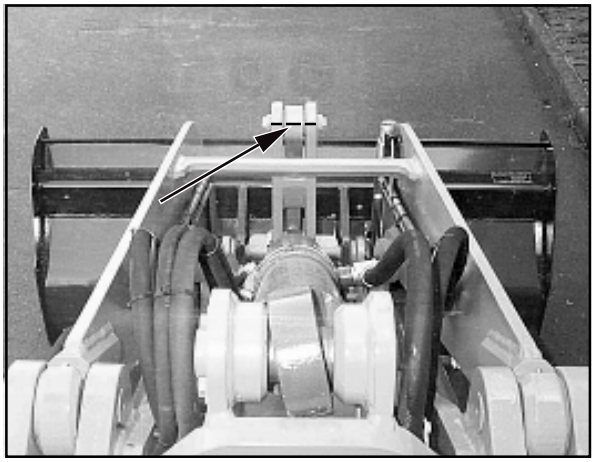

Figure 4-4

Lifting device suspension

(option)
When the loader must be driven over larger distances, especially with a loaded bucket, the lifting device suspension (4-8/15) should be activated to avoid resonant motion. This becomes even more important with increasing unevenness of the terrain and increasing speed of the loader.

Bucket position mark

The driver can see the position of the bucket by the coloured markings on the reversing rod and the reversing lever. When the coloured marks (4-4/arrow) form a line, the bucket floor is parallel to the ground.

Equipment

Operator's cabin

Standard ROPS design with ECC conformity certificate. Comfortable entry and exit from both sides, good all-round vision, lockable doors, sun visor, front and rear windscreen wipers/washers, rear window heater, multi-speed heating/ventilation system, heating and ventilation filters.

Driver's seat

The driver's seat has a hydraulic suspension and is provided with weight compensation. Horizontal and seat height positioning as well as for backrest and seat inclination permit optimum individual adaptation. The seat belt, the fold-up arm rests and the ergonomically formed seat and back rest assure a safe and comfortable seat position.

4.3 Changing a wheel

(1) Park the machine on solid ground.

(2) Set the drive switch (4-7/13) to “0”.

(3) Apply the parking brake (4-7/14).

(4) Changing a front wheel:
- Lift and mechanically prop up bucket arm [e.g. by inserting the bucket arm support (option) (1-1/arrow)] and lower bucket arm until it rests on the bucket arm support.
- Block the swivel mechanism by inserting the blocking wedge (1-3/arrow) in the swivel blocking device (1-4/arrow) and secure using the spring cotter pin.

(4) Changing a rear wheel:
Place the attachment on the ground.

https://truckmanualshub.com/

(5) Turn the ignition key (4-8/19) to the left to the “0” position.

(6) Secure the hand lever for the working and auxiliary hydraulics (1-2/arrow).

(7) Secure the machine by placing two wedges under one wheel of the axle where **no** wheel is to be changed.

(8) Loosen the wheel nuts of the wheel to be changed until further loosening does not require a large torque.

(9) Fit an appropriate jack (minimum capability = 2.0 t) from the side under the axle bridge in the vicinity of the axle fixture so that it is centered and cannot slip. Lift the front/ rear axle from the side until the wheel does not have any contact to the ground.

DANGER

- Block the jack by a suitable support to prevent any penetration into the ground.
- Make sure that the jack is fitted well.

(10) Loosen the wheel nuts completely and remove them.

(11) Lower the loader slightly with the jack until the wheel bolts are free.

(12) Push off the wheel from the wheel hub by moving it back and forth. Remove the wheel and roll it aside.

(13) Push the new wheel on to the planetary axle.

NOTE

- Pay attention to the profile position.
- If the profile position of the replacement wheel does not fit, the replacement wheel must only be used until an appropriate one can be fitted as soon as possible.

(14) Fit the wheel nuts by hand: if necessary, grease them beforehand.

(15) Lower the front/rear axle using the jack.

(16) Tighten the wheel nuts with a torque wrench to 300 Nm.

CAUTION

Tighten the wheel nuts after the first 8-10 operating hours.

https://truckmanualshub.com/

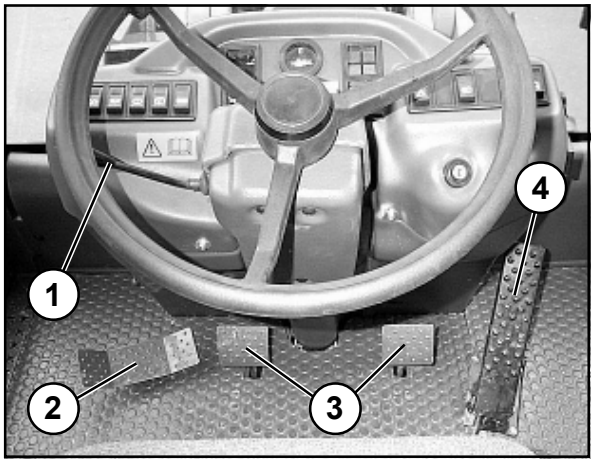

Figure 4-5

4.4 Controls

1 - Steering column switch
- to the front: Turn indicator, right
- to the rear: Turn indicator, left
- up - Low beam
- down - High beam
- pushbutton - Signal horn

2 - Foot pedal for swiveling
3 - Double pedal for service brake/inching
4 - Accelerator pedal

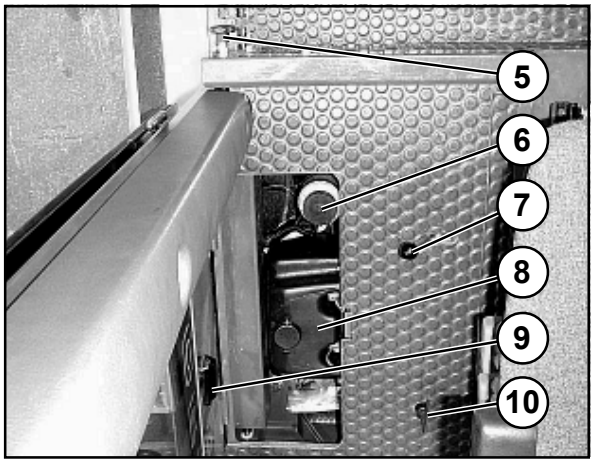

Figure 4-6

5 - Door handle
6 - Brake hydraulic oil reservoir
7 - Switch lever for steering
8 - Water tank for wiper system
9 - Maintenance door
10 - Battery main switch

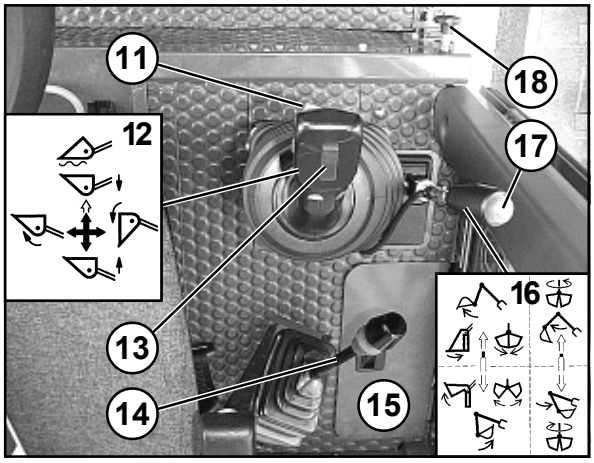

Figure 4-7

11 - Hydraulic driving steps:
- right - speed I: slow
- left - speed II: fast

12 - Pilot valve for working hydraulics
13 - Drive switch:
Forward/0/reverse
14 - Parking brake hand lever
15 - Maintenance door
16 - Pilot valve for auxiliary hydraulics
17 - Push-button auxiliary hydraulics (option)
18 - Door handle

https://truckmanualshub.com/

4.5 Instrument panel

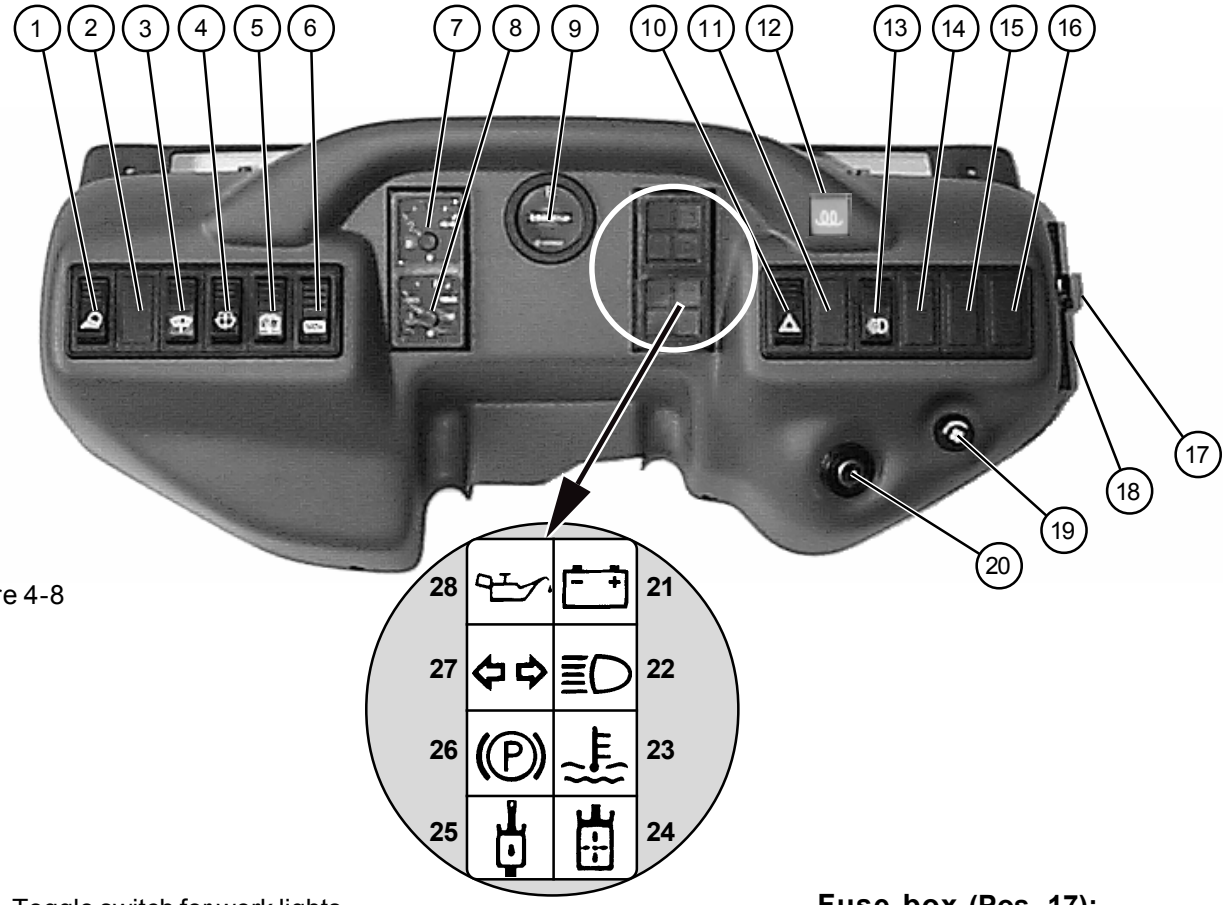

Figure 4-8

1 - Toggle switch for work lights
2 - Push-button: release of quick-change device
3 - Toggle switch for interval wiper, front
4 - Push-button: front washer
5 - Toggle switch/push-button for rear wiper/washer
6 - Toggle switch for rear window heater
7 - Fuel gauge
8 - Engine oil temperature display
9 - Operating hours meter
10 - Toggle switch for hazard flasher system
11 - Toggle switch for beacon light (optional)
12 - Control lamp: Preheating (optional)
13 - Toggle switch for road lights
14 - Gear switch (only for fast loaders)
15 - Not assigned
16 - Toggle switch for lifting device suspension (optional)
17 - Socket
18 - Fuse box
19 - Rotary switch for heating/ventilation system
20 - Starter switch
21 - Control lamp for battery charging
22 - Control lamp for high beam
23 - Control lamp for cooling water temperature
24 - Hydraulic oil filter clogging indicator
25 - Control lamp for hydraulic oil temperature
26 - Control lamp for parking brake
27 - Control lamp for directional indicator
28 - Control lamp for engine oil pressure

Fuse box (Pos. 17):

10	9	8	7	6
14	13	12	11	
5	4	3	2	1

1	Traction drive	10,0 A
2	Turn indicator	7,5 A
3	Hydraulics, brake lights	20,0 A
4	Heater	20,0 A
5	Rear window heater	20,0 A
6	High beams	15,0 A
7	Low beams	15,0 A
8	Tail light, left parking light, left	5,0 A
9	Tail light, right parking light, right	5,0 A
10	Hazard flasher	15,0 A
11	Windshield wiper/washer	20,0A
12	Engine cut-off	5,0 A
13	Working lights	20,0 A
14	Warning beacon (option), signal horn, socket, interior lighting	30,0A

https://truckmanualshub.com/

https://truckmanualshub.com/

Operation

https://truckmanualshub.com/

5 Operation

5.1 Pre-use check

- Engine oil level (see Engine Operating Instructions)
- Brake fluid level
- Hydraulic oil level
- Fuel level
- Tire pressure
- Profile depth
- Battery fluid level
- Lighting system
- Seat position
- Swing mechanism lock (1-4/arrow); remove if unnecessary
  » only if work is to be commenced «
- remove bucket arm prop [(e.g. bucket arm support (option) (1-1/arrow)] if necessary
- Ball block valve for the working and auxiliary hydraulics (1-2/arrow); open if necessary
  » only if work is to be commenced «
- General status of loader , e.g. leaks

5.2 Starting up

5.2.1 Starting the diesel engine

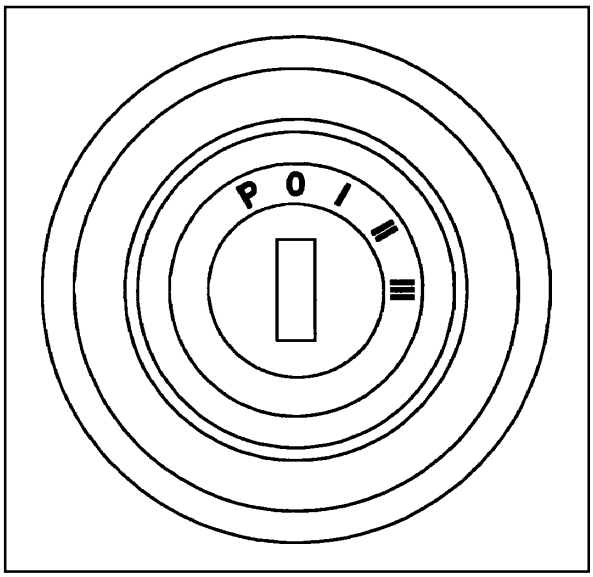

Figure 5-1

(1) Pull the lever for the parking brake (4-7/14).

(2) Insert the battery main switch (4-6/10).

(3) Set the drive switch (4-7/13) to position “0” (starter interlock!).

(4) Insert the ignition key into the starter switch (4-8/19) and turn the key to the right to the position “I” (5-1).

NOTE

- The generator lamp, parking brake indicator lamp and engine oil pressure lamps light up. The fuel gauge, engine oil temperature gauge and operating hour meter function.

- Start the engine in the neutral position.

(5) Turn the ignition key to the right to position “III”. As soon as the engine starts, release the ignition key.

https://truckmanualshub.com/

NOTE

- If the engine has not started after two attempts, determine the cause using the malfunction table in the Engine Operating Instructions.

- For operation at extremely low temperatures, see the Engine Operating Instructions.

- The clogging indicator for the hydraulic oil filter (4-8/23) may light up prematurely after a cold start. It will go out when the hydraulic oil warms up. Operate the loader at a **low** speed until the indicator lamp goes out. Never subject the loader to full loads in this state.

5.2.2 Winter operation

CAUTION

If the outside temperature is below 0 °C, the machine must be properly "warmed up" to avoid damage to certain assemblies. To do so, actuate all cylinders (lifting, tipping and swivelling cylinders) for some time (depending on the ambient temperature) with the machine idling.

Proper operation of the machine can only be guaranteed even for subzero temperatures if the following measures have been taken:

5.2.2.1 Fuel

At low temperatures, paraffin precipitating from the fuel can cause the fuel system to clog up.
For this reason, always use winter diesel fuel (suitable for temperatures down to -15 °C) when the outside temperature is below 0 °C.

NOTE

The fuelling stations normally start offering winter diesel fuel in good time before the cold season starts. Often, they offer diesel fuel that can be used down to temperatures of -20 °C (super-grade diesel fuel).

If the temperature is below -15 °C or -20 °C, paraffin oil must be added to the diesel fuel. For the mixture ratio, refer to the diagram (5-2).

I = Summer diesel fuel
II = Winter diesel fuel
III = Super-grade diesel fuel

CAUTION

Only mix the ingredients in the tank! First, fill in the required amount of paraffin oil, then top up with diesel fuel.

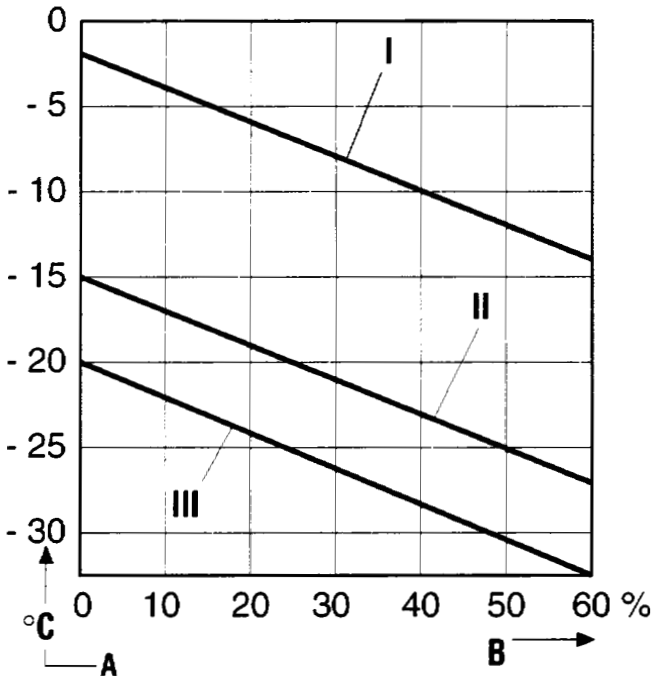

Figure 5-2

https://truckmanualshub.com/

5.2.2.2 Changing the engine oil

See the operating instructions for the engine and the operating instructions for the machine (section 8.2.5).

5.2.2.3 Changing the oil in the hydraulic system

CAUTION

The viscosity of the hydraulic oil changes according to the temperature; therefore, the ambient temperature in the place where the machine will be used determines what viscosity class (SAE class) must be chosen. If the hydraulic oil used matches the expected ambient temperature, optimum operating conditions can be attained. Therefore, use hydraulic oil of an appropriate grade if required.

See section 8.2.7 for the oil change procedure required for the hydraulic system.

5.2.2.4 Anti-freezing agent for the windshield washer system

CAUTION

If the temperature is expected to drop below 0 °C, add a sufficient amount of anti-freezing agent to the water in the windshield washer system (4-6/8) to prevent it from icing up.
Heed the instructions provided by the manufacturer for the mixture ratio.

5.2.3 Driving the loader on public roads

CAUTION

- Driving on public roads is **only** permitted with a standard, multipurpose OR lightweight material bucket and with bucket protection.
- A warning triangle and a first-aid kit must be provided in the loader.

The driver of the machine must possess a valid driver's license.

The driver must carry his driving license (original) with him as well as the operating permit (original).

https://truckmanualshub.com/

Before driving in public traffic, the following safety measures for public road traffic are to be taken:

(1) Lower the bucket arm until the lowest point of the bucket arm or the bucket is at least 30 cm above the road (5-3).
(2) Close the ball block valve for the working and auxiliary hydraulics (1-2/arrow).
(3) Block the swivel mechanism by inserting block wedges (1-3/arrow) in the swivel mechanism lock (1-4/arrow) and secure with the spring cotter pin.
(4) Cover the bucket cutting edge and teeth with the bucket protector (5-3/arrow).
(5) Insert the plug of the edge protector into the socket (5-4/arrow).
(6) Check that the lighting system functions correctly.
(7) Close both doors.
(8) Switch the toggle lever for the steering system (4-6/7) to the “Rear-wheel steering” position.

Figure 5-3

DANGER

- Driving on public roads with the bucket filled is forbidden.
- The working searchlights must be switched off (4-8/1).

(9) Release the parking brake (4-7/14).
(10) Preselect hydraulic travel speed "II" (4-7/11).
(11) Preselect the travel direction (4-7/13).
(12) Press the accelerator pedal (4-5/4).

NOTE

The loader starts. The driving speed is determined by the position of the accelerator pedal.

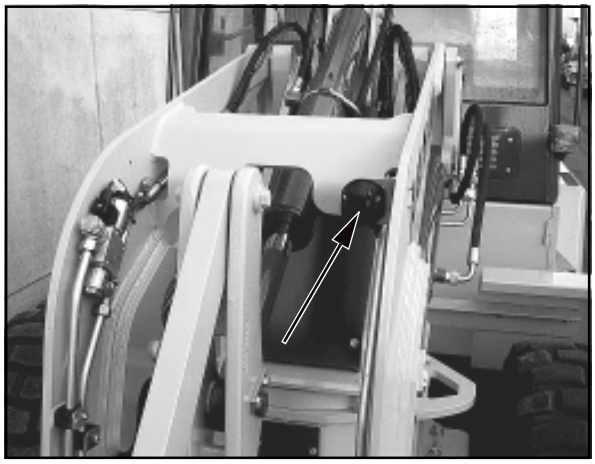

Figure 5-4

CAUTION

- The service brake is activated by depressing the brake pedal.
- Changing the driving direction (forward/reverse) during driving is **not** allowed to avoid any danger to other road users.

5.2.4 Working with the loader

Normally, all work is executed in hydraulic drive stage **"II"** (4-7/11).

CAUTION

For special tasks which ask for a more sensitive control of the speed or a higher engine speed at re-duced driving speed, hydraulic drive stage "I" (4-7/11) can be selected. The driving speed can thus be reduced to 6 km/h (slow loaders) or 8 km/h (fast loaders).

To attain full performance, the combined action of propulsion and the hydraulic loader functions is necessary. It is up to the operator to control the available power using the accelerator, the inching function and the hand lever for the hydraulic loader functions.

https://truckmanualshub.com/

NOTE

The hydraulic travel stage can be switched from I to II or vice versa while driving. However, switching from hydraulic travel speed II to I when driving at high speeds is not recommended because the loader is slowed dramatically.

(1) Close both doors.

(2) Release the parking brake (4-7/14).

(3) Define the hydraulic travel speed (4-7/11).

(4) Select the desired travel direction (4-7/13).

(5) Press the accelerator pedal (4-5/4).

NOTE

- The travel speed and the pushing force are altered exclusively by depressing the accelerator pedal.
- When driving up gradients, the travel speed decreases in spite of full throttle in favor of the pushing force.
- The pushing forces and travel speeds are the same in forward and reverse.

CAUTION

- The hydraulic quick-change device may only be actuated when an attachment is present.
- If the control lamp for the hydraulic oil temperature (4-8/24) lights up during operation, the machine must be switched off immediately, the cause must be determined by a hydraulics expert and the malfunction must be eliminated.

DANGER

If it is necessary during special types of work to drive with the bucket arm swung, the bucket must be kept close above the wheel and the travel distance must be kept as short as possible If a wheel is raised off the ground by the stabilizer equipment due to rough terrain, the bucket arm must be briefly swiveled in the direction of travel so that the axle lock is deactivated.

https://truckmanualshub.com/

5.2.5 Heating and ventilation system

5.2.5.1 Adjusting the amount of air

(1) Turn the rotary switch (5-5/ arrow) for the blower to position 0, 1 or 2, depending on the amount of air desired.

Figure 5-5

(2) Adjust the direction of the air flow by means of the lateral nozzles (5-6/arrow and 5-7/1).

Figure 5-6

5.2.5.2 Switching on the heater

(1) Depending on the heating requirement, turn the ball valve (5-7/1) to a vertical or horizontal position.

NOTE

Ball valve vertical - cold.
Ball valve to front - warm.

(2) Adjust the amount of air as described under 5.2.5.1.

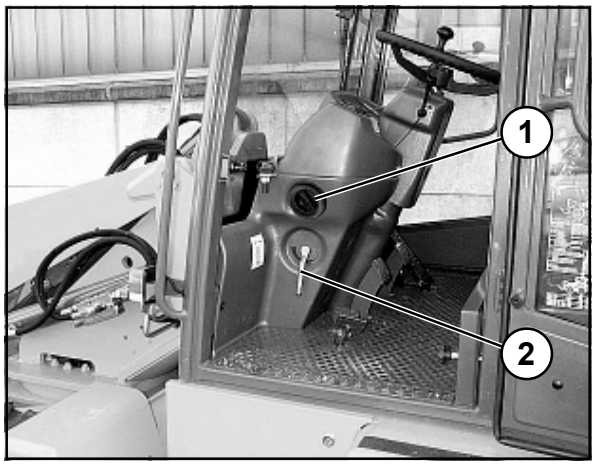

Figure 5-7

https://truckmanualshub.com/

5.3 Stopping loader operation

5.3.1 Parking the loader

(1) Stop the loader on solid ground; if possible, not on a slope.

(2) Place the bucket or the front-mounted attachment on the ground.

(3) Set the drive switch (4-7/13) to “0”.

(4) Apply the parking brake (4-7/14).

DANGER

If parking on a slope or gradient cannot be avoided, wheel chocks must be placed on the sloping side of the front axle wheels **in addition to** applying the parking brake.

5.3.2 Switching off the diesel engine

CAUTION

If the diesel engine is very hot or has been under heavy use, let the engine idle for a short time before switching it off.

Turn the ignition key to the left to the “0” position (5-1) and remove it.

NOTE

In the „P position, the parking light and the dashboard illumination remain switched on and a warning signal is issued.

5.3.3 Switching off the heating and ventilation system

(1) Shut off the warm air supply (5-7/2).

(2) Turn the rotary switch (5-5/arrow) to the “0” position.

5.3.4 Leaving the loader

(1) Lock the hand lever for the working and auxiliary hydraulics (1-2/arrow).

(2) Remove the ignition key.

(3) Remove the battery main switch (4-6/10).

(4) Close the windows and lock the doors.

https://truckmanualshub.com/

5.4 Adjusting the operator's seat

(1) Use the ratchet handle (5-8/3) to adjust the suspension. To do so, pull the ratchet lever in longitudinal direction and simultaneously turn it to "**+**" or "**-**".

(2) Use the knob (5-8/2) to adjust the seat suspension to the driver's weight. To do so, sit down on the seat, pull out the knob and move it to the right or left.

(3) The operator's seat can be adjusted in the horizontal direction to suit the driver's requirements by actuating the lever (5-8/1) and moving the seat forward or backward.

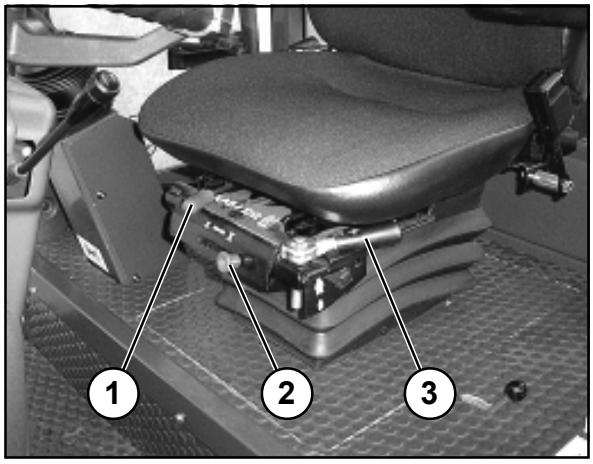

Figure 5-8

(4) Adjust the height of the arm rest by turning the knob (5-9/2).

(5) Fasten the seat belt (5-9/1) when you are working with the loader.

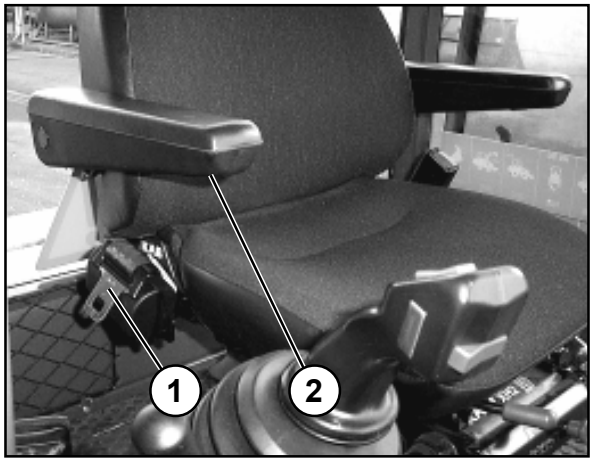

Figure 5-9

5.5 Switching the steering

CAUTION

- The wheels of the rear axis must be in the straight position before the switching lever (5-10/arrow) is activated.
- The steering can be switched **only if the machine is standing still**. To switch the steering type, move the hand lever inwards (rear-axle steering) or outwards (four-wheel steering).

Figure 5-10

https://truckmanualshub.com/

https://truckmanualshub.com/

Attachments

https://truckmanualshub.com/

Figure 6-1

6 Attachments

6.1 Mounting and dismounting attachments without hydraulic connections

6.1.1 Standard/lightweight bucket

Mounting

(1) Bring the bucket to its lowest position and tip the quick-change device.

(2) Drive the loader up to the bucket (6-1).

Figure 6-2

(3) Pick up the bucket using the quick-change device and, by simultaneously tilting the quick-change device, raise the bucket until the quick-change device is next to it (6-2).

(4) Lock the bucket (6-3) by using the hand lever of the auxiliary hydraulic system (4-7/16).

(5) Check the connection and the lock on both sides.

DANGER

Both bolts of the quick-change device must fit in the boreholes of the bucket support and must be clearly visible (6-3/arrow).

Dismounting

(1) Place the bucket firmly on the ground.

(2) Press the release button for the quick-change device (4-8/2) and, while keeping the button depressed, unlock the bucket by using the hand lever for the auxiliary hydraulics (4-7/16).

CAUTION

The hydraulic quick-change device must only be **locked** when an attachment has been mounted.

(3) Tilt the quick-change device and reverse out.

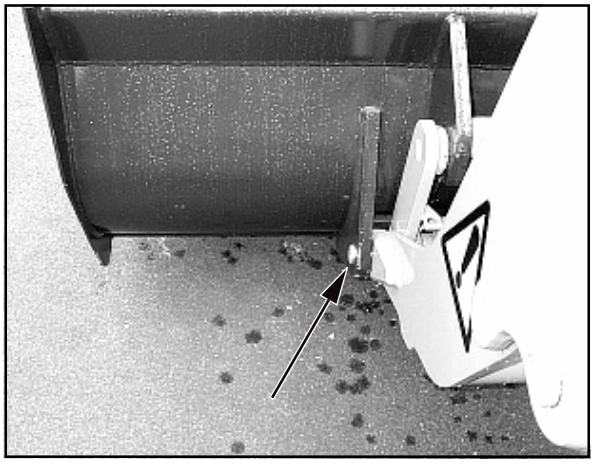

Figure 6-3

NOTE

The type label is on the rear of the bucket, on the right below the cross arm.

https://truckmanualshub.com/

6.1.2 Fork-lift attachment

NOTE

- Illustration 6-4 shows the truck with a fork-lift attachment.
- Mounting and dismounting are carried out in the same way as for the standard/lightweight bucket (chapter 6.1.1).

Figure 6-4

DANGER

- Both bolts of the quick-change device must fit in the boreholes of the fork-lift attachment and must be clearly visible (6-5/arrow).
- Distribute the weight equally on both fork tines and secure it against moving and falling off.
- Rest the load at the rear of the fork and tilt the fork lift attachment.
- Position both fork tines at an equal distance from the center (6-6/arrows) and lock them.

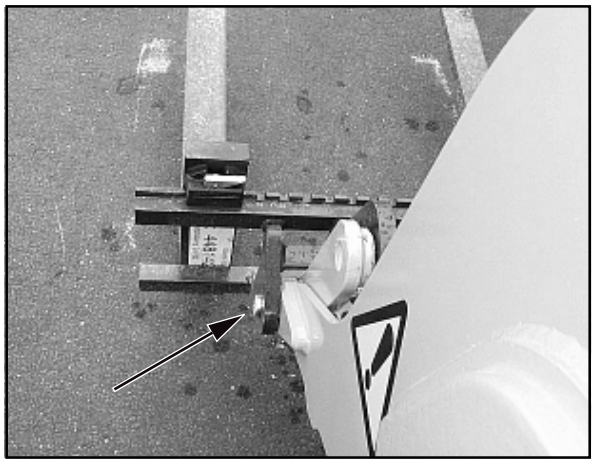

Figure 6-5

CAUTION

The hydraulic quick-change device must only be **locked** when an attachment has been mounted.

NOTE

- The fork tines are locked correctly when the two tiltable locking levers are fully positioned on the fork carrier.
- The type plate is on the rear of the fork-lift attachment on the upper fork support.

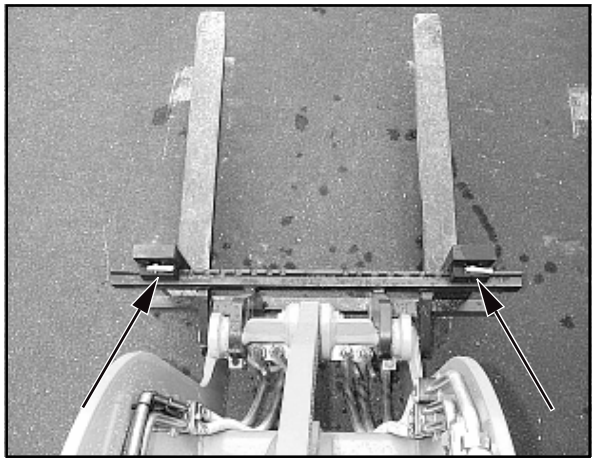

Figure 6-6

https://truckmanualshub.com/

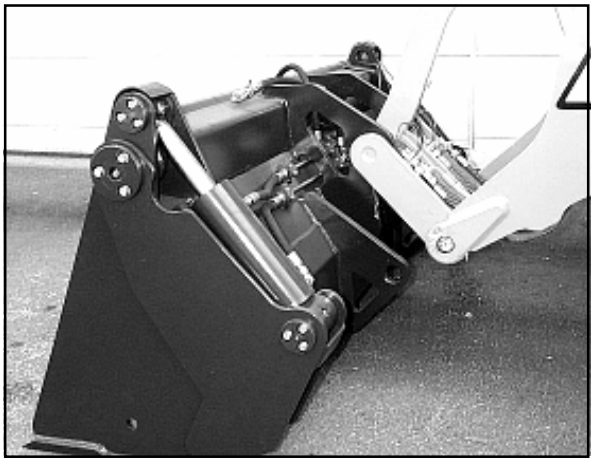

Figure 6-7

6.1.3 Lifting hook

NOTE

Mounting and dismounting are carried out in the same way as for the standard bucket (chapter 6.1.1).

DANGER

- Both bolts of the quick-change device must fit in the boreholes of the lifting hook attachment and must be clearly visible.
- Check the safety flap on the crane hook for proper functioning.

CAUTION

The hydraulic quick-change device must only be **locked** when an attachment has been mounted.

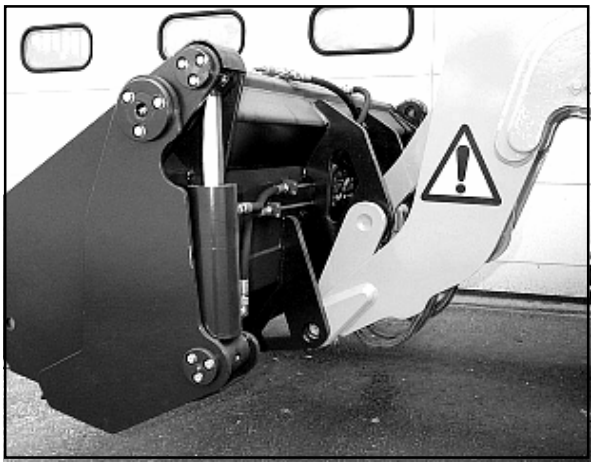

Figure 6-8

6.2 Mounting and dismounting attachments with a hydraulic connection

6.2.1 Multi-purpose bucket

Mounting

(1) Bring the bucket arm to its lowest position and tip the quick-change device.

(2) Drive the loader up to the bucket (6-7).

(3) Pick up the bucket using the quick-change device and, by simultaneously tilting the quick-change device, raise the bucket until the quick-change device is next to it (6-8).

(4) Lock the bucket (6-9) by using the hand lever of the auxiliary hydraulic system (4-7/16).

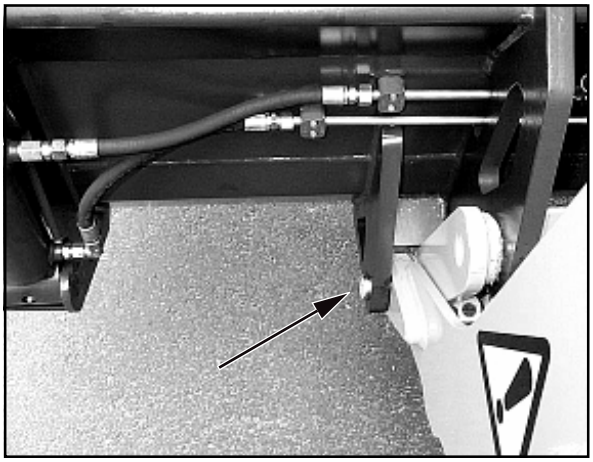

Figure 6-9

https://truckmanualshub.com/

(5) Check the connection and the lock on both sides.

DANGER

Both bolts of the quick-change device must fit in the boreholes of the bucket support and must be clearly visible (6-9/arrow).

(6) Stop the engine.

(7) Remove the pressure from the hydraulic lines with back and forth movements of the hand lever for auxiliary hydraulics (4-7/16).

(8) Remove the protection caps from the hoses of the multi-purpose bucket (6-10/2) and pull them from the hoses of the multi-purpose bucket (6-10/1).

(9) Connect the hoses of the multi-purpose bucket with the quick couplings of the quick-change device by pressing them firmly (6-10).

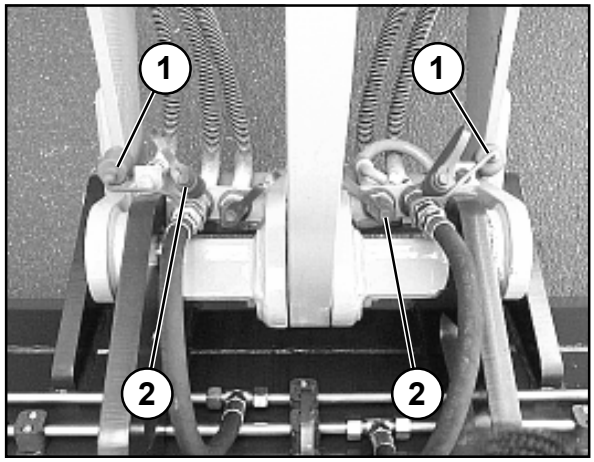

Figure 6-10

CAUTION

When making connections, pay attention that the hydraulic connections are clean and complete.

Dismounting

(1) Place the multi-purpose bucket firmly on the ground.

(2) Stop the engine.

(3) Remove the pressure from the hydraulic lines with back and forth movements of the hand lever for the auxiliary hydraulics (4-7/16).

(4) Dismounting takes place in the reverse order of mounting. However, to unlock the multi-purpose bucket, the release button for the quick-change device (4-8/2) must be used.

CAUTION

The hydraulic quick-change device must only be **locked** when an attachment has been mounted.

NOTE

The type plate is on the rear of the bucket, on the right on the cross arm.

https://truckmanualshub.com/

Figure 6-11

Notes on the application of the multi-purpose bucket

The multi-purpose bucket can be used for:

- peeling (6-11)

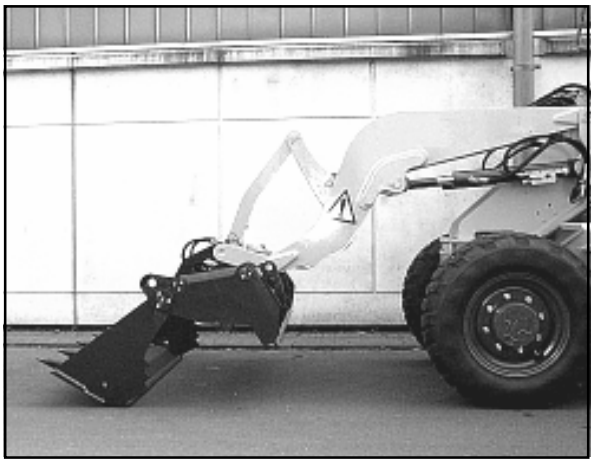

Figure 6-12

- scraping (6-12)

- grabbing (6-13) and

- in bucket operation.

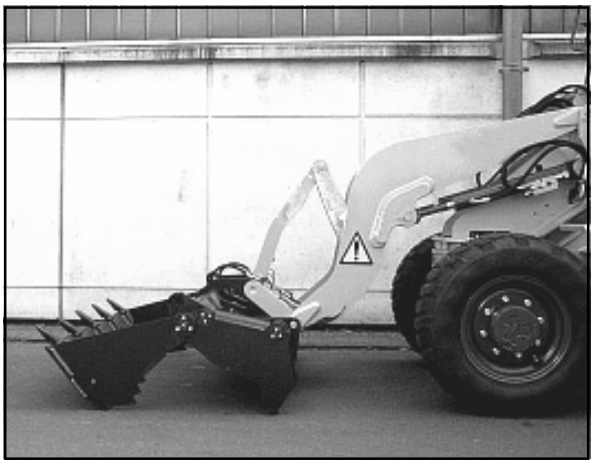

Figure 6-13

6.3 Using other attachments

DANGER

1. Only those attachments described in the present operating instructions may be used.

2. We emphasize that attach-ments that are not supplied by us are also not tested and approved by us. Use of such products can under certain conditions negatively influence the preset constructional qualities of your loader and thus limit the active and passive driving stability. The manufacturer cannot be held responsible for damage that occurs through the use of such products.

https://truckmanualshub.com/

Rescue, towing, lashing, lifting by crane

https://truckmanualshub.com/

7 Rescue, towing, lashing, lifting by crane

7.1 Rescue, towing, lashing

7.1.1 Rescue/towing of the loader if the engine or drive has failed

CAUTION

The swivel loader must not be tow-started. Any attempt to tow-start leads to damage.

DANGER

Secure the rescue location if it is on a public road.

NOTE

- Towing is only permitted to clear the area of use or a street.
- Preparation for towing depends on whether the engine has failed, thus leading to a failure of the entire hydraulics system or if only the drive has failed and the engine can drive the rest of the hydraulics system.

7.1.1.1 Towing the swivel loader when the engine has failed

NOTE

The preparation in points (3), (5), (6) and (11) is only to be carried out if the rescue location is **not** on a public road.

(1) Press the toggle switch for the hazard flasher (4-8/10).

(2) Set the drive switch (4-7/13) to the “0” position.

(3) Switch the toggle lever for the steering (4-6/7) of the front axle to the “rear-wheel steering” position; the wheels must be in the straight position.

(4) Set the parking brake (4-7/14).

CAUTION

If the rescue location is on a slope, wheel chocks must be placed on the sloping side of both front axle wheels in addition to applying the parking brake.

https://truckmanualshub.com/

(5) Cover the bucket cutting edge and teeth with the bucket protector (5-3/arrow).

(6) Insert the plug of the bucket protector in the socket (5-4/arrow).

(7) Disconnect the hydraulic hoses from the lifting cylinders.

NOTE

- Have a sufficiently large oil pan ready to catch the hydraulic oil that flows out.

- After towing has been completed, fill the lifting cylinders with hydraulic oil and deaerate them by raising and lowering the bucket arm several times.

(8) Using a suitable lifting device, e.g. a second loader with an attached bucket, lift the bucket arm of the loader to be towed until the mechanical bucket arm support can be inserted at the loader to be towed (7-1).

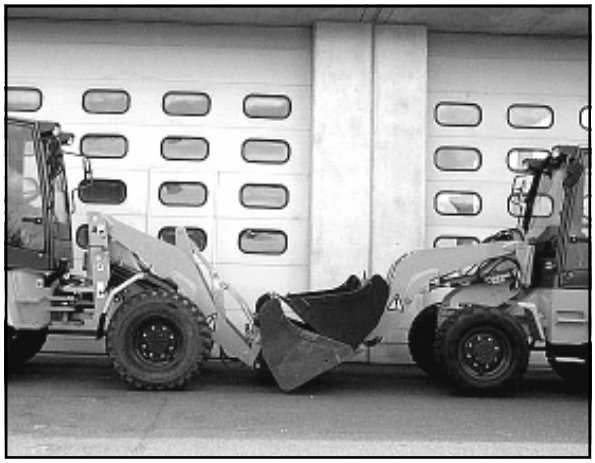

Figure 7-1

(9) Mechanically prop up bucket arm [e.g. by inserting the bucket arm support (option) (1-1/arrow)] and lower bucket arm until it rests on the bucket arm support.

(10) Close the ball block valve (1-2/arrow) for the working and auxiliary hydraulics.

(11) Block the swivel mechanism by inserting the blocking wedge (1-3/arrow) in the swivel blocking mechanism (1-4/arrow).

(12) Attach the towing rod to the loader to be towed [(7-2/1 - towing forwards) or (7-5/1 - towing backwards)] and to the towing vehicle.

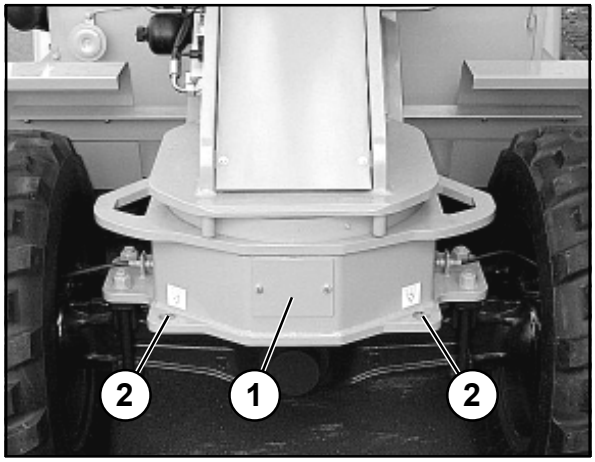

Figure 7-2

CAUTION

If the loader does not have a forward ranging and towing coupling, the loader must only be towed backwards.

(13) Switch the hydrostatic drive motor to free flow before towing. For this purpose loosen the hexagon lock nuts. Screw the pins at both high pressure relieve valves (7-3/arrows - slow loader) or (7-4/arrows - fast loader) of the drive pump until they are level to the hexagon lock nuts. After that fasten the lock nuts again.

NOTE

After towing procedure loosen the hexagon lock nuts. Screw the pins out of both high pressure relieve valves until the pins stop. Fasten the lock nuts.

(14) If necessary, remove the chocks.

(15) Release the parking brake (4-7/14).

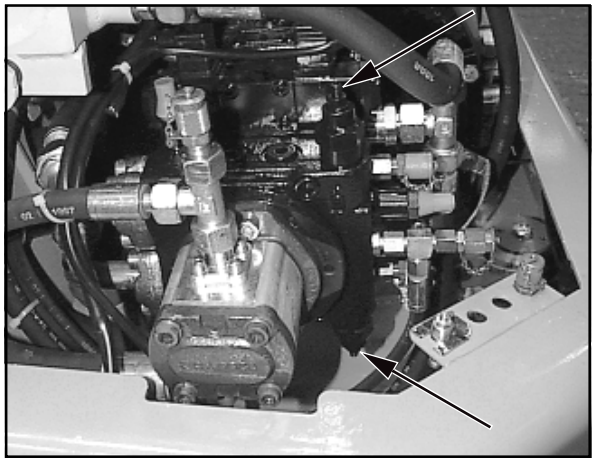

Figure 7-3

https://truckmanualshub.com/

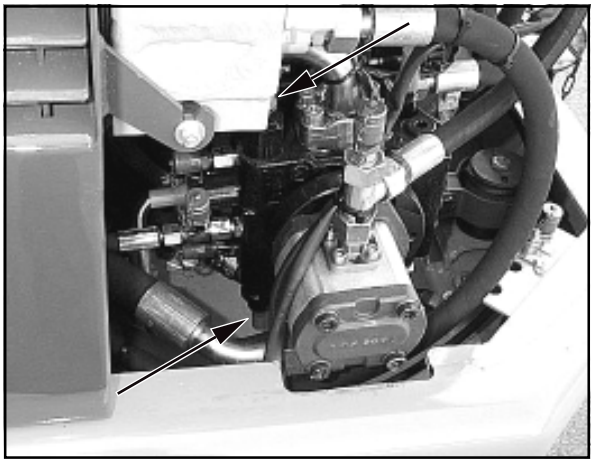

Figure 7-4

DANGER

- More power is required to steer if the engine has failed.
- Tow the loader at walking speed (2 km/h).
- The towing distance should not exceed 1 km.
- For a longer distance, the defective loader must be loaded onto a truck (for the lashing points, see 7-2/1 and 7-2/2, 7-5/1 and 7-5/2).
  - The max. permitted load of the forward ranging and towing coupling (7-2/1) is 3.0 t horizontally in the longitudinal direction.
  - The max. permitted load of the rear ranging and towing coupling (7-5/1) is 3.0 t horizontally in the longitudinal direction.
  - The max. permitted load of the lashing points/load-bearing points (7-2/2 and 7-5/2) is 2.0 t at an assumed bracing angle of 45°.

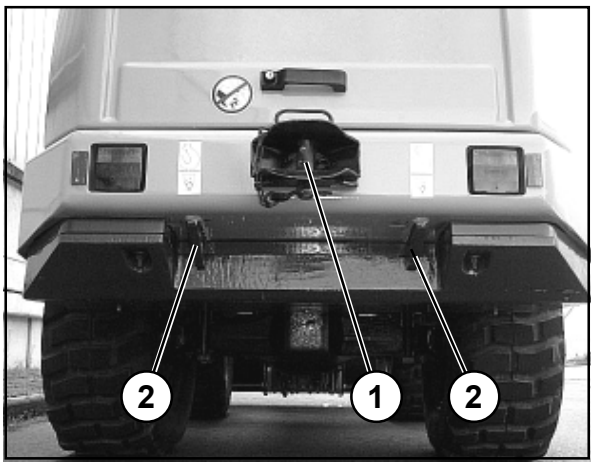

Figure 7-5

7.1.1.2 Towing the swivel loader when the drive has failed

NOTE

The preparation in points (3), (5), (6) and (9) is only to be carried out if the rescue location is **not** on a public road.

(1) Press the toggle switch for the hazard flasher (4-8/10).

(2) Set the drive switch (4-7/13) to the “0” position.

(3) Switch the toggle lever for the steering (4-6/7) of the front axle to the “rear-wheel steering” position; the wheels must be in the straight position.

(4) Set the parking brake (4-7/14).

CAUTION

If the rescue location is on a slope, wheel chocks must be placed on the sloping side of both front axle wheels in addition to applying the parking brake.

(5) Cover the bucket cutting edge and teeth with the bucket protector (5-3/arrow).

(6) Insert the plug of the bucket protector in the socket (5-4/arrow).

(7) Lift and mechanically prop up bucket arm [e.g. by inserting the bucket arm support (option) (1-1/arrow)] and lower bucket arm until it rests on the bucket arm support.

(8) Close the ball block valve (1-2/arrow) for the working and auxiliary hydraulics.

(9) Block the swivel mechanism by inserting the blocking wedge (1-3/arrow) in the swivel blocking mechanism (1-4/arrow).

https://truckmanualshub.com/

(10) Attach the towing rod to the loader to be towed [(7-2/1 - towing forwards) or (7-5/1 - towing backwards)] and to the towing vehicle.

CAUTION

If the loader does not have a forward ranging and towing coupling, the loader must only be towed backwards.

(11) Switch the hydrostatic drive motor to free flow before towing. For this purpose loosen the hexagon lock nuts. Screw the pins at both high pressure relieve valves (7-3/ arrows - slow loader) or (7-4/arrows - fast loader) of the drive pump until they are level to the hexagon lock nuts. After that fasten the lock nuts again.

NOTE

After towing procedure loosen the hexagon lock nuts. Screw the pins out of both high pressure relieve valves until the pins stop. Fasten the lock nuts.

(12) If necessary, remove the chocks.
(13) Release the parking brake (4-7/14).

DANGER

- Tow the loader at walking speed (2 km/h) with the engine running.
- The towing distance should not exceed 1 km.
- For a longer distance, the defective loader must be loaded onto a truck (for the lashing points, see 7-2/1 and 7-2/2, 7-5/1 and 7-5/2).

NOTE

See page 7-4 for the max. permitted load of the lashing/ load-bearing points.

7.2 Lifting by crane

The loader to be lifted is to be prepared as follows:

(1) Set the drive switch (4-7/13) to the “0” position.

(2) Set transmission stage "I" (4-7/11).

(3) Set the parking brake (4-7/14).

(4) Remove the cover plate in the swivel unit (7-6/arrow).

(5) Lift or lower the bucket arm until the lowest point of the bucket arm or the bucket is at least 30 cm above the road (5-2).
(6) Close the ball block valve (1-2/arrow) for the working and auxiliary hydraulics.

(7) Block the swivel mechanism by inserting the blocking wedge (1-3/arrow) in the swivel blocking mechanism (1-4/ arrow).
(8) Lock the doors.

(9) Fold the outside mirror inwards.

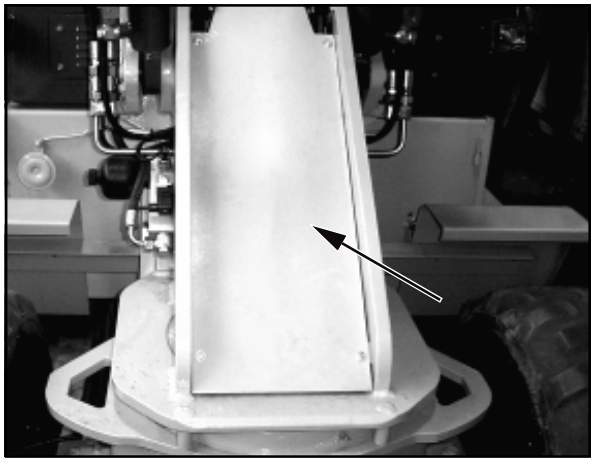

Figure 7-6

https://truckmanualshub.com/

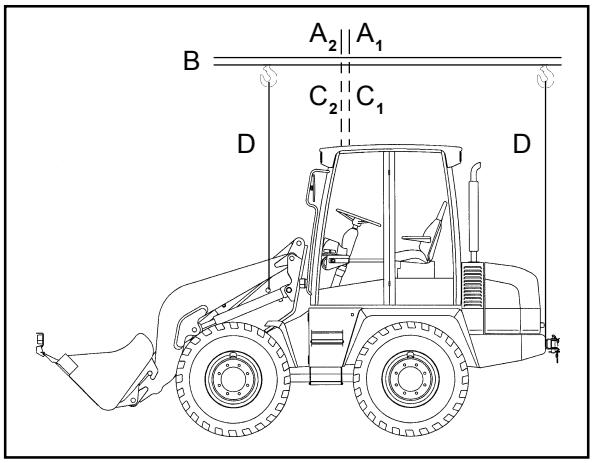

Figure 7-7

CAUTION

The following items must be observed when lifting by crane (see Figure 7-7:

- The lifting point (A_1 - loader without standard bucket or A_2 - loader with standard bucket) of the lifting device (B) must be located precisely vertically over the center of gravity (C_1 or C_2) of the loader so that the lifting device is located **horizontally** above the longitudinal axis of the loader.

- The lifting gear (D) must lead vertically upwards from the lifting points of the loader (7-5/2, 7-8/arrow and 7-9/arrow).

DANGER

A permitted payload of at least 3.0 t is required for the lifting gear.

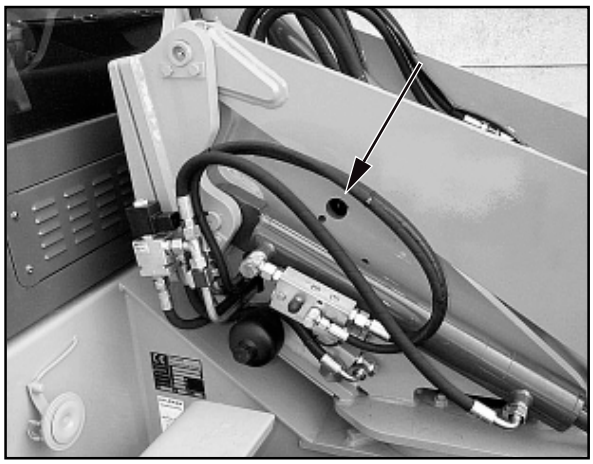

Figure 7-8

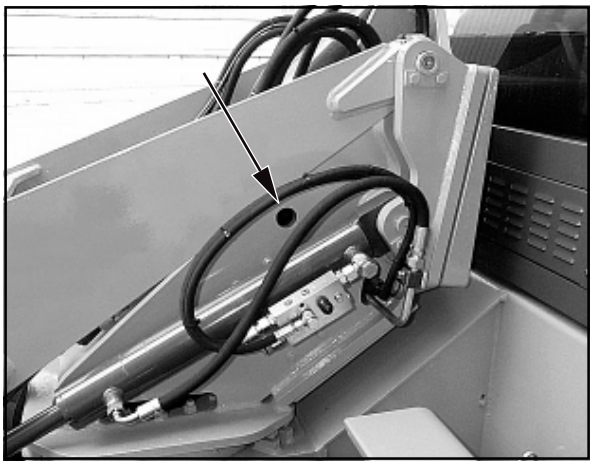

Figure 7-9

https://truckmanualshub.com/

Maintenance

4117874A

GB

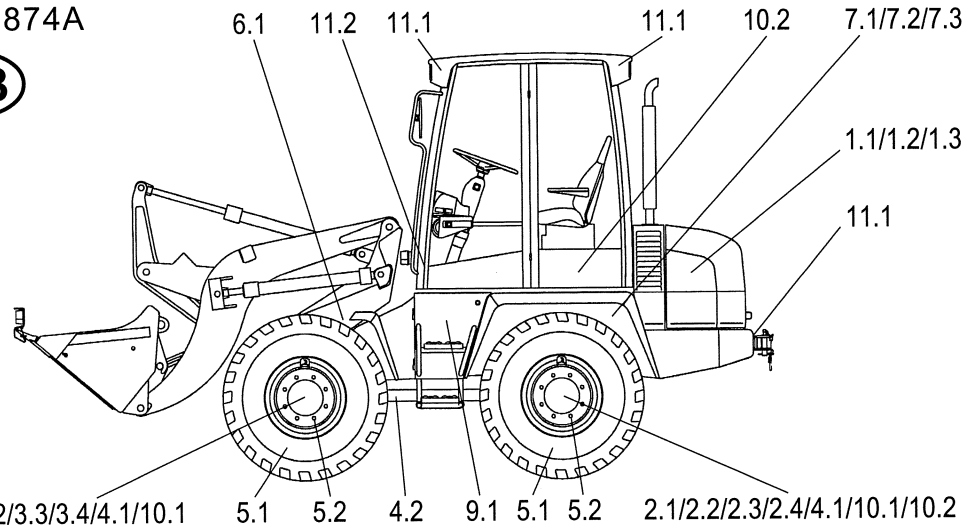

Item	Designation	Specification	Viscosity	Filling amount
* 1	Motor oil	MIL-L-2104 C = API-CD	acc. to manufacturer	ca. 6 l with oil filter
* 2.2	Transmission oil	MIL-L-2105 D = API-GL5-6 (with LS for locking differential)	SAE 85 W 90	ca. 4.5 l
* 2.4	Transmission oil	MIL-L-2105 D = API-GL5-6	SAE 85 W 90	ca. 2x 1.5 l
* 3.2	Transmission oil with LS addition	MIL-L-2105 D = API-GL5-6-LS	SAE 85 W 90-LS	ca. 4 l
* 3.4	Transmission oil with LS addition	MIL-L-2105 D = API-GL5-6-LS	SAE 85 W 90-LS	ca. 2x 1.5 l
* 7.3	Hydraulic oil (4)	DIN 51524 - HVLP 46	ISO VG 46, VI > 180	ca. 70 l
8	Grease	DIN 51825 - KPF 1/2 N-20		as required
9	Distilled water			as required
* 10	Brake fluid	DOT3 / DOT 4		as required

Key to symbols

- △ First oil change / first filter replacement
- ▲ first check; eliminate any determined problems
- ○ Check; eliminate any determined problems;
- ◇ change
- * The markings, filling and check plugs are binding
- Refer to operating instructions

Caution

When carrying out maintenance work, heed the accident prevention regulations!

Lubrication points (indicated in red)

1. Lubricate bolts every 10 operating hours with grease according to DIN 51825 - KPF 1/2 N-20.
2. Lubricate glide points as required and always after cleaning, using grease according to DIN 51825 - KPF 1/2 N-20.

Oil lubrication points

3. Lubricate joints and toggle levers every 50 operating hours wih engine oil MIL-L-2104 C.

Optional features: Biodegradable hydraulic oil

4. Ester-based synthetic hydraulic oil viscosity class ISO VG 46 VI > 180 →

Every x operating hours — max. permitted intervals or shorter (depending on use)

10	50	500	1500	Item	Maintenance points
				1	**Engine**
○	△			1.1	Maintenance according to manufacturer's regulations
				1.2	Dry air filter system
	○				Activate dust removal valve
	○				Check maintenance display
				1.3	Replace filter element if maintenance display is red →
				2	**Rear axle with axle power shift gear**
	○			2.1	Check oil level in axle and power shift gear (control screw)
		△	◇	2.2	Change oil in axle and power shift gear →
	○			2.3	Check oil level in planetary gear (control screw)
		△	◇	2.4	Change oil in plan. gear →
				3	**Front axle**
	○			3.1	Check oil level in axle gear (control screw)
		△	◇	3.2	Change oil in axle gear →
	○			3.3	Check oil level in planetary gear (control screw)
		△	◇	3.4	Change oil in plan. gear →
				4	**Axles/ Cardan shaft(s)**
	▲	○		4.1	Check fastening of axles (800 Nm)
	▲	○		4.2	Check fastening of cardan shaft(s) (32 Nm)
				5	**Wheels and tyres**
	○			5.1	Check air pressure
▲		○		5.2	Check fastening of wheel nuts (300 Nm)
				6	**Ball bearing slewing ring (swivel loader only)**
	▲	○		6.1	Check fastening (300 Nm)
				7	**Hydraulic system**
	△	○	◇	7.1	Replace filter insert, observe electric control lamp →
○				7.2	Oil level check (sight glass)
			◇	7.3	Oil change
				8	**Lubrication points (indicated in red)** →
				9	**Battery**
		○		9.1	Visual check
				10	**Brake system**
				10.1	Service and parking brake: Take function and visual check before starting work
○				10.2	Service brake: visual check of compensation tank
		○		10.3	Check parking brake, adjust if required →
				11	**Lighting system / fresh air filter**
				11.1	Take function test before starting work
		○	◇	11.2	Check fresh air filter

https://truckmanualshub.com/

https://truckmanualshub.com/

8 Maintenance

8.1 Maintenance notes

DANGER

- The engine must be turned off.
- When working under the bucket arm:
  - the bucket must be emptied or the attachment must be relieved,
  - the bucket arm must be mechanically propped up [e.g. by inserting the bucket arm support (option) (1-1/arrow)],
  - the ball block valve for the working and auxiliary hydraulics (1-2/arrow) must be closed,
  - the swivel mechanism is to be blocked (1-4/arrow).
- The loader is to be secured against rolling by using the parking brake (4-7/14) or by setting the drive direction switch (4-7/13) to the “0” position. In addition, wedges must be placed on both sides of one of the two wheels of the front axle.

CAUTION

- Change the oil when the units are lukewarm.
- Check the oil level when the loader is on level ground and the bucket arm is in its lowest position.
- Replace damaged filter inserts and gaskets immediately.
- Clean pressure lubrication fittings before lubricating.

NOTE

- All necessary maintenance work is to be taken from the maintenance plan.
- Damage which is traceable to non-observance of the maintenance plan is not covered by the guarantee.
- The lubricants mentioned in the maintenance plan may be used at an ambient temperature from **-15°** to **+40°C**.

CAUTION

For ambient temperatures below -15 °C, refer to the description given in section 5.2.2, “Winter operation”.

NOTE

If a hose and/or pipe break occurs, the lid of the hydraulic oil filter (8-17/arrow) must be loosened because the loader does not have a locking cock that could prevent large amounts of hydraulic oil from escaping.

https://truckmanualshub.com/

Figure 8-1

8.2 Maintenance work

8.2.1 Checking the engine oil level

See Engine Operating Instructions.

8.2.2 Checking the oil level in the axles

8.2.2.1 Rear axle

(1) Unscrew the plug from the axle arch (8-1/arrow).

NOTE

- The oil level must reach the plug bore.
- Collect any escaping oil.

(2) Replace the plug.

Figure 8-2

8.2.2.2 Planetary gear

(1) Move the loader until the marking line ”OIL LEVEL/ OELSTAND” is horizontal and the plug is located above the top left of the marking line (8-2/arrow).

(2) Unscrew the plug.

NOTE

- The oil level must reach the plug bore.
- Collect any escaping oil.

(3) Replace the plug and fit a new gasket.

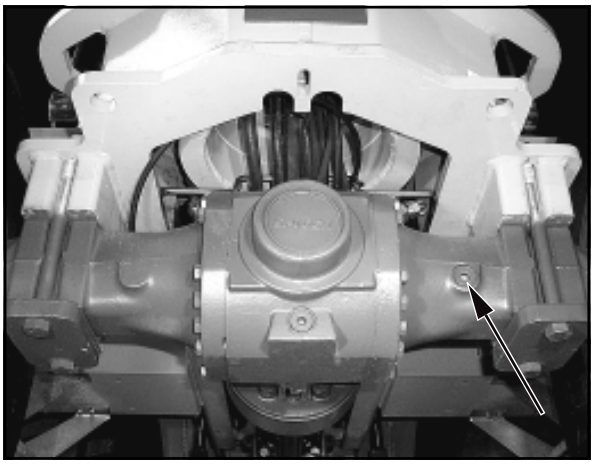

Figure 8-3

8.2.2.3 Front axle

(1) Unscrew the plug (8-3/arrow) from the axle arch.

NOTE

- The oil level must reach the plug bore.
- Collect any escaping oil.

(2) Replace the plug.

https://truckmanualshub.com/

8.2.3 Checking the oil level in the distribution gear

(1) Unscrew the plug (8-4/arrow) from the transmission housing.

NOTE

- The oil level must reach the plug bore.
- Collect any escaping oil.

(2) Replace the plug.

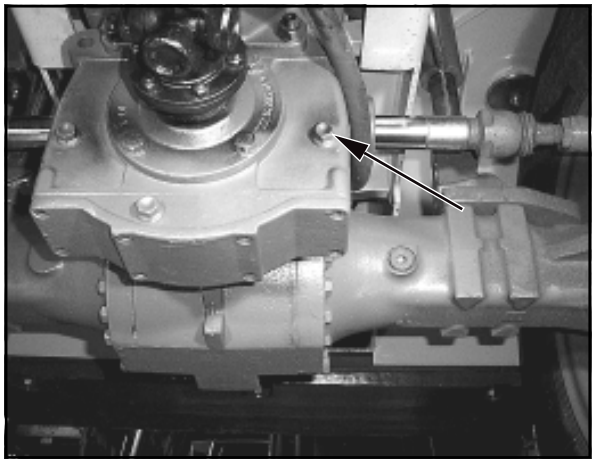

Figure 8-4

8.2.4 Checking the oil level in the hydraulic oil reservoir

(1) Park the loader in a level position.

(2) Place the bucket arm in its lowest position and tip the quick-change device.

(3) Open the motor cover.

(4) Check the oil level in the sight gauge.

NOTE

The oil level must be visible in the sight gauge (8-5/arrow). If necessary, fill oil into the filler neck (8-15/arrow).

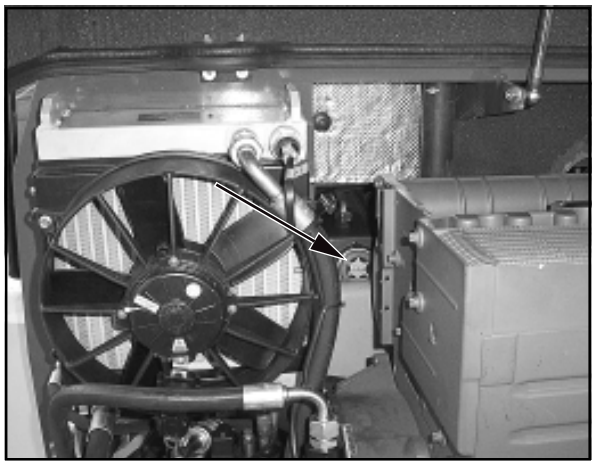

Figure 8-5

8.2.5 Changing the engine oil

NOTE

The oil drain plug is accessible from below and is located on the engine front (as seen in travelling direction).

(1) Place a sufficiently large oil drain pan underneath the motor oil sump.

(2) Unscrew the cover for access to the oil drain on the motor (8-6/arrow).

(3) Screw the drainage nozzle with hose from the tool box (4-1/10) to the oil drain.

(4) Remove the cover cap from the hose.

(5) Further procedures can be found in the Engine Operating Manual.

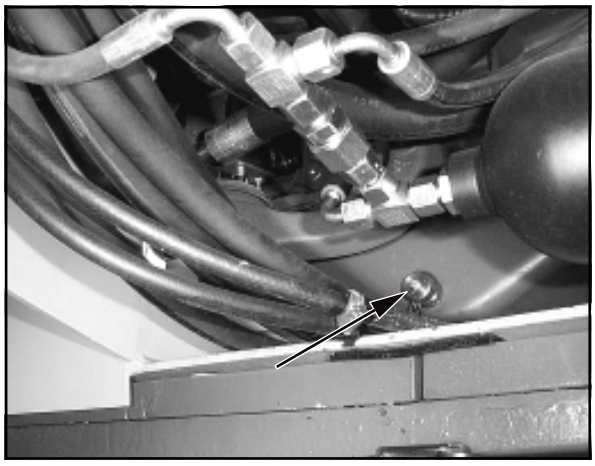

Figure 8-6

https://truckmanualshub.com/

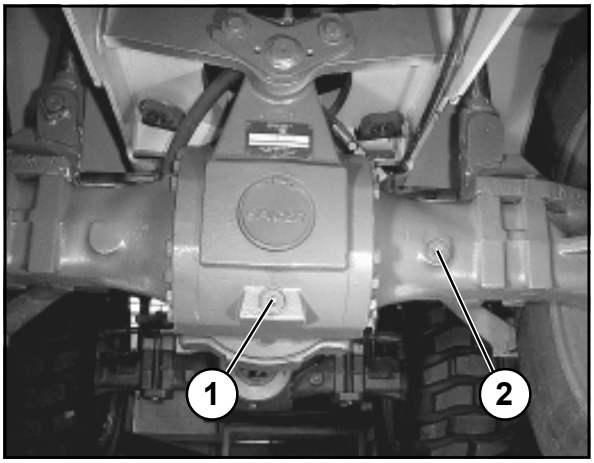

Figure 8-7

8.2.6 Changing the oil in the axles

8.2.6.1 Rear axle

(1) Place a sufficiently large oil drain pan underneath the axle.

(2) Unscrew the plugs from the axle arch (8-7/1 and 8-7/2) and the distribution gear (8-8/1 and 8-8/2) and let the oil drain out.

CAUTION

Waste oil must be disposed of in such a way that it will not cause pollution!

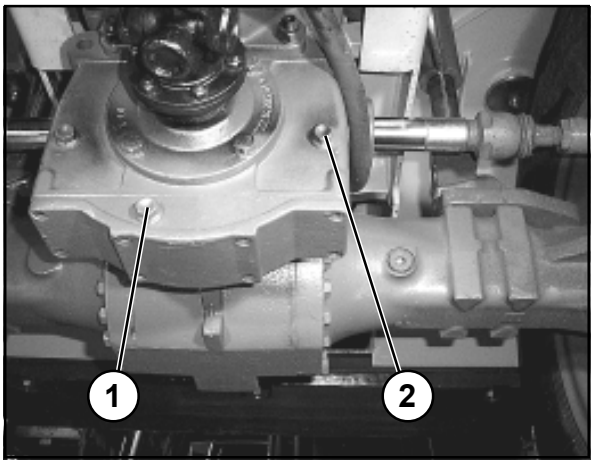

Figure 8-8

(3) Screw in the plugs for the axle arch (8-7/1) and the distribution gear (8-8/1) again.

(4) Fill in oil via the plug hole in the axle arch (8-7/2) and the distribution gear (8-8/2) until the oil reaches the opening.

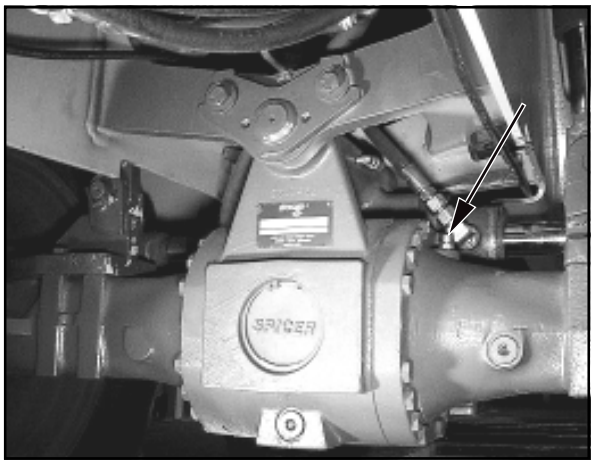

Figure 8-9

NOTE

- The axle ventilation valve (8-9/arrow) must be free of dirt.
- Information about the quantity of oil is in the maintenance plan.
- After a few minutes, when the oil level has lowered, top up the oil until the oil level reaches the marked level and remains stable.

(5) Screw in the plugs for the axle arch (8-7/2) and the distribution gear (8-8/2) again.

https://truckmanualshub.com/

8.2.6.2 Planetary gear

(1) Move the loader so that the plug (8-10/arrow) is positioned at 6 o'clock.

(2) Place an oil drain vessel with a drain channel underneath the gear.

(3) Unscrew the drain plug and let the oil drain out.

CAUTION

Dispose of waste oil in an environmentally friendly manner.

(4) Move the loader until the marking line "OIL LEVEL/ OELSTAND" is horizontal and the plug is located above the top left of the marking line (8-11/arrow).

(5) Fill oil into the plug bore of the axle arch (8-11/2) until the oil level reaches the opening.

NOTE

- Information about the quantity of oil is given in the maintenance plan.
- After a few minutes, when the oil level has lowered, top up the oil until the oil reaches the marked level and remains stable.

(6) Use a new gasket when replacing the plug.

Figure 8-10

Figure 8-11

8.2.6.3 Front axle

(1) Place a sufficiently large oil drain pan underneath the axle.

(2) Unscrew the plugs from the axle arch (8-12/1 and 8-12/2) and drain the oil.

CAUTION

Waste oil must be disposed of in such a way that it will not cause pollution!

(3) Replace the plug (8-12/1).

(4) Fill in oil via the plug bore (8-12/2) until the oil level reaches the opening.

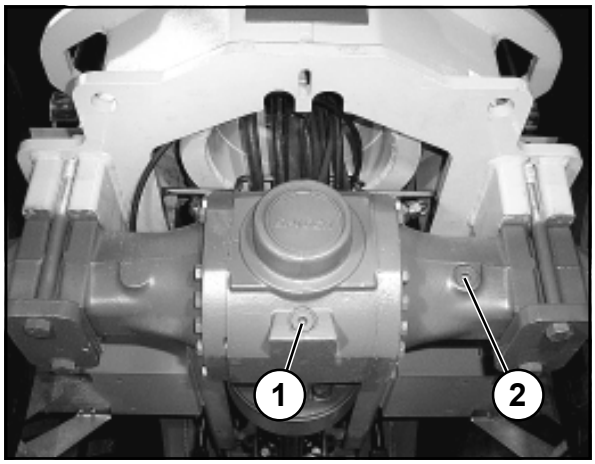

Figure 8-12

https://truckmanualshub.com/

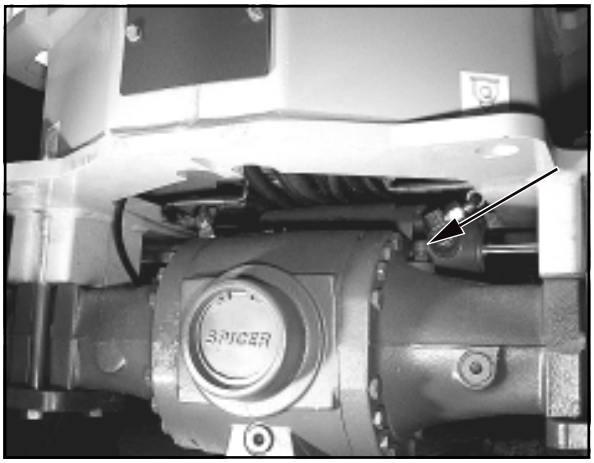

Figure 8-13

NOTE

- The axle ventilation valve (8-13/arrow) must be kept free of dirt.
- Information about the quantity of oil is in the maintenance plan.
- After a few minutes, when the oil level has lowered, top up the oil until the oil level reaches the marked level and remains stable.

(5) Replace the plug (8-12/2).

8.2.7 Changing the oil in the hydraulic system

(1) Have an oil pan ready (at least 70 l).

(2) Unscrew the cover of the oil drain (8-14/arrow).

(3) Screw the drainage nozzle with hose from the tool box (4-1/10) to the oil drain plug.

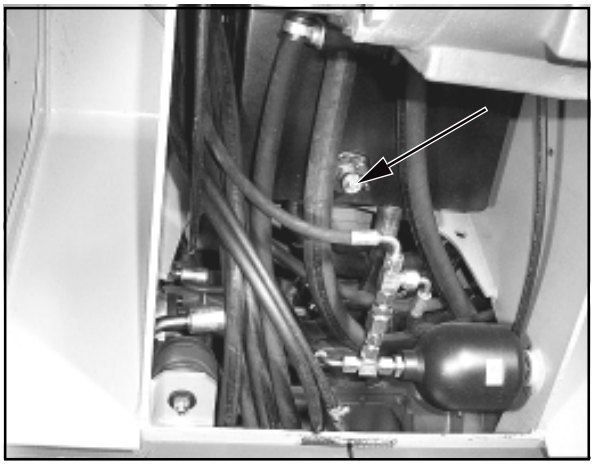

Figure 8-14

(4) Remove the cover cap from the hose.

(5) Drain the oil into the drain pan.

CAUTION

Waste oil must be disposed of in such a way that it will not cause pollution!

(6) Remove the nozzle with the hose and replace the cover on the hose.

(7) Replace the cover on the oil drain.

(8) Change the hydraulic oil filter insert (section 8.2.8).

(9) Fill in oil into the filler neck (8-15/arrow).

CAUTION

When changing the oil in machines filled with biodegradable hydraulic oil (synthetic ester-based hydraulic oil - viscosity class ISO VG 46 VI > 180) - (identification label is located on the hydraulic oil reservoir and on the dashboard), this type of oil must always be used.
Mineral and biodegradable oils must **never** be mixed!
Biodegradable hydraulic oil must be changed every **1000 operating hours**.
A conversion from hydraulic oil on mineral basis to a biodegradable oil must be carried out in accordance with the VDMA 24 569 conversion guidelines!

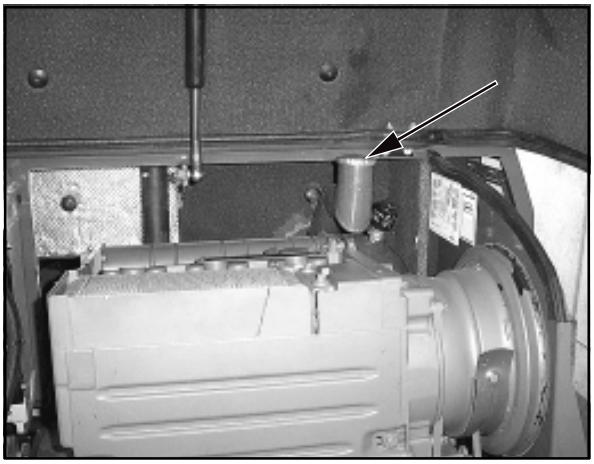

Figure 8-15

(10) Check the oil level at the sight glass oil gauge (8-5/arrow).

(11) Close the filling nozzle.

https://truckmanualshub.com/

8.2.8 Changing the back-flow suction filter insert/suction strainer

CAUTION

Change the filter insert according to the maintenance plan or when the clogging indicator lamp (4-8/23) lights up.

NOTE

The clogging indicator lamp may light up briefly after a cold start but will go out when the hydraulic oil has reached its operating temperature.

(1) Take out the rubber mats around the driver's seat.

(2) Unscrew the six screws that fasten the seat plate (8-16/arrows) to the left, right, front and rear.

(3) Push the driver's seat into the lowest position (chapter 5.4).

(4) Tilt the driver's seat against the steering wheel and secure it in this position.

(5) Loosen the lid of the hydraulic oil filter (8-17/arrow) and replace the filter cartridge by new ones.

CAUTION

The replaced hydraulic oil filter cartridge must be disposed of in an environmentally friendly manner.

(6) Lock the lids of the hydraulic oil filter.

(7) Install driver's seat and put back the rubber mat again.

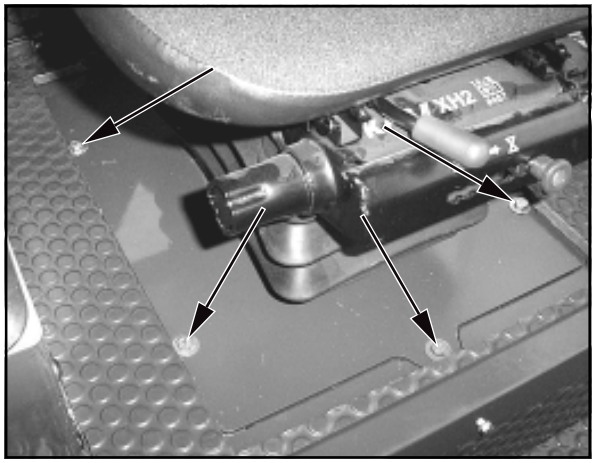

Figure 8-16

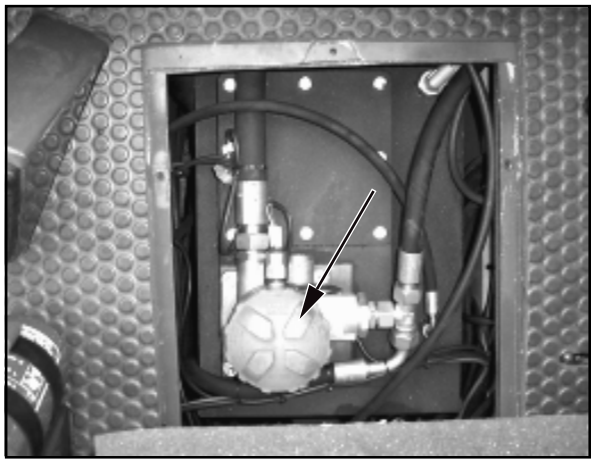

Figure 8-17

8.2.9 Maintaining/replacing the air filter

NOTE

Maintenance of the filter cartridge is necessary when either the red range is visible in the maintenance indicator (8-20/arrow) or after 12 months, whichever is sooner.

(1) Open the engine cover.

(2) Loosen the two spring-loaded catches on the air filter lid (8-18/arrow) and remove the air filter lid.

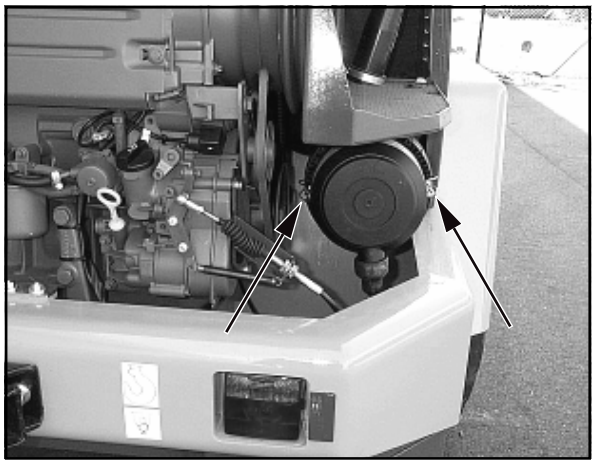

Figure 8-18

https://truckmanualshub.com/

Figure 8-19

(3) Pull out the air filter cartridge (8-19/arrow) by carefully turning it back and forth.

(4) Clean the filter cartridge.

CAUTION

- For cleaning, use a compressed air gun to which a pipe (angled at 90°) has been attached. The pipe must be sufficiently long to reach the cartridge bottom. Use dry compressed air of no more than 5 bar to blow out the cartridge by moving the pipe back and forth in the interior of the cartridge. Cleaning may be stopped when dust formation ceases.
- Do not use petrol or hot liquid for cleaning.

(5) Use a hand-held lamp to check the filter cartridge for damage to the cartridge paper or the rubber gasket. If the cartridge or seals are damaged, replace the cartridge.

(6) Carefully insert the filter cartridge.

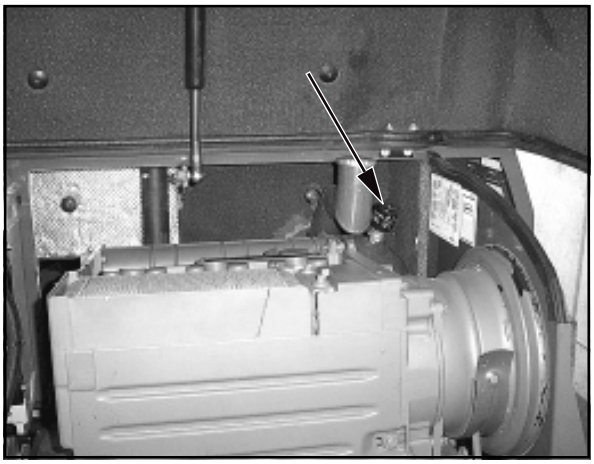

Figure 8-20

(7) Install the air filter lid on the filter housing in such a way that the direction arrow in the marking **"OBEN-TOP"** points upwards. This ensures that the dust removal valve is pointing downwards.

NOTE

The dust removal valve must be checked from time to time and replaced if necessary.

(8) When the indicator field becomes red (8-20/arrow), push the reset button. The field becomes clear.

CAUTION

Check all connection pipes and hoses of the air filter system for damage before starting the engine.

8.2.10 Changing the safety cartridge

CAUTION

- The safety cartridge must not be cleaned.
- The safety cartridge must be replaced after the filter cartridge has been maintained/cleaned 5 times, at the latest after two years.
- Make sure that no dirt or dust can enter the filter housing during replacement of the safety cartridge.

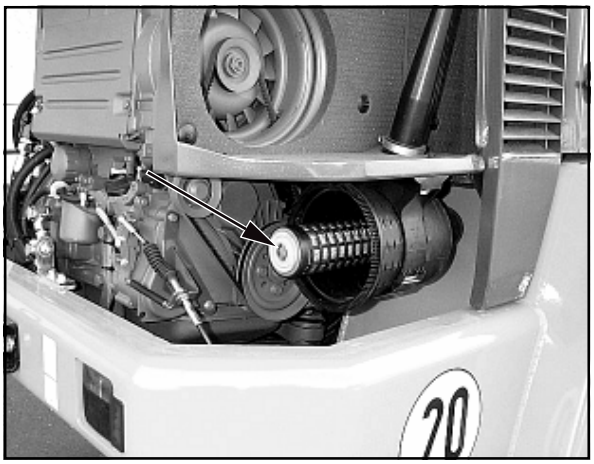

Figure 8-21

(1) Remove the filter cartridge (chapter 8.2.9).

(2) Pierce the seal of the safety cartridge (8-21/arrow) from the inside by using a screwdriver or similar tool and pull up both strips.

(3) Hold the filter cartridge by both strips and pull it out by carefully turning it back and forth. Replace the safety cartridge and the filter cartridge by new ones.

(4) The remaining installation is performed as described in section 8.2.9 (6)-(8).

https://truckmanualshub.com/

8.2.11 Replacing the fuel filter

See the Engine Operating Instructions.

8.2.12 Exchanging the starter battery

NOTE

- The starter battery is a low maintenance part according to DIN 72311 T, section 7. It is located in the left-hand entrance area.
- Keep the battery dry and clean.

(1) Remove the battery main switch (4-6/10).

(2) Use a square wrench to open the maintenance flap (8-22/arrow).

(3) Remove the fastening screw (SW 17) (8-23/2) of the battery compartment.

(4) Loosen and remove the connecting cables (8-23/1) from the battery (SW 13).

DANGER

Always remove the negative pole cable first, then the positive cable. Installation is in the reverse order.

(5) Remove the battery and replace it.

(6) Before connecting, apply a thin layer of acid-proof grease on the battery terminals and the battery poles.

(7) Installation occurs in the opposite order.

DANGER

Make sure the fastenings are secure.

(8) Close and lock the maintenance flap.

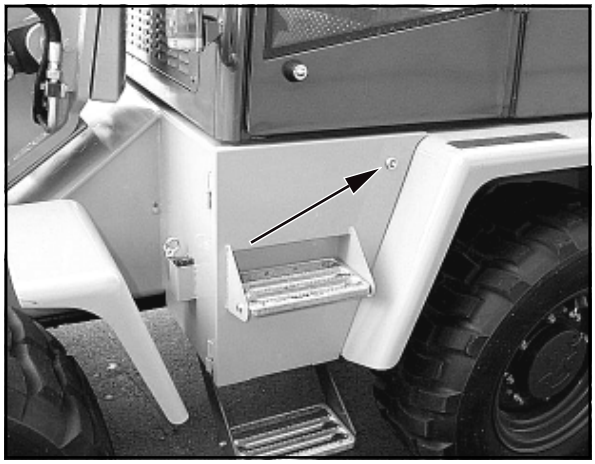

Figure 8-22

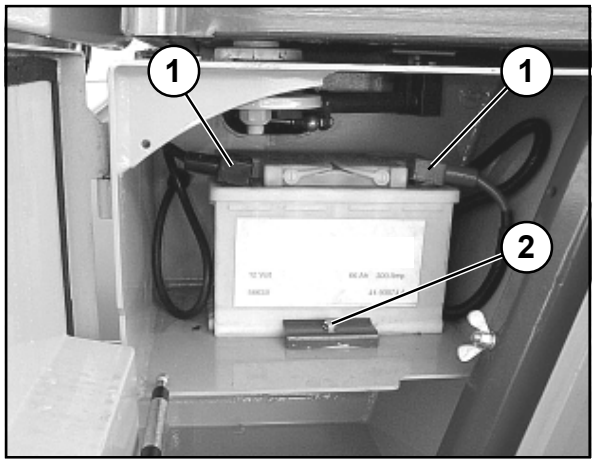

Figure 8-23

8.2.13 Maintaining/replacing the fresh air filter

(1) Lift and mechanically prop up bucket arm [e.g. by inserting the bucket arm support (option) (1-1/arrow)], Lower bucket arm until it rests on the bucket arm support and swivel all the way to the right or left.

(2) Loosen the four fastening screws (SW 13) (8-24/arrows) of the heater cover and remove the cover.

Figure 8-24

https://truckmanualshub.com/

Figure 8-25

(3) Remove the filter elements (8-25/arrows) and clean them with pressurised air.

CAUTION

Do not use any petrol, hot fluids or compressed air for cleaning.

(4) Check the filter elements for damage.

NOTE

The filter elements must be replaced when they are damaged or every **1500 operating hours**.

(5) Insert the filter elements and install the heater cover.

Figure 8-26

8.2.14 Checking/adjusting the parking brake

CAUTION

All work on the brake system must only be carried out by authorized personnel.

(1) Pull the parking brake lever (8-26/arrow) and release it again (lowest position).

CAUTION

The parking brake should become effective on the third catch.

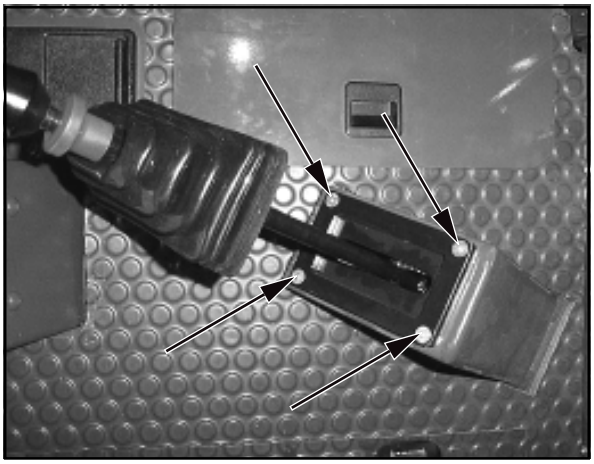

Figure 8-27

If the path of the parking brake until the parking brake becomes effective is significantly longer, the following work must be carried out:

(2) Push the rubber bellows on the parking brake lever upwards. Loosen the four fastening screws (8-27/arrows) and pull out the parking brake lever along with linkage and Bowden cable.

https://truckmanualshub.com/

(3) Loosen the counter nut (8-28/2) at the support.

(4) Turn the adjusting nut (8-28/1) until it touches the support.

CAUTION

Check the brake lining thickness if necessary (see Repair Instructions).

(5) Perform a function check.

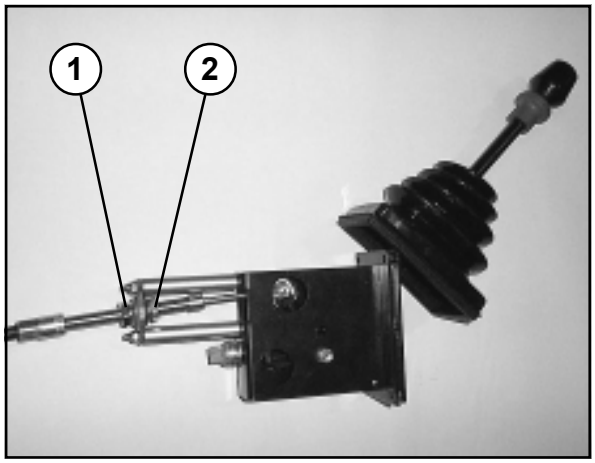

Figure 8-28

8.2.15 Checking/adjusting the service brake

DANGER

- All work on the brake system must only be carried out by authorized personnel.
- Operation of the loader must be stopped immediately if the pedal can be pressed down too far or the braking effect decreases noticeably.
- Oil loss (leaks) in the brake system must be immediately reported to authorized personnel.

(1) Check the brake hydraulic oil (4-6/6); add if necessary.

(2) Check the pedal travel.

(3) Visually check the entire system for correct functioning.

NOTE

The service brake is maintenance-free and therefore does not require any further check.

8.3 Lubrication points

NOTE

The lubrication points are marked in red on the loader.

8.3.1 Rear axle pivot bolt (8-29/arrow)

CAUTION

- The rear axle pivot bolt must be lubricated every **50 operating hours**.
- Release the rear axle from load before lubricating the rear axle pivot bolts.

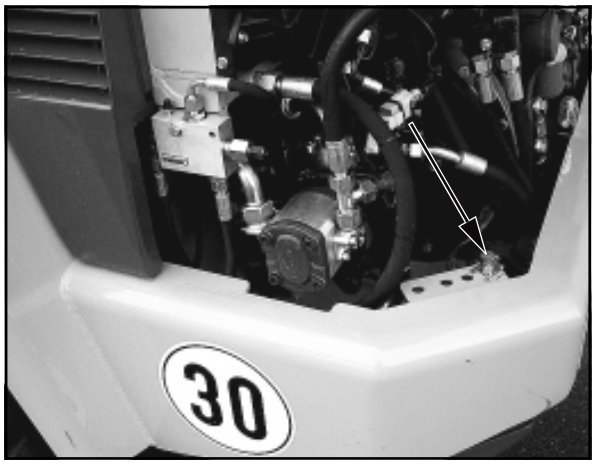

Figure 8-29

https://truckmanualshub.com/

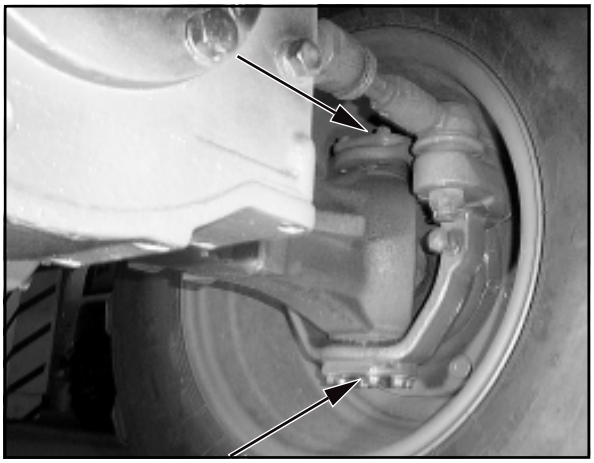

Figure 8-30

8.3.2 Rear axle (8-30/arrows)

CAUTION

The rear axle spindle bolts must be lubricated every **50 operating hours**.

NOTE

Lubricate the top and the bottom of the axle spindle bolts on both sides of the axle.

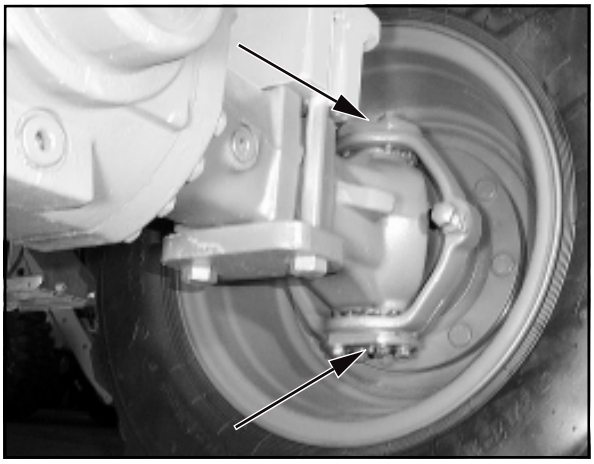

Figure 8-31

8.3.3 Front axle (8-31/arrows)

CAUTION

The rear axle spindle bolts must be lubricated every **50 operating hours**.

NOTE

Lubricate the top and the bottom of the axle spindle bolts on both sides of the axle.

Figure 8-32

8.3.4 Bucket motor

CAUTION

The bearing bols/lubrication points of the bucket motor must be lubricated every **10 operating hours**.

8-32/arrows Bucket motor/change device

https://truckmanualshub.com/

8.3.5 Ball rotary connection

The grease should prevent abrasion, seal and protect against corrosion. For this reason, lubricate the support every **10 operating hours**, until grease escapes. When lubricating the ball rotary connection, swivel the bucket arm in 20° steps. In each position, lubricate all four grease nipples (8-33/arrows). Lubrication is required before and after the loader is removed from operation for a long period.

DANGER

- Before greasing, mechanically prop up the bucket arm [e.g. by inserting the bucket arm support (option) (1-1/arrow)], apply the parking brake (4-7/14) and set the drive direction switch (4-7/13) to “0“.
- **During** swivelling, no one must be in the swivelling range of the bucket arm.

Figure 8-33

8.3.6 Driver cabin door (8-34/arrows)

CAUTION

The hinges of the driver cabin doors must be lubricated every **50 operating hours**.

NOTE

Lubricate the door hinges of both driver cabin doors.

Figure 8-34

8.3.7 Engine hood

CAUTION

The hinges of the engine hood (8-35/arrows) must be lubricated **every 50 operating hours.**

Figure 8-35

https://truckmanualshub.com/

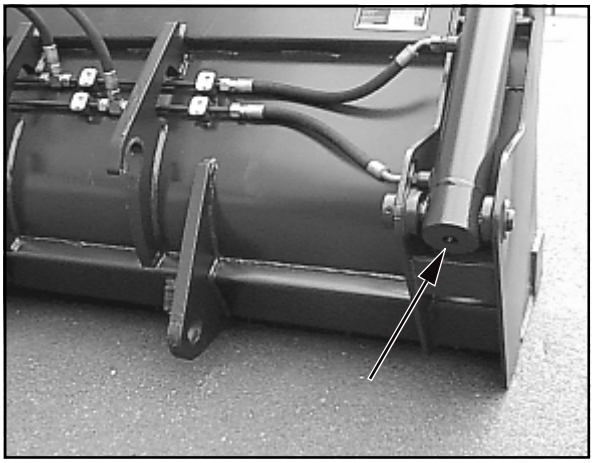

Figure 8-36

8.3.8 Multi-purpose bucket

CAUTION

The support bolts of the multi-purpose bucket must be lubricated every **10 operating hours**.

NOTE

Lubricate the bolts on both sides of the multi-purpose bucket (8-36/arrow).

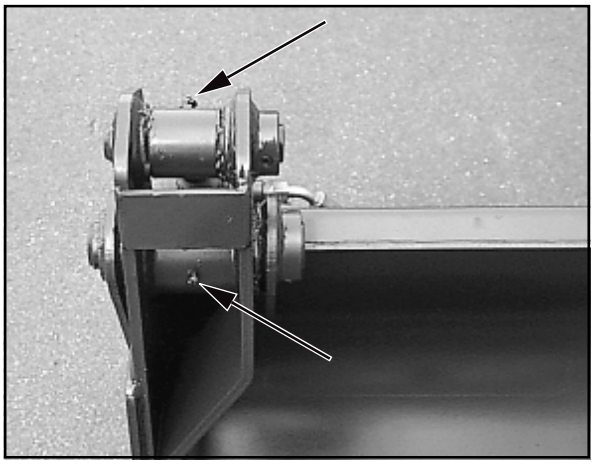

Figure 8-37

CAUTION

The support bolts of the multi-purpose bucket must be lubricated every **10 operating hours**.

NOTE

Lubricate the bolts on both sides of the multi-purpose bucket (8-37/arrows).

https://truckmanualshub.com/

Malfunctions, causes and remedies

https://truckmanualshub.com/

9 Malfunctions, causes and remedies

NOTE

*) Malfunctions may only be remedied by authorized personnel

Malfunction	Possible cause	Remedy
Engine		See Engine Operating Instructions
Engine does not start	Drive switch (4-7/13) is not in neutral position	Switch into neutral position
Bucket arm cannot be raised/lowered	Pressure relief valve in the control valve is open	Completely dismantle and clean the pressure relief valve; readjust *
	Pilot valve for the working hydraulics (4-7/12) is locked	Unlock the pilot valve (1-2/arrow)
	Pilot pressure is not present or is too low	Open the pressure relief valve in the control cable, clean it and readjust it *
	Diesel engine has failed	Using storage pressure, it is possible to bring the bucket arm to its lower-most position directly after the engine fails. » Not with built-in pipe break safety device «
Steering requires increased effort	Pressure relief valve in the control valve is open	Completely dismantle and clean the pressure relief valve; readjust *
	Pusher in the priority valve is stuck	Replace the priority valve *
Swivel mechanism does not swivel	Block wedge blocks swiveling (1-4/arrow)	Remove block wedge and place it in it holder
	Pressure relief valve in the control valve is open	Completely dismantle and clean the pressure relief valve; readjust *
Stabilizer fails	The stop valve's connection in the frame under the revolving seat is jammed	Bring the bucket arm in the direction of travel; make it move freely
Stabilizer fails when bucket arm is lowered in the swiveled position	Non-return valve in the pressure line is open	Bring the bucket arm in the direction of travel; remove and clean the non-return valve; if necessary, replace *

https://truckmanualshub.com/

Malfunction	Possible cause	Remedy
Defects in the drive and working hydraulics	The filter is clogged	Replace filter insert
	Lack of oil in the hydraulic oil reservoir	Refill oil
	Electrical connections to the axial piston pump are loose, disconnected or oxydized	Connect according to the wiring diagram or clean
Defects in the braking system	Parking brake does not hold the loader	Check settings; if necessary, adjust *
Generator does not charge	Plug connection is loose	Push in plug connection and secure
	V-belt torn	Replace V-belt
	Generator speed too low	Check V-belt tension; if necessary, tighten
Heating/ventilation system fails	Fuse in the fuse box is defective	Replace fuse
Hose couplings on attachments cannot be connected	Increased pressure resulting from influence of heat on the attachment	**Carefully** loosen the coupling at the hose end above the quick coupling; oil sprays off; excess pressure drops; tighten coupling **NOTE** Make sure that the collected oil cannot cause any pollution!
	Increased pressure in basic unit	Stop the engine. Remove the pressure in the lines by moving the valve lever for the auxiliary hydraulics (4-7/16) back and forth several times

https://truckmanualshub.com/

https://truckmanualshub.com/

Wiring and Hydraulics

10.1 - 02.2003 Elektrik-Schaltplan/Schéma électrique/Wiring diagramm/Elektrisch schakelschema/El-oversigt/Elektriskt kopplingsschema

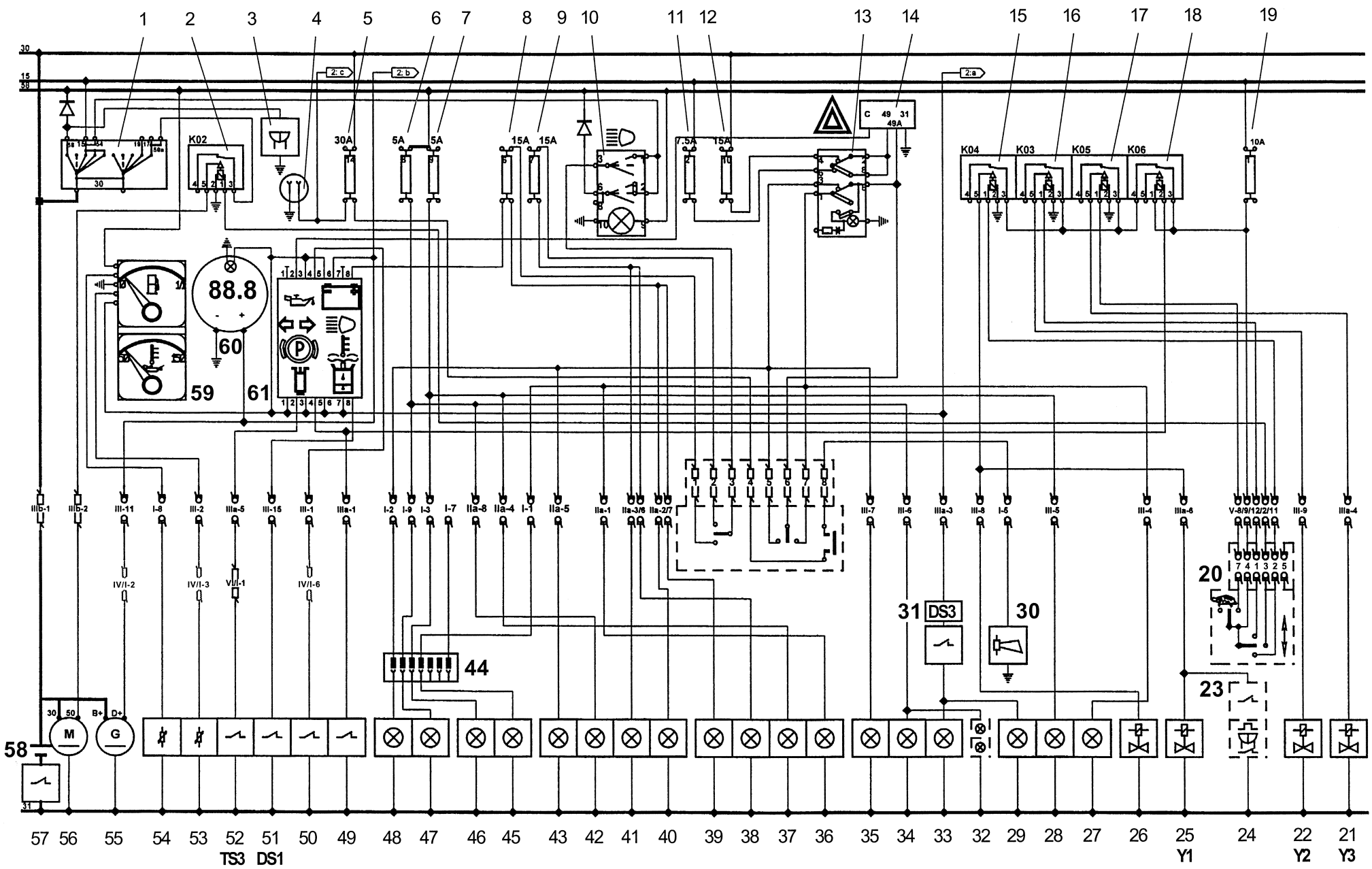

https://truckmanualshub.com/

https://truckmanualshub.com/

10.1 Wiring diagram

Item	Designation
01	Starter switch
02	Start blocking relay
03	Accoustic warning for parking light
04	Socket on instrument panel
05	Fuse (section 2.2 item 14)
06	Fuse (section 2.2 item 8)
07	Fuse (section 2.2 item 9)
08	Fuse (section 2.2 item 6)
09	Fuse (section 2.2 item 7)
10	Switch for driving lights required by German traffic regulations
11	Fuse (section 2.2 item 2)
12	Fuse (section 2.2 item 10)
13	Hazard flasher light activation
14	Flasher transmitter
15	Relay for performance adaptation, backwards
16	Relay for performance adaptation, forwards
17	Relay for gear selector
18	Relay for performance adaptation, driving interruption
19	Fuse (section 2.2 item 1)
20	Activation of: fast/slow driving stages forwards/backwards
21	Valve, gear selector
22	Forward valve drive direction
23	Switch, reversing buzzer
24	reversing buzzer
25	Reverse valve drive direction
26	Valve, direction recognition
27	Turn indicator light, rear right
28	Rear light, right
29	Brake light, right
30	Signal horn
31	Brake light switch
32	License plate illumination, (opt.)
33	Brake light, left
34	Rear light, left
35	Turn indicator light, rear left
36	Turn indicator light, front right
37	Parking light, right
38	Dipped beam, right
39	High beam, right
40	High beam, left
41	Dipped beam, left
42	Parking light, left
43	Turn indicator light, front left
44	Socket, 7-pole
Bucket protection:	
45	Turn indicator, right
46	Contour light, right
47	Contour light, left
48	Turn indicator, left
49	Switch, parking brake
50	Switch, engine oil pressure
51	Switch, hydraulic oil filter
52	Switch, hydraulic oil temperature
53	Engine oil pressure sensor
54	Immersion tube sensor
55	Generator
56	Starter motor
57	Battery main switch
58	Battery
59	Fuel display/Engine oil temperature display
60	Operating hours meter
61	Monitoring lamps

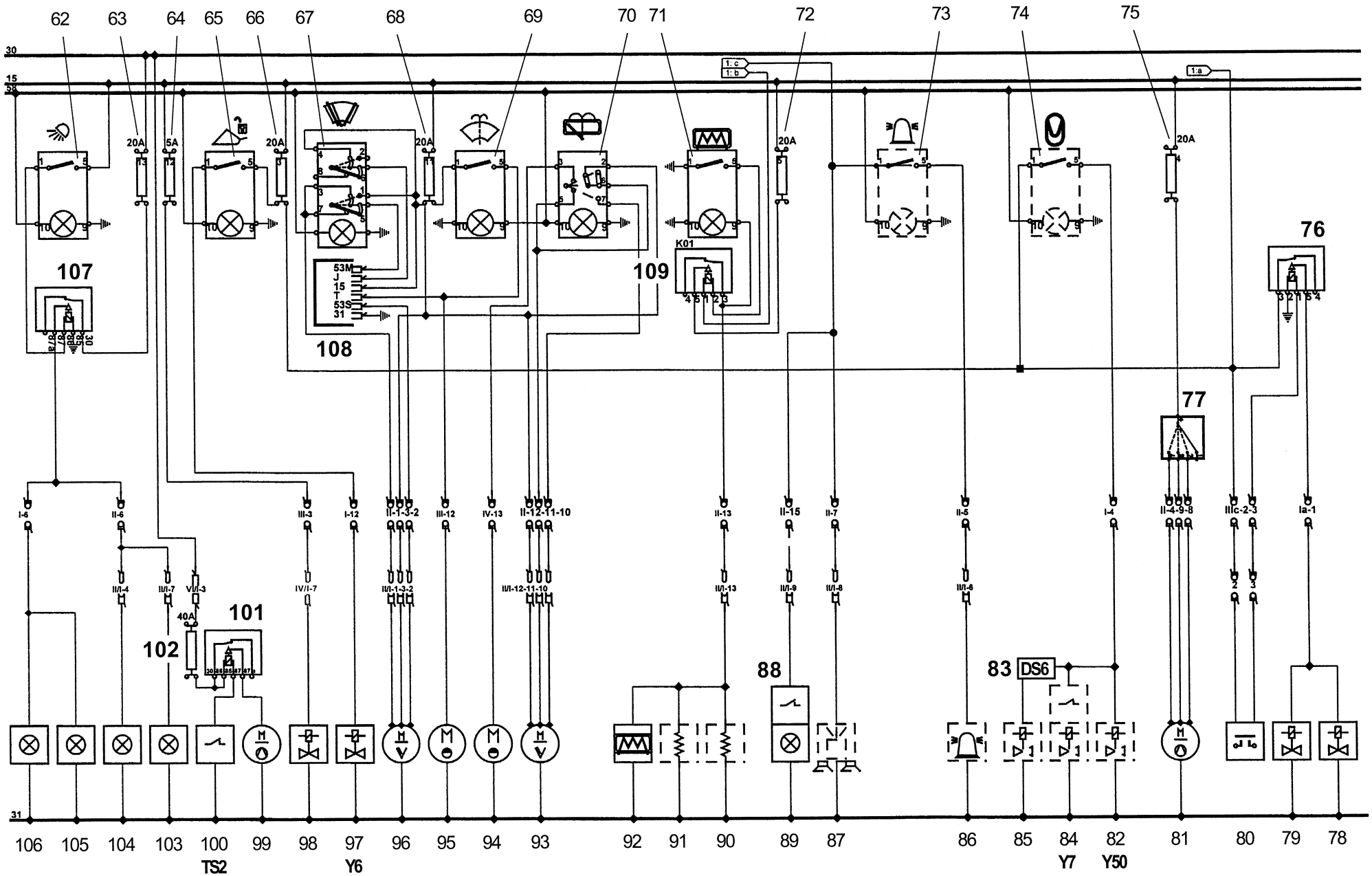

https://truckmanualshub.com/

https://truckmanualshub.com/

10.1 Wiring diagram

Item	Designation
62	Activation of working lights
63	Fuse (section 2.2 item 13)
64	Fuse (section 2.2 item 12)
65	Activation of release for quick-change device
66	Fuse (section 2.2 item 3)
67	Activation of front interval wiper
68	Fuse (section 2.2 item 11)
69	Activation of front washer
70	Activation of rear wiper/washer
71	Activation of rear window heater
72	Fuse (section 2.2 item 5)
73	Activation of beacon light (opt.)
74	Activation of lifting mechanism suspension (opt.)
75	Fuse (section 2.2 item 4)
76	Relay: Switching to 2nd hydraulic oil circuit
77	Activation of ventilation (heater)
78	Valve: 2nd hydraulic oil circuit
79	Valve: 2nd hydraulic oil circuit
80	Actuator: Switching to 2nd hydraulic oil circuit
81	Ventilation motor, heater
82	Valve: Pipe break safety device/lifting mechanism suspension (opt.)
83	Pressure switch, lifting mechanism suspension (opt.)
84	Storage valve, lifting mechanism suspension (opt.)
85	Reservoir valve, lifting mechanism suspension (opt.)
86	Beacon light (opt.)
87	Radio (opt.)
88	Switch, interior lights
89	Interior lights
90	Heatable rearview mirror, right
91	Heatable rearview mirror, left
92	Rear window heater
93	Motor, rear wiper
94	Motor, rear washer
95	Motor, front washer
96	Motor, front wiper
97	Valve, release for quick-change device
98	Valve, engine switch-off
99	Ventilation motor, oil cooler
100	Temperature switch, oil cooler
101	Relay, oil cooler
102	Fuse (oil cooler)
103	Rear working lights
104	Rear working lights
105	Front working lights
106	Front working lights
107	Relay, working lights
108	Interval transmitter
109	Time relay, rear window heater

NOTE

The item nos. printed in bold type in the wiring diagram are cross-references to the interface in the hydraulics plan.

Hydraulik-Schaltplan/Schéma hydraulique/Hydraulic circuit diagram/Hydraulisch schakelschema/Hydraulikoversigt/Hydraulik kopplingsschema

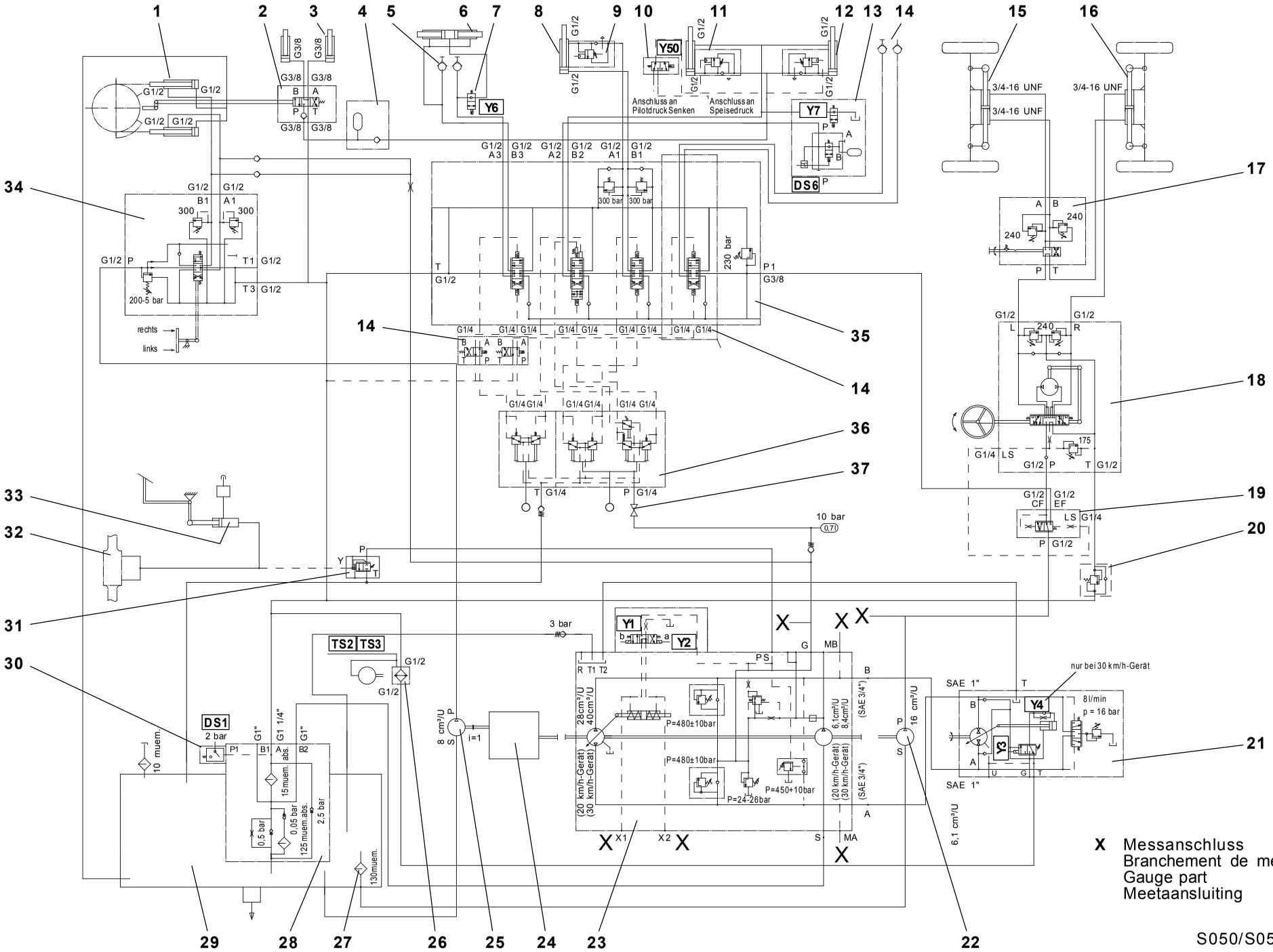

https://truckmanualshub.com/

https://truckmanualshub.com/

10.2 Hydraulic circuit diagram

Item	Designation
01	Swivel cylinder DW 80/32/540/845
02	Supporting valve
03	Supporting cylinder EW 32/104/389.5
04	Reservoir system, pipe break protection (option)
05	Auxiliary hydraulics, external circuit
06	Locking cylinder DW 63/40/195
07	Electrohydraulic interlock for quick-change device
08	Tip cylinder GDW 100/50/317/1297
09	Pipe break protection, tilt cylinder (option)
10	Combination valve: pipe break protection / lifting device suspension (option)
11	Pipe break protection, lift cylinder (option)
12	Lift cylinder DW 70/40/445/909
13	lifting device suspension (option)
14	Auxiliary hydraulics, internal circuit (option)
15	Steering cylinder, front
16	Steering cylinder, rear
17	Steering switching valve
18	Steering unit 100 cm^3/rev.
19	Priority valve
20	Servo pressure valve
21	Drive motor A6VM 107 HA1U1
22	Gear-type pump 16 cm^3/rev.
23	Drive pump A4VG 28 DA1D4
24	Drive motor KHD 1011 F
25	Gear-type pump 8 cm^3/rev.
26	Hydraulic oil cooler with electric fan
27	Suction strainer
28	Combined suction and return flow filter
29	Hydraulic oil tank
30	Electric contamination indicator
31	Inching valve
32	Drum brake
33	Main brake cylinder
34	1-way valve
35	3-way valve
36	Control pressure transmitter
37	Shut-off valve, working hydraulics

https://truckmanualshub.com/

https://truckmanualshub.com/

Technical Data (Loader)

https://truckmanualshub.com/

11 Technical data (Loader)

NOTE

All technical data refer to tire size 15.5/55 R 18.

11.1 Loader

- Height	2550 mm
- Width	1620 mm
- Wheel base	1600 mm
- Track	1270 mm
- Operation weight without attachments	4120 kg
- Ground clearance	
- Distrib. transmission	310 mm
- Axle	330 mm
- Turning radius (over rear)	2770 mm
- Steering angle	+/- 35 °
- Oscillation path	+/- 10 °
- Embankment angle	33 °
- Climbing ability with payload	60 %
- Max. shunting force	25 kN
- Max. lifting force	24 kN

11.2 Engine

- Oil/air-cooled diesel engine	
- 3-cylinder, 4-stroke, direct injection	
- Displacement	2049 cm³
- Power according to ISO 1585	30.0 kW at 2500 rpm
- Exhaust emission regulation according to RL 97/68 EC step 1 + EPA	

11.3 Starter

-	2.2 kW, 12 V

11.4 Alternator

-	60 A, 14 V

11.5 Hydrostatic drive unit

Type "20 km/h"

- Travel speed I	0.....6 km/h
- Travel speed II	0.....20 km/h

Type "30 km/h"

- Travel speed I	0.....8 km/h
- Travel speed II	0.....30 km/h

11.6 Axle loads

- Permitted axle loads in accordance with StVZO	
- Front	3000 kg
- Rear	3000 kg
- Permitted total weight in accordance with StVZO	4500 kg

https://truckmanualshub.com/

11.7 Tires

The following tire sizes are permitted:

- Size		12.5-18
- Tire pressure	- front	2.5 bar
	- rear	2.5 bar
- Size		15.5/55 R 18
- Tire pressure	- front	3,0 bar
-	rear	3,0 bar
- Size		335/80 R 18
- Tire pressure	- front	3.0 bar
	- rear	3.0 bar

11.8 Steering system

- Four-wheel (can be switched to rear-wheel)
- Hydrostatic via priority valve
- Pressure max. 170 bar

11.9 Brake system

- Hydraulic service brake (wet lamellae) acting on all four wheels.
- Parking brake acting on all four wheels via prop shafts.

11.10 Electrical system

- Battery 12 V, 66 Ah

11.11 Hydraulic system

- Capacity	70 l
- Hydraulic oil tank	49.5 l
- Flow	40 + 20 l/min
- Max. operating press.	230-5 bar
- 2 lift cylinders	Ø 70/40 mm
- 1 tip cylinder	Ø 70/40 mm
- Times according to DIN ISO 7131	
Raise	5.5 s
Lower	3.5 s
Dump 90°	1.4 s
Tilt up 45°	2.2 s

11.11.1 Swivel mechanism

- Flow	20 l/min
- Max. operating press.	200+/-5 bar
- 2 swivel cylinders	Ø 80/32 mm
- Swivel time 180°	7.0 s

11.11.2 Stabilizers

- Operating press.	load controlled
- 2 stabilizer cylinders	
Plunger diameter	36 mm

https://truckmanualshub.com/

11.12 Fuel supply system

- Capacity Fuel tank	42 l

11.13 Heating and ventilation system

- Oil heater	COBO
- Type	2/9008/COMB-10/A45
- Heat output 3-speed	Q_{80}max. 10.5 kW at V_{oil} 30 l/min
- Blower output 3-speed	max. 785 m³/h

11.14 Full flow suction filter

- Grade of filtration according to ISO 4572	10 µm abs.
- By-pass reaction pressure	Δp = 0.25 bar

11.15 Electrical contamination indicator

- Switch pressure	Δp = 0.15 bar

11.16 Oil cooler with thermostat control

- Power	max. 12 kW
- Flow rate	
- Slow speed	14 l/min
- Fast speed	21 l/min

11.17 Noise emission

“20 km/h” variant

Sound power level (LWA) » Noise outside: «	99 dB(A)
Acoustic power level (LpA) » noise in the driver’s cabin: «	78 dB(A)

“30 km/h” variant

Sound power level (LWA) » Noise outside: «	99 dB(A)
Acoustic power level (LpA) » noise in the driver’s cabin: «	78 dB(A)

https://truckmanualshub.com/

Technical Data (Attachments)

https://truckmanualshub.com/

12 Attachments

NOTE

- All technical data refer to tire size 15.5/55 R 18.

12.1 Buckets

- Dimensions acc. to ISO 7131/35

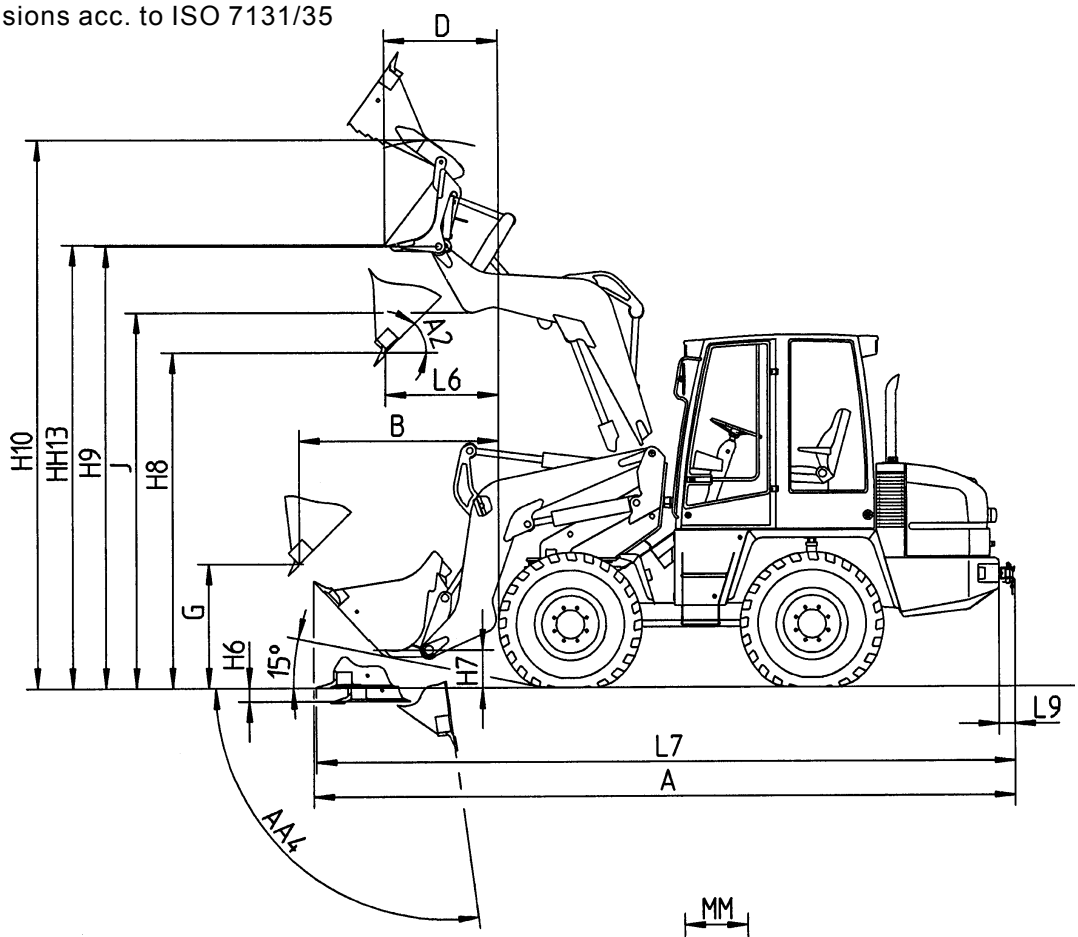

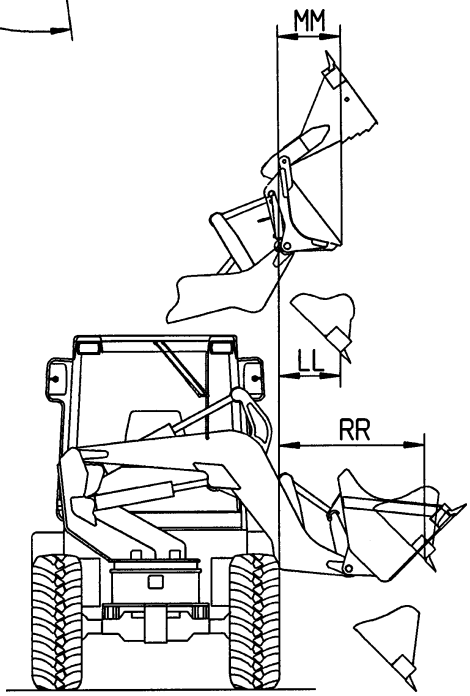

https://truckmanualshub.com/

12.1 Buckets

Bucket type		Standard bucket	Lightweight bucket	Multi-purpose bucket
Bucket volume according to DIN/ISO 7546	m³	**0,5**	**0,6**	**0,45**
Bucket width	mm	1650	1650	1650
Dead weight	kg	238	250	380
Loads according to ISO 14397				
Bulk density	t/m³	1,75	1,4	2,0
Rated dump load				
- frontal	kg	2240 (2430)*	2160 (2350)*	2190 (2380)*
- swiveled	kg	2025 (2120)*	1965 (2060)*	2045 (2140)*
Rated payload				
- frontal	kg	1120 (1215)*	1080 (1175)*	1095 (1190)*
- swiveled	kg	1010 (1060)*	980 (1030)*	1020 (1070)*
Loads according to ISO 8313				
Bulk density	t/m³	1,55	1,25	1,8
Rated dump load				
- frontal	kg	2020 (2200)*	1980 (2160)*	2000 (2180)*
- swiveled	kg	1620 (1650)*	1570 (1600)*	1640 (1670)*
Rated payload				
- frontal	kg	1010 (1100)*	990 (1080)*	1000 (1090)*
- swiveled	kg	810 (825)*	785 (800)*	820 (835)*
Tear-out force according to ISO 8313	kN	35,0	30,3	37,2

A	Total length	mm	4865	4860	4820
AA4	Max. dump angle	°	105	105	105
A2	Max. dump angle	°	46	46	46
B	Max. dumping distance at dumping angle 45°	mm	1355	1375	1305
G	Dumping height at max. dumping width and dump angle 45°	mm	810	790	825
H6	Depth of feed-in	mm	100	50	85
H7	Distance to the bolt center (quick-change device)	mm	440	440	440
H8	Dumping height at max. lifting height and dump angle 45°	mm	2490	2460	2470
H9	Distance to the bolt center (quick-change device)	mm	3160	3160	3160
H10	Maximum working height	mm	3775	3775	4425
J	Free lift height	mm	3030	3030	3030
LL	Dumping distance at max. lifting height and dumping angle 45°	mm	190	210	135
L6	Dumping distance at max. lifting height and dumping angle 45°	mm	385	405	330
L7	Total length	mm	4770	4790	4750
L9	Shunting and trailer coupling	mm	125	125	125
RR	Max. dumping distance at dumping angle 45°	mm	1000	1020	950

Multi-purpose bucket opened:

D	Dumping distance at max. lifting height and tilted bucket	mm	-	-	340
HH13	Max. dumping height with swiveled bucket	mm	-	-	3200
MM	Dumping distance at max. lifting height and tilted bucket	mm	-	-	140

NOTE

- The permissible payloads as per **DIN 14397** are given **for reasons of comparison** only.
- The permissible payloads as per **ISO 8313** equal the **actual payloads**.

* The values given in brackets refer to a machine **with additional weight.**

https://truckmanualshub.com/

12.2 Fork-lift attachment

- Dimensions acc. to ISO 7131/35

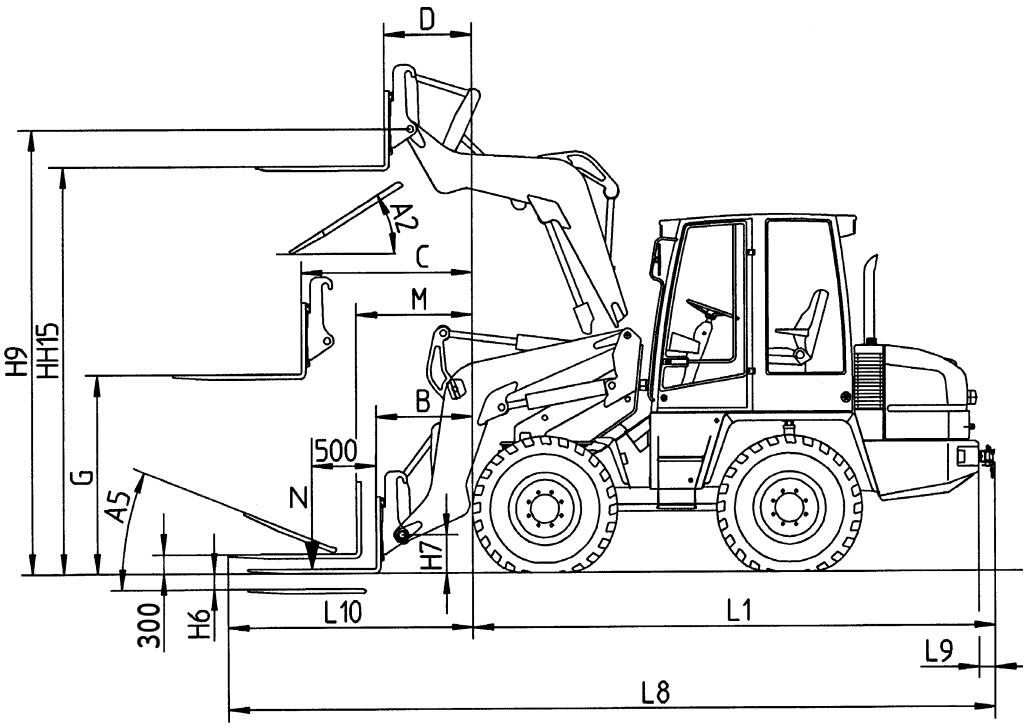

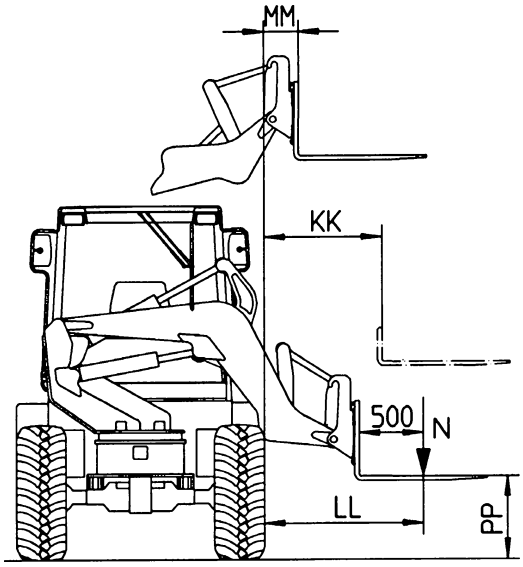

https://truckmanualshub.com/

12.2 Fork-lift attachment

Fork length	1000 mm
Fork height	35 mm
Fork spacing (centre - centre)	
- min.	150 mm
- max.	825 mm
Dead weight	128 kg

Permissible payload N acc. to ISO 14397

frontal	
- level terrain (stability safety factor 1.25)	1510 kg (1630 kg)*
- rough terrain (stability safety factor 1.67)	1130 kg (1225 kg)*
swiveled	
- level terrain (stability safety factor 1.25)	1265 kg (1275 kg)*
- rough terrain (stability safety factor 1.67)	945 kg (975 kg)*

Permissible payload N acc. to ISO 8313

frontal	
- level terrain (stability safety factor 1.25)	1400 kg (1500 kg)*
- rough terrain (stability safety factor 1.67)	1050 kg (1150 kg)*
swiveled	
- level terrain (stability safety factor 1.25)	1060 kg (1080 kg)*
- rough terrain (stability safety factor 1.67)	800 kg (810 kg)*

Permissible payload N acc. to ISO 8313 **(height of upper tine edge: 150 mm)**

frontal	
- level terrain (stability safety factor 1.25)	1600 kg (1750 kg)*
- rough terrain (stability safety factor 1.67)	1200 kg (1300 kg)*

A2	Dump angle	32 °
A5	Tilt angle	21 °
B	Min. operating span	705 mm
C	Max. operating span	1155 mm
D	Operating span at max. lifting height	160 mm
G	Free lift height at max. reach	1265 mm
H6	Depth of feed-in	85 mm
H7	Distance to the bolt center (quick-change device)	265 mm
H9	Distance to the bolt center (quick-change device)	3170 mm
HH15	Free lift height at max. lifting height (upper edge of tines)	2940 mm
KK	Max. operating span	815 mm
LL	Distance between tires and rated load	1155 mm
L1	Length	3390 mm
L8	Total length	5280 mm
L9	Shunting and trailer coupling	125 mm
L10	Distance between tire and tine point (height of upper tine edge: 300 mm)	1890 mm
M	Reach (height of upper tine edge: 300 mm)	895 mm
MM	Reach at max. lifting height	-50 mm
PP	Min. free lift height	510 mm

NOTE

- The permissible payloads as per **DIN 14397** are given **for reasons of comparison** only.
- The permissible payloads as per **ISO 8313** equal the **actual payloads**.

* The values given in brackets refer to a machine **with additional weight.**

https://truckmanualshub.com/

12.3 Lifting hook

- Dimensions acc. to ISO 7131/35

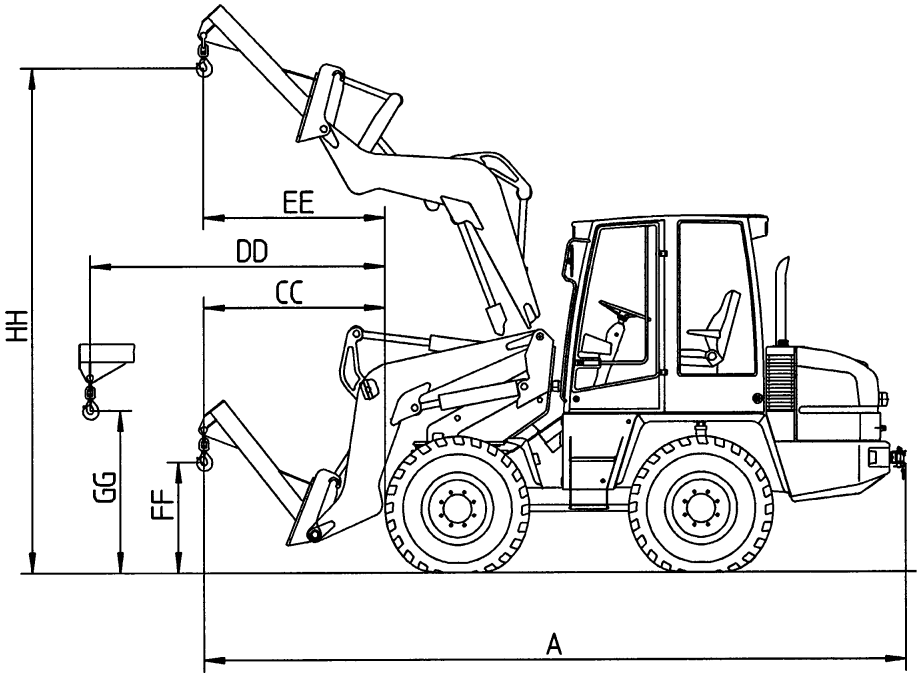

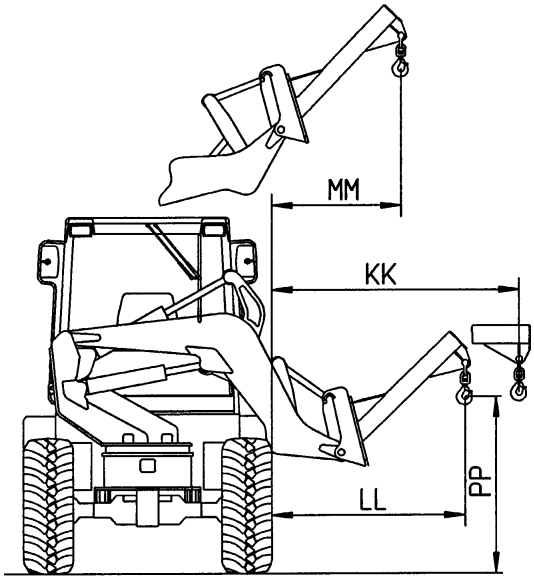

https://truckmanualshub.com/

12.3 Lifting hook

Permissible payload according to DIN EN 474-3 (Measurement analog to ISO 8313)

- Max. reach (stability safety factor 2)	
- front	850 kg (890 kg)*
- swiveled	640 kg (680 kg)*
Dead weight	72 kg

A	Total length	4310 mm
CC	Min. reach	920 mm
DD	Max. reach	1770 mm
EE	Reach at max. lifting height	500 mm
FF	Min. lifting height with tilted quick-change device	515 mm
GG	Lifting height at max. reach	1235 mm
HH	Max. lifting height	3510 mm
KK	Max. reach	1410 mm
LL	Min. reach	980 mm
MM	Reach at max. lifting height	1115 mm
PP	Lifting height at min. reach	1080 mm

NOTE

* The values given in brackets refer to a machine **with additional weight.**

https://truckmanualshub.com/

https://truckmanualshub.com/

Optional Extras, Changes

https://truckmanualshub.com/

13 Additional options, modifications, notes on inspection for loaders

13.1 Additional options

none

13.2 Modifications

none

https://truckmanualshub.com/

https://truckmanualshub.com/

https://truckmanualshub.com/

https://truckmanualshub.com/

https://truckmanualshub.com/

https://truckmanualshub.com/

https://truckmanualshub.com/

https://truckmanualshub.com/

https://truckmanualshub.com/

https://truckmanualshub.com/

https://truckmanualshub.com/

https://truckmanualshub.com/