https://truckmanualshub.com/

SISU

Bodybuilders Instructions

Press Button

https://truckmanualshub.com/

Record

https://truckmanualshub.com/

Contents

Cover 1
Record 2
Regulations relating to the bodyworks of vehicles 15
Machinery Directive (EC countries) 15
Regulations given by the authorities 15
1 Truck, bodywork, machine 17
2 Bodywork categorization 17
2.1 Bodyworks, group 1: 17
2.1.1 Group 1 includes 17
2.2 Bodyworks, group 2 18
2.2.1 According to the Machinery Directive 98/37/EC 18
2.2.2 Group 2 bodyworks 18
2.3 Vehicle/machinery 19
3 Regulations, Group 1 20
3.1 Masses and main dimensions of vehicles and vehicle combinations in international traffic (EC countries) 21
3.1.1 Trailer axle weight table, EU countries 22
3.1.2 Maximum laden masses of vehicles in the EU 23
3.1.3 Maximum laden masses of trailers in the EU 23
3.1.4 Maximum laden masses of combination vehicles in the EU 24
3.1.5 Vehicle, trailer and combination vehicle lengths in the EU 25
3.1.6 Maximum width and height of vehicles and trailers in the EU 25
3.1.7 Maneuverability in the EU 25
3.2 Other regulations relating to the structures and operation of vehicles 26
3.3 Brake adapting 26
3.4 Licenced mounting and repair 26
3.4.1 Licencing for modifications and repairs 27
3.5 Bodyworks 27
4 Regulations, Group 2 28
4.1 General 28
4.1.1 Responsibility 28
4.1.2 Conformity 28
4.2 Certifying the conformity 29
4.2.1 Procedure based on the declaration by the manufacturer of the machinery 30
4.2.2 EC type-examination procedure 30
4.2.3 Declaration of conformity 30
4.2.3.1 Declaration A. 31
4.2.3.2 Declaration B. 32
4.2.3.3 Declaration C. 32
4.2.4 Other certificates 32
5 CE marking 33
5.1 General 33
5.2 CE mark 33
5.3 Examples of the declaration of conformity and CE marking 34
6 Instructions, indications and technical documentation 38
7 Notified body 39

https://truckmanualshub.com/

8 Acquiring the regulations . . . 39
9 General safety instructions . . . 41
9.1 Dangers . . . 41
9.1.1 Falling . . . 42
9.1.2 Rolling over . . . 42
9.1.3 Electric shock . . . 42
9.1.4 Pneumatics . . . 43
9.1.5 Hydraulics . . . 43
9.1.6 Coolant . . . 43
9.1.7 Refrigerant . . . 44
9.2 Unintentional starting/moving of the vehicle . . . 44
General bodywork constructioning guidelines . . . 45
Notes on bodywork construction: . . . 46
1 Forces acting on vehicles . . . 47
1.1 Examining the forces . . . 47
1.1.1 Static forces . . . 47
1.1.2 Dynamic forces . . . 47
1.1.3 Lateral forces . . . 48
1.1.4 Torsional forces . . . 48
1.1.5 Stress acting on the frame beams . . . 48
2 Sisu frame beams . . . 49
2.1 Sisu S-series frame material . . . 50
2.2 Sisu E-series frame material . . . 50
2.2.1 Heat treatment . . . 50
3 Strengthening the vehicle’s frame . . . 50
3.1 General . . . 50
3.1.1 Diagonal support . . . 50
3.1.2 Other strengthening . . . 50
4 Subframe . . . 51
4.1 General . . . 51
4.1.1 Subframe function . . . 51
4.2 Material . . . 51
4.3 Subframe construction and dimensioning . . . 52
4.3.1 General . . . 52
4.3.2 Subframe general requirements . . . 52
4.3.3 Subframe material section . . . 53
4.3.4 Subframe bending resistance . . . 54
4.3.5 Subframe plate bracings . . . 55
4.3.6 Subframe truss bracing . . . 56
4.3.7 Notes for mounting . . . 57
4.4 Subframe mounting brackets . . . 58
4.4.1 Mounting bracket material . . . 58
4.4.2 Flexible mounting brackets . . . 58
4.4.3 Rigid mounting bracket . . . 58
4.4.4 Dimensioning the mounting brackets . . . 59
4.4.5 Mounting bracket location . . . 60
4.5 Bolted joints . . . 61
4.5.1 General . . . 61
4.5.2 Bolted-joint dimensioning, tightening . . . 61
4.5.3 Frame holes . . . 62

https://truckmanualshub.com/

4.5.4 Drilling holes . . . 63
Record . . . 64
Flexible bodywork . . . 65
1 Tipping platforms . . . 67
1.1 General . . . 67
1.1.1 Tipping stability . . . 67
1.2 General construction principles . . . 68
1.2.1 Tipping support . . . 69
1.2.2 Tipping-gear mounting . . . 69
1.2.3 Tipping stability test . . . 70
1.3 Construction . . . 70
1.3.1 Hydraulics . . . 70
1.3.2 Tipping gear control device . . . 70
1.3.3 Tipping cylinder/tipping gear . . . 70
1.3.4 Mounting the tipping gear on a vehicle with a high frame . . . 71
1.3.5 Warnings . . . 71
1.3.6 Platform supports . . . 72
1.3.7 Tipping-platform side guides . . . 73
1.3.8 Tipping-platform service support . . . 73
1.4 Tipping-platform subframe . . . 74
1.4.1 Subframe bending resistance . . . 75
1.4.2 Truss bracing . . . 76
1.4.3 Subframe mounting . . . 76
1.4.4 Rearmost plate bracket in vehicles with a lift bogie . . . 77
1.4.5 Closing the rear of the frame . . . 77
1.5 Chassis frame rear overhang . . . 78
1.6 Tipping platforms in trucks with high frames . . . 78
1.6.1 General . . . 78
1.6.2 Tipping-axle mounting . . . 78
1.6.3 Frame truss bracing . . . 79
2 Fixed platform or van body . . . 80
2.1 General . . . 80
2.2 Subframe . . . 80
2.3 Mounting the bodywork . . . 81
2.3.1 Mounting . . . 81
2.3.2 Extremely rigid bodywork . . . 82
3 Fixed platform + loader behind the cab . . . 83
3.1 General . . . 83
3.2 Mountings . . . 83
3.2.1 Loader on the bodywork subframe . . . 84
3.2.2 Loader on a separate subframe . . . 84
3.2.3 Mounting with wear plates . . . 84
3.2.4 Heavy-loader mounting . . . 84
4 Tail lifts . . . 85
4.1 General . . . 85
4.2 Mounting . . . 85
5 Timber truck . . . 86
5.1 General . . . 86
5.1.1 Log loader . . . 86

https://truckmanualshub.com/

5.2 Vehicles with subframes (low-frame vehicles) 86
5.2.1 Subframe 86
5.3 Mounting the loader on a vehicle with a subframe 88
5.4 Mounting the loader on a vehicle with a high frame 89
5.4.1 Sheath saddle mounting at the rear 89
5.5 Front grid 90
5.6 Timber bunks 91

6 Tipping concrete tank 92
6.1 General 92
6.2 Subframe 93
6.2.1 Mounting 93

7 Concrete mixer 94
7.1 General 94
7.2 Subframe 94
7.2.1 Mounting 95

8 Interchangeable platform structures 96
8.1 General 96
8.2 Hoists 96
8.3 Interchangeable platform frame 97
8.4 Interchangeable platform underframe 97
8.5 Interchangeable platform subframe 98
8.5.1 Subframe mounting 98

Rigid bodywork 99

1. Van body or container 101
1.1. General structure information 101
1.2. Subframe 102
1.3. Mounting 103
1.3.1. Mounting the subframe or integrated mounting frame on the chassis frame 103
1.3.2. Mounting brackets 104
1.4. Freezing and refrigerating units 104

2. Rear loaders 105

3. Tank structures 106
3.1. Chassis, tank structure and basic mounting guidelines 106
3.1.1. Chassis frame truss bracing 106
3.2. Tank mounting brackets 107
3.2.1. Mounting bracket mounting 108
3.3. Mounting the tank on the chassis frame 109
3.4. Milk transport lorries 111

4. Bulk tanks 112
4.1. Mounting in general 112
4.2. Fixed bulk tank 113
4.3. Tipping bulk tanks 114
4.3.1. Cradle mounting 115

5. Fire trucks 116

6. Multi-wheel drive special vehicles 117

https://truckmanualshub.com/

Record 118
Other bodywork constructions 119
1. Additional devices, mounting in front of the cab 121
1.1. General. 121
1.2. Headgear 121
1.2.1. Mounting 121
1.2.2. Headgear's 3-point mounting attachment points: dimensioning 122
1.2.3. Additional devices attached to the headgear: operation 122
2. Additional devices/equipment, mounted on the cab or engine 123
2.1. Roof-mounted additional equipment 123
2.2. Engine outlet ports for the cargo space auxiliary heating 124
3. Additional Devices Mounted Behind the Cab 126
3.1. Refrigeration unit 126
3.2. Hydraulics panel, hydraulic oil tank 126
3.3. Crane 128
3.3.1. General 128
3.3.1.1 Plan, check and calculate 128
3.3.2. Roll axes 128
3.3.2.1 Roll axes with one outrigger pair 129
3.3.2.2 Roll axes with two outrigger pairs. 130
3.3.3. Stability factor 131
3.3.3.1 Calculating the stability factor 131
3.3.4. Axle loads and loading capacity 133
3.3.4.1 Selecting the bodywork length and location before weight calculation 136
3.3.5. Mounting the crane 137
3.3.5.1 Web mounting 137
3.3.5.2 Shackle mounting 138
3.3.5.3 Reinforcing the mounting 139
3.3.5.4 Calculating the mounting 140
3.3.6. Subframe and wear plate 143
3.3.6.1 Subframe 143
3.3.6.2 Short subframe 144
3.3.6.3 Wear plate 145
3.3.7. Crane mounting: up to 24 tonne meters. 146
3.3.7.1 Standard 300 mm frame, crane mounted on the wear plate 146
3.3.7.2 Standard 300 mm frame and standard subframe 146
3.3.7.3 Standard 300 mm frame, crane mounted on the short subframe 147
3.3.7.4 High C-frame, crane mounted on the wear plate 147
3.3.8. Crane mounting: 24–32 tonne meters. 148
3.3.8.1 Standard 300 mm frame, subframe and reinforced mounting 148
3.3.8.2 460 mm-high C-frame 148
3.3.9. Crane mounting: heavy cranes over 30 tonne meters 149
3.3.9.1 Standard 300 mm frame and subframe 149
3.3.9.2 High C-frame 150
3.3.9.3 400 mm special frame for crane trucks with a driving front axle 151
3.3.10. Crane commissioning inspection 151
4. Additional devices, mounting between the axles. 152
4.1. Heavy components attached to the frame 152
4.2. Belly blade 153
5. Additional devices, mounting between rear axles. 154

https://truckmanualshub.com/

5.1. Robson drive 154
5.1.1. 300 mm chassis frame 154
5.1.2. 460 mm chassis frame 155
6. Additional devices, mounting behind the rear axles 156
6.1. Tail lift 156
6.1.1. Mounting 156
6.2. Rear-mounted cranes and loaders 157
6.2.1. Roll axes: rear-mounted crane 158
6.2.2. Axle loads and loading capacity with a rear-mounted crane 159
6.2.2.1 Axle loads 159
6.2.2.2 Subframe 161
6.2.3. Crane mounting: rear mount, vehicle with subframe (300 mm chassis frame) 162
6.2.3.1 Heavy cranes 162
6.3. Crane mounting: rear mount, vehicle with high frame (460 mm). 163
6.3.1. Sheath saddle mounting at the rear 163
6.3.2. Heavy crane 163
6.4. Other devices installed behind the rear axle assembly 163
Record 164
PTOs (Power take-offs) 165
1. Engine PTOs 165
1.1. REPTO engine PTOs 165
1.1.1. Cummins M11 engines. 166
1.1.2. Cummins N14 engines. 167
1.2. Cogged-belt driven hydraulic pump. 168
1.2.1. E11 vehicles 168
1.2.2. E14 vehicles 169
1.2.3. Cogged-belt driven hydraulic pump: mounting. 170
1.2.4. Requirements for mounting cogged-belt driven hydraulic pumps 172
2. Transmission PTOs 173
2.1. PTOs for Eaton Fuller RTO/RTLO transmissions 175
2.1.1. Transmission PTOs: below mount 175
2.1.2. Transmission PTOs: side mount 179
2.1.3. RTO 14613 transmission PTOs: rear mount 180
2.2. PTOs for the Eaton RTSO 17316 transmission 182
2.3. PTOs for Renault B18 transmission 188
2.4. PTOs for ZF Ecosplit 16S221 transmission 189
2.5. PTOs for Allison HD 4060P and 4560P transmissions 191
3. Calculating the output and selecting the hydraulic pump size 195
4. Propeller shafts 197
4.1. Propeller shaft operation 197
4.1.1. Joint angle compensation with universal joints. 198
4.1.1.1 Propeller shaft with two joints 199
5. Checking and adjusting the backslash of Chelsea PTOs 200
5.1. PTO without geared adapter 200
5.2. PTO with geared adapter. 201
Record 202
Towing vehicles, coupling devices 203
Coupling device directive 94/20/EC 206

https://truckmanualshub.com/

Identifying approved and compatible coupling devices 206
EC approval markings 206
Coupling inspection 207
Coupling standards 207
Possible problems 208
National testing and approval of coupling devices 208
Notes on various combinations! 209

1. Coupling devices 211
1.1. Equations for coupling devices 211
1.1.1. D value 211
1.1.2. D value 211
1.1.3. Dc value 211
1.1.4. V value 211

2. Trailer coupling mounting beam 212
2.1. Location of the mounting beam/trailer coupling 212
2.2. Mounting of Sisu end cross beam/mounting beam 212
2.2.1. Mounting 213
2.2.1.1 To a standard frame 213
2.2.1.2 To a high frame 214
2.2.2. Inspection 214
2.2.2.1 Mounting inspection 214
2.2.2.2 Maintenance inspections 214
2.3. Mounting of other manufacturer's mounting beams (e.g. VBG) 215
2.4. Towing vehicle's chassis frame and its possible strengthening 215
2.4.1. Low-frame vehicle 215
2.4.2. High-frame vehicle 216

3. Trailer coupling 217
3.1. Trailer coupling position 217
3.2. Mounting of power actuator control valve 217
3.3. Other 217
3.4. Trailer couplings and equipment, supplied from the factory 218

4. Fifth wheel 219
4.1. Tractors for semi-trailers, general 219
4.2. Coupling dimensioning 219
4.2.1. Wheelbase 219
4.2.2. Trailer's front overhang 219
4.2.3. Coupling profile 220
4.2.4. Fifth wheel position 220
4.2.5. Fifth wheel characteristics 221
4.2.6. Trailer's inclination angles 221
4.3. Mounting of fifth wheel 222
4.3.1. Fifth wheel height 222
4.3.2. Fifth wheel's D value, i.e. rated load 223
4.3.3. Attaching of fifth wheel 223
4.3.4. Fifth wheel to a high frame 224
4.4. Special fifth wheels 224
4.4.1. Switchable locking mechanism 224
4.4.2. Sliding fifth wheel 224
4.4.3. Dual height fifth wheel 224

https://truckmanualshub.com/

4.5. Notes on mounting . . . 224
4.6. Fifth wheels and equipment . . . 225
5. Use, maintenance and service of coupling devices . . . 226
5.1. Use of coupling device . . . 226
5.1.1. Trailer coupling . . . 226
5.1.2. Fifth wheels . . . 226
5.2. Maintenance of coupling devices . . . 226
Frame jobs . . . 227
Chassis frame modifications . . . 227
Damage repair . . . 228
Damage repair methods . . . 228
Collision damage . . . 228
Frame job record . . . 228
1. Frame materials . . . 229
. . . 229
2. Welding the frame . . . 230
2.1. Foreword . . . 230
2.1.1. Welding standards . . . 230
2.2. Safety instructions . . . 230
2.3. Protection . . . 230
2.3.1. Disconnecting the electric system . . . 231
2.3.2. Grounding the welding machine . . . 231
2.3.3. Electronic control units and devices, Celect ECM, Mac ECU, ECAS air suspension, ABS braking system, HD transmission . . . 231
2.4. Preliminary work . . . 231
2.4.1. Cleaning . . . 231
2.4.2. Drying/heating . . . 231
2.5. Filler metals . . . 232
2.6. Opening fractures . . . 232
2.7. Joint beveling and welding . . . 233
2.7.1. Welding inner beams . . . 234
2.7.2. Welding imperfections . . . 234
2.7.3. Filling holes . . . 234
2.8. Weld joint post-treatment . . . 234
2.8.1. Cooling . . . 234
2.8.2. Grinding and cleaning . . . 234
2.8.3. Painting . . . 234
3. Wheelbase alterations . . . 235
3.1. General . . . 235
3.2. Preliminary work . . . 235
3.3. Cutting the frame . . . 235
3.3.1. Cutting location . . . 236
3.3.2. Marking . . . 236
3.3.3. Cutting angle . . . 237
3.3.4. Joining . . . 237
3.3.5. Welding the joint/joints . . . 238
3.3.6. Cross beams . . . 238
3.3.7. Inner frame joint locations . . . 238
3.4. Relocating the rear axle or bogie . . . 238

https://truckmanualshub.com/

3.5. Propeller shafts 239
3.6. Adjusting the rear-axle angle and engine angle 240
3.7. Pneumatic pipes 240
3.8. Electric wires 240
3.9. Modification plate 241
3.10. Straightness of the frame 241

4. Installing an additional axle or removing an axle 241
4.1. General 241
4.2. Procedure 242
4.3. Marking 243

5. Mounting chassis frame cross beams 243
5.1. Removing cross beams 243
5.2. Cross beam mounting 243

6. Extending the rear overhang 244
6.1. Rear corner lateral travel 244
6.2. Calculating the rear overhang length 245
6.2.1. Rear axle assembly's center of gravity 245
. 246

7. Documents 247

8. Chassis frame damage repair/strengthening 247
8.1. General 247
8.2. Repair plates 247
8.3. Stiffening the rear overhang for trailer towing 248
8.4. Flat steel bar stiffener for the S-series 249
Record 250

Electric and pneumatic equipment 251

1 Electric devices 251
1.1 Safety instructions 251
1.1.1 Preparing for electric work 253
1.1.1.1 Temporary fuse for the ground wire 253
1.1.2 Electric welding 253
1.1.2.1 Disconnecting the electric system: 253
1.1.2.2 Grounding the welding machine 253
1.1.2.3 Protection 253
1.1.2.4 Electric control units and devices, Celect ECM, Mac ECU, ECAS air suspension, ABS braking system, HD transmission 253
1.1.3 Charging the batteries 254
1.1.4 Oven drying 254
1.1.5 Alternator capacity/bodywork 254
1.2 Dimensioning fuses and wires 256
1.2.1 General 256
1.2.2 Dimensioning the fuses 256
1.2.3 Dimensioning the wires 256
1.3 Connectors 257
1.4 Electrical center 257
1.5 Lead-through routing, connectors 261
1.5.1 Wire lead-through routing from the cab to the chassis 261
1.5.2 Connectors 265

https://truckmanualshub.com/

1.5.3 Electronic units . . . 266
1.6 Power supply to bodywork or other additional installations . . . 267
1.6.1 Antenna cables and power supply for CB and NMT phones and . . . 267
1.6.1.1 CB/NMT/GSM . . . 267
1.6.1.2 NMT/GSM . . . 267
1.6.1.3 . . . 267
1.6.2 Connecting side lights . . . 269
1.6.3 Rear-light connector lead-through hole in frame. . . . 269
1.6.4 Spare wires from cab to chassis . . . 270
1.6.5 Trailer socket connections . . . 270
1.7 Electric connections in ADR-equipped vehicles . . . 271
1.7.1 General . . . 271
1.7.2 Regulations . . . 271
2 Pneumatic devices . . . 272
2.1 Pneumatic system . . . 272
2.1.1 General . . . 272
2.1.2 Compressor . . . 272
2.1.3 Air dryer . . . 272
2.1.4 Warnings . . . 272
2.1.5 Device locations . . . 273
2.2 Pressurizing and depressurizing the pneumatic system . . . 274
2.3 Bodywork pneumatic connections . . . 274
2.3.1 Compressed-air lead-through to cab . . . 275
2.3.2 Connector parts . . . 275
2.3.2.1 Cab bulkhead connector diagram. . . . 276
2.3.3 Fitting the pipe to the connector . . . 277
Record . . . 278
Lights and equipment, general . . . 279
1 Lamps and retro reflectors (EC regulations) . . . 280
1.1 Following lamps and retro reflectors are mandatory on vehicles . . . 280
1.2 In addition to above, following lamps and retro reflectors are optional. . . . 280
1.3 Installing and connecting of lamps . . . 281
1.4 Connections . . . 281
2 General requirements for lamps . . . 282
2.1 E marking on lamps . . . 282
2.1.1 E marking, front lamps . . . 283
2.1.2 E marking, rear lamps . . . 283
2.2 Reference values in use . . . 283
2.3 Color of the light emitted forward/rearward. . . . 283
2.4 Visibility areas of lamps . . . 283
3 Lamps and retro reflectors for vehicles, front . . . 284
3.1 Dipped-beam and main-beam headlamps (1), mandatory . . . 284
3.1.1 Dipped-beam headlamps . . . 284
3.1.2 Main-beam headlamps (1) . . . 285
3.2 Front position lamps (1), mandatory . . . 285
3.3 Additional lamps on snow plowing vehicles (2), if required . . . 285
3.4 Additional main-beam headlamps (3), optional . . . 285
3.5 Front fog lamps (4), optional. . . . 286
3.6 Direction indicator lamps (5), mandatory . . . 286

https://truckmanualshub.com/

3.6.1 Hazard warning signal, mandatory . . . 286
3.7 End-outline marker lamps (6), mandatory . . . 286
3.8 Daytime running lamps (7), optional . . . 287
3.9 Flashing hazard beacon (8), if required . . . 287
3.10 Lamp illuminating company's name plate or route plate (9), optional . . . 287
3.11 Front retro reflectors, optional . . . 287

4 Lamps and retro reflectors for vehicles, side . . . 288
4.1 Side direction indicator lamps (1), mandatory . . . 288
4.2 Side-marker lamps (2), mandatory . . . 288
4.3 Side retro reflectors (2), mandatory . . . 288

5 Lamps and retro reflectors for vehicles, rear . . . 289
5.1 Direction indicator lamp (1), mandatory . . . 289
5.2 Rear position lamp (2), mandatory . . . 289
5.3 Stop lamp (3), mandatory . . . 289
5.4 Rear registration plate lamp (4), mandatory . . . 289
5.5 End-outline marker lamps (5), mandatory . . . 290
5.6 Rear fog lamp (6), mandatory . . . 290
5.7 Reversing lamp (7), mandatory . . . 290
5.8 Rear retro reflectors (8), mandatory . . . 290
5.9 Third stop lamp (9), optional . . . 291
5.10 Work and additional lamps (10), optional . . . 291
5.11 Retro-reflecting outline signals and commercial signals, optional . . . 291
5.12 Additional rear lamp set for tow trucks . . . 291
5.13 Rear marking plates for heavy vehicles . . . 292

6 Lamps, retro reflectors and plates for trailers . . . 293
6.1 Lamps and retro reflectors . . . 293
6.1.1 Direction indicator lamps (1), mandatory . . . 294
6.1.2 Stop lamps (2), mandatory . . . 294
6.1.3 Rear registration plate lamp (3), mandatory . . . 294
6.1.4 Front position lamps, mandatory . . . 294
6.1.5 Front retro reflectors, mandatory . . . 294
6.1.6 Rear position lamps (4), mandatory . . . 294
6.1.7 Rear fog lamp (5), mandatory . . . 294
6.1.8 End-outline marker lamps (6), mandatory . . . 294
6.1.9 Side-marker lamps/retro reflectors, mandatory . . . 294
6.1.10 Reversing lamp (7), mandatory . . . 294
6.1.11 Third stop lamp (8), optional . . . 295
6.1.12 Work and additional lamps . . . 295
6.1.13 Rear retro reflectors (9), mandatory . . . 295
6.1.14 Retro reflectors for protruding structures . . . 295
6.2 Plates . . . 296
6.2.1 Rear marking plates for long vehicles . . . 296
6.2.2 Speed plate . . . 296

7 Lamps and retro reflectors, approvals given by the authorities . . . 297
7.1 Main-beam and dipped-beam headlamps . . . 297
7.2 Direction indicator lamps . . . 297
7.3 Stop lamps . . . 297
7.4 Rear registration plate lamp . . . 297

https://truckmanualshub.com/

7.5 Front and rear position lamps . . . 297
7.6 Rear fog lamp . . . 297
7.7 Reversing lamp . . . 297
7.8 End-outline marker lamps . . . 297
7.9 Lamps illuminating plates . . . 297
7.10 Flashing hazard beacon . . . 297
7.11 Front fog lamps . . . 298
7.12 Parking lamps . . . 298
7.13 Daytime running lamps . . . 298
7.14 Side-marker lamps . . . 298
7.15 Lamps indicating towing vehicles . . . 298
7.16 Retro reflectors . . . 298

8 Markings on vehicles used for traffic subjected to license. . . . 299

9 Other equipment . . . 300
9.1 Trailer socket connections . . . 300
9.1.1 7-pole trailer socket . . . 300
9.1.2 15-pole trailer socket ISO/DIS 12098 . . . 300
9.1.3 VBG 14-pole trailer socket . . . 301
9.1.4 VBG 17-pole trailer socket . . . 301
9.2 Tachograph . . . 302
9.2.1 Inspections of tachograph. . . . 302
9.3 Rear-view mirrors. . . . 302
9.4 Visual obstructions . . . 302
9.5 External projections . . . 302
9.6 Antennas . . . 302
9.7 Rear and lateral protection devices . . . 303
9.7.1 Rear underrun protection for motor vehicles and trailers . . . 303
9.7.2 Requirements . . . 303
9.8 Side guards for motor vehicles . . . 304
9.8.1 Technical requirements for side guards . . . 304
9.8.2 Forward edge of the side guard . . . 305
9.8.3 Rearward edge of the side guard . . . 305
9.8.4 Lower edge of the side guard. . . . 305
9.8.5 Upper edge of the side guard. . . . 305
9.8.6 Derogations . . . 305
9.8.7 Side guards for trailers . . . 306
9.9 Wheel guards and rain flaps . . . 306
9.9.1 Wheel guards and rain flaps for trailers . . . 307
9.10 Fuel tank . . . 308
9.10.1 Fuel tank on trailer . . . 308
9.11 Load lashing . . . 308
9.11.1 Lashing equipment . . . 308
9.11.2 Winch . . . 308
9.11.3 Lashing . . . 308
9.11.4 Special provisions on lashing timber and containers . . . 308

https://truckmanualshub.com/

Regulations relating to the bodyworks of vehicles

Foreword

Extract from the Machinery Directive: "The social cost of the large number of accidents caused directly by the use of machinery can be reduced by inherently safe design and construction of machinery and by proper installations and maintenance."
The purpose of this section is to provide bodywork manufacturers and installers with the required information, or references to such information, on the regulations given by the authorities relating to the bodyworks constructed for and mounted on trucks.

Various laws, decrees and acts on road traffic and especially machine safety are subject to change and increase in number.

The Machinery Directive is a legal obligation relating to machinery and is applied to national legislation in every member state of the European Communities.

In this section we discuss the harmonized regulations of the European Community relating to bodyworks. The bodywork manufacturer must familiarise himself with any possible special national regulations.

Outside the European Community (EC), regulations given by the national authorities must be complied with.

Machinery Directive (EC countries)

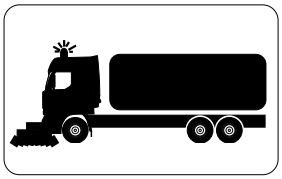

The Machinery Directive covers new machinery, i.e. machines that are placed on the market or put into service for the first time after the decision enters into force. Second-hand machines imported into the European Community economic area or machinery assembled from second-hand components are recognized as new machines that must comply with the directive. The Machinery Directive is compulsory for the manufacturer of the machinery, regarding both individually and serially manufactured machines. Depending on the situation, any person placing the machinery on the market can be regarded as the manufacturer.

Regulations given by the authorities

The regulations relating to vehicles are usually taken from the laws on road traffic, decrees on vehicle construction and equipment and on the use of that equipment, and EC directives relating to vehicles.
The regulations relating to machinery are based on directive 98/37/EC of the European Communities.

From 1 January 1997 onwards, the machinery must comply with all other special directives relating to the machinery in question.

Other regulations given by the authorities include harmonized and national standards and other national regulations relating to product safety.
The level of safety of standards must be followed!

A harmonized standard is a standard for which the reference is published in the Official Journal of the European Communities and which is published as a national standard in a state in the European economic area.

Why is it important to be familiar with the regulations?

Familiarity with the regulations and following them is required for manufacturing and selling machines in the European economic area.

- ❑ Only vehicles and machinery that comply with the regulations are allowed in road traffic.
- ❑ Only machinery that complies with the directive is allowed free movement on the market.
- ❑ Directives lay down the tasks the manufacturer (or other person placing the machinery on the market) must carry out before the machine is placed on the market and put into service.
- ❑ Directives include essential health and safety requirements relating to the machinery.
- ❑ Directives include instructions on certifying the conformity to the directives.

https://truckmanualshub.com/

❑ The manufacturers and other persons placing the machinery on the market must be familiar with the obligations of the directives. These obligations cover both new machinery and second-hand machinery imported into the European Communities economic area.

!

It is extremely important that the bodywork manufacturer, installer or other person placing the machinery on the market has good knowledge of the regulations given by the authorities, because the responsibility for the machine safety and conformity is ten years from the date of sale. In addition, after this period the owner of the machinery has three more years in which any pre-existing damage may be dealt with through legal action.

Section disclaimer

This section presents selected excerpts from the regulations in force at the time of compiling this document. Each bodywork manufacturer and/or installer should acquire complete versions of the appropriate regulations.

General safety instructions are presented at the end of this section.

Bodywork and additional device manufacturer's responsibility

The manufacturer of the bodywork or additional device is solely responsible for the personal injury or material damage caused by the manufactured bodywork or additional device, when the bodywork or device has not complied with the appropriate regulations.

Bodywork and additional-device installer's responsibility

The installer of bodywork or additional devices is solely responsible for the direct or indirect personal injury or material damage caused by himself, his associate, employee or other corresponding person, regardless of the object of the damage, when the injury or damage is directly or indirectly caused by incorrect installation conducted by any person mentioned above, or by not following the regulations given by the authorities, instructions given by the device or machine manufacturer, or instructions on mounting bodyworks or additional devices given by Sisu Auto Inc.

Responsibility of the person placing the machinery on the market

The person who has full responsibility and issues the declaration of conformity is usually the person placing the machinery on the market. Depending on the case or agreement, this person may be the manufacturer, installer, importer or even the owner of the machinery, if he has constructed or installed the machine.

It is advisable to agree who will take full responsibility for the machine delivery in question, i.e. who issues the declaration of conformity, affixes the CE mark and retains the technical construction file.

NOTE!

The responsibility for the Machinery Directive cannot be transferred to an other party, even by an agreement!

Sisu Auto Inc.

will not accept any damage claims arising from the bodywork or additional-device manufacturer's or installer's area of responsibility as mentioned above.

Terminology

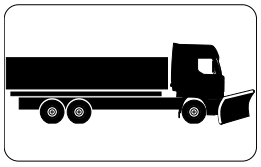

In this bodywork manual, the term **bodywork** refers to any additional structure constructed or mounted on a truck and facilitating or enabling transportation tasks, or any additional device mounted on a truck for an intended task (e.g. plow).

https://truckmanualshub.com/

1 Truck, bodywork, machine

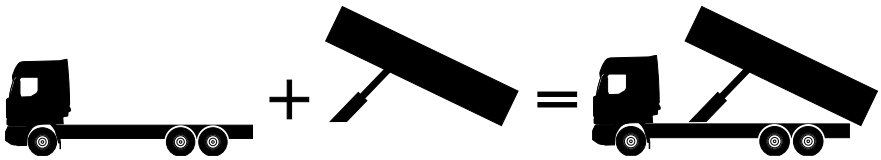

A truck without bodywork is a transportation vehicle, which is not covered by the Machinery Directive. The situation changes conclusively if a bodywork is mounted on the vehicle.

2 Bodywork categorization

Bodyworks can be divided into two groups:

2.1 Bodyworks, group 1:

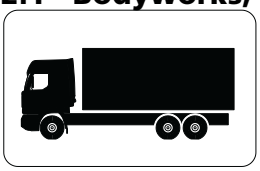

Bodyworks that do not have the characteristics of a machine and hence the Machinery Directive is not applied. This type of bodywork and its general regulations are discussed in group 1, point 3 in this section.

2.1.1 Group 1 includes

❑ platforms and other bodyworks that do not include e.g. electrically, hydraulically or pneumatically actuated moving components, or control systems, or generators.

These include, e.g.:

- timber-bunk structures for timber transportation, provided that they do not include hydraulic, electric or pneumatic release devices, or timber loaders or other crane structures
- van bodies without tipping gears, tail lifts or other auxiliary devices with their own control or power circuits or e.g. refrigeration units.

Regulations relating to group 1 structures are mainly from the road traffic regulations, e.g. regulations on maximum permissible dimensions and loads.

https://truckmanualshub.com/

2.2 Bodyworks, group 2

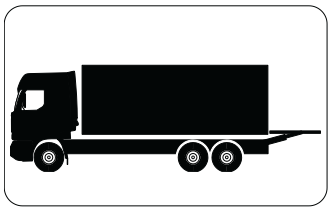

Bodyworks that have the characteristics of machinery and hence are covered by the Machinery Directive. For these structures, Machinery Directive 98/37/EC of the European Communities, other special directives and harmonized standards are applied. These bodywork types are discussed in group 2 in this section.

2.2.1 According to the Machinery Directive 98/37/EC

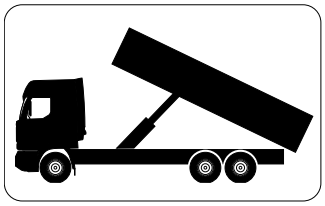

Machinery and safety component

Machinery means an assembly of linked parts or components, at least one of which moves, with the appropriate actuators, control and power circuits, etc., joined together for a specific application. The machinery is assembled in particular for the processing, treatment, moving or packaging of a material.

Machinery also means

a) an assembly of machines that, in order to achieve the same end, are arranged and controlled so that they function as an integral whole

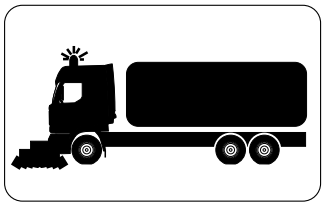

b) interchangeable equipment modifying the function of a machine, which is placed on the market for the purpose of being assembled with a machine or a series of different machines or with a tractor by the operator himself in so far as this equipment is not a spare part or a tool.
In addition, machinery means machinery where the manufacturer declares that it is intended to be incorporated into machinery or assembled with other machinery to constitute machinery covered by the Machinery Directive.

In this decision a **safety component** means a component to fulfil a safety function when in use and the failure or malfunctioning of which endangers the safety or health of exposed persons. However, safety components are not an interchangeable equipment as defined in Article 1 (2).

In addition to all regulations for group 1 structures, all existing EC Machinery Directives, special directives and harmonized standards are applied for group 2 structures.

2.2.2 Group 2 bodyworks

The Machinery Directive applies to the following bodywork structures:

- tipping gears
- standard tipping devices; gravel trucks, trailers and agricultural trailers
- interchangeable platform gears, e.g. hook-lift hoists, interchangeable body devices, etc.
- the structures can be separate, detachable bodyworks attached to the vehicle with taper pin mounting
- container handling devices; lock devices, lift devices
- cranes; general cargo cranes, timber loaders
- tail lifts, side lifts, tail lifts that form a door for the bodywork
- machine-actuated systems for rolling tarpaulins over the load
- lift and roll devices for tarpaulins in trailers
- hydraulic or pneumatic tailgates (often associated with tipping gears)
- conveyors for unloading bodyworks
- vehicles with skidding winches and booms
- vehicles with refrigeration units and van bodies
- towing vehicles
- lift devices for vehicles
- vehicle winches at the front or rear of the vehicle
- towing devices for towing vehicles
- vehicles with garbage packers (type-approval required)
- ladder trucks, personnel hoists (type-approval required)
- vehicles with devices for insulation-material blowing

https://truckmanualshub.com/

- vehicles with wood-chipping devices
- vehicles with tanks
-vehicles for draining drain pits
- vehicles equipped for sewer opening and cleaning
- vehicles equipped for sanitation, e.g. street sweeping and washing
- vehicles equipped for high-pressure cleaning
- vehicles equipped for steam generation
- fire-fighting vehicles with fire pumps (inclination test in the future)
- vehicles equipped for liquids, animal feed and powder materials, with unloading devices and often a tipping gear
- concrete trucks with rotating tanks
- vehicles with belt conveyors
- concrete pump trucks (with boom)
- vehicles with generators
- vehicles with welding machines (engine PTO for the generator)
- generators with a separate drive engine
- vehicles equipped for manufacturing animal feed
- trailers equipped for cooking
- car transportation trailers (with lift devices)
- road-maintenance vehicles
- lift devices for front blades or plows
- drags and blades mounted under the vehicle
- sanding devices: sanding vehicles or additional devices for sanding
- devices for washing and mounting traffic signs

Vehicle bodyworks include structures that are not unambiguously covered by the Machinery Directive. These include for example Robson drives and bogie lift devices. At the moment the Machinery Directive is applied to these devices, provided that the device is supplied and retrofitted by the bodywork manufacturer. In this case, they require appropriate actions according to the Machinery Directive.

If the vehicle manufacturer installs the devices mentioned above, they are regarded as vehicle components, rather than separate machinery.

A hydraulic lifting device or jack included in the vehicle's equipment is also regarded as machinery according to the Machinery Directive, and hence requires the CE mark.

2.3 Vehicle/machinery

For regulations in relation to vehicles, see group 1, point 3, from page 20 onwards);

and

for regulations in relation to machinery, see group 2, point 4, from page 28 onwards.

https://truckmanualshub.com/

3 Regulations, Group 1

Foreword

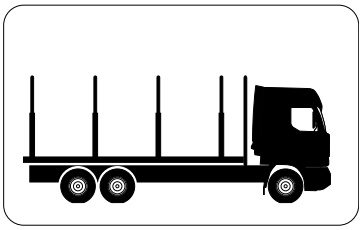

Sisu trucks meet the chassis requirements set by the road traffic legislation, with the exception of the equipment required by the vehicle inspection for various operation duties.
The bodywork and/or additional-device installer must insure that the product to be installed meets the requirements set by the regulations in relation to operation, structure and mounting, and that the product with the selected chassis forms a safe, suitable and operational assembly for the intended purpose.

Any equipment mounted on a chassis or modification must not violate **e-**/**E-**regulations, or other regulations, or alter the structures or dimensions approved in the type approval. However, if these modifications are required, the modifier is obliged to discuss the modification in advance with both the appropriate authorities and Sisu Auto Inc.

(**e** = approval/requirement according to a directive

E = approval/requirement according to the E-regulation)

Adapting the brakes

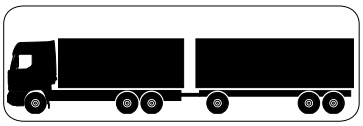

When delivering a vehicle combination, the trailer manufacturer or dealer must insure that the trailer brakes are adapted with the brakes of the towing vehicle. In other words, the trailer must brake its share of the gross weight of the vehicle combination. The brakes are adapted using either a series of braking tests or a dynamometer test.

Dimensions and masses

The following pages present dimensions, masses and maneuverability for trucks and vehicle combinations in international traffic (EU), according to the legislation in force on 1 August 1997.

However, the regulations given by the authorities are amended continuously. The bodywork manufacturer must follow the amendments and acquire the updated versions in order to be able to act according to the regulations in force.

https://truckmanualshub.com/

3.1 Masses and main dimensions of vehicles and vehicle combinations in international traffic (EC countries)

The masses and dimensions of the vehicle referred here must not exceed the values approved in the country where the vehicle is registered or approved for entry into service.

If the registered vehicle is used in other member state of the EEA, the member state may restrict the masses and main dimensions into the following values.

	When a vehicle is driven on the road, the mass on the axle must not exceed the following values: Other than driving axle: 10 tonnes Driving axle: 11.5 tonnes
	When a vehicle or vehicle combination is driven on the road, the mass on the axle or bogie or the maximum laden mass of the vehicle must not exceed the value marked in the vehicle register.
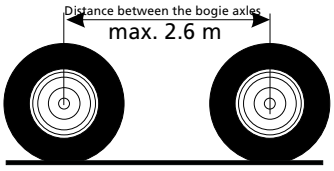	NOTE! The maximum permissible distance between the bogie axles is 2.6 meters.
	When a motor vehicle is driven on the road, the mass on the bogie must not exceed the following values:
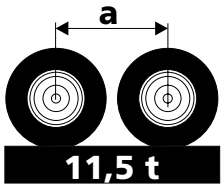	11.5 tonnes (a < 1.0 m) Two-axle bogie, the distance between the axles is under 1.0 meter.
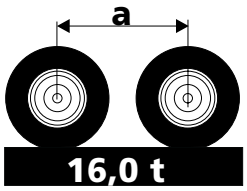	16.0 tonnes (a = 1.0–1.299 m) Two-axle bogie, the distance between the axles is over 1.0 meter but under 1.3 meters.
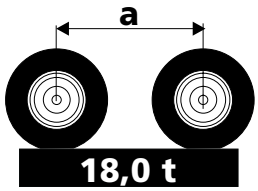	18.0 tonnes (a = 1.3–1.799 m) Two-axle bogie, the distance between the axles is over 1.3 meters but under 1.8 meters.
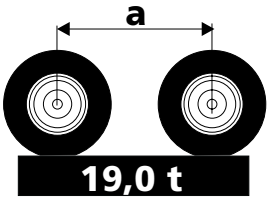	19.0 tonnes (a = 1.3–1.799 m) Two-axle bogie, if the distance between the axles (a) is over 1.3 meters but under 1.8 meters and the driving axle has double wheels and air suspension, or its suspension is recognized to be equivalent to air suspension, or each driving axle has double wheels and the mass on any axle does not exceed 9.5 tonnes.*
* "A suspension recognized to be equivalent to air suspension" means a suspension system for a vehicle axle or group of axles that complies with the requirements of Annex I, point 7.11 to Directive 97/27/EC. "Air suspension" means a suspension system on which at least 75 percent of the spring effect is caused by the air spring.	

https://truckmanualshub.com/

3.1.1 Trailer axle weight table, EU countries

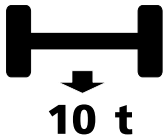	10 tonnes, solo axle.
When a trailer is driven on the road, the mass on the bogie must not exceed the following values:	
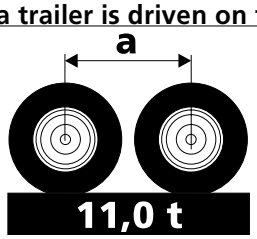	11 tonnes (a < 1.0m) Two-axle bogie, the distance between the axles is under 1.0 meter.
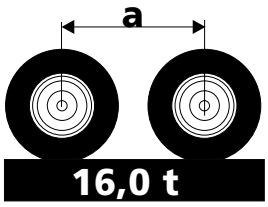	16 tonnes (a = 1.0–1.299 m) Two-axle bogie, the distance between the axles is over 1.0 meter but under 1.3 meters.
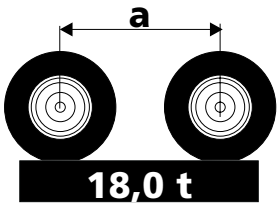	18 tonnes (a = 1.3–1.799 m) Two-axle bogie, the distance between the axles is over 1.3 meters but under 1.8 meters.
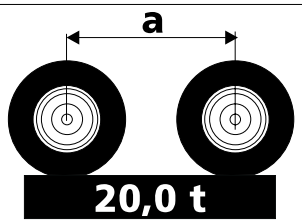	20 tonnes (a = 1.80– m) Two-axle bogie, the distance between the axles is over 1.8 meters.
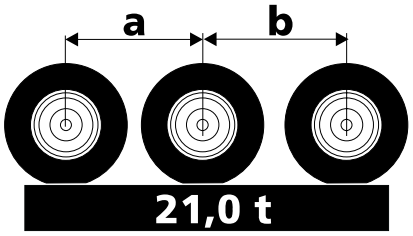	21 tonnes (a = max. 1.30 m) Three-axle bogie, the maximum distance between the axles is 1.3 meters.
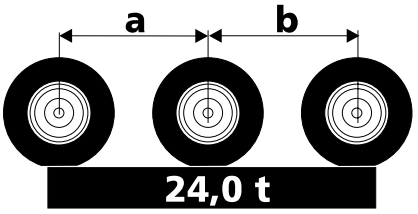	24 tonnes (a/b = 1.31–1.40 m) Three-axle bogie, the distance between the axles is over 1.3 meters but under 1.4 meters.

https://truckmanualshub.com/

3.1.2 Maximum laden masses of vehicles in the EU

	Two-axle vehicle: 18 tonnes.
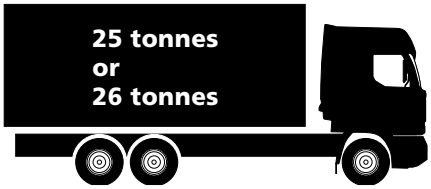	Three-axle vehicle: 25 tonnes. 26 tonnes, if the driving axle has double wheels and air suspension or a suspension recognized to be equivalent to air suspension, or if each driving axle has double wheels and the mass on any axle does not exceed 9.5 tonnes. *
	32 tonnes Four-axle vehicle with two steering axles, if the driving axle has double wheels and air suspension or a suspension recognized to be equivalent to air suspension, or if each driving axle has double wheels and the mass on any axle does not exceed 9.5 tonnes. * However, the maximum laden mass for a four-axle vehicle in tonnes is five times the distance between the farthest axles of the vehicle in meters.
* "A suspension recognized to be equivalent to air suspension" means a suspension system for a vehicle axle or group of axles that complies with the requirements of Annex I, point 7.11 to Directive 97/27/EC. "Air suspension" means a suspension system on which at least 75 percent of the spring effect is caused by the air spring.	

3.1.3 Maximum laden masses of trailers in the EU

	18 tonnes, standard two-axle or center-axle trailer.
	24 tonnes, standard three-axle or center-axle trailer.

https://truckmanualshub.com/

3.1.4 Maximum laden masses of combination vehicles in the EU

The maximum laden mass of a vehicle and trailer is:	
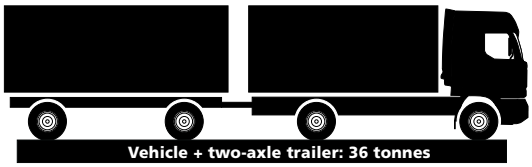	36 tonnes, combination of a two-axle vehicle and a two-axle trailer.
	38 tonnes, combination of a two-axle vehicle and a two-axle semi-trailer, if the distance between the semi-trailer axles is over 1.8 meters and if the driving axle has double wheels and air suspension or a suspension recognized to be equivalent to air suspension.
	40 tonnes, combination of a vehicle and trailer including five or six axles.
	44 tonnes, a combination of a three-axle vehicle and two- or three-axle semi-trailer, carrying an ISO 40-foot container in combined transport
When transporting a combination of a vehicle and trailer in international traffic, the mass on the diving axle or driving axles must be at least 25 percent of the total mass of the combination.	

https://truckmanualshub.com/

3.1.5 Vehicle, trailer and combination vehicle lengths in the EU

Vehicle and trailer lengths in the EU	
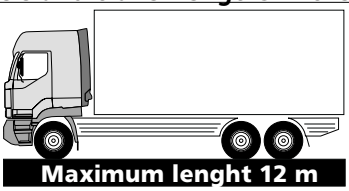	A) The maximum permissible length of a truck is 12.0 meters.
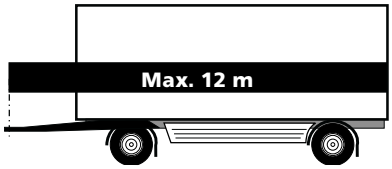	B) 12.0 meters, standard or center-axle trailer with coupling devices.
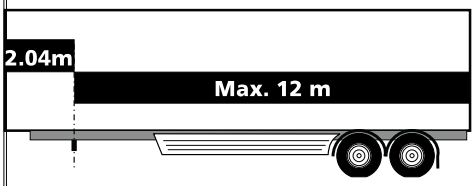	**C)** Semi-trailer: - 12.0 meters from the vertical axis of the fifth wheel king-pin to the rear of the trailer (towing length) - 2.04 meters, from the vertical axis of the fifth wheel king-pin (**radially**) at a horizontal level to any foremost point (the dimension is 1.6 m; 2.55 m for a wide trailer with unrounded front edges).
Combination vehicle lengths in the EU:	
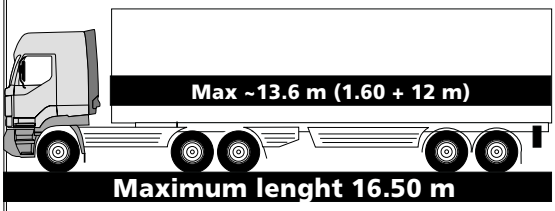	E) 16.5 meters, combination of a vehicle (categories N_2 and N_3) and semi-trailer.
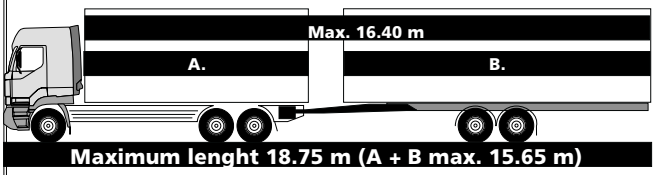	**F)** 18.75 meters, combination of a vehicle and standard or center-axle trailer 15.65 meters, total external length of the loading areas 16.40 meters, distance from the foremost point of the towing vehicle's loading area to the rearmost point of the trailer's loading area.
In a combination of a towing vehicle and standard trailer, the minimum distance between the vehicle's rearmost axle and trailer's frontmost axle is 3.0 meters.	

3.1.6 Maximum width and height of vehicles and trailers in the EU

The maximum height of a vehicle and trailer is 4.0 meters and width 2.55 meters. However, the maximum width of an insulated vehicle is 2.60 meters.

3.1.7 Maneuverability in the EU

A vehicle and a combination of a vehicle and trailer must be able to maneuvre so that when the outer circle has a radius of 12.50 m, the circle of the inner side has a minimum radius of 5.30 meters.

https://truckmanualshub.com/

3.2 Other regulations relating to the structures and operation of vehicles

National regulations relating to the structures and operation must be examined from the regulations given by the appropriate national authorities.

The bodywork manufacturer should acquire all the regulations relating to the construction of bodyworks and also acquire the updated versions when necessary.

3.3 Brake adapting

Adapting the towing vehicle's and trailer's brake circuits in a combination vehicle improves driving safety through more efficient and balanced braking. In addition, balanced braking operation increases the service life of brakes.

Balanced braking operation means that both the towing vehicle and the coupled trailer brake their own weight. When the brakes are adapted correctly, the vehicle's and trailer's deceleration is equal during braking. Hence, no tensile or compressive stress acts on the towbar during braking.

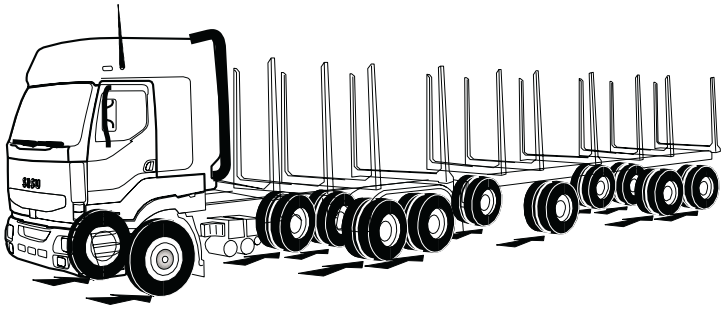

The bodywork manufacturer should acquire all the regulations relating to the inspection of pneumatic brakes for heavy vehicles.

3.4 Licenced mounting and repair

Regulations relating to the commerce of traffic equipment are prepared to influence vehicle safety, environmental damage and energy consumption. Traffic equipment is any component, system or equipment in a vehicle or a personal protective device of a road user.

The regulations apply to traffic equipment when there are regulations for its technical characteristics, or if e.g. a mark of approval must be attached to the equipment.

Mounting or repairing some traffic equipment requires such technical resources and automotive expertise that mounting or repairing is usually subjected to a licence, such as installing and repairing tachographs (classes A and B), mounting and repairing brake systems for heavy vehicles (classes A and B), installing and repairing mandatory speed limiters, etc.

If the bodywork manufacturer conducts this type of work, he should acquire all the regulations relating to the licenced mounting and repair and also acquire the updated versions, when necessary.

https://truckmanualshub.com/

3.4.1 Licencing for modifications and repairs

If the construction or devices of a registered vehicle is modified in a way that has an effect on traffic safety, the vehicle must usually be approved by appropriate authority before the next time the vehicle is put into service.

All modifications of construction or devices do not require a separate modification licence.

Modifications and approval procedures are usually prescribed in the regulations given by the appropriate authority.

3.5 Bodyworks

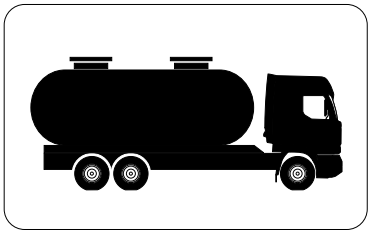

Regulations given by the authorities usually relate to following issues:

- Mounting the bodywork on the vehicle;
- Front wall of the bodywork or equivalent guard protecting the cab;
- Dimensions for the front wall or cab guard;
- Strength of the front wall or cab guard;
- Mounting points;
- Nominal strength of the mounting points;
- The number, location and shape of the mounting points;
- etc.

The bodywork manufacturer must acquire and follow the current versions of the appropriate regulations.

In addition, the bodywork installer must issue a **certificate** that the, for example:

- ❑ mounting and strength of the bodywork;
- ❑ mounting and strength of the cab guard (front grid);
- ❑ mounting and strength of the timber bunks;
- ❑ etc.

meet the requirements set by the appropriate regulations.

https://truckmanualshub.com/

4 Regulations, Group 2

4.1 General

All regulations for group 1 are also applied to group 2.

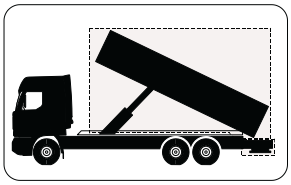

A bodywork that has the characteristics of machinery and is mounted on a vehicle does not mean that vehicle is machinery as covered by the Machinery Directive. The Machinery Directive is only applied to bodyworks classified as machinery and their mounting.

If the purpose of a used vehicle is altered by mounting a different bodywork, a new declaration of conformity must be issued and a new CE mark attached (if the new bodywork is regarded as machinery).

4.1.1 Responsibility

Simple distribution of responsibility is based on the work or service performance of each participant in the supply chain.

In addition, full responsibility for the delivery is often added, based on how the customer has ordered the vehicle and bodywork. This also designates the issuer of the declaration of conformity and attacher of the CE marking.

It is important that, during the purchase of the vehicle, it is agreed who has the full responsibility for the bodywork, issues the declaration of conformity and attaches the CE mark.

A. The vehicle manufacturer is responsible for the safety of the instructions on bodywork mounting issued by the vehicle manufacturer.

B. The bodywork (if covered by the Machinery Directive) manufacturer is responsible for the conformity of the bodywork.

C. The bodywork installer (person/company) is responsible for the conformity of the mounting.

D. In addition, the regulations usually obligate the employer to maintain and repair the tools, i.e. machinery, so that they meet the safety requirements set by the Machinery Directive for their total service life.

❑ The responsibility issues do not depend on the financing method of the vehicle and its bodywork mounting.

The responsibility for the machine safety and conformity is ten years from the date of sale. In addition, after this period the owner of the machinery has three more years in which any pre-existing damage may be dealt with through legal action.

The participant of the supply chain cannot transfer the responsibility to another party, even by agreement.

4.1.2 Conformity

Conformity means that the machinery complies with all the provisions set by the regulations.

Before the CE mark is attached to the machinery and the machinery is placed on the market, the machinery manufacturer and/or installer must sign the EC declaration of conformity.

After this, the CE mark can be attached and the machinery placed on the market.

https://truckmanualshub.com/

4.2 Certifying the conformity

Machinery Directive, Article 8
depending on the machinery, there are two ways of certifying the conformity.

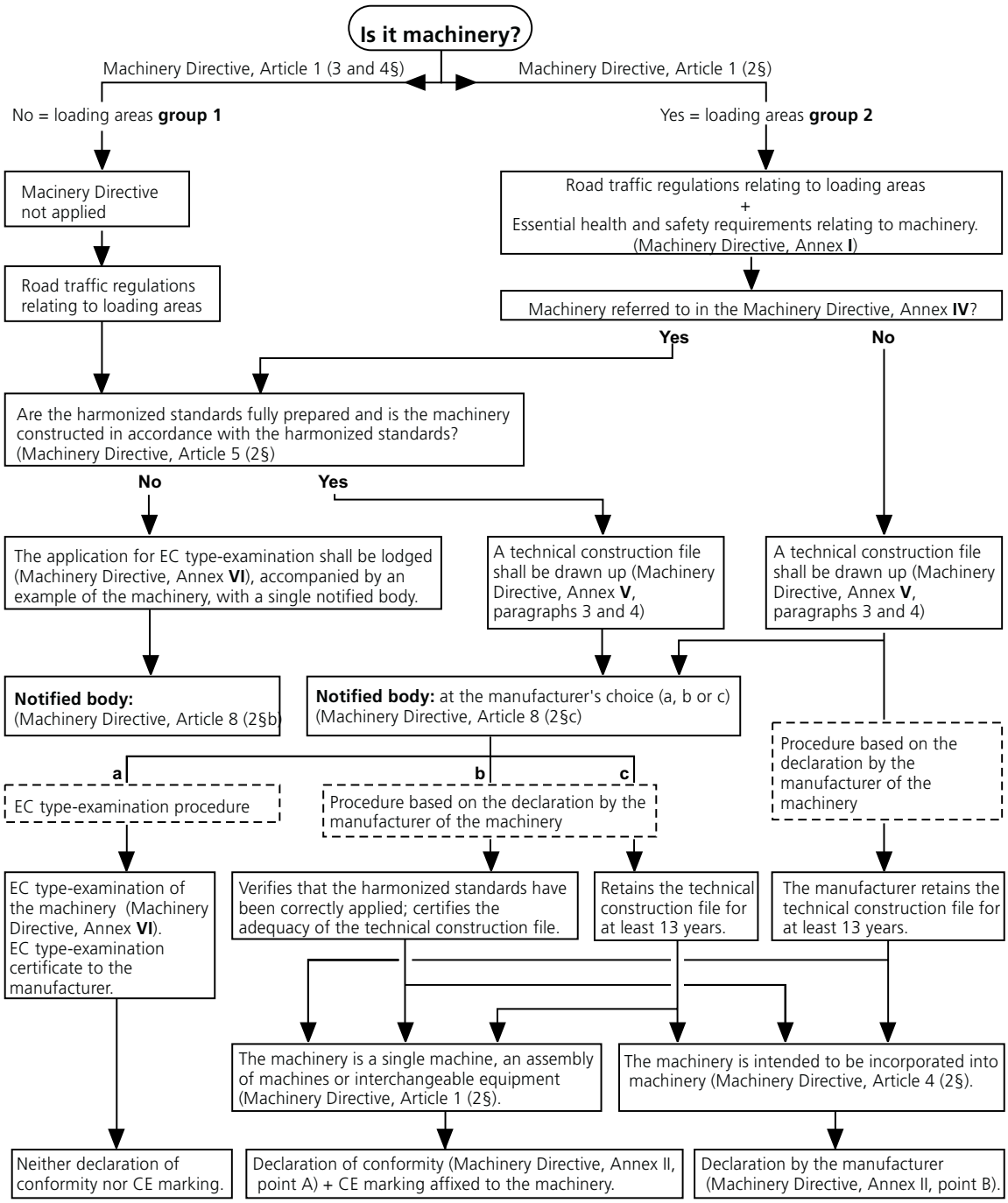

1. Based on the declaration by the manufacturer of the machinery;
if the machinery is not referred to in Annex **IV** to the Machinery Directive.
or
2. Based on the EC type-examination;
- if the machinery is referred to in Annex **IV** to the Machinery Directive, and it is not manufactured in accordance with the harmonized standards, or the standards have not been fully prepared
- requirements as in point **1** but verified by the authorities.

https://truckmanualshub.com/

4.2.1 Procedure based on the declaration by the manufacturer of the machinery

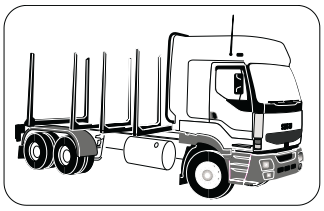

Condition: The machinery is not referred to in Annex **IV** to the Machinery Directive, or it is constructed in accordance with the relevant harmonized standards. (see the Machinery Directive, Article 5 (2)).
For most of the machinery, the manufacturer's own verification and certification of the compliance with the directives and standards is adequate.
The manufacturer indicates this by drawing up the EC declaration of conformity according to Annex **II** to the Machinery Directive and attaching the CE mark.

Before signing the declaration of conformity, it must be verified that the essential requirements relating to the machinery are appropriately satisfied.

In addition, the technical construction files referred to in Annex **V** to the Machinery Directive must be available on demand as described in the Annex.

At their choice, the manufacturer can utilize third parties to test or evaluate the machinery or component for conformity to the standards, required strength characteristics, etc. However, the EC type-examination cannot be applied to machinery not referred to in Annex **IV** to the Machinery Directive.

The safety requirements are similar to the EC type-examination procedure, but the manufacturer takes the responsibility and certifies the conformity.

4.2.2 EC type-examination procedure

Condition: The machinery is referred to in Annex **VI** to the Machinery Directive

(e.g. manually-loaded trucks for the collection of household refuse incorporating a compression mechanism.)

Condition: The machinery is not constructed in accordance with the harmonized standards (see the Machinery Directive, Article 5 (2)), or the harmonized standards have not been fully prepared.

4.2.3 Declaration of conformity

!

If machinery defined as machinery in the Machinery Directive is coupled to or mounted on a vehicle, the vehicle must not be placed on the market or used without the declarations of conformity in accordance with the Machinery Directive (98/37/EC).

According to a general definition, the declaration of conformity is a declaration and statement issued by the manufacturer for which the manufacturer is solely responsible. The declaration of conformity indicates that a product, process or service conforms with the document or documents specified in the declaration.

The declaration of conformity is issued by the party that is finally responsible for the product, process or service placed on the market.

Hence, the designer, manufacturer, dealer, importer, assembler, etc. can be regarded as the supplier, depending on the situation.

The declaration of conformity is intended to inform mainly the authorities, but also the purchasers and users, that the product, process or service conforms with the document or documents specified in the declaration.

When the vehicle manufacturer supplies a vehicle equipped with a bodywork regarded as machinery, the vehicle manufacturer is obliged to issue the declaration of conformity for the machinery and attach the CE mark.

When the vehicle dealer supplies a vehicle equipped with a bodywork regarded as machinery, the dealer is obliged to issue the declaration of conformity for the machinery and attach the CE mark, given that the bodywork manufacturer has not already issued the declaration and attached the mark.

If the purchaser of the vehicle purchases and orders the mounting of a bodywork regarded as machinery, the purchaser must demand that the bodywork (machinery) manufacturer and/or installer supplies:

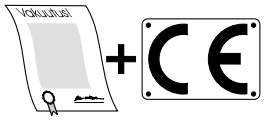

a) The declaration of conformity (Annex II, point A) and CE mark on the machinery, if the machinery is a single machine, an assembly of machines or interchangeable equipment (machinery that can be coupled by the operator using e.g. quick-couplers).

https://truckmanualshub.com/

e.g. A tipping gear mounted on a vehicle is a complete machinery and the installer/supplier must issue the above-mentioned EC declaration of conformity referred to in Annex II, point A + attach the CE mark.

e.g. When the vehicle manufacturer or dealer supplies a vehicle equipped with a sander, plow, belly blade, etc. designed for road-maintenance duties, the manufacturer or dealer must issue the declaration of conformity referred to in Annex II, point A and attach the CE mark.

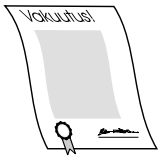

b) The declaration of conformity referred to in Annex II, point B (declaration by the manufacturer, no CE marking), if the machinery is intended to be incorporated into machinery.

e.g. A separate tipping cylinder for a tipping gear is an element and must be accompanied by the declaration of conformity referred to in Annex II, point B, issued by the manufacturer, but no CE marking.

e.g. A tail lift must be must be accompanied by the declaration of conformity referred to in Annex II, point B, issued by the manufacturer (the bodywork company mounting the tail lift on the vehicle will issue the declaration of conformity referred to in Annex II, point A and attaches the CE mark).

c) The declaration of conformity referred to in Annex II, point C, if the machinery is a safety component supplied separately for the machinery.

(In the Machinery Directive, a safety component means a component to fulfil a safety function when in use and the failure or malfunctioning of which endangers the safety or health of exposed persons. However, a safety component is not interchangeable equipment as defined in Article 1 (2).)

Hence, there are three types of declarations of conformity:

A, B and C.

4.2.3.1 Declaration A. (declaration of conformity for machinery)

Contents of the EC declaration of conformity for machinery:

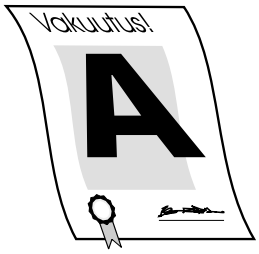

(The declaration must be drawn up in the same language as the original instructions and must be either typewritten or handwritten in block capitals. It must be accompanied by a translation in one of the official languages of the country in which the machinery is to be used.)

The EC declaration of conformity must contain the following particulars:
- name and address of the manufacturer or his authorised representative established in the Community;
(Business name and full address; authorised representatives must also give the business name and address of the manufacturer)
- description of the machinery;

(Description of the machinery, e.g. make, type, serial number.)

- all relevant provisions complied with by the machinery;

(e.g. the directives, harmonized standards, etc. that the machinery complies with)

- where appropriate, the name and address of the notified body and number of the EC type-examination certificate;

- where appropriate, the name and address of the notified body to which the file has been forwarded in accordance with the first indent of Article 8(2)(c);

- where appropriate, the name and address of the notified body which has carried out the verification referred to in the second indent of Article 8(2)(c);

- where appropriate, a reference to the harmonised standards;

- where appropriate, the national technical standards and specifications used;

- identification of the person empowered to sign on behalf of the manufacturer or his authorised representatives

https://truckmanualshub.com/

4.2.3.2 Declaration B.

(manufacturer's declaration of conformity for machinery intended to be incorporated into machinery)

Contents of the declaration by the manufacturer or his authorised representatives established in the Community (Article 4(2).

The manufacturer's declaration referred to in Article 4(2) must contain the following particulars:
- name and address of the manufacturer or authorised representative;
- description of the machinery or machinery parts;
- where appropriate, the name and address of the notified body and the number of the EC type-examination certificate (91/368);
- where appropriate, the name and address of the notified body to which the file has been forwarded in accordance with the first indent of Article 8(2)(c) (91/368);
- where appropriate, the name and address of the notified body which has carried out the verification referred to in the second indent of Article 8(2)(c) (91/368/EC);
- where appropriate, a reference to the harmonised standards (91/368/EC);
- a statement that the machinery must not be put into service until the machinery into which it is to be incorporated has been declared in conformity with the provisions of the Directive;
- identification of the person signing.

4.2.3.3 Declaration C.

(declaration of conformity for safety components)

Contents of the EC declaration of conformity for safety components placed on the market separately.

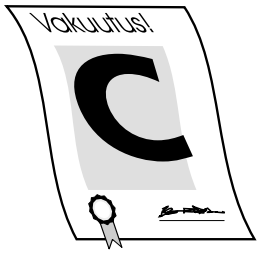

(The declaration must be drawn up in the same language as the original instructions and must be either typewritten or handwritten in block capitals. It must be accompanied by a translation in one of the official languages of the country in which the machinery is to be used.) (93/44/EC)
The EC declaration of conformity must contain the following particulars (93/44/EC):
- name and address of the manufacturer or his authorised representative established in the Community (2) (93/44/EC);
- description of the safety component;
(Description of the safety component: (make, type, serial number, if any, etc.) (93/44/EC)
- safety function fulfilled by the safety component, if not obvious from the description (93/44/EC);
- where appropriate, the name and address of the notified body and the number of the EC type-examination certificate (93/44/EC);
- where appropriate, the name and address of the notified body to which the file was forwarded in accordance with the first indent of Article 8(2)(c) (93/44/EC);
- where appropriate, the name and address of the notified body which carried out the verification referred to in the second indent of Article 8(2)(c) (93/44/EC);
- where appropriate, a reference to the harmonised standards (93/44/EC);
- where appropriate, the national technical standards and specifications used (93/44/EC);
- identification of the person empowered to sign on behalf of the manufacturer or his authorised representative established in the Community (93/44/EC).

4.2.4 Other certificates

In addition, the bodywork installer must issue a certificate that the, for example:

❑ mounting and strength of the bodywork;

❑ mounting and strength of the cab guard (front grid);

❑ mounting and strength of the timber bunks; /etc.

meet the requirements set by the appropriate regulations.

See point 3.5, page 27.

https://truckmanualshub.com/

5 CE marking

5.1 General

The Machinery Directive sets out the requirements for indicating that the machinery conforms to the directives and the associated CE marking.

All new machinery, i.e individual machines covered by the Machinery Directive, that are first placed on the market or put into service in the European economic area after January 1 1995, must comply with requirements and be accompanied by the CE marking. Machinery parts or components must not be marked on the basis of the Machinery Directive.

In accordance with the regulations given by the authorities, electrical equipment must usually be accompanied by the CE marking along with the appropriate requirements.

The declaration of conformity delivered with the machinery indicates the regulations/directives complied with by the machinery.

The CE marking can be attached to the machinery only if the machinery complies with all provisions applicable to it. This means that e.g. the electrical equipment of the machinery must comply with the applicable special directives and that their mounting and the machinery in other respects must comply with all the requirements set out in the Machinery Directive (conformity to the electrical equipment directive alone is not sufficient to issue the declaration of conformity and attach the CE marking).

By attaching the CE marking, the supplier of the product indicates for the market control that the product is in accordance with the applicable community legislation.

5.2 CE mark

The CE conformity marking shall consist of the initials "CE":

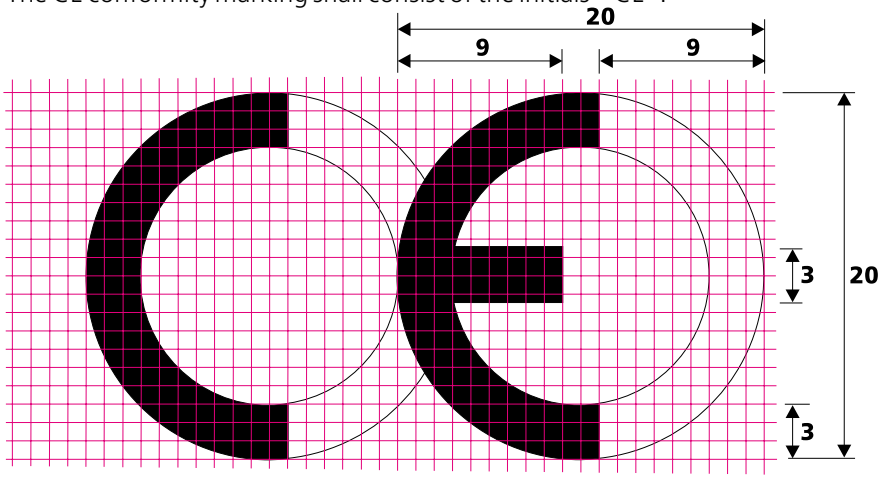

- If the CE marking is reduced or enlarged, the proportions given in the above drawing must be respected.
- The various components of the CE marking must have substantially the same vertical dimension, which may not be less than 5 mm. This minimum dimension may be waived for small-scale machinery.

https://truckmanualshub.com/

5.3 Examples of the declaration of conformity and CE marking

Vehicle owner	Bodywork manufacturer/installer:	Machinery manufacturer
Orders a platform with tipping gear (or e.g. a van body with tail lift).	Manufactures the platform and orders the tipping gear.	Manufactures the tipping gear.
Maintains the platform according to the service instructions.	Installs the platform and tipping gear. Issues the declaration of conformity (declaration A) and attaches CE marking to the bodywork.	Delivers the tipping gear accompanied by the declaration by the manufacturer (declaration B).
Orders a front-mounted plow to be connected to the vehicle's hydraulic system and its control system.		Manufactures the front-mounted plow.
Maintains the plow.		Delivers the plow accompani ed by the CE mark and the declaration of conformity (declaration A).
Orders a platform and tipping gear structures.		Manufactures the platform and tipping gear structures.
Installs the platform and the tipping gear. Attaches the CE mark to the bodywork and issues the declaration of conformity.		Delivers the structures accompanied by the declaration by the manufacturer.

Customer orders a vehicle with a timber loader.	Vehicle dealer orders the timber loader installed.	Bodywork manufacturer orders the timber loader.	Manufacturer delivers the timber loader accompanied by the CE marking and
Customer is responsible for maintaining the bodywork according to the service instructions.	Dealer verifies the adequacy of the declaration of conformity (declaration A) and CE marking.	Bodywork manufacturer installs the loader, subframe and timber bunks. Issues the declaration of conformity and attaches the CE marking.	declaration by the manufacturer (declaration B).

Tipping cylinder or tipping gear:
- Machinery intended to be incorporated into machinery.
- Declaration by the manufacturer (declaration B)

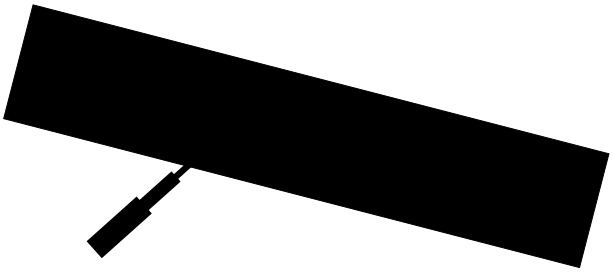

Bodywork with tipping gear:
- Single machinery.
- Bodywork manufacturer issues the declaration of conformity (declaration A) and attaches the CE mark.

Brush device, to be connected to the vehicle's hydraulic system:
- Interchangeable equipment.
- Declaration of conformity (declaration A).
- CE marking on the machinery.

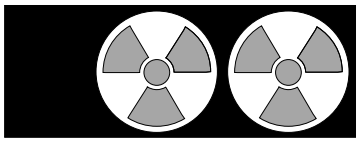

Refrigeration unit:
- Machinery intended to be mounted.
- Declaration by the manufacturer (declaration B).
- Bodywork installer issues the declaration of conformity and attaches the CE marking.

https://truckmanualshub.com/

Example of declaration A

The declaration of conformity (declaration A), e.g. declaration for the entire bodywork ordered by the customer, issued by the bodywork manufacturer after the bodywork is installed.

Declaration of Conformity

We;

Bodywork Manufacturer Inc.
Konetie 3
12300 Vantaa, Finland

declare solely under our own responsibility that on the vehicle intended for excavation purposes;

Make;	Sisu
Type;	E14M K-PP-6x2/405+130
Chassis no.;	YK2FBCA10VK123456
Year of construction;	2001

, the tipping gear;

Type;	ABH200
Serial number;	321654

, accompanied by the declaration by the manufacturer,

and the platform, are mounted in compliance with Machinery Directive 98/37/EC (other applicable special directives must also be mentioned), and with the following harmonized standards: XXX-X X XXX-X, XXX-X X XXX-X, etc.

In addition, the mounting complies with the national standard XXX-X.

The technical construction file provided for the mounting is retained at the address mentioned above.

***

Vantaa, March 23, 2001

Name; Simo Sisukas
Simo Sisukas
Director

***

A technical construction file is provided for the mounting and the issuer of the declaration retains the file. The declaration must contain the following points a), b) or c), where appropriate.

a) The name and address of the notified body and number of the EC type-examination certificate, if the type-examination is carried out. For a tipping gear, the EC type-examination procedure does not apply.

b) The name and address of the notified body that has verified the correct application of the harmonized standards, if this verification is carried out.

c) The name and address of the notified body to which the technical construction file has been forwarded for retention, if the file is forwarded.

Declaration A includes the CE marking attached to the bodywork!

https://truckmanualshub.com/

Example of declaration A

The declaration of conformity (declaration A), issued by the vehicle dealer when the vehicle is to be equipped with the bodywork structures the customer has ordered.

Declaration of Conformity

We;

Truck Sales Inc.
Konetie 3
12300 Vantaa, Finland

declare solely under our own responsibility that for the vehicle intended for goods transportation;

Make; Sisu
Type; E12M K-PP-6x2/465+130
Chassis no.; YK2GCDA10VK456789
Year of construction; 1997

,we have supplied the van body with tail lift;

Type; XXX 333
Serial number; 987654

, accompanied with the declaration by the manufacturer,

and that they are mounted in compliance with Machinery Directive 98/37/EC (other applicable special directives must also be mentioned), and with the following harmonized standards: XXXX-X X XX-X, XXX-X X XXX-X, etc.

The technical construction file provided for the mounting is retained at the address mentioned above.

***

Vantaa, March 23, 1998

Name; Simo Sisukas

Simo Sisukas
Director

***

A technical construction file is provided for the mounting and the issuer of the declaration retains the file. The declaration must contain the following points a), b) or c), where appropriate.

a) The name and address of the notified body and number of the EC type-examination certificate, if the type-examination is carried out. For a tipping gear, the EC type-examination procedure does not apply.

b) The name and address of the notified body that has verified the correct application of the harmonized standards, if this verification is carried out.

c) The name and address of the notified body to which the technical construction file has been forwarded for retention, if the file is forwarded.

https://truckmanualshub.com/

Example of declaration B

The declaration of conformity (declaration B), issued by the machinery manufacturer for machinery intended to be incorporated into machinery.

Declaration of Conformity

We;

Machinery Manufacturer Inc.
Konetie 3
12300 Vantaa, Finland

declare solely under our own responsibility that the tipping cylinder,

Type; XXX 333
Serial number; 987654
Year of construction; 1999

intended to be incorporated into tipping gear,

complies with Machinery Directive 98/37/EC (other applicable special directives must also be mentioned), and with the following harmonized standards: XXX-X X XXX-X, XXX-X X XXX-X, etc..

The tipping gear must not be put into service until the tipping gear and platform into which it is to be incorporated has been declared in conformity with the Machinery Directive (declaration A).

The technical construction file provided for the machinery is retained at the address mentioned above.

***

Vantaa, March 23, 2000

Name; Simo Sisukas
Simo Sisukas
Director

***

A technical construction file is provided for the machinery and the issuer of the declaration retains the file. The declaration must contain the following points a), b) or c), where appropriate.

a) The name and address of the notified body and number of the EC type-examination certificate, if the type-examination is carried out. For a tipping gear, the EC type-examination procedure does not apply.

b) The name and address of the notified body that has verified the correct application of the harmonized standards, if this verification is carried out.

c) The name and address of the notified body to which the technical construction file has been forwarded for retention, if the file is forwarded.

https://truckmanualshub.com/

6 Instructions, indications and technical documentation

"The information needed to control machinery must be unambiguous and easily understood" (Machinery Directive 98/37/EC, Annex I, point 1.7.4).

a) All machinery must be accompanied by instructions that include at least the following:

❑ A repeat of the information with which the machinery is marked, except for the serial number, together with any appropriate additional information to facilitate maintenance.

- name and address of the manufacturer
- the CE marking
- designation of series or type
- the year of construction

❑ Foreseen use of the machinery within the meaning of Annex I to the Machinery Directive, point 1.1.2(c)

- i.e. when drafting the instructions, the manufacturer must envisage not only the normal use of the machinery but also uses that could reasonably be expected.

❑ Workstation(s) likely to be occupied by operators

❑ Instructions for safe;

- putting into service
- use,
- handling, giving the mass of the machinery and its various parts where they will regularly be transported separately
- mounting
- assembly, dismantling
- adjustment
- maintenance (servicing and repair);
  - - procedures that can be carried out by the owner
  - - procedures that must be carried out by an authorized repair shop
- where necessary, training instructions
- where necessary, the essential characteristics of tools that may be fitted to the machinery

❑ Where necessary, the instructions should draw attention to ways in which the machinery should not be used.

b) The instructions must be drawn up in one of the Community languages.
Upon being put into service, all machinery must be accompanied by a translation of the instructions in the language or languages of the country in which the machinery is to be used and by the instructions in the original language.
If the maintenance is carried out by specialized personnel, the maintenance instructions for use by specialized personnel may be drawn up in only one of the Community languages understood by that personnel.

c) The instructions must contain the drawings and diagrams necessary for putting into service, maintenance, inspection, checking of correct operation and, where appropriate, repair of the machinery, and all useful instructions in particular with regard to safety.

https://truckmanualshub.com/

d) Any literature describing the machinery must not contradict the instructions as regards safety aspects.

In addition, the instructions must give the requirements relating to installation and assembly for reducing noise or vibration (dampers, etc.), and information concerning airborne noise emissions by the machinery if they exceed certain limit values.

The manufacturer, his authorised representative (e.g. installer) or person placing the machinery on the market must not give any such verbal instruction relating to the use of the machinery that cannot be found in or is contrary to the instructions accompanied by the machinery.

Note!

See Annex I to the Machinery Directive, point 1.7.4.

7 Notified body

(Machinery Directive, Article 9)

Notified bodies are the approved bodies that the Member States have informed the Commission and other Member States of and which the Member States have appointed to carry out the procedures referred to in Article 8 together with the specific tasks that these bodies have been appointed to carry out and the identification numbers assigned to them beforehand by the Commission.

The Commission shall publish in the Official Journal of the European Communities a list of the notified bodies and their identification numbers and the tasks for which they have been notified. The Commission shall ensure that this list is kept up to date.

The notified bodies carry out EC type-examinations on their own operation range and verify or retain the technical construction files, if required by the machinery manufacturer.

8 Acquiring the regulations

Bodywork manufacturers can acquire the required regulations from the appropriate authorities.

https://truckmanualshub.com/

https://truckmanualshub.com/

9 General safety instructions

Foreword

A bodywork is always constructed for a truck due to its transportation or driving task. Sisu dealers will select the truck's chassis in cooperation with the customer so that it will form, together with the bodywork, an optimal assembly for the vehicle's transportation or driving task.

The bodywork manufacturer/installer must always establish the vehicle's intended purpose and operating conditions carefully with the vehicle owner.

If the bodywork manufacturer/installer for some reason cannot follow this manual's instructions relating to the chassis, or a procedure is not instructed in this manual, he must contact the nearest authorized **SISU** dealer/repair shop.

The bodywork manufacturer/installer should agree with the other parties of the vehicle supply chain (dealer, importer, bodywork manufacturer/installer, etc.) on who will take full responsibility for the bodywork, issue the declaration of conformity, attach the CE mark, and provide and retain the required technical construction files for thirteen years, when the bodywork structure/structures are regarded as machinery.

Mounting bodyworks on heavy trucks will inevitably lead to situations where there is a risk of accident. The risk is eliminated by planning and anticipating different stages of work.

This section presents possible risks that must be anticipated for safe working.

Always follow

- ❑ The safety instructions.
- ❑ Regulations given by the authorities.
- ❑ Instructions and provisions presented in this manual by Sisu Auto Inc.

WHEN WORKING:

- ❑ Anticipate.
- ❑ Be careful.
- ❑ Follow the instructions.

9.1 Dangers

- ❑ Falling
- ❑ Rolling over
- ❑ Electric shock
- ❑ Pneumatics
- ❑ Hydraulics
- ❑ Coolant
- ❑ Refrigerant
- ❑ Unintentional starting/moving of the vehicle

https://truckmanualshub.com/

9.1.1 Falling

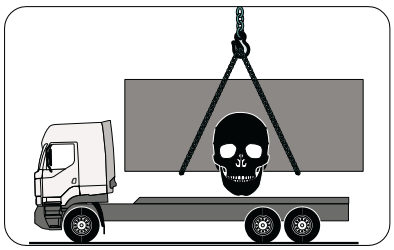

906001

Being crushed by vehicle, its component or bodywork will cause severe, even fatal injuries.
The vehicle, its component or bodywork lifted on hydraulic or mechanic jacks can fall or lower suddenly due to failure or misuse of the lifting device.
When lifting a vehicle's chassis, component or bodywork, support it with jack stands or other equivalent purpose-built supports.
Make sure that the bed under the jack stands or other supports is sufficiently strong and level.

Never go under a vehicle, its component or bodywork that is supported by a lifting device alone

906002

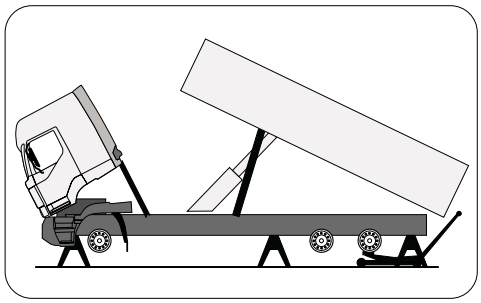

Normally, the cab must be tipped up to its **limit position** and locked with the valve in the hydraulics pump.

If partial tipping of the cab is required, support the cab with an appropriate support and lock with the valve in the hydraulics pump.

Going under a lifted tipping platform is strictly prohibited, unless the platform is supported with separate tipping platform service supports.

For trucks with air suspension, the frame must always be lifted on jack stands before mounting, since the frame is lowered significantly when the air bellows are emptied.

Always make sure that the locks of the lifting devices and supports are faultless and will hold and withstand the loads in question.

9.1.2 Rolling over

906010

Being crushed by vehicle, its component or bodywork that is rolling over will cause severe, even fatal injuries.
During moving or installation, a vehicle, its component or bodywork can roll over due to an incorrect work procedure, a failure of a moving or fixing device or e.g. collapse of the ground.

Use sufficient precautions in order to prevent the device from rolling over. Never go to the danger area during moving.

9.1.3 Electric shock

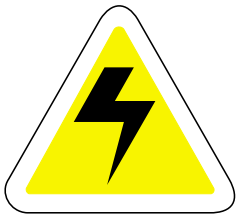

906003

The electric charge in the vehicle's batteries may cause a fire or other accident, causing burns or damage to the vehicle's electric devices.
When welding or installing electric devices, disconnect the cables from the batteries. If current is required in the electric system during installation, use an extra 8 A fuse between the battery terminal and cable (for detailed instructions, see section **09**).

Never wear conductive watchbands or rings during installation.

https://truckmanualshub.com/

9.1.4 Pneumatics

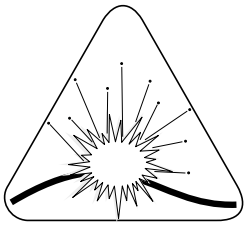
906004

The vehicle's pneumatic system can cause a situation with a risk of an accident.
For trucks with air suspension, the frame is lowered significantly if the system is emptied.
The springs in the brake cylinders will pull the brake levers and brakes immediately when the system is emptied.
If pneumatic devices are used in bodywork, appropriate safety regulations must be followed.

When working with pneumatics, always anticipate the effect caused by your next operation.

9.1.5 Hydraulics

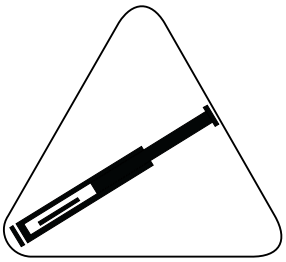
906005

A sudden breakdown or misuse of the vehicle's hydraulic system may cause severe damage.
Bodyworks lifted by hydraulics can fall or roll over rapidly. Additional devices driven by hydraulics can start and/or operate unexpectedly.

When opening hydraulic connections, installing a component, etc., absolute cleanliness must be followed. Never let impurities enter the system, as they may cause a control-system malfunction.

When working with hydraulics, always anticipate the effect caused by your next operation.

Never use your hands to locate leaks in hydraulic hoses. High-pressure hydraulic oil can penetrate e.g. protective gloves or rubber boots and skin into human tissue. Hydraulic oil that penetrates under the skin will cause severe poisoning.

Be careful with hydraulic hoses especially when welding. A welding spatter, etc., burning through a hydraulic hose can cause an intensive fire.

9.1.6 Coolant

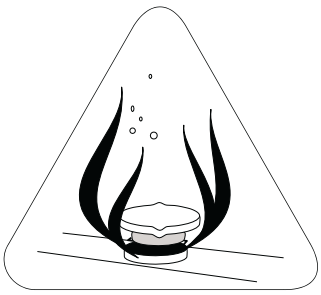
906006

A hot cooling system has a strong over pressure. If a radiator cap or hose connections are opened when the system is hot, hot spraying coolant can cause severe burns.
The anti-freeze, anti-corrosion and other additives in the coolant are dangerous if taken internally, splashed into eyes or if they penetrate under skin, and may cause severe poisoning.

If possible, work with the cooling system only after the coolant is cooled down.

- ❑ Wear rubber gloves and goggles.
- ❑ Wait until the coolant is cooled down.
- ❑ Open the expansion tank cap carefully.
- ❑ Use appropriate equipment for filling and draining the cooling system.

https://truckmanualshub.com/

9.1.7 Refrigerant

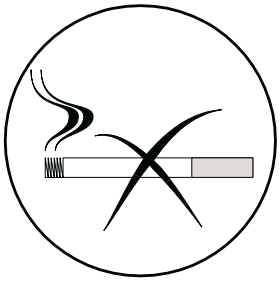
906007

The refrigeration devices of cargo spaces whose temperature is controlled and cooled as well as vehicles with air conditioning contain refrigerant.
For older devices, the refrigerant can be ISCEON R12 (contains Freon).
For newer devices, the refrigerant is ISCEON R134a or ISCEON 49, which do not contain Freon.
Refrigerants must be disposed of according to the regulations given by the authorities.

The refrigerant in the refrigeration devices is under pressure. Leaking refrigerant will cause frost injuries if spilled on skin. Inhaling large amounts of vapor may cause headache, dizziness, drowsiness, unconsciousness or even a heart attack.

Leaking refrigerant heated by a welding flame, cigarette, etc., will generate highly poisonous gases.

Never weld or smoke if the work with the refrigeration device includes a risk of refrigerant leak. Ventilate the working area carefully before welding.

Since unpressurized refrigerant is colorless and has very mild ethereal odor, it is difficult to detect.

Refrigerant gas is heavier than air and hence accumulates easily e.g. in the service pit. This may cause the person working in the pit to suffocate due to lack of oxygen.

When servicing, emptying or filling refrigeration devices:

906008

- ❑ Arrange sufficient ventilation for the working area.
- ❑ Protect your eyes/face with appropriate protective equipment.
- ❑ Wear appropriate protective gloves (PVC), clothing, helmet and boots.
- ❑ Isolate sources that may ignite the refrigerant.
- ❑ Do not smoke.
- ❑ Never open connections of the refrigeration device before emptying the system.
- ❑ Use appropriate special equipment for filling and draining the system.

Leave the handling of refrigerants and refrigeration devices to competent specialists.

9.2 Unintentional starting/moving of the vehicle

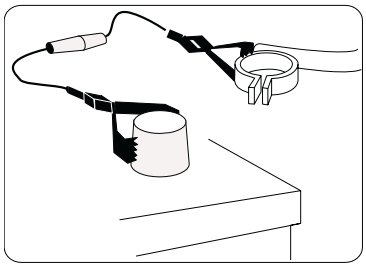
906009

Unintentional starting of the vehicle will cause a risk of a serious accident.
If the vehicle is unintentionally started when the gear is coupled, stopping the vehicle quickly enough may be difficult, especially if the cab is tipped.

Disconnect the – cable from the battery before connecting the bodyworks's electric devices to the vehicle's electric system. This will also prevent vehicle's other electric devices from being switched on unintentionally.

If current is required in the electric system during installation, use an extra 8 A fuse between the battery terminal and cable (for detailed instructions, see section **09**).

https://truckmanualshub.com/

General bodywork constructioning guidelines

Foreword

This section provides information about the vehicle's frame and the issues that affect bodywork construction. In addition, this section gives general instructions on constructing the subframes, mounting the subframe on the vehicle's frame and subframe mounting brackets.

More detailed instructions on different bodyworks and driving tasks are given in the appropriate chapters.

However, the bodywork manufacturer must note that the instructions by **Oy Sisu Auto Ab** are basic guidelines without exact dimensioning data, since without knowing the bodywork's construction, load, driving conditions, etc. of the individual cases, Oy Sisu Auto Ab cannot make exact calculations.

The responsibility for the bodywork compliance belongs to those who manufacture and install the bodywork. This responsibility also applies to the vehicle's characteristics to the extent that the bodywork has an effect on these characteristics.

The demand for compliance includes road traffic regulations, safety and EU directives.

- If a bodywork is mounted contrary to the instructions given by **Oy Sisu Auto Ab**, the warranty becomes void to the extent that the bodywork has an effect on the durability and operating characteristics of the vehicle.
- **The RS Hansa Auto Oy** dealer selects a suitable vehicle for the customer's driving task together with the customer.
- The customer designs the bodywork together with the bodywork manufacturer or with the vehicle dealer and the bodywork manufacturer.
- The dealer/bodywork manufacturer gives instructions on the bodywork operation and maintenance to the customer.
- If a vehicle is made ready for a driving task, the dealer of the vehicle is responsible that the bodywork is compliant with the regulations and is constructed according to the instructions by **Oy Sisu Auto Ab**.
- When mounting a bodywork that differs from normal bodyworks, the dealer, buyer or the bodywork manufacturer should contact Oy Sisu Auto Ab technical support.

☛ **Read section 01 carefully for regulations and safety instructions.**

https://truckmanualshub.com/

Notes on bodywork construction:

- Make sure that the vehicle meets the demands set by the bodywork and transportation task.

Fig. 907002

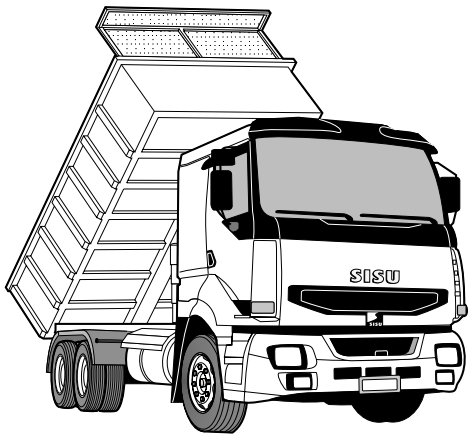

- **If the steering or braking system must be modified in a way that is not outlined in this folder, the modifications must be approved by Oy Sisu Auto Ab.**
- Bodywork may not impair the operation or durability of the chassis components.
- Removing and installing components such as the engine, clutch, transmission, propeller shafts and axles may not be excessively impaired. Enough space must be left for removing and installing these components as well as for tipping the cab.
- The bodywork may not excessively impair maintenance and checking procedures regarding the periodic service of the chassis.
- At least 20% of the vehicle's weight must be on the steering axle/axles.
- The distribution of the total axle load to wheel loads on each axle may not differ by more than 3% from side to side.

https://truckmanualshub.com/

1 Forces acting on vehicles

The frames of Sisu trucks are dimensioned and built to withstand maximum loads in a way such that the frame flexibility together with tires and suspension also offer optimal riding comfort.

It is important that the bodywork's construction and mounting do not impair the durability of the vehicle's frame and riding comfort.

Various static and dynamic forces act on the vehicle's frame structure. These forces load the frame and have an effect on the maneuverability and operation characteristics.

Some of these forces can be calculated and the calculated values used for theoretical and empirical design and construction of the bodywork and its mounting.

1.1 Examining the forces

1.1.1 Static forces

When the vehicle is standing still, the forces acting on the vehicle are the vehicle's own mass, bodywork mass and the mass of the vehicle's load, i.e. static forces.

The static forces generated by different bodyworks and vehicle loads can be calculated and plotted to graphic load curves. With these curves, it is easy to establish how the static load generated by the bodywork is distributed over the vehicle's chassis.

Fig. 907003

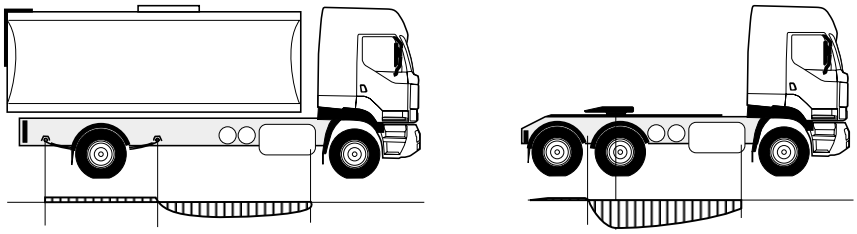

The load curve can easily show whether a subframe is required for balancing the load distribution.

If the load is a concentrated or point load as shown in the figure (tractor), the following must be taken into consideration:

- in normal cases, Sisu trucks do not require a subframe.
- in heavy combinations (e.g. towing a lowboy trailer), a subframe is required to balance the load distribution.

1.1.2 Dynamic forces

Dynamic forces are generated e.g.:

- by the inertia of the masses mentioned above, when there are changes in the vehicle's movement due to acceleration, deceleration, changes in the direction of travel or unevenness of the road.
- by friction between the road and tires. E.g. when a truck with a bogie axle turns sharply on a paved road or in deep ruts, it will cause notable lateral dynamic forces acting on the vehicle's chassis.
- when loading and unloading the vehicle.

Dynamic forces cannot usually be determined exactly but empirical knowledge must be used when designing bodywork mountings and e.g. the subframe.

The effect of dynamic forces on the durability of the vehicle's chassis structure depends largely on the bodywork and its mounting on the vehicle's chassis.

The flexibility and fatigue strength of the structures are the fundamental issues when constructing a truck chassis structure that will be functional and withstand dynamic loads.

https://truckmanualshub.com/

1.1.3 Lateral forces

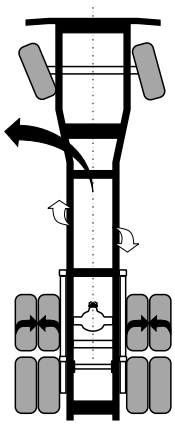

Fig. 907004

Notable lateral forces are generated in the vehicle's chassis when e.g. a truck with a bogie axle and a long wheelbase turns on a paved road or a trailer is coupled to a truck with a long rear overhang.

In these cases, the lateral stiffness must be extremely high. This requirement for lateral stiffness applies also to the bodywork and its mounting on the vehicle's frame. The lateral stiffness of the frame is increased by using cross beams to prevent the longitudinal movement of the frame beams relative to each other.

If the frame's lateral stiffness is not adequate, the vehicle yaws. This notably impairs the maneuverability and safety of the vehicle.

The bodywork and its mounting on the vehicle's frame may not essentially impair the lateral stiffness of the frame.

1.1.4 Torsional forces

Fig. 907005

Notable torsional forces are generated into the vehicle's chassis on uneven roads and off-road conditions.

The chassis of Sisu trucks is designed to provide very high torsional stiffness along the whole frame length by using tubular cross beams. However, the front part of the frame behind the cab has higher torsional flexibility than the rear of the frame.

This design provides the best maneuverability and frame durability for the vehicle.

Heavy components (fuel tanks, batteries etc.) mounted on the side beams of the frame generate high torsional forces in the beams. The manufacturer of the vehicle has taken this into consideration when designing the cross beams and possible brackets.

The bodywork and its mounting on the vehicle's frame may not essentially alter the frame's torsional stiffness properties as designed and constructed by the vehicle's manufacturer.

1.1.5 Stress acting on the frame beams

The forces acting on the vehicle generate tensile or compressive stress in the frame beams.

Vertical and lateral bending of the frame beam generates the stress distribution

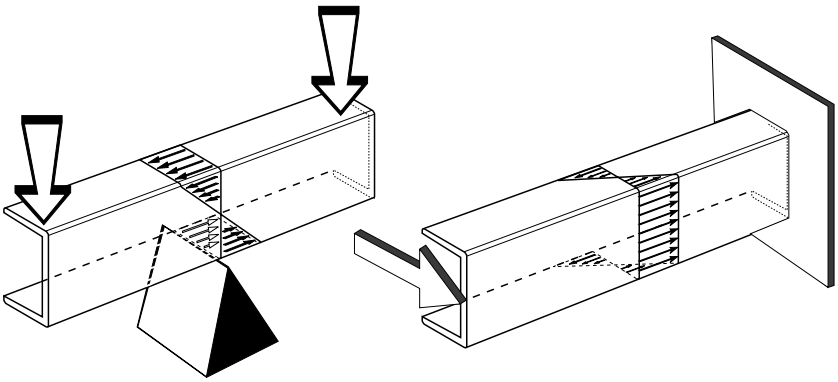

Fig. 907006

shown in the picture. Since the beam is usually subjected to the vertical, lateral and torsional forces simultaneously, the stresses created by all the forces are added together.

The picture also shows why Oy Sisu Auto Ab gives exact instructions on drilling holes in the frame beams, reinforcing, repairing and extending the frame beams as well as welding techniques.

https://truckmanualshub.com/

2 Sisu frame beams

The following profiles and materials are used as frame beams in Sisu trucks:

Frame profiles	**1**	**2**	**3**	**4**
Area [cm^2]	35.8	16.3	39.9	52.7
Vertical moment of inertia/beam $\mathbf{I_x}$ [cm^4]	4306	1703	10832	14142
Vertical bending resistance/beam $\mathbf{W_x}$ [cm^2]	287	121	471	615
Mass/beam/meter [kg]	28.3	12.8	31.5	41.6
Sisu standard frame (1) reinforced with U-reinforcement (2): Moment of inertia I_x = 10259 and bending resistance $\mathbf{W_x}$ = 451.43				

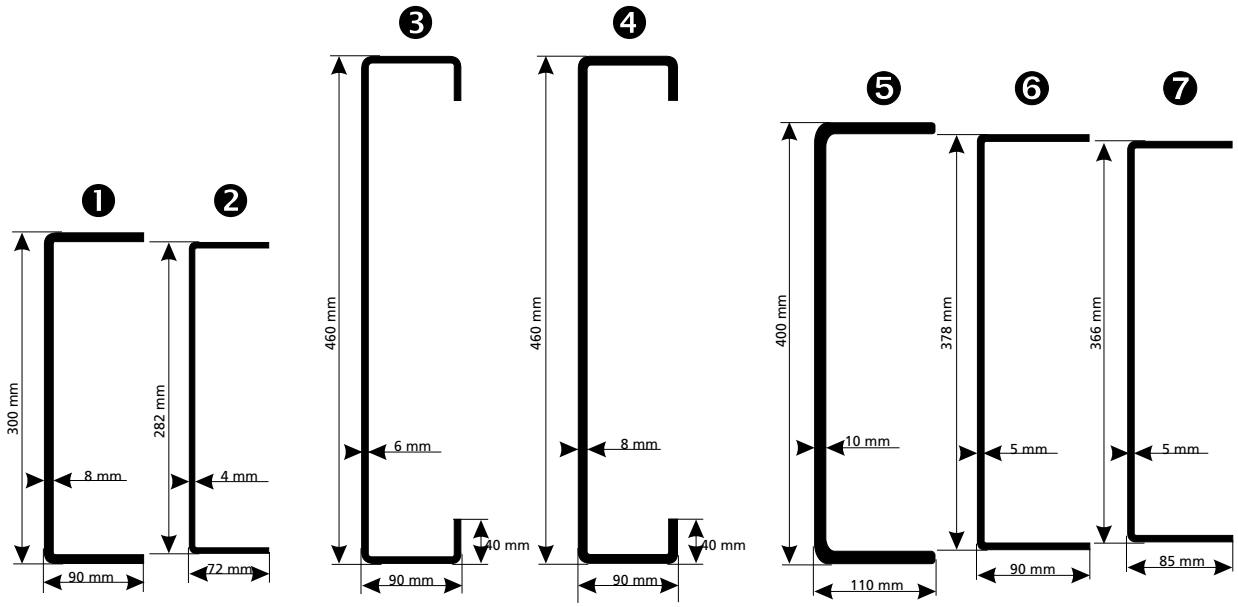

Fig. 907007

❶ Standard frame profile.

❷ Inside frame of the previous item, for heavy-duty driving tasks.
Available lengths; 4500, 5500, 6500, 8000 and 9000 mm

The inner frame ❷ is installed at the factory in all 6x2, 6x4, 6x6, 8x2, 8x4, 8x6 model vehicles with a U-frame.

❸ High C-frame, 6 mm. Manufactured for S-series vehicles in 1991–96.

Note! If a used vehicle with this frame type is modified for a new driving task, the need to reinforce the frame or construct a subframe must be calculated separately in each case.

❹ High C-frame, 8 mm. Used especially for timber trucks.

❺ Special frame for vehicles equipped with front drive axle and heavy crane.

❻ 1st inside frame for the previous item (customized beam lengths).

❼ 2nd inside frame for the previous item (customized beam lengths), shorter than the 1st inside frame.

https://truckmanualshub.com/

2.1 Sisu S-series frame material

Material: Fe 52 D (SFS) = S355J2G3 (EN 1993) steel, in which;

- ❑ Yield point 355 N/mm^2
- ❑ Tensile strength 510–680 N/mm^2

2.2 Sisu E-series frame material

Material: HSF 490 (ISO 5951) = Fe E 490-TM (EU 149 -80)

Trade name e.g. RAEX 490 HSF (Rautaruukki)

- ❑ Yield point 490 N/mm^2
- ❑ Tensile strength 550–705 N/mm^2

2.2.1 Heat treatment

RAEX 490 HSF steel is thermomechanically rolled fine-grain steel. The following must be noted if the material is subjected to heat treatment or heat straightening:

- Maintaining the temperature over 650°C for extended periods decreases the strength of steel permanently.
- The amount of the steel's strength impairment depends on the temperature and duration, but at most the decreasing of the yield limit can be approximately 150 MPa if steel is normalized. The normalizing temperature is about 910°C. After normalizing, the strength of steel is in practice at the same level as standard S355 (Fe 52) steel.
- A suitable stress-relief annealing temperature for Raex HSF high-strength steel, especially for welded seams, is 550–600°C.
- With regard to steel properties, the safe temperature range for heat straightening is 550–650°C.

For the instructions on frame jobs, see section 08.

☛ **Note! During frame jobs, never use temperatures over 650°C. The color of HSF steel is blood red at 650°C (not visible in bright sunlight).**

3 Strengthening the vehicle's frame

3.1 General

For some driving tasks or when a vehicle is modified for a new task not originally designed for the vehicle, the vehicle's own frame can also be stiffened.

3.1.1 Diagonal support

The rear of the frame can be stiffened e.g. for heavy trailer towing or heavy-duty tipping platform duties depending on the rear overhang length, subframe and bodywork.

For heavy-duty timber trucks with trailers, a frame diagonal support constructed from flat steel bars is recommended. It strengthens the frame against the lateral forces generated by the trailer at the rear overhang.

The diagonal support should start as close to the trailer coupling mounting beam as possible and run to the next cross beam of the frame.

The diagonal support is subjected to high tensile and compressive stresses, which must be taken into consideration in support dimensioning and mounting.

Use sufficiently strong flat steel bars (material min. requirement Fe 52).

Bolt mounting to the web of the frame.

Construct the mounting points to be strong enough.

Do not weld on the flat steel-bar crossing point.

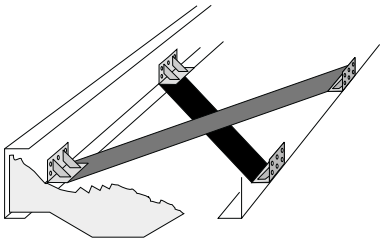

Fig. 907008

3.1.2 Other strengthening

Additional strengthening of the chassis frame may be required for exceptionally heavy bodywork. In such cases it will be designed and constructed separately.

https://truckmanualshub.com/

4 Subframe

4.1 General

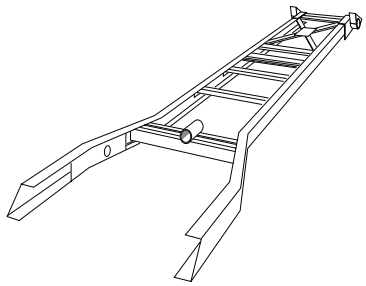

907009

This section gives general guidelines for the subframe structure and mounting on the vehicle's frame. These instructions are universally applicable.

Since the vehicle types, driving tasks and driving conditions are not identical, the structure, dimensioning and mounting of the subframe must be selected separately for each case.

More detailed instructions on the structure, dimensioning and mounting of the subframe on the vehicle's chassis frame are given in the appropriate chapters dealing with different types of subframes.

One of the most important issues in mounting bodyworks is the **tipping stability** of the tipping bodyworks. Almost without exception, all tipping bodyworks require a subframe, which must be dimensioned and constructed correctly.

Furthermore, the mounting of the subframe on the vehicle's chassis must be correct in order to ensure the appropriate tipping stability and durability of the chassis.

4.1.1 Subframe function

The frames of Sisu trucks are dimensioned for an even load. However, the load is not usually distributed evenly over the whole length of the frame, rather than the forces pass into the frame through the bodywork's bearing points. Moreover, e.g. when tipping or in other bodywork operation situations, high point loads are generated on the bodywork mounting point and/or e.g. on the tipping axle; the loads vary between the early and final stages of tipping.

Hence, many bodyworks for different driving tasks require a subframe. **The only exception for this general rule can be made with a SISU high frame.**

The function of the subframe is to distribute the weight of the bodywork and the vehicle's load evenly on the vehicle's chassis, increase the vehicle's frame strength and torsional resistance in different driving tasks and increase e.g. tipping stability on vehicles equipped with tipping gear. In other words, the subframe serves as a flexible and strengthening component on a truck's frame.

4.2 Material

The requirements for subframe material properties depend on the bodywork. In heavy-duty operation, e.g. in tipping vehicles, concrete trucks, etc. the material's strength properties should be close to those of the frame.

If the subframe is subjected to minor stresses only, the strength properties of the subframe material can be clearly lower than the frame's material. In all cases, the material must have good weldability.

Minimum material requirements:

- ❑ Yield point: 355 N/mm^2
- ❑ Tensile strength: 520 N/mm^2
- ❑ Strain: A_5 25%

Material min. S355 (Fe 52)

☛ **Recommended subframe materials for Sisu S- and E-series: RAEX 490 HSF**

https://truckmanualshub.com/

4.3 Subframe construction and dimensioning

4.3.1 General

The bodywork must not have a substantial effect on the flexibility of the frame and therefore the bodywork must be mounted correctly on the frame. In most cases this is done by means of a subframe.

With appropriate dimensioning and mounting the bodywork can be mounted on the vehicle's chassis so that the functionality, durability and safety of the vehicle are optimal for its intended purpose.

The starting points for dimensioning and mounting the subframe are:

- construction and purpose of the bodywork
- duty/driving task (cargo/timber/excavation etc., loader/tipper/other equipment...)
- difficulty of the driving task (load/road conditions/off-road conditions)
- type and location of the rear axles
- type of load and loading method
- desired load height
- rear overhang
- space required by tires

4.3.2 Subframe general requirements

- The torsional stiffness properties of the subframe must match both the front end (lower torsional stiffness) and rear end (high torsional stiffness) of the vehicle's frame.
- The torsional and bending resistance of the subframe must be adequate as regards the vehicle's load and purpose.
- The cross beams of the subframe must be located at the subframe's mounting points, if possible.
- At the rear end of the frame the cross beams should be located at the subframe's plate brackets, if possible.
- The subframe must start as far to the front as possible, about 500 mm behind the centerline of the front axle, so that the first bracket of the subframe is in front of the front axle spring's rear bracket.

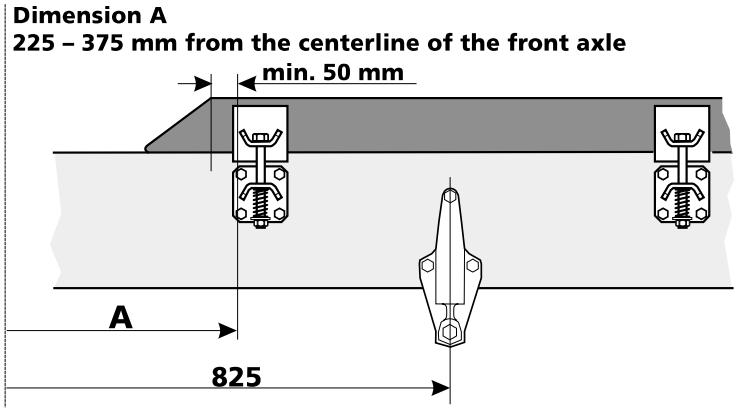

Fig. 907010

- If possible, the hole groups provided for bodywork mounting should be used when mounting the brackets.

https://truckmanualshub.com/

- The front end of the subframe must be chamfered to 45–60° and the lower edge of the beam flange must be rounded (radius 10 mm) in order to prevent digging.

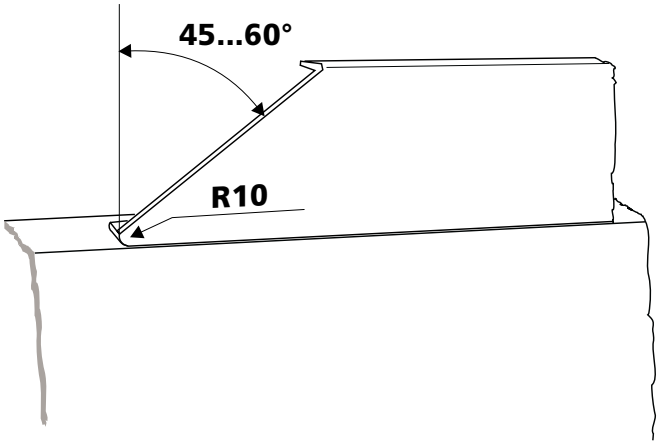

Fig. 907011

- The mounting method of the subframe must be selected correctly with regard to the bodywork (rigid and flexible mounting points). The selected mounting method must not prevent the frame twisting between the wheelbase when driving on uneven surfaces.
- The shape of the subframe must be identical to the frame and rest on the frame along its total length (i.e. the front end of the subframe must be bent to follow the shape of the vehicle's frame).

If the primary function of the subframe is to distribute the load from the bodywork (e.g. fixed platform):

- The decisive factors of the subframe construction are stiffness and the surface moment of inertia.
- The effects of point loads on the structure must be taken into consideration.
- If a trailer coupling mounting beam is installed in a vehicle with a fixed platform and long rear overhang, the stiffness of the subframe must be high enough and the loads acting on the rear overhang area must be dimensioned to be low enough.

☛ **More detailed instructions on dimensioning and constructing the subframes are given in the appropriate chapters dealing with different types of bodywork**

4.3.3 Subframe material section

Subframes are constructed from both a U-section and a rectangular hollow section.

As a general rule, Oy Sisu Auto Ab recommends U-sections for subframes for the following reasons:

- A U-section allows the required flexibility according to the various bodywork constructions.
- The torsional stiffness of a U-section can be adjusted/increased according to the requirements of the various bodyworks by boxing the required length of the beam.
- U-sections allow the correct mounting of cross beams and truss bracing into the web of the section.
- A U-section subframe is easier to repair and is usually also more durable, especially with regard to the joints.

However, rectangular hollow sections can be used e.g. in timber trucks and vehiscles with heavy cranes.

The rectangular hollow section has its own advocates. It provides the same bending resistance value with a lower structure. Despite this fact, experience has shown that a subframe constructed from a rectangular hollow section is quite vulnerable to fatigue in cross-beam joints, and repairs are more difficult.

A rectangular hollow section should be used only when the required height of the subframe or other requirements do not allow the use of a U-section.

4.3.4 Subframe bending resistance

☛ **When calculating the strength of the subframe, the yield-limit safety factor must be 3.0 for static loads.**

The bending resistance required for the subframe depends on the bodywork, vehicle type, driving task, rear overhang, wheelbase and e.g. loading method (see picture 907012 on page 55).

Directive dimensioning guidelines are also given in the appropriate chapters dealing with mounting instructions for various bodyworks. The following table presents the bending resistances of subframe sections and gives examples of applications:

U-section, RAEX HSF 490 or minimum S355 = Fe 52				
Frame beam	**Bending resistance/ beam [cm^3]**	**Type**	**Driving task/bodywork examples**	**Load**
110 x 80 x 6	52	4 x 2	General cargo, fixed platform or van body - fixed sides - short wheelbase - rear overhang max. 1250 mm	Light
110 x 80 x 8	66	4 x 2 6 x 2	General cargo/fixed platform or van body - fixed sides - rear overhang max. 1500 mm	Light
120 x 80 x 6	58	4 x 2 6 x 2	General cargo, fixed platform or van body - fixed sides - rear overhang max. 1250 mm	Light
120 x 80 x 8	71	4 x 2 6 x 2 6 x 4	General cargo, fixed platform or van body - fixed sides - rear overhang max.1800 mm, 1250 mm for bodywork w/ side access Interchangeable platforms	Medium-heavy
140 x 80 x 6	69	4 x 2 6 x 2 6 x 4	General cargo, fixed platform or freight body - fixed sides - rear overhang max.1800 mm - rear overhang max. 1250 mm for bodywork w/ side access	Medium-heavy
140 x 80 x 8	89	6 x 2 6 x 4 6 x 6 8 x 2 8 x 4 8 x 6	General cargo, fixed platform or van body - rear overhang max. 2800 mm for bodywork w/ side access Excavation, tipping platforms, interchangeable platforms Rear overhang max. 1250 mm	Medium-heavy/ heavy Heavy
160 x 80 x 8	107	6 x 2, 6 x 4, 6 x 6 8 x 2, 8 x 4, 8 x 6	Excavation, tipping platform Concrete trucks, mixer or tank - rear overhang max. 1250 mm	Heavy
180 x 80 x 8	126	6 x 2, 6 x 4, 6 x 6 8 x 2, 8 x 4, 8 x 6	Heavy driving tasks/off-road conditions Excavation, tipping platform Concrete trucks, mixer or tank - rear overhang max. 1250 mm	Extra-heavy
RHS rectangular hollow profile, RAEX HSF 490 or minimum S 355 = Fe 52				
160 x 80 x 6	min. 115	6 x 2, 6 x 4, 6 x 6 8 x 2, 8 x 4, 8 x 6	Timber trucks	Heavy
This table presents directive general information only. Operating conditions, loading methods, etc. have an essential influence on the strength required from the subframe.				

If the height of the subframe creates special problems, a closed section (RHS rectangular hollow section) provides similar bending resistance with about 20% lower beam structure when compared to a U-section with similar wall thickness and width.

However, we do not recommend using a closed section for subframe beams except in the special cases mentioned in the previous paragraph.

https://truckmanualshub.com/

When defining the subframe dimensioning (bending resistance), take into account all possible factors that will affect the load.

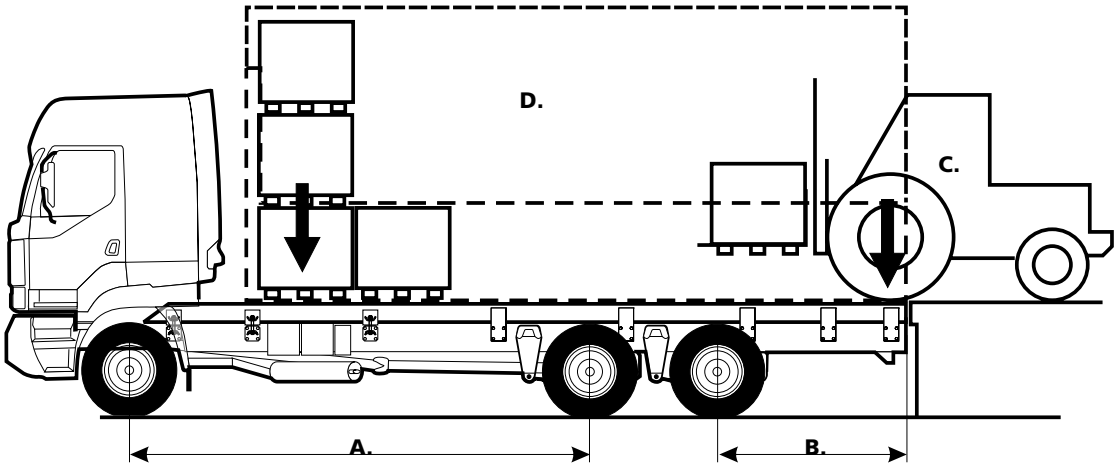

Fig. 907012

For example

A. Wheelbase

B. Rear overhang

C. Loading method

If a vehicle with a long rear overhang (2–2.5 m or longer) is loaded using a forklift truck, we recommend the construction of hydraulic outriggers to support the rear overhang during loading.

D. Bodywork stiffness. E.g. bodywork with side access substantially decreases the stiffness of the bodywork and moves the load to the subframe and chassis frame.

4.3.5 Subframe plate bracings

In some cases either the front or rear of the subframe must be stiffened. The subframe side beam is boxed at the length required by welding a plate bracing onto the web of U-section.

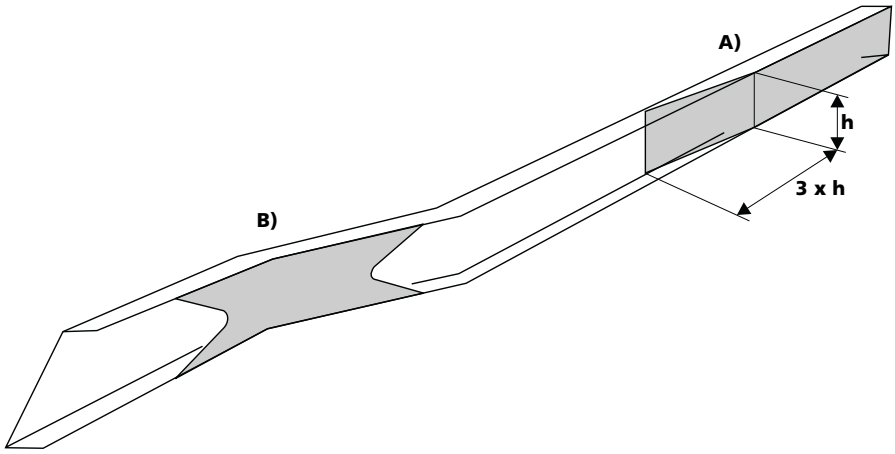

Fig. 907013

The open and boxed-section interface of the stiffened profile is subjected to the highest loads.

The change between the boxed and open section must be flexible, as shown in the figure, construction A and B.

Construction A, in which the bracing is leaded diagonally to the web of the beam, is preferred.

https://truckmanualshub.com/

4.3.6 Subframe truss bracing

When a heavy truck is constructed with current gross vehicle weights and bodywork dimensioning, a heavy truss bracing is usually required at rear of the subframe, or even two consecutive bracings may be required.

The bracing prevents the longitudinal movement of the frame beams compared to each other, thus increasing the lateral stiffness of the frame. Simultaneously, it notably increases the torsional stiffness, which has significant effect on tipping stability. Adequate truss bracing also slows down the appearance of subframe fatigue failures.

Truss-bracing requirements:

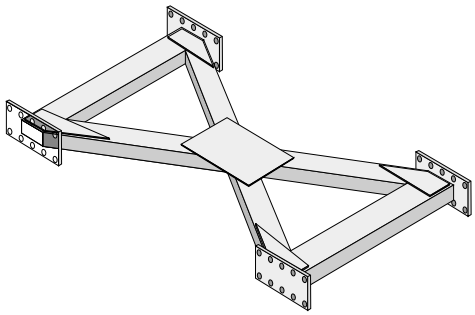

Fig. 907014

- Material min. S 355 (Fe 52), preferably RAEX HSF 490.
- The truss bracing must be attached **extremely firmly to the subframe cross beams**, and the center junction must be reinforced by a plate (the bracing may not be welded directly to the flanges of the subframe longitudinal beams).
- Bolt mounting of the cross beams to the subframe longitudinal beams is recommended.
- The truss bracing must be long enough, preferably extending to the centerline of the rear axle or bogie.
- In vehicles with tipping gear, the truss bracing must be constructed from a rectangular hollow section.
- At the truss bracing's cross beams, the subframe must be attached to the frame with sufficiently rigid and thick (8–10 mm) mounting plates.

Dimensioning and material:

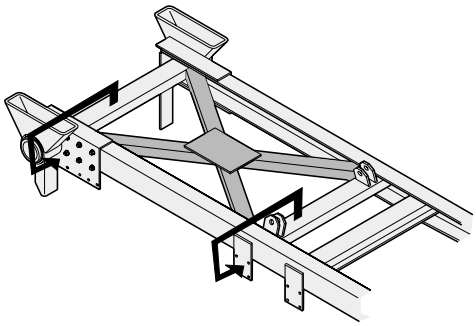

Fig. 907015

The truss bracing must be dimensioned separately in each case.

The truss bracing is constructed with an RHS-beam, e.g. 60 x 80 x 6.3 mm, depending on the load. The RHS-beam bracing is reinforced by a reinforcement plate welded on the bracing center junction.

- The ends of the truss bracing are attached to the subframe cross beams. In tipping constructions, the rear end is attached to the tipping axle or as close to the tipping axle as possible.
- The truss bracing may not be welded straight to the flanges of the subframe longitudinal beams.
- Since the truss bracing is subjected to high tensile loads, the mounting of the truss bracing must be extremely secure.
- The truss bracing is attached as close to the upper edge of the subframe as possible. However, it may not be welded to the upper flange of the subframe.
- The junction and mounting of the truss bracing to the subframe according to figure (Fig. 907016)

Fig. 907016

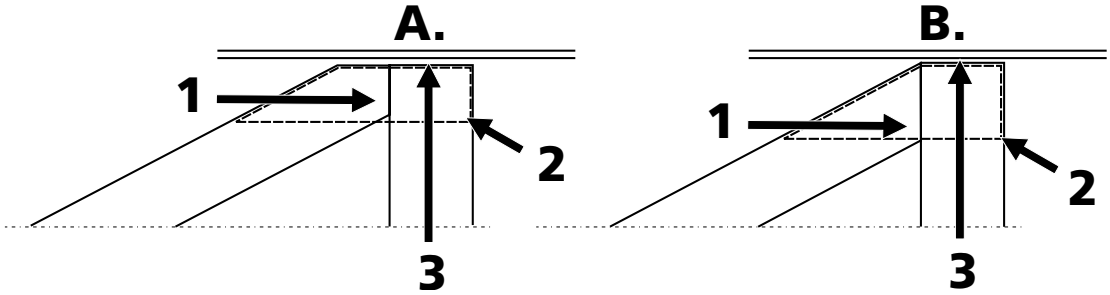

1. The bracing beam is attached to the cross beam according to the figure (A or B). Type A is preferred.
2. The junction is reinforced with a reinforcement plate (s = min. 5 mm).
3. Mounting plates for bolt mounting are welded to the ends of the truss bracing, or it is welded to the web of subframe with a continuous seam.

- It is recommended that the truss bracing be constructed with the RHS-beam on its edge, if the space allows. If not, the bracing beams may be flat.

https://truckmanualshub.com/

In some cases a flat steel-bar truss bracing is also approved.

Fig. 907017

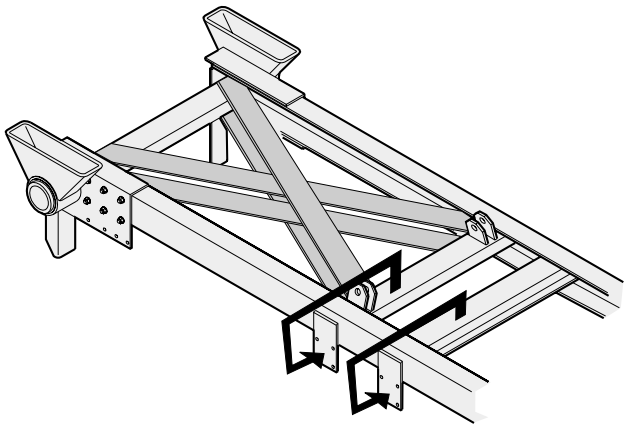

If the lack of space prevents the installation of a rectangular hollow section, it can be replaced with flat steel-bar truss bracing. The flat steel bracing must be doubled, inside the upper and lower flange of the subframe.

The flat steel-truss bracing is constructed from 60 x 10 flat steel or from flat steel of a corresponding cross-sectional area (min. Fe 52).

Experience has shown that the flat steel bracing does not provide a nearly similar support effect as the RHS-beam.

In long three- and four-axle vehicles and especially if the truss bracing is short (under 1 m), it is recommended that two consecutive bracings be constructed if the space allows. In this case, the front bracing can be constructed from flat steel.

Never weld on the flat steel-bar truss bracing crossing point.

4.3.7 Notes for mounting

- The frame of the vehicle must be vertical when mounting the bodywork.
- Welding the bodywork onto the chassis frame is strictly prohibited.
- Mounting the subframe must be done with flexible and rigid brackets according to the case (see appropriate bodywork instructions).
- The subframe must lay on the longitudinal beams of the vehicle's frame without tension.
- If there are differences in height, they must be corrected by heating the subframe and pressing it to follow the shape of the vehicle's frame (forcing the subframe to touch the vehicle's frame using mounting bolts is strictly prohibited).

Welding, notching or drilling the upper and lower flanges of the subframe's longitudinal beams is strictly prohibited. The upper flanges especially are under high loads, and any point of stress discontinuity can easily cause fatigue failures.

Holes in the webs of the longitudinal beams must be manufactured by drilling or laser-cutting (never by flame-cutting).

If the cross-beams are attached to the webs of the longitudinal beams by welding, the welding seam must be continuous around the object. However, we recommend attaching the cross-beams to the webs of the longitudinal beams by bolt mounting.

https://truckmanualshub.com/

4.4 Subframe mounting brackets

4.4.1 Mounting bracket material

Brackets are normally constructed from 8 mm or thicker HSF 490 high-strength steel, depending on the bodywork weight.

However, Fe 52 steel can be used with light bodyworks.

4.4.2 Flexible mounting brackets

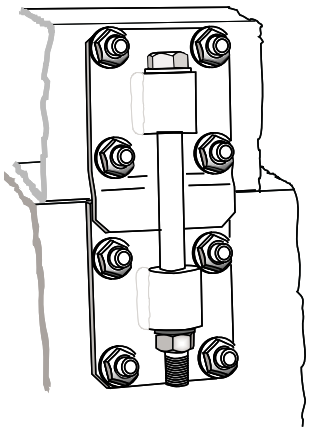

Fig. 907018

A flexible mounting bracket allows longitudinal movement between the subframe and vehicle frame.

Usually, the front mounting brackets must be flexible. They must allow longitudinal movement between the subframe and vehicle frame, but prevent lateral movement of the subframe. Depending on the bodywork and wheelbase, 1–3 flexible brackets/side are used.

If the flexibility of a flexible bracket is based on a friction joint generated by a preloaded bolt (Fig. 907018), the tension of the bolt must be checked regularly. Loose (can usually be rotated by finger-force) bolts cause additional stress on the mounting and fatigue failures in the subframe. We do not recommend this type of mounting bracket.

We recommend the bracket type in which the flexibility is based on a steel spring or a damping rubber element installed under a bolt (Fig. 907019).

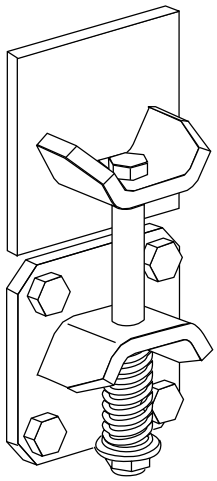

Fig. 907019

4.4.3 Rigid mounting bracket

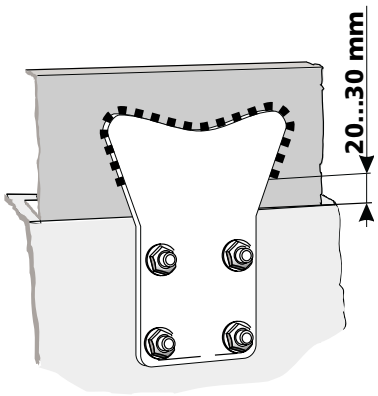

Fig. 907020

- A rigid mounting bracket prevents movement between the vehicle's frame and subframe.

A rigid mounting bracket also stiffens the chassis frame and increases the vehicle's torsional resistance.

The rear of the subframe is usually attached rigidly to the frame using mounting plates. This requires special attention e.g. in vehicles with tipping gear, in which the rear frame stiffness has a direct effect on tipping stability.

A rigid mounting bracket can be attached to the subframe by welding or bolting. **If the bracket is welded, the seam may not reach closer than 20–30 mm to the lower flange, see figure.**

☛ **Note! Attaching any object to the vehicle's frame by welding is strictly prohibited!**

https://truckmanualshub.com/

4.4.4 Dimensioning the mounting brackets

Rigid mounting bracket:

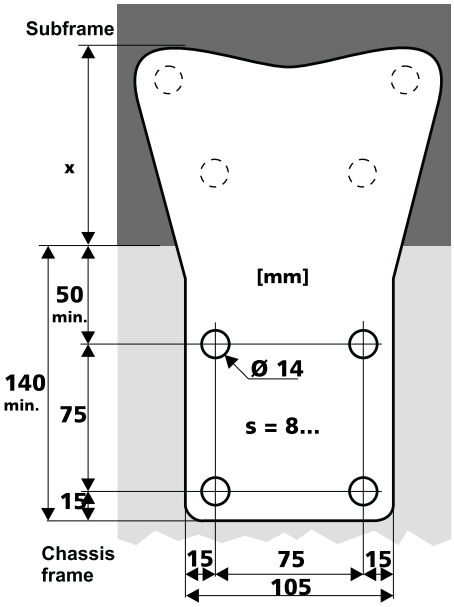

Fig. 907021

Dimension x depends on the height of the subframe and whether the mounting to the subframe is by welding or bolting.

The thickness of the bracket must be dimensioned according to the bodywork and driving task, i.e. according to the load.

Although the part of a rigid mounting bracket attached to the vehicle's frame is usually narrow due to the limited space, the part of the bracket attached to the subframe can be constructed wider. This allows the distribution of stress over a wider section of the subframe beam and a longer weld seam.

Remember that the weld seam may not reach closer than 20–30 mm from the subframe lower flange.

Always mount to the web of the frame with bolt mounting.

At the rear of the frame, the separate mounting plates can be replaced with

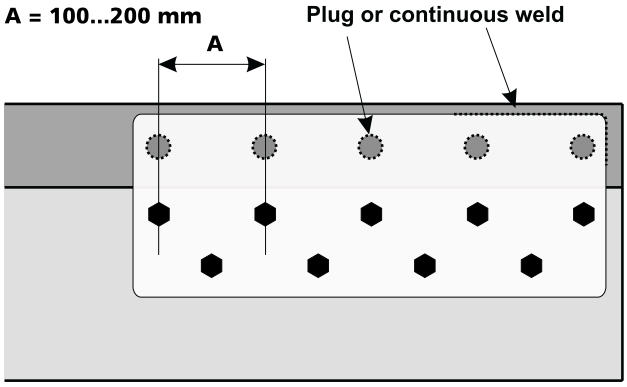

Fig. 907022

continuous reinforcement plates, which can be taken into account when calculating the bending resistance of the subframe.

The reinforcement plate starting point is

4x2 vehicles:	at the drive axle
Vehicles w/ bogie:	at the centerline of the bogie

The reinforcement plate continues to the end of the frame or e.g. to the tipping axle of the platform in tipping vehicles. The reinforcement plate is attached to the frame with either a plug weld (A) or continuous weld (B).

Bolt mounting to the frame with bolt spacing is shown in the figure.

https://truckmanualshub.com/

4.4.5 Mounting bracket location

- The first subframe mounting bracket is located 225–375 mm from the centerline of the front axle.

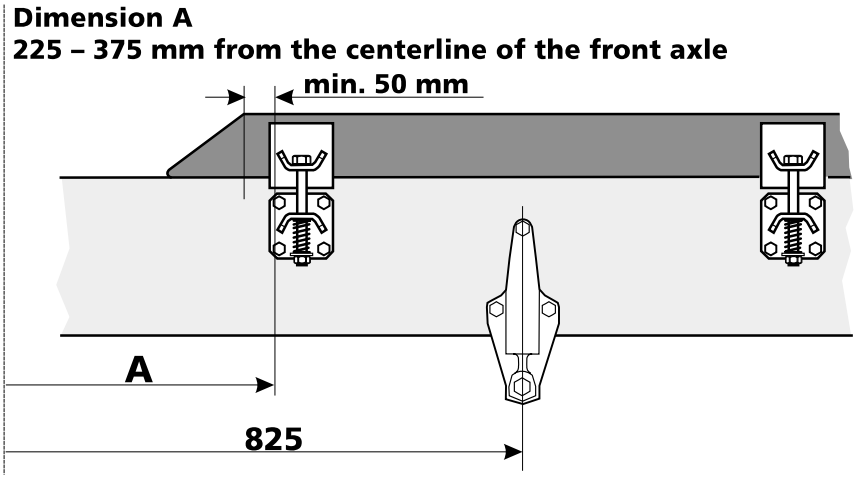

Fig. 907010

- It is recommended that the brackets be mounted to the provided mounting hole groups.
- The number and location of flexible and rigid mounting brackets depend on the bodywork (separate instructions in this folder in the appropriate sections dealing with various bodyworks).
- When mounting the subframe, attaching any object to the vehicle's frame by welding is strictly prohibited.
- Drilling holes in the flanges of the vehicles's frame is prohibited except at the rear of the frame when attaching the tipping axle, given that the strength of the cross-beam mounting is maintained.

https://truckmanualshub.com/

4.5 Bolted joints

4.5.1 General

All bodyworks must be attached to the webs of the frame beams with bolted joints. The joint type can be either friction or rigid joint. A rigid joint requires drilling the holes together and broaching in order to insure adequate accuracy.

Bolted joints must always be dimensioned so that the joint is a friction joint only. An operational precondition of a friction joint is the preload of the bolt during tightening.

Since the bolts for bodywork mounting are usually short, the stretch length of the bolts is short. The preload generated in tightening decreases rapidly during driving, since the joint is moving and the paint coatings on the contact surfaces wear out. This is why it is very important to retighten the joint after a certain amount of time from mounting for the proper operation of the joint. For the same reason, the paint coatings on the contact surfaces must be as thin as possible.

The use of lock nuts does not prevent the loosening of the joints, since even if the nut does not move with regard to the bolt, the pretension decreases due to the wearing of the paint coatings. Lock nuts prevent the detaching of nuts.

The clearances between the bolt and the holes drilled in the mounting plate and frame must be as small as possible. This ensures only minimal movement when the joint is under stress. For the same reason, the bolt shank must reach as far as possible through the frame and mounting plate.

4.5.2 Bolted-joint dimensioning, tightening

- The number of bolts must be selected according to the load.
- Simultaneous drilling with a 13.8 mm drill bit for M14 bolts, concerning the mounting plates and cross beams.
- Simultaneous drilling with a 15.8 mm drill bit for M16 bolts, concerning the mounting plates and cross beams.
- The bolt shank must reach as far as possible through the bracket and frame.

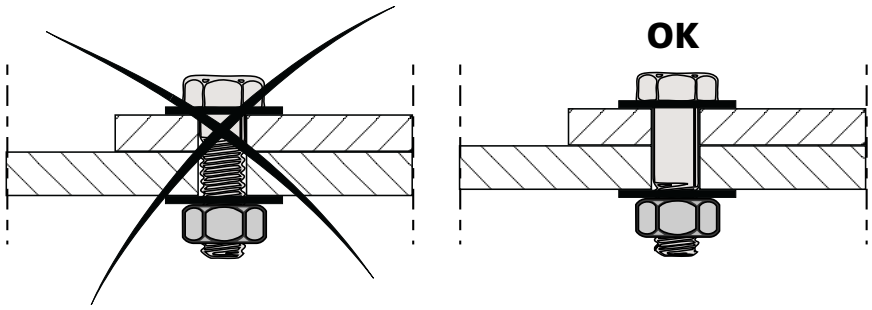

Fig. 907023

- Washers must always be used under the bolt and nut.
- Only lock nuts may be used for locking (spring washers are prohibited).

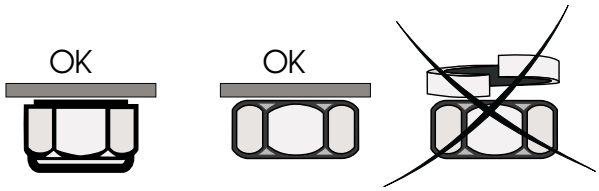

Fig. 907024

- We recommend grade 8.8 fine-threaded M14 bolts, specially designed for Sisu frames. The diameter of the bolt shank is higher than in the standard M14 bolts, which allows a tightening torque of 130 Nm. The length of the bolt must be selected according to the joint thickness using the following table.

https://truckmanualshub.com/

Bolt	Joint thickness		Part number
	Washer 2 mm	Washer 4 mm	
M14 x 1.5 - 35	14–18 mm	12–13 mm	90171 11401
M14 x 1.5 - 41	20–24 mm	18–19 mm	90171 11402
M14 x 1.5 - 47	26–30 mm	24–25 mm	90171 11403
Nut M14 x 1.5			90556 14223

(The bolts and nuts presented in the table can be purchased from Hansa Auto Oy service and spare part dealers)

- Minimum washer hardness: 200 HB

Tightening torques:

M14	8.8	fine thread	130 Nm
M14	8.8	std thread	115 Nm
M16	8.8	std thread	180 Nm

The tightness of the bolted joints must be checked regularly.

4.5.3 Frame holes

Hole groups for mounting the bodywork are provided in the frames of Sisu trucks.

The dimensions of the hole groups and free space around the hole pattern are presented in the figure below.

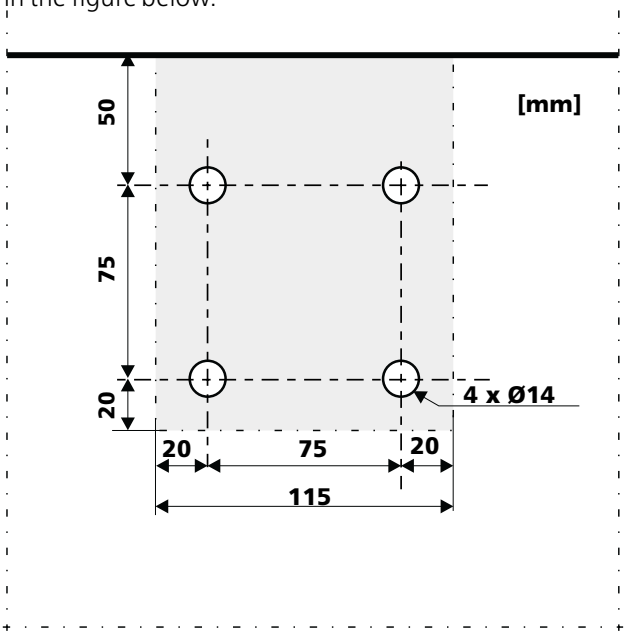

Fig. 907025

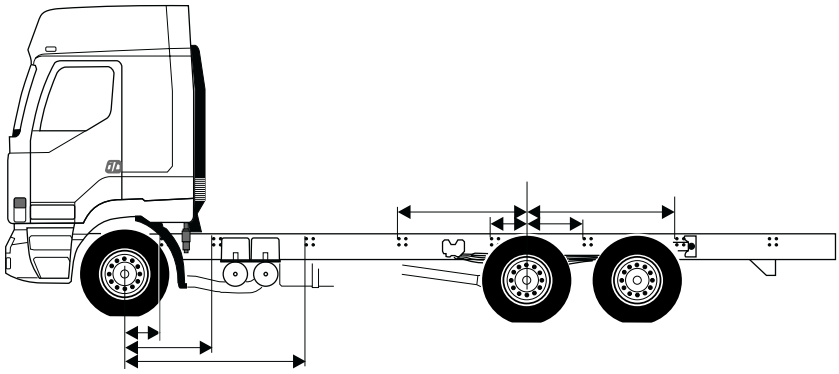

Fig. 907026

The distance between standard hole patterns varies according to vehicle type and intended purpose, so the bodywork manufacturer must measure the spacing from the frame or consult the vehicle manufacturer, if necessary.

https://truckmanualshub.com/

4.5.4 Drilling holes

If the provided hole groups cannot be used, the new mounting holes are drilled using the bracket as a drilling guide.

E.g. for M 14 bolts a 13.8 mm drill bit is used.

The minimum distances and instructions must be followed if holes are to be drilled in the frame beams of SISU trucks.

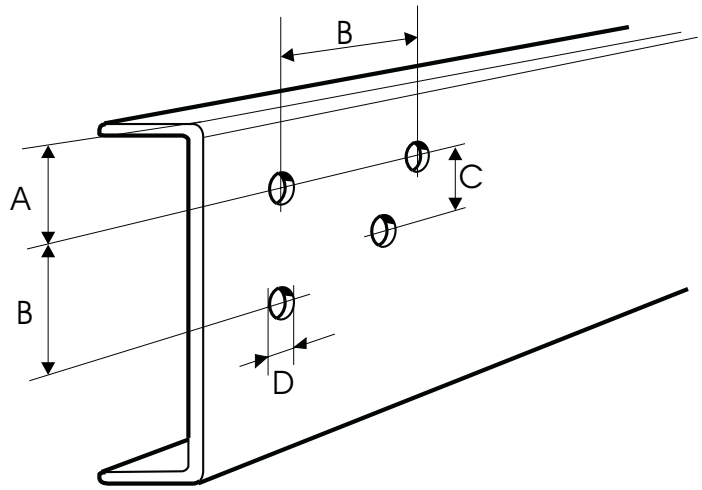

Fig. 907027

A = min. 3 x D, not less than 50 mm

B = min. 4 x D

C = min. 3 x D

D = drilled hole diameter

- It is recommended that the bodywork mounting holes be drilled in the centerline of the side beam or as close to the centerline as possible.
- Drilling holes in the upper and lower flanges of the frame beams is strictly prohibited. The exception allowed is the upper and lower flanges at the rear of the frame, in which holes for e.g. tipping axle mounting can be drilled if the strength of the rearmost cross beam's mounting is not maintained.
- In addition to that, drilling holes in critical sections of the frame should be avoided. These critical sections include e.g. near the spring brackets, both ends of the frame reinforcement plates and near the frame beam bends.
- If a rigid joint is constructed, the holes in the mounted object and in the frame must be fitted together by broaching.

https://truckmanualshub.com/

Record

https://truckmanualshub.com/

Flexible bodywork

General

In these instructions a flexible bodywork refers to a bodywork with a low torsional resistance, which allows the bodywork and frame to follow each other's movements.

Fig. 907005

These bodyworks include e.g. open-top platforms, various interchangeable platforms, tipping platforms, leg gears, fifth wheel, timber bunk structures for timber trucks etc.

The correct mounting on the vehicle's frame is very significant with these types of bodyworks, and is even emphasized if the vehicle's frame is subjected to high torsional stress due to driving conditions.

Subframes of flexible bodyworks: mounting methods.

Bodywork	Front mounting	Rear mounting
Tipping platform	Jointed or flexible in longitudinal direction	Rigid
Fixed platform w/ side access	Flexible, single-acting (longitudinally)	Rigid
Van body w/ side access	Flexible, single-acting	Rigid, single-acting and as flexible as possible
Timber underframes	Flexible, single-acting	Rigid
Interchangeable platform underframes	Flexible, single-acting	Rigid, from the front of the rear axle spring's front bracket
Concrete mixer		
Concrete tank		

This section provides basic guidelines for mounting flexible bodyworks on Sisu trucks.

Dimensioning subframes and mountings must be considered separately for each case according to the vehicle's intended purpose and dimensioning.

The bodywork manufacturer must acquire all the standards and regulations concerning the bodywork to be manufactured.

If the bodywork must comply with the machine directive, the bodywork installer must issue the declaration of conformity and attach the CE mark. (See section 01).

The industrial safety district may now inspect the validity of the machine directive declaration of conformity at the district's own discretion and within the limits of market control.

https://truckmanualshub.com/

Remember!

- The first mounting bracket of the subframe is always 225–375 mm from the centerline of the front axle.

Fig. 1695 /907010

Dimension A
225 – 375 mm from the centerline of the front axle

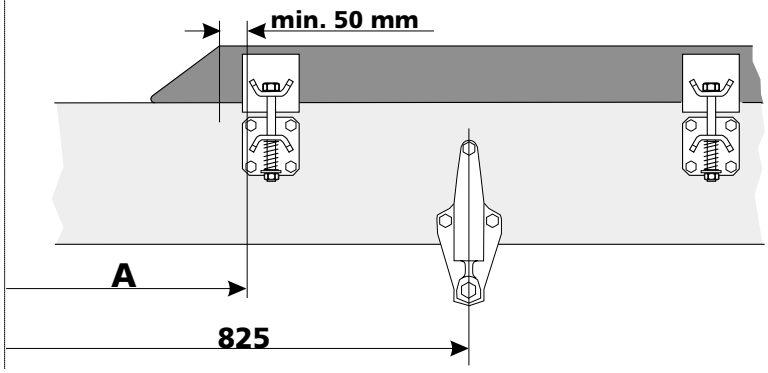

- The first mounting bracket of the subframe is always in front of the front axle spring's rear bracket.
- Welding any object to the vehicle's frame is strictly prohibited.

See:
General guidelines for constructing and mounting subframes (section 02).

https://truckmanualshub.com/

1 Tipping platforms

1.1 General

Fig. 458
/908008

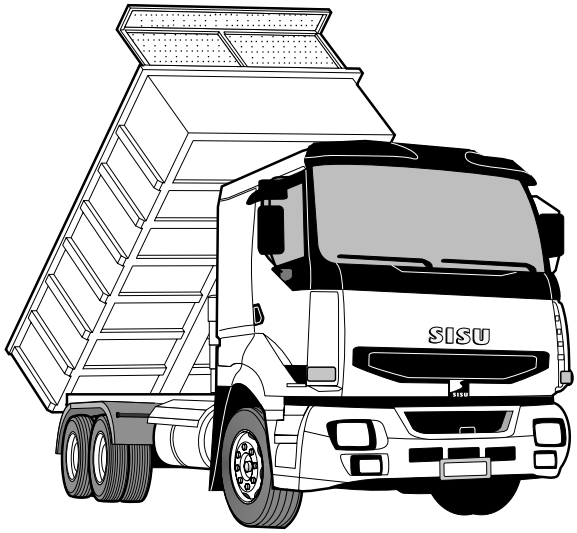

Various tipping platforms are flexible bodyworks. In addition to the low torsional resistance of the structure, the tipping stability must also be considered when mounting tipping platform structures. Tipping bodyworks must always be constructed as rigidly as possible.

Since the load is not distributed evenly in tipping platforms, a subframe is always required. Only in vehicles with a so-called "high frame" can a tipping platform be mounted without a subframe.

- **The tipping gear and platform must be mounted according to the appropriate EU directives, and the installer must issue the declaration of conformity and attach the CE mark**

Since the subframe of a tipping platform is flexible, the front of the subframe must be mounted with brackets that are flexible in longitudinal direction. The rear section of the subframe is usually mounted with rigid brackets from the rear axle spring's front bracket rearward.

When designing tipping bodyworks, the principle must be that the vehicle's structure and subframe and the bodyworks' structure are sufficiently rigid that the vehicle keeps its stability during tipping without the support of the tipping gear.

However, when designing the bodywork and subframe, the characteristics of the selected tipping gear must be considered.

Tipping cylinders include stabilizing and non-stabilizing types. A stabilizing cylinder can also withstand lateral forces and hence improve tipping stability. On the other hand, a non-stabilizing cylinder is usually more durable.

A twin-ram tipping gear can withstand a notable amount of lateral force, significantly improving tipping stability.

If the selected tipping gear/cylinder(s) provide good stability, the excessive play caused by the wear of the tipping axle and bearings may not be noticed in time. Excessive play in the tipping axle notably increases the lateral load of the tipping cylinder and may damage the cylinder or its mounting in the long run.

1.1.1 Tipping stability

In addition to chassis stability, the torsional stiffness of the cargo space and its mounting on the chassis have an effect on the tipping stability. The tipping platform must be sufficiently rigid that no significant bending or twisting occurs even if the load partially sticks to the platform.

We recommend that the supplier who is responsible for the CE mark certify the product's tipping stability with a test according to the standard SFS 5750.

Since 1992, insurance companies have required that a vehicle that has been repaired after a tipping accident must meet the above mentioned standard with regard to the tipping stability. If a vehicle or trailer does not meet the standard, the vehicle's full insurance may be canceled.

https://truckmanualshub.com/

1.2 General construction principles

- Wheelbase as short as possible.
- Tipping platform as short as possible in rear tipping construction.

A long platform in rear-tipping construction is especially problematic with regard to tipping stability.

Side-tipping construction does not generate problems of similar scale due to the longer distance between the bearing points and the lower height of the center of mass.

- Stiff rear springs and an anti-roll bar on the rear axle.

Stability is improved by stiffer rear springs and an anti-roll bar mounted on the rear axle. For heavier vehicles, the rear axle anti-roll bar is mandatory. A front axle anti-roll bar has a slightly positive effect on tipping stability. **In Sisu trucks, a front axle anti-roll bar is installed in special cases only.**

- No tipping platform for vehicles with air suspension.

If this construction cannot be avoided, the tipping feature may be used only when the air bellows are empty. **The vehicle must be equipped with a system that prevents tipping until the bellows are empty.**

- Tipping-axle mounting.

The tipping axle is mounted on the subframe. At the tipping-axle area (rear of the subframe) the subframe is mounted on the vehicle frame with rigid mounting. Both the tipping-axle mounting on the subframe and the bearing mounting on the bodywork frame must be constructed so that they will **definitely withstand all load conditions** and so that they improve the torsional stiffness of the rear of the frame.

The tipping axle must be parallel to the bodywork bed and at a 90 degree angle to the vehicle frame. During tipping, a misaligned tipping axle will cause lateral deflection on the platform and immediate risk of vehicle rollover.

The tipping axle bearing must be almost without clearance (under 1 mm). The bearing diameter and the distance between the bearings (laterally) must be as high as possible. The lubrication of bearings must be sufficient and positive.

- A truss bracing must always be constructed on the rear of the subframe.
- The tipping-axle rear overhang must be as short as possible.

When the rear overhang is over 1000 mm, the subframe must be constructed using the heavy-duty specifications (see subframe bending resistance table).

Maximum rear overhang is 1250 mm.

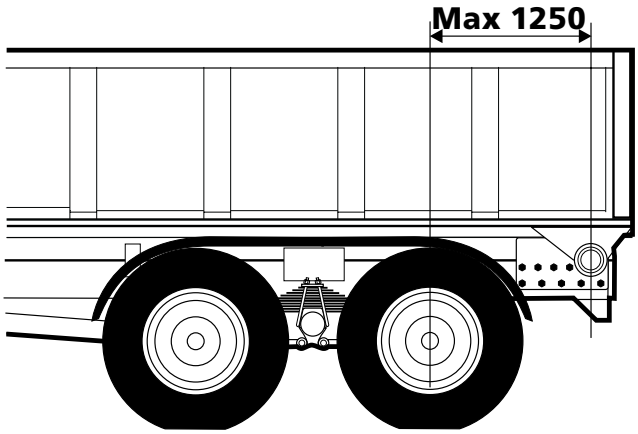

Fig. 908001

The platform overhang (the distance between the rear end of the platform and the tipping axle) must also be as short as possible.

https://truckmanualshub.com/

1.2.1 Tipping support

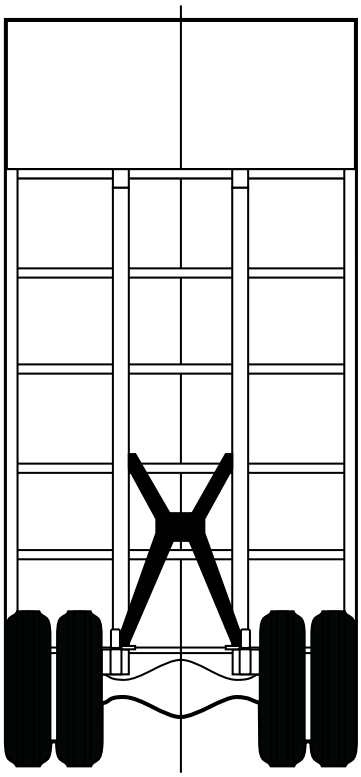

Fig. 523/908003

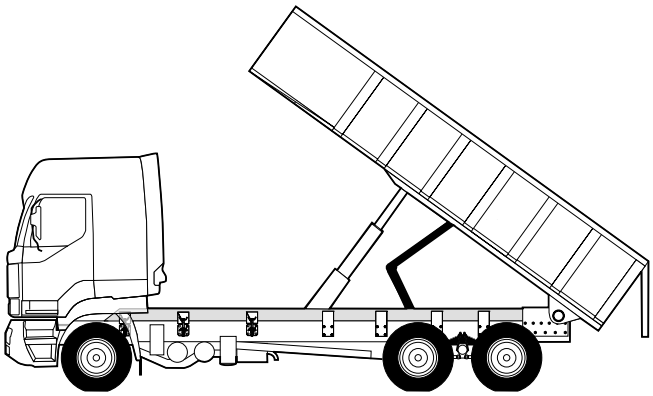

Fig. 503
/908002

Torsional stiffness and tipping stability can be improved further by installing tipping support. The tipping support is almost essential for longer tipping platforms (over 5.5 m) and mandatory in 8x2 and 8x4 vehicles as well as tipping trailers. It is strongly recommended that tipping support also be installed on platforms under 5.5 m length if a non-stabilizing front or underbody tipping gear is utilized.

The tipping support is designed for transferring part of the bodywork torsional forces towards the front of the frame. Hence, the torsional forces transferred via the tipping axle to the rear of the frame decrease.

The tipping support must be installed on the center hinge pointing forward (as shown in the figure).

The tipping-support strength must be equivalent to that of the tipping axle. When tipping on inclined surfaces, the tipping support takes over 50% of the lateral stress generated by the bodywork and load on the bodywork.

The mounting points of the tipping support should be in front of the drive axle or bogie centerline.

1.2.2 Tipping-gear mounting

Since the mounting brackets of the tipping cylinder/cylinders and tipping-axle components are subjected to extremely high stresses, these brackets and other components must be sufficiently strong and robust. The number of bolted joints or welded joints and dimensioning must be designed regarding the factors mentioned above.

The attaching points to the bodywork bed must also be designed and constructed to be sufficiently strong.

The tipping-gear mounting points must be located in front of the platform's center of gravity.

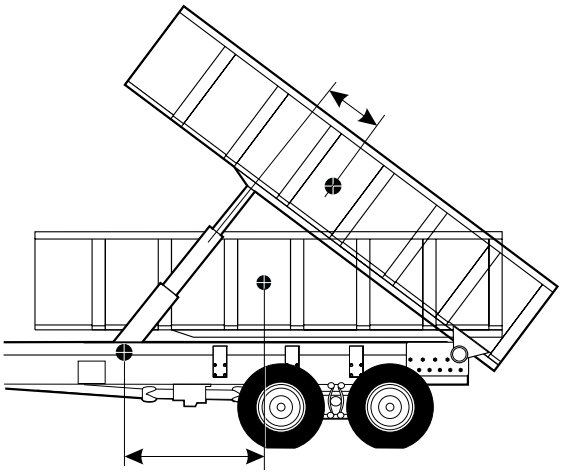

Fig. 908004

If the mounting point of the tipping gear/platform is between the platform's center of gravity and tipping axle, it tries to lift the tipping axle upwards at the beginning of tipping, resulting in impaired tipping stability and extra load on the tipping axle.

In addition to that, the bodywork's center of gravity may never transfer vertically behind the tipping axle even if the bodywork is lifted to its maximum structural height.

The closer to the front of the platform the tipping gear is mounted, the better the tipping stability is, due to the longer distance between the bearing points. The factors mentioned above require that the tipping platform be sufficiently strong and rigid.

Lift retainer

Tipping construction must include a lift retainer that stops the lift before the maximum cylinder stroke length is reached.

The retainer can be a steel cable construction, tipping support or a mechanical retainer system that stops the lift by interrupting the lift control valve.

The retainer and its attaching points must be constructed to withstand the maximum tipping force with an empty bodywork.

https://truckmanualshub.com/

1.2.3 Tipping stability test

By conducting a tipping stability test according to the standard SFS 5750, the bodywork manufacturer certifies that the tipping construction meets the tipping stability regulations.

With a tipping stability test certificate, the bodywork manufacturer can prove that the construction has met the tipping stability regulations in case of a possible accident. The certificate is an important document when judging liability.

The bodywork manufacturer that installs the tipping gears should acquire the standard SFS 5750.

☛ **We recommend that a tipping stability test always be conducted according to the standard SFS 5750 before commissioning the vehicle.**

1.3 Construction

1.3.1 Hydraulics

Tipping gear hydraulics must be equipped with a restraining valve (e.g. a pressure-reducing valve reacting to flow speed), which prevents the bodywork from falling rapidly in case of e.g. a hydraulic hose failure.

See the decision of the Council of State: Vnp 1314/94, Appendix 1, 1.3.2.

It is also possible to use an electrically controlled directional control valve or a controlled lowering valve attached to the side of the tipping cylinder. Since the lowering valves are usually used with double-acting cylinders, installing the valve on a single-acting cylinder requires special arrangements.

However, the controlled lowering valve construction is the safest solution.

1.3.2 Tipping gear control device

Tipping is controlled with an electronic switch or an pneumatic valve controlling the actual tipping valve. The control device is located near the driver. The control device must enable lifting and lowering the bodywork from the vehicle's cab only, or if special reasons require, from other appropriate location (SFS 5339).

1.3.3 Tipping cylinder/tipping gear

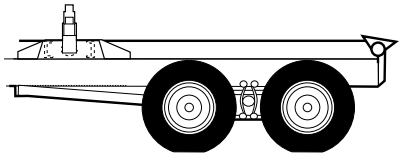

Fig. 908005

If the tipping cylinder is located in the middle, it may be necessary to relocate the cross beams of the chassis. However, the distance between the cross beams may not exceed 1500 mm. If necessary, an additional cross beam must be constructed at the tipping cylinder to strengthen the frame.

In vehicles with a triple axle that were **manufactured before May 1998,** the frame beam behind the triple axle must be relocated 150–200 mm rearwards so that enough space is provided for the tipping cylinder. It must be confirmed that the tipping cylinder does not come into contact with the air bellows, propeller shaft or track rod. The minimum clearance between the tipping cylinder and propeller shaft is 25 mm.

Fig. 2491 /908006

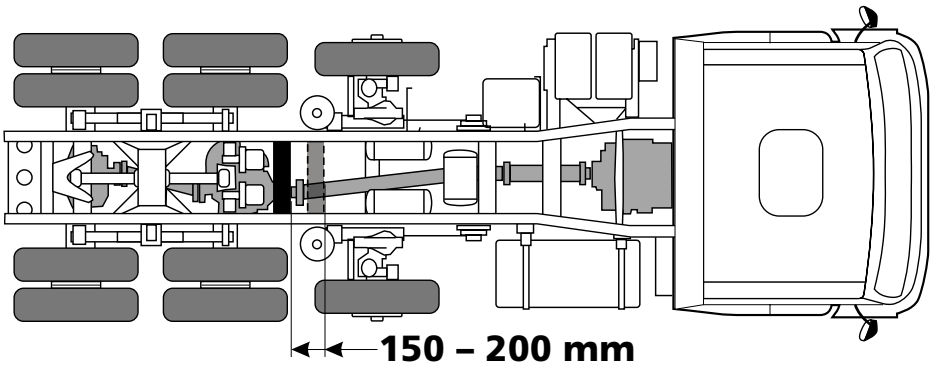

The tipping gear is mounted on the subframe according to the tipping gear manufacturer's instructions.

https://truckmanualshub.com/

1.3.4 Mounting the tipping gear on a vehicle with a high frame

Since vehicles with high frames do not require a subframe, tipping-gear Z-beams must be mounted on the web of the frame beam with mounting plates.

☛ **NOTE! Welding the Z-beams to the frame beams is strictly prohibited!**

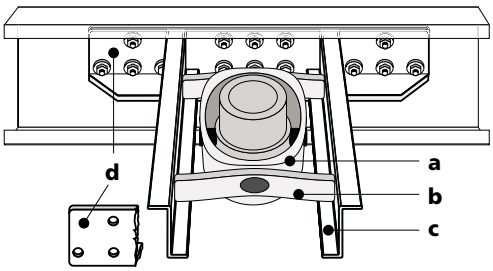

Fig. 908050

Fig. 908050 shows an example of mounting the tipping gear

A = cradle
b = rack beam
c = Z-beam
d = mounting plates

- Construct L-section mounting plates that are sufficiently strong regarding the tipping-gear load.
  Dimension the mounting plates appropriate for the Z-beams and the required number of mounting bolts. (For example, see Fig. 908052.)

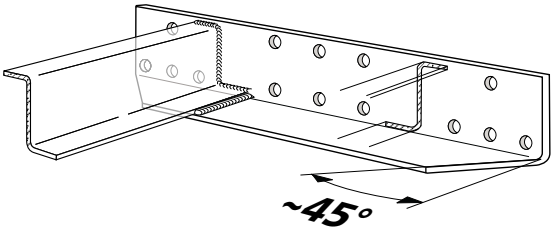

Fig. 908053

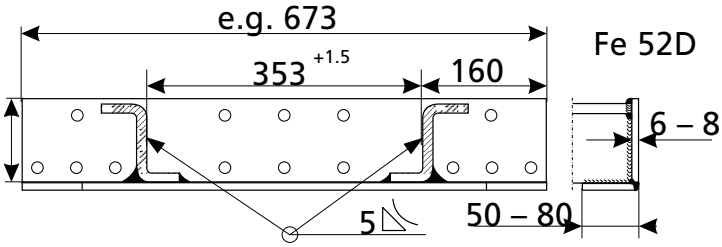

Fig. 908052en

An L-section can be manufactured by bending the plate 90° or welding a 50–80 mm flange to the plate. Chamfer both ends of the flange to 45°.

Mounting plate thickness: 6–8 mm, minimum material requirement: Fe 52D

- The mounting plates must be mounted on the webs of the frame beams at an appropriate height and using sufficient number of bolts with regard to the tipping-gear load. For mounting holes and bolted joints, see section **2** and follow the tipping-gear manufacturer's instructions.
- Cut the Z-beams to an appropriate length (web width – mounting plate thickness). The Z-beams must be cut at both ends so that the tipping gear cradle is located exactly in the middle of the frame. See tipping-gear manufacturer's instructions.
- The Z-beams must be welded to the mounting plates when the beams are in their correct position inside the vehicle's frame. Weld a continuous seam carefully around the object according to the welding instructions.

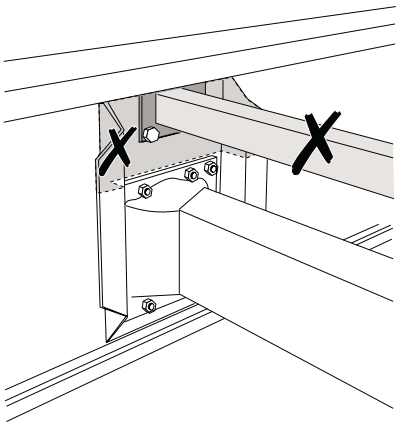

Fig. 908051

The mounting plate shown in Fig. 908052en is for a Z-beam distance of 353 mm. If the Z-beam distance is shorter or longer, the total length of the mounting plate is altered accordingly.

The height of the mounting plate should be approximately 10 mm higher than the Z-beams so that the upper and bottom edges of the Z-beams can be properly welded.

When mounting the tipping gear, more space can be obtained by removing the upper square hollow section of the frame cross beam, if required. See Fig. 908051.

1.3.5 Warnings

Relocating the cross beams located at the spring brackets or propeller-shaft bearing is strictly prohibited without the prior consent of the vehicle's manufacturer.

The tipping cylinder/gear must be mounted according to both the tipping gear manufacturer's instructions and the instructions by Oy Sisu Auto Ab presented in this manual regarding the mounting of tipping gear onto the chassis frame.

https://truckmanualshub.com/

1.3.6 Platform supports

Fig. 908007

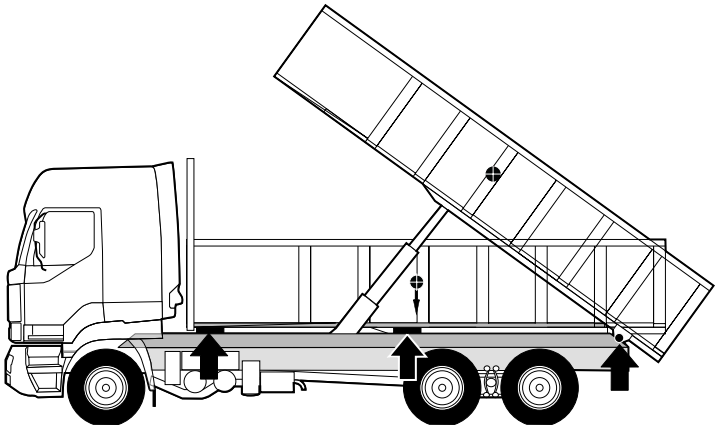

The bodywork must be supported on the subframe or chassis frame so that the frame vibrations that impair driving comfort are eliminated. This means that the bodywork must not rest on the subframe along its total length.

Supports on which the bodywork rests are attached on top of the upper flange of the subframe or vehicle's frame (vehicles with a high frame). The supports must be sufficiently long (min. 250 mm) depending on the load so that the surface pressure on the subframe or frame remains low enough.

For long platforms, it is recommended that two center supports be installed to support the platform in its lowered position. For shorter platforms, one center support is adequate and should be located at approximately the midpoint of the front support and tipping axle.

If the vehicle has a loader behind the cab, the first support must be located directly behind the loader.

The first support should usually be located as close to the front of the platform as possible, the center supports near the platform's center of gravity and the rearmost support **(i.e. tipping axle)** as close to the rear axle as possible.

In vehicles with a subframe, the platform support is a 250–350 mm long flat steel bar (min. Fe 52). The support is welded to the upper flange of the subframe and a 3–4 mm thick rubber pad is glued onto the support.

In vehicles with a high frame, the platform support is constructed with a 5 mm L-section (min. Fe 52), which is bolted to the web of the frame. E.g. a 3–4 mm thick rubber or nylon pad is glued onto the platform support, see Fig. 1857/908009 .

Fig. 1857/908009

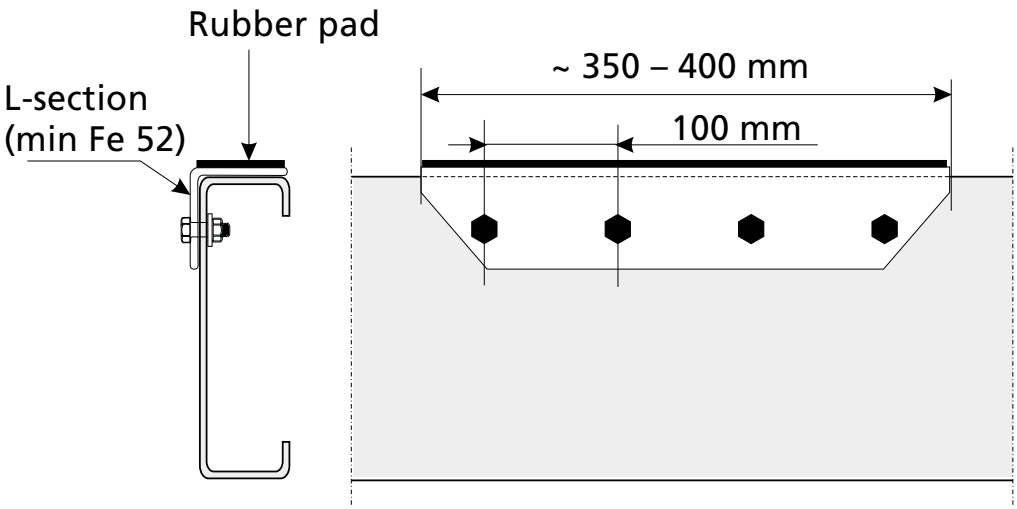

https://truckmanualshub.com/

Three-point support

Three-point support is usually required for tipping platforms with extremely high torsional resistance designed for heavy duty excavation and/or difficult off-road conditions. When the structure is designed for maximum torsional resistance, the front of the tipping platform must be allowed to twist in relation to the frame. A so-called "three-point support" is the best way to achieve this. E.g. a fork-type front support located at the centerline of the platform and allowing the torsional movement in relation to the frame.

Also, with the three-point support construction, the fixed supports are required at the midpoint of the platform, bearing load when the vehicle is loaded. When unloaded, the clearance between these supports and the platform frame may be 2–3 mm. The supports can be e.g. rubber pads with a hardness of 80 Shore A (anti-roll support). More fixed supports are required for long platforms.

If the platform structure rests on the vehicle's frame or subframe using other method than described above, the support at the front end of the platform must be considered carefully in order to eliminate harmful frame vibrations.

Platform supports with three-way tipping gears

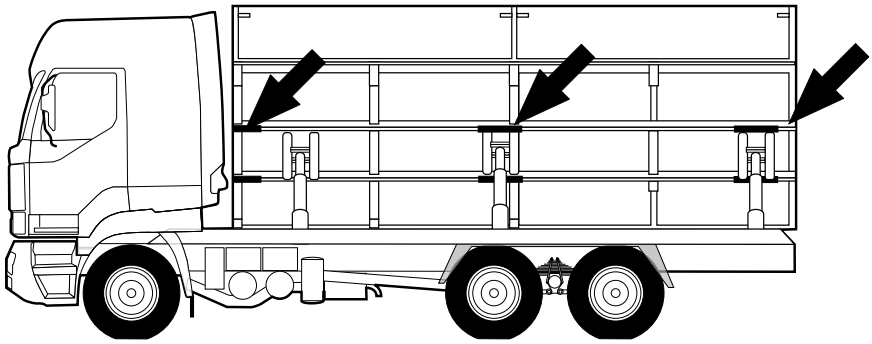

Fig. 908010

This structure requires at least one platform support to be installed for each frame beam in addition to the supports at the bearing axles' bearing points.

1.3.7 Tipping-platform side guides

When the platform is lowered, it must be positioned in the middle of the frame when the vehicle is on a level surface.

Platform side guides guide the platform to the middle of the frame when the platform is lowered and the vehicle is on inclined surface.

If the platform, subframe and tipping axle are not mounted correctly, the platform tends to position eccentricly on the subframe when lowered. In this case, the side guides may broach the subframe and even cut it quite quickly.

1.3.8 Tipping-platform service support

The bodywork service support consists of two steel bars attached to both sides of the subframe. These bars can be turned up against the bed of the lifted bodywork and they will support the bodywork during service tasks.

The service supports and their mounting and bearing points on the subframe and on the bed of the bodywork must be constructed to be sufficiently strong. The subframe mounting of the service supports may not impair the subframe's characteristics and durability. If the service support is not designed to carry the weight of a loaded bodywork, it must be stated in a warning sign located in the immediate proximity of the support.

https://truckmanualshub.com/

1.4 Tipping-platform subframe

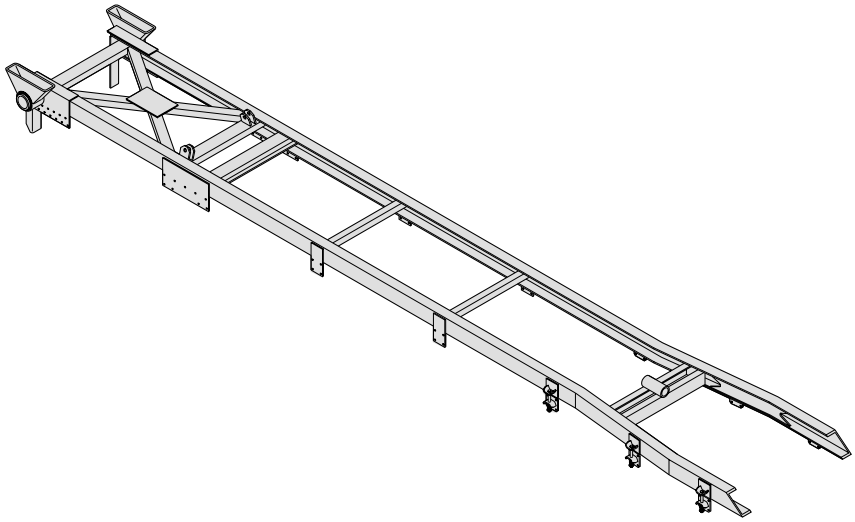

Fig. 908011

Read the general subframe guidelines (section 02).

For vehicles with a high-frame chassis, a subframe is not required even for excavation duties.

For vehicles with a standard-frame chassis, the tipping platform construction always requires a subframe

- In all cases, the first flexible mounting bracket of the subframe must be in front of the front spring's rear bracket.
- The subframe must be constructed with cold-formed or bent beam section material that meets the general guidelines. We recommend a U-section for longitudinal beams when possible. RHS - rectangular hollow section - may be used only when the subframe is designed for minimum subframe height.
- Creating points of discontinuity (holes, notches, welding, etc.) on the upper and lower flanges of the subframe is strictly prohibited.
- Holes drilled in the web of the subframe usually require reinforcement.
- The subframe must include the same number of cross beams as the vehicle's frame.
- At the rear of the frame, the cross beams should be located at the subframe plate brackets and otherwise at the chassis-frame cross beams.

At the front of the subframe, the cross beam is constructed with an open section (U) that is lower than the longitudinal beam and does not generate excessive torsional stiffness in the subframe. The front support of a three-point supported tipping platform must also be constructed with open sections. The two cross beams from the rear of the subframe must be rectangular hollow sections in order to generate higher torsional stiffness in the rear of the frame. This rigid rear-end construction is necessary in tipping vehicles. A sufficiently strong bearing axle can replace the rearmost subframe cross beam.

- The rear of the subframe must be equipped with a truss bracing constructed with RHS beams. The truss bracing should extend to the centerline of the rear axle or bogie.
- The ends of the truss bracing must be mounted to the chassis frame with robust mounting plates.
- The tipping axle must be sufficiently strong.
- Mounting the tipping axle, truss bracing and cross beams on the webs of the longitudinal beams must be carried out according to the instructions and constructed to be sufficiently strong.
- Platform supports must be sufficiently long (min. 250 mm).

☛ **At the end of the vehicle's frame, there must absolutely be either a cross beam constructed with a rigid rectangular hollow section or a Sisu trailer-coupling mounting beam.**

https://truckmanualshub.com/

1.4.1 Subframe bending resistance

Read the general subframe construction instructions in the general guidelines (section 02).

The bending resistance required for the subframe depends on the vehicle type, tipping-gear type, driving task, driving conditions, platform construction, rear overhang A (Fig. 397), loading methods, etc. The rear overhang (**A**) must be constructed as short as possible, max. 1250 mm. Constructions with a longer rear overhang are always special cases and they must be designed and dimensioned separately.

Fig. 397
/908012

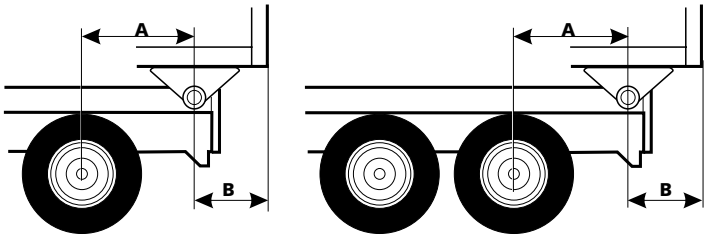

The platform overhang (B) must also be as short as possible.

☛ **Dimension A: Max. 1250 mm**

The table presents recommendations for subframe sections or their bending resistance, with regard to the vehicle type, duty, rear overhang, tipping support and tipping gear.

Rear overhang A [mm]	**Duty*** (light, normal, heavy)	**Vehicle type**	Recommendation for subframe longitudinal beam, **bending resistance / section**				**Tipping support ****	**Tipping gear*****	
			120x80x8 71cm^3 /section	**140x80x8 89 cm^3 /section**	**160x80x8 107 cm^3 /section**	**180x80x8 126 cm^3 /section**		**1-cyl**	**2-cyl. stab. gear**
–499	Light	4 x 2, 6 x 2	X****					X	
	Normal	4 x 2, 6 x 2 / 4	X****	X				X	
	Heavy	6 x 4, 8 x 2 / 4 / 6			X		X		X
500–849	Light	4 x 2	X****				X	X	
	Normal	6 x 2 / 4		X			X		X
	Heavy	6 x 4, 8 x 2 / 4 / 6			X		O		X
850–1250	Light	6 x 2		X			X		X
	Normal	6 x 2 / 4			X		O		X
	Heavy	6 x 4, 8 x 2 / 4 / 6				X	O		X

X = recommended, O = required

*** Difficulty of the duty:**
Light; e.g. communal trucks, trucks w/ interchangeable platforms (good driving conditions, mainly light-duty gravel loads, construction waste loads, etc.)
Normal; gravel loads for construction sites, etc., relatively good driving conditions.
Heavy; gravel loads on difficult off-road conditions, tipping vehicle w/ cassette trailer, heavy excavation, etc.

****Tipping support;** see 1.2.1 on page 69.

***** Tipping gear;** 2-cylinder stabilizing tipping gear notably improves tipping stability.

******** For platform lengths under 4500 mm in 4 x 2 vehicles, a 120 x 80 x 6 section can be used

If the height of the subframe creates problems, a 20% lower rectangular hollow section (RHS section) provides similar bending resistance when compared to a U-section with similar wall thickness and width.

When calculating the strength of the subframe, the yield-limit safety factor must be **3.0.**

Tipping vehicles: the rear of the subframe must always be strengthened with a rectangular hollow section truss bracing!

This table is for max. 6000 mm platform lengths. Very long platforms must be regarded as special cases.

This table presents directive information only, and is intended to provide an evaluation basis for subframe construction!

https://truckmanualshub.com/

1.4.2 Truss bracing

If a truck is equipped with a tipping platform, a heavy truss bracing is absolutely required at the rear of the subframe, or even two consecutive bracings may be required. The truss bracing increases the lateral and torsional stiffness of the frame, thus having an essential effect on the vehicle's tipping stability.

Dimensioning and material:

In 4 x 2 tipping trucks, the truss bracing must extend to the centerline of the rear axle.

In 6 x 2/4 and 8 x 2/4 vehicles, the truss bracing should preferably extend to the centerline of the bogie.

Fig. 908013

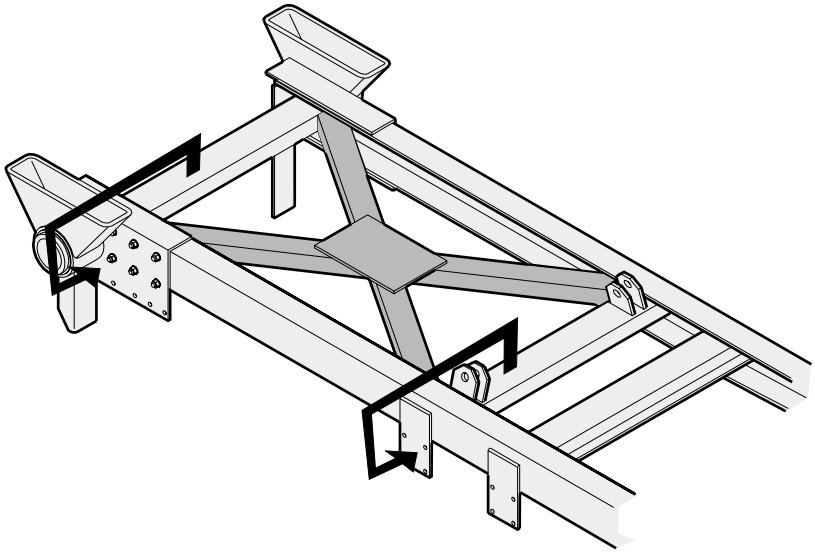

Read the instructions on constructing the truss bracing from general guidelines (section 02)

1.4.3 Subframe mounting

See general guidelines (section 02)

It is recommended that the subframe be mounted using the hole groups provided.

The subframe must be mounted so that the torsional movement between the front and rear axle is resisted but not prevented when driving on uneven surfaces.

The front of the subframe is mounted using flexible, single-acting brackets that allow the subframe's longitudinal movement when the chassis frame is twisting, but on the other hand prevent the subframe's lateral movement.

Fig. 469/908014

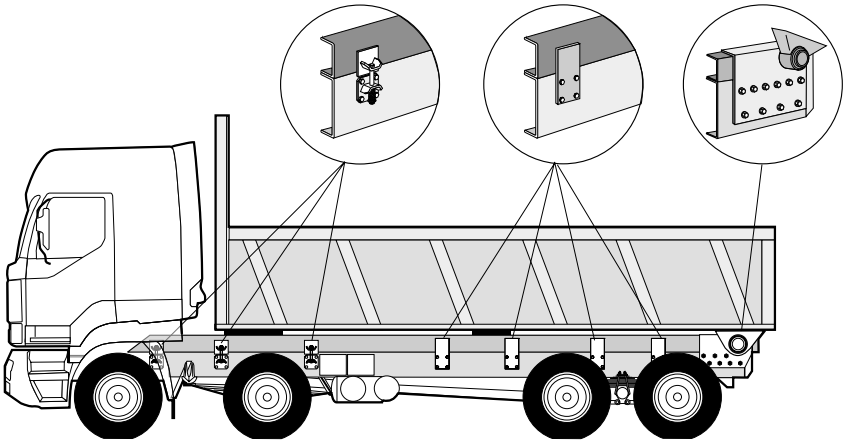

The number of flexible brackets is 2–3 brackets/side, depending on the wheelbase.

https://truckmanualshub.com/

Fig. 2253
908015

From the rear axle spring's front bracket rearwards, the subframe is mounted with rigid mounting plates, which rigidly join the subframe and the vehicle's frame, thus preventing the movements of the subframe and vehicle frame relative to each other.

The brackets are bolted to the web of the frame. The brackets can be welded to the subframe. Recommended bolt lengths for different joint thicknesses are presented in the general guidelines (section 02).

The plate brackets must be mounted using the provided holes for bodywork mounting whenever possible.

Bolt joints are fitted precisely with M14-bolts by using the hole groups provided in the frame as instructed in the general guidelines.

If required, the M16-bolts in the cross beams can also be used.

We recommend that the separate mounting plates at the rear of the frame be replaced with a continuous reinforcement plate, extending from the drive axle to the platform tipping axle in 4 x 2 vehicles and from the centerline of the bogie to the platform tipping axle in 6 x 2 and 8 x 2 vehicles. The reinforcement plate also serves as tipping-axle mounting bracket.

The reinforcement plate is welded or bolted to the subframe along the entire length of the plate using 100–200 mm spacing. We recommend plug welds (see section 02).

The plate is always bolted to the vehicle's frame with 100–200 mm bolt spacing. Bolts already available in the frame can be used to attach the plate, but the sufficient length of the bolts must be ensured.

1.4.4 Rearmost plate bracket in vehicles with a lift bogie

In vehicles with a lift bogie, the rearmost mounting bracket of the subframe is mounted under the bogie cylinder's rear bracket.

Fig. 2202
/908016

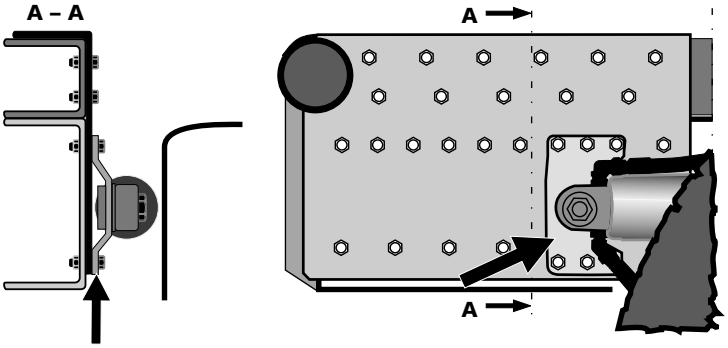

1.4.5 Closing the rear of the frame

The rear of the chassis frame is closed and reinforced by welding an 8–10 mm thick steel plate (min. Fe 52 D) to the end of the frame.

Fig. 2236/908017

Fig. 2220
/908018

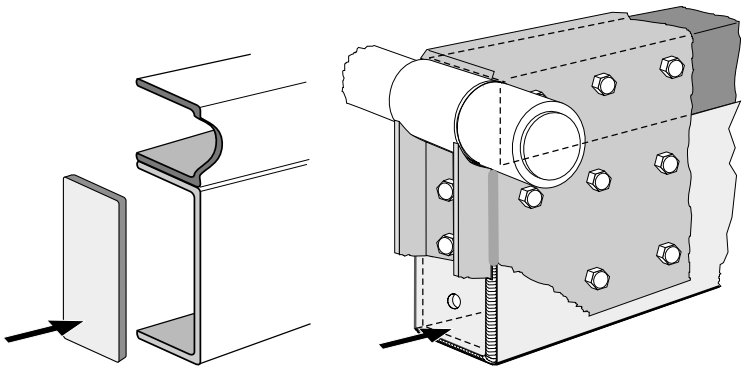

See Fig. 2236 and 2253

https://truckmanualshub.com/

1.5 Chassis frame rear overhang

At the end of the vehicle's frame there must always be either a cross beam constructed with a rigid rectangular hollow section or a trailer-coupling mounting beam. The maximum distance between the end of the frame's longitudinal beams and the rearmost cross beam is 200 mm.

- **Rear of the frame: extending and shortening**.

Extending the rear of the frame is exceptional in tipping vehicles. In section **08** (chassis modifications) we provide special instructions on altering the vehicle's wheelbase. The general rule is that when extending the rear of the frame is required, it must be carried out according to the principles of altering the wheelbase. In trailer towing duties and e.g. during tipping of gravel cassettes, the rear of the frame is subjected to extremely high stress.

When the rear of the frame is shortened, a standard-end cross beam or a Sisu trailer-coupling mounting beam must always be attached to the end of the frame. **The end cross beam is also required if the trailer coupling is mounted to the cross beam mounted under the frame.**

The frame must be extended with a Sisu frame beam.

1.6 Tipping platforms in trucks with high frames

1.6.1 General

If a Sisu truck has a high frame (C-frame), the tipping platform is mounted directly onto the vehicle's frame even for normal heavy-duty excavation purposes. The bending resistance of the frame is sufficient in most cases and the lateral and torsional resistance of the rear of the frame is increased by constructing a truss bracing.

However, for extra-heavy duties (e.g. excavation duties in private areas, etc.) the need for subframe must be determined by calculations.

Apart from the tipping-axle mounting and the frame-truss bracing, the above presented construction principles apply.

1.6.2 Tipping-axle mounting

The tipping axle is mounted on the webs of both frame beams by bolted bearing mounting flanges.

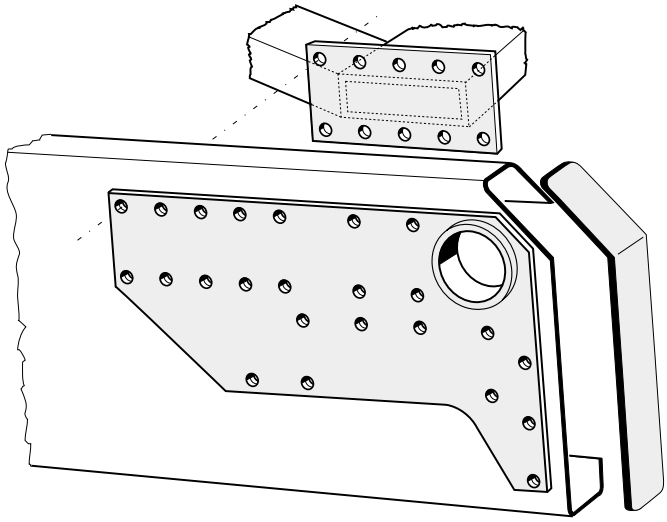

Fig. 661
/908019

The mounting flanges can be manufactured from e.g. 10 mm thick plate (Fe 52D). The bushing is dimensioned according to the tipping axle and load.

If required, the end of the frame can be chamfered. The end is closed by welding a shaped steel plate to the end of the beam, s = 8–10 mm (min. Fe 52 D).

https://truckmanualshub.com/

1.6.3 Frame truss bracing

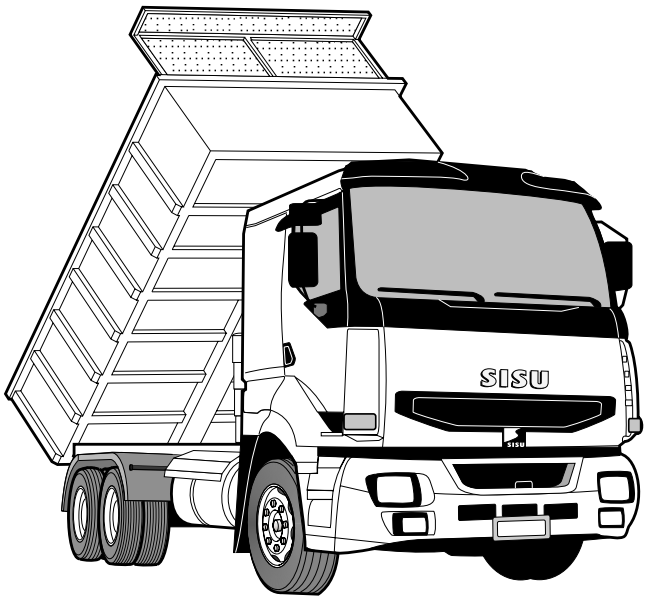

The rear of the truss bracing and partly the rearmost cross beam is attached using bearing-mounting flange bolts.

The truss bracing is constructed with e.g. 100 x 60 x 6.3 RHS section (Fe 52D), mounting plates of the truss bracing; s = 8 mm and reinforcement plates; s = 6 mm.

Fig. 691
/908020

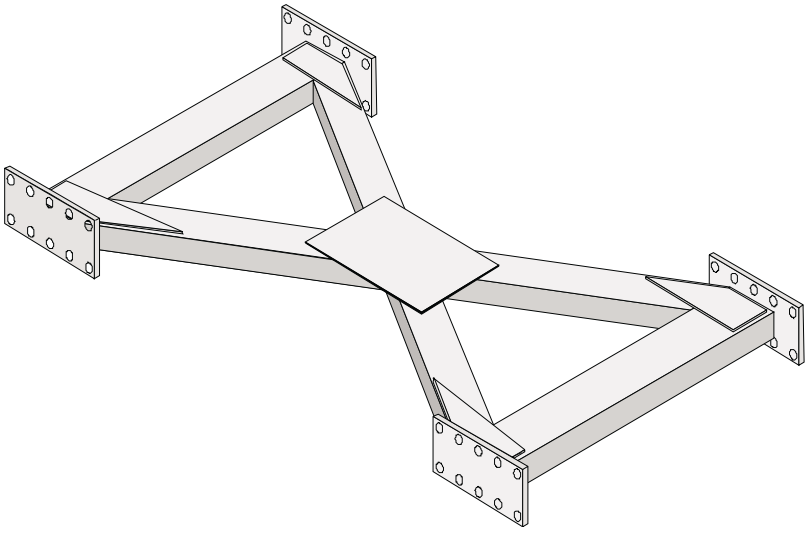

Note! The truss bracings for vehicles with high frames can be purchased from your nearest RS Hansa Auto Oy dealer.

Truss bracings for vehicles with high frames: part numbers:

105-510-0061	Vehicle with drive bogie
105-510-0071	Vehicle with lift bogie

https://truckmanualshub.com/

2 Fixed platform or van body

2.1 General

Weigh the chassis and determine the bodywork dimensioning before starting the work.

Check that the maximum front or rear axle load is not exceeded and that the minimum front axle load is achieved.

A subframe is required to distribute the load along the frame as evenly as possible (not required for vehicles with high frames).

If required by the vehicle's service or mounting, the required service hatches must be constructed in the bed of the platform.

2.2 Subframe

U-section, [RAEX HSF 490 or min. S355/ Fe 52]				
Frame beam	Bending resistance /beam [cm^3]	Type	Bodywork	Load
110 x 80 x 6	52	4 x 2	Fixed platform or van body - fixed sides - short wheelbase - rear overhang max. 1250 mm	light
110 x 80 x 8	66	4 x 2 6 x 2	Fixed platform or van body - fixed sides - short wheelbase - rear overhang max. 1500 mm	light
120 x 80 x 6	58	4 x 2 6 x 2	Fixed platform or van body - fixed sides - short wheelbase - rear overhang max. 1250 mm	light
120 x 80 x 8 140 x 80 x 6	71 69	4 x 2 6 x 2 6 x 4	Fixed platform or van body - short wheelbase Rear overhang: max. 1250 mm for side access max 1800 mm for fixed sides	medium-heavy
140 x 80 x 8 or 160 x 80 x 8	89 107	4 x 2 6 x 2/4 8 x 2/ 4/6	Fixed platform or van body - long rear overhang and/or bodyworks w/ side access require stronger subframe	heavy

The wheelbase, rear overhang, loading method and bodywork (fixed sides or side access) in particular must be taken into consideration when dimensioning the subframe .

Fig. 2121
/908021

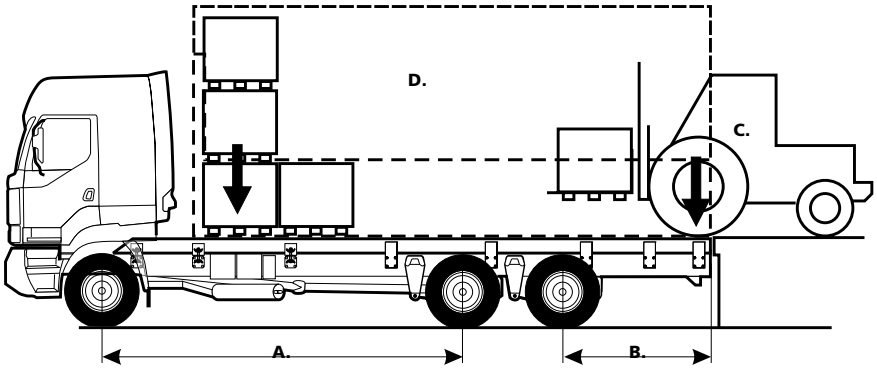

https://truckmanualshub.com/

- The subframe must include the same number of cross beams as the vehicle's frame, and they must be located at the chassis-frame cross beams.
- The frontmost cross beams must be constructed with an open section, e.g. U-section.
- At the rear, the last two cross beams must be constructed with a closed RHS section, and there must be rigid mounting brackets on the chassis frame at their location. The last cross beam of the subframe should be at the rearmost cross beam or trailer-coupling mounting beam of the chassis, unless this is prevented by structural factors.
- The cross beams are mounted on the webs of the longitudinal beams by bolting or welding; welding continuously around the object.
- The frame of a fixed platform or van body can also be integrated into the subframe, i.e. the platform's cross beams at the same level as the subframe, resulting a slightly lower construction (see figures).

Fig. 903
/908022

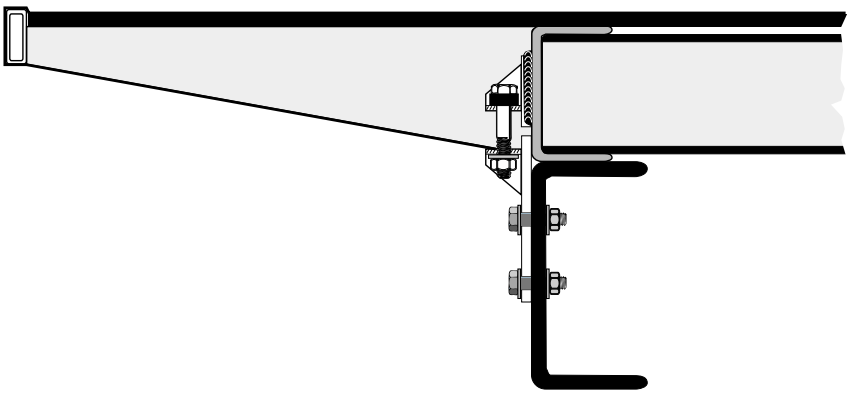

Fig. 886
/908023

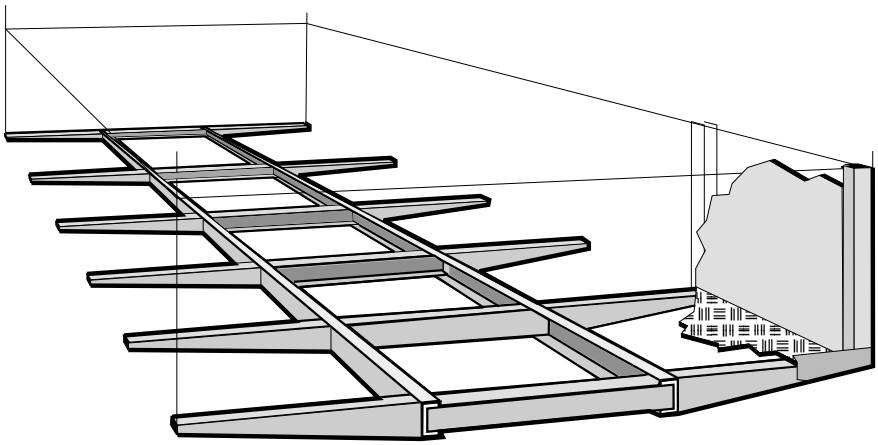

2.3 Mounting the bodywork

- The vehicle's frame must be level when mounting the bodywork.

Read the instructions on bodywork mounting in general guidelines 03.

2.3.1 Mounting

The front of the subframe is attached to the longitudinal beams of the chassis

https://truckmanualshub.com/

frame with flexible mounting brackets; 2–3 brackets for both sides, depending on the wheelbase.

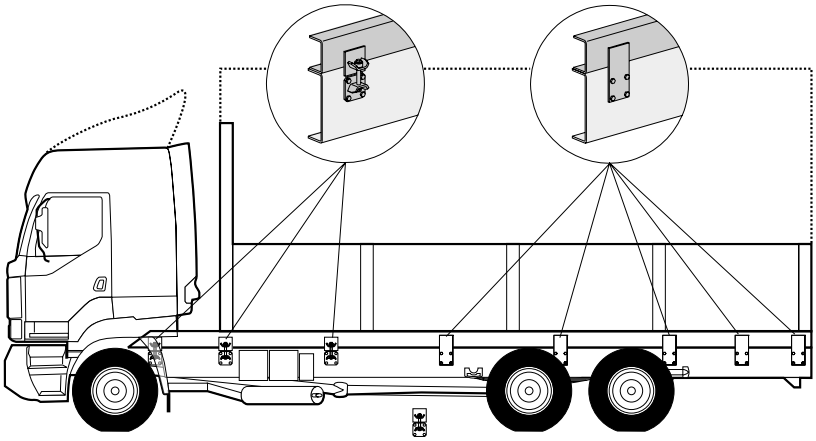

Fig. 629/908024

The rear of the subframe is attached to the chassis frame with rigid mounting plates from the rear axle spring's front bracket area rearwards, so that the last mounting bracket is bolted to the mounting holes of the rearmost cross beam or trailer-coupling mounting beam.

The recommended number of rigid mounting plates is 3–5 plates/side, depending on the rear overhang and chassis length.

If two rigid mounting brackets would come close to each other, they can be combined into one longer mounting plate, especially at the rear of the vehicle.

2.3.2 Extremely rigid bodywork

In vehicles with long rear overhang and extremely rigid bodywork, flexible mounting brackets can also be used at the rear overhang area. Extremely rigid bodyworks include e.g. van bodies with Sandwich construction and subframes designed for transporting containers and to which the containers are positively locked.

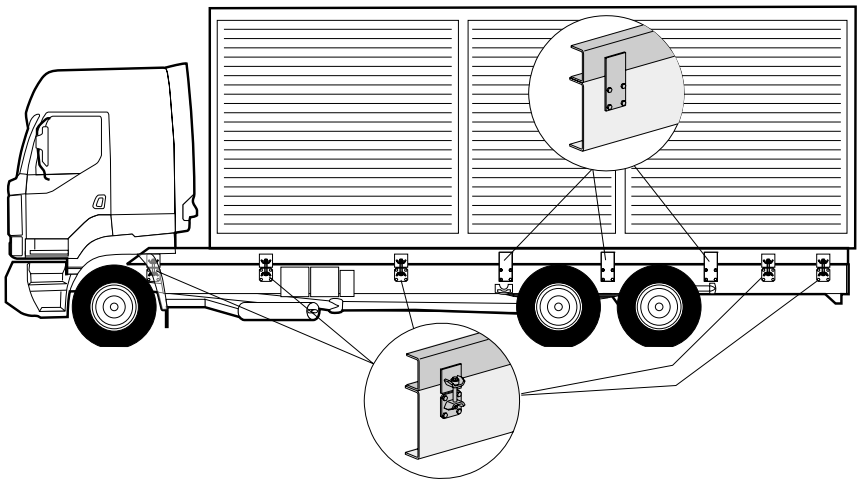

Fig. 2276/908025

The bodywork must be mounted with rigid mounting plates at the rear axle or bogie so that in 2-axle vehicles there is a minimum of two rigid mounting plates per side and in 3 or 4-axle vehicles a minimum of three rigid mounting plates per side.

https://truckmanualshub.com/

3 Fixed platform + loader behind the cab

3.1 General

In principle, a loader can be mounted using various methods:

- without subframe on wear plates
- on a short subframe positioned under the loader only
- on a continuous subframe required by another structure

Fig. 934
/908026

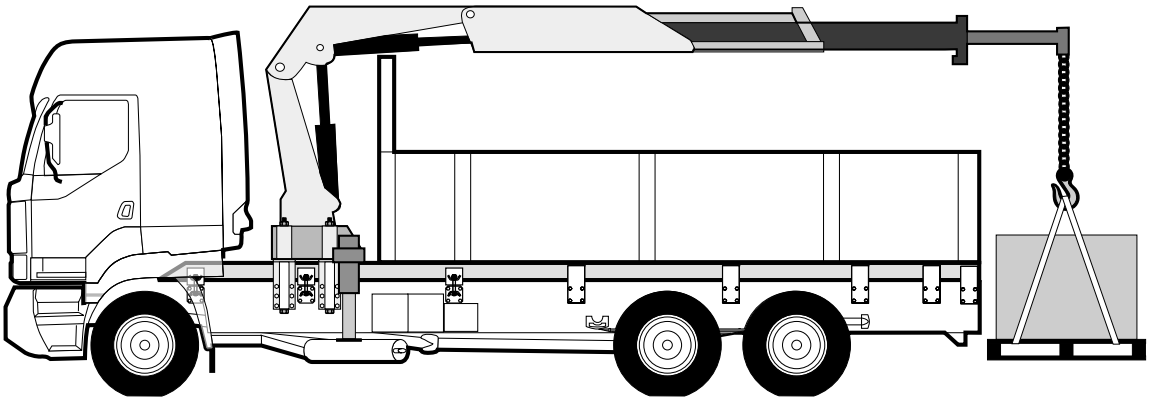

The last method is the most common with fixed platforms. In these cases, the subframe is constructed and mounted similarly to the standard fixed platforms; front mounting is flexible and rear is rigid.

The loader is mounted as forward as possible and always so that the outriggers are behind the loader. The chassis weight calculations must be checked in order not to exceed the front axle load with own weight. This is important, since e.g. in some cases the frame can be extended, especially for very heavy loaders having high lift capacity.

Loader stability evaluation must also be carried out. Factors affecting stability include e.g. chassis frame, vehicle weight and wheelbase as well as the number of outriggers and their distance. Minimum stability requirement is 1.25 for the whole load moving area.

☛ **Loader manufacturers provide detailed mounting instructions for their products. These instructions must always be followed.**

- The loader must be mounted according to EU directives and the installer must issue the declaration of conformity and attach the CE mark

3.2 Mountings

Mounting the loader on the chassis frame flanges only is strictly prohibited since it generates high point loads and may damage the flanges or the webs of the frame beams.

Shackle mounting should not be used to attach the loader to the frame. Loader mounting bushings are bolted with M16 bolts to the web of the chassis frame and, using a minimum of 6 bolts/mounting bushing, the joints fitted precisely together.

If the bushing mounting plates are connected to each other, the number of bolts must be increased notably and the joints must be friction joints. This is to prevent excessive local stiffening of the frame between the mounting brackets.

☛ **Loader manufacturers provide detailed instructions on mounting and mounting brackets. These manufacturer's instructions must always be followed. In addition, the mounting instructions (drilling, welding, etc.) presented in this manual must be taken into consideration.**

https://truckmanualshub.com/

3.2.1 Loader on the bodywork subframe

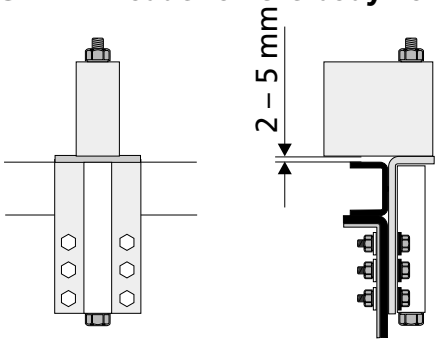

Fig.937/908027

The loader may not rest directly on the subframe. The clearance between the loader and subframe must be 2–5 mm, in order to allow longitudinal movement of the subframe with regard to the frame.

If the subframe section under the loader is either higher or lower than the rest of the subframe, the change in height must be smooth, preferably using an angle under 45 degrees as shown in the figure.

Fig. 987/
908028

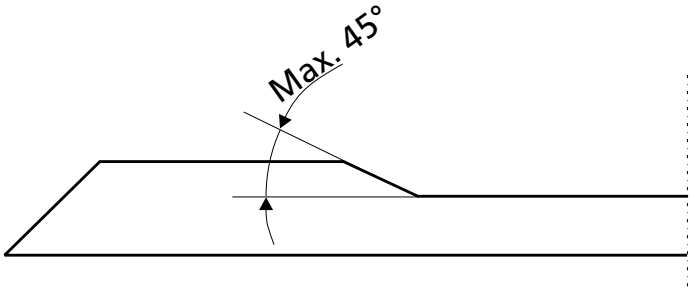

- Attaching the mounting bushings by welding or bolting the bushings to both the subframe and web of the chassis frame is strictly prohibited due to the twisting of the frame mentioned above. This is allowed in special cases only and requires the consent of the vehicle's manufacturer.

3.2.2 Loader on a separate subframe

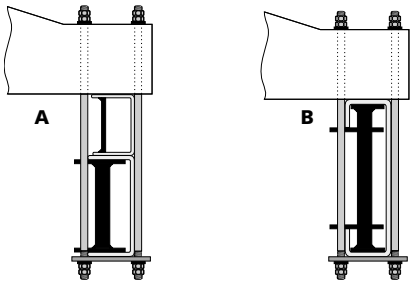

Fig. 1310/908029

If the loader is mounted on its own subframe, the subframe must be sufficiently strong and extend sufficiently behind the loader in order to provide an even distribution of loads. The longitudinal beams of the subframe must be constructed with a closed section. The minimum number of cross beams is two, and they must be constructed with an open U-section.

The mounting bushings are welded to the subframe and bolted to the chassis frame as described above. In this case, the loader mounting on the subframe must be flexible and other subframe structures are attached according to appropriate instructions.

Loaders may be equipped for shackle mounting. Shackle mounting is not recommended but it may be allowed if the frame and subframe are supported at the mounting as shown in the figure (Fig. 1310/908029) (A = with subframe, B = vehicle with a high frame).

3.2.3 Mounting with wear plates

If a structural or other reason requires mounting with so-called "wear plates", they are manufactured with 90 x 90 x 8 L-section and bolted to the webs of the frame beams similarly to the mounting bushing flanges.

3.2.4 Heavy-loader mounting

If the intention is to install a loader with an extremely high lift capacity (15 tonnes/meter or higher), special structures are required. In this case, the vehicle's chassis is equipped for this purpose at the factory or the manufacturer will provide special instructions for retrofitting. Usually, this means stiffening the chassis along its entire length, which in practice is implemented by attaching an extra-strong subframe to the chassis frame.

☛ **For more detailed instructions on mounting the loaders, see section 05**

https://truckmanualshub.com/

4 Tail lifts

4.1 General

During lifting, the tail lift generates bending and torsional forces on the rear overhang of the frame. Strengthening the frame must be defined separately for each case, with regard to lift capacity, rear overhang length and bodywork type. The bodywork usually strengthens the frame sufficiently for tail lift.

4.2 Mounting

Strengthening the frame is not required under the following conditions:

- Rear overhang in 4 x 2 vehicles is 3000 mm or less.
- Rear overhang in 6 x 2 vehicles is 4000 mm or less.
- Lift capacity of the tail lift is 2000 kg or less.
- The cargo space and subframe are dimensioned and mounted according to the instructions given in this manual.
- Original rigid Sisu cross-beam or trailer-coupling mounting beam at the end of the chassis frame.

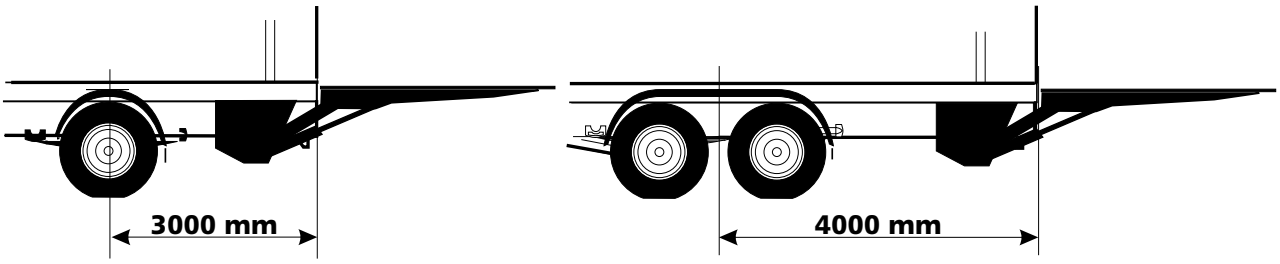

Fig. 1492/908030

Other issues to be noted:

- At the rear overhang area, the cargo space must be mounted to the chassis frame with rigid mounting brackets.
- It is recommended that the cargo space be mounted utilizing the hole groups provided in the frame.
- The tail lift is bolted to the webs of the chassis frame's longitudinal beams by following both this manual's and the tail-lift manufacturer's instructions.
- If required, a tail lift with high lift capacity must be equipped with separate outriggers.
- When constructing the cargo space, the tail lift's effect e.g. on the stiffness of the rear frame must be taken into consideration.
- When dimensioning the vehicle, the increased weight on the rear axle due to the tail lift must be taken into consideration.
- The tail lift must be mounted according to EU directives, and the installer must issue the declaration of conformity and attach the CE mark.

☛ **The tail lift must be mounted according to the tail-lift manufacturer's instructions, appropriate regulations and the frame-mounting instructions given in the general guidelines.**

☛ **For more detailed instructions on mounting the tail lift, see section 05.**

https://truckmanualshub.com/

5 Timber truck

5.1 General

In timber trucks, the load passes into the vehicle's frame through the bearing points of the timber bunks. The stress acting on the frame is usually increased by a fixed or detachable log loader mounted at the rear.

Due to the point loads generated by the timber bunks and loader:

- For vehicles with a low frame, a subframe is always required.
- For vehicles with a high frame (C-frame), no subframe is required.

☛ **The original rigid cross beam or Sisu trailer-coupling mounting beam must always be at the end of the vehicle's frame.**

Two peak value points of bending moment are generated; one is between the front and rear axle and the other at the bogie frame mounting point.

Typical timber truck bodywork consists of:

- Subframe (only in vehicles with low frames).
- Safety wall (front grid).
- Timber bunks.
- Loader and its rear mounting gear (sheath saddle).

5.1.1 Log loader

The log loader must be mounted according to the appropriate decisions of the Council of State, Act on Occupational Safety, standards SFS 4772/4677/4261 and separate instructions and regulations by the Department of Occupational Safety and Health.

☛ **Before mounting the loader, a stability evaluation must be carried out according to the loader manufacturer's instructions. The calculated stability factor must be 1.4 or better.**

☛ **The loader must be mounted according to the loader manufacturer's instructions, instructions given in this bodywork manual as well as regulations. See also the general guidelines in section 03.**
Before commissioning a new or used loader mounted on a vehicle, a commissioning test must be carried out. In addition to that, an annual inspection is required (testing according to standard SFS 4261 and stability test according to standard SFS 4677) at appropriate vehicle inspection premises.

5.2 Vehicles with subframes (low-frame vehicles)

5.2.1 Subframe

Although the loader is used only when the outriggers are down, the subframe for vehicles with low frames must be dimensioned so that it will bear the loads together with the frame, without the outriggers.

As an exception to the general guidelines, it is recommended that the longitudinal beams of the timber truck's subframe be constructed with at least 160 x 80 x 6 (Fe 52) hot-rolled rectangular hollow section (RHS), with a minimum bending resistance W = 115 cm^3.

If a loader is mounted on a low-frame vehicle, either at the front or back, the stresses generated by the loader must be taken into consideration when dimensioning the subframe.

Otherwise, the instructions presented in the general section 03 apply to the subframe.

- The subframe must follow the shape of the frame.
- The subframe cross beams must rest on the frame beams without stress.
- The front of the subframe must be formed as instructed in the general guidelines.

https://truckmanualshub.com/

Subframe construction

The minimum number of subframe cross beams is six (6). If the vehicle is equipped with a Robson drive and its axle goes through the vehicle, it acts as a substitute for one cross beam.

Fig. 1205
/908031

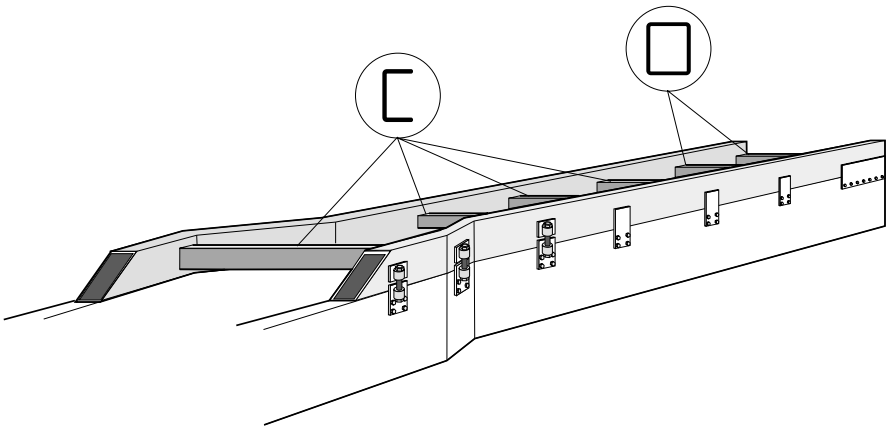

The cross beams must be attached as closely to the subframe mounting points as possible, yet so that cross beams are also located as closely to the subframe's lateral bending points as possible. This prevents twisting of the longitudinal beams during bending.

The cross beams, except the two rearmost beams, are constructed with a U-section, minimum: Fe 52, 140 x 70 x 5. The cross beam must be open section and 20–40 mm lower than the longitudinal beam in order to provide sufficient space for welding.

The cross beams are welded continuously around.

The two rearmost cross beams are constructed with RHS rectangular hollow section (e.g. 140 x 80 x 6.3, Fe 52). This provides sufficient torsional stiffness to the rear of the subframe.

If a loader rear-mounting kit is to be attached to the vehicle, it is recommended that the two rearmost cross beams be located at the ends of the saddle.

The subframe is mounted using flexible mounting brackets at the front (2–3/side) and with rigid mounting brackets from the rear axle spring's front bracket rearwards (Fig. 1010/908032). If the vehicle is to be equipped with a Robson drive, rigid mounting plates must be attached to both sides of the drive.

https://truckmanualshub.com/

5.3 Mounting the loader on a vehicle with a subframe

General

Rear-mounted loader generates high stresses on the rear frame, especially during loading or unloading. Hence, the rear overhang area must be constructed sufficiently rigid in order to avoid damage to the frame and subframe.

A rear mounting kit (sheath saddle) is usually attached to the rear frame, facilitating easy loader mounting and dismounting.

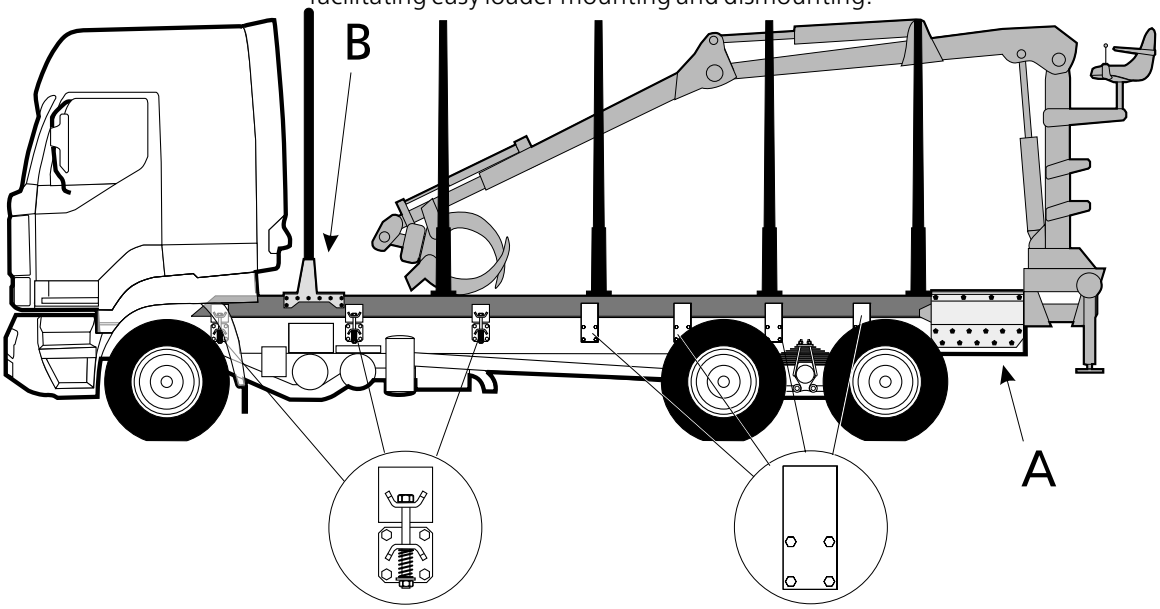

Fig. 1010/908032

Fixed loader mounting at the front or rear is a also possible.

Mounting

See Fig. 1010/908032, item (A).

The two rearmost cross beams of the subframe must be constructed with rectangular hollow section made of sufficiently strong material. The cross beams are located as closely to the front and rear end of the sheath saddle as possible. If required, a truss bracing must also be constructed at the rear of the subframe.

There must be a rigid cross beam at the end of the vehicle's frame , e.g. the vehicle's original cross beam or a Sisu trailer-coupling mounting beam.

The sheath saddle is attached rigidly to the vehicle's frame and subframe, providing maximum frame stiffness to the rear overhang area.

Bolted joints must be dimensioned according to the loads.

Loader mounting kits and mounting accessories are also available from loader manufacturers.

☛ **For more detailed instructions on loader mounting, see section 05**

https://truckmanualshub.com/

5.4 Mounting the loader on a vehicle with a high frame

General

Aswith a vehicle with a subframe, a rear-mounted loader generates high stresses on the rear frame, especially during loading or unloading.

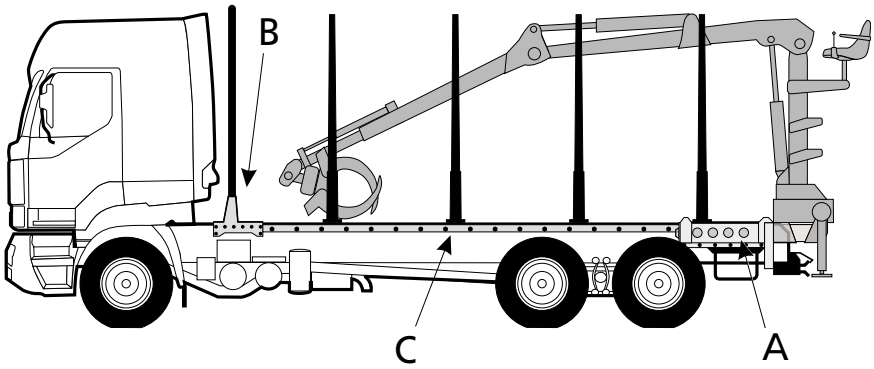

Fig. 1209/908033

There must be either the original rigid cross beam or a Sisu trailer-coupling mounting beam at the end of the vehicle's frame .

Especially for trailer-towing duties, it is recommended that the rear overhang be strengthened with a diagonal support (see section 02, chapter 3).

A rear mounting kit (sheath saddle) is usually attached to the rear frame, facilitating easy loader mounting and dismounting and stiffening the rear overhang area.

5.4.1 Sheath saddle mounting at the rear

Fig. 1209/908033, item A.

Trucks that are equipped in the factory for timber trucks include an installed loader rear-mounting kit if the customer requires.

Otherwise, the sheath saddle can be purchased separately or the bodywork manufacturer can construct and install a saddle.

The mounting of the sheath saddle must be sufficiently strong and carried out according to the saddle manufacturer's instructions and the instructions on frame mounting given in this manual's general guidelines.

☛ **For more detailed instructions on loader mounting, see section 05**

---

https://truckmanualshub.com/

5.5 Front grid

Fig. 1209/908033, item B

A safety wall, front grid, to protect the cab must be mounted on timber trucks.

Fig. 1094
/908034

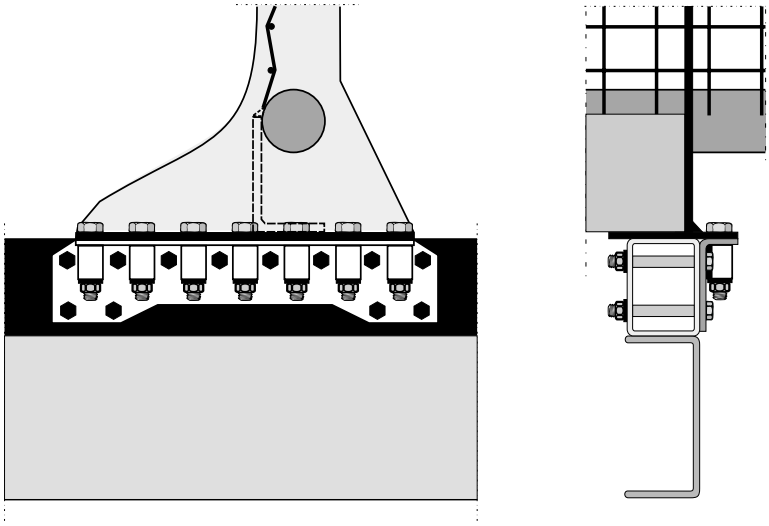

The front grid must be attached to the subframe so that it can definitely withstand the loads acting it and will not generate fatigue failures in the subframe.

- The mounting must meet appropriate regulations.
- The front grid mounting must not prevent the torsional movement of the frame or subframe, i.e. the mounting must be flexible (bolt mounting).
- The front-grid manufacturer's mounting instructions must be followed.

Fig. 1147
/908035

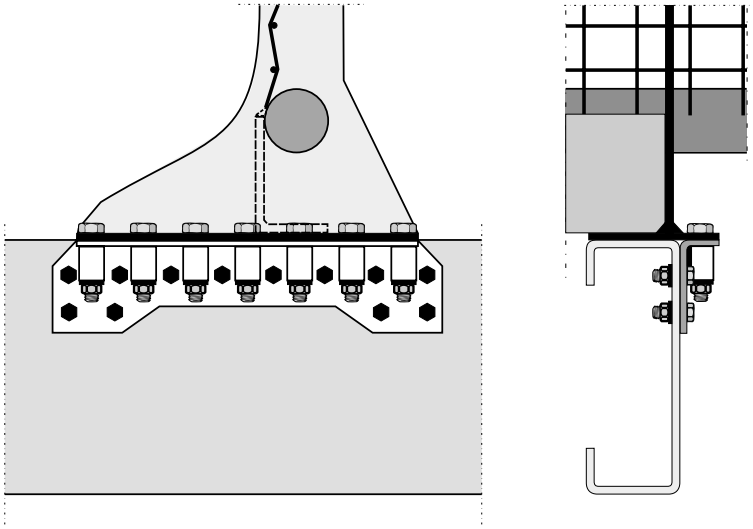

The front grid is attached to high-frame vehicles by following the same principles for vehicles with subframes.

https://truckmanualshub.com/

5.6 Timber bunks

Fig. 1209/908033, item C.

- Timber bunks are mounted according to the bunk manufacturer's instructions.
- Mounting the timber bunks directly on the frame upper flange is strictly prohibited.

In high-frame vehicles where the bunks are mounted directly on the frame, strong L-sections must be bolted to the web of the frame at the upper flange level on both sides.

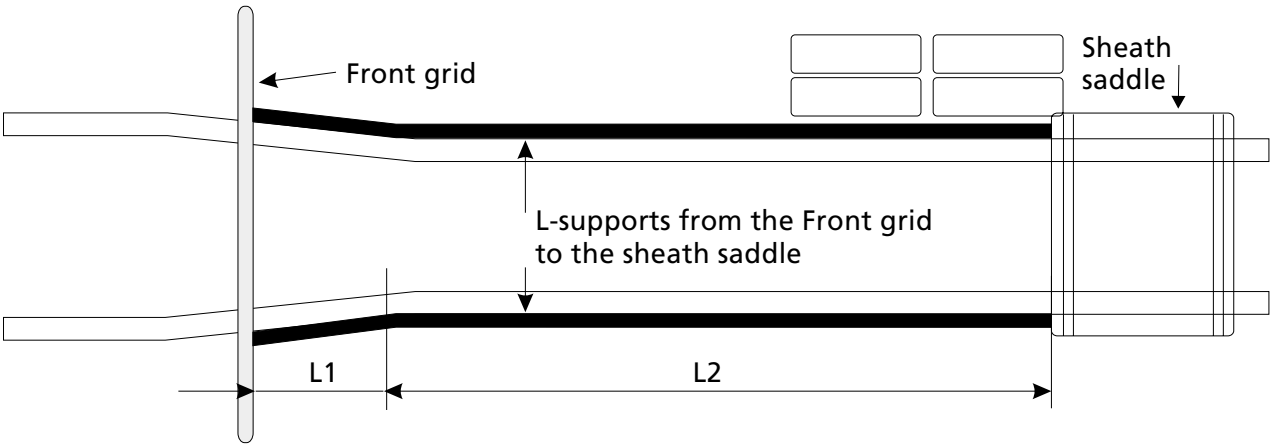

Fig. 1118/908036

The timber bunks are attached to the L-sections in high-frame vehicles.

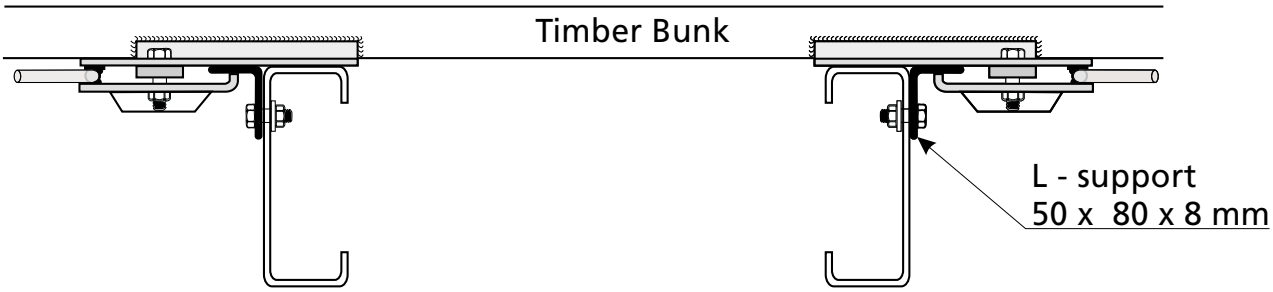

Fig. 1117/908037

- The timber bunk mounting must not prevent the torsional movement of the frame or subframe, i.e. the mounting must be flexible (bolt mounting).
- In vehicles with a subframe, the timber bunks must be mounted according to the bunk manufacturer's instructions.
- Note!
  Ready-made L-sections can be purchased from your nearest RS Hansa Auto Oy dealer.

https://truckmanualshub.com/

6 Tipping concrete tank

6.1 General

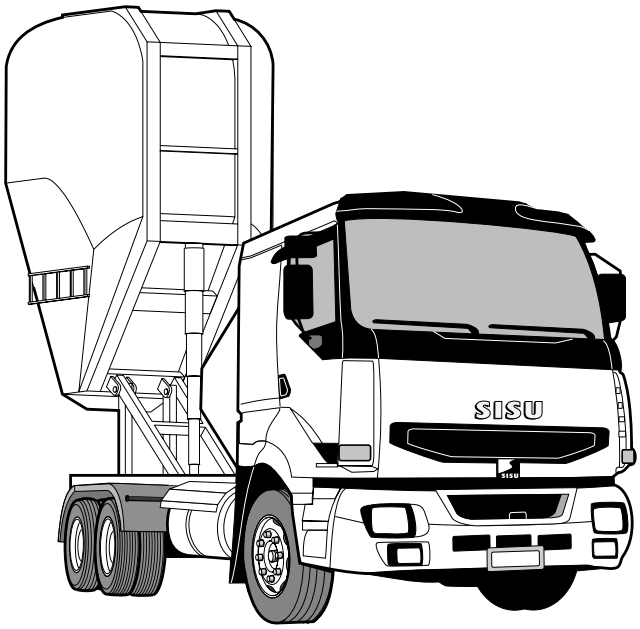

Fig. 1179/908038

A concrete tank is a tipping structure, i.e. regarded as a flexible bodywork.

The optimal chassis type for this purpose has as short a wheelbase as possible. The best chassis type is 6 x 2 or heavier.

Since both the structure's center of gravity and the tipping axle are rather high, the combined torsional and bending stresses acting on the chassis frame and subframe are extremely high.

This structure is a special case among tipping structures and requires case-specific designing and dimensioning by the bodywork manufacturer.

- Dimension L1 in Fig. 1341. The distance between the front axle and the rearmost support point of the chassis is as short as possible.
- Dimension L2, max. 1500–1600 mm, Fig. 1341. The distance between the front axle's rear bearing point and the frontmost bearing point of the tank (to the frame) is as short as possible. This minimizes structural vibrations, and especially stresses acting on the frame generated by dynamic forces.
- Dimension L3 in Fig. 1341. The distance between the rearmost support point of the chassis and rearmost support point of the tank (tipping axle) is as short as possible. This increases the durability of the frame and tipping stability in particular.

The rear overhang, i.e. the distance between the tipping axle and rear axle, should not exceed 100 cm.

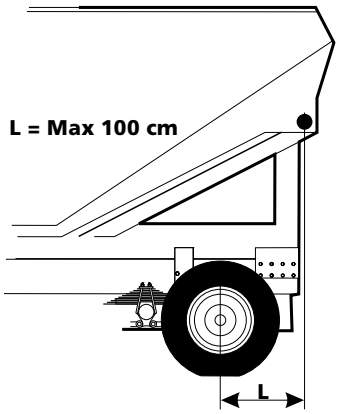

Fig. 908049

https://truckmanualshub.com/

6.2 Subframe

If the vehicle has a high frame, a subframe is not usually required.

It is recommended that the subframe side beams for standard-frame vehicles be constructed with min. 160 x 80 x 8 mm U-section (Fe 52), e.g. with 6 x 4 or 8 x 4 chassis.

The rear of the subframe must be stiffened with one or two consecutive truss bracings. The rearmost two cross beams must be sufficiently strong RHS rectangular hole section. The distance between the cross beams should not exceed 1000 mm and the stiffening structure length must be at least 1.5 times the frame width.

The actual tipping frame is mounted on the subframe with rigid mountings. The level bottom of the tank must rest on the subframe.

Fig. 1341
/908039

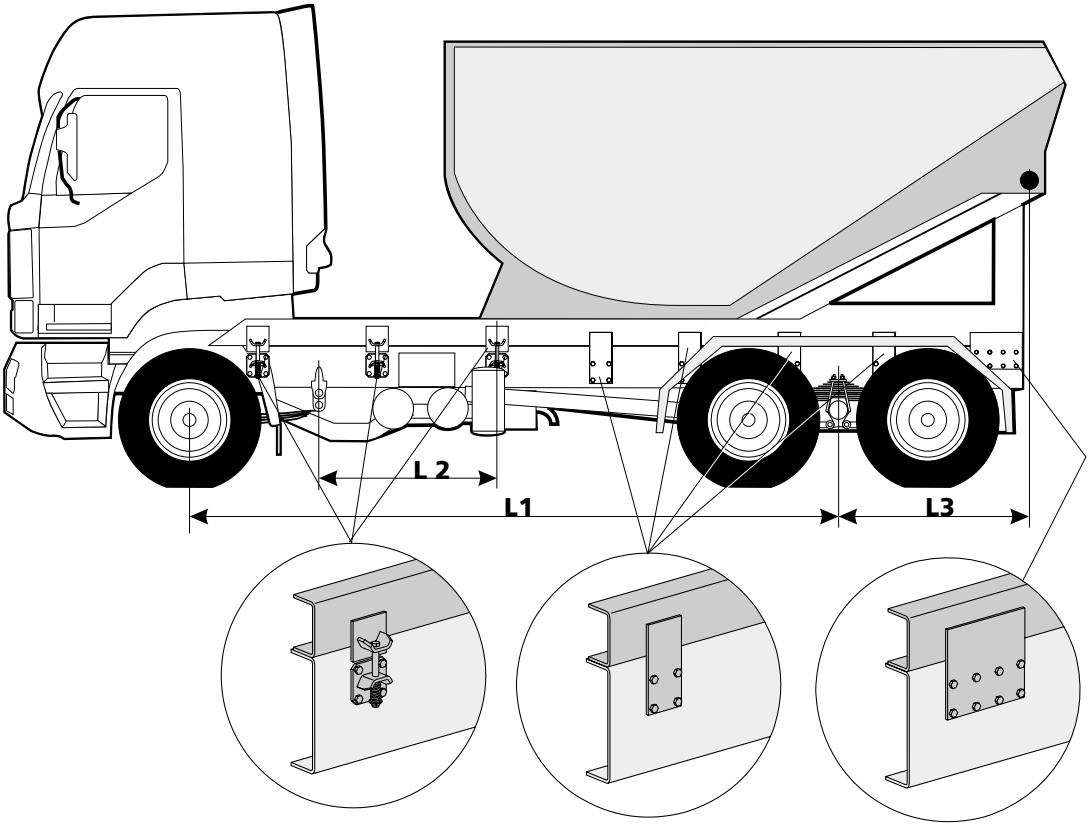

6.2.1 Mounting

The front of the subframe must be mounted on the chassis frame with single-acting flexible mounting brackets. The number of brackets is 2–3/ side and the brackets are bolted to the frame using the provided hole groups and M14 bolts according to the general guidelines.

The rear of the subframe is mounted with rigid mounting plates so that the rearmost plate is bolted together with the rearmost beam of the chassis using M16 bolts and a larger mounting plate equivalent to the material specifications given in the general guidelines.

https://truckmanualshub.com/

7 Concrete mixer

7.1 General

A concrete mixer is a flexible bodywork. The bodywork is best for vehicles with 6 x 2 or more axles (Fig. 1429).

The supports for a rotating mixer are basically located similarly to the tipping structure, although no actual tipping gear is included. The rear suspension of the chassis must be rigid, and anti-roll bars must be mounted on the axle. If the rear axle has air suspension, the anti-roll bars are usually on both axles.

Since the load is directed at a rather short area, high standards are set for both chassis frame and subframe. Since the load's center of gravity is relatively high, the moment due to swaying generates extremely high torsional forces on the mounting structure especially on poor road conditions (e.g. temporary roads on construction sites). This is why the suitable vehicle model/wheelbase for this bodywork construction should be selected in co-operation with the vehicle dealer.

If this bodywork construction is mounted on used chassis, it is recommended that detailed instructions on possible wheelbase alteration requirements be acquired from the vehicle dealer.

7.2 Subframe

Vehicles with a high frame do not usually require a subframe. For standard-frame vehicles, it is recommended that the subframe for 6 x 4 and 8 x 4 chassis be constructed with a minimum of 160 x 80 x 8 mm U-section (Fe 52), materials and construction according to the general guidelines.

The bodywork's center of gravity can be lowered by modifying the subframe longitudinal beam sections as shown in Fig. 1459, which allows slightly lower mounting of the concrete mixer.

Fig. 1459
/908040

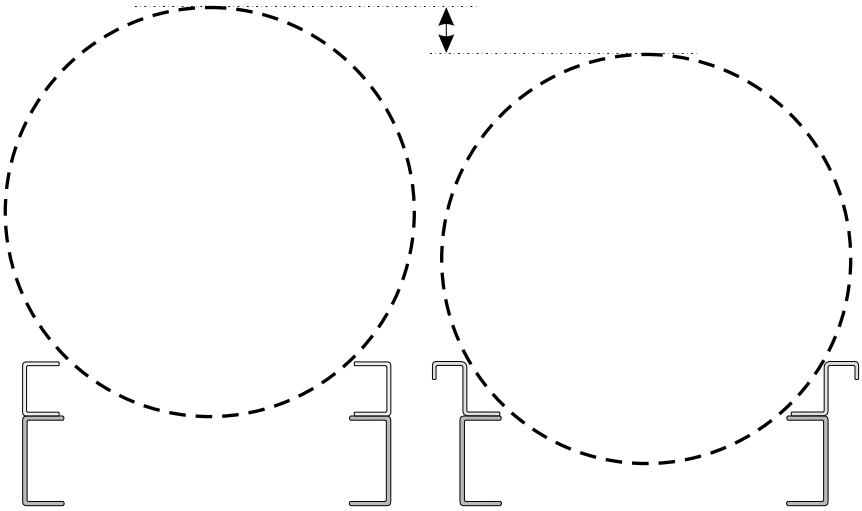

Since this is not a tipping structure, stiffening the subframe's rear-overhang area with a diagonal support is not necessary.

https://truckmanualshub.com/

7.2.1 Mounting

The front of the subframe is mounted on the chassis frame with single-acting flexible mounting brackets, allowing the longitudinal movement of the subframe relative to the frame when the chassis is twisting.

Fig. 1429
/908041

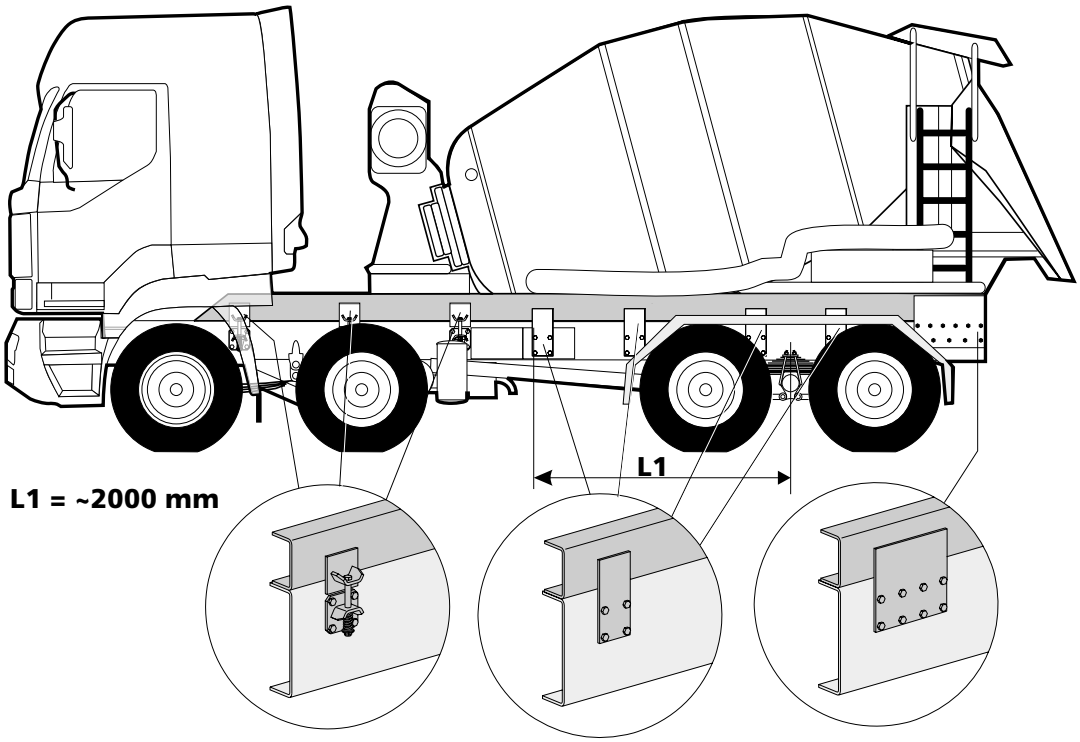

In order to prevent excessive stress peak loads on the structure due to twisting, the minimum number of flexible mounting brackets is 3 per side, depending on the number of axles and the wheelbase.

The first rigid mounting bracket is located approximately 2000 mm in front of the bogie frame and from that point rearwards the subframe is mounted to the frame with rigid mounting plates. Bolt mounting according to the general guidelines and using the provided hole groups and M14 bolts. For the rearmost bracket, the rear beam mounting holes and M16 bolts are used. The number of rigid mounting brackets is 4–5/side.

- Mounting plate thickness: 8–10 mm.
- General recommendation: approximately 10 M14 mounting bolts per frame meter.

https://truckmanualshub.com/

8 Interchangeable platform structures

8.1 General

With an interchangeable platform hoist, the bodywork can be swapped according to the driving task or the empty body can be left for loading, and the loaded body taken for transportation.

Interchangeable platform systems must meet the EU directives. The installer must issue a declaration of conformity and attach the CE mark to the equipment.

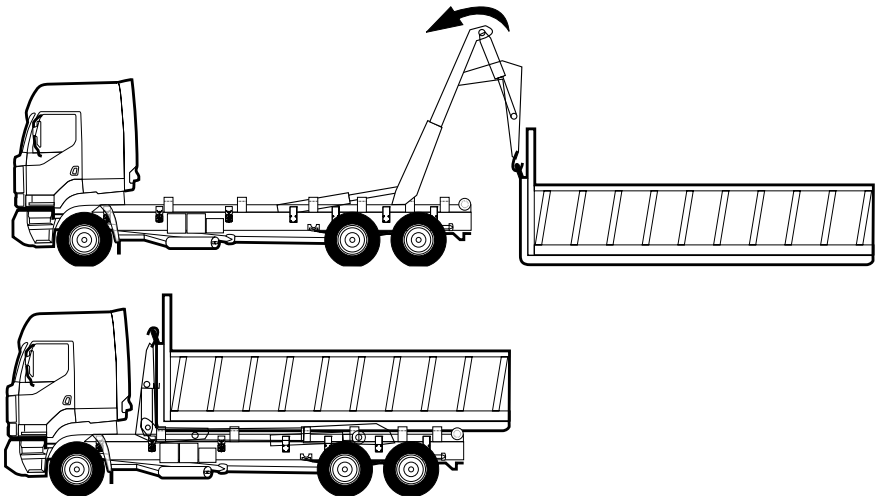

Fig. 1526/908042

Note!

Interchangeable platform systems with tail roll-off or lift functions must meet the tipping-stability requirements.

Note!

Interchangeable bodyworks and their mountings to the subframe or interchangeable platform underframe must meet the requirements set for the corresponding, fixed-mounting bodyworks presented in this manual.

This means that the total interchangeable platform structure must not impair the vehicle's durability and maneuverability.

Note!

The bodywork must be compatible with the hoist system in question.

8.2 Hoists

Hoists for interchangeable platforms include e.g.:

- Hook-lift hoist (Fig. 1526/908042)
- Cable hoist (Fig. 1565/908043)
- Chain hoist
- Leg gear

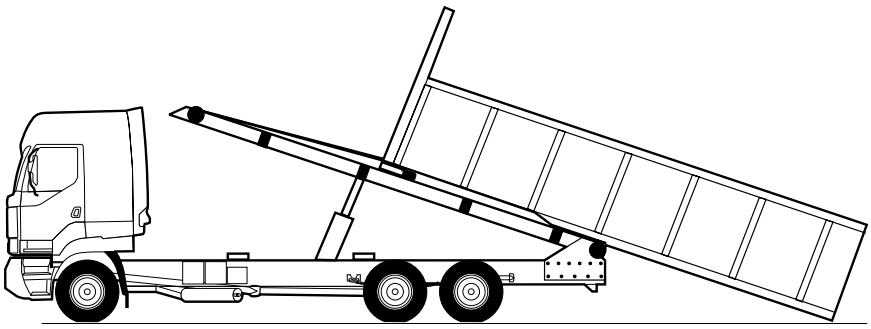

Fig. 1565/908043

https://truckmanualshub.com/

8.3 Interchangeable platform frame

- The interchangeable platform frame must be constructed with an open section, since the front of the frame must have a relatively high torsional flexibility (e.g. I-beam).
- The interchangeable platform frame must be dimensioned separately in each case.
- When mounting the bodywork on the interchangeable platform frame, the torsional flexibility of the bodywork and the interchangeable platform or subframe mounting on the chassis frame must be taken into consideration.

8.4 Interchangeable platform underframe

With interchangeable platform systems, either a subframe or an interchangeable platform underframe attached to the chassis frame is used. The interchangeable platform underframe is attached directly to the web of the chassis frame.

Fig. 1561
/908044

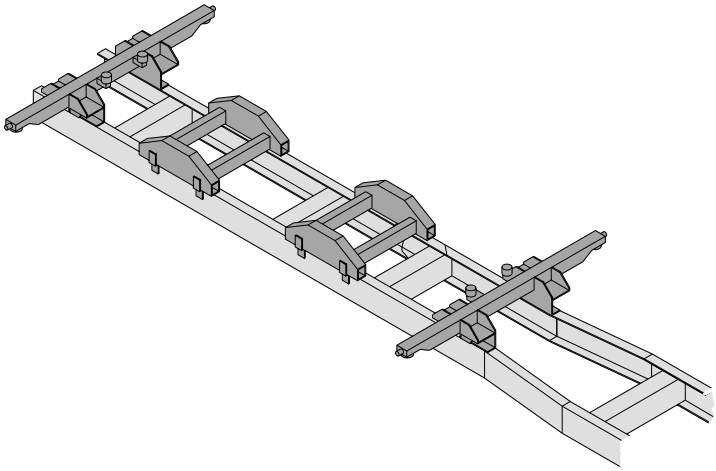

Fig. 1562
/908045

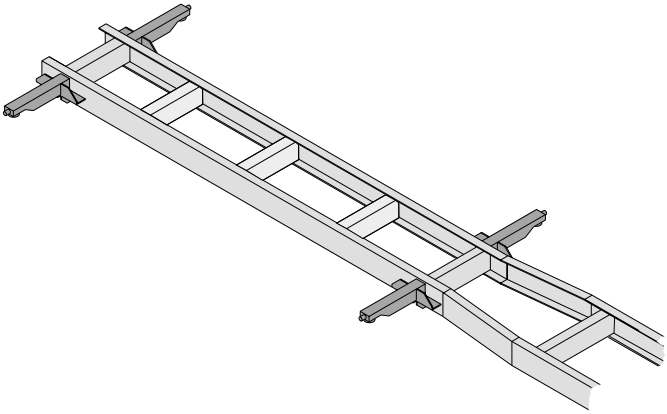

Underframe designed for interchangeable platforms for cargo transport shown in Fig. 1562.

☛ **Interchangeable platform underframe can be used when the bodywork with its load or the interchangeable platform system does not require a subframe.**

☛ **The interchangeable platform underframe must be mounted according to the frame mounting instructions presented in this manual.**

https://truckmanualshub.com/

8.5 Interchangeable platform subframe

- The subframe must be constructed according to the instructions presented in the general guidelines.
- The subframe must be dimensioned and constructed according to the bodyworks in question.
- If the interchangeable platform hoist provides tipping, roll-off or lift functions, the rear of the subframe must be strengthened by a truss bracing

Fig. 1530
/908046

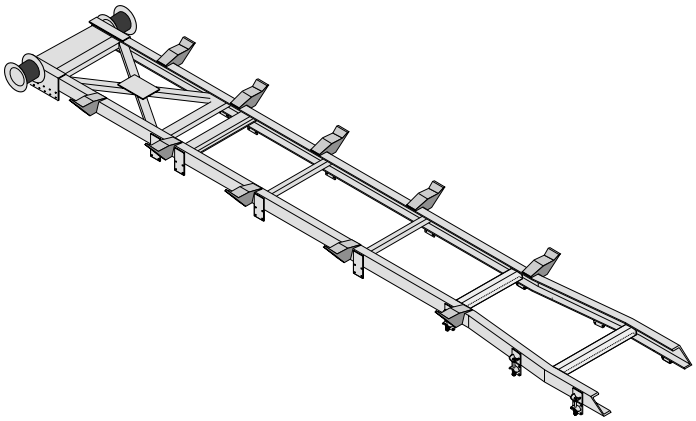

Fig. 1530 shows an interchangeable platform subframe for tail roll-off or lift systems. See table on page 75.

The hoist roller must be located as forward as possible (Fig. 1575) in order to minimize the stresses acting on the rear of the frame.

Fig. 1575
/908047

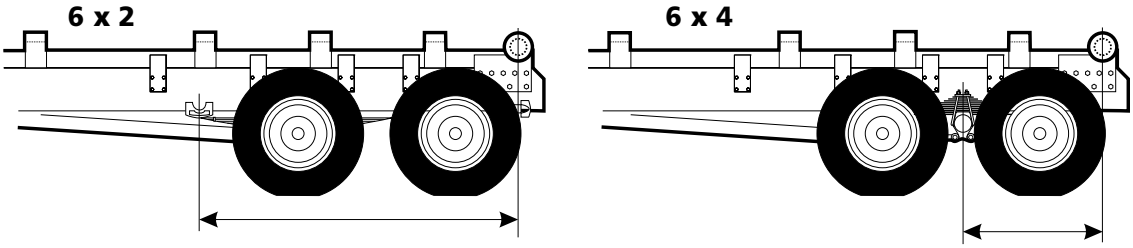

8.5.1 Subframe mounting

The subframe is mounted with rigid mounting brackets from the front of the rear axle to the rear of the frame. The first 2–3 mounting brackets should be flexible.

Note! When mounting the subframe, the characteristics of the bodyworks in question must be taken into consideration!

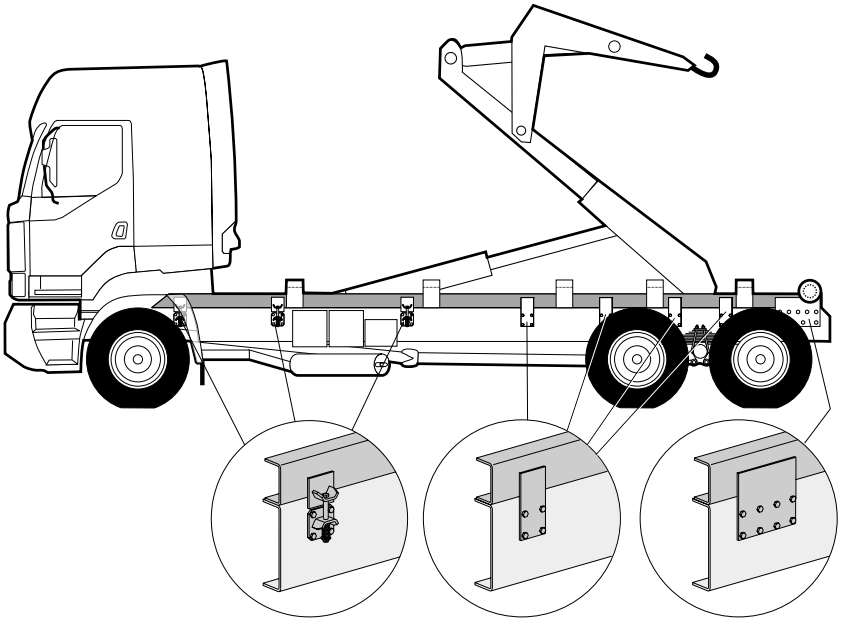

Fig. 1569/908048

https://truckmanualshub.com/

Rigid bodywork

Fig. 936034

General

In these instructions a rigid bodywork is a bodywork which has very high torsional resistance. These bodyworks include e.g. self-supporting van bodies and various tank structures.

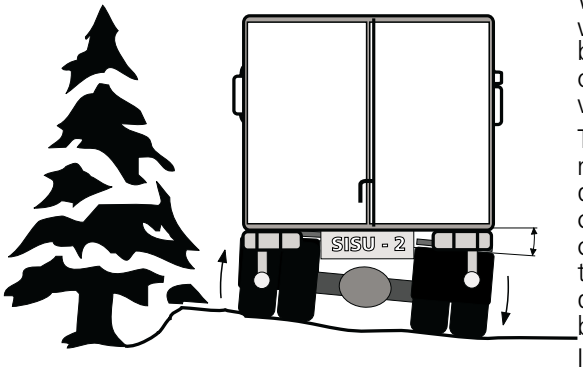

Fig. 936001

When a rigid bodywork is installed on a truck's chassis frame which has relatively high torsional flexibility, the mounting must be done according to the instructions. This ensures the durability of the frame, bodywork and mounting as well as good maneuverability.

The most significant issue when installing a rigid bodywork is to mount the bodywork on the chassis frame so that the bodywork does not excessively prevent the torsional movement of the vehicle's frame when driven on uneven surfaces. The bodywork and chassis frame may move with regard to each other only when twisting or bending caused by driving on uneven surfaces. In order to prevent bodywork vibration, the flexible movements must be dampened.

Incorrect mounting will damage the frame, bodywork and mounting as well as impair the vehicle's maneuverability.

A rigid bodywork is constructed either on its own frame or is mounted on a subframe. See section 02 for general guidelines on subframes, mounting etc.

Compatibility with the chassis frame's torsional flexibility characteristics is acquired by flexible mounting brackets as well as correct design and mounting.

Other issues, which must be taken into consideration, include the space required by the wheels and that the bodywork load is evenly distributed along the length of the bodywork.

The following pages dealing with various types of bodywork include more detailed instructions about mounting the bodywork or the bodywork frame on the chassis frame.

Note!

- It is recommenced that the bodywork manufacturer acquires all the standards and regulations concerning the bodywork to be manufactured.
- If the bodywork must comply with the machine directive, the bodywork installer must issue the declaration of conformity and attach the CE mark. (See section 01).
- The industrial safety district may now inspect the validity of the machine directive declaration of conformity at district's own discretion and within the limits of market control.

https://truckmanualshub.com/

Note!

Relocating parts or components

When installing subframes or bodyworks, some parts or components (e.g. electric wires, hydraulic hoses or pipes), mounted on the chassis frame may require relocating. In this case appropriate distances to other parts and components must be maintained at all times.

E.g. components relocated too close to the cab or other components subject to suspension movements may come into contact with moving components and be damaged.

Chassis frame truss bracing

The rear of the chassis frame is reinforced with truss bracing in the following cases:

Always if the rear overhang is over 1000 mm

Always if the tank or other rigid bodywork structure has tipping capabilities

https://truckmanualshub.com/

1. Van body or container

1.1. General structure information

A van body is mounted either on a subframe or a frame resting on the chassis frame along its total length is constructed in the van body. Here a container means the container itself and the subframe designed for transporting the containers and to which the container is positively locked.

When using a subframe, the subframe is constructed according to the general instructions (section 02) and dimensioned according to the requirements set by the bodywork.

If a van body is so called integrated type, i.e. the mounting frame is a part of the van body, the mounting frame must start as far to the front as possible. The best results are achieved if the integrated mounting frame (figure 908023) is constructed to reach under the cab according to the subframe length requirements.

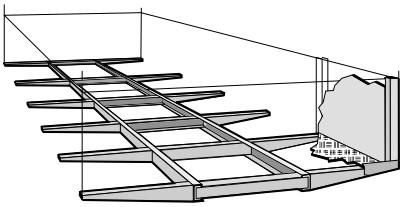

Fig. 908023

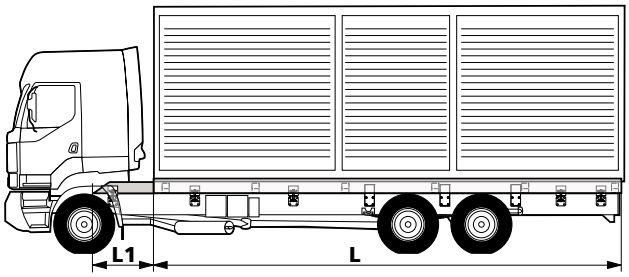

Fig. 936002

This van body mounting frame construction decreases the load acting on the chassis frame and dampens the frame vibration which decreases riding comfort. The frame must also be constructed so that the load is as far forward as possible (if front axle load allows).

The most important issue when installing a rigid bodywork is that the bodywork mounting frame or subframe (if a subframe is used) is mounted on the chassis frame according to the following principles:

- The mounting between the chassis frame and subframe or between the chassis frame and bodywork mounting frame must be flexible
- The bodywork may resist but may not prevent the torsional movements of the chassis frame when driving on uneven surfaces (the dampening of flexible movements prevents the frame vibration when driving on even roads).
  The mounting brackets must allow upward movements of cargo space with regard to the frame. The mounting bracket must guide the cargo space in longitudinal and lateral direction but must also allow minor longitudinal movement due to the frame's torsional, lateral and bending movements.
  The flexibility is acquired by using flexible mounting brackets. The mounting brackets must allow the appropriate flexibility suitable for the bodywork stiffness and driving conditions.

Fig. 936003

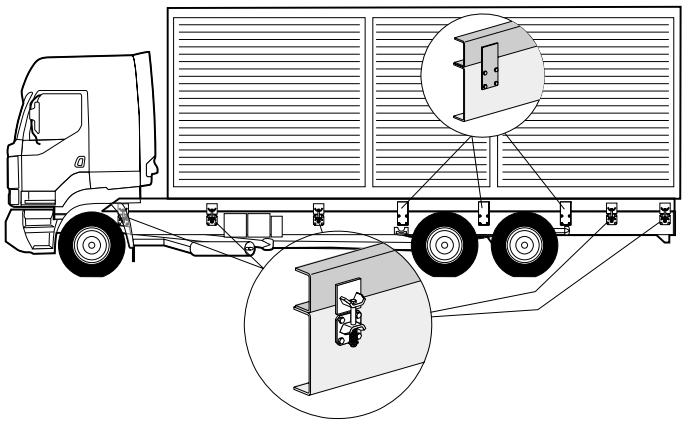

The bodywork mountings are usually flexible at the front, then rigid at the rear axle area and again flexible at the **long** rear overhang area.

https://truckmanualshub.com/

1.2. Subframe

The following table presents dimension guidelines for subframe materials.

U-section, [RAEX HSF 490 or min. S355/Fe52]				
Frame beam	Bending resistance / beam [cm^3]	Type	Bodywork	Duty
110 x 80 x 6	52	4 x 2	Rigid van body	Light
110 x 80 x 8	66	4 x 2 6 x 2	Rigid van body or container	Light
120 x 80 x 6	58	4 x 2 6 x 2	Rigid van body	Light
120 x 80 x 8 140 x 80 x 6	71 69	4 x 2 6 x 2	Rigid van body	Medium-heavy
120 x 80 x 8 140 x 80 x 6	71 69	4 x 2 6 x 2	Container	Light
140 x 80 x 8	89	6 x 2 6 x 4	Rigid van body, possibly long rear overhang	Heavy
140 x 80 x 8	89	6 x 2 6 x 4	Container	Medium-heavy
160 x 80 x 8	107	6 x 2/4 8 x 2/4/6	Container or rigid van body with long rear overhang	Heavy

When dimensioning the subframe, especially the wheelbase, rear overhang and loading method must be noted.

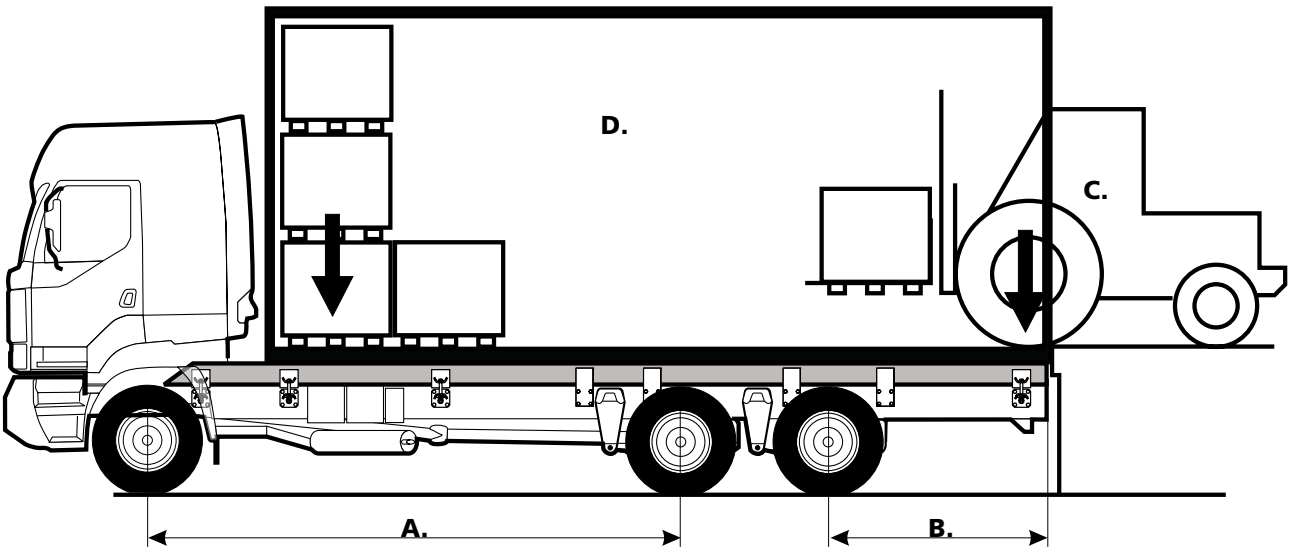

Fig. 936005

Integrated mounting frame

The dimension of the bodywork-integrated mounting frame depend on the bodywork structure to such extent that we are not able to give even general guidelines in these instructions. However, the principle is that the total bending resistance of the integrated mounting frame and the bodywork is equivalent to the bending resistance of the standard subframe/bodywork structure.

The mounting of the integrated mounting frame on the chassis frame is similar to the mounting of the subframe.

https://truckmanualshub.com/

1.3. Mounting

1.3.1. Mounting the subframe or integrated mounting frame on the chassis frame

Note! For instructions on front mounting, see section 02, page 17.

A. 6 x 2 Lift bogie
B. 6 x 4 Drive bogie
C. 6 x 2 Air suspension
D. 6 x 4 Drive bogie + air suspension
E. 8 x 2 Triple bogie axle (lift bogie)
F. 8 x 4 Triple bogie axle (drive bogie)

Front mounting
The front of the subframe is mounted with flexible mounting brackets according to the general guidelines (section 02).
Integrated mounting frame is extended as far to the front as possible (see Fig. 936002) and is also mounted with flexible mounting brackets.
The mounting brackets are mounted on the chassis frame using the provided mounting hole groups. The brackets are selected considering the load and other factors acting on the brackets.

Rear mounting
The figure shows mounting hole group locations with various rear axles.
Line X - X is the centerline of the first drive axle in each axle option.

In the figure the rigid plate brackets are located on the mounting points where the rigid brackets are usually used when mounting rigid containers or van bodies.

General guidelines:
Rigid mounting brackets at the area between the rear axle/axles mounting points. Other mounting brackets flexible. At the rear overhang area (max. 1300 mm) rigid mounting brackets can also be used, otherwise flexible brackets.

Other mounting brackets are flexible and since their spacing depends on the wheelbase, rear overhang and other structures, their dimensioning data cannot be presented in these instructions. If needed, the dimensioning data can be acquired by ordering the vehicle's frame drawing.

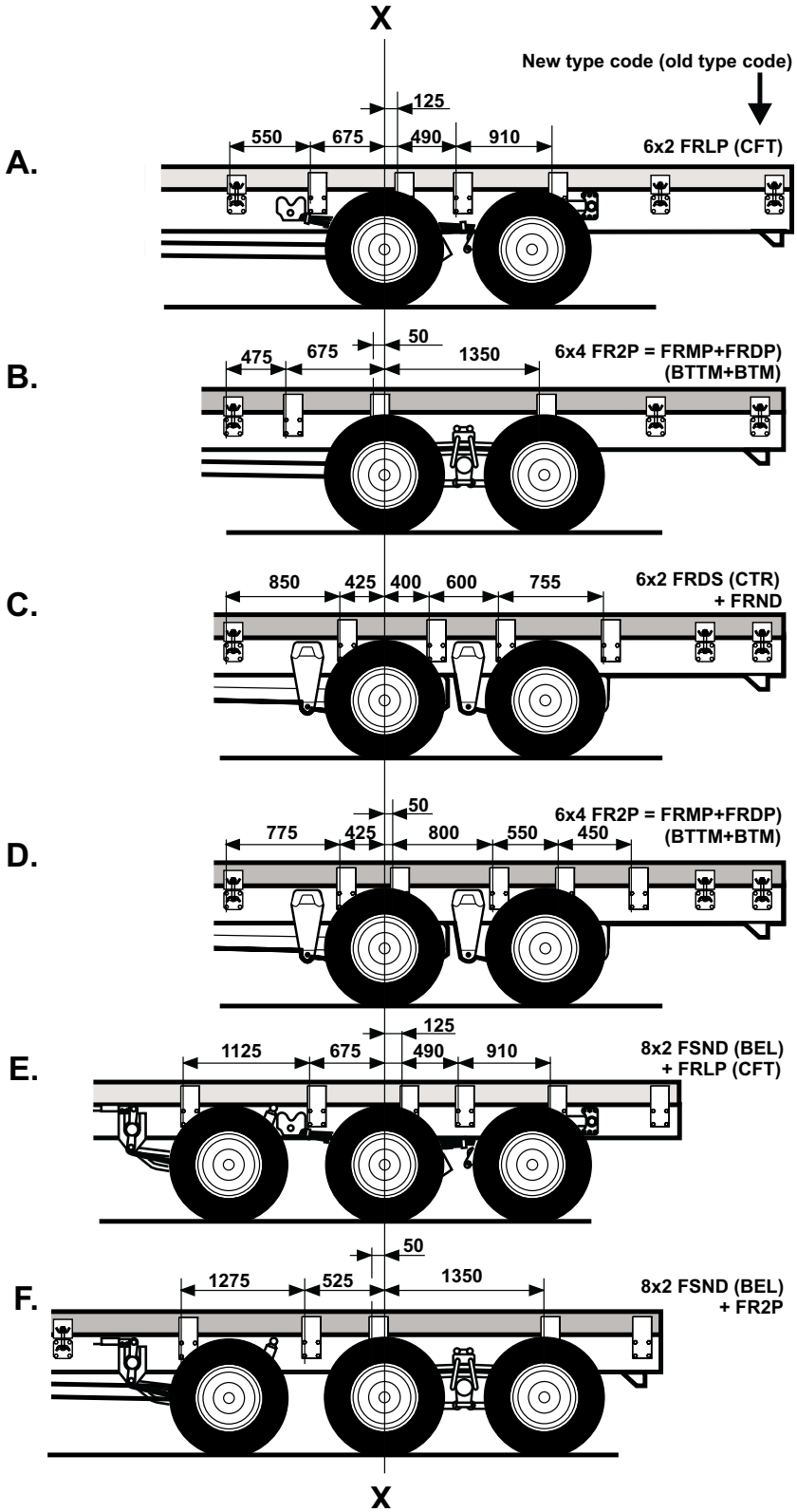

Fig. 936007en

https://truckmanualshub.com/

1.3.2. Mounting brackets

Plate brackets are used as rigid mounting brackets. Since there are several types of flexible mounting brackets, the most appropriate brackets must be selected with regard to the bodywork in question.

The flexibility of a flexible bracket is based on a rubber element, steel spring or on a friction joint generated by a preloaded bolt. We recommend bracket types in which the flexibility is based on a rubber element or steel spring. The preloaded-bolt type bracket must be tightened regularly and it is not flexible upwards. Flexible mounting brackets allow longitudinal movement between the chassis frame and bodywork due to frame's torsional and bending movements but prevent lateral movement.

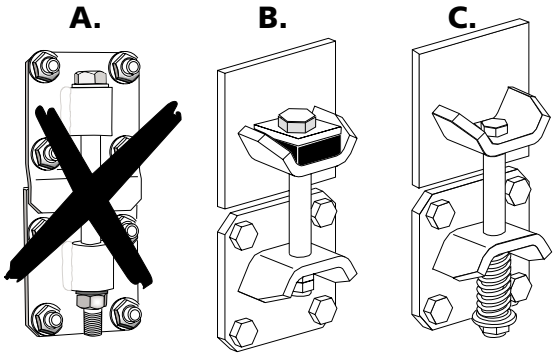

Fig. 936008

A. Not recommended

B. and C. good flexible mounting brackets for van bodies and containers.

1.4. Freezing and refrigerating units

When using refrigerating units installed partly above the cab, make sure that there is enough space between the unit and cab for tipping and suspension movements of the cab.

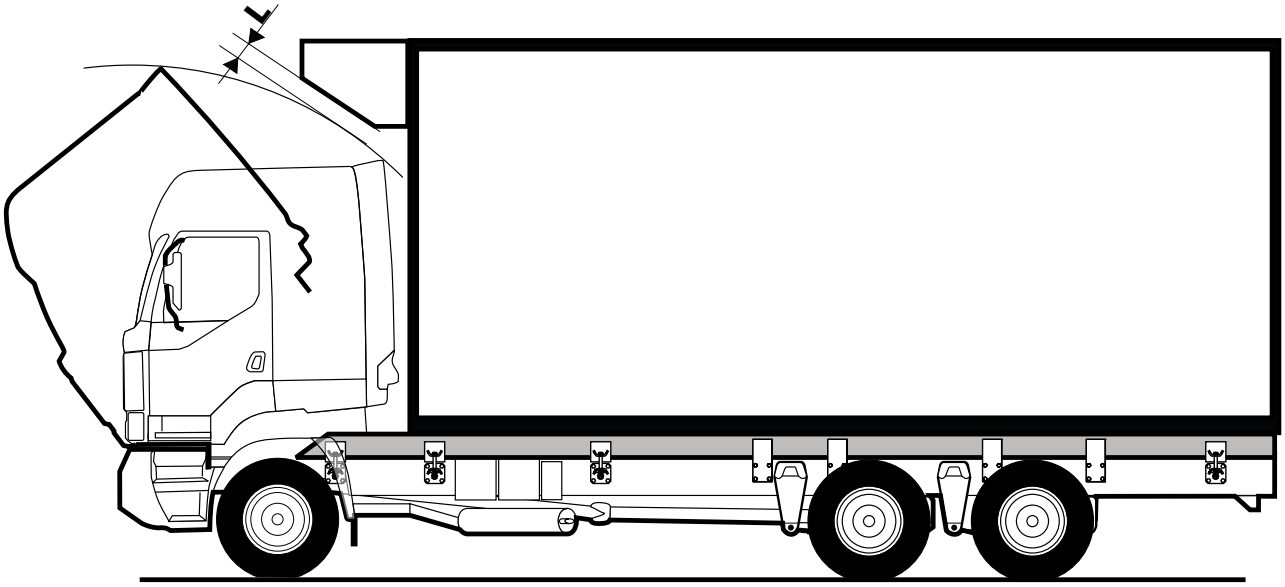

Fig. 936009

The turning radii of the cabs are presented in dimension drawings, section 14.

https://truckmanualshub.com/

2. Rear loaders

The same mounting principles as for van bodies and containers can be applied also for rear loaders.

The rear of the bodywork is mounted with mounting plates so that the appropriate rigidity of the rear of the chassis frame is acquired. The rearmost mounting plate can be continuous, longer mounting plate.

For the locations of fixed mounting plates in different axle/suspension versions, see page 103

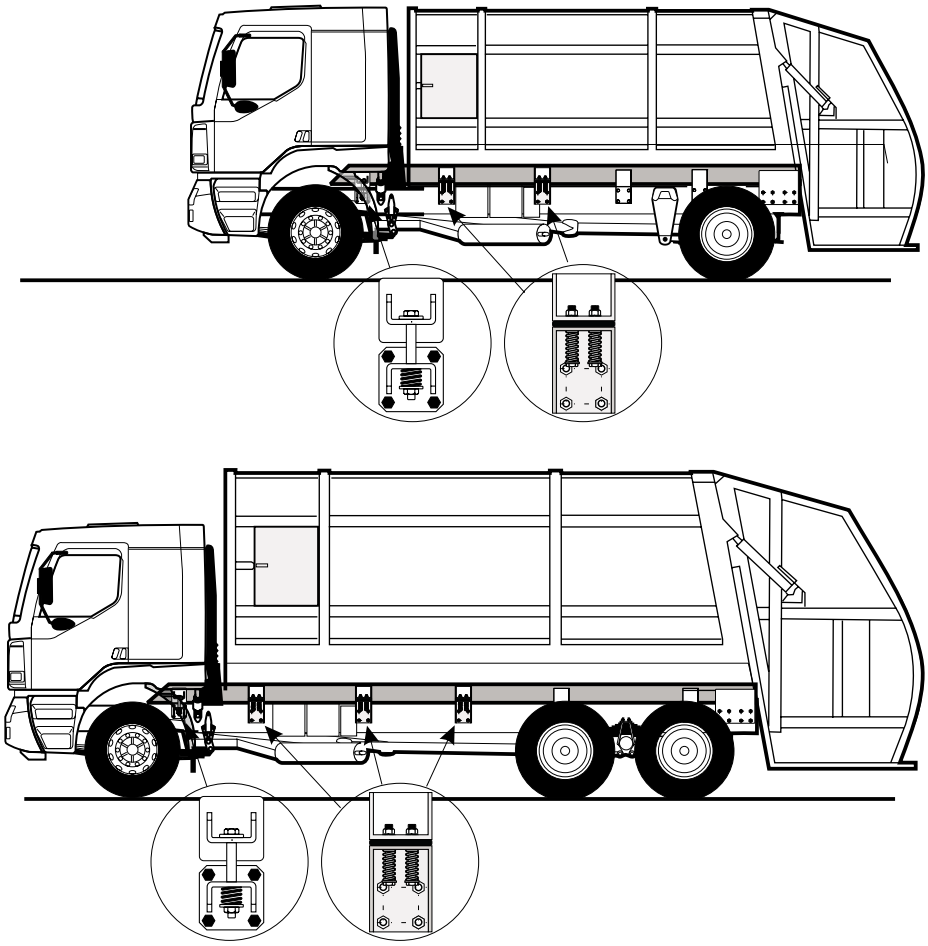

Fig. 396010

From the front of the rear axle spring's front bracket the unit is mounted with flexible mounting brackets. The mounting brackets must be selected according to the load and driving conditions. The mounting brackets must be strong enough considering the loads acting on the bodywork.

https://truckmanualshub.com/

3. Tank structures

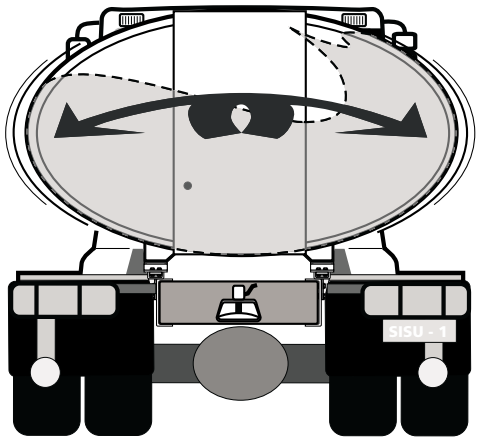

Fig. 936019

This chapter provides basic instructions on mounting tank structures. The bodywork manufacturer must dimension the mounting and mounting brackets according to each tank structure, total mass, intended purpose (e.g. driving conditions etc.) and the vehicle in question.

Tank structures have extremely high torsional stiffness and they vibrate easily. In a tank structure the center of gravity is relatively high with full load. Especially with liquid tanks the load is distributed unevenly and varies according to driving conditions.

If the tank is mounted incorrectly, the factors mentioned above may have very harmful effect on the vehicle's maneuverability and hence driving safety.

3.1. Chassis, tank structure and basic mounting guidelines

- The tank structure's center of gravity as low as possible in order to minimize inclination forces
- The wheelbase as short as possible in order to eliminate frame vibrations
- The mounting must prevent excessive swaying of the cargo space relative to the frame
- The tank structure rests on the bearing points, i.e. mounting brackets, located in the chassis frame. Special tank structures, e.g. fire trucks' water tanks and bulk tanks, make an exception to this rule since they can be mounted e.g. with 3-point mounting and rest on the subframe along their whole length
- The first bearing point is located as far to the front as possible
- The other mounting brackets are located considering the load and frame vibrations
- The load must be distributed evenly on all mounting brackets
- The mounting must be constructed so that the vertical forces generated by the bodywork do not create too high bending forces into the frame beams
- The inclination forces generated by the bodywork must be distributed evenly on both the front axle and rear axle or bogie
- The mass of the bodywork must be directed at the same level with the core of the frame beams
- It is recommended that the provided hole patterns be used for mounting

3.1.1. Chassis frame truss bracing

The rear of the chassis frame is strengthened with truss bracing in the following cases:

❶ Always if the rear overhang is over 1000 mm

❷ Always if a tank or other cargo space structure has a tipping capability

❸ In heavy-duty trailer purposes

https://truckmanualshub.com/

3.2. Tank mounting brackets

Due to the high torsional stiffness of the tank structures, the requirements for their mounting brackets are:

- Higher flexibility
- The mounting brackets must be shaped and dimensioned so that they allow the torsional and longitudinal movement between the chassis frame and bodywork
- The mounting brackets must guide the bodywork in lateral and longitudinal direction
- The mounting brackets must be constructed so that vertical forces generated by the bodywork do not create too high bending forces into the frame beams
- The mounting bracket must distribute the load into as long area of the frame as possible

Mounting bracket examples:

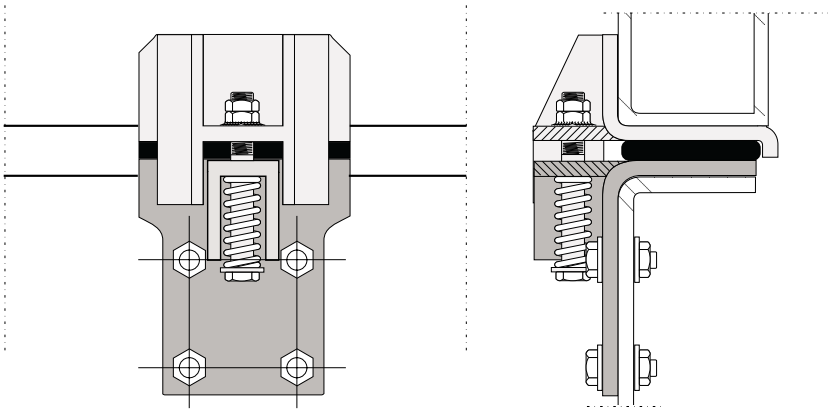

Fig. 936015

Mounting bracket 1.

❑ The rubber element (rubber quality e.g. 70 shore, depending on the load) allows the downward movement and the coil spring facilitates upward movement.

❑ Under the cab as the first mounting bracket.

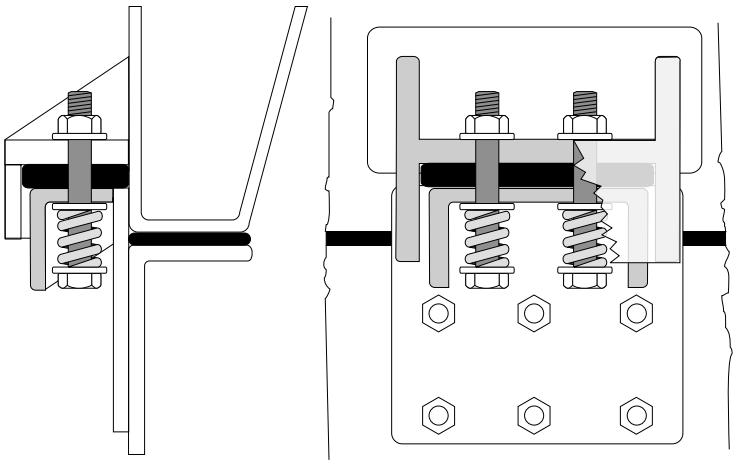

Fig. 936016a

Mounting bracket 2.

❑ Mounting bracket for medium-light duty only

❑ Cannot be bolted directly to the mounting hole groups provided

https://truckmanualshub.com/

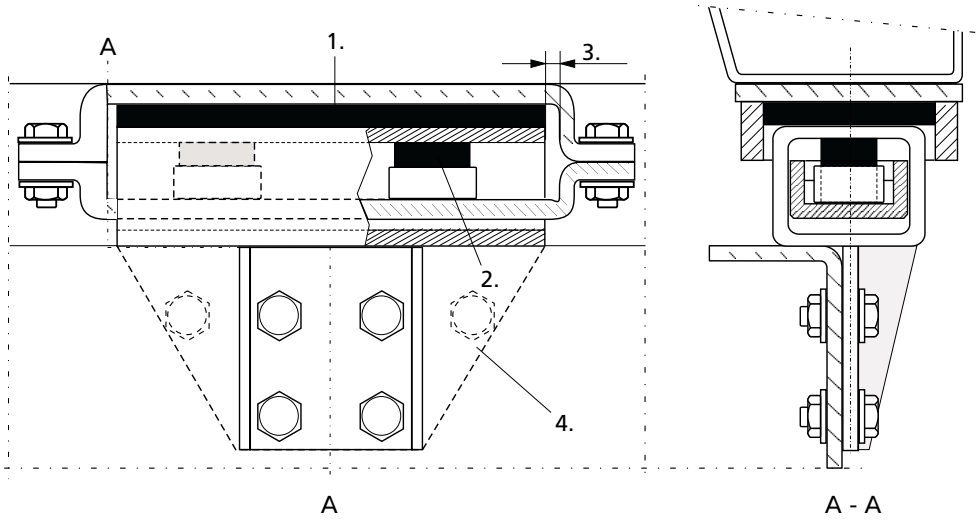

Fig. 936012

Mounting bracket 3.

❑ For mounting of long and heavy tanks

1. Rubber element allowing downward movement (e.g. 70 shore)

2. Rubber elements allowing upward movement (e.g. 45 shore)

3. Clearance for longitudinal movement

4. If the weight of the tank structure requires, the mounting bracket must be bolted on the chassis frame by using more bolts and longer mounting length than provided by the standard mounting hole group

Note! *The mounting brackets must always be constructed and dimensioned considering the tank weight and driving conditions.*

3.2.1. Mounting bracket mounting

- It is recommended to bolt the mounting brackets on the mounting hole groups provided in the chassis frame
- If new holes must be drilled for the mounting brackets, see drilling instructions in section 02
- For bolt joints, see general guidelines in section 02

When installing the mounting brackets, the space required by e.g. rear springs and bogie swing arm travel outside the frame must be taken into consideration. It the bracket cannot be fitted outside the frame, it can also be mounted inside the frame. In this case a mounting brace shown in the figure 936020 must be constructed.

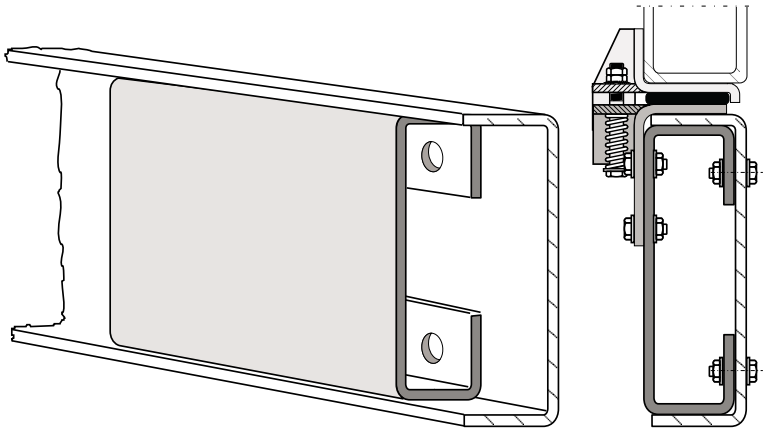

Fig. 936020

https://truckmanualshub.com/

3.3. Mounting the tank on the chassis frame

A. In all cases the tank's mounting frame is extended so that the first flexible mounting bracket can be mounted on the hole group located 225–375 mm from the centerline of the front axle, according to the general guidelines (section 02, chapter 4.3, page 9). **This will prevent frame vibrations and provide good maneuverability and excellent durability**

B. Flexible mounting bracket located at the front of the tank, other mounting brackets depending on the wheelbase

C. Mounting brackets depending on the rear axle type (see Fig. 936007en on page 103)

D. Flexible mounting bracket located at the rear of the tank if the rear overhang is over 1300 mm

***Area C**. The foremost mounting bracket in front of the spring's front bracket and the rearmost mounting bracket behind the spring's rear bracket.*
If the wheelbase is over 4400 mm, a flexible mounting bracket is added on top of the rear axle.

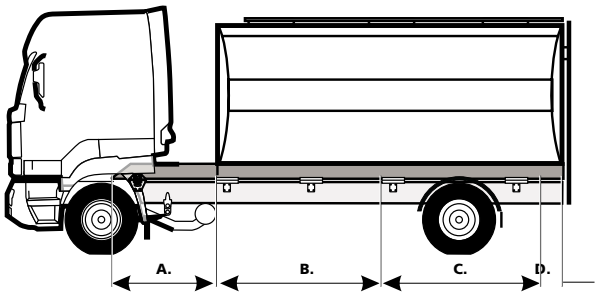

***Area C**. In vehicles with air suspension and drive bogie, the mounting brackets are located as shown in the figure. With lift bogie the foremost mounting bracket is located in front of the bogie axle spring's front bracket, the second mounting bracket between the axles, in front of the bogie supporting axle, and the third mounting bracket immediately behind the bogie cylinder mounting point on the frame.*

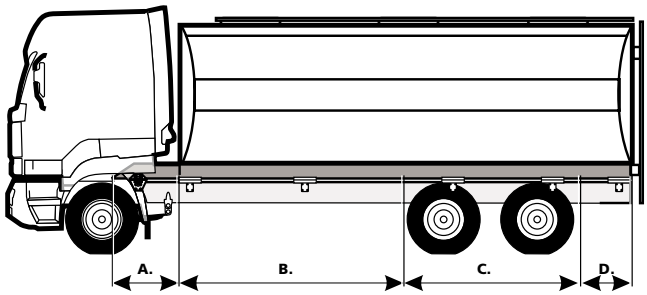

***Area C**. In vehicles with triple bogie axle, the first mounting bracket at the bogie axle area is located behind the bogie axle spring's front bracket.*

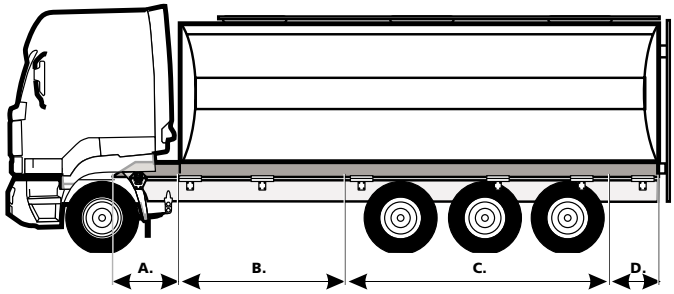

***Area B**. In vehicles with front bogie, one flexible mounting bracket is located immediately behind the rearmost front axle spring's rear bracket.*
Rear axle construction is a drive bogie axle with standard suspension.

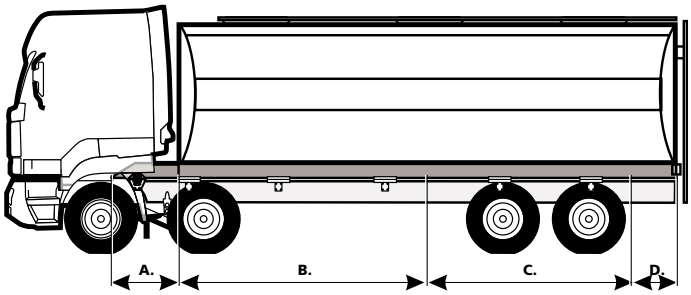

***Areas B and C**. Flexible mounting brackets similar to the vehicles with front bogie and triple bogie.*

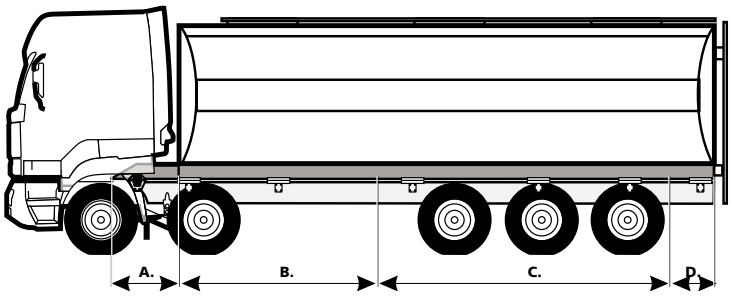

https://truckmanualshub.com/

Example 1. Vehicle with bogie and air suspension, 6x2

The mounting frame of the tank is lowered and extended under the cab so that the first lighter flexible mounting bracket is bolted on the first mounting point located in front of the front axle spring's rear bracket.

Fig. 936021

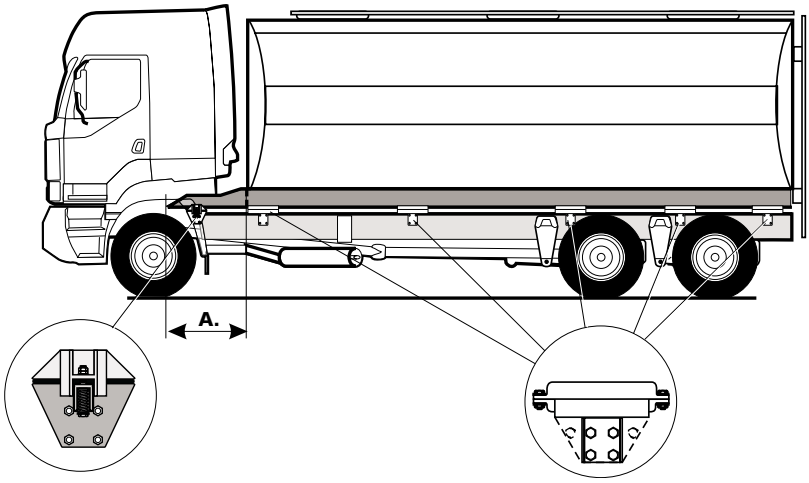

Example 2. Vehicle with drive bogie and air suspension, 6x4

In vehicles with three axles, the minimum number of tank mounting brackets is 4 brackets per side.

Fig. 936014

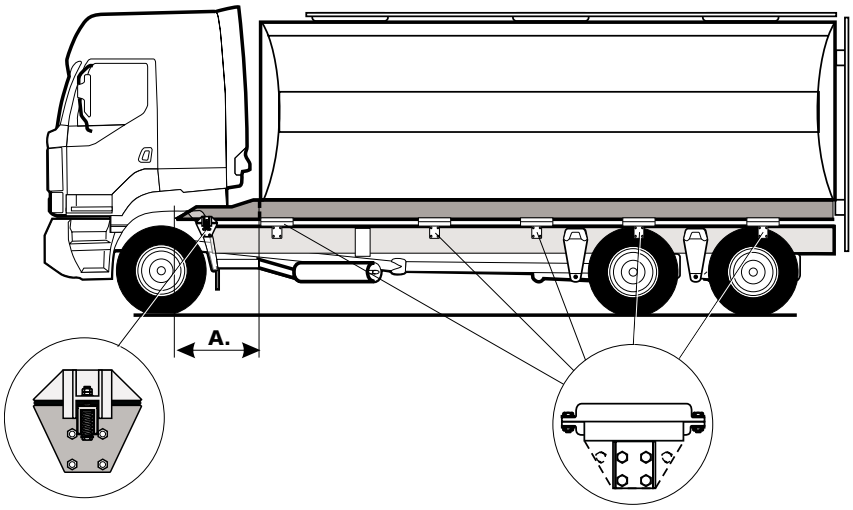

Example 3. Vehicle with front bogie and drive bogie

The number and location of mounting brackets so that the load is distributed to the chassis frame as evenly as possible.

Fig. 936018

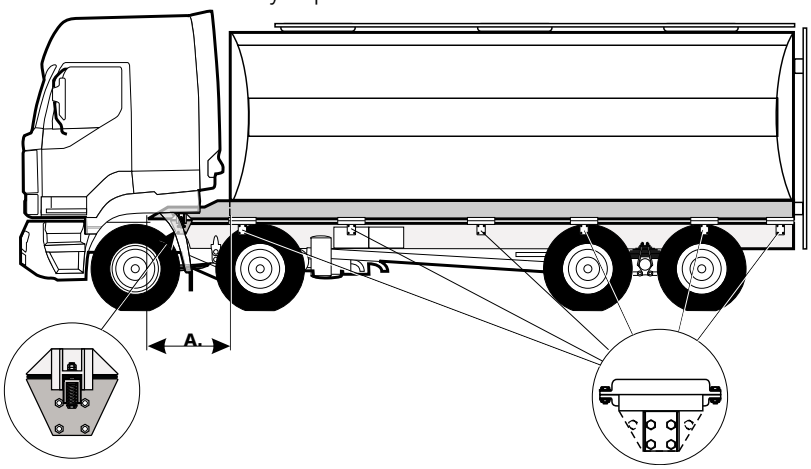

https://truckmanualshub.com/

3.4. Milk transport lorries

The bodywork in milk transport lorries usually consists of a space for dry cargo and a milk tank.

In mounting the milk tank on the chassis frame, the same rules apply as for tank lorries in general.

An allowable exception is mounting the tank on the chassis frame without a subframe (or if the mounting frame of the tank does not extend under the cabin) in 6x2 trucks with a maximum tank volume of 15 m^3, provided that the chassis frame is equipped with a long inner frame (the inner frame reaches from the rear of the truck to the front of the rear spring shackle of the front axle).

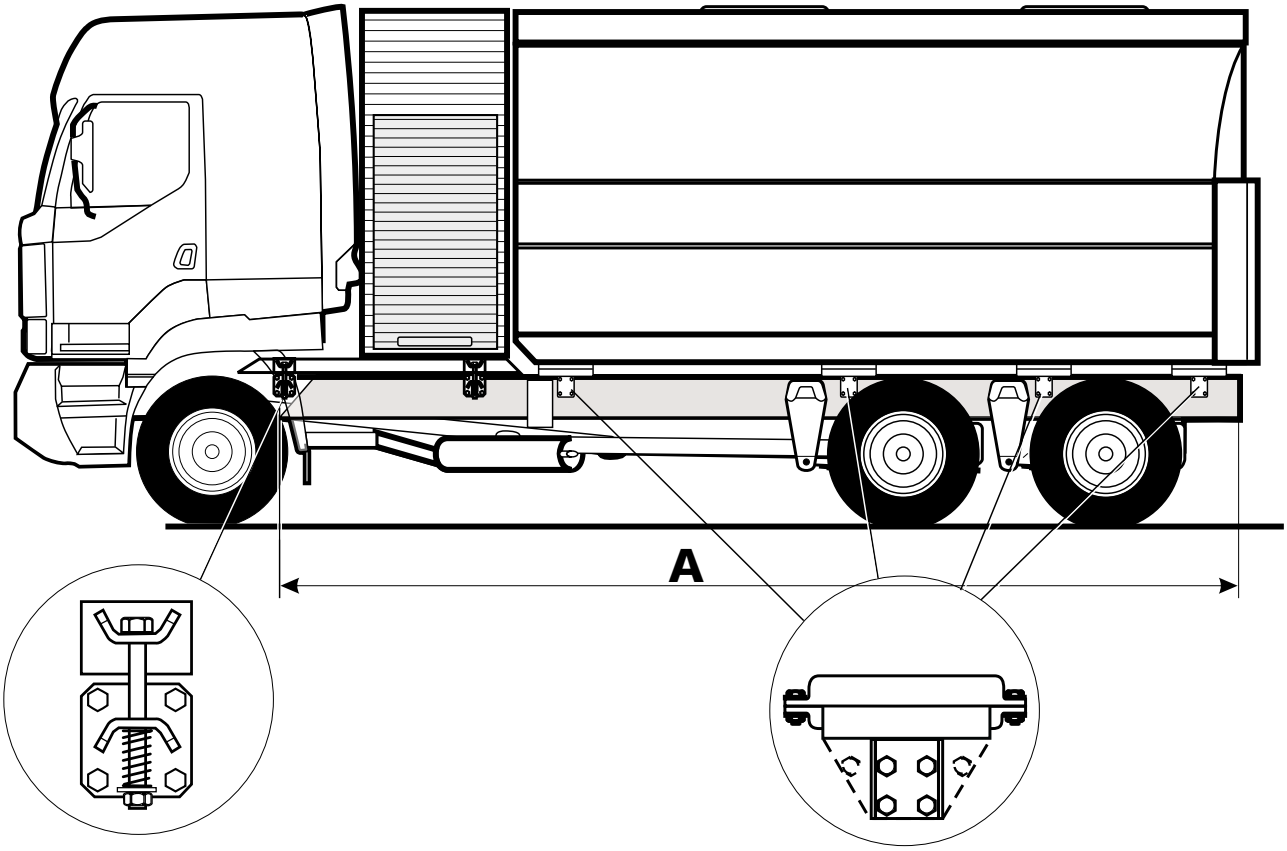

Fig. 936039

A = The long inner frame on the chassis frame. Mounted at the car factory (if ordered).

The dry cargo space is mounted on its own short subframe which must begin under the cab, in accordance with the general instructions. The front and the rear of the subframe must be bevelled by 45°. The subframe is mounted on the chassis frame with two or three flexible mounting plates on each side.

The dry cargo space must be securely mounted in the subframe. There must be enough room to allow the movement of the cab and the milk tank.

https://truckmanualshub.com/

4. Bulk tanks

Bulk tanks are designed for transporting granule or powdery materials. The tank is usually loaded from silos or by a pneumatic system. Almost without exception, the tank is emptied pneumatically by the air flow/pressure generated by a compressor installed in the vehicle.

☛ **Note!**
The available height at the silo loading area is usually limited. When designing the tank mounting, make sure that the vehicle/tank structure is not too high for the loading area.

The bulk tanks are usually made of aluminum but sometimes stainless steel is also used. The operating pressures are generally between 1.0–2,5 bar, so they are classified as pressure vessels.

4.1. Mounting in general

As a bodywork, the bulk tank is a rigid structure with high torsional and bending resistance.

All the basic principles of other tank structures apply also to the construction and mounting of bulk tanks (see chapter 3.1. and 3.2.).

- The bulk tanks are mounted between the front and rear axles with a subframe. The subframe must be constructed and mounted according to the general guidelines (see section 02) and dimensioned considering the bodywork load and the difficulty of the driving conditions. If the subframe is not constructed to reach the rear of the frame, the longitudinal beam rear ends must be rounded similarly to the front ends.

- The subframe is mounted on the chassis frame with rigid mounting brackets

If the height of the bulk tank poses a problem on the loading place and if the results from the bending moment calculations allow, the subframe construction can be replaced with L-sections mounted longitudinally on the chassis frame. The L-sections must have appropriate strength with regard to the load (minimum 6 x 90 x 90 mm, Fe 52).

The L-section starts behind the front axle according to the subframe specifications and runs continuously to the rear of the chassis frame.

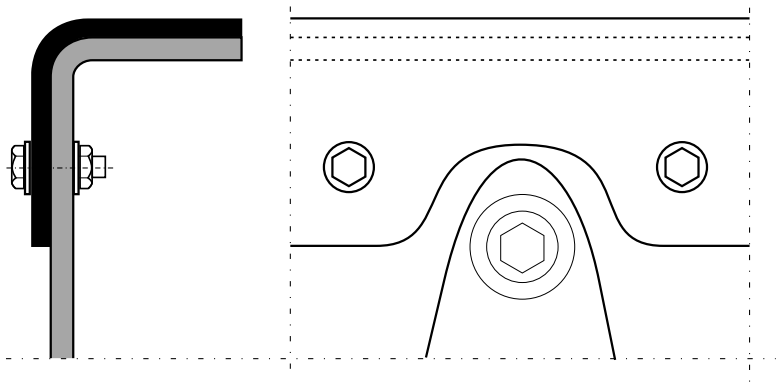

Fig. 936028

The L-section is mounted into the chassis frame core spacing the mounting points evenly and by using provided bolt joints where possible. Drilling holes, piercing and embeds are required for the part of the L-section located into the core in order to fit and mount the section properly. The mounting requires a lot of work but lowers the structure for the height of the subframe

- The mounting points of aluminum bulk tanks must be designed and constructed carefully in order to prevent tearing

https://truckmanualshub.com/

4.2. Fixed bulk tank

Bulk tank is mounted with 3-point mounting

Fig. 936023

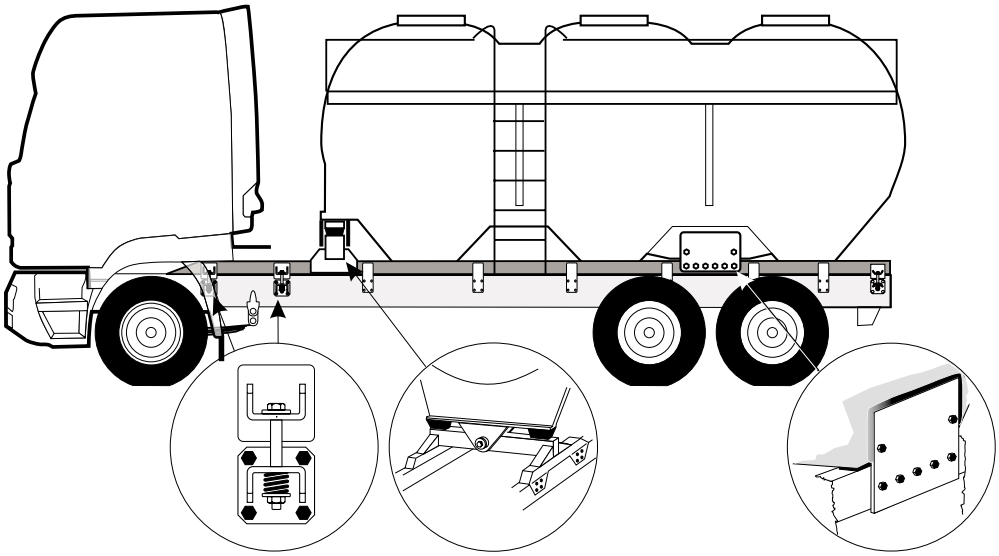

Fig. 936032

The front end is mounted on the subframe with one ball pin or with rubber bushing/pin construction.

Fig. 936030

At the rear axle area or between the bogie axles the tank is mounted on the subframe with plate-mounting brackets

The mounting points of aluminum tanks are easily torn. The figure shows how the plate mounting bracket is welded on the tank frame. In order to prevent tearing, the welding is strengthened with bolt mounting.

- Depending on the tank structure, several mounting methods can be used. In all cases the mounting must allow appropriate torsional movement of the frame.
- In heavy-duty trailer towing it is recommended that the rear of the frame be stiffened with a rigid truss bracing.

https://truckmanualshub.com/

4.3. Tipping bulk tanks

For instructions on tipping platform subframes, truss bracings, mounting of the tipping axle and tipping support etc., see section 03, tipping platforms.

Since the front tipping gear does not provide lateral support for the tank, the subframe and the rear of the chassis frame must be stiffened with sufficiently strong truss bracing.

In addition to that, the tank structure should be equipped with a jointed support, if the construction allows.

☛ **The rear of the frame must be equipped with correctly dimensioned outriggers in order to ensure tipping safety.**
The outriggers are not necessary only if the structure passes the tipping safety test according to the standard SFS 5750 without the outriggers

Sufficiently strong side guides must be mounted on the subframe to ensure the correct positioning of the tank when it is lowered down and the vehicle is inclined. The side guides also prevent the lateral movements of the tank's front end during driving.

A 4–5 mm thick rubber or nylon padding must be mounted on top of the subframe or L-section along the whole length to share the load and protect the metal surfaces from wearing.

The first two subframe mounting brackets should be flexible and other brackets rigid.

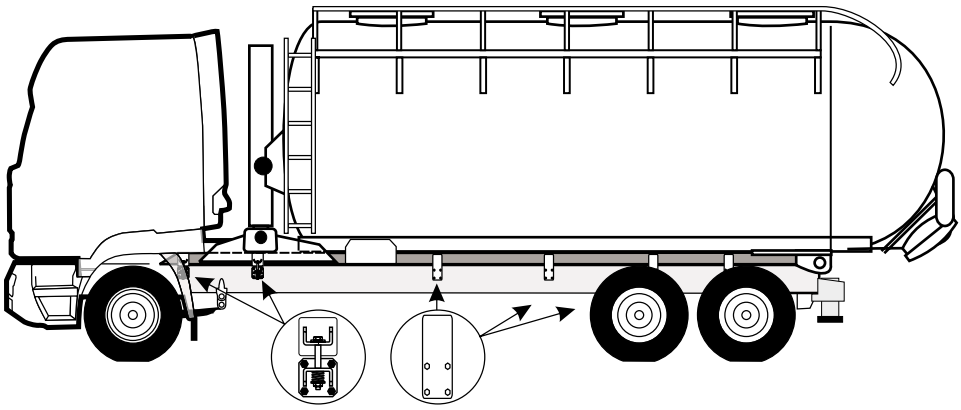

Fig. 936031

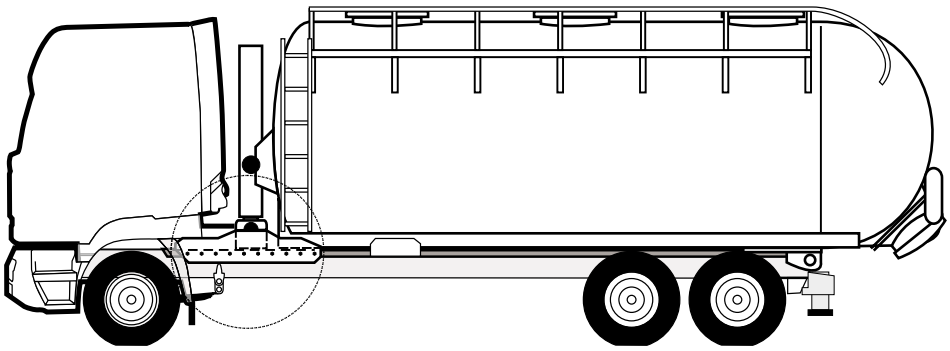

Fig. 936036

If the subframe is replaced with L-section construction, the tipping cylinder must be mounted so that neither excessive point loads nor point of load discontinuity are generated.

In other respects the tipping cylinder is mounted on the chassis frame and tank according to the tipping gear manufacturer's instructions.

☛ **Remember that the tipping stability test according to standard SFS 5750 is the only positive way to demonstrate that the structure is compliant with tipping stability regulations when no outriggers are used during tipping. Otherwise, tipping without the outriggers must be absolutely prohibited or the structure designed to prevent tipping without outriggers.**

https://truckmanualshub.com/

4.3.1. Cradle mounting

A tipping bulk tank can also be mounted in a cradle. Tank-shaped supports are constructed on the subframe and the tank is lowered into this cradle. This construction provides high torsional and bending flexibility for the frame but also supports the tank in lateral direction.

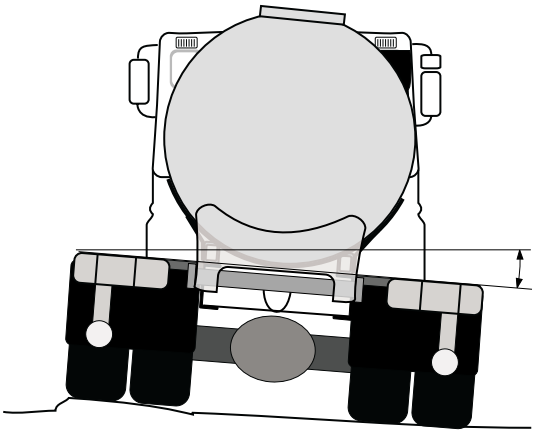

Fig. 936038

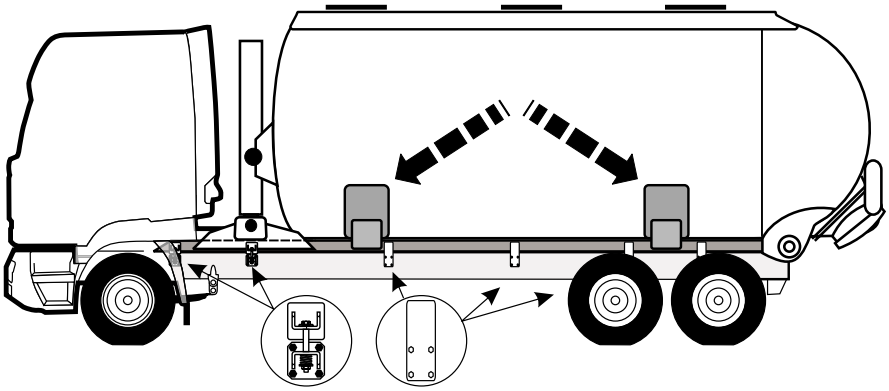

Fig. 936037

The first tank-shaped support is mounted near the front end of the tank and the other support between the bogie axle. A 4–5 mm thick rubber or nylon padding is installed between the tank and the supports.

Sufficiently stiff subframe, sufficiently short wheelbase/tank and utilization of jointed tipping support provide good tipping stability and in this case outriggers are usually not necessary. However, if the outriggers are not installed, the tipping stability test is required.

https://truckmanualshub.com/

5. Fire trucks

A Sisu low-cab vehicle chassis is an excellent choice for a fire truck chassis. Additional elements for constructing crew-cabs are available for the basic cab.

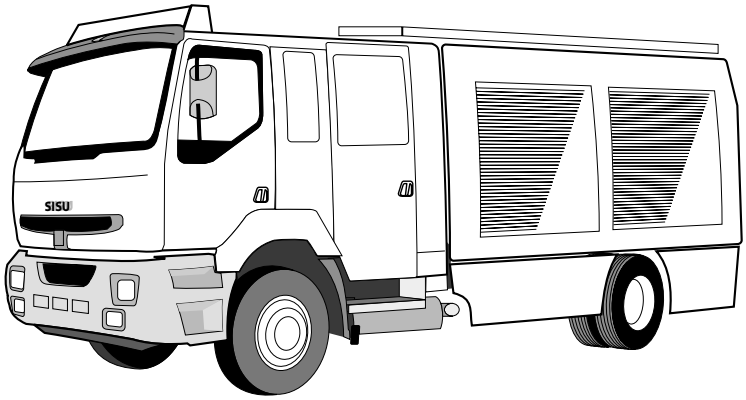

Fig. 936024

Please note the following guidelines when constructing fire trucks:

- The center of gravity must be located as low and as front as possible. This minimizes the inclination forces and distributes these forces evenly between the front and rear axle
- Rear springs must be as stiff as possible, without compromising the driving comfort
- Anti-roll bars are recommended on both front and rear axles
- When constructing the crew-cab, maintenance accessibility and tipping the cab must be taken into consideration

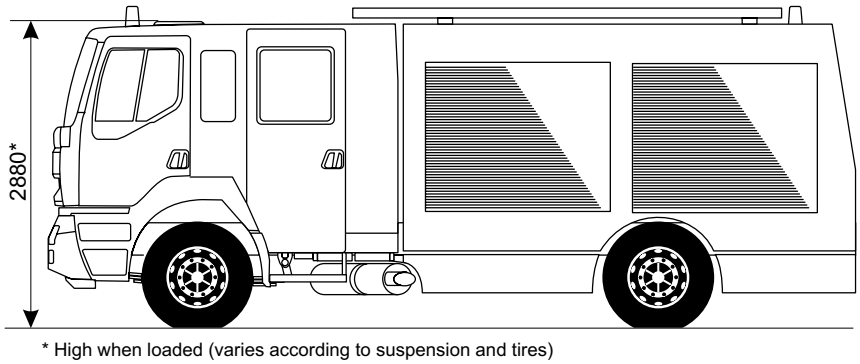

Fig. 936025en

Tank mounting methods:

❶ Rigid mounting brackets at the rear to stiffen the rear of the frame and sufficiently flexible mounting brackets at the front

or

❷ Three-point mounting: the one end of the tank is mounted with rigid mounting and the other with one-point mounting allowing the torsional movement of the frame in the direction of the longitudinal axis

In other respects the general tank structure mounting guidelines apply (see chapter 3. on page 106)

https://truckmanualshub.com/

6. Multi-wheel drive special vehicles

Fig. 936029

Sisu ET-series special truck chassis is designed as a multi-wheel drive off-road vehicle. Due to its construction, it is suitable for various driving tasks and bodywork constructions.

Sisu ET-series features high, rigid frame. The flexibility required by the off-road conditions is obtained with high axle travel.

Even when driving on uneven surfaces, the suspension movements of the frame are small. Hence, bodywork mounting on the frame is simple.

Bodywork is mounted directly on the chassis frame. Since the chassis frame is so robust, no subframe is required.

All components, including rigid bodyworks are mounted rigidly on the chassis frame between the rear axle bearing points. The components are mounted with fixed mounting plates which are dimensioned considering the bodywork and cargo mass.

Outside the area of the rear axle bearing points, i.e. the rearmost and the front mounting brackets are simple flexible mounting brackets allowing small longitudinal movement between the bodywork and chassis frame.

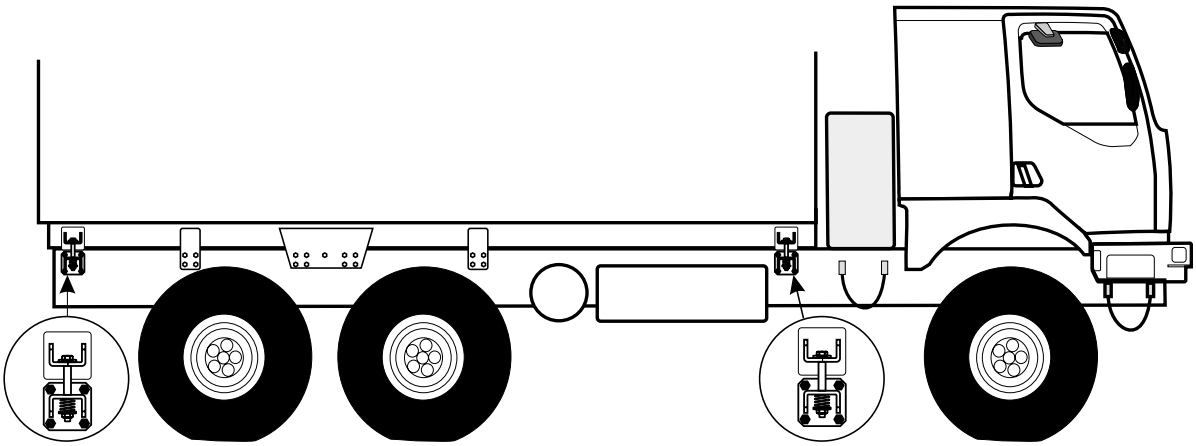

Fig. 936035

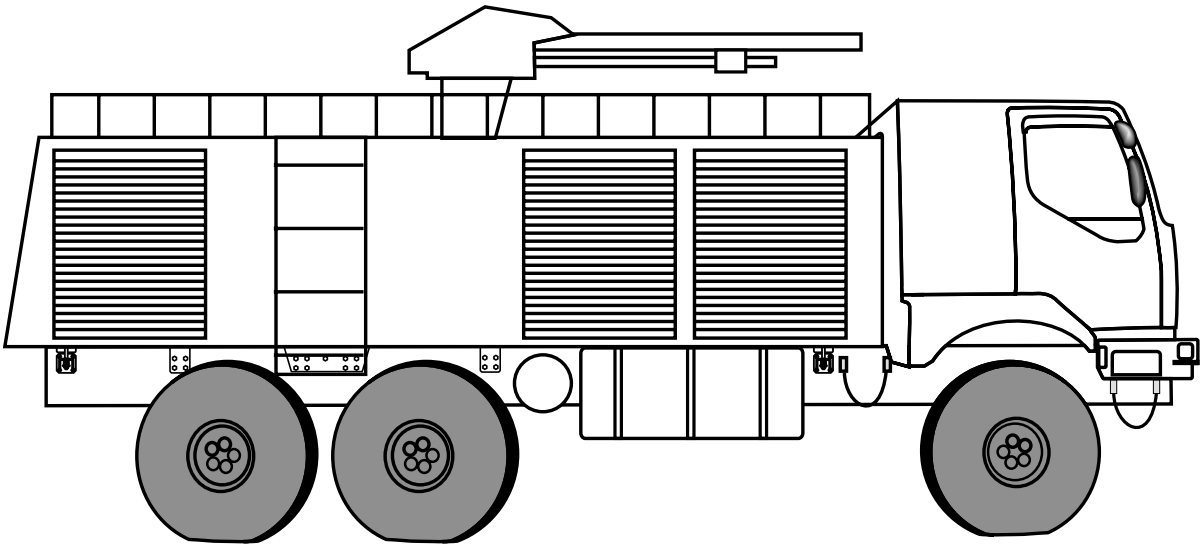

Fig. 936026

Follow the general mounting guidelines given in section 02.

For mounting the tipping gear and tipping axle on high-frame vehicles, see section 03.

https://truckmanualshub.com/

Record

https://truckmanualshub.com/

Other bodywork constructions

General

Fig. 963004

Other bodywork constructions refer to devices attached to a truck, facilitating either transportation tasks (load handling) or other tasks connected with goods transportation (e.g. road maintenance).

Typically, these additional devices are either mounted machine units or machines that are attached to the system and hence must comply with the regulations and include the declaration of conformity (section 01).

This section provides general guidelines for mounting and attaching additional devices to the chassis frame.

Without knowing driving tasks and driving conditions in individual cases, we can provide only general instructions on structures and their strength dimensioning. The bodywork manufacturer is always responsible for the exact dimensioning.

In co-operation with the dealer and/or bodywork manufacturer, the customer can mark e.g. tank locations, the length of the frame and rear overhang on the layout drawing delivered during the purchase of the vehicle.

If the customer requires, the frame is constructed to the desired length and a trailer-coupling mounting beam is attached by the vehicle manufacturer.

Careful advance planning saves the customer in bodywork mounting.

Other bodywork constructions are presented in the following order according to their mounting location; in front/on top of the cab, behind the cab, at the wheelbase area, between the rear axles and rear-mounted bodyworks.

Trailer couplings and fifth wheels required for trailer towing are presented in section 07.

Note!

- The bodywork manufacturer should acquire all standards and regulations that apply to the bodywork to be manufactured.
- If the bodywork must comply with the machinery directive, the bodywork must meet all appropriate regulations given by the authorities.
- If the bodywork must comply with the machinery directive, the bodywork installer must issue the declaration of conformity and attach the CE mark (see section 01).
- The industrial safety district may now inspect the validity of the machinery directive declaration of conformity at the district's own discretion and within the limits of market control.

https://truckmanualshub.com/

https://truckmanualshub.com/

1. Additional devices, mounting in front of the cab

1.1. General

Front-mounted additional devices are usually used for road maintenance, e.g. snow plow, brush. Almost without exception, the devices are attached to the headgear and connected to the hydraulic system with quick connectors. These devices must be CE marked and include the declaration of conformity issued by the manufacturer.

Devices mounted on top of the cab are usually lights or horns. For mounting these devices, instructions are given on drilling the holes in the roof and packing nuts, either already provided or to be installed later.

1.2. Headgear

Headgear is optional equipment that enables the mounting of a front plow, brush or equivalent device on front of the vehicle.

Fig. 963005

Headgear can also be retrofitted to Sisu S- and E-series trucks. A section is cut off from the plastic bumper and replaced by the headgear.

The parts required for each vehicle model can be purchased from your nearest authorized dealer.

1.2.1. Mounting

Grade 12.9 bolts must be used for headgear mounting.

The maximum static moment generated by a device attached to the headgear is 17.3 kNm at the level of the headgear's front surface.

If this moment load is exceeded, the frame's front extension must be strengthened. Your nearest authorized dealer must be consulted for detailed instructions for each case.

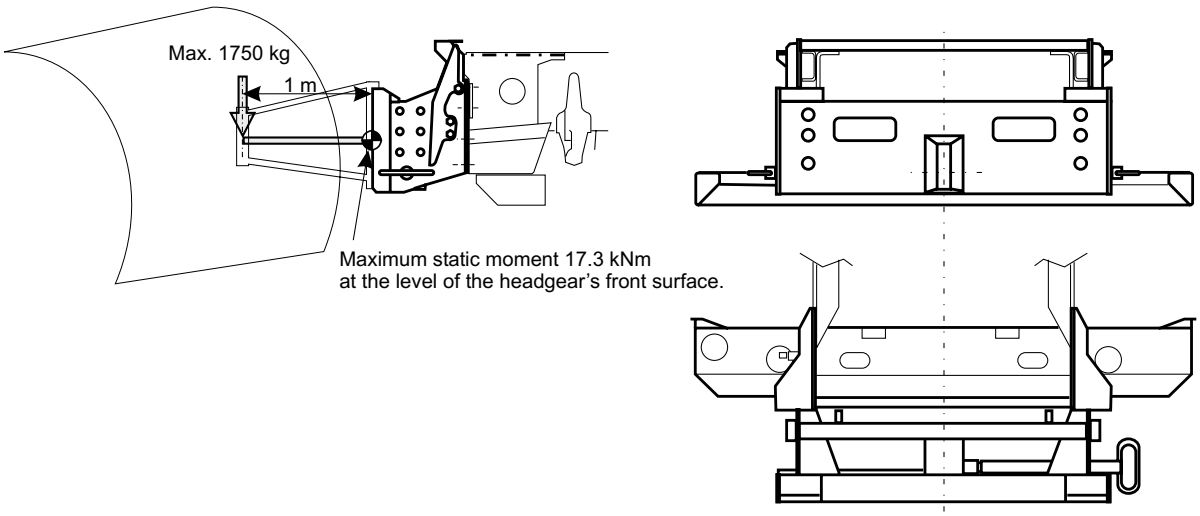

Fig. 963006

https://truckmanualshub.com/

1.2.2. Headgear's 3-point mounting attachment points: dimensioning

Fig. 963007

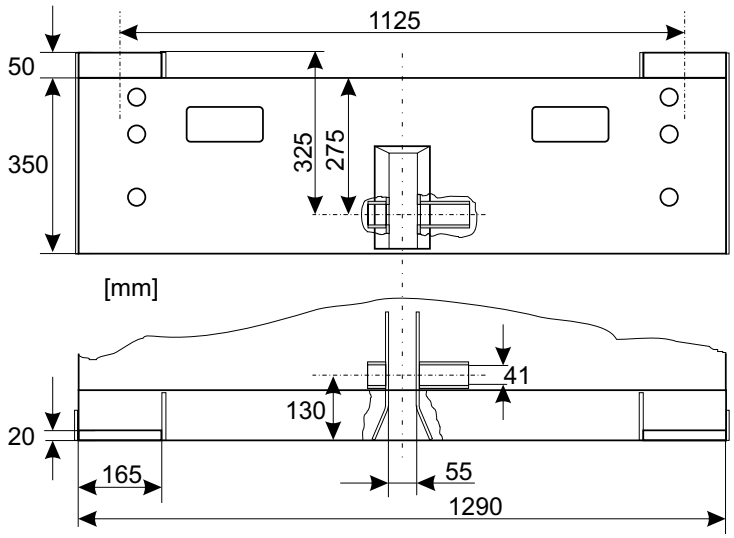

1.2.3. Additional devices attached to the headgear: operation

- The maximum speed when the front plow or other additional device is lifted is 50 km/h. On poor road conditions, lower speeds are required.
- Check the condition of the headgear and its structures daily when using a front plow or other heavy device. Observed damage must be repaired immediately in order to avoid dangerous situations.
- The lifting circuit for front plows or other heavy devices must include an overload valve.

Fig. 963008

Notes for front plow operation:
- Never hit immoveable or heavy objects with the plow.
- Flying snow, slush, rocks, etc. must not endanger other traffic.
In order to avoid dangerous situations, the driver operating a front plow must be extremely careful and alert at all times!

https://truckmanualshub.com/

2. Additional devices/equipment, mounted on the cab or engine

2.1. Roof-mounted additional equipment

Additional devices mounted on top of the cab are usually lights or horns.

Fig. 963011

Fig. 963009

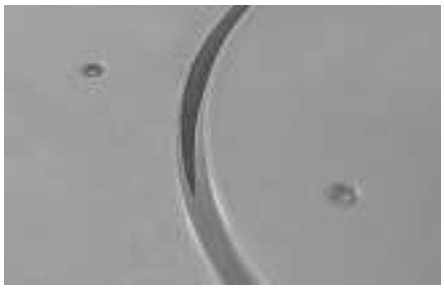

Fig. 963010

The devices are mounted on the roof using the provided pre-welded mounting nuts, or sealed mounting nuts that are installed during mounting.

Welded mounting nut locations and the locations where sealed mounting nuts can be used are clearly marked with dots. In addition, figure 963093 indicates areas for horn or antenna mounting. (Note! the other side of the roof is symmetric.)

Avoid drilling holes in spot welded lines or near these lines.

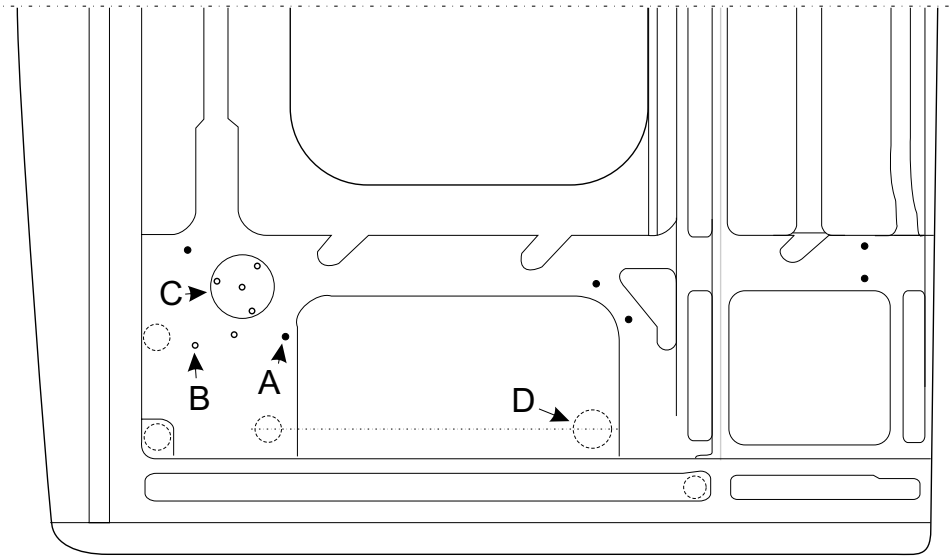

Items:

A = Welded mounting nut locations (black dots)

B = Locations for sealed mounting nuts

C = Attachment points for rotating beacon

D = Areas suitable for mounting e.g. horns and antennae

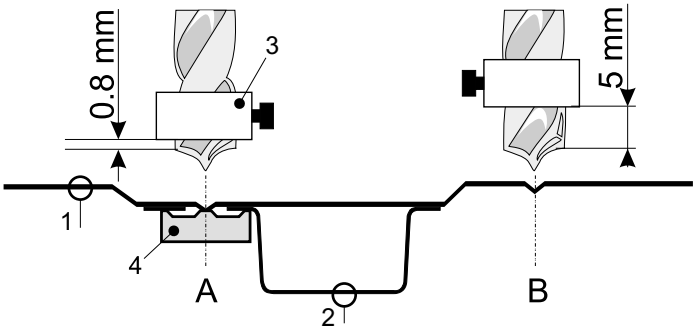

Fig. 963012

Use a centering drill bit and drill hole at the appropriate dot to expose the provided mounting nut or attach a sealed mounting nut to the hole.

To drill the roof panel (1), use a centering drill bit with a depth stop (3).

A. Drilling a hole for a welded mounting nut: use a 10 mm drill bit and adjust the depth stop to 0.8 mm.

B. Drilling a hole for a sealed mounting nut: adjust the depth stop to maximum of 5 mm and use:

9.2 mm drill bit for 6 mm mounting nuts

and

11.2 mm drill bit for 8 mm mounting nuts.

2 = Roof stiffener

4 = Welded mounting nut

https://truckmanualshub.com/

2.2. Engine outlet ports for the cargo space auxiliary heating

In some cases, an auxiliary heating system is required for the cargo space, e.g. dry cargo space heating in milk trucks.

Heating can be organized by liquid circulation heaters utilizing the heat taken from the engine cooling system.

When installing the heating-system water hoses, insure that they will not become frayed or compressed. Check the connections for leaks.

Insulate the hoses, if necessary.

After mounting, fill and bleed the cooling system according to the instructions in the operator's manual. In addition, bleed the auxiliary heater circuit using the bleed screw in the auxiliary heater or appropriate connector.

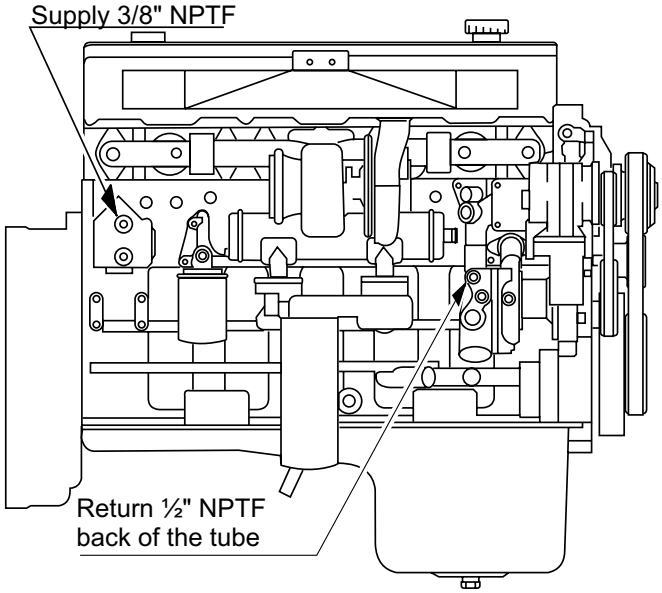

Remember to check the coolant level of the cooling system after bleeding (see operator's manual).

Water outlets for auxiliary heater: Cummins 11 l engine

Fittings, e.g.:

Supply:

91874-41612 Elbow fitting body
91872-01616 Direct threaded fitting
174-101-0051 Shut-off valve
91978-21701 Hose fitting

Return:

91871-41616 Fitting body
91871-01616 Fitting body
91834-71600 2 pcs, crimp ferrule
91843-01628 2 pcs, jacket nut
93201-71615 Tube 16 mm
174-101-0051 Shut-off valve
91978-21701 Hose fitting

Water outlets for auxiliary heater: Cummins 14 l engines

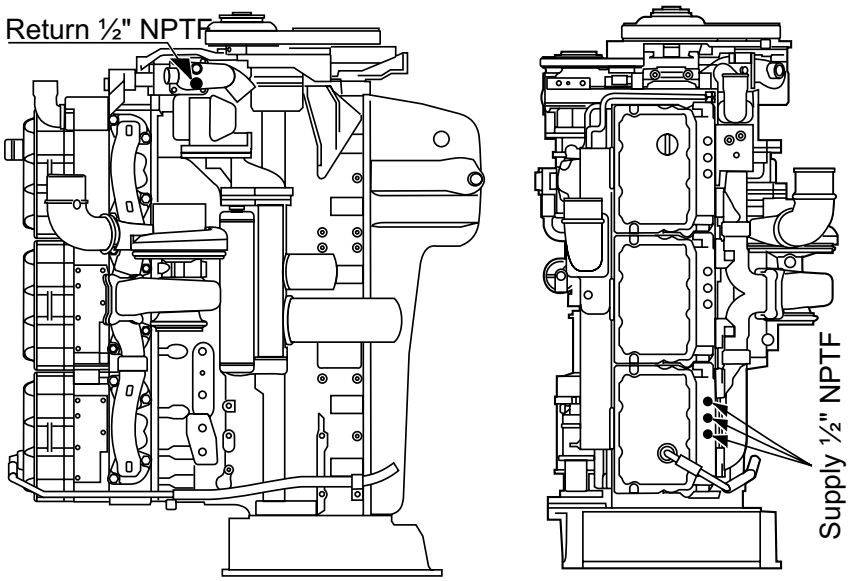

Fittings, e.g.:

91874-41616 2 pcs, elbow fitting body
91871-01616 2 pcs, fitting body
91834-71600 4 pcs, crimp ferrule
91843-01628 4 pcs, jacket nut
93201-71615 1 pcs, tube 16 mm
174-101-0051 2 pcs, shut-off valve
91978-21701 2 pcs, hose fitting

https://truckmanualshub.com/

Water outlets for auxiliary heater: Mack 12 l engines

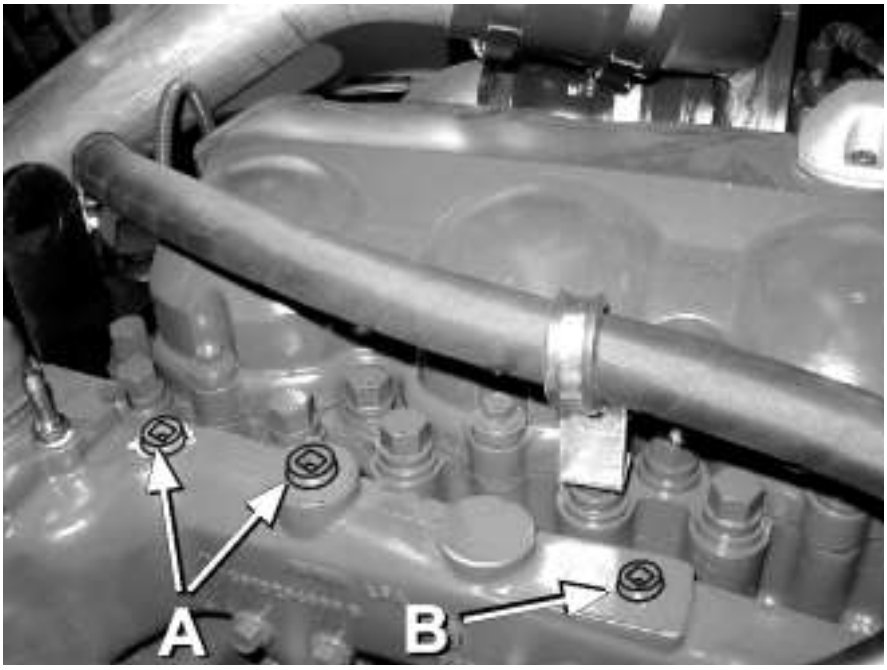

Fig. 963065

Supply:
A. 2 pcs NPTF ½"
B. 1 pcs NPTF 3/8"

Fittings, e.g.:
91874-41616 Elbow fitting
or
91874-41612 Elbow fitting
91871-01616 Direct fitting
91834-71600 2 pcs, crimp ferrule
91843-01628 2 pcs, jacket nut
93201-71615 Tube 16 mm
174-101-0051 Shut-off valve
91978-21701 Hose fitting

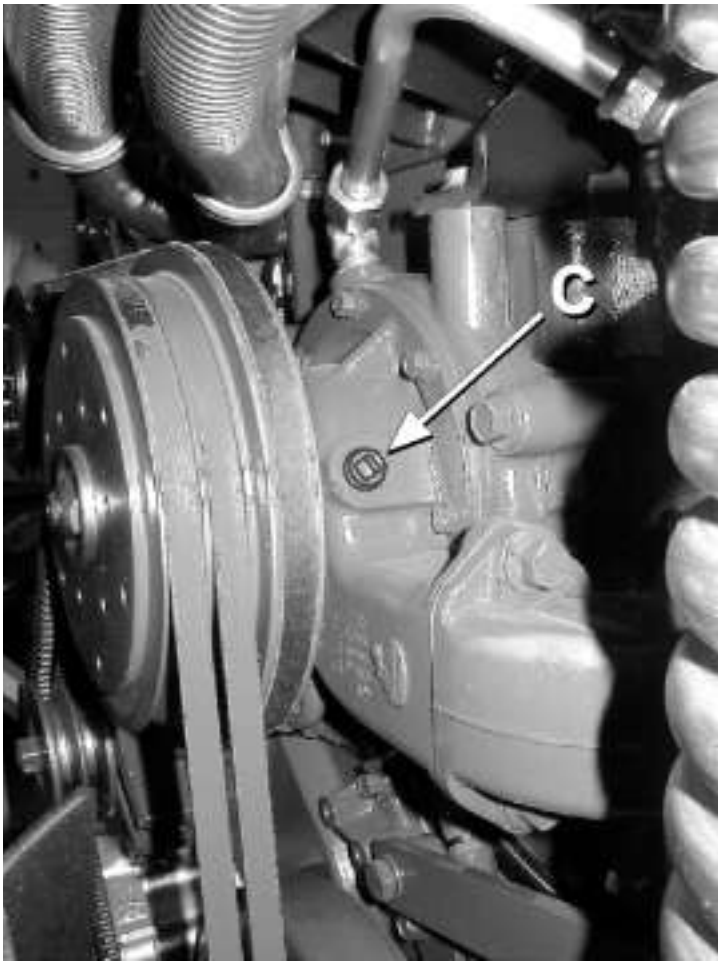

Fig. 963064

Return:
Fittings, e.g.:
91871-41612 Direct fitting
91871-01616 Direct fitting
91834-71600 Crimp ferrule
91843-01628 Jacket nut
93201-71615 Tube 16 mm
174-101-0051 Shut-off valve
91978-21701 Hose fitting

https://truckmanualshub.com/

3. Additional Devices Mounted Behind the Cab

3.1. Refrigeration unit

If a refrigeration unit is mounted on the front wall of the cargo space, insure that there is enough space between the unit and cab for tipping and suspension movements of the cab.

Otherwise, refrigeration units are installed according to the refrigeration device installation regulations given by the authorities.

3.2. Hydraulics panel, hydraulic oil tank

Hydraulic valves and a large hydraulic oil tank are required for vehicles that will be equipped with e.g. road-maintenance equipment.

The hydraulics panel and oil tank are usually mounted behind the cab. The mounting bracket for the tank and valve assembly is attached either to the subframe (A) or chassis frame (B).

If the front of the subframe is mounted on the chassis frame with rigid mounting brackets (A), the valve/ assembly bracket can be attached to the subframe.

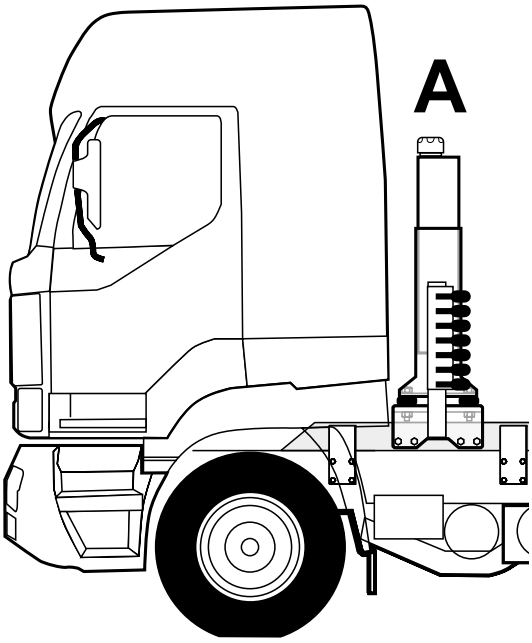

If the front of the subframe is mounted on the chassis frame with flexible mounting brackets (B), it is advisable to attach the valve/tank mounting bracket to the web of the chassis frame, especially if the front subframe's longitudinal movement in relation to the chassis frame is continuous and more excessive than normal (e.g. due to driving conditions and/or bodywork).

The tank is attached to the bracket using vibration isolation mounts. A hydraulic oil tank must be equipped with a so-called "cavitation plate", which prevents the pump from sucking air due to the cavitation effect when the oil level is at minimum. The cavitation plate is installed a few centimeters above the oil-suction port.

If required, the tank must be equipped with splash plates.

Note!

- Insure that there is enough space for tipping and suspension movements of the cab.
- Device mountings must not excessively impair a vehicle's service procedures.

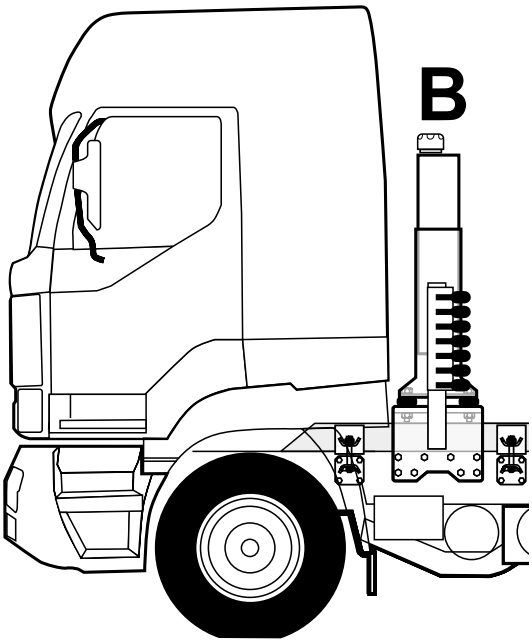

Fig. 963060

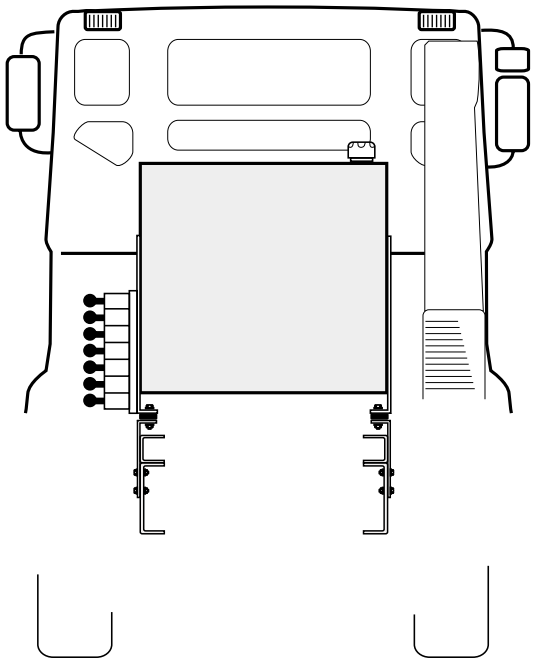

Fig. 963060a

https://truckmanualshub.com/

Some examples of the oil tank and equipment mounting.

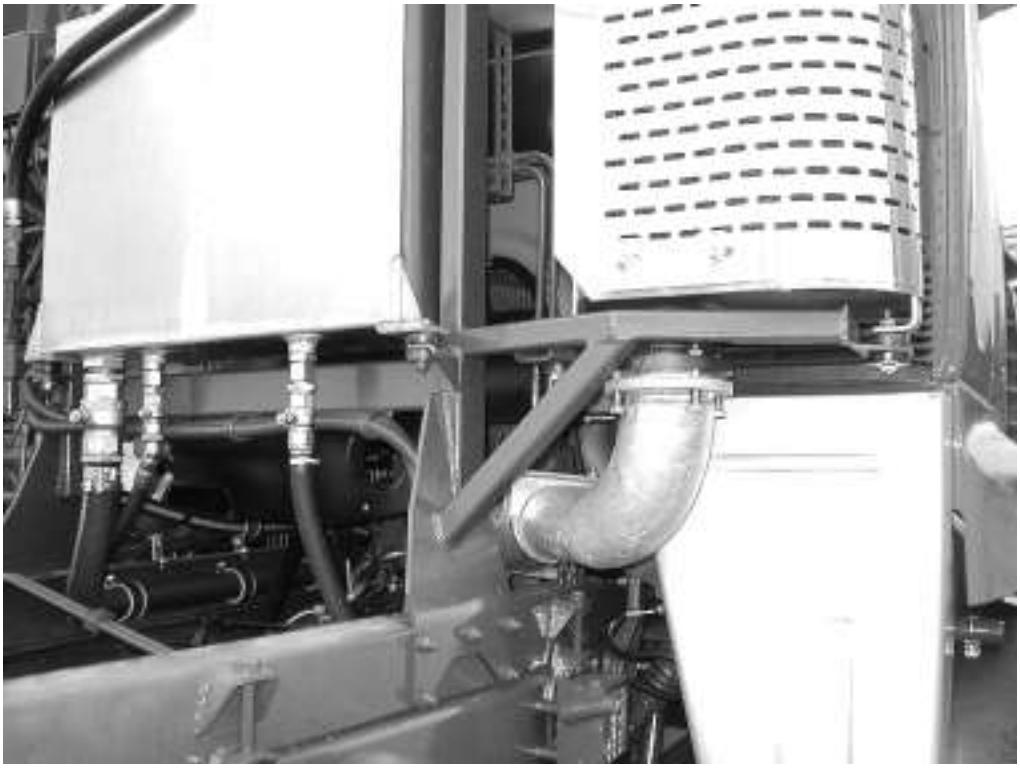

Fig. 963057

Fig. 963056

Fig. 963058

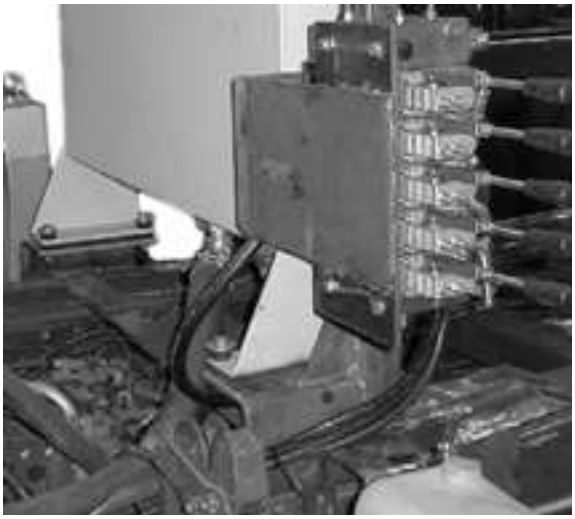

Fig. 963059

https://truckmanualshub.com/

3.3. Crane

With regard to the lift requirements, the crane must have sufficient lift capacity and be suitable for the intended purpose in all respects. The operating conditions must correspond to the basis for the crane design and construction. The requirements set by safe operation must be taken into consideration when planning the crane location and determining the visibility of the work area.

The crane and its mounting must meet the requirements given by the authorities.

3.3.1. General

- Use the dimensional drawings of the vehicle and crane when planning the location of the crane.
- The minimum space between the crane and cab when the crane is turned is 50 mm. Sufficient space must be available to tip the cab.
- Normally, the three-point support must be mounted towards the cab. Hence, the front axle load is decreased and there is more space for the crane operator at the operating levers.
- In order to decrease the load on the frame and frame vibrations impairing maneuverability, locate the crane as far to the front as possible.

3.3.1.1 Plan, check and calculate

❶ Calculate the stability, axle loads, loading capacity, crane mounting and the need for a subframe or strengthening the frame.

❷ Check if mounting is possible without relocating cross beams, pneumatic pipes and hydraulic or fuel hoses.

❸ Check the applicability of the PTO. Dimension and select the hydraulic pump.

❹ Select the correct size of the hydraulic pipes/hoses and possible tank.

❺ Check whether a hydraulic oil cooler is required.

☛ **This section provides the calculation principles for the required calculations. Crane manufacturers provide detailed instructions and required specification tables for the calculations. Always follow the crane manufacturer's instructions!**

The bodywork manufacturer who has installed the crane is always responsible for the accuracy of the stability calculations, axle load and gross weight calculations, frame calculations and crane mounting calculations, as well as for the safety and operability of the installation.

3.3.2. Roll axes

The roll axis is an imaginary line that runs through two bearing points. The vehicle rolls over this axis if the stability is not sufficient.

The moment inside the roll axis is stabilizing moment, and the moment outside the roll axis is tipping moment (moment = mass x distance from the roll axis).

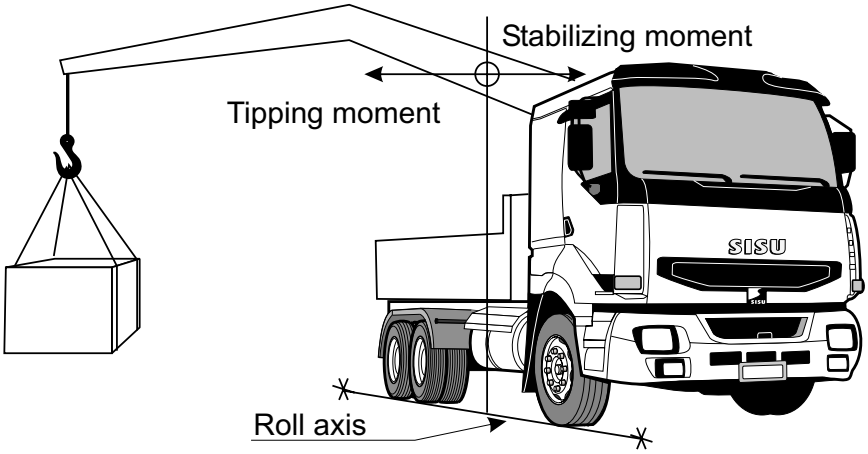

Fig. 963013

When lifting without outriggers from the side of the vehicle, the roll axis runs longitudinally along the side of the vehicle's wheels.

There is more than one roll axis, depending on the crane lift position in relation to the vehicle. The following pages include two diagrams, presenting the roll axes for a crane mounted behind the cab, with one and two outrigger pairs.

https://truckmanualshub.com/

3.3.2.1 Roll axes with one outrigger pair

Note! When lifting over the cab, directly in front of the vehicle (90-degree angle in relation to the front axle), the roll axis is at the centerline of the front axle.

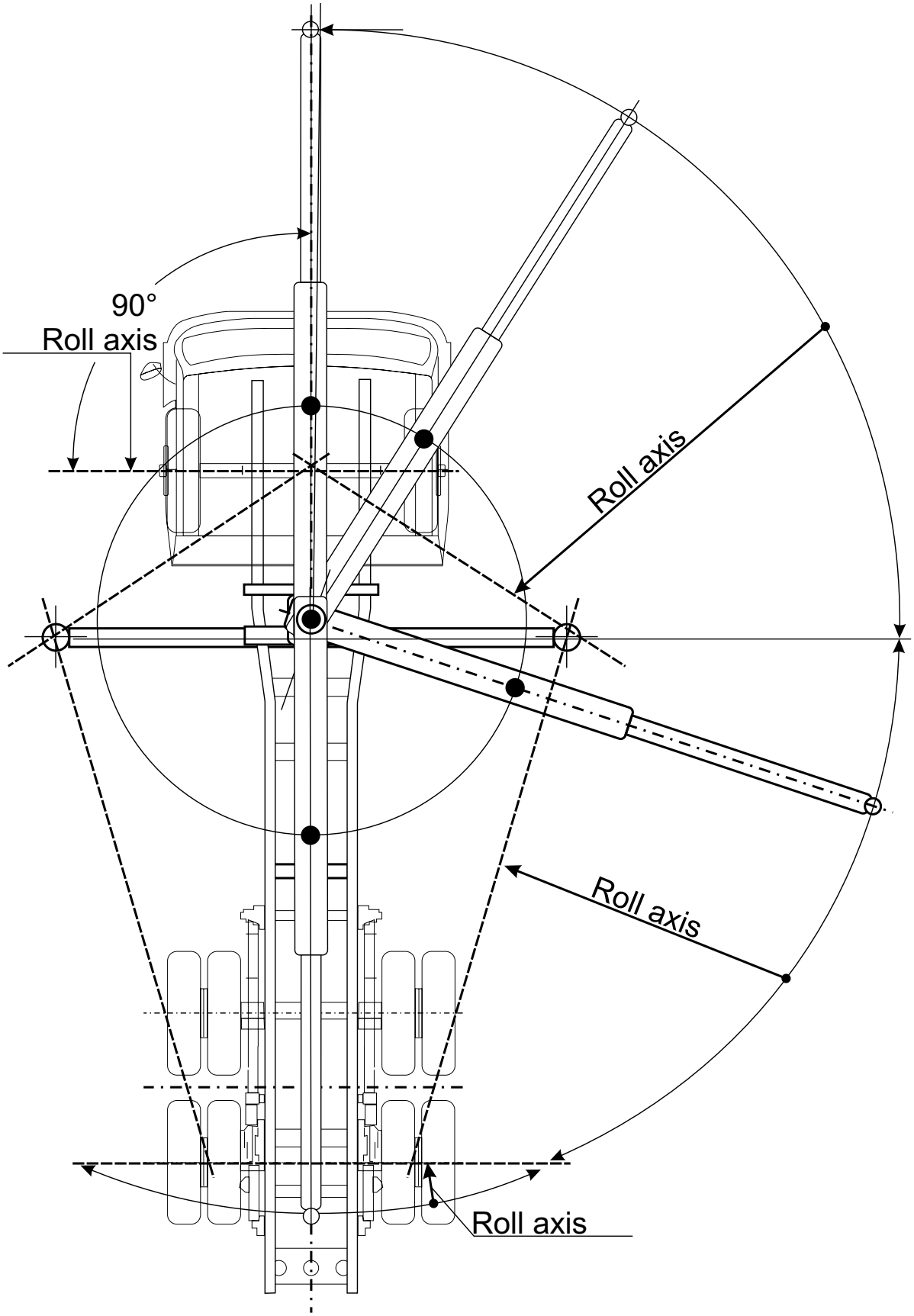

Fig. 963014

3.3.2.2 Roll axes with two outrigger pairs

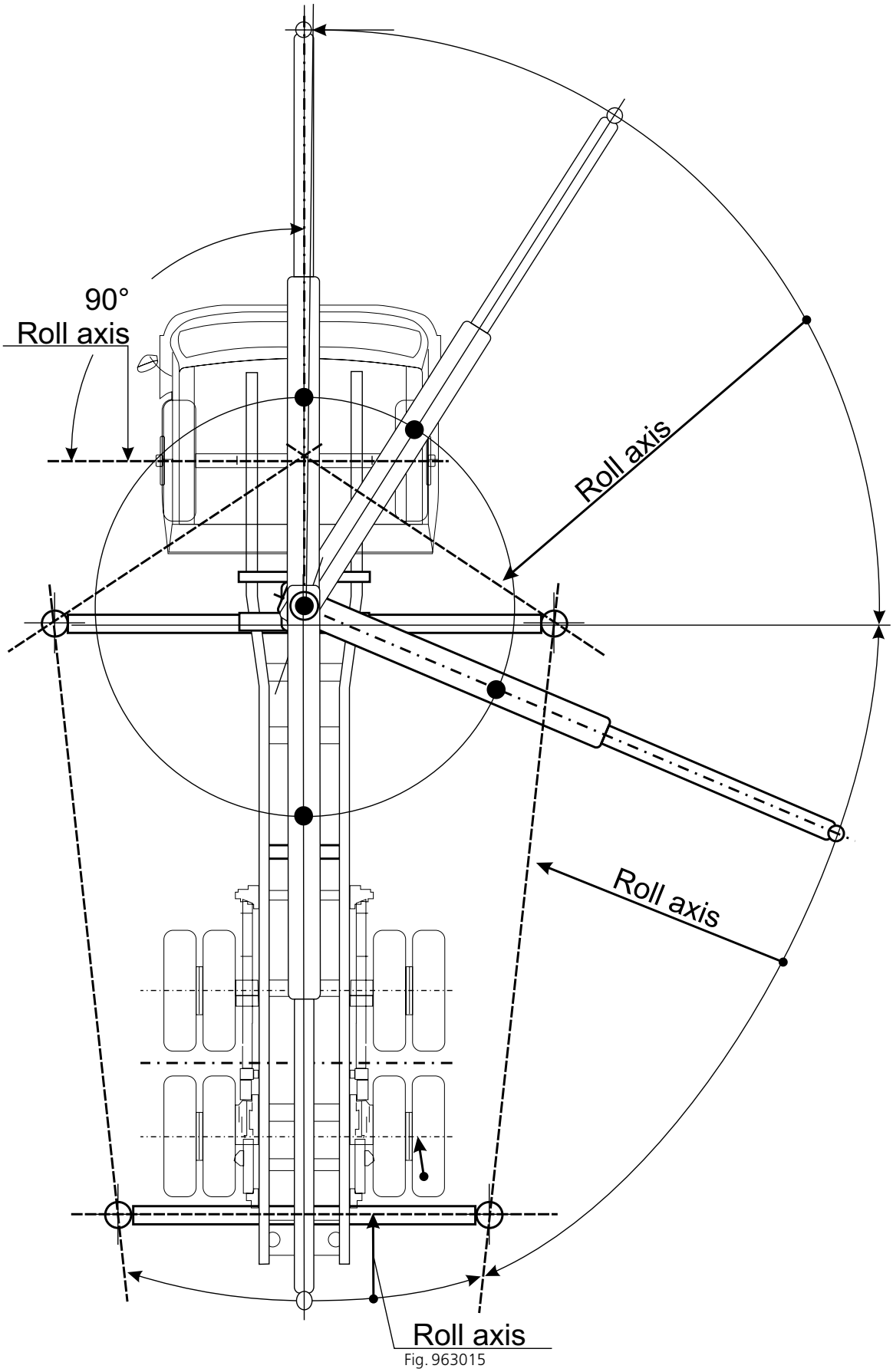

Fig. 963015

https://truckmanualshub.com/

3.3.3. Stability factor

Note!
All mass on the vehicle's side increases stability.
All mass outside the roll axis decreases stability.

The stability factor **n** is calculated by dividing the total sum of moments increasing stability by the total sum of moments decreasing stability.

$$\frac{\textit{Moments increaSing stability}}{\textit{Moments decreaSing stability}} \quad n$$

To acquire sufficient stability, the minimum theoretical stability factor used should be **1.4**.

3.3.3.1 Calculating the stability factor

Stability factor is calculated for each roll axis, the crane at a 90-degree angle in relation to the axis, using the crane's maximum reach and maximum load equivalent to the reach.

Moments increasing the stability are calculated by multiplying the masses on the vehicle's side by their distance from the roll axis.

Moments decreasing the stability are calculated by multiplying the masses outside the roll axis by their distance from the roll axis.

The masses and centers of gravity are presented on the vehicle's and crane's technical specifications.

Note!
When calculating the stability factor for lifting from the front area, i.e. for outrigger/front-axle center point roll axis, or for lifting directly in front of the vehicle, i.e. the roll axis at the centerline of the front axle (see Fig. 963015), the crane's center of gravity may be outside the roll axis. In this case, G2 x E2 is placed under the line in the equation, i.e. it decreases the stability.

Note!
In various outrigger and/or mounting versions, the masses and distances inside the roll axis (on the vehicle's side) are stabilizing moments and are placed on top of the line in the equation.
The masses and distances outside the roll axis are moments decreasing stability and are placed under the line in the equation.

Note!
The crane manufacturer provides the required crane dimensions and masses.
The vehicle dealer provides the required vehicle dimensions and masses.

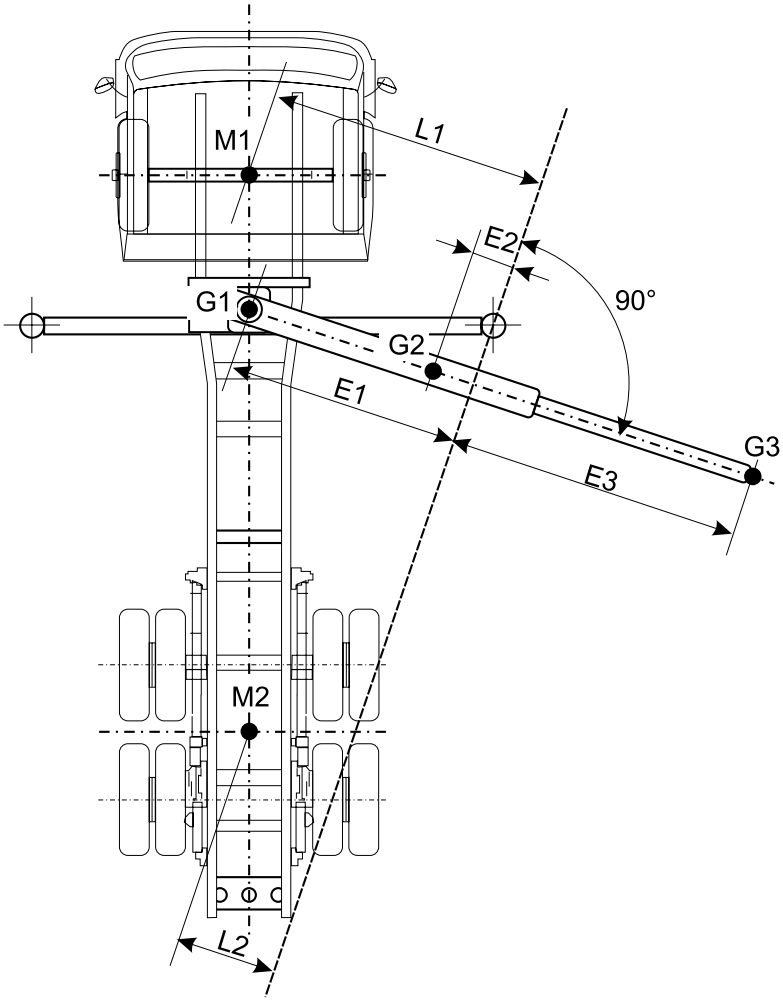

Fig. 963016

M1 = Front axle load (dead weight)	L1 = Distance from the roll axis
M2 = Rear axle load (dead weight)	L2 = Distance from the roll axis
G1 = Frame assy and hydr. oil mass	E1 = Distance from the roll axis
G2 = Boom assembly mass	E2 = Distance from the roll axis
G3 = Max. load mass	E3 = Max. reach from the roll axis
n = Stability factor	

https://truckmanualshub.com/

Vehicle with front bogie and a heavy, long-reach crane

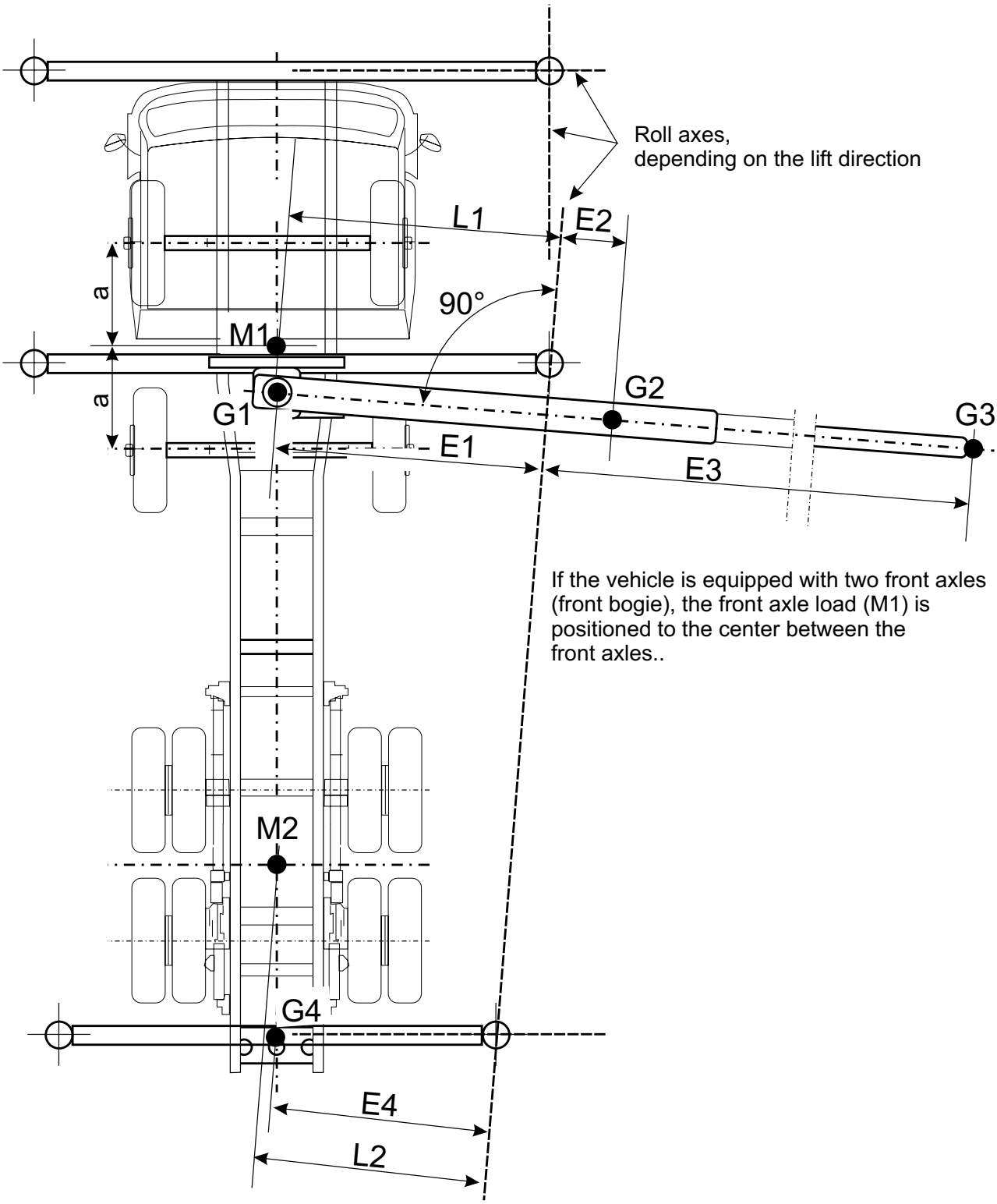

Fig. 963022

$$\frac{(M1xL1) \quad (M2xL2) \quad (G1xE1) \quad (G4xE4)}{(G2xE2) \; + \; (G3xE3)} \qquad \mathbf{n}$$

If the center of gravity of the crane's dead weight (G2) is outside the roll axis, its moment is placed under the line, since in this case it is tipping moment.

https://truckmanualshub.com/

3.3.4. Axle loads and loading capacity

The crane must be mounted and the bodywork dimensioned so that the vehicle can be loaded using the maximum permissible axle loads, allowing the maximum permissible payload.

Typically, axle-load calculations are made assuming that the load is distributed evenly along the entire bodywork. In this case, the center of gravity is at the center point of the bodywork.

Maximum permissible axle loads are acquired by correctly locating the load's center of gravity. If the front edge of the bodywork is determined, the location of the center of gravity can be changed by altering the bodywork's length. If the bodywork is extended, the load is transferred from the front axle to the rear axle. If the bodywork is shortened, the load is transferred from the rear axle to the front axle.

Calculation example

Axle loads and loading capacity for a three-axle vehicle; wheelbase 4050 mm and the distance between the bogie axles 1370 mm. For vehicles with a bogie, a reduced wheelbase value is used. The reduced wheelbase is measured from the front axle to the centerline of the bogie axle assembly; in this example 4735 mm.

Dead weight on the front axle is 4780 kg, including the driver, and the dead weight on the rear axle is 4460 kg.

A 1200 kg crane is mounted behind the cab.

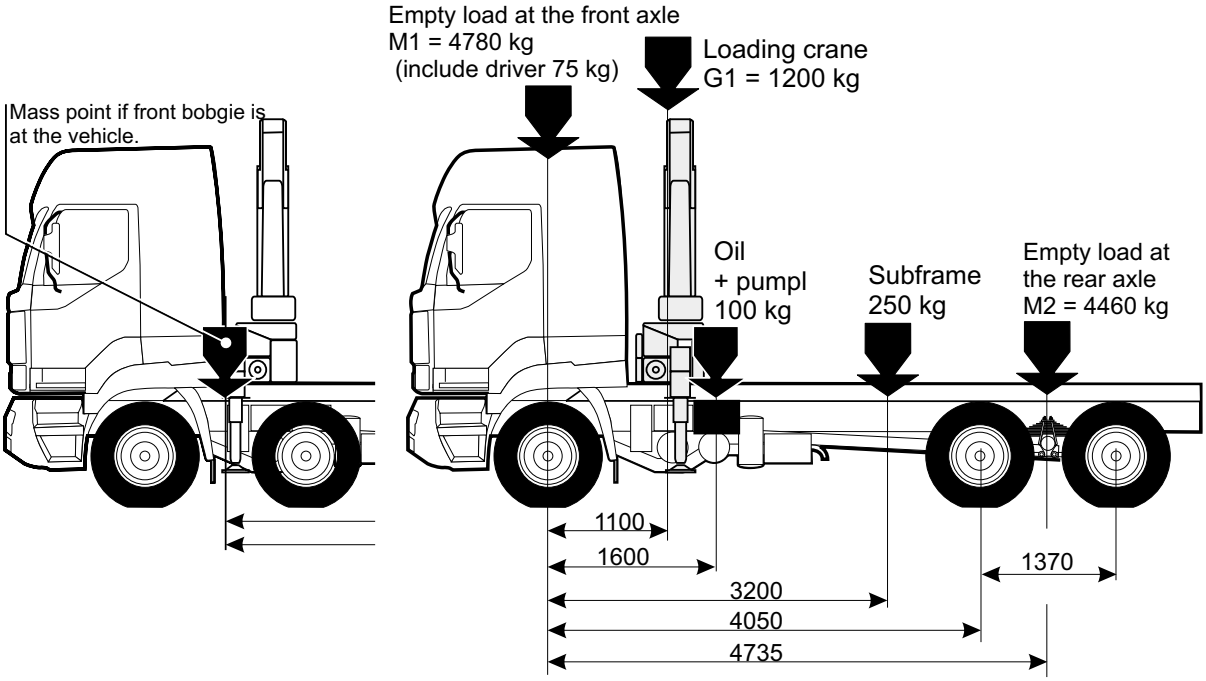

Fig. 963017

The maximum permissible weight on the front axle is 9 000 kg (structural, depending on tires, selected springs and axle).

The maximum permissible weight on the rear axle is 19 000 kg (by the authorities), see section 01.

The gross weight is 26 000 kg (by the authorities), see section 01.

Enter the values to a table, e.g.:

Item	Front axle	Rear axle	Total
1. Chassis	4780	4460	9240
2. Crane	?	?	1200
3. Oil + pump	?	?	100
4. Subframe	?	?	240
5. Total	?	?	10780
6. Permissible axle loads and gross weight	9000	19000	26000
Difference, remains for the platform and load mass			15220

https://truckmanualshub.com/

Calculate the mass distribution between the front and rear axles

Equation:

$$\frac{\text{Mass x Distance from the front axle}}{\text{Wheelbase}} \quad \textit{Mass to the rear axle}$$

Crane:

$$\frac{1200 x 1100}{4735} \quad 279 \text{ kg to the rear axle} \quad 921 \text{ kg to the front axle}$$

Pump + hydraulic oil:

$$\frac{100 \ x \ 1600}{4735} \quad 34 \text{ kg to the rear axle} \quad 66 \text{ kg to the front axle}$$

Subframe:

$$\frac{250 \ x \ 3200}{4735} \quad 169 \text{ kg to the rear axle} \quad 81 \text{ kg to the front axle}$$

Item	Front axle	Rear axle	Total
1. Chassis	4780	4460	9240
2. Crane	921	279	1200
3. Oil + pump	66	34	100
4. Subframe	81	169	250
5. Total	5848	4942	10790
6. Permissible axle loads and gross weight	9000	19000	26000
Difference, remains for the platform and load mass	3152	14058	15210

Now we know the maximum permissible total weight of the bodywork and load and the load on the front and rear axles coming from the bodywork and load.

Fig. 963018

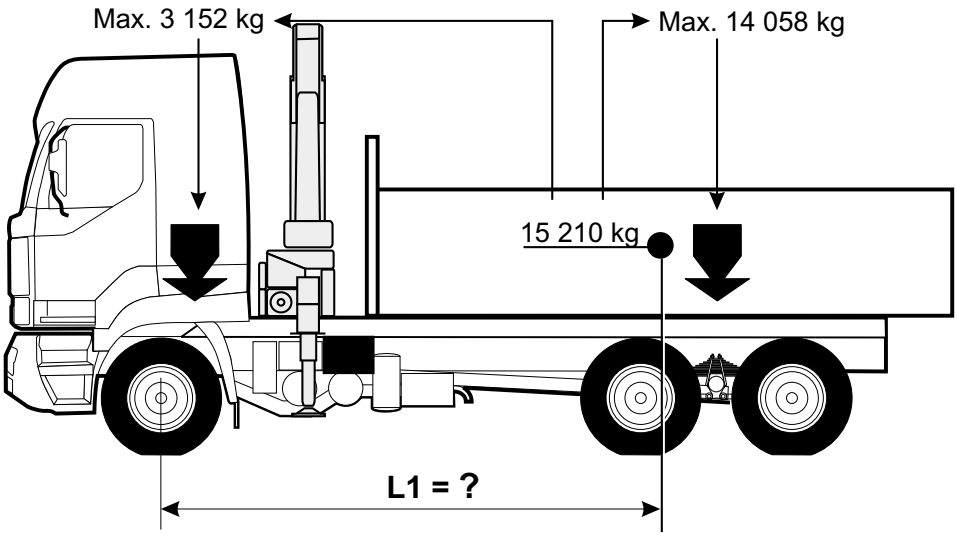

We must next determine the location of the bodywork's and load weight's center of gravity, which provides the correct axle loads.

Note! Since the maximum permissible gross weight is less than the total weights permissible on the front and rear axles, we can calculate two points **between which** the center of gravity can be located.

This means that, in this case, the axle load distribution can be altered within certain limits and without exceeding the maximum permissible axle loads by altering the load position.

https://truckmanualshub.com/

Calculate the location of the bodywork's and load weight's center of gravity

$$L = \frac{\text{Max. rear axle load} \times \text{Wheelbase}}{\text{Bodywork and load weight}}$$

Since the total maximum permissible axle loading capacity exceeds the maximum permissible gross weight, we will calculate two center of gravity locations for the maximum permissible gross weight, i.e. for the minimum and maximum permissible weights on the rear axle. The minimum permissible weight is on the rear axle when the maximum permissible weight is on the front axle (15210 - 3152 = 12058).

$$L1 = \frac{12058 \times 4735}{15210} = 3754 \text{ mm} \quad \textbf{OR} \quad L2 = \frac{14058 \times 4735}{15210} = 4376 \text{ mm}$$

Fig. 963019

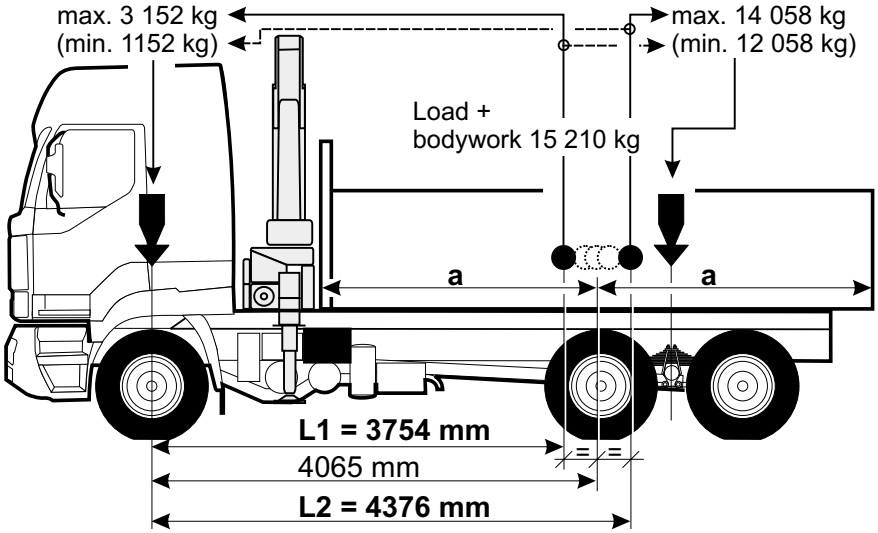

The center point is located 4065 mm from the front axle, with an adjust range of ±311 mm from the center point.

Once the centers of gravity have been located, the bodywork length can be selected according to the front edge and the load's appropriate center of gravity location. If the length is selected according to the center point between the centers of gravity, it is easier to stay within the permissible axle loads when loading the vehicle to the maximum permissible gross weight.

If the rearmost center of gravity is selected as the center point of the bodywork, a longer platform and more weight distributed on the rear axle are achieved.

Fig. 963020

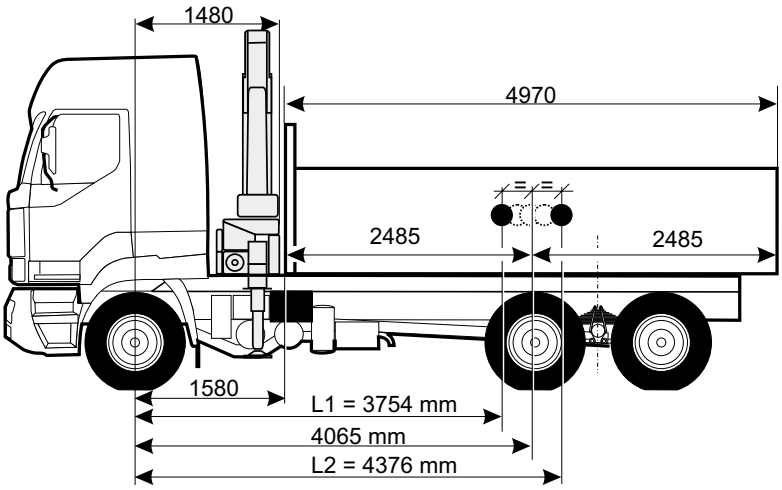

In this example, the permissible bodywork's and load's weights were calculated together. The payload is 15210 kg minus the weight of the bodywork.

If the bodywork length is 4.970 m and it weighs 400 kg/meter, the total weight of the bodywork is 400 x 4.97 = 1988 kg.

The payload is 15210 kg - 1988 kg = 13222 kg.

3.3.4.1 Selecting the bodywork length and location before weight calculation

If the bodywork is required to be longer than facilitated by its front edge location in the previous example, the load weight's center of gravity will be located away from the bodywork's center point. The length of the bodywork is selected before the calculation.

The bodywork is included in the axle load and loading capacity calculation.

Selected bodywork length: 5500 mm (extension 530 mm)

Weight: 400 kg x 5.5 = 2200 kg

The distance between the bodywork's center of gravity and front axle: 4330 mm (in the middle of the bodywork)

Weight on the rear axle: $\frac{\textit{Mass x disTance from the front axle}}{\textit{Wheelbase}} =$

$\frac{2200 \times 4330}{4735}$ 2012 kg to the rear axle 188 kg to the front axle

Enter the values in the table. The total load weight and distribution on the axles are provided.

Item	To front axle	To rear axle	Total
1. Chassis	4780	4460	9240
2. Crane	921	279	1200
3. Oil + pump	66	34	100
4. Subframe	81	169	250
5. Bodywork	188	2012	2200
6. Total	6036	6954	12990
Permissible axle loads and gross weight	9000	19000	26000
Difference, remains for the platform and load mass	2964	12046	13010

Calculate the distance between the load weight's center of gravity and front axle with the maximum permissible front axle load (a) and rear axle load (b):

a). $\frac{10046 \times 4735}{13010}$ 3656 mm b). $\frac{12046 \times 4735}{13010}$ 4384 mm

Fig. 963021

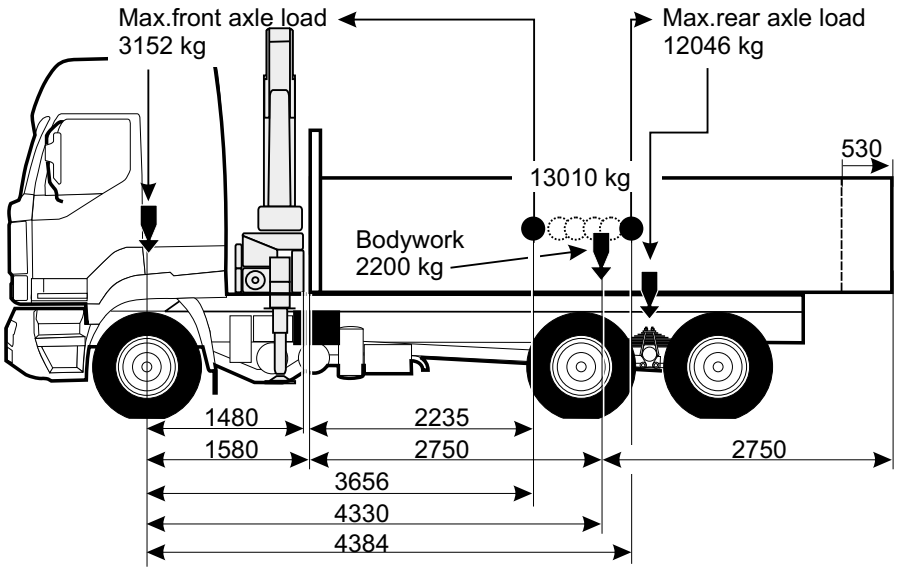

This reveals that the adjusting range for the load's center of gravity is longer than in the previous example.

The bodywork should include a marked area within which the load's center of gravity should be placed. This facilitates loading and insures the correct weight distribution on the rear and front axles. By using the marking, the loader could also transfer the weight e.g. to the rear axle in a controlled way, without exceeding the maximum permissible axle load.

https://truckmanualshub.com/

3.3.5. Mounting the crane

3.3.5.1 Web mounting

For maneuverability and durability, the best mounting method is to bolt the crane mounting brackets to the web of the frame.

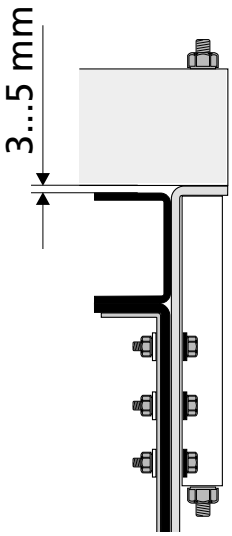

Fig. 963025

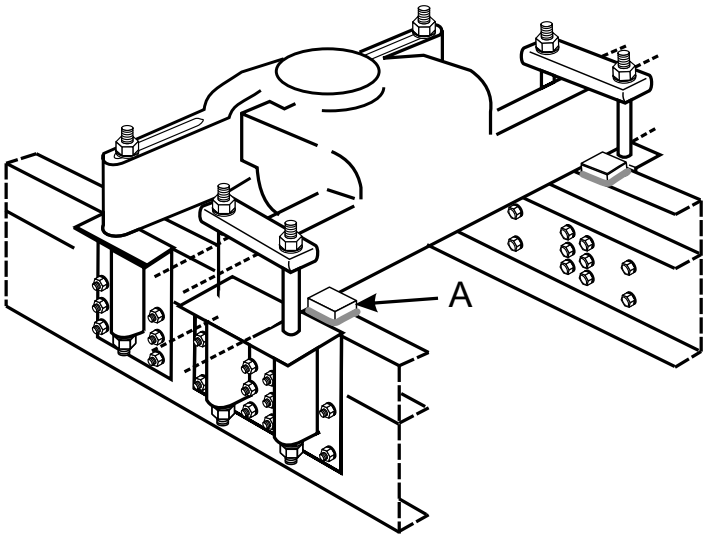

Fig. 963023

Crane mounting must be supported longitudinally by welding stoppers to the subframe upper flanges on both sides of the crane outrigger beam (see figure, item A).

Crane manufacturers deliver the mounting components.
Crane mounting brackets and their locations must be fitted according to the space available. Hence, welding the brackets and drilling the holes must be done when mounting the crane.
The number of mounting bolts used to attach the brackets to the web of the frame must be selected according to the load generated by the crane.

- When fitting the crane mounting brackets, take other frame-mounted equipment into account and use the provided mounting holes in the frame whenever possible.
- For a standard frame, fit the brackets so that the space between the subframe and crane is 3–5 mm (Fig. 963025), allowing the normal longitudinal movement of the subframe.
- Remove the paint from the bracket and frame mating surface.
- Drill the mounting holes simultaneously for M14 or M16 bolts (for detailed information on drilling, bolted joints and tightening torques, see section 02).

Crane mounting is dimensioned according to crane size. For large cranes, the frame and mounting location is strengthened and stiffened as required.

High-frame vehicles

For high-frame vehicles, it is recommended that the crane be mounted using web mounting.

Never mount a crane directly on the frame's upper flanges!

Between the crane and flange, either a space is required, or a wear plate or mounting reinforcement must be installed.

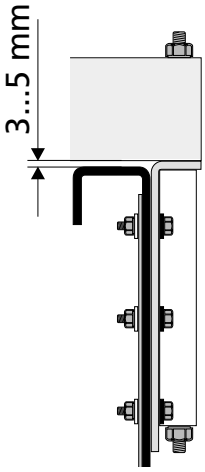

Fig. 963027

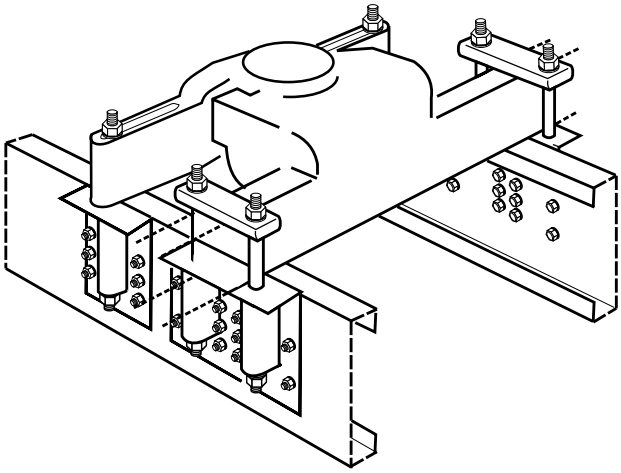

Fig. 963026

https://truckmanualshub.com/

3.3.5.2 Shackle mounting

Cranes are usually equipped for shackle mounting. Sisu does not recommend this mounting method, but it can be allowed if sufficient supports are installed between the frame and subframe flanges (see Fig. 963024, item X)

Fig. 963024

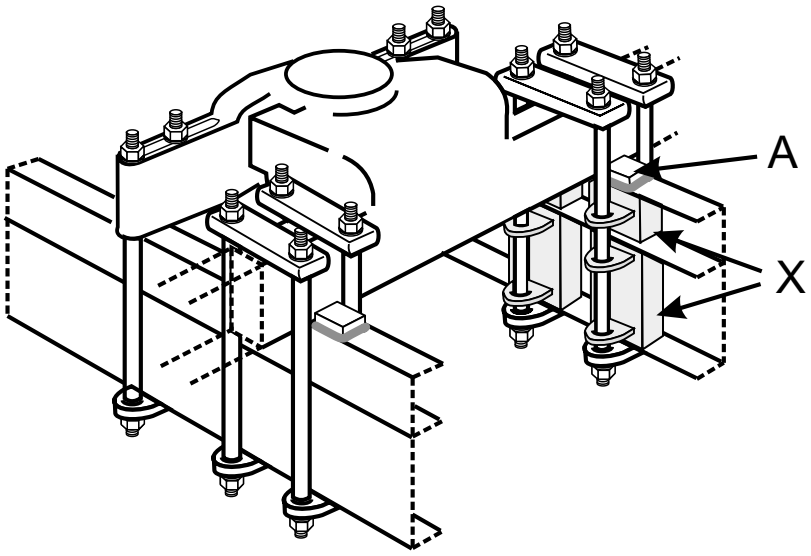

A = Stoppers. Longitudinal crane travel must be prevented with stoppers welded to the subframe upper flanges, on both sides of the crane outrigger beam.

Shackle mounting prevents the longitudinal movement of the subframe. This impairs maneuverability and stresses the frame structure.

High-frame vehicles

Shackle mounting is not recommended for high-frame vehicles either. However, it is allowed if sufficient supports are installed between the frame and subframe flanges (X).

For shackle mounting on high-frame vehicles, wear plates or reinforced mounting must always be used. Crane beams must not rest directly on the frame upper flanges.

Fig. 963028

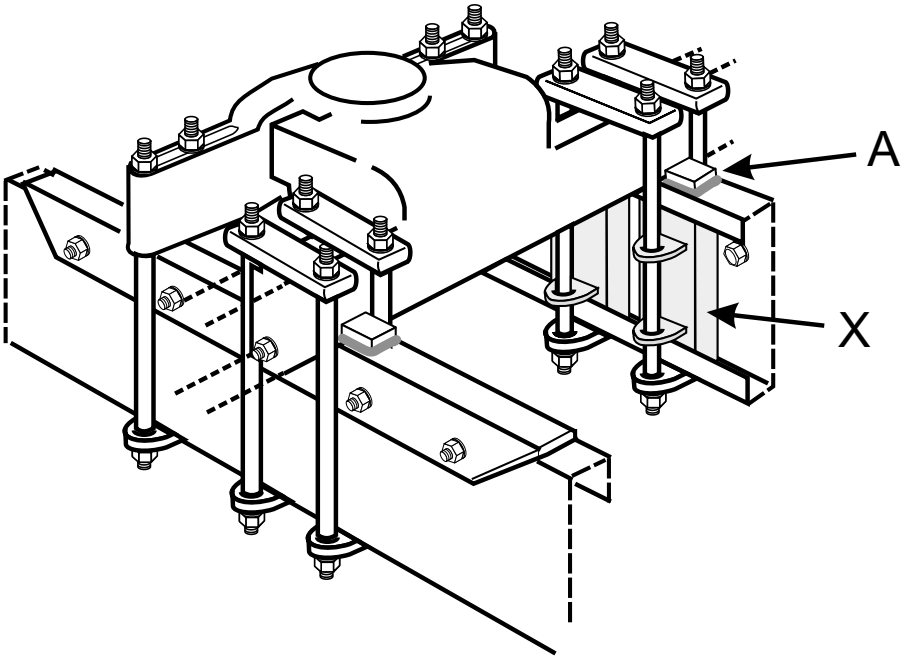

A = Stoppers. Longitudinal crane travel must be prevented with stoppers welded to the subframe upper flanges, on both sides of the crane outrigger beam (the figure shows stoppers welded to the wear plate).

X = flange supports

https://truckmanualshub.com/

3.3.5.3 Reinforcing the mounting

Depending on the intended purpose and operating conditions, reinforced mounting should be used for cranes of 20 tonne meters (Tm) onwards.

Standard frame

Reinforced crane mounting:

- The chassis frame, subframe and crane-mounting brackets are attached rigidly to each other.
- A mounting plate is a continuous plate that stiffens the frame.

Note!

Rigid mounting prevents the front subframe's longitudinal movement in relation to the chassis frame. This impairs the vehicle's maneuverability and must be taken into consideration, especially under poor road conditions (uneven road), by notably decreasing the vehicle speed.

Fig. 963029

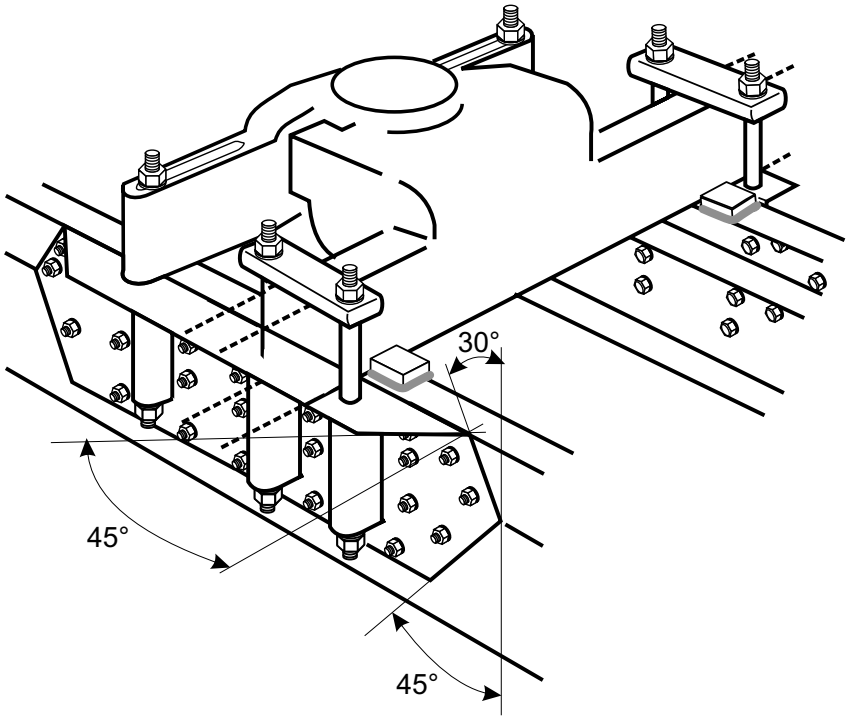

The mounting plate and/or reinforcement must be shaped so that no points of discontinuity are generated from the load acting on the chassis frame.

High frame

Depending on the intended purpose and operating conditions, reinforced mounting should be used for cranes of 28 tonne meters (Tm) onwards.

For vehicles with high frames, the web of the frame is reinforced with an L-reinforcement, or a continuous 8–10 mm steel plate of sufficient length is used as mounting plate.

The mounting plate and/or reinforcement must be shaped so that no points of discontinuity are generated from the load acting on the chassis frame.

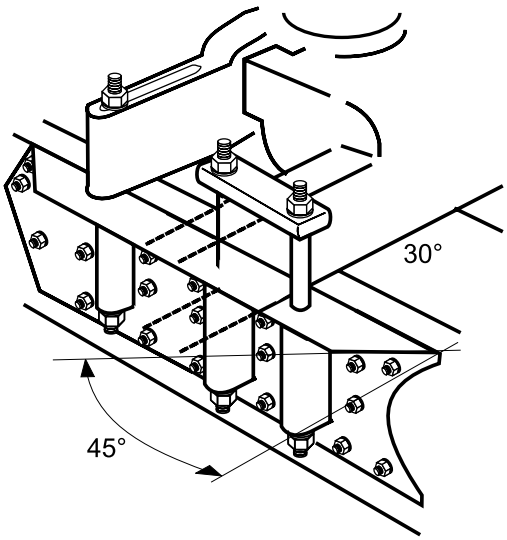

Fig. 963044

https://truckmanualshub.com/

3.3.5.4 Calculating the mounting

The stresses of the mounting elements are calculated using the total lift moment (Ma). The crane manufacturer provides the total lift moment value for the crane to be mounted.

Total lift moment (Ma) includes the moment of the load and boom assembly multiplied by the dynamic factor.

The lift force (Ft) that acts on the three-point support is calculated by dividing the total lift moment (Ma) by the distance between the tipping edge and three-point support mounting bolt (f):

$$Ft \quad \frac{Ma}{f}$$ Ma is usually given in kNm.

If the dimension f is in meters, the result is in kN. $Ft \quad \frac{kNm}{m} \quad kN$

The crane manufacturers usually also provide the lift force (Ft) for the crane's three-point support pivot point and the dimensions shown in the figure below (as well as for various mounting versions).

Fig. 963030

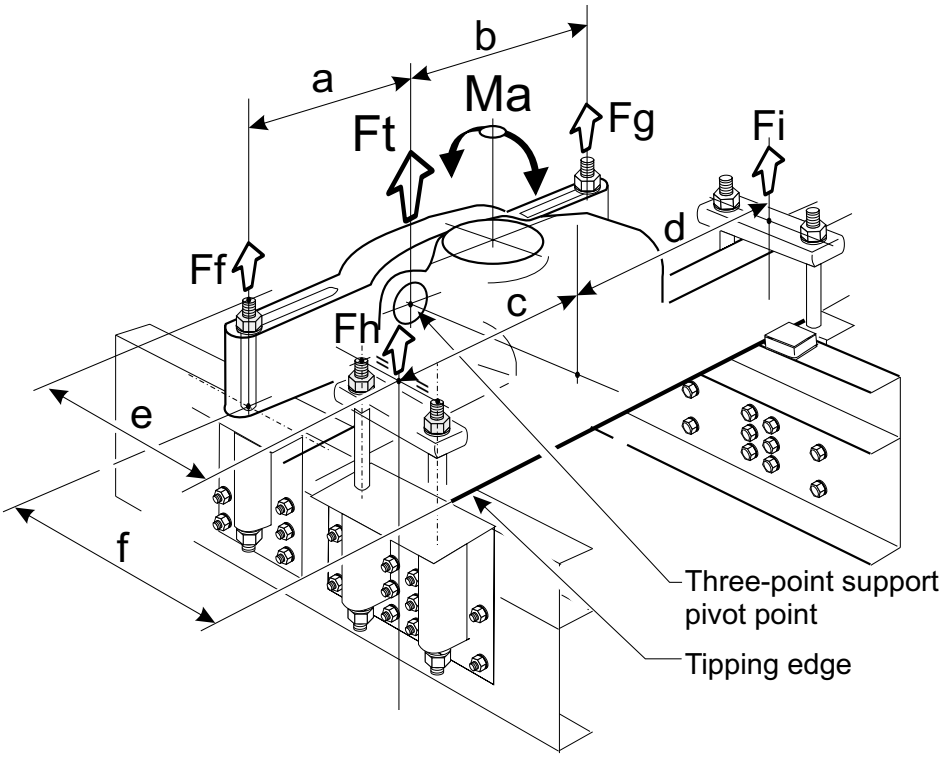

Using the data above, the forces acting on bearing points Ff/Fg/Fh/Fi are calculated. The mounting bolts and the number of bolts are selected based on these calculations.

Bearing point Ff:

If the three-point support mounting bolts are symmetrically in relation to the bearing point (Ft), i.e. a = b, the forces acting on the bearing points Ff and Fg are equal, i.e.:

$$Ff \quad Fg \quad \frac{Ft}{2}$$

If the dimensions a and b are not equal, the force acting on bearing point Ff is calculated using the equation:

$$Ff \quad \frac{Ft \ x \ b}{a \quad b}$$ Bearing point Fg is: $Fg \quad \frac{Ft \ x \ a}{a \quad b}$

Bearing point Fh:

$$Fh \quad \frac{Ma \ x \ \sqrt{e^2 \quad d^2}}{(c \quad d) \ x \ e}$$

Bearing point Fi:

$$Fi \quad \frac{Ma \ x \ \sqrt{e^2 \quad c^2}}{(c \quad d) \ x \ e}$$

https://truckmanualshub.com/

Examples of crane-mounting dimensions for calculation

Total lift moment (Ma) provided by the manufacturer; includes the moment of the load and boom assembly multiplied by the dynamic factor.
Do not mix up dimensions e and f .

Note!
Crane manufacturers may give dimension e as e^x, depending on whether the longitudinal distance between the bearing points is at the center point of the mounting bolts or e.g. bearing points Fh/Fi are in the middle of two mounting bolts (as in Fig. 963032).
However, dimension e used in the calculations is always the longitudinal distance between the bearing points.

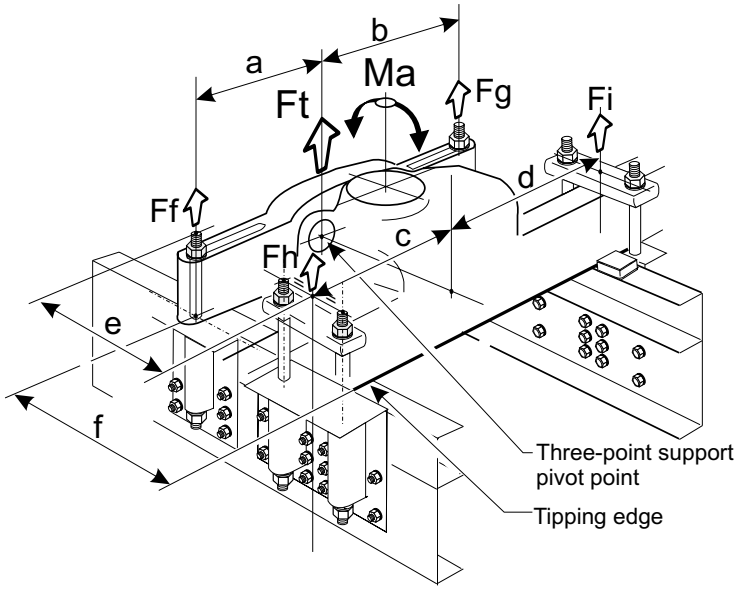

Fig. 963031

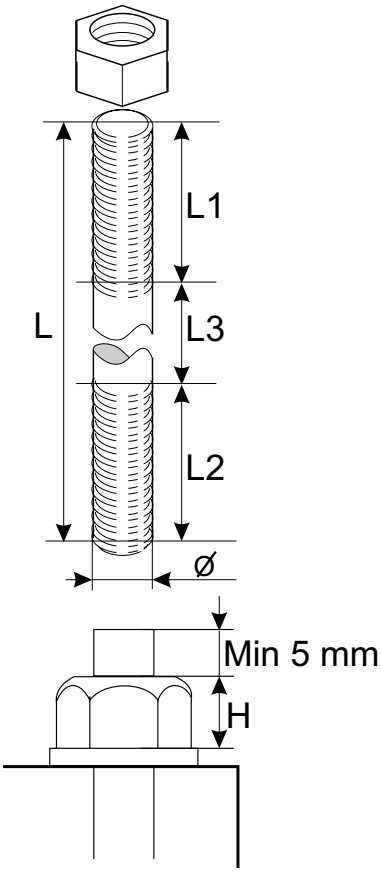

Fig. 963033

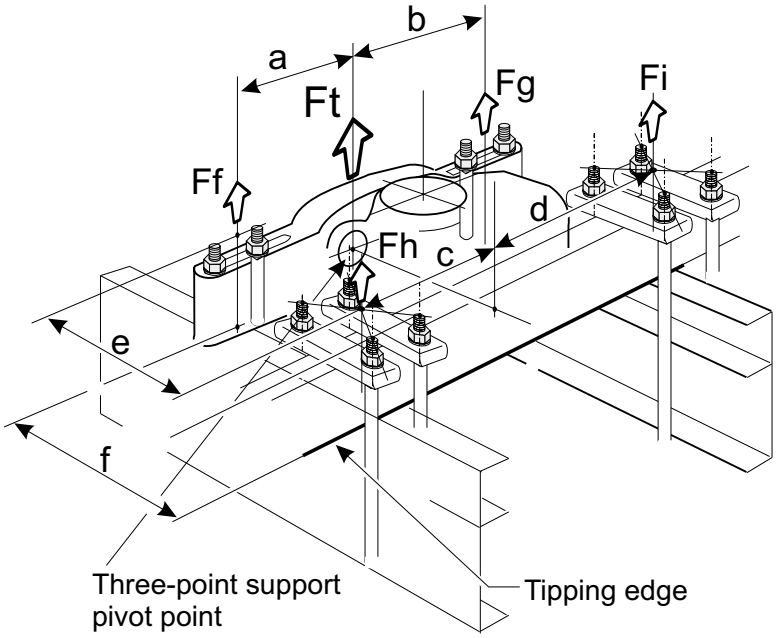

Fig. 963032

After calculating the forces acting on the bearing points, choose the appropriate mounting bolts/bearing point according to their number

Diameter and thread	Grade	Max. load/1 bolt	Tightening torque
7/8-9	10.9	138 kN = 13.8 t	930 Nm
1-8	10.9	181 kN = 18.1 t	1115 Nm
M 27	10.9	210 kN = 21.0 t	1370 Nm
M 30	10.9	259 kN = 25.9 t	1860 Nm
M36	10.9	378 kN = 37.8 t	3250 Nm

https://truckmanualshub.com/

Calculation example

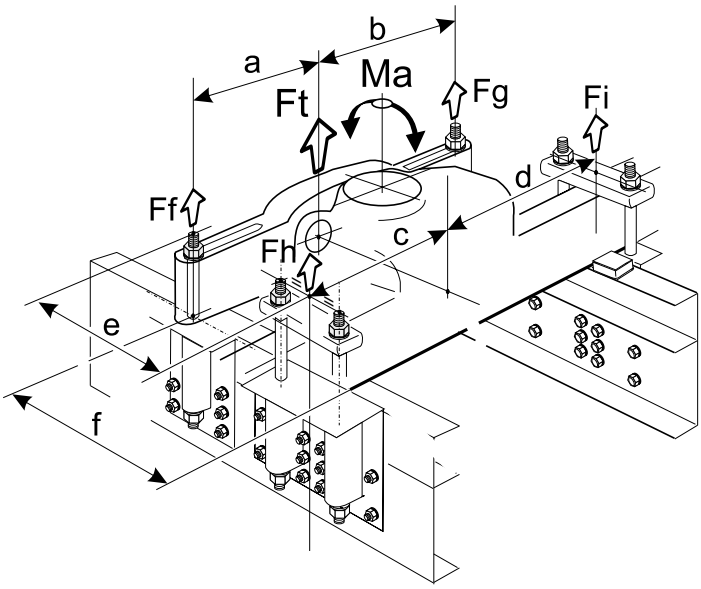

Fig. 963034

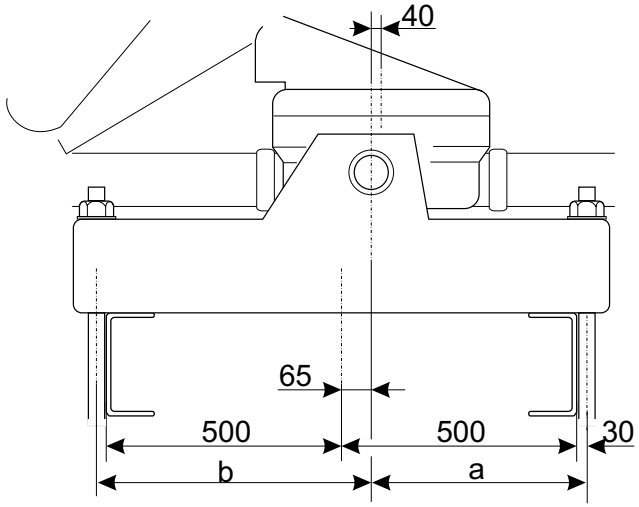

Fig. 963035

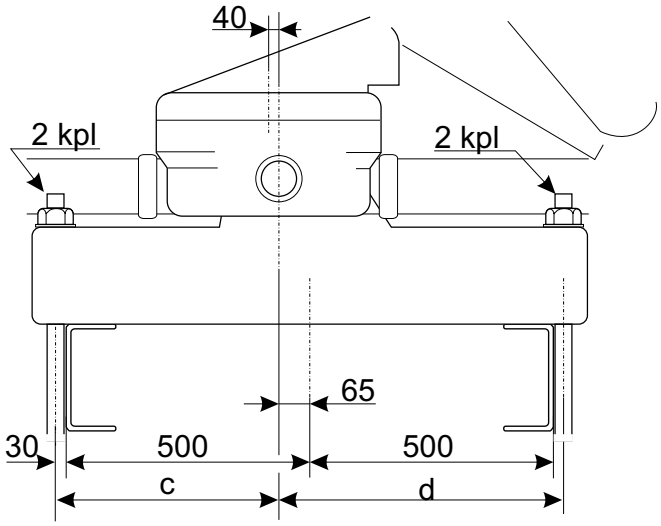

Fig. 963036

Mounting as shown in the figure.

Three-point support: Bolt mounting on the web of the frame with one bolt/side.

Outrigger beam: Bolt mounting on the web of the frame with one bolt/side.

Following values from the crane manufacturer:

Ma = 206.5 kNm = 206500 Nm

Ft = 330 kN

f = 630

e = 550 (Note! In this case dimension e is the distance measured from the three-point support mounting bolt to the middle of the outrigger beam mounting bolts. Some manufacturers give this dimension as e.g. e^x).

Frame width = 1000 mm

Three-point support pivot point: 65 mm, eccentric

Crane turning center: 105 mm, eccentric

Calculate the dimensions:

$$a = \frac{1000 \quad (2 \ x \ 30)}{2} \quad 65 \quad 465\,mm$$

$$b = \frac{1000 \quad (2 \ x \ 30)}{2} \quad 65 \quad 595\,mm$$

Since both the three-point support and outrigger beam are bolt-mounted to the web of the frame, distance c = a and distance d = b, distances c and d need not be calculated separately.

Calculate support forces:

$$Ff = \frac{330\,kN \ x \ 595\,mm}{465 \quad 595\ mm} \quad 185\ kN$$

$$Fg = \frac{330\,kN \ x \ 465\,mm}{465 \quad 595\,mm} \quad 145\,kN$$

Note! For the following calculations, convert the distances to meters.

$$Fh = \frac{206{,}5\,kNm \ x \ \sqrt{0{,}55^2 \quad 0{,}595\,m^2}}{(0{,}465 \quad 0{,}595\,m) \ x \ 0{,}550\,m} \quad 287\,kN$$

$$Fh = \frac{287\,kN}{2} \quad 144\,kN\,/\text{mounting bolt}$$

$$Fi = \frac{206{,}5\,kNm \ \sqrt{0{,}55^2 \quad 0{,}465\,m^2}}{(0{,}465 \quad 0{,}595\,m) \ x \ 0{,}55\,m} \quad 255\,kN$$

$$Fi = \frac{255\,kN}{2} \quad 128\,kN\,/\text{mounting bolt}$$

Note! The results are rounded up to the next integer kN value.

Select the mounting bolts whose maximum loads are not exceeded.

https://truckmanualshub.com/

3.3.6. Subframe and wear plate

General

A crane mounted behind the cab will generate high, point-torsional and bending loads on a short frame section from the front axle's rear- spring mounting bracket rearwards. In order to distribute the load evenly and optimize maneuverability and durability, it is crucial that the subframe or wear plate be constructed and mounted correctly.

Figure 963037 illustrates the distribution of bending moment on the chassis frame when the crane is mounted behind the cab.

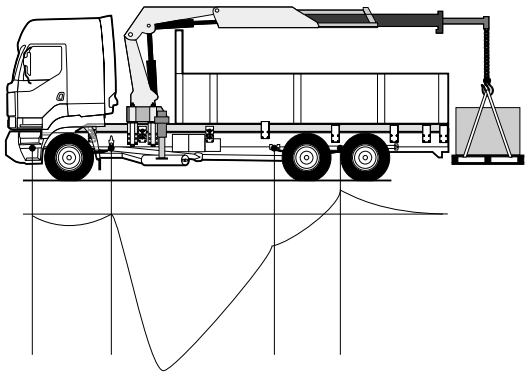

Fig. 963037

3.3.6.1 Subframe

The subframe is constructed according the principles presented in the general guidelines, section 02. When dimensioning the subframe, the additional loads generated by the crane and its operation must be taken into consideration.

Note!
Cross beams must be mounted on the subframe. Locate the beams under the frame, near its front and rear edge. The cross beams are constructed with an open U-section. Other cross beams according to the bodywork's requirements.

Examples: subframe beam dimensioning			
Frame/Crane		Subframe beam	
Frame	Max. crane size [tonne meters]	Min. bending resistance/ section [cm^3]	U-section corresponding the bending resistance
300 mm standard frame	–16	58	120 x 80 x 6
300 mm standard frame + long inner frame	16–20	71	120 x 80 x 8
	20–24	89	140 x 80 x 8
300 mm standard frame + long inner frame + reinforced mounting*	20–26	89	140 x 80 x 8
	24–28	107	160 x 80 x 8
	28–30	126	180 x 80 x 8
* Reinforced mounting: chassis frame is attached rigidly to the subframe and crane mounting brackets (see point 3.3.5.3 on page 139).			
400 mm special frame for heavy crane trucks w/ driving front axle + 2 inner frames**	Vehicles with this frame do not require a subframe. If an especially heavy crane is mounted, the frame is reinforced with L-reinforcements. The dimensioning and mounting of required reinforcements is done by the vehicle manufacturer at the factory. This frame is recommended for heavy crane trucks with a driving front axle.		
** A 400-mm special frame is recommended for all vehicles if a 40 Tm or heavier crane is to be installed. These vehicles are always equipped with a driving front axle and usually a front bogie.			
460 mm high C-frame	–28	No subframe required. If necessary, the frame is reinforced by dimensioning the wear plate so that it stiffens the frame.	
	28–	The frame is reinforced with L-reinforcements or a subframe. Their bending resistances must be calculated separately for each case.	

https://truckmanualshub.com/

3.3.6.2 Short subframe

The crane can be mounted on a short subframe that is for the crane only, **if there is no subframe under other bodywork structures**. If a subframe is used under the bodywork, the subframe must be extended to the front, according to the instructions on the subframe structures. Short subframes should be used in exceptional cases when it is not possible to mount the crane in any other way.

Fig. 963049

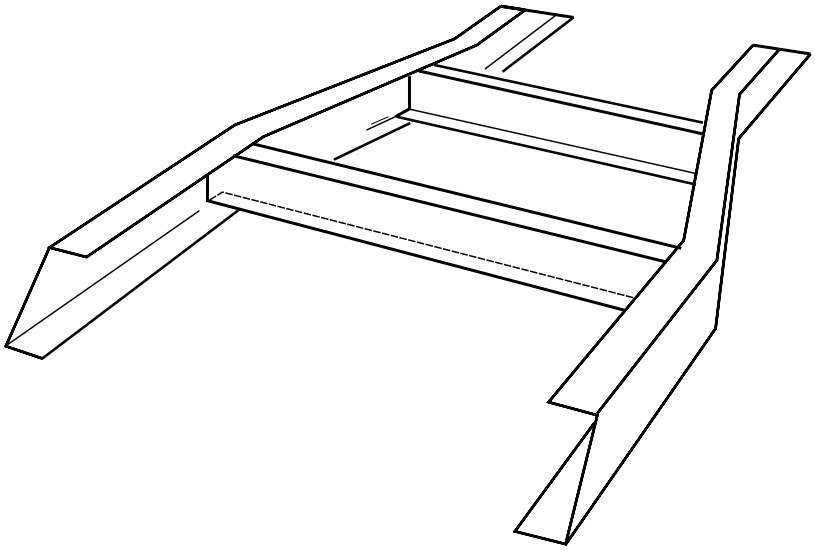

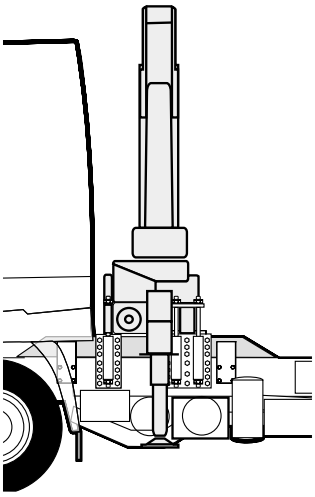

Fig. 963043

- Minimum material requirement for the subframe: S355 (Fe 52). However, RAEX 490 HSF is recommended.
- The short subframe is constructed to begin under the cab, similarly to the standard subframe. See section 02.
- The short subframe must exactly follow the shape of the chassis frame and rest on it along its total length.
- For 300 mm frames, a long inner frame must be used with the short subframe.
- The rear of the subframe is chamfered similarly to the front end.
- The subframe must have at least two cross beams (for cranes, near the crane's front and rear edge).
- Subframe cross beams are constructed with a U-section.
- The short subframe is mounted rigidly on the chassis frame.
- For crane mounting, crane mounting brackets are attached to both chassis frame and short subframe.
- Dimension the short subframe to be sufficiently strong for the crane in question.
- Attach the short subframe rigidly to the chassis frame with mounting plates.

https://truckmanualshub.com/

3.3.6.3 Wear plate

The wear plate is especially used in high-frame Sisu trucks.

In vehicles with a 300 mm standard frame, the wear plate can be used with light cranes or if the frame is sufficiently strengthened using other methods.

Fig. 963041

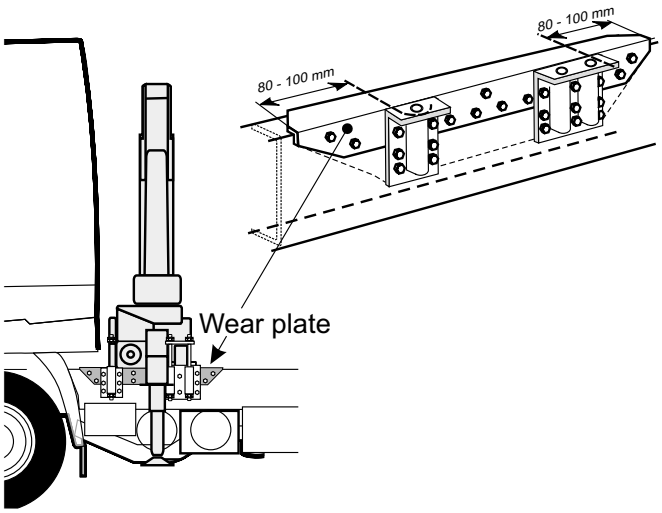

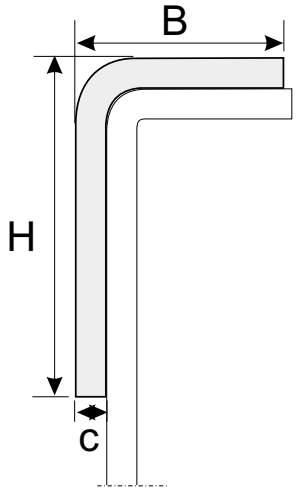

Fig. 963042

- A wear plate must always be used if the crane mounting beams would be directly on the upper flanges of the frame beams.
- Minimum material requirement for wear plates: Fe 52, cold-formed L-section.
- The thickness of the wear plate is 6–10 mm, depending on the purpose and other structures.
- The wear plate must be formed so that no significant points of discontinuity are generated by the load.
- Wear plates can also be used to strengthen the frame or mount by appropriate dimensioning and forming of the plates.
- If a wear plate has a positive strengthening effect on the frame, the plate is considered to be an L-reinforcement and it must begin as far to the front as a subframe (see section 02).
- The wear plate must be mounted according to the instructions on drilling holes and bolted joints given in section 02.

H [mm]	B [mm]	c [mm]	Bending resistance W vertical [cm^3]	
80	95	6	approx. 10 cm^3	This table presents attainable bending resistance values for various wear plates. Please note the following: If the bending resistance for a wear plate exceeds 30 cm^3, it is considered to be an L-reinforcement and its stiffening effect on the frame must be taken into consideration for the overall construction. In this case, its length rearwards from the crane must also be adapted separately for each case and formed so that no points of discontinuity are generated from the load acting on the chassis frame.
120	95	6	approx. 22 cm^3	
160	95	6	approx. 38 cm^3	
200	95	6	approx. 57 cm^3	
80	95	8	approx. 13 cm^3	
120	95	8	approx. 29 cm^3	
160	95	8	approx. 50 cm^3	
200	95	8	approx. 75 cm^3	
80	100	10	approx. 16 cm^3	
120	100	10	approx. 36 cm^3	
160	100	10	approx. 62 cm^3	
200	100	10	approx. 94 cm^3	

https://truckmanualshub.com/

3.3.7. Crane mounting: up to 24 tonne meters

3.3.7.1 Standard 300 mm frame, crane mounted on the wear plate

Only a light crane (under 12 Tm) can be mounted with a wear plate on a 300 mm frame. The wear plate must be dimensioned according to the crane and operating conditions. For instructions on wear-plate mounting, see point 3.3.6.3 on page 145.

3.3.7.2 Standard 300 mm frame and standard subframe

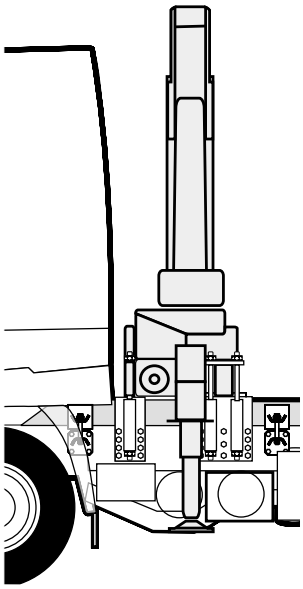

Fig. 963038

- The subframe required by other bodywork structures is used, but it is dimensioned according to the additional load generated by the crane. In other respects, the subframe is constructed according to the instructions given in section 02.
- The subframe is mounted according to the bodyworks's requirements, use flexible mounting brackets at the front of the subframe (cab side).
- The crane is attached to the web of the chassis frame and the crane must not prevent the longitudinal movement of the subframe's front section.
- For cranes 12 Tm and heavier, a long inner frame must be used.

If the subframe is required to stiffen the chassis frame behind the cab for the crane operation, it can be implemented e.g. by boxing the subframe's U-section along the length required for stiffening. The section modified into a rectangular hollow section must end smoothly, at an angle of at least 45 degrees (see Fig. 963040).

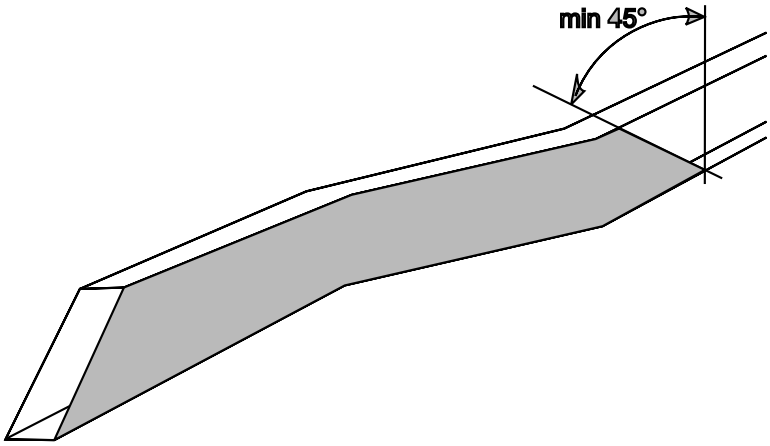

Fig. 963040

Even if the subframe is stiffened, the front subframe must be mounted on the chassis frame with flexible mounting brackets.

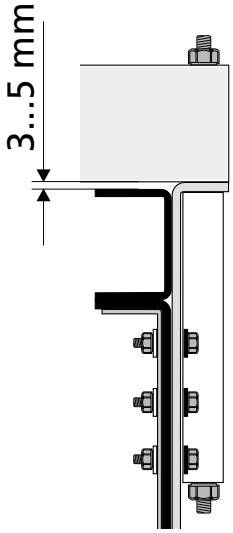

Fig. 963025

The gap between the subframe and crane mounting beams must be 3–5 mm, facilitating the longitudinal movement of the front subframe in relation to the chassis frame.

https://truckmanualshub.com/

3.3.7.3 Standard 300 mm frame, crane mounted on the short subframe

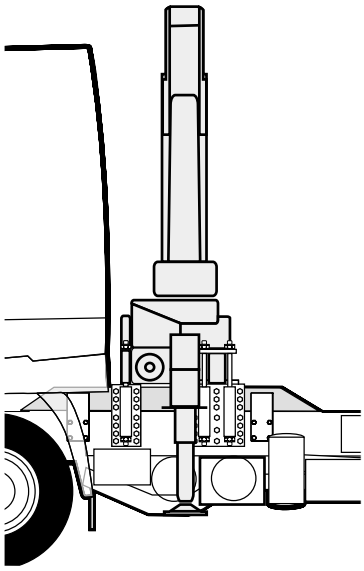

Fig. 963043

The crane can be mounted on a short subframe that is for the crane only, **if there is no subframe under other bodywork structures**. If a subframe is used under the bodywork, the crane is mounted on the web.

- The short subframe for the crane is constructed to begin under the cab, similarly to the standard subframe (see section 02).
- The rear of the subframe is chamfered similarly to the front end.
- The subframe must have at least two cross beams, near the crane's front and rear edges.
- The short subframe is mounted rigidly on the chassis frame.
- A long inner frame must be used with the short subframe.
- Crane mounting brackets are attached to both chassis frame and subframe.
- The crane can be mounted using shackles and stopper, but attaching it to the web of the frame is recommended.
- Insure that the subframe is sufficiently strong for the crane.
- Attach the short subframe rigidly to the chassis frame with mounting plates.

3.3.7.4 High C-frame, crane mounted on the wear plate

Since mounting a crane directly on the upper flanges of the frame beams is prohibited, the cranes in vehicles with high C-frames are mounted on wear plates using L-reinforcements, if necessary, or on a short subframe, or on a long subframe, depending on the crane size, bodywork, intended purpose and operating conditions.

In vehicles with a 460-mm high C-frame, cranes up to 28 tonne meters can usually be mounted on the wear plate.

However, cranes over 20 Tm require that the wear plate be dimensioned to strengthen the frame according to the crane size and operating conditions. Follow the instructions on wear plate mounting, point 3.3.6.3, page 145.

Fig. 963046

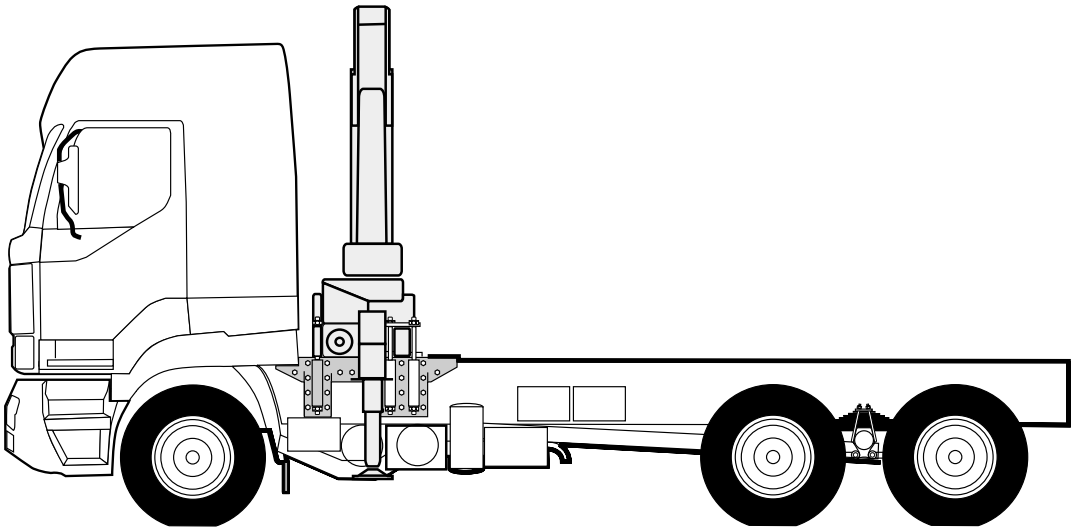

https://truckmanualshub.com/

3.3.8. Crane mounting: 24–32 tonne meters

Medium-heavy cranes

3.3.8.1 Standard 300 mm frame, subframe and reinforced mounting

- The chassis frame must always be equipped with a long inner frame.
- The subframe is dimensioned according to the crane, bodywork and operating conditions.
- Reinforced mounting is required for crane mounting, see page 139.

Fig. 963045

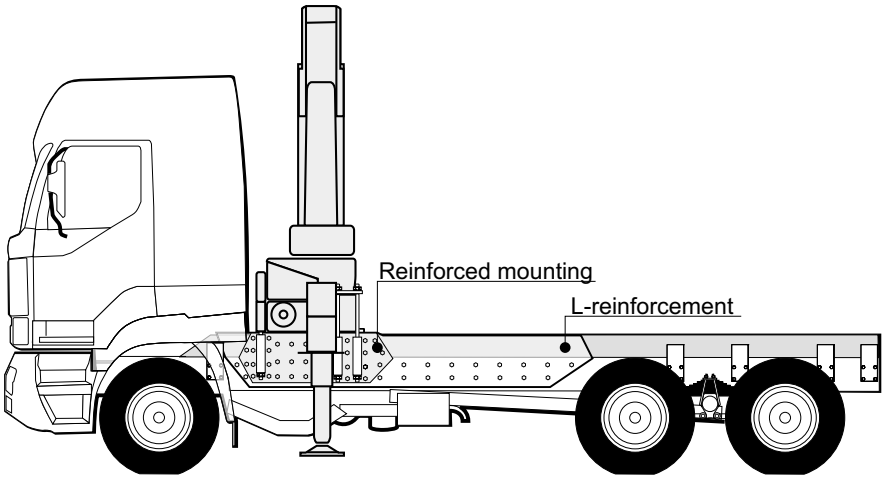

3.3.8.2 460 mm-high C-frame

The crane can be mounted using the L-reinforcement replacing the wear plate, on a short subframe for the crane only, or on a long subframe on which the other bodywork structures are mounted.

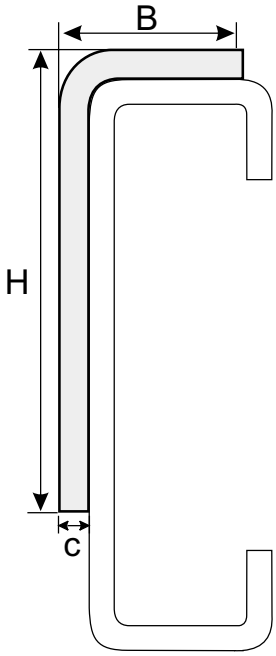

Fig. 963087

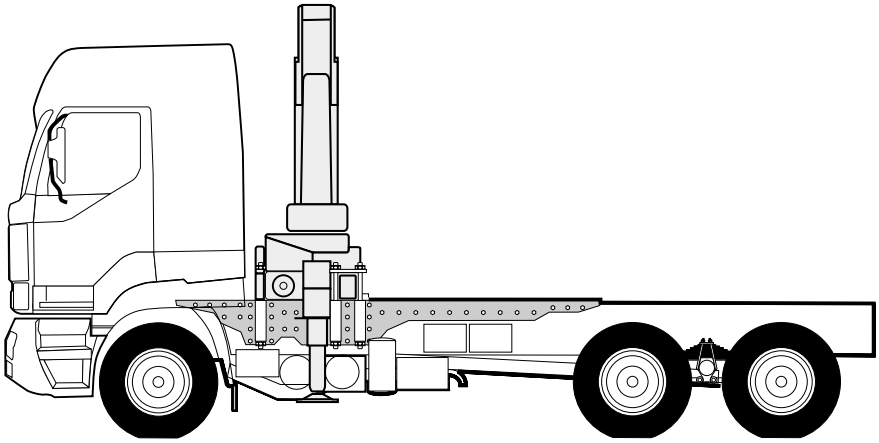

Fig. 963048

L-reinforcement is used if the lowest possible mounting is desired. The L-reinforcement must begin as far to the front as the standard subframe. The reinforcement must extend at least behind the rear axle spring's front bracket.

The structure of L-reinforcement is similar to a wear plate. However, the reinforcement is dimensioned to have a positive strengthening/stiffening effect on the chassis frame.

The L-reinforcement must be dimensioned to be adequate for the crane size and bodywork in question. It must be formed so that it does not generate significant points of discontinuity from the load acting on the chassis frame. To attaching other components, L-reinforcements usually need to be formed and holes will probably have to be drilled in the L-reinforcements.

https://truckmanualshub.com/

3.3.9. Crane mounting: heavy cranes over 30 tonne meters

3.3.9.1 Standard 300 mm frame and subframe

If a heavy crane is to be mounted, the 300 mm frame must always be equipped with a long inner frame.

When a heavy crane is mounted on a vehicle with a 300 mm frame, the subframe and its mounting must be constructed to be extremely rigid. Two examples of subframes constructed under a heavy crane are presented below.

However, the bodywork manufacturer must calculate the torsional stiffness required for the subframe separately for each case and construct the subframe according to the calculations.

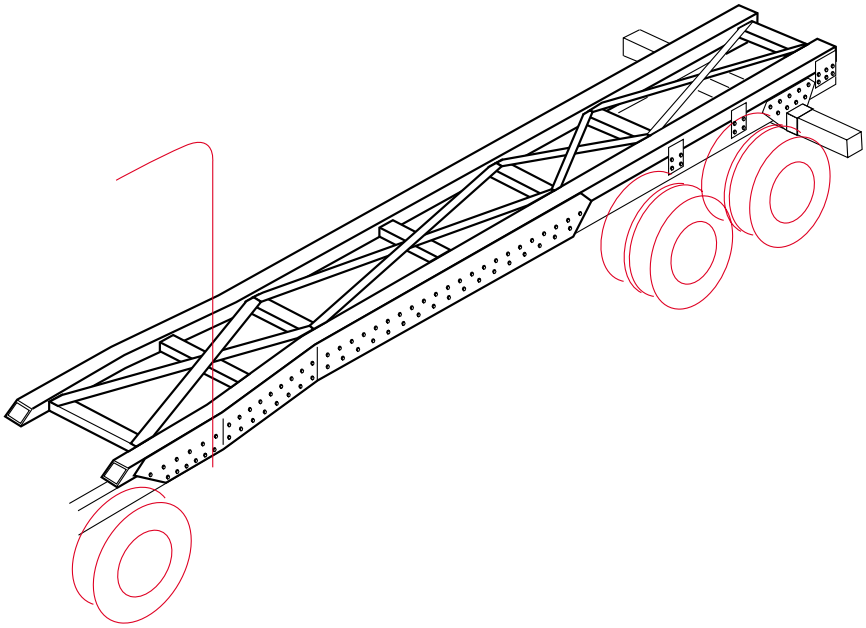

Fig. 963051

For 30–36 Tm cranes, the subframe beams can be constructed with e.g. a 150 x 200 x 10 rectangular hollow section, subframe's cross beams with e.g. a 200 x 80 x 8 U-section and the L-reinforcement material thickness can be e.g. 8–10 mm, depending on the bodywork, intended purpose and operating conditions.

The L-reinforcements must be constructed to extend from the front end of the subframe to at least 400 mm behind the rear axle spring's front bracket.

Since the heavy, 30 Tm and heavier cranes usually require two outrigger pairs, truss bracings must be constructed along the total length of the subframe.

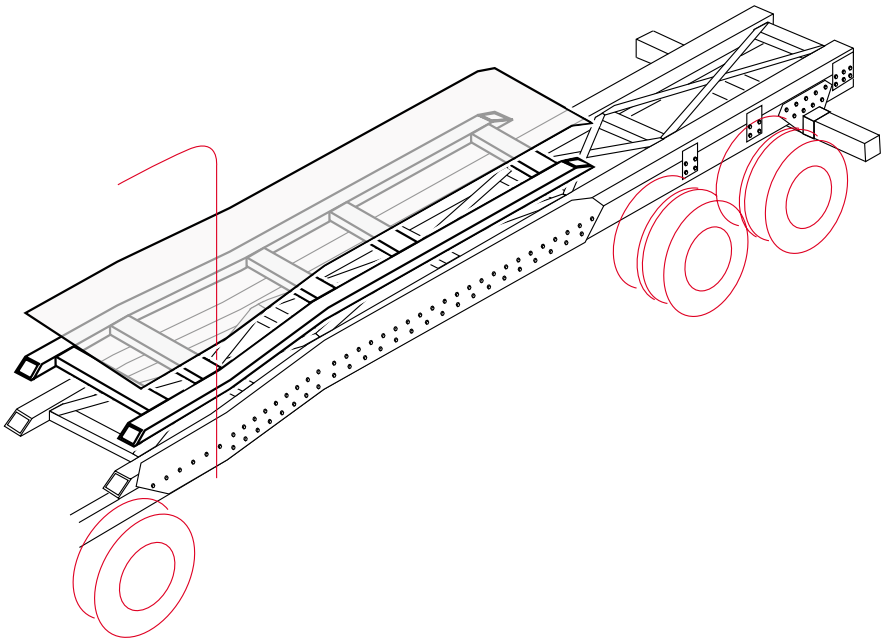

Fig. 963052

For even heavier cranes, a pair of rectangular hollow sections can be added to the subframe and add a 10–12 mm steel plate on this additional subframe construction. If required, another steel plate can be added between the rectangular hollow sections.

This additional subframe can be shorter than the subframe if the actual subframe is a full-length construction.

https://truckmanualshub.com/

3.3.9.2 High C-frame

In the following, a short description of various methods of mounting a heavy crane on a vehicle with a high C-frame is presented. By applying these instructions, the crane can be mounted correctly despite the intended purpose or operating conditions.

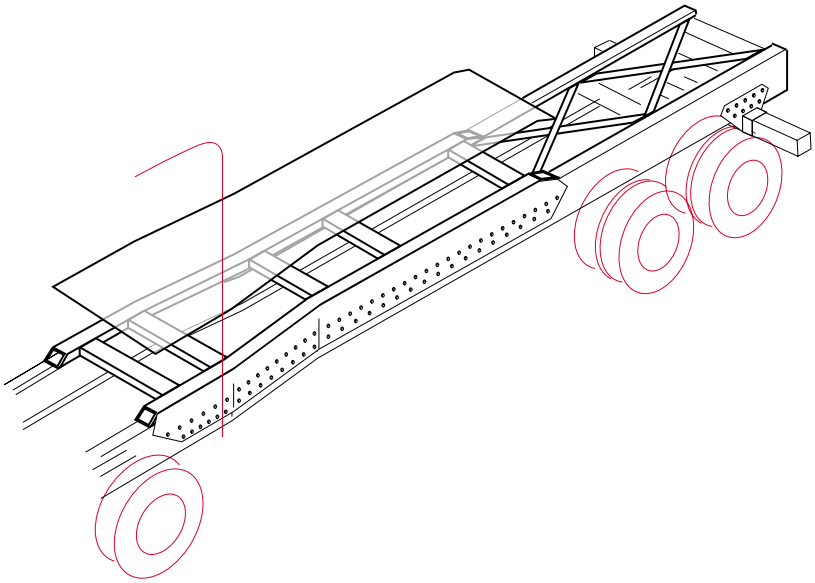

Fig. 963053

To mount 30 Tm or heavier cranes on vehicles with a high C-frame, use a sufficient L-reinforcement (or side plate reinforcement) and a partial subframe, or a subframe and an additional subframe with a top-mounted steel plate, if required.

The subframes (subframe, partial subrame, additional subframe) are constructed with U-section or rectangular hollow section, depending on the crane size.

With a correctly dimensioned steel plate, partial subframe and L-reinforcement, the structure shown in Fig. 963053 is sufficient for cranes up to 45–50 Tm.

A partial subframe must extend approximately 400 mm behind the first rear-axle spring's front bracket.

If an outrigger pair is to be installed at the rear, truss bracings must be constructed on the rear section of the chassis frame behind the partial subframe.

Note!

If outriggers are to be installed in front of the cab, the subframe must be sufficiently strong all the way to the front. In this case, we recommend the 400 mm special frame (see point 3.3.9.3, page 151) and a front bogie. Vehicles with 400 mm special frames are always equipped with a driving front axle.

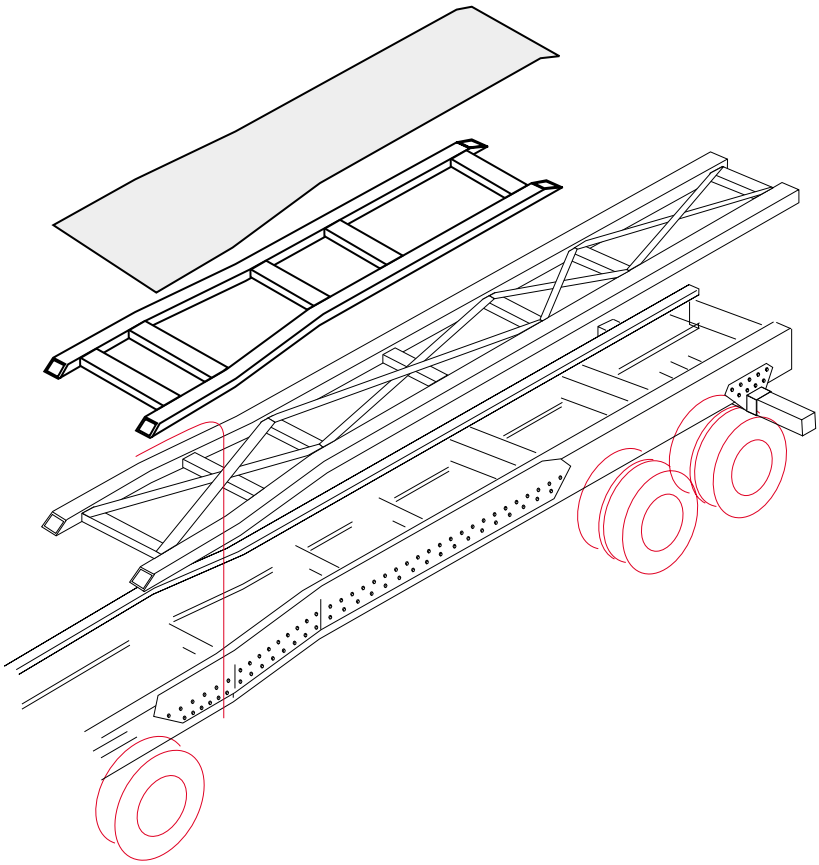

Fig. 963054

For cranes over 50 Tm, full-length subframes with truss bracings are recommended.

For especially heavy cranes, full or partial length subframes together with a top-mounted steel plate and L-reinforcement can be used, depending whether the bodywork is mounted on a full-length subframe.

Note!

When mounting a heavy crane, planning and strength calculation are especially important.

https://truckmanualshub.com/

3.3.9.3 400 mm special frame for crane trucks with a driving front axle

If a truck equipped with a heavy (40 Tm or higher) or especially heavy crane is required, we recommend that a vehicle with a Sisu 400 mm frame, front bogie and driving front axle be selected for this purpose.

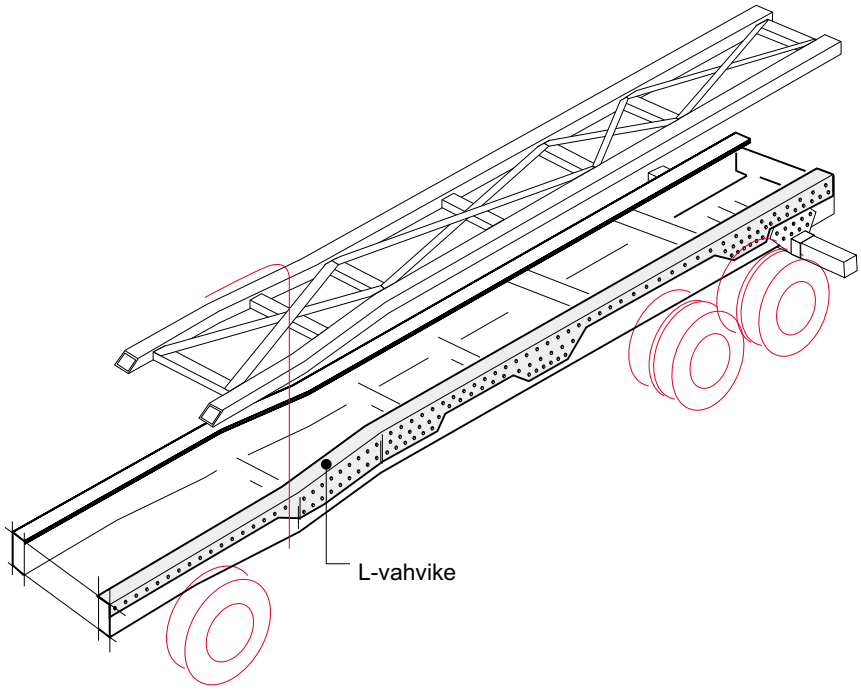

Fig. 963055

The 400 mm frame is especially designed for heavy cranes and is available with one or two inner frames. The vehicles with this frame are always equipped with a driving front axle and usually with a front bogie.

In addition, the chassis frame is delivered with an L-reinforcement designed and dimensioned for the crane in question and e.g. for the outrigger pair installed in front of the cab. If a subframe is still required, the dimensioning data for the subframe are provided.

Especially heavy above 55 tm crane, need always subframe.

By using this frame, bodywork construction costs are notably reduced, correctly calculated and constructed chassis frame/reinforcements are achieved and the time spent on bodywork construction is notably shortened.

3.3.10. Crane commissioning inspection

In order to evaluate the stability, a loading test is carried out during the crane commissioning inspection according to the machinery directive.

Loading test coefficients:

Static: 1.25 x load

Dynamic: 1.1 x load

https://truckmanualshub.com/

4. Additional devices, mounting between the axles

4.1. Heavy components attached to the frame

Heavy components, such as spare wheel racks, load-tying devices, Robson drives, hydraulic oil and fuel tanks, batteries, compressors, etc., generate high torsional forces on the frame.

In addition, the inertial force of heavy components (during acceleration, deceleration, turning, driving on uneven surfaces, etc.) generate continuous dynamic stress on the frame.

Mounting principles

Due to the reasons above, it is very important that heavy components be correctly attached to the frame. This prevents damage to the frame and insures maneuverability.

The components are attached correctly at the factory. If these components must be repositioned, they must be re-mounted according to the following principles:

- Always mount the components by bolting them to the webs of the frame beams. Be sure to dimension the bolted joints correctly.
- Never drill holes in the upper or lower flanges of the frame beams nor weld any objects to the frame beams.
- Construct the bolted joints and drill the required holes according to the instructions given in section 02.
- Locate the mounting points at the cross beam mounting points whenever possible.
- Dimension and shape the mounting brackets so that they withstand the loads.
- To distribute the dynamic forces and prevent fatigue failures, use sufficient triangular and cross bracings in mounting (see Fig 963066).
- Try to get the component's center of gravity as close to the web of the frame as possible.
- If the component generates over 500 Nm of torsional moment at the mounting point, the mounting point must be reinforced with a 6–8 mm-thick plate fitted inside the frame. If the vehicle is equipped with an inner frame, this plate is not required.
- If the component generates over 1000 Nm of torsional moment, the mounting point must always be located at the cross beam mounting points or supported with a new cross beam.
- Position the component so that it will not fray other vehicle components, e.g. pneumatic hoses/pipes, hydraulic pipes, electric wiring, steering or suspension components, etc.
- If the component is a machine or a machine unit, the installer or manufacturer must issue the declaration of conformity and attach the CE mark. The installer of the component is responsible for issuing the appropriate declarations of conformity and attaching the CE mark.
- Components attached to the frame must not prevent or excessively impair the vehicle's servicing procedures.

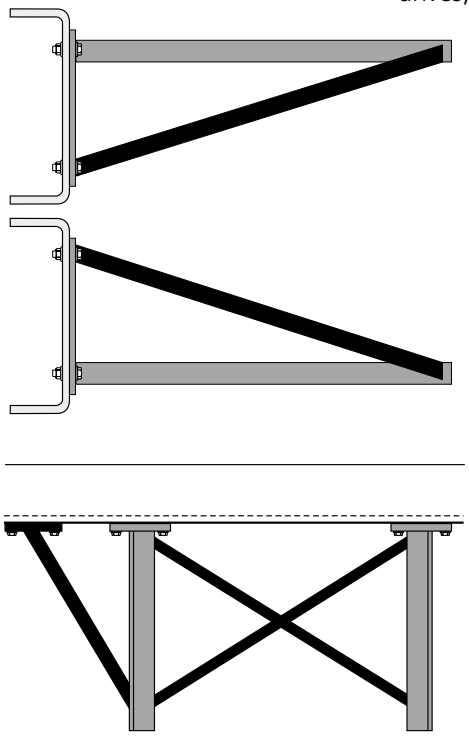

Fig. 963066

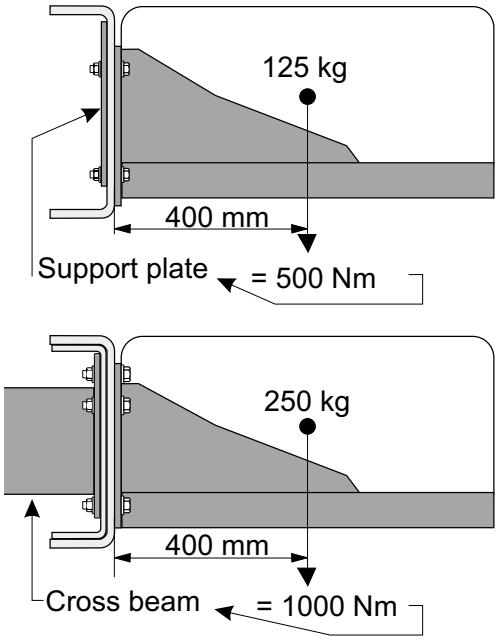

Fig. 963067

https://truckmanualshub.com/

4.2. Belly blade

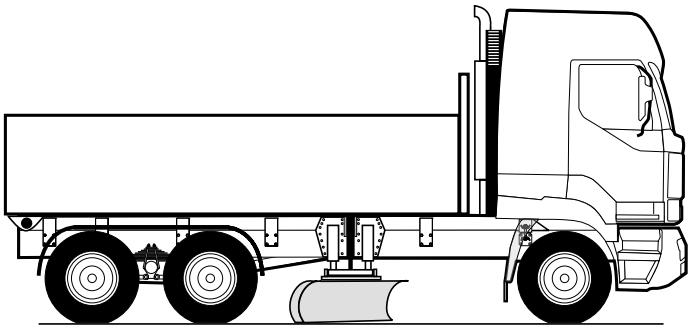

Fig. 963069

A belly blade is a bodywork structure used on road maintenance trucks or trucks performing road maintenance duties along with other driving tasks. The belly blade is mounted between the vehicle's front and rear axles, under the frame, and it is controlled hydraulically (lifting/lowering/turning). In addition, a side plow can be attached to the belly blade.

Fig. 963068

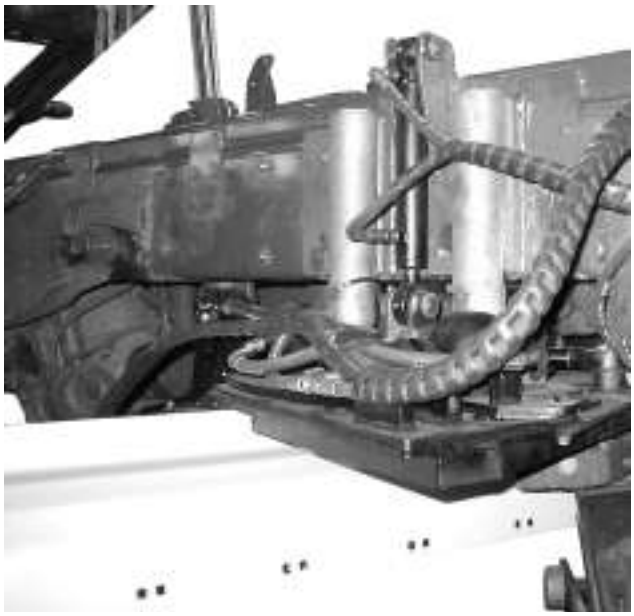

Fig. 963070

Notes for belly-blade mounting:

- If a belly blade is to be mounted on a new vehicle, the dealer should mention the belly blade when ordering the vehicle.
- The vehicle must be equipped with a full-length inner frame.
- Vertical exhaust pipe option must be selected.
- "Lifted" fuel tank option must be selected.
- Pneumatic tanks are mounted above the lower flange of the frame.
- The wheelbase must be sufficient for the desired turning angle of the belly blade (enough space to turn the belly blade to the desired angle in relation to the direction of travel).
- The subframe must be dimensioned to withstand the loads generated by the belly blade and other bodywork structures.
- The belly blade is attached rigidly with bolted joints both to the web of the chassis frame and the web of the subframe.
- In high-frame vehicles, the belly blade can be attached to the web of the chassis frame only, depending on other bodywork structures and load.
- The mounting brackets for the belly blade must be shaped so that they do not generate point of discontinuity from the load acting on the chassis frame or subframe.
- The first subframe mounting bracket is flexible. Otherwise, the subframe is attached rigidly to the chassis frame with the belly blade mounting brackets and mounting plates.
- Follow the belly-blade manufacturer's mounting instructions.

The belly blade is a machine unit, and must be delivered with a declaration of conformity, (Annex II, point B), issued by the manufacturer.

The belly blade's installer must issue the declaration of conformity, (Annex II, point A) and attach the CE mark (see section 01).

https://truckmanualshub.com/

5. Additional devices, mounting between rear axles

5.1. Robson drive

The Robson drive is a device installed between the rear axles. If a Robson drive is retrofitted by the bodywork manufacturer, it is regarded as machine: an issued declaration of conformity and attached CE mark are required (a Robson drive installed by the vehicle manufacturer is vehicle component and does not require a separate declaration of conformity).

Follow the Robson drive manufacturer's mounting instructions!

Fig. 963071

Robson drive delivery includes a cross beam designed only for transporting new vehicles (Fig. 963071, marked X). For the final structure, this beam must be replaced with a cross beam constructed with minimum material requirements of 100 x 80 x 5 rectangular hollow section and 12 mm thick end flanges (see Fig. 963075) .

The diameter of a Robson drive's roll depends on the tire size. Insure that the roll size is correct!

5.1.1. 300 mm chassis frame

In a 300 mm chassis frame, the Robson drive is attached to the chassis frame and subframe.

Since the Robson drive is subjected to extremely high dynamic forces, the mounting must be constructed to be as strong as possible!
In addition, the subframe and its mounting on the chassis frame must be constructed to be sufficiently strong at the Robson drive area.

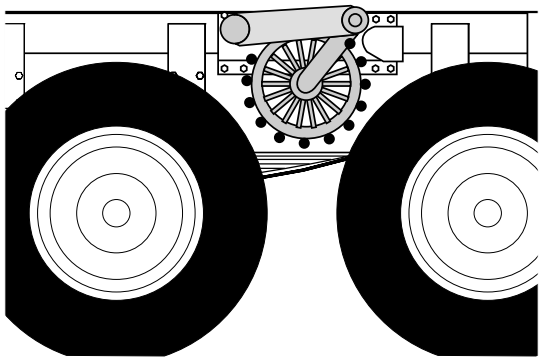

Fig. 963074

A Robson drive ordered for a **300 mm frame** is mounted on the chassis frame by the vehicle manufacturer, but the bodywork manufacturer must construct the mounting on the subframe.

A subframe cross beam must be located at the Robson drive's main axle (Fig. 963075).

Minimum material requirements for the cross beam: 100 x 80 x 5 rectangular hollow section, end flanges 12 mm plate.

The cross beam is attached to the subframe and Robson drive with **M14 (Grade 12.9)** bolts.

In addition, a chassis frame cross beam must be located at the Robson drive's main axle.

https://truckmanualshub.com/

Minimum material requirements for Robson drives: **130 x 75 x 8**, recommended **RAEX 490 HSF** or minimum **RAEX 355 HSF.** The subframe must be attached to the chassis frame directly on the front and rear of the Robson drive with sufficiently strong mounting plates
(s = min. 10 mm).

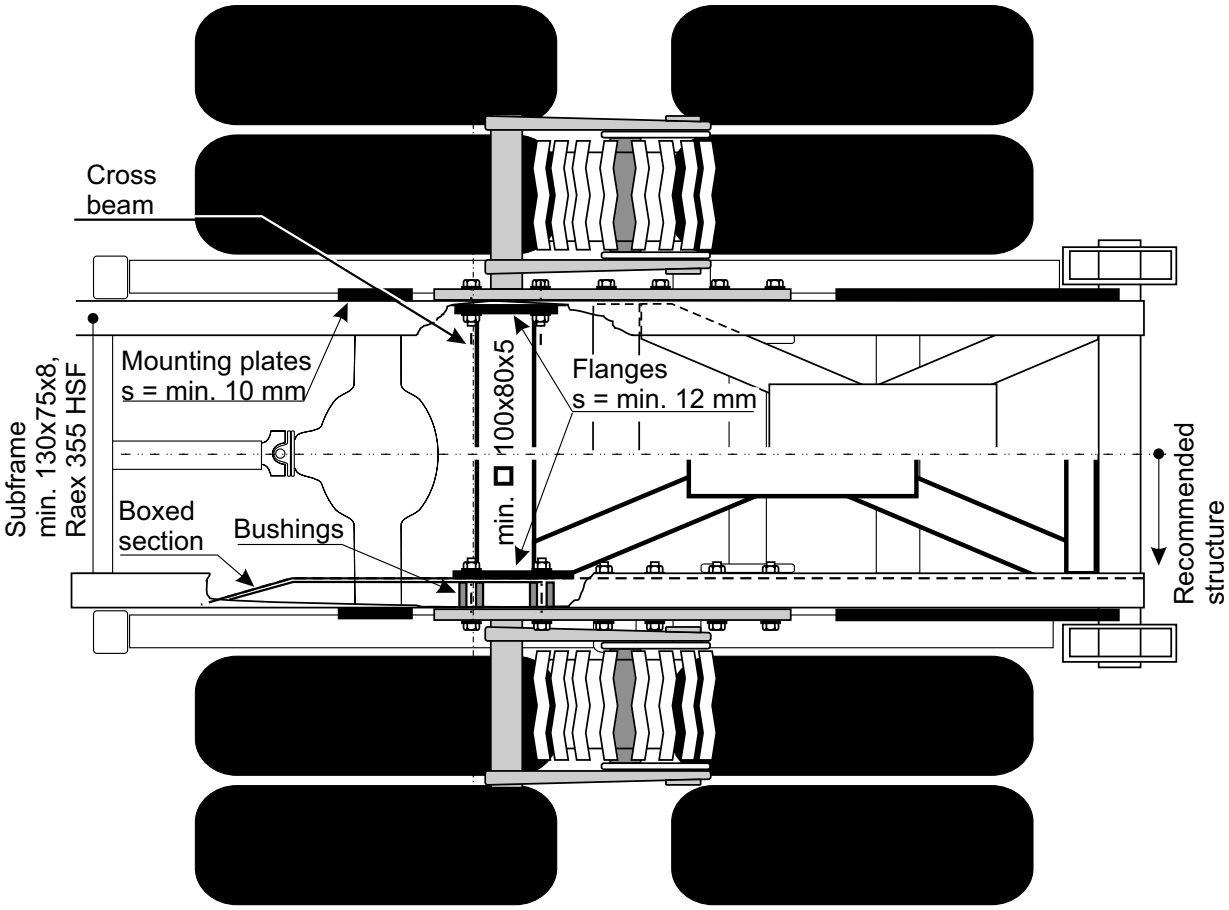

Fig. 963075

It is recommended that the rear of the subframe be boxed from the rear of the subframe to the front of the Robson drive. For tipping duties, the truss bracing must be sufficiently strong and extend from the tipping axle preferably up to the Robson drive's main axle, but at least up to the bogie centerline.

With a boxed subframe, robust bushings must be welded to the mounting holes inside the boxed section. This prevents the boxed section from collapsing.

If the main axle of the Robson drive goes through the frame (intermediate main axle), the subframe cross beam will not be installed. The intermediate main axle must be led through the subframe and welded to the subframe according to the Robson drive manufacturer's instructions.

5.1.2. 460 mm chassis frame

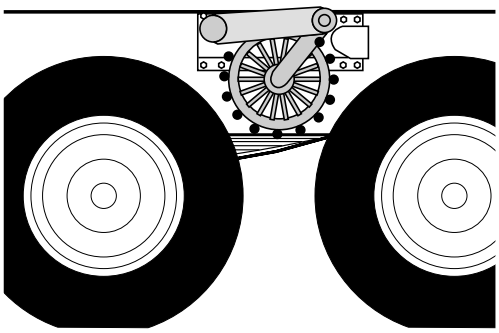

Fig. 963094

In a 460 mm chassis frame, the Robson drive is attached to the chassis frame only. Two cross beams are mounted on the frame at the Robson drive's main axle. The cross beam mounting bolts at the Robson drive's main axle are used to mount the Robson drive frame. The original bolts must be replaced with sufficiently long, Grade 12.9 bolts.

Part numbers for cross beams:

Upper: 101-191-0200

Lower: 101-191-0110

https://truckmanualshub.com/

6. Additional devices, mounting behind the rear axles

6.1. Tail lift

During lifting, the tail lift generates bending and torsional forces on the rear overhang of the frame. Strengthening the frame must be defined separately for each case with regard to lift capacity, rear overhang length and bodywork type. The bodywork usually strengthens the frame sufficiently for tail lift.

6.1.1. Mounting

Strengthening the frame is not required under the following conditions:

- Rear overhang in 4 x 2 vehicles is 3000 mm or less.
- Rear overhang in 6 x 2 vehicles is 4000 mm or less.

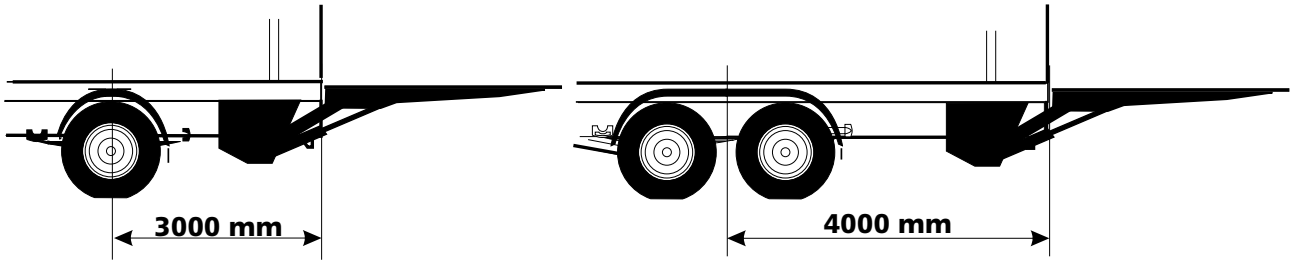

Fig. 963030

- Lift capacity of the tail lift is 2000 kg or less.
- The cargo space and subframe are dimensioned and mounted according to the instructions given in this manual.
- Original rigid Sisu cross-beam or trailer-coupling mounting beam at the end of the chassis frame.

Fig. 963076

Fig. 963077

Other issues to be noted:

- At the rear overhang area, the cargo space must be mounted to the chassis frame with rigid mounting brackets.
- It is recommended that the cargo space be mounted utilizing the hole groups provided in the frame.
- The tail lift is bolted to the webs of the chassis frame's longitudinal beams by following both this manual's and the tail-lift manufacturer's instructions.
- If required, a tail lift with high lift capacity must be equipped with separate outriggers.
- When constructing the cargo space, the tail lift's effect on e.g. the stiffness of the rear frame must be taken into consideration.
- When dimensioning the vehicle, the increased weight on the rear axle due to the tail lift must be taken into consideration.
- The tail lift must be mounted according to EU directives, and the installer must issue the declaration of conformity and attach the CE mark.
- Check that the alternator output is sufficient for the tail-lift operation.

☛ **In all respects, the tail lift must be mounted according to the tail-lift manufacturer's instructions, appropriate regulations given by the authorities and the frame-mounting instructions given in the general guidelines.**

https://truckmanualshub.com/

6.2. Rear-mounted cranes and loaders

General

A rear-mounted crane or loader generates high torsional and bending stresses on the rear section of the frame, especially during loading or unloading, but also during driving when the loader is mounted on the vehicle.

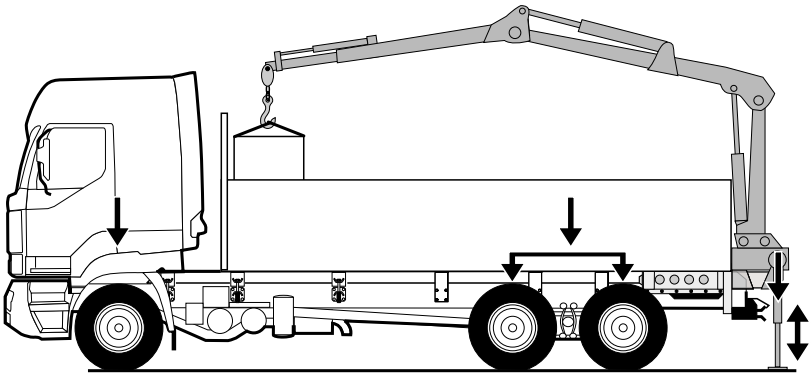

Fig. 963081

During driving, the suspension movement of the rear overhang bends the frame mainly when the vehicle is unloaded.

Long rear overhang increases the bending moment acting on the frame. Hence, the rear overhang must be constructed as short as possible and sufficiently rigid in order to prevent damages to the frame and/or subframe.

The rear axle mounting points are under the highest load.

When loading and unloading, the load must be distributed between the outriggers, rear axle assembly and front axle assembly. An essential factor for distributing the load correctly is the height of the outriggers.

Since the frame moves vertically during loading, load distribution varies significantly unless the height of the outriggers is adjusted according to the movement.

For subframe mounting, the rear overhang area of the subframe must be appropriately stiffened.

A 300 mm frame must always be equipped with a long inner frame and a subframe.

When no subframe is used in a high-frame (460 mm) vehicle, the rear overhang of the chassis frame must be stiffened with a diagonal support.

A rear mounting kit (sheath saddle) is usually attached to the rear frame, facilitating loader mounting and dismounting.

Fig. 963083

Fig. 963082

A Correctly constructed and mounted sheath saddle sufficiently stiffens the rear overhang area.

Read **Crane, point 3.3.**, from page 128 onwards; stability, roll axes, axle loads, load capacity, etc.! Adapt the information to a rear-mounted crane. If the crane is mounted with fixed mounting, adapt the instructions on mounting the crane behind the cab.

In the following, items regarding rear-mounted cranes in particular are presented.

https://truckmanualshub.com/

6.2.1. Roll axes: rear-mounted crane

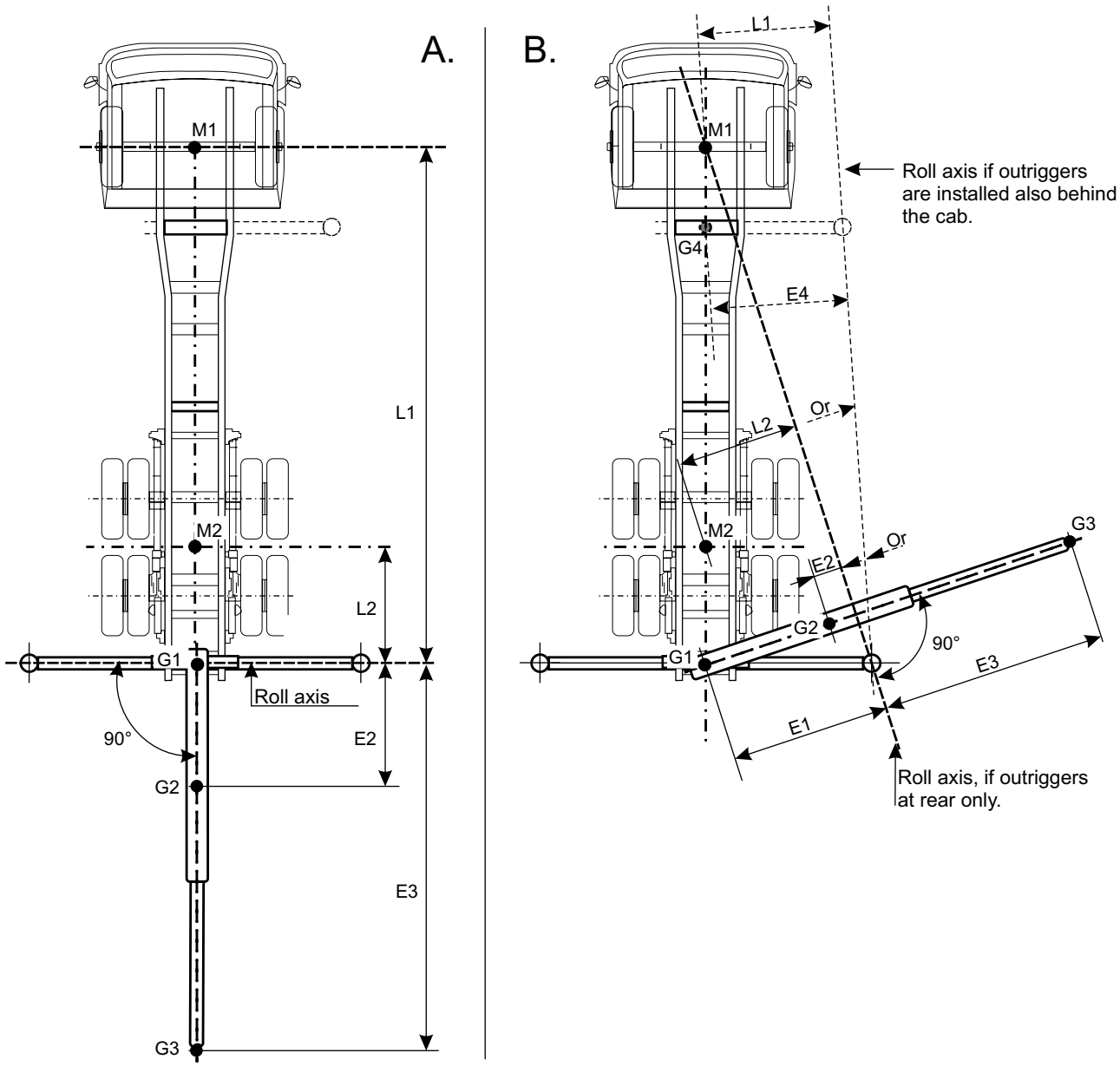

Fig. 963078

A. The roll axis is at the centerline of the crane's bearing point. In this case, weight G1 will not be included in the calculation. Stability factor (n) is:

$$n \quad \frac{M1 \times L1 \quad M2 \times L2}{G2 \times E2 \quad G3 \times E3}$$

B. If outriggers are not installed behind the cab, the roll axis goes through the center point of the front axle. In this case, front axle load will not be included in the calculation.

$$n \quad \frac{M2 \times L2 \quad G1 \times E1 \quad G2 \times E2}{G3 \times E3}$$

If an outrigger pair is also installed behind the cab, the roll axis goes through the outriggers. In this case, front axle load is stabilizing moment and will be included in the calculation.

$$n \quad \frac{M1 \times L1 \quad M2 \times L2 \quad G1 \times E1 \quad G2 \times E2 \quad G4 \times E4}{G3 \times E3}$$

(G4 is the weight of the outrigger pair installed behind the cab).

https://truckmanualshub.com/

6.2.2. Axle loads and loading capacity with a rear-mounted crane

6.2.2.1 Axle loads

Initial situation illustrated in Fig 963085.

Fig. 963085

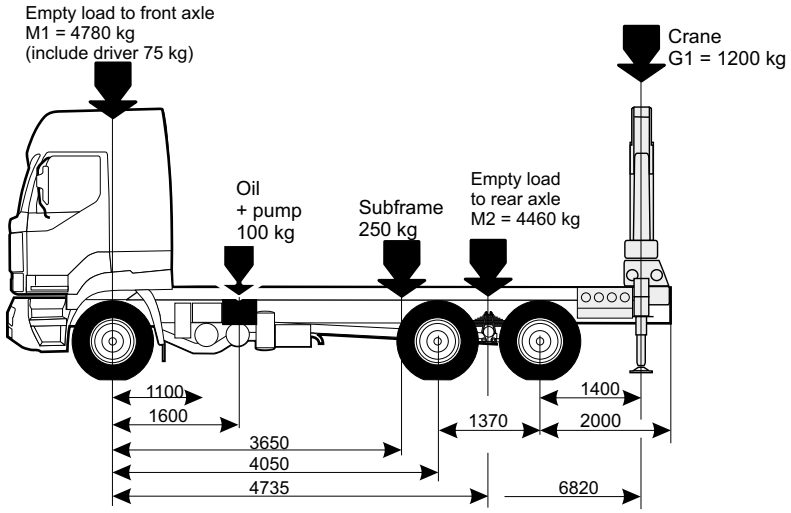

Maximum permissible weight on the front axle is 9000 kg (structural, depending on tires, selected springs and axle).

Maximum permissible weight on the rear axle assembly is 19000 kg (by the authorities), see section 01.

Gross weight is 26000 kg (by the authorities), see section 01.

Enter the values in a table, e.g.:

Item	Front axle	Rear axle	Total
1. Chassis	4780	4460	9240
2. Crane	?	?	1200
3. Oil + pump	?	?	100
4. Subframe	?	?	240
5. Total	?	?	10780
6. Permissible axle loads and gross weight	9000	19000	26000
Difference, remains for the platform and load mass			15220

Calculate the mass on the rear axle generated by the crane:

$$\frac{\textit{Crane weight x disTance from the front axle}}{\textit{Wheelbase}} \quad \frac{1200\,kg \times 6820}{4735} \quad 1728\,kg$$

The crane generates 1728 kg of weight on the rear axle. Since the weight on the rear axle is higher than the crane's weight, the weight is transferred from the front axle to the rear axle:

1728 kg – 1200 kg = **528 kg**

Enter the values in the table:

Item	Front axle	Rear axle	Total
1. Chassis	4780	4460	9240
2. Crane	– 528	1728	1200
3. Oil + pump	?	?	100
4. Subframe	?	?	240
5. Total	?	?	10780
6. Permissible axle loads and gross weight	9000	19000	26000
Difference, remains for the platform and load mass			15220

https://truckmanualshub.com/

Calculate the weight distribution of pump, oil and subframe:

Equation:

$$\text{Mass on the rear axle} \quad \frac{\text{Mass x DisTance from the front axle}}{\text{Wheelbase}}$$

Pump and oil: $\frac{100\,kg \times 1600}{4735}$ 34 *kg* to the rear axle

Subframe: $\frac{250\,kg \times 3650}{4735}$ 193 *kg* to the rear axle

Enter the values:

Item	Front axle	Rear axle	Total
1. Chassis	4780	4460	9240
2. Crane	– 528	1728	1200
3. Oil + pump	66	34	100
4. Subframe	57	193	250
5. Total	4375	6415	10790
6. Permissible axle loads and gross weight	9000	19000	26000
Difference, remains for the platform and load mass	4625	12585	15210

Now we know the maximum permissible bodywork and load total weight (15210 kg) and the maximum permissible weight on the front axle (4625 kg) and rear axle (12585 kg).

Note! Since the maximum permissible gross weight is less than the total weights permissible on the front and rear axle assemblies, we can calculate two points **between which** the center of gravity can be located.

To calculate the location of the bodywork's and load weight's center of gravity, see point 3.3.4., from page 135 onwards.

Fig. 963086

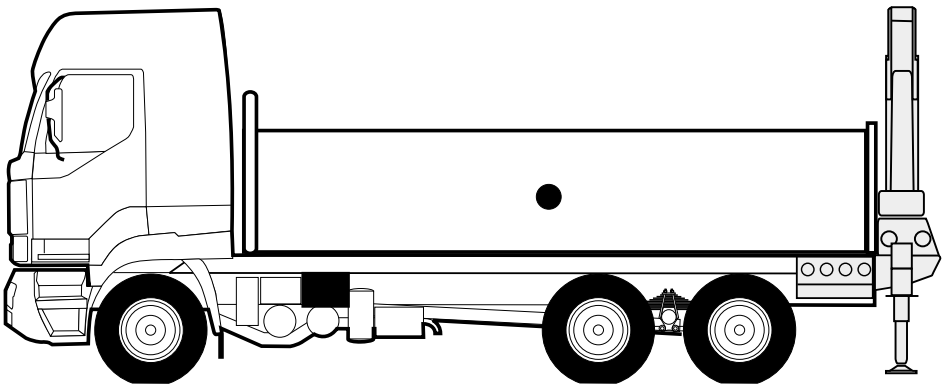

Note!

A minimum of 20% of the unloaded vehicle's weight must be on the front axle. If a three-axle vehicle with a short wheelbase and long rear overhang is equipped with rear-mounted crane, the weight on the front axle may not be sufficient.

https://truckmanualshub.com/

6.2.2.2 Subframe

The subframe must be dimensioned according to the stresses generated by the bodywork and crane. The subframe must be constructed according to the principles presented in section 02.

Dimensioning examples for the longitudinal subframe beams according to the crane size are presented in the diagram below.

Since dimensioning a subframe includes several factors, the diagram is merely directive. Exact dimensioning details are not possible within this manual.

Subframe beam

U-section

Material RAEX HSF 490 or min. S355 (Fe52)

Fig. 963084

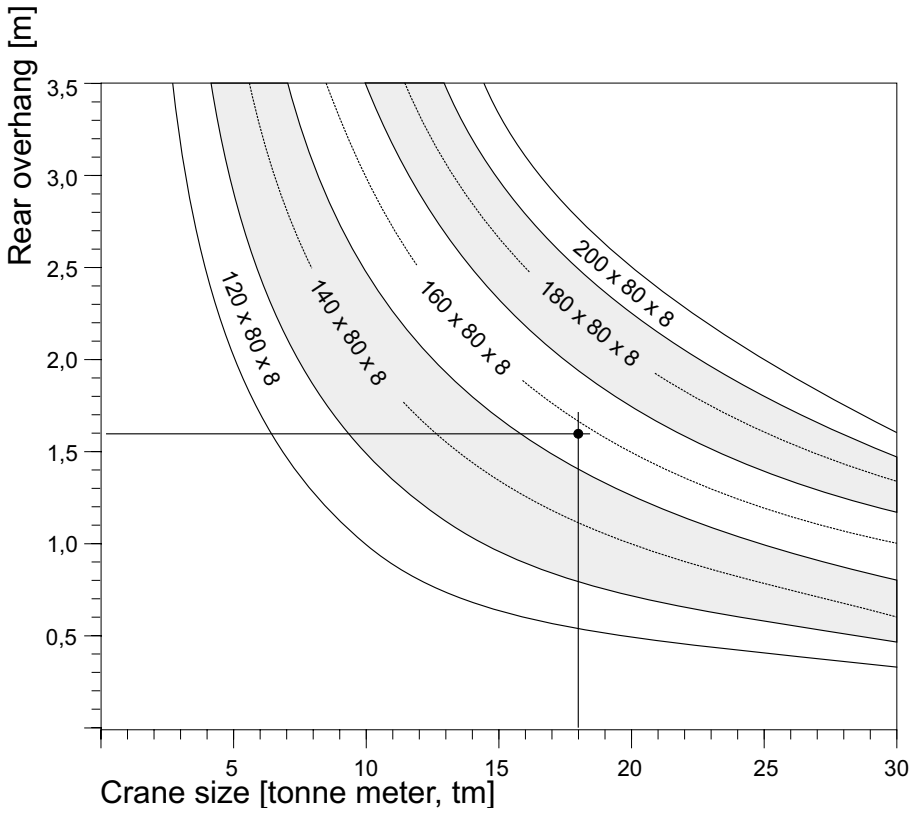

Example

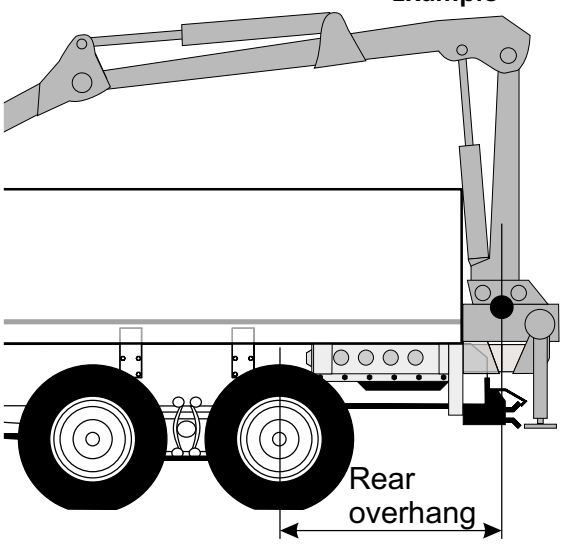

Fig. 963092

Crane size: 18 Tm. Rear overhang: 1.6 m. Draw a vertical line from 1.8 m and a horizontal line from 18 Tm. Intersection indicates a directive subframe beam size.

Note!

If the rear overhang is 2500 mm or longer and the weight of the crane 2000 kg or heavier, the dynamic forces generated by the crane during driving may be crucial when dimensioning the subframe beam size.

Subframe construction

The two rearmost cross beams of the subframe must be constructed with a sufficiently strong and rigid rectangular hollow section. If required, the rear overhang area of the subframe must be stiffened with one or two consecutive truss bracings, constructed with a U- or Z-section.

Note!

In this case, the rear overhang length is measured from the rearmost bogie axle centerline to the crane's center of gravity.

https://truckmanualshub.com/

6.2.3. Crane mounting: rear mount, vehicle with subframe (300 mm chassis frame)

Fig. 963079

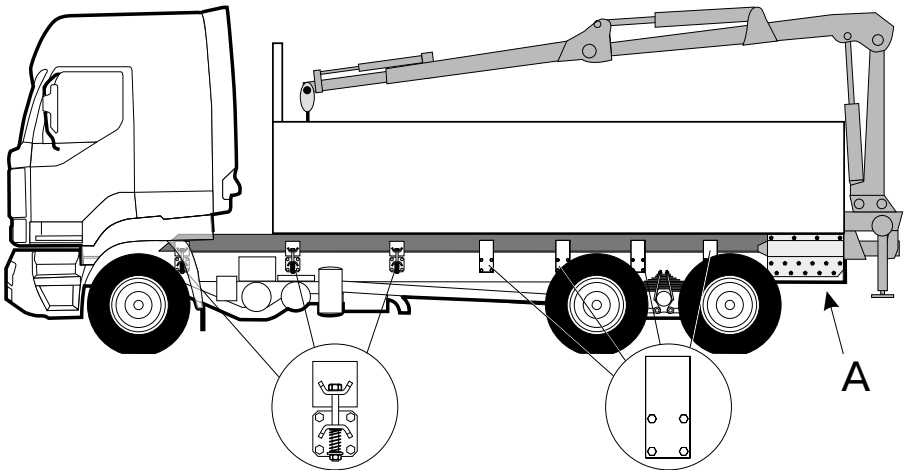

Rigid cross beam required at the end of the vehicle's frame, e.g. original cross beam or Sisu trailer-coupling mounting beam.

Mounting

- Rear mounting kit (A), sheath saddle, is attached rigidly to the vehicle's frame and subframe. This provides maximum stiffness to the rear overhang area. Fixed mounting is also possible.
- Bolted joints must be dimensioned according to the loads.
- Sheath saddles and mounting accessories can be purchased from the crane manufacturer. The crane manufacturer's instructions on mounting must be followed.
- The first 2–3 subframe mounting brackets should be flexible. Rigid mounting brackets are used rearwards from the first spring mounting bracket of the rear axle.

6.2.3.1 Heavy cranes

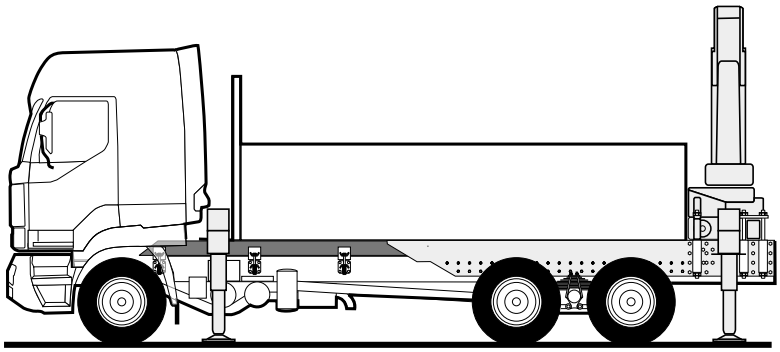

Fig. 963089

For cranes over 20 Tm, a continuous web plate must be used. This plate rigidly attaches the subframe to the chassis frame. The web plate must extend from the rear to the front of the first rear axle assembly's mounting point and be sufficiently strong for the crane in question.

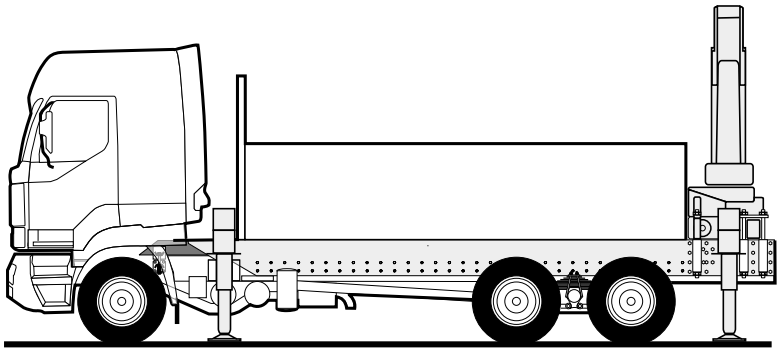

Fig. 963090

For cranes over 30 Tm, the web plate must extend from the rear to the frontmost outrigger pair.

https://truckmanualshub.com/

6.3. Crane mounting: rear mount, vehicle with high frame (460 mm)

General

As with a vehicle with a subframe, a rear-mounted crane generates high stresses on the rear frame, especially during loading and unloading.

There must be either the original rigid cross beam or a Sisu trailer-coupling mounting beam at the end of the vehicle.

Especially for trailer-towing duties, it is recommended that the rear overhang be strengthened with a diagonal support (see section 02).

A rear mounting kit (sheath saddle) is usually attached to the rear frame, facilitating easy loader mounting and dismounting and stiffening the rear overhang area.

6.3.1. Sheath saddle mounting at the rear

Item A

Fig. 963080

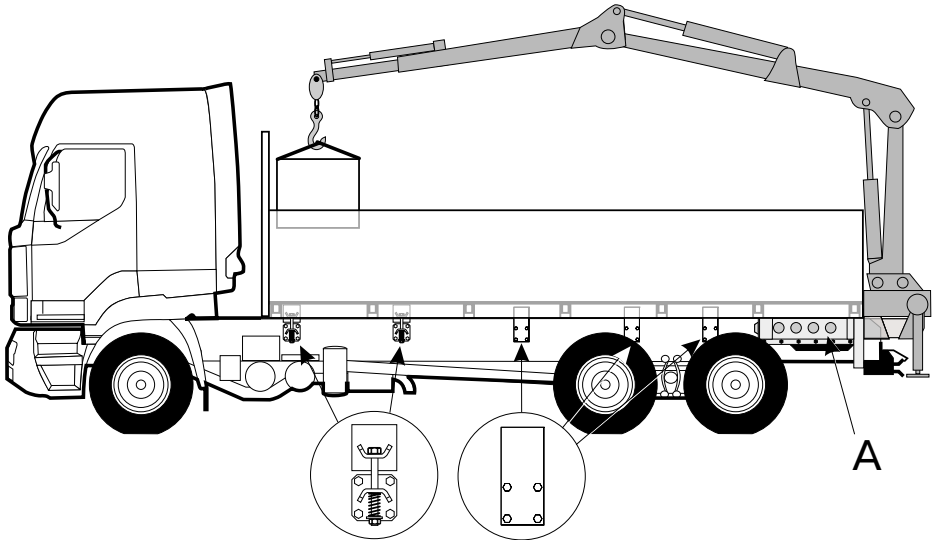

Trucks that are equipped as timber trucks in the factory may include an installed loader rear-mounting kit, if the customer requires.

Otherwise, the sheath saddle can be purchased separately or the bodywork manufacturer can construct and install a saddle.

The mounting of the sheath saddle must be sufficiently strong and carried out according to the saddle manufacturer's instructions and the instructions on frame mounting given in this manual's general guidelines.

6.3.2. Heavy crane

For rear-mounted cranes over 20 Tm, the high frame must be stiffened with an L-reinforcement. L-reinforcement must extend from the rear to at least the front of the first rear axle assembly's mounting point. For cranes over 30 Tm, the L-reinforcement must extend from the rear to the frontmost outrigger pair.

6.4. Other devices installed behind the rear axle assembly

If a device mounted behind the rear axle is so heavy and/or the rear overhang so long that the bending and/or torsional moment generated by the device causes bending or torsional movement on the wheelbase area due to the bending of the rear overhang, the rear overhang and wheelbase (if required) must be stiffened using a sufficiently strong subframe or L-reinforcement.

In other respects, the mounting must be constructed:

- sufficiently strong with regard to the device's weight and driving conditions;
- according to the regulations given by the authorities;
- according to the instructions on frame mounting given in this manual.

https://truckmanualshub.com/

Record

https://truckmanualshub.com/

PTOs (Power take-offs)

General

A PTO is required for driving hydraulic pumps, compressors, product pumps (oil, gasoline, gas, milk, water) or other devices. Depending on the intended task, devices to be driven and its driving range and bodywork, different PTO options can be chosen.
There are several PTO options for Sisu E-series vehicles. PTOs can be divided into two main groups: Engine PTOs and transmission PTOs, which are clutch-dependent.

This section (06) of the bodywork manual provides information on PTOs available for Sisu E-series vehicles.
This section also includes the calculation formulas required for dimensioning PTO drives, calculation examples and propeller shaft theory.
Electric and pneumatic diagrams required for installing the PTOs are attached to this section. More detailed instructions on installing the PTOs are provided in the service manuals for each PTO model.

1. Engine PTOs

Two types of engine PTOs are available:
A. REPTO, i.e. an engine PTO; installed on the flywheel housing and driven by the flywheel.
B. PTO for hydraulic pump; cogged-belt driven by the crankshaft.

1.1. REPTO engine PTOs

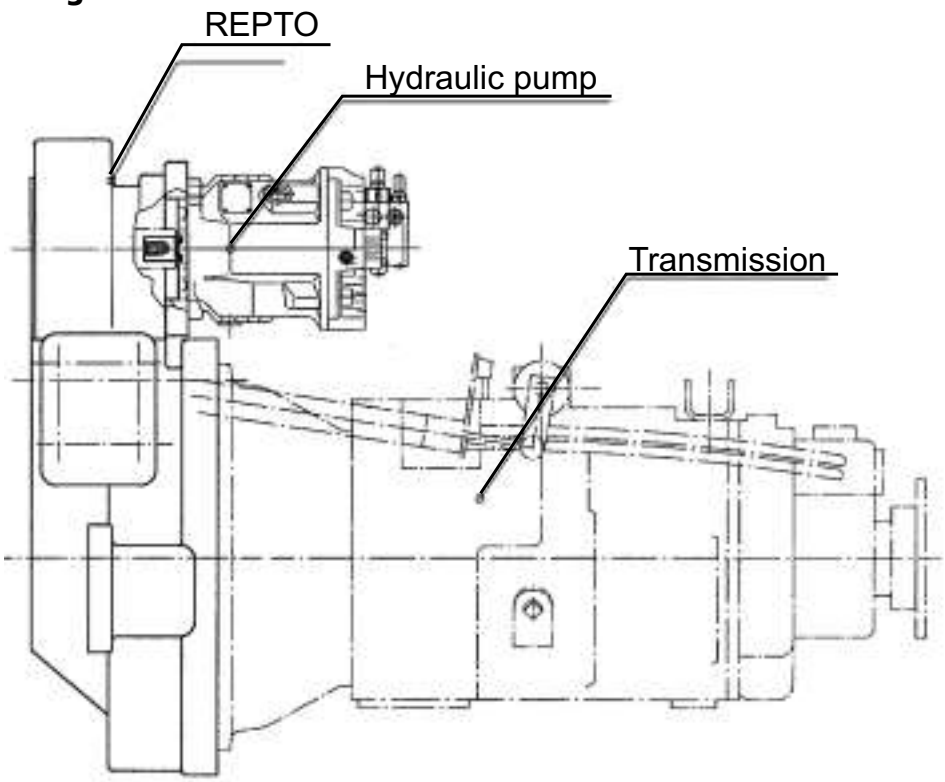

Fig. Repto 1

https://truckmanualshub.com/

1.1.1. Cummins M11 engines

137-020-1221

Suitable with M11 engine and RTSO transmission

Use: Continuous

Flywheel housing: SAE 1

Flywheel ring: SAE 1

PTO coupling location: 12 o'clock, height from the crankshaft centerline: 608 mm

Direction of rotation: same as engine

Gear ratio: 1.07

Output: Continuous: 200 hp

Torque: Continuous: 600 Nm

Pump mounting: SAE C, 2- and 4-bolt mounting

Pump shaft: SAE C, 14T involute spline

Weight: 70 kg

https://truckmanualshub.com/

1.1.2. Cummins N14 engines

137-020-1211
Suitable with N14 engine and RTSO transmission
Use: Continuous
Flywheel housing: SAE 1
Flywheel ring: SAE 1
PTO coupling location: 8° right from 12 o'clock
Direction of rotation: same as engine
Gear ratio: 1.106
Output: Continuous: 200 hp
Torque: Continuous: 600 Nm
Pump mounting: SAE C, 2- and 4-bolt mounting
Pump shaft: SAE C, 14T involute spline
Weight: 70 kg

137-020-1161
Suitable with N14 engine and Eaton-Fuller or Allison HD transmission
Use: Continuous
Flywheel housing: SAE 1
Flywheel ring: SAE 2
PTO coupling location: 8° right from 12 o'clock
Direction of rotation: same as engine
Gear ratio: 1.106
Output: Continuous: 200 hp
Torque: Continuous: 600 Nm
Pump mounting: SAE C, 2- and 4-bolt mounting
Pump shaft: SAE C, 14T involute spline
Weight: 70 kg

https://truckmanualshub.com/

1.2. Cogged-belt driven hydraulic pump

The cogged-belt driven hydraulic pump is driven by the crankshaft with a cogged belt and pulleys. A cogged-belt driven hydraulic pump can be used to replace the REPTO engine PTO. The gear ratio of the belt drive is 1.475, i.e. the pump's speed of rotation is higher than the crankshaft's speed.

1.2.1. E11 vehicles

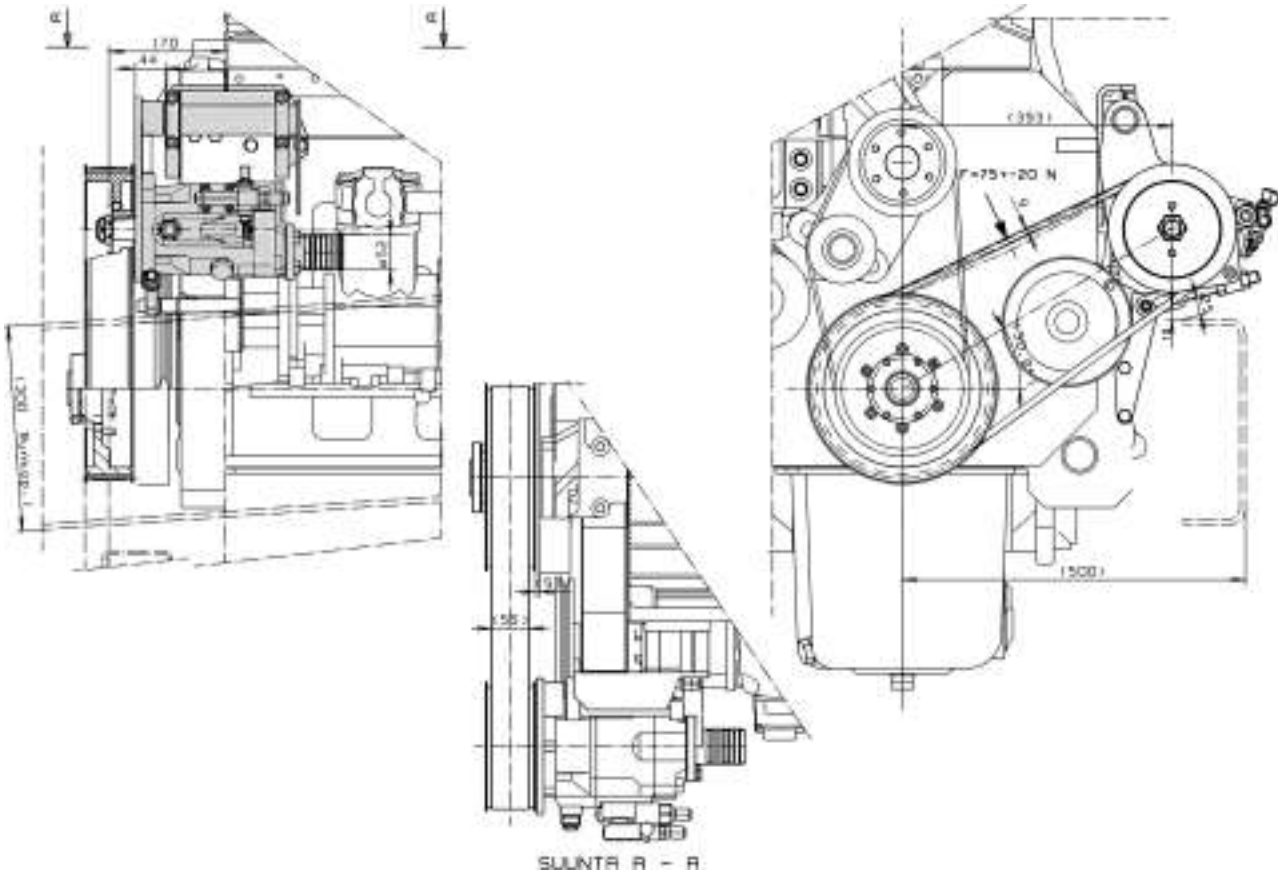

Fig. E11hihX

https://truckmanualshub.com/

1.2.2. E14 vehicles

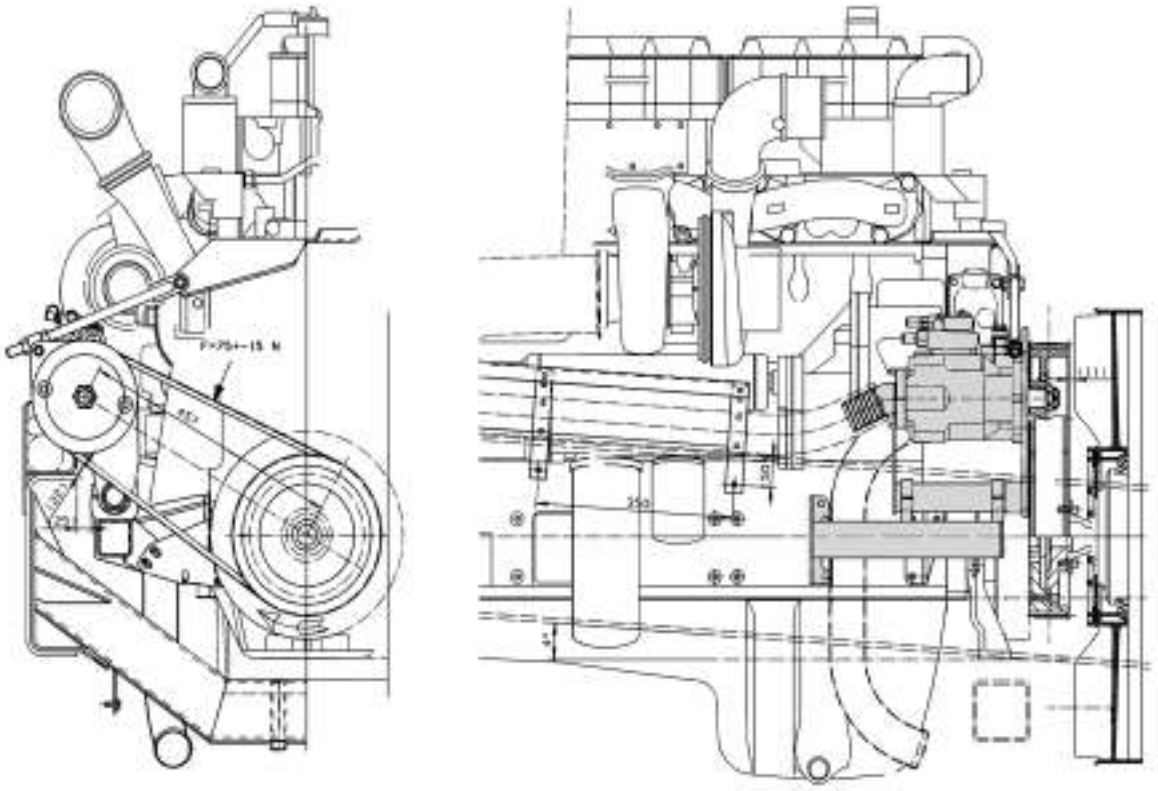

Fig. E14phihX

https://truckmanualshub.com/

1.2.3. Cogged-belt driven hydraulic pump: mounting

Pulley alignment

The maximum linear misalignment of the pulleys is ±2.5 mm.

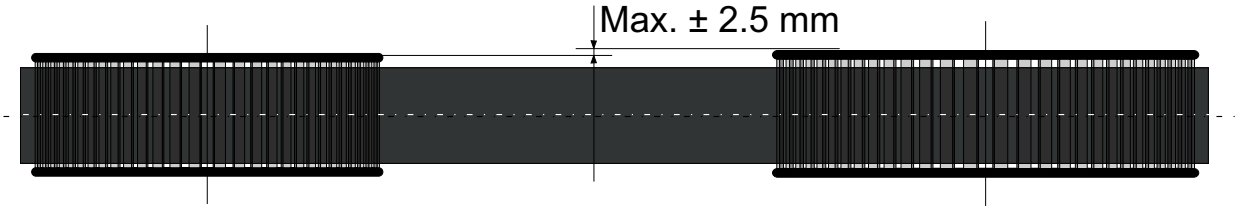

Fig. 0903

The pump shaft must be parallel to the crankshaft.

The maximum angular misalignment is ± 0.25° (= ± 0.8 mm/Ø 188 mm).

Angular misalignment is measured from the pump pulley (Ø 188 mm) with a ruler. Position the ruler towards the crankshaft pulley. Measure the distances between the opposing edges of the pulley and the ruler. The maximum difference between these two values is ± 0.8 mm. If the difference is higher, it must be corrected with shims.

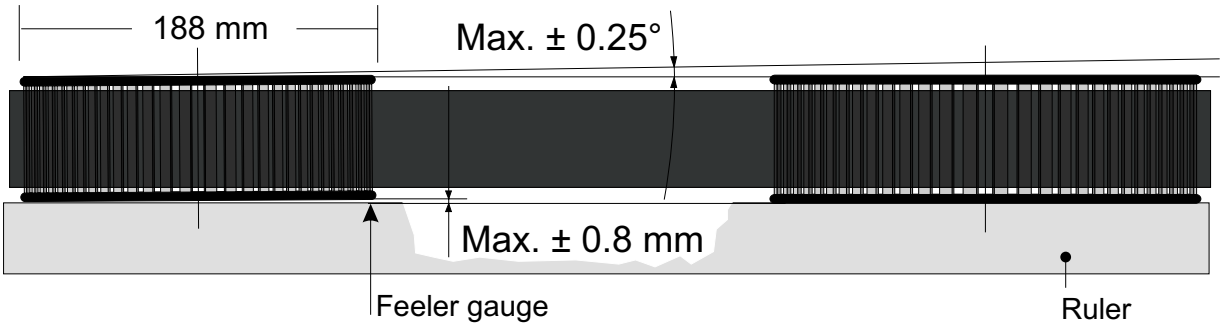

Fig. 09-04

Aligning the pump with shims

If required, the pump is aligned with shims. In E14 vehicles, the shims are placed under the pump bracket shaft and/or bracket feet. In E11 vehicles, the shims are placed under the pump bracket shaft only.

For the exact shim locations and part numbers, see the attached spare-part lists.

Observing the cogged belt when the engine is running

Any possible pump misalignment will be evident when the engine is running. If the belt drifts to the opposite sides of the pulleys or touches the belt guides when the engine is running, the pump is out of alignment and must be aligned according to the procedure above.

https://truckmanualshub.com/

Belt tensioning

The belt is tensioned with tensioning guide tool 173-000-0006 (see attached drawing for manufacturing the tool) and a belt tension gauge (available from belt dealers).

1. Check with a ruler that the alignment is correct.

2. Place the tensioning guide tool 173-000-0006 on top of the belt so that the flange edge touches the belt edge.

3. Check the belt tension with the belt tension gauge:

A. Set the lower O-ring of the gauge so that the distance equals **specified belt deflection + tensioning guide tool (173-000-0006) material thickness**.
For example, if the material thickness is 5 mm and the specified deflection 9 mm, the lower O-ring is set to 14 mm.
The higher O-ring is set to the top collar.

B. Insert the tension gauge into the hole in the tensioning guide tool and position the gauge at a 90-degree angle to the belts. The gauge must be in the middle of the belt both longitudinally and laterally.

C. Hold the top of the tension gauge and press the gauge down to the belt until the lower O-ring meets the top level of the tensioning guide tool. Read the force equaling the belt deflection indicated at the higher O-ring. If the force is according to the specification, check the tightness of the mounting bolts.

4. If the belt tension is not correct, loosen bolts 2, 3 and 4. Adjust the tension with nuts 5 on the adjusting rod and tighten the bolts.

5. Re-check the tension.

6. If a new belt is installed, let the engine run for approximately 30 minutes and check the tension again, i.e. after the belt has adapted to the pulleys.

Note!

Too tight a belt will damage the pump and may damage crankshaft bearings.

If the pump shaft is not aligned with the crankshaft, the service life of the belt is significantly shortened.

Remember to loosen all the required bolts when adjusting the belt tension and tighten the bolts after adjustment!

Fig. 09-02

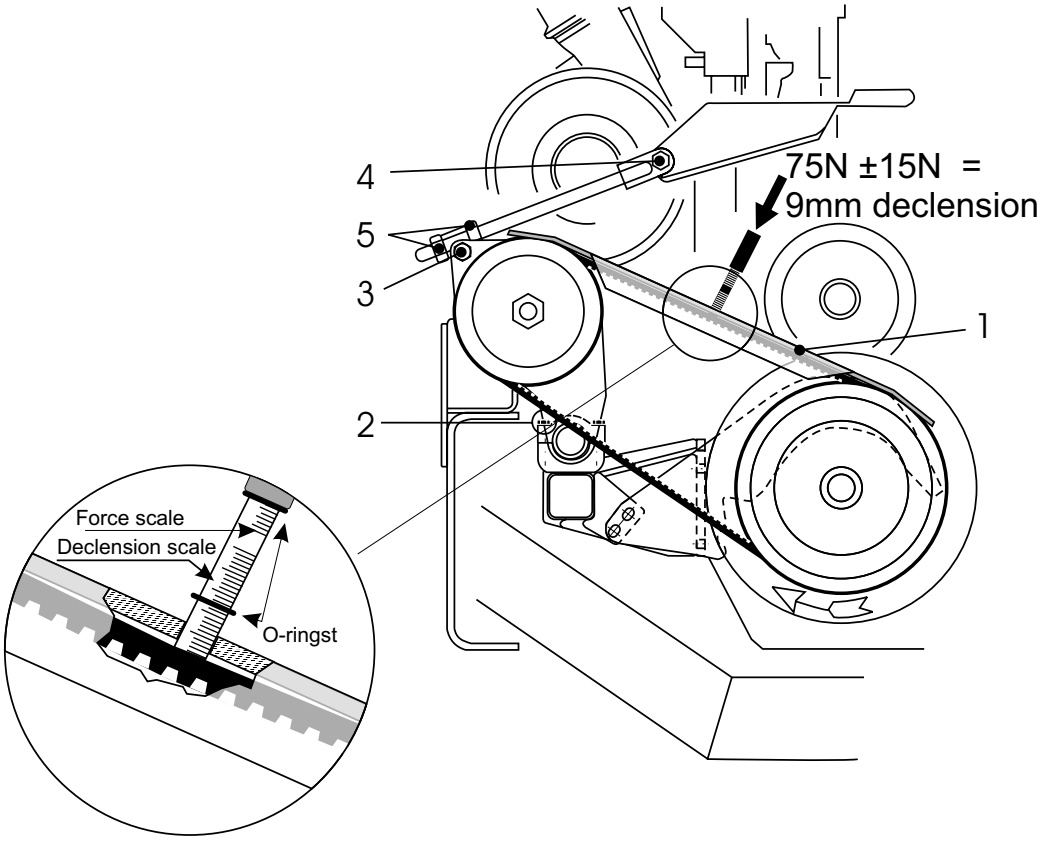

The figure illustrates a type E14 vehicle. The procedure is similar for E11 vehicles.

https://truckmanualshub.com/

1.2.4. Requirements for mounting cogged-belt driven hydraulic pumps

Hoses and hydraulic lines

- Suction hose inside diameter 2" (51 mm), pressure hose 3/4" (19 mm), drain hose min. 3/4" (19 mm).
- A drain line must always be installed separately and routed directly to the tank below the oil level.
- The connectors used in the drain line must offer as free a flow as possible.
- The drain line must not include restrictive components (elbow or reducing fittings).
- The drain line must not include non-return valves, filters, etc.
- The drain line must not be connected to other return or drain lines of the system.
- Suction and drain lines must be as short as possible.
- Suction filter is prohibited.

Oil selection

- Optimal oil viscosity at operating temperature $\nu = 16–32\ mm^2/s$
- Min. viscosity $\nu = 10\ mm^2/s$, short period.
- Max. viscosity $\nu = 1000\ mm^2/s$, short period during cold starts.
- Operating temperature range = -25°C, t_{max} = +80°C (drain oil temperature for short periods +90°C)

Filtration

- Min. filtration level: class 9 (NAS 1638), class 6 (SAE), class 18/15 (ISO/DIS 4406)
- The levels mentioned above will be met when the filtering degree of separation $\beta_{20}>100$
- Return or pressure filtration recommended.

Oil tank

- Min. volume $V = 80\ dm^3$ (A10VO45) or $V = 110\ dm^3$ (A10VO60).
- The tank is mounted so that the oil level in the tank is always higher than the suction port of the pump.
- Separate connection for pump drain line required. Drain line connection must always be below the oil level.
- The tank must be equipped with a breather filter, filtration level β_{10} 75 or higher.

Belt tension adjustment

- Specified belt tension: belt deflection 9 mm when the belt is depressed in the middle of the span with a force of F = 75 +-20 N. See instructions on adjusting above.

Pump pressure adjustment

- For adjusting the stand-by and maximum pressure, see the A10VO pump adjusting instructions.

Before commissioning

- Remember to fill the pump housing with clean oil through the drain line.
- Check that the drain hose is installed so that the pump chamber will not drain.
- Before starting, insure that the shut-off valves in suction and drain lines are positively open.
- Check the pump's direction of rotation.
- Check the belt tension.
- Check the linear and angular alignment of the crankshaft and pump pulleys. The belt sides must not touch the opposite sides of the pulleys.

https://truckmanualshub.com/

2. Transmission PTOs

There are several PTO options for transmissions used in Sisu trucks. Hence, the optimal PTO meeting the output, torque and gear ratio requirements set by the driving task can be chosen.

Sisu E-series transmission options:

- Eaton Fuller RTO 14613
- Eaton Fuller RTLO 16718
- Eaton RTSO 17316
- Renault B18
- ZF Ecosplit 16S221
- Allison HD 4060P and 4560P

The following table presents the PTOs in production. More detailed information on these PTOs is presented separately for each transmission after the table.

PTO	Transmission	Direction of rotation in relation to engine	Gear ratio in relation to engine	Max. torque(Nm)	Max. output(kW) /1000 rpm	Pump drive	PTO location
137-011-4631	RTO 14613 and RTLO 16618A	Opposite	1: 1.27	Cont.: 380 Interm.: 542		Flange	Bottom
137-011-4631	RTLO 16718B	Opposite	1:1.43	Cont.: 380 Interm.: 542		Flange	Bottom
137-011-4641	RTO 14613 and RTLO 16618A	Opposite	1: 1.27	Cont.: 380 Interm.: 542		Direct	Bottom
137-011-4641	RTLO 16718B	Opposite	1:1.43	Cont.: 380 Interm.: 542		Direct	Bottom
137-011-5271	RTO 14613 and RTLO 16618A	Opposite	1:1.42	Cont.: 380 Interm.: 540	Cont.: 39 Interm.: 56	Direct	Bottom
137-011-5271	RTLO 16718B	Opposite	1:1.60	Cont.: 380 Interm.: 540	Cont.: 39 Interm.: 56	Direct	Bottom
137-011-5281	RTO 14613 and RTLO 16618A	Opposite	1: 0.88	Cont.: 474 Interm.: 678	Cont.: 49 Interm.: 70	Flange	Bottom
137-011-5281	RTLO 16718B	Opposite	1: 0.99	Cont.: 474 Interm.: 678	Cont.: 49 Interm.: 70	Flange	Bottom
137-011-5291	RTO 14613 and RTLO 16618A	Opposite	1: 0.88	Cont.: 474 Interm.: 678	Cont.: 49 Interm.: 70	Direct	Bottom
137-011-5291	RTLO 16718B	Opposite	1: 0.99	Cont.: 474 Interm.: 678	Cont.: 49 Interm.: 70	Direct	Bottom
137-011-5301	RTO 14613 and RTLO 16618A	Opposite	1:1.42	Cont.: 380 Interm.: 540	Cont.: 39 Interm.: 56	Flange	Bottom
137-011-5301	RTLO 16718B	Opposite	1:1.60	Cont.: 380 Interm.: 540	Cont.: 39 Interm.: 56	Flange	Bottom
137-011-5421	RTO 14613 and RTLO 16618A	Engine	1:1.13	Cont.: 214 Interm.: 305	Cont.: 22 Interm.: 32	Direct	Side
137-011-5421	RTLO 16718B	Engine	1:1.28	Cont.: 214 Interm.: 305	Cont.: 22 Interm.: 32	Direct	Side
137-011-4553	RTO 14613	Engine	1:1.50	Cont.: 237 Interm.: 440	Cont.: 37 Interm.: 70	Flange	Rear
137-011-4541	RTO 14613	Opposite	1:1.00	Cont.: 440 Interm.: 590	Cont.: 70 Interm.: 93	Flange	Rear
137-011-4581	RTSO 17316	Opposite	1: 0.92	1000		Flange	Rear
137-011-4591	RTSO 17316	Opposite	1: 0.92	1000		Direct	Rear
137-011-4821	RTSO 17316	Engine	1:1.20	300		Direct	Rear
137-011-4831	RTSO 17316	Opposite	1:1.41	640		Direct	Rear x 2
137-011-4841	RTSO 17316	Opposite	1:1.83	540		Flange	Rear x 2
137-011-4861	RTSO 17316	Point 1: Opp. Point 2: Engine	Point 1: 1:1.41 Point 2: 1:1.14	Point 1: 640 Point 2: 720		Direct	Rear x 2
137-011-5431	Renault B18	Opposite	1:1.008	600		Direct	Side

https://truckmanualshub.com/

PTO	Transmission	Direction of rotation in relation to engine	Gear ratio in relation to engine	Max. torque(Nm)	Max. output(kW) /1000 rpm	Pump drive	PTO location
137-011-5441	Renault B18	Opposite	1:1.008	600		Flange	Side
137-011-5451	Renault B18	Engine	1:1.45	400		Flange	Side
137-011-4871	ZF 16 S 221	Opposite	0.91/1.09	1000 cont.		Direct	Rear
137-011-4881	ZF 16 S 221	Opposite	0.91/1.09	1000 cont.		Flange	Rear
137-011-4891 137-011-4921	ZF 16 S 221	C: Engine D: Opposite	C: 1.35/1.62 D: 1.17/1.40	C: 730 cont. D: 600 cont.		Direct	Rear x 2
137-011-4901 137-011-4931	ZF 16 S 221	C: Engine D: Opposite	C: 1.75/2.09 D: 0.91/1.09	C: 560 cont. D: 430 temp.		C: Flange D:Direct	Rear x 2
137-000-1351	Allison HD	Engine	1:1.03	Cont.: 317 Interm.: 454	Cont.: 34 Interm.: 49	Direct	Top/side
137-000-1361	Allison HD	Engine	1: 1.03	Cont.: 317 Interm.: 454	Cont.: 34 Interm.: 49	Flange	Top/side
137-000-1371	Allison HD	Engine	1:1.24	Cont.: 304 Interm.: 434	Cont.: 32 Interm.: 45	Direct	Top/side
137-000-1381	Allison HD	Engine	1:1.24	Cont.: 304 Interm.: 434	Cont.: 32 Interm.: 45	Flange	Top/side
137-000-1511	Allison HD	Engine	1:1.09	Cont.: 546 Interm.: 780	Cont.: 62 Interm.: 88	Flange	Top/side
137-000-1521	Allison HD	Engine	1:1.09	Cont.: 546 Interm.: 780	Cont.: 62 Interm.: 88	Direct	Top/side
137-000-1531	Allison HD	Engine	1:1.09	Cont.: 546 Interm.: 780	Cont.: 62 Interm.: 88	Direct	Top/side
137-000-1541	Allison HD	Engine	1:1.65	Cont.: 394 Interm.: 562	Cont.: 41 Interm.: 58	Flange	Top/side

https://truckmanualshub.com/

2.1. PTOs for Eaton Fuller RTO/RTLO transmissions

2.1.1. Transmission PTOs: below mount

Fig. UNDPTO

137-011-4631

The assembly includes PTO 137-011-4632 and adapter 137-110-0031
Pump drive: Keyway shaft for universal shaft flange
Direction of rotation: Opposite to engine
Gear ratio:
RTO 14613 and RTLO 16618A: 1.27
RTLO 16718B: 1.43
Torque:
Intermittent: 542 Nm
Continuous: 380 Nm (over 5 min. continuous operation)
Adapter 137-110-0031 must always be used in order to facilitate hydraulic pump mounting on the PTO.

https://truckmanualshub.com/

137-011-4641

The assembly includes PTO 137-011-4642 and adapter 137-110-0031

Pump drive: Direct pump mount DIN 5462

Direction of rotation: Opposite to engine

Gear ratio:

RTO 14613 and RTLO 16618A: 1.27

RTLO 16718B: 1.43

Torque:

Intermittent: 542 Nm

Continuous: 380 Nm (over 5 min. continuous operation)

Maximum pump weight without additional bracket: Max. bending moment at the pump joint is 26.5 Nm, equals e.g. 18 kg pump, center of gravity 150 mm from the mounting surface.

Adapter 137-110-0031 must always be used in order to facilitate hydraulic pump mounting on the PTO.

137-011-5271

Pump drive: Direct pump mount DIN 5462

Direction of rotation: Opposite to engine

Gear ratio:

RTO 14613 and RTLO 16618A: 1.42

RTLO 16718B: 1.60

Torque:

Intermittent: 540 Nm

Continuous: 380 Nm

Output:

Intermittent: 56 kW/1000 rpm

Continuous: 39 kW/1000 rpm

Weight: 29 kg

NOTE: An additional bracket decreasing the load acting on the PTO is required for pumps mounted directly on the PTO.

https://truckmanualshub.com/

Fig. 1375281

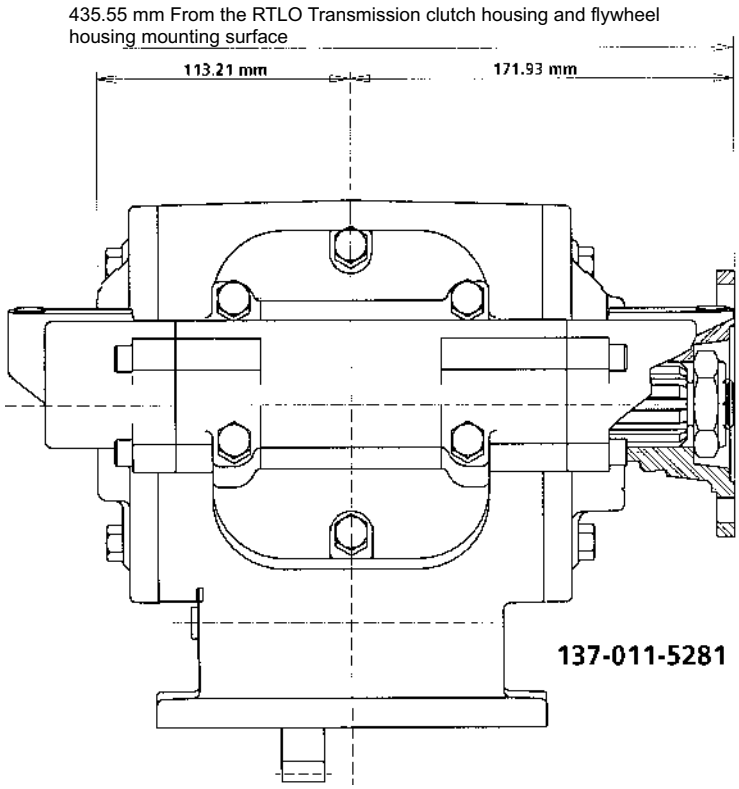

137-011-5281
Pump drive: Universal shaft flange 1410 series
Direction of rotation: Opposite to engine
Gear ratio:
RTO 14613 and RTLO 16618A: 0.88
RTLO 16718B: 0.99
Torque:
Intermittent: 678 Nm
Continuous: 474 Nm
Output:
Intermittent: 70 kW/1000 rpm
Continuous: 49 kW/1000 rpm
Weight: 29 kg

137-011-5291
Pump drive: Direct pump mount DIN 5462
Direction of rotation: Opposite to engine
Gear ratio:
RTO 14613 and RTLO 16618A: 0.88
RTLO 16718B: 0.99
Torque:
Intermittent: 678 Nm
Continuous: 474 Nm
Output:
Intermittent: 70 kW/1000 rpm
Continuous: 49 kW/1000 rpm
Weight: 29 kg

NOTE: An additional bracket decreasing the load acting on the PTO is required for pumps mounted directly on the PTO.

https://truckmanualshub.com/

137-011-5301
Pump drive: Universal shaft flange 1410-series
Direction of rotation: Opposite to engine
Gear ratio:
RTO 14613 and RTLO 16618A: 1.42
RTLO 16718B: 1.60
Torque:
Intermittent: 540 Nm
Continuous: 380 Nm
Output:
Intermittent: 56 kW/1000 rpm
Continuous: 39 kW/1000 rpm
Weight: 29 kg

137-011-5331
Pump drive: Universal shaft flange 1300 series
Direction of rotation: Same as engine
Gear ratio:
RTO 14613 and RTLO 16618A: 1.98
Torque: 345 Nm

Note! This PTO type is not longer in production.

https://truckmanualshub.com/

2.1.2. Transmission PTOs: side mount

Fig. fulsipto

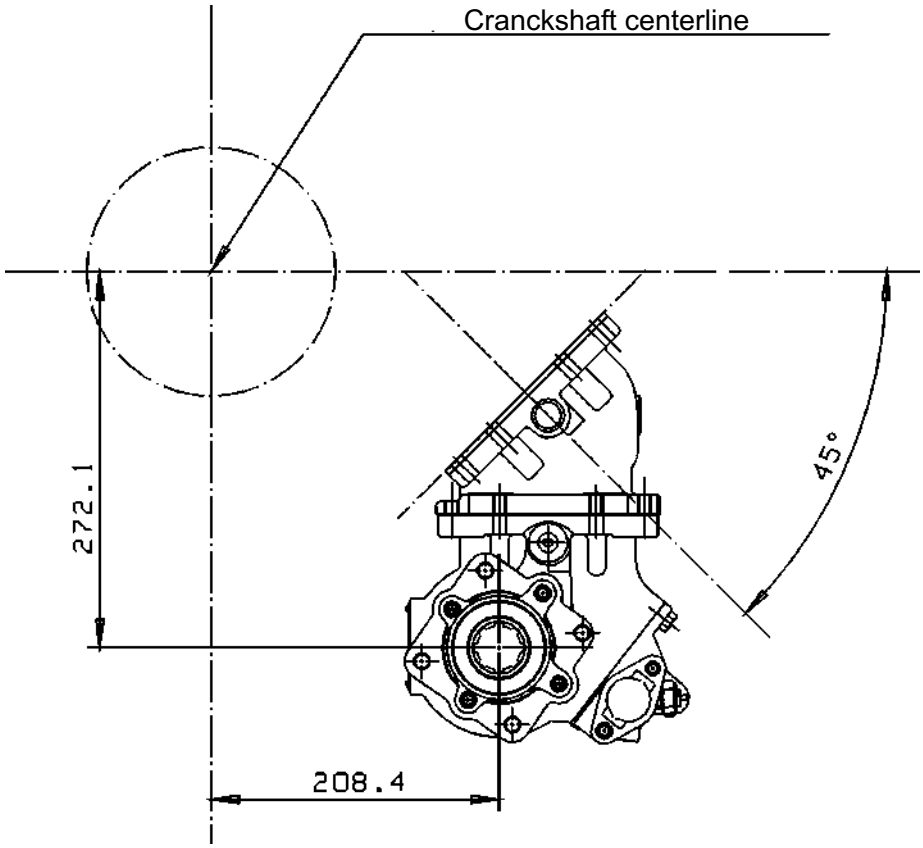

137-011-5421

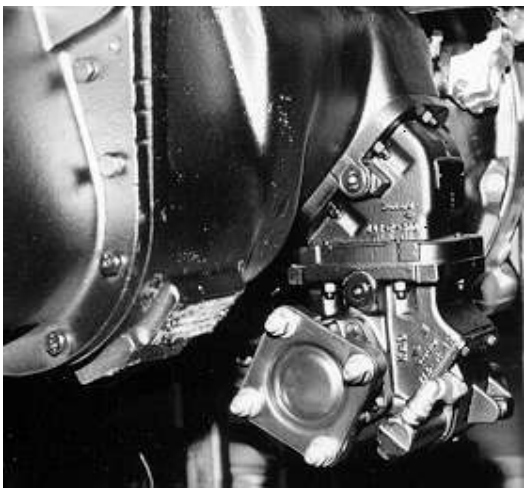

Fig. Sidepto

The assembly includes PTO 137-011-5422 and adapter 137-110-0021
Pump drive: Direct pump mount DIN 5462
Direction of rotation: Same as engine
Gear ratio:
RTO 14613 and RTLO 16618A: 1.13
RTLO 16718B: 1.28
Torque:
Intermittent: 305 Nm
Continuous: 214 Nm
Output:
Intermittent: 32 kW/1000 rpm
Continuous: 22 kW/1000 rpm
Weight: 12 kg + 7 kg (adapter)
Adapter 137-110-0021 must always be used for mounting.

https://truckmanualshub.com/

2.1.3. RTO 14613 transmission PTOs: rear mount

Fig. fulrpto

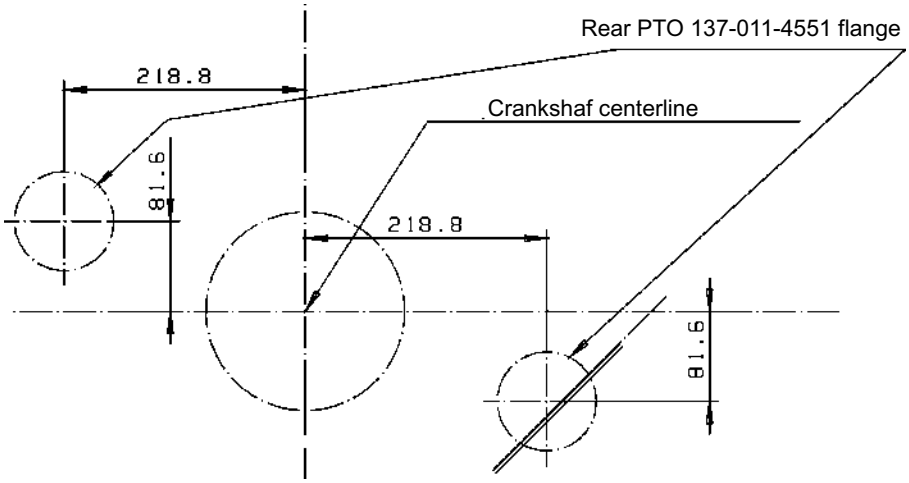

137-011-4553

Pump drive: Universal shaft flange 90 mm

Direction of rotation: Same as engine

Gear ratio: 1.50

Total gear ratios with different gears:
Crawler: 0.393
1. 0.594
2. 0.799
3. 1.088
4. 1.464

Torque:
Intermittent: 440 Nm
Periodic (1.5 h / 12 h): 380 Nm
Continuous: 237 Nm

Output:
Intermittent: 70 kW
Periodic (1.5 h / 12 h): 60 kW
Continuous: 37 kW

Fig. Rpto

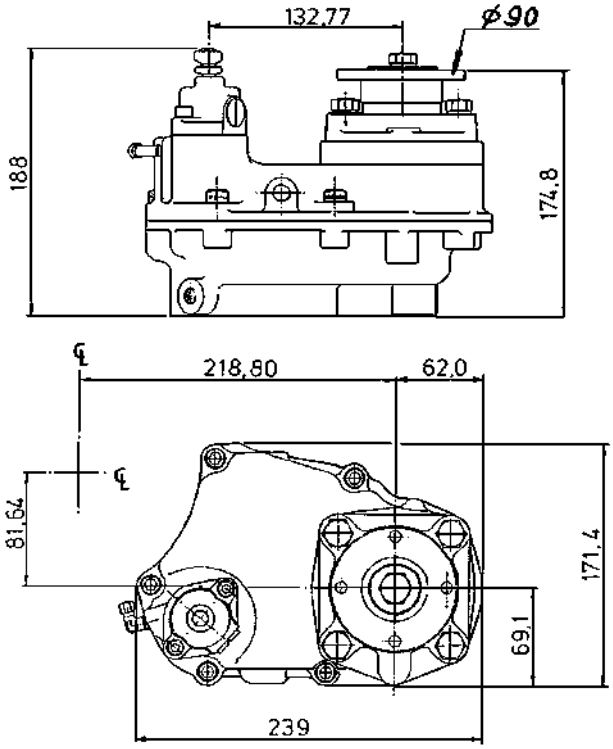

https://truckmanualshub.com/

137-011-4541
Pump drive: Universal shaft flange 90 mm
Direction of rotation: Opposite to engine
Gear ratio: 1.00
Total gear ratios with different gears:
Crawler: 0.262
1. 0.396
2. 0.533
3. 0.725
4. 0.976

Torque:
Intermittent: 590 Nm
Periodic (1.5 h / 12 h): 510 Nm
Continuous: 440 Nm
Output:
Intermittent: 93 kW
Periodic (1.5 h / 12 h): 80 kW
Continuous: 70 kW

https://truckmanualshub.com/

2.2. PTOs for the Eaton RTSO 17316 transmission

There are several PTO options for RTSO transmissions. All PTOs are rear-mounted and driven by the ends of the transmission countershafts. Two rear-mounting locations are available, i.e. at the end of both countershafts. **For Sisu trucks, the top mounting locations are possible for PTOs 137-011-4581 and 137-011-4591 only. Due to the cross beam, other PTO types will not fit and they must be mounted on the lower location (8 o'clock).**

Fig. 838011a

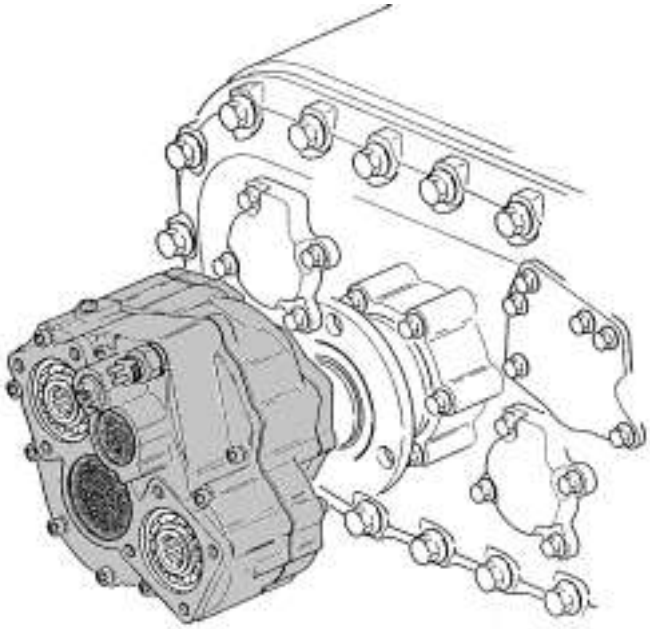

Fig. 838012a

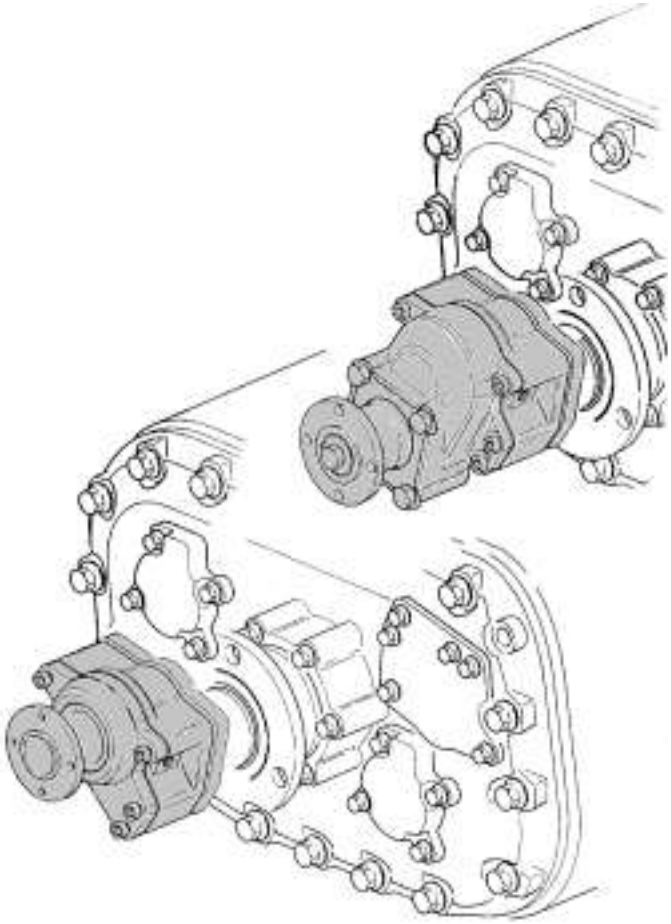

https://truckmanualshub.com/

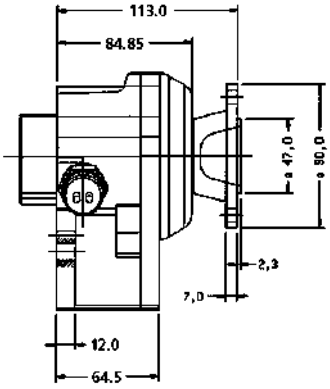

Fig. 2801-3

137-011-4581

Pump drive: Universal shaft flange Spicer 1120

Direction of rotation: Opposite to engine

Gear ratio: 0.92

Torque: 1000 Nm

Weight: 5.5 kg

Maximum pump weight without additional bracket: Max. bending moment at the pump joint is 30 Nm, equals e.g. 15 kg pump, center of gravity 200 mm from the mounting surface.

NOTE: The PTO cannot be used when the splitter is on low range. The internal structure of the transmission does not allow an unequal load to act on the splitter clutch when the PTO is engaged. The blocking system is indicated in Sisu connection diagrams 001-186-0414 (Sisu cabs) and 001-186-0512 (Premium/Kerax cabs).

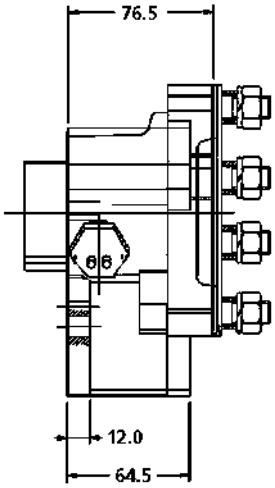

Fig. 2801-2

137-011-4591

Pump drive: Pump mount ISO 7707

Direction of rotation: Opposite to engine

Gear ratio: 0.92

Torque: 1000 Nm

Weight: 4 kg

Maximum pump weight without additional bracket: Max. bending moment at the pump joint is 30 Nm, equals e.g. 15 kg pump, center of gravity 200 mm from the mounting surface.

NOTE: The PTO cannot be used when the splitter is on low range. The internal structure of the transmission does not allow an unequal load to act on the splitter clutch when the PTO is engaged. The blocking system is indicated in Sisu connection diagrams 001-186-0414 (Sisu cabs) and 001-186-0512 (Premium/Kerax cabs).

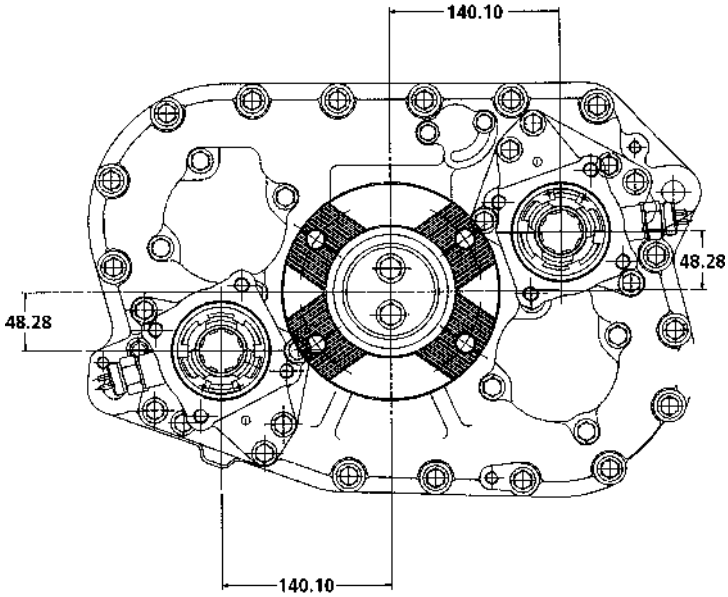

Fig. 2801-1

https://truckmanualshub.com/

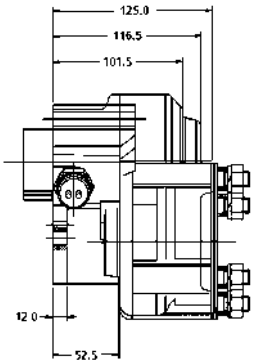

Fig. 2802-2

137-011-4821

Pump drive: Pump mount ISO 7707

Direction of rotation: Same as engine

Gear ratio: 1.20

Torque: 300 Nm

Weight: 6 kg

Maximum pump weight without additional bracket: Max. bending moment at the pump joint is 30 Nm, equals e.g. 15 kg pump, center of gravity 200 mm from the mounting surface.

NOTE: The PTO cannot be used when the splitter is on low range. The internal structure of the transmission does not allow an unequal load to act on the splitter clutch when the PTO is engaged. The blocking system is indicated in Sisu connection diagrams 001-186-0414 (Sisu cabs) and 001-186-0512 (Premium/Kerax cabs).

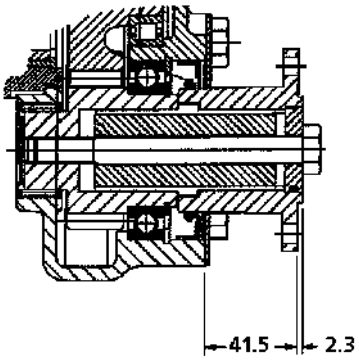

Fig. 2802-3

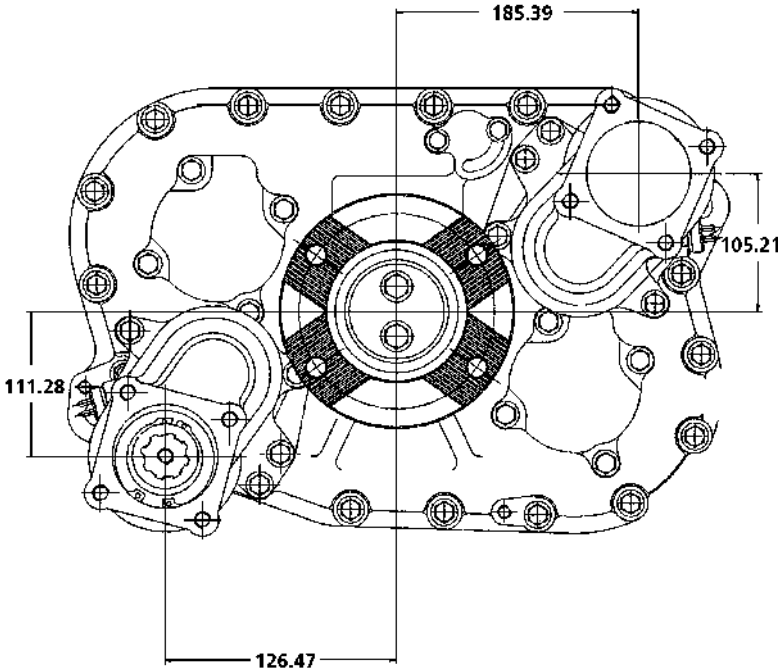

Fig. 2802-1

☛	**NOTE: The PTOs must always be mounted on the lower location (8 o'clock).**
💣	**Warning: If the vehicle has two front axles one of which is a liftable axle, the hydraulic pump must be mounted so that it points at 4 o'clock.** **If the pump is mounted pointing downwards (7 o'clock), the axle can come into contact with the pump's return line connector when the axle is lifted!**

https://truckmanualshub.com/

137-011-4831

Dual PTO

Pump drive: Pump mount ISO 7707

Direction of rotation: Opposite to engine

Gear ratio: 1.41

Torque: 640 Nm

Weight: 25-30 kg

Maximum pump weight without additional bracket: Max. bending moment at the pump joint is 30 Nm, equals e.g. 15 kg pump, center of gravity 200 mm from the mounting surface.

NOTE: The PTO cannot be used when the splitter is on low range. The internal structure of the transmission does not allow an unequal load to act on the splitter clutch when the PTO is engaged. The blocking system is indicated in Sisu connection diagrams 001-186-0414 (Sisu cabs) and 001-186-0512 (Premium/Kerax cabs).

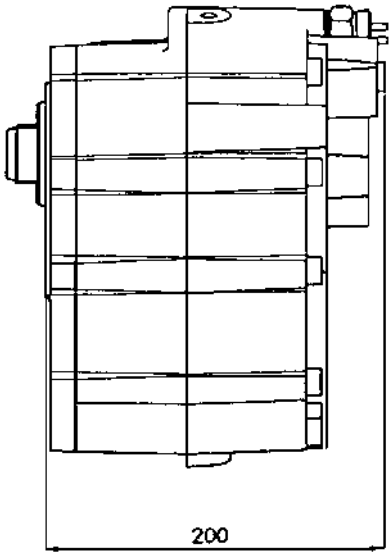

Fig. Rtso2pto

137-011-4841

Pump drive: Universal shaft flange Spicer 1300

Direction of rotation: Opposite to engine

Gear ratio: 1.83

Torque: 540 Nm

Weight: 25-30 kg

Maximum pump weight without additional bracket: Max. bending moment at the pump joint is 30 Nm, equals e.g. 15 kg pump, center of gravity 200 mm from the mounting surface.

NOTE: The PTO cannot be used when the splitter is on low range. The internal structure of the transmission does not allow an unequal load to act on the splitter clutch when the PTO is engaged. The blocking system is indicated in Sisu connection diagrams 001-186-0414 (Sisu cabs) and 001-186-0512 (Premium/Kerax cabs).

Fig. 2830koe1

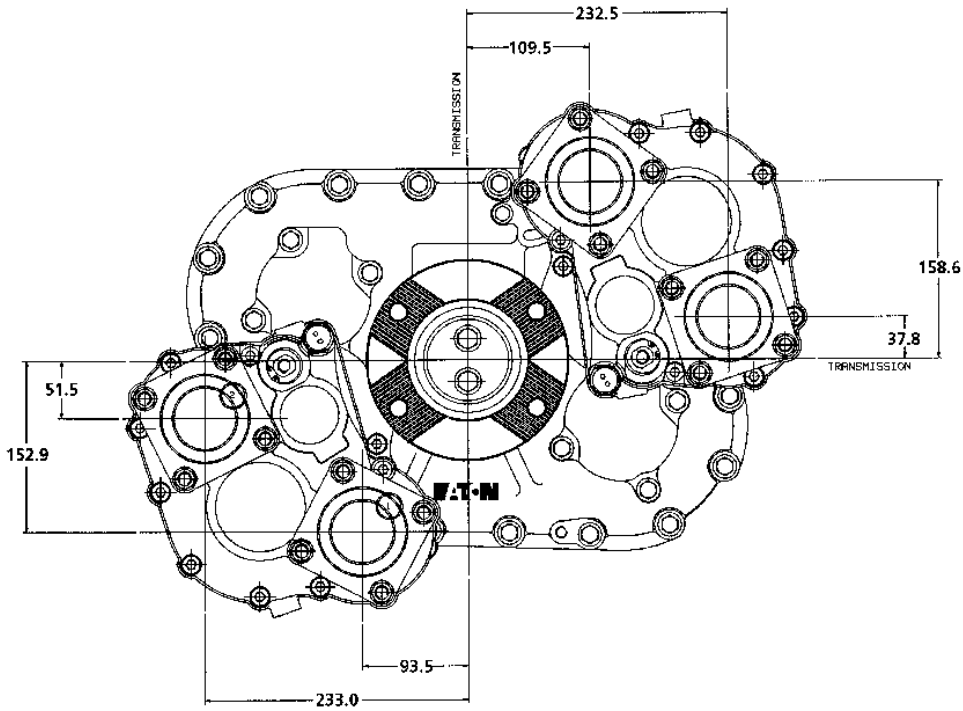

☛ **NOTE: The PTOs must always be mounted on the lower location (8 o'clock).**

https://truckmanualshub.com/

137-011-4851

PTO for emergency steering pump with RTSO transmission

Type: PSPD

Pump drive: Direct pump mount on the PTO by a gear mounted on the pump shaft

Direction of rotation: Same as the propeller shaft

Gear ratio: 2:1 in relation to the propeller shaft

PTO location: Behind the transmission, down on the right-hand side

In addition to the PTO and mounting accessories, the mounting kit includes a universal shaft flange so that the transmission length remains unchanged. For installing radial piston pump ZF 8605-99-127 (Sisu No: 173-010-8121), pump-mounting kit 137-880-0031 is required.

Fig. Pspd1

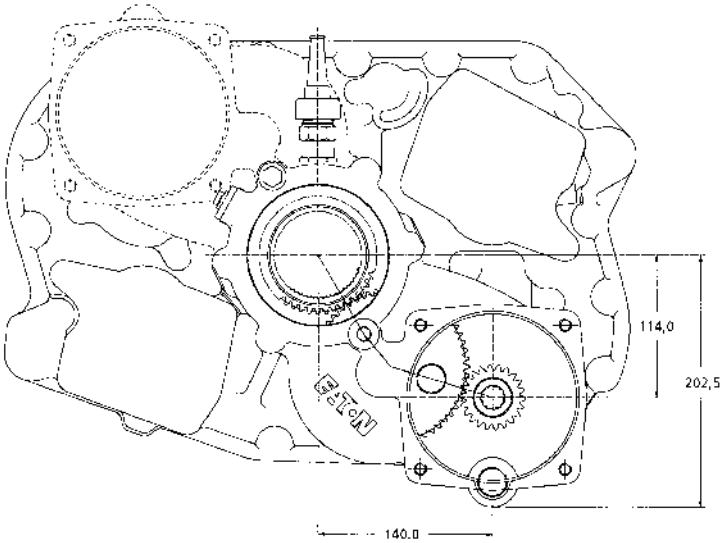

Fig. Pspd2

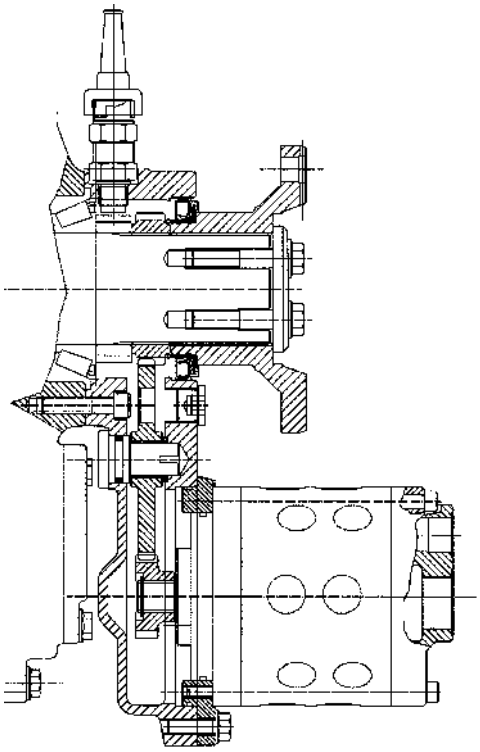

https://truckmanualshub.com/

137-011-4861

Dual PTO rotating opposite directions

Pump drive: Pump mount ISO 7707 (DIN 5462)

Direction of rotation: PTO point 1: Opposite to engine

PTO point 2: Same as engine

Gear ratio: PTO point 1: 1.41

PTO point 2: 1.14

Torque: PTO point 1: 640 Nm

PTO point 2: 720 Nm

Weight: 25-30 kg

Maximum pump weight without additional bracket: Max. bending moment at the pump joint is 30 Nm, equals e.g. 15 kg pump, center of gravity 200 mm from the mounting surface.

For this PTO, universal shaft flange kit 138-913-0340 is available. This kit converts the standard DIN direct pump mount to a universal shaft flange coupling. In this case, the universal shaft flange is a Spicer 1300-series flange.

NOTE: The PTO cannot be used when the splitter is on low range. The internal structure of the transmission does not allow an unequal load to act on the splitter clutch when the PTO is engaged. The blocking system is indicated in Sisu connection diagrams 001-186-0414 (Sisu cabs) and 001-186-0512 (Premium/Kerax cabs).

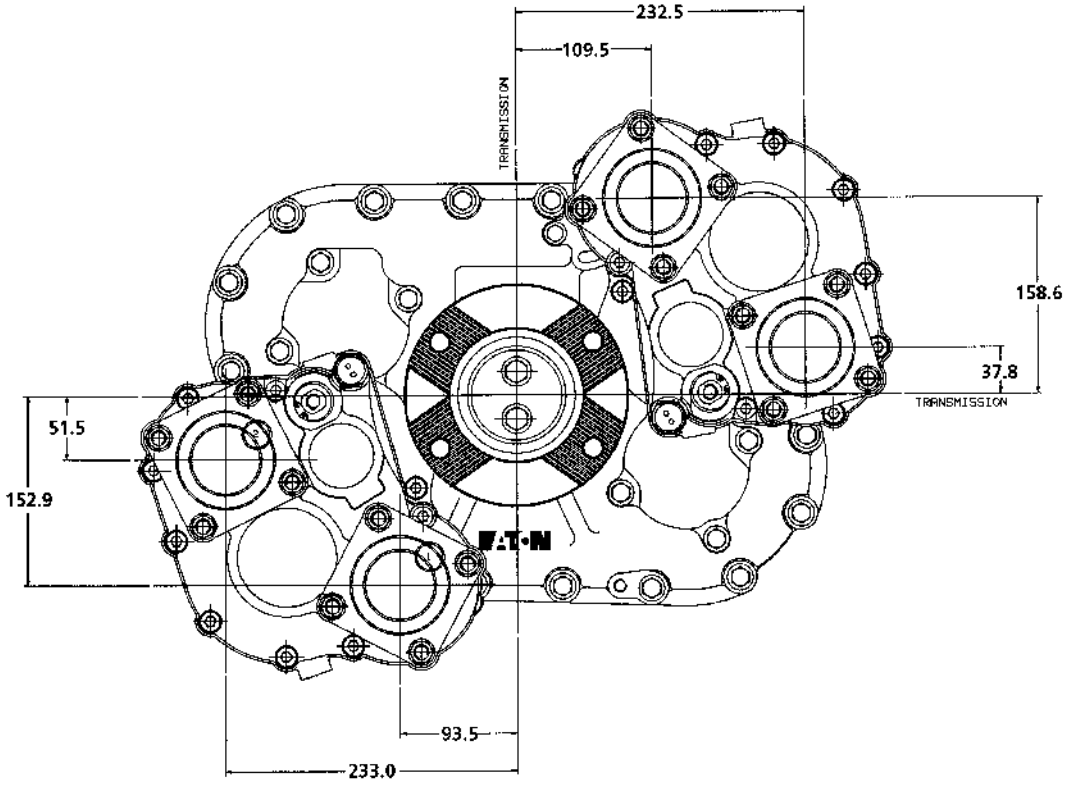

Fig. 2830koe1

☛ **NOTE: The PTO must always be mounted on the lower location (8 o'clock).**

https://truckmanualshub.com/

2.3. PTOs for Renault B18 transmission

The PTOs are located at the right-hand side of the transmission. The figure illustrates the transmission viewed from the left-hand side.

Fig. B18pto

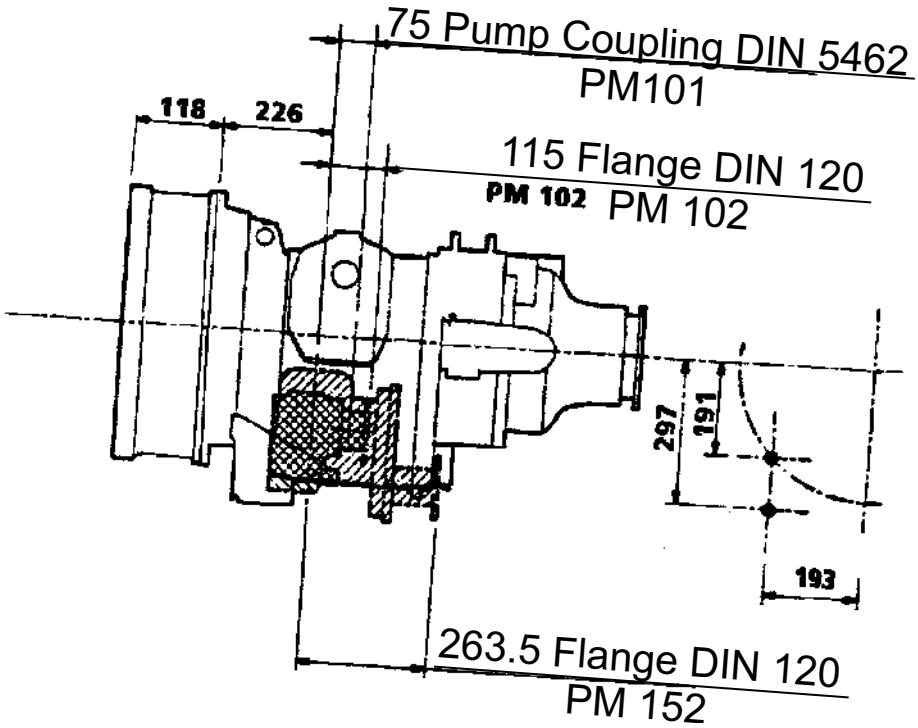

137-011-5431
Type: PM101
Pump drive: Direct pump mount DIN5462
Direction of rotation: Opposite to engine
Gear ratio: 1.008
Torque: 600 Nm
Weight: 21 kg

137-011-5441
Type: PM 102
Pump drive: Universal shaft flange DIN120
Direction of rotation: Opposite to engine
Gear ratio: 1.008
Torque: 600 Nm
Weight: 21 kg

137-011-5451
Type: PM 152
Pump drive: Universal shaft flange DIN120
Direction of rotation: Same as engine
Gear ratio: 1.45
Torque: 400 Nm
Weight: 42.5 kg

https://truckmanualshub.com/

2.4. PTOs for ZF Ecosplit 16S221 transmission

137-011-4871
Type: N71/1c
Pump drive: Direct pump mount DIN 5462 / ISO 7653
Direction of rotation: Opposite to engine
Gear ratio: 0.91 or 1.09, depending on the splitter
Torque: 1000 Nm continuous
Weight: 4.5–7 kg
Maximum pump weight without additional bracket: Max. bending moment at the pump joint is 50 Nm, equals e.g. 20 kg pump, center of gravity 250 mm from the mounting surface.

137-011-4881
Type: N71/1b
Pump drive: Universal shaft flange 90 mm, 4 holes 8.1 mm
Direction of rotation: Opposite to engine
Gear ratio: 0.91 tai 1.09, depending on the splitter
Torque: 1000 Nm continuous
Weight: 4.5–7 kg

Fig.Zfn71-1

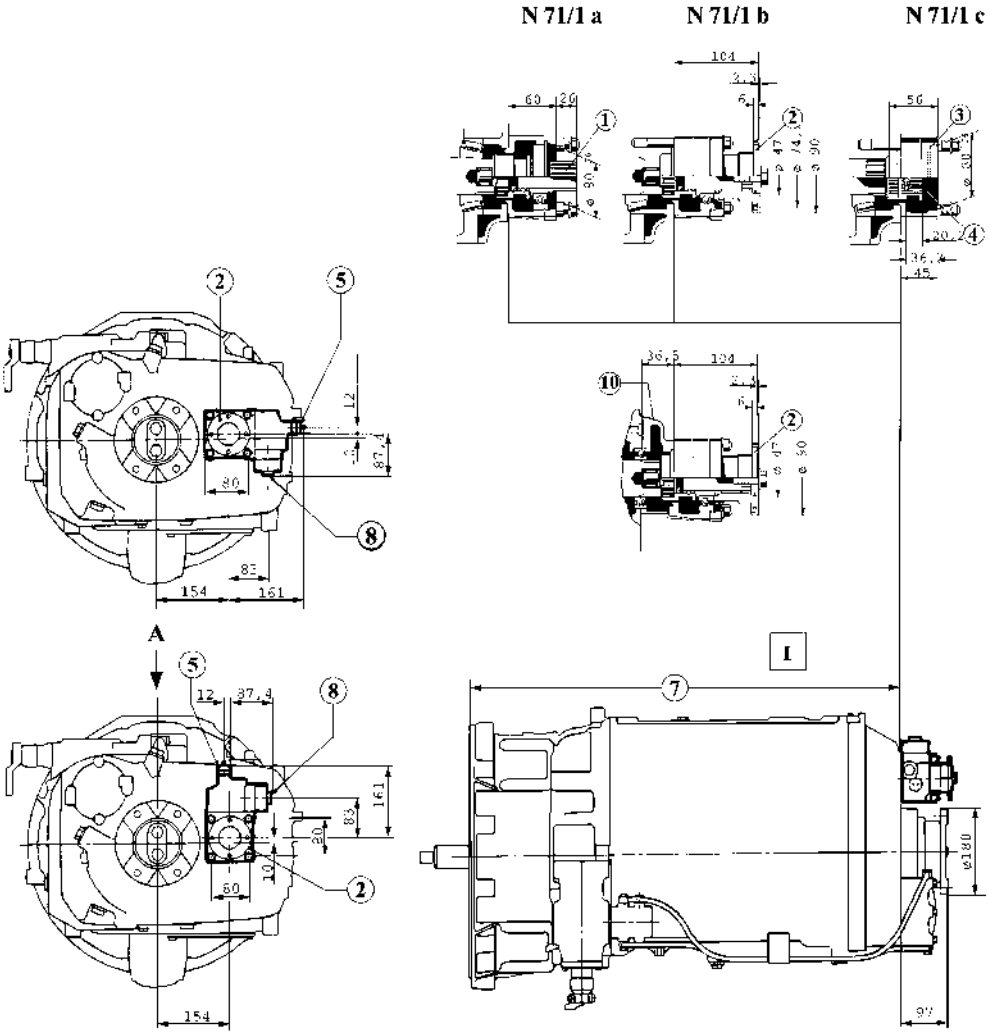

https://truckmanualshub.com/

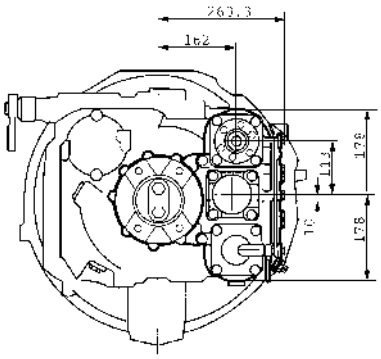

Fig. Zfn221-1

137-011-4891 (and 137-011-4921)

Dual PTO, PTO point C (top) = 137-011-4891 and
PTO point D (middle) = 137-011-4921

Type: N221/10 + N351/1

Pump drive: Direct pump mount DIN 5462 / ISO 7653, at both PTO points

Direction of rotation: PTO C; same as engine, PTO D; opposite to engine

Gear ratio: Depends on the splitter

PTO C 1.35 or 1.62

PTO D 0.91 or 1.09

Torque: PTO C 730 Nm continuous

PTO D 600 Nm continuous

Weight: (25 kg, without PTO D)

Maximum pump weight without additional bracket: Max. bending moment at the pump joint is 30 Nm, equals e.g. 15 kg pump, center of gravity 200 mm from the mounting surface.

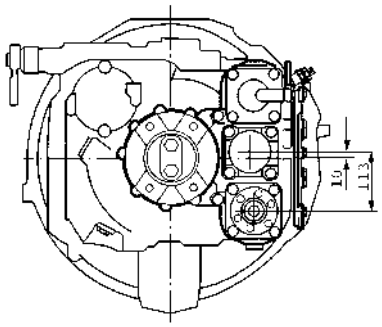

Fig. Zfn221-2

137-011-4901 (and 137-011-4931)

Dual PTO, PTO point C (top) = 137-011-4901 and
PTO point D (middle) = 137-011-4931

Type: N221/10 + N353/4

Pump drive:

PTO point C; Universal shaft flange 90 mm, 4 holes 8.1 mm

PTO point D; Direct pump mount DIN 5462 / ISO 7653

Direction of rotation: PTO C; same as engine, PTO D; opposite to engine

Gear ratio: Depends on the splitter

PTO C 1.75 or 2.09

PTO D 1.17 or 1.40

Torque: PTO C 560 Nm continuous

PTO D 430 Nm temporary (under 30 min)

Weight: (25 kg, without PTO D)

Maximum pump weight without additional bracket: PTO D; Max. bending moment at the pump joint is 30 Nm, equals e.g. 15 kg pump, center of gravity 200 mm from the mounting surface.

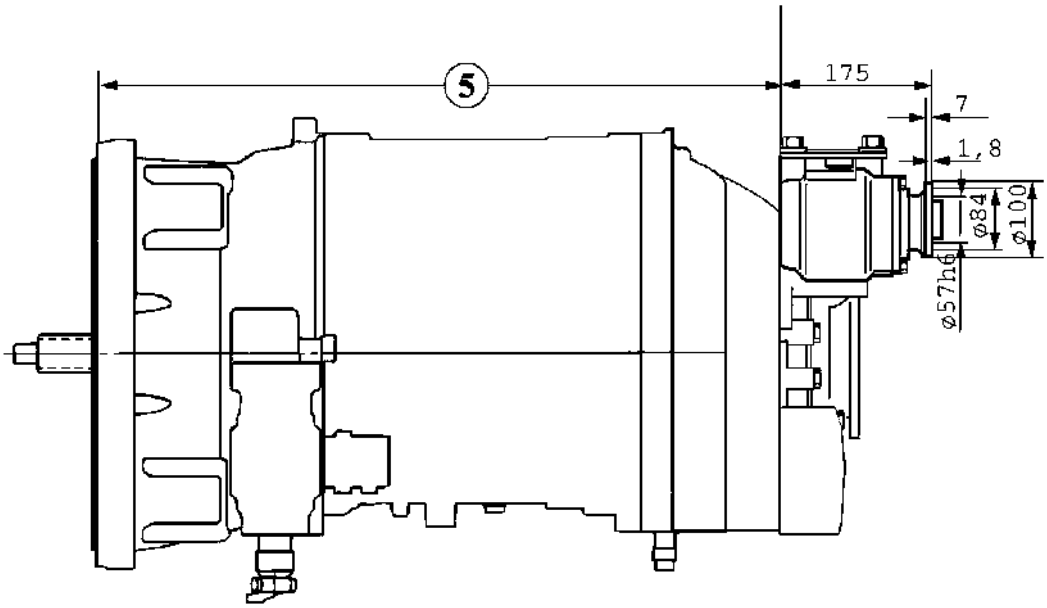

Fig. Zfn221-3

https://truckmanualshub.com/

2.5. PTOs for Allison HD 4060P and 4560P transmissions

Two PTOs can be mounted on Allison HD transmissions. The locations are on top of the transmission (1 o'clock, as shown) and on the left-hand side (9 o'clock).

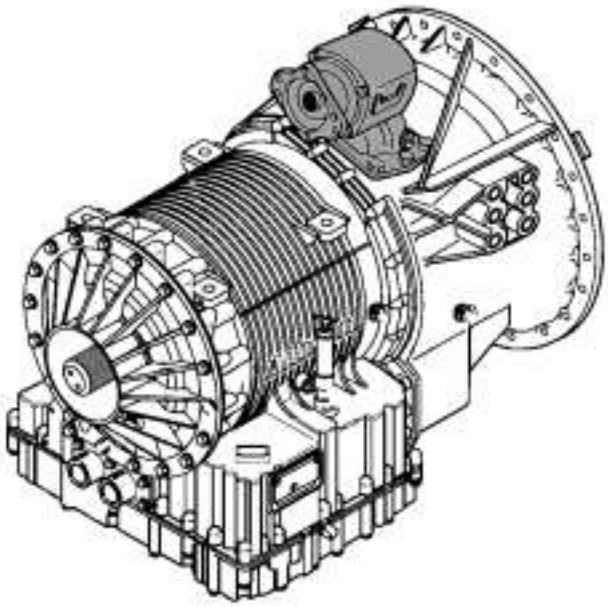

Fig. 838010a

137-000-1351

Pump drive: Direct pump mount SAE-B, 2- or 4-bolt

Direction of rotation: Same as engine

Gear ratio: 1.03

Engaging: Wet multi-plate clutch controlled by the transmission control unit

Torque:

Intermittent: 454 Nm

Continuous: 317 Nm

Output:

Intermittent: 49 kW/1000 rpm

Continuous: 34 kW/1000 rpm

Weight: 20 kg

The PTO delivery includes a mounting kit, comprising the required mounting and guide bolts and connectors. In addition, a PTO hose kit is required. The part number for the hose kit depends on the PTO location.
Left-hand side mount: 179-760-6231
Top mount: 179-760-6241

https://truckmanualshub.com/

137-000-1361

Pump drive: Universal shaft flange Spicer 1410
Direction of rotation: Same as engine
Gear ratio: 1.03
Engaging: Wet multi-plate clutch controlled by the transmission control unit
Torque:
Intermittent: 454 Nm
Continuous: 317 Nm
Output:
Intermittent: 49 kW/1000 rpm
Continuous: 34 kW/1000 rpm
Weight: 20 kg
The PTO delivery includes a mounting kit, comprising the required mounting and guide bolts and connectors. In addition, a PTO hose kit is required. The part number for the hose kit depends on the PTO location.
Left-hand side mount: 179-760-6231
Top mount: 179-760-6241

137-000-1371

Pump drive: Direct pump mount, SAE-B 2- or 4-bolt
Direction of rotation: Same as engine
Gear ratio: 1.24
Engaging: Wet multi-plate clutch controlled by the transmission control unit
Torque:
Intermittent: 434 Nm
Continuous: 304 Nm
Output:
Intermittent: 45 kW/1000 rpm
Continuous: 32 kW/1000 rpm
Weight: 20 kg
The PTO delivery includes a mounting kit, comprising the required mounting and guide bolts and connectors. In addition, a PTO hose kit is required. The part number for the hose kit depends on the PTO location.
Left-hand side mount: 179-760-6231
Top mount: 179-760-6241
For left-hand side mount, a separate PTO coupling solenoid 137-408-0031 is required. The coupling solenoid integrated into the PTO end cover will come into contact with the cross beam under the transmission.

137-000-1381

Pump drive: Universal shaft flange Spicer 1410
Direction of rotation: Same as engine
Gear ratio: 1.24
Engaging: Wet multi-plate clutch controlled by the transmission control unit
Torque:
Intermittent: 434 Nm
Continuous: 304 Nm
Output:
Intermittent: 45 kW/1000 rpm
Continuous: 32 kW/1000 rpm
Weight: 20 kg
The PTO delivery includes a mounting kit, comprising the required mounting and guide bolts and connectors. In addition, a PTO hose kit is required. The part number for the hose kit depends on the PTO location.
Left-hand side mount: 179-760-6231
Top mount: 179-760-6241

https://truckmanualshub.com/

137-000-1511

Pump drive: Universal shaft flange Spicer 1410

Direction of rotation: Same as engine

Gear ratio: 1.09

Engaging: Wet multi-plate clutch controlled by the transmission control unit

Torque:

Intermittent: 780 Nm

Continuous: 546 Nm

Output:

Intermittent: 88 kW/1000 rpm

Continuous: 62 kW/1000 rpm

Weight: 40 kg

The PTO delivery includes a mounting kit, comprising the required mounting and guide bolts and connectors. In addition, a PTO hose kit is required. The part number for the hose kit depends on the PTO location.
Left-hand side mount: 179-760-6231
Top mount: 179-760-6241

137-000-1521

Pump drive: Direct pump mount SAE-C 2- and 4-bolt

Direction of rotation: Same as engine

Gear ratio: 1.09

Engaging: Continuous, no clutch

Torque:

Intermittent: 780 Nm

Continuous: 546 Nm

Output:

Intermittent: 88 kW/1000 rpm

Continuous: 62 kW/1000 rpm

Weight: 35 kg

The PTO delivery includes a mounting kit, comprising the required mounting and guide bolts and connectors. In addition, a PTO hose kit is required. The part number for the hose kit depends on the PTO location.
Left-hand side mount: 179-760-6231
Top mount: 179-760-6241

137-000-1531

Pump drive: Direct pump mount SAE-C 2- and 4-bolt

Direction of rotation: Same as engine

Gear ratio: 1.09

Engaging: Wet multi-plate clutch controlled by the transmission control unit

Torque:

Intermittent: 780 Nm

Continuous: 546 Nm

Output:

Intermittent: 88 kW/1000 rpm

Continuous: 62 kW/1000 rpm

Weight: 40 kg

The PTO delivery includes a mounting kit, comprising the required mounting and guide bolts and connectors. In addition, a PTO hose kit is required. The part number for the hose kit depends on the PTO location.
Left-hand side mount: 179-760-6231
Top mount: 179-760-6241

https://truckmanualshub.com/

137-000-1541

Pump drive: Universal shaft flange Spicer 1410

Direction of rotation: Same as engine

Gear ratio: 1.65

Engaging: Wet multi-plate clutch controlled by the transmission control unit

Torque:

Intermittent: 562 Nm

Continuous: 394 Nm

Output:

Intermittent: 58 kW/1000 rpm

Continuous: 41 kW/1000 rpm

Weight: 40 kg

The PTO delivery includes a mounting kit, comprising the required mounting and guide bolts and connectors. In addition, a PTO hose kit is required. The part number for the hose kit depends on the PTO location.
Left-hand side mount: 179-760-6231
Top mount: 179-760-6241

https://truckmanualshub.com/

3. Calculating the output and selecting the hydraulic pump size

It is important to select the correct hydraulic pump size in order not to overload the PTO and to obtain the desired flow rate at the desired engine speed.

The required pump size (displacement) Vg (cm^3/r) can be calculated using the equation:

$$Vg = \frac{Q \times 1000}{n \times Z}$$

In:
V_g = Displacement (cm^3/r)
Q = Required flow (l/min)
n = Selected engine speed (rpm)
Z = PTO gear ratio

Hydraulic pump size calculation example

The additional device requires a flow of 90 l/min, the PTO gear ratio is 0.92 and the desired engine speed is 1200 r/min. What displacement should the selected pump have?

$$V_g = \frac{90 \times 1000}{1200 \times 0.92} = 81.5\ cm^3/r$$

The correct pump size (displacement) for the requirements above is 81.5 cm^3/r. The nearest pump displacement could be e.g. 80 cm^3/r.
In order not to overload the PTO, it is important to calculate the torque load and the selected pump's power input requirement from the PTO.

Torque (M) and power (P) can be calculated using the following equations:

$$M = \frac{V_g \times p_{bar} \times 1.59}{100 \times 0.95}$$

$$P = \frac{M \times n}{9549}$$

Where:
M = Torque (Nm)
V_g = Pump displacement (cm^3/r)
p_{bar} = System pressure
1.59; 100 and 9549 = coefficients
P = Power (kW)
n = PTO speed
0.95 = Pump efficiency (depends on the pump type)

https://truckmanualshub.com/

Calculation example 2

The hydraulic pump is selected according to the example above and the system pressure P is 200 bar. Calculate the torque load and the selected pump's input power requirement.

$$M = \frac{80 \times 200 \times 1.59}{100 \times 0.95} = 268 \text{ Nm}$$

$$P = \frac{268 \times 1\,104}{9549} = 40.0 \text{ kW}$$

The calculated load value must be compared with the maximum allowed load of the PTO.

WARNING: If the calculated load is higher than the maximum load of the PTO, a different pump size must be selected.

The correlation between power and torque at a certain speed can be calculated using the following equation:

$$P(\text{kW}) = \frac{M\,(\text{Nm}) \times n\,(\text{rpm})}{9549}$$

Calculation example 3

The maximum allowed PTO torque is 540 Nm. How much power can be extracted at PTO speed of 1000 rpm?

$$P = \frac{540 \times 1000}{9549} = 56.6 \text{ kW}$$

This calculation can be reversed if the PTO power requirement is known and we want to determine whether the maximum allowed torque for the PTO will be exceeded.

Calculation example 4

The desired PTO power requirement is 49 kW at 900 rpm. Will the maximum allowed torque for the PTO be exceeded?

$$M\,(\text{Nm}) = \frac{P\,(\text{kW}) \times 9549}{n\,(\text{rpm})}$$

Thus

$$M = \frac{49 \times 9549}{900} = 520 \text{ Nm}$$

https://truckmanualshub.com/

4. Propeller shafts

4.1. Propeller shaft operation

Universal joint position

For the operation of the propeller shaft system, it is crucial that the joint angles be selected correctly and that the relative position of the joints is correct.

☛ **NOTE: The most common cause for propeller shaft vibration is the incorrect relative position of joints.**

Fig. 938001

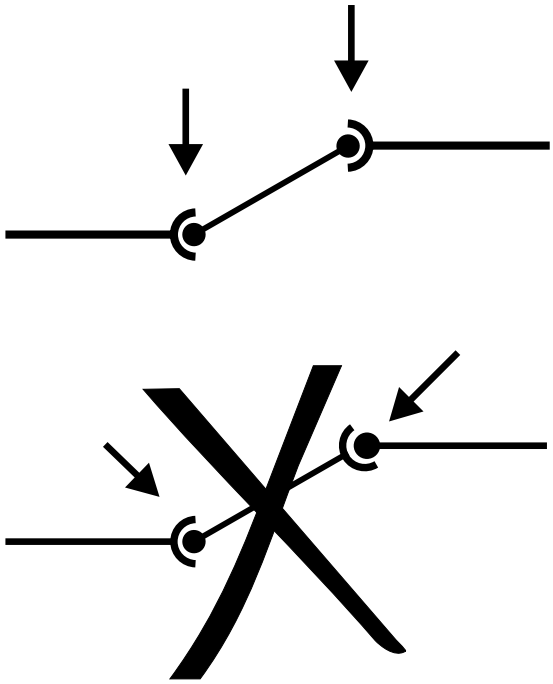

Uneven rotation of the joint

Universal joints are used when connecting shafts that form an angle with each other, or parallel shafts that are not on the same level.

When this kind of shaft assembly is rotating, the universal joints rotate unevenly.

Uneven rotation is caused by the joint angle and is an inbuilt feature of the universal joints. The higher the joint angle, the higher the level of uneven rotation.

Fig. card-3

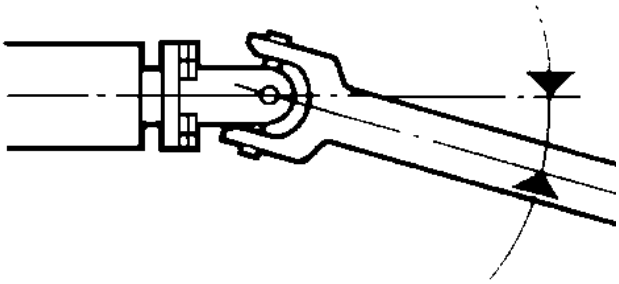

The significance of joint angles

If the joint angles are even, uneven rotation will not be conveyed to the other components of the system.

The propeller shaft's speed of rotation is constant only when the joint angle is 0°. If the joint angles are under 3°, the spiders may become pressure damaged, which will reduce their service life.

https://truckmanualshub.com/

4.1.1. Joint angle compensation with universal joints

If the propeller shaft assembly includes several universal joints, each joint will induce uneven rotation corresponding to the joint angle.

If the joint angles are measured and the difference is calculated, the propeller shaft assembly can be installed so that no disturbing vibrations will be generated.

If the yokes on the propeller shaft are on same plane, the uneven rotation of the other joint can be reduced or compensated with the other joint.

If the propeller shaft includes two yokes on same plane and their joint angles are equal, the shaft does not rotate unevenly after the second joint.

Since the yokes are on same plane, the one joint increases the speed and the other simultaneously reduces the speed, or vice versa.

The correct relative position of the joints is important regardless of whether there are two or more universal joints in the propeller shaft assembly.

Two arrangement options

There are two basic options for installing propeller shaft assemblies, Z- and W-arrangements. Combinations of these two options can also be used. The Z-arrangement is recommended, since it generates less load on the bearings of both driving and driven devices.

Z-arrangement

In a Z-arrangement, the driving and driven shafts are parallel or almost parallel.

Fig. Card-1

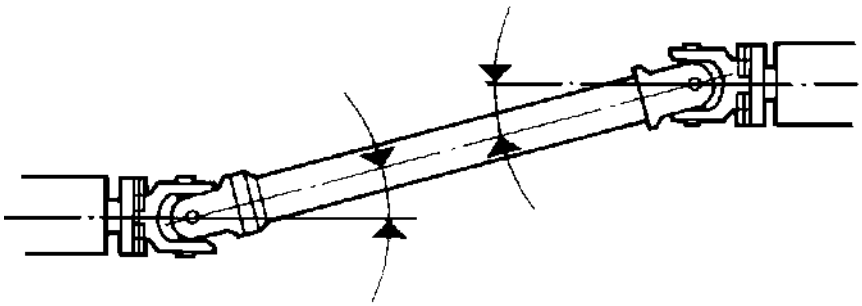

W-arrangement

In a W-arrangement, the driving and driven shafts are not parallel.

Fig. Card-2

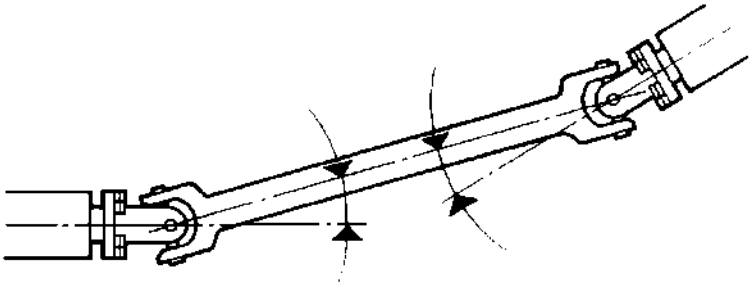

If all angles are under 3°, the uneven rotation will not cause significant problems.

The uneven rotation can be calculated exactly. Since the complete calculations for the uneven rotation of propeller shafts are very complicated, only a simplified method will be presented.

https://truckmanualshub.com/

4.1.1.1 Propeller shaft with two joints

Propeller shaft with yokes on the same plane.

Since the joint angles are not equal, the shaft conveys the uneven rotation to the other components of the system.

Joint 1 joint angle 1 = 7°

Joint 2 joint angle 2 = 6°

When the joints rotate to the same direction, the angle difference is subtracted.

$1^2 - 2^2$ = difference, when the joints are on one plane.

(7x7) - (6x6) = 13

i.e. the difference is 13 units.

If the propeller shaft in this example had been installed incorrectly, i.e. not on one plane, the angle difference would have been added up.

$1^2 + 2^2$ = deflection, when the joints are incorrectly installed, i.e. turned 90°.

(7x7) + (6x6) = 85

This difference is too high for continuous use.

Fig. 938002

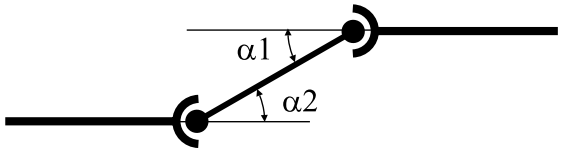

$$\alpha 1^2 - \alpha 2^2$$

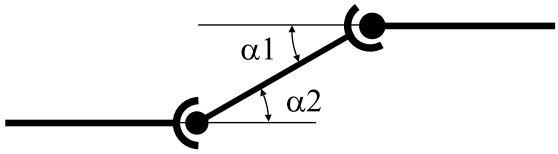

$$\alpha 1^2 + \alpha 2^2$$

The consequences of uneven rotation

As long as the uneven rotation remains between the universal joints, it has no significant effect on the durability of the drivetrain. However, uneven rotation can cause vibrations and resonance noise, which can rise to a disturbing level.

https://truckmanualshub.com/

5. Checking and adjusting the backslash of Chelsea PTOs

5.1. PTO without geared adapter

Backslash is adjusted by changing the gasket thickness between the PTO and transmission.

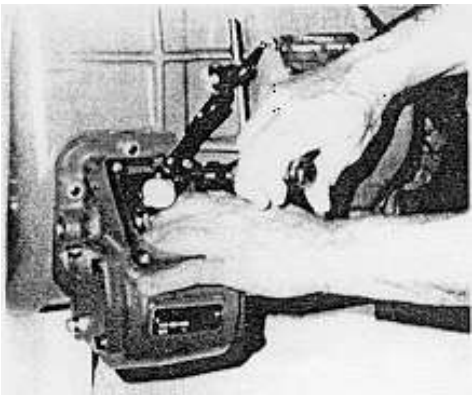

Fig. Chpklsh2

1. Remove the PTO shift housing and/or inspection cover.
2. Position the dial indicator so that it indicates the PTO's input gear movement.

NOTE: Position the contact point of the dial indicator as shown in the figure (two typical options presented).

3. Hold the PTO drive gear using a screwdriver or rod and turn the PTO's input gear back and forth. Read the total movement of the gear from the dial indicator.
4. Adjust the backslash to 0.006" – 0.012" (0.15–0.30 mm) by adding or removing gaskets.

As a general rule, a 0.010" (0.25 mm) gasket changes the backslash about 0.006" (0.15 mm) and 0.020" (0.50 mm) gasket about 0.012" (0.30 mm).

5. Install the PTO shift housing and/or inspection cover and tighten the bolts according to the torque specification.

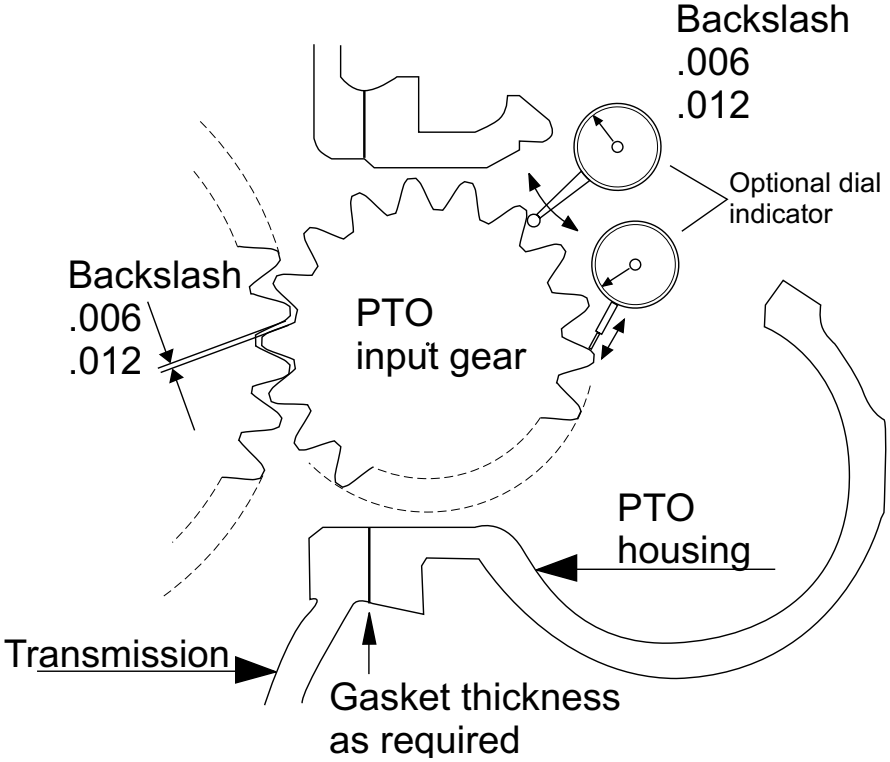

Fig. Chbklsh1

https://truckmanualshub.com/

5.2. PTO with geared adapter

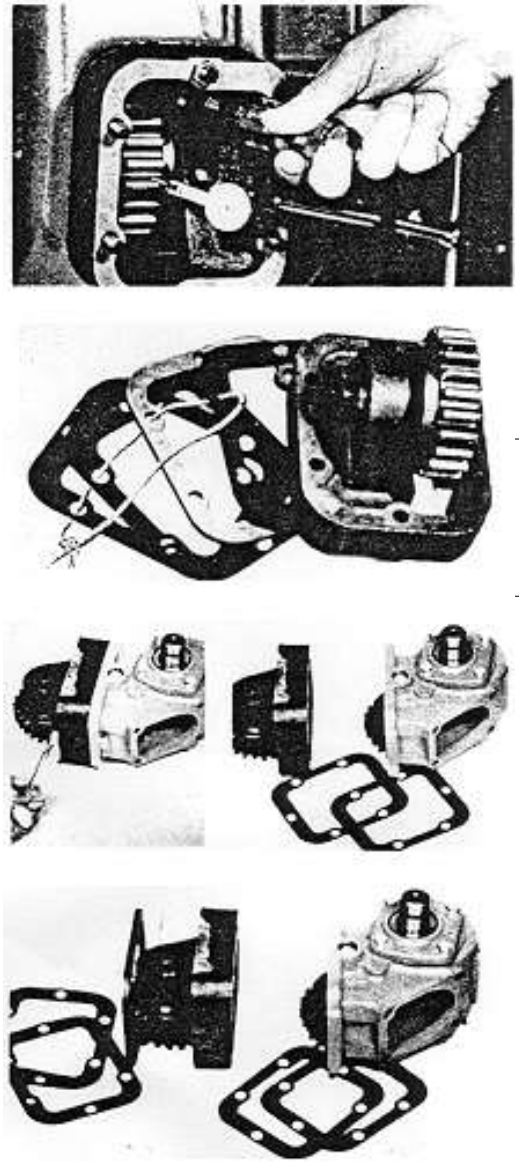

Fig.CHPKLSH3

A geared adapter is used if the PTO cannot otherwise be mounted on the transmission. The adapter changes PTO's direction of rotation, which can be an advantage for certain applications.

1. Install the adapter onto the transmission and check the adapter backslash using the procedure above.

2. After the backslash is adjusted, remove the adapter, gaskets and possible spacer from the transmission. Keep the gaskets and spacer in one stack.

3. Attach the adapter to the PTO in a bench vise.

4. Adjust the backslash of the adapter and PTO gears by changing the gasket thickness between the adapter and PTO.

5. Install the gaskets, adapter and PTO onto the transmission in the correct order.

6. Tighten the mounting bolts according to the torque specification.

Run the PTO for a short period and observe the sound.

WARNING: At this point, the transmission and PTO do not have lubricating oil, so the running period must be as short as possible.

- If the PTO makes howling noise, the backslash may be too small. Increase the gasket thickness.
- If the PTO makes a clattering noise, the backlash may be too high. Decrease the gasket thickness.

As a general rule, a 0.010" (0.25 mm) gasket changes the backslash about 0.006" (0.15 mm) and a 0.020" (0.50 mm) gasket about 0.012" (0.30 mm).

https://truckmanualshub.com/

Record

https://truckmanualshub.com/

Towing vehicles, coupling devices

General

This section provides information on various coupling devices mounted on trucks and guidelines for their mounting and attachment.

If, for example, a 24-tonne trailer is coupled to a truck, the coupling must withstand all loads acting on the coupling in all circumstances. This is insured by regulations given by the authorities and manufacturer's instructions that the bodywork manufacturer must follow in detail.

In this section we discuss some regulations that are in force at the moment relating to coupling devices of trucks. Since the regulations given by the authorities are amended from time to time and may include national derogation, the bodywork manufacturer must make sure that he has the regulations in force.

General

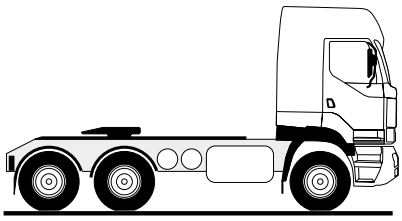

Fig. 965005

Fig. 965006

Note!
E regulation no. 55 is in the process of being amended and it will be harmonized with directive 94/20/EC with certain amendments and modifications.

Truck

- Truck (lorry) means a motor vehicle with a total laden mass of not more than 3.5 tonnes and designed and constructed for conveying goods. Trucks are divided into category N2; total laden mass not exceeding 12 tonnes, and **category N3; total laden mass exceeding 12 tonnes** (all Sisu trucks are in category N3)**.**

Towing vehicle

- Towing vehicle means a motor vehicle of category N that is designed and constructed exclusively or principally to tow trailers.
- Trailer towing vehicle means a towing vehicle that is designed and constructed exclusively or principally to tow trailers other than semi-trailers. It may be equipped with a loading platform.
- Semi-trailer towing vehicle (tractor) means a towing vehicle that is designed and constructed exclusively or principally to tow semi-trailers.

Coupling devices

- A mounting beam for attaching a pintle hook is required on a category N3 vehicle that is not fitted with trailer coupling or fifth wheel. The mounting beam must have a hole pattern in accordance with ISO 3584. Mounting beam is not required on a vehicle fitted with tail lift or a device which prevents the mounting of pintle hook.
- Trailer coupling designed for towing trailer must be located at the longitudinal axis of the truck. The turning point of fifth wheel for semi-trailer must be located at the longitudinal axis of the truck, and at or in front of the load point of rear axle or bogie.
- Coupling device must be attached securely to truck's frame, or to structures or devices attached to the frame. Positioning support and coupling devices on loading platform are permitted only for lightweight and temporary local transportation of steel bars and equivalent long items. In that case the attaching point may be behind the rear axle assembly.
- **Coupling device which is designed for towing trailer must comply with the requirements of Directive 94/20/EC of the European Parliament and of the Council relating to the mechanical coupling devices of motor vehicles and their trailers and their attachment to those vehicles, or with E regulation no. 55, or with national regulations, and in case of a close-coupling device, with E regulation no. 102, or with national regulations. If required, authorities may issue more detailed provisions on the strength and approval of trailer coupling mounting beams.**

https://truckmanualshub.com/

- **Drawbar eye, drawbar (towbar) and king-pin must comply with the requirements of Directive 94/20/EC, or with E regulation no. 55, or with national regulations and in case of a close-coupling device, with E regulation no. 102, or with national regulations. If required, authorities may issue more detailed provisions on the strength and approval of drawbar when the drawbar is designed for trailers with front bogie** (applies to motor vehicles first used on or after 1 April 2000).
- In addition, relevant aspects of provisions on coupling devices of motor vehicles are applied to trailer couplings, fifth wheels and mounting beams mounted on trailers.

☛ **The most important approval procedure for coupling devices is Directive 94/20/EC of the European Parliament and of the Council (of 30 May 1994).**

Modification applies to motor vehicles first used on or after 1 April 2000.

Coupling device manufacturers will follow the requirements of coupling device directive 94/20/EC ("e") in their new products. E regulation ("E") is already outdated.

Trailer

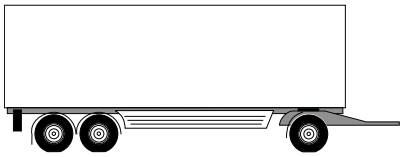

Fig. 965007

- **Trailer** (categories O1 to O4) means a towed vehicle designed for transportation of passengers or goods, or for travel purposes. Trailer is a non-self-propelled vehicle that is designed and constructed to be towed by a motor vehicle. Sled is a trailer with runners.
- **Semi-trailer** means a towed vehicle that is designed to be coupled to a semi-trailer towing vehicle or to a dolly axle. Semi-trailer imposes a substantial vertical load on the towing vehicle or on the dolly axle.
- **Drawbar trailer** means a towed vehicle with at least two axles, of which at least one is a steered axle, and equipped with a drawbar which can move vertically (in relation to the trailer), and which transmits no significant static vertical load to the towing vehicle.
- **Center-axle trailer** means a rigid drawbar trailer where the axle(s) is (are) positioned close to the center of gravity of the vehicle so that only a small static vertical load, not exceeding 10% of that corresponding to the maximum mass of the trailer, or a load of 1000 kg (whichever is the lesser) is transmitted to the towing vehicle. A dolly axle with a rigid drawbar and fifth wheel designed for coupling a semi-trailer to towing vehicle is also a center-axle trailer. Tractor-trailer means a center-axle trailer designed to be coupled to a tractor and in which a load higher than stated above is transmitted to the towing vehicle, not exceeding 3000 kg.

Classes of trailers:

Trailers are divided into the following classes according to the total laden mass:

a) O1: total laden mass of the trailer does not exceed 0.75 tonnes;

b) O2: total laden mass of the trailer exceeds 0.75 but is not more than 3.5 tonnes;

c) O3: total laden mass of the trailer exceeds 3.5 but is not more than 10 tonnes; and

d) O4: total laden mass of the trailer exceeds 10 tonnes.

Examples of couplings on vehicle combinations (ISO 11407):

https://truckmanualshub.com/

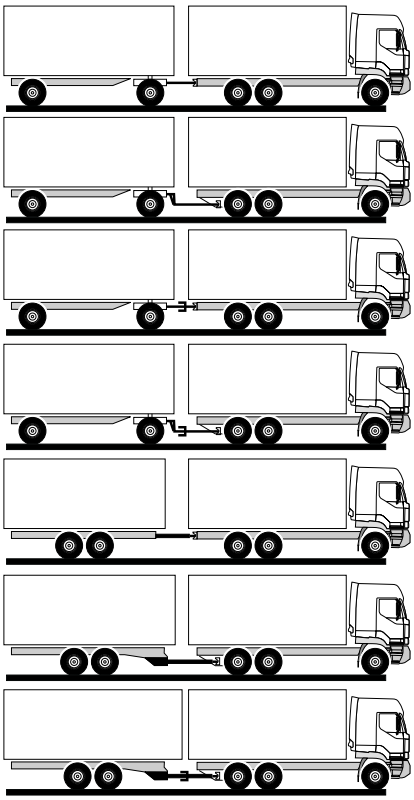

Fig. 965004

Drawbar trailer:

Towing vehicle with rear-mounted trailer coupling and drawbar trailer.

Towing vehicle with trailer coupling located low in front of the rearmost cross beam and drawbar trailer.

Towing vehicle with rear-mounted trailer coupling and close-coupled drawbar trailer (extendible drawbar)***.

Towing vehicle with trailer coupling located low in front of the rearmost cross beam and close-coupled drawbar trailer (extendible drawbar)***.

Center-axle trailers:

Towing vehicle with rear-mounted trailer coupling and center-axle trailer.

Towing vehicle with trailer coupling located low in front of the rearmost cross beam and close-coupled center-axle trailer.

Towing vehicle with trailer coupling located low in front of the rearmost cross beam and close-coupled center-axle trailer (extendible drawbar)***.

*****Due to the current provisions on vehicle combination dimensions, mounting of extendible drawbars has become uncommon (in Finland).**

For vehicle combination types, main dimensions and masses, see section 01!

Before registration/after modifications, for example, following items are inspected in relation to coupling:

- ❑ Type, approvability and permissible loads of coupling devices.
- ❑ Applicability to different trailer types.
- ❑ Dimensions having an effect on coupling information.

- Insure beforehand that the coupling devices to be mounted are approved by the authorities for the intended purpose of the vehicle.
- Insure that the vehicle combination complies with maneuverability requirements (see section 01)

https://truckmanualshub.com/

Coupling device directive 94/20/EC

Coupling device directive is related to type-approval directive 70/156/EEC with all amendments and annexes.

Coupling device is a device designed to be mounted on a vehicle. Coupling device must comply with the requirements of the special directive and be type-approved separately according to provisions laid down in the directive.

Coupling devices must comply with the requirements set out in the directive in order to insure compatibility, safe coupling and safe coupling procedures when coupling motor vehicles to different trailer types.

All mechanical coupling devices mounted on the frame, supporting structures and chassis of a vehicle and used for coupling towing vehicles to trailers are regarded as coupling devices.

All components and devices, including detachable or fixed components for attaching, adjusting or operating the coupling device, must comply with the same requirements as the coupling device. The components and devices include for example

- Mounting plates and subframes for fifth wheels
- Separate side plates of mounting beams (mounting plates)
- Slider subframes for fifth wheels and components of dual height fifth wheels
- Fifth wheel mountings on interchangeable platforms
- Fifth wheel conical pin mountings

Trailer couplings and fifth wheels must include two independent, positive locking systems. Both must lock automatically when coupling (i.e. manual additional locking is not sufficient).

Trailer coupling and fifth wheel must include a device clearly indicating closed and secured position of the coupling device.

Identifying approved and compatible coupling devices

The characteristics and strength – compliance with the requirements – of a coupling device can be verified only from markings on the coupling device or from certificate of approval with matching numbers.

Approval marking must be permanent and clearly legible also when coupling device is mounted on a vehicle.

EC approval markings

Example: VBG trailer coupling:

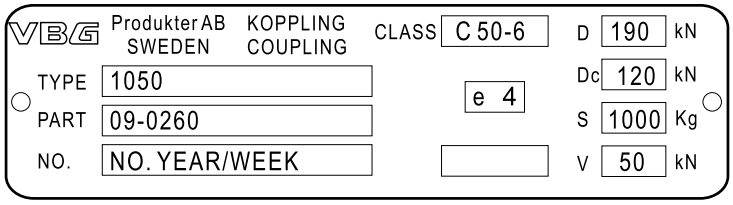

Fig. 965031

Trailer coupling in accordance with standard class C 50-6

Rated load (D) 190 kN (not vertical load)

Approved in the Netherlands (e4)

Rated load for center-axle trailer (single-axle) coupling device (D_C) 120 kN (incl. vertical load)

Approval number e4*94/20*0343*00

Static drawbar load (S) 1000 kg

Rated vertical load (V) 50 kN

https://truckmanualshub.com/

Coupling inspection

Mounted coupling must be inspected by an appropriate national body, according to national regulations. Inspection may not be mandatory if the coupling devices and connectors for brake and electric systems comply with the requirements of:

❶ directive 94/20/EC, or

❷ E regulation no. 55, or

❸ special national regulations, or

❹ appropriate standards in force.

Directive 94/20/EC is relating to:

- scope
- definitions
- type-approval
- requirements
- testing
- attachment to a vehicle

E regulation no. 55 corresponds to the directive in relation to technical requirements.

Coupling standards

There are numerous standards relating to couplings.

Examples of current ISO coupling standards:

- Coupling devices between towing vehicles and trailers: ISO 1102 and ISO 11406
- Mounting of coupling devices on mounting beams: ISO 3584
- Mechanical coupling between tractors and semi-trailers: ISO 1726
- Semi-trailer king-pin, 50 mm: ISO 337
- Semi-trailer king-pin, 90 mm: ISO 4086
- Coupling devices between towing vehicles and center-axle trailers: ISO 11407
- Pneumatic brake connectors (separate connectors): ISO 1728
- Location of electrical and pneumatic connectors: ISO 4009
- Electrical connections, type 24 N: ISO 1185
- Electrical connections, type 24 S: ISO 3731
- Electrical connections, 24 V, 15-pole: ISO 12098
- Electrical connections, type 12 N: ISO 1724
- Electrical connections, 12 V, 13-pole: ISO 1146

Note!

Bodywork manufacturer should always have current standards relating to coupling devices and couplings.

https://truckmanualshub.com/

Possible problems

When designing a vehicle combination, the bodywork manufacturer should insure the availability of approved coupling devices beforehand.

Trailer couplings:
Main products are "e" type-approved; problems unlikely.

Trailer coupling mounting beams:
"e" approved mounting beams with side plates available.
Problems may arise in special cases, for example:
- Accommodating mounting beam on tipping trucks with short rear overhang length due to tipping axle.
- On 6x4 trucks if an anti-roll bar is mounted low behind the bogie axle.
- Not enough space for the drawbar under the anti-roll bar when transferring the cassette on cassette trucks.
- Accommodating the sheaths for rear-mounted detachable loader

Drawbar eyes:
"e" approved drawbar eyes available.

Drawbars:
Availability of drawbars that are "e" approved for masses permitted in certain countries may pose a problem (especially uncommon lengths, mounting widths and front bogie masses and total laden masses that are higher than are normally permitted).
Approval testing of drawbars is unfinished and drawbar types approved for higher masses are not adequately available at the moment. Automatic drawbars are not tested at all.
Check the national requirements for drawbars.

Fifth wheels:
Unlikely to cause problems.
We recommend that the approval of detachable fifth wheel's attachment be insured beforehand.

Fifth wheel mounting plates:
We recommend that the availability of approved mounting plates for certain heights be insured beforehand.

King-pins:
Approved king-pins available.

National testing and approval of coupling devices

Testing and approval according to national procedures.

https://truckmanualshub.com/

Notes on various combinations!

Towing vehicle and a semi-trailer:

- Increase of the permitted total laden mass to 48 tonnes in certain countries has generated problems with some king-pin models on old semi-trailers.
- The difference in permitted masses (48 or 44 tonnes) causes that, for example, dual height fifth wheel ratings are not enough for 48-tonne combinations.

Dolly axle:

When using a dolly axle, its vertical load requirements for trailer couplings and mounting beams must be taken into consideration.

King-pin may reduce the use as a module combination on old semi-trailers.

Trailer coupling must be mounted similarly to a coupling for a drawbar trailer. Most of the dolly axle couplings are equipped with a power actuator.

Center-axle trailers:

We recommend that Dc and V values always be calculated, especially for module combinations.

Note the trailer coupling's mounting depth of 1400/1600/1900 mm, and mounting height 425 mm.

The registration documentation of a center-axle trailer should include a marking of coupling device's permitted values (Dc and V values), as well as towing vehicle's (truck or a semi-trailer) D, Dc and V values. Otherwise it will be difficult for a driver or supervisory authority to know if the center-axle trailer can be for example towed as a module with a semi-trailer combination. Replacing the coupling device later will cause rather high and unnecessary costs.

A drawbar trailer coupled to a semi-trailer is a rather uncommon combination.

Power-actuated coupling is recommended since the coupling is difficult to reach.

Equations:

There are no official equations for rated loads of coupling devices when a vehicle combination includes two trailers.

A proposition on rated loads for module combinations is presented to the European Automobile Manufacturers Association (ACEA).

Note on proposition:

- When dimensioning the coupling devices, technically permissible laden mass of each unit must be used. Total permissible laden mass of a module combination will in most cases be well over 60 tonnes; the actual combination of units is not known beforehand. For example, truck 26 t, semi-trailer's bogie 24 t and center-axle trailer 20 t totals 70 tonnes. Coupling devices on center-axle trailers are usually dimensioned for combination's laden mass of 44 tonnes.

Trailer coupling, mounting beam and drawbar eye on a dolly axle: D value is used (not Dc value), since vertical loads are significantly lower than on center-axle trailers.

Since the "cargo space" of a dolly axle is only as long as the fifth wheel, factor 0.5 is used when calculating the V value for a dolly axle (according to VBG calculation instructions).

https://truckmanualshub.com/

https://truckmanualshub.com/

1. Coupling devices

Values D, Dc, V and S are given for a coupling device according to EC directive 94/20/EC. The right coupling device for intended purpose can be selected using the given values in various equations.

1.1. Equations for coupling devices

1.1.1. D value

Rated load in kilonewtons [kN] for drawbar trailer coupling devices not designed to support vertical loads.

$$D \quad g\frac{T\,x\,R}{T \quad R} \qquad \text{For example } 9{,}81\frac{26x36}{26 \quad 36} \quad 148\,kN$$

where:

T = Technically permissible maximum mass of the towing vehicle [t]

R = Technically permissible maximum mass of a drawbar trailer (with a drawbar free to move on a vertical plane) [t]

g = Acceleration due to gravity [m/s^2] (9.81 m/s^2)

1.1.2. D value

Rated load [kN] for semi-trailer coupling devices.

$$D \quad g\frac{0{,}6TR}{T \quad R \quad U} \qquad \text{For example } 9{,}81\frac{0{,}6x32x39}{32 \quad 39 \quad 15} \quad 131\,kN$$

where:

T = Technically permissible maximum mass of the towing vehicle [t]

R = Technically permissible maximum mass of a semi-trailer (fifth wheel load + bogie mass) [t]

U = Vertical mass on the fifth wheel [t]

1.1.3. Dc value

Rated load [kN] for **center-axle trailer** (single-axle) coupling device.

$$Dc \quad g\frac{TxC}{T \quad C} \qquad \text{For example } 9{,}81\frac{26x18}{26 \quad 18} \quad 104\,kN$$

T = Technically permissible maximum mass of the towing vehicle [t], including vertical load imposed by a single-axle center-axle trailer [t]

C = Total axle mass of the center axle trailer loaded to the technically permissible maximum mass [t]

1.1.4. V value

Rated load [kN] for center-axle trailer coupling device.

$$V \quad a\frac{x^2}{l^2}C \qquad \text{For example } 1{,}8\frac{7{,}82^2}{6{,}5^2}18 \quad 47\,kN$$

where:

a = Factor depending on the type of suspension system of the rear axle of the towing vehicle

a = 1,8 m/s^2 (air suspension or equivalent)

or

a = 2,4 m/s^2 (other types of suspension)

x = Length of the cargo space of the trailer [m]

l = Distance from the center of the drawbar eye to the center of the axle assembly [m]

https://truckmanualshub.com/

2. Trailer coupling mounting beam

2.1. Location of the mounting beam/trailer coupling

See also point 3.1. on page 217.

Figure shows an example of calculating the distance between coupling pin's centerline and the rearmost edge of vehicle's cargo space. Mounting beam location can be determined after the installation dimension of the selected trailer coupling's coupling pin is taken into consideration.

When designing a vehicle combination, provisions for example on the length of towing vehicle, length of trailer, trailer type, length of cargo space, etc must be taken into consideration. See section 01.

X = B + C + D – Z

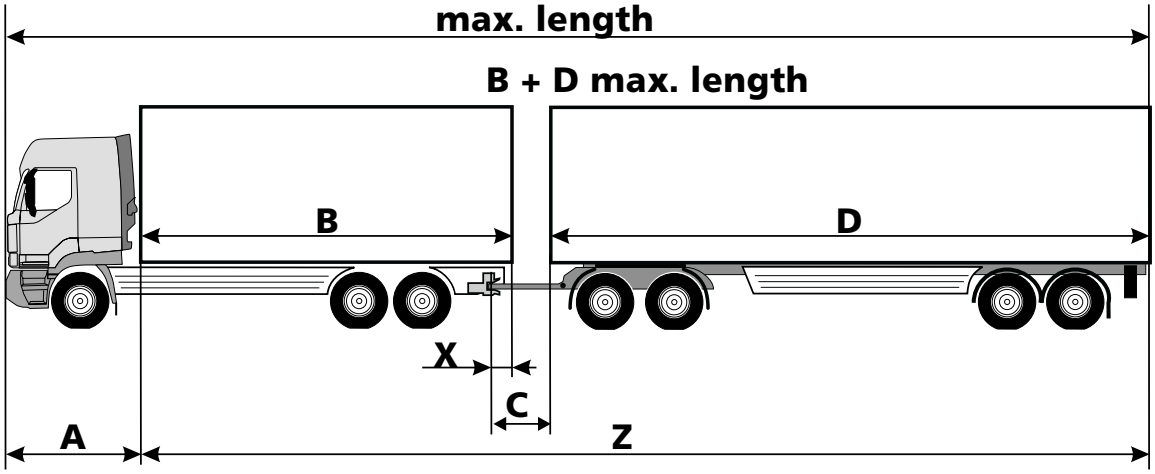

Fig. 965032

For maximum length of the vehicle combination and total maximum length of cargo spaces, see appropriate regulations given by the authorities.

B = Truck's bodywork length

C = Drawbar's overhang length from the trailer's bodywork

D = Trailer's bodywork length

Z = Total bodywork length + space

2.2. Mounting of Sisu end cross beam/mounting beam

We recommend original Sisu end cross beam/mounting beam, no. **102-910-0121** for the couplings of drawbar trailers. Maximum permissible trailer mass for the beam is 40000 kg, 50000 if driving speed is 50 km/h.

- **Sisu end cross beam/mounting beam is approved only for Sisu trucks** and a separate end cross beam at rear of the frame is not required when Sisu end cross beam/mounting beam is used.
- If other than Sisu end cross beam/mounting beam is used, a rigid cross beam must be at the end of the vehicle.
- If other than Sisu end cross beam/mounting beam is used, both mounting beam and its mounting plates must be approved by the authorities according to directive 94/20/EC, E regulation no. 55 or national regulations, and include appropriate approval mark.

☛ **Note! Sisu end cross beam/mounting beam is intended for drawbars that can move vertically (drawbar trailers).**
For center-axle trailers and/or dolly axles, a mounting beam approved for that purpose must be mounted (in this case the mounting beam will be designed and approved also for substantial vertical loads transmitted by the rigid drawbar).

https://truckmanualshub.com/

2.2.1. Mounting

The position of mounting beam is determined separately for each case according to cargo space, trailer and trailer coupling. There are several methods to calculate the mounting position for trailer coupling and mounting beam. Usually, mounting position is determined by the truck dealer in cooperation with the customer using a computer.

2.2.1.1 To a standard frame

When the position of mounting beam is determined, 16-mm holes are drilled simultaneously through mounting beam's mounting plate and frame beam's web and lower flange as shown in figures below.

If the mounting bracket of the bogie lift cylinder and mounting beam should be located in the same position, cylinder's bracket is bolted through the mounting beam's flange with M14 bolts [tightening torque 110 Nm, (8.8)].

Mounting:

Components, especially the mating surfaces must be clean!

M16 bolts (8.8).

Tightening torque 175 Nm.

Flat hard washers (hardness 200 HB) under bolt heads and nuts.

Bolts must be tightened with a torque wrench

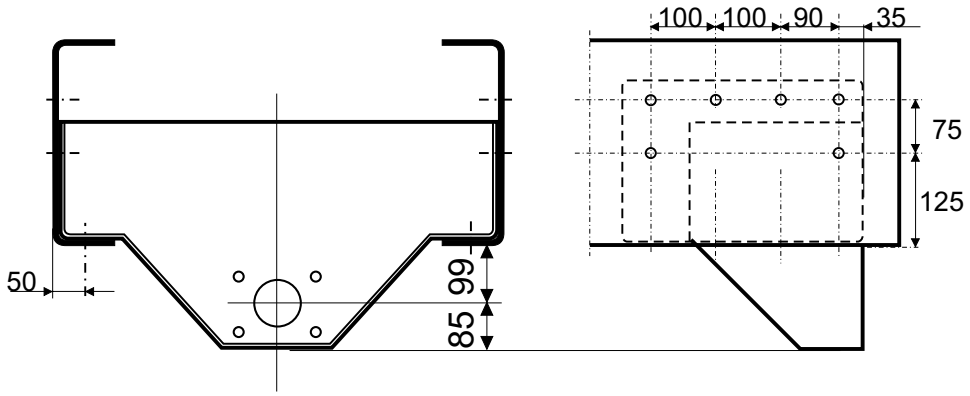

Fig. 965001

Sometimes a mounting beam has to be mounted to a frame section with inner frame. In these cases inner frame must be shortened in order to accommodate the mounting beam to proper location.

Shortening of the inner frame:

1. Open the bolts between the inner and outer frame beams.
2. Force a wedge between the inner and outer beams.
3. Cut off appropriate section from the inner frame beam. Be careful not to damage the outer frame beams.
4. Finish the end of the inner frame beam (burnt area), remove damaged paint and paint with primer and topcoat.

https://truckmanualshub.com/

2.2.1.2 To a high frame

Fig. 965003

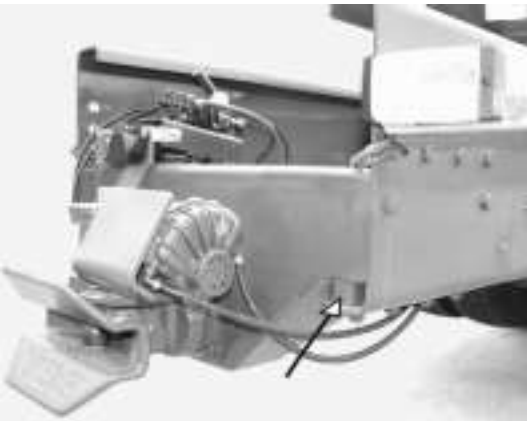

When a mounting beam is mounted to high C frame, blocks are fitted between frame's lower flange and mounting beam (part no. 101-811-2250).

Blocks must also be fitted with end cross beam/mounting beam other than Sisu end cross beam/mounting beam if mounting beam is bolted through the lower flange of the C frame beam.

If the mounting bracket of the bogie lift cylinder and mounting beam should be located in the same position on high frame, cylinder bracket is moved 35 mm upwards to accommodate mounting beam bolts under the bracket.

Mounting:
M16 bolts (8.8).
Tightening torque 175 Nm.
Flat hard washers (hardness 200 HB) under bolt heads and nuts.

Components must be clean!

Bolts must be tightened with a torque wrench!

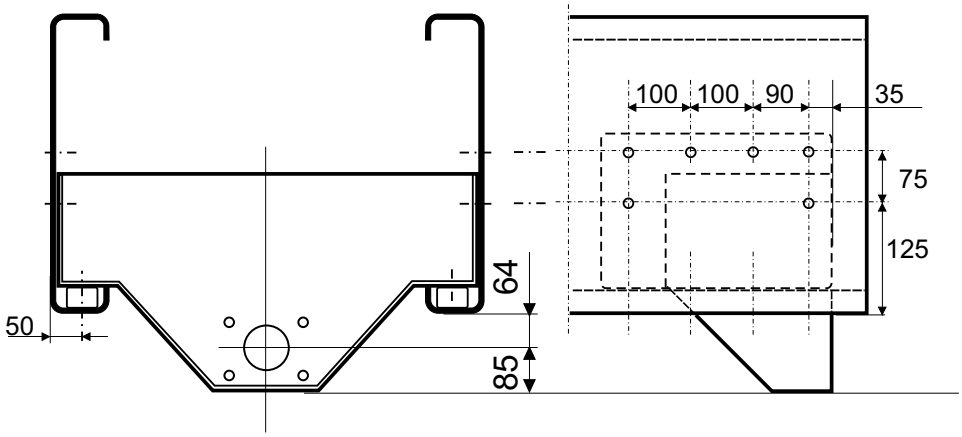

Fig. 965002

2.2.2. Inspection

2.2.2.1 Mounting inspection

- Check that the mounting beam bolts are tightened to correct torque.
- Mounting plates for rear underrun protection device, light beams or mounting brackets for wheel guards may be installed under the mounting beam bolts. Installing other items, such as mountings for rear-mounted loader or tail lift mounting plates under the mounting beam bolts is prohibited.
- Drilling holes or attaching any objects by welding to mounting beam is prohibited.

2.2.2.2 Maintenance inspections

Check the tightness of mounting bolts at appropriate intervals. Check the condition of mounting beam visually at periodic services.

- Check that the mounting beam has not moved in relation to the vehicle frame.
- Check the beam for fatigue failures; coupling's attaching point, welded joints, side plates (remove the trailer coupling if required)
- Check that the beam does not have marks indicating jack-knifing, buckling or hits by the drawbar eye.

https://truckmanualshub.com/

2.3. Mounting of other manufacturer's mounting beams (e.g. VBG)

Insure that the mounting beam and mounting plates are approved by the authorities! (Mounting plates and mounting beam must have appropriate approval marks)

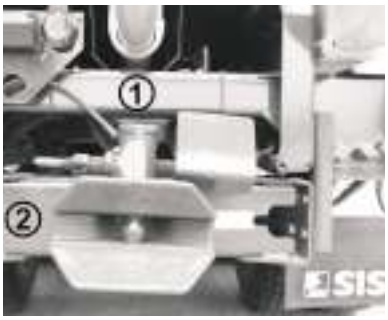

Fig. 965011

Mounting of mounting beam and/or mounting plates must be in accordance with instructions on attaching components to the frame (see section 02).

Mounting beam or mounting plates are bolted to the web of the frame. If required, mounting beam may be partly attached to lower flanges of frame beams (similarly to Sisu mounting beam), **but only behind frame's rearmost support point** (in this case a block must be fitted between frame's lower flange and mounting beam, see previous page).

A rigid cross beam must be at the end of the vehicle:

❶ Rigid cross beam; 101-241-0300, to be used with older VBG mounting beams.

❷ Rigid cross beam; 101-169-0000, to be used with approved VBG mounting beams that have entered into markets at March/April 2001.

Figure: 1. Rigid cross beam 2. Mounting beam

- Distance between the mounting beam and the next cross beam must not exceed 1400 mm. If required, the first cross beam must be installed even closer to the mounting beam (if the bodywork does not provide support to the frame and/or vehicle is used for heavy trailer-towing duties).

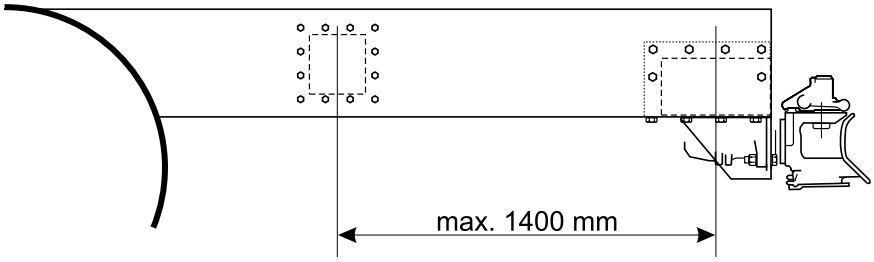

Fig. 965035

Always follow instructions given by the mounting beam manufacturer and in this manual.

Check that the mating surfaces are clean when mounting the mounting beam and its mounting plates.

Tighten the bolts with a torque wrench.

2.4. Towing vehicle's chassis frame and its possible strengthening

Heavy trailer generates notable lateral forces into the towing vehicle's chassis frame. In order to maintain good maneuverability, the chassis frame must be stiffened in the following cases if a coupling device is fitted:

2.4.1. Low-frame vehicle

(See Fig. 965034)

- Chassis frame must be stiffened with a diagonal support or truss bracing for four-axle trailer towing duties if the rear overhang exceeds 1200 mm.
- Chassis frame must be stiffened with a diagonal support or truss bracing for three-axle trailer towing duties if the rear overhang exceeds 1400 mm.
- Chassis frame must be stiffened with a diagonal support or truss bracing if trailer coupling's center point is lower than 100 mm from the frame's lower edge and the rear overhang exceeds 1000 mm.

For stiffening the rear of the vehicle, supports or bracings can also be constructed to the subframe provided that subframe's mounting to the chassis frame is sufficiently rigid and constructed with sufficiently thick mounting plates starting at the rear axle and continuing to the rear of the frame.

On vehicles with tipping platforms, instructions on subframes and truss bracings given in section 03 must always be followed.

https://truckmanualshub.com/

2.4.2. High-frame vehicle

- Chassis frame must be stiffened with a diagonal support for four-axle trailer towing duties if the rear overhang exceeds 2000 mm.
- Chassis frame must be stiffened with a diagonal support if trailer coupling's center point is lower than 150 mm from the frame's lower edge and the rear overhang exceeds 1800 mm.

Measuring rear overhang for coupling pin's centerline:

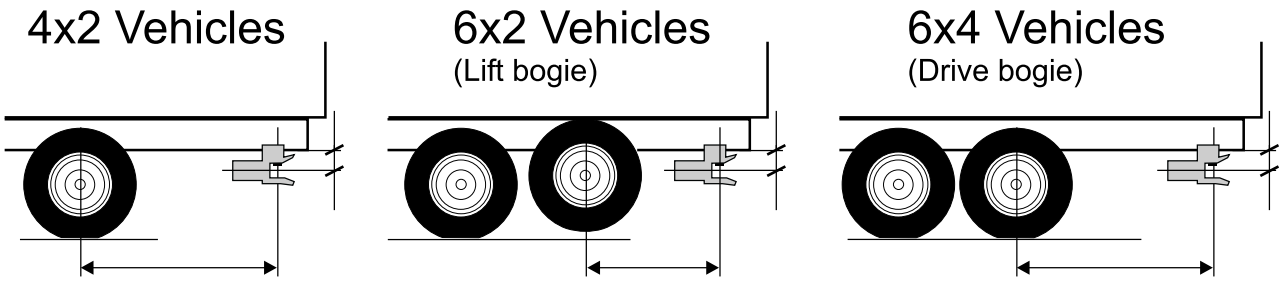

Fig. 965034

Some examples on attachment of the mounting beam are shown below.
A rigid Sisu cross beam must also be mounted to the end of the frame.

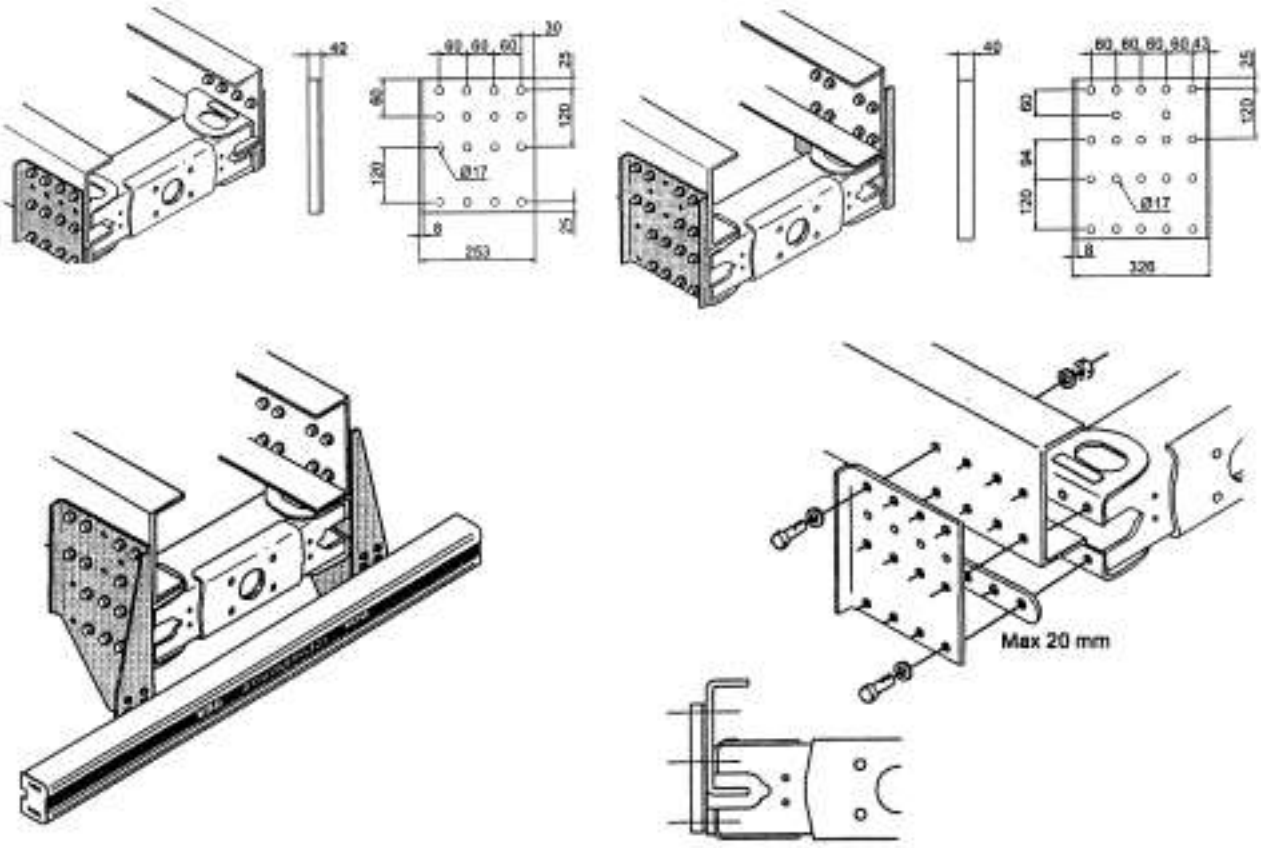

Fig. 965008

https://truckmanualshub.com/

3. Trailer coupling

3.1. Trailer coupling position

Trailer coupling position depends on the vehicle combination.

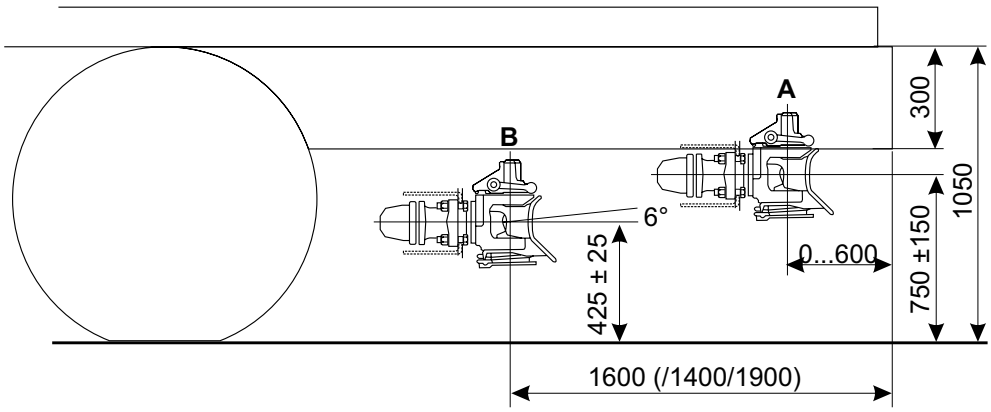

Fig. 965009

A = Drawbar trailer or dolly axle (according to the old standard)

B = Center-axle trailer (according to standard ISO 11407)

More detailed regulations given by the authorities and instructions can be found in standards (see page 207).

☛ **Trailer couplings are supplied with instructions on mounting, maintenance and use by the coupling manufacturer. These instructions must be followed.**

3.2. Mounting of power actuator control valve

Power actuator control valve must be positioned and mounted carefully.

Trailer coupling must be visible from the control valve.

The control valve must be mounted so that it cannot come loose, for example, due to corrosion of mounting components or metal fatigue.
In addition, control valve must be in a sheltered location or otherwise protected, for example, against tire explosion (tire explosion or flying tire debris must not be able hit valve to open position).

Valve's pneumatic pipes must be cut to proper length and attached securely.

Insure that pneumatic connections are correct!

Fig. 965014

3.3. Other

- When mounting the coupling, note that drawbar inclination must not be more than ± 5° (also when bogie axle is lifted).
- **Central lubrication** is not recommended for couplings that are rarely used (for example coupled only once a week) since coupling's operation becomes heavy if the coupling mechanism overfills with grease.
- Bolts must be tightened with a **torque wrench**.
- **Re-tightening** must be possible after the bodywork is mounted on the vehicle.

https://truckmanualshub.com/

3.4. Trailer couplings and equipment, supplied from the factory

Sisu Auto Inc. supplies the following towing equipment, mounted either permanently or temporarily:

- ❑ Q101 Trailer coupling VBG-8500, incl. electric and pneumatic connectors. SISU end cross beam/mounting beam.
- ❑ Q102 Trailer coupling VBG-8500 w/ pneumatic power actuator, incl. electric and pneumatic connectors. SISU end cross beam/mounting beam.
- ❑ Q103 Trailer coupling KRZ50S, incl. electric and pneumatic connectors. SISU end cross beam/mounting beam.
- ❑ Q104 Trailer coupling VBG-590, incl. electric and pneumatic connectors. SISU end cross beam/mounting beam.
- ❑ Q105 Trailer coupling VBG-590 w/ pneumatic power actuator, incl. electric and pneumatic connectors. SISU end cross beam/mounting beam.
- ❑ Q107 Pintle hook, w/o electric and pneumatic connectors.
- ❑ Q108 SISU end cross beam/mounting beam, w/ pintle hook, w/o electric and pneumatic connectors.
- ❑ Q109 SISU end cross beam/mounting beam, w/o trailer coupling.
- ❑ Q112 Trailer coupling TAV-50, incl. electric and pneumatic connectors. SISU end cross beam/mounting beam.
- ❑ Q113 Trailer coupling TAV-50, w/ pneumatic power actuator, incl. electric and pneumatic connectors. SISU end cross beam/mounting beam.
- ❑ Q201 Mounting of mounting beam (when the mounting dimension is given).
- ❑ Q202 Temporary mounting of mounting beam. **Note!** The bodywork manufacturer must mount the beam permanently.

Alternative mounting beams

- ❑ Q701 VBG mounting beam.
- ❑ Q702 VBG mounting beam, w/ rear underrun protection device.

Electric and pneumatic connectors

- ❑ Q901 Trailer electric and pneumatic connectors.
- ❑ Q902 Trailer electric connector for items Q107 and Q108.

Note! Information may change without prior notice.

https://truckmanualshub.com/

4. Fifth wheel

4.1. Tractors for semi-trailers, general

As stated on the first page of this section, Sisu tractors for semi-trailers are category N3 vehicles that are designed and constructed exclusively or principally to tow semi-trailers.

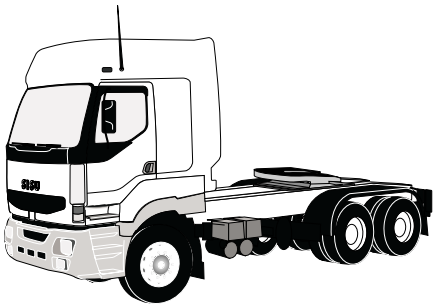

Fig. 965016

A semi-trailer is coupled to the tractor with a fifth wheel.

As a tractor for semi-trailers, the vehicle can be used for various transport duties. However, this requires compliance with national and international regulations and standards, and the construction of the vehicle and trailer by the same standards.

ISO 1726 is an international standard that defines fifth wheel position and characteristics as well as trailer's space requirement. In the following we discuss some issues relating to this standard, but the bodywork manufacturer must familiarize himself with the standard in close detail.

4.2. Coupling dimensioning

4.2.1. Wheelbase

Tractor's wheelbase is selected according to the provisions on the length and total laden mass of the vehicle combination and considering, for example, trailer's front overhang and maneuverability.

General rule is to select as short a wheelbase as possible within the regulatory limits.

4.2.2. Trailer's front overhang

Trailer's front overhang radius from the king-pin must not exceed 2040 mm. With a certain trailer width (W), this corresponds with distance (L) from the king-pin to trailer's front edge (see table below).

W =	L =
2500 mm	1610 mm
2550 mm	1590 mm
2600 mm	1610 mm

Check also that there is enough clearance, for example, between the cab and trailer and between trailer's landing legs and vehicle.

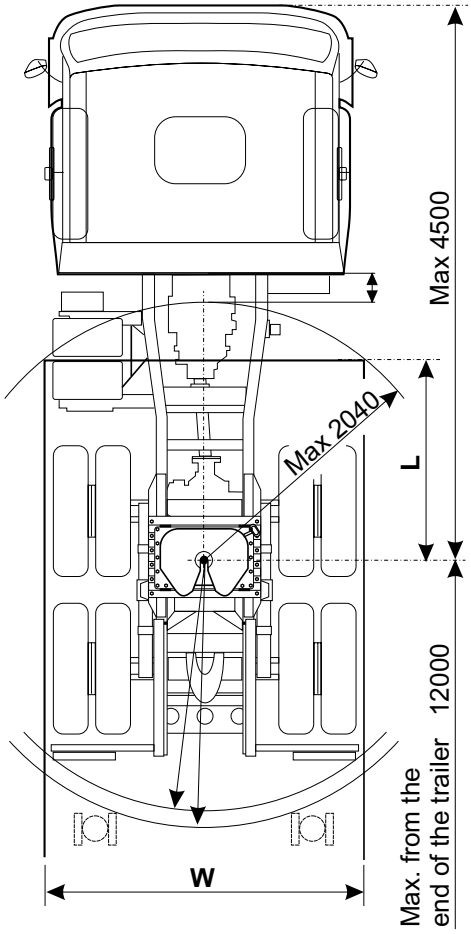

Fig. 965021

https://truckmanualshub.com/

4.2.3. Coupling profile

By using the coupling profile shown in Fig. 965022 for coupling dimensioning, compatibility with all tractors and trailers that are manufactured in accordance with ISO standard is insured.

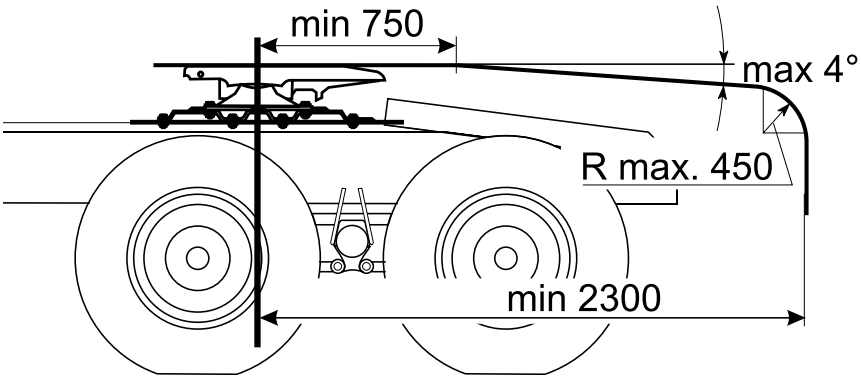

Fig. 965022

4.2.4. Fifth wheel position

Distance between tractor's front to the center point of fifth wheel must not exceed 4500 mm if a 13-6-meter trailer is coupled to the vehicle (see Fig. 965021).

Check the axle loads when positioning the fifth wheel!

See also section 01: (Table: Vehicle, trailer and combination vehicle lengths).

Check that there will be enough space between the trailer and the rear of the frame!

Following issues must also be noted when positioning the fifth wheel:

- Maneuverability, i.e. the control of the trailer is improved when the fifth wheel is positioned as far to the front as possible from the bogie's center of gravity (6x4 vehicles), or from the rear axle's centerline (4x2 vehicles) (since the trailer tends to push the tractor sideways when turning on slippery conditions, tractor's oversteering characteristics are increased in proportion to the fifth wheel's position at the rear).
- In order to utilize the maximum permissible front axle load, fifth wheel should be positioned as far to the front as possible.
- On the other hand, in order to minimize frame vibration, fifth wheel should be positioned as far to the rear as possible, i.e. at the bogie's center of gravity or rear axle's centerline, or as close to these points as possible.
- In addition, trailer must not be able to come into contact with the cab or the rear section of the vehicle frame under any circumstances.
- Regulations relating to axle loads, vehicle combination lengths, maneuverability (turning), etc. must be followed.
- Since there are so many factors that have an effect on the fifth wheel location, it must always be determined separately for each case. The easiest way to determine the position is to do it in cooperation with the truck dealer using a computer.

Maneuverability rules of thumb:

Two-axle vehicles:

- Fifth wheel is positioned in front of the rear axle, about 10% of the wheelbase.

Three-axle vehicles:

- Fifth wheel is positioned in front of the bogie's centerline, about 10% of the wheelbase.

However, the fifth wheel usually has to be positioned slightly farther towards the front axle due to front axle load.

The fifth wheel generates a high point load into the vehicle's chassis frame. Hence, the fifth wheel must not be positioned any farther than 800 mm from the rear axle's centerline towards the front axle without special instructions by the vehicle manufacturer.

https://truckmanualshub.com/

4.2.5. Fifth wheel characteristics

Minimum requirements for fifth wheel's turning about its longitudinal and lateral axis are shown in the figure:

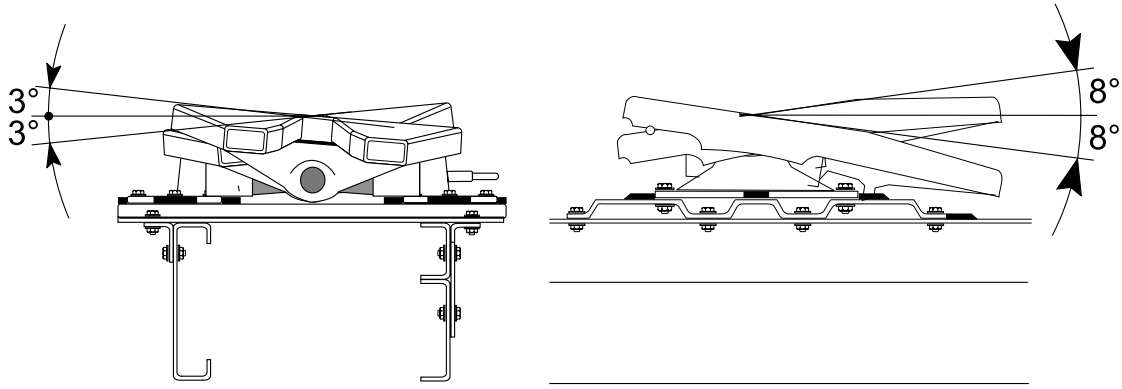

Fig. 965023

4.2.6. Trailer's inclination angles

Figure shows the minimum requirements for the trailer's inclination angles that the coupling's structure must allow. This insures adequate space for trailers in common driving situations.

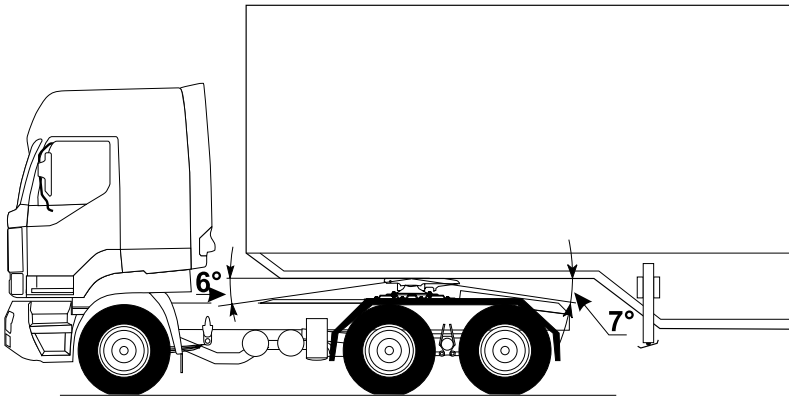

Fig. 965024

Class H fifth wheel height h [mm] for a laden tractor can be determined by using the following equation:

$h \quad 0.137\, l_1 + 0.095 \times b + r + r_1 - 143.5$

where:

l_1 = distance between the fifth wheel coupling point and tractor's rearmost axle centerline

b = total width from top of the tires

r = unladen tire radius

r_1 = laden tire radius

Note! Equation provides the clearance in relation to the tires.

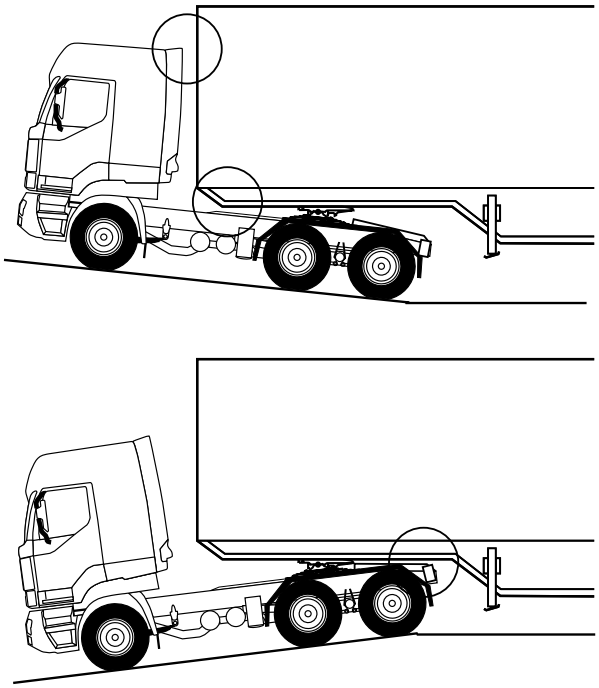

Fig. 965025

Note! Trailer must not be able to come into contact with the tractor's cab or chassis structures under any circumstances.

https://truckmanualshub.com/

4.3. Mounting of fifth wheel

4.3.1. Fifth wheel height

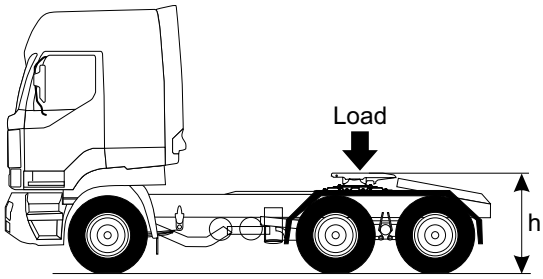

Fig. 965017

On a laden tractor, the fifth wheel's height (h) above the ground (GRP) must be either:

1200 mm +100 / –50 mm (class H) or

1050 mm + 80 / – 100 mm (class L)

Note! When the height of a laden fifth wheel is according to class **L**, fifth wheel's height must be clearly marked at rear of the vehicle.

Fifth wheel's height consists of vehicle's frame height (laden), height of the mounting plates and fifth wheel height.

Selected tire size also has an effect on vehicle's frame height.

Laden frame heights with the most common tire sizes		
Tire size	Laden frame height	
	4 x 2 vehicles	6 x 2 vehicles
285/60R22.5TL	940	967
275/70R22.5TL	960	987
305/70R22.5TL	976	1003
315/70R22.5TL	981	1008
295/80R22.5TL	1000	1027
315/80R22.5TL	1013	1040

When fifth wheel is remounted, stoppers shown in black in Fig. 965026 must be fitted to the fifth wheel mounting if they are not already fitted in the factory.

Each Sisu truck is supplied with a layout drawing indicating vehicle's laden frame height (for the selected tire size).

In order to meet the compatibility requirements for classes H or L, a mounting plate of suitable height is selected for the fifth wheel.

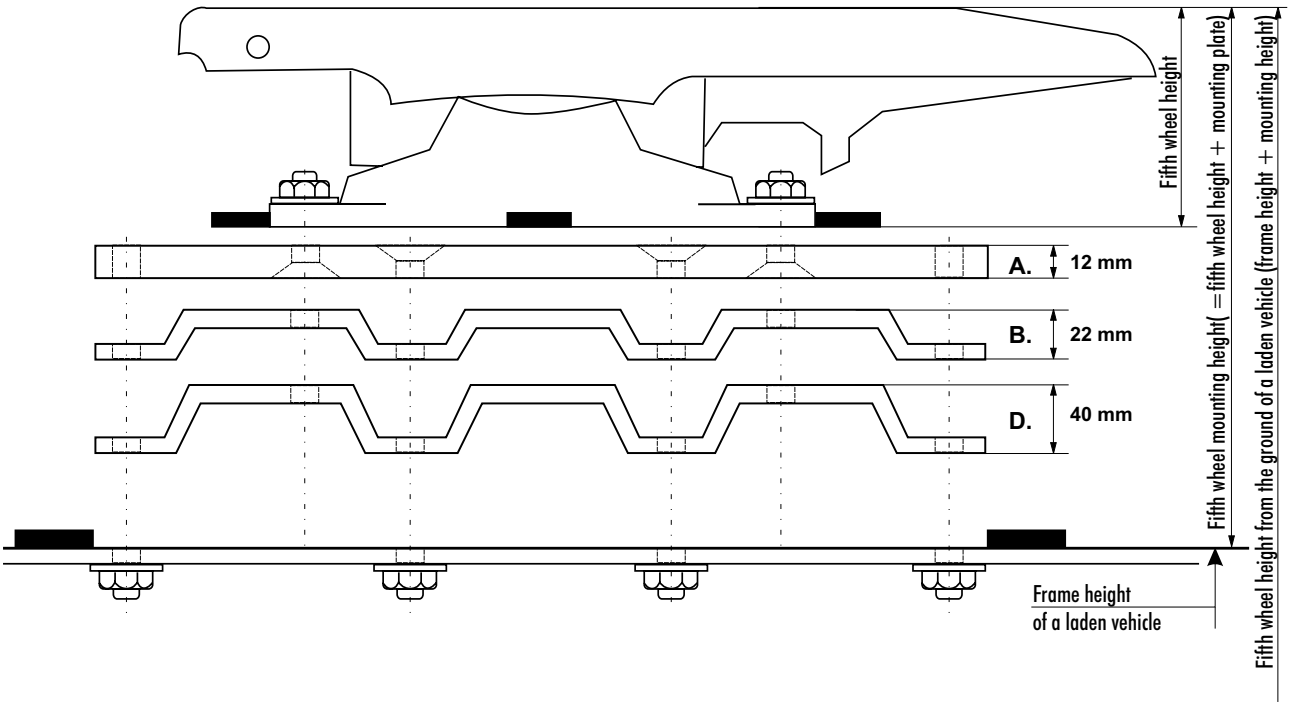

Fig. 965026

Fifth wheel height can also be increased by selecting a fifth wheel with higher mounting feet.

https://truckmanualshub.com/

4.3.2. Fifth wheel's D value, i.e. rated load

When selecting the fifth wheel, rated load on the fifth wheel, D value, must be calculated for the vehicle combination.

D value is calculated with following equation:

$$D \quad g \times \frac{0{,}6 \times T \times R}{T \quad R \quad U} (kN)$$

where:

T = Permissible maximum mass of the towing vehicle (t)

R = Permissible maximum mass of a semi-trailer (t)

U = Permissible vertical mass on the fifth wheel (t)

g = 9,81 (m/s^2)

4.3.3. Attaching of fifth wheel

Fifth wheel is mounted either on a subframe with a mounting plate or on chassis frame with angle brackets, depending on load and intended purpose.

Mounting plate or plates must be approved by the authorities!

Angle brackets or subframe and its mounting used for attaching must be dimensioned correctly. When selecting the attaching method and dimensioning the mounting, fifth wheel height, loads and operating conditions are taken into consideration.

Angle bracket is attached using e.g. 16 bolts, size M14 (8.8) per bracket.

See instructions on bolted joints and drilling holes in section 02.

Fifth wheel is secured by stoppers, sized approximately 15 x 15 x 100 mm, and welded in front, at rear and outside of fifth wheel's both mounting feet. Similar stoppers must be welded in front and at rear of the mounting plate.

When mounting the fifth wheel on mounting plate, the minimum number of mounting bolts is 8 bolts, size M16 (min. 8.8).

The minimum number of bolts for mounting the mounting plate is also 8 bolts (M16 - 8.8).

Flat washers BRB 17x30 must be used under bolt heads and lock nuts.

Tightening torque is 230 Nm. Bolts must be re-tightened.

Fig. 965027

Subframe and its mounting are dimensioned separately for each case. We recommend that the subframe be constructed from U-section, but Z-section can also be used. Depending on the case, two or three frontmost subframe mounting brackets are flexible, others are rigid.

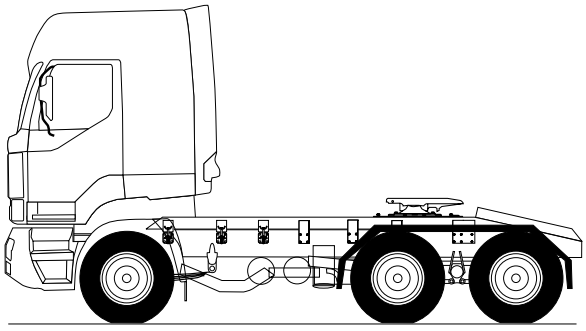

Fig. 965029

☛ **Lateral forces generated by a heavy trailer when turning must be taken into account in the subframe structure. One or more heavy cross beams must be mounted to the subframe in front and at the rear of the fifth wheel's bearing point. If required, a heavy truss bracing must be mounted to the subframe in front of the fifth wheel.**

https://truckmanualshub.com/

For heavy towing duties (e.g. 6x4 lowboy towing vehicles) and heavy operating conditions, chassis frame must be strengthened with a diagonal support, or on vehicles with a subframe, a truss bracing must be mounted at wheelbase as shown in Fig. 965033.

Welding the diagonal support at the crossing point is prohibited but it can be tied with a bolt or a clamp for noise reduction purposes.

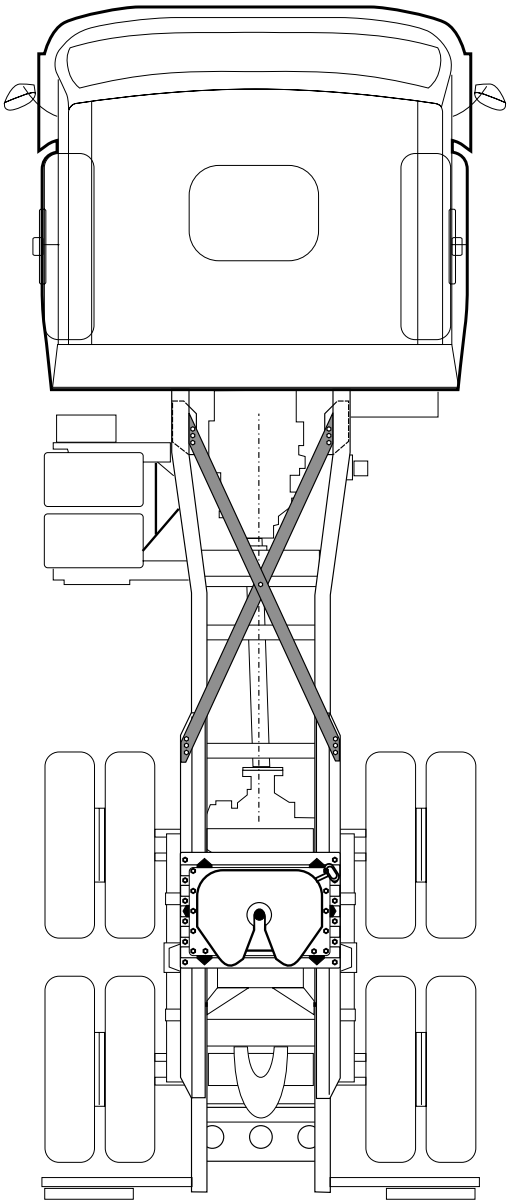

Fig. 965033

4.3.4. Fifth wheel to a high frame

On high C-frame (460 mm) or special frame (400 mm), neither a subframe nor a diagonal support is usually required for fifth wheel mounting.

If a heavy crane is mounted behind the cab to a vehicle with a front drive axle and special frame, the chassis frame must be strengthened accordingly.

In other respects, fifth wheel is mounted as to low-frame vehicles.

4.4. Special fifth wheels

Special fifth wheels are usually mounted as other fifth wheels, following the instruction documentation by the manufacturer.

4.4.1. Switchable locking mechanism

A fifth wheel with switchable locking mechanism allows switching between 2- and 3.5-inch king-pin.

4.4.2. Sliding fifth wheel

Sliding fifth wheel enables modifying weight distribution, axle load and vehicle combination length if required. In addition, it enables coupling of various types of semi-trailers to the tractor.

4.4.3. Dual height fifth wheel

Dual height fifth wheel enables the use of a low tractor also for towing traditional semi-trailers.

4.5. Notes on mounting

	Bolts must be tightened with a torque wrench
	Mating surfaces must be clean when mounting
	Always follow the mounting, use and maintenance instructions provided by the coupling device manufacturer

https://truckmanualshub.com/

4.6. Fifth wheels and equipment

Sisu Auto Inc. supplies the following fifth wheels/equipment:

❑ T201 Semi-trailer towing equipment for 4 x 2 vehicles, including:

- plastic wheel guards w/ brackets
- rain flaps
- rear lamp mountings to the wheel guard brackets
- side lamps
- walk platforms
- step below the battery box
- trailer electric and pneumatic connectors (on the rack behind the cab)
- wheel chocks with racks (not mounted)

❑ T202 Semi-trailer towing equipment for 6 x 2 vehicles, including:

- plastic wheel guards w/ brackets
- rain flaps
- rear lamp mountings to the wheel guard brackets
- side lamps
- walk platforms
- step below the battery box
- trailer electric and pneumatic connectors (on the rack behind the cab)
- wheel chocks with racks (not mounted)

❑ T203 Semi-trailer towing equipment for 6 x 4 vehicles, including:

- plastic wheel guards w/ brackets
- rain flaps
- rear lamp mountings to the wheel guard brackets
- side lamps
- walk platforms
- step below the battery box
- trailer electric and pneumatic connectors (on the rack behind the cab)
- wheel chocks with racks (not mounted)

❑ T711 Fifth wheel, stationary. Includes steering wedges. Fits K-A 4x2 chassis

❑ T722 Fifth wheel, stationary. Includes steering wedges. Fits K-AA 6x2 chassis

❑ T932 Pneumatic hoses duo-matic, on a rack

❑ T934 Trailer cable (electric), on a rack

❑ T935 Trailer cable (auxiliary electric), on a rack

❑ T936 Trailer cable ABS, on a rack

Note! Information may change without prior notice.

https://truckmanualshub.com/

5. Use, maintenance and service of coupling devices

5.1. Use of coupling device

Before driving, the driver must insure that the trailer or trailers are correctly coupled and coupling devices are in closed and secured position.

Coupling devices' installer or person placing the device on the market must advise the user in relation to use and maintenance of the device.

5.1.1. Trailer coupling

Present trailer couplings have two separate locking devices:

- **Locking 1**,
- **Locking 2**, additional locking (indicator/locking device)

Both lockings operate in the coupling's coupling mechanism automatically.

Locking 2 includes an indicator device indicating trailer coupling's coupling/locking position.

A pin is located inside the indicator/locking device. When the pin is inside, the trailer coupling is coupled and secured. If the pin is not fully inside the device, the trailer coupling is not closed and secured.

Couplings are supplied with instruction documentation by the coupling manufacturer. These instructions must be followed.

Check the coupling before driving!

5.1.2. Fifth wheels

Fifth wheels have also two independent, automatic locking devices:

- **Locking 1**, king-pin's locking to fifth wheel
- **Locking 2**, handle locking (safety latch); locks automatically when the king-pin is locked to the fifth wheel. The safety latch will not move to closed position unless the king-pin is locked.

One must always check that the safety latch is in the closed position before driving.

Fifth wheels are supplied with instruction documentation by the fifth wheel manufacturer. These instructions must be followed.

When coupling a semi-trailer, it must be insured that trailer's plate is in contact with fifth wheel! This insures that the king-pin is in so deep that securing plate has closed it vertically.

5.2. Maintenance of coupling devices

- Coupling devices must be lubricated during mounting (supplied couplings are protected only with storage grease).

Coupling devices are cleaned, checked, measured, adjusted, lubricated and re-tightened according to the manufacturer's instructions.

Open coupling devices require maintenance more often, usually once a week, than vehicle's periodic maintenance intervals.

The bodywork manufacturer or person placing the machinery on the market must insure that the customer familiarizes himself with the operation/maintenance instructions supplied with the coupling device and that the instructions are supplied with the vehicle in question.

Central lubrication is not recommended for couplings that are rarely used (for example coupled only once a week) since coupling's operation becomes heavy if the coupling mechanism overfills with grease.

Coupling devices are supplied with instruction documentation by the manufacturer. These instructions must be followed.

- We recommend trailer coupling maintenance/checking procedures once a week.
- We recommend fifth wheel maintenance/checking procedures every 10000 km or monthly.

https://truckmanualshub.com/

Frame jobs

General

As a means of transportation, trucks fall under the regulations given by the authorities. The regulations are used as principled instructions in order to ensure the quality of the modifications and repairs.

Fig. 934030

The repair of a damaged vehicle or assembly of a vehicle from components must be carried out carefully. The parts must not be older or under poorer condition than the vehicle under repair or to be assembled. The strength of the repaired or assembled vehicle must be equivalent to an undamaged vehicle of similar age.

If the bodywork is regarded as a machine, the repairs and modifications are under the machine directive. Generally, the principle is that, after the repairs, the functions, strength and safety of the machine must correspond with those before the damage. If the machine is substantially modified during the repair or otherwise, the modifier must issue the CE declaration of conformity certifying that the machine is in conformity with all the requirements of the machine directive and standards relating to the machine.

For the regulations given by the authorities, see section **01**.

This section 08 and section 08/1 provide instructions on chassis frame modifications and repairs for Sisu trucks.

Chassis frame modifications

Altering the wheelbase or installing an additional axle are the most typical chassis frame modifications.

For other modifications, consult the vehicle manufacturer.

Altering the wheelbase and/or installing an additional axle may be required if the vehicle's driving task changes.

The wheelbase is usually altered by:

- Cutting the frame and shortening or extending it between the axles.

or

- Relocating the rear axle or bogie.

The frame may be shortened or extended if the wheelbase of the modified chassis is included in the vehicle's model series of the type in question. Otherwise, a modification permit must be obtained from the appropriate authorities.

☛ **Chassis frames may be modified only in repair shops authorized by the vehicle manufacturer or distributor. If the frame is modified in another repair shop, the modification must be carried out under the supervision of the manufacturer's or distributor's representative.**

https://truckmanualshub.com/

Damage repair

The frame can be damaged due to e.g. a collision or an incorrectly mounted bodywork generating a fatigue failure.

A frame damaged in a collision usually requires straightening and often a heat treatment during the straightening (see section **08**1/Frame deformations and straightening).

When repairing damage or altering the wheelbase, the frame is usually welded, new holes are drilled, old holes are filled by welding, the frame is strengthened, etc.

Damage repair methods

Frame-damage repair methods for heavy trucks have been developing for decades.

The expertise gained during this time is available for Sisu owners through the vehicle manufacturer's or authorized distributor's service and sales network.

There are two different schools for damage repair straightening jobs, heat straightening and cold straightening. Although the section "Frame deformation and straightening" is based on heat straightening, both options are feasible and the better method must be considered separately for each case, or both methods used.

See also section **08**1/Frame deformations and straightening.

Collision damage

Damage caused by collisions, driving off the road or rollovers is usually covered by the vehicle's insurance, i.e. the insurance company covers the costs.

Before repairing the damage, the insurance company conducts a damage inspection and suggests repairs.

Insurance companies have their own methods of damage inspection and pricing methods for damage repairs.

The vehicle's owner should ask the representative of the insurance company for an itemized repair estimate, including the jobs to be done and their timeline, the parts to be replaced/repaired and the limits of financial liability (who pays for what).

Based on this repair estimate, the repair shop makes a repair plan, which should be checked together with the vehicle's owner. If the costs stated in the repair plan and the repair estimate by the insurance company are not equal, the customer (i.e. the vehicle's owner) usually pays the difference.

If new factors that affect on the repair appear during the work, the insurance company's damage inspector must be contacted immediately.

The quality requirements for collision damage repairs can be found in both decisions by the authorities and the insurance terms and conditions.

If the vehicle is damaged in a tipping rollover accident, it is recommended that a tipping stability test be conducted after the repair, if there is a national tipping stability standard.

Frame job record

The person modifying the frame or repairing damage should compile a record of the frame repair procedures in order to establish the conducted procedures later, if required.

Carefully complete the record. Draw a circle around the areas subjected to procedures and describe the procedures. If e.g. the frame is straightened by applying heat, mark the heated points, temperatures used and preferably the duration of heating.

Frame job records can be found under section separator **08**.

https://truckmanualshub.com/

1. Frame materials

Sisu has chosen the high-strength steel RAEX 490 HSF as the material for its E-series frame beams.

RAEX 490 HSF withstands heat treatment up to 650°C (microstructure and characteristics remain unchanged).

This ensures that the strength of the frame remains after repairs, if they are carried out according to the instructions and the temperature limit of 650°C is not exceeded.

Fig. 934031

In addition, Sisu has not constructed the frame using thinner frame beams, but has fully utilized the strength of the material which in turn results in improved durability.

Type	Frame material	Max. temperature
S-series	Fe 52 D	900°C
E-series	RAEX 490 HSF	650°C

Fig. 934034

https://truckmanualshub.com/

2. Welding the frame

2.1. Foreword

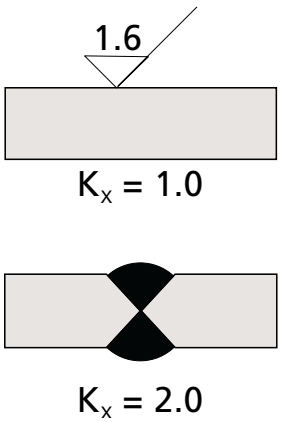

Fig. 934017

Welding the frame is only allowed if required by the repair or modification jobs in question. Attaching bodywork or additional equipment to the frame by welding is strictly prohibited. Only bolted joints are allowed according to the appropriate instructions (section **02**).

Points of discontinuity, such as the shape of welded joints and welding imperfections, generate local stress states that can be notably higher than the calculated stress states. This decrease in fatigue durability is expressed as the joint's stress concentration factor (K_x). The higher the stress concentration factor, the lower the fatigue durability compared to the parent metal values.

The best way to improve the fatigue durability and calculated stress factor of welded joints is to follow these guidelines:

- Construct "smooth" joints and locate the welds in the low-stress areas, if possible.
- Weld the beads as low as possible.
- Avoid imperfections and repair any imperfections occurred (slag inclusions, cracks, undercuts).
- Smooth the weld by grinding it to the parent metal level.

Fatigue durability can also be improved by decreasing the effective stress amplitude. This can be achieved by:

- Overloading the structure moderately before commissioning.
- Stress-relief annealing (not over 650°C for RAEX HSF 490)
- Generating compressive stress at critical points (e.g. by spot heat, sand or shot blasting, cold peening).

Only qualified welders may weld the frame!

2.1.1. Welding standards

The bodywork manufacturer should acquire the welding standards for welding quality control and qualifying the persons involved in welding.

EN 287, Approval testing of welders. Fusion welding.

EN 288, Specification and approval of welding procedures for metallic materials. Parts 1–8.

EN 719, Welding coordination. Tasks and responsibilities.

EN 729, Quality requirements for welding. Parts 1–4.

EN 25817, Arc-welded joints in steel. Guidance on quality levels for imperfections.

2.2. Safety instructions

Read the **General safety instructions**, section (**01**). Anticipate the risks involved in the repair job in question and follow the instructions.

- Remove flammable objects from the vicinity of the welding area or protect them from welding spatters.
- Wear appropriate protective equipment (welding helmet, welding gloves, etc.)

2.3. Protection

It is easier and cheaper to protect sensitive components carefully before welding than to replace damaged components after welding.

Use, for example, a non-flammable cloth to protect electric wires, pneumatic, fuel and hydraulic pipes and hoses, etc. from welding spatters. A spark that lands on a bundle of pipes may cause leaks in several pipes.

If the damaged pipe is a part of the pneumatic brake system, the pipe must be replaced since the regulations by the authorities prohibit adding extra joints to the pipes of a brake system.

Protect the chassis and ensure that no chassis component is overheated during welding.

https://truckmanualshub.com/

2.3.1. Disconnecting the electric system

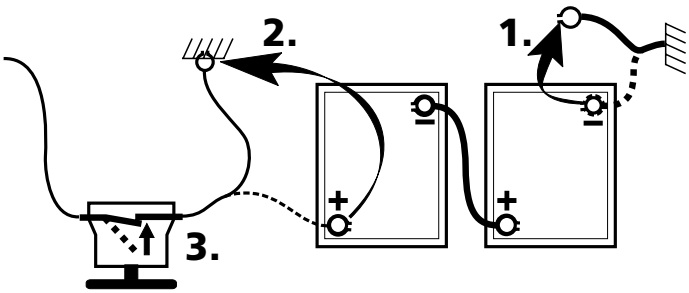

Fig. 931003

Open the main switch

1. Disconnect the – cable from the battery.

2. Disconnect the + cable (power supply cable) from the battery and connect the cable to the ground.

3. Close the main switch.

The circuit is now dead and protected from any possible voltage spikes generated by the welding machine.

2.3.2. Grounding the welding machine

Connect the welding machine ground cable as close to the welding point as possible. **The maximum distance between the ground cable connection and welding point is 50 cm.**

In order to create an appropriate connection, the ground cable connection point must be cleaned thoroughly by grinding away any paint, rust, etc.

In addition, the welding current circuit may not pass through bearings, since the bearing surfaces may be damaged.

2.3.3. Electronic control units and devices, Celect ECM, Mac ECU, ECAS air suspension, ABS braking system, HD transmission

All electric control-unit components, wires and connectors must be protected from welding spatters/sparks and the heat caused by welding. Welding or connecting the welding machine ground cable to any electric control unit, heat sink or other part of the electronic system is strictly prohibited.

According to the instructions of the component manufacturers, all the wires must be disconnected from the control unit in order to be 100% certain that the control unit is not damaged during welding.

However, disconnecting and connecting some connector types cause a greater technical risk of damage to the connector and the unit than electric welding, provided that the above instructions are followed.

Disconnecting the control unit connectors is unnecessary if the instructions on disconnecting the battery cables, closing the main switch and connecting the ground cable close to the welding point are followed!

2.4. Preliminary work

2.4.1. Cleaning

Remove paint, oil, grease, rust and moisture from the area to be welded.

2.4.2. Drying/heating

The welded surfaces must be absolutely dry and their temperature over +15°C, preferably over +20°C.

During winter, bring the vehicle inside well before welding (min. 2–3 hours).

When cold metal is brought inside, moisture condenses on the metal as long as the temperature difference between the metal and the surrounding indoor air is sufficient. Moisture (water, frost, ice) acts as a source of hydrogen, which increases cold cracking and gas-pore formation. A delayed crack caused by hydrogen can, in practice, initiate even several days after welding.

Welding in subzero conditions

If the welding must be carried out outdoors during winter, sections approximately 300 mm wide on each side of the joint must be cleaned and preheated to +50 – +100°C. Possible backing must also be dried.

In subzero conditions, use low-hydrogen, alkaline welding consumables and arrange the welding conditions as optimally as possible.

https://truckmanualshub.com/

2.5. Filler metals

The recommended welding procedure is gas-shielded arc welding (MAG). Metal arc welding with covered electrode ("arc welding") can also be used .

The following filler metals can be used for welding Sisu S- and E-series frames:

MAG welding (MIG)

S- and E-series frames

Wire:

- OK Autorod 12.51, or 13.09, or 13.26 (ESAB), or equivalent.

Shielding gas:

- Mison Ultra or equivalent (M21).

Arc welding

Covered electrode:

S-series frames, S355J2G3 (Fe 52D):

- OK 48.00 (ESAB) or equivalent.

E-series frames, RAEX HSF 490:

OK 55.00, or OK 73.08 (ESAB), or equivalent.

2.6. Opening fractures

When repairing frame beam fractures, proceed as follows:

- Open the fracture, e.g. by grinding or carbon-arc gouging according to the figure below (934001). Open the end of the fracture sufficiently, so that all hairline cracks are removed. The end of the fracture can also be opened by drilling with a conical drill bit.

If the root cannot be opened as shown in the figure, the groove must be opened by grinding so deep that complete penetration is ensured for the whole length of the joint.

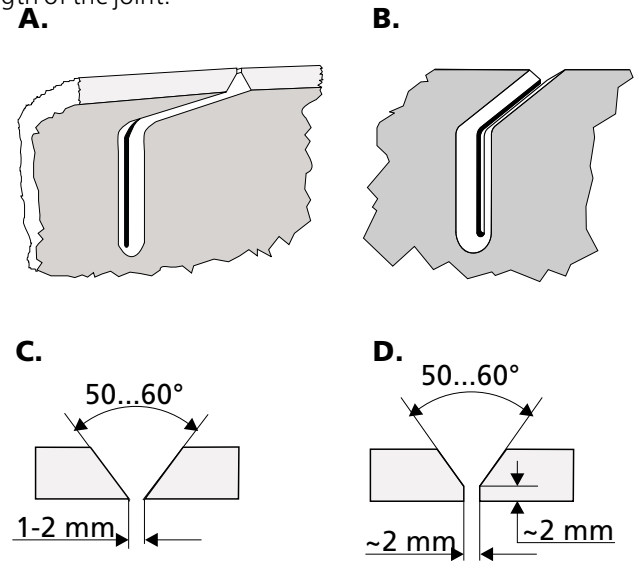

Fig. 934 001

The fracture can be opened either from the inside (A) or outside (B).

When opened from the inside, the root is first welded from the inside. After welding, slag and impurities can be easily removed from the outside with a cutting wheel before final welding up to the surface level (note especially the flange and web corner areas).

Shape the groove according to figure **C.** for MIG/MAG welding or according to figure **D.** for arc welding.

For welding instructions, see point 2.7.

https://truckmanualshub.com/

2.7. Joint beveling and welding

For extending or shortening the frame or attaching a repair plate, bevel the joint and weld according to option A, B, C or D.

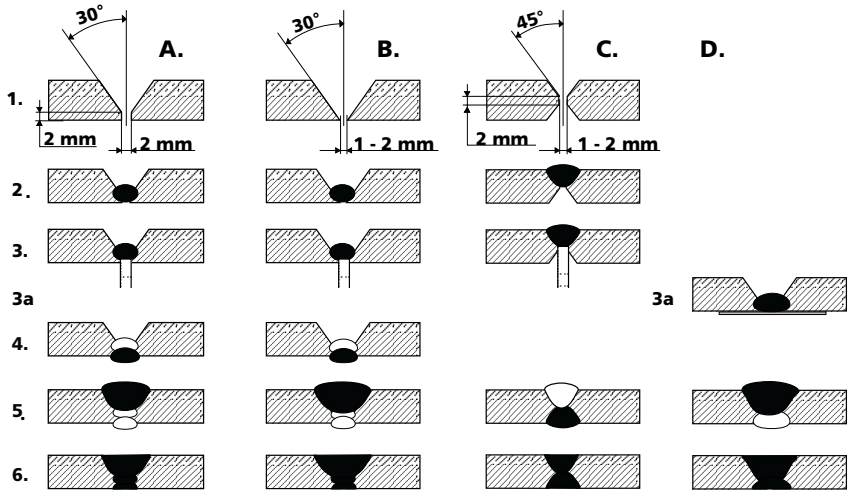

Fig. 934019

A. Suitable especially for arc welding

❶ Bevel the joint according to the figure and tack weld if required.

❷ Weld the root from the opened side.

❸ Clean the root with a cutting wheel.

❹ Final weld the joint from the outside.

❺ Final weld the joint from the opened side.

❻ Grind the bead to the parent-metal level from both the inside and outside. Ensure that the weld has no undercuts, cracks or slag inclusions.

B. Suitable especially for MIG/MAG welding

❶ Bevel the joint according to the figure and tack weld if required.

❷ Weld the root from the opened side.

❸ Clean the root with a cutting wheel.

❹ Final weld the joint from the outside.

❺ Final weld the joint from the opened side.

❻ Grind the bead to the parent-metal level from both the inside and outside. Ensure that the weld has no undercuts, cracks or slag inclusions.

C. Suitable for both arc welding and MIG/MAG welding

❶ Bevel the joint to a double V-groove according to the figure and tack weld if required.

❷ Final weld up to the surface level from one side.

❸ Clean the root by grinding from the other side.

❹ Final weld up to the surface level from the other side.

❻ Grind the bead to the parent metal level from both the inside and outside. Ensure that the weld has no undercuts, cracks or slag inclusions.

D.) Welding with backing

❶ Bevel the joint according to figure A or B and tack weld if required.

❸ **a.** Weld the root with backing.

❺ Final weld up to the surface level.

❻ Remove the backing. Grind the bead to the parent-metal level from both the inside and outside. Ensure that the weld has no undercuts, cracks or slag inclusions.

☛ **Careful cleaning of the groove ensures good welds.**

---

https://truckmanualshub.com/

2.7.1. Welding inner beams

☛ **Inner beams do not require beveling to V-grooves, but appropriate preparation is to use a 2-mm root opening and a backing that must be removed after welding.**

2.7.2. Welding imperfections

Cracks, undercuts and slag inclusions

Cracks, undercuts and slag inclusions must be remedied by opening the defective area, e.g. with a cutting wheel, and re-welding.

Most likely causes for cracks in frame welding:

- Too large depth-to-width ratio of the weld, (over 2:1, narrow and high weld bead). The correct depth to width ratio is 1:1 – 2:3.
- Excessive concaveness in fillet welds (lack of filler metal). The weld may not withstand normal contraction stresses.
- Inadequate filling of the crater at the bead stop (crater cracking).

Undercuts and slag inclusions are usually caused by poor welding technique (welding speed, welding parameter settings, impurities, etc.).

2.7.3. Filling holes

If there are extra holes in the frame after modifications, the holes must be filled by welding.

Proceed as follows:

- Small holes are drilled to 5 mm in order to facilitate welding.
- Bevel the hole edges with a conical drill bit to 50–60 degrees, 2/3 of the material thickness.
- For filling holes of 20 mm or higher, construct a filler slug and bevel it similarly to the hole.
- Weld the hole or the hole and the filler slug full from the beveled side.
- Weld from the other side, if required.
- Grind to the parent-metal level.

2.8. Weld joint post-treatment

2.8.1. Cooling

The weld joint must be allowed to cool slowly, without any external cooling (water, compressed air, etc.).

2.8.2. Grinding and cleaning

When repairing frame beams, grind the weld bead to the frame-beam surface level. At this point, it is recommended that the bead be checked for undercuts or cracks.

Remove all the slag, oxide layers, salts, splatters and damaged paint.

Sandblasting is recommended for cleaning. Grinding or very thorough brushing with a wire brush is also possible.

2.8.3. Painting

Paint the area first with anti-corrosive primer and then apply the topcoat.

- Primer film thickness must be about 60 µm.
- After the topcoating, the dry film thickness must be 100–200 µm.
- Paint grades are marked on the chassis card delivered with the vehicle.
- Painting must be carried out according to the paint manufacturer's instructions.

https://truckmanualshub.com/

3. Wheelbase alterations

3.1. General

When altering the wheelbase, the instructions given in this manual and appropriate regulations must be followed so that the altered vehicle meets the demands and regulations set for operational safety, road safety and overall quality.

Frames may be modified only in repair shops authorized by Sisu Auto Inc. If the frame is modified in another repair shop, the modification must be carried out under the supervision of the manufacturer's representative.

The frame may be shortened or extended if the wheelbase of the modified chassis is included in the vehicle's model series of the type in question. Otherwise, a modification permit must be obtained from the appropriate authorities.

Extending the wheelbase over the longest wheelbase of the vehicle's model series requires the consent of Sisu Auto Inc.

The modifier of the chassis frame is responsible for following the regulations and for insuring that the joints and mounting follow the instructions given in this manual.

It is recommended that the need for written reports and possible inspections during modification (e.g. filler metals and welded joints) be agreed beforehand with the local vehicle inspection authorities.

The axle loads and gross weight remain the same as before the modification.

Usually, wheelbase alteration requires cutting and extending or shortening the frame. The wheelbase sometimes can be altered by changing the location of the axle or bogie.

3.2. Preliminary work

Contact R&D Support/Sisu Auto Inc. and order the frame drawing presenting the intended wheelbase model of the vehicle type in question.

Remove pneumatic and hydraulic pipes and hoses and electric wires. Remove all components that hinder the work (propeller shaft, etc.).

Level the vehicle on jack stands. Locate the jack stands at the ends of the frame beams and at both sides of the cutting point.

Fig. 934010

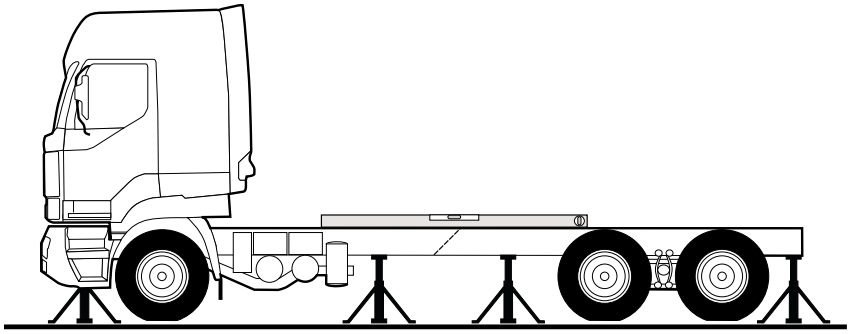

Check the straightness of the chassis with a spirit level.

3.3. Cutting the frame

In most cases, wheelbase alteration requires extending or shortening the frame. The frame side beams are cut at an appropriate location between the axles. Extension sections are welded or appropriate sections cut off for extending or shortening, respectively. The spring brackets and cross beams located near the rear axle are not removed from the frame.

Vehicles with fifth wheels

If the wheelbase of a two-axle vehicle with a fifth wheel is extended and a bogie axle is added, a full-length inner frame must always be mounted when cutting and extending the frame.

https://truckmanualshub.com/

3.3.1. Cutting location

The cutting location must be selected carefully.

In vehicles with inner frames, the inner frame is also extended or shortened to the appropriate dimensions of the wheelbase and vehicle type. In vehicles with inner frames, the minimum distance between the joints of the inner and outer frames is 250 mm.

The joint must not be located at the cross beam or too close to cross beam mounting holes (for instructions on drilling holes, see section 02). The optimal joint location is in the middle of the cross beams to be installed.

3.3.2. Marking

Before cutting the frame beams, punch measuring points in both sides of the cutting location. This helps to ensure that the length of both side beams is altered equally. Punch the measuring points in the upper flanges of the side beams, as close to the web as possible.

Use a long square tool or a square tool and a steel ruler as a guide.

Make a note of dimension A!

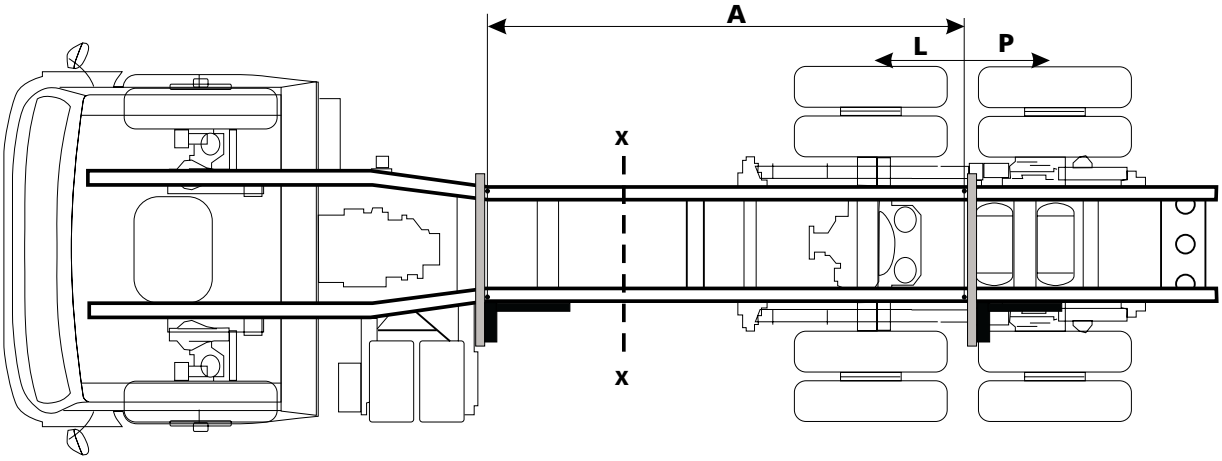

Fig. 934011

A = Original check dimension (the distance between the measuring points before cutting)

P = Dimension for extending the wheelbase (new wheelbase – old wheelbase)

L = Dimension for shortening the wheelbase

A + **P** = check dimension (new distance between the measuring points) when extending the wheelbase

A – **L** = check dimension (new distance between the measuring points) when shortening the wheelbase

X --- **X** = cutting location

In order to ensure that the frame is square, cross-measure between some points that are fixed in relation to the frame side beams (e.g. spring brackets). The maximum difference allowed in the cross measures is 5 mm.

https://truckmanualshub.com/

3.3.3. Cutting angle

The cutting angle is usually 45 or 90 degrees.

Sisu Auto Inc. recommends that the frame beams be cut at a 45-degree angle, if allowed by other structures.

This angle allows the distribution the stresses acting on the joint to a longer section of the frame beam and to a longer weld. A frame with single beams should always be cut at a 45-degree angle.

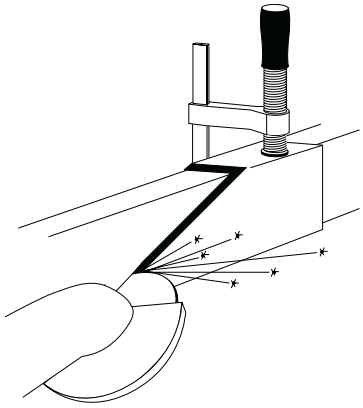

Fig. 934012

When cutting the frame, a template is constructed and attached to the frame with clamps. The beams are cut with a cutting wheel along the template.

Since the direction of the cutting angle is similar in both side beams, two different templates must be constructed, one for each side.

Care must be taken not to damage the inner frame, if there is an inner frame at the cutting location of the outer frame. A device limiting the cutting depth is strongly recommended for cutting.

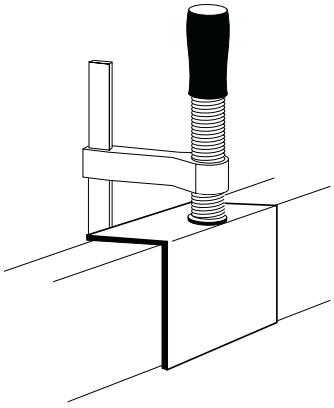

Fig. 934013

If a cutting angle of 45° is not possible, the frame can be cut and the joint constructed at a 90-degree angle.

Note!
Sisu frame beams do not require additional reinforcement at joint locations if the joint is constructed according to these instructions.
Additional reinforcements increase the chassis weight and alter the frame cross-section, which increases fatigue stress.

To shorten the wheelbase, use the templates and cut sections off the side beams according to dimension **L** (shortening dimension).

To extend the wheelbase, use the templates and cut sections from the original Sisu frame beam sections according to dimension **P** (extending dimension).

3.3.4. Joining

Shortening the wheelbase

After sections of dimension L are cut from the frame beams, move the rear of the frame so that the distance between the measuring points equals **A–L** (check dimension **A –** shortening dimension **L**).

- Bevel the joints according to the instructions (see point 2. on page 230).
- Check that the front and rear of the frame are level using e.g. a spirit level.
- Cross-measure in order to insure that the frame is square.
- Check that the joint fits properly.

Extending the wheelbase

Move the rear of the frame so that the distance between the measuring points equals **A + P** (check dimension **A +** extending dimension **P**).

- Bevel the joints according to the instructions (see point 2. on page 230).
- Check that the front and rear of the frame are level using e.g. a spirit level.
- Cross-measure in order to insure that the frame is square.
- Check the length and fit of the extension sections.

https://truckmanualshub.com/

3.3.5. Welding the joint/joints

Weld according to the instructions. See point 2. on page 230.

- Tack weld and then double-check the correct dimensions carefully before final welding.
- Grind the welded joints to the parent-metal level. Be careful not to damage the frame. No undercuts, cracks or slag inclusions are allowed in the weld. Imperfections must be corrected by opening the joint and re-welding.
- Remove all the damaged paint around the welded areas.
- Paint with primer and topcoat (for detailed instructions, see section 11)

☛ **Inner beams do not require beveling to V-grooves, but appropriate preparation is to use a 2-mm root opening and a backing that must be removed after welding.**

3.3.6. Cross beams

Move and install the cross beams to the locations indicated in the frame drawing. This is to ensure that the torsional and bending characteristics of the frame meet the standards. Moreover, the propeller shafts and the shaft bearings will be in the correct locations.

By following the frame drawing, constructing a non-standard structure that can not use off-the-shelf spare parts is avoided.

3.3.7. Inner frame joint locations

The minimum distance between the joints of the inner and outer frames is 250 mm.

Fig. 934035en

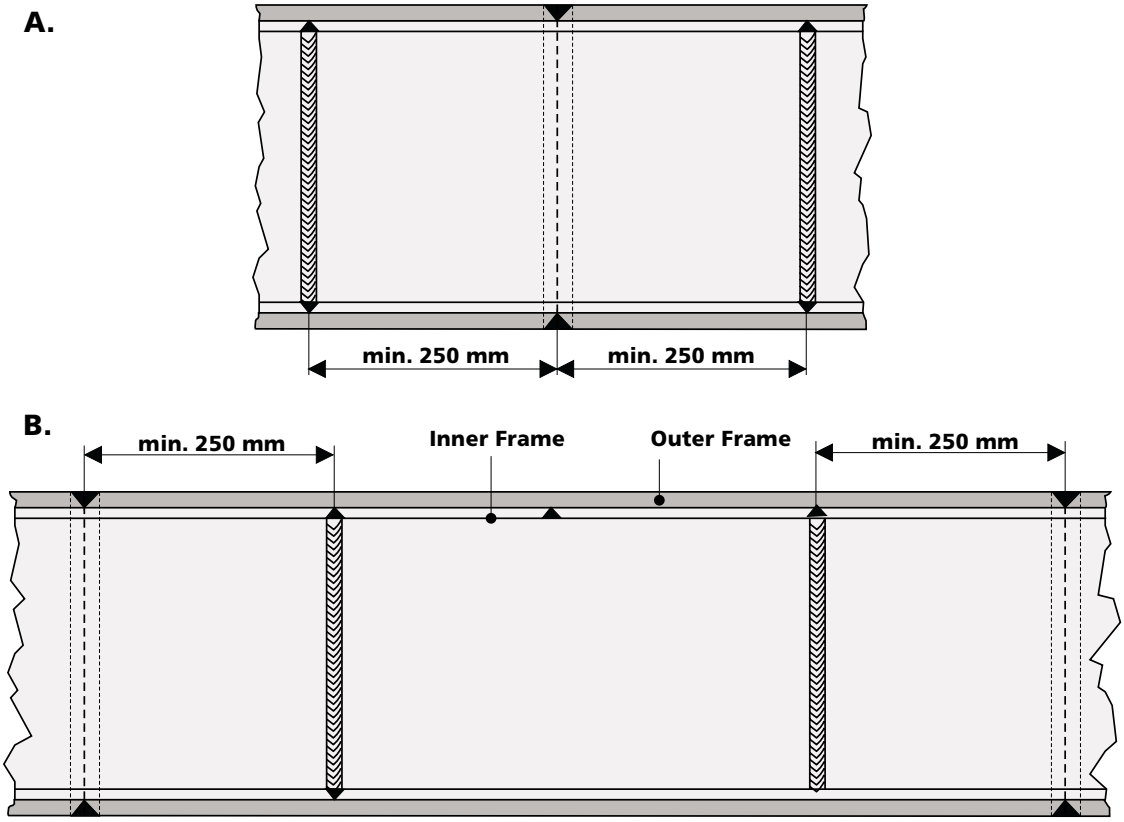

A = for shortening the frame
B = for extending the frame

3.4. Relocating the rear axle or bogie

- Order the frame drawing presenting the intended wheelbase model of the vehicle type in question (R&D Support/Sisu Auto Inc.).
- Remove all components that hinder the work (propeller shafts, pneumatic pipes, etc.).
- Level the vehicle on jack stands.

https://truckmanualshub.com/

- Before removing the components that will be relocated, punch measuring points in the components and frame at appropriate locations. This allows the measurement of the correct moving distance of the components.
- Remove the components and cross members to be relocated.
- If the frame beams are to be extended, the extension sections must be constructed with the original Sisu frame beam section and joined according to the instructions above. Extending the inner and outer frame beams at the same location is prohibited. The minimum distance between the joints of the inner and outer frames is 250 mm (shorten the inner frame min. 250 mm before extending it to the rear of the vehicle).
  (In these cases, less work is usually required if the extending sections are added between the axles, as instructed above. However, a stronger result will be achieved by relocating the rear axle and extending the rear overhang, since the joints are not located at the frame area, which is under the highest stresses.)
- The joint location of the outer frame beam should be behind the rearmost axle's rear bearing point.
- Drill new mounting holes for components in the frame beams using a template or the actual components. Before drilling, insure that the distance between the new and old mounting holes is correct.
  After drilling, remove the drillings between the inner and outer frame beams.
- Install the cross beams in the locations indicated in the frame drawing. See point 3.3.6. on page 238.
  There must be either a SISU trailer-coupling mounting beam or end cross beam at the end of the vehicle's frame. A cross beam mounted under the frame alone is not sufficient for the end cross beam.
- Remount the components on the frame.

☛ **Follow the instructions on drilling the holes in the frame and bolted joints presented in section 02.**

3.5. Propeller shafts

If the wheelbase is modified, the lengths and mountings of the propeller shaft must also be modified. When the length and/or number of the propeller shafts is changed, new shafts must be purchased or old shafts modified.

More detailed information on propeller shafts can be found in section 06 (PTOs)

When the wheelbase of the modified vehicle is included in the vehicle's model series of the type in question, propeller shafts of suitable lengths can be found off the shelf. By following the drawings, the proper mounting of the propeller shafts is also insured.

Fig. 934033

It is possible to modify a propeller shaft by shortening the tube or replacing the original tube with a longer one. Some repair shops can modify propeller shafts (aligning, welding) and can balance the modified shaft according to the regulations (ask your local authorized dealer).

The maximum propeller shaft length is 2000 mm.

If the wheelbase of the modified vehicle is not included in the vehicle's model series of the type in question, the following issues must be noted:

https://truckmanualshub.com/

- The maximum propeller shaft length is 2000 mm.
- U-joint angles.
- Asymmetry of joint angles.
- Mutual position of the joints.

Incorrect propeller shaft mounting can easily cause vibrations and generate noise from the vehicle chassis and drivetrain.

3.6. Adjusting the rear-axle angle and engine angle

Adjusting the rear-axle angle or engine angle may be required if the wheelbase is altered in a vehicle with a lift bogie and leaf springs. The engine angle is adjusted by moving the engine mounting brackets. The rear-axle angle is adjusted with wedge shims added between the spring sets and rear axle.

The following table presents the wedge angles of wedge shims and corresponding engine angles for different wheelbases:

Wheelbase	Wedge angle	Engine angle	Wheelbase	Wedge angle	Engine angle
3150	2.0°	5.5°	4750	3.0°	4.0°
3450	1.5°	5.0°	4950	2.0°	4.0°
3750	2.0 °	5.0°	5250	2.0°	4.0°
4050	2.0°	5.0°	5550	2.0°	4.0°
4350	4.0°	4.0°	5850	2.0°	4.0°
4450	4.0°	4.0°	6150	2.0°	4.0°
4650	3.0°	4.0°			

In 8 x 2 vehicles, the wheelbase is the distance between the frontmost axle and driving rear axle.

The wedge shims are always installed with the thicker end pointing back.

Wedge shims can be purchased from your nearest authorized dealer.

Engine angle

When adjusting the engine angle, the engine's rear mounting bracket and transmission mounting bracket are removed. The brackets are raised or lowered the required distance and new mounting holes are drilled for the brackets. Old mounting holes are filled by welding according to the welding instructions.

3.7. Pneumatic pipes

According to the regulations, pneumatic pipes must be replaced with pipes of correct length (i.e. adding extra joints to extend the pipes is strictly prohibited).

Clean the new pipes with compressed air before installing.

Brake delay may not be changed.

3.8. Electric wires

If the electric wires become too short:

S-series:

- Route new wires from the connecting box to the rear of the frame (the location of the connecting box is determined by the length of the incoming wires).

E-series:

- Extend the wire with original Sisu connectors.

https://truckmanualshub.com/

3.9. Modification plate

Attach a modification plate in close proximity to the original type plate of the modified vehicle. The modification plate must include chassis number and type, old wheelbase, new wheelbase, etc.

The modification plate can be made of aluminum; the changed data are punched into the plate and attached next to the type plate.

Adding or modifying the data on the original type plate is strictly prohibited!

3.10. Straightness of the frame

The straightness of the chassis frame must always be checked after extending or shortening the frame.

Detailed instructions on checking the straightness and possible corrective measures are presented in section **08** / Frame deformations and straightening.

4. Installing an additional axle or removing an axle

4.1. General

When installing an additional axle or removing an axle, the instructions given in this manual and appropriate regulations by the authorities must be followed so that the altered vehicle meets the demands and regulations set for operational safety, road safety and overall quality.

An axle may be installed or removed only in repair shops authorized by Sisu Auto Inc. If the vehicle is modified in another repair shop, the modification must be carried out under the supervision of the manufacturer's representative.

Adding or removing an axle is allowed only if the modified chassis is included in the vehicle's model series of the type in question. Otherwise, a modification permit must be obtained from the appropriate authorities.

The modifier is responsible for following the regulations and insuring that the work is carried out properly, following the instructions given in this manual.

Typically, an additional axle is installed if used three-axle timber truck is altered to a four-axle gravel truck. The same principles apply to both adding and removing an axle.

https://truckmanualshub.com/

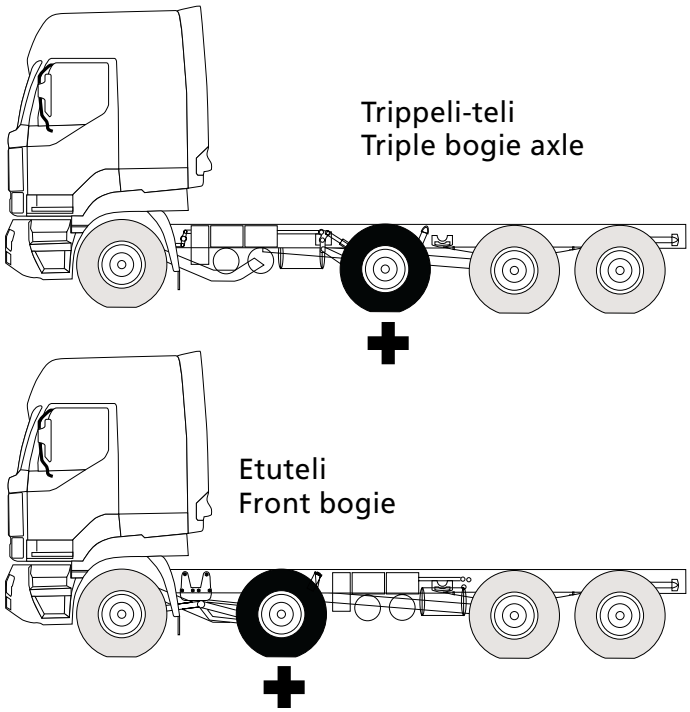

Fig. 934016

If an additional axle is installed near a bogie (upper picture), it is called a **triple bogie axle**.

If an additional axle is installed behind the front axle (lower picture), it is called a **front bogie**.

(For maximum axle and bogie loads, see section 01.)

If the desired bogie axle distance is not included in the vehicle's model series of the type in question, consult Sisu Auto Inc.

4.2. Procedure

Order the required documents, assembly diagram, frame diagram, brake diagram and dimensional drawings for the vehicle model to be modified by installing or removing an axle, as well as documents for the components to be added to the vehicle. See point 7. on page 247.

Purchase an additional axle assembly (if an axle is to be installed) according to the dimensional data determined by the axle location (steering arms, etc.).

- Remove all components at the additional axle location and remove the propeller shafts.

If the wheelbase is to be altered, follow the instructions given in point

- The inner frame must be extended to the dimension indicated in the frame drawing. **In vehicles with 4 axles, a full-length inner frame is always used, i.e. the inner frame extends from the rear to the front of the front axle's rear spring bracket**
- Measure and mark the axle location according to the dimensional drawing.
- Drill the required component mounting holes in the frame beams using a drilling template or the components as a guide. See instructions on bolted joints and drilling, section **02**.
- Add and/or relocate cross beams according to the dimensional drawing.
- Install additional tanks on the pneumatic circuit according to the diagram: 1 tank for the brake circuit and 1 tank for the axle lifting circuit.
- Install the additional axle. See detailed instructions from the service manual 878.0596, Suspension and axle mountings (at additional axle with air

https://truckmanualshub.com/

suspension).

- Adjust the pressure according to the service manual instructions.

- Install other components.
  The steering arms and joint must be installed according to the drawings!
- Check/adjust the toe-in/toe-out:

  Front bogie:
  Toe-in for both front axles: 0–1 mm

  Triple bogie axle:
  Toe-in for the front axle: 0–1 mm
  Triple axle: Left wheel positioned straight and right wheel toe-out is adjusted to 2–3 mm.

4.3. Marking

Attach a modification plate in close proximity to the original type plate of the axle-modified vehicle. The modification plate must include chassis number and type, old wheel base and new wheelbase.

5. Mounting chassis frame cross beams

When modifying the chassis frame, relocating, removing or adding cross beams may be required.

5.1. Removing cross beams

Usually, the easiest way to remove a cross beam is to cut it from the middle and remove the bolts. If the cross beam is to be relocated, check whether it is possible to remove and relocate the cross beam without cutting it.

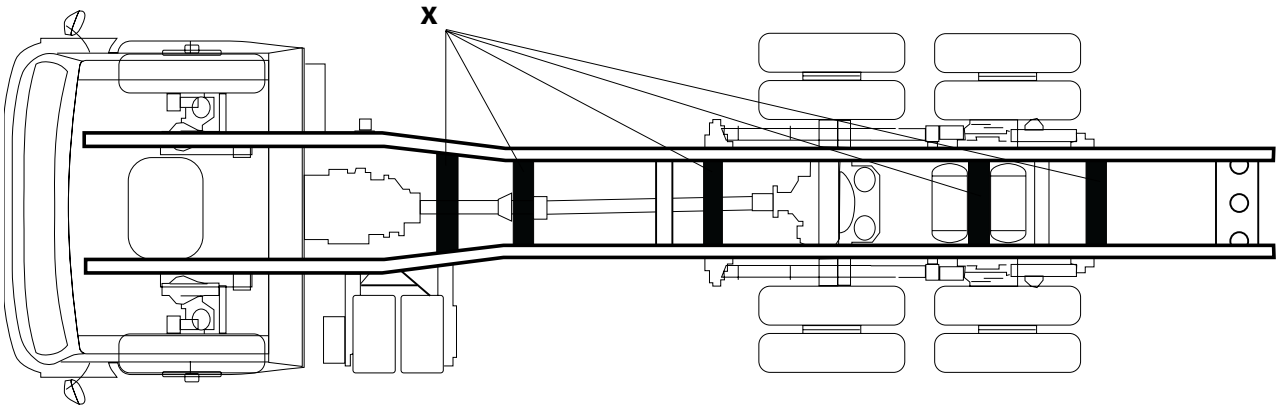

Fig. 934029

☛	**Removing or relocating the cross beams marked X in Fig. 934029 is strictly prohibited without the consent of Sisu Auto Inc.**
☛	**There must be either a SISU trailer-coupling mounting beam or a rigid end cross beam at the end of the vehicle's frame.**

5.2. Cross beam mounting

If mounting the cross beam is not possible without cutting the beam, cut the beam from the middle with a cutting disc. Bevel the joint, mount the beam and weld the joint according to the welding instructions.

Bolt the cross beam to the frame according to the instructions on bolted joints (section **02**).

https://truckmanualshub.com/

6. Extending the rear overhang

The rear overhang is extended by following the same principles as altering the wheelbase by shortening or extending the frame beams.

☛ **If the vehicle is used for towing heavy trailers, the frame must be extended by adding the extension sections between the axles (see point on page).**

The extension sections for frame beams must always be constructed with original Sisu frame beam sections.

When planning the rear overhang extension, possible optional equipment (e.g. tail lift) must be taken into consideration, as should the extension's effect on the mounting requirements of the equipment.

In vehicles with inner frames, the inner frame is also extended. The minimum distance between the joints of the inner and outer frames is 250 mm. (see point 3.3.7.)

An adequate number of cross beams must be mounted on the extended rear overhang, with regard to the overhang length and bodywork. There must be either a SISU trailer-coupling mounting beam or end cross beam at the end of the vehicle's frame.

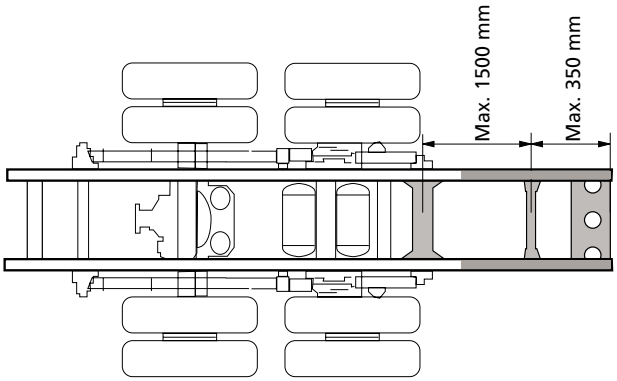

Fig. 934015

- If the distance between the trailer-coupling mounting beam and the next cross beam is more than 1500 mm, a cross beam must be installed between these cross beams.

☛ **If a SISU trailer-coupling mounting beam is not used, a rigid end cross beam must be used at the end of the vehicle's frame.**

See section **07**, mounting the trailer-coupling mounting beam.

Ready-made cross beams can be purchased from your nearest authorized dealer.

6.1. Rear corner lateral travel

According to Finnish regulations, rear overhang must be dimensioned so that when the vehicle is driven away and the steering is in a position producing a turning circle of 12.5 m (**R**) (or if the vehicle's turning circle is larger, in a position producing the vehicle's minimum turning circle), the maximum lateral distance covered by the body's rear corner is 0.8 meters (**L**), measured outwards from the longitudinal level determined by the side of the vehicle.

Fig. 934025

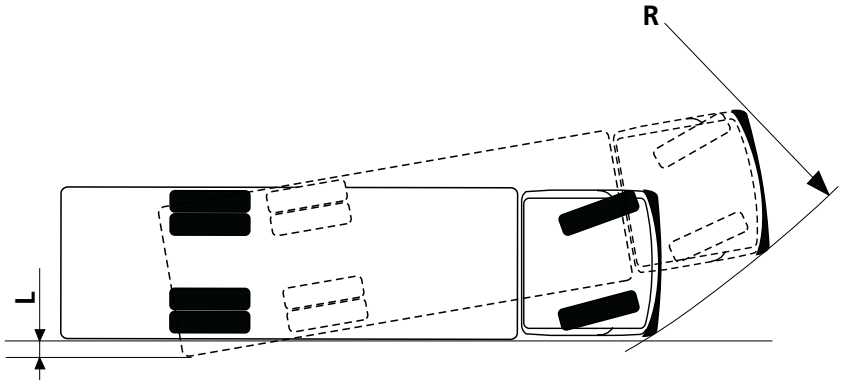

This requirement must also be applied to vehicles with axle lift devices when the axle/axles are lifted.

For category N vehicles with liftable axles lifted or loadable axles unloaded, the maximum lateral travel (**L**) is 1.00 meters.

Note! For vehicles with liftable axles, the rear corner lateral travel test must be carried out with the liftable axles in both the lowered and lifted positions, and the vehicle must pass both tests.

Check the regulations given by your local authorities.

https://truckmanualshub.com/

6.2. Calculating the rear overhang length

If it is desired that the rear overhang length be the maximum allowed by the rear corner maximum lateral movement, the rear overhang length can be calculated using the laws of geometry. For the calculation, the distance between the rear axle assembly's center of gravity and the cab's outermost corner (**a**) must be determined.

Dimension **C** is 12.5 meters, or if the vehicle's minimum turning circle is over 12.5 meters, dimension **C** is the vehicle's minimum turning-circle radius.

*First, dimension **b** is calculated:*

$$c^2 = a^2 + b^2 \Rightarrow b^2 = c^2 - a^2 \Rightarrow b = \sqrt{c^2 \quad a^2}$$

Fig. 934026

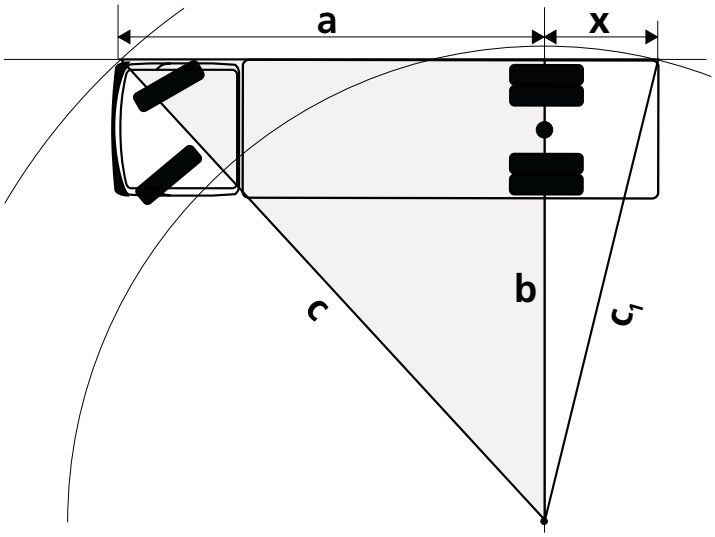

*After dimension **b** is determined, the maximum rear overhang length, i.e. dimension **x,** can be calculated:*

$$x^2 + b^2 = c_1^{\ 2} \Rightarrow x^2 = c_1^{\ 2} - b^2 \Rightarrow x = \sqrt{c_1^2 \quad b^2}$$

6.2.1. Rear axle assembly's center of gravity

Turning-point location for different rear axle constructions with liftable axles down and loaded (Fig. 934027).

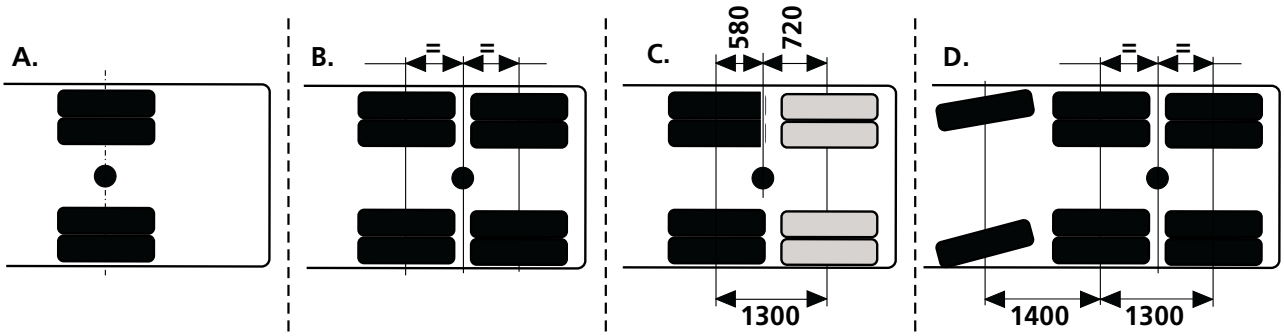

Fig. 934027

A. Turning point for two-axle vehicle: at the rear axle centerline.

B. Turning point for drive bogie: in the middle of the axles.

C. Turning point for lift bogie.

D. Turning point for triple bogie axle (turning point for triple bogie axle is not the same as the center of gravity, due to the turning wheels of the I-axle).

When other axles are lifted, the turning point for the bogie axle is at the loaded axle centerline.

☛ **As a rule of thumb, the maximum rear overhang length is 75% of the vehicle's wheelbase.**

https://truckmanualshub.com/

Example:

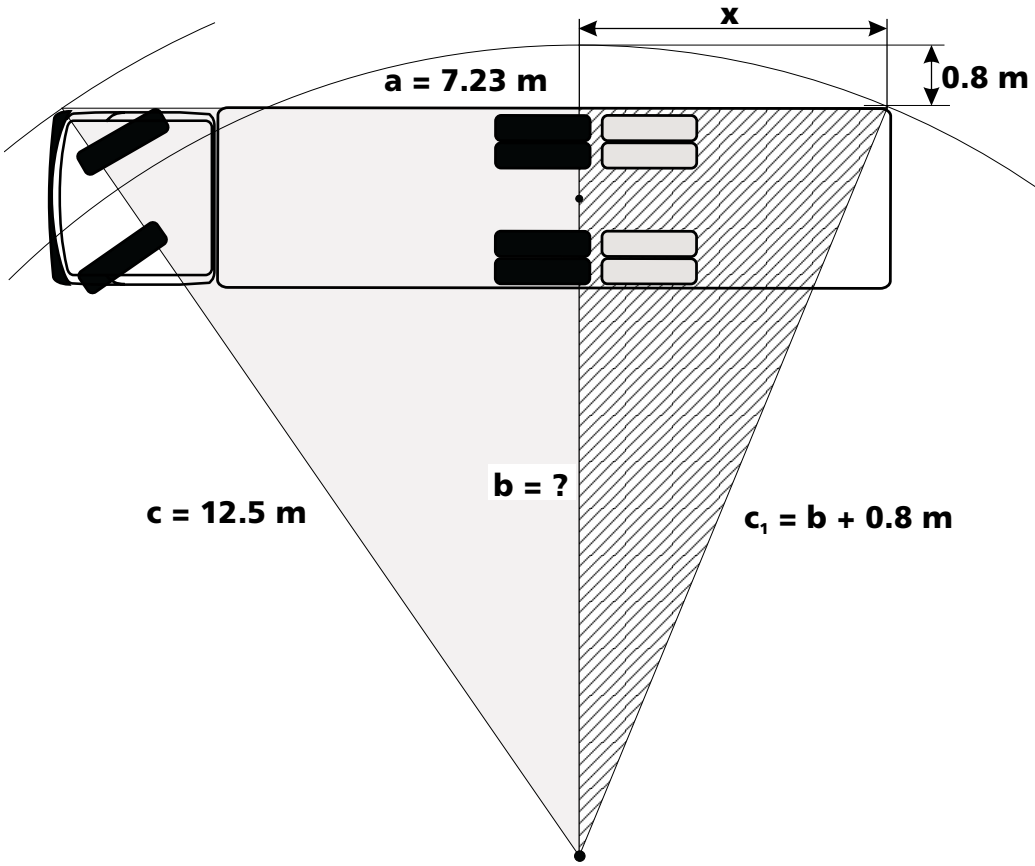

Fig. 934028

Vehicle with lift bogie, rear axle assembly's center of gravity 0.580 m behind the drive axle.

Note!

The calculated rear overhang length value **X** is from the rear axle assembly's center of gravity.

When this value is used, the rear overhang length must be measured from the axle assembly's center of gravity.

If the length is to be measured from the drive axle centerline, in this case 0.580 m must be added to the calculated value **X**.

a = distance between the rear axle assembly's turning point and the cab's outermost corner
***b** = shared base of the triangles*
***c** = 12.5 m, or if the vehicle's minimum turning circle is over 12.5 meters, the vehicle's minimum turning-circle radius*
***c1** = radius equivalent to the maximum allowed lateral travel = **b** + 0.8 or 1.0 m*

a = 1.400 m (front overhang) + 5.250 m (wheelbase) + 0.580 (the distance between the drive axle and center of gravity) **= 7.23 m**

1. The length of the first triangle base **b**

$$b^2 = c^2 - a^2$$

$$\Rightarrow b^2 = 12.5^2 - 7.23^2$$

$$\Rightarrow b^2 = 156.25 - 52.27$$

$$\Rightarrow b^2 = 103.98 \Rightarrow b = \sqrt{103.98} = 10.20\ \text{m}$$

The length of the longer side (c1) of the second triangle is b + 0.8 m

$$c_1 = 10.20 + 0.8 = 11\ \text{m}$$

2. The length of the side **x** of the second triangle; equals the maximum rear overhang length measured from the rear axle assembly's center of gravity.

$$x^2 = c_1^2 - b^2 \Rightarrow x^2 = 121 - 104.04$$

$$\Rightarrow x = \sqrt{16.96} = 4.12\ \text{m}$$

The maximum rear overhang length **measured from the rear axle assembly's center of gravity to the outermost rear corner** is 4.12 m.

For a vehicle with a bogie axle, the length value must also be calculated with the assumption that the liftable axles are fully or slightly lifted. In this case, the change in the rear axle assembly's center of gravity must be taken into consideration (usually at the loaded axle centerline). Then, the maximum allowed lateral travel is 1.0 m.

After calculating the length value in both ways for a vehicle with a bogie axle, the maximum rear overhang length is the shorter value of the two.

https://truckmanualshub.com/

7. Documents

Order dimensional drawing, type-approval certificate and possible weight certificate (if not included in the type-approval certificate) from Sisu Auto Inc. / R&D Support
Address:
Sisu Auto Inc.
R&D Support
Tel. +358 (0)19 2751
PO BOX 68
10301 KARJAA, FINLAND

8. Chassis frame damage repair/strengthening

8.1. General

As mentioned previously, the frame is usually damaged due to incorrectly mounted bodywork generating a fatigue failure or due to a sudden incident, e.g. a collision or rollover.

Instructions on repairing fatigue failures were presented with the welding instructions (page 230, point 2.). Such damage must always be repaired by following the welding instructions.

Sisu frames do not normally require additional reinforcement. Additional reinforcements increase the chassis weight and alter the frame cross-section which increases fatigue stress.

However, the reason for generating the failure (e.g. incorrectly mounted bodywork or subframe, incorrectly dimensioned or constructed subframe, incorrectly mounted accessory) must **always** be solved when repairing any fatigue failure.

The cause of the failure must always be repaired when repairing the failure (e.g. correct the subframe or bodywork mounting and/or dimensioning).

8.2. Repair plates

If the frame has serious local deformation and/or fractures, it can be repaired with repair plates.

- Remove all components that hinder attaching the repair plate.
- Cut the damaged area off so that the minimum cutting angle in the height direction of the frame beam is 45 degrees. See fig. 934020
- Construct a repair plate from the original frame beam section.
- Bevel and weld the joints according to the welding instructions. See point 2.7. on page 233

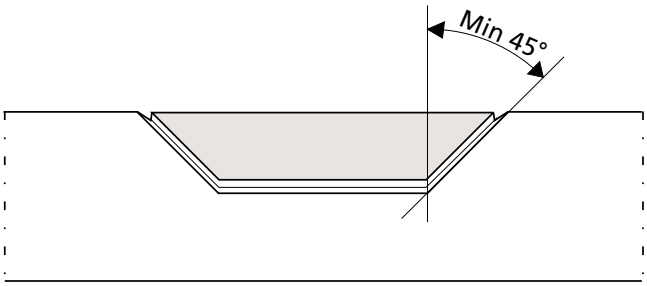

Fig. 934020

https://truckmanualshub.com/

8.3. Stiffening the rear overhang for trailer towing

It is recommended that the rear overhang area of the chassis frame be stiffened in the following cases:

- Towing a heavy 4-axle trailer or a trailer with bogie.
- Towing a semi-trailer using a dolly.
- When the bodywork mounting does not stiffen the rear frame along its whole length and the distance between the trailer coupling and the drive axle or the frontmost drive axle is over 1000 mm for 2-axle vehicles, or over 2500 mm for vehicles with a bogie or triple bogie.

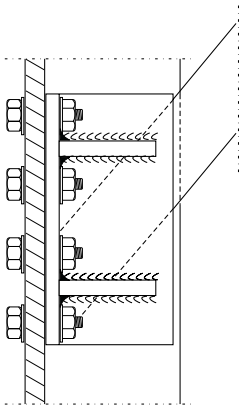

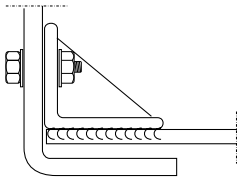

Fig. 934023

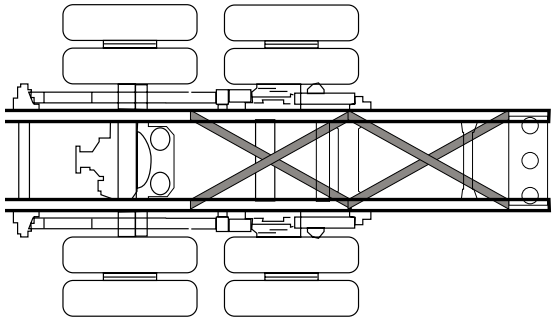

Fig. 934021

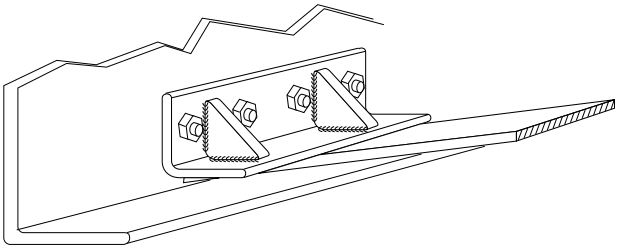

Fig. 934022

The structure is stiffened by constructing one or two truss bracings at the rear overhang area.

The truss bracings can be constructed using e.g 60 x 12 mm flat steel bars.

Material minimum requirement: Fe 52.

The truss bracing is bolted to the web of the frame, as close to the lower flange of the frame beam as possible. The bracing is welded to special angle brackets, which are then bolted to the web (see Fig. 934022 and Fig. 934023)

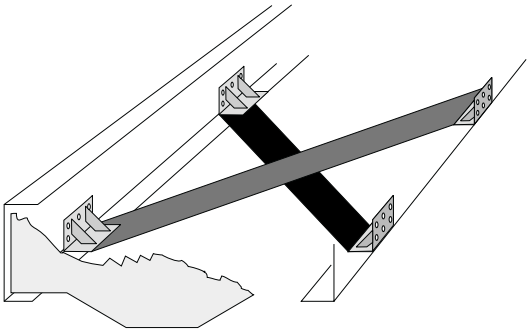

Fig. 907008

☛ **Note!**
Do not weld the flat steel bar crossing point!

Attaching the truss bracing to the frame cross beams is strictly prohibited!

https://truckmanualshub.com/

8.4. Flat steel bar stiffener for the S-series

☛ **Using a flat steel bar frame stiffener for the E-series is prohibited!**

A flat steel bar stiffener can be used in S-series vehicles in some special cases, e.g. due to aging of the vehicle and/or modifying the vehicle for heavier driving tasks, or if a standard-type subframe cannot be used.

The frame is stiffened by welding flat steel bars to the upper and lower flanges of the frame beams.

The flat steel bar stiffener is extended from the rear to as far front as possible and mounted on the upper and lower flanges of the frame beams. Material minimum requirement is Fe 52 or stronger.

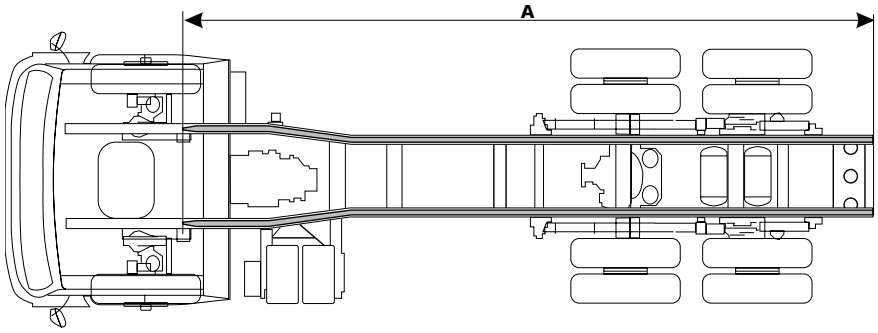

Fig. 934018

The flat steel bars are welded with intermittent welds.

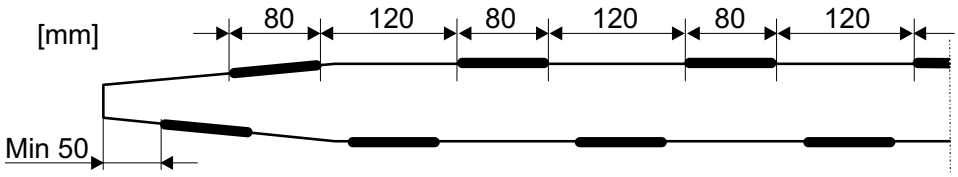

Fig. 934003

...or plug welds.

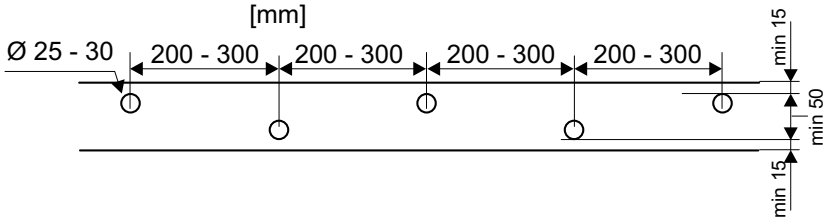

Fig. 934002en

Note that the welded seam must not be closer than 5 mm to the flange edges which are under the highest stress and therefore most prone to fatigue failures of all of the frame components.

Stiffening the frame flanges with flat steel bars, high-frame vehicles (1) and low-frame vehicles (2).

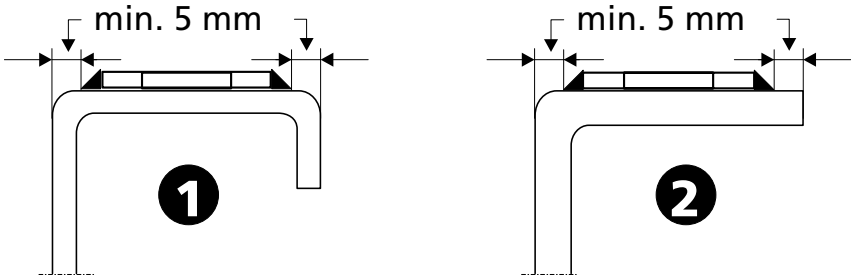

Fig. 934004

If angle brackets (3) are used, the stiffener can be extended up to the outer edge of the bracket. In this case, the flat steel bar stiffener is welded to the flame flange with plug and intermittent welds.

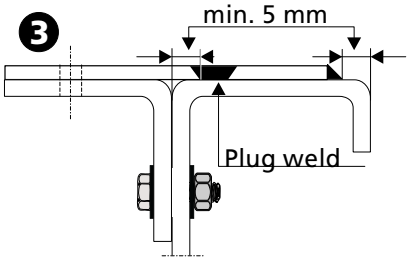

Fig. 934005en

https://truckmanualshub.com/

Record

https://truckmanualshub.com/

Electric and pneumatic equipment

Foreword

This bodywork manual section (09) gives instructions on connecting bodywork operation systems to the electric and pneumatic systems of the vehicle.

For more information, see the electric and pneumatic device sections in the maintenance manual series.

Read and follow the warnings regarding the electric and pneumatic systems.

Mistakes in installing electric or pneumatic system components may destroy expensive components or result in serious injury.

1 Electric devices

This chapter (**1**) explains the Sisu E series electric system for installing bodywork.

1.1 Safety instructions

Although the truck's nominal voltage of 24 V is not dangerous to a human being as such, electric work must be carried out with extreme care due to the notable electric energy capacity charged to the batteries.

Remove all rings and conductive watchbands before conducting electrical work. If short circuited, they will heat rapidly and cause severe burns.

Follow the instructions carefully when connecting electric connections to the bodywork, and make sure that the connections are working and safe.

A short circuit in the connections will cause an immediate fire hazard!

A faulty connection may cause truck devices to operate unexpectedly, resulting in dangerous situations!

Trucks with Cummins engines: the operating voltage of the injector nozzles is high. Due to the risk of electric shock, never touch the injector nozzles or their wires when the engine is running.

Drilling a hole/holes to the electrical center is strictly prohibited.

Never drill a hole to the electrical center for e.g. inserting a wire (drilling a hole will necessitate the replacement of the electrical center). For information about lead-through routing, see this section, chapter 1.5, page 261.

The bodywork manufacturer is solely responsible for the installation of the electric devices he has conducted.

https://truckmanualshub.com/

https://truckmanualshub.com/

1.1.1 Preparing for electric work

1.1.1.1 Temporary fuse for the ground wire

1. Turn off the main switch

2. Disconnect the ground cable from the batteries and install a temporary 8 A fuse between the cable and the battery terminal.

Fig. 42/931002

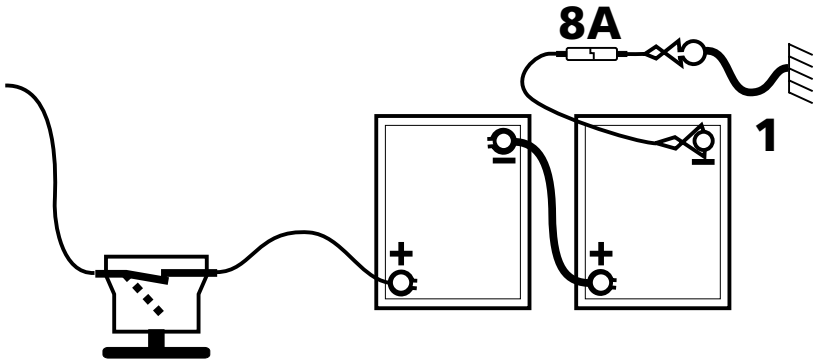

3. Turn on the main switch

This connection is to ensure that a possible short circuit during the installation will not cause major damage.

1.1.2 Electric welding

1.1.2.1 Disconnecting the electric system:

Open the main switch

1. Disconnect the – cable from the battery

2. Disconnect the + cable (power supply cable) from the battery and connect the cable to the ground

3. Close the main switch

Fig. 44/931003

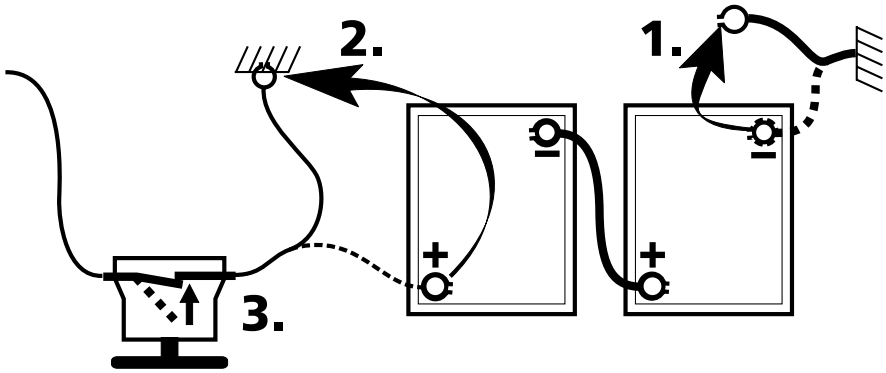

The circuit is now dead and protected from any possible voltage spikes generated by the welding machine

1.1.2.2 Grounding the welding machine

Always connect the welding machine ground cable as close to the welding point as possible. **The maximum distance between the ground cable connection and welding point is 50 cm.**

1.1.2.3 Protection

Protect all hoses, wires, cables, pneumatic pipes, etc. from the welding spatters. Protect and/or ensure that chassis components near the welding point will not overheat during welding.

1.1.2.4 Electric control units and devices, Celect ECM, Mac ECU, ECAS air suspension, ABS braking system, HD transmission

Protect all the electric control-unit components, wires and connectors from welding spatters/sparks and the heat caused by welding.

https://truckmanualshub.com/

Never weld or connect the welding machine ground cable to any electric control unit, heat sink or other part of the electronic system.

According to the instructions of the component manufacturers, all the wires must be disconnected from the control unit in order to be 100% certain that the control unit is not damaged during welding.

However, disconnecting and connecting some connector types cause a greater technical risk of damage to the connector and the unit than electric welding provided the above instructions are followed.

Disconnecting the control unit connectors is unnecessary if the instructions on disconnecting the battery cables, closing the main switch and connecting the ground cable close to the welding point are followed!

1.1.3 Charging the batteries

When charging the batteries with an external charger, the + and – cables must be disconnected from the battery.

If the battery cables are not disconnected, charging will likely damage one or more of the vehicle's control units.

1.1.4 Oven drying

If oven drying is used after painting, the heat may damage electric devices.

Proceed as follows:

Remove electronic devices if the temperature near the component exceeds:

+ 100°C without current or

+ 70°C with current

1.1.5 Alternator capacity/bodywork

Before installing bodywork electric devices, make sure that the planned bodywork device power consumption does not exceed alternator capacity.

Vehicle	Alternator	Batteries	Voltage
E11	55 A or 80 A	2 x 180 or 220 Ah	24 V
E12	80 A	2 x 180 or 220 Ah	24 V
E14	80 A	2 x 180 or 220 Ah	24 V

Alternator capacity must be 15–25 A over the power consumption of the electric devices. Otherwise, the alternator is not able to balance the charge level of the batteries.

If the alternator charging capacity is less than 15 A over the power consumption, a new alternator with a higher capacity must be installed.

Vehicle's power consumption without bodywork

Device	pcs	total power consumption
Headlights	2 x 3 A	6 A
Rear lights	4 x 0.25 A	1 A
Corner lights	4 x 0.25 A	1 A
Instrument lights	tot. (approx.)	2 A
Heater fan		5 A
Windshield wiper		4 A
Radio/cassette player		2 A
Air dryer		3 A
Total (approximate):		**24 A**

https://truckmanualshub.com/

Trailer power consumption without bodywork

Device	pcs	total power consumption
Corner and side lights	tot. appr.	5 A
Rear lights	4 x 0.5 A2 A	
Other lights	tot. appr.	8 A
Total (approximate):		**15 A**

Power consumption of some common optional equipment:

Device	pcs	total power consumption
Side lights	4/6 x 0.5 A	2–3 A
Auxiliary headlights	2/4 x 3 A6–12 A	
Work lights	1–3 x 4 A	4–12 A
Heated rearview mirrors	2 x 2 A	4 A
Heated seats	2 x 2.5 A5 A	
Refrigerator		2 A
Eberspächer (cab heater)		3 A
Webasto (cab heater)		6 A
Pause heater		4 A

Bodywork electric actuators may have a very high power consumption, e.g.:

Tail lift	100 A
Electric retarder	100 A

Actual power consumption of optional equipment or devices by utilization rate

Utilization rate as a percentage (%) must be defined for optional equipment and bodyworks. A device's rated power is multiplied by the estimated utilization rate,

E.g.

Tail lift	power consumption 100 A,	utilization rate 2 %
	= 100 x 0.02 = 2 A	

This gives device's actual power consumption value for calculating the required alternator capacity.

https://truckmanualshub.com/

1.2 Dimensioning fuses and wires

1.2.1 General

Fuses and wires must be dimensioned correctly. A misdimensioned fuse or wire may cause fire or actuator damage.

The following equation is used for calculating the dimensioning:

P = U x I, or **U = P:I**, or **I = P:U**, where

P = Power (W), in watts

U = Voltage (V), in volts

I = Current (A), in amperes

i.e. if two values are known, the third can be calculated.

E.g.:

The power rating of the device is 250 W (**P**)

The operating voltage of the device is 24 V (**U**)

Rated current (**I**) can be calculated:

I = P:U = 250W : 24 V = 10.4 A

1.2.2 Dimensioning the fuses

The nominal (calculated) total current may not exceed 60 % of the fuse's rated current (A).

i.e. a device with a rated current of **I = 10.4 A** requires **a 10.4: 0.6 = 17.3 A** fuse

1.2.3 Dimensioning the wires

The cross-sectional area of the wire used is selected according to the actuator's power rating, rated current and distance from the power source (wire length).

The wire length has an effect on the wire voltage loss.

A voltage loss of approximately 5% (1.2 V) is normally allowable.

If the voltage loss is higher, a wire with larger cross-sectional area must be selected.

Voltage loss for copper wires is calculated as follows:

U = I x (0.0175 x L) : A, where:

U = Voltage loss (V), in volts

I = Current (A), in amperes

L = Wire length in meters (m)

A = Cross-sectional area of the wire (mm^2)

When the allowable voltage loss, current and the cross-sectional area of the wire are known, the following equation can be used to calculate the maximum length of the wire:

$\mathbf{L_{max} = U \times A:(I \times 0.0175)}$

The following table shows examples of wires used for devices with various power ratings

Input power	Nominal current	Wire, cross-sectional area [mm^2]
200 W	10 A	0.75–1
400 W	15 A	1.5
500 W	20 A	2.5
650 W	25 A	4.0
850 W	40 A	6.0
1200 W	50 A	10.0

The wires outside the cab must always be over 1.5 mm^2.

https://truckmanualshub.com/

1.3 Connectors

The Sisu E series electric system includes several types of electric connectors due to the purpose and location requirements.

The electronic device connections in particular require high conductivity. In these connectors, the contact surfaces are usually made of gold.

It is advisable to use weatherproof connectors outside the cab.

When modifying the electric system or adding components to the system, original type connectors must be used. Connectors can be ordered from the Oy Sisu Auto Ab spare part center, Helsinki, Finland, or purchased from the nearest Hansa Auto Oy dealer.

1.4 Electrical center

The electrical center is located on the passenger's side, under the glove compartment. To gain access to the center, remove the glove compartment and footwell trim panel.

Fig. 228/931004

The electrical center with relays and fuses is located under the glove compartment.

The connectors and lead-through panel are located behind the footwell trim panel.

https://truckmanualshub.com/

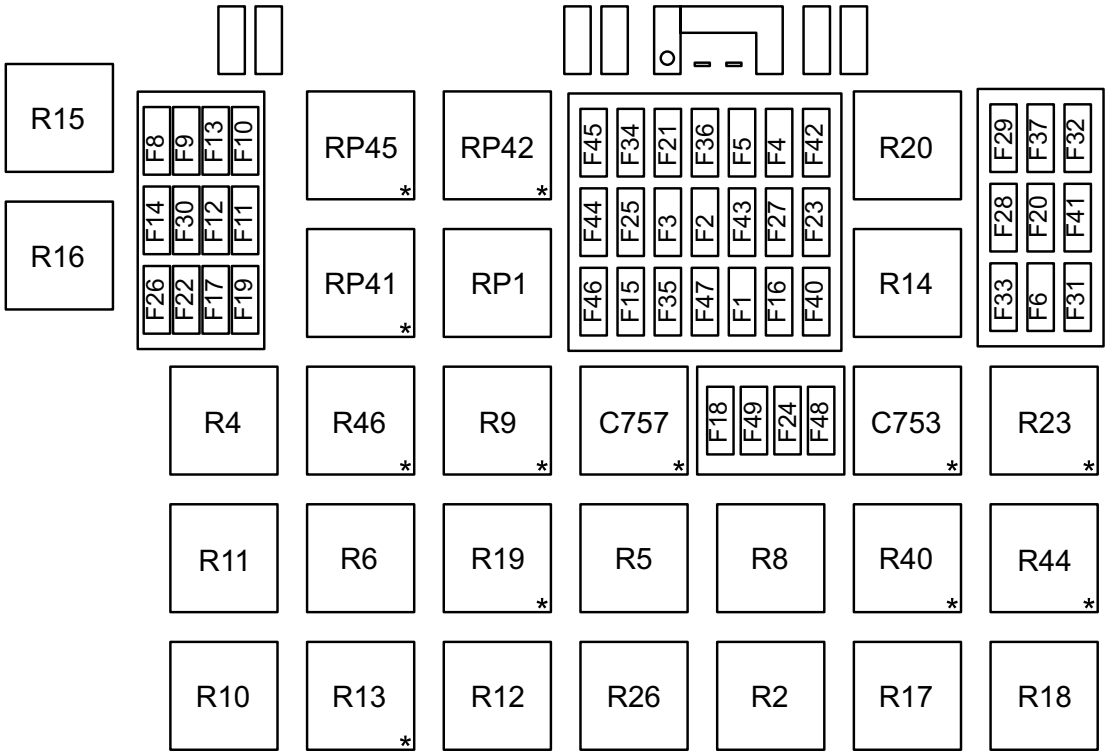

Relay	Type	Function
1	50 A	Immobilizer (not in use)
R 2	25 A	Immobilizer (not in use)
R 4	25 A	Hour meter
R 5	25 A	Parking lights
R 6	25 A	Auxiliary devices
R 8	25 A	Instrument lights
R 9	25 A	Front fog lights *
R 10	25 A	Rear fog lights
R 11	25 A	Low beam headlights
R 12	25 A	High beam headlights
R 13	25 A	*
R 14	25 A	Stop lights
R 15	25 A	ABS
R 16	25 A	ABS
R 17	25 A	ABS
R 18	25 A	ABS
R 19	25 A	Speed limiter *
R 20	25 A	Rearview mirror heating
R 23	25 A	Hazard indicators
R 26	25 A	Brake-pad wear indicator (not in use)
R 40	25 A	*
41	50 A	Fuel heater E12 *
42	50 A	*
R 44	25 A	power supply E 12*
45	50 A	Cab tipping pump * (not in use)
R 46	25 A	Eberspächer *
C753		Headlight washer timer *
C757		*

*** Optional equipment**

https://truckmanualshub.com/

Fuse	Rating	Device
F 1	15 A	"ABS" socket, door step and front grid lights
F 2	10 A	Right; side lights/corner lights/parking light
F 3	**10 A**	Left; side lights/corner lights/parking light, **free power supply (activated by parking lights)**
F 4	**10 A**	Trailer side lights, **free power supply (activated by parking lights)**
F 5	**10 A**	**Free power supply (activated by parking lights)**
F 6	10 A	Dashboard instrument and switch lighting
F 7	10 A	Free (not available for connection)
F 8	10 A	Rear fog lights
F 9	10 A	Front fog lights
F 10	10 A	High-beam headlight, right
F 11	10 A	High-beam headlight, left
F 12	10 A	Low-beam headlight, left
F 13	10 A	Low-beam headlight, right
F 14	10 A	Free (not available for connection)
F 15	10 A	Electronic tachograph, windshield wiper speed control
F 16	10 A	Stop light relay, reverse lights, warning lights, rearview mirror heating, trailer stop light switch, air dryer, central lubrication system
F 17	20 A	Radio
F 18	15 A	Air conditioning
F 19	25 A	Fuel filter preheating, E 12
F 20	10 A	Rotating beacons, roof air-vent motor
F 21	**15 A**	**Free power supply from the main switch, timber truck accessories**
F 22	10 A	Auxiliary heater (Eberspächer)
F 23	10 A	Interior lights, side locker light, voltage dropper for telecommunications devices (NMT, GSM, CB etc. overhead panel)
F 24	20 A	Power windows
F 25	5 A	Tachograph clock
F 26	10 A	Horn
F 27	10 A	Stop lights
F 28	10 A	ABS - electronic control unit
F 29	10 A	Electric side mirrors, rearview mirror heating
F 30	20 A	Headlight adjustment, seat heating, cigarette lighter, 12 V socket (central panel), tachograph A4
F 31	**20 A**	**Free (special connector)**
F 32	20 A	Windshield wiper motor and washer pump, headlight washer and pump
F 33	10 A	Air suspension electronic control unit, diagnostic socket
F 34	10 A	Direction indicator relay, radio memory power supply, Eberspächer clock, Road Relay onboard computer power supply through voltage dropper
F 35	**15 A**	**Free power supply from the ignition switch**, ABS socket plug 2, timber truck loader seat / scales power supply
F 36	20 A	Trailer ABS socket
F 37	10 A	Central locking
F 40	**10 A**	**Free**
F 41	10 A	Free (not available)
F 42	10 A	Auxiliary high-beam headlights, snow plow lights
F 43	10 A	Work lights, radiator grille light
F 44	25 A	Cab tipping pump (optional)
F 45	10 A	Central locking
F 46	10 A	Fuel heating E12, Celect ECM from the ignition switch
F 47	10 A	Air suspension electronic control unit, bogie lifting, range shift prevention
F 48	20 A	E12 power supply
F 49	3 A	V-MAC E12 engine brake, Celect indicators

Note!
Replacing the original fuses with higher rating fuses is strictly prohibited!

https://truckmanualshub.com/

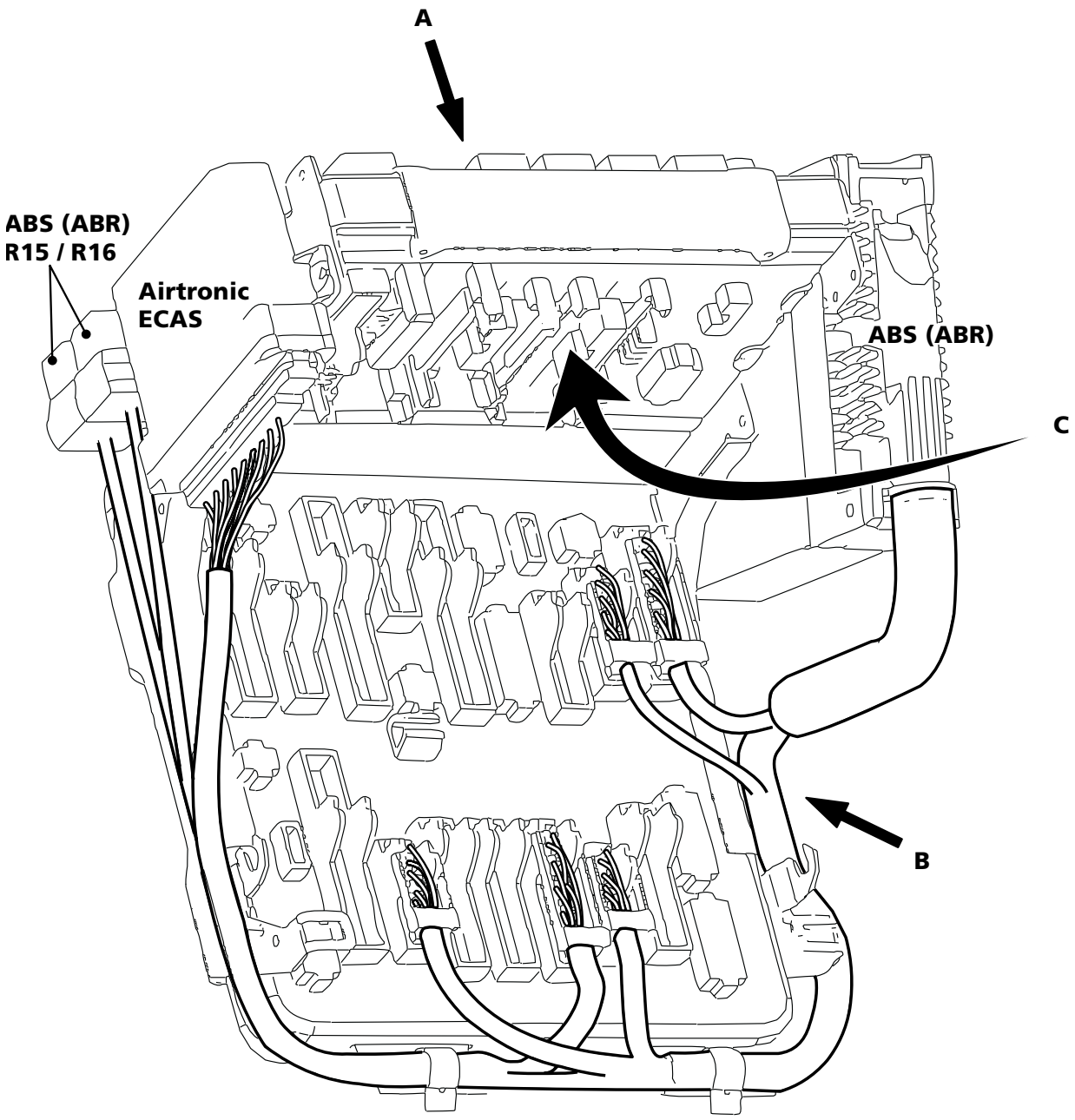

A = Fuses and relays, under the glove compartment
B = Connectors, lead-through panel; access from the passenger-side footwell
C = Electronic units

https://truckmanualshub.com/

1.5 Lead-through routing, connectors

1.5.1 Wire lead-through routing from the cab to the chassis

Wiring-harness lead-through connectors are provided in the electrical center, on the right-hand side of the cab.

The cab's interior wiring harness connector is connected to the electrical center connector from the cab interior.

Fig. 931007

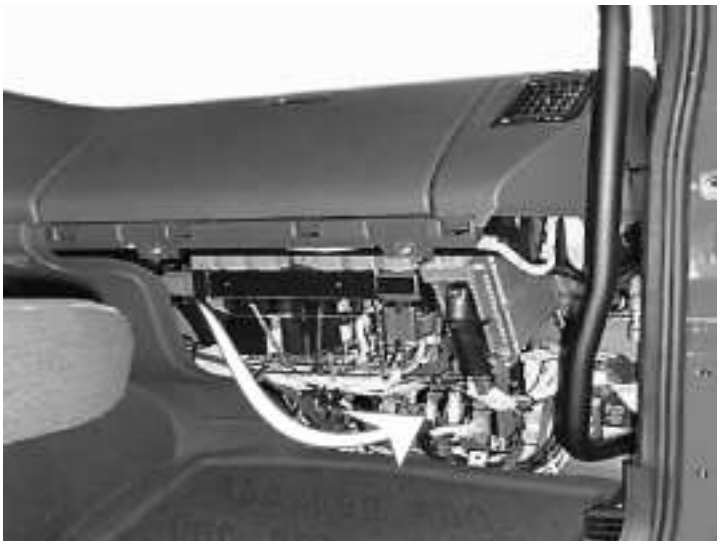

The connector of the wiring harness routed to the chassis is connected to the corresponding connector from the cab exterior.

Fig. 931008

Fig. 931009

The connectors are color-coded and the electrical center's connector parts have corresponding color codes.

These connectors have spare terminals to enable the bodywork manufacturers to route the harnesses inside the cab easily and safely.

The next figures present the lead-through panel connector diagrams viewed from the cab interior and exterior.

https://truckmanualshub.com/

Cab interior

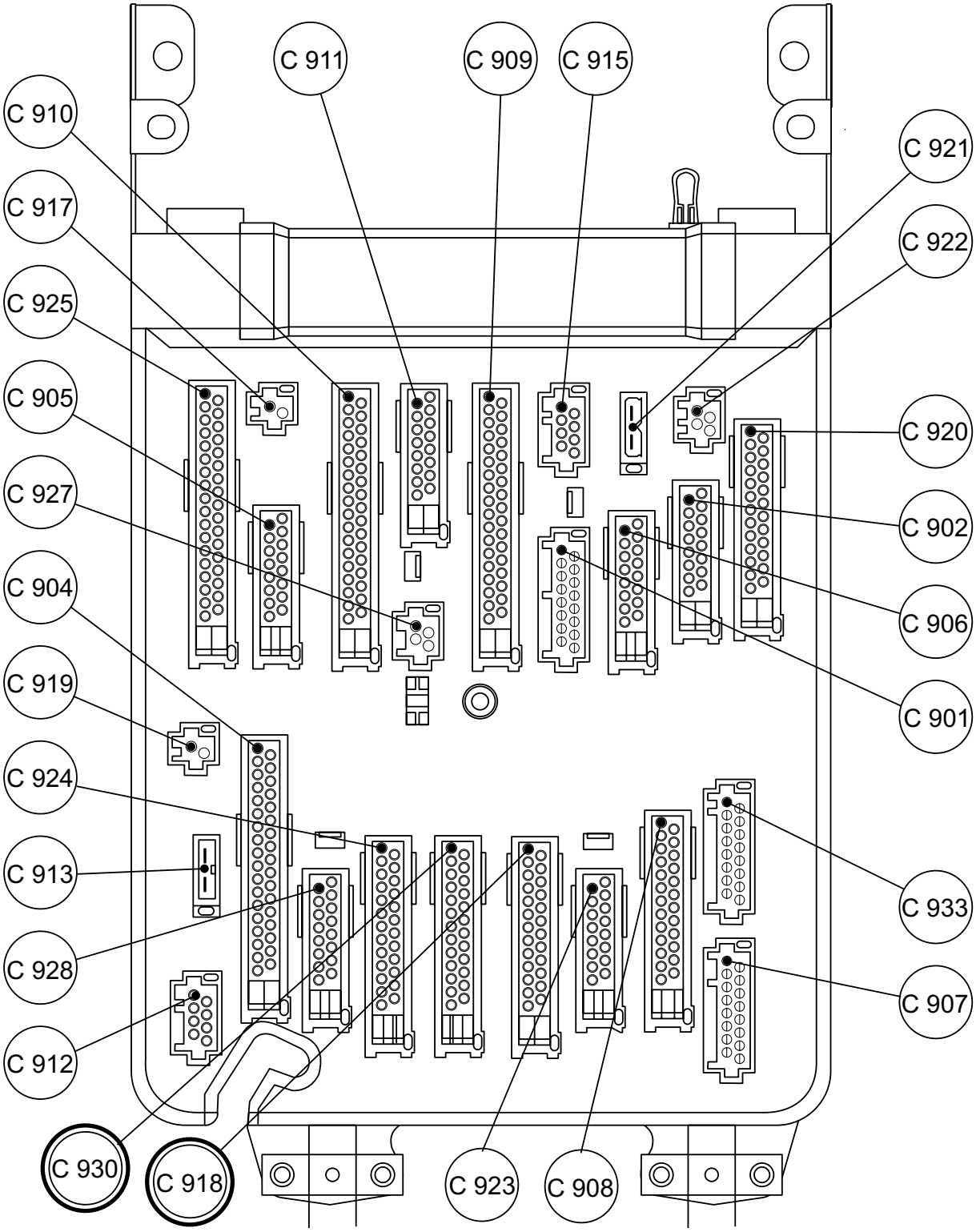

Available connectors:
C918 (white), corresponding exterior connector C815 (white)
C930 (yellow), corresponding exterior connector C819 (yellow)

https://truckmanualshub.com/

Cab exterior

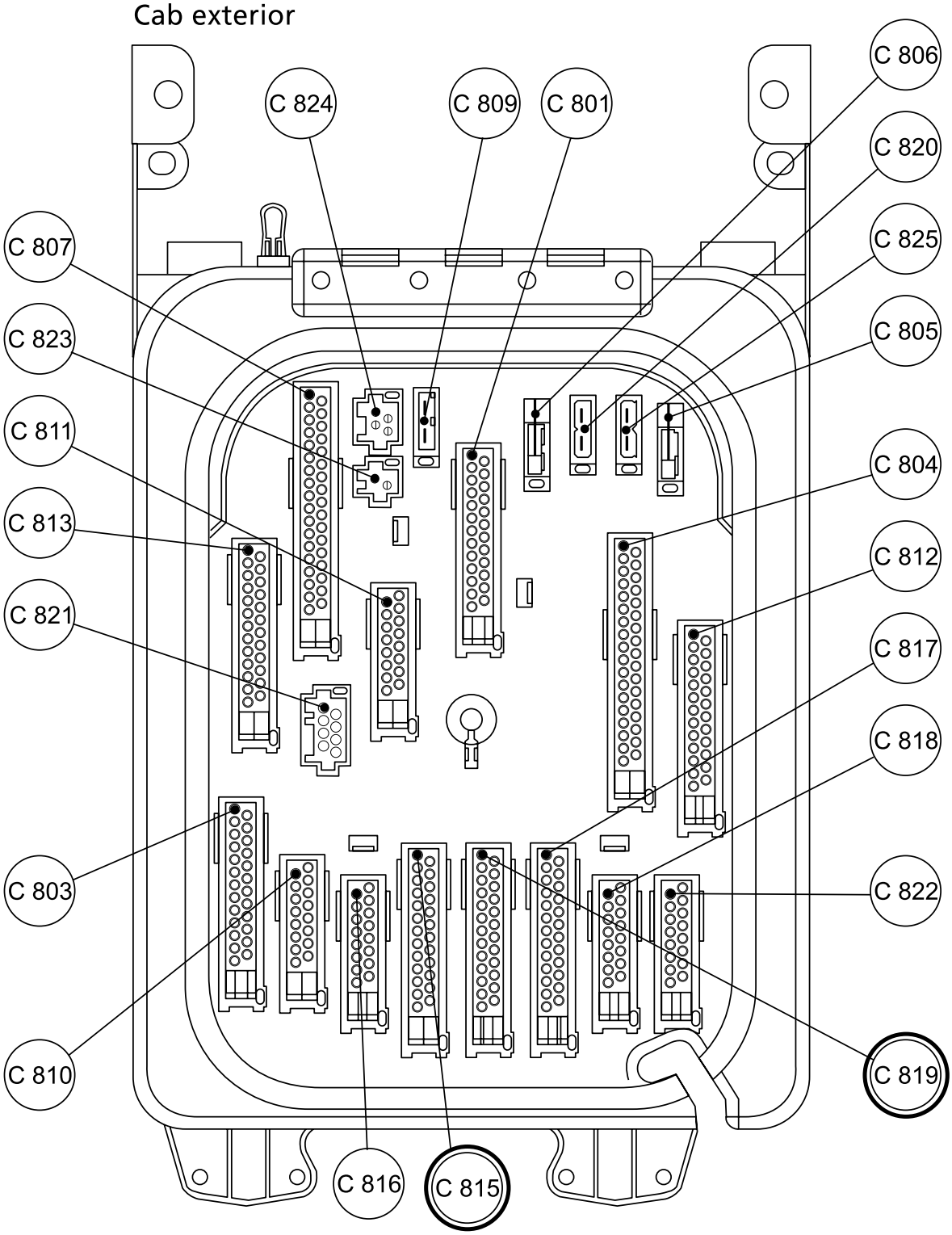

Available connectors:
C 815 (white),corresponding interior connector C 918 (white)
C 819 (yellow), corresponding interior connector C 930 (yellow)

The terminals of connectors C815, C819, C918 and C930 are shown in the table on page 264!

For the use of connectors, see table on page 265.

https://truckmanualshub.com/

Terminal numbering of the lead-through panel for additional routing; white and yellow connectors, cab interior and exterior.			
White connector		**Yellow connector**	
Cab exterior	**Cab interior**	**Cab exterior**	**Cab interior**
C 815 (Connector no.)	**C 918** (Connector no.)	**C 819** (Connector no.)	**C 930** (Connector no.)
Terminal	**Terminal**	**Terminal**	**Terminal**
A13	X *	A13	X *
A12	B12	A12	B12
A11	B11	A11	B11
A10	B10	A10	B10
A9	B9	A9	B9
A8	B8	A8	B8
A7	B7	A7	B7
A6	B6	A6	B6
A5	B5	A5	B5
A4	B4	A4	B4
A3	B3	A3	B3
A2	B2	A2	B2
A1	B1	A1	B1
B12	A13	B12	A13
B11	A12	B11	A12
B10	A11	B10	A11
B9	A10	B9	A10
B8	A9	B8	A9
B7	A8	B7	A8
B6	A7	B6	A7
B5	A6	B5	A6
B4	A5	B4	A5
B3	A4	B3	A4
B2	A3	B2	A3
B1	A2	B1	A2
X *	A1	X *	A1

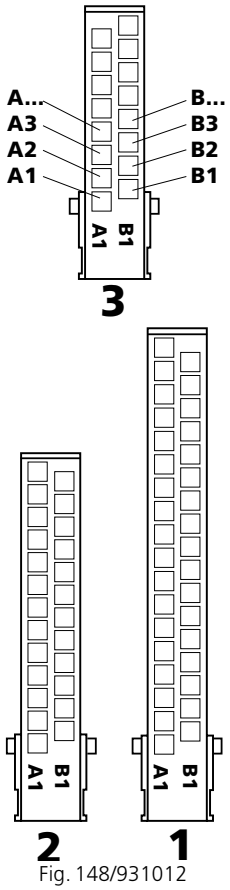

Fig. 148/931012

* X - no connection

1 = connector with 35 terminals

2 = connector with 25 terminals

3 = connector with 16 terminals

E.g. Exterior connector terminal B1 corresponds interior terminal A2

The wire is connected to the terminal using a connector as shown in the picture below.

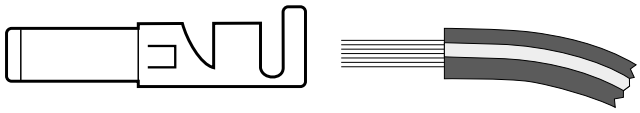

SISU 92205 28004 or AMP 927777-1 (1,5–2,5 mm^2 wires)

and

SISU 92205-28003 or AMP 927779-1 (0,5–1,0 mm^2 wires)

These connectors can be purchased from the nearest RS Hansa Auto Oy dealer.

The same connector fits both interior and exterior connector terminals.

https://truckmanualshub.com/

1.5.2 Connectors

Cab interior panel				Cab exterior panel			
Con-nector	Function	Pins	Color	Con-nector	Function	Pins	Color
901	Diagnostics	16	Br	801	Power supply/starting	25	Red
902	Airtronic suspension, ECAS	16	Wh	803	To bulkhead	25	Red
904	V-MAC	35	Gre	804	Engine and transmission	35	Gre
905	Dashboard	16	Ye	805	Ground	1	Br
906	Dashboard	16	Blu	806	+ 24 V	1	Blk
907	Roof-panel harness	16	Gre	807	Electronics INFO	35	Wh
908	Roof panel/door	25	Red	809	Trailer socket	2	Gy
909	Dashboard	35	Ye	810	Chassis	16	Gre
910	Dashboard	35	Red	811	Trailer sockets	16	Wh
911	Dashboard	16	Gr	812	Headlights	25	Br
912	Auxiliary heater	8	Ye	813	Door	25	Gr
913	Auxiliary heater	2	Br	815	Airtronic, ECAS/lift bogie	25	Wh
915	Auxiliary display	8	Wh	816	ABS, rear	16	Br
917	Spare power supply (available)	2	Gy	817	V-MAC	25	Blu
918	Air suspension/lift bogie	25	Wh	818	ABS, front	16	Red
919	Seat heaters	2	Wh	819	Timber truck accessories	25	Ye
920	ABS/ASR, rear	25	Gre	820	Fuel heating / starting	2	Wh
921	Client socket, (available)	2	Gy	821	Retarder	8	Ye
922	Airtronic suspension, ECAS	4	Ye	822	Eberspächer	16	Ye
923	ABS/ASR	16	Br	823	Power supply (available)	2	Gy
924	V-mac	25	Blu	824	Brake-pad wear indicator	4	Wh
925	Dashboard	35	Wh	825	Cab tipping	2	Blu
927	Cruise control	4	Wh				
928	ABS, front	16	Red				
930	Timber truck accessories	25	Ye				
933	Roof auxiliary set	16	Gy				

Connectors to the electrical center	Purpose	RVI part number
Connector body, 2-pin, gray	Spare power connector 823, 917	5010214473
Connector body, 4-pin, white	Cruise control (c.c.) 927	5010214479
Connector body, 8-pin, yellow	Electric retarder 821, Eberspächer 912	5010214490
Connector body, 16-pin, green	Rear lights 810, range shift prevention 911	5010214705
Connector body, 16-pin, white	Air suspension 902, sockets 811	5010214706
Connector body, 16-pin, red	ABS 816	5010214707
Connector body, 16-pin, yellow	Eberspächer 822	5010214708
Connector body, 16-pin, blue	To dashboard 906	5010214709
Connector body, 16-pin, brown	ABS 818	5010214710
Connector body, 25-pin, white	Air suspension 918, 815	5010214712
Connector body, 25-pin, red	To engine 801	5010214713
Connector body, 25-pin, yellow	Direct out 930, 819	5010214714
Connector body, 25-pin, blue	V-MAC 924, 817	5010214715
Connector body, 25-pin, brown	Headlights 812	5010214716
Connector body, 35-pin, green	Engine 904, 804	5010214717
Connector body, 35-pin, white	Electronics/aux. high-beam headlights 807	5010214718

https://truckmanualshub.com/

Connectors to the electrical center	Purpose	RVI part number
Connector body, 35-pin, yellow	To dashboard 909	5010214720
Connector body, 2-pin, white	Fuel temperature 820	5010214929
Connector body, 2-pin, black	Cab power supply 806	5010293073
Connector body, 2-pin, gray	Socket 809, spare power socket 921	5010293074
Connector body, 2-pin, brown	Eberspächer, power supply 913	5010293075
Connector, 6-10 mm^2	Wide flat connector, power supply 806, 809	7701997035
Connector, 3-6 mm^2	Wide flat connector, 921, 913	7701997034
Connector 1.5 –2.5 mm^2	Timer connector	SISU 92205-28004
Connector 0.5–1.0 mm^2	Timer connector	SISU 92205-28003

1.5.3 Electronic units

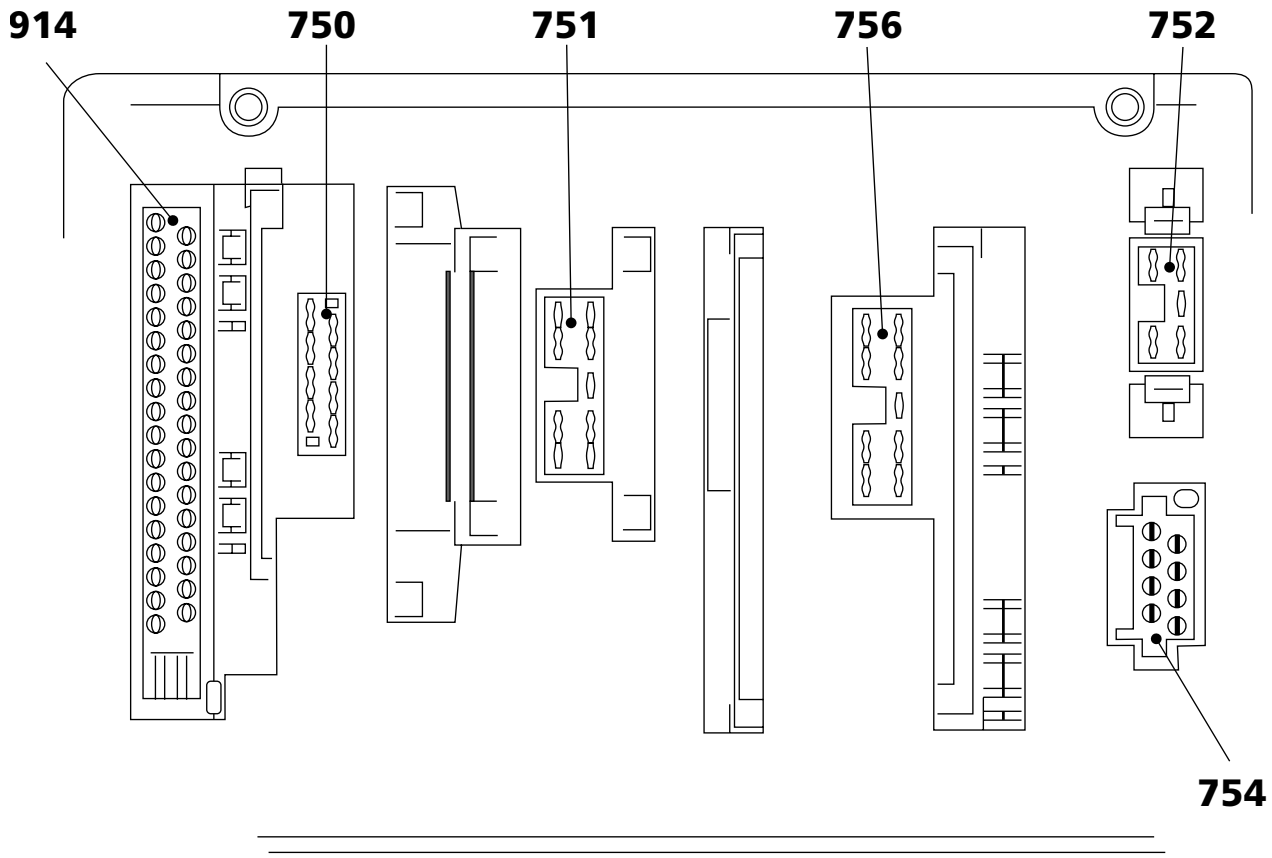

Connector	Function	Pins	Color
750	Direction indicator unit	16	Black
751	Multifunction control (indicators, instruments)	13	Black
752	Windshield wiper speed control	9	Black
754	Not connected	8	Purple
756	LIV ASR (separate speed limiter)	17	Black
914	Instrument cluster (connector to the instrument cluster)	35	Blue

https://truckmanualshub.com/

1.6 Power supply to bodywork or other additional installations

Fig. 213/931015

Max. 5 A

If a low-current (5 A or less) power supply is required in the cab, an appropriate supply is available from wire 274. The wire can be found either behind the lift bogie switch or at the white 16-pin connector, pin B5, located in the electrical center.

Max. 15 A

A 2-pin connector 917 is located inside the cab, in the upper left-hand corner of the electrical center. Pin 1 of this connector is connected to (+) plus from fuse 21. Maximum load is 15 amperes. This fuse is usually rated at 10 A but a fuse with higher rating of 15 A is allowable. The main switch cuts this power supply.

Pin 2 of this connector is connected to the ground.

The part number of this connector body is 5010214473 and the part number of the connectors for the body is 92205-28004.

Higher power supply to chassis

If a higher power supply is required for the chassis, e.g. for several trailer work lights, a new power supply must be routed for this purpose. This supply must be equipped with its own fuse, either from the main switch box or from the battery compartment. For this type of power supply, only the control current is taken from the cab.

1.6.1 Antenna cables and power supply for CB and NMT phones and

Antenna cables

The CB antenna cable end is located inside the roof trim panel opening in all vehicles, behind the radio.

In standard cab vehicles, the NMT antenna cable end is located in the overhead panel, under a gray cover plate.

In space-cab vehicles, the NMT antenna cable end is located behind the radio.

1.6.1.1 CB/NMT/GSM

All cabs include a CB +12 V power supply through a voltage dropper (10 A). Wires 4000 and 144 are taped to the center of the overhead panel. Since 1998, the main switch cuts this power supply (until 1997 it was cut by the ignition switch).

Fig. 180/931016

Fig. 931017

1.6.1.2 NMT/GSM

1.6.1.3

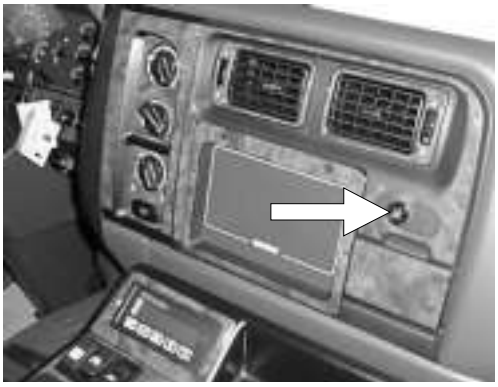

Fig. 184/931018

If a 12-V power socket is located at the right-hand side of the dashboard middle section, it can be used as a power supply for e.g. NMT/GSM phones. In the original connection version, this power supply is also cut from the ignition switch.

If this supply is desired in order to modify to a continuous type supply, the 24-V feed to the voltage dropper located at the right-hand side of the electrical center must be modified to take the feed from wire 202; available in pin 9 of the green 16-pin connector 907 . Fuse 34, max. 10 A.

https://truckmanualshub.com/

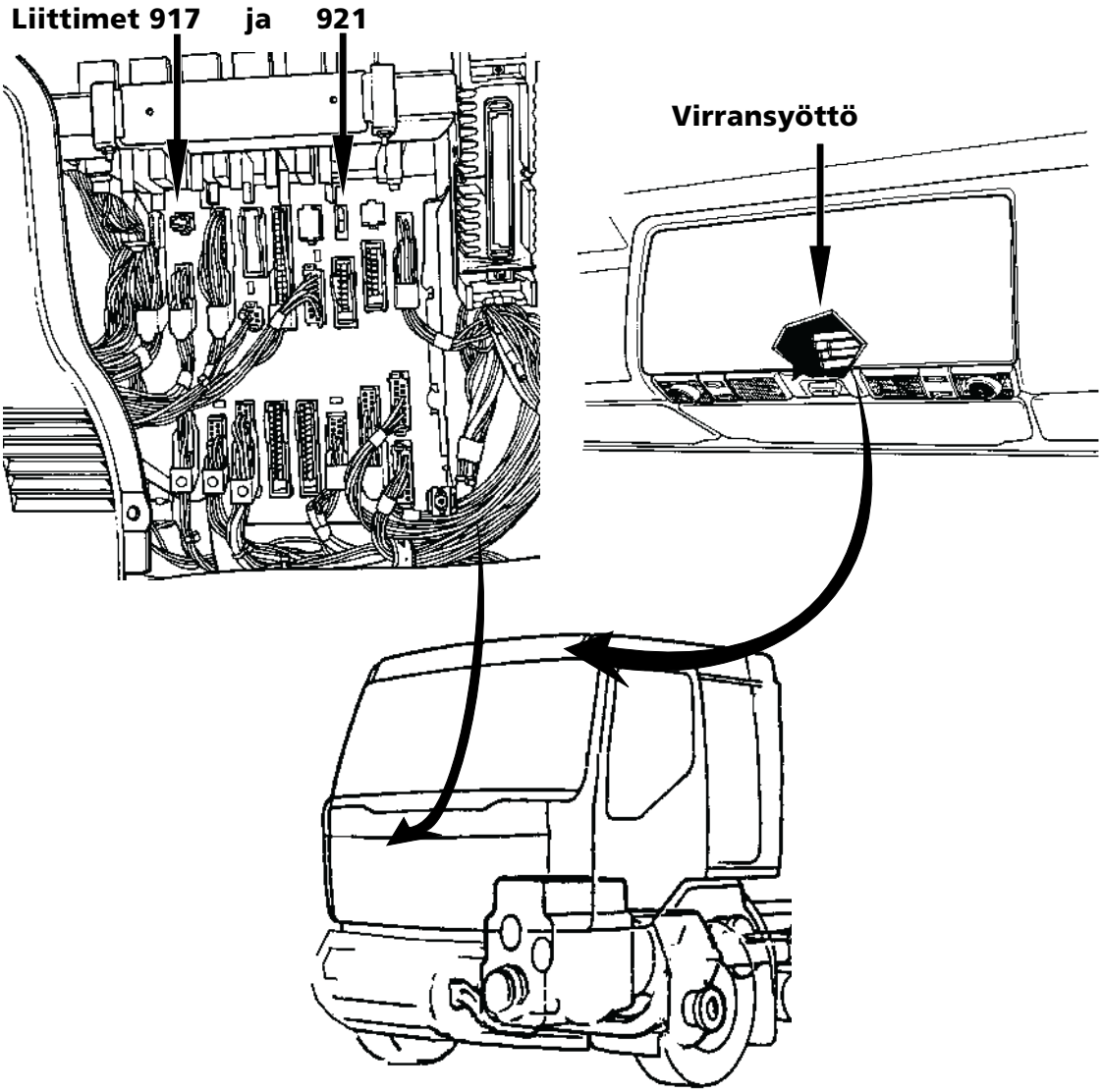

GRAY, connector 917	Wire	Fuse	Rating
Ground Free power supply	1 208	 F 21	 15 A

GRAY, connector 921	Wire	Fuse	Rating
Ground Free power supply (from ignition switch)	1 275	 F 35	 15 A

Power supply from the overhead panel	Wire	Fuse	Rating
Ground	1		
Free power supply (lights)	305	F 3	10 A
Free power supply + 12 V (CB)	4000	F 17	10 A
Free power supply – (CB)	144	F 17	10 A
Free power supply + 12 V (car phone)	46	F 17	10 A
Free power supply – (car phone)	155	F 17	10 A

Note! Replacing the original fuses with higher rating fuses is strictly prohibited!

https://truckmanualshub.com/

1.6.2 Connecting side lights

All vehicles include a side-light power supply, available in pins 6 and 7 of the gray 12-pin Deutsch connector X122. The connector is located inside the right-hand side frame beam, near the rear axle (in ADR vehicles the connector is located under the cab, on the right-hand side of the engine).

The connector part number is 92226-15031.

The crimping tool is Deutsch HDT-48-00. A grounding point that can be used to ground the side lights is available at the frame near the connector.

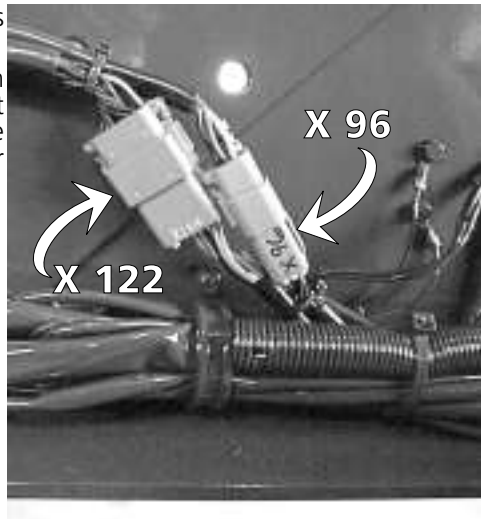

Fig. 931020

1.6.3 Rear-light connector lead-through hole in frame

E.g. when the frame beams are shortened, the lead-through hole in frame beams for the rear-light wiring harness must be changed. However, the lead-through hole is too small to route the harness connector through the hole.

Fig.931021

The connector can be disassembled by using special tools.

Tool order numbers are:

AMP 726310-0 and

AMP 725938-0

Tools can be purchased from e.g. Tampereen Sähköpalvelu, Finland, tel. +358 (0)3 2515224.

https://truckmanualshub.com/

1.6.4 Spare wires from cab to chassis

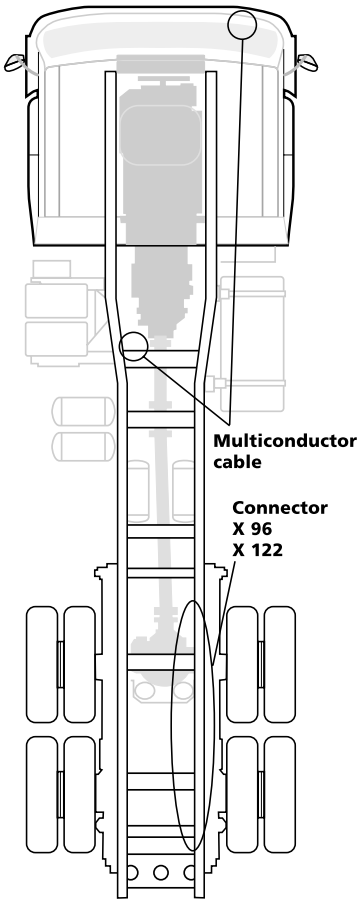

Fig. 139/931022

Some spare wires are included in the chassis to facilitate retrofitting.

Wiring-harness spare wires

A rear work-light/reverse-alarm wiring harness with 3 spare wires is routed from the cab to the chassis. The spare wires are yellow, lilac and black.

These wires are located at the connectors 811 and 810 harness in the cab lead-through panel presented on the previous pages. At the rear end, the wires are located near the rear axle, inside the right-hand side frame beam (), connector X96, pins 4, 5 and 6. (In ADR vehicles, the connector X96 is located under the cab, on the right-hand side of the engine).

Multiconductor cable

All vehicles include a spare multiconductor cable 7 x 1.5 mm^2 routed from the cab to the chassis.

The cable is located in the lead-through panel, outside the cab, wire ends unconnected. The other end of the cable is located behind the transmission, at the cross beam. See pictures.

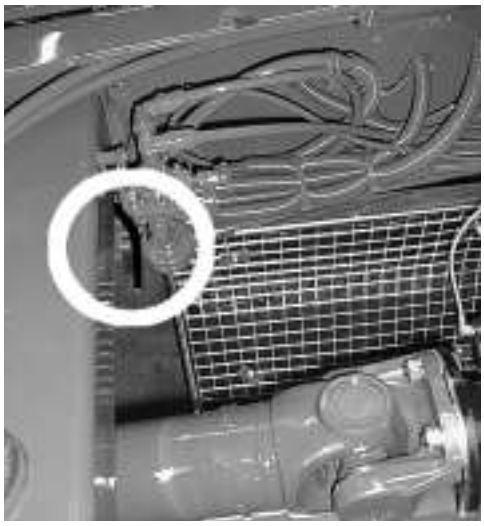
Fig. 931023

1.6.5 Trailer socket connections

Fig. 170/931024

The standard socket is connected according to DIN ISO 1185. The socket includes the following connections:

- parking light
- direction-indicator light
- stop light
- ground

An additional socket is standard with vehicles ordered with a trailer coupling, including the following connections:

- reverse light
- rear fog light
- ground

If the vehicle is ordered with a trailer auxiliary electric set, the socket also includes the following connections:

- trailer lock
- brake
- bogie 1
- bogie 2

If the auxiliary electric set is not included in the order, four spare wires are included in the cab lead-through panel connector 811 harness. In the 7- conductor cable, the wires are brown, red and green.

The additional socket is connected according to ISO 3731.

https://truckmanualshub.com/

1.7 Electric connections in ADR-equipped vehicles

1.7.1 General

ADR = Vehicle intended for the transport of dangerous goods.

An ADR-equipped vehicle is a vehicle in which the chassis' electric devices are installed according to EEC ADR directive (annex B, appendix B.2), i.e. the chassis of the vehicle has an ADR facility.

- The electric cables, devices and connectors in the chassis are ADR-approved

1.7.2 Regulations

If modifications or additional installations are made to the electric systems of ADR-equipped vehicles, the bodywork manufacturer must follow all appropriate regulations.

https://truckmanualshub.com/

2 Pneumatic devices

2.1 Pneumatic system

2.1.1 General

The most important part of the pneumatic system of Sisu trucks is the pneumatic brake system. Since the brake system is one of the most important control systems of the vehicle, the mechanic must know exactly where and what can be connected when connecting additional devices to the pneumatic system. All connections to the pneumatic system must be made according to the instructions given in this manual.

2.1.2 Compressor

The compressed air for the system is generated by a compressor driven by the vehicle's engine.

Compressor output is dimensioned so that it is sufficient for the brake system and other actuator and control systems of the vehicle, as well as for normal bodywork actuator and control systems.

2.1.3 Air dryer

Nowadays the pneumatic systems of all vehicles are equipped with an air dryer. The air dryer removes moisture from the compressed air coming from the compressor and also includes a pressure regulator.

Antifreeze fluid in the braking system will destroy the air dryer.

If an air dryer is installed in the vehicle afterwards, any possible antifreeze pump must be removed.

Supplying compressed air from a pneumatic system with an antifreeze pump to a pneumatic system with an air dryer is also prohibited.

2.1.4 Warnings

Energy is stored in compressed air. Note the following warnings when working with pneumatic systems:

Make sure that the vehicle will not move (chocks in front of and behind the wheels). A change in the system pressure may cause the vehicle to move.

A change in the system pressure may cause a rapid change in the frame height of a vehicle with air suspension.

Always use jack stands when working under a vehicle with air suspension!

Never disconnect or connect a pipe or a hose under pressure. Never disconnect or connect a part or a pipe plug unless you are sure that the system or applicable part of the system has no pressure, or if you do not know what will happen if the part or plug is removed.

Appropriate tools and connectors must be used in all pneumatic connections.

Wear goggles. Never look at air nozzles or point them at anyone.

https://truckmanualshub.com/

2.1.5 Device locations

The most important pneumatic devices and their locations for the bodywork manufacturers are shown below. The exact location may vary according to vehicle model, wheelbase and other design.

Fig. 544/ 931025

Fig. 596/ 931026

Fig. 512/ 931027

Fig. 547 / 931028

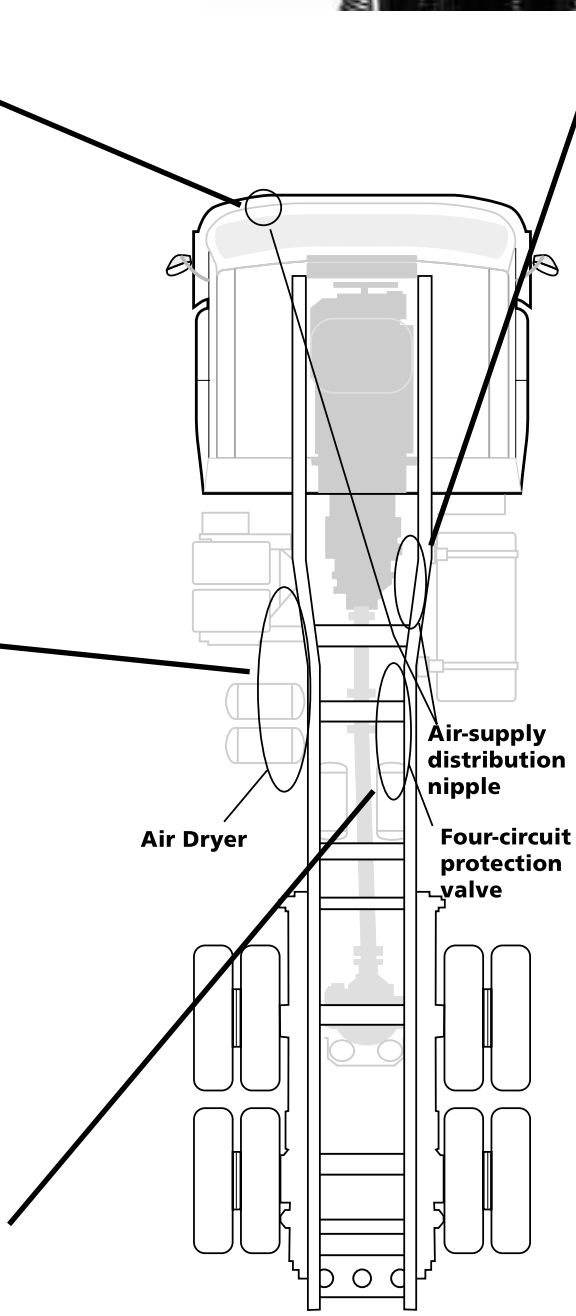

Fig. 510 / 931029en

https://truckmanualshub.com/

2.2 Pressurizing and depressurizing the pneumatic system

Fig. 435/931027

The pneumatic system can be depressurized or pressurized from an external pneumatic system or from a pneumatic system of another vehicle by using the valve on the air dryer.

The system must always be pressurized through the air dryer in order to prevent moisture entering the system.

Supplying compressed air from a pneumatic system with an antifreeze pump to a pneumatic system with an air dryer is prohibited.

2.3 Bodywork pneumatic connections

The pneumatic connections for additional devices are always connected to the additional device circuit number 24 of the four-circuit protection valve in the pneumatic system.

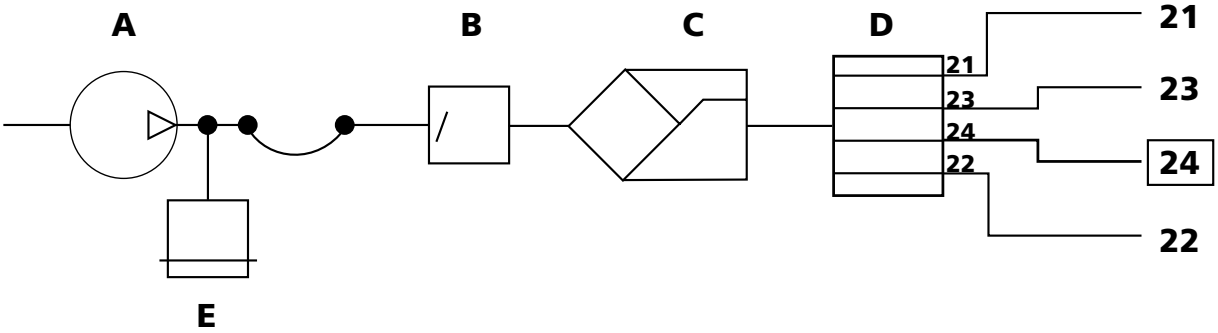

Fig. 931030

A = Compressor
B = Shut-off valve
C = Air dryer (Fig. 512 on page)
D = Four-circuit protection valve (Fig. 547 on page)
21 = To rear circuit
22 = To front circuit
23 = To parking brake circuit
24 = To additional device circuit

In Sisu trucks, two distribution nipples are connected to the additional device circuit (24). The bodywork manufacturer can use these connections for the required compressed air supply.

The distribution nipples are located under the hood and on the frame at the transmission (see Fig. 510, Fig. 544 and Fig. previous page)

E = Safety valve

https://truckmanualshub.com/

2.3.1 Compressed-air lead-through to cab

The required pneumatic pipes are routed to the cab through the connector panel located at the bulkhead.

The appropriate connectors and locking covers must be used for connector-panel lead-through connections.

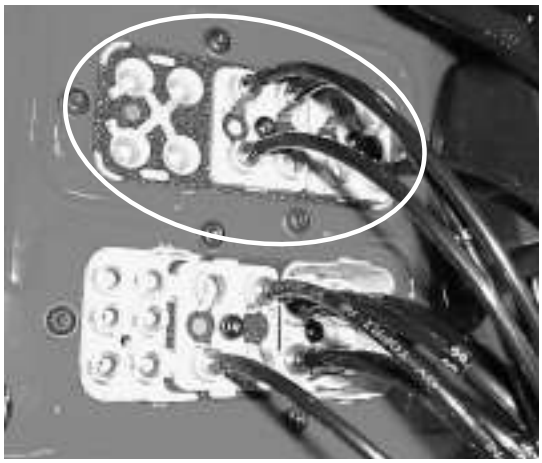

2.3.2 Connector parts

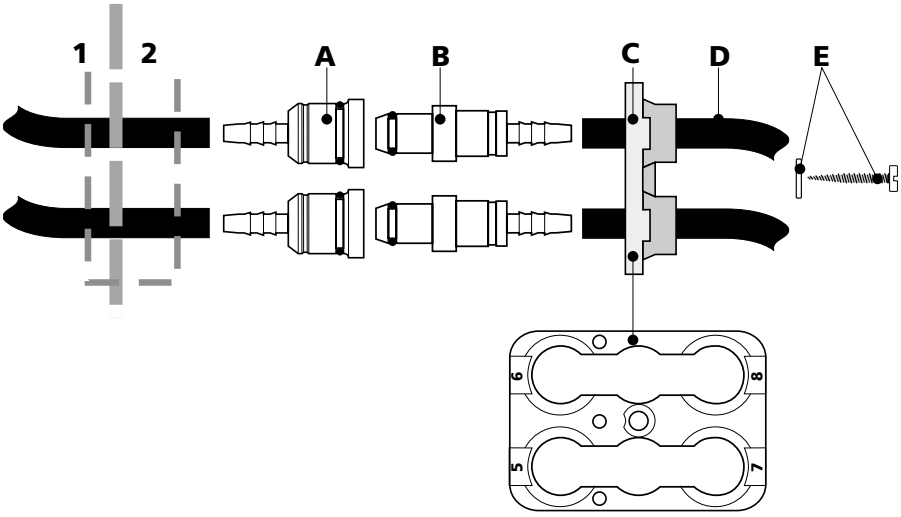

1 = cab interior
2 = cab exterior

	Order number:
	6 mm pipe
A = Connector,	5010260161
(SISU no.)	(91908-00006)
B = Connector	5010260160
(SISU no.)	(91908-01006)
C = Locking cover	5010260151 right
	5010260152 left

E = Screw and washer

2.3.2.1 Cab bulkhead connector diagram.

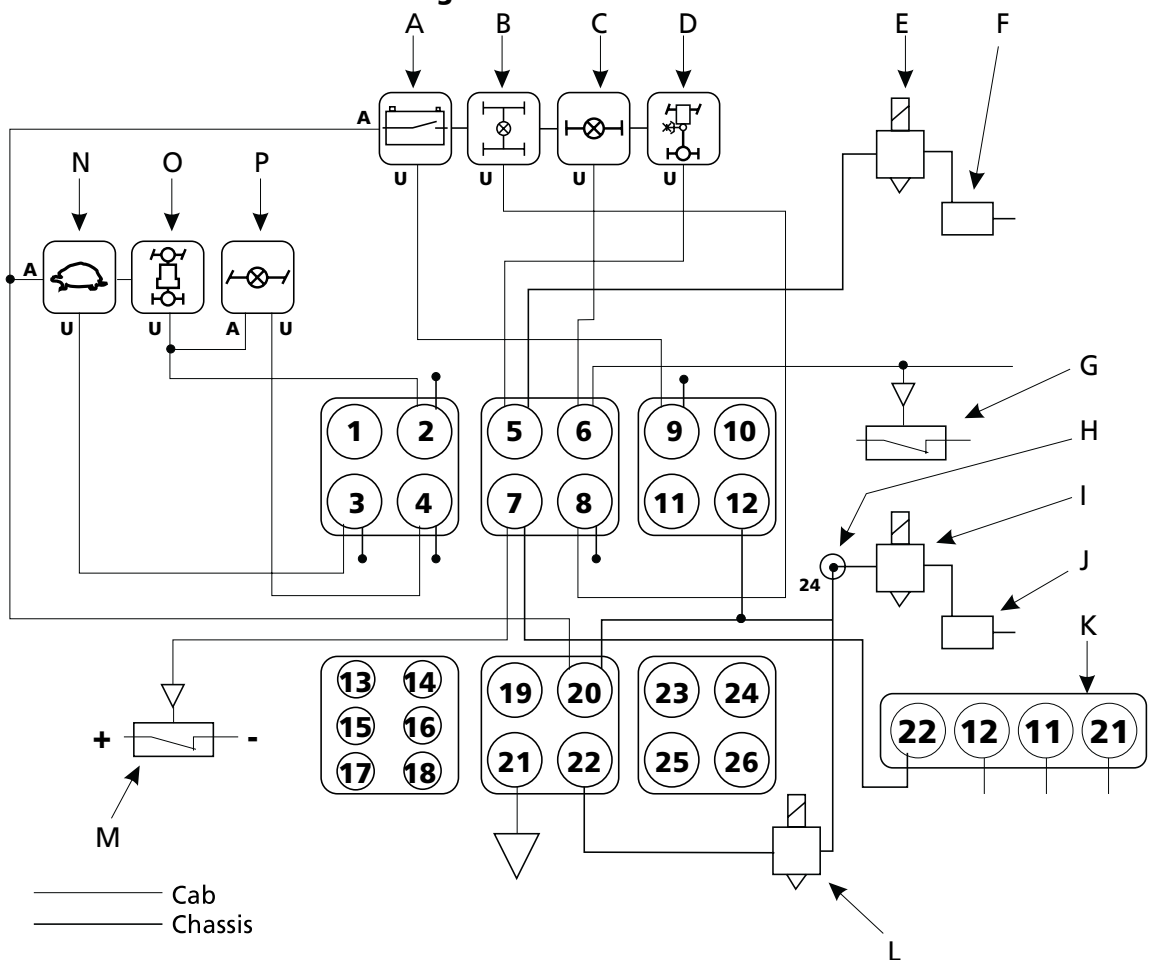

1= Empty
2= Front wheel drive engaging, Transfer case 6x1
3= Low range
4= Front axle. Diff. lock 6x1
5= PTO 6x1
6= Rear axle. Diff. lock 6x1
7= Pressure switch Celect 6x1
8= Rear axle/rear intermediate diff. lock 6x1
9= Main switch (ADR) 6x1
10= Empty
11= Empty
12= Supply 6x1
13= Transmission pattern 4x1
14= Transmission pattern 4x1
15= Transmission pattern 4x1
16= Transmission pattern 4x1
17= Transmission pattern 4x1
18= Transmission pattern 4x1
19= Empty
20= Supply 6x1
21= Outlet pipe 6x1
22= To horns 6x1
23= Parking brake, brake diagram 8x1
24= Parking brake, brake diagram 8x1
25= Parking brake, brake diagram 8x1
26= Parking brake, brake diagram 8x1

A R5010260070
B R5010260063
C R5010260061
D R5010260066
E T 171-601 0261 Transmission RTSO + rear PTO
F PTO
G R5010270576 + distr. Connector D 91905-27016
H 4-c.p.v
I T 171-601-0261
J Exhaust brake (Mack)
K Brake-pedal valve
L T 171-601-0261 Horns
M 186-330-0231 Pressure switch Celct.
N R5010260072
O R5010260073
P R5010260062 at the right end of the row

https://truckmanualshub.com/

2.3.3 Fitting the pipe to the connector

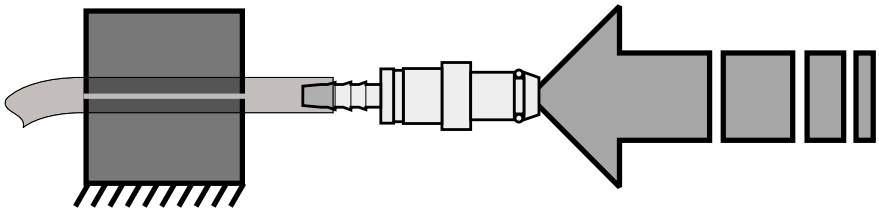

The pipe is fitted to the connector with a special tool that is used to insert the connector into the pipe.

Tool order number: 5000265132

If the tool is not available, the pipe can usually be fitted to the connector by applying a connector tool designed for passenger car brake pipes.

NOTE! Heating the pipe during fitting is strictly prohibited.

The pipe is attached to the connector by a tight press-fit. If the pipe is softened by heating, the fitting will not be tight enough and the pipe will come off later.

https://truckmanualshub.com/

Record

https://truckmanualshub.com/

Lights and equipment, general

Fig. 964013

The authorities have aimed at optimizing road traffic safety by legislation and regulations regarding vehicle equipment, for example lights.

In addition, internationalization has increased the number of equipment regulations given by the authorities.

One of the objectives of the Economic Commission for Europe (ECE) has been to draw up uniform European regulations and approval procedures for vehicle parts and equipment. In addition, EC directives have become a complement to these regulations. By standardizing the regulations, technical barriers to trade have been removed. A product approved in any EC Country is marketable freely also in other EC Countries or countries that have ratified the ECE Agreement.

The regulations for lights and retro reflectors provide that the lights and their placing must comply with EC directives or E regulations. Hence, if the directives are amended, the national regulations will be amended as well.

Approval procedures for vehicles and their parts, systems and components

Type-approval system:

Type-approval is carried out by an authority. Application for type-approval can be submitted by the manufacturer of the vehicle, equipment or part, or by a manufacturer's authorized representative.

E-approval refers to approval according to the regulation annexed to the agreement concerning the adoption of uniform conditions of approval and reciprocal recognition of approval for motor vehicle equipment and parts, done at Geneva on 20 March 1958.

e-approval refers to approval of the vehicle's structure, equipment or part according to a regulation or directive issued by the Council of the European Union or Commission of the European Communities, or co-operatively by the European Parliament and Council of the European Union.

Type-approval:

Type approval is carried out in order to classify a new vehicle model and to check that the structure, equipment, dimensions and other characteristics of the model are in compliance with the regulations.

Only the vehicle's manufacturer or his authorized representative can submit the vehicle for type-approval.

National approvals:

The authorities conduct national approvals for some parts and equipment. Approval can be applied by the manufacturer of the part or equipment, or his representative.

Familiarity with EU directives is also required if a vehicle is modified or equipped relating to lights since national regulations do not necessarily include anymore, for example, exact positioning dimensions of lights.

In this section we discuss some regulations (EC regulations and Finnish national regulations) relating to lighting devices and selected equipment of trucks that are in force at the moment. Since the regulations given by the authorities are amended from time to time and may include national derogations, the bodywork manufacturer must make sure that he has the regulations in force.

Since mandatory lighting devices are installed by the vehicle manufacturer, the compliance of these devices is inspected in the type-approval. Since the bodywork manufacturer may be required to install auxiliary lighting devices according to the customer's needs, he must be familiar with the regulations relating to lighting devices.

Some of the equipment is usually installed by the bodywork manufacturer. For example, regulations relating to rear underrun protection devices and side guards and their installation must be followed.

https://truckmanualshub.com/

1 Lamps and retro reflectors (EC regulations)

Only mandatory or optional lamps may be installed on a vehicle.

1.1 Following lamps and retro reflectors are mandatory on vehicles

- Main-beam and dipped-beam headlamps.
- Direction indicator lamps with hazard warning signal.
- Stop lamps and a third stop lamp on vehicles first used on or after 1 October 2000, or passenger cars that are EU type-approved after 1 October 1998.
- Rear registration plate lamp.
- Front and rear position lamps.
- Red retro reflectors at rear.
- Side retro reflectors or side-marker lamps on vehicles the length of which exceeds 6 m. However, side-marker lamps are not mandatory on tractors for semi-trailers.
- Rear fog lamp or lamps.
- Reversing lamp or lamps.
- End-outline marker lamps on vehicles exceeding 2.1 m in width. However, end-outline marker lamps emitting light in rearward direction are not mandatory on tractors for semi-trailers.
- Flashing hazard beacons and work lamps on certain vehicles. The color, position and usage of flashing hazard beacons and work lamps must comply with national regulations.
- Amber retro reflectors apparent from side for marking a structure or equipment narrower than other structures protruding outside the vehicle in front of or over 1 meter outside the vehicle at rear.
- Other possible special lamps due to the operation of the vehicle.

1.2 In addition to above, following lamps and retro reflectors are optional

- Additional main-beam headlamps.
- Additional, high-mounted dipped-beam headlamps, main-beam headlamps, direction indicator lamps and front position lamps on snow plowing vehicles.
- Front fog lamps.
- Parking lamps if the length of the vehicle is not more than 6 meters and width is not more than 2 meters.
- Side retro reflectors on vehicles in category M1 and other vehicles if the length of the vehicle is not more than 6 meters.
- Front retro reflectors.
- End-outline marker lamps if the width of the vehicle is not less than 1.8 meters and not more than 2.1 meters, and rear end-outline marker lamps on cabs of category N vehicles.
- Third stop lamp mounted up in the middle.
- Daytime running lamps.
- Side-marker lamps and side retro reflectors if the length of the vehicle is not more than 6 meters.
- Flashing hazard beacons and work lamps on certain vehicles. The color, position and usage of flashing hazard beacons and work lamps must comply with national regulations.
- Necessary work and additional lamps for loading, unloading and other operations on vehicles in category N.
- Lamps illuminating the plate indicating the name of the transport company, transport company's client, the owner of the vehicle or the end locations of the route on vehicles in categories N2 and N3.
- Separately defined lighting devices and retro reflectors on vehicles for oversized transport duties.

Note! Installing other lamps or retro reflectors than stated above is strictly prohibited. For example, decorative illuminating using low-wattage lamps is <u>not</u> allowed!

Familiarize yourself with the possible national derogations to the EC regulations

https://truckmanualshub.com/

1.3 Installing and connecting of lamps

- The color, type, number, position, visibility, alignment, connection, operational tell-tales of the lamps and retro reflectors described in this manual must comply with the requirements of Council Directive 76/756/EEC on the approximation of the laws of the Member States relating to the installation of lighting and light-signaling devices on motor vehicles and their trailers, as amended with directive 84/8/EEC, or with requirements of E regulation 48, and/or with possible national derogations and regulations.
- On vehicles first used on or after 1 October 1994, the color, type, number, position, visibility, alignment, connection and operational tell-tales of the lamps and retro reflectors stated above must comply with the requirements of the directive stated above, as amended with directives 91/663/EEC and 97/28/EC, or with national regulations. The directives and regulations stated above are also applied to the color, position, visibility and alignment of other lamps and retro reflectors.
- If no lamps and retro reflectors complying with the EC directive or E regulation are available for the vehicle model, the mandatory lamps and retro reflectors, except main-beam and dipped-beam headlamps, that comply with standard FMVSS 108 are regarded as equivalent to the lamps and retro reflectors stated above. DOT approved main-beam and dipped-beam headlamps with code 9004, type HB1; code 9005, type HB3 or code 9006, type HB4 bulbs are regarded as equivalent to the mentioned lamps also when lamps and retro reflectors complying with the EC directive or E regulation are available for the vehicle model. This applies only to vehicles first used before 1998. After 1998 exceptions to the European legislation are accepted only for vehicles that are, for example, imported along with immigration.
- The installation height of additional dipped-beam headlamps, main-beam headlamps, direction indicator lamps and front position lamps on snow plowing vehicles may be as required by the conditions. Additional dipped-beam headlamps must be below the lower edge of the windscreen. Additional dipped-beam headlamps must be aligned so that the light does not cause undue glare to oncoming drivers and other road-users.
  Additional dipped-beam headlamp circuit must be equipped with a switch located in such a position that switching between original and additional dipped-beam headlamps is not possible during driving.

1.4 Connections

- The electrical connections must be such that the front and rear position lamps, the end-outline marker lamps, where fitted, the side-marker lamps, where fitted, and the rear registration plate lamp can only be switched on and off simultaneously. This requirement shall not apply when using front and rear position lamps, as well as side-marker lamps combined or reciprocally incorporated with said lamps, as parking lamps.
- In addition, the electrical connections must be such that the main-beam and dipped-beam headlamps and the fog lamps cannot be switched on unless the lamps referred to in the previous paragraph are also switched on. This requirement shall not apply, however, to connections for enabling luminous warning signals with main-beam or dipped-beam headlamps.
- With the exception of the main-beam headlamp, the dipped-beam headlamp and the front fog lamp, the concealment of lamps when not in use is prohibited. It must be possible to move the concealable lamps into the position of use and to switch them on by means of a single control.

☛ **Before making any electric connections to Sisu trucks, read section 09 Electric and pneumatic equipment in the Bodywork manual!**

https://truckmanualshub.com/

2 General requirements for lamps

Headlamps must emit white light, but on vehicles first used before 1 October 1994, selective yellow headlamps are allowed.

Dipped-beam headlamps must be designed for left or right-hand traffic according to the direction of traffic. All lamps and retro reflectors shall be e or E approved for the intended use as motor vehicle lamps. Approved lamp may not be replaced with unapproved lamp even if e or E approval is not required for some lamp on the vehicle in question. The bulb used in the lamp must be designed and approved for the lamp.

E approved lamps have the letter **E** inside a circle and a number indicating the country which has granted approval. Correspondingly, e approved lamps have the letter **e** inside a rectangle and a number indicating the country which has granted approval.

e = approval according to EU directives.

E = approval according to the Geneva Agreement (ECE approval).

Lamps constituting a pair shall be symmetrical to one another and be fitted symmetrically if allowed by the external shape of the vehicle. The lamps shall satisfy the same colorimetric characteristic and have substantially identical photometric characteristics.

Any assembly of lamps having the same function is regarded to be a single lamp if the projections of the illuminating surfaces of the lamps on a given transverse plane occupy not less than 60% of the smallest rectangle circumscribing the projections of the said illuminating surfaces. These lamps can be, but they need not be identical. This possible combination does not apply to main-beam headlamps, dipped-beam headlamps, front fog lamps and third stop lamps (see derogation later).

In addition, the distance between main-beam headlamps constituting a pair, like other lamps positioned on different sides of the vehicle, must be high enough so that they cannot be considered as a single lamp according to this regulation. Each lighting unit of the doubled lamp shall be approved as a type D lamp.

2.1 E marking on lamps

Fig. 964012

02 HC/R **where**

02 = Complies with the regulation revision 2,
H = Halogen lamp
C = Dipped beam on the lamp
/ = Not simultaneously usable
R = Main beam on the lamp

where

E = ECE approved

1 = country granting the approval (1 = Germany, 2 = France, 3 = Italy, 4 = The Netherlands, 5 = Sweden, ...11 = United Kingdom..., 17 = Finland)

20 = Reference value, indicates the effectiveness of the main beam.

where:

02 = Complies with the regulation revision 2

A = Front position lamp

The five-digit number indicates the lamp's approval number.

https://truckmanualshub.com/

2.1.1 E marking, front lamps

A = Front position lamp, B = Fog lamp, C = Dipped-beam lamp, R = Main-beam lamp, CR = Main-beam and dipped-beam lamp, C/R = Main-beam or dipped-beam lamp, HC = Halogen dipped-beam lamp, HR = Halogen main-beam lamp, HCR= Halogen dipped-beam and main-beam lamp, HC/R=Halogen dipped-beam or main-beam lamp, DC = Xenon dipped-beam lamp, DR = Xenon main-beam lamp, DC/R = Bi-Xenon
/ = Not simultaneously usable.

2.1.2 E marking, rear lamps

A = Front position lamp, AR = Reversing lamp, F = Rear fog lamp, 1, 1a, 1b = Front direction indicator lamp (different technical specifications), 2a = Rear direction indicator lamp, 5 = Side direction indicator lamp (vehicles up to 6 meters long), 6 = Side direction indicator lamp (vehicles exceeding 6 m in length), SM1 = Side-marker lamp (all vehicles), SM2 = Side-marker lamp (vehicles up to 6 meters long), IA = Rear retro reflector, R = Rear position lamp, S1= Stop lamp.

2.2 Reference values in use

7,5	10	12,5	17,5	20	25
27,5	30	37,5	40	45	50
Unmarked halogen lamp: 20					
Unmarked filament lamp: 10					

The aggregate maximum intensity of the main-beam headlamps which can be switched on simultaneously shall not exceed 225,000 cd, which corresponds to a reference value of 75. However, on vehicles first used before 1 January 1980, the maximum allowed total reference value is 100. Reference value is marked adjacent to the E mark.

2.3 Color of the light emitted forward/rearward

No red light shall be emitted from a lamp in a forward direction and no white light, other than from the reversing lamp, shall be emitted from a lamp in a rearward direction. This requirement is considered to have been met if there is no direct visibility of the light-emitting surface of a red lamp viewed by an observer situated 25 m in front of the vehicle within a zone limited by transverse planes situated 15 degrees outward from the vehicle's side. Equivalent verification is applied for the visibility of white light towards the rear.

In addition, no reflector shall reflect red light in a forward direction or white light in a rearward direction, unless specified separately (for example number plates).

2.4 Visibility areas of lamps

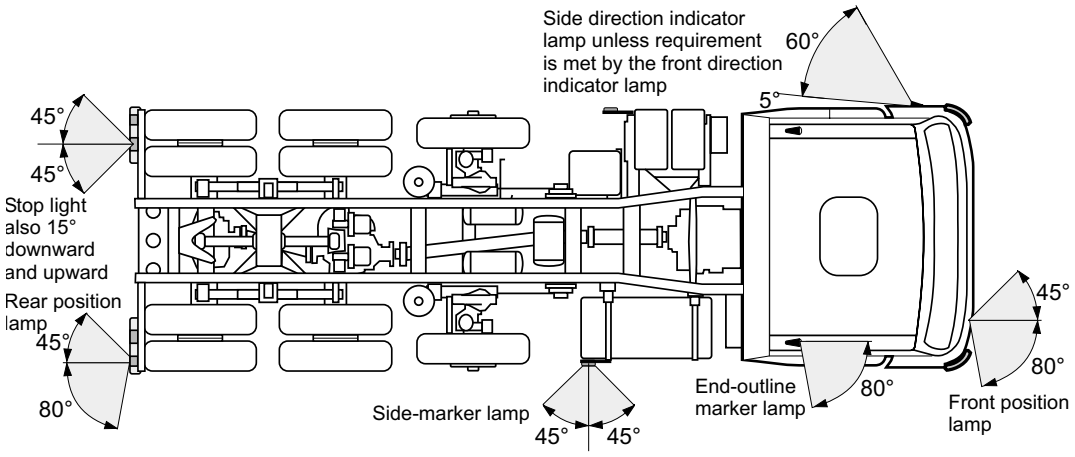

Visibility area requirements have been set for lamps. For example, if the front direction indicator lamp does not meet the visibility angle requirements of 5° to 60° backwards, a side direction indicator lamp meeting the requirement must be installed.

Bodywork must not hide or obstruct required visibility areas for lamps

https://truckmanualshub.com/

3 Lamps and retro reflectors for vehicles, front

A) 600 mm or more
B) 400 mm or less
C) Front fog lamp's upper edge below headlamp's upper edge.
D) 250 mm or more, front fog lamp or daytime running lamp not higher than the dipped-beam headlamp
E) 500–1200 mm
F) Additional dipped-beam headlamps (on snow plowing vehicles) at or below the lower edge of the windscreen
G) End-outline marker lamps above the windscreen at front
H) Distance between additional main-beam headlamps not restricted

Note! *Special dimensions (in parentheses) mentioned in the text apply only to vehicles on which standard dimensions cannot be applied due to structural reasons (e.g. vehicle's external shape).*
Note! *Following regulations do not include items relating to smaller than category N3 trucks.*

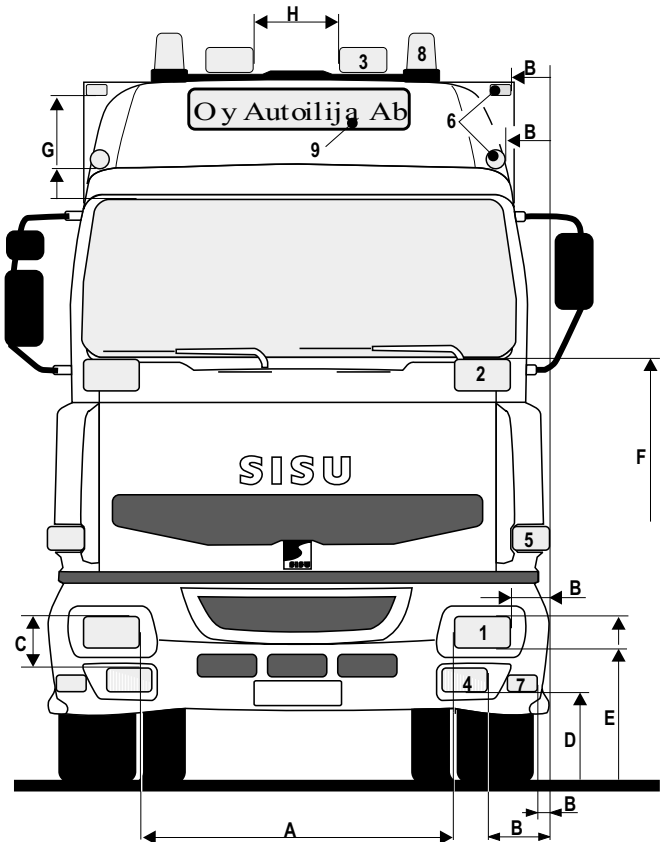

3.1 Dipped-beam and main-beam headlamps (1), mandatory

The electrical connections must be such that the front and rear position lamps, the end-outline marker lamps, the side-marker lamps and the rear registration plate lamps are lit up simultaneously with headlamps (dipped/main-beam headlamps).

3.1.1 Dipped-beam headlamps

Dipped-beam headlamp is used to illuminate the road ahead of the vehicle without causing undue glare or discomfort to oncoming drivers and other road-users.

- Two dipped-beam headlamps mandatory.
- Dipped-beam headlamp's distance from the extreme outer edge of the vehicle must not be more than 400 mm. The inner edges of the illuminating surfaces must not be less than 600 mm apart.
- Doubling of dipped-beam headlamps is prohibited on vehicles first used on or after 1 January 1980.
- The height of the light-emitting surface must not be less than 500 mm (measured from the lowest point) or more than 1200 mm above the ground (measured from the highest point of the light-emitting surface).
- The dipped beams may remain switched on at the same time as the main beams.
- The apparent surface of the dipped-beam headlamp must be vertically visible at a 15° angle above and at a 10° angle below the horizontal level, and horizontally at a 45° angle outwards and at a 10° angle inwards, in relation to the axis of reference specified by the manufacturer of the lamp. Circuit-closed tell-tale is optional for dipped-beam headlamps.
- Headlamp alignment must be carried out according to the instructions issued by the vehicle manufacturer.
- In addition, a device enabling adjusting the relative position of the headlamp and the vehicle according to the vehicle's loading conditions is mandatory on vehicles first used on or after 14 June 1995 (does not apply if the chassis of the vehicle is tested to be sufficiently rigid). Initial inclination with one person in the driver's seat is normally 1 to 1.5% downwards.

https://truckmanualshub.com/

3.1.2 Main-beam headlamps (1)

Main-beam headlamp is used to illuminate the road over a long distance ahead of the vehicle.

Main-beam headlamps may be switched on either simultaneously or in pairs but for changing over from the main to the dipped beam, all main-beam headlamps must be switched off simultaneously.

Circuit-closed tell-tale is mandatory for main-beam headlamps. Main-beam headlamps must be aligned towards the front in such a way that the light emitted does not cause discomfort to the driver either directly or indirectly through any reflecting surfaces.

Two or four main-beam headlamps are allowed (additional main-beam headlamps).

3.2 Front position lamps (1), mandatory

Front position lamp means the lamp used to indicate the presence and the width of the vehicle when viewed from the front. Usually incorporated with main-beam/dipped-beam headlamp.

- Two front position lamps mandatory.
- Lamp's distance from the extreme outer edge of the vehicle must not be more than 400 mm.
- The clearance between the respective inner edges of the two illuminating surfaces must not be less than 600 mm.
- The height of front position lamp must not be less than 350 mm and not more than 1500 mm above the ground. However, if the shape of the bodywork makes it impossible to keep within 1500 mm, the maximum height is 2100 mm above the ground
- Front position lamp must emit white light and be aligned towards the front.
- Circuit-closed tell-tale is mandatory but not required if the instrument panel lighting can only be turned on simultaneously with the front position lamps.
- Front position lamp must be horizontally visible at a 45° angle inwards and at an 80°angle outwards.

3.3 Additional lamps on snow plowing vehicles (2), if required

If required, the following additional lamps are allowed on snow plowing vehicles

- Additional dipped-beam headlamps, main-beam headlamps, direction indicator lamps and front position lamps.
- Installation height can be selected as required by the conditions; the dipped-beam headlamps must be below the lower edge of the windscreen.
- A switch must be located in such a position that switching between original and additional dipped-beam headlamps is not possible during driving.

3.4 Additional main-beam headlamps (3), optional

- Two lamps. Additional main-beam headlamps may be installed if compatible with the requirements relating to symmetry.
- May not be installed in such a position that the outer edges of the additional main-beam headlamps are closer to the extreme outer edge of the vehicle than the outer edges of the illuminating surface of the dipped-beam headlamps.
- Must be fitted longitudinally in such a way that the light emitted does not cause discomfort to the driver either directly or indirectly through the reflecting surfaces of the vehicle.
- The maximum number of main-beam headlamps on a vehicle is 6 lamps if the vehicle is originally fitted with 4 main-beam headlamps.
- The aggregate maximum intensity of the headlamp beams which can be switched on simultaneously shall not exceed **225 000** cd; the total sum of individual reference values indicated on the headlamps switched on simultaneously shall not exceed **75**
- Additional main-beam headlamps may be installed on roof only if they can be positioned in front of the front axle.

Where a vehicle is fitted with four concealable main-beam headlamps, the installation of two additional main-beam headlamps shall only be authorized for the purpose of light signaling in daylight. Doubling of both main-beam headlamps and additional main-beam headlamps is allowed on vehicles first used

https://truckmanualshub.com/

before 1 January 1980. In such a case, main-beam headlamps shall not be fitted on roof.

The illuminating surface of the main-beam headlamp must be visible at a 5° angle towards all directions in relation to the axis of reference.

3.5 Front fog lamps (4), optional

Front fog lamp means the lamp used to improve the illumination of the road in case of fog, snowfall or rainstorms. Front fog lamps are optional on motor vehicles.

- If fitted, two front fog lamps are mandatory (may not be doubled) and they must emit white light.
- Distance from the extreme outer edge of the vehicle must not be more than 400 mm.
- Lamps must not be less than 250 mm above the ground and no point on the illuminating surface must be higher than the highest point on the illuminating surface of the dipped-beam headlamp.
- Lamps must be directed forwards without causing undue glare or discomfort to oncoming drivers and other road users.
- The apparent surface of the front fog lamp must be vertically visible at a 5° angle above and below the horizontal level, and horizontally at a 45° angle outwards and a 10° angle inwards in relation to the lamp's axis of reference. Circuit-closed tell-tale is optional but recommended.
- Approval: e-76/762 or E-19/02

3.6 Direction indicator lamps (5), mandatory

- Front and rear, one on each side.
- Side direction indicator lamps on both sides of the vehicle unless the front direction indicator lamp meets the visibility angle requirement of 5 to 60 degrees backwards.
- Direction indicator lamps must emit amber light.
- The height of the front and rear direction indicator lamps: 350 to 1500 mm above the ground (max. height 2100 mm in special cases).
- Distance from the extreme outer edge of the vehicle must not be more than 400 mm.

3.6.1 Hazard warning signal, mandatory

Hazard warning signal is mandatory on vehicles first used on or after 1 January 1989. The signal shall be operated by means of a separate control enabling hazard warning signal activation independently of the other lamps and position of the device which starts and stops the engine. Circuit-closed tell-tale is mandatory.

3.7 End-outline marker lamps (6), mandatory

End-outline marker lamp means the lamp fitted to the extreme outer edge as close as possible to the top of the vehicle and intended clearly to indicate the vehicle's overall width. These lamps are optional on vehicles exceeding 1.80 m in width. Width requirement does not apply to vehicles fitted with end-outline marker lamps before 1 January 1993.

End-outline marker lamps are mandatory on vehicles exceeding 2.10 m in width and first used on or after 1 January 1993.

- Two end-outline marker lamps emitting white light visible from the front and two lamps emitting red light visible from the rear. Since the position on the longitudinal axis is free, the lamp visible from the front and the lamp visible from the rear, on the same side of the vehicle, may be combined in one device.
- The point on the illuminating surface which is farthest from the vehicle's median longitudinal plane must not be more than 400 mm from the extreme outer edge of the vehicle.
- The highest point of the illuminating surface of the end-outline marker must not be lower than the upper edge of the transparent zone of the windscreen. This height requirement does not apply to end-outline markers fitted before 1 October 1994.
- At rear, the end-outline marker lamps must be positioned as high as possible and located in such a position that the vertical distance between the end-outline marker lamp and rear position lamp is not less than 200 mm.

https://truckmanualshub.com/

- Note! Using lamps integrated into additional main-beam headlamps as end-outline marker lamps is allowed only if they are approved for the intended purpose (E or e approved) and fitted compatible with the requirements relating to end-outline marker lamps.

End-outline marker lamp must be horizontally visible at an 80° angle outwards, and vertically at a 5°angle above and at a 20°angle below the horizontal level.

3.8 Daytime running lamps (7), optional

Daytime running lamp means a lamp facing in a forward direction used instead of dipped-beam headlamps to make the vehicle more easily visible when driving during daytime.

- Two lamps fitted at front of the vehicle in forward direction. The electrical connections must be such that the daytime running lamps are lit only when rear position lamps are on and are switched off when headlamps are switched on, except when headlamps are used for the purpose of light signaling.
- Daytime running lamp must emit white diffused light that does not cause discomfort to the driver or oncoming drivers and other road users either directly or indirectly by reflection.
- Daytime running lamps emitting yellow light are allowed on vehicles first used before 1 October 1994.
- Distance from the extreme outer edge of the vehicle must not be more than 400 mm.
- Height above the ground must not be less than 250 mm and not above the dipped-beam headlamps (max. height 1500 mm)
- Distance between daytime running lamps must not be less than 600 mm. This distance may be reduced to 400 mm where the overall width of the vehicle is less than 1300 mm.
- Circuit-closed tell-tale is optional.
- Daytime running lamp must be horizontally visible at a 20° angle outwards and inwards, and vertically at a 10° angle above and below the horizontal level.

3.9 Flashing hazard beacon (8), if required

Depending on national regulations, flashing hazard beacon can be mandatory, for example, on towing trucks and road maintenance vehicles.

Color, position, number, required approval, required circuit-closed tell-tales and usage of flashing hazard beacons must comply with national regulations.

3.10 Lamp illuminating company's name plate or route plate (9), optional

Transport company's name plate or route plate may be illuminated.

- Light must not be directed outside the plate, i.e. the light-emitting surface of the plate lamp must not be visible directly from frontward or rearward direction or from the side. However, plate may be illuminated from inside.
- Plate lamp or the plate if illuminated from inside must emit white or light yellow light without flashing.
- Maximum total wattage of lamps is 18 W.

3.11 Front retro reflectors, optional

Two front retro reflectors may be fitted.

- Reflectors must be non-triangular.
- Front retro reflectors must be white, i.e. reflect the light emanating from a light source without changing the color of the light. Additional retro reflecting devices and materials are permitted provided they do not impair the effectiveness of the mandatory lighting and light signaling devices.
- Distance from the extreme outer edge of the vehicle must not be more than 400 mm. The distance between the inner edges of the retro reflectors shall not be less than 600 mm. This distance may be reduced to 400 mm if the overall width of the vehicle is less than 1300 mm.
- The height above the ground must not be less than 350 mm and not more than 900 mm, or 1500 mm if the structure of the vehicle makes it impossible to keep within 900 mm.
- Front retro reflector must be horizontally visible at a 30° angle inwards and outwards, and vertically at a 15° angle above and below the horizontal level. The vertical angle below the horizontal may be reduced to 5° in the case of a retro reflector less than 750 mm above the ground.

https://truckmanualshub.com/

4 Lamps and retro reflectors for vehicles, side

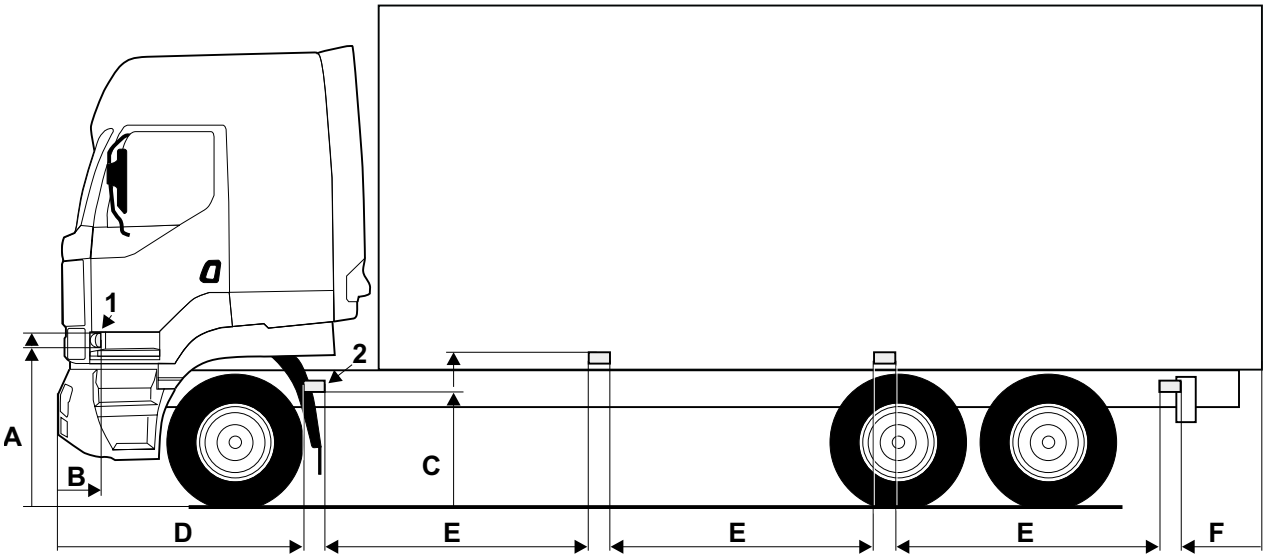

Fig. 964004

Special dimensions in parentheses apply only to vehicles on which standard lamp/retro reflector position requirements cannot be applied due to structural reasons (e.g. vehicle's external shape).

A = 500–1500 mm (–2300 mm)
B = 0–1800 mm (–2500 mm)
C = 350–1500 mm (–2100 mm)
D = 0–3000 mm
E = 3000 mm or less
F = 0–1000 mm

4.1 Side direction indicator lamps (1), mandatory

Category 6 side direction indicator lamp is mandatory unless the front direction indicator lamp meets the visibility angle requirement of 5 to 60° backwards.

- Amber
- 1 lamp/side

4.2 Side-marker lamps (2), mandatory

Side-marker lamps are mandatory on vehicles the length of which exceeds 6 m (does not apply to tractors for semi-trailers).

- All side-marker lamps must be installed at the same height, if allowed by the structure of the vehicle.
- Amber (may be red if combined with the rear position lamp).
- Maximum wattage 10 W.
- Visibility angle requirement: 45 degrees to the front and to the rear.

4.3 Side retro reflectors (2), mandatory

Side retro reflectors are mandatory on vehicles the length of which exceeds 6 m.

- Amber
- Reflectors must be non-triangular.
- Visibility angle requirement: 45 degrees to the front and to the rear.
- Installation requirements equivalent to side-marker lamps. Side retro reflectors are usually combined with side-marker lamps.

https://truckmanualshub.com/

5 Lamps and retro reflectors for vehicles, rear

A = 350–900 mm
B = 350–1500 mm (–2100 mm)
C = max. 400 mm, rear position lamp, direction indicator lamp and retro reflector
D = min. 200 mm
E = 250–1000 mm
F = min. 600 mm
G = 250–1200 mm

Special dimensions in parentheses apply only to vehicles on which standard lamp/retro reflector position requirements cannot be applied due to structural reasons (e.g. vehicle's external shape).

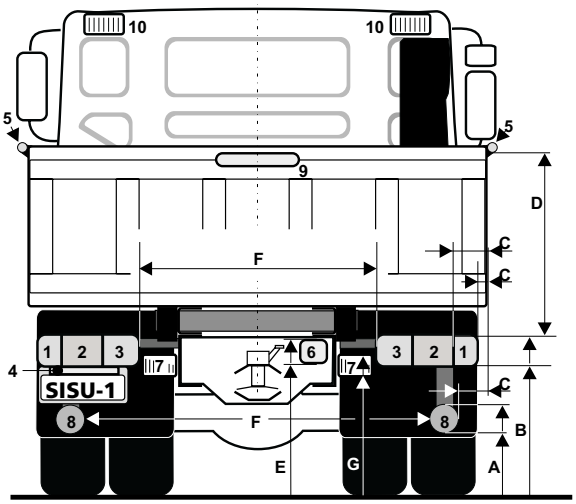

Fig. 964007

5.1 Direction indicator lamp (1), mandatory

Requirements regarding front direction indicator lamp are applied also to rear direction indicator lamp.

5.2 Rear position lamp (2), mandatory

Rear position lamp means the lamp used to indicate the presence and the width of the vehicle when viewed from the rear.

- Two rear position lamps fitted at rear of the vehicle in backward direction and emitting red light are mandatory. Distance from the extreme outer edge of the vehicle must not be more than 400 mm.
- Distance between rear position lamps must not be less than 600 mm.
- The height of rear position lamp must not be less than 350 mm and not more than 1500 mm above the ground. However, if the shape of the bodywork makes it impossible to keep within 1500 mm, the maximum height is 2100 mm above the ground.
- Rear position lamp must be horizontally visible at a 45° angle inwards and at an 80° angle outwards, and vertically at 15° above and below the horizontal level. The vertical angle below the horizontal may be reduced to 5° in the case of lamps less than 750 mm above the ground.

5.3 Stop lamp (3), mandatory

Stop lamp means the lamp used to indicate to other road-users to the rear of the vehicle that the driver is applying the service brake.

- Two stop lamps are mandatory.
- Stop lamp must emit red light.
- Stop lamps must be aligned towards the rear of the vehicle. Stop lamps must light up when the service brake is applied, except if the device which starts and/or stops the engine is in a position which makes it impossible for the engine to operate. Operational tell-tale indicating malfunction of the stop lamps is optional.
- The height of stop lamp must not be less than 350 mm and not more than 1500 mm above the ground, or not more than 2100 mm if the shape of bodywork makes it impossible to keep within 1500 mm. Distance between the stop lamps must not be less than 600 mm. This distance may be reduced to 400 mm if the overall width of the vehicle is less than 1300 mm.
- Stop lamp must be horizontally visible at a 45° angle inwards and outwards, and vertically at a 15° angle above and below the horizontal level. The vertical angle below the horizontal may be reduced to 5° in the case of lamps less than 750 mm above the ground

5.4 Rear registration plate lamp (4), mandatory

Rear registration plate lamp is used to illuminate the rear registration plate. Lamp must emit white light not visible from the rear. Number and position must be such that the device is capable of illuminating the space for the registration plate.

https://truckmanualshub.com/

5.5 End-outline marker lamps (5), mandatory

End-outline marker lamp means the lamp fitted to the extreme outer edge as close as possible to the top of the vehicle and intended clearly to indicate the vehicle's overall width. These lamps are optional on vehicles exceeding 1.80 m in width. Width requirement does not apply to vehicles fitted with end-outline marker lamps before 1 January 1993.

End-outline marker lamps are mandatory on vehicles exceeding 2.10 m in width and first used on or after 1 January 1993.

- Two end-outline marker lamps emitting red light visible from the rear. Since the position on the longitudinal axis is free, the lamp visible from the front and the lamp visible from the rear, on the same side of the vehicle, may be combined in one device.
- The point on the illuminating surface which is farthest from the vehicle's median longitudinal plane must not be more than 400 mm from the extreme outer edge of the vehicle.
- At rear, the end-outline marker lamps must be positioned as high as possible and located in such a position that the vertical distance between the end-outline marker lamp and rear position lamp is not less than 200 mm.

End-outline marker lamp must be horizontally visible at an 80° angle outwards, and vertically at a 5°angle above and at a 20°angle below the horizontal level.

5.6 Rear fog lamp (6), mandatory

Rear fog lamp means the lamp used to render the vehicle more readily visible from the rear in case of fog, snowfall or rainstorms.

- At least one rear fog lamp emitting red light is mandatory on vehicles first used on or after 1 January 1993; the maximum number of lamps is two. Circuit-closed tell-tale is mandatory.
- The height of the rear fog lamp must be between 250 and 1 000 mm above the ground. If there is only one rear fog lamp, it must be on the left side of the median longitudinal plane of the vehicle in countries with right-hand driving and on the right side in countries with left-hand driving.
- If two lamps are fitted, they must be positioned symmetrically, causing a minimum distance requirement between the lamps so that they cannot be regarded as one lamp positioned at the median longitudinal plane of the vehicle.

The distance between the rear fog lamp and each stop lamp must be greater than 100 mm. Rear fog lamp must be aligned towards the rear of the vehicle and must be horizontally visible at a 25° angle outwards and inwards, and vertically at a 5° angle above and below the horizontal level.

5.7 Reversing lamp (7), mandatory

Reversing lamp means the lamp used to illuminate the road to the rear of the vehicle and to warn other road-users that the vehicle is reversing or about to reverse.

- One or two reversing lamps are mandatory on vehicles first used on or after 1 January 1984.
- Reversing lamp must be positioned at rear of the vehicle and the height of the reversing lamp must not be less than 250 mm and not more than 1 200 mm above the ground, no position specifications in relation to width. Reversing lamp must be vertically visible at a 15° angle above and at a 5° angle below the horizontal level. If only one lamp is fitted, it must be horizontally visible at a 45° angle to the right and the left. If two lamps are fitted, the lamp must be horizontally visible at a 45° angle outwards and at a 30° angle inwards.
- Reversing lamp may only light up if the reverse gear is engaged and if the device which controls the starting or stopping of the engine is in such a position that operation of the engine is possible. Circuit-closed tell-tale is optional.

5.8 Rear retro reflectors (8), mandatory

Rear retro reflector is mandatory on motor vehicles and it means a device used to indicate the presence of a vehicle by the reflection of light emanating from a light source not connected to the vehicle. Rear retro reflector must be red and two reflectors are required.

- Rear retro reflector on motor vehicle must be non-triangular.

https://truckmanualshub.com/

- Distance from the extreme outer edge of the vehicle must not be more than 400 mm. The distance between two reflectors must not be less than 600 mm.

Rear retro reflector must be aligned towards the rear of the vehicle and it must be horizontally visible at a 30° angle inwards and outwards, and vertically visible at a 15° angle above and below the horizontal level. The vertical angle below the horizontal may be reduced to 5° in the case of a retro reflector less than 750 mm above the ground.

5.9 Third stop lamp (9), optional

In addition to actual stop lamps, a third stop lamp emitting red light may be fitted.

- Third stop lamp must be lit simultaneously with stop lamps.
- Third stop lamp must be fitted at the vehicle's centerline, above the stop lamps and the height must be more than 850 mm above the ground or more than 150 mm below rear window. Third stop lamp must be horizontally visible at a 10° angle inwards and outwards, and vertically at a 10° angle above and at a 5° angle below the horizontal level.
- Doubling of third stop lamp is prohibited and it may not be positioned outside the centerline, unless required by the structure of the vehicle (center-split access doors at rear). Each lighting unit of the doubled third stop lamp shall be approved as a type D lamp. Even in this case, third stop lamp must not be more than 150 mm off the centerline, measured from the lamp's point of reference.

5.10 Work and additional lamps (10), optional

According to national regulations, necessary work and additional lamps for loading, unloading and other operations may be fitted.

Work and additional lamps must be switched off when driving on public roads. This does not apply to work carried out on road.

5.11 Retro-reflecting outline signals and commercial signals, optional

Retro-reflecting outline and commercial signals must meet the following requirements:

- No reflector shall reflect red light in a forward direction.
- No reflector shall reflect white light in a rearward direction.
- Signals must be constructed with E approved materials according to regulation no. 104.
- No retro-reflecting outline or commercial signals are allowed on the towing vehicle unless the trailer is fitted with retro-reflecting signals.
- Band-shaped outline retro-reflector must be 50–60 mm in width and indicate not less than 80% of the length and width of the vehicle. If the reflector is not continuous, spaces between the band sections must not be more than half of the length of the shortest band section.

Special dimensions in parentheses apply only to vehicles on which standard lamp/retro reflector position requirements cannot be applied due to structural reasons (e.g. vehicle's external shape).

- Lower edge 250–1500 mm (–2100mm) above the ground.
- Retro-reflecting commercial signal must be positioned on the side of the vehicle inside a retro-reflecting outline signal. Commercial signal may not impair the effectiveness of the outline signals, lamps or retro-reflecting devices.
- Max. length 15 letters, height 300–1000 mm.
- The total area of commercial signal constructed with category D retro-reflecting material as specified in E regulations must not be more than 2.0 m^2

5.12 Additional rear lamp set for tow trucks

- Tow trucks must be equipped with separate device including rear position, stop and direction indicator lamps that can be attached to the rear of the towed vehicle. This device must be used if conditions during towing duties require the use of lamps and the vehicle's lighting devices cannot be used according to regulations. Alternatively, tow trucks may be fitted with doubled rear position, stop and direction indicator lights, mounted up behind the cab. These lamps may be used during towing only.

https://truckmanualshub.com/

5.13 Rear marking plates for heavy vehicles

Category N2 and N3 vehicles may be fitted with rear marking plates complying with E regulation number 70. Plates must have alternate, diagonal red stripes painted with luminous paint and yellow retro-reflecting stripes.

Three lengths of plates are available. If more than one plate is fitted, they must be positioned symmetrically.

Fig. 964017

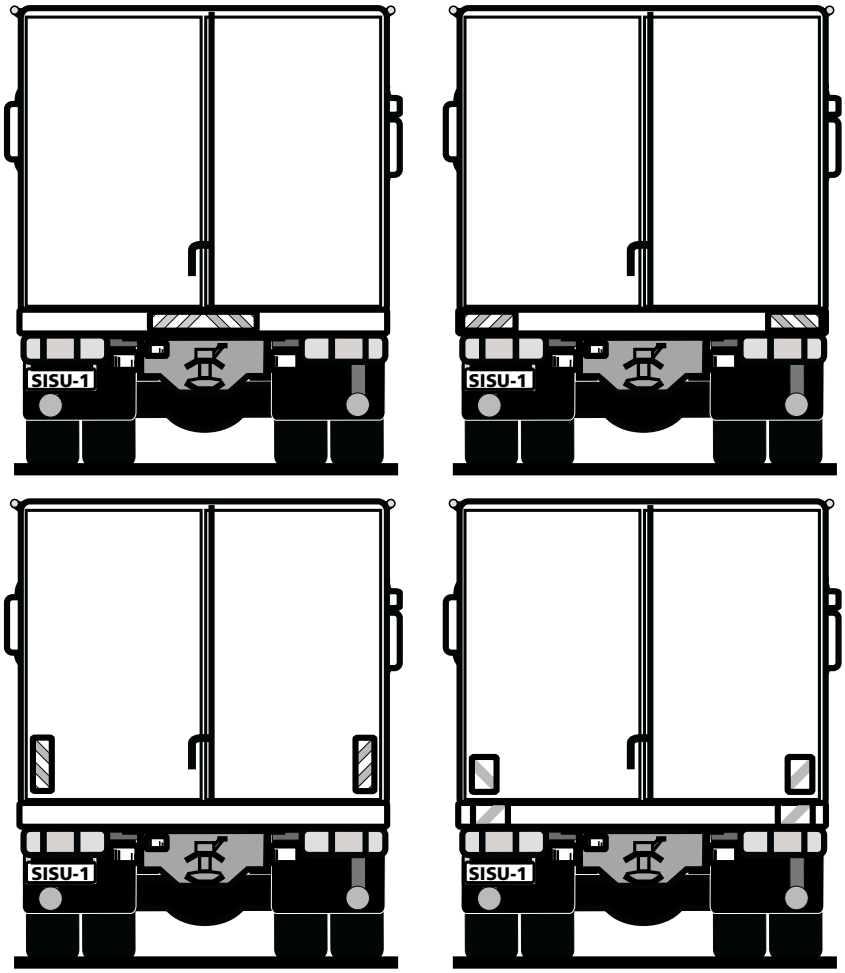

Note!

Fig. 964018a

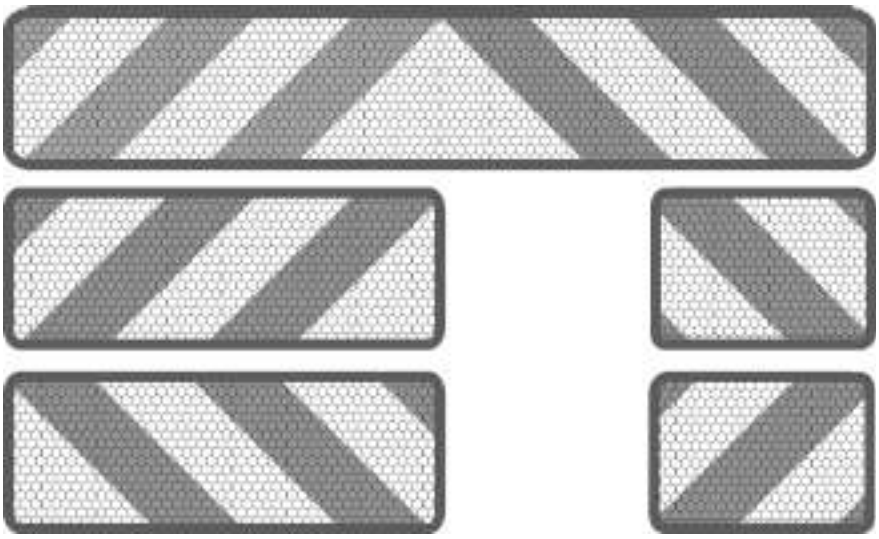

A = Rear marking plate/plates for heavy vehicles

https://truckmanualshub.com/

6 Lamps, retro reflectors and plates for trailers

6.1 Lamps and retro reflectors

On trailers first used on or after 1 October 1994, the color, type, number, position, visibility, alignment and connection of the lamps and retro reflectors must comply with the requirements of the appropriate Council Directive as amended with directive 97/28/EEC, or with requirements of E regulation no. 48, or with national regulations.

The directives and regulations stated above are also applied to the color, position, visibility and alignment of other lamps and retro reflectors.

Following lamps and retro reflectors are mandatory on trailers:

- Direction indicator lamps;
- Stop lamps;
- Rear registration plate lamp;
- Front position lamps on trailers exceeding 1.6 m in width;
- Rear position lamps;
- Red retro reflectors at rear (triangular, apex directed upwards)
- Front retro reflectors;
- Side retro reflectors;
- Rear for lamp or lamps;
- End-outline marker lamps if the trailer exceeds 2.1 m in width; and
- Amber retro reflectors apparent from side for marking a structure or equipment narrower than other structures protruding over 1 meter outside the vehicle at rear.

Fig. 964020

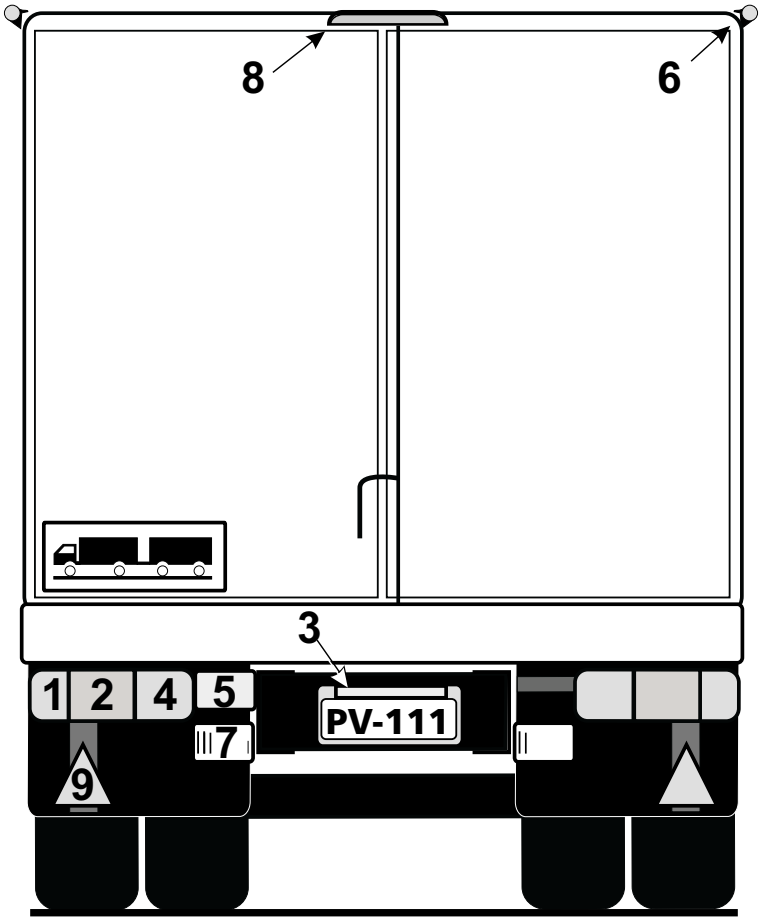

https://truckmanualshub.com/

6.1.1 Direction indicator lamps (1), mandatory

- As rear direction indicator lamps on vehicles -

Direction indicator lamps must be e approved according to directive 76/759/EEC, or E approved according to regulation no. 6/01.

6.1.2 Stop lamps (2), mandatory

- As on vehicles -

Stop lamps must be e approved according to directive 76/758/EEC, or E approved according to regulation no. 7/01.

Third stop lamp must be fitted at the trailer's centerline.

The lower edge of the third stop lamp's light-emitting surface must be more than 850 mm above the ground. In every case, the lower edge of the third stop lamp's light-emitting surface must be above the actual stop lamps' light-emitting surface.

Third stop lamp must be lit simultaneously with stop lamps.

6.1.3 Rear registration plate lamp (3), mandatory

- As on vehicles -

Rear registration plate lamp must be e approved according to directive 76/760/EEC, or E approved according to regulation no. 4.

6.1.4 Front position lamps, mandatory

- 350–1500 (–2100) mm above the ground
- 0–150 mm from the extreme outer edge
- visibility 5 degrees inwards and 80 degrees outwards
- otherwise as on vehicles

6.1.5 Front retro reflectors, mandatory

- white, non-triangular
- 350–900 (–1500) mm above the ground
- 0–150 mm from the extreme outer edge
- visibility 30 degrees inwards and outwards, 15 degrees above and below the horizontal level

6.1.6 Rear position lamps (4), mandatory

- As on vehicles -

6.1.7 Rear fog lamp (5), mandatory

Mandatory from 1 October 1994.

- As on vehicles -

6.1.8 End-outline marker lamps (6), mandatory

Mandatory on trailers exceeding 2.1 m in width from 1 October 1994.

- As on vehicles -

6.1.9 Side-marker lamps/retro reflectors, mandatory

Mandatory on trailers exceeding 6 m in length.

Towing equipment is also included in length.

- As on vehicles -

6.1.10 Reversing lamp (7), mandatory

- As on vehicles -

Approval: e-77/539 or E-23

https://truckmanualshub.com/

6.1.11 Third stop lamp (8), optional

- As on vehicles -

- At the centerline, above the actual stop lamps
- 850 mm or higher above the ground

Approval as with actual stop lamps or according to FMVSS 108.

6.1.12 Work and additional lamps

Necessary work and additional lamps for loading and unloading.

- Work and additional lamps must be switched off when driving on public roads. This does not apply to work carried out on road.

6.1.13 Rear retro reflectors (9), mandatory

Rear retro reflector is mandatory on trailers and it means a device used to indicate the presence of a trailer by the reflection of light emanating from a light source not connected to the trailer.

- Equilateral triangle, always apex directed upwards.
- Two required, symmetric to the centerline.
- Distance between the reflectors not less than 600 mm.
- Distance from the extreme outer edge of the trailer not more than 400 mm.
- Height 350–900 mm above the ground.
- Visibility 30 degrees inwards and outwards, 15 degrees above and below the horizontal level.
- Approval according to directive 76/757/EEC, or E regulation no. 3/02.

6.1.14 Retro reflectors for protruding structures

- Amber retro reflectors apparent from side for marking a structure narrower than other structures protruding over 1000 mm outside the trailer at rear.

https://truckmanualshub.com/

6.2 Plates

6.2.1 Rear marking plates for long vehicles

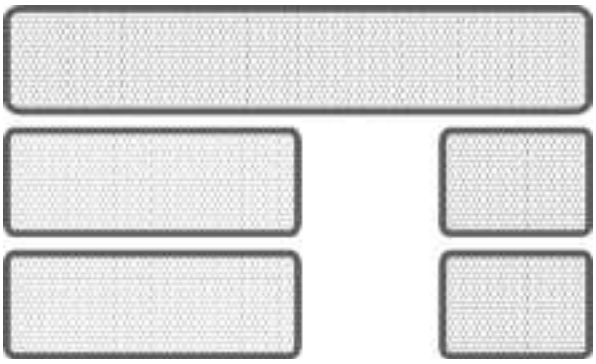

Fig. 964023

Rear marking plates for long vehicles complying with E regulation no. 70/01 must be fitted at rear of the trailer of a long vehicle combination (length over 15.5 m).
Three lengths of plates are available and they can be fitted as shown in the figures.

Rear marking plates for long vehicles may be replaced by a plate, sized not less than 0,3 m x 0.8 m, with 25 mm red borders and illustrating a black vehicle combination on a yellow retro-reflecting base (see figure below).

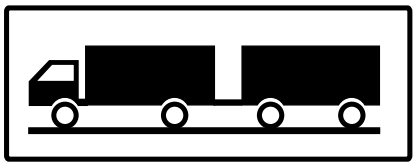

Fig. 964021

Fig. 964019

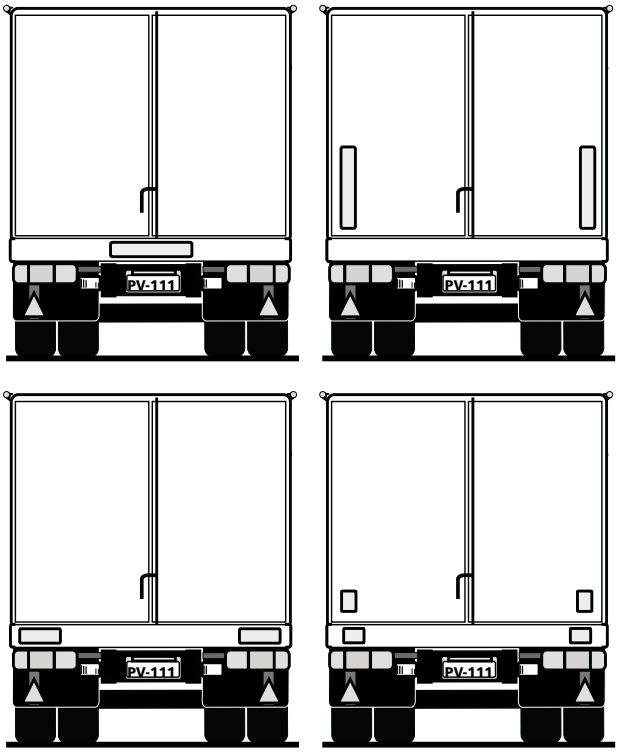

6.2.2 Speed plate

If a trailer's towing speed is limited below 80 km/h, a round speed plate indicating the maximum speed in kilometers per hour must be fitted at rear of the trailer. Plate's diameter is 240 mm, it must have black borders and the numbers indicating the maximum speed must be 120 mm high.

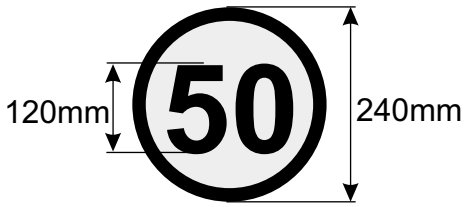

Fig. 964022

https://truckmanualshub.com/

7 Lamps and retro reflectors, approvals given by the authorities

7.1 Main-beam and dipped-beam headlamps

Dipped-beam headlamps must be designed for left or right-hand traffic according to the direction of traffic.

Main-beam and dipped-beam headlamps must be e approved according to Council Directive 76/761/EEC on the approximation of the laws of the Member States relating to motor-vehicle headlamps which function as main-beam and/or dipped-beam headlamps and to incandescent electric filament lamps for such headlamps, or E approved alternatively according to regulation no. 1/01, 5/01, 8/02, 20/02, or 31/02, or comply with national regulations.

The bulb used in main-beam or dipped-beam headlamp must be designed and approved for the lamp and E approved alternatively according to regulation no. 2/03, 8/02, 20/02, or 37/03. The total reference value marked on the main-beam headlamps which can be switched on simultaneously shall not exceed 75.

7.2 Direction indicator lamps

Direction indicator lamp must be e approved according to Council Directive 76/759/EEC on the approximation of the laws of the Member States relating to direction indicator lamps for motor vehicles and their trailers, or E approved according to regulation no. 6/01, or comply with national regulations.

7.3 Stop lamps

Stop lamps must be e approved according to Council Directive 76/758/EEC on the approximation of the laws of the Member States relating to end-outline marker lamps, front position (side) lamps, rear position (side) lamps and stop lamps for motor vehicles and their trailers, as amended with Commission Directive 89/516/EEC and 97/30/EC, or E approved according to regulation no. 7/02, or comply with national regulations.

7.4 Rear registration plate lamp

Rear registration plate lamp must be e approved according to Council Directive 76/760/EEC on the approximation of the laws of the Member States relating to the rear registration plate lamps for motor vehicles and their trailers, or E approved according to regulation no. 4, or comply with national regulations.

7.5 Front and rear position lamps

According to national regulations.

7.6 Rear fog lamp

Rear fog lamp must be e approved according to directive 77/538/EEC, as amended with directive 89/518/EEC, or E approved according to regulation no. 38, or comply with national regulations.

7.7 Reversing lamp

Reversing lamp must be e approved according to directive 77/539/EEC, or E approved according to regulation no. 23, or comply with national regulations.

7.8 End-outline marker lamps

According to national regulations.

7.9 Lamps illuminating plates

Maximum total wattage of lamps is 18 W.

7.10 Flashing hazard beacon

Flashing hazard beacon must be E approved according to regulation no. 65, or comply with national regulations.

https://truckmanualshub.com/

7.11 Front fog lamps

Front fog lamp must be e approved according to Council Directive 76/762/EEC on the approximation of the laws of the Member States relating to front fog lamps for motor vehicles and filament lamps for such lamps, or E approved according to regulation no. 19/02, or comply with national regulations.

7.12 Parking lamps

Parking lamp must be e approved according to Council Directive 77/540/EEC on the approximation of the laws of the Member States relating to parking lamps for motor vehicles, or E approved according to regulation no. 77, or comply with national regulations.

7.13 Daytime running lamps

Daytime running lamp must be E approved according to regulation no. 87, or comply with national regulations.

7.14 Side-marker lamps

Side-marker lamp must be e approved according to directive 76/758/EEC or E approved according to regulation no. 91, or comply with national regulations.

7.15 Lamps indicating towing vehicles

Lamps indicating towing vehicles are prohibited from 1 October 2000.

7.16 Retro reflectors

Retro reflectors must be e approved according to Council Directive 76/757/EEC on the approximation of the laws of the Member States relating to reflex reflectors for motor vehicles and their trailers, or E approved according to regulation no. 3/02, or comply with national regulations.

Retro reflectors aligned towards the front must be white, towards the side amber and towards the rear red.

Retro reflectors must be non-triangular, except the retro reflectors aligned towards the rear on trailers.

https://truckmanualshub.com/

8 Markings on vehicles used for traffic subjected to license

The name of the traffic license holder must be marked clearly and permanently on both sides of a category N vehicle used for traffic subjected to license. The height of the letters must not be less than 60 mm.

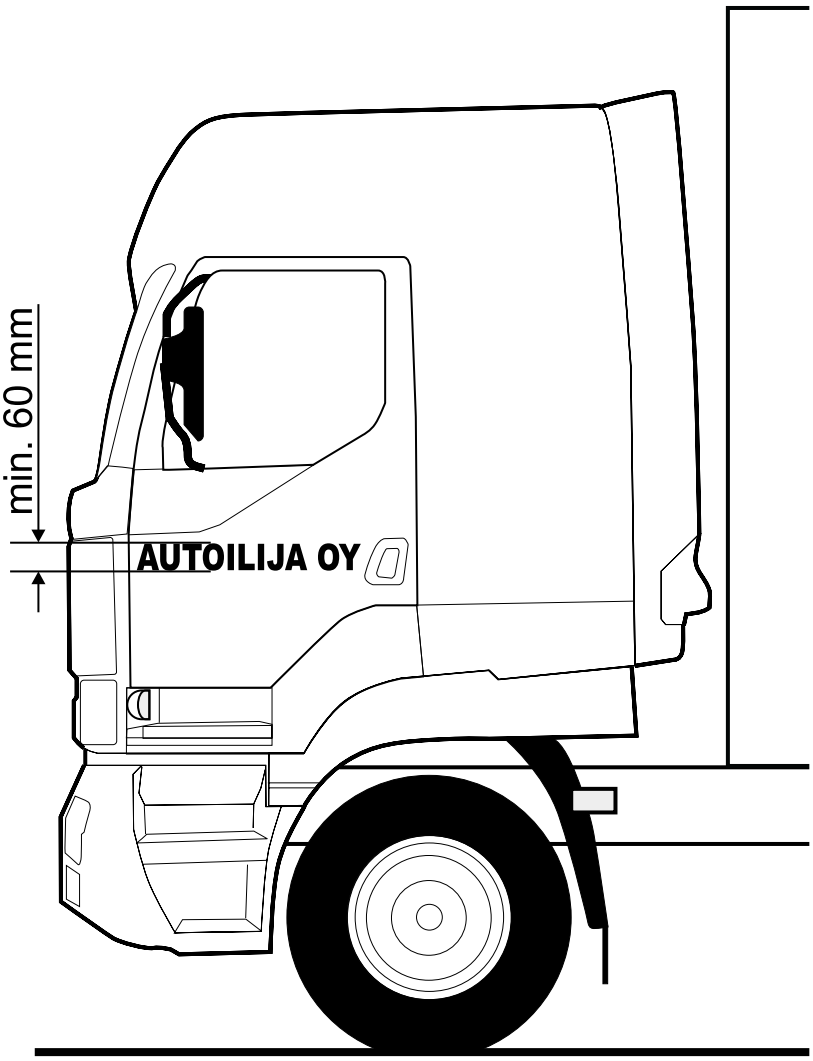

Fig. 964029

https://truckmanualshub.com/

9 Other equipment

9.1 Trailer socket connections

9.1.1 7-pole trailer socket

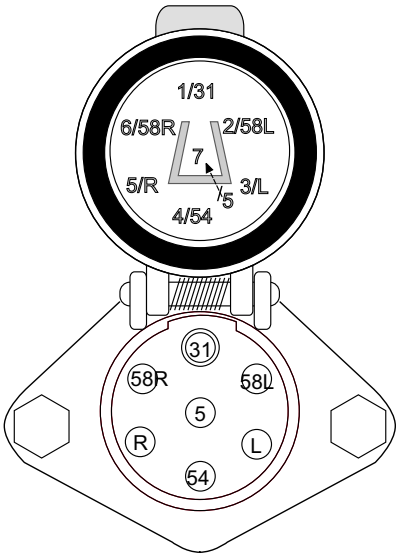

Fig. 964010

7-pole trailer socket for Sisu cable set 186-701-7291

Pole	Function	Wire in the Sisu cable set Color / no
1. / 31	= Ground	wh / 9
2. / 58L	= Left, parking and side-marker	blk / 165
3. / L	= Left direction indicator	ye / 167
4. / 54	= Stop lamp	red / 182
5. / R	= Right direction indicator	grn / 177
6. / 58R	= Parking/side-marker right + reg. plate	br / 175
7. / 5	= Spare	blu

Note! Middle pole (7./5) is reserved for electric control of the trailer brake. Other connections, e.g. reversing lamp, to that pole are strictly prohibited.

7-pole trailer socket for Sisu additional cable set 186-701-7311

Pole/wire	Function	Wire in the Sisu cable set Color / no
1. / 31	= Ground	wh / 9
2. / 58L	= Trailer bogie 2 *	blk / 165
3. / L	= Reversing lamp	ye / 183
4. / 54	= + (trailer brake) *	red / 182
5. / R	= Spare (trailer bogie) *	grn / 177
6. / 58R	= Spare (trailer lock) *	br / 175
7. / 5	= Spare	blu
	* In the auxiliary electric set (if ordered)	

9.1.2 15-pole trailer socket ISO/DIS 12098

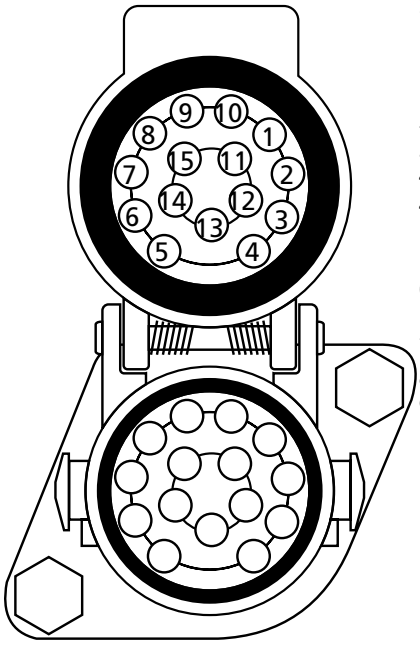

Fig. 964011

Socket 186-520-0451, plug 186-510-0681

Pole/wire	Function	Wire in the Sisu cable set Color / cable set no
1. / 39	= Left direction indicator	ye / D 186-701-8021
2./ 30	= Right direction indicator	grn / D 186-701-8021
3./ 307	= Rear fog lamp	blu / D 186-701-8021
4./ 1	= Ground	wh / D 186-701-8021
4./ 1	= Ground	wh / D 186-701-8031
5./ 634	= Left rear + parking + side-marker + reg. lamp	blk / D 186-701-8021
6./ 634	= Right rear + parking + side-marker + reg. lamp	br/ D 186-701-8021
7./ 3	= Stop lamp	red / D 186-701-8021
8./ 608	= Reversing lamp	ye / D 186-701-8031
9.	= Trailer brake *	red / D 186-701-8031
10.	= Trailer lock *	br / D 186-701-8031
11.	= Trailer bogie 2 *	blk / D 186-701-8031
12.	= Spare	
13.	= Trailer bogie 1 *	grn / D 186-701-8031
14.	= Spare	
15.	= Spare	
*	In the auxiliary electric set (if ordered)	

https://truckmanualshub.com/

9.1.3 VBG 14-pole trailer socket

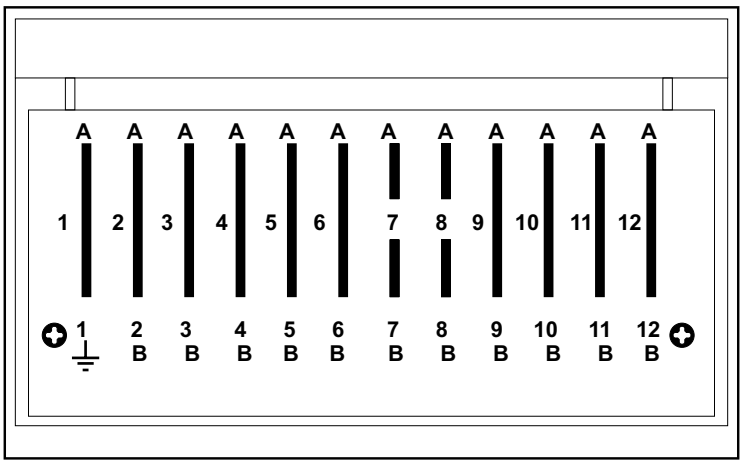

1.	Ground
2.	Left direction indicator lamp
3.	Right direction indicator lamp
4.	Stop lamp
5.	Left rear position lamp
6.	Right rear position lamp
7a.	Reversing lamp
7b.	Rear fog lamp
8a.	Trailer brake *
8b.	Trailer bogie *
9.	Trailer bogie 2 *
10.	Trailer lock *
11.	Spare
12.	Spare
*	In the auxiliary electric set (if ordered)

9.1.4 VBG 17-pole trailer socket

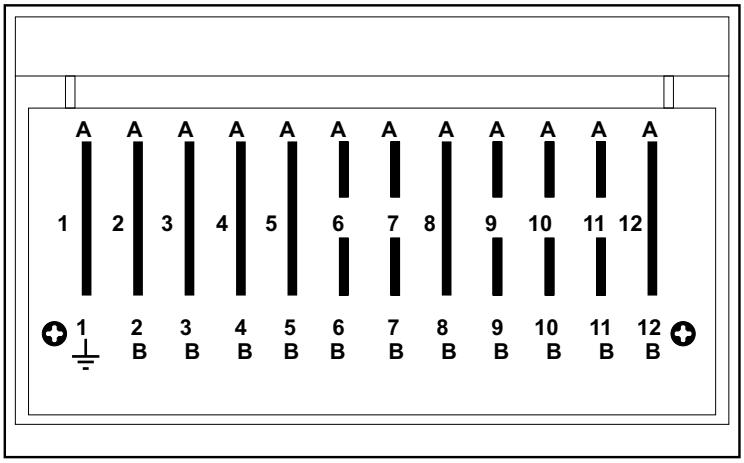

1.	Ground
2.	Left direction indicator lamp
3.	Right direction indicator lamp
4.	Stop lamp
5.	Left rear position lamp
6a.	Right rear position lamp
6b.	Spare
7a.	Reversing lamp
7b.	Rear fog lamp
8.	Trailer bogie 2 *
9a.	Trailer brake *
9b.	Trailer bogie *
10a.	Trailer lock *
10b.	Spare
11a.	Spare
11b.	Spare
12.	Spare
*	In the auxiliary electric set (if ordered)

https://truckmanualshub.com/

9.2 Tachograph

1. Tachograph is mandatory on vehicles in category N3. However, a tachograph is not mandatory on vehicles to which legislation relating to driving and rest periods are not applied according to Article 4 in Council Regulation (EEC) No 3820/85 on the harmonization of certain social legislation relating to road transport, or to which a duty roster system is applied granted under the Article 14 (1) of the said regulation.

2. Tachograph must be e approved according to Council Regulation (EEC) No 3821/85 on recording equipment in road transport.

4. In the event of breakdown or faulty operation of the tachograph, the owner or holder of the vehicle shall have it repaired by an approved fitter or workshop, as soon as circumstances permit.

5. If the vehicle is unable to return to the premises within a period of one week calculated from the day of the breakdown or of the discovery of defective operation, the repair shall be carried out en route.

9.2.1 Inspections of tachograph

1. Inspections and checks referred to in Chapter VI of Annex I in Council Regulation (EEC) No 3821/85 on recording equipment in road transport may be carried out only by person, workshop or body approved for installation or reparation of tachographs and entitled to carry out the required inspection.

2. A signed inspection certificate shall be issued by the inspector and the certificate must be kept in the vehicle when used on public roads and handed over at the request of any authorized inspecting officer.

9.3 Rear-view mirrors

Fig.964031

The number, position, field of vision, surface area, strength and flexibility under impact of the rear-view mirrors must comply with Council Directive 71/127/EEC on the approximation of the laws of the Member States relating to the rear-view mirrors of motor vehicles, as amended with Commission Directives 79/795/EEC, 85/205/EEC, 86/562/EEC and 88/321/EEC, or with E regulation no. 46/01, or comply with national regulations.

Bodywork manufacturer must note that if a mounted device or equipment impairs the visibility to the sides of the vehicle, the bodywork manufacturer must install appropriate additional rear-view mirrors in order to insure driver's clear view and monitoring of the traffic.

If the bodywork manufacturer repositions or modifies the original rear-view mirrors installed by the vehicle manufacturer, he must insure that the new/modified mirrors comply with all the regulations.

9.4 Visual obstructions

Except for the specified signals and devices, hanging or installing signals, objects or devices, inside or outside the vehicle that may impair visibility is strictly prohibited.

However, a parking disc may be positioned on the right-hand side of the windscreen. In addition, a safety seat for children may be mounted on the passenger's seat if the safety seat does not excessively impair visibility.

9.5 External projections

Attaching parts or equipment to the vehicle's bodywork or platform that have pointed or otherwise dangerous external projections facing frontwards, sidewards or rearwards is strictly prohibited.

A vehicle in category N must comply with Council Directive 92/114/EEC relating to the external projections forward of the cab's rear panel of motor vehicles of category N, or with E regulation no. 61, or with national regulations.

9.6 Antennas

An antenna installed on a motor vehicle may not be aligned so that it projects beyond vehicle's outlines longitudinally or laterally.

https://truckmanualshub.com/

9.7 Rear and lateral protection devices

9.7.1 Rear underrun protection for motor vehicles and trailers

A rear bumper or similar device is mandatory on motor vehicles and trailers in order to provide effective protection against underrunning from the rear especially by vehicles of categories M1 and N1 in a case of a rear-end collision. Rear underrun protection device must comply with Council Directive 70/221/EEC on the approximation of the laws of the Member States relating to liquid fuel tanks and rear protective devices for motor vehicles and their trailers, as amended with Commission Directives 79/490... 81/333... and 97/19/EEC, or with E regulation no. 58/01, or with national regulations.

Rear underrun protection is not required in the following cases:

- On motor vehicles and trailers where the structure and position of a component or device mounted securely on the bodywork, chassis or vehicle meets the requirements set for rear underrun protection (see Requirements).
- On tractors for semi-trailers.
- On category N vehicles that are designed for special purposes and allowed to be used on public roads only for transporting from site to site.
- Motor vehicles designed for the transport of long items (e.g. timber) and that do not include bodywork structure, or trailers designed for the transport of undivided long items, such as logs or steel bars.
- On all-wheel-drive category N2G and N3G vehicles and trailers coupled to the vehicles.
- On vehicles equipped with interchangeable platform devices other than leg gear.
- On other vehicles for which a rear-underrun protection is incompatible with their use, or on a dolly axle designed to be coupled to a semi-trailer.
- On category O1 and O2 trailers if the ground clearance of the rear part of the unladen vehicle does not exceed 55 cm over a width which is not shorter than that of the trailer's width by more than 20 cm and at a distance of not more than 45 cm from the rear extremity of the trailer.

9.7.2 Requirements

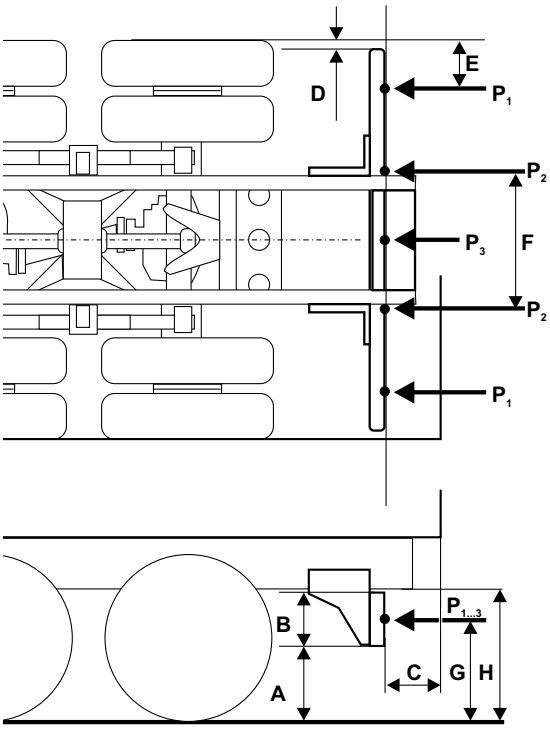

Fig. 964030

When the vehicle is unladen, the lower edge of the rear underrun protection device must at no point be more than 55 cm above the ground (A).

The width of the rear underrun protection device must at no point exceed the width of the rear axle, nor must it be more than 10 cm shorter on either side (D). Where there is more than one rear axle, the width to be considered is that of the widest one.

The height (B) of the rear underrun protection device must not be less than 100 mm.

The rear underrun protection device must be fitted as close to the rear of the vehicle as possible and the distance between the device and the rear extremity of the vehicle must not exceed 40 cm (C). In measuring this distance, any part of the vehicle, which is more than 3 m above the ground, must be excluded.

The lateral extremities of the rear underrun protection device must not bend to the rear and must be attached securely to chassis side-members.

The rear underrun protection device must withstand:

A horizontal force corresponding to 12.5% of the maximum technically permissible mass of the vehicle but not exceeding 2.5 x 104 N (~26kp), applied to both points P1 and to point P3 (height above the ground G = H - B/2).

A horizontal force corresponding to 50% of the maximum technically permissible mass of the vehicle but not exceeding 10 x 100 N (~100 kp) must be applied successively to both points P20.

The rear underrun protection device may be so designed that its position at the rear of the vehicle can be varied. It must be possible for the operator to vary the position of the device by applying a force not exceeding 400 Nm (~40 kp). There must be a guaranteed method of securing it in the service position so that any unintentional change of position is precluded.

See also instructions on bolted joints, section 02

https://truckmanualshub.com/

9.8 Side guards for motor vehicles

Lateral protection (side guards) must comply with EC directives, E regulations or national regulations

1. Vehicles in categories N2 and N3 must be constructed and/or equipped so that unprotected road users have as minimal a risk as possible of falling under the sides of such vehicles. **Lateral protection must comply with** Council Directive 89/297/EEC on the approximation of the laws of the Member States relating to the lateral protection (side guards) of certain motor vehicles and their trailers, or with E regulation no. 73, or with national regulations.

2. If the sides of the vehicle are so designed and/or equipped that by their shape and characteristics their component parts together meet the requirements laid down in EC directive or regulations referred to in point 1, they may be regarded as replacing the side guards.

3. Lateral protection provided by a specific device (side guard) is not required:

a) on tractors for semi-trailers;

b) on all-wheel-drive category N2G and N3G vehicles; or

c) on vehicles designed and constructed for special purposes where it is not possible, for practical reasons, to fit such lateral protection (e.g. timber trucks).

9.8.1 Technical requirements for side guards

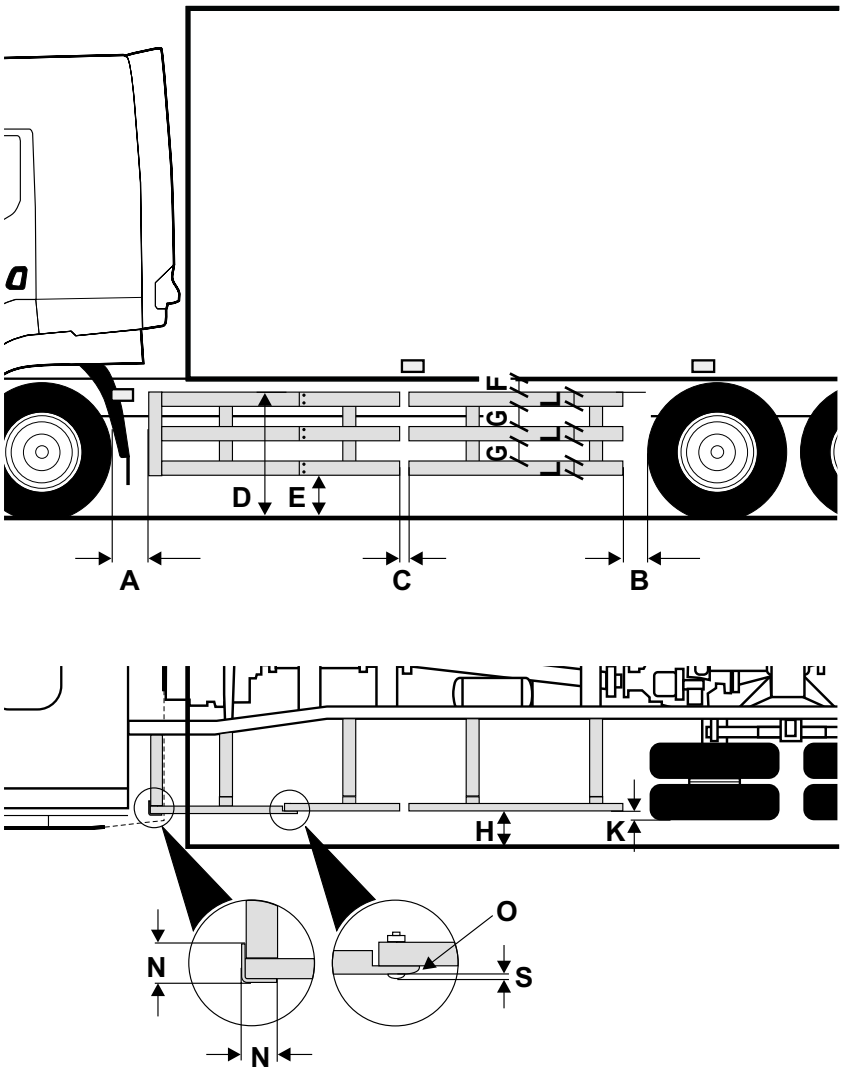

Fig. 964027

A.	max. 300 mm
B.	max. 300 mm
C.	max. 25 mm
D.	min. 950 mm
E.	max. 550 mm
F.	max. 350 mm
G.	max. 300 mm
H.	max. 120 mm
K.	max. 30 mm
L.	min. 100 mm
N.	min. 100 mm
O.	see point O later
S.	max. 10 mm

See explanations about items A to S later.

The outer surface of the side guard shall be smooth, substantially flat or horizontally corrugated and so far as possible continuous from front to rear.

Adjacent parts may however overlap, provided that the overlapping edge faces rearwards or downwards (O).

Between the adjacent parts a gap of not more than 25 mm measured longitudinally may be left, provided that the rearward part does not protrude outboard of the forward part (C).

Domed heads of bolts or rivets may protrude beyond the surface to a distance not exceeding 10 mm and other parts may protrude to the same extent provided that they are smooth and similarly rounded (S).

All external edges and corners shall be rounded with a radius not less than 2.5 mm.

Side guards shall be essentially rigid, securely mounted (they shall not be liable to loosening due to vibration in normal use of the vehicle) and, except as regards the components listed later (battery box, etc.), made of metal or any other suitable material.

Side guard must withstand a horizontal static force of 1 kN applied perpendicularly to any part of its external surface by the center of a ram the face of which

https://truckmanualshub.com/

is circular and flat, with a diameter of 220 mm ± 10 mm, and the deflection of the guard under load may not be more than:

- 30 mm over the rearmost 250 mm of the guard, and
- 150 mm over the remainder of the guard.

The above requirement may be checked by means of calculations.

Components permanently fixed to the vehicle, e.g. battery box, air tanks, fuel tanks, lamps, reflectors, spare wheels and toolboxes, may be incorporated in the side guard, provided that they meet the requirements for dimensions and gaps.

Letters in parentheses refer to items in figure 964027.

The side guard shall not increase the overall width of the vehicle and the main part of its outer surface shall not be more than 120 mm (H) inboard from the outermost plane (maximum width) of the vehicle.

The rearward end of the side guard shall not be more than 30 mm (K) inboard from the outermost edge of the rear tires (excluding any bulging of the tires close to the ground) over at least the rearmost 250 mm.

The side guard may consist of a continuous flat surface, or of one or more horizontal rails.

When rails are used, they shall be not more than 300 mm apart (G) and not less than 100 mm high (L) and essentially flat. Combinations of surfaces and rails shall form a continuous side guard subject to the provisions set out above.

The side guard may not be used for the attachment of brake, air or hydraulic pipes.

9.8.2 Forward edge of the side guard

The position of the forward edge of the side guard must not be more than 300 mm (A) to the rear of the transverse vertical plane tangential to the rearmost part of the tire on the wheel immediately forward of the guard.

Where the forward edge lies in otherwise open space, the edge shall consist of a continuous vertical member extending over the whole height of the guard. The outer and forward faces of this member shall measure at least 100 mm rearwards and be turned 100 mm inwards.

Where the 300 mm-dimension from the front wheel referred above falls within the cab, the guard shall be so constructed as to meet the cab panels and if necessary be turned in through an angle not exceeding 45°. A longitudinal gap of 100 mm shall be permitted between the forward edge and the cab panels in the case of suspended or tilt cabs. In this case, the provisions on the forward edge set out above are not applicable.

9.8.3 Rearward edge of the side guard

The rearward edge of the side guard shall not be more than 300 mm forward of the transverse vertical plane tangential to the foremost part of the tire on the wheel immediately to the rear (B). A continuous vertical member is not required on the rear edge.

9.8.4 Lower edge of the side guard

The lower edge of the side guard shall at no point be more than 550 mm above the ground.

9.8.5 Upper edge of the side guard

The upper edge of the side guard shall not be more than 350 mm (F) below that part of the structure of the vehicle, cut or contacted by a vertical plane tangential to the outer surface of the tires.

Where the plane does not cut the structure of the vehicle, the upper edge shall be level with the surface of the load-carrying platform, or 950 mm from the ground, whichever is less.

Where the plane cuts the structure of the vehicle at a level more than 1.3 m above the ground, then the upper edge of the side guard shall not be less than 950 mm (D) above the ground.

On a vehicle specially designed and constructed for the carriage of a container or demountable body, the upper edge of the guard shall be level with the surface of the load-carrying platform, or 950 mm from the ground, whichever is less. In this case, the container or body being considered as part of the vehicle.

9.8.6 Derogations

The compliance with side guard regulations may be waived with following vehicles:

https://truckmanualshub.com/

A tank-vehicle, which is a vehicle designed solely for the carriage of fluid substance in a closed tank permanently fitted to the vehicle and provided with hose or pipe connections for loading or unloading, shall be fitted with side guards which comply so far as is practicable with all the requirements set out above. Strict compliance may be waived only where operational requirements make this necessary.

On a vehicle fitted with extendible legs to provide additional stability, the side guard may be arranged with additional gaps where these are necessary to permit extension of the legs.

On a vehicle equipped with anchorage points for ro-ro transport, gaps shall be permitted within the side guard to accept the passage and tensioning of fixing lashings.

9.8.7 Side guards for trailers

The same general prescriptions and definitions relating to side guards for motor vehicles are also applied to side guards for trailers.

1. Trailers in categories O3 and O4 designed to be coupled to motor vehicles must be constructed and/or equipped so that unprotected road users have as minimal a risk as possible of falling under the sides of such trailers. Lateral protection must comply with Council Directive 89/297/EEC on the approximation of the laws of the Member States relating to the lateral protection (side guards) of certain motor vehicles and their trailers, or with E regulation no. 73, or with national regulations.

2. If the sides of the trailer are so designed and/or equipped that by their shape and characteristics their component parts together meet the requirements laid down in EC directive or regulations referred to in point 1, they may be regarded as replacing the side guards.

3. Lateral protection provided by a specific device (side guard) is not required:

a) on trailers specially designed and constructed for the carriage of very long loads of indivisible length, such as timber and steel bars;

b) on trailers coupled to all-wheel-drive category N2G and N3G vehicles;

c) on trailers designed and constructed for special purposes where it is not possible, for practical reasons, to fit such lateral protection.

An extendible trailer shall comply with all of the side guard requirements when closed to its minimum length.

When the trailer is extended, the side guards shall comply with requirements for maximum and minimum height, and with **either for forward or rearward edge of the side guard**. Extension of the trailer shall not produce gaps in the length of the side guards.

9.9 Wheel guards and rain flaps

1. The motor vehicle must be provided with wheel guards on all wheels. A specific wheel guard is not required if the bottom of the vehicle's bodywork or load-carrying platform with necessary additional devices form a protection against splashing equivalent to the level specified later.

2. Wheel guards on vehicles in category M1 must be EC approved according to Council Directive 78/549/EEC on the approximation of the laws of the Member States relating to the wheel guards of motor vehicles, as amended with Commission Directive 94/78/EC, or comply with national regulations. On other than category M1 vehicles, wheel guards must meet the requirements set out in points 3 to 5, or comply with national regulations.

3. The wheel guard must possess a total width at least adequate to cover the entire width of the tire or the entire width of two tires in the case of twin wheels. The wheel guard must extend beyond the part formed by radial planes at an angle of 30° to the front and on category N3 vehicles at an angle of 90° to the rear of the center of the wheels. The rear of the wheel guards of an unladen vehicle must not terminate above a horizontal plane 150 mm above the axis of rotation of the wheels (as measured at the wheel centers), **(A = max 150 mm)**. Furthermore, the intersection of the edge of the wheel guard with this plane must lie outside the median longitudinal plane of the tire, or in the case of twin wheels the median longitudinal plane of the outermost tire.

https://truckmanualshub.com/

Fig. 964028

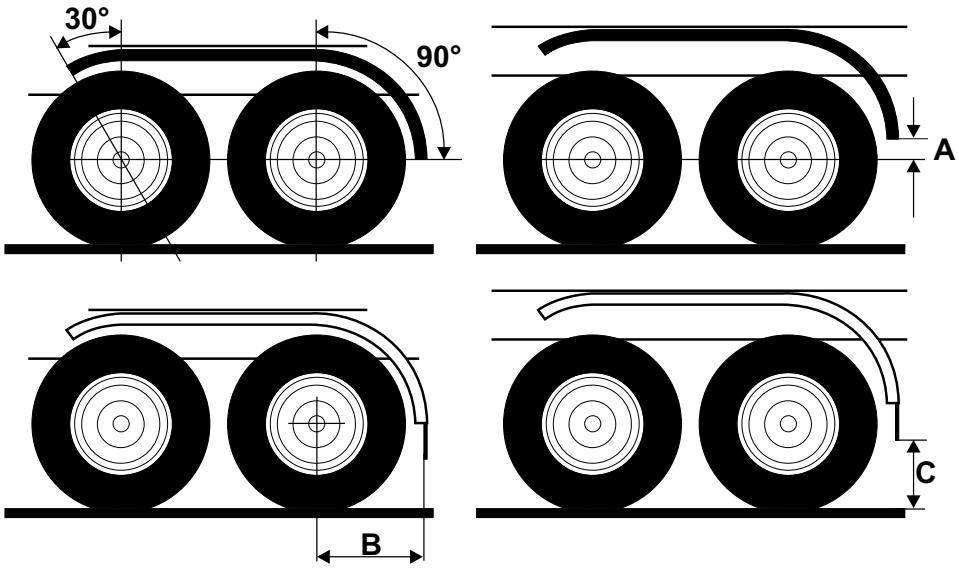

4. The projection - situated in the vertical plane of the tire axis - of the depth of the outer edge of the wheel guards, measured in the vertical longitudinal plane passing through the center of the tire, must be at least 30 mm. This depth may be reduced progressively towards the angles specified in point **3**.

5. The distance between the edge of the wheel guard and the axis passing through the center of the wheel must not exceed the diameter of the tire within the part formed by the radial planes referred to in point **3**.

6. All vehicles in category N2 and N3 must be fitted with **rain flaps** within the wheel guards of rear wheels. The width of the rain flap must not be less than the width of the wheel guard and the distance from the wheel's axle must not be more than 1.2 m **(B)**. When the vehicle is unladen, the distance between the lower edge of the rain flap and ground must not be more than 1/4 of the distance mentioned above **(C, max 300 mm)**, unless otherwise required by the structure of the vehicle and its suspension. On category N2 vehicles of a maximum mass exceeding 7.5 tonnes, and all category N3 vehicles, rain flaps that comply with Council Directive 91/226/EEC on the approximation of the laws of the Member States relating to the spray-suppression systems of certain categories of motor vehicles and their trailers are considered to meet the requirements set out in this paragraph.

9.9.1 Wheel guards and rain flaps for trailers

1. The trailer of a motor vehicle must be provided with wheel guards on all wheels. A specific wheel guard is not required if the bottom of the trailer's bodywork or load-carrying platform with necessary additional devices form a protection against splashing equivalent to the level specified later.

2. The wheel guard must possess a total width at least adequate to cover the entire width of the tire or the entire width of two tires in the case of twin wheels. The wheel guard must extend beyond the part formed by radial planes at an angle of 30° to the front and at an angle of 90° to the rear of the center of the wheels, measured from an unladen trailer.

3. The projection - situated in the vertical plane of the tire axis - of the depth of the outer edge of the wheel guards, measured in the vertical longitudinal plane passing through the center of the tire, must be at least 30 mm. The distance between the edge of the wheel guard and the axis passing through the center of the wheel must not exceed 1.5 x the radius of the tire.

4. All trailers in category O3 and O4 must be fitted with rain flaps within the wheel guards of rear wheels. The width of the rain flap must not be less than the width of the wheel guard and the distance from the wheel's axle must not be more than 1.2 m. When the vehicle is unladen, the distance between the lower edge of the rain flap and ground must not be more than 1/4 of the distance mentioned above, unless otherwise required by the structure of the trailer and its suspension.

5. On category O3 and O4 trailers, rain flaps that comply with Council Directive 91/226/EEC are considered to meet the requirements set out in point 4 above.

https://truckmanualshub.com/

9.10 Fuel tank

1. Motor vehicle's fuel tank and its position in the vehicle must comply with directive 70/221/EEC, as amended with Commission Directive 97/19/EC, or with national regulations.

2. When the capacity of the fuel tank exceeds 800 liters, the provisions on the tanks for transport of dangerous goods are applied.

9.10.1 Fuel tank on trailer

A fuel tank with capacity of not more than 200 liters is allowed on trailer for a fuel-burning device, such as a refrigeration unit, located in the trailer.

Fitting a fuel tank on a dolly axle designed to be coupled to a semi-trailer is prohibited.

9.11 Load lashing

Load lashing equipment must comply with national regulations.

9.11.1 Lashing equipment

Fig. 964032

The combined rated strength of lashings preventing the forward movement of the load from both sides of the cargo space must not be less than the weight of load; for lashings preventing the sideward and rearward movement not less than 50% of the weight of load, unless the blocking of load and the friction between the load and the bottom of the cargo space allow lower lashing strength.

New lashing equipment must withstand a load that is two times the rated strength without breaking. For the metal components, the requirement is 1.4 times the rated strength.

The condition of lashing equipment must be checked at appropriate intervals. Using lashing equipment that is damaged, frayed or otherwise impaired due to wear and tear, or incorrectly repaired is strictly prohibited.

Information on rated strength and manufacturing date must be attached to the webbing of the lashing equipment.

9.11.2 Winch

The strength of winch must not be less than the lashing equipment used. When a manual force of 0.5 kN is applied to the winch, it must produce tensile strength equivalent to not less than 5% of the nominal strength of the lashing equipment.

Winch may be operated continuously by hydraulic or pneumatic pressure if the cab of the vehicle is fitted with device that warns the driver if hydraulic or pneumatic pressure drops too low for proper operation of the winch.

9.11.3 Lashing

Lashing must be secure and appropriate.

Lashing equipment preventing the forward movement of the load must be positioned as horizontal as possible and the angle between the lashing and horizontal level may not exceed 60° without a special reason.

Lashing equipment must not be against load's or vehicle's sharp edges. If required, lashing equipment must be appropriately protected.

Lashing equipment must be appropriately tensioned and the tension must be checked during transportation, if required. Breaking, damaging or loosening of a single lashing, bracket or other unit may not impair other lashing units attaching the load. **Winches for tensioning the lashings must be located in such a position that the width of the vehicle is not increased.**

9.11.4 Special provisions on lashing timber and containers

When timber or equivalent long items are transported, load must be lashed to the vehicle's chassis or bodywork with minimum of one lashing. When the nominal length of the items exceeds 3 m, two lashings are required. If the item or bundle of load is supported to vertical side poles, it must rest on not less than two poles of the same side.

A container that cannot be locked by a container lock must be lashed by not less than four lashings from container's upper corner attaching points and, if required, supported to the bodywork.