https://truckmanualshub.com/

质量安全

YUCHAI 玉柴机器

YC6A、YC6B、YC6J 工程用系列发动机

使用说明书

YC6A、YC6B、YC6J Series Construction Engine
Operation & Maintenance Manual

使用前请仔细阅读使用说明书
Please read the Manual carefully before using.

https://truckmanualshub.com/

广西玉柴机器股份有限公司

Guangxi YuChai Machinery Co., Ltd.

二 00 八年六月

June.2008

前　　言 Foreword

本说明书介绍了 YCA、YC6B、YC6J 工程用系列发动机的主要结构、技术参数、主要附件的技术规格与数据以及使用和维护方面的基本知识，并对一些常见故障及其排除方法作了初步的介绍。

This Instruction Manual introduces the YCA、YC6B、YC6J series construction engine about its structure and technical parameters, the technical specifications and data of its main accessories as well as the basics information on use and service. It also describes some common malfunctions and solutions.

为了使机器的优越性能得到更好的发挥，并保证机器的安全运行，请您在使用之前首先详细阅读本使用说明书，正确认识、了解与掌握 YCA、YC6B、YC6J 工程用系列发动机的使用和维护要求，并特别注意以下的“安全行车注意事项”。

Please read this manual carefully to understand and master the operation and maintenance requirements about YCA、YC6B、YC6J series construction engine prior to

https://truckmanualshub.com/

putting the machine into operation and pay your particular attention to the Precautions for Safe Operation described below in order to enable the machine to bring its superior performance into full play and ensure its safe operation.

随着社会不断发展和需要，发动机将不断优化和提高，并不断增加变型设计的产品，除特别重大的设计变型外，本说明书不再作更改，因此过了一定的时间后说明书的介绍可能与实际的发动机有一定的出入，请以实物为准，敬请广大用户加以注意和谅解。

With continuous development and demand of the society, the engine will be uninterruptedly optimized and improved and its modified products will also be continuously increased. Except for especially great modifications in the design this manual will not be altered again. Therefore, after a certain period, there will be some discrepancies between the description in the manual and the actual engine, to which kindly ask our customers to pay due attention.

本说明书只对基本型发动机详加说明，变型产品不作列举，请用户注意和谅解。

The manual gives a detailed description for the basic model engine only, and any modifications of it are not laid out to which we ask our customers to pay due attention and understand it well.

本说明书的解释权归玉柴。

YuChai reserves the explanation right of this manual.

安全行车注意事项! Precautions for Safe Operation!

1.润滑油压力感应塞、水温感应塞、润滑油压力过低报警器这些零件非常重要，凡有失灵者，须立即更换，以确保这些零件能正常工作。否则会造成因缺油烧坏曲轴或因缺水致使气缸盖过热而开裂。

Such parts as lubricating oil pressure sensing plug, water temperature sensing plug and alarm for too low lubricating oil pressure are very important. In case any failure, immediately replace it to ensure normal working of these parts, otherwise the crankshaft may be burned due to lack of the oil or the cylinder head may crack due to overheating resulted from lack of the water.

2.凡在保养过程中更换润滑油滤清器时，应先将新润滑油滤清器灌满润滑油再安装，而且安装完成后，必须起动发动机，并使其怠速运转，然后下车仔细观察滤清器有无渗漏现象，若有则须及时排除，否则会导致缺油烧坏曲轴、轴瓦等运动副零部件。

After cleaning the oil filter or during the process of replacing filter gauze, reinstall the filter

https://truckmanualshub.com/

only after refilling oil fully, and start the engine on idle running immediately after reinstallation; meantime, check if there is any sign of leakage to any filter. Correct the leaking filters or it may easily lead to crankshaft burn caused by oil shortage.

3.每次起动发动机，须怠速运转 3～5 分钟，待各种仪表正常工作后，方可起步运行。不允许冷车突然加大油门，否则会损坏各种仪表及其相应零件、加速发动机运动件的磨损及损坏增压器，从而缩短发动机的使用寿命。

Each time you start the vehicle, first start the engine on idle running for 3 to 5 minutes till the engine warms up and all gauges working in normal function, then start to move. Never put the vehicle to sudden acceleration from cold-start. For any dramatic speed-up on cold status will damage the instruments and their corresponding parts and components and accelerate the wear and tear of engine's kinetic parts, consequently it will shorten the engine's life cycle.

4. 不允许高速、大负荷运转状态下突然熄火停机，怠速运转 3～5 分钟后再停机。否则会损坏发动机的运动件，从而缩短发动机的使用寿命。

Avoid any sudden stall and stop at high speed & high load status, the appropriate way is to gear down gradually and stop the vehicle after 3～5 minutes of engine idle running. Otherwise it will damage turbocharger and other moving parts and shorten engine service life consequently.

5.应经常检查进气管路是否漏气、空气滤清器是否堵塞，若有以上现象则必须及时维护，否则会对发动机造成损坏；同时发动机功率会下降，整车只能以较低的车速行驶，应及时维修。

Check often for the leakage and blockage of the intake piping and air cleaner to make them work normally. Do make adjustment or maintenance when there is leakage in the intake system and blockage in air cleaner, for they will damage the turbo-charger and cause the cylinder scoring, and will decrease the engine's power at the same time , therefore maintain timely as the vehicle can be driven at pretty low speed .

6.使用发动机时要一档起步，否则发动机可能会熄火。

Start the engine on first gear, otherwise it may stop.

7.凡发现发动机工作不正常时，应及时处理。

Whenever the engine works abnormally, it shall be dealt with care.

8.发动机运转时严禁靠近旋转部件，严禁直接触摸发动机的高温部件（例如排气管等）；停机后不要立即打开水箱盖以免烫伤。

Don't approach rotating components and directly touch the high temperature parts (such as exhaust pipe and turbocharger etc.) of the engine when you check it, don't open the water tank cover immediately just after stop, for this may cause physical burn.

9.凡新机运行 50～60 小时时，须及时通过玉柴的委托技术服务站进行走合保养，否则不予实行发动机的保修。

Send the engine to a consignment technical service station of YuChai for run-in service

https://truckmanualshub.com/

when it runs 50-60hour, or you will waive the warranty for this engine.

10.冷却系统必须使用防冻液，否则由此引起的故障，不予实行免费保修。

Anti-freeze coolant shall be used in the cooling system; otherwise the consequent failure will not be included in the free warranty

11.严禁用户擅自拔插各接插件。

Customer is prohibited to insert or pull out the connectors.

12.严禁以水或任何清洗液冲洗发动机。

Water and any other cleaning agent are prohibited to use for washing and cleaning the engine.

13 按规定放燃油预滤器积水、更换预滤器滤芯总成和精滤器滤芯总成。

Follow the instruction to drain water of fuel pre-filter, replace filter element assy. of pre-filter and filter element assy. of precision fuel filter.

14.拆卸蓄电池和断开蓄电池主开关之前，确认点火开关已关闭。

Make sure the ignition switch is turned off before dismounting and cutting off the battery.

15. 根据包装箱外的注意事项进行吊装、运输，贮存发动机的环境应通风、干燥、清洁、无腐蚀性物质，发动机有效封存期为见发动机包装箱上注明。

Hoist and transport the engine in accordance with the precautions described on the outside the packaging case. The place for storage of the engine shall be well-ventilated, dry, clean and free of corrosive substances. See the mark on the package for preservation of the engine.

16. 发动机的标牌含有发动机的基本信息包括:标定功率、标定转速、系列号、生产日期、执行标准等。发动机的标牌位于缸盖罩顶面。

The basic information of the engine is on the nameplate, including: rated power, rated speed, series number, production date and implement standard. The nameplate of the engine is located at the top of the cylinder cover housing.

17. 发动机型号和出厂编号还打印在气缸体下缘中间的平台上。

The engine type and ex-work number are printed on the platform in the middle of the cylinder lower margin.

18.安全警告包括：敬告用户、曲轴转向、转动危险及高温危险，分别贴在发动机的缸盖罩、离合器壳、缸盖罩靠排气管侧。

The safety warnings include user’s precaution, crankshaft steering/rotating danger and high temperature danger sticking on engine cover, clutch housing and cover on exhaust pipe respectively

https://truckmanualshub.com/

19. 包装箱内随带下列随机文件（使用说明书、随机备件清单、随机工具清单、合格证、装箱清单），用户开箱后应及时清点。

Random documents are included in the package: user's manual, parts list, tool list, certification and packing list. Please check after opening.

目　录 Content

1 概述 General introduction 18

1.1 产品特点 Product Feature 18

1.2 型号的组成及其代表意义 Style number composition and its specific meaning 18

1.3 主要用途及适用范围 Main application scope 19

2 技术特性 Technical specification 20

2.1 主要性能（基本型）Main specification (basic) 20

2.2 主要技术参数 Main technical parameter 35

3 发动机主要结构及工作原理 39

Primary Structures of Engine and working principle 39

3.1 气缸体 Cylinder Block 39

3.2 气缸盖与配气机构 Cylinder Head and Valve Train 40

3.3 曲柄连杆机构 Crank-connecting Rod Mechanism 46

3.4 燃油系统 fuel system 50

3.5 润滑系统 Lubrication System 58

3.6 冷却系统 Cooling System 62

3.7 启动装置、电气系统与仪表 Start device, electrical system and instrument 66

3.8 增压器 Turbocharger 69

3.9 转向泵 Steering pump 72

4 发动机的使用和维护保养 75

Operation and maintenance of engine 75

4.1 发动机的使用 Operation of engine 75

https://truckmanualshub.com/

4.2 发动机的维护保养 Engine Maintenance 79

5 发动机常见故障及排除方法.....82

Frequently-possible Troubles and Their Solution.....82

5.1 发动机不能起动 Engine Fails to Start 82

5.2 发动机功率不足 Insufficient power of Engine.....84

5.3 发动机运转时有不正常的杂声 86

Abnormal Noise during Running of Engine 86

5.4 排气冒黑烟 Black Smoke from Exhaust Manifold 87

5.5 排气冒白烟、蓝烟.....88

White smoke and Blue Smoke from Exhaust Manifold.....88

5.6 润滑油压力异常 Abnormal lubricant pressure.....88

5.7 润滑油消耗高、消耗量大 90

Large Consumption of Lubricating Oil 90

5.8 出水温度过高 Too high water outlet temperature.....90

5.9 增压器常见故障及排除方法 Malfunction and Solution of Turbocharger 91

5.10 离合器常见故障及排除方法 Malfunction and Solution of Clutch 92

5.11 发动机自行熄火 Shut-off automatically 92

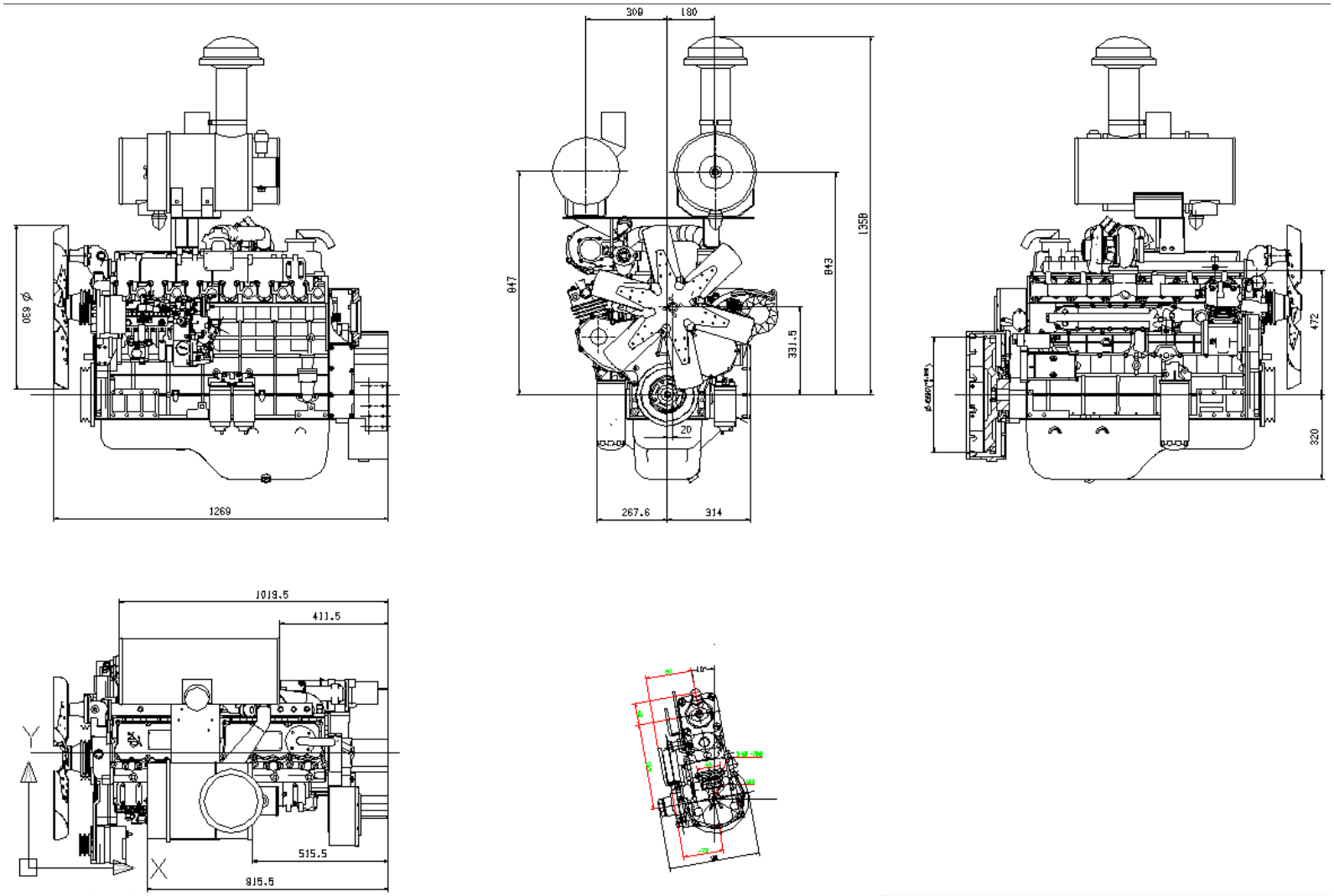

图 1 YC6A 系列柴油机外形安装图（实际跟配套布置会有小差距）

Fig 1 Assembly Layout for YC6A Diesel Engine (may differ from the practical configuration)

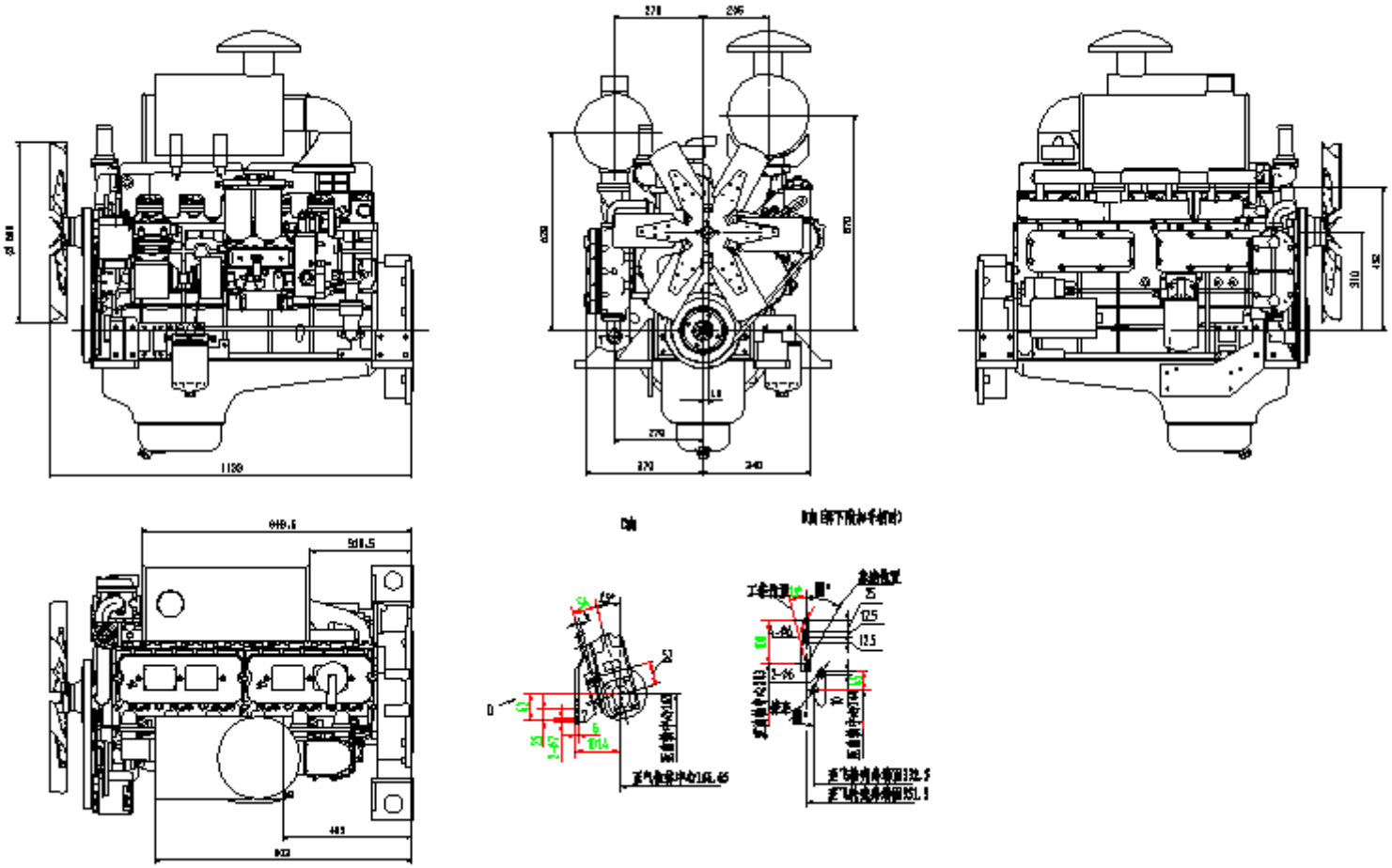

图 2 YC6B 系列柴油机（非增压）外形安装图（实际跟配套布置会有小差距）

Fig 2 Assembly Layout for YC6B Diesel Engine (non-Turbocharged) (may differ from the practical configuration)

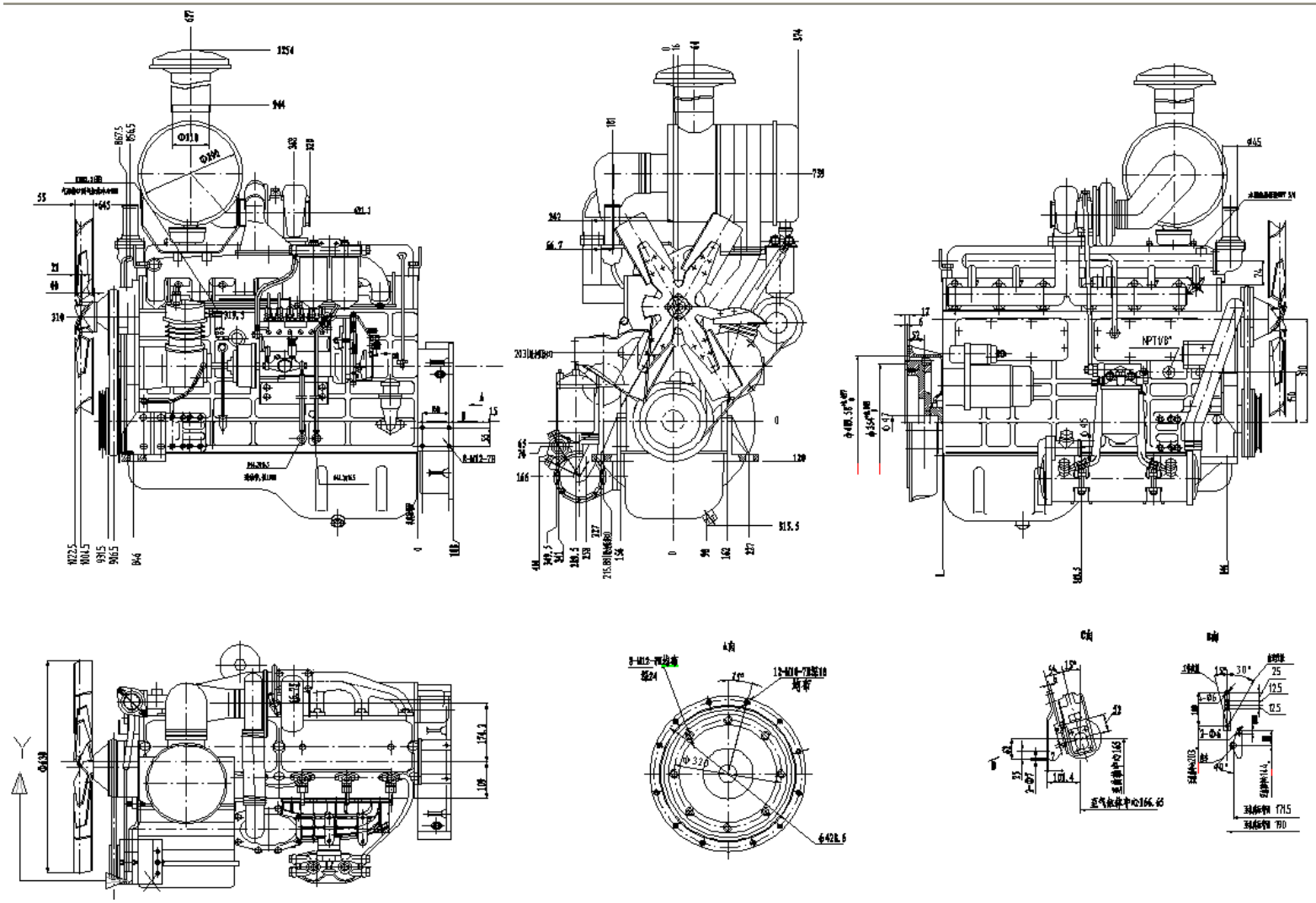

图 3 YC6B 系列柴油机（增压）外形安装图（实际跟配套布置会有小差距）

Fig 3 Assembly Layout for YC6B Diesel Engine (Turbocharged) (may differ from the practical configuration)

https://truckmanualshub.com/

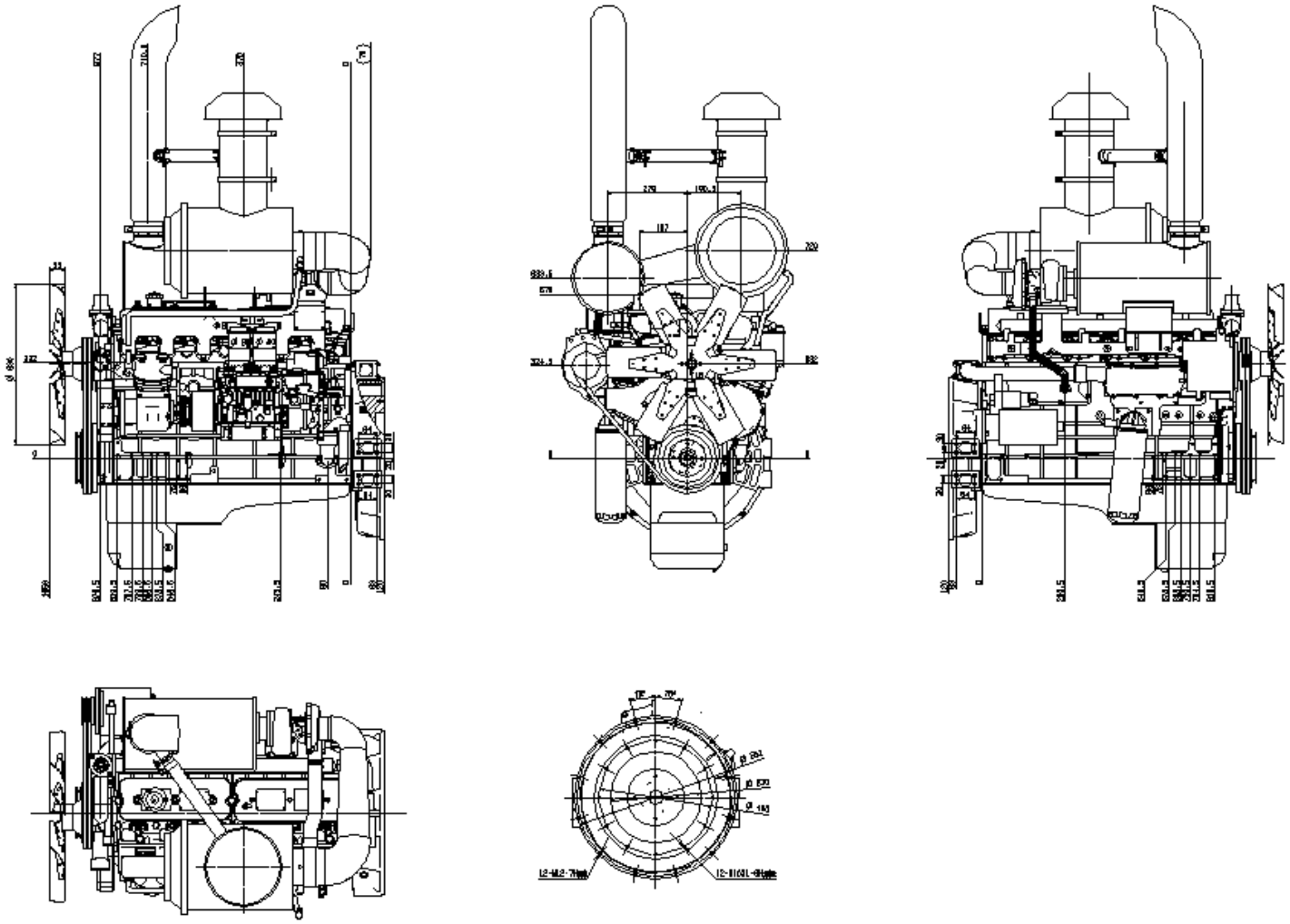

图 4 YC6J 系列柴油机外形安装图（实际跟配套布置会有小差距）

https://truckmanualshub.com/

Fig 4 Assembly Layout for YC6J Diesel Engine (may differ from the practical configuration)

https://truckmanualshub.com/

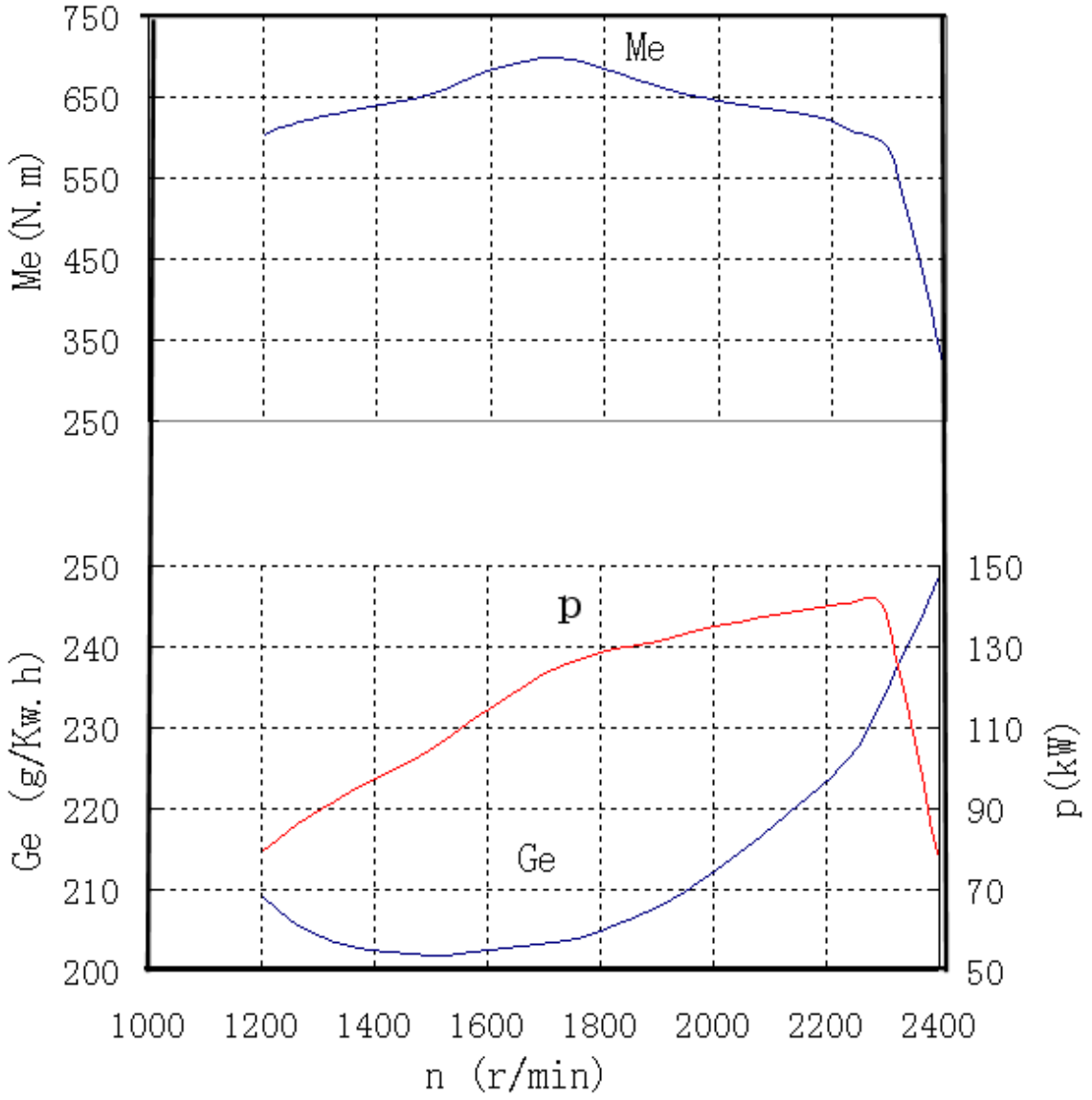

YC6A 工程用系列发动机（A8700）外特性曲线图

YC6A series construction engine (A8700) external characteristic curve

https://truckmanualshub.com/

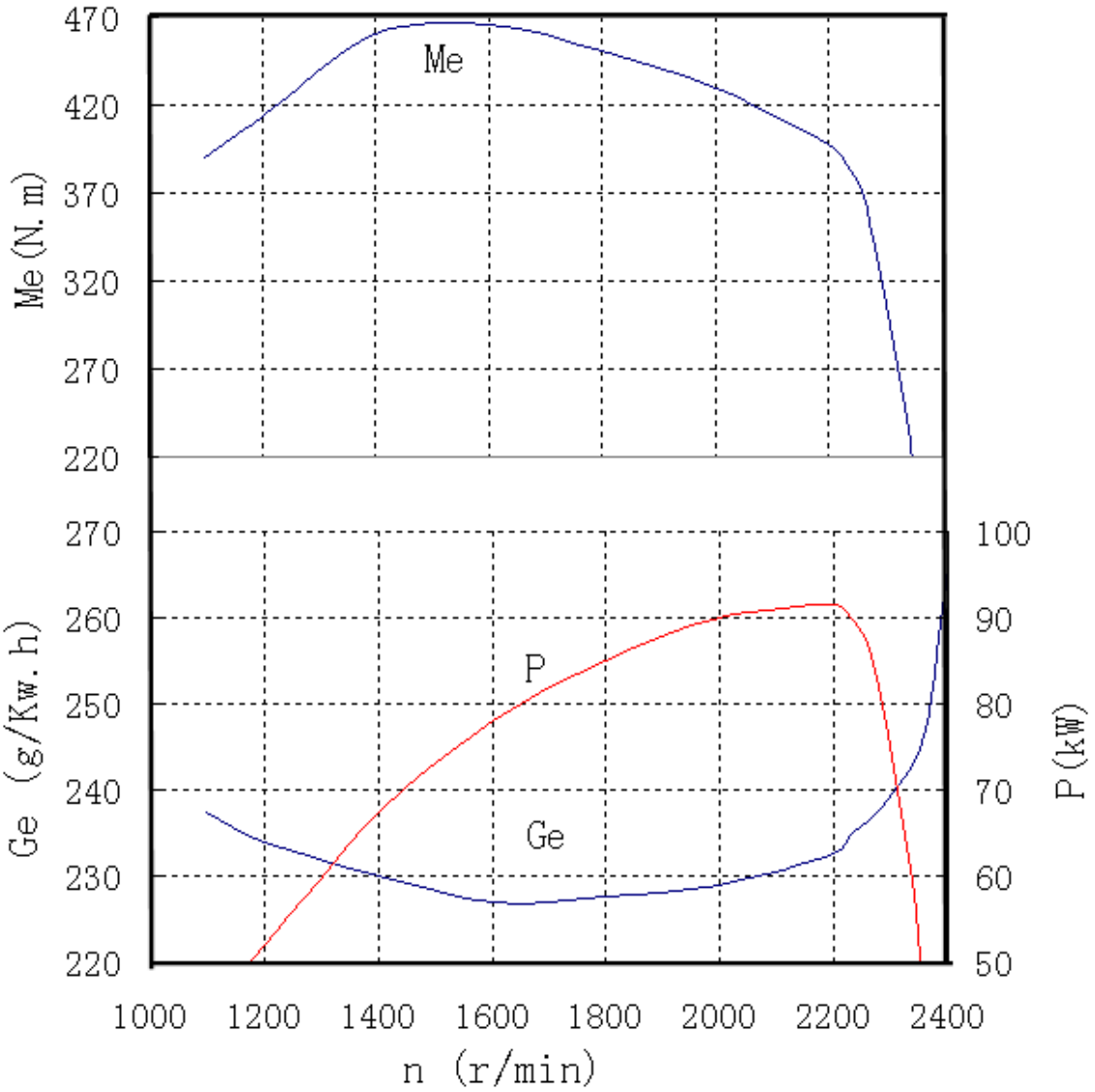

YC6B 工程用系列非增压发动机（B8C00、B9C00）外特性曲线图

YC6B series construction non-Turbocharged engine （B8C00、B9C00） external characteristic curve

https://truckmanualshub.com/

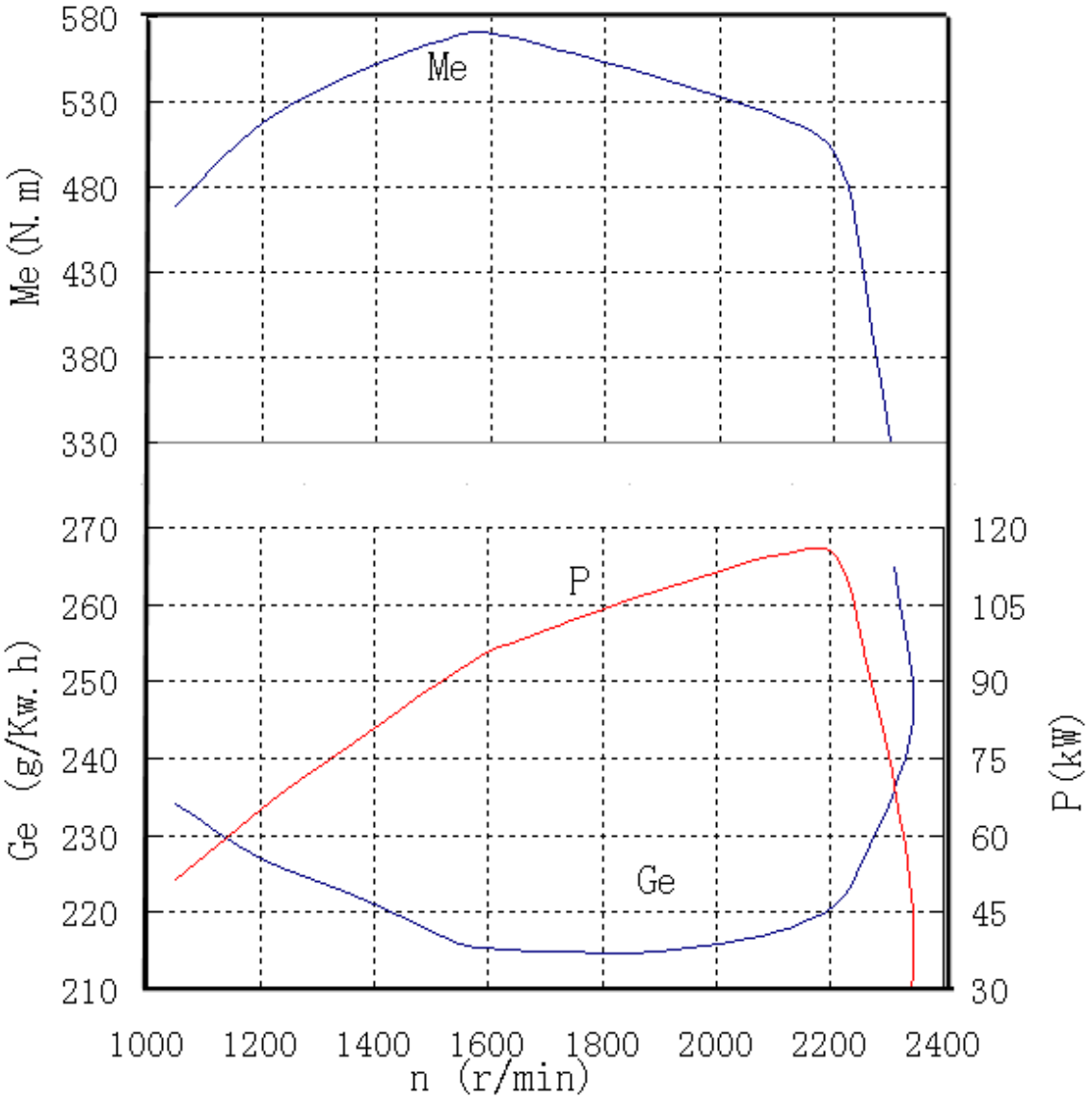

YC6B 工程用系列增压发动机（B7700）外特性曲线图

YC6B series construction Turbocharged engine （B7700）external characteristic curve

https://truckmanualshub.com/

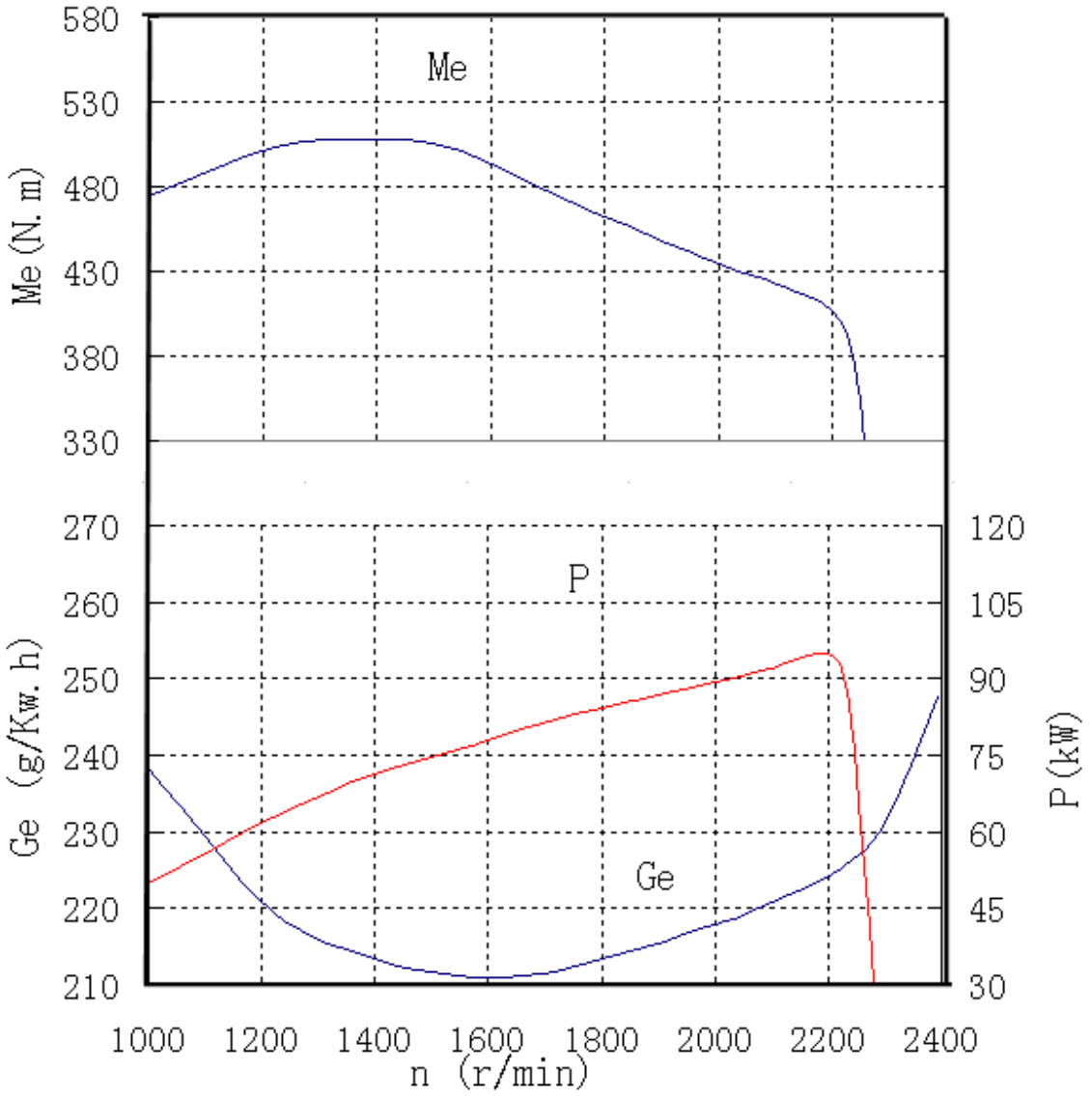

YC6J 工程用系列发动机（**J8000**）外特性曲线图

YC6J series construction engine (J8000) external characteristic curve

https://truckmanualshub.com/

1 概述 General introduction

1.1 产品特点 Product Feature

YC6A、YC6B、YC6J 系列是由玉柴自主开发而成的发动机,发动机有可靠、省油，动力性好等优点,是一种理想的配套动力。

YC6A、YC6B、YC6J series engines are developed by Yuchai with advantages of reliability, fuel consumption saving and strong power. It is ideal power for construction.

1.2 型号的组成及其代表意义

Model number composition and its specific meaning

产品型号由阿拉伯数字和大写英文字母表示，其组成结构如下：

The product style number is consisted of Arabic numbers and capital English letters, and the specific meaning is as follows:

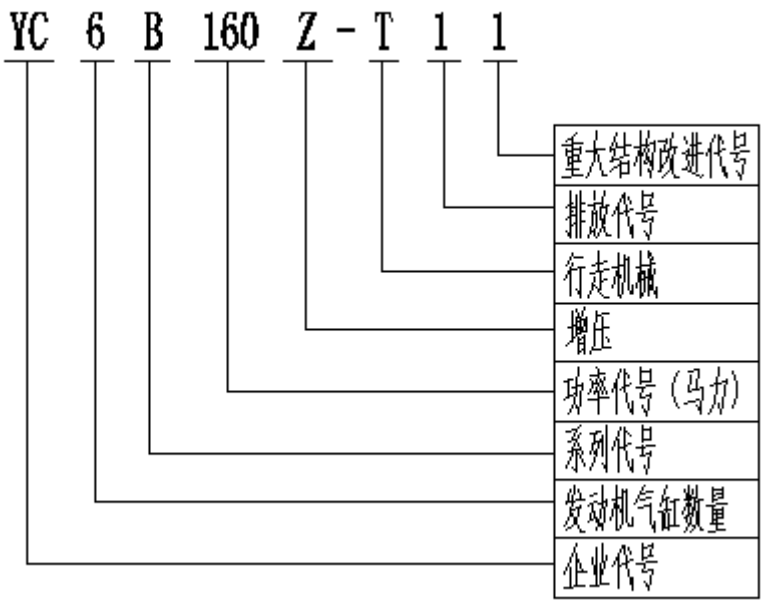

https://truckmanualshub.com/

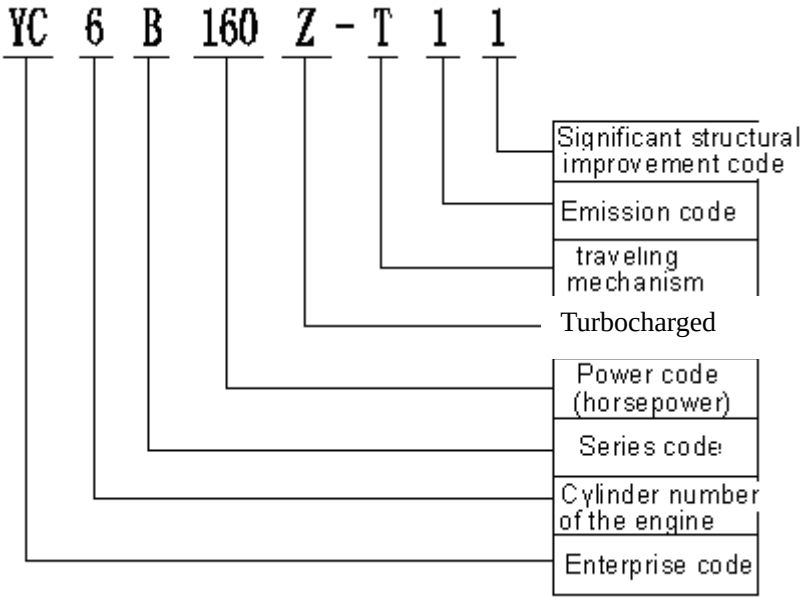

1.3 主要用途及适用范围 Main application scope

发动机适用于环境温度为-15℃～40℃、海拔高度 2000 米以下的环境条件下能正常工作，禁止在水浸、火灾环境下工作。在环境温度低于-15℃或高于 40℃或海拔高度超过 2500 米时，用户应向玉柴技术、服务部门咨询，采取有效措施或使用相应专用发动机以保证发动机能正常工作。

The engine could work normally under temperature of -15℃～40℃ and at the height above sea-level of lower than 2000 m. it is forbidden to work in the water or in the fire. When the engine needs to work at temperature lower than -15℃ or higher than 40℃, at the at the height above sea-level of higher than 2500 m, the user should consults YuChai Technical Dept. and Service Dept. to adopt effective measure or replace special engine to ensure the normal working.

2 技术特性 Technical specification

2.1 主要性能（基本型）Main specification (basic)

表 1－1　YC6A 系列发动机主要技术参数

Table 1-1 Main technical parameters of YC6A engine

序号	名　　称	技　术　规　格 Technical specification

https://truckmanualshub.com/

No.	Name	A8900	A8700
1	型 号Model	YC6A180Z-T11	YC6A190Z-T10
2	型 式 Type	立式、直列、水冷、四冲程 Vertical in-line, water-cooling, 4-stroke	
3	进气方式 Air intake way	增压 Turbocharged	
4	燃烧室形式 Combustion type	直喷式缩口ω燃烧室 Direct injection tube sinking ω combustion chamber	
5	气缸数Cylinder number	6	
6	气缸直径 mm Cylinder diameter	108	
7	活塞行程 mm Piston stroke (mm)	132	
8	活塞总排量 L Total piston displacement	7.252	
9	压缩比Compression ratio	17:1	
10	气缸套型式 Cylinder sleeve type	湿 式 Wet	
11	标定功率 kW Rated power (kW)	130	140
12	标定转速 r/min Rated rotation speed(r/min)	2300	2300
13	最大扭矩 N·m Max. torque(N·m)	670	690
14	最大扭矩转速 r/min Speed at max torque (r/min)	1500～1700	1500～1800

https://truckmanualshub.com/

15	标定工况燃油消耗率 g/kW·h Fuel consumption rate at rated working condition	≤240	
16	最大扭矩工况燃油消耗率 Fuel consumption rate at max torque g/kW·h	≤225	
序号 No.	名称 Name	技 术 规 格Technical specification	
		A8900	A8700
17	柴油牌号 Diesel oil brand	夏季：GB 252-2000优级品或一级品0号、10号轻柴油机, Summer: GB 252-2000 top grade or first rater 0 #, 10 # light diesel oil 冬季：GB 252-2000优级品或一级品0号、-10号、-20号、-35号轻柴油。 Winter: GB 252-2000 top grade or first rater 0 #,-10 #, -20 #, -35 # light diesel oil	
18	最高空载转速 Max. rotation speed with no load r/min	≤2530	≤2540
19	最低空载转速 Min. rotation speed with no load r/min	700～750	
20	工作次序 Working order	1—5—3—6—2—4	
21	机油燃油消耗比 Oil fuel consumption ratio ％	≤0.5	

https://truckmanualshub.com/

22	机油牌号 Oil brand	夏季：CD40、CD15W—40，冬季： CD10W—30或与环境相适应的不低于GB 11122-2006中CD级的其他柴油机油 Summer: CD40、CD15W—40, Winter: CD10W—30 or other diesel oil with grade not below CD grade of GB 11122-2006 corresponding with the environment
23	曲轴旋转方向(面向功率输出端) Crankshaft rotation direction (face to power output end)	逆时针 Anticlockwise
24	供油提前角(上止点前曲轴转角) °CA Fuel supply advance angle (Top dead point front crankshaft corner) °CA	12±1
25	喷油器型号 Fuel injector type	KBEL-P023A
26	油嘴型号 Fuel nozzle type	DSLA147P008
27	喷油器开启压力 Fuel injector opening pressure MPa	25～26
28	排气烟度 FSN Exhaust smoke level (FSN)	≤3.0
29	噪声限值 LwdB(A) Limit of noise LwdB(A)	≤115
30	压缩压力 Compressing pressure (n≥200r/min) MPa	≥2.5

https://truckmanualshub.com/

31	润滑方式 Lubricating method	压力润滑与飞溅润滑复合式 Pressure lubricating and splattering lubricating combined
32	起动方式 Starting method	电起动 Electrical starting
33	机油容量 L Capacity of engine oil (L)	17~20
34	柴油机净质量 Diesel engine net weight kg	700
35	外形尺寸 长×宽×高 mm Overall dimension (length × width× height) (mm)	1234×800×1100

表1－2 YC6B（非增压）系列发动机主要技术参数

Table 1-2 YC6B (non-Turbocharged) series engine main technical parameter

序号 No.	名 称 Name	技 术 规 格 Technical specification				
		B8W00	B9C00	B9D00	B8Q00	B8C00
1	型 号Model	YC6B120-T1	YC6B125-T1	YC6B125-T1	YC6B105-K	YC6B125-K
2	型 式Type	立式、直列、水冷、四冲程 Vertical in-line, water-cooling, 4-stroke				
3	进气方式 Air intake way	自然吸气 Natural air intake 增压Turbocharged				
4	燃烧室形式 Type of combustion chamber	直喷式缩口ω燃烧室 Direct injection type tube sinking ω combustion chamber				

https://truckmanualshub.com/

5	气缸数 Cylinder NO.	6				
6	气缸直径 mm Cylinder diameter (mm)	108				
7	活塞行程 mm Piston stroke (mm)	125				
8	活塞总排量 L Total piston displacement	6.871				
9	压缩比 Compression ratio	17.5:1				
10	气缸套型式 Cylinder sleeve type	湿 式 Wet				
11	标定功率 kW Rated power (kW)	85	92	92	75	92
12	标定转速 r/min Rated rotation speed(r/min)	2000	2200	2300	1700	2200
13	最大扭矩 N·m Max. torque(N·m)	463		450	460	463
14	最大扭矩转速 r/min Speed at max torque (r/min)	1400～1600			1300～1400	1400～1600
15	标定工况燃油消耗率 g/kW·h Fuel consumption rate at rated working condition	≤240				

https://truckmanualshub.com/

16	最大扭矩工况燃油消耗率 Fuel consumption rate at max torque g/kW·h	≤235				
17	柴油牌号 Diesel oil brand	夏季：GB 252-2000优级品或一级品0号、10号轻柴油机, Summer: GB 252-2000 top grade or firstrater 0 #, 10 # light diesel oil 冬季：GB 252-2000优级品或一级品0号、-10号、-20号、-35号轻柴油。 Winter: GB 252-2000 top grade or firstrater 0 #,-10 #, -20 #, -35 # light diesel oil				
18	最高空载转速 Max. rotation speed with no load r/min	≤2200	2420～2464	≤2530	1870±20	2420～2464
19	最低空载转速 Min. rotation speed with no load r/min	700～750				
20	工作次序 Working order	1—5—3—6—2—4				

表 1-2（续）Table 1-2 (continued)

序号 No.	名　　称 Name	技　术　规　格 Technical specification				
		B8W00	B9C00	B9D00	B8Q00	B8C00
21	机油燃油消耗比 Oil fuel consumption ratio ％	≤0.5				

https://truckmanualshub.com/

22	机油牌号 Oil brand	夏季：CD40、CD15W—40，冬季： CD10W—30或与环境相适应的不低于GB 11122-2006中CD级的其他柴油机油 Summer: CD40、CD15W—40, Winter: CD10W—30 or other diesel oil with grade not below CD grade of GB 11122-2006 corresponding with the environment
23	曲轴旋转方向(面向功率输出端) Crankshaft rotation direction (face to power output end)	逆时针 Anticlockwise
24	供油提前角(上止点前曲轴转角) °CA Fuel supply advance angle (Top dead point front crankshaft corner) °CA	13±2
25	喷油器型号 Fuel injector type	CKBL68S001/PF68S35
26	油嘴型号 Fuel nozzle type	CDLLA147S071/DSLA147S071
27	喷油器开启压力 Fuel injector opening pressure MPa	23～24
28	排气烟度 FSN Exhaust smoke level (FSN)	≤3.5

https://truckmanualshub.com/

29	噪声限值 LwdB(A) Limit of noise LwdB(A)	≤115
30	压缩压力 Compressing pressure (n≥200r/min) MPa	≥2.5
31	润滑方式 Lubricating method	压力润滑与飞溅润滑复合式 Pressure lubricating and splattering lubricating combined
32	起动方式 Starting method	电起动 Electrical starting
33	机油容量 L Capacity of engine oil (L)	15~18
34	柴油机净质量 Diesel engine net weight kg	650
35	外形尺寸 长×宽×高 mm Overall dimension (length × width× height) (mm)	1133×725×889

表1－3 YC6B（增压）系列发动机主要技术参数

Table 1-3 YC6B (Turbocharged) series engine main technical parameters

序号 No.	名 称 Name	技 术 规 格 Technical specification			
		B7700	B9A00	B9F00	B9K00
1	型 号Model	YC6B160Z-	YC6B140Z-T1	YC6B150Z-T1	YC6B150Z-T1
2	型 式Type	立式、直列、水冷、四冲程 Vertical in-line, water-cooling, 4-stroke			
3	进气方式 Air intake way	增压 Turbocharged			

https://truckmanualshub.com/

4	燃烧室形式Type of combustion chamber	直喷式缩口ω燃烧室Direct injection type tube sinking ω combustion chamber			
5	气缸数 Cylinder NO.	6			
6	气缸直径 mm Cylinder diameter (mm)	108			
7	活塞行程 mm Piston stroke (mm)	125			
8	活塞总排量 L Total piston displacement	6.871			
9	压缩比 Compression ratio	17.5:1			
10	气缸套型式 Cylinder sleeve	湿 式 Wet			
11	标定功率 kW Rated power (kW)	115	102	110	110
12	标定转速 r/min Rated rotation speed(r/min)	2200	2000	2000	2100
13	最大扭矩 N·m Max. torque(N·m)	560	550	550	550
14	最大扭矩转速 r/min Speed at max torque (r/min)	1400～1600	1400～1600	1400～1600	1400～1600

https://truckmanualshub.com/

15	标定工况燃油消耗率 g/kW·h Fuel consumption rate at rated working condition	≤230			
16	最大扭矩工况燃油消耗率 g/kW·h Fuel consumption rate at max torque g/kW·h	≤225			
17	柴油牌号Diesel oil brand	夏季：GB 252-2000优级品或一级品0号、10号轻柴油机, Summer: GB 252-2000 top grade or firstrater 0 #, 10 # light diesel oil 冬季：GB 252-2000优级品或一级品0号、-10号、-20号、-35号轻柴油。 Winter: GB 252-2000 top grade or firstrater 0 #,-10 #, -20 #, -35 # light diesel oil			
18	最高空载转速 Max. rotation speed with no load r/min r/min	≤2420	≤2160	≤2200	≤2310
19	最低空载转速 Min. rotation speed with no load r/min	700～750			
20	工作次序 Working order	1—5—3—6—2—4			

表 1-3（续）Table 1-3(continued)

序号 No.	名　　称 Name	技　术　规　格Technical specification			
		B7700	B9A00	B9F00	B9K00
21	机油燃油消耗比 Oil fuel consumption ratio ％	≤0.5			

https://truckmanualshub.com/

22	机油牌号 Oil brand	夏季：CD40、CD15W—40，冬季： CD10W—30或与环境相适应的不低于GB 11122-2006中CD级的其他柴油机油Summer: CD40、CD15W—40, Winter: CD10W—30 or other diesel oil with grade not below CD grade of GB 11122-2006 corresponding with the
23	曲轴旋转方向(面向功率输出端) Crankshaft rotation direction (face to power output end)	逆时针Anticlockwise
24	供油提前角(上止点前曲轴转角) °CA Fuel supply advance angle (Top dead point front crankshaft corner) °CA	13±2
25`	喷油器型号Fuel injector type	CKBL68S001/PF68S35
26	油嘴型号Fuel nozzle type	CDLLA147S071/DSLA147S071
27	喷油器开启压力 Fuel injector opening pressure MPa	23～24
28	排气烟度 FSN Exhaust smoke level (FSN)	≤3.5
29	噪声限值 LwdB(A) Limit of noise LwdB(A)	≤115
30	压缩压力 Compressing pressure (n≥200r/min) MPa	≥2.5

https://truckmanualshub.com/

31	润滑方式 Lubricating method	压力润滑与飞溅润滑复合式Pressure lubricating and splattering lubricating combined
32	起动方式 Starting method	电起动 Electrical starting
33	机油容量 L Capacity of engine oil (L)	17~19
34	柴油机净质量 Diesel engine net weight kg	650
35	外形尺寸 长×宽×高 mm Overall dimension (length × width× height) (mm)	1133×725×889

表1－4 YC6J系列发动机主要技术参数

Table 1-4 YC6J series engine main technical parameter

序号 No.	名 称 Name	技 术 规 格Technical specification			
		J8400	J8500	J8000	J7M00
1	型 号Model	YC6J120-T1	YC6J120-T10	YC6J125Z-T2	YC6J145Z-T2
2	型 式Type	立式、直列、水冷、四冲程 Vertical in-line, water-cooling, 4-stroke			
3	进气方式 Air intake way	自然吸气Natural air intake			增压 Turbocharged
4	燃烧室形式 Type of combustion chamber	直喷式缩口ω燃烧室 Direct injection type tube sinking ω combustion chamber			
5	气缸数Cylinder NO.	6			

https://truckmanualshub.com/

6	气缸直径 mm Cylinder diameter (mm)	108			
7	活塞行程 mm Piston stroke (mm)	125			
8	活塞总排量 L Total piston displacement	6.494			
9	压缩比 Compression ratio	16.5:1			
10	气缸套型式 Cylinder sleeve	湿 式 Wet			
11	标定功率 kW Rated power (kW)	85	85	92	105
12	标定转速 r/min Rated rotation speed(r/min)	2200	2400	2200	2200
13	最大扭矩 N·m Max. torque(N·m)	≥405	390	500	550
14	最大扭矩转速r/min Speed at max torque (r/min)	1400～1600	1500～1700	1400～1600	1400～1600
15	标定工况燃油消耗率 g/kW·h Fuel consumption rate at rated working condition	≤245		≤230	
16	最大扭矩工况燃油消耗率 Fuel consumption rate at max torque g/kW·h	≤235		≤210	

https://truckmanualshub.com/

17	柴油牌号Diesel oil brand	夏季：GB 252-2000优级品或一级品0号、10号轻柴油机, Summer: GB 252-2000 top grade or firstrater 0 #, 10 # light diesel oil 冬季：GB 252-2000优级品或一级品0号、-10号、-20号、-35号轻柴油。 Winter: GB 252-2000 top grade or firstrater 0 #,-10 #, -20 #, -35 # light diesel oil			
18	最高空载转速 Max. rotation speed with no load r/min	≤2420	≤2620	≤2420	≤2420
19	最低空载转速 Min. rotation speed	700～750			
20	工作次序Working order	1—5—3—6—2—4			

表 1-4（续）Table 1-4(continued)

序号 No.	名　　称 Name	技　术　规　格 Technical specification			
		J8400	J8500	J8000	J7M00
21	机油燃油消耗比 Oil fuel consumption ratio％	≤0.5			
22	机油牌号Oil brand	夏季：CD40、CD15W—40，冬季： CD10W—30或与环境相适应的不低于GB 11122-2006中CD级的其他柴油机油 Summer: CD40、CD15W—40, Winter: CD10W—30 or other diesel oil with grade not below CD grade of GB 11122-2006 corresponding with the environment			
23	曲轴旋转方向(面向功率输出端) Crankshaft rotation direction (face to power output end)	逆时针 Anticlockwise			

https://truckmanualshub.com/

24	供油提前角(上止点前曲轴转角) Fuel supply advance angle (Top dead point front crankshaft corner)°CA	16±2
25	喷油器型号 Fuel injector type	CKBL68S001/PF68S35
26	油嘴型号Fuel nozzle type	CDLLA147S071/DSLA147S071
27	喷油器开启压力 Fuel injector opening pressure MPa	23～24
28	排气烟度 FSN Exhaust smoke level (FSN)	≤3.5
29	噪声限值 LwdB(A) Limit of noise LwdB(A)	≤115
30	压缩压力 Compressing pressure (n≥200r/min)	≥2.5
31	润滑方式 Lubricating method	压力润滑与飞溅润滑复合式 Pressure lubricating and splattering lubricating combined
32	起动方式 Starting method	电起动 Electrical starting
33	机油容量 L Capacity of engine oil (L)	17~19
34	柴油机净质量 Diesel engine net weight kg	650

https://truckmanualshub.com/

35	外形尺寸　　长×宽×高　　mm Overall dimension (length × width× height) (mm)	1137×800×1473

2.2 主要技术参数 Main technical parameter

表 1－5 YC6A、YC6B、YC6J 系列发动机主要零件配合间隙及磨损极限

Table 1-5 YC6A、YC6B、YC6J series engine main parts fitting clearance and wearing limit

序号 NO	配合部位 Name & Fitting Position	图纸尺寸（mm） Drawing dimension	配合性质 Fitting type	配合公差（mm） Fitting clearance interference
1	排气门座孔/排气门座外径 Exhaust valve seating hole/ Exhaust valve seating outer diameter	$\phi 40.5_{0}^{+0.025}/\phi 40.5_{+0.097}^{+0.122}$	过　盈 Interference	0.072～0.122
2	进气门座孔/进气门座外径 Intake valve seating hole/ Intake valve seating **outer diameter**	$\phi 48_{0}^{+0.025}/\phi 48_{+0.097}^{+0.122}$	过　盈 Interference	0.072～0.122
3	缸盖导管孔径/气门导杆外径 Cylinder cover canal hole diameter / valve guide lever outer diameter	$\phi 16_{0}^{+0.018}/\phi 16_{+0.028}^{+0.046}$	过　盈 Interference	0.010～0.046
4	气门导管孔径/排气门杆直径 Valve pipe hole diameter /exhaust valve diameter	$\phi 9.5_{0}^{-0.022}/\phi 9.5_{-0.062}^{-0.040}$	径向间隙 Radical clearance	0.040～0.084
5	气门导管孔径/进气门杆直径 Valve pipe hole diameter /intake valve diameter	$\phi 9.5_{0}^{+0.022}/\phi 9.5_{-0.047}^{-0.025}$	径向间隙 Radical clearance	0.025～0.069
6	气门下沉深度 Valve submersion depth			0.8～1.2
7	气门摇臂孔径/气门摇臂轴 Valve Rocker arm shaft seat hole diameter /rocker arm shaft	$\phi 25_{0}^{-0.021}/\phi 25_{-0.041}^{-0.020}$	径向间隙 Radical clearance	0.020～0.062
8	气门挺柱孔径/气门挺柱 Valve tappet hole/ Valve tappet	$\phi 28_{0}^{+0.052}/\phi 28_{-0.041}^{-0.020}$	径向间隙 Radical clearance	0.020～0.093
9	凸轮轴衬套孔径/凸轮轴颈	$\phi 55.5_{0}^{+0.03}/\phi 55.5_{-0.079}^{-0.060}$	径向间隙 Radical	0.060～0.109

https://truckmanualshub.com/

		Camshaft bushing hole diameter / Camshaft journal		clearance	
10		惰齿轮衬套孔径/惰齿轮轴 Idler gear bushing hole diameter / idler gear shaft	$\phi 30^{+0.025}_{0}/\phi 30^{-0.020}_{-0.041}$	径向间隙 Radical clearance	0.020～0.066
11		正时惰齿轮厚/惰轮轴高、 Timing idler gear thick/ idler gear shaft high	$\phi 28^{0}_{-0.08}/\phi 28^{+0.17}_{+0.07}$	轴向间隙 Axial clearance	0.07～0.025
12	YC6A系列 YC6A series	活塞环槽高/第一道气环高 Piston ring groove height/First piston ring height	$2.695\pm0.015/2.605^{-0.01}_{-0.03}$	轴向间隙 Axial clearance	0.085～0.135
13		活塞环槽高/第二道气环高 Piston ring groove height/Second piston ring height	$2.5^{+0.10}_{+0.08}/2.5^{-0.010}_{-0.025}$	轴向间隙 Axial clearance	0.090～0.125
14		活塞环槽高/油环高 Piston ring groove height/oil ring height	$3.5^{+0.04}_{+0.02}/3.5^{0}_{-0.02}$	轴向间隙 Axial clearance	0.020～0.060
15		活塞环压入Φ108.00内径量规内检查 Piston ring opening clearance Φ108.00 after pressed into measure gauge check	第一道气环 First gas ring 第二道气环 Second gas ring 油环 Oil ring	闭口间隙 Close clearance	0.45～0.60 0.30～0.45 0.25～0.40
16		气缸孔径/活塞裙部最大直径 Cylinder hole diameter/piston skirt max diameter	$\phi 108^{+0.035}_{0}/\phi 107.87^{0}_{-0.03}$	径向间隙 Radical clearance	0.130～0.195
17	YC6B系列 YC6B series	活塞环槽高/第一道气环高 Piston ring groove height/First piston ring height	$2.85^{+0.02}_{0}/2.816^{-0.01}_{-0.03}$	轴向间隙 Axial clearance	0.044～0.084
18		活塞环槽高/第二道气环高 Piston ring groove height/Second piston ring height	$2.5^{+0.07}_{0.05}/2.5^{0}_{-0.015}$	轴向间隙 Axial clearance	0.050～0.085
19		活塞环槽高/油环高 Piston ring groove height/oil ring height	$5^{+0.06}_{+0.04}/5^{0}_{-0.015}$	轴向间隙 Axial clearance	0.04～0.075

https://truckmanualshub.com/

20		活塞环压入Φ108.00内径量规内检查 Piston ring opening clearance Φ108.00 after pressed into measure gauge check	第一道气环 First gas ring 第二道气环 Second gas ring 油环 Oil ring	闭口间隙 Close clearance	0.45～0.60 0.30～0.45 0.25～0.40
21		气缸孔径/活塞裙部最大直径 Cylinder hole diameter/piston skirt max diameter	$\phi108^{+0.035}_{0}/\phi107.87^{0}_{-0.03}$	径向间隙 Radical clearance	0.130～0.195
22	YC6J系列 YC6J series	活塞环槽高/第一道气环高 Piston ring groove height/First piston ring height	$3^{+0.11}_{+0.09}/3^{0}_{-0.015}$	轴向间隙 Axial clearance	0.09～0.127
23		活塞环槽高/第二道气环高 Piston ring groove height/Second piston ring height	$3^{+0.07}_{0.05}/3^{0}_{-0.015}$	轴向间隙 Axial clearance	0.050～0.085
24		活塞环槽高/油环高 Piston ring groove height/oil ring height	$5^{+0.06}_{+0.04}/5^{0}_{-0.015}$	轴向间隙 Axial clearance	0.04～0.075
25		活塞环压入Φ105.00内径量规内检查 Piston ring opening clearance Φ105.00 after pressed into measure gauge check	第一道气环 First gas ring 第二道气环 Second gas ring 油环 Oil ring	闭口间隙 Close clearance	0.45～0.60 0.30～0.45 0.25～0.40
26		气缸孔径/活塞裙部最大直径 Cylinder hole diameter/piston skirt max diameter	$\phi105^{+0.035}_{0}/\phi104.87^{0}_{-0.03}$	径向间隙 Radical clearance	0.130～0.195
27	连杆大头轴承孔径/连杆颈 Connecting rod big end bearing hole diameter / connecting rod diameter		$\phi70^{+0.116}_{+0.06}/\phi70^{0}_{-0.03}$	径向间隙 Radical clearance	0.06～0.146
28	连杆衬套孔径/活塞销 Connecting rod sleeve hole diameter /Piston pin		$\phi38^{+0.036}_{0.025}/\phi38^{0}_{-0.011}$	过 盈 Interference	0.025～0.047
29	活塞销座孔径/活塞销		$\phi38^{-0.013}_{-0.024}/\phi38^{0}_{-0.011}$	过盈间隙	0.002～0.024

https://truckmanualshub.com/

	Piston pin seat hole diameter/piston pin		Interference Clearance	
30	主轴承孔径/主轴颈 Main bearing bore diameter /main bearing diameter	$\phi 85^{+0.115}_{0.05}/\phi 85^{0}_{-0.035}$	径向间隙 Radical clearance	0.05～0.15
31	曲轴止推面间隙 Crankshaft thrust plane clearance		轴向间隙 Axial clearance	0.10～0.30
32	隔圈/凸轮轴止推片 Set collar/Camshaft thrust plate	$\phi 5^{+0.12}_{+0.06}/\phi 5^{-0.04}_{-0.08}$	间 隙 Clearance	0.10～0.20
33	各齿轮之间的啮合间隙 Engagement side play between various gears		间 隙 Clearance	0.07～0.30
34	压缩余隙 Compressing clearance		间 隙 Clearance	1.0～1.2

表 1-6 YC6A、YC6B、YC6J 系列发动机主要螺栓、螺柱、螺母拧紧力矩

YC6A、YC6B、YC6J Series Engine Tightening Torque for the Bolts、Studs and Nuts

名称 Description	拧紧力矩（N.m）Tightening torque（N.m）	名称 Description	拧紧力矩（N.m）Tightening torque (N·m)
主轴承盖螺母 Main bearing bolt nut	220～260	皮带轮减振器螺栓（起动抓） Belt pulley shock absorber bolt	**≥300**
主轴承螺柱 Main bearing bolt	150～170	飞轮壳螺栓 flywheel casing bolt	100～108
连杆螺栓 Connecting rod bolt	170～210	飞轮螺栓 Flywheel bolt	170～210
气缸盖螺栓或螺母 Cylinder head bolt or nut	210～250	喷油器总成螺母 Injector assembly nut	20～30
凸轮轴正时齿轮螺母 Camshaft timing gear bolt nut	160～200	铸铁油底壳螺栓 Cast iron crankcase oil tray bolt 钢板冲制油底壳螺栓 Steel plate stamping oil tray bolt	27～34 20～30

注：高强度螺栓在此基础上加 5 N·m

Note: extra 5 N m is required on this base for High intensity bolt

https://truckmanualshub.com/

表 1-7 其它螺栓拧紧力矩推荐值

Table 1-7 Recommended tightening moment of the plug screw of other bolts

螺纹直径（mm）Thread diameter (mm)	公制 Metric system	M6	M8	M10	M12	M14
扭紧力矩(N·m) Tightening moment of（N·m）		8~12	16~20	27~34	61~68	115~129

3 发动机主要结构及工作原理

Primary Structures and Working Principle of Engine

3.1 气缸体 Cylinder Block

气缸体采用整体龙门式结构，由合金灰铸铁铸造而成，用均匀的加强筋加固，整个气缸体具有足够的强度和刚度。

The cylinder block uses an integral portal shaped structure and is made of the alloy grey cast iron and strengthened with equally spaced reinforced ribs. The whole cylinder block has adequate strength and rigidity due to its wider junction plane with oil sump.

气缸体设计为湿式缸套，耐磨性好。气缸套下部装有二根耐油橡胶密封圈，以防止漏水穴蚀。

Wet cylinder sleeve is designed for cylinder block with good wearing resistance. There are two oil resistance rubber sealing ring at the bottom of the cylinder sleeve to avoid water leaking.

气缸体顶面有 26 个螺孔，通过气缸盖螺栓固定气缸盖。

There are 26 screw holes on the top of the cylinder body which are used to fix the cylinder head 。

气缸体右侧（从飞轮输出端看）装有排气管、起动机、机油滤清器等。

There are air exhaust pipe, starter and oil filter on the right side of the engine (viewing from the flywheel output end).

气缸体左侧上部安装有进气管、高压油泵等。下部装有油标尺组件，油标尺上有两条刻线，在柴油机起动前加油时，油面应接近上刻线，柴油机运转时应特别注意油面应保持在上下刻线之间。气缸体前端面装有飞轮壳。

Air intake pipe and high pressure oil pump are installed at left upper of the cylinder block; oil dipstick is installed at the bottom with 2 scales on it; when filling oil before the diesel engine starts, the oil level shall be near the upper scale; the oil level shall be kept between the upper and lower scale when the diesel engine starts. Flywheel housing is installed at front of the cylinder block.

https://truckmanualshub.com/

气缸体后端面与正时齿轮室盖形成正时齿轮室，室内装有正时传动齿轮，机油泵由下部中间齿轮传动。正时齿轮室盖与减振皮带轮上打有相应的刻度标志，用来检查供油正时和配气正时。

The rear end of the cylinder block and timing gear chamber cover forms the timing gear chamber with timing transmission gear in it and the oil pump is driven by the lower middle gear. Corresponding scale marks are printed on the timing gear chamber cover and vibration absorbing belt pulley to check the fuel supply timing and air distribution timing. .

气缸体的下部装有储存润滑油的油底壳。根据不同的配套需要，按材质分为铸铁和薄钢板冲制两种，根据用户对倾斜度的不同要求，油底壳的式样也各有不同。油底壳垫片为耐油橡胶制成，安装油底壳时紧固螺栓拧紧力矩按表二规定，力矩过大反而会使垫片压裂，并注意按对角交叉次序逐渐拧紧紧固螺栓。油底壳底部安装有放油螺塞供更换机油时放油用。

The oil pan storing lubricating oil is at the bottom of the cylinder block. There are two types of oil pans according to the matching requirement: cast iron and thin metal sheet punching. The oil pan types are different depending on various gradient requirements of the users. The gasket is made of oil resistance rubber. Refer to Table 2 for bolt tightening torque when installing the oil pan. The gasket will cracks if too large torque is applied. Tighten the bolts gradually according to the cross angle order. Oil drain plug is installed at the bottom of the oil pan to drain the oil when replacing the oil.

3.2 气缸盖与配气机构 Cylinder Head and Air Distribution Mechanism

3.2.1 气缸盖及缸盖罩 Cylinder Head and Cylinder head cover

气缸盖 Cylinder head cover

气缸盖 气缸盖由合金铸铁材料制成，三缸合用一盖，每缸均匀分布缸盖螺柱 14 只，总共 26 只，中央两只螺柱（螺栓）两缸盖共用。由于气缸盖螺柱（螺栓）所受预紧力矩较大，为减少变形，保证密封可靠，对气缸盖螺柱（螺栓）拧紧力矩的大小及拧紧顺序应予严格控制，其最后拧紧力矩为 230±20N·m，注意应分三次均匀拧紧（图 2—1）

Cylinder head

Cylinder is made of alloy cast iron and three cylinders use one head. There are 14 cylinder head bolts on every cylinder head cover, and 26 altogether, the double screw bolt in middle are common used by two cylinders. Because cylinder head bolt is under large pre-tightening moment of force, in order to reduce distortion and ensure reliable seal, the tightening moment of force and order of cylinder head should be controlled strictly, and the last tightening moment of force is 230±20N·m. please pay attention to tighten for three times (Fig 2-1).

第一次:80～90N·m First time, 80～90N·m

https://truckmanualshub.com/

第二次:140～180N·m　　Second time, 140～180N·m
第三次:210～250N·m　　Third time, 210～250N·m

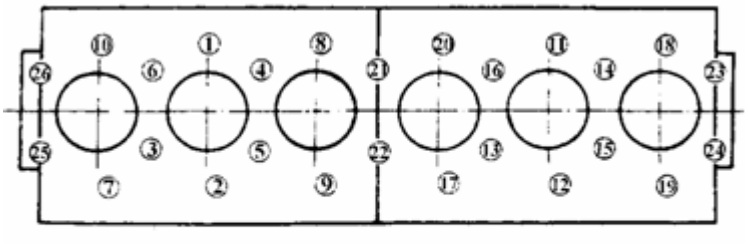

图 2-2　缸盖螺栓拧紧顺序
Fig 2-2 cylinder cover bolt tightening order

3.2.2 气缸垫 Cylinder gasket

气缸垫片置于气缸盖底部与气缸体顶部之间，在气缸盖螺母（螺栓）拧紧后，对循环冷却水、机油、燃烧室的高压气体起密封作用，为钢架石棉板制成，表面涂有防粘层涂料，拆气缸盖后重装，应更换气缸垫片。凡新机运行完磨合期后，应复紧缸盖螺栓到规定的力矩，以防漏水、漏油、冲缸垫。**特别注意：全钢质缸垫一经拆卸，不能重复使用！**

Cylinder gasket is installed between the bottom of cylinder head and the top of cylinder body. After tightening cylinder head cover nut (bolt), it could seal circulating cooling water, oil and high pressure gas in combustion chamber. It is made from steel fame asbestos plate and the surface is print with anti-seize coating. When reassembling cylinder head, cylinder gasket should be replaced. In common sense, after run-in period of new engine, retighten cylinder head cover to regulate torque in order to prevent water leakage, oil leakage and pushing cylinder gasket. **Special notice: Once the steel cylinder head gasket is removed, it can not be used any more!**

3.2.3 气门 Valve

气门 气缸盖每缸设有进、排气门各一个。进排气道分布于两侧。气缸盖的进排气口装有高强度耐热钢制成的气门座圈，磨损后可以更换（标准尺寸或加大尺寸）。进气、排气门锥角及座角均为 90°。气门下沉量应严格控制，技术要求为 1±0.2mm（图 2—2）。

Valve

One intake valve and one exhaust valve are designed on each cylinder head. The intake and exhaust passages locate on the two sides. The valve seat made of high intensity

https://truckmanualshub.com/

heat-resisting steel is installed on the intake valve of cylinder head and can be replaced (standard size or extra large size) after wearing. The seat angle and cone angle of intake valve and exhaust valve is 90°. The sinkage of valve shall be controlled strictly and technical requirement is 1±0.2 mm (Fig 2-2).

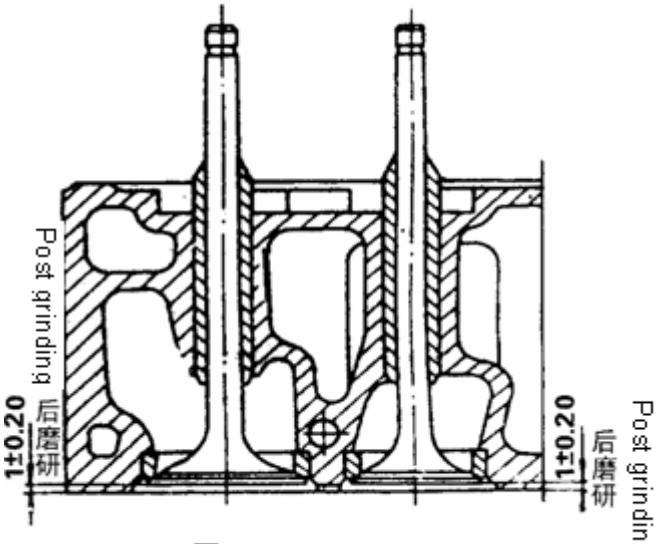

（图 2—2）Fig 2-2

气门导管也可以更换，为保证使用性能，气门导管压入气缸盖后，其下端面到气缸盖底面的深度要求为 35±0.5mm（图 2—3）

Valve duct can be replaced too. In order to ensure performance, after valve duct pressed into cylinder, the distance between lower end of valve duct and bottom surface of cylinder shall be 35±0.5mm (Fig 2-3)

https://truckmanualshub.com/

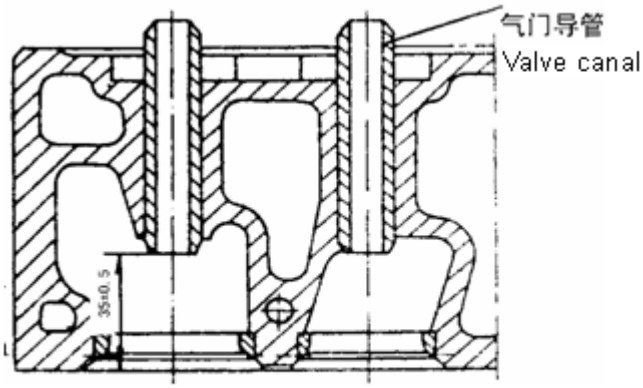

（图 2—3）Fig 2-3

3.2.4 配气机构 Air distribution structure

配气机构采用顶置式配气机构，由气门组和气门传动组构成。气门组包括气门、气门弹簧、气门锁夹、气门导管、气门座。气门传动组包括凸轮轴、气门挺杆、推杆、摇臂、凸轮轴正时齿轮等。

Air distribution structure adopts overhead air distribution structure and it consists of valve group and valve transmission group. The valve group includes valve, valve spring, valve lock, valve duct and valve seat. Valve transmission group includes camshaft, valve lifter, push rod, rocker arm and camshaft timing gear.

气门组零件装在气缸盖上。进、排气门均由两种材料通过摩擦焊接而成，杆部材料相同，为硅铬合金，排气门盘锥面上还堆焊有 F203 合金。

The valve group parts are installed on cylinder head. Intake valve and exhaust valve are welded with two kinds of materials; the material of lever is silicochromium. F203 alloy is welded on exhaust valve cone

为保证柴油机的正常工作状态，用户应按要求定期检查调整气门间隙。冷态时进气门的间隙为 0.4±0.05mm。排气门的间隙为 0.45±0.05mm。气门间隙检查调整的方法是:把曲轴转到第一缸压缩上止点位置，此时可检查调整 1、2、3、6、7、10 气门，再把曲轴转过 360°，此时可检查 4、5、8、9、11、12 气门，气门间隙的调整可通过调整气门调整螺钉来实现，调整时先把锁紧螺母松脱，用起子把气门调整螺钉按需要旋进或旋出，然后用厚薄规检查摇臂

与气门端的间隙，符合要求后拧紧锁紧螺母（图 2—4）。

In order to ensure the normal working of diesel engine, users should check valve clearance according to requirements regularly. When the engine is in a cold state, the clearance of intake valve should be 0.4±0.05 mm and the clearance of exhaust valve should be 0.45±0.05 mm, The method of checking and adjusting the valve clearances is as follows: Rotate the

https://truckmanualshub.com/

crankshaft to the position were the first piston is on the compression TDC, then adjust the No. 1, 2, 3, 6, 7 and 10 valve. Rotate again the crankshaft for 360° to adjust the No. 4, 5, 8, 9, 11 and 12 valves. The valve adjustment can be achieved by adjusting the valve adjusting bolts, i.e. to loose the tightening nut of the adjustment bolt and screw the adjustment bolt out and in, then check the clearance between the rocker arm and the end of the valve stem with a feeler gauge, fasten the tightening nut when the checking result is accordance with the requirement, (Fig 2-4)

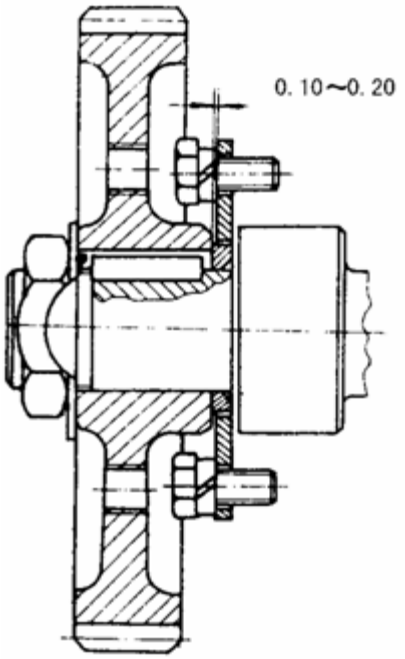

(图 2—5)Fig 2-5

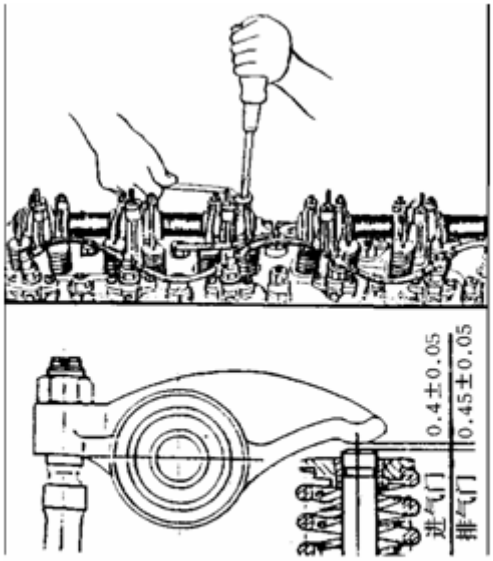

(图 2—4)Fig 2-4

3.2.4.1 凸轮轴组 Camshaft group

凸轮轴有 7 个支承轴颈和 12 个配气凸轮。凸轮轴的第二、第五道凸轮轴衬套上分别有输送机油至两个气缸盖的油孔，装配时应注意保持油道畅通。

Camshaft consists of 7 supporting axis necks and 12 air distributing cams. On the second and fifth camshafts neck bush, there are oil holes that deliver engine oil to two cylinder heads. When assembling, please pay attention to keep the oil path flowing.

凸轮轴的轴向间隙靠止推片来控制，装配时要保证轴向间隙为 0.10～0.20mm（图 2—5）。间隙过小将会使凸轮轴正时齿轮与止推片卡住或咬死， 图 2—5 图 2—4

The axial clearance of the camshaft is controlled by the thrust plate, ensure the axis clearance of 0.10～0.20mm (Fig 2-5) when assembling. Too small clearance will be locked

https://truckmanualshub.com/

and seized between camshaft timing gear and thrust plate. Fig 2-5 and Fig 2-4

过大则会引起凸轮轴窜动和气门正时不准，也容易造成供缸盖机油油孔的错位堵塞而上不了油。进排气门摇臂各有 6 个，与气门杆端接触的头部有镶块，经氮碳共渗后，有很高的硬度，耐磨性好。

If the clearance is too large, it will cause camshaft run out and incorrect valve timing and also will lead the misplacement of oil supply valve head oil hole and can not supply the oil. There are 6 rockers on each intake valve and exhaust valve, there is glut with valve lever on the connected end. After nitro carburizing, it has high hardness and good wearing resistance.

摇臂轴为 3 缸 1 根，每根支撑在 3 个摇臂支座上。在检修后安装时应注意，从气缸盖的油道用一油管接到中间的摇臂支座上，摇臂轴中心有一油道，通过该油道将润滑油送往另两个摇臂支座供润滑用。拆装气门弹簧时，要使用专门的工具，见图 2—6。

One rocker arm shaft is equipped for three valves and every shaft supports on the rocker arm seat. When installing after checking, please pay attention that the oil path of valve head is connected to the middle rocker arm seat, there is one oil path at the center of rocker arm shaft, the lubricant is delivered to these two rocker arm seats for lubricating through this oil path. When dismounting valve spring, the special tools shall be used. See Fig 2-6

3.2.4.2 正时齿轮及传动　Timing Gear and Belt Drive

凸轮轴的驱动是通过齿轮的驱动来实现。曲轴正时齿轮为主动齿轮，向上通过正时惰齿轮传动喷油泵齿轮和凸轮轴正时齿轮，向下通过机油泵中间齿轮传动机油泵齿轮。曲轴正时齿轮、正时惰齿轮、喷油泵齿轮及凸轮轴齿轮上均刻有正时记号，安装时须对准记号进行装配，以免影响使用性能。齿轮侧向间隙要求为 0.07～0.30mm（图 2—7）（图 2—8）

The camshaft is driven by the gear. The crankshaft timing gear is driving gear; it moves upwards to drive fuel injection pump gear and camshaft timing gear through timing idler gear, and it moves downwards to drive oil pump gear through oil pump middle gear. Timing marks are printed on crankshaft timing gear, timing idler gear, fuel injection pump gear and camshaft gear. Align to the mark when assembling to avoid incorrect installation influencing the performance. The side gear clearance shall be 0.07～0.30mm (Fig 2-7) (Fig 2-8)

https://truckmanualshub.com/

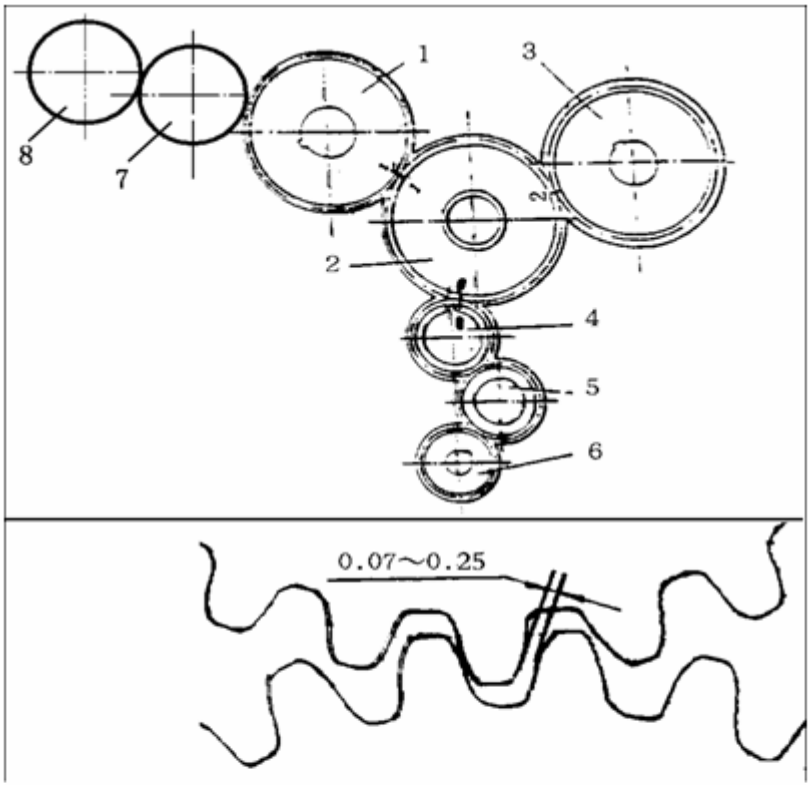

（图 2—7）齿轮传动图

Fig 2-7 gear transmission

1.凸轮轴正时齿轮 Camshaft timing gear 2.正时惰齿轮 Timing idler gear 3 喷油泵齿轮 Fuel injection pump gear 4.曲轴正时齿轮 Crankshaft timing gear 5.机油泵中间齿轮 Oil pump middle gear 6.机油泵驱动齿轮图 Oil pump drive gear figure 7.气泵惰齿轮 Air pump idler gear 8.气泵齿轮 Air pump gear

3.3 曲柄连杆机构 Crank-connecting Rod Mechanism

曲柄连杆机构是发动机的主要工作机构。其作用是把活塞的往复直线运动变为曲轴的旋转运动，把燃气作用在活塞上的力转变成曲轴的扭矩并对外输出作功。曲柄连杆机构包括活塞连杆组和曲轴飞轮组。活塞连杆组的零件见图 2-9。

Crank-connecting rod mechanism is one of main working mechanisms of the engine. It is used to turn reciprocating linear motion of the piston into rotating motion of the crankshaft, i.e. turn the force applied by the fuel gas in piston into the torque of the crankshaft which can be output to do work. Crank-connecting rod mechanism includes piston-connecting rod assembly and crankshaft-flywheel assembly. See Fig 9 for the parts in piston-connecting rod

https://truckmanualshub.com/

assembly.

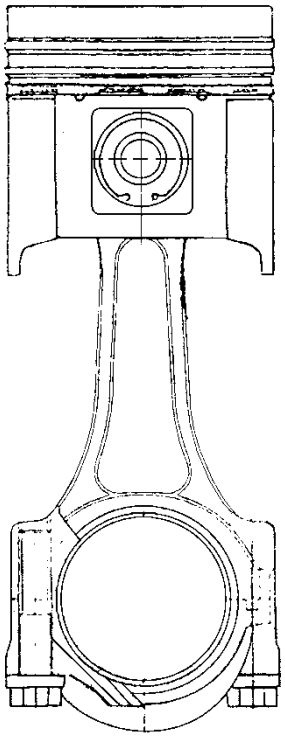

图 2-9 连杆活塞组件

Fig2- 9 Link piston components

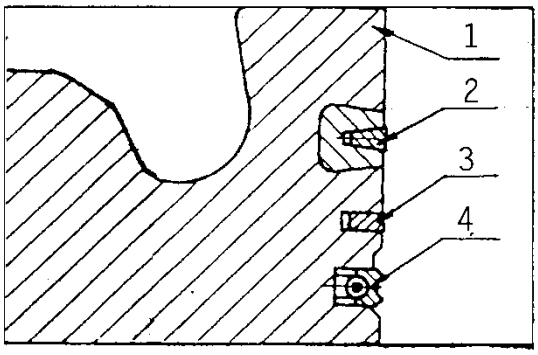

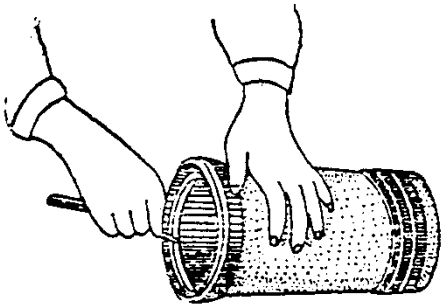

图 2-10 活塞的安装及闭口间隙的测量

Fig.2-10 installation of piston

活塞环在安装时应注意其倒角的方向。活塞环开口安装方向亦应按规定，见图 2-10，。活塞通过活塞冷却喷钩喷润滑油冷却，它可保证活塞有效的冷却而不致于过热，见图 2-11 注意不可拆掉活塞冷却喷钩不用。

The chamfer direction should be noticed during the installation of the piston ring, refer to The installation direction of the piston ring should meet with the provision. Refer to Fig.2-10. The piston is cooled by the splash of the engine oil through the piston coolant injection hook, which could ensure the effective cooling of the piston without the overheating. Refer to Fig.2-11Notice not to remove the piston coolant injection hook.

https://truckmanualshub.com/

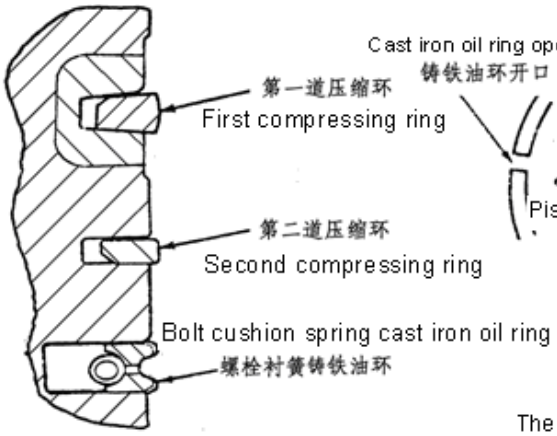

图 2-11 活塞环的安装方向
Fig 2-11 Installation direction of the piston ring

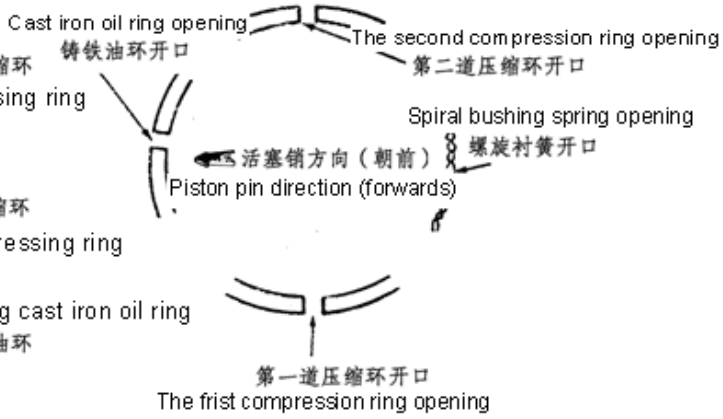

图 2-12 活塞环开口方向
Fig 2-12 Opening direction of the piston ring

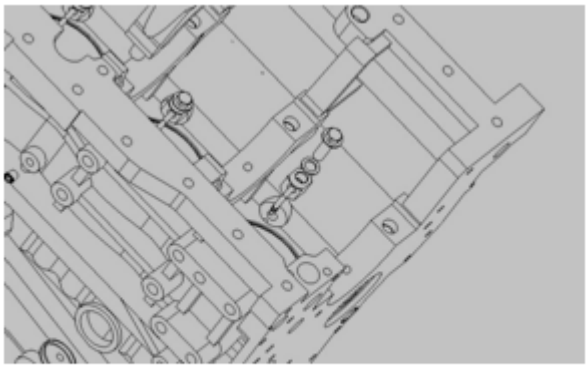

图 2-13 活塞的润滑油冷却喷钩
Fig 2-13 Lubricating oil cooling injection hook

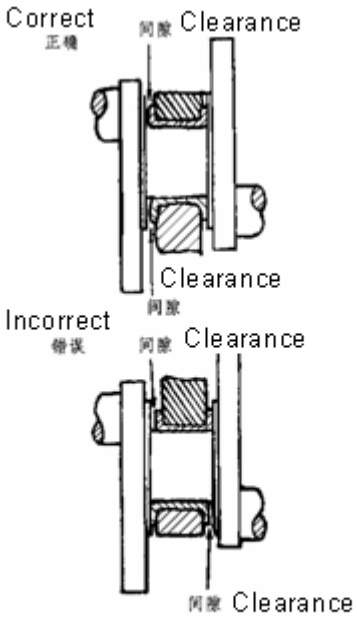

图 2-14 曲轴止推瓦的安装
Fig 2-14 Installation of crankshaft thrust bushing

装配时，连杆杆身上的记号要朝前。将连杆小头置于活塞销座中间，活塞销装入销孔内，用软金属轻轻敲打，装入后的活塞和连杆应摇动自如无阻滞现象。在更换活塞环时要注意检查其轴向和开口间隙。（图 2—12）。

Install piston into cylinder liner according to the forward mark on the connecting rod body. Put the small head of connecting rob into the middle of piston pin, put the piston pin into the

https://truckmanualshub.com/

pin hole, then knock it lightly with soft metal see if the piston and connecting rob move freely and not to be clogged. Pay attention to check up the shaft orientation and opening clearances.

（fig.2-12）

连杆螺栓的拧紧力矩为 200±20N·m，需分三次均匀拧紧，

The tightening torque of the connecting rod bolt shall be 200±20 N·m, and it shall be tightened in three steps

第一次拧紧力矩：60～80N·m，

First tightening torque: 60～80N·m，

第二次拧紧力矩：(100～130)N.m

Second tightening torque: (100～130)N.m

第三次拧紧力矩：(180～200)N.m

Third tightening torque: (180～200)N.m

上紧后应保证曲轴转动灵活，并检查连杆头端的轴向间隙。 连杆轴承的轴瓦是铜铅合金，表面镀有铅锡铜三元合金，并镀有防蚀锡层。

The crankshaft shall rotate freely after tightening; check the axial clearance at connecting rod end. The bushing of connecting rod is made of copper-lead alloy with lead-tin-copper ternary alloy and corrosion resistance coat on the surface.

曲轴飞轮组由曲轴、飞轮、曲轴皮带轮减振器等组成。曲轴为球墨铸铁（部分增压机型为铸钢）件，采用全支承结构，主轴瓦有七道，其材料与连杆轴瓦相同，曲轴中间档装有止推片，防止曲轴前后窜动，必须保证曲轴轴向间隙为 0.1～0.3mm（图 2—15）。所有主轴承螺母拧紧力矩力为 240±20N·m，应按先中间后两端的次序分三次均匀拧紧。

The crankshaft flywheel consists of crankshaft, flywheel and crankshaft belt pulley vibration absorber. The crankshaft is made of ductile cast iron (the part of engine with Turbocharger is made of cast steel) with full support structure. There are 7 main bushing made of the same material as connecting rod bushing; thrust is installed at middle of the crankshaft to avoid run out of the crankshaft. The axial clearance of the crankshaft shall be 0.1～0.3mm (Fig 2-15). The tightening torques of all the main bearing nuts are 240±20N·m. They shall be tightened for three times from middle first, then tighten the two end.

飞轮是以飞轮螺栓固定在曲轴后端的安装法兰上，拧紧时按对称位置分三次均匀拧紧，拧紧力矩按表 1-6 规定。由于飞轮也是柴油机向外输出动力的联接件，根据不同厂家的配套，其对外联接尺寸各异，具体联接尺寸以配套技术协议为准。

The flywheel is fixed on the flange on the crankshaft rear end with flywheel bolts; tighten it for

https://truckmanualshub.com/

three times according to symmetrical position with the torque specified in Table 1-6. Since the flywheel is the connecting part for power output, the outer connecting dimensions are different depending on various manufacturers. Refer to the supply technical agreement for specified connecting dimensions.

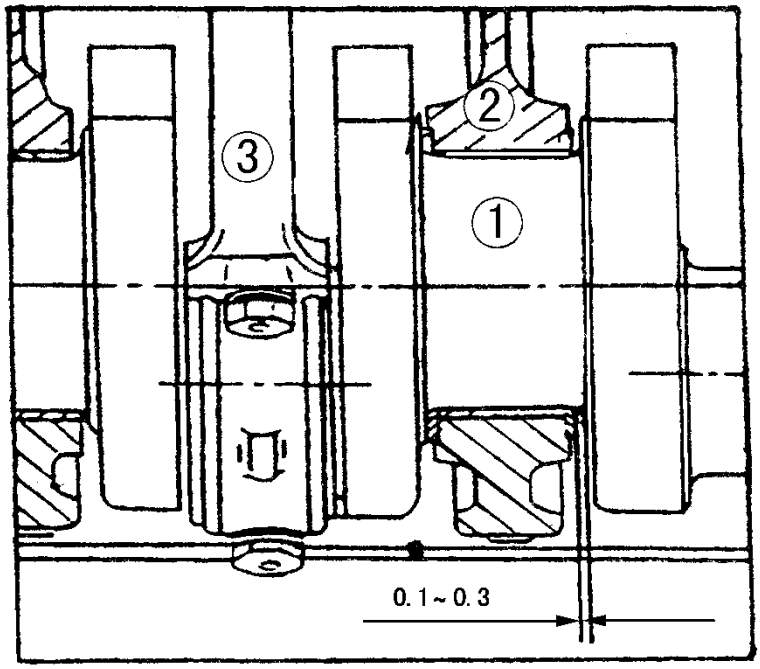

1.曲轴 crankshaft 2.第四档主轴承 Fourth main bearing 3.连杆 connecting rod
图 2—15 Fig 2-15

3.4 燃油系统 fuel system

燃油系统的功用是根据柴油机的工作要求定时、定量、定压地将柴油以雾化的状态按一定的供油规律喷入气缸内，并使其与空气迅速而良好地混合和燃烧。它的工作情况对柴油机的动力性和经济性有着重要的影响。柴油机燃油系统由油箱（用户自配）、进、回油管、柴油滤清器、喷油泵、高压油管、喷油器等组成。

The fuel system works to inject the spray diesel oil with certain quantity at certain time and pressure according to the fuel supply rules and working requirement of the diesel engine, thus the diesel oil will mix with the air well rapidly to combust. The working status of the system attaches much importance to the power and economics of the diesel engine. The fuel system of the diesel engine consists of fuel tank (equipped by user), fuel inlet/return pipe, diesel oil filter, fuel injection pump, high pressure fuel pipe and fuel injector.

喷油泵为单列柱塞式，使用时应注意： The fuel injection pump is of in-line piston type.

https://truckmanualshub.com/

Please pay attention to the following when using:

（1）检查油泵润滑油量是否充足，不足时应加足。

Check whether the lubricating oil in the pump is adequate. Fill full if inadequate.

（2）放完输油管道及油泵内腔空气。

Exhaust the air in the fuel transfer pipe and fuel pump.

（3）检查供油提前角是否正确，若不正确需调整。

Check whether the fuel supply advance angle is correct. Adjust it if incorrect.

（4）检查断油装置是否起作用，若不起作用需妥善修复。

Check whether the fuel cutoff device could work. If it can't work, repair it.

静态时供油提前角参考技术参数表，提前角不符时应通过专业人员进行调整，这时可通过对油泵联轴器（带提前器）的调整来实现。检查提前角时，松开第一缸高压油管与油泵的连接螺母，慢慢转动曲轴，当出油阀紧帽中的油面开始波动时即停止转动曲轴，此时定时指针在皮带轮减振器定时刻度上的指示值即为供油角度（图 2—16）。在飞轮壳和飞轮上有指针和刻度，请用户加以注意。

Refer to the technical parameter table for the fuel supply advance angle in static status. Special staff shall adjust the advance angle if it doesn't conform to the requirement. The angle could be adjusted by adjusting the fuel pump coupling (with advance device). When check the advance angle, release the connecting nut of the first cylinder high pressure fuel pipe and fuel pump; rotate the crankshaft slowly, stop rotating the crankshaft when the oil level of the fuel valve begins to fluctuate; the angle value on the belt pulley vibration absorber timing scale is the fuel supply angle (Fig 2-16). The user shall pay attention to the pointer and scale on the on the flywheel housing and flywheel.

供油提前角度调整：Adjusting fuel supply advance angle:

方法-：适当松开喷油泵前端连接法兰的紧固螺母，然后把喷油泵按需要适当拔转一角度（喷油泵往内拔转则提前角度变大，喷油泵往外拔转则提前角度变小），然后拧紧连接法兰的螺母，检查供油提前角，调整至符合要求后把连接法兰紧固螺母拧紧。

Method 1: release the fixing nut connected to the flange at front of the fuel injection pump; then rotate the fuel pump at an angle as required (the advance angle increase if the pump rotates inwards while the angle decreases if rotating outwards.); tighten the nut connected to the flange and check the fuel supply advance angle; tighten the nut after adjust it as required

方法二：打开喷油泵齿轮盖板，适当拧紧喷油泵齿轮的四个紧固螺栓，转动喷油泵齿轮轴 2 调整供油提前角（顺时针方向转动喷油泵凸轮轴，增大供油提前角，反之减小供油提前角），然后扭紧喷油泵齿轮的固定螺栓，检查供油提前角，直至符合要求后按扭矩要求拧紧喷油泵齿轮的四个紧固螺栓。

Method 2: open the gear cover of the fuel injection pump; tighten 4 tightening bolts of the pump gear; rotate the pump gear shaft to adjust fuel supply advance angle (the fuel supply advance angle increases when rotate the fuel injection pump camshaft clockwise, oppositely, the angle decrease), tighten the fuel injection pump gear fixing bolts; check the fuel supply

https://truckmanualshub.com/

advance angle; then tighten the 4 tightening bolts of the pump gear according to the torque requirement.

方法三：转动曲轴至第一缸供油，然后将曲轴转至所需要的供油提前角，再按方法一二拔动喷油泵体或转动喷油泵凸轮轴至第一缸开始供油位置，扭紧紧固螺栓，检查供油提前角，若符合要求，再按扭紧力矩要求扭紧紧固螺栓。

Method 3: rotate the crankshaft to first cylinder supplying fuel; rotate the crankshaft to the fuel supply advance angle as required; then move the fuel injection pump body or camshaft to first cylinder starting supply position as per Method 1 and Method 2; tighten the tightening bolts and check the fuel supply advance angle; if it conforms the requirement, tighten the bolts according to the torque.

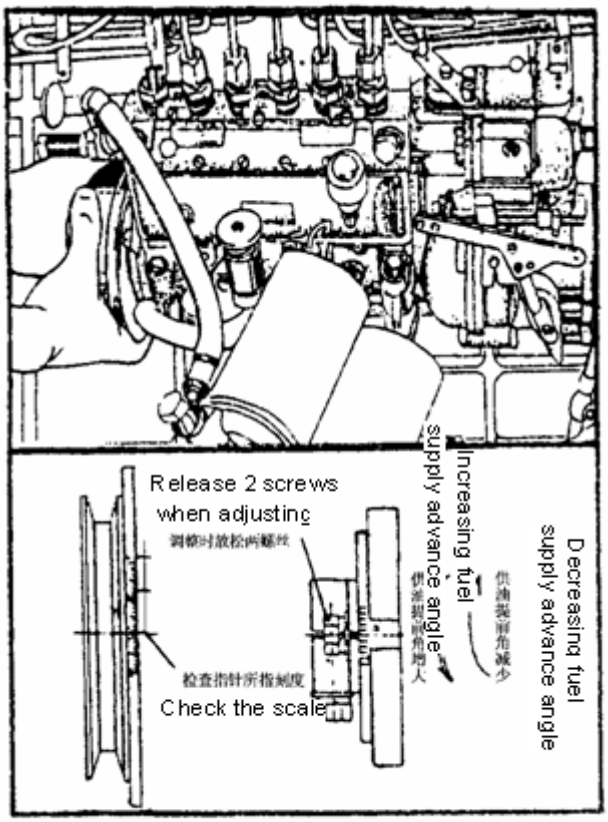

图 2-16 Fig 2-16

供油角度自动提前器为机械离心式，作用转速为 500～ 1400r/min，供油角度提前量为 5°～6°，在提前器外圆上刻有表示供油时刻开始的刻度，此刻度与固定在泵体上的刻度对正时，表示此时喷油泵第一缸供油时刻的开始。用户应定期检查提前器内润滑油的油量，并予以补充加足。（图 2—17）。**供油提前角属于重要的质量控制项目,必须由玉柴服务站专业人员进行调整。**

(Fig 2-16)

The fuel supply angle automatic advance device is of mechanical centrifugal type with

https://truckmanualshub.com/

rotation speed of 500～ 1400r/min and fuel supply angle advance of 5°～6°; there is scale showing fuel supply time at outer round of the advance device, and when the scale is aligned to the scale on the pump body, the fuel supply of the fuel injection pump first cylinder begins. The user shall check the lubricating oil quantity in the advance device, and fill full when inadequate. (Fig-2-17). **Fuel supply advance angle is important quality control item, and the adjustment shall be carried out by the special staff of Yuchai service station.**

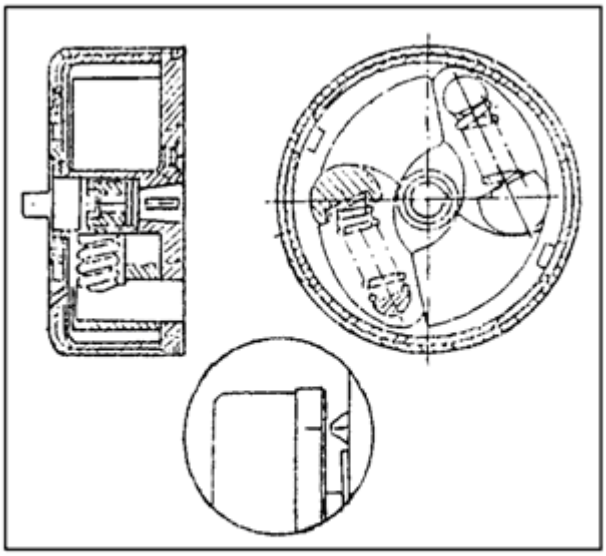

图 2—17 供油角度自动提前器

Fig 2-17 Fuel supply angle automatic advance

高压油泵的输油泵的结构如图 2—18，输油泵上设有手动驱动装置，用来排除燃油管路内的空气，使用时拧开手柄紧帽，手柄即会升起，然后向下压手柄，如此往复运动，即能从油箱里吸取柴油供给油路各油腔，同时，松开放气螺塞，排除掉管路内空气，使用完毕，应将手柄紧帽旋紧，以免柴油机工作时空气进入供油系统中，另外，进油接头螺栓内有一小滤网，用了一段时间后应取下清洗，以免因堵塞而影响供油。The fuel transfer pump structure of the high pressure fuel pump is shown as Fig 2-18; manual drive device is designed on the fuel transfer pump tp exhaust the air in the fuel pipe; loose the lever screw when using, and the lever will raises; press the lever downwards and repeat the operation, the diesel oil will be suck from the tank to the fuel path, meanwhile, release the exhaust plug to exhaust the air in the pipe. Tighten the crew after using to avoid the air from entering the fuel supply system when the engine works. There is a small filtering net in the fuel inlet connector bolt, and it could be cleaned after using for some time to avoid blockage to affect the fuel supply.

https://truckmanualshub.com/

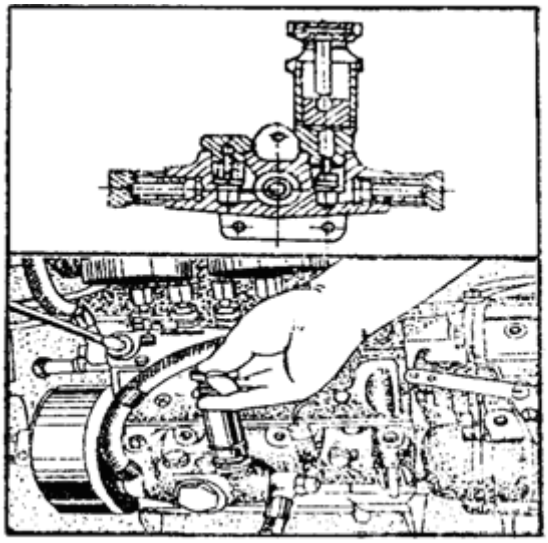

图 2—18 Fig.2-18

工程用柴油机大部分采用 RSV、R801 型调速器。

喷油泵和调速器的工作正常与否，对柴油机的工作状态影响很大，柴油机出厂时已调整好，一般不能随意调整，如柴油机运转使用较久，出现不正常现象时，可找玉柴服务站或专业人员进行调整，以避免不应有的事故发生。

柴油预滤器为纸制滤芯旋装式（图 2-19），此预滤器主要作用为油水分离及过滤柴油中的大颗粒。预滤器柴油机每累计工作 400 小时应更换预滤器整体滤心。同时当预滤器分离出的水位到一定高度时适时的打开放水开关进行放水。

Generally, RSV, R801 speed governor is adopted for construction diesel engine. The working statuses of the fuel injection pump and speed governor will affect the diesel engine operation a lot. The diesel engine has been adjusted when ex-factory, and the user is not allowed to adjust it. If abnormal phenomenon of the engine occurs after long operation, send it to Yuchai service station or to professional staff for adjustment to avoid accidents.

Yuchai filter is of rotary paper filter element structure (Fig. 2-19), it is mainly used to separate water and oil and filter the bulky grain in diesel oil. The filter element of diesel engine filter shall be replaced for using accumulated 400 hours. At the same time, when the water level separated from filter reaches a certain height, open water drainage switch to drain water.

https://truckmanualshub.com/

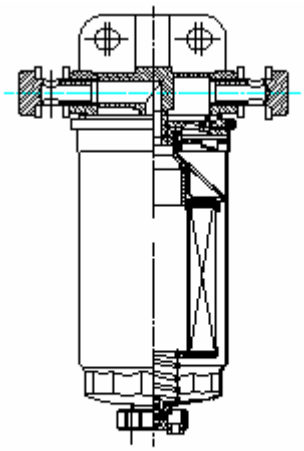

图 2-19 Fig 2-19

柴油滤清器为二级纸质滤芯旋装式（图 2—20）。柴油机每累计工作时间 400 小时应更换柴滤器整体滤心，以免因芯滤阻力过大而引起供油不足。

Yuchai filter is secondary rotary paper filter element structure (Fig. 2-20). The filter element of diesel engine filter shall be replaced for using accumulated 400 hours to avoid too large filter element resistance to lead the lacking of fuel supply.

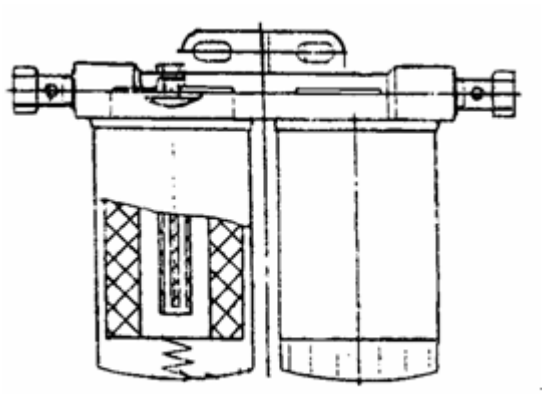

图 2—20Fig 2-20

YC6A、YC6B、YC6J 喷油器型号、油嘴型号以及开启压力请参加技术参数表。喷油嘴偶件精度高，针阀及针阀体不能互换。喷油压力的大小可以调整，调整方法是:拆下调压螺钉护帽，把调压螺钉顺时针方向拧转则喷油压力增大，逆时针方向拧转则喷油压力减少。喷油压力的调整应在专用试验台上进行（图 2—21）。

Refer to technical parameter table for YC6A、YC6B、YC6J fuel injector model, fuel injection

https://truckmanualshub.com/

nozzle model and opening pressure. The fuel injector matching parts are of high precision and the needle valve and body can't be interchanged. The pressure of the fuel injector can be adjusted. The adjusting method is that: remove the pressure adjusting screw and tighten it clockwise to enlarge the fuel injection pressure, and tighten it anticlockwise to reduce the fuel injection pressure. The fuel injection pressure shall be adjusted on the special test bench. (Fig 2-21)

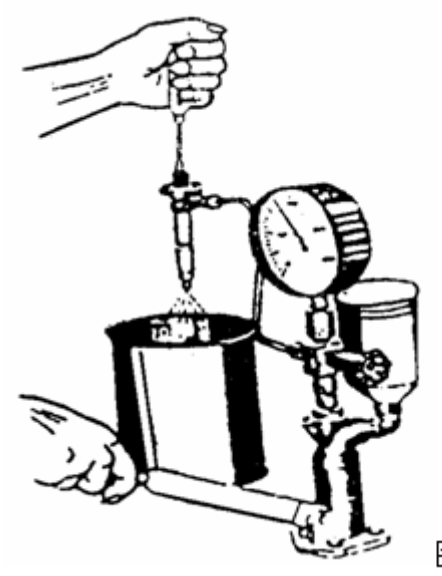

图 2—21 Fig 2-21

喷油器喷射的油速应均匀，雾化质量应良好，即油粒细小均匀，喷油时声音清脆，无滴油现象（图 2—22）。

The injection speed of injector shall be even, atomization quality shall be good, the particle shall be small and even, the sound of injecting shall be ringing, without oil dropping. (Fig. 2-22)

https://truckmanualshub.com/

图 2—22Fig 2-22

喷油器安装在气缸盖上，应保证喷油咀突出气缸盖底面的高度（即喷油器突出高度），YC6A 系列按 4.2±0.1mm 控制，YC6B、YC6J 系列按 2.4±0.1mm 控制。拆装喷油器时应注意这个高度不能随意增减，如不符合可通过喷油器前端的铜垫来调整（图 2—23），否则会影响柴油机的性能。

The fuel injector is installed on the cylinder cover to ensure the project height from the cylinder bottom (i. e. the project height of the fuel injector); the height of YC6A series engine shall be controlled at 4.2±0.1mm, and 2.4±0.1mm for YC6B and YC6J series. The height is not allowed to change when disassembling the fuel injector; if the height can’t meet the requirement, it could be adjusted through copper gasket at front of the injector (fig 2-23), otherwise, the performance of the engine will be affected.

https://truckmanualshub.com/

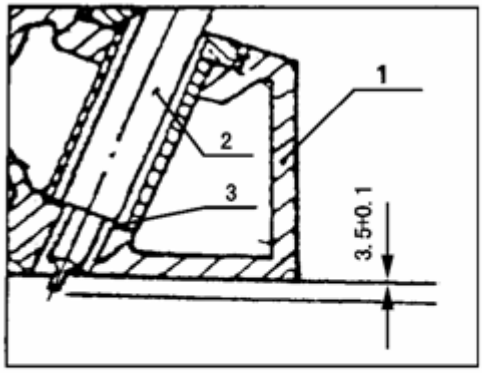

1. 气缸盖 Cylinder cover 2.喷油器 Fuel injector
3.铜垫 Brass gasket

（图 2—23）喷油器的安装图
Fig 2-23 Installation of the fuel injector

3.5 润滑系统 Lubrication System

润滑系统的任务就是把清洁的、压力和温度适宜的润滑油送至柴油机的各摩擦表面进行润滑，使柴油机各零件能正常工作。柴油机的润滑系统如图 2—24 所示。

Purpose of the lubrication system is to deliver clean lubricant with appropriate pressure and temperature to all friction surfaces of diesel engine to lubricate them so as to ensure normal operation of all parts and components of the engine. Engine lubricating system is shown in Fig 2-24.

https://truckmanualshub.com/

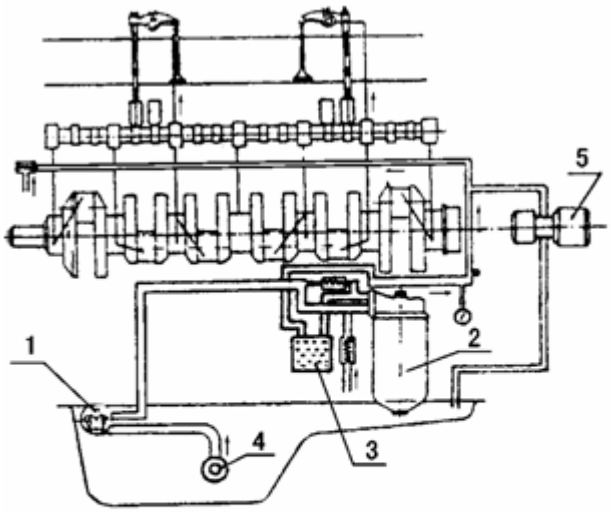

1.机油泵 Oil pump 2.机油滤清器 Oil filter
3.机油冷却器 Oil cooler 4.机油集滤器 Oil focus filter
5.增压器图 Supercharger
图 2—24 发动机润滑系统示意图
Fig 2-24 Engine lubricating system diagram

机油泵将油底壳的润滑油经集油器滤网过滤后泵入主油道，主油道沿气缸体纵向布置，润滑油经机油滤清器座用油管引至水冷式机油冷却器，利用水与油的热交换对机油进行冷却后再用油管引回机油滤清器座，并进入机油滤清器过滤后进入分油道向主轴承供油，并通过曲轴上的油道润滑连杆轴承和凸轮轴轴承，从凸轮轴第二、第五道及相应的两条连接油管间歇地引向摇臂轴总成，以便润滑摇臂轴衬套和气门间隙调整螺钉，然后机油沿推杆向下流至挺柱，多余的机油经气缸盖上的推杆孔、气缸体上的空腔流回油底壳。齿轮等其余运动件的润滑靠曲轴转动时曲拐搅动机油引起机油的飞溅进行润滑。

The lubricating oil in the oil pan flows over the filter net and the oil pump delivers the oil to main oil path; the main oil path is arranged vertically along the cylinder block; the oil pipe leads the lubricating oil through oil filter seat to water cooled oil cooler, the oil is cooled down utilizing the heat exchange of water and oil; then the oil returns to the oil filter seat and enters into sub oil path to supply oil to main bearing after filtering, meanwhile, the oil lubricates the connecting rod bearing and camshaft bearing through oil path on the crankshaft.; the oil is lead to rocker arm shaft assembly through camshaft 2nd , 5th path and 2 connecting oil paths to lubricate rocker arm bushing and valve clearance adjusting screw. Then, the oil flows to the tappet along the pushing lever and extra oil will return to oil pan through push rod hole on the cylinder cover and cavum on the cylinder block. Crank stirs the oil splattering to lubricate other moving parts when the crankshaft rotates.

在使用时应定期检查油底壳内油面的高度，油面高度应保证置于油标尺上下刻度之间（图2—25）。油底壳下部设有放油螺塞，供更换机油时放油用。机油冷却器为水冷式，根据不同的

https://truckmanualshub.com/

机型，分为板式和铜管式两种。机油冷却器使用一段时间后，会结有水垢或其它杂物，影响冷却效果和机油压力，尤其是使用的冷却水水质较差时更应注意。清洗机油冷却器的方法是:先把进出水管及进出油管拆除，将冷却器从机体上卸下，板式的则拆开冷却器的盖板，将芯板子取下，用柴油对芯板内腔进行冲洗，将内腔的油垢冲洗掉，然后清除芯板表面及水腔内的水垢，以提高冷却效果。清除圬垢后，用干净的柴油冲洗，并擦拭干净。铜管式的则拆开两端端盖，用钢丝扎紧干净的棉纱或布条，沾干净的柴油逐条铜管进行通洗，将管内的水垢清除干净，通洗完后再用干净的柴油冲洗一次，端盖及壳体也要清洗干净。清洗后的机油冷却器组装时应注意密封垫片应予以更换，组装时螺栓应按对角顺序均匀拧紧，以保证不出现渗漏现象。

Check the oil level in the oil pan regularly and the oil level shall be between the upper and lower scale of the oil dipstick (Fig 2-25). There is oil drain plug at the bottom of the oil pan to drain oil. The oil cooler is of water cooling type; there are 2 types: plate and copper pipe depending on different models. After a period of using, the furring or other impurities will affect the cooling effect and oil pressure. This will happen when using cooling water with poor quality. The cleaning method for the oil cooler is that: remove the water inlet/outlet pipe and fuel inlet/outlet pipe, then remove the cooler from the engine. Open the cover to remove the element if the cooler is of plate type, then wash the element plate with diesel oil to clean the oil dirt, then remove the furring on the element plate and in the tank to improve the cooling effect. After that, wash it with clean diesel oil and wipe it clean. If the cooler is of copper pipe type, remove the end cove on both sides, use steel wire to strap the clean yarn and cotton, dip it into clean diesel oil to clean each copper pipe. Replace the gasket when assembling the cooler after cleaning; tighten the bolts according to the cross order when assembling to ensure no leaking.

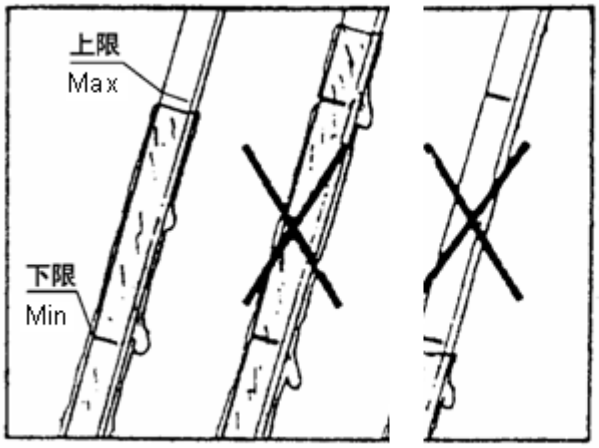

（图 2—25 Fig 2-25

机油滤清器为纸质滤芯，根据不同的用户分为两种型号，一种为旋装式，型号为 JS0818，此型号滤清器更换滤芯时须和外壳一起更换。另一种滤清器型号为 J1012，其滤芯清洗干净后可重复使用。当机器使用工作时间累计 250 小时时应更换滤芯（JS0818 型）或清洗滤芯，清洁的柴油或汽油清洗后再用压缩空气吹干（J1012 型）。安装滤清器时，先用清洁的机油加

https://truckmanualshub.com/

满新的或经清洗干净的滤清器，然后用少量清洁的机油润滑橡胶密封圈再安装滤清器。

The engine oil filter is of paper filter element, there are two types according to different users, one is rotary paper filter element structure and model number is JS0818. The filter of this type should be changed with shell. Another type filter is J1012 whose filter element is clean and can be reused. When engine is used for 250 hours accumulatively, the filter element (JS0818) should be changed or be cleaned. Clean diesel oil and petrol should be blow to dry by compressed air (JS0818). Prior to installation, the new filter should be filled with clean oil; and then, the rubber seal ring is lubricated with a little clean oil.

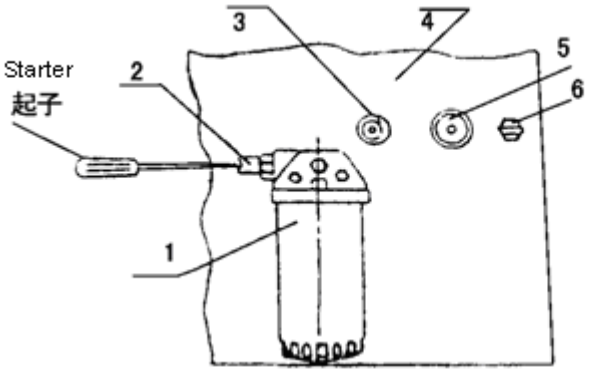

1 机油滤清器 Oil filter
2 滤清器调压阀调整螺丝 Filter pressure adjusting valve screw
3 机油压力报警器 Oil pressure alarm
4 机体 Engine body 5 机油温感应塞 Oil sensing plug
6 机油限压阀调整螺丝 Oil pressure limiting valve adjusting screw

图 2—26 机油压力的调整

Fig 2- 26 Oil pressure adjustment

柴油机运行时，如机油压力过低，可用起子先调整装于气缸体上的机油限压阀调整螺钉，旋进油压升高，直调至 0.4MPa，如油压还低，则再调整机油滤清器上的调压阀调整螺钉，旋进油压升高，旋出油压降低，再不行，则需认真检查润滑油路中的故障（图 2—26）。

When the diesel engine works, if the oil pressure is too low, use the starter to adjust the oil pressure limiting valve screw on the cylinder block to increase the pressure to 0.4MPa; if the pressure is still low, adjust the screw again; if the pressure is low, check the malfunction lubricating path.

https://truckmanualshub.com/

3.6 冷却系统 Cooling System

冷却系统采用强制闭式循环水冷却系统，主要由散热器（水箱）、水泵、风扇、调温器、机油冷却器、进出水管等零件组成（图 2—27）。

Cooling system uses a forced closed cycle cooling system. It includes radiator (water tank), water pump, ventilating fan,thermostator, oil cooler and intake and exhaust water pipe. (Fig 2-27)

散热器下部出水口通过水管接机油冷却器的进水口，机油冷却器出水口通过水管接水泵，水泵将冷却液泵入气缸体水道，冷却液先经过气缸体内部的水套冷却气缸，然后向上流动冷却气缸盖，再经出水总管汇集到达调温器处。当冷却液温度低于 70℃时，调温器关闭，全部冷却液旁通至水泵进口处，这时冷却液只在气缸体和气缸盖之间循环，可迅速暖车。当冷却液温度达到 70℃时，调温器开始打开，部分冷却液流向散热器上部进水口进入散热器，经散热风扇进行冷却，当冷却液温度为 78℃以上时，调温器全开，旁通孔关闭，全部冷却液经散热器冷却。

The lower water outlet of the radiator is connected to the water inlet of the oil cooler through water pipe, and the oil cooler water outlet is connected to the water pump through pipe. The water pump will send the coolant to cylinder block water path. The coolant will flow through the water sleeve in the cylinder block to cool the cylinder, then the coolant will flow upwards to cool cylinder cover and flow to the thermostator through water outlet. When the coolant temperature is lower than 70℃, the thermostator shuts off, and all the coolant will flow to water pump inlet, meanwhile, the coolant only circulates between cylinder block and cover to warm up the engine rapidly. When the coolant temperature reaches 70℃, the thermostator opens and partial coolant flows to the radiator through upper water inlet to cool the radiator fan. When the coolant temperature is higher than 78℃, the thermostator fully opens and the bypass hole close; all the coolant will be cooled down through radiator.

https://truckmanualshub.com/

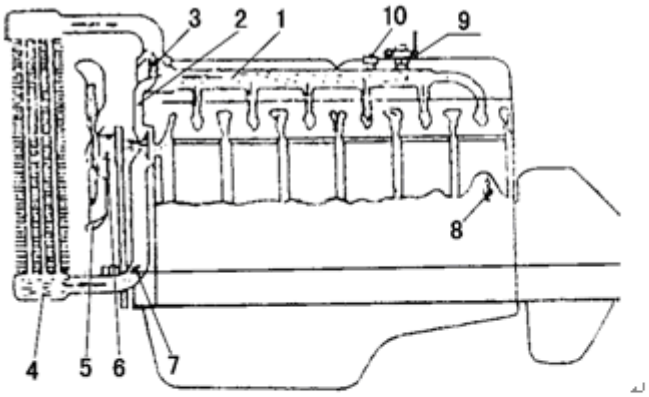

1.出水总管 water effluent main pipe
2.小循环管 samll circulation pipe
3.调温器 Thermolator
4.散热器 radiator
5.风扇 fan
6.水泵 water pump
7.机油散热器 Oil radiator
8.放水阀 drain valve
9.暖风阀 Heater valve
10.水温感应塞 water temp. Sensing plug

图 2-27 冷却系统示意图 Fig. 2-27 Sketch map of cooling system

冷却液应采用清洁干净的软水，采用防冻防锈液更佳。柴油机出水温度控制在 80℃～95℃，机油温度控制在 85℃～120℃较适宜。（注意正常工作时机油温度是无法控制的，机油温度一般比出水温度高 15℃～20℃）

Clean soft water shall be used as coolant, and it is better to use anti-freeze anti-rust fluid. The water outlet temperature of the diesel engine shall be controlled at 80℃～95℃ and the oil temperature shall be controlled at 85℃～120℃. (it is impossible to control the oil temperature when normal working, and the oil temperature is 15℃～20℃ higher than water temperature.)

水泵及风扇是冷却系统的主要部件，其结构如图 2—28 所示，一般柴油机累计工作 50 小时应从水泵上的黄油嘴给水泵轴承腔加注一次黄油。

水泵及风扇、充电发电机均通过曲轴皮带轮用同一皮带传动，皮带的松紧度应适宜，不能过松或过紧，一般在两皮带轮之间向里加 40～50N 力作用时，皮带能弯进 10～15mm 为宜（图 2—29）。皮带为 C 型带或多楔带，其规格根据不同的机型有多种，更换时请按旧皮带上所标规格购买。皮带的松紧度调整可通过调整充电发电机与调节板的相对位置来达到，充电机往外摆，则皮带张紧，往内摆则皮带放松（图 2—30）。

Water pump and fan are key parts of the cooling system and the structure is as shown in Fig 2-26. Fill grease into water pump bearing tank through the grease nozzle on the water pump after the diesel engine works for accumulated 50 hours.

The water pump, fan and charging generator are driven by the same belt through crankshaft belt pulley. The belt shall be of proper tightness. The belt shall be bend 10~15 mm when 40～

https://truckmanualshub.com/

50N force is applied between two belt pulleys. (Fig 2-29). The belt is C belt or ribbed belt. There are different specifications according to various models. Bring the old specification when replacing. The belt tightness could be adjusted through the adjustment of the positions of charging generator and adjusting plate. The belt is tightened when the generator moves outside and the belt is loosed when it moves inwards.

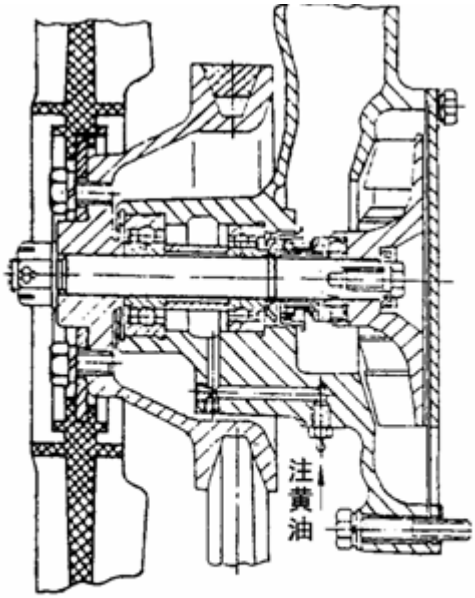

图 2—28 水泵风扇结构图

Fig 2-28 Water pump fan structure

https://truckmanualshub.com/

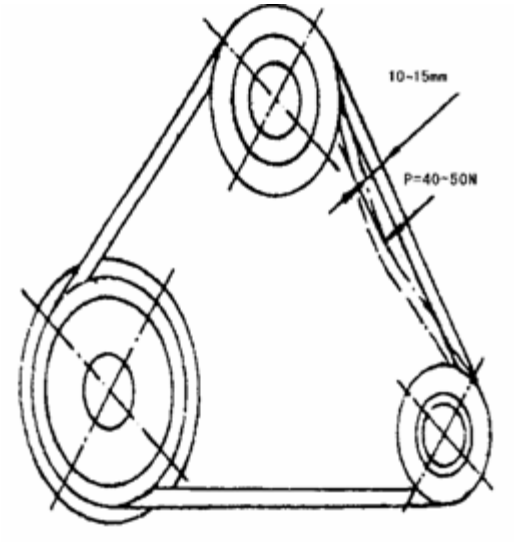

图 2—29 皮带松紧度检查
Fig 2-29 Belt tightness check

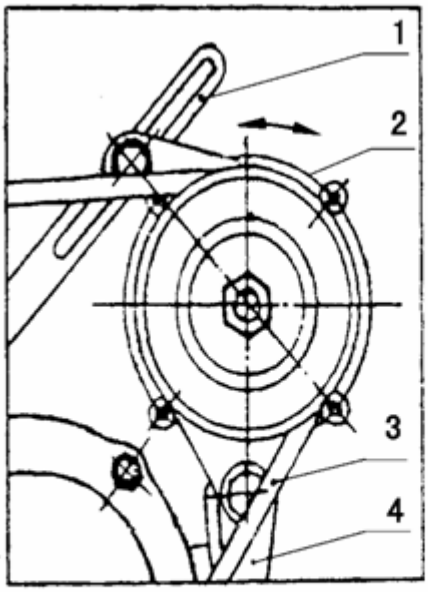

1.调节板 Adjusting plate 2.充电发电机 Charging generator
3.皮带 Belt 4.发电机支架 Generator bracket
图 2—30 皮带松紧度的调节
Fig 2-30 Belt tightness adjusting

调温器为腊式，安装于出水总管出水口内，柴油机在使用过程中，不要轻易把调温器拆掉，以免影响柴油机的正常工作状态。（图 2—31）

Thethermostator is of wax type and installed in the water outlet of the pipe. It is not

https://truckmanualshub.com/

allowed to remove thethermostator when using to avoid affecting the normal working condition of the diesel engine.

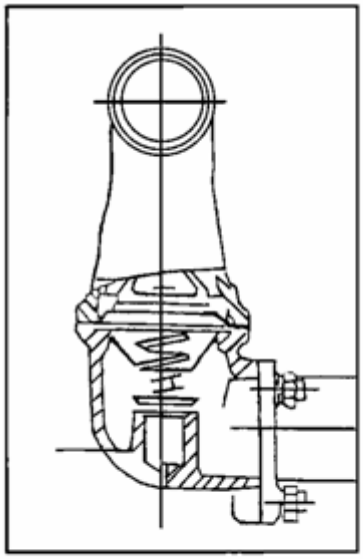

图 2—31 出水管总成局部图
Fig 2-31 water outlet assembly section

3.7 启动装置、电气系统与仪表 Start device, electrical system and instrument

电气系统原理图如图 2—32 所示。

The electric system principle is shown in Fig2-32

柴油机所用启动电机为四极四刷直流串激电动机，上述起动电机工作电压均为直流 24V，最大输出功率 6.6KW，单线制负极接地（搭铁）。电机小齿轮与飞轮齿圈的啮合用电磁铁控制机械驱动并带有滚柱式单向离合器，以防止电机转子超速，当按下启动开关一次不能起动时，必须等利用复位的小齿轮完全退回原来位置后，才可以进行第二次启动，连续二次启动间隔时间应不少于 1 分钟以上，每次启动时间不应超过 10 秒，以防止电机过热损坏。决不允许在柴油机及启动电机尚未停止转动时再次按下启动按钮，否则将会引起齿轮和齿圈的剧烈撞击而损坏。当发动机起动成功后，应立即松开按钮，使小齿轮复位。

The diesel engine adopts 4-pole, 4-brush, DC, series motor with working voltage of DC 24V, max power of 6.6KW and single-wire negative ground (earth lead). Electromagnet control mechanism drives the motor small gear and flywheel gear ring engagement with roller type one way clutch to avoid over speed of motor rotor. If the motor can’t start to work when pressing start switch once, the user should attempt the second start only after the small gear returns completely to the original position, and the time interval between the 2 starts shall be

https://truckmanualshub.com/

at least 1 minute; the start time shall not exceed 10 sec to avoid the damage due to overheat. It is forbidden to press the start button again when the diesel engine and motor operate, otherwise, the gear and gear ring will hit each other to cause damage. When the engine starts to operate, release the button to reset the small gear.

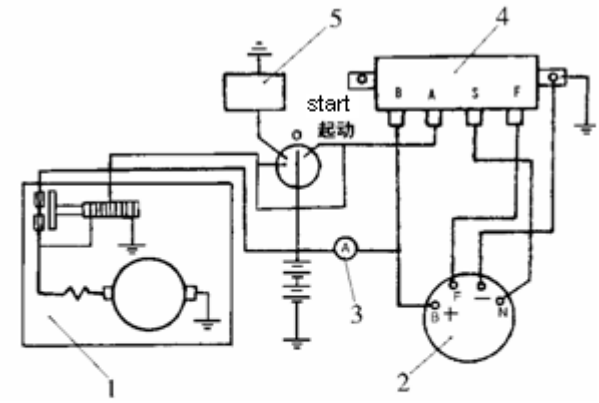

1. 起动电机 Start motor 2.发电机 Generator
3.电流器 Current 4.电压调节器 Voltage adjustor
5.进气加热器 Air intake heater
图 2-32 电气系统图图 Fig 2-32 Electrical system

发电机为 JF 型硅整硫无刷发电机，工作电压为 28V，根据不同的机型，其功率有 0.5KW、0.75KW 两种，不允许超负荷使用。发电机为负极接地（搭铁），不能接错，否则将会烧坏电机。并严禁将发电机“+”与“F”或“-”极接线端头相碰，否则将会损坏电压调节器。

JF silicon rectifying brushless generator is adopted with working voltage of 28V, and there are 2 powers of 0.5 KW and 0.75 KW depending on the different models. It is not allowed to operate overload. The generator is of negative ground type, and it must be connected correctly to avoid the motor from burnt. It is forbidden to connect the terminal “+” to terminal “F” or “-”, otherwise, the voltage adjustor will be damaged.

电压调节器的作用是当发电机转速发生变化时，自动地将发电机输出的电压稳定在一定的范围内，供用电器使用并向蓄电池充电。电压调节器安装时应垂直安装，接线柱向下，调节器是较精密的电器，切勿随意调整，当确认有故障时，应将盖子拆下，先检查触点有否污染不通，触点弹簧仅起调节电压数值的大小作用，拉长弹簧电压上升，反之下降。每经工作 350 小时后，应检查电压数值并整修触点，调节器衔铁与铁芯间隙应为 1.4～1.5mm。

The voltage adjustor is used to stabilize the output voltage within a certain range automatically when the rotation speed of the generator changes, and it also serves the electrical device and battery charging. The voltage adjustor shall be installed vertically with the terminal post downwards. It is not allowed to adjust the adjustor since it is a precise device. When malfunction occurs, remove the cover first, then check whether there is dirt on the contact. The contact spring is used to adjust the voltage: the voltage increases when the spring extends, otherwise, the voltage decreases. Every after 350 hours working, check the

https://truckmanualshub.com/

voltage and adjust the contact. The clearance between armature iron and iron element of the adjustor shall be 1.4～1.5mm.

进气加热器安装于进气管与进气弯管接合处，是当环境温度较低时，使柴油机更易于起动而设置的辅助启动装置。其工作原理是当空气从空气滤清器进入进气管流经加热器时，已通电发热的电热板将流过的空气进行加热，温度升高后的空气被吸入气缸使柴油机易于起动。与配置有进气加热器的柴油机配套的工程机械应设有带预热启动的启动开关，接线时注意与加热器两个接线柱相联接的接线端子不要与柴油机外壳相碰，以免造成短路故障。在启动时如需进行预热启动，则应先把启动开关板至预热位置，每次预热时间应控制在 40 秒内，然后再将开关板至启动位置，对发动机进行启动.

Air intake heater is installed at the joint of air intake pipe and elbow pipe. When the environmental temperature is low, the auxiliary start device could make the diesel engine easy to start. When the air enters the intake pipe from the filter passing the heater, the platen heater will heat the air; the diesel engine is easy to start due to the heated air in the cylinder. Start switch with preheating start shall be provided for the construction mechanism with diesel engine equipped with air intake heater; when connecting the wire, the terminal connected with 2 heater terminals shall not contact the diesel engine housing to avoid short-circuit. If preheating start is required, shift the start switch to preheating position to control the preheating time within 40 sec each time; then shift the switch to start position to start the engine.

柴油机根据用户的需要，可选配不同的仪表及传感器，主要有微细管膨胀式水温表、油温表;油管直通式机油压力表;直流电流表;电信号机油压力过低报警器;电信号机油温度、冷却水温度传感器;电子式转速表;带计时器电子式转速表;冷却水温度过高报警器。电子转速表的接线示意图如（2—33 所示）。

Different instruments and sensors can be equipped as options according to user’s requirements, including capillary expansion thermometer, oil thermometer, oil pipe straight pressure gauge, DC ammeter, electrical signal oil pressure too low alarm, electrical signal oil temperature, cooling water temperature sensor, electrical tachometer, electrical tachometer with timepiece and cooling water temperature too high alarm. The connection diagram of electrical tachometer is shown in Fig 2-33.

https://truckmanualshub.com/

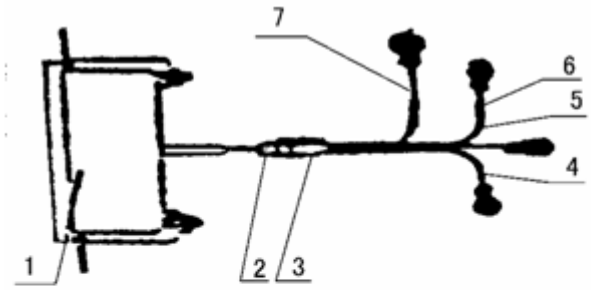

1.转速表 Tachometer 2.六芯插头 6-pin plug 3.六芯插座 6-pin socket
4.地线（黑）Earth lead (black) 5.电源线（红） Power source wire (red)
6.灯线（白）Lamp wire (white)
7.讯号线（接充电发电机中性点"N"）（蓝）
Signal wire (connected to neutrality point "N" of charging generator) (blue)

图 2—33 电子转速表接线示意图

Fig 2-33 electrical tachometer connection diagram

3.8 增压器 Turbocharger

YC6A、YC6B、YC6J 系列增压的柴油机均采用废气涡轮增压系统。其工作原理如下图所示。柴油机排气管 1 接到增压器的涡轮壳 4 上，柴油机排出的高温和有一定压力的废气经涡轮壳 4 进入喷嘴环 2，由于喷嘴环的通道面积由大到小，因而废气的压力和温度下降，而速度却迅速提高。这个高速的废气气流，按着一定的方向冲击涡轮 3，使涡轮高速旋转。废气的压力、温度和速度越高，涡轮转动越快。通过涡轮的废气最后排入大气。因为涡轮 3 与压气机叶轮 8 固装在同一根转轴上，所以叶轮与涡轮以相同的速度旋转，将经过空气滤清器滤清过的空气吸入压气机壳。旋转的压气机叶轮将空气压力提高后进入气缸，由于空气密度增加，进入气缸的空气量也增加，因而可以增加喷入气缸的油量，从而提高发动机功率，降低燃油消耗率。

YC6A、YC6B、YC6J series diesel engine adopts exhaust gas turbo Turbocharged system. The working principle is shown as following. The diesel engine exhaust pipe 1 is connected to the turbo housing 4 of the Turbocharger; high temperature of the diesel engine and the exhaust gas with certain pressure will enter the injection ring 2 through turbo housing. Since the path area of the injection ring changes from large to small, the pressure and temperature of the gas will decrease, but the speed increases rapidly. The high speed gas flow will rush the turbo 3 as per certain direction to make turbo rotating at high speed. The higher the pressure, temperature and speed are, the quicker the turbo rotates. The exhaust gas will exhaust to outside through turbo. The turbo 3 and air compressor impeller 8 are installed on the same shaft, so the impeller and turbo rotate at the same speed to suck the air passing the filter to air compressor housing. The rotating air compressor impeller will increase the air

https://truckmanualshub.com/

pressure to enter the cylinder. Since the air intensity increases, more air enters into the cylinder, so the fuel quantity injected into the cylinder increases, thus the engine power can be improved and the fuel consumption can be reduced.

涡轮增压器和增压柴油机在性能上有着密切的关系，如果增压器的性能改变，将直接影响到柴油机的性能。为了使增压柴油机保持良好的综合性能，同柴油机一样，增压器在使用过程中必须用正确的方法和进行良好的保养。由于整个进排气系统各接头处漏气时会影响增压器的工作，因此必须经常检查外部接头的紧固情况。

The performance of the turbo Turbocharger attaches much importance to the Turbocharged diesel engine. If the performance of the Turbocharger changes, it will affect the engine performance directly. In order to keep good performance of the Turbocharged engine, correct operation and good maintenance of the Turbocharger shall be followed when using. Since the leaking of joints of the whole exhaust system wi;; affect the working of the Turbocharger, so the tightening condition of the outer connectors shall be checked.

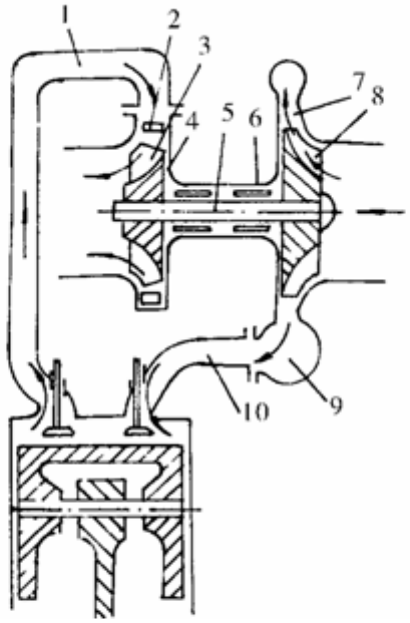

1.排气管 Exhaust pipe 2.喷嘴环 Injector ring 3.涡轮 Turbo
4.涡轮壳 Turbo housing 5.转子轴 Rotor shaft 6.轴承 Bearing
7.扩压器 Diffuser 8.压气机叶轮 Air compressor impeller
9.压气机壳 Air compressor housing 10.进气管 Air intake pipe

图 2-34 废气涡轮增压柴油机工作原理图

Fig 2-34 Exhaust gas turbocharger diesel engine working principle

https://truckmanualshub.com/

增压器系统常见故障及排除方法
Malfunction and Solution of Turbocharger

故障原因 Cause	排除方法 Solution
①进气系统堵塞 Air intake system blocked	检查空气滤清器与压气机之间的管路、压气机出口与进气管管路及进气管、清理通畅。Check and clean the pipe between air filter and compressor, compressor outlet and air intake pipe
②进气泄漏 Air intake leaking	检查空气滤清器与压气机之间的管路、压气机出口与进气管之间的管路，进气管与发动机连接处等是否有泄漏、可拧紧紧固螺栓、更换垫片等零件。Check whether there is leak between air filter and compressor, air intake pipe and connecting part.; tighten the bolt and replace the gasket
③排气系统阻塞 Air exhaust blocked	维修或更换有关部件 Repair and replace related parts
④排气泄漏 Air exhaust leak	检查排气管与发动机、涡轮进口与排气管，涡轮壳与中间壳，涡轮出口至排气管连接处，如有泄漏可更换密封垫片拧紧紧固螺栓 Check whether there is leak between air exhaust pipe and engine, turbo inlet and exhaust pipe, turbo housing and middle housing, turbo outlet to exhaust pipe connector; replace the gasket and tighten the bolt.
⑤压气机转子与压气机壳体、涡轮与涡轮壳相碰 Rotor of compressor touches compressor housing and turbo housing	更换总成 Replace assembly
⑥进、回油管漏油 Fuel leak of fuel intake/ return pipe	更换 Replace

由于增压器属于精密的部件，对装配技术要求很高，为了保证增压器有较长的寿命，属于增压器本身的故障，请与全国各地玉柴的委托技术服务站联系解决。用户切莫自行解体增压器，否则，不予质量保修。另外，凡更换润滑油，清洗机油滤清器或发动机长时间停放后（约一周以上），必须松开增压器的进油接头，注入干净润滑油，使增压器润滑系统中充满润滑油。

Since the Turbocharger is precise part, it is required strictly for the assembly. In order to

https://truckmanualshub.com/

ensure long lifetime of the Turbocharger, if there is malfunction of the Turbocharger, contact the technical service station of Yuchai to solve the problem. The user is forbidden to disassemble the Turbocharger, otherwise, the quality warranty shall be not provided. If replace the lubricating oil, clean the oil filter or the engine stops for a long time (more than one week), the fuel inlet connector of the Turbocharger shall be released and clean lubricating oil shall be filled in the lubricating system.

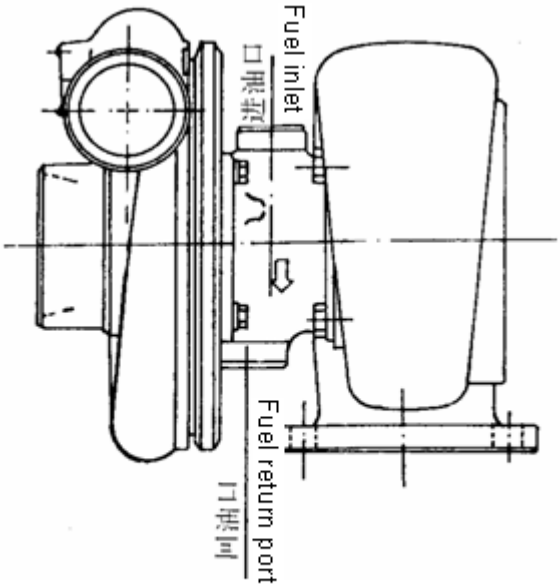

图 2-35 废气涡轮增压器
Fig 2-35 Exhaust gas turbocharger

3.9 转向泵 Steering pump

部分机型带转向泵，一般泵上有一个进油口和一个出油口，工作之前需要灌入专用液压油。

Steering pump is adopted for some models and there is one fuel inlet and outlet on the pump; fill special hydraulic oil before working.

1） 拆卸注意事项：Caution when disassembling

装拆中，严禁用力敲打、撞击，轻取轻放。

During disassembly and reassembly it is forbidden to knock or strike with force and everything should be handled with care.

管路在拆装更换时，严格保证清洁度，并注意管路与泵进出油口密封垫圈的光整性，如变

https://truckmanualshub.com/

形较大，需及时更换，否则油路会漏油。

Ensure the cleanness and notice the smoothness of pipeline and seal gaskets on oil inlet and outlet during the assembly, disassembly and replacement of pipeline. If the pipeline is distorted greatly, be sure to replace it in time; otherwise, the oil pipeline will leak oil.

特别注意：因转向泵属汽车安全件，其零件制造及装配有严格的要求，禁止非专业人员自行拆装转向泵内部零件。

Special notes: The parts inside the steering pump can be disassembled and reassembled only by qualified specialized personnel, because the pump is a component essential to safety of the vehicle, and so strict requirements have been set for manufacture and assembly of its parts.

2） 使用注意事项：Cautions when using

环境温度在 0℃以上，采用 N68HM、N46HM 抗磨液压油，环境温度在 0℃以下采用 N32HM 抗磨液压油。

The environmental temperature should be over 0℃ and N68HM、N46HM hydraulic oil should be used while N32HM hydraulic oil when the environmental temperature is below 0℃

- 油罐内添新液压油时，必须经过滤方可注入（过滤精度为 25μm）（应具有“新”油并不干净的概念）。

  It is a must to refill the oil tank only with the new hydraulic oil filtrated with an accuracy of 25μm (the user should keep he concept that the new oil is not clean)

- 转向泵严禁在无油的状态下使用，否则会缩短泵的使用寿命。

  It is prohibited to use the steering pump when there is no oil in it, otherwise it will result in shortening its service life

- 将方向盘打到死角位置的连续时间不得超过半分钟，否则会缩短泵的使用寿命。

  The accumulated length of time of the steering wheel at its dead point shall not exceed half a minute; otherwise the service life of the pump will be shortened

新转向泵走合 60 小时及以后每行驶 100 小时需及时更换油液，同时清洗或更换油罐中滤芯。

Change the hydraulic oil after the running-in period of a new steering pump for 60 hours and consequent every 100 hours of operation and simultaneously clean the filter element in the oil tank or replace it with a new one.

https://truckmanualshub.com/

使用中应经常检查油罐中油量是否缺少，油液有无变质，杂质是否过多，如发现不良状况，应及时添加或更换。

Frequently check the oil tank for its quantity and the hydraulic oil quality for its deterioration & impurities. Replenish or change oil in time in case of any unsatisfactory situations

进回油接头出现漏油现象时不允许采用涂密封胶排除，否则会造成转向泵失效。

Any leakage on the oil inlet & return joints can not be remedied by means of coating the sealant; otherwise it will result in failure of the steering pump

常见的故障及排除方法：（表 2-4）

Table 2-4 Malfunction and solution

现象 Phenomenon	原因 Phenomenon	排除方法 Solution
转向缓慢、沉重 Slow and ponderous steering	油箱内油少 Deficient oil in oil tank	加油至油面高度 Refill to the level of oil surface
	油液粘度大 Great viscidity of oil	使用推荐油液（N32—N46）Use the recommended oil(N32—N46)
	吸油不畅 Difficult oil suction	清洗滤油网及管路，根据使用环境定期检查，及时清洗更换 Clean the filter net and the pipeline; perform a regular check according to the usage environment; and implement a timely cleaning and replacement
	管路有死角 Dead angle in pipeline	固定油管，防止死角产生 Fix the oil pipe to prevent the occurrence of a dead angle

现象 Phenomenon	原因 Phenomenon	排除方法 Solution
压力不稳 Greater noises and unstable	吸油管漏气 Gas leakage from oil sucking pipe	更换吸油管或拧紧管夹 Replace the oil sucking pipe or tighten the pipe clip

https://truckmanualshub.com/

	吸油口密封不良 Poor sealing of the oil suction.	检查密封铜垫变形情况，去除脏物、毛刺或更换 Check the deformation of the copper sealing gasket, remove dirt and burr, or replace the gasket.
	骨架密封圈损坏 Framed sealing ring is damaged.	更换骨架密封圈 Replace the framed sealing ring.
漏油 Oil leakage	出油口密封不良 Poor sealing of the oil suction.	更换该处密封件 Replace the sealing part
	流量阀大螺帽处密封不良 Poor sealing of the flow valve nut.	更换该处“O”型圈 Replace the O-ring.
	后盖密封圈损坏 Sealing ring of the rear cover is damaged.	专业厂家维修 Repair by professionals
转向不助力或压力不足 No boosterr during steering or inefficient	流量阀卡死 Flow valve is blocked.	用金相纸抛光阀体表面，清洗阀孔（参照阀卡检修安装示意图）Polish the valve core surfaces with metallographic paper, clean the valve bore (refer to the repair & assembly chart of the flow valve)
	内部零件失效所致 Interior parts are faulty.	专业厂家维修 Repair by professionals.

4 发动机的使用和维护保养
Operation and maintenance of engine

4.1 发动机的使用 Operation of engine

4.1.1 起动前 Before starting

- 检查油底壳润滑油油面，确保润滑油足够，保证润滑，若不够，则应添加到润滑油标尺规定的位置;
- Check the oil surface of lubricant in oil pan; making sure lubricant is enough, if it is not enough, lubricant should be added to the regulated position of scale.
- 检查水箱中的冷却液，保证正常冷却;

https://truckmanualshub.com/

- Check the cooling fluid in radiator to make sure cooling smoothly.
- 检查排除燃油管路的空气和柴油滤清器的水；
- Check and drain the air in fuel pipeline and water in diesel filter.
- 检查油箱，若不够，添加燃油;
- Check fuel tank and add fuel if it is not enough.
- 检查电器系统（各连接线路、开关接线等是否牢固可靠，电瓶电解液是否充足，若不够，加足电解液）;
- Check electrical system (credibility and fastness of all connections and switch connections; the capacity of battery electrolyte, add it if necessary).

- 检查皮带，松紧度应适宜，皮带过松打滑使水泵、风扇的工作不正常，冷却效果差，发动机水温高，过紧则使皮带轮轴受力过大、皮带寿命缩短;
- Check the strap, the tightness should be suitable; if too loose, water pump and fan will work abnormally by strap skidding, the cooling effect will be very bad and water temperature in engine will be very high; if tool tight, the load of sprat axle is too high and cut service life of sprat.

- 检查汽车底盘和操纵装置，禁止汽车带病行驶。
- Check vehicle batholiths and control devices; avoid vehicle runs in danger.

4.1.2 起动 Starting

完成起动前准备工作并确认符合要求后，才可以起动发动机（冬天天气寒冷时需对柴油机预热后才能起动），起动发动机时，持续起动时间不能超过 **10** 秒钟;二次起动的时间间隔不应少于 1 分钟;若连续三次均无法起动，则应检查原因，排除故障，再行起动。起动后检查:
Start the engine (In cold winter, diesel engine should be started after heating for a while) after completing preparation and ensuring all requirements are satisfied. When starting engine, continuous starting time should be limited in 10 seconds; the time gap for restart should be at least one minute; if it can not be continuously started for three times, driver should check the cause and eliminate faults and restart engine. After starting, driver should check:

润滑油压力:在怠速时不能低于 0.1Mpa，压力过低，发动机润滑不良会造成各运动副磨损;
Lubricant pressure: The pressure should not be lower than 0.1Mpa in ideal speed; if it is too low, bad lubricating of engine will cause secondary worn of action.

水泵工作情况良好，确认冷却液已进入发动机水套内循环;无“三漏”、异响现象;
Good working situation of water pump; make sure cooling fluid has entered the internal cycle of engine water jacket; no “three leakages” and abnormal sound.

https://truckmanualshub.com/

各汽车仪表的工作情况。发现有不正常现象，必须立即停车检查排除，必要时送修。

Working situation of all vehicle instruments: If there is fault, driver must stop the vehicle and check and solve the problem, driver can also call somebody to repair the vehicle if necessary.

4.1.3 运行 Running

发动机起动之后，依次使发动机在低速和中速下空车暖机，当发动机冷却液温度高于 60℃，润滑油温度高于 45℃时，才允许带负荷工作。并注意以下各点：

Warm up the vehicle unloaded by running the engine successively at the low and medium speeds after it is started; it is allowed for the engine to work with loads only when the engine coolant temperature is higher than 60℃ and the oil temperature higher than 45℃. Pay due attention to the following items:

不允许发动机长期在怠速下运转。

Do not run the engine at the idle speed for a long time.

怠速时润滑油压力不得低于0.1Mpa。

The oil pressure shall not be lower than 0.1Mpa during running at an idle speed.

运转期间的润滑油压力、润滑油温度及出水温度应正常。

The oil pressure & temperature and outlet water temperature should be normal during running period

如发现有异响和振动，应立即停车检查。

Stop and check the vehicle immediately if there is any abnormal noise and vibration.

注意油、气、水的密封情况，如有泄漏，应立即消除。

Pay due attention to the sealing conditions of fuel, air and water; in case of any leakage solution it immediately.

新的发动机或大修后的发动机不允许一开始就以高速、重负荷工作，在最初的2500公里或60小时之内，应降低功率使用，负荷应不超过65%，以保证良好的磨合。

It is forbidden for a new or an overhauled engine to work at high speeds and with heavy loads at the beginning; for the first 2500km or 60h, run the engine at a decreased power and with a load of less than 65% to ensure better running-in.

4.1.4 停车 Stopping

发动机应避免急速停车熄火。停车前应低转速运转3～5分钟，以使发动机冷却下来，然后加怠速空转2～3分钟，使各部分得到充分的润滑油，然后停车熄火。

It should be avoided for the engine to stop suddenly. Before stopping run the engine for 3 ~ 5 minutes at a lower speed to cool down the engine, then run the engine at the idle speed for 2~3 minutes, and only in this case you can stop the engine.

另外应注意在环境气温低于 5℃以下时，如果发动机冷却液不能确保不发生冰冻，应及时

https://truckmanualshub.com/

把冷却液放完，以免冻坏机件。

In addition, you should pay due attention to the following: drain off the coolant to protect the engine & its components from freezing when the ambient temperature is lower than 5℃ and the engine is not ensured to be prevented from frrezing.

当气温低于-30℃时，应将蓄电池拆下，搬入暖室内保温，否则难以起动。

Remove the battery and put it into a room to keep warm when the ambient temperature is lower than -30℃, otherwise it will be difficult to start.

4.1.5 燃油 Fuel

为了使发动机拥有更高的可靠性和更低油耗，燃油应选用符合 GB252－2000《轻柴油》规定的清洁轻柴油，并随着地区环境气温的不同而选用不同牌号的清洁柴油，一般夏季选用 0 号，冬季气温在-5℃以上时选用－10 号，当气温在-14℃以上时应选用－20 号，当气温在-29℃以上时应选用－35 号。

In order to achieve higher reliability and lower oil consumption, we should select the clean light diesel oil according to the regulation of GB252-2000 <Light Diesel Fuel>. Different diesel fuels should be selected based on different areas and different temperatures. Commonly, 0# diesel fuel should be selected in summer; -10# diesel fuel should be selected in winter with temperature over -5℃; -20# diesel fuel should be selected at the temperature over -14℃; -35# diesel fuel should be selected at the temperature over -29℃.

燃油的指标，Index of diesel fuel

黏度：40 °C 时 为 1.3～5.8 厘沲

Viscosity: 1.3 to 5.8 centistokes at the temperature of 40 °C

十六烷值：环境温度高于 0°C 时，不低于 40

Cetane number: higher than 40 at the environmental temperature of over 0°C

低于 0°C 时，不低于 45

When temperature is lower than 0°C, it should not be less than 45

含硫量：不超过 0.5 质量百分比

Sulphur content: Lower than 0.5%

水和沉积物：不超过 0.05 体积百分比

Water and sediment: Lower than 0.05%

浊点：低于燃油所要工作的最低环境温度 6°C

https://truckmanualshub.com/

Turbidity point: Lower than 6°C that is the lowest environmental temperature diesel fuel requires

用户请注意：**Note:**
为确保您购买的燃油品质满足以上的要求，避免燃油中可能存在的杂质和水分对发动机燃油系统零部件的影响，玉柴要求用户到正规加油站购买燃油。有条件的用户，最好自备一个加装燃油滤清器的储油罐。买来的柴油先在罐中存放两天，待杂质和水分沉淀以后再取出使用。储油罐要定期排除沉淀下来的杂质和水分并更换加装的滤清器。

In order to ensure the diesel fuel can satisfy the requirements above and avoid the influence from impurity and water in diesel fuel to parts of engine diesel fuel system, Yuchai advices customers to buy diesel fuel at standard gas station. If necessary, customers had better have a fuel tank with fuel filter. Bought fuel should be put in this tank for two days and can be used after sediment and water deposit. Costumer should eliminate sediment and water and replace filter on schedule.

4.2 发动机的维护保养 Engine Maintenance

一般首次使用 50～60 小时必须通过当地玉柴技术服务站进行首次保养（俗称“走保”），保养需要更换三滤及机油等。

First maintenance shall be carried out at local Yuchai service station after first driving for 50～60 hours . it is required to replace 3 filters and oil for the maintenance.

项目 Item l	保养周期 Maintenance interval	保　养　项　目 Maintenance Description
日常维	每日进行 Daily maintenance	检查油箱油量 Check the fuel quantity in the tank
		检查冷却水量 Check cooling water quantity

https://truckmanualshub.com/

护 **Routine maintenance**		检查油底壳及喷油泵内的机油量 Check the oil quantity in the oil pan and fuel injection pump.
		检查“三漏”情况 Check leakage of fuel, coolant and oil
一级保养 First-level maintenance	每 100 小时 Every 100 hours	所有日常维护项目 All items of daily maintenance
		清洗输油泵进油滤网 Clean the fuel inlet filtering net of the fuel transfer pump
		检查风扇皮带的松紧度 Check the tightness of the fan belt
		检查缸盖螺母的拧紧情况 Check the tightening of the cylinder cover nut
		检查并调整气门间隙 Check and adjust the valve clearance
		检查喷油器的喷油压力及雾化状况 Check the fuel injection pressure and spray of the fuel injector
		对新机或刚大修好的机更换机油 replace the oil for new engine or engine after overhaul
二级保养 Second-level maintenance	每 250 小时	所有一级保养项目 All items of first level maintenace
		检查供油提前角 Check the fuel supply advance angle
		更换机油滤清器 Replace the oil filter
		更换柴油滤清器 Replace the diesel oil filter
		清洁空气滤清器 Clean the air filter
		检查气门密封情况 Check the valve sealing
		给水泵加注润滑脂 Fill lubricating grease to the water pump

https://truckmanualshub.com/

		检查电器线路各连接点的接触情况 Check the contact of the circuit connection
		检查所有重要螺栓螺母的拧紧情况 Check the tightening of all key bolts and nuts.
		若冷却系统结垢严重，水温高的应及时除垢 The furring shall be removed if there is much furring in the cooling system.
		清洗呼吸器滤芯 Clean the element of the respirator
		更换机油 Replace the oil
三级保养 Third-level maintenance	每 1500 小时 Every 1500 hour	解体整机清除油污、积炭、结焦等 Disassemble the engine to emove the oil dirt, carbon deposit and coking
		检查各摩擦副、运动件的磨损变形情况 Check the wearing and distortion of friction parts and moving parts.
		检查喷油泵的工作情况 Check the working condition of the fuel injection pump
		检查喷油器的工作情况 Check the working condition of the fuel injector
		检查机油泵的工作情况 Check the working condition of the oil pump
		检查发电机及起动马达的使用情况，清洗轴承及其它机件，加注润滑脂 Check the operation of the generator and the start motor; clean the bearing and other parts; fill lubricating grease
		检查气缸垫及其它垫片的使用情况 Check the operation condition of the cylinder gasket and other gaskets
		排除各种隐患 eliminate other malfunctions
		更换机油 Replace the oil

https://truckmanualshub.com/

注意：三级保养完成的柴油机应有 50 小时的磨合期，不能马上高速高负荷运转，以免损伤机件，影响使用寿命。

Note: run-in period of 50 hours is required for the diesel engine after 3-level maintenance, and it can' work at high speed with heavy load to avoid damaging the parts and shortening the lifetime.

4.2.1 柴油机的使用：　Operation of the diesel engine

(1)检查准备：Check preparation

- 检查油底壳机油面应在油标尺上下两刻线之间。
- Check whether the oil level of the oil pan is between the upper and lower scales
- 检查冷却液是否充足。
- Check whether the coolant is sufficient
- 检查柴油是否充足，并排干净管路中的空气：

松开喷油泵上回油管的放气螺塞，逆时针拧转输油泵上的手柄，手柄升起后反复向下压，待放气螺塞冒出的柴油不带气泡后，将放气螺塞和输油泵手柄拧紧。

Check whether the diesel oil is sufficient and exhaust the air in the pipe:

Release the exhaust plug on the fuel return pipe of the fuel injection pump, and rotate the lever on the fuel transfer pump anticlockwise; press the lever several times; tighten the exhaust plug and fuel transfer pump until there is no bubble in the diesel oil.

- 检查进排气管路连接是否密封和牢固。
- Check whether the air intake/exhaust pipe connection is sealed and firm.
- 检查水泵皮带松紧程度是否合适：

在水泵与充电机两皮带轮中部向下施加 4-5 公斤的作用力，皮带下沉 10-15mm 为宜。

Check whether the tightness of the water pump belt:

A force of 4-5 kg is applied downwards in the middle of the 2 belt pulleys of the water pump and cgarger; the belt shall be sunk for 10-15mm.

- 检查电气线路是否连接牢固，是否有碰线和破损。
- Check whether the electric circuit is connected firmly, whether there is swing cross and damage.
- 检查是否有的三漏现象（漏油、漏水、漏气）。
- Check whether there is leakage of oil, water and air.
- 检查各种仪表、感应元件是否有缺损。
- Check whether there is damage of the instruments and sending units.
- 检查各外围零件连接是否紧固。

Check whether the outer parts are connected firmly.

(2)起动：Start;

- 完成起动前准备工作并确认符合要求后，才可以起动柴油机（冬天天气寒冷时需对柴油

https://truckmanualshub.com/

机预热后才能起动）

- Start the diesel engine after the start preparation and confirmation of the requirement. (The diesel engine can be started after preheating in winter.)
- 起动柴油机时，持续起动时间不能超过 10 秒钟；二次起动的时间间隔不应少于 1 分钟；若连续三次均无法起动，则应检查原因，排除故障，再行起动。
- The continuous start time of the diesel engine shall not exceed 10 sec, and the interval between 2 starts shall be at least 1 min; if the engine can't be started after three attempts, check the reason, and start again after eliminating the fault.
- 严禁起动后猛轰油门。
- It is forbidden to operate the accelerator fiercely after start.
- 机油压力:在怠速时不能低于 0.1Mpa，压力过低，发动机润滑不良会造成各运动副磨损；
- Oil pressure shall not be lower than 0.1Mpa at idle speed; if the pressure is too low, poor lubrication of the engine will cause the moving parts wearing.
- 检查水泵工作情况良好，检查有无“三漏”、异响现象；
- Check whether the working condition of the water pump is good, whether there is leakage of oil, water and air, whether there is abnormal sound.
- 检查整车仪表的工作情况。发现有不正常现象，必须立即停车检查排除，必要时送修。
- Check the working condition of the instruments. Stop driving and eliminate the fault if there is abnormal phenomenon. Send it to repair if necessary.
- 严禁长时间怠速：起动后怠速 3-5 分钟，一般要求不超过 10 分钟，否则易引起烧油嘴、缸套活塞环磨损等故障。
- It is forbidden to operate at idle speed for a long time: the engine works at idle speed for 3-5 min after start, generally not exceeding 10 min, otherwise, the fuel nozzle may be burnt and the cylinder sleeve piston ring may be wearing.

(3)运行：Operation

- 柴油机冷机起动后，禁止大油门高速高负荷运转柴油机，应逐渐提高柴油机转速，水温上升到 60℃以上，发动机充分润滑、受热均匀后才能正常运转。
- It is forbidden for the diesel engine to work at high speed with heavy load after the cold starts; increase the speed of the engine gradually, the engine could operate normally with full lubrication after the water temperature is higher than 60℃
- 正常运行时机油压力应在 0.25-0.6MPa 之间。
- The oil pressure shall be between 0.25-0.6MPa when normal operation.
- 正常运行时水温应在 75-95℃之间。
- The water temperature shall be between 75-95℃ when normal operation.
- 汽车在行驶阶段，机手应经常注意观察车上各种仪表，随时掌握发动机的运行情况，发现不正常情况必须立即停车检查排除，必要时送修。
- The driver shall observe the instruments of the vehicle when driving to know the operation of the engine; if abnormal status appears, stop driving to eliminate the fault.

https://truckmanualshub.com/

Send it to repair if necessary.

(4)停机：Engine shutoff

- 停车前怠速运行 3～5 分钟后才熄火，避免急速停车，特别是高转速高负荷运转时更应如此。
- The engine is shut off after 3~5 min operation at idle speed when the vehicle stops. Sudden stop shall be avoided, especially when the engine operates at high speed with heavy load.
- 每次停车后，必须及时排除在运行期间所发现的故障，并经常进行必要的检查，保证柴油机正常的技术状态。
- The malfunctions in operation shall be eliminated timely after stop; necessary inspection is required regularly to ensure the normal technical status of the diesel engine.

4.2.2 柴油机的维护保养：　　Maintenance of the diesel engine

(1)磨合：Run-in period:

- 新柴油机（或刚大修好的柴油机）必须进行先期磨合，以此改善各摩擦副的配合及提高工作能力，这对保证柴油机工作可靠性及使用寿命至关重要。
- Early run-in shall be carried out for new diesel engine (or diesel engine after overhaul) to improve the matching of friction parts and the working ability. It is quite important to guarantee the reliability and long lifetime of the diesel engine.
- 磨合时间为 40～50 小时，磨合期的功率和转速应由低到高，但最大不应超过标定功率的 80%。
- The run-in period lasts 40～50 hours. The power and speed when run-in shall be increased gradually, but the max power shall not exceed 80% of the rated power.
- 磨合期结束后更换机油、机油滤清器。
- Replace the oil and oil filter after the run-in period
- 严禁长时间怠速和低速磨合，否则容易造成早期磨损、烧油嘴等故障。（有些用户将正常的磨合等同于怠速磨合，机器买回来后长时间怠速磨合，其实这种做法是错误的，磨合期是可以进行工作的，只要不超负荷就可以了）
- It is forbidden to operate at idle speed and low speed for a long time in run-in period, otherwise, early wearing and burnt fuel nozzle may be caused. (some users take normal run-in the same as idle speed run-in, and operate the engine at idle speed for a long time. The above operation is incorrect. The engine could work in run-in period with proper load.)
- (2)机油的使用：Application of oil
- CD40、（使用外界温度为 10℃～40℃）
- CD40 (external temperature in application is 10℃～40℃)
- CD30（使用外界温度为 0℃～30℃）
- CD30　(external temperature in application is 0℃～30℃)

https://truckmanualshub.com/

- 20W/50（使用外界温度为-5℃～50℃）
- 20W/50 (external temperature in application is -5℃～50℃)
- 15W/40（使用外界温度为-10℃～40℃）
- 15W/40 (external temperature in application is -10℃～40℃)
- 10W/30（使用外界温度为-20℃～30℃）
- 10W/30 (external temperature in application is -20℃～30℃)
- 5W/30、5W/40、0W/30（使用外界温度为-20℃以下）
- 5W/30、5W/40、0W/30 (external temperature in application is below -20℃)
- n自然吸气柴油机建议选用 CD 级或以上级的机油，增压柴油机建议选用 CF 级或以上级的机油。
- As for natural aspirated diesel engine, the oil of CD level or higher shall be selected; as for supercharged diesel engine, the oil of CF level or higher shall be selected.
- n柴油机在使用过程中，会消耗一定比例的机油。
- In the operation of diesel engine, certain proportion oil shall be consumed.
- n不同品牌的机油由于配方不同，混合使用可能会对柴油机产生不良影响。
- Because different oil brands use different formulation, mixed usage will lead bad influence to diesel engine.
- n严禁使用劣质机油，否则将会对柴油机造成严重损害，由此产生的故障玉柴不予保修。
- It is forbidden to use poor quality oil, or it will lead serious damage to diesel engine. The malfunction for this reason shall not be guaranteed and repaired by Yuchai.
- n当机油变稀、变稠、变黑、失去粘性时，必须及时更换机油，建议更换周期 150-250 小时。
- When oil becomes thin, thick, black and missing viscosity, the oil must be replaced in time. Recommended replacement cycle is 150-250 hours.
- n更换机油时必须同时更换机油滤清器，建议使用玉柴专用配件
- When replacing oil, oil filter shall be replaced at the same time; we recommend users to use Yuchai special parts.
- n(3)柴油的使用：
- Application of diesel oil
- n0 号柴油（使用外界最低温度≥4℃）
- 0 #diesel oil (lowest external temperature in application ≥4℃)
- -10 号柴油（使用外界最低温度为≥-5℃）
- -10 # diesel oil (lowest external temperature in application ≥-5℃)
- -20 号柴油（使用外界最低温度为≥-14℃）
- -20 # diesel oil (lowest external temperature in application ≥-14℃)
- -35 号柴油（使用外界最低温度为≥-29℃）
- -35 # diesel oil (lowest external temperature in application ≥-29℃)
- -50 号柴油（使用外界最低温度为≥-44℃）

https://truckmanualshub.com/

- -50 # diesel oil (lowest external temperature in application ≥-44℃)
- 伸入油箱的油管吸油口应距离油箱底面 25mm 以上，同时避免从油箱底部出油，以防水分及杂质进入柴油机的燃油系统。
- The fuel suction port in the fuel tank shall be away from the tank bottom for over 25mm to avoid the fuel out of the bottom and to prevent water and impurities entering in the fuel system of the diesel engine.
- 在输油泵进油接头处有一滤网，用于滤除柴油中的杂质，请定期清洗此滤网。
- There is filtering net at the end of fuel inlet connector of the fuel transfer pump to filter the impurities in the diesel oil. Clean the filtering net regularly.
- 用户应到正规的加油站加注符合要求的柴油，避免使用劣质油品，否则极易卡死油嘴，由于所用柴油不合格造成的故障玉柴不予保修。
- The user shall fill standard diesel oil at official gas station. Avoid using oil brands with poor quality, otherwise, the fuel nozzle will be blocked. Yuchai will not provide warranty for the malfunction due to using unqualified diesel oil.
- 柴油滤清器建议使用 200-300 小时进行更换，请使用品质信誉好的柴油滤清器，建议使用玉柴专用配件。

It is recommended to replace the diesel oil filter after using for 200-300 hours. Please select diesel oil filter with high reputation and excellent quality. Yuchai special part is recommended.

(4)冷却液的使用：

Application of cooling fluid

n 如使用水做为冷却液，应采用清洁干净的软水，不能使用井水、河水、泉水等硬水。

If water is used as coolant, clean soft water shall be adopted, it is forbidden to use well water, river water, spring water and other hard water.

n 常用的硬水软化方法是煮沸沉淀后除去沉淀物。更为彻底的方法是硬水中加软化剂，如每升水加 0.5～1g 碳酸氢钠（纯碱）或 0.5～0.8g 氢氧化纳（烧碱）。

Water softening method in common use is to boil water and remove precipitates after precipitating. Most thorough method is to use water softening agent, e. g. add 0.5～1g sodium bicarbonate (calcined soda) or 0.5～0.8g sodium hydroxide (sodium hudroxide) for every liter of water.

n 建议使用防冻液做为冷却液，特别是使用环境温度较低、海拔高度较高时。防冻液具有防冻、防腐蚀 、防穴蚀、防垢、高沸点等功能。

It is recommended to use antifreeze as coolant, especially in the environment of low temperature and high elevation. Antifreeze takes the advantages of freeze resistance, corrosion prevention, cavitation pitting prevention, anti-scale prevention and high boiling point.

n 优质的防冻液是国家指定的检测站检测合格的品牌，从外观上看:清澈透明、无杂质、不浑浊、无刺激性气味，产品外包装上应有详细的生产单位名称，产品说明书以及明确的指标说明。

Good quality antifreeze is the qualified brand that checked by national appointed inspection

https://truckmanualshub.com/

station. The external appearance is clean and transparent, with no impurity, no thickness and no irritating smell. On the package there shall be detailed name of production unit, products specification and clear instruction and explain.

n 使用劣质的防冻液不但不能防冻防沸，反而会加速冷却系统的腐蚀。

Use poor quality antifreeze can not to prevent frostbite and boil, on the contrary, poor quality antifreeze will increase the corrosion of cooling system.

(5)空气滤清器的保养：

Maintenance of air filter

n 空滤过滤原理：

Filtering principle of air filter

一级过滤：导风罩（使空气形成涡流，在重力和离心力作用下使灰尘沉淀到底部由排尘袋排出）

First class filtering: wind guide cover (forming air bow wave and deposit the dust to bottom and exhaust it out under the effects of gravity and mental efforts)

二级过滤：主滤芯（起主要过滤作用，过滤效果达 95%以上）

Second class filtering: main filter element (playing the leading role in filtering and the filtering impact will reach above 95%)

三级过滤：安全滤芯（起辅助过滤作用，同时防止异物进入）

Third class filtering: security filter element (assisting filtering and preventing impurity enter).n 保养：Maintenance

空滤器壳体：清理滤清器内腔、导风罩、排尘袋中的灰尘，注意不能认为导风罩没有用途而扔掉。

Air filter housing: clean filter inside, wind guide cover and the dust in dust exhausting pocket. Please notice that do not believe wind guide cover is useless and throw it out.

主滤芯：用毛刷刷除滤芯表面尘土，接着用压缩空气（压力 0.4-0.6MPa)从滤芯里面往外吹。如滤芯有破损必须马上更换。

Main filter element: use brush to clean the dust on the surface of filter element, and then use compressed air (pressure 0.4-0.6MPa) to blow from inside of filter element.

安全滤芯：用手拍打清洁，避免用空气吹。

Security filter element: use hand to flap to clean it and avoid blowing with air,

n 安装：检查密封圈是否破损缺失，拧紧时先旋转一下滤芯使其到位，一定要注意安装必须密封，不能造成空气短路。

Installation: check whether seal ring is damaged, when tightening it, rotate the filter element in place. Pay attention that it must be sealed when installation and can not lead air short circuit.

n 注意检查排尘袋口必须向下。

Pay attention to check whether the mouth of dust exhausting packet is downward.

https://truckmanualshub.com/

5 发动机常见故障及排除方法
Frequently-possible Troubles and Their Solution

5.1 发动机不能起动 Engine Fails to Start

故 障 原 因 **Cause**	排 除 方 法 **Solution**
① 起动机转速过低 Too low starter rotating speed.	检查起动系统，起动转速不得低于 110r/min。 Check starting system, and the starting rotating speed can not be lower than 110r/min.
②供油系统内有空气 There is any air in fuel feeding system.	1．检查供油管路接头是否松动。拧松燃油滤清器总成上的放气螺钉，用手动泵压送燃油，直到溢出的燃油不带气泡为止。 Check whether the fuel feeding pipe joints loosened or not. Loosen the air-bleeding screw on fuel filter assembly, and feed the fuel by the hand pump until there is no air bubble in the fuel spilt out. 2．拧松喷油器端的高压油管接头，用手动泵压送燃油，直到溢出的燃油不带气泡为止。 Unscrew the high pressure fuel pipe joint at he end of fuel injector; feed the fuel by the hand pump until there is no air bubble in the fuel spilt out.
燃油管路阻塞 Fuel pipeline is clogged.	检查供油管路是否通畅。 Check whether the fuel feeding pipeline is unobstructed or not.
② 燃油滤清器阻塞 Fuel filter is clogged	更换燃油滤清器总成的旋装式滤芯。 Replace the rotary element of the fuel filter assembly
③ 输油泵不供油或断续供油 Fuel delivery pump does not supply the fuel or supplies the fuel interruptedly.	检查进油管是否漏气； Check whether or not the fuel intake pipe is air leaking; 输油泵是否有故障。 whether or not the fuel supply pump is fault.
④ 喷油少，不喷油或喷油压力低 Inject less fuel; inject no	1. 检查喷油器雾化情况; Check the fuel injector for atomization. 2. 喷油泵柱塞及出油阀是否磨损或卡死、柱塞弹簧及出油阀

https://truckmanualshub.com/

fuel or low injected fuel pressure.	弹簧是否折断； Check whether the fuel injections pump plunger and fuel outlet valve is worn or clogged or not, plunger spring and fuel outlet valve spring is broken or not.
⑤ 起动系统故障： Starting system troubles	
电路接线错误或接触不良： Wrong wiring connection or poor contact:	检查接线是否正确、可靠。 Check wiring for its correctness and reliability.
蓄电池电力不足： Underpower of the battery	向蓄电池充电。 Underpower of the battery
起动机碳刷与整流子接触不良： Poor contact of the starter carbon brush with commutator:	修理或调换电刷，用木砂纸清理整流子表面，并吹净。 Repair or replace the brush; clean the commutator surface by abrasive paper and blow it clean.
⑥ 压缩压力不足： Insufficient compression pressure	更换活塞环，视情况加缸套。 Replace piston ring; add cylinder liner as per actual situation.
活塞环过度磨损： 气门漏气。 Piston ring is excessively worn: the valve has any air leak.	检查气门间隙，气门弹簧、气门导管及气门座的密封性，密封不好应研磨气门座。 Check the valve clearance and hermetization of the valve spring, valve guide pipe and valve seat, lap the valve seat in case of poor hermetization.
⑦ 燃油切断电磁阀的接头松动或脏污、腐蚀 Loosened, contaminated or corroded joint to cut off the solenoid	拧紧、清洗或更换。 Re-tighten, clean or replace.
⑧ 装配正时不正确。 Incorrect assembly timing.	检查并调整。 Check and adjust.

https://truckmanualshub.com/

5.2 发动机功率不足 Insufficient power of Engine

故 障 原 因 Cause	排 除 方 法 Solution
① 进气堵塞 Air intake is clogged.	检查空气滤清器、进气管，清理或更换空气滤清器滤芯。 Check air cleaner and intake pipe. Clean or replace air cleaner element
② 排气背压过高 Too high exhaust back pressure.	检查气门定时，必要时调整；清理排气管。 Check valve timing and adjust it as necessary; clean the exhaust pipe.
③ 增压系统压力不足 Insufficient pressure of Turbocharged system.	检查并排除管路和连接处的泄漏。 Check and clear the leaking from pipeline and connection position
④ 增压器工作失常：压气机、涡轮气流通道污染堵塞或损坏； The turbocharger works abnormally, the compressor & turbine gas flow duct is clogged with contaminants or damaged;	清洗或更换压气机壳、涡轮壳。 Clean or replace air compressor & turbine housings.
轴承失效；Bearing failure	更换。Replace.
涡轮、压气机背面间隙处有积碳、油泥 There is any carbon deposit or oily dirt on the clearance of turbine and back of air compressor.	清洗。Clean.
⑤ 中冷器损坏、漏气 Intercooler is damaged or has any air leaks.	修补或更换。 Repair or replace.
⑥ 燃油管路漏油或堵塞 Fuel pipeline is oil leaking or clogged.	检查油管及接头处的密封情况、燃油滤清器的堵塞情况，更换旋装式滤芯。检查喷油控密封。 Check the fuel pipe and joints for hermetization, the

https://truckmanualshub.com/

	fuel filter for clogging; replace the rotary element.
⑦ 喷油泵柱塞磨损过大 Excessive wear of EUP plunger	检查、更换。 Check and replace
⑧ 传感器坏 Sensor fault	检查、更换 Check and replace
⑨ 增压补偿管损坏漏气 Turbocharged supplement pipe broken and qir leak	更换。 Replace
⑩ 喷油器雾化不良 Poor atomization of fuel injector	检查喷油压力、清理积碳、调整及修理。 Check injection fuel pressure, clean carbon deposit, adjust and repair.
⑾配气相位不对 Incorrect air distribution phase	检查并调整配气定时及气门间隙。 Check and adjust air distribution timing and valve clearance
⑿供油提前角提前或迟后 Advanced or late of fuel supply advanced angle	检查并调整。 Check and adjust
⒀调速器高速调整过低 High speed of the governor too low	检查并调整。 Check and adjust
⒁气缸垫漏气 Air leak of cylinder gasket	按规定力矩、顺序拧紧气缸盖螺栓或更换气缸垫。 Tighten the cylinder head bolt to specified torque or replace cylinder gasket
⒂气门密封不良 Poor sealing of the valve	研磨或更换重新研磨。 Rub or replace
□发动机过热冷却液温度过高 Engine overheating too high coolant temperature	检查并修理散热器、调温器，调整风扇皮带张紧力。 Check and repair radiator and thermostat; adjust the fan belt tension.
□活塞环磨损过大，断裂 Piston ring is worn too much; broken	更换 Replace it with a new one

https://truckmanualshub.com/

5.3 发动机运转时有不正常的杂声

Abnormal Noise during Running of Engine

故 障 原 因 Cause	排 除 方 法 Solution
①气缸内有异响 There is abnormal sound in the cylinder	检查装配正时是否正确 Check whether the timing is correct or not. 检查并调整配气定时。 Check and adjust the air distribution timing.
②连杆轴瓦、主轴瓦磨损过大，在曲轴箱处可听到撞击声 Connecting rod bearing shell and main bearing shell are worn too much; the clash can be heard at the position of crankcase.	拆检轴瓦，必要时更换，并保持规定的合理间隙。 Disassemble and check the bearing shell, and replace them when necessary; keep the reasonable clearance as specified.
③减振器损坏，不起减振作用 Shock absorber is damaged and without function	检查连接螺栓及损坏情况，必要时更换。 Check the connection bolt for itself & its damage, and replace it when necessary.
④传动齿轮磨损，间隙过大。在正时齿轮室盖处可听到撞击声 Driving gear is worn and the clearance is too big. Clash can be heard at the timing gear chamber cover.	检查齿侧间隙，视磨损情况更换齿轮。 Check gear flank clearance; and replace the gear according to its wear.
⑤活塞与气缸间隙过大，运转时气缸壁处的撞击声 The clearance between piston and cylinder is too big; clash is heard from the cylinder wall during running.	更换活塞，视磨损情况加修理用缸套，注意保持配缸间隙。 Replace piston; add repair it by using cylinder liner according to their wear; pay due attention to the clearance between cylinders.
⑥增压器轴承损坏，转动件与壳体相碰 Turbocharger bearing is	更换增压器总成。 Replace the turbocharger assembly.

https://truckmanualshub.com/

damaged, so the rotating part bumps with the housing.	
⑦气门间隙过大 ,在气缸盖处有较大响声 The valve clearance is too big; there is bigger sound at the cylinder head.	调整气门间隙。 Adjust the valve clearance.
⑧ 增 压 器 喘 振 Turbocharger surging	清除压气机通道、废气通道的积碳及污物 , 运行海拔过高。 Remove the carbon deposit and dirt in the passage air compressor and exhaust gas path; operate at too high elevation

5.4 排气冒黑烟 Black Smoke from Exhaust Manifold

故 障 原 因 Cause	排 除 方 法 Solution
①进气堵塞 Air intake blocked	检查空气滤清器、进气管路并清理。Check and clean the air filter and air intake pipe.
②燃油质量差 Poor quality of fuel.	换用规定的燃油。Replace the fuel as specified.
③喷油器雾化不良 Poor atomization of fuel injector	检查，修复或更换。Check, repair or replace.
④增压系统压力不足 Inadequate pressure of Turbocharged system	检查并排除管路和连接处的泄漏。 Check and eliminate the leak of pipes and connectors
⑤增压器工作失常 Abnormal working of Turbocharger	检查更换总成。Check and replace the assembly
⑥ 中 冷 器 损 坏 、 漏 气 Intercooler damaged and air leak	修补或更换。Repair or replace

5.5 排气冒白烟、蓝烟
White smoke and Blue Smoke from Exhaust Manifold

故 障 原 因 Cause	排 除 方 法 Solution

https://truckmanualshub.com/

①燃油质量差、含水份过多 Poor quality of fuel and too much content	更换燃油。 Replace the fuel.
②冷却水温度过低 Too low temperature of coolant	检查调温器工作温度，必要时更换。 Check the working temperature of thermostat, and replace it when necessary.
③配气或供油定时不正确 Incorrect air distributing or fuel feeding timing	按专门人员检查和调整。 Check and adjust by the specialized serviceman.
④压缩压力低、燃烧不完全 Low compression pressure; incomplete combustion.	检查活塞环及气缸垫，更换。 Check piston ring and cylinder head gasket; replace.
⑤活塞环安装方向不对，开口未错开 Incorrect piston ring assembly direction; unstaggered opening	检查并重新装配。 Check and reassemble.
⑥长期低负荷运转 Long-time running with low loading	注意使用适当的工作转速和负荷。 Use proper working speed and loads.
⑦增压器密封环磨损 Worn seal ring of turbocharger	检查并更换。 Check and replace.
⑧增压器止推轴承磨损 Worn thrust bearing of turbocharger	检查并更换。 Check and replace.
⑨增压器回油管路阻塞 Clogged oil return pipe of turbocharger	清洗、修理。 Rinse and repair.

5.6 润滑油压力异常Abnormal lubricant pressure

5.6.1 润滑油压力过低 Too Low Lubricating Oil Pressure

故　障　原　因 Cause	排　除　方　法 Solution
①　润滑油变稀或所用润滑油不当 Thinned lubricating oil, or improper use of lubricating oil	按规定选用作品适的润滑油。 Select the lubricating oil as specified.

https://truckmanualshub.com/

② 润滑油泵转子磨损或装配间隙过大 Worn inside/outside rotors of the lubricating oil pump, or too big assembly clearance	更换润滑油泵。Replace lubricating oil pump
③润滑油滤清器堵塞 Clogged lubricating oil filter	更换旋装式滤芯 Replace the rotary element
④ 润滑油滤清器调压阀失灵 Failure of pressure adjustment of lubricating oil filter	修复。 Repair.
⑤ 润滑油泵齿轮损坏或磨损 Damaged or worn lubricating oil pump gear	更换。 Replace
⑥ 润滑油泵进油管有裂缝 Cracks on the lubricating oil inlet pipe of lubricating oil pump	修复、更换。 Repair or replace.
⑦ 润滑油泵进油管固定螺栓松动 Loosened bolt fixing the oil inlet pipe of lubricating oil pump	拧紧到规定力矩。 Retighten it to the specified torque.
⑧ 轴瓦间隙过大 ⑨ Too big clearance of bearing shell	检查并更换 Check and replace.

5.6.2 润滑油压力过高

Too High Lubricating oil Pressure

故 障 原 因 Cause	排 除 方 法 Solution
① 气温过低，润滑油粘度变大 Increased lubricating oil viscosity due to too low ambient temperature	选用规定牌号的润滑油，起动后应先低速运转，待油温正常后再检查。 Use the lubricating oil of selected brand; run the engine at a low speed after it is started; check it

https://truckmanualshub.com/

	again when the oil temperature is normal.
② 溢流阀堵塞 Clogged overflow valve	检查、清洗。 Check and clean.

5.7 润滑油消耗高、消耗量大

High Lubricating Oil Temperature and Bigger Consumption Quantity of Oil

故 障 原 因 Cause	排 除 方 法 Solution
①外部润滑油管路有泄漏 Lubricating oil leakage in external oil pipeline	检查并修复。 Check and repair.
②发动机负荷过重 Too heavy engine load	降低负荷。Decrease the load.
③使用润滑油牌号不当 Improper brand of lubricating oil used	按规定选用。Use the oil as specified.
④活塞环卡死或磨损过大 Clogged piston ring or its excessive wear	检查、修复、必要时更换。 Check and repair; replace as necessary.
⑤缸孔磨损过大 Excessive wear of the cylinder bore	镗缸后换加工尺寸的活塞环，或加修理用缸套。 After cylinder boring replace the piston ring with newly machined sizes, or repaired cylinder liner.
⑥气门导管磨损过大，气门杆密封失效 Excessive wear of the valve guide pipe, and failed sealing of valve stem	检查、更换。 Check and replace.

5.8 出水温度过高 Water outlet temperature too high

故障原因 Cause	排除方法 Solution
⑴冷却水量不足，水流量过小 Inadequate cooling water, water flow too little	检查冷却水量是否足够，不足就添加；Check whether there is enough cooling water; Fill water if inadequate
⑵皮带是否过松 Belt too loosed	调整 Adjust
⑶水泵有漏水 Water leak of the water pump	及时进行修理 Repair
⑷节温器失灵、损坏 Malfunction or damaged thermostat	检查更换 Check and replace
⑸水温表损坏，水温感应塞失灵 Water gauge damaged, malfunction of	检查实际温度与表指示温度是否相符;如不符则更换感应塞或水温表 Check whether the actual

https://truckmanualshub.com/

water temperature sensor plug	temperature is the same as the indicating temperature; if not, replace he sensor plug or water gauge
⑥冲缸垫 Rushing cylinder gasket	检查更换 Check and replace
⑦改装情况下水箱、风扇匹配问题 Radiator and fan matching problem under refit	重新按要求匹配 Match again as required

5.9 增压器常见故障及排除方法 Malfunction and Solution of Turbocharger

故障原因 Cause	排除方法 Solution
① 进气系统堵塞 Air intake blocked	检查空气滤清器与压气机之间的管路、压气机出口与进气管路及进气管、清理通畅。 Check and clean the pipe between air filter and compressor, compressor outlet and air intake pipe
②进气泄漏 Air intake leak	检查空气滤清器与压气机之间的管路、压气机出口与进气管之间的管路，进气管与发动机连接处等是否有泄漏，可拧紧紧固螺栓、更换垫片等零件 Check whether there is leak between air filter and compressor, air intake pipe and connecting part.; tighten the bolt and replace the gasket
③排气系统阻塞 Air exhaust blocked	维修或更换有关零件。Repair and replace related parts
④排气泄漏 Air exhaust leak	检查排气管与发动机、涡轮进口与排气管，涡轮壳与中间壳，涡轮出口至排气管连接处，如有泄漏可更换密封垫片拧紧紧固螺栓。Check whether there is leak between air exhaust pipe and engine, turbo inlet and exhaust pipe, turbo housing and middle housing, turbo outlet to exhaust pipe connector; replace the gasket and tighten the bolt.
⑤压气机转子与压气机壳体、涡轮壳相碰 Rotor of compressor touches compressor housing and turbo housing	更换总成 Replace assembly
⑥进、回油管漏油 Fuel leak of fuel intake/ return pipe	更换 Replace

https://truckmanualshub.com/

5.10 离合器常见故障及排除方法 Malfunction and Solution of Clutch

故障原因 Cause	排除方法 Solution
1.离合器抖动 Clutch trembled	校正离合器压盘和从动盘的变形，消除不规则接触 Calibrate the distortion of clutch pressing plate and driven plate; eliminate abnormal touch
2.油路堵塞或有大量空气进入 Fuel pipe blocked or large amount of air in the fuel pipe	清理油污，调整分离轴承位置，更换从动盘总成，减少负荷 Clean the oil dirt and adjust bearing position; replace driven plate assy
3.离合器分离不彻底:压盘或从动盘变形，传动片变形 The clutch separated incompletely ; pressing plate or driven plate distortion; drive plate distortion	消除变形，调整自由行程或更换离合器 Eliminate distortion and adjust free stroke or replace the clutch
4.离合器异常响动:离合器的零件松动，减震弹簧断裂或离合器中有异物 Abnormal sound: clutch parts loosed, vibration absorber spring broken or abnormal object in the clutch	将松动零件铆紧，消除异物或更换从动盘总成 the loosed part; eliminate the abnormal object or replace driven plate assembly

5.11 发动机自行熄火 Shut-off automatically

故障原因 Cause	排除方法 solution
1.燃油用完 No fuel	检查、添加，注意排除除油路中的空气 Check and fill fuel; exhaust the air in he fuel pipe
2.油路堵塞或有大量空气进入 Fuel pipe blocked or large amount of air in the fuel pipe	检查、清理油路，排除油路中的空气，找出进气的原因并排除 Check and clean the fuel pipe; exhaust the air; find the reason and eliminate the problem
3. 发动机润滑油路不通畅，引起烧轴瓦 Lubricating oil pipe blocked to burn the bushing	如水温正常突然停机多属于此种情况，应拆开油底壳检查、维修，更换相应的损坏零件 If the engine shuts off at normal water temperature, this problem appears. Disassemble the oil pan to check and repair; replace the damaged part
4.发动机过热拉缸，一般是由于缺水或水温过高引起的 Engine over heat caused due to lack of water or too high water temperature	先让机子自行冷却（绝不允许加入冷水或用冷水冲），然后试着转动曲轴，如无卡滞现象可加入冷却水后起动。如转不动则应拆机检查，修复，更换损坏的零部件 Let the engine cool down itself (Never add cold water); turn the crankshaft, fill cooling water to start if unblocked. If blocked, disassemble

https://truckmanualshub.com/

	the engine to check, repair and replace damaged parts.

https://truckmanualshub.com/

（封底）Back cover

玉柴机器　　绿色动力

Yuchai Machinery　　Green Power

执行标准 Implementation standard：Q/YC 456-2006

广西玉柴机器股份有限公司

Guangxi Yuchai Machinery Co,. Ltd.

地址 Add：88 Tianqiao West Road , Yulin,Guangxi,China

邮编 Post Code：537005

销售电话 Sales Tel：00886-775-3226931

传真 Fax：0086-775-3289856

网址 Website：www.yuchai.com