https://truckmanualshub.com/

STERLING TRUCKS

ACTERRA MAINTENANCE MANUAL

Models: MX

STI-403-1 (10/08P)

Published by
Daimler Trucks North America LLC
4747 N. Channel Ave.
Portland, OR 97217
Printed in U.S.A.

https://truckmanualshub.com/

Foreword

Scheduled maintenance provides a key element for the safe operation of your vehicle. A proper maintenance program also helps to minimize downtime and to safeguard warranties. This maintenance manual provides information necessary for years of safe, reliable, and cost-efficient vehicle operation.

IMPORTANT: The maintenance operations in this manual are **not all-inclusive**. Also refer to other component and body manufacturers' instructions for specific inspection and maintenance instructions.

Perform the operations in this maintenance manual at scheduled intervals. Perform the pretrip and post-trip inspections, and daily/weekly/monthly maintenance, as outlined in the vehicle driver's manual. Major components, such as engines, transmissions, and rear axles, are covered in their own maintenance and operation manuals, that are provided with the vehicle. Perform any maintenance operations listed at the intervals scheduled in those manuals. Your Sterling Dealership has the qualified technicians and equipment to perform this maintenance for you. They can also set up a scheduled maintenance program tailored specifically to your needs. Optionally, they can assist you in learning how to perform these maintenance procedures.

IMPORTANT: Descriptions and specifications in this manual were in effect at the time of printing. Daimler Trucks North America LLC reserves the right to discontinue models and to change specifications or design at any time without notice and without incurring obligation. Descriptions and specifications contained in this publication provide no warranty, expressed or implied, and are subject to revision and editions without notice.

Refer to www.Daimler-TrucksNorthAmerica.com and www.SterlingTrucks.com for more information, or contact Daimler Trucks North America LLC at the address below.

Environmental Concerns and Recommendations

Whenever you see instructions in this manual to discard materials, you should attempt to reclaim and recycle them. To preserve our environment, follow appropriate environmental rules and regulations when disposing of materials.

NOTICE: Parts Replacement Considerations

Do not replace suspension, axle, or steering parts (such as springs, wheels, hubs, and steering gears) with used parts. Used parts may have been subjected to collisions or improper use and have undetected structural damage.

© 2000–2008 Daimler Trucks North America LLC

All rights reserved. No part of this publication, in whole or in part, may be translated, reproduced, stored in a retrieval system, or transmitted in any form by any means, electronic, mechanical, photocopying, recording, or otherwise, without the prior written permission of Daimler Trucks North America LLC. Daimler Trucks North America LLC is a Daimler company.

Daimler Trucks North America LLC
Service Systems and Documentation (POC-SSD)
P.O. Box 3849
Portland, OR 97208–3849

https://truckmanualshub.com/

Descriptions of Service Publications

Daimler Trucks North America LLC distributes the following major service publications in paper and electronic (via ServicePro®) formats.

Workshop/Service Manual

Workshop/service manuals contain service and repair information for all vehicle systems and components, except for major components such as engines, transmissions, and rear axles. Each workshop/service manual section is divided into subjects that can include general information, principles of operation, removal, disassembly, assembly, installation, and specifications.

Maintenance Manual

Maintenance manuals contain routine maintenance procedures and intervals for vehicle components and systems. They have information such as lubrication procedures and tables, fluid replacement procedures, fluid capacities, specifications, and procedures for adjustments and for checking the tightness of fasteners. Maintenance manuals do not contain detailed repair or service information.

Driver's/Operator's Manual

Driver's/operator's manuals contain information needed to enhance the driver's understanding of how to operate and care for the vehicle and its components. Each manual contains a chapter that covers pretrip and post-trip inspections, and daily, weekly, and monthly maintenance of vehicle components. Driver's/operator's manuals do not contain detailed repair or service information.

Service Bulletins

Service bulletins provide the latest service tips, field repairs, product improvements, and related information. Some service bulletins are updates to information in the workshop/service manual. These bulletins take precedence over workshop/service manual information, until the latter is updated; at that time, the bulletin is usually canceled. The service bulletins manual is available only to dealers. When doing service work on a vehicle system or part, check for a valid service bulletin for the latest information on the subject.

IMPORTANT: Before using a particular service bulletin, check the current service bulletin validity list to be sure the bulletin is valid.

Parts Technical Bulletins

Parts technical bulletins provide information on parts. These bulletins contain lists of parts and BOMs needed to do replacement and upgrade procedures.

Web-based repair, service, and parts documentation can be accessed using the following applications on the AccessSterling.com website.

ServicePro

ServicePro® provides Web-based access to the most up-to-date versions of the publications listed above. In addition, the Service Solutions feature provides diagnostic assistance with Symptoms Search, by connecting to a large knowledge base gathered from technicians and service personnel. Search results for both documents and service solutions can be narrowed by initially entering vehicle identification data.

PartsPro

PartsPro® is an electronic parts catalog system, showing the specified vehicle's build record.

EZWiring

EZWiring™ makes Freightliner, Sterling, Western Star, Thomas Built Buses, and Freightliner Custom Chassis Corporation products' wiring drawings and floating pin lists available online for viewing and printing. EZWiring can also be accessed from within PartsPro.

https://truckmanualshub.com/

Descriptions of Service Publications

Warranty-related service information available on the AccessSterling.com website includes the following documentation.

Recall Campaigns Recall campaigns cover situations that involve service work or replacement of parts in connection with a recall notice. These campaigns pertain to matters of vehicle safety. All recall campaigns are distributed to dealers; customers receive notices that apply to their vehicles.

Field Service Campaigns Field service campaigns are concerned with non-safety-related service work or replacement of parts. All field service campaigns are distributed to dealers; customers receive notices that apply to their vehicles.

https://truckmanualshub.com/

Page Description

For an example of an *Acterra Maintenance Manual* page, see **Fig. 1**.

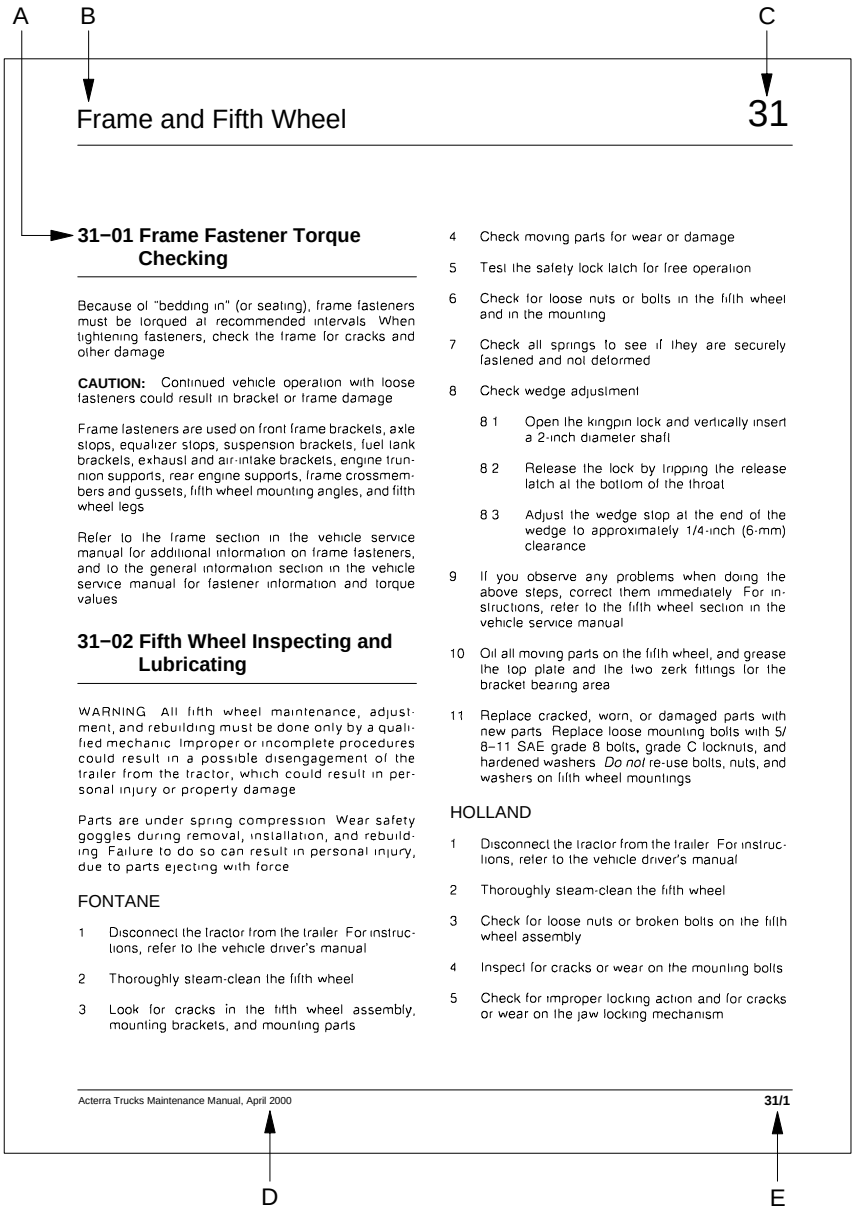

02/11/2002 f020103

A. Maintenance Operation Number consists of the Group Number followed by the Sequence Number
B. Group Title
C. Group Number
D. Release Date
E. Group Number/Page Number

Fig. 1, Example of an Acterra Maintenance Manual Page

https://truckmanualshub.com/

Maintenance Manual Contents

Group No.	Group Title
00	General Information
01	Engine
09	Air Intake
13	Air Compressor
15	Alternators and Starters
20	Engine Cooling/Radiator
25	Clutch
26	Transmission
31	Frame and Frame Components
32	Suspension
33	Front Axle
35	Rear Axle
40	Wheels and Tires
41	Driveline
42	Brakes
46	Steering
47	Fuel
49	Exhaust
54	Electrical, Instruments, and Controls
72	Doors
83	Heater and Air Conditioner

https://truckmanualshub.com/

Index, Alphabetical

Title of Maintenance Operation (MOP)	MOP Number
Initial Maintenance (IM) Operations Table	00–09
Lubrication and Fluid Level Check (M1)	00–15
Lubrication and Fluid Level Check (M2)	00–16
M1 Maintenance Interval Operations Table	00–10
M2 Maintenance Interval Operations Table	00–11
M3 Maintenance Interval Operations Table	00–12
M4 Maintenance Interval Operations Table	00–13
M5 Maintenance Interval Operations Table	00–14
Maintenance Interval Tables	00–07
Maintenance Operation Sets Table	00–08
Maintenance Schedule Table	00–06
Metric/U.S. Customary Conversion Tables	00–04
Noise Emission Control Systems Maintenance	00–01
Scheduled Maintenance Intervals, Description and Use	00–05
Torque Specifications Tables	00–03
Verification of Inspections Log	00–02

https://truckmanualshub.com/

General Information

Federal Law, Part 205: Transportation Equipment Noise Emission Controls

Part 205, Transportation Equipment Noise Emission Controls, requires the vehicle manufacturer to furnish, with each new vehicle, such written instructions for the proper maintenance, use, and repair of the vehicle by the ultimate purchaser to provide reasonable assurance of the elimination or minimization of noise emission degradation throughout the life of the vehicle. In compliance with the law, the Noise Emission Control Systems maintenance located in each applicable group within this manual, in conjunction with the vehicle workshop manual, provides these instructions to owners.

Normal Vehicle Use

The maintenance instructions contained in this manual are based on average vehicle use and normal operating conditions. Unusual vehicle operating conditions may require service at more frequent intervals.

Recommendations for Replacement Parts

Replacement parts used for maintenance or for the repair of noise emission control systems should be genuine Sterling parts. If other than genuine Sterling parts are used for replacements or for the repair of components affecting noise emission control, the owner should be sure that such parts are warranted by their manufacturer to be equivalent to genuine Sterling parts in performance and durability.

Sterling Noise Emissions Warranty

See the vehicle owner's warranty information book for warranty information concerning noise emission control systems.

Tampering With the Noise Control System Is Prohibited

Federal law prohibits the following acts or the causing thereof: (1) the removal or rendering inoperative by any person other than for purposes of maintenance, repair, or replacement, of any device or element of design incorporated into any new vehicle for the purpose of noise control prior to its sale or delivery to the ultimate purchaser or while it is in use, or (2) the use of the vehicle after such device or element of design has been removed or rendered inoperative by any person. Among those acts presumed to constitute tampering are the acts listed below:

A. Removal of engine noise-deadening panels.

B. Removal of or rendering the engine speed governor inoperative so as to allow engine speed to exceed manufacturer's specifications.

C. Removal of or rendering inoperative the fan clutch, including by-passing the control on any thermostatic fan drive to cause it to operate continuously.

D. Removal of the fan shroud.

E. Removal of or rendering inoperative exhaust system components, including exhaust pipe clamping.

F. Removal of air intake system components.

G. Removal of hood liners (noise-deadening panels).

Maintenance Instructions

Scheduled intervals are in the maintenance tables in Group 00 of this manual. A "Verification of Inspections Log" is contained in the following table, and should be filled in each time the noise emission controls on the vehicle are maintained or repaired.

https://truckmanualshub.com/

Verification of Inspections Log

Verification of Inspections Log — Group 20

Verification of Inspections Log — Group 20 — Engine Cooling/Radiator				
Date	Mileage	Repair Description	Cost	Repair Facility

Verification of Inspections Log — Group 49

Verification of Inspections Log — Group 49 — Exhaust				
Date	Mileage	Repair Description	Cost	Repair Facility

https://truckmanualshub.com/

Torque Specifications Tables: 00–03

Torque Values for U.S. Customary Thread Fasteners With Lubricated* or Plated Threads†								
Thread Diameter–Pitch	Regular Hex				Flanged			
	Grade 5 Bolt	Grade 5 or B Nut	Grade 8 or 8.2 Bolt	Grade 8 or C Nut	Grade 5 Bolt	Grade B Nut	Grade 8 or 8.2 Bolt	Grade G Nut
	Torque: lbf·ft (N·m)		Torque: lbf·ft (N·m)		Torque: lbf·ft (N·m)		Torque: lbf·ft (N·m)	
	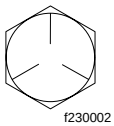 f230002	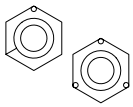 f230003	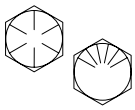 f230004	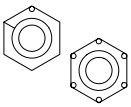 f230005	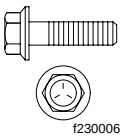 f230006	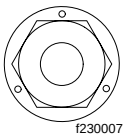 f230007	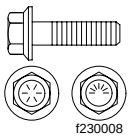 f230008	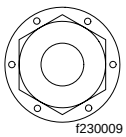 f230009
1/4–20	7 (9)		8 (11)		6 (8)		10 (14)	
1/4–28	8 (11)		9 (12)		7 (9)		12 (16)	
5/16–18	15 (20)		16 (22)		13 (18)		21 (28)	
5/16–24	16 (22)		17 (23)		14 (19)		23 (31)	
3/8–16	26 (35)		28 (38)		23 (31)		37 (50)	
3/8–24	30 (41)		32 (43)		25 (34)		42 (57)	
7/16–14	42 (57)		45 (61)		35 (47)		60 (81)	
7/16–20	47 (64)		50 (68)		40 (54)		66 (89)	
1/2–13	64 (87)		68 (92)		55 (75)		91 (123)	
1/2–20	72 (98)		77 (104)		65 (88)		102 (138)	
9/16–12	92 (125)		98 (133)		80 (108)		130 (176)	
9/16–18	103 (140)		110 (149)		90 (122)		146 (198)	
5/8–11	128 (173)		136 (184)		110 (149)		180 (244)	
5/8–18	145 (197)		154 (209)		130 (176)		204 (277)	
3/4–10	226 (306)		241 (327)		200 (271)		320 (434)	
3/4–16	253 (343)		269 (365)		220 (298)		357 (484)	
7/8–9	365 (495)		388 (526)		320 (434)		515 (698)	
7/8–14	402 (545)		427 (579)		350 (475)		568 (770)	
1–8	—		582 (789)		—		—	
1–12	—		637 (863)		—		—	
1–14	—		652 (884)		—		—	

* Sterling recommends that all plated and unplated fasteners be coated with oil before installation.

† Use these torque values if either the bolt or nut is lubricated or plated (zinc-phosphate conversion-coated, cadmium-plated, or waxed).

Table 1, Torque Values for U.S. Customary Thread Fasteners With Lubricated or Plated Threads

https://truckmanualshub.com/

Torque Specifications Tables: 00–03

Torque Values for U.S. Customary Thread Fasteners With Dry (Unlubricated)* Plain (Unplated) Threads†						
Thread Diameter–Pitch	Regular Hex				Flanged	
	Grade 5 Bolt	Grade 5 or B Nut	Grade 8 or 8.2 Bolt	Grade 8 or C Nut	Grade 8 or 8.2 Bolt	Grade G Nut
	Torque: lbf·ft (N·m)		Torque: lbf·ft (N·m)		Torque: lbf·ft (N·m)	
	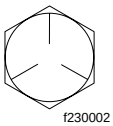 f230002	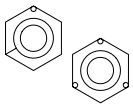 f230003	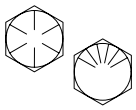 f230004	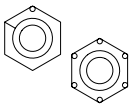 f230005	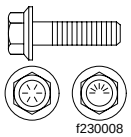 f230008	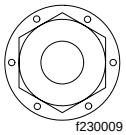 f230009
1/4–20	8 (11)		10 (14)		—	
1/4–28	9 (12)		12 (16)		—	
5/16–18	15 (20)		22 (30)		22 (30)	
5/16–24	17 (23)		25 (34)		—	
3/8–16	28 (38)		40 (54)		40 (54)	
3/8–24	31 (42)		45 (61)		—	
7/16–14	45 (61)		65 (88)		65 (88)	
7/16–20	50 (68)		70 (95)		—	
1/2–13	70 (95)		95 (129)		95 (129)	
1/2–20	75 (102)		110 (149)		—	
9/16–12	100 (136)		140 (190)		140 (190)	
9/16–18	110 (149)		155 (210)		—	
5/8–11	135 (183)		190 (258)		190 (258)	
5/8–18	155 (210)		215 (292)		—	
3/4–10	240 (325)		340 (461)		340 (461)	
3/4–16	270 (366)		380 (515)		—	
7/8–9	385 (522)		540 (732)		—	
7/8–14	425 (576)		600 (813)		—	
1–8	580 (786)		820 (1112)		—	
1–12	635 (861)		900 (1220)		—	
1–14	650 (881)		915 (1241)		—	

* Threads may have residual oil, but will be dry to the touch.

† Male and female threads (bolt and nut) must both be unlubricated and unplated; if either is plated or lubricated, use **Table 1**. Sterling recommends that all plated and unplated fasteners be coated with oil before installation.

Table 2, Torque Values for U.S. Customary Thread Fasteners With Dry (Unlubricated) Plain (Unplated) Threads

https://truckmanualshub.com/

Torque Values for Metric Thread Fasteners With Lubricated* or Plated Threads†				
Thread Diameter–Pitch	Class 8.8 Bolt	Class 8 Nut	Class 10.9 Bolt	Class 10 Nut
	Torque: lbf·ft (N·m)		Torque: lbf·ft (N·m)	
	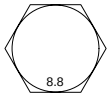 f230010	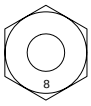 f230011	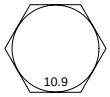 f230012	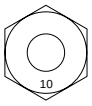 f230013
M6	5 (7)		7 (9)	
M8	12 (16)		17 (23)	
M8 x 1	13 (18)		18 (24)	
M10	24 (33)		34 (46)	
M10 x 1.25	27 (37)		38 (52)	
M12	42 (57)		60 (81)	
M12 x 1.5	43 (58)		62 (84)	
M14	66 (89)		95 (129)	
M14 x 1.5	72 (98)		103 (140)	
M16	103 (140)		148 (201)	
M16 x 1.5	110 (149)		157 (213)	
M18	147 (199)		203 (275)	
M18 x 1.5	165 (224)		229 (310)	
M20	208 (282)		288 (390)	
M20 x 1.5	213 (313)		320 (434)	
M22	283 (384)		392 (531)	
M22 x 1.5	315 (427)		431 (584)	
M24	360 (488)		498 (675)	
M24 x 2	392 (531)		542 (735)	
M27	527 (715)		729 (988)	
M27 x 2	569 (771)		788 (1068)	
M30	715 (969)		990 (1342)	
M30 x 2	792 (1074)		1096 (1486)	

* Sterling recommends that all plated and unplated fasteners be coated with oil before installation.

† Use these torque values if either the bolt or nut is lubricated or plated (zinc-phosphate conversion-coated, cadmium-plated, or waxed).

Table 3, Torque Values for Metric Thread Fasteners With Lubricated or Plated Threads

https://truckmanualshub.com/

Metric/U.S. Customary Conversion Tables: 00–04

When You Know U.S. Customary	Multiply By	To Get Metric	When You Know Metric	Multiply By	To Get U.S. Customary
Length					
inches (in)	25.4	millimeters (mm)		0.03937	inches (in)
inches (in)	2.54	centimeters (cm)		0.3937	inches (in)
feet (ft)	0.3048	meters (m)		3.281	feet (ft)
yards (yd)	0.9144	meters (m)		1.094	yards (yd)
miles (mi)	1.609	kilometers (km)		0.6215	miles (mi)
Area					
square inches (in^2)	645.16	square millimeters (mm^2)		0.00155	square inches (in^2)
square inches (in^2)	6.452	square centimeters (cm^2)		0.155	square inches (in^2)
square feet (ft^2)	0.0929	square meters (m^2)		10.764	square feet (ft^2)
Volume					
cubic inches (in^3)	16387.0	cubic millimeter (mm^3)		0.000061	cubic inches (in^3)
cubic inches (in^3)	16.387	cubic centimeters (cm^3)		0.06102	cubic inches (in^3)
cubic inches (in^3)	0.01639	liters (L)		61.024	cubic inches (in^3)
fluid ounces (fl oz)	29.54	milliliters (mL)		0.03381	fluid ounces (fl oz)
pints (pt)	0.47318	liters (L)		2.1134	pints (pt)
quarts (qt)	0.94635	liters (L)		1.0567	quarts (qt)
gallons (gal)	3.7854	liters (L)		0.2642	gallons (gal)
cubic feet (ft^3)	28.317	liters (L)		0.03531	cubic feet (ft^3)
cubic feet (ft^3)	0.02832	cubic meters (m^3)		35.315	cubic feet (ft^3)
Weight/Force					
ounces (av) (oz)	28.35	grams (g)		0.03527	ounces (av) (oz)
pounds (av) (lb)	0.454	kilograms (kg)		2.205	pounds (av) (lb)
U.S. tons (t)	907.18	kilograms (kg)		0.001102	U.S. tons (t)
U.S. tons (t)	0.90718	metric tons (t)		1.1023	U.S. tons (t)
Torque/Work Force					
inch–pounds (lbf·in)	11.298	Newton–centimeters (N·cm)		0.08851	inch–pounds (lbf·in)
foot–pounds (lbf·ft)	1.3558	Newton–meters (N·m)		0.7376	foot–pounds (lbf·ft)
Pressure/Vacuum					
inches of mercury (inHg)	3.37685	kilo Pascals (kPa)		0.29613	inches of mercury (inHg)
pounds per square inch (psi)	6.895	kilo Pascals (kPa)		0.14503	pounds per square inch (psi)

Table 4, Metric/U.S. Customary Conversion

When You Know	Subtract	Then Divide By	To Get	When You Know	Multiply By	Then Add	To Get
degrees Fahrenheit (°F)	32	1.8	degrees Celsius (°C)		1.8	32	degrees Fahrenheit (°F)

Table 5, Temperature Conversion

https://truckmanualshub.com/

Scheduled Maintenance Intervals, Description and Use: 00–05

Description

Schedule I (severe service) applies to vehicles that annually travel up to 6000 miles (10 000 kilometers) *or* that operate under severe conditions. Examples of Schedule I usage include: operation on extremely poor roads or where there is heavy dust accumulation; constant exposure to extreme hot, cold, salt-air, or other extreme climates; frequent short-distance travel; construction-site operation; city operation (fire truck, garbage truck); or farm operation.

Schedule II (short-haul transport) applies to vehicles that annually travel *up to* 60,000 miles (100 000 kilometers) and operate under normal conditions. Examples of Schedule II usage are: operation primarily in cities and densely populated areas; local transport with infrequent freeway travel; or high percentage of stop-and-go travel.

Schedule III (long-haul transport) is for vehicles that annually travel *more than* 60,000 miles (100 000 kilometers), with minimal city or stop-and-go operation. Examples of Schedule III usage are: regional delivery that is mostly freeway miles; interstate transport; or any road operation with high annual mileage.

The table under **Maintenance Schedule Table** shows three different schedules of vehicle usage. For each schedule the appropriate distance interval is given for performing Initial Maintenance and for repeating each maintenance operation set (M1 through M5). For Schedule I, the appropriate time interval is also given.

The tables under **Maintenance Interval Tables** show which maintenance operation set must be performed at the actual distances (miles and kilometers) for each maintenance schedule (or the actual hours of operation for Schedule I). The schedule of actual distances (and hours) is based on the intervals given in the Maintenance Schedule Table.

The tables under **Maintenance Operation Sets Tables** list, in numerical order, the text reference numbers and descriptions of *all* maintenance operations, and indicates all maintenance operation sets at which each operation must be performed.

Each Maintenance Interval Operations Table (IM through M5) lists the appropriate text reference numbers and descriptions of only those maintenance operations that must be performed at that maintenance operation set. Each maintenance operation set is listed in a separate Maintenance Operations Table.

Use

Before placing your new vehicle in service, determine the correct maintenance intervals that apply to your intended use of the vehicle. Refer to the Maintenance Schedule Table to determine the distance (or hour) interval at which each Maintenance Operation Set must be performed to comply with your vehicle's schedule. For Schedule I vehicles equipped with an hourmeter, use hours to determine maintenance intervals, rather than distance traveled.

When the vehicle reaches the actual distance (or hours) given for an interval, refer to the Maintenance Interval Tables to find the Maintenance Operation Set that applies to that interval. Then perform the maintenance operations listed in the applicable Maintenance Interval Operation Table. Use the maintenance operation reference numbers to find instructions in the manualfor completion of each operation.

Complete each Maintenance Operation Set at the required interval. Then, when you have completed Maintenance Operation Set M5 under the 32nd Maintenance Number listed in the Maintenance Interval Table, repeat the pattern. The 33rd Maintenance Number will begin at Maintenance Operation Set M1, under the 1st Maintenance Number listed in the Maintenance Interval Table.

NOTE: When performing operations for the 33rd Maintenance Number, complete the M1 operations only, not the Initial Maintenance operations.

To determine the distance/hours for the 33rd Maintenance Number, add your schedule's distance/hours for the 1st Maintenance Number to the distance/hours for the 32nd Maintenance Number, then perform the operations listed in the applicable table in the Maintenance Operations Tables. For the 34th Maintenance Number, add the distance/hours for the 2nd to the distance/hours for the 32nd; continue this pattern for each successive Maintenance Number.

https://truckmanualshub.com/

Maintenance Schedule Table: 00–06

Maintenance Schedule	Models	Maintenance Interval Operation	Maintenance Intervals			
			Frequency	Miles	Km	Hours
Schedule I (Severe Service) vehicles that annually travel up to 6000 miles (10 000 km)	All	Initial Maintenance (IM)	first	1000	1600	100
		Maintenance 1 (M1)	every	1000	1600	100
		Maintenance 2 (M2)	every	4000	6400	400
		Maintenance 3 (M3)	every	8000	12 800	800
		Maintenance 4 (M4)	every	16,000	25 600	1600
		Maintenance 5 (M5)	every	32,000	51 200	3200
Schedule II (Short-Haul Transport) vehicles that annually travel up to 60,000 miles (100 000 km)	All	Initial Maintenance (IM)	first	8000	12 000	—
		Maintenance 1 (M1)	every	8000	12 000	
		Maintenance 2 (M2)	every	16,000	24 000	
		Maintenance 3 (M3)	every	32,000	48 000	
		Maintenance 4 (M4)	every	64,000	96 000	
		Maintenance 5 (M5)	every	128,000	192 000	
Schedule III (Long-Haul Transport) vehicles that annually travel over 60,000 miles (100 000 km)	All	Initial Maintenance (IM)	first	10,000	16 000	—
		Maintenance 1 (M1)	every	10,000	16 000	
		Maintenance 2 (M2)	every	20,000	32 000	
		Maintenance 3 (M3)	every	40,000	64 000	
		Maintenance 4 (M4)	every	80,000	128 000	
		Maintenance 5 (M5)	every	160,000	256 000	

Table 6, Maintenance Schedule Table

https://truckmanualshub.com/

Maintenance Intervals for Schedule I				
Maint. No.	**Maintenance Interval**	**Miles**	**km**	**Hours**
1	IM and M1	1000	1600	100
2	M1	2000	3200	200
3	M1	3000	4800	300
4	M1and M2	4000	6400	400
5	M1	5000	8000	500
6	M1	6000	9600	600
7	M1	7000	11 200	700
8	M1, M2, and M3	8000	12 800	800
9	M1	9000	14 400	900
10	M1	10,000	16 000	1000
11	M1	11,000	17 600	1100
12	M1 and M2	12,000	19 200	1200
13	M1	13,000	20 800	1300
14	M1	14,000	22 400	1400
15	M1	15,000	24 000	1500
16	M1, M2, M3, and M4	16,000	25 600	1600
17	M1	17,000	27 200	1700
18	M1	18,000	28 800	1800
19	M1	19,000	30 400	1900
20	M1 and M2	20,000	32 000	2000
21	M1	21,000	33 600	2100
22	M1	22,000	35 200	2200
23	M1	23,000	36 800	2300
24	M1, M2, and M3	24,000	38 400	2400
25	M1	25,000	40 000	2500
26	M1	26,000	41 600	2600
27	M1	27,000	43 200	2700
28	M1 and M2	28,000	44 800	2800
29	M1	29,000	46 400	2900
30	M1	30,000	48 000	3000
31	M1	31,000	49 600	3100
32	M1, M2, M3, M4, and M5	32,000	51 200	3200

Table 7, Maintenance Intervals for Schedule I

https://truckmanualshub.com/

Maintenance Interval Tables: 00–07

Maintenance Intervals for Schedules II and III (all models)					
Maint. No.	Maintenance Interval	Schedule II		Schedule III	
		Miles	km	Miles	km
1	IM and M1	8000	12 000	10,000	16 000
2	M1 and M2	16,000	24 000	20,000	32 000
3	M1	24,000	36 000	30,000	48 000
4	M1, M2, and M3	32,000	48 000	40,000	64 000
5	M1	40,000	60 000	50,000	80 000
6	M1 and M2	48,000	72 000	60,000	96 000
7	M1	56,000	84 000	70,000	112 000
8	M1, M2, M3, and M4	64,000	96 000	80,000	128 000
9	M1	72,000	108 000	90,000	144 000
10	M1 and M2	80,000	120 000	100,000	160 000
11	M1	88,000	132 000	110,000	176 000
12	M1, M2, and M3	96,000	144 000	120,000	192 000
13	M1	104,000	156 000	130,000	208 000
14	M1, and M2	112,000	168 000	140,000	224 000
15	M1	120,000	180 000	150,000	240 000
16	M1, M2, M3, M4, and M5	128,000	192 000	160,000	256 000
17	M1	136,000	204 000	170,000	272 000
18	M1 and M2	144,000	216 000	180,000	288 000
19	M1	152,000	228 000	190,000	304 000
20	M1, M2, and M3	160,000	240 000	200,000	320 000
21	M1	168,000	252 000	210,000	336 000
22	M1 and M2	176,000	264 000	220,000	352 000
23	M1	184,000	276 000	230,000	368 000
24	M1, M2, M3, and M4	192,000	288 000	240,000	384 000
25	M1	200,000	300 000	250,000	400 000
26	M1 and M2	208,000	312 000	260,000	416 000
27	M1	216,000	324 000	270,000	432 000
28	M1, M2, and M3	224,000	336,000	280,000	448 000
29	M1	232,000	348 000	290,000	464 000
30	M1 and M2	240,000	360 000	300,000	480 000
31	M1	248,000	372 000	310,000	496 000
32	M1, M2, M3, M4, and M5	256,000	384 000	320,000	512 000

Table 8, Maintenance Intervals for Schedules II and III (all models)

https://truckmanualshub.com/

Maintenance Operation Sets Table: 00–08

IMPORTANT: At each Maintenance Operation Set, in addition to the maintenance operations listed in this table, perform all daily, weekly, and monthly maintenance operations listed in the "Pretrip and Post-trip Inspections and Maintenance" chapter of the *Acterra® Driver's Manual*.

NOTE: Maintenance operations appearing in italics in this table are for noise emission control components. Numbers in this table are maintenance operation reference numbers matching those in the text of this manual.

Maintenance Operation Sets for Groups 00 through 83							
REQUIRED MAINTENANCE OPERATION SET		IM	M1	M2	M3	M4	M5
Maintenance Operation Number and Operation Description							
01–01	Engine-Support Fasteners Checking					•	•
01–02	Engine Drive Belt Inspecting				•	•	•
01–03	Pacbrake Inspecting and Maintenance*				•	•	•
09–01	Air Cleaner Element Inspecting and Replacing				•	•	•
13–01	Air Compressor Inspecting, Bendix			•	•	•	
13–02	Air Compressor Rebuilding/Replacing, Bendix						•
15–01	Alternator, Battery, and Starter Checking					•	•
20–01	Radiator Cap Checking			•	•	•	•
20–02	Radiator Pressure Flushing and Coolant Changing					•	•
20–03	*Fan Clutch Checking*			•	•	•	•
25–01	Clutch Release Bearing and Release Cross-Shaft Lubricating	•	•	•	•	•	•
25–02	Clutch (Pull-Type) Inspecting and Adjusting	•			•	•	•
25–03	Hydraulic Fluid Level Checking	•	•	•	•	•	
25–04	Hydraulic Fluid Replacing						•
26–01	Manual Transmission Fluid Level Checking		•	•	•		
26–02	Eaton Fuller and TTC Transmission Fluid Changing and Magnetic Plug Cleaning	•†				•	•
26–03	Allison, Eaton Fuller, and Meritor Transmission Breather Checking			•	•	•	•
26–04	Allison Transmission Fluid and Filter Changing				•	•	•
26–05	Mercedes-Benz Transmission Fluid Changing and Magnetic Plug Cleaning						•
26–06	Mercedes-Benz Transmission Leak Checking						•
31–01	Frame Fastener Torque Checking	•				•	•
31–02	Fifth Wheel Inspecting	•	•	•	•	•	•
31–03	Fifth Wheel Lubricating	•	•	•	•	•	•
31–04	Trailer Electrical Connector Lubricating	•	•	•	•	•	•
32–01	Suspension Inspecting	•	•	•	•	•	•
32–02	Suspension Lubricating	•	•	•	•	•	•
32–03	U-Bolt Torque Checking	•			•	•	•
33–01	Knuckle Pin Lubricating	•	•	•	•	•	•
33–02	Tie-Rod End Inspecting	•	•	•	•	•	•
33–03	Tie-Rod End Lubricating	•	•	•	•	•	•

https://truckmanualshub.com/

Maintenance Operation Sets Table: 00–08

Maintenance Operation Sets for Groups 00 through 83							
REQUIRED MAINTENANCE OPERATION SET		IM	M1	M2	M3	M4	M5
Maintenance Operation Number and Operation Description							
33–04	All-Axle Alignment Checking	•				•	•
33–05	All-Wheel-Drive Front Axle Oil Level Checking	•	•	•			
33–06	All-Wheel-Drive Front Axle Oil Changing				•	•	•
33–07	Draw Key Nut Inspecting	•			•	•	•
35–01	Axle Lubricant Level Checking		•	•	•		
35–02	Axle Breather Checking	•	•	•	•	•	•
35–03	Axle Lubricant Changing and Magnetic Plug Cleaning	•				•	•
35–04	Two-Speed-Axle Shift Unit Oil Level Checking	•		•			
35–05	Two-Speed-Axle Shift Unit Oil Changing				•	•	•
40–01	Wheel Nut Checking				•	•	•
41–01	Driveline Inspecting	•	•	•	•	•	•
41–02	Driveline Lubricating	•	•	•	•	•	•
42–01	Air Dryer Inspecting, Bendix AD–9	•	•	•	•	•	•
42–02	Air Brake Valve Inspecting and Leak Checking, Bendix BP–R1	•	•	•	•	•	•
42–03	Foot Brake Valve Actuator Lubricating, Bendix E–8P	•	•	•	•	•	•
42–04	Air Brake Valve Operation Checking	•	•	•	•	•	•
42–05	Relay Valve Checking, Midland	•	•	•	•	•	•
42–06	Quick Release and Flipper Valves Checking, Midland	•	•	•	•	•	•
42–07	Brake Chamber Inspecting (All Models)	•	•	•	•	•	•
42–08	Camshaft Bracket Bushing Lubricating			•	•	•	•
42–09	Automatic Slack Adjuster Checking, Meritor	•	•	•	•	•	•
42–10	Automatic Slack Adjuster Lubricating, Meritor	•	•	•	•	•	•
42–11	Automatic Slack Adjuster Inspecting, Meritor			•	•	•	•
42–12	Air Dryer Checking, Bendix AD–9				•	•	•
42–13	Air Dryer Desiccant Replacing, Bendix AD–9						•
42–14	Air Brake Valve Leak Checking, Bendix TC–6	•	•	•	•	•	•
42–15	Air Reservoir Automatic Drain Valve Disassembly, Cleaning, Inspecting, and Lubricating, Bendix DV–2			•	•	•	•
42–16	Air Brake Valve Disassembly, Cleaning, and Inspecting, Bendix E–8P, R–12, R–14, SR–1, ST–3, TC–6, and TP–3DC						•
42–17	Brake Lining Wear Checking, Hydraulic Disc Brakes	•	•	•	•	•	•
42–18	Brake Lines Checking, Hydraulic Disc Brakes	•	•	•	•	•	•
42–19	Power Booster Checking, Bendix Hydro-Max®	•	•	•	•	•	•
42–20	Automatic Slack Adjuster Lubricating, Gunite	•	•	•	•	•	•
42–21	Automatic Slack Adjuster Inspecting, Gunite	•	•	•	•	•	•
42–22	Automatic Slack Adjuster Lubricating, Haldex	•	•	•	•	•	•

https://truckmanualshub.com/

Maintenance Operation Sets Table: 00–08

Maintenance Operation Sets for Groups 00 through 83							
REQUIRED MAINTENANCE OPERATION SET		IM	M1	M2	M3	M4	M5
Maintenance Operation Number and Operation Description							
42–23	Bosch Rail-Slide Hydraulic Brake Caliper Lubricating			•	•	•	•
42–24	Brake Inspection	•	•	•	•	•	•
46–01	Steering Driveline Lubricating			•	•	•	•
46–02	Drag Link Lubricating	•	•	•	•	•	•
46–03	Power Steering Reservoir Fluid Level Checking	•	•	•	•		
46–04	Power Steering Reservoir Fluid and Filter Changing					•	•
46–05	Power Steering Gear Lubricating	•	•	•	•	•	•
47–01	Fuel Tank Draining and Vent Checking				•	•	•
49–01	*Exhaust System Inspecting*			•	•	•	•
54–01	Electrical System Checking				•	•	•
54–02	Coolant Level Sensor Cleaning						•
72–01	Weatherstrip, Door Latch, and Door Hinge Lubricating	•	•	•	•	•	•
83–01	Air Conditioner Inspecting	•	•	•	•	•	•
83–02	HVAC Air Filter Replacing‡						

* With frequent use, the Pacbrake Exhaust Brake will operate free of maintenance. However, if the vehicle is used inconsistently, seasonally, or is exposed to excess moisture, it will be necessary to perform preventative maintenance as instructed in Maintenance Operation **01–03**.

† IM interval does not apply to vehicles with a factory fill of Eaton approved synthetic lubricant.

‡ Replace the HVAC filter every 6 months regardless of mileage.

Table 9, Maintenance Operation Sets for Groups 00 through 83

https://truckmanualshub.com/

Initial Maintenance (IM) Operations Table: 00–09

IMPORTANT: After performing all operations in this table, perform all daily and weekly maintenance operations listed in the "Pretrip Inspection and Daily Maintenance" chapter of the vehicle driver's manual. Also, perform all M1 Maintenance Interval Operations at the Initial Maintenance (IM).

NOTE: Numbers in this table are maintenance operation reference numbers matching those in the text of this manual. The Initial Maintenance consists of all M1 Operations plus the other operations listed below.

Initial Maintenance (IM) Operations

Maint. Oper. No.	Initial Maintenance (IM) Operations
00–10	Perform All M1 Operations
25–02	Clutch (Pull-Type) Inspecting and Adjusting
26–02	Eaton Fuller and TTC Transmission Fluid Changing and Magnetic Plug Cleaning*
31–01	Frame Fastener Torque Checking
32–03	U-Bolt Torque Checking
33–04	All-Axle Alignment Checking
33–07	Draw Key Nut Inspecting
35–03	Axle Lubricant Changing and Magnetic Plug Cleaning
35–04	Two-Speed-Axle Shift Unit Oil Level Checking

* IM interval does not apply to vehicles with a factory fill of Eaton approved synthetic lubricant.

https://truckmanualshub.com/

M1 Maintenance Interval Operations Table: 00–10

IMPORTANT: After performing all operations listed in this table, perform all daily, weekly, and monthly maintenance operations listed in the "Pretrip and Post-Trip Inspections and Maintenance" chapter of the *Acterra® Driver's Manual*.

NOTE: Numbers in this table are maintenance operation reference numbers matching those in the text of this manual.

M1 Maintenance Interval Operations

Maint. Oper. No.	M1 Maintenance Interval Operations
00–15	Lubrication and Fluid Level Check: • Clutch Release Bearing and Release Cross-Shaft Lubricating • Hydraulic Fluid Level Checking • Manual Transmission Fluid Level Checking • Fifth Wheel Lubricating • Trailer Electrical Connector Lubricating • Suspension Lubricating • Knuckle Pin Lubricating • Tie-Rod End Lubricating • All-Wheel-Drive Front Axle Oil Level Checking • Axle Lubricant Level Checking • Driveline Lubricating • Foot Brake Valve Actuator Lubricating, Bendix E–8P • Automatic Slack Adjuster Lubricating, Meritor • Automatic Slack Adjuster Lubricating, Gunite • Automatic Slack Adjuster Lubricating, Haldex • Drag Link Lubricating • Power Steering Reservoir Fluid Level Checking • Power Steering Gear Lubricating (Ross TAS Series) • Weatherstrip, Door Latch, and Door Hinge Lubricating
31–02	Fifth Wheel Inspecting
32–01	Suspension Inspecting
33–02	Tie-Rod End Inspecting
35–02	Axle Breather Checking
41–01	Driveline Inspecting
42–01	Air Dryer Inspecting, Bendix AD–9
42–02	Air Brake Valve Inspecting and Leak Checking, Bendix BP–R1
42–04	Air Brake Valve Operation Checking
42–05	Relay Valve Checking, Midland
42–06	Quick Release and Flipper Valves Checking, Midland
42–07	Brake Chamber Inspecting (All Models)

https://truckmanualshub.com/

M1 Maintenance Interval Operations Table: 00–10

Maint. Oper. No.	M1 Maintenance Interval Operations
42–09	Automatic Slack Adjuster Checking, Meritor
42–14	Air Brake Valve Leak Checking, Bendix TC–6
42–17	Brake Lining Wear Checking, Hydraulic Disc Brakes
42–18	Brake Lines Checking, Hydraulic Disc Brakes
42–19	Power Booster Checking, Bendix Hydro-Max®
42–21	Automatic Slack Adjuster Inspecting, Gunite
42–24	Brake Inspection
83–01	Air Conditioner Inspecting

https://truckmanualshub.com/

M2 Maintenance Interval Operations Table: 00–11

IMPORTANT: After performing all operations listed in this table, perform all daily, weekly, and monthly maintenance operations listed in the "Pretrip and Post-Trip Inspections and Maintenance" chapter of the *Acterra® Driver's Manual*. Also, perform all M1 Maintenance Interval Operations at the M2 Maintenance Interval.

NOTE: Maintenance operations appearing in italics in this table are for noise emission control components. Numbers in this table are maintenance operation reference numbers matching those in the text of this manual. The M2 Maintenance consists of all M1 Interval Operations plus the other operations listed below.

M2 Maintenance Interval Operations

Maint. Oper. No.	M2 Maintenance Interval Operations
00–10	Perform All M1 Operations
00–16	Lubrication and Fluid Level Check: • Two-Speed-Axle Shift Unit Oil Level Checking • Camshaft Bracket Bushing Lubricating • Air Reservoir Automatic Drain Valve Disassembly, Cleaning, Inspecting, and Lubricating, Bendix DV–2 • Bosch Rail-Slide Hydraulic Brake Caliper Lubricating • Steering Driveline Lubricating
13–01	Air Compressor Inspecting, Bendix
20–01	Radiator Cap Checking
20–03	*Fan Clutch Checking*
26–03	Allison, Eaton/Fuller, and Meritor Transmission Breather Checking
42–11	Automatic Slack Adjuster Inspecting, Meritor
49–01	*Exhaust System Inspecting*
83–02	HVAC Air Filter Replacing*

* Replace the HVAC filter every 6 months regardless of mileage.

https://truckmanualshub.com/

M3 Maintenance Interval Operations Table: 00–12

IMPORTANT: After performing all operations listed in this table, perform all daily, weekly, and monthly maintenance operations listed in the "Pretrip and Post-Trip Inspections and Maintenance" chapter of the *Acterra® Driver's Manual*. Also, perform all M1 and M2 Maintenance Interval Operations at the M3 Maintenance Interval.

NOTE: Numbers in this table are maintenance operation reference numbers matching those in the text of this manual. The M3 Maintenance consists of all M1 and M2 Interval Operations plus the other operations listed below.

M3 Maintenance Interval Operations

Maint. Oper. No.	M3 Maintenance Interval Operations
00–10	Perform All M1 Operations
00–11	Perform All M2 Operations
01–02	Engine Drive Belt Inspecting
09–01	Air Cleaner Element Inspecting and Replacing
25–02	Clutch (Pull-Type) Inspecting and Adjusting
26–04	Allison Transmission Fluid and Filter Changing
32–03	U-Bolt Torque Checking
33–06	All-Wheel-Drive Front Axle Oil Changing
33–07	Draw Key Nut Inspecting
35–05	Two-Speed-Axle Shift Unit Oil Changing
40–01	Wheel Nut Checking
42–12	Air Dryer Checking, Bendix AD–9
47–01	Fuel Tank Draining and Vent Checking
54–01	Electrical System Checking

https://truckmanualshub.com/

M4 Maintenance Interval Operations Table: 00–13

IMPORTANT: After performing all operations listed in this table, perform all daily, weekly, and monthly maintenance operations listed in the "Pretrip and Post-Trip Inspections and Maintenance" chapter of the *Acterra® Driver's Manual*. Also, perform all M1, M2, and M3 Maintenance Interval Operations at the M4 Maintenance Interval.

NOTE: Maintenance operations appearing in italics in this table are for noise emission control components. Numbers in this table are maintenance operation reference numbers matching those in the text of this manual. The M4 Maintenance consists of all M1, M2, and M3 Interval Operations plus the other operations listed below.

M4 Maintenance Interval Operations

Maint. Oper. No.	M4 Maintenance Interval Operations
00–10	Perform All M1 Operations
00–11	Perform All M2 Operations
00–12	Perform All M3 Operations
01–01	Engine-Support Fasteners Checking
15–01	Alternator, Battery, and Starter Checking
20–02	Radiator Pressure Flushing and Coolant Changing
26–02	Eaton Fuller and TTC Transmission Fluid Changing and Magnetic Plug Cleaning
31–01	Frame Fastener Torque Checking
33–04	All-Axle Alignment Checking
35–03	Axle Lubricant Changing and Magnetic Plug Cleaning
46–04	Power Steering Reservoir Fluid and Filter Changing

https://truckmanualshub.com/

M5 Maintenance Interval Operations Table: 00–14

IMPORTANT: After performing all operations listed in this table, perform all daily, weekly, and monthly maintenance operations listed in the "Pretrip and Post-Trip Inspections and Maintenance" chapter of the *Acterra® Driver's Manual*. Also, perform all M1, M2, M3, and M4 Maintenance Interval Operations at the M5 Maintenance Interval.

NOTE: Numbers in this table are maintenance operation reference numbers matching those in the text of this manual. The M5 Maintenance consists of all M1, M2, M3, and M4 Interval Operations plus the other operations listed below.

M5 Maintenance Interval Operations

Maint. Oper. No.	M5 Maintenance Interval Operations
00–10	Perform All M1 Operations
00–11	Perform All M2 Operations
00–12	Perform All M3 Operations
00–13	Perform All M4 Operations
13–02	Air Compressor Rebuilding/Replacing, Bendix
25–04	Hydraulic Fluid Replacing
26–05	Mercedes-Benz Transmission Fluid Changing and Magnetic Plug Cleaning
26–06	Mercedes-Benz Transmission Leak Checking
42–13	Air Dryer Desiccant Replacing, Bendix AD–9
42–16	Air Brake Valve Disassembly, Cleaning, and Inspecting, Bendix E–8P, R–12, R–14, SR–1, ST–3, TC–6, and TP–3DC
54–02	Coolant Level Sensor Cleaning

https://truckmanualshub.com/

Lubrication and Fluid Level Check (M1): 00–15

Maintenance Operation 00–15 (see **Table 10**), summarizes all Lubrication and Fluid Level Check operations that must be performed at the **M1** Maintenance Interval for Schedules I, II, and III

Maintenance operation numbers given in the table are reference numbers used to help you find detailed instructions in the manual on the lubrication or fluid check.

Maintenance Operation 00–15 M1 Lubrication and Fluid Level Check	
Maint. Oper. No.	**Operation Description**
25–01	Clutch Release Bearing and Release Cross-Shaft Lubricating
25–03	Hydraulic Fluid Level Checking
26–01	Manual Transmission Fluid Level Checking
31–03	Fifth Wheel Lubricating
31–04	Trailer Electrical Connector Lubricating
32–02	Suspension Lubricating
33–01	Knuckle Pin Lubricating
33–03	Tie-Rod End Lubricating
33–05	All-Wheel-Drive Front Axle Oil Level Checking
35–01	Axle Lubricant Level Checking
41–02	Driveline Lubricating
42–03	Foot Brake Valve Actuator Lubricating, Bendix E–8P
42–10	Automatic Slack Adjuster Lubricating, Meritor
42–20	Automatic Slack Adjuster Lubricating, Gunite
42–22	Automatic Slack Adjuster Lubricating, Haldex
46–02	Drag Link Lubricating
46–03	Power Steering Reservoir Fluid Level Checking
46–05	Power Steering Gear Lubricating
72–01	Weatherstrip, Door Latch, and Door Hinge Lubricating

Table 10, Maintenance Operation 00-15, M1 Lubrication and Fluid Level Check

https://truckmanualshub.com/

Lubrication and Fluid Level Check (M2): 00–16

Maintenance Operation 00–16 (see **Table 11**), summarizes all Lubrication and Fluid Level Check operations that must be performed at the **M2** Maintenance Interval for Schedules I, II, and III

Maintenance operation numbers given in the table are reference numbers used to help you find detailed instructions in the manual on the lubrication or fluid check.

Maintenance Operation 00–16 M2 Lubrication and Fluid Level Check	
Maint. Oper. No.	**Operation Description**
35–04	Two-Speed-Axle Shift Unit Oil Level Checking
42–08	Camshaft Bracket Bushing Lubricating
42–15	Air Reservoir Automatic Drain Valve Disassembly, Cleaning, Inspecting, and Lubricating, Bendix DV–2
42–23	Bosch Rail-Slide Hydraulic Brake Caliper Lubricating
46–01	Steering Driveline Lubricating

Table 11, Maintenance Operation 00-16, M2 Lubrication and Fluid Level Check

https://truckmanualshub.com/

Index, Alphabetical

Title of Maintenance Operation (MOP)	MOP Number
Engine Drive Belt Inspecting	01–02
Engine-Support Fasteners Checking	01–01
Pacbrake Inspecting and Maintenance	01–03

https://truckmanualshub.com/

01–01 Engine-Support Fasteners Checking

Front and rear engine supports for vehicles built from January 2007 require no periodic maintenance. Mounts should be inspected when the engine is removed for service. For vehicles manufactured prior to January 2007, perform the following check.

Check the rear engine-support fasteners (see **Fig. 1**, Ref. 4) for tightness. Tighten the 3/4-inch fasteners 215 to 265 lbf·ft (292 to 359 N·m).

Check the front engine-support fasteners for tightness. Tighten the 5/8-inch fasteners 125 lbf·ft (170 N·m).

NOTE: At engine overhaul, and whenever the engine has been removed, inspect the lower and upper isolators (Refs. 1 and 6), and replace them if they are worn. See **Group 01** of the *Acterra® Workshop Manual* for instructions.

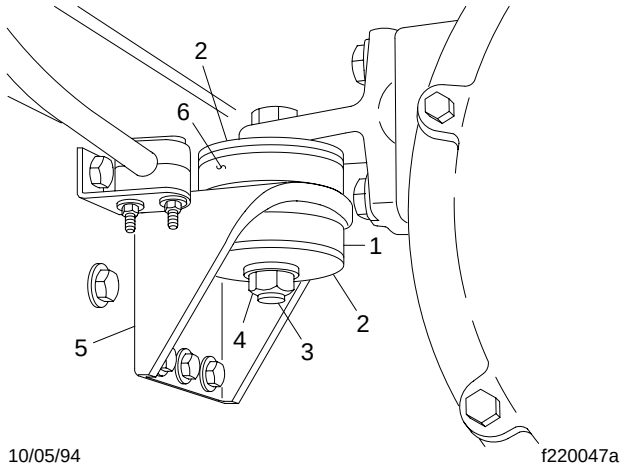

1. Lower Isolator
2. Engine Support Washer
3. 3/4–10 Capscrew
4. 3/4–10 Hexnut
5. Engine Mount
6. Upper Isolator

Fig. 1, Engine Rear Mount

01–02 Engine Drive Belt Inspecting

Worn or loose drive belts may cause premature bearing failure or engine overheating. Excessive tension, or too little tension on the belt may result in excessive and premature belt wear. Poly-V belts, or serpentine belts, are retained by a belt tensioner that requires no tension adjustment. Replace the engine drive belt if any conditions described in the visual description are found. V-belts are installed as individual belts, and as matched sets. When replacing a matched set of belts, always replace both belts at the same time. Matched belts must be from the same manufacturer. To inspect a belt, gently twist the belt to view the belt sidewalls and bottom. Inspect all drive belts for the following conditions, then perform the belt tension inspection.

Belt Condition Inspection

1. Inspect the belt for glazing. See **Fig. 2**, Ref. A. Glazing is represented by shiny sidewalls, and is caused by friction created when a loose belt slips in the pulleys. It can also be caused by oil or grease contamination on the pulleys.
2. Check the belt for ply separation. See **Fig. 2**, Ref. B. Oil, grease, or belt dressing can cause the belt to fall apart in layers. Repair any oil or coolant leaks that are affecting the belts before replacing the drive belts. Do not use belt dressing on any belt.
3. Check the belt for a jagged or streaked sidewall. See **Fig. 2**, Ref. C. Jagged or streaked sidewalls are the result of foreign objects, such as sand or gravel in the pulley, or a rough pulley surface.
4. Check for tensile breaks (breaks in the cord body). See **Fig. 2**, Ref. D. Cuts in a belt are usually caused by foreign objects in the pulley, or by prying or forcing the belt during removal or installation.
5. Check for uneven ribs on serpentine (poly-V) belts. See **Fig. 2**, Ref. E. Foreign objects in the pulley will erode the undercord ribs, causing the belt to lose its gripping power.
6. Check the drive belts for cracks. See **Fig. 2**, Ref. F. Small irregular cracks are usually the signs of an old belt.
7. Inspect the pulleys for excessive play or wobble. Excessive play or wobble indicates a failure of the pulley bearing. Check for belt squealing or squeaking. Replace the bearings as necessary.

NOTE: If it is difficult to distinguish the location of a supposed bearing noise, obtain a stethoscope and place it on the component being

https://truckmanualshub.com/

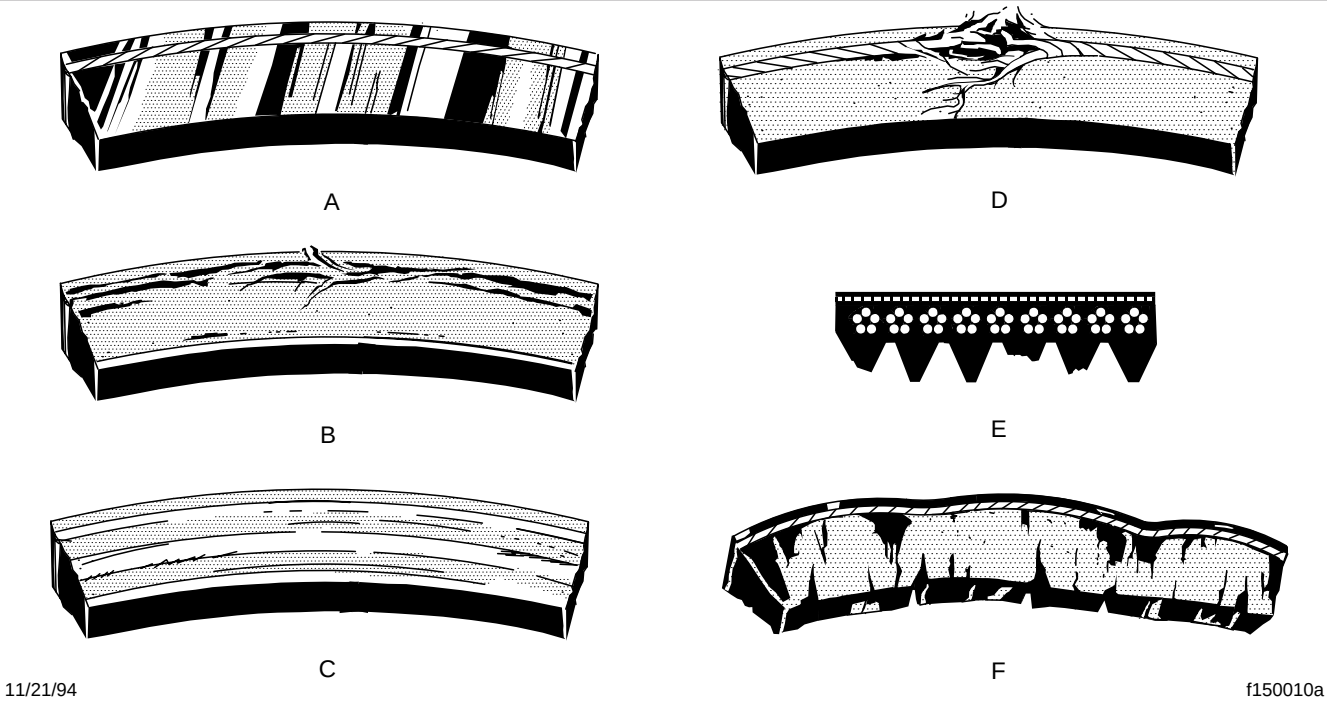

A. Glazing
B. Separating Layers
C. Streaked Sidewalls
D. Tensile Break
E. Uneven Ribs
F. Cracks

Fig. 2, Drive Belt Replacement Conditions

checked, not the pulley, to isolate the area from outside interference.

8. Inspect all pulleys for foreign objects, oil, or grease in the grooves.

Belt Tension Inspection

NOTE: If engine drive belts require adjustment, see **Group 01** of the *Acterra® Workshop Manual* for instructions.

Threaded-Adjustment Type

1. Apply the parking brakes, and chock the tires to prevent the vehicle from moving.
2. Install a belt tension gauge at the center of the belt's longest free-span. Check belt tension. See **Table 1** for belt tension specifications.
3. If belt tension is not correct, see **Group 01** of the *Acterra® Workshop Manual* to adjust belt tension.

Spring-Tension Type

On belts equipped with a spring tensioner, the belt tension is automatically adjusted. Check that the tensioner is holding tension on the belt by inserting the end of a breaker bar in the 1/2-inch square hole on the forward face of the tensioner, and rotating the tensioner down, away from the belt. When the breaker bar is slowly released, the tensioner should return to its original position. If not, see **Group 01** of the *Acterra® Workshop Manual* for replacement instructions.

NOTE: Caterpillar engines are provided with automatic drive belt tensioners. The following engines, which appear in **Table 1**, are provided with automatic tensioners for the fan and alternator belts.

https://truckmanualshub.com/

Engine	Component	Belt Tension: lbf (kg)
Cummins ISB, ISC, ISM	Refrigerant Compressor	100 (45)
Mercedes-Benz MBE900	Fan and Alternator	29.5 (27.9)
	Refrigerant Compressor	30.0 (28.4)

Table 1, Drive Belt Tensions

01–03 Pacbrake Inspecting and Maintenance

With frequent use, the Pacbrake Exhaust Brake will operate maintenance-free. If the vehicle is used inconsistently or seasonally, it will be necessary to perform preventative maintenance. If the vehicle is exposed to excess moisture, or is used only for periodical or seasonal use, perform the following steps:

1. With the engine off, use any oil-free or non-petroleum based high-heat lubricant, and spray or coat a sufficient amount on the restricter valve shaft and the attaching locations at each end of the actuation cylinder.
2. With your hands or a pair of pliers, motion the valve several times to distribute the lubricant down the shaft and the attaching locations.

NOTE: Operation of the Pacbrake could be affected by starting the engine and idling for short periods of time. During a cold engine start-up, moisture occurs in the engine and the exhaust system that creates a corrosion hazard. The brake housing may trap water in the valve shaft bore causing corrosion resulting in an improper or non-functioning brake. If it is necessary to periodically start the engine, attain normal operating temperatures before shutting down the engine.

https://truckmanualshub.com/

Index, Alphabetical

Title of Maintenance Operation (MOP) **MOP Number**

Air Cleaner Element Inspecting and Replacing 09–01

https://truckmanualshub.com/

09–01 Air Cleaner Element Inspecting and Replacing

Method 1

Replace the air cleaner element at the recommended interval or when the air restriction indicator reaches 22 inH_2O on a vehicle with an MBE engine, or 25 inH_2O on a vehicle with a Caterpillar or Cummins engine, if equipped with an air restriction indicator. For replacement instructions, see **Group 09** of the *Acterra® Workshop Manual*. Reset the air restriction indicator.

If the maximum restriction is not reached, record the air restriction value. If the value is higher than the previous recording, reset the air restriction indicator. If the value is lower than the previous recording, inspect the air cleaner and air cleaner element of cracks, leaks, or any other damage.

If the air cleaner or air cleaner element is damaged, replace it and reset the air restriction indicator.

Method 2

Replace the air cleaner element at the recommended interval or when the air restriction indicator reaches 22 inH_2O on a vehicle with an MBE engine, or 25 inH_2O on a vehicle with a Caterpillar or Cummins engine, if equipped with an air restriction indicator. For replacement instructions, see **Group 09** of the *Acterra® Workshop Manual*. Reset the air restriction indicator.

If the maximum restriction is not reached, inspect the air cleaner and air cleaner element for cracks, leaks, or any other damage. If the air cleaner or air cleaner element is damaged, replace it and reset the air restriction indicator.

https://truckmanualshub.com/

Index, Alphabetical

Title of Maintenance Operation (MOP)	MOP Number
Air Compressor Inspecting, Bendix	13–01
Air Compressor Rebuilding/Replacing, Bendix	13–02

https://truckmanualshub.com/

13–01 Air Compressor Inspecting, Bendix

Inspect the air intake line, oil supply and return lines, and coolant supply and return hoses for tight connections and general condition. Tighten the connections, and replace the lines and hoses, as needed. If the compressor air-intake adapter is loose, remove the adapter, replace its gaskets, and securely install it.

Check the cooling fins on the compressor crankcase. Clean the fins if they are clogged with debris.

13–02 Air Compressor Rebuilding/Replacing, Bendix

Disassemble, clean, and inspect the air compressor. Replace all seals, gaskets, springs, and all parts that are worn or damaged beyond re-use. Replace the air compressor unloader mechanism components. Use only genuine Bendix replacement parts or kits. Test the operation of the unloader mechanism. See **Group 13** of the *Acterra® Workshop Manual* for rebuild (or replacement) instructions and test operations.

NOTE: Bendix factory-rebuilt air compressors are available from authorized Bendix distributors, and carry a new compressor warranty.

https://truckmanualshub.com/

Index, Alphabetical

Title of Maintenance Operation (MOP) **MOP Number**

Alternator, Battery, and Starter Connections Checking 15–01

https://truckmanualshub.com/

15–01 Alternator, Battery, and Starter Connections Checking

WARNING

Batteries generate explosive gas as a by-product of their chemical process. Do not smoke when working around batteries. Put out all flames and remove any source of sparks or intense heat in the vicinity of the battery compartment. Make sure the battery compartment has been completely vented before disconnecting or connecting the battery cables.

Battery acid is extremely harmful if splashed in the eyes or on the skin. Always wear a face shield and protective clothing when working around batteries.

1. Check the tightness of the alternator bracket fasteners; tighten the fasteners as needed. For torque values, see **Group 15** of the *Acterra® Workshop Manual*.
2. Check the belt tension of the alternator drive belt. Use a tension gauge at the belt's widest span, and adjust the belt tension if needed. See **Group 01** for belt tension specifications. Some Caterpillar engines are equipped with dual alternator belts; always check both belts for correct tension. Check that the tensioner operates smoothly without binding. Engines equipped with a serpentine, or poly-V belt have automatic belt tensioners and do not require belt tension inspection.
3. Check that all electrical connections at the alternator and starter are clean. Clean and tighten all charging system electrical connections, including the connections at the starter B terminal and ground terminal, and where the alternator charging cable terminates.
4. Inspect the battery cables for wear, and replace as needed. Clean the cable connector terminals with a wire brush. See **Group 54** of the *Acterra® Workshop Manual* for troubleshooting instructions, and for adjustment, repair, or replacement instructions.
   - 4.1 Clean and tighten the battery ground cable, terminal, and clamps.
   - 4.2 Inspect the retainer assembly (or battery hold-downs) and the battery box. Replace worn or damaged parts. Remove any corrosion with a wire brush, and wash with a weak solution of baking soda and water. Rinse with clean water, and dry. Paint the retainer assembly, if needed, to prevent rusting.
   - 4.3 Check that foreign objects, such as stones, bolts, and nuts are removed from the battery box.
   - 4.4 After cleaning, connect the cables to the batteries, and tighten them to the torque specifications listed on the battery, generally 10 to 15 lbf·ft (14 to 20 N·m).
   - 4.5 Coat the battery terminals with dielectric grease.
5. Check the alternator wiring for missing insulation, kinks, and heat damage. Replace or repair as needed.
6. Check the terminals on the battery shut-off switch and the magnetic switch. Make sure the terminal connections are clean and tight. Coat the terminal connections with dielectric red enamel after cleaning.

https://truckmanualshub.com/

Index, Alphabetical

Title of Maintenance Operation (MOP)	MOP Number
Fan Clutch Checking (Noise Emission Control)	20–03
Radiator Cap Checking	20–01
Radiator Pressure Flushing and Coolant Changing	20–02

https://truckmanualshub.com/

20–01 Radiator Cap Checking

WARNING

Do not remove or loosen the radiator cap until the engine and cooling system have completely cooled. Use extreme care when removing the cap. A sudden release of pressure from removing the cap prior to the system cooling can result in a surge of scalding coolant that could cause serious personal injury.

CAUTION

The radiator cap currently installed may not be the same one installed when the vehicle was built. If the radiator cap must be replaced, make sure that it is the correct cap for the cooling system of the vehicle. Because the radiator cap pressure rating affects the operating temperature of the engine, installing an improperly rated radiator cap may have adverse effects on the cooling system, and engine operating temperatures. This could cause premature engine wear or damage.

1. Using a radiator-cap tester, check the pressure cap to see if it maintains pressure to within 10% of the pressure rating marked on the cap. If it doesn't, replace the cap. Make sure that the replacement radiator cap is correctly rated for the cooling system of the vehicle.
2. There is a second valve in the radiator cap that opens under vacuum. This prevents the collapse of hoses and other parts that are not internally supported when the system cools. Inspect the vacuum-relief valve to be sure it is not stuck.
3. Make sure that the cap seals properly on the coolant filler neck seat, and that the radiator cap gasket is not damaged. On vehicles with screw on caps with O-rings, make sure that the O-ring is not cracked or deteriorated. Replace the cap if the gasket shows deterioration or damage.

20–02 Radiator Pressure Flushing and Coolant Changing

NOTE: For additional instructions on cleaning and flushing the cooling system, see the engine manufacturer's maintenance and operation manual.

1. Drain the radiator.
   - 1.1 Remove the surge tank cap. See **Fig. 1**.

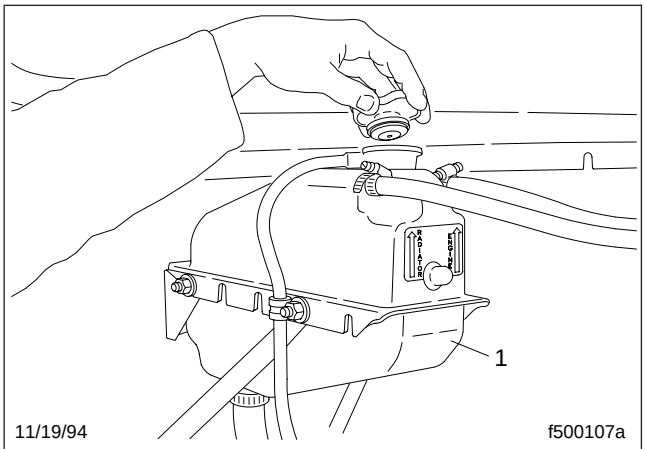

1. Surge Tank

Fig. 1, Surge Tank and Cap

   - 1.2 Open the petcock at the bottom of the radiator to drain the engine coolant. See **Fig. 2**.
2. Disconnect the radiator inlet and outlet hose connections.
3. Flush the radiator.
   - 3.1 Attach a flushing gun nozzle to the radiator outlet.
   - 3.2 Run water in until the radiator is full.
   - 3.3 Apply no more than 20 psi (138 kPa) air pressure intermittently to help dislodge sediment buildup in the core.

CAUTION

When flushing the radiator, do not apply more than 20 psi (138 kPa) air pressure. Excessive pressure can damage the radiator or heater core.

https://truckmanualshub.com/

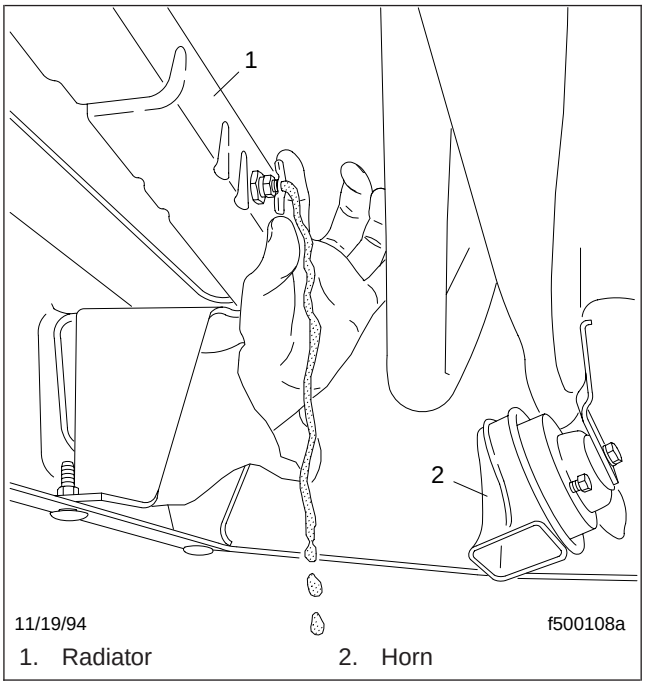

Fig. 2, Draining The Engine Coolant

4. Drain the radiator, and flush the radiator until clean water flows from the radiator. Remove the flushing gun.
5. Close the petcock at the bottom of the radiator.
6. Connect the hoses. Your hose clamps can be either T-bolt clamps (see **Fig. 3**) or Breeze Constant-Torque clamps (see **Fig. 4**).

   Tighten T-bolt type hose clamps 55 lbf·in (620 N·cm). These clamps are now standard on hoses with an inside diameter greater than 2 inches (51 mm).

   Breeze Constant-Torque hose clamps must be tightened to the correct torque. The screw tip of the clamp must extend about 1/4 inch (6 mm) from the clamp housing, and the belleville washer stacks must be collapsed almost flat. Use a torque wrench to install these clamps. Correct installation torque is as follows:

   For Breeze Constant-Torque hose clamps with a 5/16-inch tightening screw hex: 55 lbf·in (620 N·cm).

   For Breeze Constant-Torque hose clamps with a 3/8-inch tightening screw hex: 90 lbf·in (1020 N·cm).

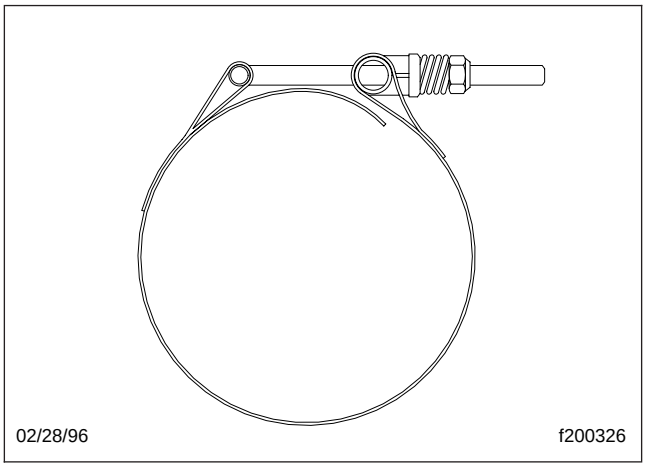

Fig. 3, T-Bolt Type Hose Clamp

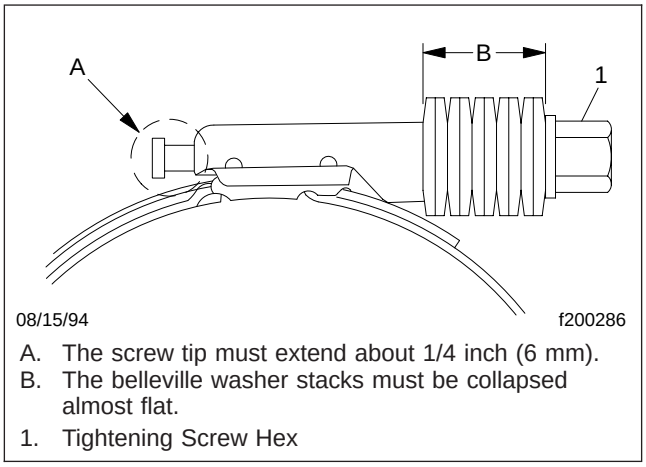

Fig. 4, Breeze Constant-Torque Hose Clamp Installation

NOTE: All hose clamps will lose torque after installation due to "compression set." However, when correctly installed, Breeze Constant-Torque clamps will hold enough torque to automatically adjust and keep consistent sealing pressure. During vehicle operation and shutdown, the screw tip may adjust according to temperature and pressure changes. The torque may need to be adjusted for individual applications.

IMPORTANT: On vehicles with EPA07 compliant engines, the coolant capacity varies depending on the engine and accessory installation. After servicing the cooling system, always verify that

https://truckmanualshub.com/

the coolant level is between the MIN and MAX lines on the surge tank.

7. Fill the radiator with coolant.

   Use a mixture of 50 percent water and 50 percent corrosion-inhibiting antifreeze to protect the engine to –34°F (–37°C) year round.

   See **Table 1** for engine cooling system capacities.

   See **Table 2** for approved antifreezes.

Coolant Capacities (pre-EPA07 engines)		
Engine Make and Model	**Radiator Core and System Capacity***	
	2 Row quarts (liters)	**3 Row quarts (liters)**
Caterpillar 3126 Series	28 (26.5)	—
Cummins B Series	30.5 (28.9)	31.0 (29.3)
Cummins C Series and M11	31.2 (29.5)	—

* System capacity includes all hoses, fittings, and the heater core.

Table 1, Coolant Capacities (pre-EPA07 engines)

Approved Coolants		
Engine Type	**Coolant Manufacturer**	**Coolant Designation***
Diesel	Texaco	JC04 Antifreeze
	Van Waters and Rogers Ltd. (Canada)	Diesel Antifreeze No. 6038
Gasoline	Chrysler	Mopar

* Sterling-approved antifreeze must meet one of the following conditions: A. Ethylene glycol solution that meets GM 6038–M Engineering Standards. B. Ethylene glycol solution that has less than 0.1% anhydrous sodium metasilicate, and meets either GM 1825–M or GM 1899–M Engineering Standards.

Table 2, Approved Coolants

NOTE: You can mix purple-pink coolant (pre-charged with a borate/nitrate-based additive) with the common green coolant, although some color change will be apparent.

20–03 Fan Clutch Checking (Noise Emission Control)

Eaton Viscous Fan Clutch

CAUTION

If the fan drive assembly is damaged, replace the unit as soon as possible. Operating a seized or otherwise damaged clutch reduces fuel economy, and could cause serious engine damage.

See **Group 20** of the *Acterra® Workshop Manual* for replacement instructions.

1. With the engine off, rotate the fan at least one full turn by hand. It should have a smooth, steady drag. If it does not, replace the fan clutch.
2. Check for physical damage to the fan or fan shroud.
3. At the fan clutch mounting:
   - 3.1 Check for correct drive belt alignment and tension. For specifications, see **Group 01** of this manual.
   - 3.2 Check for wear of the fan clutch bearings. There should be no side-to-side or in-and-out movement of the fan clutch.
   - 3.3 Do all of the checks in **Section 20.02** of the *Acterra® Workshop Manual*.

Horton Advantage® Fan Clutch

NOTE: If any part of the fan clutch needs to be repaired or replaced after performing the checks below, see **Group 20** of the *Acterra® Workshop Manual*.

1. Disconnect the the batteries at the negative terminals. Drain all air from the air system. If equipped with an air starter, drain the air starter reservoir.

WARNING

Make sure the batteries are disconnected before checking the fan clutch. If the engine starts during this procedure, the fan could engage, which could result in serious personal injury.

https://truckmanualshub.com/

2. Inspect the electrical connections and wires to the fan clutch solenoid. Secure the connection, if loose; replace wires and connectors if damaged.
3. Clean the fan clutch air solenoid valve filter, if equipped.
   - 3.1 Unscrew the fan clutch solenoid valve air filter assembly and remove the filter element.
   - 3.2 Clean the filter element with cleaning solvent.
   - 3.3 Reassemble the clutch valve solenoid air filter assembly and install on the vehicle.
4. Check the fan for bent, cracked, or damaged blades. Replace, if damaged. Check for adequate clearance between the fan and other components.
5. Check the fan belt for wear, tension, and alignment. Correct, if necessary.
6. Check for wear on the friction facing. See **Fig. 5.** Replace the friction facing if it is worn to a 1/16-inch (1.6-mm) thickness or less. Also check the facing for signs of oil contamination or burn marks. If evidence of oil or burn marks are found, replace the friction facing.

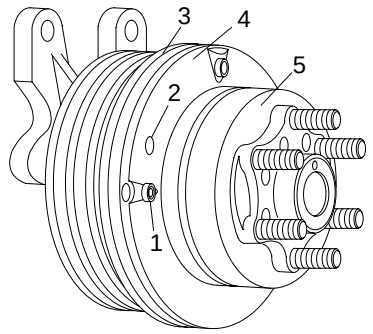

08/08/94 f200290

1. System Sentry® Fuse
2. Safeguard Hole
3. Friction Facing
4. Piston Friction Disc
5. Air Chamber

Fig. 5, Horton Advantage Fan Clutch

7. Connect the battery cables. Start the engine, and charge the air system to 120 psi (827 kPa). Shut down the engine. Separate the halves of the fan solenoid connector. The fan clutch should engage.

   If the fan does not operate correctly, see **Group 20** of the *Acterra® Workshop Manual* for troubleshooting and repair procedures.
8. With the air system charged to 120 psi (827 kPa), and with the fan solenoid connector halves separated, check the fan clutch for audible air leaks, using a suitable listening device.
9. If a leak is detected, remove the fan blade. Using a soapy water solution, check the fan clutch at the following locations to locate the source of the leak. Install a new seal kit. See **Group 20** of the *Acterra® Workshop Manual* for repair procedures.
   - 9.1 Check for a leak at the bleed hole on the fan pilot. Air leakage means that the cartridge assembly (see **Fig. 6**, Ref. 16) or face seal (Ref. 17) is damaged.
   - 9.2 Check for air leaks between the air chamber and the piston friction disc. Air leakage means that the large O-ring (Ref. 14) is damaged.
   - 9.3 Check for air leaks around the safeguard hole on the piston friction disc. Air leakage means the small O-ring (Ref. 18) is damaged.
   - 9.4 Check for air leaking from the System Sentry® fuse. Leaking air means the clutch has gotten so hot the lead alloy in the fuse melted. This released the clutch before the heat could damage the clutch bearings. Before replacing the fuse, find and repair the source of the heat.
10. If equipped with an override toggle switch on the dash, check the fan clutch operation as follows:
    - 10.1 Connect the halves of the fan solenoid connector.
    - 10.2 Turn the air conditioner off.
    - 10.3 Start the engine and charge the air system to 120 psi (827 kPa). Tests must be performed with the engine temperature below 205°F (96°C) for Caterpillar engines, and below 200°F (93°C) for Cummins.
    - 10.4 Set the toggle switch to the ON position; the fan clutch should engage.
    - 10.5 Apply the foot brake, and release the parking brakes.

https://truckmanualshub.com/

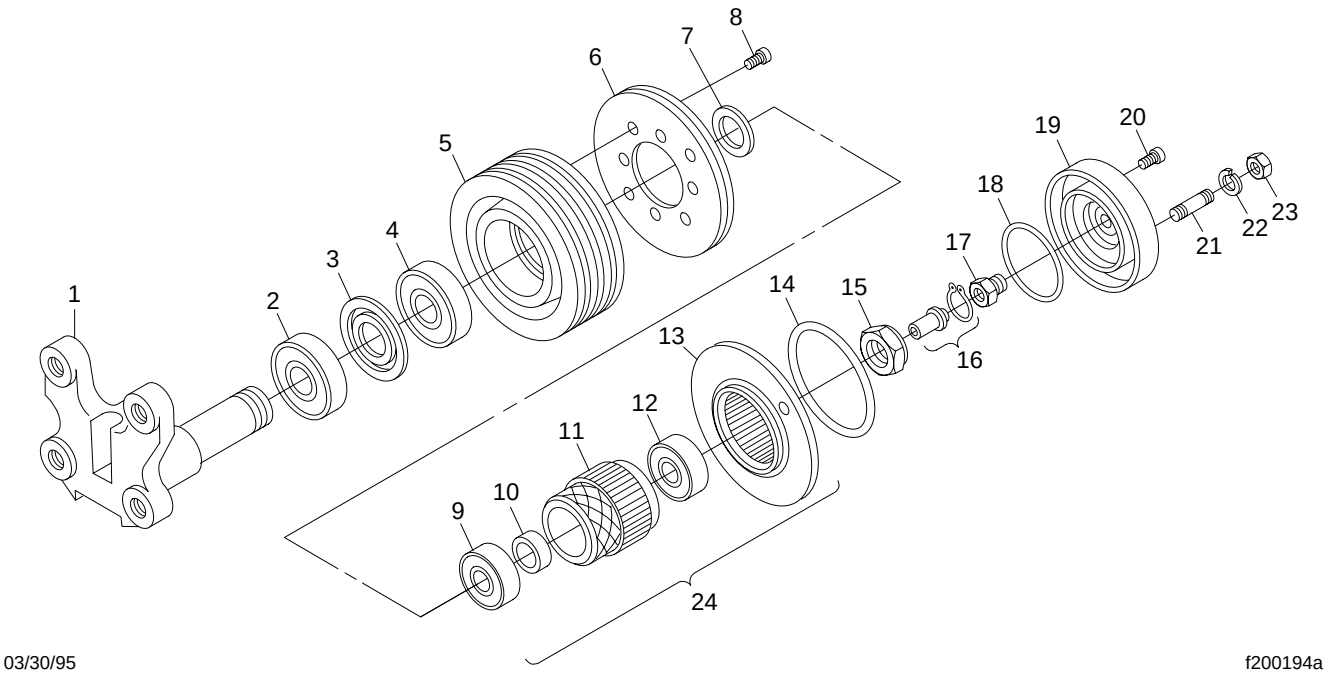

1. Mounting Bracket
2. Rear Sheave Bearing
3. Inner and Outer Bearing Spacers
4. Forward Sheave Bearing
5. Sheave
6. Friction Facing
7. Journal Spacer
8. Socket-Head Capscrew
9. Rear Hub Bearing
10. Bearing Spacer
11. Splined Hub
12. Forward Hub Bearing
13. Piston Friction Disc
14. Large O-Ring
15. Locknut
16. Cartridge Assembly
17. Face Seal
18. Small O-Ring
19. Air Chamber
20. Socket-Head Capscrew
21. Stud Bolt
22. Lockwasher
23. Hexnut
24. Piston Assembly

Fig. 6, Horton Advantage Fan Clutch Components

10.6 Set the toggle switch to the AUTO or OFF position; the air should exhaust and the fan clutch should disengage. Replace the switch, if necessary.

Kysor K22RA Fan Clutch

1. Disconnect the electrical cables from the battery. Drain all air from the air system. If equipped with an air starter, drain the air starter reservoir.

⚠ WARNING

Make sure the batteries are disconnected before checking the fan clutch. If the engine starts during this procedure, the fan could engage, which could result in serious personal injury.

2. Measure the distance from the back surface of the fan clutch retaining plate to the forward-most edge of the fan belt pulley. See **Fig. 7**, Ref. A.
3. Disconnect the line from the air inlet of the air cylinder. Connect a shop air hose to the inlet.
4. Apply a minimum of 100 psi (690 kPa) air pressure to the air cylinder—the bearing housing will move backwards, disengaging the clutch. Again, measure the distance from the back surface of the retaining plate to the forward-most edge of the fan belt pulley.
5. Compare the two measurements; if the difference between the two measurements exceeds 0.150 inches (3.8 mm), the clutch lining is worn and must be replaced. See **Group 20** of the *Acterra® Workshop Manual* for clutch lining replacement instructions.

https://truckmanualshub.com/

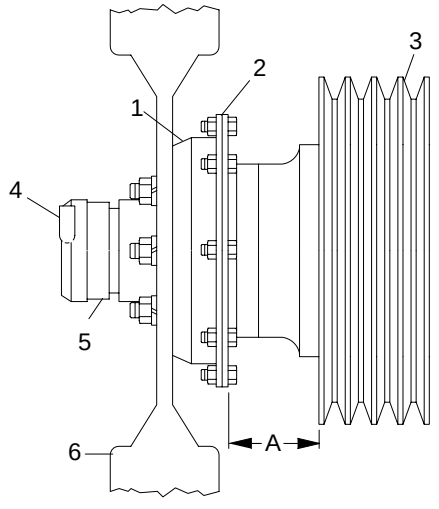

With the fan clutch engaged, measure the distance at *A*; measure it again with the fan clutch disengaged.

1. Bearing Housing
2. Retaining Plate
3. Fan Pulley
4. Air Inlet (from solenoid valve)
5. Air Cylinder
6. Fan

Fig. 7, Kysor K22RA Fan Clutch Lining Wear Checking

6. Release the air pressure, then disconnect the shop hose from the air inlet of the air cylinder. Connect the vehicle air hose to the inlet.
7. Connect the electrical cables to the battery.
8. Start the engine.

Horton DriveMaster® Fan Clutch

NOTE: If any part of the fan clutch needs to be repaired or replaced after performing the checks below, see **Group 20** of the *Acterra® Workshop Manual*.

1. Disconnect the batteries at the negative terminals. Drain all air from the air system. If equipped with an air starter, drain the air starter reservoir.

⚠ WARNING

Make sure the batteries are disconnected before checking the fan clutch. If the engine starts during this procedure, the fan could engage, which could result in serious personal injury.

2. Inspect the electrical connections and wires to the fan clutch solenoid. Secure the connection if loose; replace wires and connectors if damaged.
3. Clean the fan clutch air solenoid valve filter, if equipped.
   - 3.1 Unscrew the fan clutch solenoid valve air filter assembly and remove the filter element.
   - 3.2 Clean the filter element with cleaning solvent.
   - 3.3 Using a clean, lint free cloth, wipe off any excess solvent.
   - 3.4 Reassemble the clutch valve solenoid air filter assembly and install on the vehicle.
4. Visually check the fan for bent, cracked, or damaged blades. Replace if damaged. Check for adequate clearance between the fan and other components.
5. Check the fan belt for wear, tension, and alignment. Correct, if necessary.
6. Check for wear on the friction facing. Replace the friction facing if it is worn to a 3/16-inch (4.8-mm) thickness or less. Also check the facing for signs of oil contamination or burn marks. If evidence of oil or burn marks are found, replace the friction facing.
7. Connect the battery cables. Start the engine, and charge the air system to 120 psi (827 kPa). Manually engage and disengage the fan clutch.

   Check the fan and the fan clutch from a distance. Look for vibration, fan blade contact, fan clutch slippage, and overall fan clutch operation.

   If the fan clutch does not operate correctly, see **Group 20** of the *Acterra® Workshop Manual* for troubleshooting and repair procedures.
8. With the air system charged to 120 psi (827 kPa), check the fan clutch for audible air leaks, using a suitable listening device.

   Check at the solenoid valve, the air filter assembly, and the air hoses and fittings. See **Fig. 8**. Using a wet finger or a soapy water solution, check for a leak in the same areas.
9. If a leak is detected, remove the fan blade. Install a new seal kit. See **Group 20** of the *Acterra® Workshop Manual* for repair procedures.

https://truckmanualshub.com/

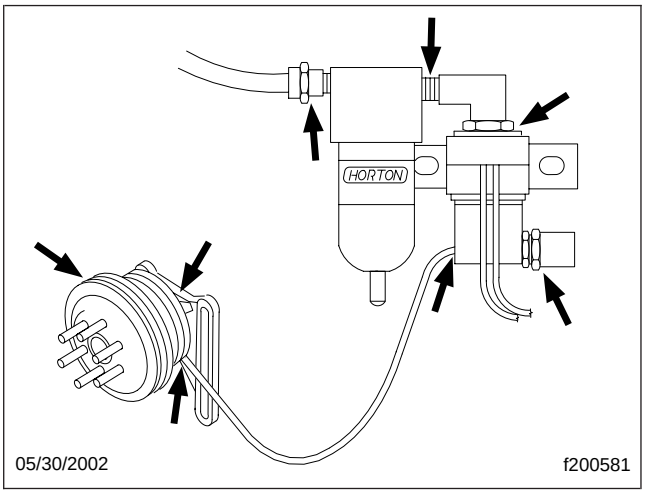

Fig. 8, Checking for Air Leaks (Horton DriveMaster)

10. Check the fan drive for discoloration or any other signs of slipping or overheating.

NOTE: The fan clutch may slip if the air supply pressure is below 70 psi (483 kPa) or if there is a leak inside the fan clutch. Any leak must be remedied.

11. Check the fan clutch bearings.

    11.1 Turn the fan in both directions and feel for worn hub bearings.

    11.2 If possible, remove the drive belt and check for worn sheave bearings by turning the sheave in both directions.

    11.3 If either the hub or sheave bearings are worn, replace them, using a Horton DriveMaster Super Kit.

    For instructions and kit part number, see **Group 20** of the *Acterra® Workshop Manual*.

https://truckmanualshub.com/

Index, Alphabetical

Title of Maintenance Operation (MOP)	MOP Number
Clutch (Pull-Type) Inspecting and Adjusting	25–02
Clutch Release Bearing and Release Cross-Shaft Lubricating	25–01
Hydraulic Fluid Level Checking	25–03
Hydraulic Fluid Replacing	25–04

https://truckmanualshub.com/

25–01 Clutch Release Bearing and Release Cross-Shaft Lubricating

Clutch Release Bearing

CAUTION

Do not over-lubricate the clutch release bearing. Over-lubrication could contaminate the clutch internally, causing clutch slippage and premature failure. Do not use chassis grease or multipurpose lubricants.

On clutches with a grease-type release bearing (see **Fig. 1**), wipe the dirt from the grease fitting. Using a pressure gun and high-temperature grease only, lubricate the release bearing at the grease fitting until the grease starts coming out of the fitting. Use only a lithium-based grease that meets NLGI grade 1 or 2 specifications.

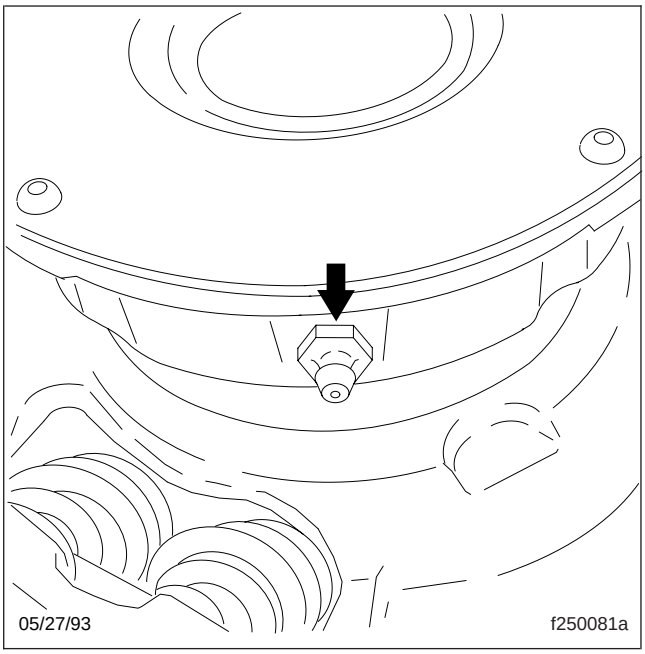

Fig. 1, Release Bearing Grease Fitting

NOTE: On clutches with a sealed release bearing, the release bearing is lubricated at the time of manufacture and requires no additional grease for the life of the bearing.

On Sachs hydraulic clutches, never lubricate the release bearing. The release bearing is made of plastic with a kind of embedded grease.

Clutch Release Cross-Shaft

The clutch release cross-shaft is equipped with two grease fittings; one at each side of the transmission clutch housing. Wipe the dirt from the grease fittings. Using a pressure gun, lubricate the cross-shaft with multipurpose chassis grease.

25–02 Clutch (Pull-Type) Inspecting and Adjusting

See **Group 25** of the *Acterra® Workshop Manual* for clutch (pull-type) inspection and adjustment.

25–03 Hydraulic Fluid Level Checking

WARNING

Use only approved clutch hydraulic fluid (DOT 3 brake fluid) in the clutch hydraulic system. Do not mix different types of brake fluid. The wrong fluid will damage the rubber parts of the system, causing loss of clutch function and the risk of serious personal injury.

CAUTION

Do not allow the fluid level in the reservoir to go below the MIN line. If too much air enters, the hydraulic system will not operate correctly, and the clutch could be damaged.

If the fluid level is below the MIN mark, fill the reservoir with DOT 3 brake fluid until the level reaches the MAX mark. See **Fig. 2**.

25–04 Hydraulic Fluid Replacing

Replace the clutch hydraulic fluid every two years to ensure clutch function is reliable and correct. Use the

https://truckmanualshub.com/

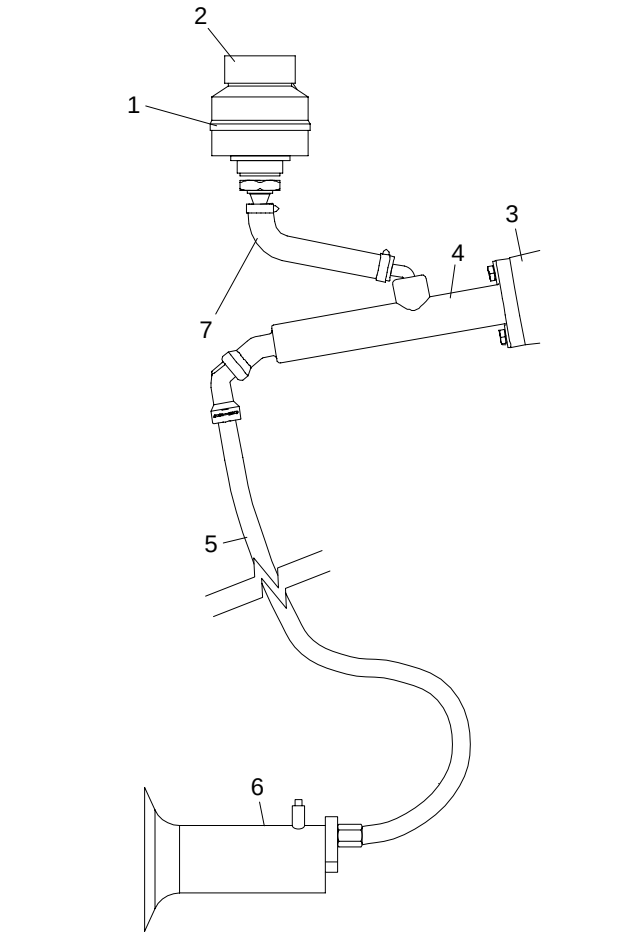

06/17/2002 f250588

1. Reservoir
2. Reservoir Cap
3. Pedal Unit
4. Master Cylinder
5. Hydraulic Hose
6. Slave Cylinder
7. Reservoir Hose

Fig. 2, Clutch Components

procedures below. Fluid replacement must be done at an authorized Freightliner service facility.

Draining and Filling

1. Shut down the engine.
2. Apply the parking brakes, chock the front and rear tires, and open the hood.
3. Using a flat-tip screwdriver, remove the quick-disconnect clamp that attaches the hydraulic hose to the slave cylinder. Retain the clamp for later installation. See **Fig. 3**.

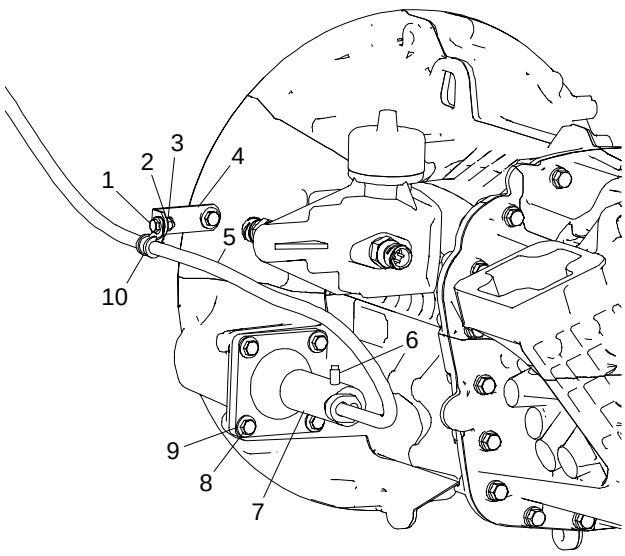

06/17/2002 f250589

1. Clamp Mounting Bolt, 1/4–20
2. Steel-Plated Flatwasher
3. Locknut, 1/4–20
4. Bell Housing Standoff Bracket
5. Hydraulic Hose
6. Bleed Valve
7. Slave Cylinder
8. Slave Cylinder Capscrew, M8
9. Flatwasher, M8
10. Cushioned Clamp

Fig. 3, Clutch Slave Cylinder

⚠ WARNING

Clutch hydraulic fluid (DOT 3 brake fluid) is hazardous. It may be a skin irritant and can cause blindness if it gets in your eyes. Always wear safety glasses when handling clutch hydraulic fluid or bleeding hydraulic lines. If you get clutch hydraulic fluid on your skin, wash it off as soon as possible.

4. Drain the hydraulic fluid.
   - 4.1 Using a drain pan or other suitable container, collect the fluid that drains from the reservoir, not more than 0.3 quarts (0.3 liters).
   - 4.2 Allow the open end of the drain hose to remain over the drain pan.

https://truckmanualshub.com/

4.3 Press down on the pedal several times, until no more fluid drains from the reservoir.

4.4 Cover the hose to avoid contamination of the clutch hydraulic fluid.

5. Connect the hydraulic hose to the slave cylinder. Install the clamp, as removed.
6. Fill the reservoir with approved DOT 3 brake fluid and bleed the system according to the procedures under the heading "Bleeding the Clutch." See **Fig. 4**.

Bleeding the Clutch

1. Apply the parking brake and chock the tires.
2. Prepare the pressure bleeding equipment according to the manufacturer's instructions. Use DOT 3 brake fluid. Pressurize the bleeder unit to 15 psi (103 kPa).

CAUTION

Do not spill clutch hydraulic fluid (DOT 3 brake fluid) on the cab paint. Clean it off immediately if any is spilled. DOT 3 brake fluid can damage paint.

3. Remove the reservoir lid and install the pressure bleed adaptor on the reservoir.
4. Remove the cap from the bleed valve. Install a transparent drain hose on the bleed valve of the slave cylinder.

IMPORTANT: The slave cylinder may not be mounted in a horizontal position. If it isn't, remove the slave cylinder and hold it in a horizontal position to completely purge all air from the cylinder.

5. Pressurize the reservoir, filling the system. Open the bleed valve on the bleed tank.

NOTE: A pressure bleeder hose (J-29532) and a bleeder adaptor (J-35798) for the fluid reservoir are available through SPX Kent-Moore Tools and may be used to complete the following procedure. To order these parts, call Kent-Moore at 1-800-328-6657.

6. Press the clutch pedal all the way down and keep it down.

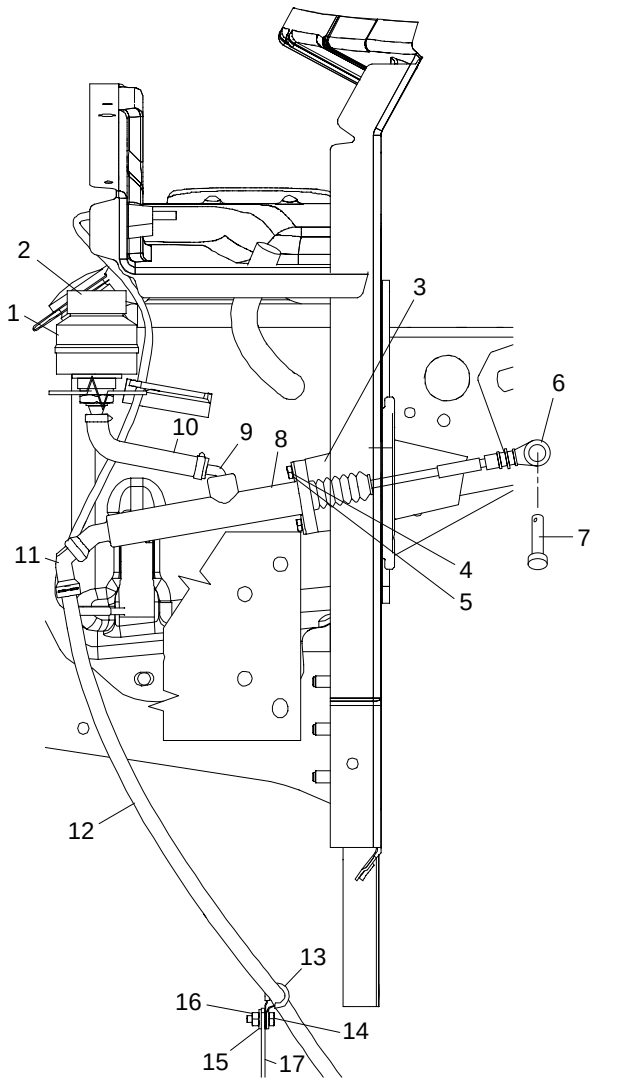

1. Reservoir
2. Reservoir Cap
3. Clutch Support Plate
4. Locking Capscrew, M6
5. Hardened Flatwasher
6. Clevis
7. Clevis Pin
8. Master Cylinder
9. Elbow Connector
10. Reservoir Hose
11. Hose Connector
12. Hydraulic Hose
13. Cushioned Clamp
14. Clamp Mounting Bolt, 1/4–20
15. Steel-Plated Washer
16. Locknut, 1/4–20
17. Shock Bracket Standoff Bracket

Fig. 4, Clutch Master Cylinder

7. Open the slave cylinder bleed valve. Observe the flow of clutch hydraulic fluid through the drain

https://truckmanualshub.com/

hose. When no bubbles appear in the fluid, close the valve on the slave cylinder. Release the clutch pedal and then close the valve at the bleeder unit.

8. Disconnect the bleeder unit, and install the cap on the slave cylinder bleeder valve.
9. Check the fluid level in the reservoir. If necessary, add or remove clutch hydraulic fluid to bring the fluid level to the MAX mark. Install the reservoir cap.
10. Depress the clutch pedal a few times. There should be resistance over the full pedal stroke.
11. Check the entire system for leaks. Tighten connections if necessary. Check the fluid level in the reservoir again.
12. Remove the chocks from the tires.

https://truckmanualshub.com/

Index, Alphabetical

Title of Maintenance Operation (MOP)	MOP Number
Allison Transmission Breather Checking	26–03
Allison Transmission Fluid and Filter Changing	26–04
Eaton Fuller and TTC Transmission Fluid Changing and Magnetic Plug Cleaning	26–02
Manual Transmission Fluid Level Checking	26–01
Mercedes-Benz Transmission Fluid Changing and Magnetic Plug Cleaning	26–05
Mercedes-Benz Transmission Leak Checking	26–06

https://truckmanualshub.com/

26–01 Manual Transmission Fluid Level Checking

1. Park the vehicle on a level surface. Apply the parking brakes and chock the rear tires.
2. With the transmission at operating temperature, check the fluid level in the transmission.
   - 2.1 Clean the area around the fill plug, then remove the plug from the side of the case.
   - 2.2 Using your finger or a bent pipe cleaner, see if the fluid is level with the lower edge of the fill opening. See **Fig. 1**.

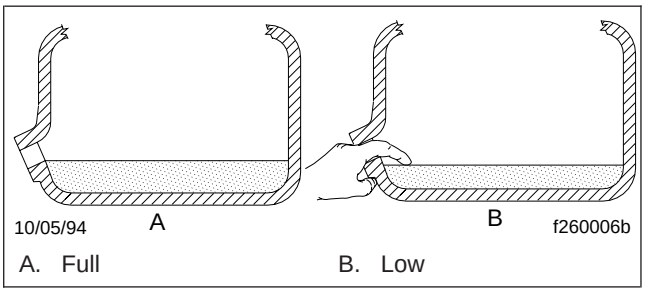

Fig. 1, Transmission Fluid Level Checking

3. If needed, fill the transmission with fluid until level with the lower edge of the fill opening.

   See **Table 1** for approved lubricants.

Approved Manual Transmission Lubricants		
Lubricant Type*	**Temperature: °F (°C)**	**SAE Viscosity**
Eaton Fuller Transmissions†		
MobilTrans SHC 50 (RN 2952 E-5)	All	50
Synthetic transmission lubricant approved by Eaton	All	50
Heavy-duty engine oil (API service classification CD or SF)	Above 10 (–12)	40 or 50
	Below 10 (–12)	30
TTC Transmissions		
Heavy-duty engine oil (API service classification CD or SF)	Above 0 (–18)	30 or 40
	Above –15 (–26)	30
Mercedes-Benz Transmissions		
Straight mineral gear oil with rust and oxidation inhibitor (API GL–1)	Above 10 (–12)	90
	Above –15 (–26)	80
Synthetic engine oil meeting MIL-L-2104D, MIL-L-46152B, API-SF, or API-CD	All	50
MobilTrans SHC® DC	All	50

* Lubricants listed in order of preference. Do not mix types of oil.

† Call 1-800-826-4357 for a complete list of Eaton approved lubricants.

Table 1, Approved Manual Transmission Lubricants

CAUTION

Operating a manual transmission with the fluid level higher or lower than recommended can result in transmission damage. Do not overfill the transmission; overfilling will force fluid out of the case through the main shaft openings. Fluid overflow may also drain onto the clutch or clutch brake, causing additional problems.

IMPORTANT: Do not mix types of fluid, because of possible incompatibility. Do not use fluid additives or friction modifiers. Do not use multiviscosity fluids or EP (Extreme Pressure) gear fluids. If switching from a petroleum-based lubricant to a synthetic, all areas of each affected component must be thoroughly drained. Switching to a synthetic lubricant, when a petroleum-based lubricant has been used for 50,000 miles (80 000 km) or longer, may affect transmission performance. Monitor all seal areas for the first 10,000 miles (16 000 km) after changing to a synthetic from a petroleum-based lubricant.

4. Clean the fill plug, then install it in the transmission. Tighten the plug as follows:
   - 25 to 35 lbf·ft (34 to 48 N·m) for Eaton Fuller transmissions with 3/4-inch pipe threads.
   - 60 to 75 lbf·ft (81 to 102 N·m) for Eaton Fuller transmissions with 1-1/4-inch pipe threads.

https://truckmanualshub.com/

- 42 lbf·ft (57 N·m) for all Mercedes-Benz transmissions.

26–02 Eaton Fuller and TTC Transmission Fluid Changing and Magnetic Plug Cleaning

Draining

1. Park the vehicle on a level surface. Apply the parking brakes and chock the rear tires.
2. Drain the fluid while the transmission is warm.
3. Clean the area around the fill plug and the drain plug(s).
4. Remove the fill plug from the side of the gear case. Remove the drain plug(s) from the bottom of the gear case.
5. Clean the magnetic plug(s) before installation. Use a piece of key stock, or any other convenient steel slug, to short the two magnetic poles and divert the magnetic field.
6. Install and tighten the drain plug(s) 50 lbf·ft (68 N·m).

Filling

1. Add fluid until it is level with the lower edge of the fill opening. See **Fig. 1**. If the transmission has two fill openings, add fluid to the level of both fill openings.

   See **Table 1** for approved transmission lubricants, and **Table 2** for lubricant capacities.

Eaton Fuller and TTC Transmission Lubricant Capacities	
Transmission Model	**Refill Capacity*: quarts (liters)**
Eaton Fuller 5-Speed FS Series	
FS–4205A/B	6.25 (5.9)
FS–5205A/B	6.25 (5.9)
FS–6305A/B	9.75 (9.2)
Eaton Fuller 6-Speed FS/FSO Series	
FS–5406A	9.75 (9.2)
FS–6406A	9.75 (9.2)
FSO–6406A	
FSO–8406A	9.75 (9.2)
6-Speed Autoshift (all)	10.4 (9.8)
Eaton Fuller 7-Speed T Series	
T–14607A/B	18.0 (17.0)
7-Speed Autoshift (all)	18.0 (17.0)
TTC 7-Speed ES Series	
ESO66-7B	11.0 (10.4)
Eaton Fuller 9-Speed RT/RTF Series	
RT–6609A	6.0 (5.7)
RT–8709B	13.0 (12.3)
RTF–8709B	
RT–8608L	13.5 (12.8)
Eaton Fuller 10-Speed FR/FRO and RT Series	
10-Speed FR/FRO (all)	11.75 (11.1)
RT–9710B	13.0 (12.3)
RT–8908LL	14.0 (13.2)
10-Speed Autoshift AS2 (all)	13.0 (12.3)

* Quantities listed are approximate. Fill the transmission until the lubricant is level with the bottom of the fill hole, with the vehicle in normal operating position.

Table 2, Eaton Fuller and TTC Transmission Lubricant Capacities

CAUTION

Operating a manual transmission with the fluid level higher or lower than recommended can result in transmission damage. Do not overfill the transmission; overfilling will force fluid out of the case through the main shaft openings. Fluid overflow may also drain onto the clutch or clutch brake, causing additional problems.

IMPORTANT: Do not mix types of fluid, because of possible incompatibility. Do not use multiviscosity fluids or EP (Extreme Pressure) gear fluids. Do not use fluid additives or friction modifiers. If switching from a petroleum based lubricant to a synthetic, all areas of each af-

https://truckmanualshub.com/

fected component must be thoroughly drained. Switching to a synthetic lubricant, when a petroleum-based lubricant has been used for 50,000 miles (80 000 km) or longer, may affect transmission performance. Monitor all seal areas for the first 10,000 miles (16 000 km) after changing to a synthetic from a petroleum-based lubricant.

NOTE: The correct fluid capacity is established by the fill plug opening.

2. Clean the fill plug, then install it in the transmission. Tighten the plug as follows:
   - 25 to 35 lbf·ft (34 to 48 N·m) for Eaton Fuller transmissions with 3/4-inch pipe threads.
   - 60 to 75 lbf·ft (81 to 102 N·m) for Eaton Fuller transmissions with 1-1/4-inch pipe threads.

26–03 Allison Transmission Breather Checking

Transmission housing breathers must remain clear. A plugged breather could result in pressure build-up, which could cause fluid leakage.

If the breather is plugged, clean or replace it. See **Fig. 2**. Check more often if the vehicle is operating under very dusty conditions.

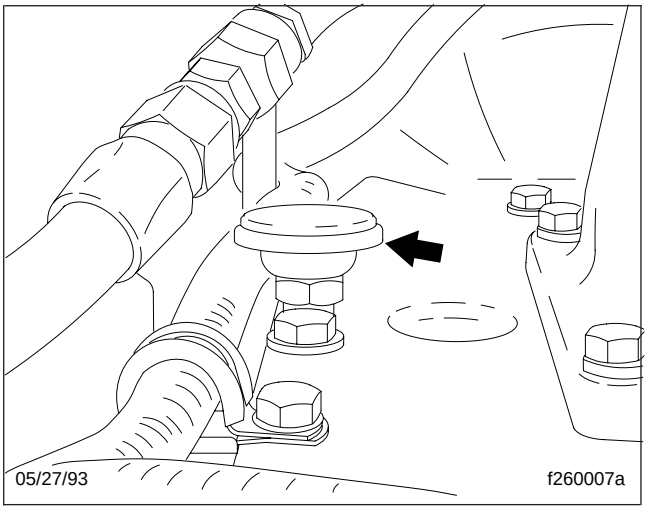

Fig. 2, Transmission Breather

26–04 Allison Transmission Fluid and Filter Changing

1000/2000/2400 Series

1. Park the vehicle on a level surface and apply the parking brakes.
2. Run the engine until the transmission fluid reaches the operating temperature of 160 to 200°F (71 to 93°C). Shift the transmission to neutral (N) and shut down the engine.

CAUTION

To prevent dirt from entering the transmission, use only clean containers and fillers for the transmission fluid. Do not use fillers or containers that have been used for water or antifreeze. Dirt, water, or antifreeze could damage the transmission.

3. Clean the area around the drain plug. Place a drain pan under the transmission and remove the drain plug. Examine the fluid while it drains. If only the filter is being changed, do not drain the fluid.

NOTE: A lot of fluid will drain when the filter is removed.

4. Using a standard strap-type filter wrench, remove the filter by turning it counterclockwise.
5. Remove the magnet from the filter attachment tube or from the top of the filter element.
6. Clean any metal debris from the magnet. Then, install the magnet on the filter attachment tube.
7. Using transmission fluid, lubricate the gasket on the filter.
8. Using your hand, install the filter by turning it clockwise until the filter gasket contacts the converter housing or cooler manifold. Then, turn the filter one more complete turn.
9. Install the drain plug and sealing washer. Tighten the plug 22 to 30 lbf·ft (30 to 40 N·m).
10. Clean the area around the fill tube and remove the dipstick. Using a clean funnel in the fill tube, add transmission fluid. See **Table 3** for approved transmission lubricants, and **Table 4** for lubricant capacities.

https://truckmanualshub.com/

11. Check and adjust the fluid level using the procedure under "Checking the Fluid Level."

Approved Allison Transmission Lubricants		
Lubricant Type*	**Temperature: °F (°C)**	**SAE Viscosity**
All Allison Transmissions		
Castrol TranSynd™ (synthetic)	Above –22 (–30)	—
On-Highway Transmissions (1000/2000/2400 Series)		
Dexron® III	Above –13 (–25)	—
AT and MD Series		
Dexron III	Above –13 (–25)	—
MT Series		
Dexron III	Above –13 (–25)	—
Type C4	10 to 120 (–12 to 48)	SAE 10W
Type C4	32 to 120 (0 to 48)	SAE 30W

* Lubricants listed in order of preference. Do not mix types of oil.

Table 3, Approved Allison Transmission Lubricants

Allison Transmission Lubricant Capacities	
Transmission Model	**Fill Capacity*: quarts (liters)**
On-Highway Series	
1000/2000/2400	15.0 (14.2)
AT Series	
AT–545	16.0 (15.1)
MT Series	
MT–643	15.0 (14.2)
MT–653	
MD Series	
MD–3060	19.0 (18.0)
MD–3560	

* Quantities listed are approximate. Add the recommended amount of fluid as listed under fill capacity, then perform a "hot check" and add fluid as needed. Do not overfill.

Table 4, Allison Transmission Lubricant Capacities

AT Series

1. Park the vehicle on a level surface and apply the parking brakes.
2. Run the engine until the transmission fluid reaches the operating temperature of 160 to 200°F (71 to 93° C). Shift the transmission to neutral (N) and shut down the engine.

CAUTION

To prevent dirt from entering the transmission, use only clean containers and fillers for the transmission fluid. Do not use fillers or containers that have been used for water or antifreeze. Dirt, water, or antifreeze could damage the transmission.

3. Clean the area around the drain plug. While the transmission fluid is warm, remove the drain plug and drain the fluid. Disconnect the fill tube from the oil pan.

IMPORTANT: Examine the used transmission fluid for dirt, coolant or water, and metal particles. If any of these contaminants are present, a problem may exist within the transmission system.

4. Support the oil pan, then remove the twenty-one washer-head screws that attach the oil pan to the transmission case. Remove the pan, and discard the pan gasket.
5. Clean the oil pan with mineral spirits.
6. Remove the washer-head screw that attaches the internal fluid filter to the filter spacer, then remove the filter and discard it. See **Fig. 3**. Remove the fluid intake tube, then remove the seal ring from the intake tube, and discard the seal ring.
7. Remove, clean, and install the governor feed line screen, located in the control valve body. See **Fig. 4**.
8. Install a new seal ring in the fluid intake tube.

IMPORTANT: Avoid twisting the intake tube when installing the internal fluid filter, intake tube, and seal ring; the seal ring could be pinched, cut, or deformed. An air-tight seal must be maintained.

9. Install the intake tube, with the seal ring installed, into the main housing. Install the internal fluid filter on the intake tube, making sure the grommet in the filter fits the intake tube snugly.
10. Install the washer-head screw to retain the fluid filter, and tighten it 10 to 15 lbf·ft (14 to 20 N·m).

https://truckmanualshub.com/

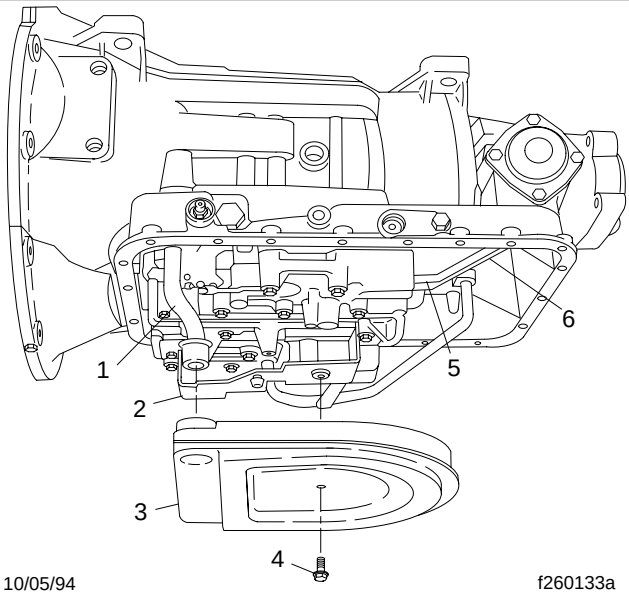

1. Fluid Intake Tube
2. Filter Spacer
3. Internal Fluid Filter
4. Washer-Head Screw
5. Governor Pressure Tube
6. Governor Feed Tube

Fig. 3, Allison AT Series Transmission Filter

11. Submerge a new oil pan gasket in transmission fluid for five minutes. Then place the gasket on the pan; do not use any substance as a gasket retainer.

IMPORTANT: Do not use gasket-sealing compounds any place inside the transmission or where they might get washed into the transmission. Also, nonsoluble vegetable-based cooking compounds or fibrous greases must not be used inside the transmission.

12. Install the oil pan and gasket.

    12.1 Guide the pan and gasket carefully into place. Guard against dirt or foreign material entering the pan. Retain the pan with four 5/16–18 washer-head screws, installed by hand into the corners of the pan.

    12.2 Install the remaining seventeen washer-head screws by hand, carefully threading each through the gasket and into the transmission. Bottom all of the screws before tightening any of them.

    12.3 Evenly tighten all 21 of the screws 10 to 15 lbf·ft (14 to 20 N·m). Check the gasket fit while the screws are being tightened.

    IMPORTANT: The oil pan bolts must maintain a minimum torque of 60 lbf·in (680 N·cm) after the oil pan gasket has taken a set.

13. Install the fill tube at the side of the pan. Tighten the tube fitting 90 to 100 lbf·ft (122 to 136 N·m).
14. Install the drain plug and gasket, and tighten the plug 15 to 20 lbf·ft (20 to 27 N·m).
15. Replace the external (auxiliary) fluid filter.
16. Clean the area around the fill tube and remove the dipstick. Using a clean funnel in the fill tube, add transmission fluid. See **Table 3** for approved transmission lubricants, and **Table 4** for lubricant capacities.
17. Check and adjust the fluid level using the procedure under "Checking the Fluid Level."

MD Series

When draining transmission fluid, check for evidence of dirt or water contamination. A small amount of condensation will appear in the fluid during operation.

Water contamination is normally characterized as a milky discoloration of the transmission fluid. Obvious contamination of the transmission fluid indicates a leak between the water and fluid areas of the transmission cooler. Inspect and pressure-test the cooler to confirm the leak; replace leaking transmission coolers.

⚠ CAUTION

To prevent dirt from entering the transmission, use only clean containers and fillers for the transmission fluid. Do not use fillers or containers that have been used for water or antifreeze. Dirt, water, or antifreeze could damage the transmission.

1. Park the vehicle on a level surface and apply the parking brakes.
2. Operate the vehicle until the transmission reaches normal operating temperature: 160 to 200°F (71 to 93°C).
3. Clean the area around the drain plug and the transmission fluid pan. Place a drain pan under

https://truckmanualshub.com/

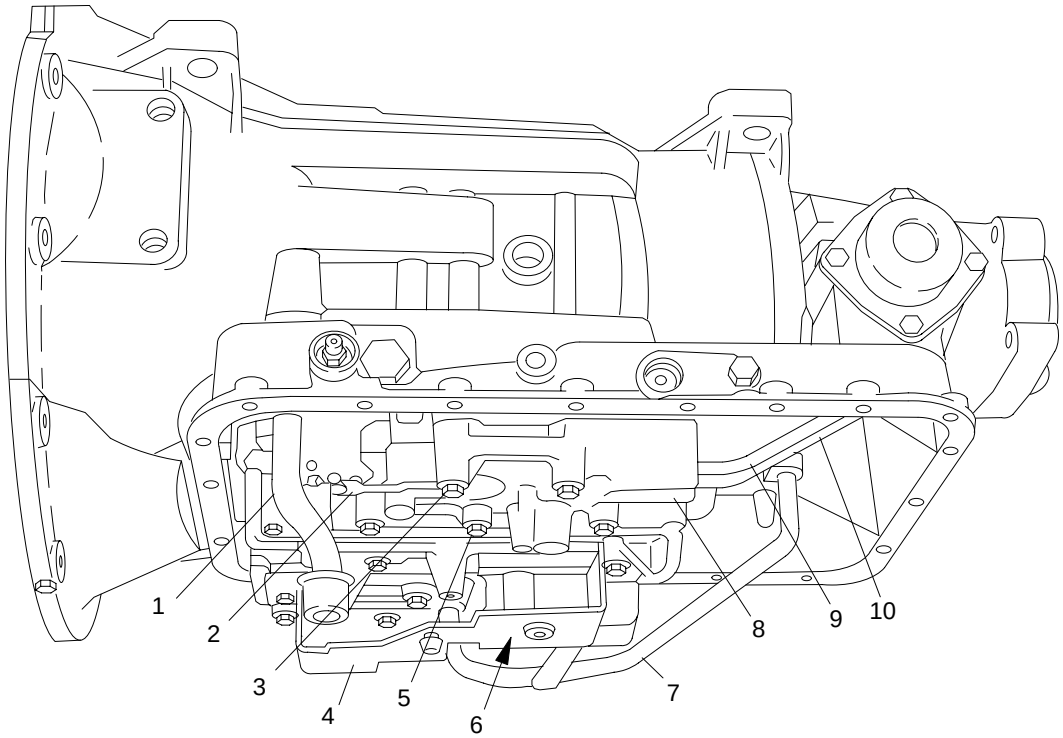

10/05/94 f260132a

1. Fluid Intake Tube
2. Detent Spring
3. Detent Spring 1-3/4" Bolt
4. Filter Spacer
5. 2-1/4" Bolt (16 qty.)
6. First/Reverse Clutch Feed Tube 3" Bolt (2 qty., behind)
7. First/Reverse Clutch Feed Tube
8. Governor Screen (in control valve body)
9. Governor Pressure Tube
10. Governor Feed Tube

Fig. 4, Allison AT Series Transmission Governor

the transmission and remove the drain plug. Examine the fluid as it drains. If only the filter is being changed, do not drain the fluid.

4. Remove the 12 mounting bolts (six each) from the two filter covers.

NOTE: A lot of fluid will drain when the filter covers are removed.

5. Remove the filter covers, O-rings, and two square-cut seals from the transmission. See **Fig. 5**.
6. Remove the filters from the bottom of the control module.
7. Lubricate the new O-rings with transmission fluid, and install them on the cover assemblies.
8. Install a new square-cut seal on each cover assembly, and install the fluid filter elements on the cover assemblies.
9. Install the filter and cover assemblies into the filter compartment.
10. Align each cover assembly with the holes in the channel plate sump, and push the cover assemblies in by hand to seat the seals.

https://truckmanualshub.com/

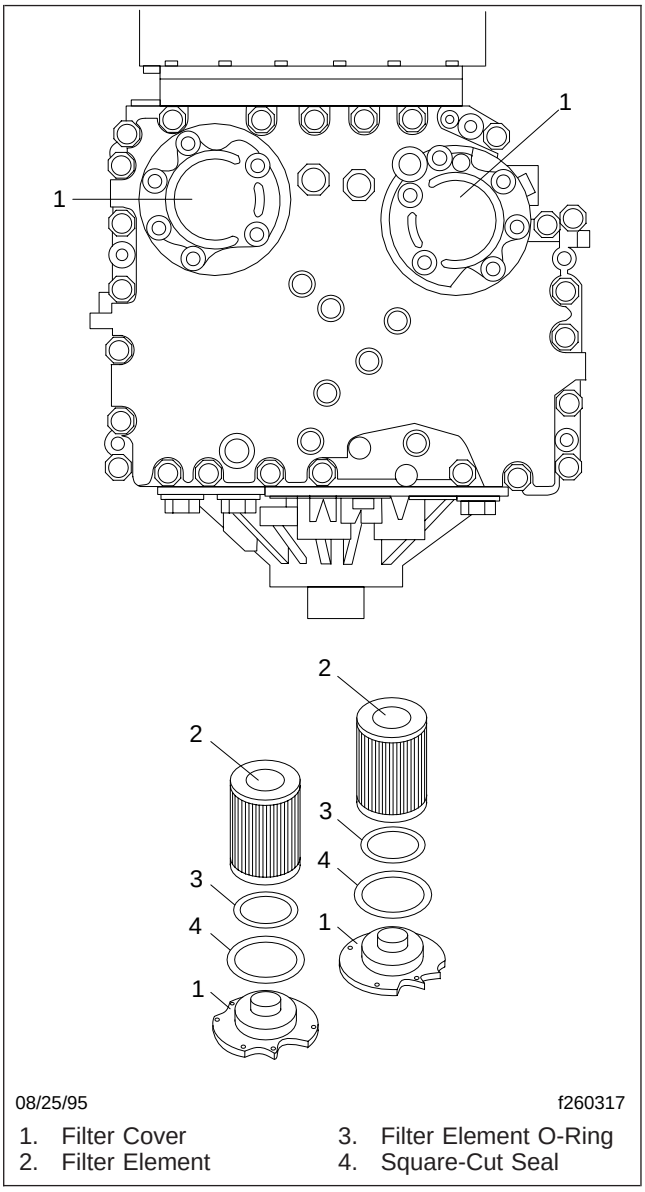

Fig. 5, Allison MD Series Transmission Filter Locations and Components

CAUTION

Do not use the bolts to draw the filter covers to the sump. This can damage the covers, seals, or sump.

11. Install six bolts in each cover, and torque the bolts 38 to 44 lbf·ft (51 to 61 N·m).
12. Replace the drain plug O-ring, and install the drain plug. Tighten the drain plug 18 to 24 lbf·ft (25 to 32 N·m).
13. Refill the transmission with fresh transmission fluid (see **Table 3**) and check the fluid level. See **Table 4** for lubricant capacities.
14. Check and adjust the fluid level using the procedures under "Checking the Fluid Level."

MT Series

1. Park the vehicle on a level surface. Apply the parking brakes and chock the rear tires.
2. Start the engine and check that the transmission fluid temperature is 160 to 200°F (71 to 93°C) before draining the fluid. Shift the gear selector to neutral and shut down the engine.
3. Place a suitable container under the transmission, then remove the drain plug and gasket from the transmission oil pan. Allow the fluid to drain.
4. Remove the nut that secures the oil filler tube to the transmission pan.
5. Remove the 21 capscrews that secure the transmission oil pan to the transmission housing, then remove the transmission oil pan and gasket from the transmission. Discard the gasket.
6. Clean the oil pan of any debris and residual fluid in an approved cleaning tank.
7. Remove the washer-head capscrew that secures the filter to the transmission, then remove the filter and the filter intake pipe from the transmission. See **Fig. 6**.
8. Separate the filter intake pipe from the filter, discard the O-ring, then clean the tube.
9. Install the filter intake pipe on the new filter. Install a new O-ring on the filter intake tube, then lubricate the O-ring with a light coat of transmission fluid.
10. Insert the filter intake pipe into the orifice on the bottom of the transmission, then secure the filter with the 5/16–18 x 5/8 inch washer-head capscrew. Tighten the capscrew 10 to 15 lbf·ft (14 to 20 N·m).
11. Place a new oil pan gasket on the oil pan. If desired, a sealant may be used on the gasket, but it must be applied carefully; sealant must be pre-

https://truckmanualshub.com/

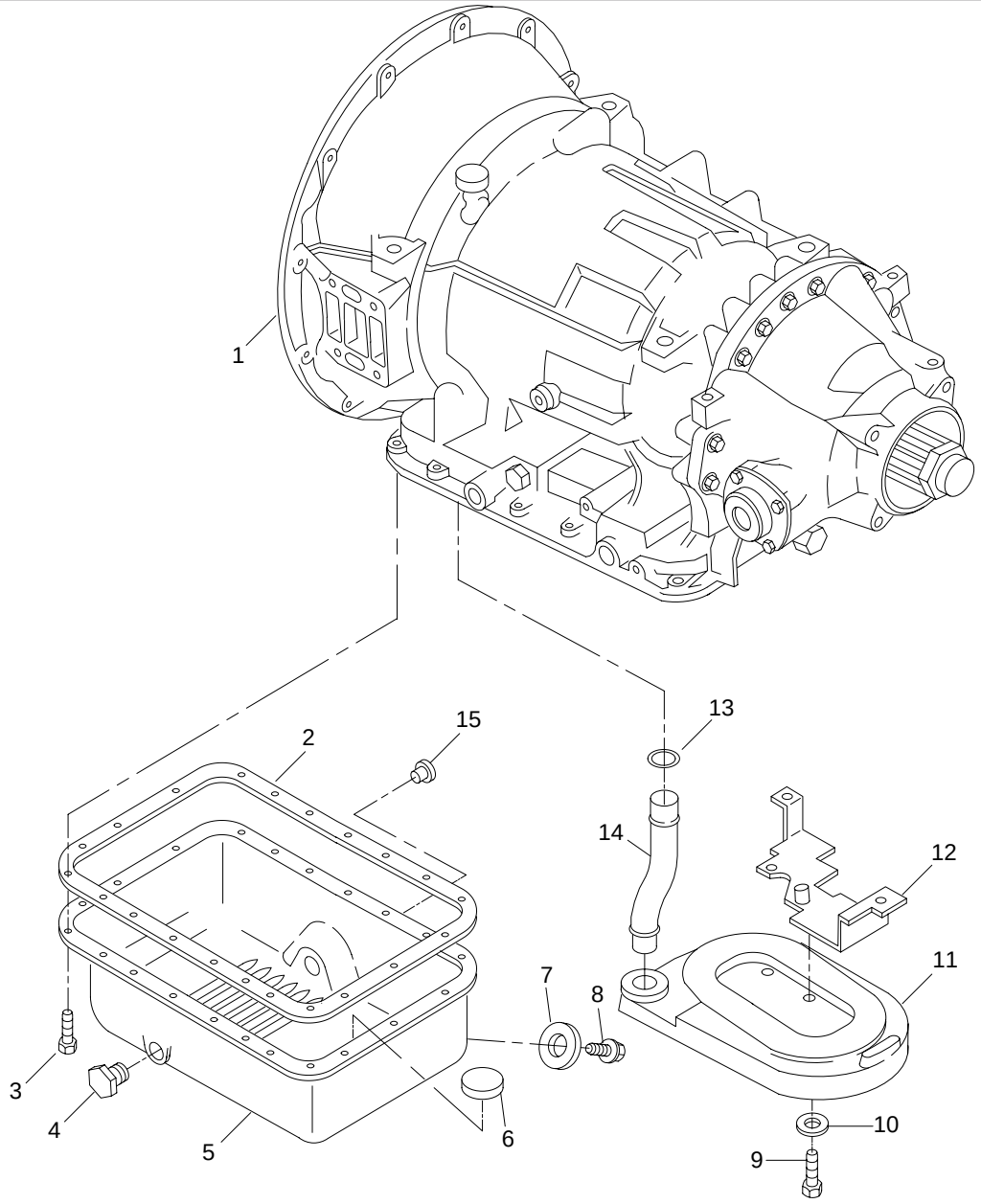

1. Transmission Housing
2. Transmission Oil Pan Gasket
3. 5/16–18 Washer-Head Capscrew
4. Plug
5. Transmission Oil Pan
6. Magnet
7. Drain Plug Gasket
8. Drain Plug
9. 5/16–18 x 5/8 Capscrew
10. Flatwasher
11. Transmission Fluid Filter
12. Fluid-Filter Spacer
13. O-Ring
14. Fluid-Filter Tube
15. Plug

Fig. 6, Allison MT Series Transmission, Filter Removal

https://truckmanualshub.com/

vented from contacting areas of the oil pan flange that are inside the raised bead of the flange.

NOTE: Do not use gasket-type sealing compounds or cement anywhere inside the transmission or where they might get washed into the transmission. Non-soluble vegetable-base cooking compounds or fibrous grease must not be used inside the transmission.

12. Install the oil pan and gasket onto the transmission. Check that no dirt or debris enters the pan. Secure the pan to the transmission housing with four 5/16–18 washer-head capscrews, installed into the corners of the oil pan, but do not tighten.
13. Install the remaining 17 washer-head capscrews by hand. Check that all of the capscrews are hand-tight.
14. Using a click-type torque wrench, tighten each capscrew 5 lbf·ft (7 N·m). See **Fig. 7** for the pattern needed to distribute the torque evenly. When all the capscrews are tightened to the first stage, repeat this procedure. This time, torque all the capscrews 15 to 20 lbf·ft (20 to 27 N·m).
15. Install the oil filler tube on the oil pan. Tighten the tube fitting 90 to 100 lbf·ft (122 to 136 N·m), then install the drain plug and gasket. Tighten the drain plug 15 to 20 lbf·ft (20 to 27 N·m).
16. Pour approximately 15 quarts (14 liters) of transmission fluid into the transmission. Start the engine and allow the transmission fluid to circulate. With the transmission in NEUTRAL, check the fluid level. Check for fluid leaks. Correct any leak with the engine OFF.

Checking the Fluid Level

CAUTION

Operating a transmission with the fluid level higher or lower than recommended can result in transmission damage. Do not overfill the transmission.

Do not mix types and brands of fluid, because of possible incompatibility. Do not use fluid additives, friction modifiers, extreme-pressure gear fluids, or multiviscosity lubricants.

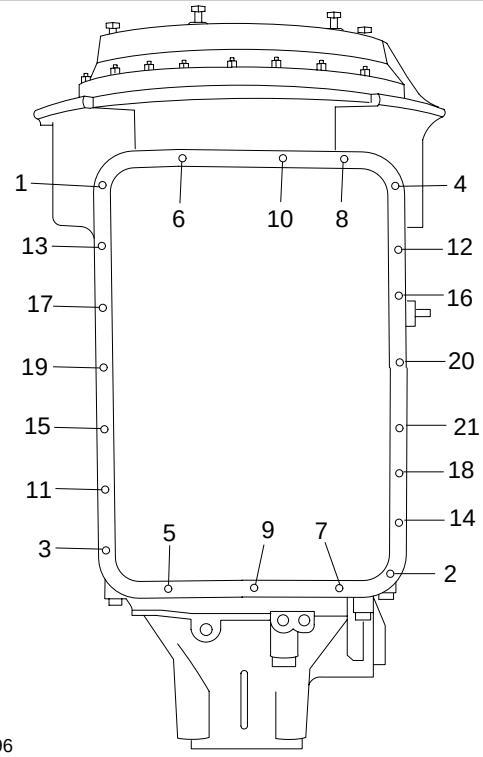

NOTE: Torque the oil pan bolts with a click-type torque wrench following this torque pattern. Tighten the bolts 5 lbf·ft (7 N·m), then repeat the torque pattern with a click-type torque wrench 15 to 20 lbf·ft (20 to 27 N·m).

Fig. 7, Allison MT Series Transmission, Oil Pan Torque Pattern

Cold Check

Clean all dirt away from around the end of the fluid fill tube before removing the dipstick.

CAUTION

Do not allow foreign matter to enter the transmission. Dirt or foreign matter in the hydraulic system may cause undue wear of transmission parts, make valves stick, and clog passages.

It is important to check the fluid level cold to determine if the transmission has a sufficient amount of fluid to be safely operated until a hot check can be performed.

1. Park the vehicle on a flat, level surface.
2. Apply the parking brakes and chock the rear tires.

https://truckmanualshub.com/

3. Run the engine for at least one minute.
4. Shift from DRIVE to NEUTRAL, and then shift to REVERSE to fill the hydraulic system.
5. Shift to NEUTRAL and allow the engine to idle at 500–800 rpm.
6. With the engine running at idle, remove the dipstick from the tube and wipe clean.
7. Insert the dipstick into the tube and remove the dipstick.
8. Check the fluid level reading and repeat the check procedure to verify the reading.

   If the fluid level is within the COLD RUN band, the transmission may be operated until the fluid is hot enough to perform a HOT RUN check.

   If the fluid level is not within the COLD RUN band, add or drain fluid as needed to adjust the fluid level to the middle of the COLD RUN band. See **Fig. 8** for the AT and MD series, and **Fig. 9** for the MT series.

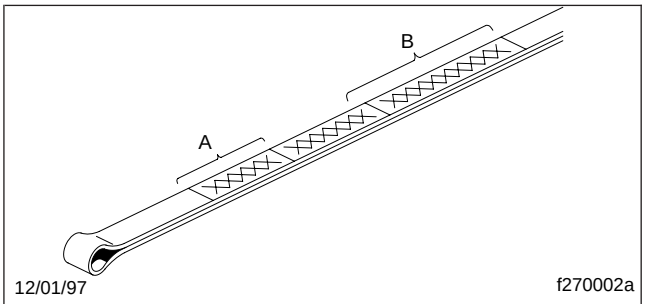

A. Cold Run Band B. Hot Run Band

Fig. 8, AT and MD Series Dipstick Markings

CAUTION

Do not fill above the COLD RUN band if the transmission fluid is below normal operating temperature. As fluid temperature increases, so does the fluid level. Filling above the COLD RUN band when the transmission is below normal operating temperature may result in an overfilled transmission, which causes fluid foaming and aeration. Fluid foaming and aeration cause transmission overheating and erratic shifting.

NOTE: Perform a hot check at the first opportunity after the normal operating temperature, 160° to 200°F (71° to 93°C) has been reached.

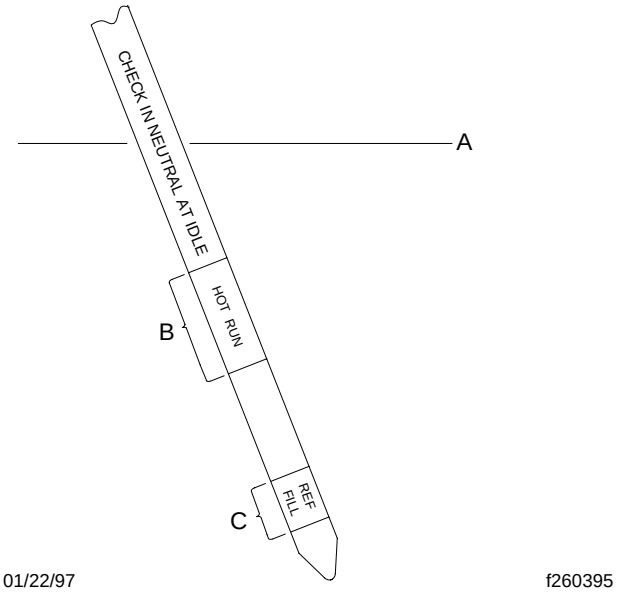

A. Transmission Housing/Oil Pan Split Line
B. Hot Run Band
C. Cold Run Band

Fig. 9, MT Series Dipstick Markings, 5.1-Inch Depth Oil Pan

Hot Check

1. Park the vehicle on a flat, level surface. Apply the parking brakes and chock the rear tires.
2. Shift the transmission to NEUTRAL.
3. Operate the engine at idle (500–800 rpm) until normal operating temperature is reached. Check that the sump temperature is 160 to 200°F (71 to 93°C). Check that the converter-out temperature is 180 to 220°F (82 to 104°C).
4. With the engine idling, remove the dipstick from the tube and wipe it clean.
5. Insert the dipstick into the tube and remove it.
6. Check the fluid level reading and repeat the check procedure to verify the reading. Safe operating level is within the HOT RUN band on the dipstick. The HOT RUN band is between the HOT FULL and HOT ADD marks.

   If the fluid level is not within the HOT RUN band, add or drain fluid as needed to bring the fluid level within the HOT RUN band. See **Fig. 8** for the AT and MD series, and **Fig. 9** for the MT series.

https://truckmanualshub.com/

26–05 Mercedes-Benz Transmission Fluid Changing and Magnetic Plug Cleaning

Draining

1. Park the vehicle on a level surface. Apply the parking brakes and chock the rear tires.

NOTE: Drain the transmission fluid while the transmission is warm.

2. Drain the transmission fluid. See **Fig. 10**.
   - 2.1 Remove the magnetic drain plug from the bottom of the gear case.
   - 2.2 Discard the aluminum gasket.
   - 2.3 Catch the transmission fluid in a suitable container and dispose of it properly.
3. Clean the area around the fill plug.
4. Remove the fill plug from the side of the case. Discard the aluminum gasket.

NOTE: Use a piece of key stock, or any other convenient steel slug, to short the two magnetic poles and divert the magnetic field.

5. Clean the magnetic drain plug before installing it.
6. Install the drain plug (p/n A 124 997 01 32) and a new aluminum gasket (p/n N 00763 024105). Tighten the drain plug 42 lbf·ft (57 N·m).

Filling

CAUTION

Operating a manual transmission with the fluid level higher or lower than recommended can result in transmission damage. Do not overfill the transmission; overfilling will force fluid out of the case through the main shaft openings. Fluid overflow may also drain onto the clutch or clutch brake, causing additional problems.

1. Add transmission fluid until it is level with the lower edge of the fill opening. See **Fig. 10** for location of the fill plug and **Fig. 11** for correct level. See **Table 5** for approved transmission lubricants and **Table 6** for lubricant capacities.

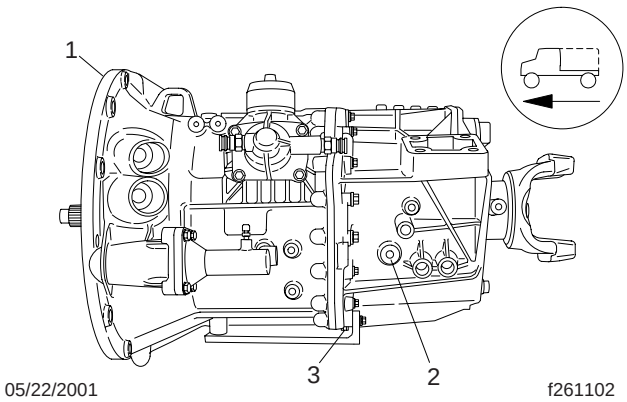

NOTE: The transmission is shown from the left-hand side.

1. Transmission
2. Fill Plug
3. Drain Plug

Fig. 10, MBT Drain and Fill Plugs

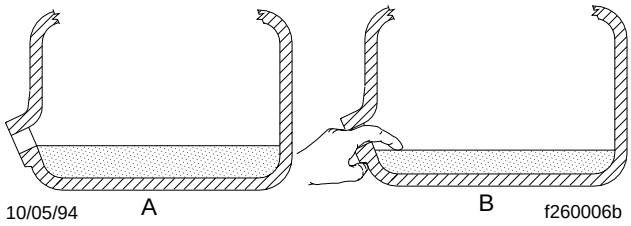

A. Full
B. Low

Fig. 11, MBT Fluid Level Checking

MBT Transmission Lubricant Types	
Manufacturer	**Type**
Mobil	Mobiltrans SHC® DC

Table 5, MBT Lubricant Types

MBT Transmission Lubricant Capacities	
Transmission Model	**Refill Capacity*: quarts (liters)**
MBT660S-6O	9.5 (9.0)
MBT520S-6D	9.5 (9.0)

* Quantities listed are approximate. Fill the transmission until the lubricant is level with the bottom of the fill hole, with the vehicle in normal operating position.

Table 6, MBT Lubricant Capacities

https://truckmanualshub.com/

CAUTION

Use only the approved Mobiltrans SHC® DC fluid. Do not mix fluid types. Adding SHC 50 RN 2952 E-5 fluid (used in Eaton and Meritor transmissions) could damage the radial seals.

2. Clean the fill plug before installing it.
3. Install the fill plug (p/n N000908 020001) and a new aluminum gasket (p/n N 00763 024105). Tighten the fill plug 42 lbf·ft (57 N·m).

26–06 Mercedes-Benz Transmission Leak Checking

1. Park the vehicle on a level surface. Apply the parking brakes and chock the rear tires.
2. Check for signs of leakage at the breather. See **Fig. 12**.

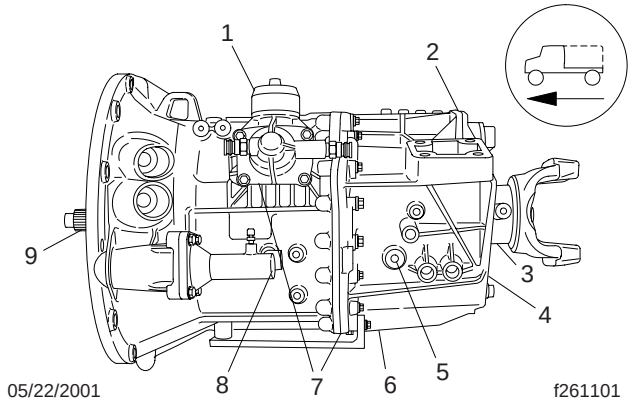

NOTE: The transmission is shown from the left-hand side.

1. Shift Lever Cap Seal
2. Breather
3. Output Shaft Radial Seal
4. Countershaft Cover Plate
5. Transmission Fluid Fill Plug
6. Transmission Fluid Drain Plug
7. Gear Case Seals
8. Clutch Slave Cylinder
9. Input Shaft Radial Seal

Fig. 12, MBT Leak Check

2.1 If leakage is found, check the breather for a missing cap. Replace the cap if necessary.

2.2 Check the fluid level at the fill plug. If the level is too high, correct the fluid level.

3. Check for signs of leakage at the cap seal on the shift lever. If the cap seal is damaged, replace it.
4. Check for signs of leakage at the radial seal on the output shaft. If leakage is found, remove the output yoke (end yoke) and replace the seal. For procedures, see **Section 26.02, Subject 120,** of the *Acterra® Workshop Manual*.

NOTE: There are two cover plates on the countershaft, one at the front and one at the rear.

5. Check for signs of leakage at the rear cover plate on the countershaft (next to the output yoke). If leakage is found, check the torque on the cover-plate bolts and check the flat seal for damage.

5.1 If the flat seal is damaged, replace it.

5.2 If the cover-plate bolts are too loose, tighten them 18 lbf·ft (25 N·m). If the cover-plate bolts are too tight, replace the flat seal and tighten to 18 lbf·ft (25 N·m).

6. Check for signs of leakage at the transmission fluid fill plug. If leakage is found, check the torque on the plug and check the aluminum gasket for damage.

6.1 If the gasket is damaged, replace it.

6.2 If the fill plug is too loose, tighten it 42 lbf·ft (57 N·m). If the fill plug is too tight, loosen it and tighten to 42 lbf·ft (57 N·m).

7. Check for signs of leakage at the transmission fluid drain plug. If leakage is found, check the torque on the plug and check the aluminum gasket for damage.

7.1 If the gasket is damaged, replace it.

7.2 If the drain plug is too loose, tighten it 42 lbf·ft (57 N·m). If the plug is too tight, loosen it and tighten to 42 lbf·ft (57 N·m).

8. Check for fluid dripping at the gear case seals. If substantial leakage is found at either location, replace the transmission.

NOTE: Weeping or sweating seals are not cause for transmission replacement.

https://truckmanualshub.com/

WARNING

Clutch hydraulic fluid (DOT 3 brake fluid) is hazardous. It may be a skin irritant and can cause blindness if it gets in your eyes. Always wear safety glasses when handling clutch hydraulic fluid or bleeding hydraulic lines. If you get clutch hydraulic fluid on your skin, wash it off as soon as possible.

9. Check for signs of leakage at the clutch slave cylinder.

CAUTION

Do not spill clutch hydraulic fluid (DOT 3 brake fluid) on the cab paint. Clean it off immediately if any is spilled. DOT 3 brake fluid can damage paint.

9.1 If leakage is found on the slave cylinder body, check the fittings and hose for damage.

9.2 If leakage is found on the piston seals, replace the slave cylinder and bleed the clutch hydraulic system. For detailed instructions, see **Group 25**.

9.3 If the slave cylinder fittings and/or the hose are damaged, replace them.

9.4 Check the torque on the slave cylinder mounting capscrews. Tighten them 15 lbf·ft (20 N·m).

9.5 If any leakage of clutch hydraulic fluid is found, check the fluid level in the reservoir, and add fluid if needed. For detailed procedures, see **Group 25**.

NOTE: There are two cover plates on the countershaft, one at the front and one at the rear.

10. Check for signs of leakage at the clutch bell housing. If leakage is found, check the radial seal on the input shaft, the front cover plate on the countershaft (inside the clutch bell housing), and the rear radial seal on the crankshaft.

10.1 If the radial seal on the input shaft is leaking, replace the radial seal. For procedures, see **Section 26.02, Subject 120,** of the *Acterra® Workshop Manual*.

10.2 If the cover plate on the countershaft is leaking, replace the cover plate. Apply liquid gasket (Loctite 518) to the new cover plate when installing it.

10.3 If the rear radial seal on the engine crankshaft is leaking, replace the rear radial seal. For procedures, see the engine manufacturer's manual.

11. Remove the chocks from the tires.

https://truckmanualshub.com/

Index, Alphabetical

Title of Maintenance Operation (MOP)	MOP Number
Fifth Wheel Inspecting	31–02
Fifth Wheel Lubricating	31–03
Frame Fastener Torque Checking	31–01
Trailer Electrical Connector Lubricating	31–04

https://truckmanualshub.com/

31–01 Frame Fastener Torque Checking

Because of "bedding in" (or seating), frame fasteners must be torqued at the recommended intervals. These intervals apply to new vehicles, and to frame fasteners that have been removed and installed.

NOTE: For off-highway operations, retorque frame fasteners the first 1000 miles (1600 km), then periodically, depending on operating conditions.

CAUTION

Make sure frame fasteners are properly tightened. Continued vehicle operation with loose fasteners could result in bracket or frame damage.

NOTE: Engine supports on vehicles built from January 2007 do not require checking.

Typical frame fastener applications include front frame, suspension, and spring brackets; fuel tank, exhaust, and engine supports; frame crossmembers and gussets; and fifth wheel mounting brackets.

For additional fastener and torque value information, see **Group 00** of the *Acterra® Workshop Manual*.

Tighten all Freightliner AirLiner suspension fasteners to the torque values in **Table 1**. Also, tighten all suspension air line fittings and air lines.

Freightliner Airliner Torque Values		
Description	**Size**	**Torque: lbf·ft (N·m)**
Leveling Valve Adjustment Nut	1/4–20	5 (7)
Leveling Valve Mounting Nuts	5/16–18	14 (19)
Air Spring Upper Locknuts	3/4–16	45 (61)
	1/2–13	23 (31)
Air Spring Lower Locknuts	1/2–13	55 (75)
Leaf-Spring-Eye Locknuts	3/4–16	270 (365)
Shock Absorber Upper Bracket Locknuts	5/8–11	125 (170)
Air Spring Upper Bracket	5/8–11	125 (170)
Spring Hanger Locknuts	3/4–10	210 (285)
Lateral Control Rod Nut	5/8–11	185 (136)

Table 1, Freightliner AirLiner Torque Values

Tighten Hendrickson suspension fasteners to the torque values given in **Table 2**.

Hendrickson Suspension Torque Values		
Description	**Size**	**Torque: lbf·ft (N·m)**
Top-Pad-to-Spring Aligning Setscrew (RT/RTE)	—	100–150 (135–200)
Top Pad Nut (RT/RTE)	—	275–400 (375–542)
U-Bolt Locknut (U/UE)	7/8–14	237–302 (321–409)
Spring Pin Locknut	1/2–13	45–63 (61–85)
Torque Rod Straddle Mount Nut	5/8–11	190 (260)
Torque Rod Stud Locknut	1-1/4–12	175–225 (235–305)
Saddle Cap Stud	7/8–14	55–65 (75–90)
	3/4–16	
Saddle Cap Locknut (RT/RTE)	7/8–14	225–275 (305–373)
Saddle Cap Locknut (U/UE)	3/4–16	125–145 (169–197)
Adapter-Type Beam End Locknut	3/4–16	210–240 (285–325)
Spring Center Bolt	7/16–20	50–60 (70–80)
	1/2–20	65–75 (90–100)
	1/2–13	
Rebound Spacer Locknut	1/2–13	38–45 (51–61)
Spring Alignment Clip	—	15 (20)
Fore and Aft Torque Rod Mount Nut	—	95 (130)

Table 2, Hendrickson Suspension Torque Values

All Hendrickson beam end fasteners must maintain their torque values to firmly clamp the rubber bushing inner metal tubes to the beam hanger legs.

WARNING

Insufficient beam end fastener torque could cause the beam to separate from the axle. This will cause loss of vehicle control resulting in property damage, serious personal injury or death.

Tighten the nut (see **Fig. 1**) to the torque value in **Table 2**. Do not over-torque.

https://truckmanualshub.com/

Check the drive-axle-flange fasteners (see **Fig. 2**) for tightness. Tighten the fasteners as follows:

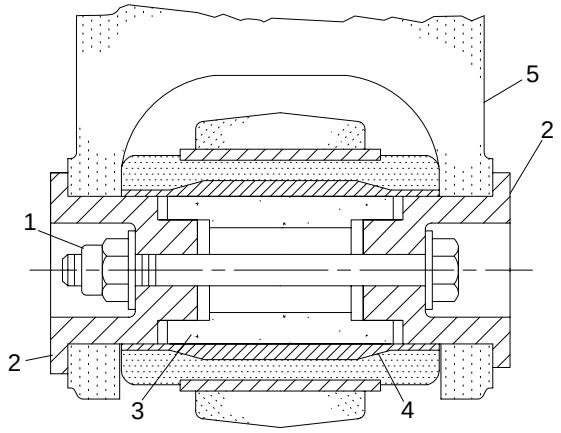

05/27/93 f320110a

NOTE: Do not use the three-piece adapter without the intermediate tube.

1. Nut
2. Adapter
3. Intermediate Tube
4. Inner Metal of Beam End Bushing
5. Beam Hanger

Fig. 1, Three-Piece Adapter-Type Beam End Connection

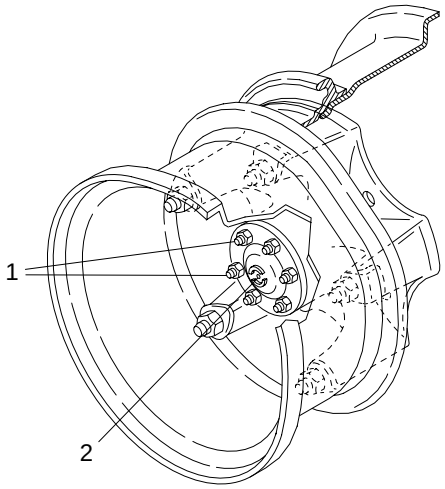

06/09/94 f400090b

NOTE: Spoke wheel shown.

1. Drive-Axle-Flange Studs and Nuts
2. Drive-Axle Flange

Fig. 2, Drive-Axle Flange

Tighten 1/2-inch drive-axle stud nuts (with or without dowels) 75 to 115 lbf·ft (102 to 156 N·m), and tighten 5/8-inch drive-axle stud nuts 150 to 230 lbf·ft (203 to 312 N·m).

31–02 Fifth Wheel Inspecting

⚠ WARNING

All fifth wheel maintenance, adjustment, and rebuilding must be done only by a qualified mechanic. Improper or incomplete procedures could result in a possible disengagement of the trailer from the tractor, which could result in personal injury or property damage.

Parts are under spring compression. Wear safety goggles while servicing the fifth wheel. Failure to do so can result in personal injury, due to parts ejecting with force.

Fontaine

Disconnect the tractor from the trailer. For instructions, see **Chapter 10** of the *Acterra® Driver's Manual*. Thoroughly steam clean the fifth wheel, then make the following checks:

1. Look for cracks in the fifth wheel assembly, mounting brackets, and mounting parts.
2. Check moving parts for wear or damage.
3. Test the safety lock latch for operation.
4. Check for loose nuts and bolts in the fifth wheel and in the mounting.
5. Check that all springs are securely fastened and not deformed.
6. Check wedge adjustment.
   - 6.1 Open the kingpin lock and insert a 2-inch (51-mm) diameter shaft vertically.
   - 6.2 Release the lock by tripping the release latch at the bottom of the throat.
   - 6.3 Adjust the wedge stop at the end of the wedge to approximately 1/4-inch (6-mm) clearance.
7. If you observe any problems doing the previous steps, correct them immediately. For instructions, see **Group 31** of the *Acterra® Workshop Manual*.

https://truckmanualshub.com/

8. Replace cracked, worn, or damaged parts with new parts. Replace loose mounting bolts with 5/8–11 SAE grade 8 bolts, grade C nuts, and hardened washers. *Do not* reuse bolts, nuts, and washers on fifth wheel mountings.

Holland

Disconnect the tractor from the trailer. For instructions, see **Chapter 10** of the *Acterra® Driver's Manual* Thoroughly steam clean the fifth wheel, then inspect for:

1. Loose nuts or broken bolts on the fifth wheel assembly.
2. Cracks or wear on the mounting bolts.
3. Improper locking action; cracks or wear on the jaw locking mechanism.
4. Gouges or wear on the fifth wheel top plate.
5. Fatigued or cracked welds.
6. Replace cracked, worn, or damaged parts with new parts. Replace loose mounting bolts with 5/8–11 SAE grade 8 bolts, grade C nuts, and hardened washers. *Do not* reuse bolts, nuts, and washers on fifth wheel mountings.
7. If you observe any problems doing the previous steps, correct them immediately. For instructions, see **Group 31** of the *Acterra® Workshop Manual*.

31–03 Fifth Wheel Lubricating

Fontaine

Use a multipurpose extreme pressure (EP) chassis grease, and lubricate all moving parts on the fifth wheel. When lubricating the top plate at the grease fittings for the bracket bearing area, tilt the top plate forward and backward to evenly distribute the grease. Using a pry tool, separate the jaw and wedge and lubricate the serrations using a brush to distribute the grease. On slide-mount applications, lubricate the slide rail and tapered wedges for smooth operation.

Once the moving parts of the fifth wheel are lubricated, apply a liberal coating of grease to the top plate and the trailer kingpin plate.

Holland

Lubricate all moving parts with a multipurpose chassis grease. Lubricate the two grease fittings located on either side of the top plate with a multipurpose chassis grease.

Once the fifth wheel's moving parts are lubricated, apply a heavy coat of grease to the top plate by direct application. On slide-mount applications, lubricate the baseplate rails and the plungers for smooth operation.

31–04 Trailer Electrical Connector Lubricating

In some cases, failure of trailer cables occurs due to intrusion of chloride-based road deicing chemicals into the trailer connector. Once inside the connector, the chloride-based chemicals corrode the brass terminals and create bridging between positive and ground terminals.

NOTE: The use of soap is not recommended for cleaning the electrical connector, as some soaps may increase the corrosion process.

1. Wash out any existing grease, dirt, and corrosion on the trailer connectors with electrical contact cleaner spray.
2. Grease the trailer connector with a lithium-based dielectric grease.

https://truckmanualshub.com/

Index, Alphabetical

Title of Maintenance Operation (MOP)	MOP Number
Suspension Inspecting	32–01
Suspension Lubricating	32–02
U-Bolt Torque Checking	32–03

https://truckmanualshub.com/

32–01 Suspension Inspecting

Sterling Front and Rear Suspension Spring Assemblies Inspecting

Inspect the front and rear suspension spring assemblies for pitted, cracked, broken, or abnormally bent leaves and extreme rust. If any of these conditions exist, replace the spring assembly. See **Group 32**of the *Acterra® Workshop Manual* for instructions.

WARNING

Do not replace individual leaves of a damaged leaf spring assembly; replace the complete spring assembly. Visible damage (cracks or breaks) to one leaf causes hidden damage to other leaves. Replacement of only the visibly damaged part(s) is no assurance that the spring is safe. On front spring assemblies, if cracks or breaks exist in the two top leaves, a loss of vehicle control could occur. Failure to replace a damaged spring assembly could cause an accident resulting in property damage, serious personal injury, or death.

IMPORTANT: On multi-leaf suspensions, closely inspect each component of the leaf spring assemblies, including the brackets, U-bolts, and related parts.

Sterling Spring Rear Suspension Spring Brackets and Equalizer Brackets Inspecting

Inspect the forward and rear spring brackets, equalizer brackets, and the wear pads, for wear, cracks, and other damage. If any of these conditions exist, replace the damaged bracket(s) and wear pad(s). See **Group 32** of the *Acterra® Workshop Manual* for instructions.

WARNING

Failure to replace the forward spring brackets, equalizer brackets, or rear spring brackets if they are worn, cracked, or otherwise damaged could result in progressive damage to and eventual breakage of the bracket. This could cause a loss of vehicle control resulting in property damage, serious personal injury or death.

Sterling Spring Tandem-Axle Suspension Crossmember and Gussets Inpsecting

Inspect the tandem-axle frame crossmember and gussets for wear, cracks, and other damage. If any of these conditions exist, replace the damaged parts. See **Group 32** of the *Acterra® Workshop Manual* for instructions. Check all fasteners for tightness; see **Group 00** of this manual for torque values.

CAUTION

Failure to replace the suspension crossmember or gussets if they are cracked, worn, or otherwise damaged could result in damage to the vehicle chassis.

Sterling Spring Shock Absorber Checking

Make sure that the shock absorber brackets are tight, and that the shock absorber is not striking or rubbing on the frame or some other part of the chassis. See **Fig. 1**. Check the rubber mounting bushings and replace if worn. Inspect the shock absorber for oil leakage.

If the shock absorber is worn or damaged, replace it with a new one.

Sterling Spring (Tandem) Radius Rod Bushing Checking

1. Without detaching the torque arms, attempt to move (by hand) each of the radius-rod ends up, down, in, and out. If there is any movement, replace the torque arm.
2. Inspect the weld seams between the torque arm tube and the shorter bushing tubes. If there are cracks, replace the torque arm. Do not weld the torque arm for any reason.
3. Inspect the rubber bushing ends. See **Fig. 2**. Replace the torque arm for any of the following reasons:
    - There are gaps between the rubber bushing and the pin or the outer steel sleeve.

https://truckmanualshub.com/

- Either bushing end contacts a torque arm pin mounting bolt.
- There are cracks in the bushing.
- Part of the rubber bushing extends beyond the outside diameter of the outer bushing sleeve.

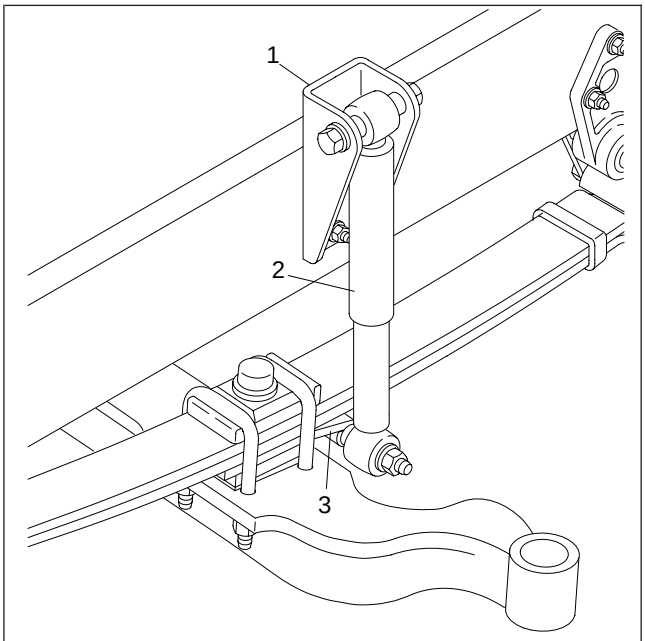

1. Upper Mounting Bracket
2. Shock Absorber
3. Lower Mounting Bracket

Fig. 1, Front Shock Absorber Installation (vehicles built before September 15, 2002)

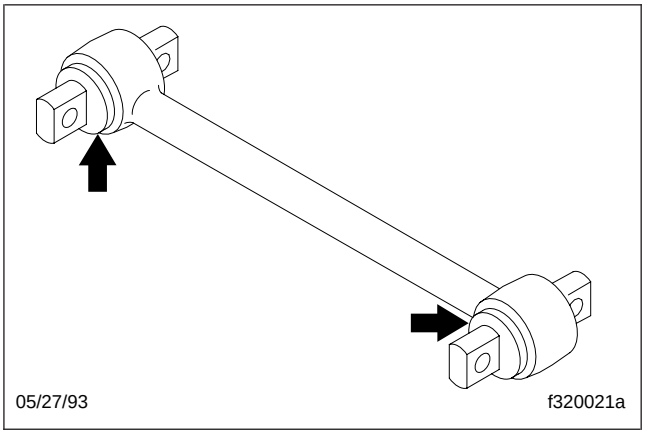

Fig. 2, Torque Arm Bushings

Sterling Spring (Tandem) Equalizer Bushing Checking

1. Block the frame up enough to take the weight of the chassis off of the springs. Attempt to move the equalizer up and down, by using a pry bar between the top of the equalizer and the top of the equalizer bracket. Apply hand pressure only. See **Fig. 3**. If movement at the center of the equalizer exceeds 1/8 inch (3 mm), replace the equalizer bushings.
2. With the vehicle unloaded, attempt to move the equalizer side to side using a pry bar between the equalizer and frame rail. Apply hand pressure only. See **Fig. 4**. If clearance between the equalizer assembly and any frame component or fastener is less than 1/8 inch (3 mm), replace the equalizer bushings.

52-Inch Multi-Leaf Spring Component Check

No lubrication is required on the 52-inch multi-leaf spring rear suspension.

Inspect the stabilizer bar, if present, for irregular bushing wear or cracks in the brackets. Check the rubber helper spring, if present, for cracks.

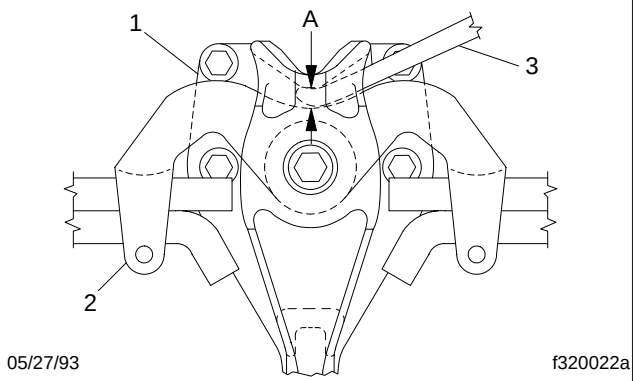

A. Measure the change in gap at this point.
1. Equalizer Bracket
2. Equalizer
3. Pry Bar

Fig. 3, Side View of the Equalizer

https://truckmanualshub.com/

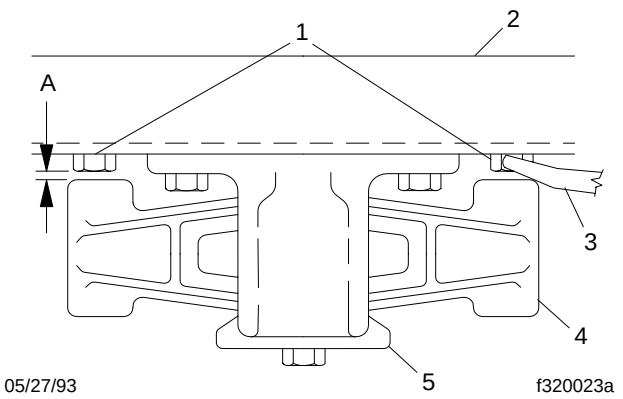

A. 1/8-inch (3-mm) Clearance
1. Frame Fasteners
2. Frame Rail
3. Pry Bar
4. Equalizer
5. Equalizer Bracket

Fig. 4, Top View of the Equalizer

60-Inch Taper-Leaf Spring Component Check

No lubrication is required on the 60-inch taper-leaf spring rear suspension.

Inspect the rear shackle brackets for bushing wear or cracks.

Inspect the stabilizer bar, if present, for irregular bushing wear or cracks in the brackets. Check the rubber helper spring, if present, for cracks.

Freightliner AirLiner Component Clearance Checking

Check that the air line support brackets are positioned so the air lines do not rub against anything. Reposition any configurations that could contact and result in friction and wear. There must be at least 1 inch (25 mm) clearance around the rubber air spring when inflated. If the clearance is less than 1 inch (25 mm), relocate the obstructing parts.

CAUTION

Failure to relocate obstructing parts could result in damage to the air spring.

Freightliner AirLiner Component Inspecting and Operation Checking

WARNING

Inspect the components and check their operation as described below. Failure to perform these inspections and checks could result in separation of worn suspension components and loss of vehicle control, possibly causing personal injury or death, or property damage.

1. Chock the front tires. Raise the rear of the vehicle so the tires just clear the ground and the suspension is fully extended. Place safety stands under the vehicle frame.
2. Squeeze all air springs to check for complete deflation. If any air springs remain partially or fully inflated, see **Group 32** of the *Acterra® Workshop Manual*.
3. Inspect each air spring for wear at its connection to its pedestal. Replace any worn air springs; for instructions, see **Group 32** of the *Acterra® Workshop Manual*.
4. Inspect the shock absorbers for oil leaks and worn rubber bushings. Replace the shock absorbers and/or rubber bushings if wear or damage is noted. For instructions, see **Group 32** of the *Acterra® Workshop Manual*.
5. Remove the safety stands and lower the rear of the vehicle to the ground. Run the engine until air pressure of at least 100 psi (689 kPa) is maintained throughout the system.
6. Check that all air springs are inflated. If the air springs do not inflate, see **Group 32** of the *Acterra® Workshop Manual* for possible causes and corrections.

Freightliner AirLiner Control Rod Checking

1. Without disconnecting the control rods, attempt to move (by hand) each of the control rod ends up, down, in, and out. If there is any movement, examine the control rods for wear or damage. Replace if necessary.
2. Inspect the rubber bushings for cracks or cuts.

https://truckmanualshub.com/

3. Check for any shifting of the barpin.
4. Check for cracks in the metal components and welds.

NOTE: The AirLiner suspension is manufactured at numerous weight ratings up to 46,000 pounds. The control rod on the 46,000-pound-rated suspension is larger, and is fastened differently than on other applications; see **Group 32** of the *Acterra® Workshop Manual* for removal and installation information.

Freightliner TufTrac

1. Inspect the suspension spring assemblies for pitted, cracked, broken, or abnormally bent leaves and extreme rust. If any of these conditions exist, replace the spring assembly.

WARNING

Do not replace individual leaves of a damaged leaf spring assembly; replace the complete spring assembly. Visible damage (cracks or breaks) to one leaf causes hidden damage to other leaves. Replacement of only the visibly damaged part(s) is no assurance that the spring is safe. On front spring assemblies, if cracks or breaks exist in the two top leaves, a loss of vehicle control could occur. Failure to replace a damaged spring assembly could cause an accident resulting in property damage, serious personal injury, or death.

IMPORTANT: On multi-leaf suspensions, closely inspect each component of the leaf spring assemblies, including the brackets, U-bolts, and related parts.

2. Inspect the brackets for cracks in the castings. Inspect the V-rod tower welds for cracking or other signs of damage. Also check for contact between the frame rail and the upper axle clamp brackets. If contact exists, check the V-rod bushing for wear. Check the V-rod fastener torques.
3. Inspect the rubber center bearing and spring tip pads for excessive wear, including de-lamination of the rubber-to-metal shim interface, and distortion and degradation of rubber.
4. Inspect the V-rods and lower control rods for wear and looseness.
   - 4.1 Without disconnecting the control rods, use your hand to attempt to move each of the control rod ends up, down, in, and out. If there is any movement, examine the control rods for wear or damage. Replace if necessary.
   - 4.2 Inspect the rubber bushings for cracks or cuts.
   - 4.3 Check for any shifting of the barpin.
   - 4.4 Check for cracks in the metal components and welds.
5. Check all fasteners for looseness.
6. Inspect the shock absorbers for oil leaks and worn rubber bushings. Replace the shock absorbers and/or rubber bushings if wear or damage is noted.

Hendrickson Suspension Inspecting

Inspect the suspension assembly for wear, cracks, and damage to its components. Replace the component(s) if any wear, cracks, or damage exists. For instructions, see **Group 32** of the *Acterra® Workshop Manual*. Check all fasteners for tightness.

Check for distorted or frayed rubber at the beam end bushings. If the bushings are damaged, replace them.

Check that the ends of the equalizer beam are not lower in the beam hanger.

If the equalizer beam ends appear lower, use a jack to raise each beam end, and check for movement of the inner metal of the rubber end bushing (see **Fig. 5**). Movement cannot be corrected by tightening the fastener, because parts could be damaged. If there is movement, replace the rubber end bushings and all connecting parts.

After repairs to the suspension, check the fastener torque after the vehicle has been in service for 2500 miles (4000 km). Tighten the adapter-type beam end connection nut (see **Fig. 6**), 210 to 240 lbf·ft (285 to 325 N·m). Do not over-torque.

WARNING

Insufficient beam end fastener torque could cause the beam to separate from the axle. This will

https://truckmanualshub.com/

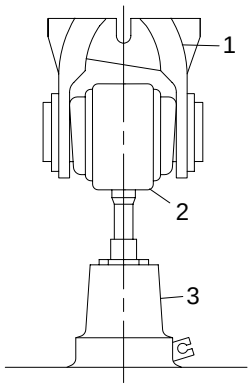

05/27/93 f320039a

1. Beam Hanger
2. Equalizer Beam
3. Jack

Fig. 5, Raising the Beam End

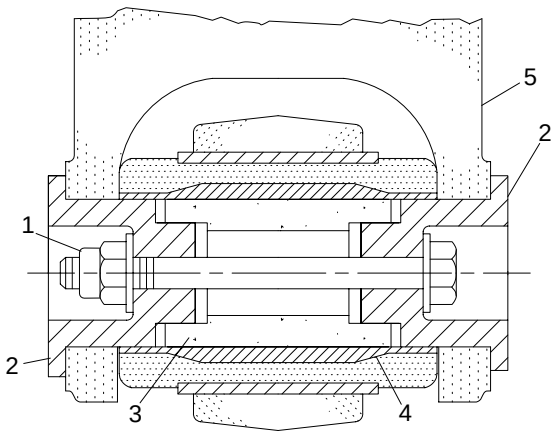

05/27/93 f320110a

NOTE: Do not use the three-piece adapter without the intermediate tube.

1. Nut
2. Adapter
3. Intermediate Tube
4. Inner Metal of Beam End Bushing
5. Beam Hanger

Fig. 6, Three-Piece Adapter-Type Beam End Connection

cause loss of vehicle control resulting in property damage, serious personal injury or death.

Hendrickson Leaf Spring Assembly Inspecting

NOTE: See **Fig. 7** for this procedure.

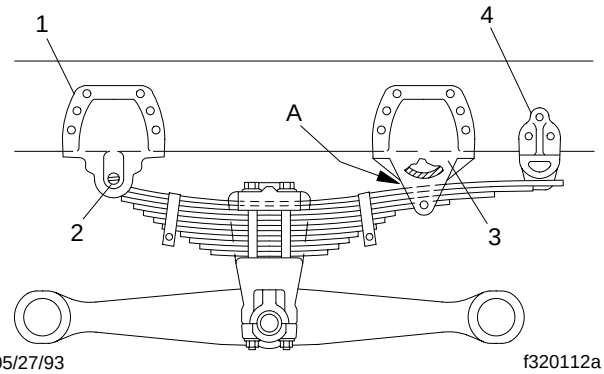

05/27/93 f320112a

A. Minimum gap of 3/8 inch (9.5 mm).
1. Forward (no. 1) Spring Hanger
2. Spring Eye Pin
3. Rear (no. 2) Spring Hanger
4. Rear (no. 3) Extension

Fig. 7, Unloaded RTE or UE Spring Suspension

1. Inspect the spring hangers for wear of the spring pin holes, cams, and the spring hanger legs.
2. If equipped with the "RTE" or "UE" series, the gap between the rear (No. 2) spring hanger and the top spring leaf should measure at least 3/8 inch (9.5 mm) in an unloaded condition.

   If the measurement is less than 3/8 inch (9.5 mm), install new rear (No. 3) extension hangers. Lubricate the bolt threads with SAE 20 oil. Tighten the 1/2–13 locknuts with hardened washers 85 lbf·ft (115 N·m).
3. Inspect the spring leaves for cracks, gouges, wear, or abnormal bends. The no. 1 main and no. 2 wrapper spring leaves (the top two spring leaves) may be individually replaced. If equipped with the "RTE" or "UE" series suspension, the nos. 1, 2, and 3 spring leaves (the top three spring leaves) may be individually replaced. If a spring leaf is damaged below these numbers in a pack, replace the spring assembly. In addition, replace both spring assemblies to ensure even spring deflection.

Hendrickson Radius Rod Bushing Checking

1. Without detaching the torque arms, attempt to move (by hand) each of the radius-rod ends up,

https://truckmanualshub.com/

down, in, and out. If there is any movement, replace the torque arm.

2. Inspect the rubber bushing ends. Replace the torque arm if there are gaps between the rubber bushing and the pin or the outer steel sleeve, if either bushing end contacts a torque arm pin mounting bolt, if there are cracks in the bushing, or if part of the rubber bushing extends beyond the outside diameter of the outer bushing sleeve.

Chalmers Suspension Checking

Chock the front wheels to prevent the vehicle from moving. Place the transmission in neutral, and release the spring or driveline brakes before inspecting the rear suspension.

Power wash the Chalmers rear suspension, or clean it with a hard-bristle brush before performing a visual inspection.

1. Inspect the rubber bushings for cracks or other damage.

   Try to move the torque rod ends using your hands only, and check for any free-play. If free-play is felt, replace the torque rod end bushing. Do not use a pry bar to check for free-play. Use of a pry bar may lead to premature bushing replacement. See **Group 32** of the *Acterra® Workshop Manual* for replacement instructions.

2. If equipped with optional shock absorbers, check for worn, broken, or damaged shock bushings, heavy corrosion on the shock absorber body, or fluid leaking from the shock absorber. Replace the shock absorbers if any of these conditions are found; see **Group 32** of the *Acterra® Workshop Manual*.

3. Lift the rear of the vehicle and support the frame on jack stands to unload the suspension components. The vehicle is lifted high enough when the beam ends are off of the saddles. All jack stands must be of sufficient strength and rigidity to safely support the vehicle. Do not perform any work on or around a vehicle that is supported solely by a lifting device.

   Visually inspect the walking beam for cracks, or other damage. If damage is found, see **Group 32** of the *Acterra® Workshop Manual* for replacement instructions.

   Keep the vehicle supported by the jack stands for the next operation.

4. Manipulate the walking beam so that a micrometer, vernier, or dial caliper can be used to determine the wear area thickness on the bottom face. See **Fig. 8**. Measurements should be taken a minimum of 1/2 inch (13 mm) from the beam flange edges to eliminate any edge wear that may have occurred. Subtract the wear area thickness (see **Fig. 8**, Ref. B), from the non-wear area (see **Fig. 8**, Ref. A), to determine the amount of wear.

   If the beams show any wear greater than the allowable 0.062-inch (1.5-mm) wear, a Chalmers wear plate must be installed, or the walking beam must be replaced. See **Group 32** of the *Acterra® Workshop Manual* for repair and replacement instructions.

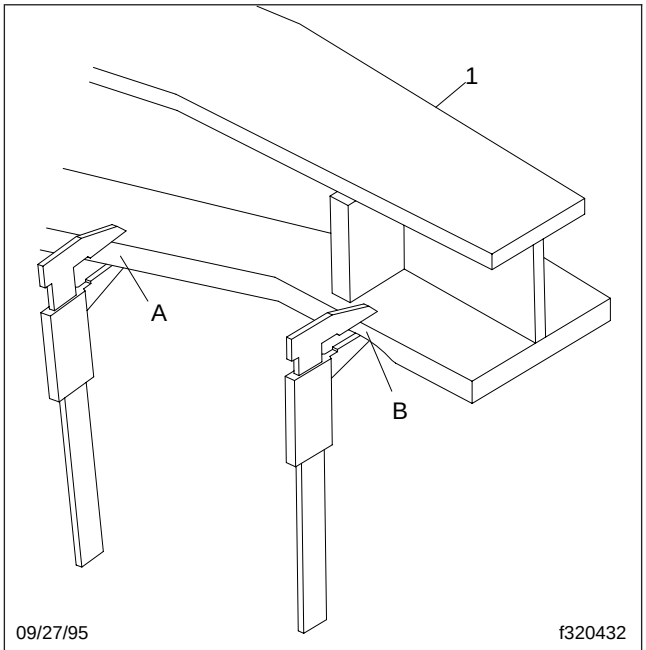

A. Non-Wear Area
B. Wear Area
1. Walking Beam

Fig. 8, Walking Beam End Wear Thickness

5. Rotate the restrictor cans 360 degrees and inspect the cans for cracks, severe corrosion, and distortion. If any of these conditions are present, or the restrictor can is missing, replace the restrictor can. See **Group 32** of the *Acterra® Workshop Manual* for replacement instructions.

https://truckmanualshub.com/

⚠ WARNING

Replace all cracked or missing restrictor cans. Failure to do so could lead to loss of vehicle control, which could result in property damage, serious personal injury, or death. Vehicles with cracked or missing restrictor cans may be driven slowly to the nearest workshop for restrictor can replacement.

6. Remove the jack stands, then lower the vehicle. Check that the spring, or driveline brake is applied, then remove the wheel chocks.

Reyco 79KB Suspension Visual Inspection

The Reyco 79KB suspension requires minimal maintenance. To provide trouble-free operation in over-the-road applications, do the following inspection.

1. Park the vehicle on level ground. Apply the parking brakes, and chock the tires.
2. Check that the torque rod clamps are directed away from the spring to prevent possible interference during operation. See **Fig. 9**.
3. Check the fit of springs to hangers to ensure good ride characteristics.
4. Check for elongated holes in the suspension components. See **Group 32** of the *Acterra® Workshop Manual* for proper repair procedures.
5. Check bushing condition. Replace any bushing that is worn, cracked, dry-rotted, or otherwise damaged. See **Group 32** of the *Acterra® Workshop Manual* for removal and installation instructions.
6. Check tire condition. If abnormal tire wear is found, check and replace all worn or damaged components, and check suspension alignment. See **Group 32** of the *Acterra® Workshop Manual* for component removal and installation procedures, and for suspension alignment instructions.

Reyco 79KB Fastener Torque Check

Check the U-bolt nuts, hanger mounting bolts, torque rod clamp nuts, and the spring retainer bolts for proper fastener torque.

1. Park the vehicle on level ground. Apply the parking brakes, and chock the tires.
2. Use a click-type torque wrench to check that U-bolt nuts are tightened 400 to 450 lbf·ft (540 to 610 N·m).

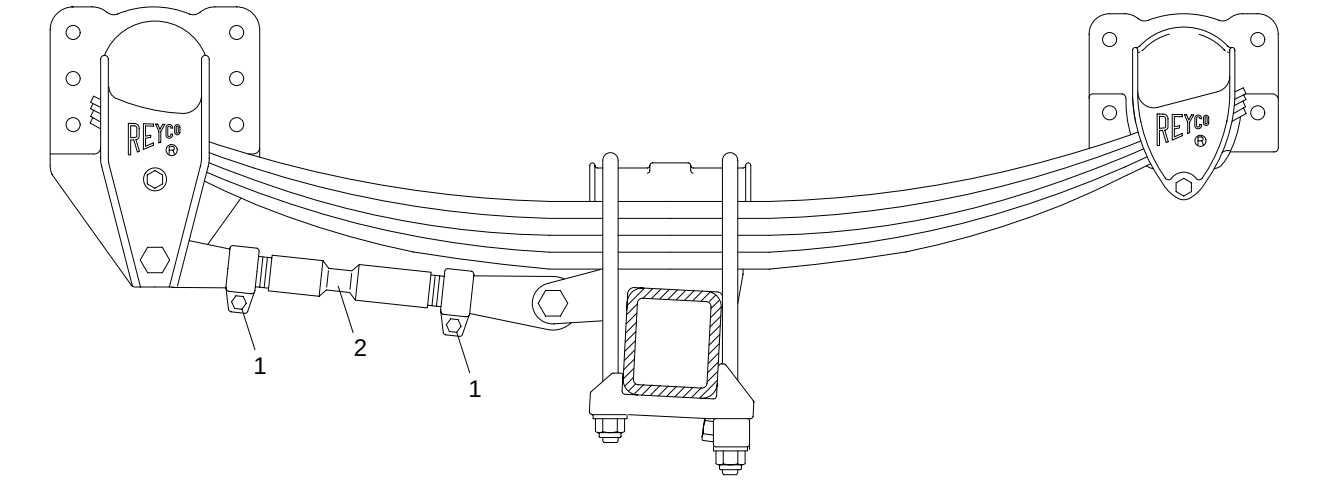

1. Torque Rod Clamp
2. Torque Rod

Fig. 9, Reyco 79KB Torque Rod Clamp Position

https://truckmanualshub.com/

3. Use a click-type torque wrench to check that spring hanger bolts are tightened 190 lbf·ft (258 N·m).
4. Use a click-type torque wrench to check that the 5/8-inch torque rod clamp nuts are tightened 125 to 150 lbf·ft (170 to 203 N·m).
5. Use a click-type torque wrench to check that the two end-nuts for each torque rod are tightened 400 to 450 lbf·ft (540 to 610 N·m).
6. Use a click-type torque wrench to check that spring retainer bolts are tightened 60 to 80 lbf·ft (81 to 109 N·m).

32–02 Suspension Lubricating

Sterling Spring Front Suspension

Wipe all dirt from the grease fittings at the forward spring pin and the spring shackle pins; then apply multipurpose chassis grease with a pressure gun until the old grease is forced out.

Sterling Spring Rear Suspension

Single Axle

Lubricate the spring pin by applying multipurpose chassis grease at the grease fitting. See **Fig. 10**. Lubricate with a grease gun until grease appears at the base of the fitting.

Tandem Axle

CAUTION

If the equalizer cap and tube assembly is equipped with a nonrelief grease fitting, excessive lubrication can damage the bushings.

Lubricate the equalizer cap-and-tube assembly bushings by applying multipurpose chassis grease at the pressure-relief grease fitting. See **Fig. 11**. Lubricate with a hand gun or pressure gun until grease is forced out from the base of the pressure-relief fitting.

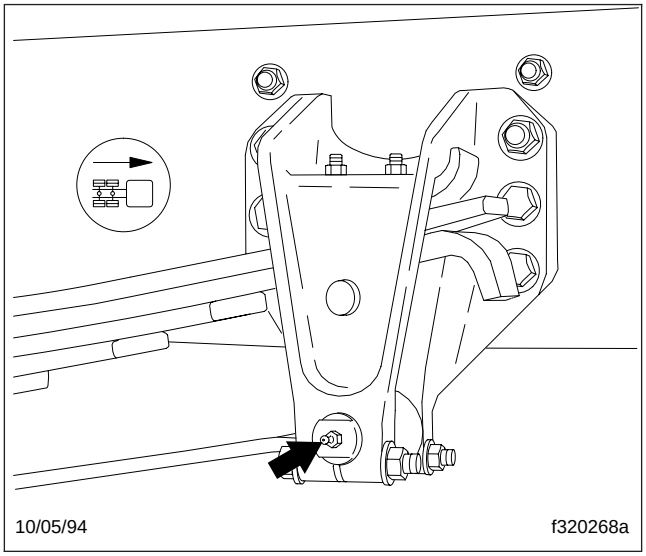

Fig. 10, Forward Spring Bracket Spring Pin Grease Fitting (vehicles built before September 15, 2002)

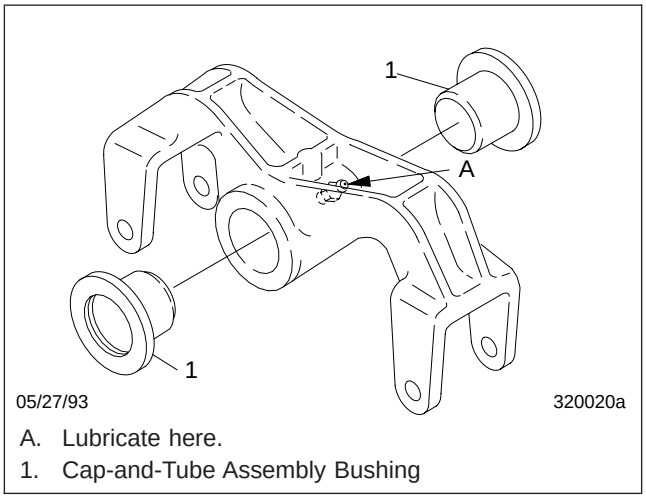

A. Lubricate here.
1. Cap-and-Tube Assembly Bushing

Fig. 11, Equalizer Assembly Lubrication

Hendrickson Equalizer-Beam End Bushings and Rubber Center Bushings

No lubrication is required for the equalizer-beam end bushings or equalizer-beam rubber center bushings.

https://truckmanualshub.com/

Hendrickson Spring-Eye Pins, RT and RTE Series

NOTE: See **Fig. 7** for this procedure.

Apply multipurpose chassis grease at the spring eye pin grease fitting (located on the inboard side of the spring eye pin) until clean grease appears at both ends of the spring eye pin.

Freightliner TufTrac

The TufTrac suspension is maintenance-free and designed so that lubrication is not required. There are no provisions for lubrication and attempting to lubricate the suspension could shorten component life.

32–03 U-Bolt Torque Checking

Check the U-bolt torque of both the front and rear axles (where applicable).

CAUTION

Failure to retorque the U-bolt nuts could result in spring breakage and abnormal tire wear.

1. Park the vehicle on a flat surface and apply the parking brakes. Chock the tires to prevent the vehicle from moving.
2. Check the U-bolt torque in a diagonal pattern. Set a click-type torque wrench to the highest torque value for the fastener being checked. See **Table 1** for U-bolt torque specifications. Turn the wrench in a clockwise motion (looking up) until the torque wrench clicks.
3. Remove the chocks.

U-Bolt Torque Values		
Description	**Size**	**Torque: lbf·ft (N·m)**
Spring Assembly U-Bolt High Nuts*	5/8–18	Stage 1: Hand Tighten Stage 2: 60 (81) Stage 3: 200 (271) Stage 4: 180 to 230 (245 to 313)
	3/4–16	Stage 1: Hand Tighten Stage 2: 60 (81) Stage 3: 200 (271) Stage 4: 270 to 330 (367 to 449)
	7/8–14	Stage 1: Hand Tighten Stage 2: 60 (81) Stage 3: 200 (271) Stage 4: 420 to 500 (571 to 680)
	1–14	Stage 1: Hand tighten Stage 2: 60 (81) Stage 3: 200 (271) Stage 4: 520 to 600 (707 to 816)

* Tighten in a diagonal pattern as shown in **Fig. 12**.

Table 1, U-Bolt Torque Values

https://truckmanualshub.com/

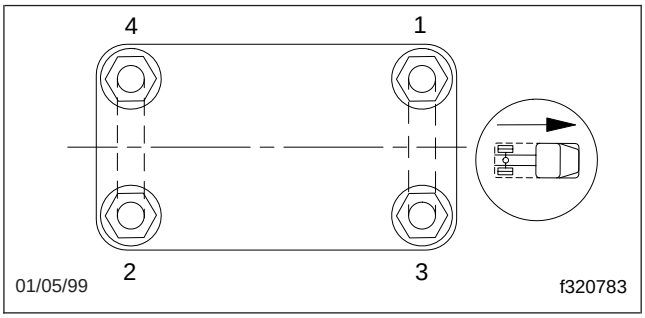

Fig. 12, Tightening Pattern for U-Bolt High Nuts

https://truckmanualshub.com/

Index, Alphabetical

Title of Maintenance Operation (MOP)	MOP Number
All-Axle Alignment Checking	33–04
All-Wheel-Drive Front Axle Oil Changing	33–06
All-Wheel-Drive Front Axle Oil Level Checking	33–05
Draw Key Nut Inspecting	33–07
Knuckle Pin Lubricating	33–01
Tie Rod End Inspecting	33–02
Tie Rod End Lubricating	33–03

https://truckmanualshub.com/

33–01 Knuckle Pin Lubricating

Standard Meritor Axles

Hold a pressure gun on each fitting until fresh grease appears. See **Fig. 1**. This will ensure that all the old contaminated grease has been forced out. It is not necessary to exceed 4000 psi (27 560 kPa). The best distribution of new lubricant and the best purging of old lubricant occurs when about 4000 psi (27 560 kPa) pressure is applied at the grease gun nozzle. Using a 40 to 1 booster, the air should be limited to 100 psi (689 kPa); using a 50 to 1 booster, the air should be limited to 80 psi (551 kPa). Higher or lower pressures are not recommended.

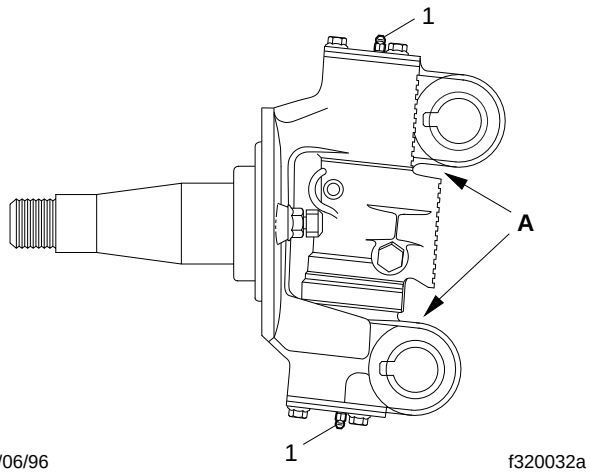

A. Pump lubricant into each grease fitting until fresh grease comes out here.
1. Grease Fitting

Fig. 1, Meritor Front Axle

When lubricating knuckle pin bushings for Initial Maintenance, raise the front axle until the front tires are off the ground. Wipe the lube fittings clean, and slowly feed multipurpose chassis grease (NLGI grade 1 or 2) into each bushing area while turning the wheels from extreme right to left and back again (lock to lock). This will eliminate small air pockets and improve grease distribution.

Lower the tires to the ground, and regrease both top and bottom bushings until new grease is seen at the seal on the bushing opposite the fittings. The grease seal will accept the grease pressure without damaging the seal, and is designed to have grease pumped out through it during lubrication. Even if grease leaks out around the top or bottom plate gasket, continue pumping until new grease is seen at the seal on the bushing opposite the grease fitting.

When lubricating knuckle pin bushings at M1 through M5, do not raise the front axle. Wipe the lube fittings clean, and apply multipurpose chassis grease until new grease is seen at the grease seal on the bushing opposite the fittings. The grease seal will accept the grease pressure without damaging the seal, and is designed to have grease pumped out through it during lubrication. Even if grease leaks out around the top or bottom plate gasket, continue pumping until new grease is seen at the seal on the bushing opposite the grease fitting.

Sealed and Easy Steer™ Axle Kingpins

NOTE: This procedure applies to the following axles:

- MFS-8-153B
- MFS-10-143A
- MFS-12-143A
- MFS-13-143A
- MFS-14-143A
- MFS-16-143A
- MFS-18-133A
- MFS-20-133A
- 975 Series Easy Steer sealed front axles

Refer to the identification tag on the front of the axle beam.

On sealed and Easy Steer™ front axle, the grease fittings are on the top and bottom kingpin caps of the knuckle.

1. Shut off the engine, apply the brakes, and chock the rear tires.
2. Make sure the tires touch the ground. **Do not**raise the vehicle.
3. Clean off all grease fittings prior to lubrication.

IMPORTANT: Meritor recognizes that industry trends are moving toward increased selection and usage of synthetic grease in vehicle maintenance. However, some seals are known to ex-

https://truckmanualshub.com/

pand when in contact with synthetic grease. Consult your local Meritor representative for synthetic grease application references **before** using any synthetic grease when performing axle service and maintenance.

4. Using a multipurpose grease, NLGI grade 1 or 2, lubricate the kingpins through the grease fittings on the top and bottom of the knuckle. See **Fig. 2**.

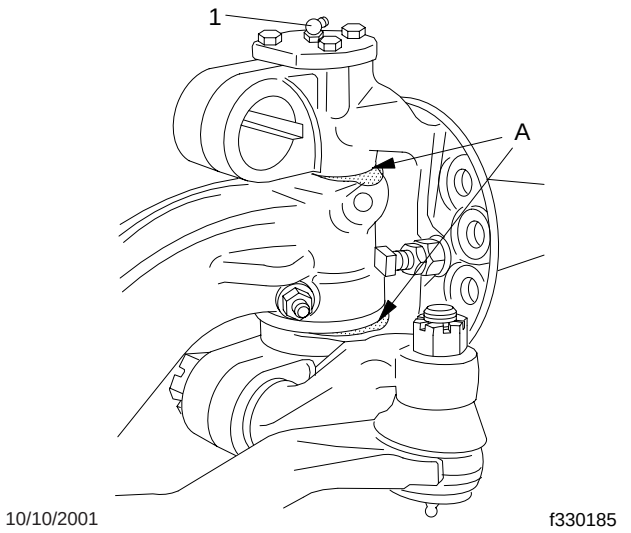

A. Apply lubricant until new lubricant comes from these areas.
1. Grease Fitting

Fig. 2, Sealed, Easy Steer Kingpin Lubrication

5. Apply lubricant until new lubricant comes from the thrust bearing seal and the upper shim pack.
6. Remove the chocks from the tires.

Easy Steer Plus™–Axles With Unitized Wheel Ends, King Pins

NOTE: This procedure applies to Easy Steer Plus™ MFS 10-12-143D sealed front axles. Refer to the identification tag on the front of the axle beam.

On Easy Steer Plus front axles, the grease fittings are on the top and bottom kingpin caps of the knuckle.

1. Shut off the engine, apply the brakes, and chock the rear tires.
2. Make sure the tires touch the ground. **Do not**raise the vehicle.
3. Clean off all grease fittings prior to lubrication.

IMPORTANT: Meritor recognizes that industry trends are moving toward increased selection and usage of synthetic grease in vehicle maintenance. However, some seals are known to expand when in contact with synthetic grease. Consult your local Meritor representative for synthetic grease application references **before** using any synthetic grease when performing axle service and maintenance.

4. Using a multipurpose grease, NLGI grade 1 or 2, lubricate the kingpins through the grease fittings on the top and bottom of the knuckle. See **Fig. 3**.

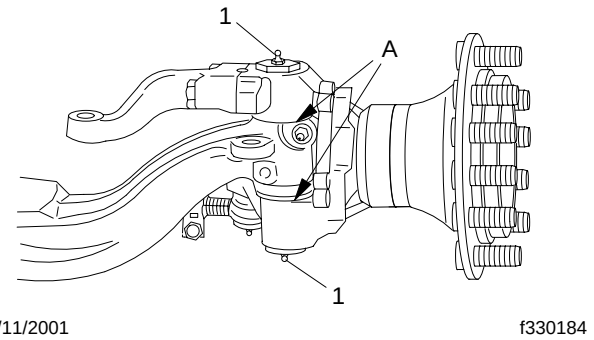

A. Apply lubricant until new lubricant comes from these areas.
1. Grease Fitting

Fig. 3, Sealed, Easy Steer Plus Kingpin Lubrication

5. Force lubricant into the upper and lower kingpin grease fitting caps until new lubricant flows from between the upper axle beam end and the knuckle and between the lower axle beam end and the knuckle. See **Fig. 3**.
6. Remove the chocks from the tires.

33–02 Tie Rod End Inspecting

IMPORTANT: If the tie rod end boot is torn or missing, replace the entire tie rod end. Do not replace the boot only.

https://truckmanualshub.com/

1. Shut off the engine, apply the brakes, and chock the rear tires.
2. Check the tie rod boot for cracks, tears, or other damage. If the tie rod boot is damaged, replace the entire tie rod end.
3. Grasp by hand (or use a pipe wrench with jaw protectors to avoid gouging the cross tube) and slightly rotate the cross tube toward the front of the vehicle and then slightly toward the rear. Then center the cross tube between the stop positions. If the cross tube does not rotate in either direction, replace both tie rod ends.
4. Position yourself directly below the ball stud socket. Using both hands, grab the end as close to the socket as possible, no more than 6 inches (15.2 cm) from the end. Firmly apply about 100 pounds of hand pressure in an up and down motion several times. When moving the assembly, check for any movement at both tie rod ends. See **Fig. 4**.

   If any movement is detected at one tie rod end, replace **both** tie rod ends. Always replace tie rod ends in pairs, even if only one tie rod end is damaged.

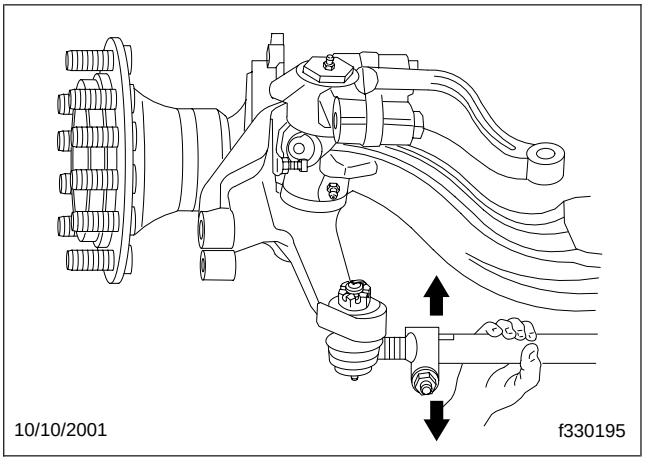

Fig. 4, Check Movement of Tie Rod End

CAUTION

Do not attempt to straighten a bent cross tube. Doing so could result in damage to the axle. Be sure to replace the cross tube with an original equipment cross tube with the same length, diameter, and thread size as the existing cross tube.

5. Check the cross tube for cracks or other damage. If the cross tube is bent or damaged, replace the cross tube.
6. Check the clamps for damage. If a clamp is damaged, replace the clamp. Replace the entire cross tube assembly if either clamp is welded to the cross tube.
7. Check for proper installation of the tie rod end clamp to the cross tube. Make sure that the tie rod ends are threaded in the cross tube past the clamps and the slots at the cross tube ends. See **Fig. 5**.

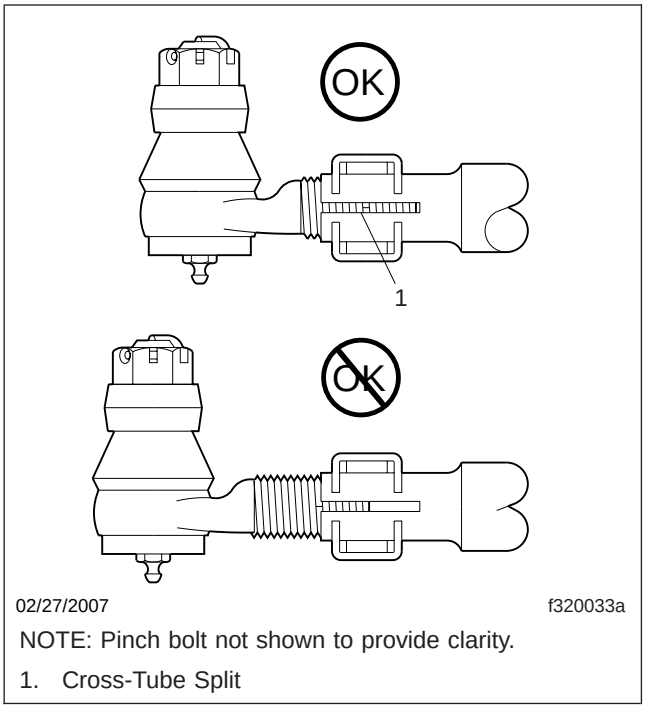

NOTE: Pinch bolt not shown to provide clarity.

1. Cross-Tube Split

Fig. 5, Tie-Rod End Adjustment

8. Check the zerk fittings for damage. If a zerk fitting is damaged, replace it.

   Some tie rod ends have no zerk fittings because they are not to be greased. Do not install a zerk fitting on this type of tie rod end.
9. Check that the cotter pin is in place. If it is not, tighten the tie rod end nut to one of the following specs depending on the size of the stud.
   - 7/8–14, 160 to 300 lbf·ft (217 to 406 N·m)
   - 1–14, 250 to 450 lbf·ft (339 to 610 N·m)

https://truckmanualshub.com/

- 1-1/8–12, 350 to 650 lbf·ft (475 to 881 N·m)
- 1-1/4–12, 500 to 675 lbf·ft (678 to 915 N·m)

10. Check the steering arm bolts for a minimum torque of 300 lbf·ft (406 N·m). If the steering arm bolt torque has fallen below this specification, remove the bolt, clean all the threads, and apply new Loctite® 680. Tighten the bolt 300 to 450 lbf·ft (406 to 610 N·m).
11. Remove the chocks from the tires.

33–03 Tie Rod End Lubricating

This procedure applies to all tie rod ends on Meritor nondrive steering axles.

1. Park the vehicle with the wheels in the straight-ahead position. Turn off the engine, apply the brakes and chock the rear tires.
2. Wipe the zerk fitting and the seal or boot clean.

NOTE: Synthetic lubricants are not approved for tie rod end lubrication.

3. Using a grease gun, apply a multipurpose grease, NLGI grade 1 or 2, to the zerk fitting until all the old grease is purged from the boot. Dis-colored old grease should come out of the purge holes near the boot crimp or bellows area.

   Apply grease until all the old grease is purged from the boot.

NOTE: If using an air pressure grease gun, do not exceed 150 psi (1035 kPa).

4. If the tie rod end is designed for lube service and it does not accept grease, perform the following substeps.
   - 4.1 Remove the zerk fitting.
   - 4.2 Inspect the threaded zerk fitting hole in the tie rod end and remove any obstructions.
   - 4.3 Install a new zerk fitting.
   - 4.4 Apply lubrication to the new zerk fitting.
5. Remove the chocks from the tires.

33–04 All-Axle Alignment Checking

Drive Axle Alignment Checking

Check the axle alignment, parallelism, and thrust angle measurements for the rear drive axles. Use the applicable procedure and specifications in **Group 35** of the *Acterra® Workshop Manual*.

Toe-In Checking, Front Axle

See **Group 33** of the *Acterra® Workshop Manual* for wheel alignment procedures.

33–05 All-Wheel-Drive Front Axle Oil Level Checking

1. On all front-wheel-drive vehicles, check the oil level in the differential. See **Fig. 6**.

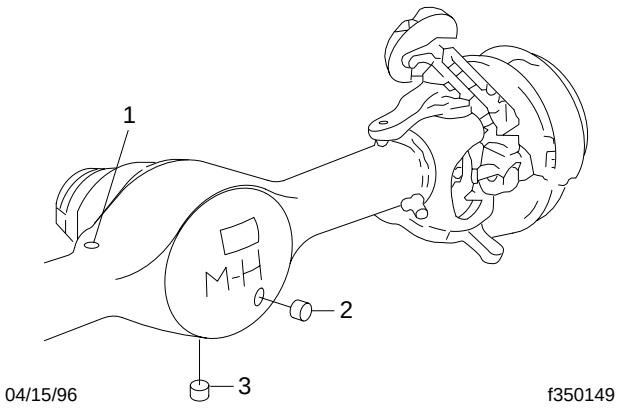

1. Vent Valve
2. Oil Level Check-and-Fill Plug
3. Oil Drain Plug

Fig. 6, All-Wheel-Drive Front Axle Differential

- 1.1 Remove the oil level check-and-fill plug, and make sure the oil level is even with the bottom of the bore.
- 1.2 If needed, add oil until the differential is filled to the bottom of the bore.
- 1.3 Install the oil level check-and-fill plug, and tighten it firmly.

https://truckmanualshub.com/

2. On front-wheel-drive vehicles equipped with MT-14, MT-17, and MT-22 axles, check the oil level in the hubs.

   2.1 The oil drain bore must be at the bottom in order to check the oil level. See **Fig. 7**.

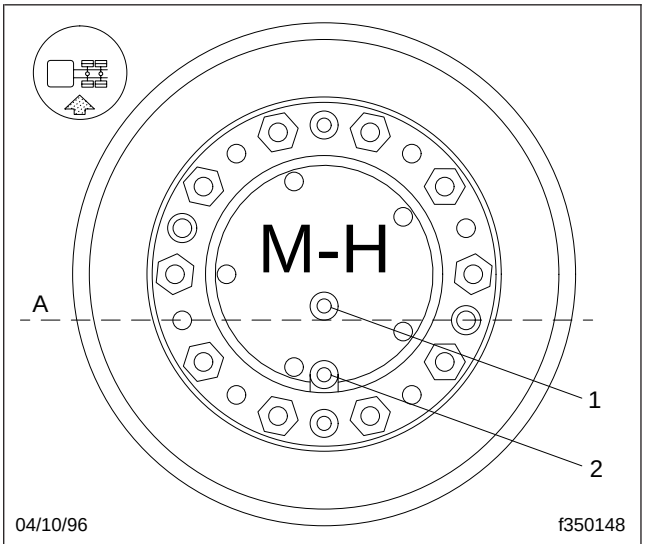

A. Correct Oil Level
1. Oil Level Checking Bore
2. Oil Drain Bore

Fig. 7, All-Wheel-Drive Front Axle Hub, MT-17 Axles

   2.2 Remove the plug from the oil level checking bore, and make sure the oil is level with the bottom edge of the bore.

   2.3 If needed, add oil until each axle hub is filled to the bottom of the bore.

   2.4 Install the plug in each oil level checking bore, and tighten it firmly.

33–06 All-Wheel-Drive Front Axle Oil Changing

1. Drive the vehicle until the axle oil is warmed, then park it, and chock the rear tires.
2. Jack up the front axle until the wheels are off the ground, then secure the axle on jack stands.
3. *On vehicles equipped with an MT-8, MT-10, or MT-11 front axle,* drain the oil from the differential.

   On vehicles equipped with an MT-14, MT-17, or MT-22 front axle, drain the oil from the differential and the hubs.

   3.1 Remove the oil-drain plug from the differential, and allow the oil to drain. See **Fig. 6**.

   3.2 If applicable, rotate each wheel until the oil drain bore is at the bottom, then remove the drain bore plugs and allow the oil to drain into a suitable container. See **Fig. 7**. If needed use a bent piece of sheet metal to direct the draining oil so it doesn't splash on the tires.

4. Fill the differential and hubs (if applicable) with new oil.

   4.1 Install the drain bore plugs in each hub and the differential, then tighten the plugs firmly.

   4.2 Remove the plug from the oil level check bore in each hub and from the fill-and-check bore in the differential.

   4.3 Fill the hubs and differential until the oil level within each is even with the bottom of the fill-and-check bore.

   4.4 Install the check bore plug in each hub and install the fill-and-check plug in the differential. Tighten all the plugs firmly.

5. Lift the front axle off the jack stands, remove the stands and lower the vehicle to the ground. Then remove the chocks from the rear tires.

33–07 Draw Key Nut Inspecting

Axles With Unitized Wheel Ends

Check the torque of the nut that holds the draw key on the side of the knuckle. The torque should be 30 to 45 lbf·ft (41 to 61 N·m). See **Fig. 8**.

https://truckmanualshub.com/

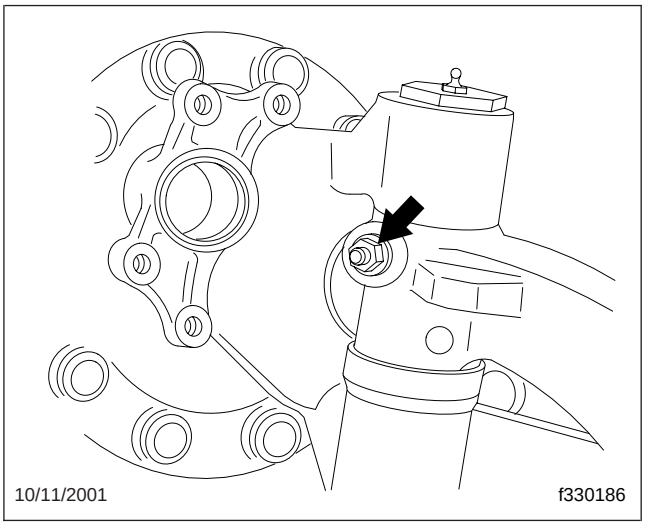

Fig. 8, Draw Key Nut

https://truckmanualshub.com/

Index, Alphabetical

Title of Maintenance Operation (MOP)	MOP Number
Axle Breather Checking	35–02
Axle Lubricant Changing and Magnetic Plug Cleaning	35–03
Axle Lubricant Level Checking	35–01
Two-Speed-Axle Shift Unit Oil Changing	35–05
Two-Speed-Axle Shift Unit Oil Level Checking	35–04

https://truckmanualshub.com/

35–01 Axle Lubricant Level Checking

CAUTION

Failure to keep the rear axle filled to the proper level with the recommended lubricant can result in rear axle damage.

1. Clean the oil fill hole plug, located in the carrier or the side of the axle housing, and the area surrounding it (see **Fig. 1**). Remove the plug.

NOTE: Some Meritor axles have a small tapped and plugged hole located near and below the housing oil fill hole. This smaller hole is for the lubricant temperature sensor only, and must not be used as a fill or level hole.

2. With the vehicle on level ground, lubricant must be level with the bottom of the oil fill hole.

   If low, add lubricant. See **Table 1** for approved axle lubricants and see **Table 2** or **Table 3** for axle capacities.

Meritor Drive Axle Recommended Lubricant			
Recommended Lubricant Type	**Ambient Temperature**	**Lubricant SAE Viscosity Grade**	**Meritor Specification**
Hypoid Gear Oil API Service Classification GL–5	+10°F (–12.2°C) and up*	85W–140	0–76–A
	–15°F (–26.1°C) and up*	80W–140	0–76–B
	–15°F (–26.1°C) and up*	80W–90	0–76–D
	–40°F (–40°C) and up*	75W–90	0–76–E
	–40°F (–40°C) to +35°F (+2°C)	75W	0–76–J
	–40°F (–40°C) and up*	75W–140	0–76–L
Synthetic Gear Oil	–40°F (–40°C) and up*	75W–90	0–76–N
–40°F (–40°C) and up*	75W–140	0–76–M	

* There is no upper limit on these ambient temperatures, but axle sump temperature must never exceed 250°F (121°C).

Table 1, Meritor Drive Axle Recommended Lubricant

Meritor Drive Axle Lubricant Capacities, Single Axles					
Axle Type	**Axle Model**	**Capacity*: pints (liters)**	**Axle Type**	**Axle Model**	**Capacity*: pints (liters)**
Single†	RS–13–120	16 (7.6)	Single†	RS–19–220	31 (14.7)
	RS–15–120	16 (7.6)		RS–21–145	32 (15.1)
	RS–15–210	16 (7.6)		RS–21–160	39.5 (18.7)
	RS–17–140	31 (14.7)		RS–21–230	39 (18.5)
	RS–17–145	33.6 (15.9)		RS–23–160	42 (19.9)
	RS–17–220	31 (14.7)		RS–23–240	45 (21.3)
	RS–19–145	34.4 (16.3)			

* Quantities listed are approximate and include 1 pint (0.5 liter) for each wheel end and with the drive pinion at 3 degrees.

† Single drive axles equipped with traction equalizers may require a "friction modifier" to correct a slip-stick condition, as described in the vehicle driver's manual. Meritor's experience shows that the following additives perform adequately: Add Elco No. 2 Friction Modifier (1 ounce [30 ml] of additive for each 1 pint [0.5 liter] of lube capacity) or Lubrizol No. 797 or 762 (1 ounce [30 mL] of additive for each 1 pint [0.5 liter] of lube capacity).

Table 2, Meritor Drive Axle Lubricant Capacities, Single Axles

https://truckmanualshub.com/

Meritor Drive Axle Lubricant Capacities, Tandem Axles	
Axle Model	**Capacity*: pints (liters)**
RT–34–144	Forward 29.8 (14.1) Rear 34 (16.1)
RT–40–145	Forward 30.4 (14.4) Rear 34.4 (16.3)

* Quantities listed are approximate and include 1 pint (0.5 liter) for each wheel end and with the drive pinion at 3 degrees.

Table 3, Meritor Drive Axle Lubricant Capacities, Tandem Axles

3. Install the fill hole plug, and tighten it 35 lbf·ft (47 N·m).

35–02 Axle Breather Checking

The axle housing breather (see **Fig. 1**) must remain clean. Whenever the axle lubricant level is checked, check that the axle breather is open. Check more often under poor operating conditions. If the breather is plugged, clean or replace it as needed.

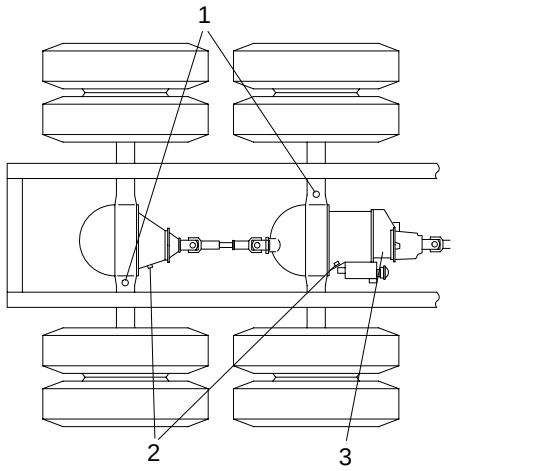

1. Axle Housing Breathers
2. Carrier Oil Fill Plugs
3. Interaxle Differential

Fig. 1, Fill Hole Plug and Axle Housing Breather Locations

35–03 Axle Lubricant Changing and Magnetic Plug Cleaning

A regular schedule for changing the axle lubricant in a particular vehicle and operation can be accurately determined by analyzing oil samples taken from the axle at specified intervals or mileages. Lubricant suppliers frequently make their laboratory facilities available for determining the useful life of their product under actual service conditions. The final schedule that is recommended may, for economic reasons, be correlated with lubricant changes that are governed by climatic conditions and magnetic plug maintenance. Change lubricant type and viscosity as climatic temperatures demand, regardless of vehicle mileage or established change schedule.

The normal operating temperature of compounded lubricants during the summer season is about 160° to 220°F (71° to 104°C). The chemicals and additives that give these lubricants increased load-carrying capacity, oxidize faster at temperatures above 220°F (104°C), contributing to more rapid lubricant deterioration. For this reason, lubricants of this type, that operate continuously at high temperatures, must be changed more frequently.

CAUTION

Failure to change the axle lubricant at more frequent intervals, when adverse operating conditions require, could result in axle damage.

Axle Draining and Flushing

1. Remove the plug at the bottom of the housing and drain the lubricant while the unit is warm. Allow enough time for all the old lubricant to drain completely.
2. Flush the unit with clean flushing oil, then drain it completely.

IMPORTANT: Do not flush axles with solvent, such as kerosene.

3. Clean the drain plugs. For magnetic drain plugs, a piece of key stock or any other convenient steel slug may be used to short the two magnetic poles and divert the magnetic field.

https://truckmanualshub.com/

NOTE: Meritor recommends using magnetic plugs with elements having a minimum pickup capacity of 2 pounds (1 kg) of low-carbon steel, in plate or bar form. Magnets will rapidly lose effectiveness as collected material bridges the gap between the two poles. Clean or change the plugs before this occurs. It may be necessary to clean or change the plugs one or more times between lubrication change intervals.

4. After cleaning the drain plugs, install and tighten them 35 lbf·ft (47 N·m).

Axle Filling

1. With the vehicle on a level surface, fill the axle housings to the bottom of the oil fill hole (in the carrier or housing) with lubricant. See **Table 1** for approved axle lubricants and see **Table 2** or **Table 3** for axle capacities.

NOTE: Meritor axles have a small tapped and plugged hole located near and below the housing oil fill hole. This smaller hole is for the lubricant temperature sensor only, and must not be used as a fill or level hole.

2. Install the fill hole plug, and tighten it 35 lbf·ft (47 N·m).
3. After filling the carrier and housing assembly with lubricant, drive the vehicle, unloaded, for 1 or 2 miles (2 or 3 kilometers) at speeds not to exceed 25 mph (40 km/h), to thoroughly circulate the lubricant throughout the assembly.

35–04 Two-Speed-Axle Shift Unit Oil Level Checking

CAUTION

Failure to keep lubricant at the specified level could cause damage to the axle shift unit.

1. Clean the oil fill hole plug in the shift unit housing cover, and the area surrounding it. See **Fig. 2.** Remove the fill hole plug.
2. The lubricant level should be maintained at the bottom of the fill hole. If low, add the specified lubricant.

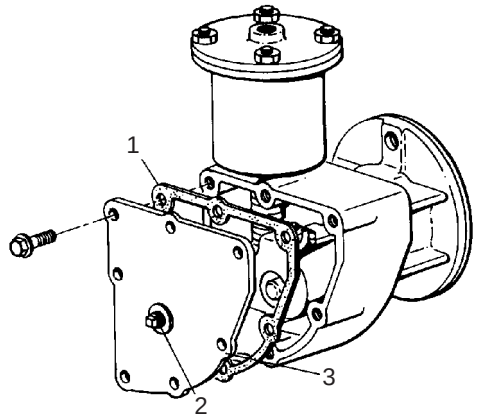

08/06/93 f350021a

1. Housing Cover Gasket
2. Oil Fill Hole Plug
3. Shift Unit Housing Cover

Fig. 2, Two-Speed-Axle Shift Unit

CAUTION

Before adding additional lubricant, make sure of the type currently in the shift unit. To prevent component damage, do not mix engine oil with automatic transmission fluid.

IMPORTANT: When the vehicle operating temperatures are above 0°F (–18°C), use SAE 10 heavy-duty engine oil, API service classification SD (sulfated ash content must not exceed 1.85%). When the vehicle operating temperatures are below 0°F (–18°C), use one part of kerosene to three parts of SAE 10 heavy-duty engine oil, API service classification SD (sulfated ash content must not exceed 1.85%). This cold-weather mixture can be safely used up to 32°F (0°C).

Commercially available automatic transmission fluid may be used in place of SAE 10 engine oil. Automatic transmission fluid can be used for all temperatures. Do not mix kerosene with automatic transmission fluid.

3. Apply a small amount of Loctite® 242, or equivalent sealant, to the threads of the fill hole plug. Install the fill hole plug finger-tight; then, using a wrench, tighten the plug 1-1/2 turns more.

https://truckmanualshub.com/

35–05 Two-Speed-Axle Shift Unit Oil Changing

1. Remove the shift unit housing cover (see **Fig. 2**), and drain the old lubricant. Discard the housing cover gasket, and the old lubricant.
2. Thoroughly wash the axle shift parts and housing cover, and allow them to air dry.
3. Install the housing cover and a new housing cover gasket. Tighten the housing cover capscrews 90 to 110 lbf·in (1020 to 1240 N·cm), then remove the oil fill hole plug from the cover.
4. Fill the shift unit housing through the oil fill hole until the specified lubricant is level with the bottom of the opening.

IMPORTANT: When the vehicle operating temperatures are above 0°F (–18°C), use SAE 10 heavy-duty engine oil, API service classification SD (sulfated ash content must not exceed 1.85%). When the vehicle operating temperatures are below 0°F (–18°C), use one part of kerosene to three parts of SAE 10 heavy-duty engine oil, API service classification SD (sulfated ash content must not exceed 1.85%). This cold-weather mixture can be safely used up to 32°F (0°C).

Commercially available automatic transmission fluid may be used in place of SAE 10 engine oil. Automatic transmission fluid can be used for all temperatures. Do not mix kerosene with automatic transmission fluid.

5. Apply a small amount of Loctite 242, or an equivalent sealant, to the threads of the oil fill hole plug. Install the oil fill hole plug finger-tight; then, using a wrench, tighten the plug 1-1/2 turns more.

https://truckmanualshub.com/

Index, Alphabetical

Title of Maintenance Operation (MOP) **MOP Number**

Wheel Nut Checking. 40–01

https://truckmanualshub.com/

40–01 Wheel Nut Checking

IMPORTANT: In addition to the maintenance interval in this manual, check the wheel nut torque the first 50 to 100 miles (80 to 160 km) of operation after a wheel has been removed and installed.

When checking wheel nuts on a dual disc assembly, remove one outer nut at a time, tighten the inner nut, then reinstall the outer nut. Repeat this procedure for all of the inner wheel nuts in the sequence shown in **Fig. 1**, then tighten all of the outer wheel nuts in the same sequence.

CAUTION

Too little wheel nut torque can cause wheel shimmy, resulting in wheel damage, stud breakage, and extreme tire tread wear. Too much wheel nut torque can break studs, damage threads, and crack discs in the stud hole area.

See **Table 1**, **Table 2**, or **Table 3** for wheel nut torque specifications.

Fastener Torque for 10-Hole Disc Wheel With Inner and Outer Locknuts			
Description	**Nut Size**	**Wheel Manufacturer**	**Torque (dry threads): lbf·ft (N·m)**
Front Wheel Nut	3/4–16, 1-1/8–16	Accuride	450–500 (610–680)
Rear Wheel Inner Nut	3/4–16	Accuride	450–500 (610–680)
Rear Wheel Outer Nut	1-1/8–16	Accuride	450–500 (610–680)
Wheel Stud Retainer Nut	3/4–16	Accuride	175–200 (235–270)

Table 1, Fastener Torque for 10-Hole Disc Wheel With Inner and Outer Locknuts

Fastener Torque for 8-Hole Disc Wheel With Cone Locknuts		
Description	**Nut Size**	**Torque (lubricated threads): lbf·ft (N·m)**
Front and Rear Wheel Nuts	M20	280–310 (380–420)

Table 2, Fastener Torque for 8-Hole Disc Wheel With Cone Locknuts

Spoke-Type Wheel Fastener Torque			
Description	**Size**	**Wheel Manufacturer**	**Torque (dry threads): lbf·ft (N·m)**
Front Wheel Nut, 5- and 6-Spoke	3/4–10	Gunite	200–225 (270–305)*
Rear Wheel Nut, 5- and 6-Spoke With Channel Spacer	3/4–10	Gunite	200–225 (270–305)
Rear Wheel Nut, 5- and 6-Spoke With Corrugated Channel Spacer	3/4–10	Gunite	240–260 (325–350)

* On front axles with over 12,000 lbs (5448 kg) capacity, tighten the wheel nuts 240 to 265 lbf·ft (325 to 359 N·m). Gunite part number W–854 nut with a phosphate and oil coating must be used.

Table 3, Spoke-Type Wheel Fastener Torque

https://truckmanualshub.com/

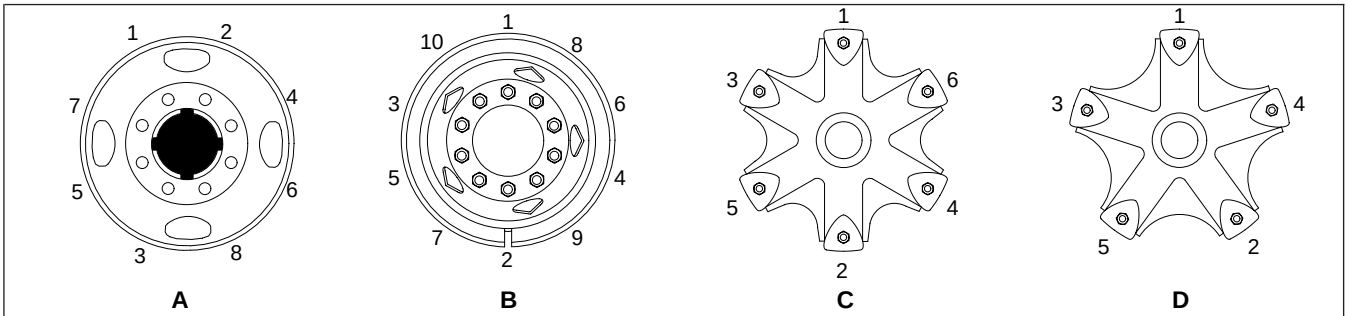

05/27/93 f400057

A. 8-Stud Disc Wheel
B. 10-Stud Disc Wheel
C. 6-Spoke Wheel
D. 5-Spoke Wheel

Fig. 1, Wheel Nut and Rim Nut Tightening Sequence

https://truckmanualshub.com/

Index, Alphabetical

Title of Maintenance Operation (MOP)	MOP Number
Driveline Inspecting	41–01
Driveline Lubricating	41–02

https://truckmanualshub.com/

41–01 Driveline Inspecting

Inspecting

1. Check that the yoke-strap capscrews (see **Fig. 1**, Ref. 4) are tightened as follows:
   - Dana Spicer 1590 and 1610: 50 to 60 lbf·ft (68 to 81 N·m)
   - Dana Spicer 1710: 125 to 135 lbf·ft (170 to 183 N·m)

CAUTION

Do not overtighten the yoke-strap capscrews, due to the extreme load occurring at high-speed rotation. A loose or broken capscrew at any point in the driveline weakens the driveline connection, which could eventually result in serious vehicle damage.

2. Check each of the output and input end yokes (see **Fig. 1**, Refs. 2 and 11) for cracks and looseness. Replace cracked yokes. If any end yoke can be moved in or out on its shaft, or can be rocked on its shaft, disconnect the driveshaft and U-joint from the end yoke. Check the drive component's shaft seal for leakage or other visible damage that may have been caused by the loose yoke. Replace the seal if needed. Tighten the end-yoke nut to the value in **Table 1**. If the end yoke is still loose after tightening the yoke nut, install a new yoke and yoke nut.

NOTE: If the end-yoke locknut was removed for any reason, install a new one.

3. Check the U-joint assemblies for wear by attempting to move the driveshaft up and down, and from side to side. If movement of the U-joint trunnion in the bearings is greater than 0.006 inch (0.15 mm), replace the U-joint assembly.
4. Check the midship bearing and bracket for looseness and deterioration by attempting to move the driveshaft up and down, and from side to side. If the bearing is loose on its shaft, or rattles, replace it. If the bearing bracket is loose on the frame, or the bearing mount is loose on the bracket, tighten the mounting bolt nuts 91 lbf·ft (123 N·m). Replace the midship bearing assembly if the rubber cushion is worn or oil-soaked.

End-Yoke Nut Torque Specifications		
Description	**Thread Size**	**Torque: lbf·ft (N·m)**
Transmissions		
Allison AT-545	1/2–20*	100–120 (140–160)
Allison MD Series	2–16	600–800 (815–1085)
Single Axle Input Shaft		
Meritor RS–13–120, RS–15–120 and –210, RS–17–140 and –20, RS–19–145 and –220, and RS–21–145 and –230	M32 x 1.5	740–920 (1000–1250)
Meritor RS–23–160	M45 x 1.5	1000–1230 (1355–1670)
Meritor RS–23–240	M39 x 1.5	920–1130 (1250–1530)
Tandem Axle Input and Output Shafts		
Meritor RD– and RR–17–145, (of RT–34–145), and RD– and RR–20–145 (of RT–40–145)	M39 x 1.5	920–1130 (1250–1530)
Coupling Shaft (Midship Bearings)		
Dana Spicer 1590, 1610, and 1710	1-1/4–18	475–525 (644–712)

* The Allison AT-545 transmission output shaft end-yoke is retained by a 1/2-20 x 1-1/2-inch bolt and a 1-1/16-inch washer. Both the bolt and the washer must be replaced each time they are removed.

Table 1, End-Yoke Nut Torque Specifications

5. Check the slip-joints for spline wear by trying to bend the sleeve-yoke and splined shaft back and forth (see **Fig. 2**). If looseness is greater than 0.007 inch (0.18 mm), replace both the sleeve-yoke and the splined shaft.
6. Check the driveshaft tubes for dents, bends, twists, or other damage. If any tube appears to be damaged, remove the driveshaft and check the runout on the tube. If the tube is not straight (and cannot be straightened) within 0.015 inch (0.38 mm) on the slip-joint seal surface of the splined shaft, 0.020 inch (0.51 mm) on the tube 3 inches (76 mm) from the front and rear welds, and 0.025 inch (0.635 mm) at the center of the tube, replace the tube. See **Fig. 3**.

https://truckmanualshub.com/

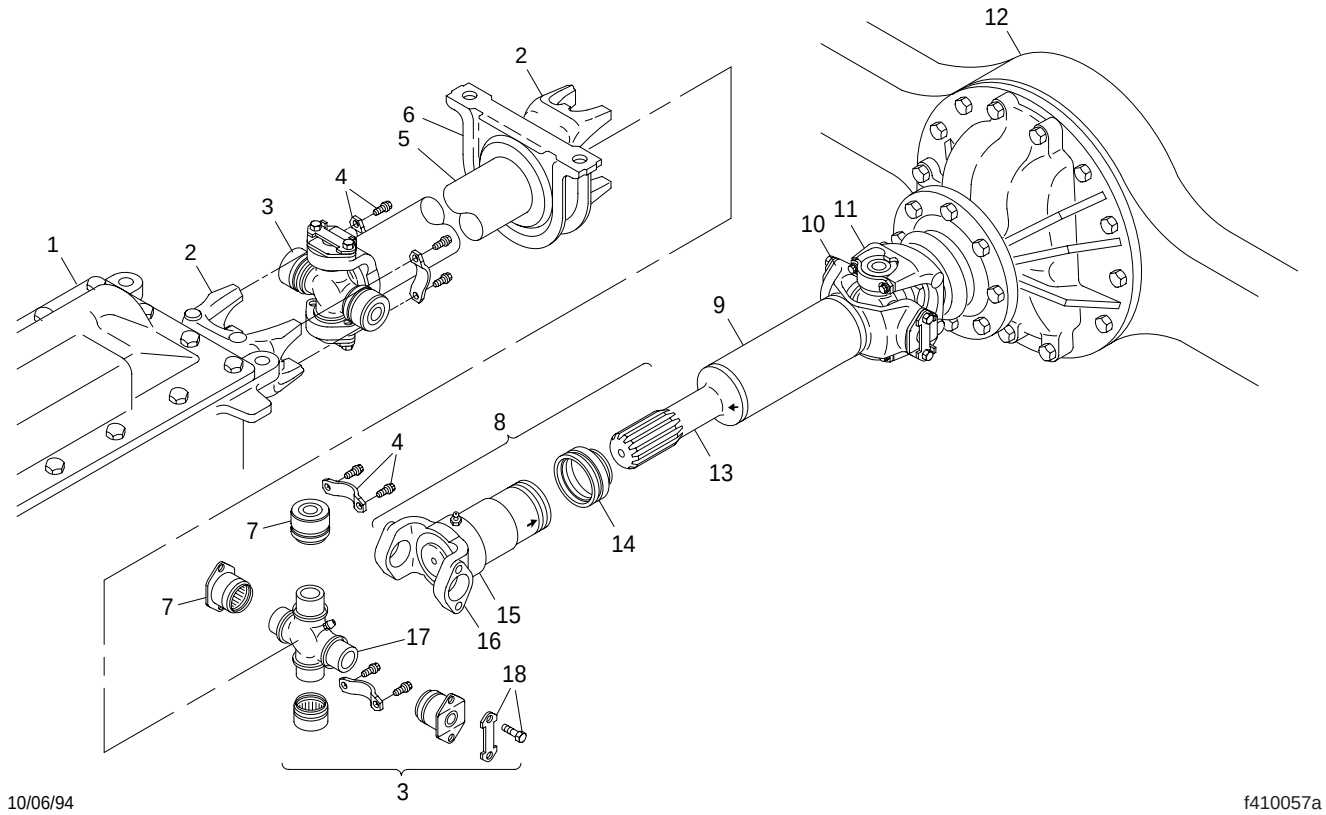

NOTE: Not all fasteners are shown.

1. Transmission
2. Half-Round End Yoke
3. U-Joint Assembly
4. Yoke Strap and Capscrew
5. Coupling Shaft
6. Midship Bearing and Mount
7. Bearing Cup
8. Slip-Joint Assembly
9. Driveshaft Tube
10. Driveshaft Yoke
11. Input Shaft Half-Round End Yoke
12. Rear Axle
13. Splined Shaft
14. Dust Seal
15. Sleeve Yoke
16. Full-Round-Yoke Lug
17. U-Joint Cross
18. Lockplate and Capscrew

Fig. 1, Driveline Assembly With Midship Bearing for Single-Axle Installation

If the driveshaft tube requires straightening or replacement, balance the repaired driveshaft before installing it. See **Group 41** of the *Acterra® Workshop Manual*.

7. Check the driveshaft for missing balance weights, and for debris build-up. Remove any build-up. If any balance weights are missing, remove the driveshaft and have it balanced; see **Group 41** of the *Acterra® Workshop Manual*.
8. For driveshafts with slip-joints, check that the yoke plug is not loose or missing. See **Fig. 4**, Ref. 2. Replace the yoke plug if needed. If the yoke plug is missing, the splined shaft may be hitting the yoke plug and knocking it out; check the driveshaft for proper length.

41–02 Driveline Lubricating

U-Joint Lubricating

1. Wipe all old grease and dirt from each U-joint grease fitting. See **Fig. 4**, Ref. 8.
2. Use a hand-type grease gun, or a high-pressure gun with a low-pressure adapter, to lubricate the U-joints.

https://truckmanualshub.com/

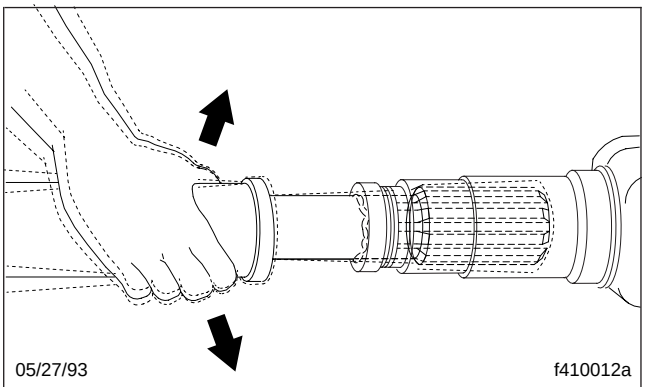

Attempt to bend the sleeve yoke and splined shaft back and forth.

Fig. 2, Slip-Joint Spline Wear Checking

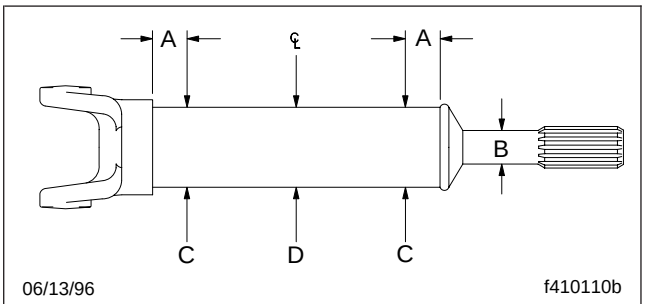

A. Measurement: 3" (76 mm)
B. Measurement: 0.015" (0.38 mm)
C. Measurement: 0.020" (0.51 mm)
D. Measurement: 0.025" (0.635 mm)

Fig. 3, Driveshaft Runout Specifications

NOTE: If a low-pressure adapter is not used with the high-pressure gun, the U-joints may not receive enough lubricant.

3. Using lithium 12-hydroxy stearate grease (NLGI grade 1 or 2, with EP additives), lubricate until new grease can be seen at all four U-joint seals.

IMPORTANT: Fresh lubricant must be seen escaping from *all four* bearing cup seals of each U-joint.

On full-round yokes, if most of the grease being added to a U-joint can be seen escaping from just one of the U-joint seals, bend the tabs of the lockstrap away from the heads of the bearing cup capscrews, then check the torque on the bearing cup capscrews at that seal. Tighten the bearing cup capscrews as follows:

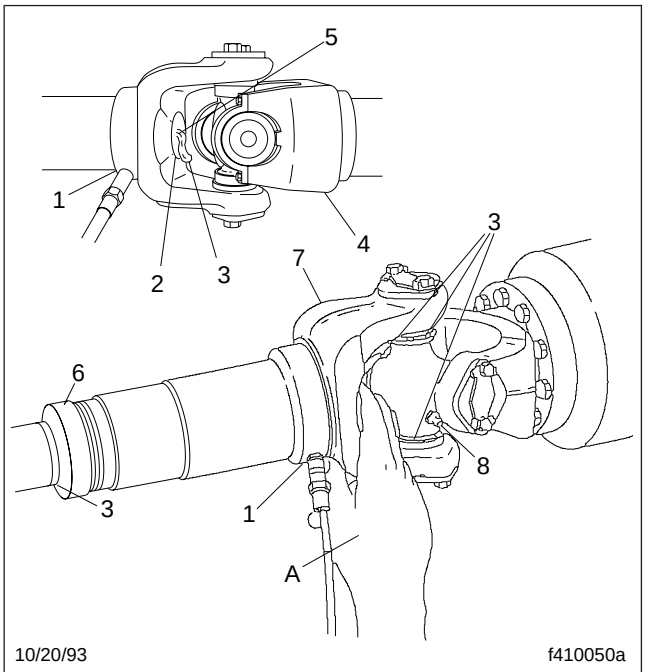

A. After grease appears, cover the pressure-relief hole while continuing to lubricate.

1. Slip-Joint Grease Fitting (with grease gun attached)
2. Yoke Plug
3. Grease
4. Half-Round Yoke
5. Yoke Plug Pressure-Relief Hole
6. Slip-Joint Seal
7. Full-Round Yoke
8. U-Joint Grease Fitting

Fig. 4, Slip-Joint and U-Joint Lubricating

- 5/16–24 capscrews: 24 lbf·ft (32 N·m)
- 3/8–24 capscrews: 37 lbf·ft (50 N·m)

Bend the lockstrap tabs up, against a flat side of each capscrew. If the capscrews were already tight, or all of the U-joint seals still do not purge, remove the bearing cup at that seal, and examine the seal for damage. If the seal is damaged, replace the complete U-joint assembly.

If grease does not appear at one of the seals, use a screwdriver to pry the U-joint trunnion away from the non-purging seal, or tap the driveshaft or yoke with a plastic or rawhide mallet (on the side opposite the dry seal), while continuing to apply gun pressure. If grease still does not appear, bend the tabs of the lockstrap away from the heads of the bearing cup cap-

https://truckmanualshub.com/

screws, then loosen the bearing cup capscrews (at the bearing with the dry seal) to relieve seal tension. Lubricate the U-joint until the old grease is purged, then tighten the capscrews to the above specifications, and bend the tabs of the lockstrap against a flat side of each capscrew. If the bearing will not take grease, replace the U-joint assembly; see **Group 41** of the *Acterra® Workshop Manual*.

4. Check the old grease. If it appears rusty, gritty, or burned, replace the U-joint assembly. See **Group 41** of the *Acterra® Workshop Manual*.
5. Wipe any excess grease from the seals and grease fittings.

Slip-Joint Spline Lubricating

1. Wipe all old grease and dirt from the slip-joint grease fitting. See **Fig. 4**, Ref. 1.
2. Use a hand-type grease gun or a high-pressure gun with a low-pressure adapter, to lubricate the slip-joint. Using lithium 12 hydroxy stearate grease (NLGI grade 1 or 2, with EP additives), lubricate until fresh grease appears at the pressure-relief hole in the yoke plug. Then cover the relief hole with your finger, while continuing to lubricate until fresh grease appears at the slip-joint seal (see **Fig. 4**, Ref. 6). This ensures complete lubrication of the splines.
3. Wipe any excess grease from the pressure-relief hole, slip-joint seal, and grease fitting.

https://truckmanualshub.com/

Index, Alphabetical

Title of Maintenance Operation (MOP)	MOP Number
Air Brake Valve Disassembly, Cleaning, and Inspecting, Bendix E–8P, R–12, R–14, SR–1, ST–3, TC–6, and TP–3DC	42–16
Air Brake Valve Inspecting and Leak Checking, Bendix BP–R1	42–02
Air Brake Valve Leak Checking, Bendix TC–6	42–14
Air Brake Valve Operation Checking	42–04
Air Dryer Checking, Bendix AD–9	42–12
Air Dryer Desiccant Replacing, Bendix AD–9	42–13
Air Dryer Inspecting, Bendix AD–9	42–01
Air Reservoir Automatic Drain Valve Disassembly, Cleaning, Inspecting, and Lubricating, Bendix DV–2	42–15
Automatic Slack Adjuster Checking, Meritor	42–09
Automatic Slack Adjuster Inspecting, Gunite	42–21
Automatic Slack Adjuster Inspecting, Meritor	42–11
Automatic Slack Adjuster Lubricating, Gunite	42–20
Automatic Slack Adjuster Lubricating, Haldex	42–22
Automatic Slack Adjuster Lubricating, Meritor	42–10
Bosch Rail-Slide Hydraulic Brake Caliper Lubricating	42–23
Brake Chamber Inspecting (All Models)	42–07
Brake Inspection	42–24
Brake Lines Checking, Hydraulic Disc Brakes	42–18
Brake Lining Wear Checking, Hydraulic Disc Brakes	42–17
Camshaft Bracket Bushing Lubricating	42–08
Foot Brake Valve Actuator Lubricating, Bendix E–8P	42–03
Power Booster Checking, Bendix Hydro-Max®	42–19
Quick Release and Flipper Valves Checking, Midland	42–06
Relay Valve Checking, Midland	42–05

https://truckmanualshub.com/

42–01 Air Dryer Inspecting, Bendix AD–9

1. Check the reservoirs for moisture. A small amount (teaspoon or less) is normal. Larger amounts may mean that the desiccant needs to be replaced. Check the mounting and connecting lines.
2. Tighten the fasteners that attach the air dryer to the vehicle. Use the following torque values:
   - 28 lbf·ft (38 N·m) for SAE grade 5, 3/8–16 fasteners
   - 135 lbf·ft (183 N·m) for SAE grade 5, 5/8–11 fasteners
3. Check all air lines, fittings, and electrical connections for damage, leakage, or looseness.
4. Replace damaged or leaking parts, and tighten loose fittings or electrical connections.

42–02 Air Brake Valve Inspecting and Leak Checking, Bendix BP–R1

1. Clean the valve exterior and inspect it for corrosion and damage.
2. Inspect the air lines connected to the valve for signs of wear or damage. Replace the lines as needed.
3. Check the valve for leakage.

   3.1 Apply the service brakes and hold them on full line pressure of at least 80 psi (550 kPa).

   3.2 Check the air line fittings for leaks; tighten or replace the fittings as needed.

   3.3 Coat the exhaust port and body of the valve with soapy water, and check for leakage. Leakage is excessive if it produces a 1-inch (25-mm) bubble within 5 seconds.

   If the brake valve does not function as described above, or if leakage is excessive, replace it with a new or remanufactured unit. Repeat the leakage checks before placing the brake valve in service.

42–03 Foot Brake Valve Actuator Lubricating, Bendix E–8P

1. Clean any dirt, gravel, and other foreign debris from the plunger boot and brake base bracket.
2. Check the brake plunger boot for cracks, holes, or deterioration. Replace if necessary.
3. Lift up the edge of the brake plunger boot and check the plunger for existing lubrication.

   3.1 If the plunger is dry, remove it by removing the cotter pin from the clevis pin and pulling the clevis pin out. Remove the piston rod and boot. Lift out the plunger. Lubricate the plunger and the tip of the piston rod with barium grease part number BW 246671, or Penzoil Adhezoplex EP 2. Install the piston rod, boot, clevis pin, and cotter pin.

   3.2 If the plunger has grease on it, lift the edge of the brake plunger boot enough to apply 2 to 4 drops of light oil around the brake plunger. Do not over-oil. Install the plunger boot.
4. Lubricate the clevis pin with light oil.
5. Check for leakage. For instructions, see **Group 42** of the *Acterra® Workshop Manual*.

42–04 Air Brake Valve Operation Checking

Check for proper operation of the brake air valves. For instructions, see **Group 42** of the *Acterra® Workshop Manual*.

42–05 Relay Valve Checking, Midland

1. Park the vehicle on a level surface. Chock the tires.
2. Start the engine and run it long enough to pressurize the air system to at least 80 psi (550 kPa). Turn off the engine. Repeat as necessary to maintain 80 psi (550 kPa) pressure during this check.

https://truckmanualshub.com/

3. Clean any road grime from the relay valve and any debris from the valve exhaust port.
4. Listen for air leakage around the fittings or exhaust port. Tighten the fittings as necessary. Use two wrenches to avoid twisting the tubing.
5. If the valve fails this check or is damaged, repair or replace it. For instructions, see the Midland service manual.
6. Remove the chocks from the tires.

42–06 Quick Release and Flipper Valves Checking, Midland

1. Park the vehicle on a level surface. Chock the tires.
2. Start the engine and run it long enough to pressurize the air system to at least 80 psi (550 kPa). Turn off the engine. Repeat as necessary to maintain 80 psi (550 kPa) pressure during these checks.
3. Clean any road grime from the valves and any material from the valves' exhaust ports.
4. Listen for air leakage around the fittings and exhaust ports. Tighten the fittings as necessary. Use two wrenches to avoid twisting the tubing.
5. If any valve fails this check or is damaged, repair or replace it. For instructions, see the Midland service manual.
6. Remove the chocks from the tires.

42–07 Brake Chamber Inspecting (All Models)

⚠ WARNING

Do not loosen or remove the parking brake clamp ring for any purpose at any time. See Fig. 1. The parking/emergency brake section is not intended to be serviced. Serious injury or death may result from sudden release of the power spring.

Before doing any repairs or adjustments on a service/parking brake chamber, read the applicable warnings and instructions in the applicable brake chamber section in Group 42 of the *Acterra® Workshop Manual*.

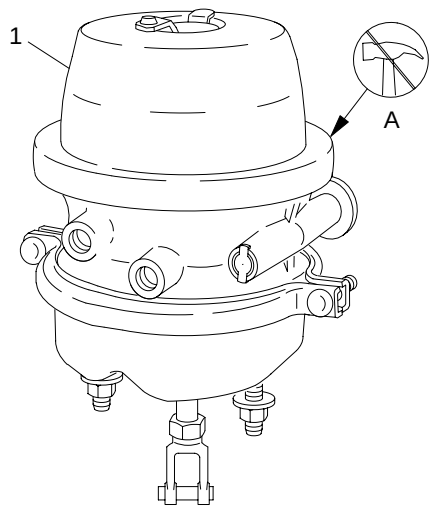

02/22/2000 f421352

A. Do not remove the factory-sealed clamp ring.
1. Model TR-T (TR Series) Brake Chamber

Fig. 1, MGM Brake Chamber

⚠ WARNING

Do not operate the vehicle with the front brakes backed off or disconnected. Backing off or disconnecting the front brakes will not improve vehicle handling and may lead to loss of vehicle control resulting in property damage or personal injury.

NOTE: Vehicles operating under severe or adverse conditions should be checked more frequently. If the brake chamber requires disassembly, see **Group 42** of the *Acterra® Workshop Manual* for instructions.

1. With the slack adjuster properly adjusted, check the angle formed by the centerline of the piston rod and slack adjuster. This angle should be greater than 90 degrees in the released position and approach 90 degrees in the applied position. See **Fig. 2**.

   At angles less than 90 degrees, brake chamber force is reduced, which reduces braking efficiency.

https://truckmanualshub.com/

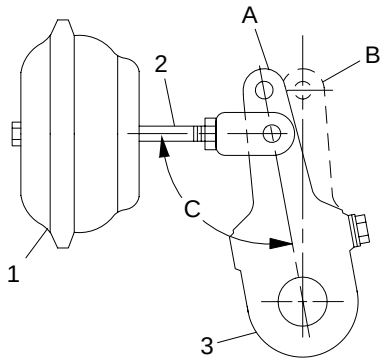

07/27/94 f420009a

A. Brakes Released
B. Brakes Applied
C. Greater than 90 degree angle
1. Brake Chamber
2. Piston Rod
3. Slack Adjuster

Fig. 2, Angle Between Piston Rod and Slack Adjuster

2. Check each brake chamber for correct installation.
   - 2.1 Check each mounting stud for the presence of prevailing torque locknuts and hardened flatwashers. Make sure that the hardened flatwashers are installed between the mounting bracket and the locknuts. Do not install flatwashers touching the service (non-pressure) chamber.
   - 2.2 If the locknuts are loose, tighten them. For correct torque values, see the applicable brake chamber section in **Group 42** of the *Acterra® Workshop Manual*.
3. Observe the piston rod engagement with the clevis. Engagement of at least 7 threads is required; there should be 1-inch (25-mm) clearance from the centerline of the clevis pin hole to the end of the piston rod. See **Fig. 3**. Adjust if needed.
4. Check the tightness of the piston rod nut. See **Table 1** for torque values. Tighten if needed.
5. See if the chamber piston rod is in line with the slack adjuster. Misalignment can cause the piston rod to rub on the non-pressure chamber and cause a dragging brake. Reposition the brake chamber on the mounting bracket, if necessary.

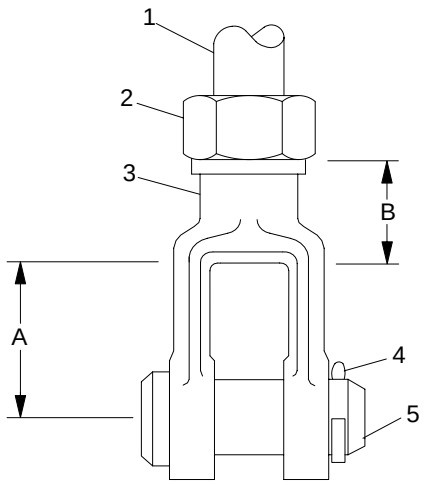

08/20/93 f420225a

A. Minimum of 1-inch (25-mm) clearance between centerline of clevis pin hole and piston rod end.
B. Minimum of 7 threads engagement.
1. Piston Rod
2. Piston Rod Nut
3. Clevis
4. Cotter Pin
5. Clevis Pin

Fig. 3, Piston Rod Engagement With the Clevis

Piston Rod Nut Torque Values		
Description	**Rod Size: inch**	**Torque: lbf·ft (N·m)**
MGM Tandem Chambers	All	25–35 (34–47)
Midland Service Chambers	1/2	20–30 (27–41)
	5/8	33–90 (45–122)

Table 1, Piston Rod Nut Torque Values

6. Inspect the condition of the hose(s) to the brake chamber. Check carefully for chafing, restrictions such as kinking or bending, and make sure the hoses are properly supported. Replace a damaged hose with the same size hose. With the service brakes applied, check for leaks at the hose-to-chamber connections. Any leaks are probably caused by loose connections or by a damaged hose fitting. Eliminate all leaks.

⚠ WARNING

Read and follow all applicable warnings and instructions in Group 42 of the *Acterra® Workshop Manual* for repairs to the service/parking brake chambers. These chambers contain a power

https://truckmanualshub.com/

spring which, if released, could cause serious injury or death.

7. Inspect the exterior surfaces of the chamber for damage. Make sure the breather holes in the non-pressure section(s) are open and free of debris. Using the instructions in **Group 42** of the *Acterra® Workshop Manual*, replace any damaged parts.
8. On parking brake chambers equipped with integral release bolts, lubricate the bolt with thread anti-seize compound. Check the tightness of the bolt. For torque values, see the applicable brake chamber section in **Group 42** of the *Acterra® Workshop Manual*.

CAUTION

If the external breather tube is missing or incorrectly installed, road dirt and debris can adversely affect the operation of the brake chamber. Once inside the chamber, dirt and debris cause the internal parts to deteriorate and shorten their lives.

9. On brake chambers equipped with an external breather tube, make sure the flexible elbows are in place and the connector tube is inserted into each elbow 1/2 inch (13 mm).
10. On all parking brake installations, check for presence of an end cover cap or dust plug and make sure the cap or plug is securely snapped into place.

Service Brake Operation and Leakage Checking

WARNING

Do not loosen or remove the parking brake clamp ring for any purpose at any time. See Fig. 1. The parking/emergency brake section is not intended to be serviced. Serious injury or death may result from sudden release of the power spring.

WARNING

Before doing any repairs or adjustments on a service/parking brake chamber, read the applicable warnings and instructions in the applicable brake chamber section in Group 42 of the *Acterra® Workshop Manual*.

1. Apply the service brakes and check that the piston rods move out promptly without binding.
2. Release the service brakes and check that the piston rods return to the released positions promptly without binding.

WARNING

Read and follow all applicable warnings and instructions in Group 42 of the *Acterra® Workshop Manual* for repairs to the service/parking brake chambers. These chambers contain a power spring, which if released, could cause serious injury or death.

3. Check the service brake chambers for leakage.

   3.1 Apply the service brakes and hold them on full line pressure of at least 80 psi (550 kPa).

CAUTION

Do not overtighten the clamp ring. This can distort the flange sealing surface, or the clamp ring itself.

   3.2 Using soapy water, coat the service chamber clamp ring. Leakage is excessive if it produces a 1-inch (25-mm) bubble within 5 seconds. See **Fig. 1**. On Bendix service chambers, tighten the clamp ring enough to stop the leakage, but do not exceed the maximum torque limits in **Table 2**. *Do not overtighten*.

   On other service chamber makes, if leakage is detected, tighten the clamp ring; but do not exceed the maximum torque limits in **Group 42** of the *Acterra® Workshop Manual*.

Clamp Ring Torque Values (Bendix Chambers)	
Description	**Torque: lbf·in (N·cm)**
5/16–24 Nut	130–150 (1460–1700)
3/8–16 Nut	140–180 (1580–2040)

Table 2, Clamp Ring Torque Values (Bendix Chambers)

https://truckmanualshub.com/

3.3 If leakage persists, use the instructions in **Group 42** of the *Acterra® Workshop Manual* to replace the service brake diaphragm.

3.4 Using soapy water, coat the area around the piston-rod bore. On some Bendix service chambers loosen the boot, if necessary. No leakage is permitted. If there is leakage, use the instructions in the applicable brake chamber section in **Group 42** of the *Acterra® Workshop Manual* and replace the service brake diaphragm.

NOTE: On weatherproof Bendix chambers, the leakage check can be performed at the cross-drilled mounting stud.

Parking Brake Operation and Leakage Checking

⚠ WARNING

Do not loosen or remove the parking brake clamp ring for any purpose at any time. See Fig. 1. The parking/emergency brake section is not intended to be serviced. Serious injury or death may result from sudden release of the power spring.

Before doing any repairs or adjustments on a service/parking brake chamber, read the applicable warnings and instructions in the applicable brake chamber section in Group 42 of the *Acterra® Workshop Manual*.

1. Park the vehicle on a level surface. Chock the tires.
2. Build the air pressure in the system to at least 100 psi (690 kPa), and shut off the engine.
3. Place the park control valve in the park position. The brake should apply immediately. Place the park control valve in the released position. The brake should release immediately.

   If the brakes do not apply or release as required, see the air brake system troubleshooting guide in the applicable brake chamber section in **Group 42** of the *Acterra® Workshop Manual* for possible causes and corrections.

⚠ WARNING

Do not disconnect the pressurized parking brake hose. If disconnected under pressure, the parking brake hose will whip as air escapes from the line, and the air stream can direct dirt or sludge toward persons in the area, which could result in injury.

4. Check the parking brake chambers for leakage.

   4.1 With the park control valve released, apply soapy water around the parking brake diaphragm clamp ring and at the drain slots and exhaust breather on the body. Disconnect the service brake hose at the service port, and apply soapy water to check for piston O-ring leakage.

⚠ WARNING

Read and follow all applicable warnings and instructions in the applicable brake chamber section in Group 42 of the *Acterra® Workshop Manual* for repairs to the service/parking brake chambers. These chambers contain a power spring, which if released, could cause serious injury or death.

   4.2 If leakage is detected at either the clamp ring or the drain slots, replace the parking brake section. Slight leakage is permitted at the service port. Any other leakage is not acceptable. Using the instructions in the applicable brake chamber section in **Group 42** of the *Acterra® Workshop Manual*, replace the parking brake section (*do not attempt to service the parking brake section*).

5. Connect the air hose to the brake chamber, making sure that the fittings are clean and free of debris. Tighten the nut finger-tight. Using a wrench, further tighten the nut until you feel resistance. Then, tighten the nut one-sixth turn more.
6. Repeat the above steps for each parking brake chamber.
7. Apply the parking brakes. Remove the chocks from the tires.

https://truckmanualshub.com/

42–08 Camshaft Bracket Bushing Lubricating

IMPORTANT: Perform **MOP 42–24** before lubricating the camshaft brackets.

Pump multipurpose chassis grease (NLGI Grade 1 or 2) into the chamber bracket until it appears at the slack adjuster end of the bracket. See **Fig. 4**. Use care that no grease enters the drum cavity. If grease leaks out under the camhead, the camshaft grease seal is worn or damaged, or is installed backwards.

NOTE: The use of meter-type fittings, having a maximum 40 psi (275 kPa) pressure relief at shutoff, is recommended.

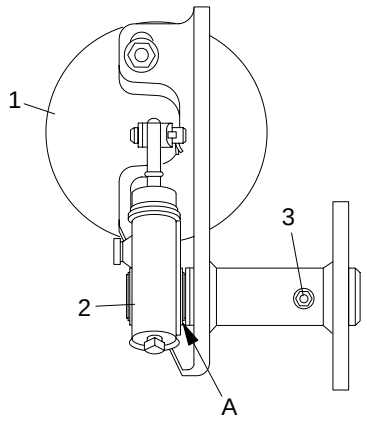

05/28/93 f420011a

A. Grease exit.
1. Brake Chamber
2. Slack Adjuster
3. Grease Fitting

Fig. 4, Camshaft Bracket Bushing Lubrication

42–09 Automatic Slack Adjuster Checking, Meritor

⚠ WARNING

Manually adjusting an automatic slack adjuster to bring the pushrod stroke within legal limits is likely masking a mechanical problem. Adjustment is not repairing. Before adjusting an automatic slack adjuster, troubleshoot the foundation brake system and inspect it for worn or damaged components. Improperly maintaining the vehicle braking system may lead to brake failure, resulting in property damage, personal injury, or death.

1. Inspect the slack adjuster for structural damage. Replace the slack adjuster if needed.
2. Check the boot for cuts, tears, etc., and replace it if necessary. See **Fig. 5**.

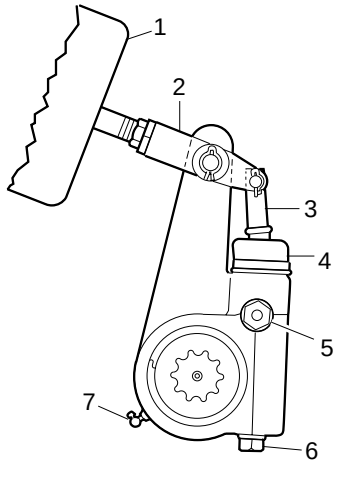

10/20/93 f420012a

1. Brake Chamber
2. Clevis
3. Actuator Rod
4. Boot
5. Pull-Pawl
6. Manual Adjusting Nut
7. Grease Fitting (or Lube Plug)

Fig. 5, Meritor Automatic Slack Adjuster

42–10 Automatic Slack Adjuster Lubricating, Meritor

IMPORTANT: Perform **MOP 42–24** before lubricating the slack adjusters.

Lubricate the slack adjuster using high-temperature, waterproof grease NLGI Grade 1, Texaco Thermotex EP 1, Shell Darina No. 1, Marathon 528 heavy-duty, Sunaplex No. 1 EP, Amdex No. 1 EP, or Philube B No. 1. It should be smooth-textured, corrosion-resistant grease, free of fillers and abrasives.

https://truckmanualshub.com/

42–11 Automatic Slack Adjuster Inspecting, Meritor

IMPORTANT: Perform **MOP 42–24** before lubricating the slack adjusters.

1. Remove the pull-pawl assembly. See .
2. Examine the pull-pawl assembly for grease retention and condition. If the grease is in good condition, install the pull-pawl assembly. Lube the slack adjuster through the grease fitting until lubricant is forced out through the inboard camshaft splines and the pull-pawl assembly.

   If the grease is hardened, or the pull-pawl assembly is dry and shows extreme wear, remove the slack adjuster. Disassemble and clean the slack adjuster. Inspect the internal parts. Install new seals and a new boot when assembling. Install and lubricate the slack adjuster. See **Group 42** of the *Acterra® Workshop Manual*.

42–12 Air Dryer Checking, Bendix AD–9

During cold-weather operation, check the operation of the end cover heater and thermostat assembly.

1. With the ignition on, check for voltage to the heater and thermostat assembly. Unplug the electrical connector at the air dryer, and place the test leads of a voltmeter on each of the pins of the male connector. If there is no voltage, look for a blown fuse, broken wires, or corrosion in the vehicle wiring harness. Check that a good ground path exists.
2. Check the thermostat and heater operation. Turn off the ignition switch and cool the end cover assembly to below 40°F (4°C). Using an ohmmeter, check the resistance between the electrical pins in the female connector. The resistance should be 1.5 to 3.0 ohms for the 12-volt heater assembly.

   Warm the end cover assembly to over 90°F (32°C) and again check the resistance. It should exceed 1000 ohms. If it does, the thermostat and heater assembly is operating properly. If it does not, replace the purge-valve housing assembly, which includes the heater and thermostat assembly.

42–13 Air Dryer Desiccant Replacing, Bendix AD–9

The desiccant change interval may vary from vehicle to vehicle. Although typical desiccant cartridge life is three years, many will perform adequately for a longer period of time. To take maximum advantage of desiccant life and ensure that replacement occurs only when necessary, disassemble, clean, and inspect the air dryer. Replace the desiccant cartridge. For instructions, see **Group 42** of the *Acterra® Workshop Manual*.

42–14 Air Brake Valve Leak Checking, Bendix TC–6

Check for leakage. For instructions, see **Group 42** of the *Acterra® Workshop Manual*.

42–15 Air Reservoir Automatic Drain Valve Disassembly, Cleaning, Inspecting, and Lubricating, Bendix DV–2

Disassemble the drain valve, clean the parts with mineral spirits, and inspect the parts. Replace all rubber parts and any worn or damaged parts. Use only genuine Bendix replacement parts or kits. Assemble and install the valve. Check for proper operation and leakage. For instructions, see **Group 42** of the *Acterra® Workshop Manual*.

https://truckmanualshub.com/

42–16 Air Brake Valve Disassembly, Cleaning, and Inspecting, Bendix E–8P, R–12, R–14, SR–1, ST–3, TC–6, and TP–3DC

Disassemble each brake valve, clean the parts with mineral spirits, and inspect the parts. Replace all rubber parts and any worn or damaged parts. Use only genuine Bendix replacement parts or kits. Assemble and install the valves. Check for proper operation and leakage. For instructions, see **Group 42** of the *Acterra® Workshop Manual*.

42–17 Brake Lining Wear Checking, Hydraulic Disc Brakes

Before checking lining wear with the wheel removed, review the following brake lining exposure warnings.

⚠ WARNING

Breathing brake lining dust (asbestos or non-asbestos) could cause lung cancer or lung disease. Unless exposure can be reduced below legal limits, wear an air purifying respirator approved by MSHA or NIOSH at all times when servicing the brakes, starting with removal of the wheels and continuing through assembly.

To minimize the possibility of creating airborne brake lining dust, clean the dust from the brake rotor, brake caliper, and brake assembly, using an industrial-type vacuum cleaner equipped with a high-efficiency filter system. Then, using a rag soaked in water and wrung until nearly dry, remove any remaining dust. Do not use compressed air or dry brushing to clean the brake assembly.

1. Check lining wear.
   - 1.1 Apply the parking brakes. Chock the tires to prevent vehicle movement.
   - 1.2 Remove one or more of the lining inspection plugs, and measure brake lining thickness.
   - 1.3 On front and rear axles, replace linings worn to less than 1/16 inch (1.6 mm).
   - 1.4 Make sure that the brake rotor and linings are free of oil and grease.
   - 1.5 Install the inspection plug(s).
2. If the wheel and hub assembly is removed from the axle, check lining wear. Replace the linings on all brake assemblies if worn to less than 1/16 inch (1.6 mm) at the thinnest point.

NOTE: To replace the brake linings, see the applicable foundation brake section in **Group 42** of the *Acterra® Workshop Manual*.

42–18 Brake Lines Checking, Hydraulic Disc Brakes

Check all hydraulic lines and fittings for damage, leakage, or looseness.

Replace damaged or leaking components, and tighten loose fittings.

42–19 Power Booster Checking, Bendix Hydro-Max®

Check for proper operation. For instructions, see **Group 42** of the *Acterra® Workshop Manual*.

42–20 Automatic Slack Adjuster Lubricating, Gunite

IMPORTANT: Perform **MOP 42–24** before lubricating the slack adjusters.

Lubricate the slack adjuster until grease flows from the grease relief opening. See **Fig. 6**. For temperatures to –40°F (–40°C), use Lubriplate Aero; for temperatures to –20°F (–29°C), use Texaco Multifak EP-2 or Mobil Grease No. 77.

The newest Gunite slack adjusters are produced without a grease relief. During lubrication with a grease gun, lubricant is forced through the drilled worm wheel onto the camshaft. Lubricate the slack

https://truckmanualshub.com/

adjuster at the grease fitting until grease appears on the camshaft.

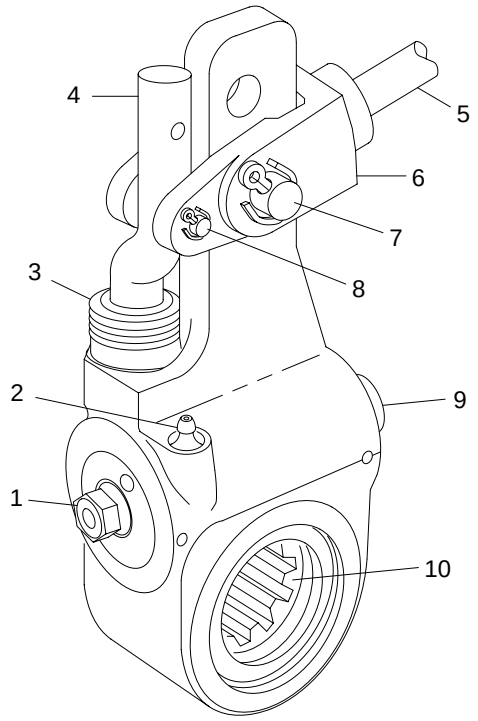

10/27/93 f420653a

1. 7/16-Inch Adjusting Hexnut
2. Grease Fitting
3. Boot
4. Link
5. Brake Chamber Piston Rod
6. Clevis
7. 1/2-Inch Clevis Pin
8. 1/4-Inch Clevis Pin
9. Grease Relief Opening
10. Slack Adjuster Spline

Fig. 6, Gunite Automatic Slack Adjuster

42–21 Automatic Slack Adjuster Inspecting, Gunite

WARNING

Manually adjusting an automatic slack adjuster to bring the pushrod stroke within legal limits is likely masking a mechanical problem. Adjustment is not repairing. Before adjusting an automatic slack adjuster, troubleshoot the foundation brake system and inspect it for worn or damaged components. Improperly maintaining the vehicle braking system may lead to brake failure, resulting in property damage, personal injury, or death.

1. Inspect the slack adjuster for structural damage. Replace the slack adjuster if needed.
2. Inspect the slack adjuster boot for cuts or tears.

   If the boot is damaged, replace it as follows. See .

   2.1 Remove the two clevis pins.

   2.2 Rotate the worm shaft adjusting hexnut counterclockwise to move the link away from the clevis. About 45 lbf·ft (60 N·m) is needed. You will hear a clicking sound.

   Remove the old boot from the link.

   2.3 Install a new boot on the link, heavy section down. Be careful not to damage the boot.

   2.4 Seat the boot so that the bottom of the boot is in the boot insert, and the top is in the groove of the link.

   2.5 Rotate the adjusting hexnut clockwise until the 1/4-inch hole in the clevis lines up with the hole in the link.

   Install the 1/4-inch clevis pin and the cotter pin.

   2.6 Tap the clevis upward or downward until the large hole in the slack adjuster lines up with one in the clevis.

   Install the 1/2-inch clevis and the cotter pin.

WARNING

Make sure both clevis pins are installed. Failure to do so will cause the slack adjuster to work incorrectly, which could lead to loss of braking control. This could result in an accident causing personal injury or property damage.

42–22 Automatic Slack Adjuster Lubricating, Haldex

IMPORTANT: Perform **MOP 42–24** before lubricating the slack adjusters.

https://truckmanualshub.com/

Lubricate a Haldex automatic slack adjuster at the grease fitting with any extreme-pressure NLGI Grade 1 or Grade 2 grease if the operating temperature is –20°F (–29°C) and above. If the operating temperature is below –20°F (–29°C), use a low-temperature extreme-pressure grease.

42–23 Bosch Rail-Slide Hydraulic Brake Caliper Lubricating

NOTE: This procedure is only for vehicles equipped with Bosch rail-slide hydraulic brake calipers.

IMPORTANT: After the vehicle is put into service, lubricate the calipers every 6 months or every 18,000 miles (28 800 km), whichever comes first.

1. Park the vehicle on a level surface. Shut down the engine, set the parking brake, and chock the front or the rear tires, depending on which axle you are working on.
2. Raise the vehicle off of the ground and securely support it with jack stands.
3. Remove the wheel from each wheel end. For instructions, see **Group 40** of the *Acterra® Workshop Manual*.
4. Place a stool near the axle to rest the caliper upon after the caliper is removed.
5. Remove the key-retaining fastener from the anchor plate. See **Fig. 7**.
6. Using a hammer and drift, carefully drive out the key and spring. See **Fig. 8**. Be careful not to nick the anchor plate rail.
7. Insert a large flat-bladed screwdriver through the caliper vent window and into the rotor fins. Pry the caliper outward; this will push the pistons back slightly into the caliper, making removal easier.
8. Grasp the caliper, swing it out and lift it from the anchor plate. Rest the caliper on the stool. For ease of removal, swing the caliper on the forward anchor plate torque rail (the large one opposite the key and spring rail).

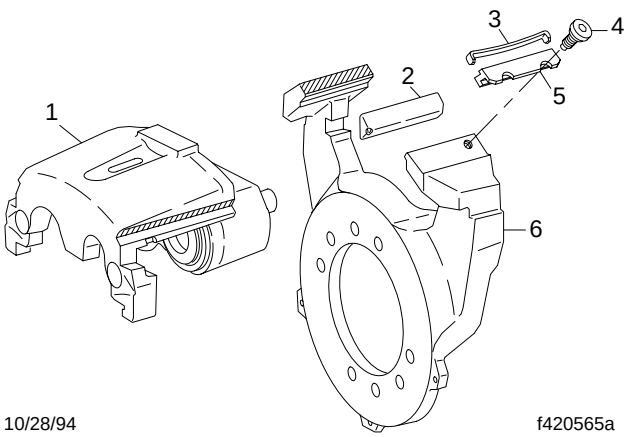

1. Caliper
2. Wear Shim
3. Spring
4. Fastener
5. Key
6. Anchor Plate

Fig. 7, Anchor Plate and Key Fastener

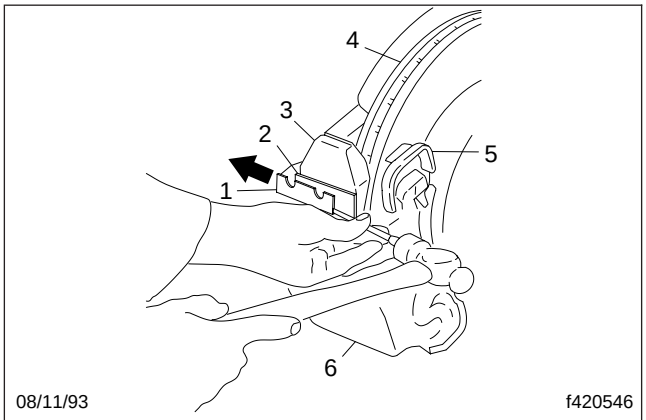

1. Key
2. Spring
3. Anchor Plate Upper Rail
4. Rotor
5. Outboard Brake Pad
6. Caliper Housing

Fig. 8, Drive Out the Key and Spring

9. Carefully remove the brake pads to avoid damaging or getting grease on the pad faces. Set them aside.
10. Using brake cleaner or alcohol, remove old grease from the caliper V-ways, the anchor plate rails, and the shoe slots. See **Fig. 7** and **Fig. 9**. Also clean the key and spring.
11. Using a wire brush or wire wheel, remove any remaining debris from the V-ways, rails, shoe slots, key and spring.

https://truckmanualshub.com/

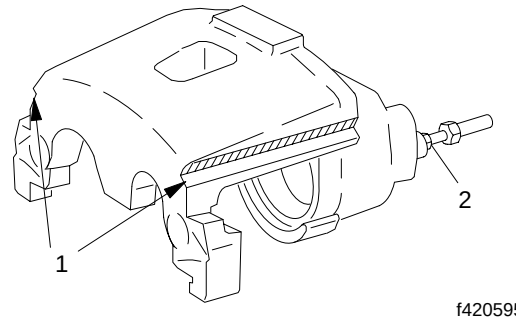

1. V-Ways
2. Bleeder Fitting

Fig. 9, Caliper V-Ways

12. Apply two level teaspoons of Aeroshell Grade 5 (ES1246) grease on each side of the assembly. Apply it evenly along the full length of the V-way groove and anchor plate rail, and apply one level teaspoon evenly on both sides of the key and spring. After the caliper is installed, pack any accumulation of grease at each end of the rail and along the top of the rail or key at the V-way.
13. Being careful not to get grease or dirt on the pad face, install each brake pad.
14. Grasp the caliper firmly, rest the V-ways on the forward anchor plate torque rail (the large rail) and swing the caliper into place. Make sure that the brake hose is not twisted. Do not get grease on the pad faces or rotor surfaces.
15. With the caliper installed and firmly seated on the forward rail (large rail), position the key and spring between the caliper V-way and the anchor rail from the inboard end of the anchor rail.
16. Carefully drive the key and spring into place. Install the key-retaining fastener and torque 12 to 18 lbf·ft (16 to 24 N·m).
17. Install the wheels. For instructions, see **Group 40** of the *Acterra® Workshop Manual*.
18. Before moving the vehicle, press the brake pedal several times to bring the pistons back to the normal position.
19. Raise the vehicle, remove the jack stands, and lower the vehicle to the ground.
20. Remove the chocks from the tires.
21. Test drive the vehicle and ensure that the brakes operate properly.

42–24 Brake Inspection

IMPORTANT: This procedure should be performed prior to lubrication of the brake components.

Parking Brake Operational Check

CAUTION

Perform the following check in a clear safe area. If the parking brakes fail to hold the vehicle, personal injury or property damage may result.

1. With the engine running, and air pressure at cut-out pressure, set the parking brake.
2. Put the vehicle in the lowest gear and gently attempt to move it forward. The vehicle should not move. If the vehicle moves, the parking brakes are not operating correctly and must be repaired before the vehicle is returned to service. See **Group 42** of the *Acterra® Workshop Manual* for repair procedures.

Brake Component Inspection

1. Park the vehicle on a level surface, set the parking brake, and chock the tires. Once the tires are chocked, release the parking brake.

WARNING

Manually adjusting an automatic slack adjuster to bring the pushrod stroke within legal limits is likely masking a mechanical problem. Adjustment is not repairing. Before adjusting an automatic slack adjuster, troubleshoot the foundation brake system and inspect it for worn or damaged components. Improperly maintaining the vehicle braking system may lead to brake failure, resulting in property damage, personal injury, or death.

2. With the engine off, and 100 psi (689 kPa) of air tank pressure, have an assistant apply and hold an 80 to 90 psi (550 to 620 kPa) brake application.
3. Check to see if the colored over-stroke band on each brake chamber pushrod is exposed.

   If a band shows, the stroke is too long. Check the foundation brake components for wear or damage, and repair as needed. See **Group 42** of

https://truckmanualshub.com/

the *Acterra® Workshop Manual* for inspection, troubleshooting, and repair procedures.

4. Measure the applied chamber stroke. See **Table 3** for the proper stroke for the type of chamber being used. If the stroke is too short, the brakes may drag or will not fully apply. Check for improper operation or adjustment of the automatic slack adjuster. See **Group 42** of the *Acterra® Workshop Manual* for inspection and troubleshooting procedures.
5. Start the engine and build air pressure to at least 100 psi (689 kPa). Shut down the engine.
6. Check all of the foundation brake components for damage, wear, and loose or missing parts. Repair as needed. See **Group 42** of the *Acterra® Workshop Manual* for repair procedures.

Brake Chamber Stroke Specifications			
Chamber			Max Applied Stroke: inch (mm)
Manufacturer	Type*	Size†	
Gunite	Standard Stroke	9	1-3/8 (35)
		12	
		16	1-3/4 (44)
		20	
		24	
		30	2 (51)
		36‡	2-1/4 (57)
	Long Stroke	16	2 (51)
		20	
		24 (2-1/2 inch rated stroke)	
		24 (3 inch rated stroke)	2-1/2 (64)
		30	
Haldex	Standard Stroke	12	1-3/8 (35)
		16	1-3/4 (44)
		20	
		24	
	2-1/2-Inch Extended Stroke	24	2 (51)
	3-Inch Extended Stroke	24	2-1/2 (64)
	Standard Stroke	30	2 (51)
	Long Stroke	30	2-1/2 (64)

https://truckmanualshub.com/

Brake Chamber Stroke Specifications			
Chamber			Max Applied Stroke: inch (mm)
Manufacturer	Type*	Size†	
Meritor	Standard Stroke	9	Less than 1-1/2 (38)
		12	
		16	Less than 1-3/4 (44)
		20	
		24	Less than 1-7/8 (48)
	Long Stroke	24	Less than 2 (51)
	Standard Stroke	30	

* Long stroke design is indicated by a tag, or embossing, on the brake chamber.

† Specifications are relative to a brake application with 80 to 90 psi (550 to 620 kPa) air pressure in the brake chambers.

‡ If type 36 chamber is used, slack length should be less than 6 inches.

Table 3, Brake Chamber Stroke Specifications

https://truckmanualshub.com/

Index, Alphabetical

Title of Maintenance Operation (MOP)	MOP Number
Drag Link Lubricating	46–02
Power Steering Gear Lubricating	46–05
Power Steering Reservoir Fluid Level Checking	46–03
Power Steering Reservoir Fluid and Filter Changing	46–04
Steering Driveline Lubricating	46–01

https://truckmanualshub.com/

46–01 Steering Driveline Lubricating

Wipe the grease fittings clean. See **Fig. 1**. Using a pressure gun, apply a lithium-based grease (NLGI grade 2) sparingly to the universal joints and slip-joint splines.

46–02 Drag Link Lubricating

1. Using a clean rag, wipe the dirt from both grease fittings on the drag link. See **Fig. 2**.
2. Using a pressure gun, apply multipurpose chassis grease at the grease fittings until old grease is forced out of the socket.

NOTE: Use multipurpose chassis grease NLGI grade 1 (6% 12-hydroxy lithium stearate grease) or NLGI grade 2 (8% 12-hydroxy lithium stearate grease). Grade 2 chassis grease is preferred.

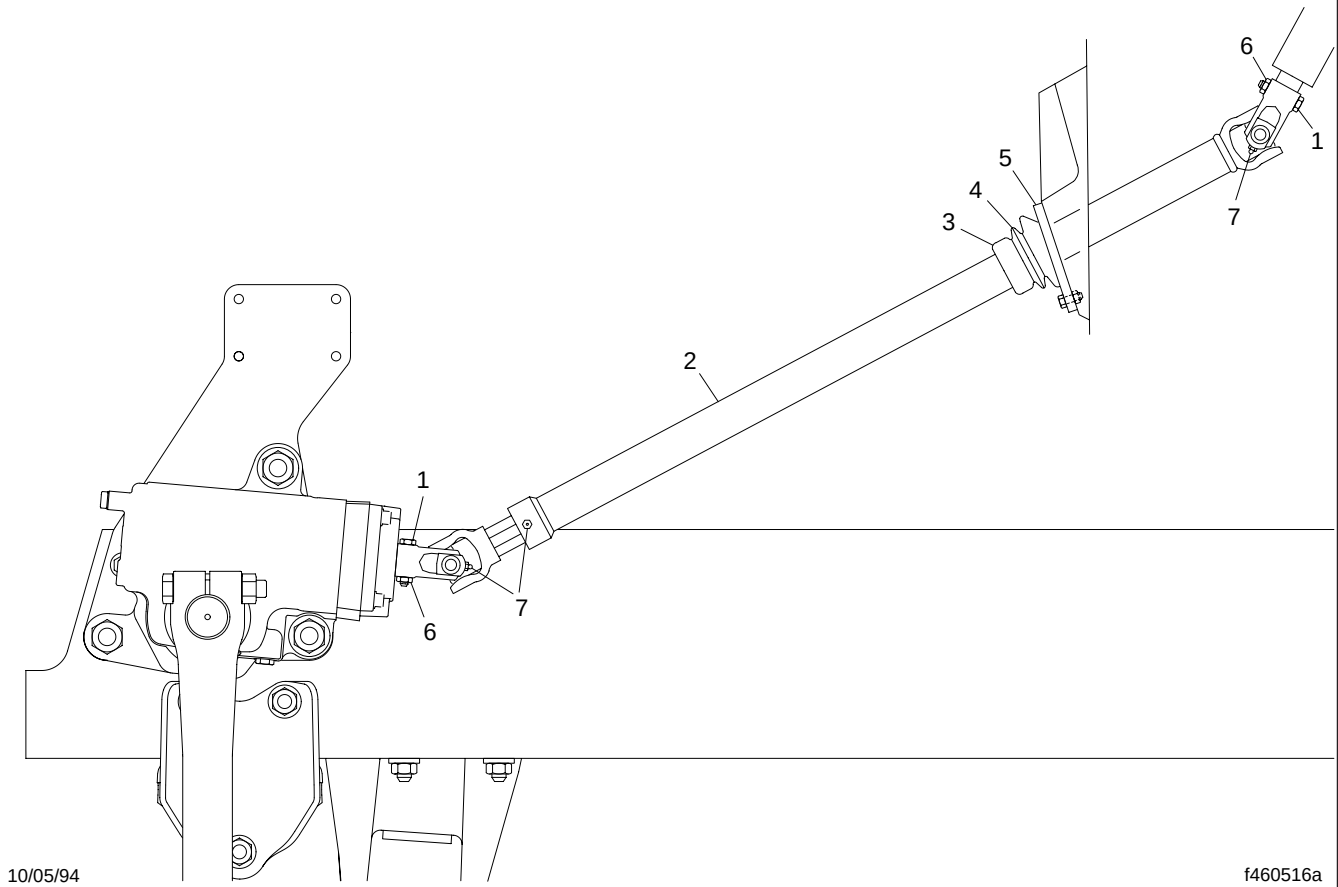

1. Pinch Bolt
2. Universal Joint Shaft
3. Bushing
4. Boot
5. Boot Retainer
6. Prevailing Torque Locknut
7. Grease Fitting

Fig. 1, Steering Driveline

https://truckmanualshub.com/

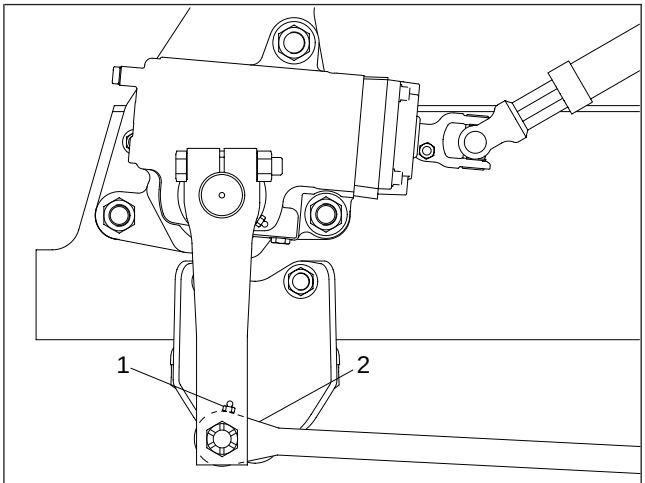

1. Grease Fitting
2. Drag Link (pitman arm end shown)

Fig. 2, Steering Drag Link

46–03 Power Steering Reservoir Fluid Level Checking

Metal Ventra Reservoir

1. Turn off the engine, apply the parking brakes, and chock the tires.
2. Open the hood.
3. Clean around the power steering reservoir fill cap with a clean rag, then remove the dipstick.

WARNING

Fill only with approved clean fluid. Do not mix fluid types. Any mixture or any unapproved fluid could lead to seal deterioration and leaks. Fluid leakage could cause loss of power steering assist, possibly resulting in personal injury and property damage.

4. With the power steering fluid at operating temperature, check the fluid level on the dipstick. If below the ADD mark, add enough fluid to bring the level up to the FULL mark on the dipstick. Use Dexron® III automatic transmission fluid (ATF) in the power steering reservoir.
5. Install the fill cap on the power steering reservoir.
6. Close the hood, and remove the chocks from the tires.

Nelson Reservoir

NOTE: If the power steering reservoir in the vehicle looks like the reservoir shown in **Fig. 3**, use the following procedure.

1. Turn off the engine, apply the parking brakes, and chock the tires.

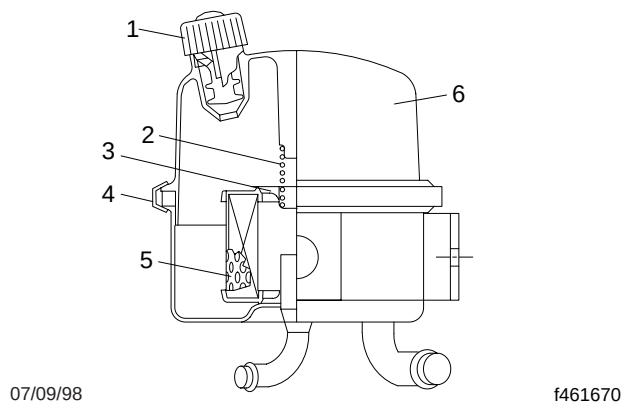

1. Fill Cap
2. Filter Spring
3. Filter Top Plate
4. Clamp
5. Filter
6. Reservoir Cover

Fig. 3, Nelson Power Steering Reservoir and Filter

2. Open the hood.
3. With the engine cool, the level should be between MIN COLD and MAX HOT lines with the engine off. Add or remove fluid as necessary to bring the fluid level to the line between the MIN COLD and MAX HOT lines. Use only Dexron® III automatic transmission fluid.
4. With the engine hot, the fluid level should be at the MAX HOT line with the engine off.
5. Add or remove fluid as necessary to bring the fluid level to the MAX HOT line. Use only Dexron® III automatic transmission fluid.
6. Close the hood, and remove the chocks from the tires.

https://truckmanualshub.com/

Plastic Ventra Reservoir

NOTE: If the power steering reservoir in the vehicle looks like the reservoir shown in **Fig. 4**, use the following procedure.

1. Turn off the engine, apply the parking brakes, and chock the tires.

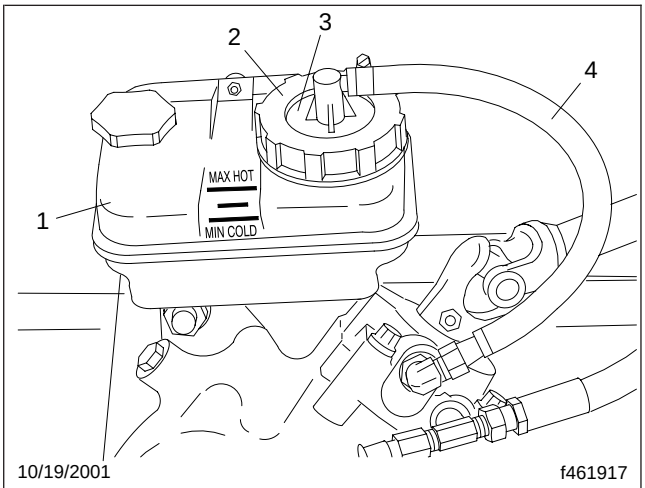

1. Power Steering Reservoir
2. Retaining Ring
3. Filter Cover
4. Return Hose

Fig. 4, Power Steering Reservoir

2. Open the hood.
3. With the engine cool, the fluid level should be between the MIN COLD and MAX HOT lines with the engine off. Add or remove fluid as necessary to bring the fluid level to the line between the MIN COLD and MAX HOT lines. Use only Dexron® III automatic transmission fluid.
4. With the engine hot, the fluid level should be at the MAX HOT line with the engine off. Add or remove fluid as necessary to bring the fluid level to the MAX HOT line. Use only Dexron® III automatic transmission fluid.
5. Close the hood, and remove the chocks from the tires.

46–04 Power Steering Reservoir Fluid and Filter Changing

Metal Ventra Reservoir

1. Turn off the engine, apply the parking brakes, and chock the tires.
2. Open the hood.
3. Remove the fill cap, nut, and cover from the steering reservoir.
4. Disconnect the hose, between the reservoir and the steering gear, from the reservoir. Then drain the reservoir in a drain pan, and cap the reservoir port.
5. Lift out the spring and filter element.
6. Thoroughly clean the reservoir with a lint-free cloth.
7. Install a new filter element, and position the spring on top of the filter element.
8. Fill the reservoir with Dexron® III automatic transmission fluid.

⚠ WARNING

Fill only with approved clean fluid. Do not mix fluid types. Any mixture or any unapproved fluid could lead to seal deterioration and leaks. Fluid leakage could cause loss of power steering assist, possibly resulting in personal injury and property damage.

9. Place the end of the hose in the drain pan. **Do not start the engine while draining the system.** Raise the front of the vehicle with a floor jack and support it with jack stands. Have someone turn the steering wheel to full lock left and right, and capture the fluid flowing from the hose in the drain pan. Add fluid to the reservoir, as needed. Continue turning the steering wheel until clean power steering fluid flows from the hose.
10. Remove the plug from the reservoir and connect the hose to the reservoir. Tighten the hose fitting nut finger tight. Then with a wrench, tighten until there is firm resistance. Tighten one-sixth turn more. Do not overtighten.

    Remove the jack stands and lower the vehicle.

https://truckmanualshub.com/

11. Fill the reservoir with ATF as needed. Start the engine and let it idle. Have someone turn the steering wheel from lock to lock until no bubbles are seen in the reservoir. Turn off the engine.
12. Install a new cover gasket, the cover, and nut. Tighten the nut 28 lbf·ft (38 N·m). Install the fill cap.
13. Start the engine and check the power steering reservoir fluid level. If the fluid level is low, add ATF to bring the level up to the FULL mark on the dipstick.
14. Close the hood and remove the chocks from the tires.

Nelson Reservoir

⚠ WARNING

Fill only with approved clean fluid. Failure to use the proper fluid could cause seal deterioration and leaks. Fluid leaks could eventually cause loss of power steering assist. This could lead to an accident resulting in personal injury or property damage. Wear eye protection when changing the fluid and filter.

NOTE: If the power steering reservoir in the vehicle looks like the reservoir shown in **Fig. 3**, use the following procedure.

1. Turn off the engine, apply the parking brakes, and chock the tires.
2. Open the hood.
3. Place a drain pan under the reservoir, and remove the steering gear-to-reservoir return hose at the reservoir. Drain the steering fluid into the drain pan and dispose of the fluid properly. Plug the return line fitting on the reservoir.
4. Loosen the clamp and remove the cover along with the filter spring and the filter top plate. See **Fig. 3**.

NOTE: Always replace the reservoir filter when changing the fluid.

5. Remove the filter. It may be necessary to wiggle the filter to remove it from its base. Do not use pliers to aid in removal of the filter; pliers could cause metal chips to enter the steering system. Clean the inside of the reservoir using a lint-free cloth.

IMPORTANT: Do not start the engine while draining the system.

6. Place the disconnected end of the steering gear-to-reservoir hose in a drain pan. Raise the front of the vehicle with a floor jack and support it with jack stands. Have someone turn the steering wheel to full lock left and right. Capture the fluid flowing from the hose in a drain pan. Add fluid to the reservoir as needed. When clean fluid flows from the hose into the drain pan, remove the plug from the reservoir and reconnect the steering gear-to-reservoir hose to the reservoir. Remove the jack stands and lower the vehicle.
7. With the larger opening at the top, install a new filter in the reservoir.
8. Clean the reservoir cover and gasket. Inspect the O-ring and the cover for cracks, deformities, or damage. Replace the gasket seal or cover as needed.
9. Install the reservoir cover along with the spring and the top plate. Make sure the center of the top plate fits into the opening at the top of the filter.
10. Place the clamp over the flanges of the cover and shell assembly, then tighten the clamp 25 to 30 lbf·ft (35 to 40 N·m).
11. Fill the reservoir with Dexron® III automatic transmission fluid to the FULL COLD mark.
12. Start the engine and operate it at idle. Turn the steering wheel to full lock left and right to adjust the fluid level and remove any existing air from the power steering pump and gear. Check the fluid level again. Add fluid as needed. The system is properly bled when the steering pump does not labor when turning the wheel.
13. Check for leaks in the system and repair as needed. Fill the reservoir as needed.
14. Turn off the engine, close the hood, and remove the chocks from the tires.

Plastic Ventra Reservoir

NOTE: If the power steering reservoir in the vehicle looks like the reservoir shown in **Fig. 4**, use the following procedure.

1. Turn off the engine, apply the parking brakes, and chock the tires.

https://truckmanualshub.com/

2. Open the hood.
3. Place a drain pan under the power steering reservoir.
4. Remove the retaining ring from the reservoir. See **Fig. 4**.
5. Remove the filter and filter cover from the reservoir. Drain the fluid from the filter into the drain pan. Leave the filter hanging over the drain pan.
6. Remove the bolts, nuts, and washers that attach the reservoir to the mounting bracket. Drain the fluid from the reservoir, but do not remove the supply line to the reservoir.
7. Using bolts, nuts, and washers, attach the reservoir to the mounting bracket.
8. Fill the reservoir with Dexron® III automatic transmission fluid to the line between the MIN COLD and MAX HOT lines. See **Fig. 4**.
9. Raise the front of the vehicle and support it with jack stands.
10. Start the engine and operate it at idle. Turn the steering wheel from full left to full right several times until clean fluid starts flowing from the steering filter. Add fluid to the reservoir to maintain the fluid level between the MIN COLD and MAX HOT lines.
11. Shut down the engine and install the filter and filter cover in the reservoir. Make sure that the gasket under the filter cover is not damaged. If the gasket is damaged, replace it. Install the gasket on the reservoir.
12. Attach the retaining ring to the reservoir to secure the filter and filter cover.
13. Start the engine and check that the fluid level is between the MIN COLD and MAX HOT lines. Add more fluid if needed.
14. Raise the vehicle, remove the jack stands, and lower the vehicle.
15. Close the hood, and remove the chocks from the tires.

46–05 Power Steering Gear Lubricating

1. Wipe off debris from the grease fitting. See **Fig. 5**.
2. Using a hand-type grease gun, apply multipurpose chassis grease until the grease starts coming out of the sector shaft dirt and water seal.

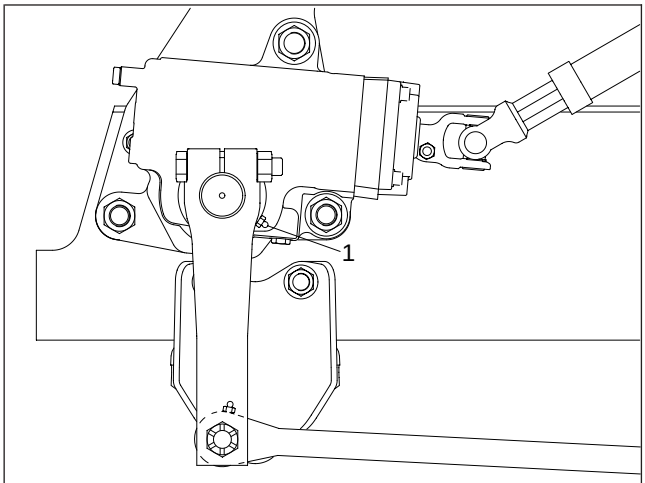

04/13/93 f460515a

1. Sector Shaft Grease Fitting

Fig. 5, Sector Shaft, TRW TAS Series

https://truckmanualshub.com/

Index, Alphabetical

Title of Maintenance Operation (MOP) **MOP Number**

Fuel Tank Draining and Vent Checking 47–01

https://truckmanualshub.com/

47–01 Fuel Tank Draining and Vent Checking

Remove the plug or open the drain valve at the bottom of the fuel tank, and allow the tank to drain until all traces of water and sediment have disappeared; install the plug or close the drain valve.

On earlier vehicles with a screw-on fuel cap, remove the fuel cap and clean it with solvent. Make sure the fuel cap vent is open. Install the cap.

On vehicles with a quarter-turn fuel cap, check to be sure the vent line at the inboard side of the fuel tank is clean and not plugged.

https://truckmanualshub.com/

Index, Alphabetical

Title of Maintenance Operation (MOP) **MOP Number**

Exhaust System Inspecting (Noise Emission Controls). 49–01

https://truckmanualshub.com/

49–01 Exhaust System Inspecting (Noise Emission Controls)

NOTE: In addition to the maintenance interval in this manual, inspect the exhaust system if the vehicle has a noticeable increase in noise level at any time. Replace parts that show leakage, wear, or damage.

Pre-EPA07 Exhaust System Inspecting

1. Check the muffler body, muffler outlet stack, muffler shield, and inlet tubes, for leakage, dents, corrosion, or holes in the muffler.
2. Inspect the exhaust pipe for leakage, wear, or damage; replace with new parts, if needed. Do not reuse wide-band clamps. Once a clamp is removed, it must be replaced.
   - 2.1 On Caterpillar and Cummins engines, check for leakage at the V-type clamp that attaches the exhaust pipe to the turbocharger exhaust outlet. If leakage exists, tighten the nut on the V-type clamp 85 lbf·in (940 N·cm). If leakage persists, install a new V-band coupling.
   - 2.2 On Mercedes-Benz MBE900 engines, check the tightness of the fasteners that attach the exhaust pipe to the exhaust flange (see **Fig. 1**). If needed, tighten the fasteners 33 lbf·ft (45 N·m) for Mercedes-Benz MBE900 engines.
3. Check for leakage at each wide-band exhaust clamp (see **Fig. 2**). If leakage exists, tighten the nuts 40 to 60 lbf·ft (54 to 81 N·m). If leakage persists, install a new wide-band exhaust clamp. See **Group 49** of the *Acterra® Workshop Manual* for instructions.

EPA07 Exhaust System Inspecting

IMPORTANT: The Environmental Protection Agency's 2007 regulations require lower exhaust emissions, thus requiring new exhaust system components. See **Fig. 3**. In particular the after-treatment device (ATD), which is part of the after-treatment system (ATS), requires special attention during regularly scheduled maintenance inspections. If any discrepancies are discovered, refer to the engine manufacturer's service literature for repair instructions.

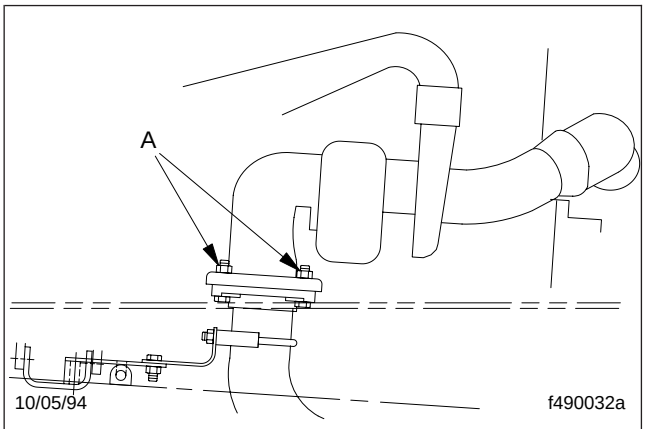

A. Check the Tightness of These Fasteners

Fig. 1, Typical Exhaust-Pipe to Exhaust-Flange Fasteners

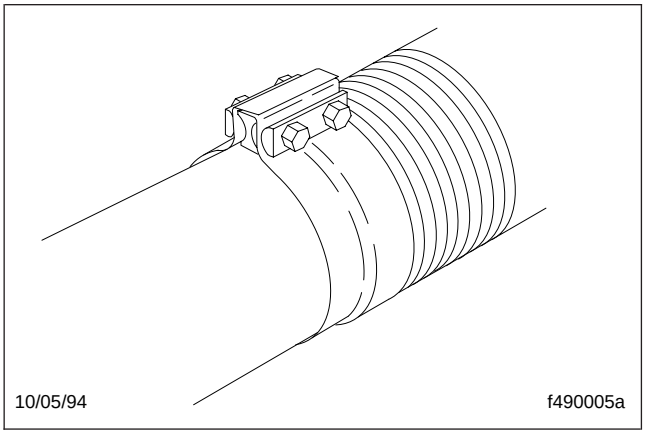

Fig. 2, Wide-Band Exhaust Clamp

Definitions of ATS Components

Refer to the following list of definitions of ATS components.

- After-Treatment System (ATS)—the entire exhaust system from the turbocharger to the exhaust stack or tail pipe.
- After-Treatment Device (ATD)—a muffler-like canister that houses a DPF, DOC, and sensors.

https://truckmanualshub.com/

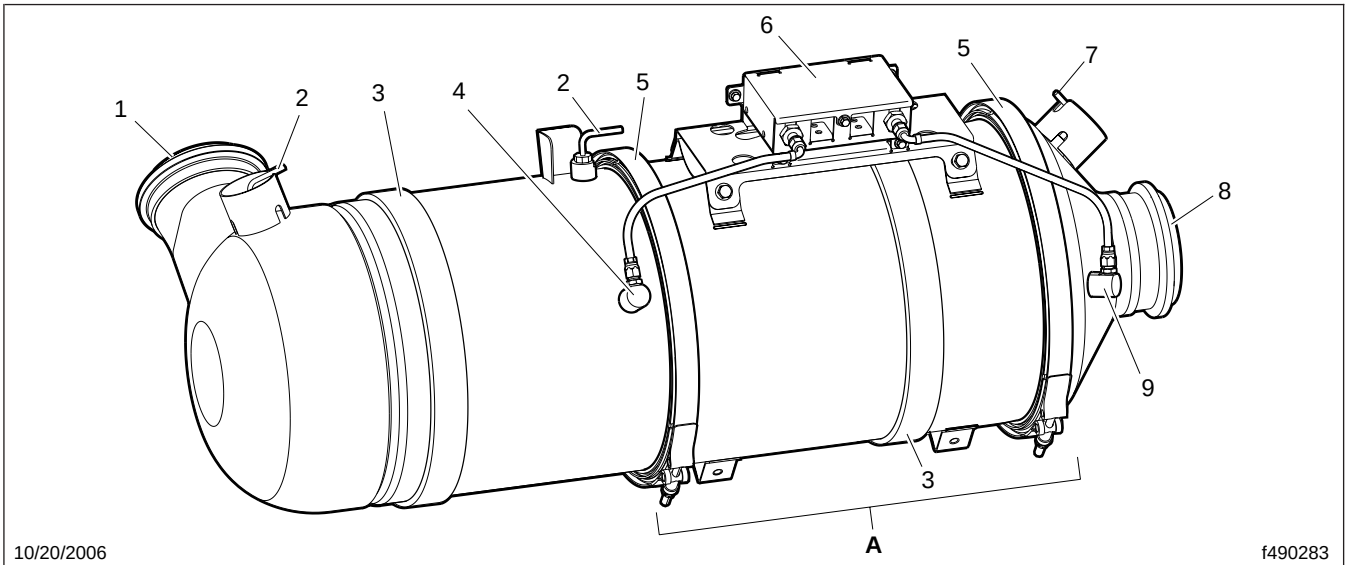

A. Inspect this area of the canister for dents.
1. Marmon Fitting at Inlet from Turbocharger
2. DOC Temperature Sensor
3. ATD Mounting Band
4. DPF Intake Pressure Sensor
5. DPF V-Band Mounting Clamps
6. Sensor Housing
7. DPF Outlet Temperature Sensor
8. Exhaust Outlet Marmon Fitting
9. DPF Outlet Pressure Sensor

Fig. 3, Typical After-Treatment Device

- Diesel Particulate Filter (DPF)—a filter that collects and holds particulate matter (soot and ash).
- Diesel Oxidation Catalyst (DOC)—oxidizes hydrocarbons and reduces NOx.
- Sensors—detect temperatures and pressures in the ATS.

Inspection

1. Check for leakage at the clamp that attaches the exhaust pipe to the turbocharger exhaust outlet. If leakage exists, tighten the nut on the clamp to the required torque. If leakage persists, install a new clamp.
2. Check the exhaust pipe, bellows, and each exhaust seal clamp for leakage, wear, cracks, or damage. Replace damaged components as needed. If leakage exists at a clamp, tighten the nuts to the required torque. If leakage persists, install a new exhaust seal clamp. Do not reuse seal clamps. Once a seal clamp is loosened or removed, it must be replaced.
3. If present, check the condition of the insulation material around the exhaust pipe between the turbocharger and the ATD.
4. Check the ATD mounting bands for tightness. Tighten to 30 lbf·ft (41 N·m) if needed. Do not overtighten.
5. Check for leaks around the clamps that attach the ATD in the ATS, and around the clamps that retain the DPF in the ATD. No leaks are allowed anywhere in the system.
6. Check all sensors attached to the ATD for leaks or damaged wires. No leaks are allowed.
7. Check the DPF exterior surface for dents or other damage. See Item A of **Fig. 3**. A dent over 3 inches (76 mm) in diameter and 1/4-inch (6-mm) deep could cause internal damage to the DPF, causing it to malfunction.
8. Check for heat discoloration on the surface of the ATD. Heat discoloration may indicate internal damage; especially around the DPF.

https://truckmanualshub.com/

9. Check any wires, lines, or hoses within 4 inches (10 cm) of the exhaust system for heat damage. Repair or reroute as needed.

https://truckmanualshub.com/

Index, Alphabetical

Title of Maintenance Operation (MOP)	MOP Number
Coolant Level Sensor Cleaning	54–02
Electrical System Checking	54–01

https://truckmanualshub.com/

54–01 Electrical System Checking

Cab

1. Uncover the electrical panel (see **Fig. 1**) by removing the fasteners.

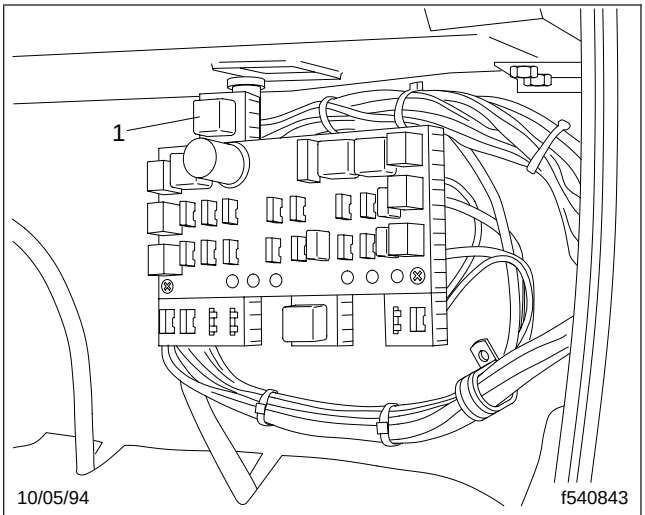

1. Flasher

Fig. 1, Under-Dash Electrical Panel

2. Check the wiring harness for movement that could strain the electrical connections. Install more clamps on the harness, if needed.
3. Check all the wiring for chafing, kinks, and discolored insulation. Find the cause of any problems, then repair, replace, or reroute the wires, as needed.
4. Check that all the relays are firmly seated in their mounting plates.
5. Check the turn-signal flasher (if so equipped). See **Fig. 1.** Make sure that the two male and female connectors are firmly connected. Check that the flasher fuse is firmly seated in its holder.
6. Check the cigarette lighter. Look inside the socket for signs of overheating (discoloration, melting) caused by misuse of the lighter socket.
7. Test the electric horn. If it does not work, check the adjustment screw on the horn unit. Turn the screw in or out, until the horn works. If the horn still does not work, check the wiring to it. If the wiring checks out okay, replace the horn.
8. Check connectors on the right side of the firewall, below the radiator surge tank. See **Fig. 2.** Check the terminals for tightness, damage, and corrosion or dirt.

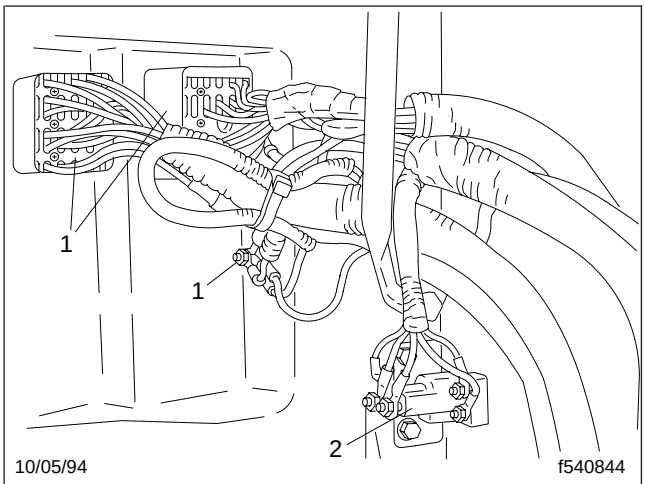

1. Electrical Connectors 2. Magnetic Switch

Fig. 2, Right Side of the Firewall

9. Check the seven-way trailer cable plug at the back of the cab. Make sure all the pins are tight and free of dirt and grease.

Chassis

1. Check the main wiring harness. Check the wiring insulation for damage from chafing or heat. Also check for kinks. Reroute, repair, or replace the wires as needed.
2. Check all the tie straps for breakage or damage. Replace any broken or cracked tie straps.

CAUTION

Do not use flat-strip aluminum tie straps for holding electrical wiring. The sharp edges on these tie straps may cause breaks in the wire insulation, allowing the aluminum tie strap to make contact with the wire. This could cause a short circuit and damage to the wiring.

3. Check the temperature sending units on the axles and transmission. Check for damaged wires and loose connectors.

https://truckmanualshub.com/

54–02 Coolant Level Sensor Cleaning

1. Drain enough coolant from the radiator to expose the coolant level sensor.
2. Disconnect wire 173 from the sensor in the radiator surge tank. Remove the sensor from the surge tank.
3. Using a fine-grit sandpaper, clean the sensor until the metal is exposed. Clean the tapped hole with a wire brush.
4. Install the sensor (do not seal the sensor threads with tape), and reconnect wire 173. Fill the cooling system to the proper level.
5. Start the engine. The LOW WTR light and warning buzzer should be off. If the light and buzzer are off, the sensor is okay. If the light and buzzer are on, replace the sensor.

https://truckmanualshub.com/

Index, Alphabetical

Title of Maintenance Operation (MOP) **MOP Number**

Weatherstrip, Door Latch, and Door Hinge Lubricating 72–01

https://truckmanualshub.com/

72–01 Weatherstrip, Door Latch, and Door Hinge Lubricating

Lightly coat door weatherstrips with a lubricant that is safe (as recommended by the lubricant manufacturer) on rubber.

Apply a few drops of light engine oil, or spray a light coating of silicone lubricant on the door latch mechanism. This will help reduce noise and wear. Wipe off any excess oil or silicone lubricant.

Lubricate door hinges by spraying them with a light coating of silicone lubricant.

Always lubricate new cab-door hinges at installation.

https://truckmanualshub.com/

Index, Alphabetical

Title of Maintenance Operation (MOP)	MOP Number
Air Conditioner Inspecting	83–01
HVAC Air Filter Replacing	83–02

https://truckmanualshub.com/

83–01 Air Conditioner Inspecting

⚠ WARNING

Wear eye protection, gloves, and protective clothing when working on the air conditioning system. Leaking refrigerant from a damaged hose or line could cause blindness or serious skin burns.

Preliminary Checks

1. Park the vehicle on a level surface, apply the parking brakes, and chock the tires.
2. Check the appearance of the air conditioner compressor pulley assembly. If the friction surface of the pulley shows signs of excessive grooving due to belt slippage, replace both the pulley and the drive plate. Visually inspect the refrigerant compressor drive belt for damage, and check that the belt is set at the proper tension. Also check the tightness of the compressor mounting fasteners. For instructions and torque values, see **Group 01** of the *Acterra® Workshop Manual*.
3. Inspect the drive plate. If the friction surface of the drive plate shows visible signs of damage due to excessive heat, replace the drive plate and pulley assembly. in **Group 83** of the *Acterra® Workshop Manual* for removal and installation procedures.
4. On a Sanden refrigerant compressor, use a feeler gauge to check that the drive plate clutch clearance is 0.016 to 0.03 inch (0.4 to 0.8 mm). See **Fig. 1**. If the drive plate clutch requires adjustment, see **Group 83** of the *Acterra® Workshop Manual*.

   On a Climate Control refrigerant compressor, place a feeler gauge between the air conditioner compressor clutch and the pulley to check the compressor clutch clearance. Drive plate to pulley clearance is 0.02 to 0.03 inch (0.6 to 0.8 mm). If the clearance is not correct, see **Group 83** of the *Acterra® Workshop Manual*
5. Inspect the compressor clutch coil wire. Check that the connector is not damaged or loose. Replace the wire if it is damaged.

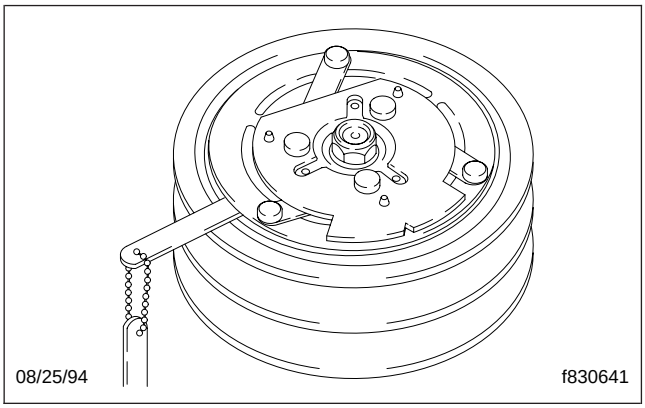

Fig. 1, Drive Plate Clearance Inspection

6. Check the overall condition of the air conditioning hoses. Look for cracks, cuts, and abrasions on the hoses. Replace damaged hoses. See **Group 83** of the *Acterra® Workshop Manual* for replacement instructions. Also, check for loose fittings on all air conditioning components.
7. Check for a buildup of road debris on the condenser fins. See **Group 83** of the *Acterra® Workshop Manual* for cleaning instructions.

83–02 HVAC Air Filter Replacing

The air filter must be replaced every six months, regardless of mileage, to permit proper operation of the HVAC system.

IMPORTANT: When replacing the air filter, use only a Sterling-approved air filter.

1. Turn off the engine, apply the parking brakes, and chock the tires.
2. Open the hood.
3. Remove the screws that attach the filter cover to the filter housing. See **Fig. 2**.

IMPORTANT: Do not operate the vehicle with the filter removed. Dust and debris could enter the blower motor and cause damage.

4. Remove the filter from the housing.
5. Install a new filter in the housing.
6. Using screws, attach the filter cover to the housing.

https://truckmanualshub.com/

7. Close the hood.
8. Remove the chocks from the tires.

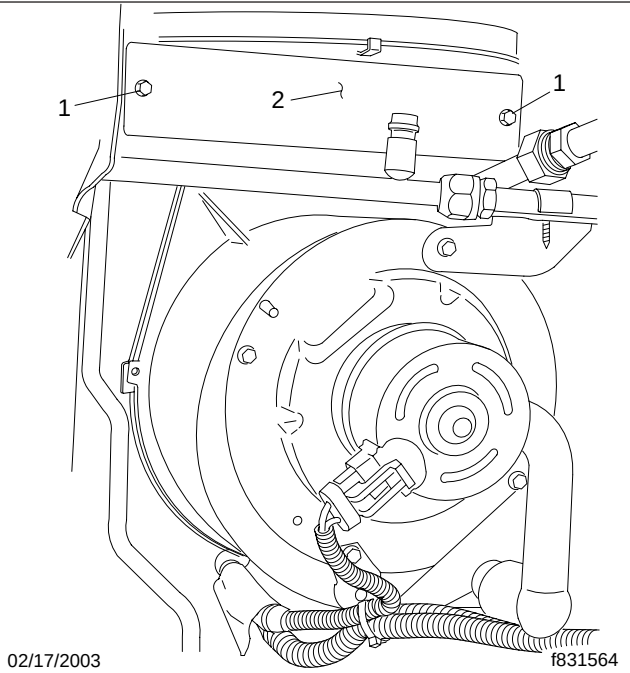

1. Screw 2. Filter Cover

Fig. 2, Air Filter Replacement