Schäffer

The compact class

2020 | 2024 | 2028
2030 | 2030 S | 2034
2336 | 2345

The SLT-class:

Low style Loader
2024 SLT | 2028 SLT | 2030 SLT
2336 SLT | 2345 SLT

Superiority in compact format

Yard-, Wheel- and Telescopic Loaders ...

from 15 kW (20 HP) to 115 kW (157 HP). At Schäffer Loaders, we have a proud 50 year history of creating loaders for individual requirements. Our customers have made us what we are today: one of the world's most competitive and successful suppliers of yard loaders, wheel loaders and telescopic loaders. Every day our team creates new custom solutions that combine years of experience with a spirit of innovation. Our products set industry standards for reliability and durability, which means you save with lower servicing costs over the life of your vehicle. The Schaffer name is your assurance of superior performance, safety and comfort for years to come.

Schäffer

The Schäffer *Compact Class:* Superiority in compact Format

The compact class is one of the most successful series ever built by SCHÄFFER. They have been specifically developed for use in confined spaces. No compromises were, however, made as regards reliability and ergonomics. In line with all other SCHÄFFER models, the machines of the compact class stand for excellent safety and low operating costs.
They thus meet the requirements of users in agriculture, manufacture, horticulture, landscape gardening and the equestrian sector as well as in the building industry. A wide range of equipment and attachments made the machines extremely versatile.

The Compact class

2020	15 kW (20 HP)		
2024	19 kW (26 HP)	2024 SLT	19 kW (26 HP)
2028	19 kW (26 HP)	2028 SLT	19 kW (26 HP)
2030	22 kW (30 HP)	2030 SLT	22 kW (30 HP)
2030 S	24 kW (33 HP)	2034	24 kW (33 HP)
2336	26 kW (36 HP)	2336 SLT	26 kW (36 HP)
2345	33 kW (45 HP)	2345 SLT	33 kW (45 HP)

https://truckmanualshub.com/ 4

Schäffer

Schäffer Loader 2020 and 2024: Simple, efficient and good value for money.

Especially in the tightest of spots these loaders are very useful. With an overall width of 79 cm the Schäffer 2020 will pass through almost every door. With 89 cm his big brother is only marginally wider. Also in previously inaccessible buildings manual work can be mechanized. The job will be done faster, easier and more productive.
The appearance of the machines is very similar. The differences mainly manifest themselves in different transmission systems. Thanks to their simple technology, the 2020 and 2024 models offer the most affordable entry into the Schäffer World. The machines have the same high quality as all Schäffer loaders. They retain their value over years. Also the most compact Schäffer achieve high prices as a second hand machine.

https://truckmanualshub.com/ 5

With the Schäffer headstock SWH the coupling of all attachments is a breeze. The hydraulic lock is standard and very comfortable. Genuine Schäffer attachments are also equipped with the double hook frame. Thus, the roll back and dump angle are adjusted easily. For materials such as grain a larger roll back angle is preferable. A larger dump angle is good for other material such as soil - simple, flexible, ingenious.

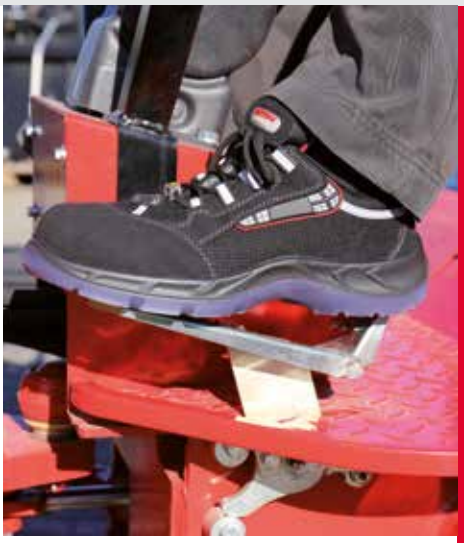

Schäffer 2020 and 2024 with hydraulic drive and foot pedal control

With the hydrualic four-wheel-drive foot pedal controlled the loaders 2020 and 2024 can be operated very easily. The diesel engine rpm is adjusted depending on conditions of use via hand throttle or accelerator. The direction of travel and velocity is controlled with a pedal on the left side of the machine. This outstanding ease of operation makes the machine very manoeuvrable. With a lot of changes in speed and direction especially in hard areas, give a great advantage.

https://truckmanualshub.com/ 6

Schäffer

The Schäffer loader 2028 and 2030: The compact energy machine with automotive control

There are nearly no other loaders in this class which could take on the Schäffer 2028 and 2030 with regard to traction force and agility. The performance of the Kubota diesel engine is transferred by the hydrostatic drive and the original Schäffer axles into the highest traction force.

Due to the automotive control the speed of the Diesel engine always adapts automatically to the called force. A stalling of the engine is not possible; it always works within the optimal range of speeds. The pulses of the gas pedal are immediately turned; the loader is always gas-driven. Compared to the previous models, the traction force has been increased once again due to the use of the latest drive components. The Schäffer loaders 2028 and 2030: They move more than you would expect.

Schäffer

https://truckmanualshub.com/ 8

Schäffer

The Schäffer 2034: The Loader In The 2t Class

The Schäffer 2034 is an agile loader that has an exceptional motor in its basic execution with a 3 cylinder Kubota motor with 24 kW (33 HP). An even more powerful motor with 26 kW (36 HP) is available as an option. In addition to its increased performance, the customer will benefit from 200 cm^3 more engine room. The torque that has been increased by 15% already starts at 1700 RPM. With that, the 2034 can be driven at lower speeds. The Schäffer axles constructed especially for this loader type will guarantee the greatest amount of pushing power. The power of the hydrostatic drive has been ideally implemented to minimize the consumption of diesel fuel. The low-maintenance and low-wear multi-disc brakes are standard features of this series. They will run through the oil bath and shine through their best braking performance with the best capability. As with all Schäffer loaders, the pivoting articulation is absolutely maintenance free.

https://truckmanualshub.com/9

The motor room opens forwards. This makes all service points easily accessible from both sides of the machine.

Even the ergonomics of this loader are exceptional. The driver has a lot of room despite the very compact dimensions of this machine. The driver will be able to work more comfortably thanks to the optimized positioning of the joystick and steering wheel.

https://truckmanualshub.com/ 10

Schäffer

The Schäffer 2300 Series: Customized Loaders

The 2300 series is hard to beat when it comes to equipment variants. Schäffer is able to offer customized loaders.No matter in which specification the loader will be delivered: The high Schäffer quality is certainly built in. Thus, the strength of the maintenance-free pendulum/articulation joint was increased again. The significant increased tipping loads are coped with easiness. Even in ergonomics the Schäffer loaders are at top of their class. The driver has more space and is pleased with perfectly operable working hydraulics. The powerful four wheel traction drive is fun. The new 4 cylinder motors are running extremly smooth. Independent benchmark tests confirm the high level of Schäffer quality again and again.

The 2300 series of Schäffer: advantages at a glance

Adjustable steering column

You can choose between a protection roof or cab.

Kubota: World market leader of compact diesel motors. Clean, moneysaving, powerful.

Original Schäffer axles: very strong, high pushing power due to best setup of axle, hydrostatic drive and diesel engine, payload of 5 t per axle.

Operators platform with less vibrations.

Schäffer Axles – For greater Safety and Stability

Schäffer axles are optimised for each model. The force of the hydrostatic drive system is converted into high thrust forces. The loader is equipped with a wear-resistant "Easy Brake" multi-disc brake. This technology is normally only used in high-capacity wheel loaders.

Great Powers at work ...

Kubota is the world's leading manufacturer of compact diesel engines. The engines built into the latest generation of Schäffer loaders consume even less fuel, and their fume and soot emissions were also reduced. Noise is also not an issue, as the modern GRP bonnet does not only look great but effectively reduces the noise of the engine. Mechanics and drivers will be pleased to know that they can now replace the oil filter without having to strain their fingers.

Ball bearing joints for long lifetime expectancy.

One strong lifting cylinder: narrow front chassis, perfect view forward, no tension.

Hydraulic quickhitch as standard. Choose between type SWH or 5 P.

Versatile due to big range of tools and optional equipment.

Maintenance free articulated pendulum joint with extended warranty.

CAD optimized lifting arm, best lifting height and reach, perfect parallel lift.

Technical Data

	2020	2024	2028	2030
Engine	3 cyl. Kubota 15 kW (20 HP)	3 cyl. Kubota 19 kW (26 HP)	3 cyl. Kubota 19 kW (26 HP)	3 cyl. Kubota 22 kW (30 HP)
Driving hydraulics	Hydraulic	Hydraulic	Hydrostatic-automotive	Hydrostatic-automotive
Tyres	7.00-12 AS Option I 27x8.50-15 SKD Option II 27x10.5-15 SKD Option III 26x12.00-12	7.00-12 AS Option I 27x8.50-15 SKD Option II 27x10.5-15 SKD Option III 26x12.00-12	7.00-12 AS Option I 27x8.50-15 SKD Option II 27x10.5-15 SKD Option III 26x12.00-12	7.00-12 AS Option I 27x8.50-15 SKD Option II 27x10.5-15 SKD Option III 26x12.00-12
Service brake	Mechanical drum brake	Mechanical drum brake	Hydrostatic mechanical drum brake	Hydrostatic mechanical drum brake
Parking brake	Mechanical drum brake	Mechanical drum brake	Mechanical drum brake	Mechanical drum brake
Working hydraulics **Steering hydraulics**	Pump output: 31 l/min Working pressure: 180 bar	Pump output: 33 l/min Working pressure: 200 bar	Pump output: 33 l/min Working pressure: 200 bar	Pump output: 33 l/min Working pressure: 200 bar
Steering	Fully hydraulic articulated steering system	Fully hydraulic articulated steering system	Fully hydraulic articulated steering system	Fully hydraulic articulated steering system
Lifting capacity	1.200 kg	1.400 kg	1.500 kg	1.500 kg
Tipping load (straight)	750 kg*	850 kg*	920 kg*	920 kg*
Tipping load (articulated)	350 kg*	480 kg*	550 kg*	550 kg*
Axles	Original Schäffer axles, 4 wheel nut rim	Original Schäffer axles, 4 wheel nut rim	Original Schäffer axles, 4 wheel nut rim	Original Schäffer axles, 4 wheel nut rim
Operating weight	1.400 kg	1.700 kg	1.760 kg	1.800 kg
Speed	0 – 12 km/h	0 – 12 km/h	0 – 15 km/h	0 – 15 km/h
Electrical system	Operating voltage 12 V	Operating voltage 12 V	Operating voltage 12 V	Operating voltage 12 V
Tank capacities	Fuel: 18 l Hydraulic fluid: 26 l	Fuel: 23 l Hydraulic fluid: 30 l	Fuel: 23 l Hydraulic fluid: 30 l	Fuel: 23 l Hydraulic fluid: 30 l

* Pallet fork and load arm in transport condition.

Schäffer

	2030 S	2034	2336	2345
Engine	3 cyl. Kubota 24 kW (33 HP)	3 cyl. Kubota 24 kW (33 HP) Option: 26 kW (36 HP)	4 cyl. Kubota 26 kW (36 HP)	4 cyl. Kubota Turbo 33 kW (45 HP)
Driving hydraulics	Hydrostatic-automotive	Hydrostatic-automotive	Hydrostatic-automotive, HTF	Hydrostatic-automotive, HTF
Tyres	10.0/75 - 15.3 AS Option I 27x10.5-15 SKD Option II 26x12.00-12 Option III 31x15.5-15	10.0/75 - 15.3 AS Option I 27x10.5-15 SKD Option II 31x15.5-15	10.0/75 - 15.3 AS Option I 27x10.5-15 SKD Option II 31x15.5-15	10.0/75 - 15.3 AS Option I 27x10.5-15 SKD Option II 31x15.5-15
Service brake	Hydrostatic/ mechanical drum brake	Hydrostatic and multiple-disk	Hydrostatic and multiple-disk	Hydrostatic and multiple-disk
Parking brake	Mechanical drum brake	Multi-disc brake	Multi-disc brake	Multi-disc brake
Working hydraulics **Steering hydraulics**	Pump output: 33 l/min Working pressure: 200 bar	Pump output: 40 l/min Working pressure: 200 bar	Pump output: 42 l/min Working pressure: 200 bar	Pump output: 42 l/min Working pressure: 200 bar
Steering	Fully hydraulic articulated steering system	Fully hydraulic articulated steering system	Fully hydraulic articulated steering system	Fully hydraulic articulated steering system
Lifting capacity	1.600 kg	1.600 kg	1.700 kg	1.700 kg
Tipping load (straight)	1.000 kg*	1.000 kg*	1.200 kg*	1.300 kg*
Tipping load (articulated)	720 kg*	720 kg*	900 kg*	930 kg*
Axles	Original SCHÄFFER axles, 4 wheel nut rim	Original SCHÄFFER axles, 5 wheel nut rim; Option: automatic limited-slip differential	Original SCHÄFFER axles, 6 wheel nut rim; Option: automatic limited-slip differential	Original SCHÄFFER axles, 6 wheel nut rim; Option: automatic limited-slip differential
Operating weight	1.980 kg/2.180 kg with cab	2.100 kg/2.300 kg with cab	2.300 kg/2.500 kg with cab	2.350 kg/2.550 kg with cab
Speed	0 – 15 km/h	0 – 15 km/h Option: 0– 20 km/h	0– 20 km/h in 2 speed gear switching under load possible Option: 0–28 km/h	0– 20 km/h in 2 speed gear switching under load possible Option: 0–28 km/h
Electrical system	Operating voltage 12 V	Operating voltage 12 V	Operating voltage 12 V	Operating voltage 12 V
Tank capacities	Fuel: 23 l Hydraulic fluid: 30 l	Fuel: 40 l Hydraulic fluid: 30 l	Fuel: 40 l Hydraulic fluid: 30 l	Fuel: 40 l Hydraulic fluid: 30 l

* Pallet fork and load arm in transport condition.

Dimensions

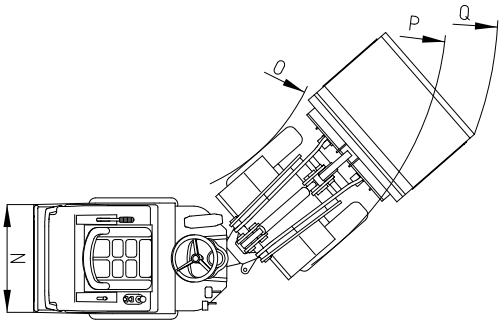

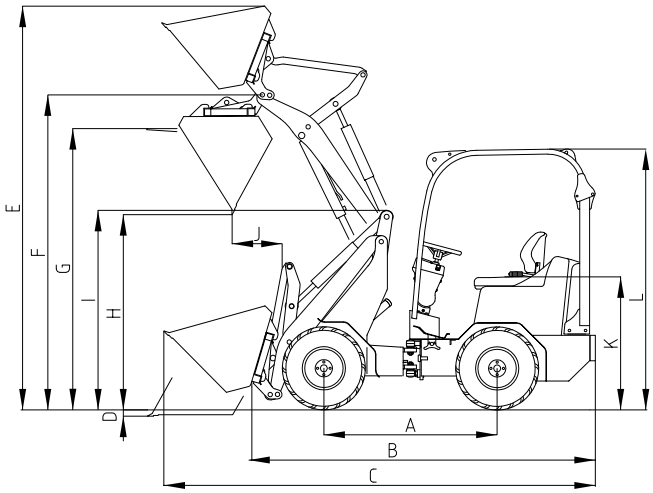

		2020	2024	2028	2030
A	Axle base [mm]	1.375	1.375	1.375	1.375
B	Chassis length [mm]	2.600	2.780	2.780	2.780
C	Total length with standard bucket [mm]	3.330	3.530	3.530	3.530
D	Excavating depth [mm]	110	110	110	110
E	Max. working height [mm]	3.180	3.460	3.460/3.720*	3.460/3.720*
F	Max. bucket pivot point [mm]	2.470	2.800/3.060*	2.800/3.060*	2.800/3.060*
G	Max. loading height with pallet fork [mm]	2.335	2.560	2.560/2.920*	2.560/2.920*
H	Max. dump height [mm]	1.710	1.965/2.265*	1.965/2.265*	1.965/2.265*
I	Reach [mm]	1.540	1.600	1.600/1.725*	1.600/1.725*
J	Dump range [mm]	580	440	440	440
K	Seat height [mm]	1.020	1.055	1.055	1.055
L	Height with protective roof [mm] Height over cab [mm]	2.070 –	2.090 –	2.090 –	2.090 –
N	Total width [mm]	790 – 1.150	890 – 1.240	890 – 1.240	890 – 1.240
O	Track arc inside [mm]	530	660	660	660
P	Track arc outside [mm]	1.515	1.560	1.560	1.560
Q	External radius with standard bucket [mm]	1.800	1.950	1.950	1.950

Schäffer

		2030 S	2034	2336	2345
A	Axle base [mm]	1.410	1.410	1.550	1.550
B	Chassis length [mm]	2.930	2.930	3.230	3.230
C	Total length with standard bucket [mm]	3.610	3.610	3.880	3.880
D	Excavating depth [mm]	110	110	90	90
E	Max. working height [mm]	3.540/3.770*	3.540/3.770*	3.570/3.800*	3.570/3.800*
F	Max. bucket pivot point [mm]	2.880 / 3.110*	2.880 / 3.110*	2.880 / 3.110*	2.880 / 3.110*
G	Max. loading height with pallet fork [mm]	2.640 / 2.970*	2.640 / 2.970*	2.680 / 3.100*	2.680 / 3.100*
H	Max. dump height [mm]	2.045/ 2.300*	2.045/ 2.300*	2.045/ 2.300*	2.045/ 2.300*
I	Reach [mm]	1.680/1.780*	1.680/1.780*	1.690/1.790*	1.690/1.790*
J	Dump range [mm]	440	440	470	470
K	Seat height [mm]	1.160	1.160	1.160	1.160
L	Height with protective roof [mm] Height over cab [mm]	2.220 2.150	2.220 2.150	2.215 2.110	2.215 2.110
N	Total width [mm]	1.020 – 1.290	1.020 – 1.290	1.020 – 1.390	1.020 – 1.390
O	Track arc inside [mm]	580	580	800	800
P	Track arc outside [mm]	1.600	1.600	1.820	1.820
Q	External radius with standard bucket [mm]	1.950	1.950	2.250	2.250

* high lift version

All technical specifications in this prospectus refer to serial models and describe their standard functions. Tipping loads and parallel motion are not guarantee when using a foreign heastock. The equipment components and their functions as well as the accessories depend on the individual model and the product options and also on the country and customer specific requirements. Images may contain products or equipment components which are not mentioned or cannot be obtained as a standard. The descriptions, measurements, images, weight specifications and technical data correspond to the state of the art at the time of printing and are non-binding.
We reserve changes in the field of construction, equipment, optics and technology without prior notice, due to the continuous development of the products. In case of doubts concerning the performance or the mode of operation of our products due to special circumstances, we recommend the execution of work samples under controlled conditions. We cannot exclude deviations from images or measurements, calculation errors, printing errors or incompleteness in the prospectus despite all due care. We do therefore not accept any liability for the correctness and completeness of the specifications in this prospectus. We do guarantee the proper functioning of our products within the scope of our General Terms and Conditions. Any guarantees that go beyond these are on principle not provided. Any liability beyond the ones set out in our General Terms and Conditions is excluded.

The Schäffer 2024 SLT, 2028 SLT and 2030 SLT
with low overall height

If you need a small loader for jobs in hard to reach areas you will find this interesting: The SLT loaders are specially designed for use in narrow passage ways and restricted head room. The 2030 SLT with a total height of 1.89 m and a minimum width of 89 cm is one of the most compact loaders you will find on the market. The 1.8 t loader is a real power pack and ideal for use under roof with narrow operating conditions. With a tipping load of 920 kg it also moves heavy silage bales safely. The protective effect of the roof from falling objects always remains, because it is not necessary to fold down the roof to pass low sections like it is on other brands.
The 22 kW (30 HP) 2030 SLT is equipped with a hydrostatic drive and provides the typical Schäffer high traction force. The model 2028 SLT offers the same chassis as the 2030 SLT's and with a 19 kw (26 HP) Kubota diesel engine it is still very strong. The 2024 SLT is another loader with the same engine. This version has a simple hydraulic drive and will be interesting for customers who want to buy a new Schaeffer at the lowest possible price.

https://truckmanualshub.com/ 17

Schäffer

The front and rear bonnet are easy to swing up. Due to the good access maintenance jobs are very facilitating.

https://truckmanualshub.com/ 18

Schäffer loader SLT: overall height less than 2.00 m

The 2336 SLT with a total height of only 1.95 m (depending on wheels) will be able to master the majority of low sections. Compared to the normal 2336, the diesel engine was placed slightly further back and the wheelbase was lengthened. So room for the lower seating position has been created, which make getting on and off the loader even easier. The ergonomics is quite similar to the standard model. The loader offers also for tall drivers more than enough space. The longer wheelbase has a positive effect also on the tipping load which sticks out with 1250 kg. With the ground clearance, there are no differences to normal machine. The SLT protective roof still meets the guidelines according to ROPS and FOPS test standard.

The Schaeffer 2336 SLT is a very agile loader which is equipped with a smooth-running 4-cylinder engine with Kubota 26 kW. Alternatively, a more powerful version with 33 kW (2345 SLT) is available. The speed of the 2336 SLT is 15 km/h. An under load switchable fast gear (20 km/h) is available as an option.

https://truckmanualshub.com/ 19

Getting on and off the machine is very easy.

The slightly twisted joystick position simplifies operation.

The available space for the driver is excellent.

Technical Data

Schäffer SLT

	2024 SLT	2028 SLT	2030 SLT
Engine	3 cyl. Kubota 19 kW (26 HP)	3 cyl. Kubota 19 kW (26 HP)	3 cyl. Kubota 22 kW (30 HP)
Driving hydraulics	Hydraulic	Hydrostatic-automotive	Hydrostatic-automotive
Tyres	7.00-12 AS Option I 27x8.50-15 SKD Option II 27x10.5-15 SKD Option III 26x12.00-12	7.00-12 AS Option I 27x8.50-15 SKD Option II 27x10.5-15 SKD Option III 26x12.00-12	7.00-12 AS Option I 27x8.50-15 SKD Option II 27x10.5-15 SKD Option III 26x12.00-12
Service brake	Mechanical drum brake	Hydrostatic mechanical drum brake	Hydrostatic mechanical drum brake
Parking brake	Mechanical drum brake	Mechanical drum brake	Mechanical drum brake
Working hydraulics Steering hydraulics	Pump output: 33 l/min Working pressure: 200 bar	Pump output: 33 l/min Working pressure: 200 bar	Pump output: 33 l/min Working pressure: 200 bar
Steering	Fully hydraulic articulated steering system	Fully hydraulic articulated steering system	Fully hydraulic articulated steering system
Lifting capacity	1.400 kg	1.500 kg	1.500 kg
Tipping load (straight)	870 kg*	920 kg*	920 kg*
Tipping load (articulated)	500 kg*	550 kg*	550 kg*
Axles	Original Schäffer axles, 4 wheel nut rim	Original Schäffer axles, 4 wheel nut rim	Original Schäffer axles, 4 wheel nut rim
Operating weight	1.750 kg	1.800 kg	1.850 kg
Speed	0 – 12 km/h	0 – 15 km/h	0 – 15 km/h
Electrical system	Operating voltage 12 V	Operating voltage 12 V	Operating voltage 12 V
Tank capacities	Fuel: 23 l Hydraulic fluid: 30 l	Fuel: 23 l Hydraulic fluid: 30 l	Fuel: 23 l Hydraulic fluid: 30 l

* Pallet fork and load arm in transport condition.

https://truckmanualshub.com/ 21

Schäffer

	2336 SLT	2345 SLT
Engine	4 cyl. Kubota 26 kW (36 HP)	4 cyl. Kubota Turbo 33 kW (45 HP)
Driving hydraulics	Hydrostatic-automotive	Hydrostatic-automotive
Tyres	10.0/75 - 15.3 AS Option I 27x10.5-15 SKD Option II 31x15.5-15	10.0/75 - 15.3 AS Option I 27x10.5-15 SKD Option II 31x15.5-15
Service brake	Hydrostatic and multiple-disk	Hydrostatic and multiple-disk
Parking brake	Multi-disc brake	Multi-disc brake
Working hydraulics Steering hydraulics	Pump output: 42 l/min Working pressure: 200 bar	Pump output: 42 l/min Working pressure: 200 bar
Steering	Fully hydraulic articulated steering system	Fully hydraulic articulated steering system
Lifting capacity	1.700 kg	1.700 kg
Tipping load (straight)	1.250 kg*	1.350 kg*
Tipping load (articulated)	930 kg*	980 kg*
Axles	Original Schäffer axles, 6 wheel nut rim; Option: automatic limited-slip differential	Original Schäffer axles, 6 wheel nut rim; Option: automatic limited-slip differential
Operating weight	2.350 kg	2.380 kg
Speed	0–15 km/h Option: 0–20 km/h	0–15 km/h Option: 0–20 km/h
Electrical system	Operating voltage 12 V	Operating voltage 12 V
Tank capacities	Fuel: 40 l Hydraulic fluid: 30 l	Fuel: 40 l Hydraulic fluid: 30 l

* Pallet fork and load arm in transport condition.

Dimensions

Schäffer SLT

		2024 SLT	2028 SLT	2030 SLT
A	Axle base [mm]	1.640	1.640	1.640
B	Chassis length [mm]	3.160	3.160	3.160
C	Total length with standard bucket [mm]	3.630	3.630	3.630
D	Excavating depth [mm]	110	110	110
E	Max. working height [mm]	3.460/3.720*	3.460/3.720*	3.460/3.720*
F	Max. bucket pivot point [mm]	2.800	2.800	2.800
G	Max. loading height with pallet fork [mm]	2.600 / 2.860*	2.600 / 2.860*	2.600 / 2.860*
H	Max. dump height [mm]	1.965	1.965	1.965
I	Reach [mm]	1.600/1.750*	1.600/1.750*	1.600/1.750*
J	Dump range [mm]	440	440	440
K	Seat height [mm]	910	910	910
L	Height with protective roof [mm] Height over cab [mm]	from 1.890 from 1.890	from 1.890 from 1.890	from 1.890 from 1.890
N	Total width [mm]	890 – 1.240	890 – 1.240	890 – 1.240
O	Track arc inside [mm]	760	760	760
P	Track arc outside [mm]	1.850	1.850	1.850
Q	External radius with standard bucket [mm]	2.270	2.270	2.270

* high lift version

Schäffer

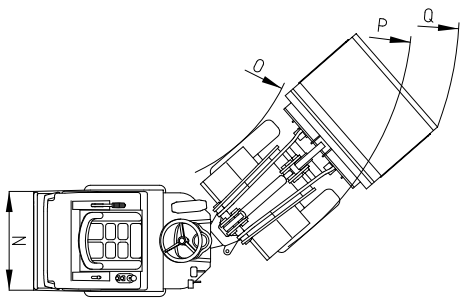

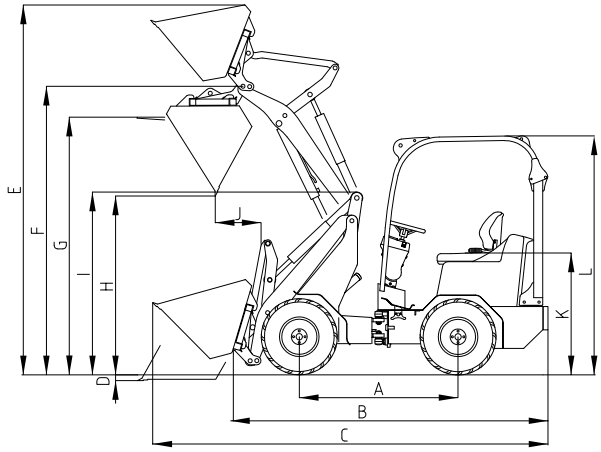

		2336 SLT	2345 SLT
A	Axle base [mm]	1.650	1.650
B	Chassis length [mm]	3.230	3.230
C	Total length with standard bucket [mm]	4.025	4.025
D	Excavating depth [mm]	90	90
E	Max. working height [mm]	3.570	3.800*
F	Max. bucket pivot point [mm]	2.880	2.880
G	Max. loading height with pallet fork [mm]	2.680	3.100*
H	Max. dump height [mm]	2.045/2.300*	2.045/2.300*
I	Reach [mm]	1.690	1.790*
J	Dump range [mm]	470	470
K	Seat height [mm]	995	995
L	Height with protective roof [mm] Height over cab [mm]	from 1.950 -	from 1.950 -
N	Total width [mm]	970 – 1.390	970 – 1.390
O	Track arc inside [mm]	870	870
P	Track arc outside [mm]	1.890	1.890
Q	External radius with standard bucket [mm]	2.320	2.320

* high lift version

All technical specifications in this prospectus refer to serial models and describe their standard functions. Tipping loads and parallel motion are not guarantee when using a foreign heastock. The equipment components and their functions as well as the accessories depend on the individual model and the product options and also on the country and customer specific requirements. Images may contain products or equipment components which are not mentioned or cannot be obtained as a standard. The descriptions, measurements, images, weight specifications and technical data correspond to the state of the art at the time of printing and are non-binding.
We reserve changes in the field of construction, equipment, optics and technology without prior notice, due to the continuous development of the products. In case of doubts concerning the performance or the mode of operation of our products due to special circumstances, we recommend the execution of work samples under controlled conditions. We cannot exclude deviations from images or measurements, calculation errors, printing errors or incompleteness in the prospectus despite all due care. We do therefore not accept any liability for the correctness and completeness of the specifications in this prospectus. We do guarantee the proper functioning of our products within the scope of our General Terms and Conditions. Any guarantees that go beyond these are on principle not provided. Any liability beyond the ones set out in our General Terms and Conditions is excluded.

https://truckmanualshub.com/ 24

The way SCHÄFFER loaders are developed, built and serviced is unique. The difference is our 50 years of experience. First, we think about the operator; we want to make his work safer, more comfortable – and more profitable. To this end, we are equipped with the most modern development and production technologies at our plant in Erwitte, Germany. Ultimately, it is our associates who work with our customers to continuously develop new solutions. Long years of commitment to the company combined with an enduring spirit of innovation are the basis of our exceptional worldwide success.

The name SCHÄFFER Loaders stands for more than one-of-a-kind product quality. It also stands for safety and optimal service, which we guarantee not only in Germany but around the globe.

The purchase of a SCHÄFFER loader is the beginning of a long-term relationship. Only original replacement parts allow your machine to remain a 100% true SCHÄFFER over the years. Only then will it guarantee the reliability you rightly expect. We offer you and our service partners a 24 hour delivery service – 7 days a week, 365 days a year.

made by SCHÄFFER

07/2015. Technical details are subject to change. Dimensions are approximate.
Some illustrations show models with special options.

SCHÄFFER offers you a product line-up of over 40 different models, each of which can be adapted to your individual requirements. Our loaders can be used in many different industries: in agriculture or construction, in horticulture or landscaping, in industry and trade, in horse husbandry or warehousing. Whatever the industry, SCHÄFFER is always your first choice.

Your dealer:

Schäffer

SCHÄFFER MASCHINENFABRIK GMBH
Postfach 10 67 | D-59591 Erwitte
Phone +49 02943 9709-0
Fax +49 02943 9709-50
info@schaeffer-lader.de
www.schaeffer-lader.de