https://truckmanualshub.com/

PREFACE

Welcome to the TS2973EN Troubleshooting Manual. We make every effort to keep our service information current and accurate. Because of the time lag involved with writing and printing processes, the transmission TCM may report a code that has not yet been added to this document. If you encounter a code that is not yet in this publication, please call the Allison Transmission Technical Assistance Center at 1-800-252-5283.

Go to the Table of Contents.

Copyright© 2005 General Motors Corp.

https://truckmanualshub.com/

Troubleshooting Manual

2005 OCTOBER
REV. 1 OCTOBER 2006

TS2973EN

Allison Transmission

VOCATIONAL MODELS

3000 VOCATIONAL MODELS

3000 HS	3500 RDS		B 300(P)(R)
3000 RDS	3500 EVS		B 400(P)(R)
3000 EVS			T 200
3000 MH			T 300
3000 PTS			
3000 TRV			
3200 SP	3500 SP	3700 SP	
3200 TRV			
MD 3060	MD 3560	MD 3070PT	
MD 3066			

4000 VOCATIONAL MODELS

4000 EVS	4500 EVS	4700 EVS	4800 EVS	B 500
4000 HS	4500 HS	4700 RDS		
4000 MH	4500 RDS			
4000 RDS	4500 SP			
4000 TRV	4500 TRV			
HD 4060	HD 4560	HD 4070	HD 4076	B 500P
HD 4060P	HD 4560P	HD 4070P		B 500R
HD 4060R	HD 4560R	HD 4070R		B 500PR
HD 4060PR	HD 4560PR	HD 4070PR		T 425
				T 450

Allison Transmission

Allison Transmission, General Motors Corporation
P.O. Box 894 Indianapolis, Indiana 46206-0894
www.allisontransmission.com

Printed in USA

Copyright © 2005 General Motors Corporation

https://truckmanualshub.com/

FOREWORD—How to Use This Manual

This manual provides troubleshooting information for the 3000 and 4000 Product Families Transmissions. Service Manuals SM2148EN and SM2457EN, plus Parts Catalogs PC2150EN and PC2456EN may be used in conjunction with this manual.

This manual includes:

- Description of the WTEC III electronic control system.
- Description of the electronic control system components.
- Description of diagnostic codes, system responses to faults, and troubleshooting.
- Wire, terminal, and connector repair information.

Specific instructions for using many of the available or required service tools and equipment are not included in this manual. The service tool manufacturer will furnish instructions for using the tools or equipment.

Additional information may be published from time to time in Service Information Letters (SIL) and will be included in future revisions of this and other manuals. Please use these SILs to obtain up-to-date information concerning Allison Transmission products.

This publication is revised periodically to include improvements, new models, special tools, and procedures. A revision is indicated by a new date on the title page and in the lower left corner of the rear cover. Contact your Allison Transmission service outlet for the currently applicable publication. Additional copies of this publication may be purchased from authorized Allison Transmission service outlets. Look in your telephone directory under the heading of Transmissions—Truck, Tractor, etc.

Take time to review the Table of Contents and the manual. Reviewing the Table of Contents will aid you in quickly locating information.

NOTE: Allison Transmission is providing for service of wiring harnesses and wiring harness components as follows:

- Repair parts for the internal wiring harness and for wiring harness components attached to the shift selector will be available through the Allison Transmission Parts Distribution Center (PDC). Use the P/N from your appropriate parts catalog or from Appendix E in this manual. Allison Transmission (AT) is responsible for warranty on these parts.
- Repair parts for the external harnesses and external harness components must be obtained from St. Clair Technologies Inc. (SCTI). SCTI provides parts to any Allison customer or OEM and is responsible for warranty on these parts. SCTI recognizes AT, manufacturers, and SCTI part numbers. SCTI provides a technical HELPLINE at 519-627-1673 (Wallaceburg). SCTI will have parts catalogs available. The SCTI addresses and phone numbers for parts outlets are:

  St. Clair Technologies, Inc.
  920 Old Glass Road
  Wallaceburg, Ontario, N8A 4L8
  Phone: 519-627-1673
  Fax: 519-627-4227

  St. Clair Technologies, Inc.
  Calle Damanti S/N Col
  Guadalupe—Guaymas
  Sonora, Mexico CP85440
  Phone: 011-526-2222-43834
  Fax: 011-526 2222-43553

- St. Clair Technologies, Inc. stocks a WTEC III external harness repair kit, P/N 29532362, as a source for some external harness repair parts. SCTI is the source for external harness repair parts.

Copyright © 2005 General Motors Corp.

https://truckmanualshub.com/

IMPORTANT SAFETY NOTICE

IT IS YOUR RESPONSIBILITY to be completely familiar with the warnings and cautions used in this manual. These warnings and cautions advise against using specific service procedures that can result in personal injury, equipment damage, or cause the equipment to become unsafe. These warnings and cautions are not exhaustive. Allison Transmission could not possibly know, evaluate, or advise the service trade of all conceivable procedures by which service might be performed or of the possible hazardous consequences of each procedure. Consequently, Allison Transmission has not undertaken any such broad evaluation. Accordingly, ANYONE WHO USES A SERVICE PROCEDURE OR TOOL WHICH IS NOT RECOMMENDED BY ALLISON TRANSMISSION MUST first be thoroughly satisfied that neither personal safety nor equipment safety will be jeopardized by the service procedures used.

Also, be sure to review and observe WARNINGS, CAUTIONS, and NOTES provided by the vehicle manufacturer and/or body builder before servicing the Allison transmission in that vehicle.

Proper service and repair is important to the safe and reliable operation of the equipment. The service procedures recommended by Allison Transmission and described in this manual are effective methods for performing troubleshooting operations. Some procedures require using specially designed tools. Use special tools when and in the manner recommended.

The WARNINGS, CAUTIONS, and NOTES in this manual apply only to the Allison transmission and not to other vehicle systems which may interact with the transmission. Be sure to review and observe any vehicle system information provided by the vehicle manufacturer and/or body builder at all times the Allison transmission is being serviced.

WARNINGS, CAUTIONS, AND NOTES

Three types of headings are used in this manual to attract your attention:

WARNING!	**Is used when an operating procedure, practice, etc., which, if not correctly followed, could result in injury or loss of life.**

CAUTION:	Is used when an operating procedure, practice, etc., which, if not strictly observed, could result in damage to or destruction of equipment.

NOTE: ***Is used when an operating procedure, practice, etc., is essential to highlight.***

Copyright © 2005 General Motors Corp.

https://truckmanualshub.com/

TRADEMARKS USED IN THIS MANUAL

The following trademarks are the property of the companies indicated:

- Allison DOC™ is a trademark of General Motors Corporation.
- DEXRON® is a registered trademark of General Motors Corporation.
- LPS® Cleaner is a registered trademark of LPS Laboratories.
- Loctite® is a registered trademark of the Loctite Corporation.
- MagiKey® is a registered trademark of NEXIQ Technologies, Inc.
- Teflon® is a registered trademark of the DuPont Corporation.
- TranSynd™ is a trademark of Castrol Ltd.

SHIFT SELECTOR TERMS AND DISPLAY INDICATIONS

Shift selector terms and displays are represented in this manual as follows:

- Button Names — ↑, ↓, “display mode”, **MODE**, etc.
- Transmission Ranges—**D** (Drive), **N** (Neutral), **R** (Reverse), **1** (First), **2** (Second), etc.
- Displays—“**o**, **L**”; “**o**, **K**”, etc. (Display occurs one character at a time.)

Copyright © 2005 General Motors Corp.

https://truckmanualshub.com/

TABLE OF CONTENTS

Page

Foreword ii

SAFETY INFORMATION

Important Safety Notice iii

Warnings, Cautions, and Notes iii

TRADEMARKS USED IN THIS MANUAL iv

SHIFT SELECYOR TERMS AND DISPLAY INDICATIONS iv

SECTION 1. GENERAL DESCRIPTION

1–1. TRANSMISSION 1–1

1–2. ELECTRONIC CONTROL UNIT (ECU) 1–3

1–3. SHIFT SELECTOR 1–3

A. Pushbutton Shift Selector 1–3

B. Lever Shift Selector 1–4

1–4. THROTTLE POSITION SENSOR 1–5

1–5. SPEED SENSORS 1–5

1–6. CONTROL MODULE 1–6

1–7. WIRING HARNESSES 1–8

A. External Wiring Harness 1–8

B. Internal Wiring Harness 1–10

1–8. VEHICLE INTERFACE MODULE 1–10

1–9. AUTODETECT FEATURE (V8, V8A, V9A SOFTWARE) 1–11

A. Retarder 1–11

B. Oil Level Sensor 1–11

C. Throttle Source (V8, V8A Software—See Paragraph 1–10C For V9A) 1–12

D. Engine Coolant Temperature Sensor Source 1–12

1–10. AUTODETECT FEATURE (V9A, V9B, AND V9C SOFTWARE) 1–12

A. Retarder 1–12

B. Oil Level Sensor (OLS) 1–12

C. Throttle Source (Also Applies to V9 Software) 1–13

D. Engine Coolant Temperature 1–13

1–11. TRANSID FEATURE 1–13

A. General Description 1–13

B. Transmission Changes Versus TransID Number 1–14

C. Compatibility Between TransID Level And ECU Calibration Level 1–16

Copyright © 2005 General Motors Corp.

https://truckmanualshub.com/

Page

SECTION 2. DEFINITIONS AND ABBREVIATIONS

2–1. CHECK TRANS LIGHT 2–1
2–2. ALLISON TRANSMISSION DIAGNOSTIC TOOL 2–1
Basic Features 2–1
PC Platform 2–2
2–3. ABBREVIATIONS 2–3

SECTION 3. BASIC KNOWLEDGE

3–1. BASIC KNOWLEDGE REQUIRED 3–1
3–2. USING THE TROUBLESHOOTING MANUAL 3–2
3–3. SYSTEM OVERVIEW 3–2
3–4. IMPORTANT INFORMATION IN THE TROUBLESHOOTING PROCESS 3–2
3–5. BEGINNING THE TROUBLESHOOTING PROCESS 3–3

SECTION 4. WIRE TESTING PROCEDURES

4–1. TESTING FOR OPENS, SHORTS BETWEEN WIRES, AND SHORTS-TO-GROUND 4–1
4–2. TESTING AT TRANSMISSION CONNECTOR AND THE INTERNAL HARNESS FOR OPENS, SHORTS BETWEEN WIRES, AND SHORTS-TO-GROUND 4–3

SECTION 5. OIL LEVEL SENSOR

5–1. INTRODUCTION 5–1
5–2. ELECTRONIC FLUID LEVEL CHECK (SHIFT SELECTOR) 5–3
A. Fluid Level Check Procedure 5–3
5–3. ELECTRONIC FLUID LEVEL CHECK (ALLISON DOC™ FOR PC–SERVICE TOOL) 5–5
A. Fluid Level Check Procedure 5–5

SECTION 6. DIAGNOSTIC CODES

6–1. DIAGNOSTIC CODE MEMORY 6–1
6–2. CODE READING AND CODE CLEARING 6–1
6–3. DIAGNOSTIC CODE RESPONSE 6–3
6–4. SHIFT SELECTOR DISPLAYS RELATED TO ACTIVE CODES 6–4
6–5. DIAGNOSTIC CODE LIST AND DESCRIPTION 6–4
6–6. DIAGNOSTIC CODE TROUBLESHOOTING 6–16
A. Beginning the Troubleshooting Process 6–16
B. Solenoid Locations 6–16
C. Diagnostic Code Schematics 6–16
D. Wire/Terminal Numbering Scheme 6–17

Copyright © 2005 General Motors Corp.

https://truckmanualshub.com/

Page

SECTION 7. INPUT AND OUTPUT FUNCTIONS

7–1. INPUT FUNCTIONS 7–1
7–2. OUTPUT FUNCTIONS 7–3

SECTION 8. GENERAL TROUBLESHOOTING OF PERFORMANCE COMPLAINTS

APPENDICES

A. IDENTIFICATION OF POTENTIAL CIRCUIT PROBLEMS A–1
B. MEASURING CLUTCH AND RETARDER PRESSURES B–1
C. SOLENOID AND CLUTCH CHART C–1
D. WIRE/CONNECTOR CHART. D–1
E. CONNECTOR PART NUMBERS, TERMINAL PART NUMBERS, TOOL PART NUMBERS, AND REPAIR INSTRUCTIONS E–1
F. THROTTLE POSITION SENSOR ADJUSTMENT F–1
G. WELDING ON VEHICLE/VEHICLE INTERFACE MODULE G–1
H. HYDRAULIC SCHEMATICS H–1
J. 3000 AND 4000 PRODUCT FAMILIES WIRING SCHEMATIC J–1
K. TRANSID 1 TEMPERATURE SENSOR AND SOLENOID RESISTANCE CHARTS K–1
L. EXTERNALLY-GENERATED ELECTRONIC INTERFERENCE L–1
M. DIAGNOSTIC TREE—HYDRAULIC SYSTEM M–1
N. DIAGNOSTIC TOOL INFORMATION N–1
P. INPUT/OUTPUT FUNCTIONS P–1
Q. TRANSID 2 AND 3 THERMISTOR TROUBLESHOOTING INFORMATION Q–1
R. SAE J1939 COMMUNICATION LINK R–1

Copyright © 2005 General Motors Corp.

https://truckmanualshub.com/

NOTES

Copyright © 2005 General Motors Corp.

https://truckmanualshub.com/

SECTION 1—GENERAL DESCRIPTION

1–1. TRANSMISSION

The World Transmission Electronic Controls (WTEC III) system features closed-loop clutch control to provide superior shift quality over a wide range of operating conditions. The 3000 and 4000 Product Families transmissions configurations can be programmed to have up to six forward ranges, neutral, and one reverse range. The MD 3070, 3700 SP, HD 4070/4076, 4700 RDS, 4700/4800 EVS, 4700/4800 SP have up to seven forward ranges and one reverse.

Figure 1–1 is a block diagram of the basic system inputs and outputs.

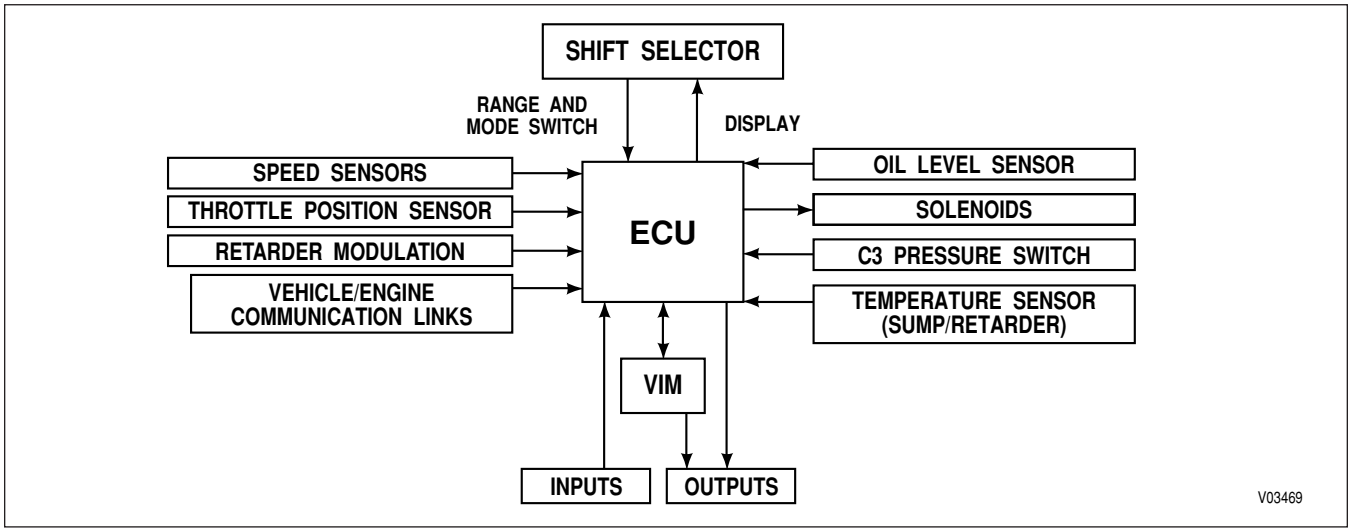

Figure 1–1. Electronic Control Unit Block Diagram

Figure 1–2 shows WTEC III electronic control components.

WTEC III Electronic Controls consist of the following elements:

- Remote 12/24V Max Feature Sealed Electronic Control Unit (ECU)
- Remote Pushbutton or Lever Shift Selector
- Optional Secondary Shift Selector
- Throttle Position Sensor (TPS) (or electronic engine throttle data or PWM signal)
- Engine, Turbine, and Output Speed Sensors
- Control Module (Electro-Hydraulic Valve Body)
- Wiring Harnesses
- Vehicle Interface Module (VIM)
- Autodetect Feature
- TransID Feature
- Optional Retarder Controls
- Optional Engine Coolant Temperature Input.

NOTE:
- ***All external harnesses are OEM supplied***
- ***The VIM is an OEM option***

Copyright © 2005 General Motors Corp.

https://truckmanualshub.com/

GENERAL DESCRIPTION

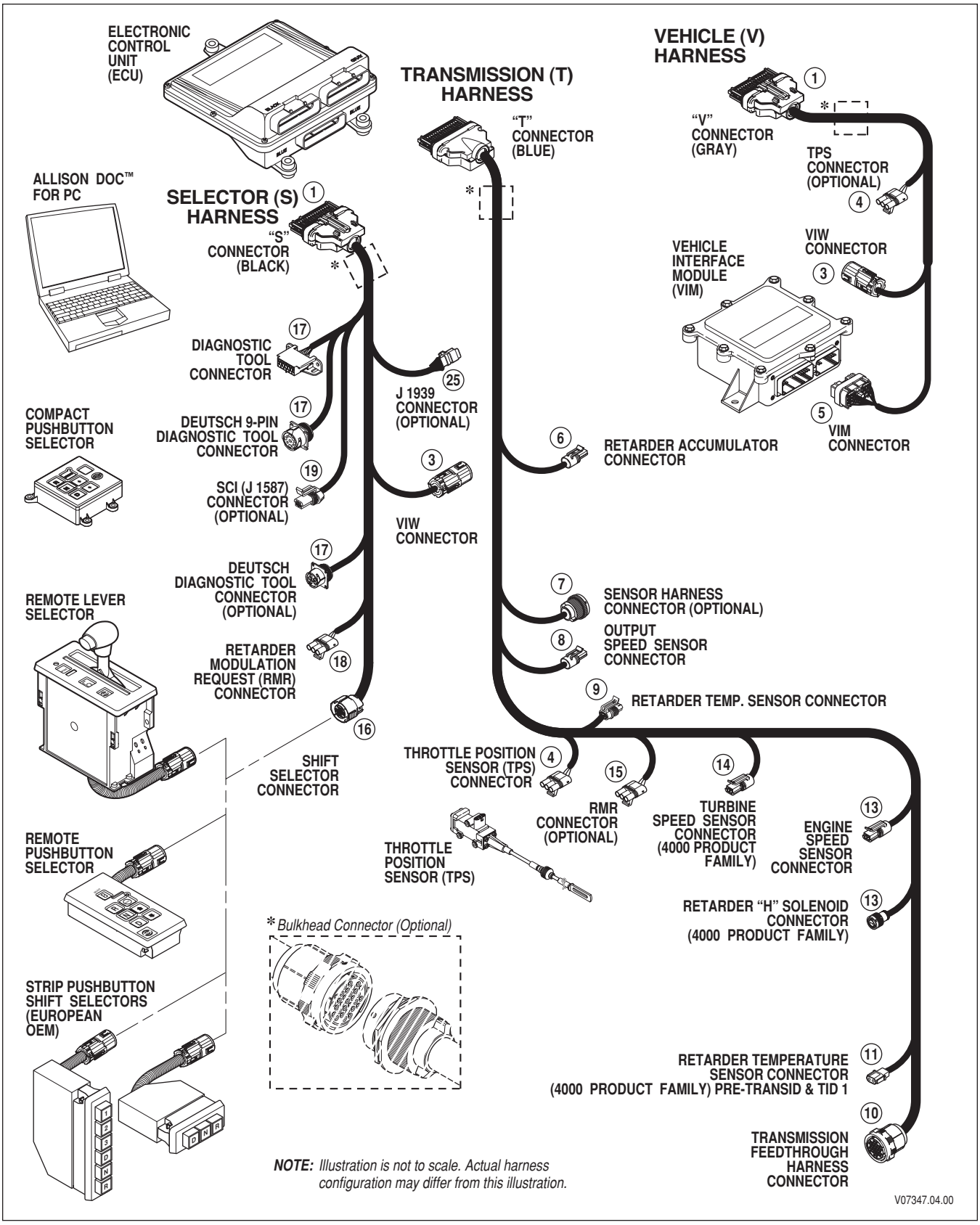

Figure 1–2. WTEC III Electronic Control Components

Copyright © 2005 General Motors Corp.

https://truckmanualshub.com/

GENERAL DESCRIPTION

1–2. ELECTRONIC CONTROL UNIT (ECU)

The ECU (Figure 1–3) contains the microcomputer which is the brain of the control system. The ECU receives and processes information defining:

- Shift selector
- Throttle position
- Sump/retarder temperature
- Engine speed
- Turbine speed
- Transmission output speed.

The ECU uses the information to:

- Control transmission solenoids and valves
- Supply system status
- Provide diagnostic information.

Each ECU has a date code stamped on the label which is attached to the outer case of the ECU. This is the date when the ECU passed final testing. This date is commonly used to denote the change configuration level of the ECU. It is normal for the ECU date displayed electronically to be a few days prior to the date shown on the label.

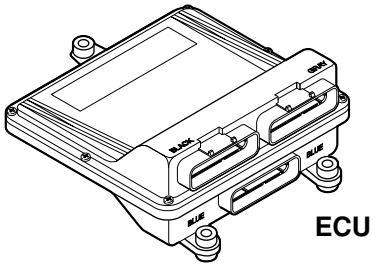

NOTE: *ECU wiring harness connector retainers are individually keyed and color-coded to ensure that the proper connector is attachedto the correct ECU socket. The color of the connector retainer should match the color of the connector strain relief (see Appendix E, Paragraph 1–1).*

V07346.00.01

Figure 1–3. Electronic Control Unit (ECU)

1–3. SHIFT SELECTOR

Pushbutton and lever shift selectors for the WTEC III Series are remote mounted from the ECU and connected to the ECU by a wiring harness. All shift selectors except the strip-type pushbutton have a single digit LED display and a mode indicator (LED). During normal transmission operation, illumination of the LED mode indicator shows that a secondary or special operating condition has been selected by pressing the **MODE** button. During diagnostic display mode, illumination of the LED indicator shows that the displayed diagnostic code is active. Display brightness is regulated by the same vehicle potentiometer that controls dash light display brightness. More information on both types of shift selectors is continued below.

A. Pushbutton Shift Selector *(Figure 1–4)*

There are three full-function pushbutton shift selectors and a strip pushbutton shift selector. Strip pushbutton shift selectors are used by European OEMs. A full-function shift selector has a **MODE** button and diagnostic display capability through the single digit LED display. The strip pushbutton shift selector does not have a **MODE** button, diagnostic capability, or adjustable illumination. The full-function pushbutton shift selector has six (6) pushbuttons which are **R** (Reverse), **N** (Neutral), **D** (Drive), ↓ (Down), ↑ (Up), and **MODE**. Manual forward range downshifts and upshifts are made by pressing the ↓ (Down) or ↑ (Up) arrow buttons after selecting **D** (Drive). The **N** (Neutral) button has a raised lip to aid in finding it by touch. The **MODE** button is pressed to select a secondary or special operating condition, such as ECONOMY shift schedule. Diagnostic and oil level (if sensor is present) information is obtained by pressing the ↓ (Down) and ↑ (Up) arrow buttons at the same time.

Copyright © 2005 General Motors Corp.

https://truckmanualshub.com/

GENERAL DESCRIPTION

The strip pushbutton shift selector has either three or six range selection positions as shown in Figure 1–4. When a strip pushbutton shift selector is used, diagnostic information must be obtained by using the Allison DOC™ For PC–Service Tool, or a customer-furnished remote display.

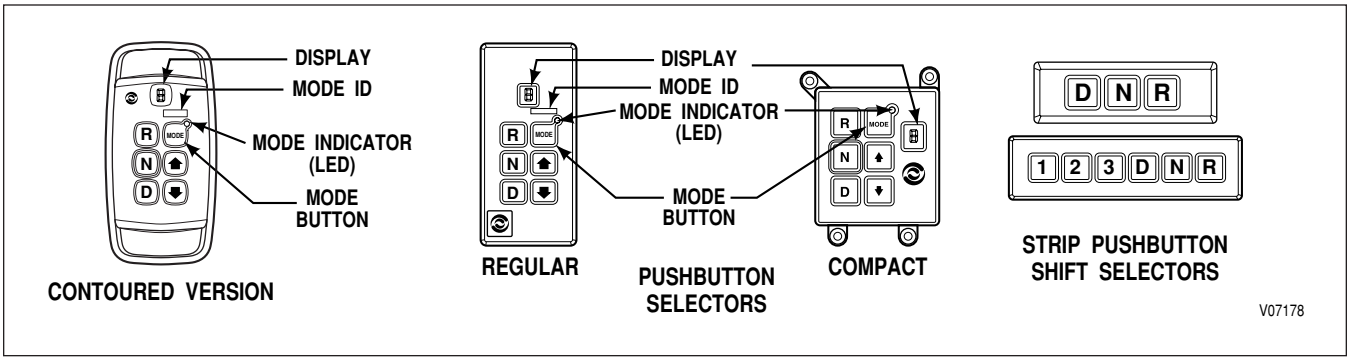

Figure 1–4. Pushbutton Shift Selectors

B. Lever Shift Selector *(Figure 1–5)*

The lever shift selector can have as many as six forward range positions (seven for the 7-speed models), as well as **R** (Reverse) and **N** (Neutral). There is a hold override button which **must be pressed** and held in order to move between certain selector positions. The hold override button **must be pressed** when shifting between **R**, **N,** and **D**. The hold override button is released when the desired selector position is reached. The selector lever can be moved freely between **D** and the numbered forward ranges without pressing the hold override button. The lever selector can be chosen with the lever on the left side or on the right side and with the **R** (Reverse) position toward the front or toward the rear of the selector. Diagnostic and oil level (if sensor is present) information is obtained from the LED display by pressing the **DISPLAY MODE/DIAGNOSTIC** button.

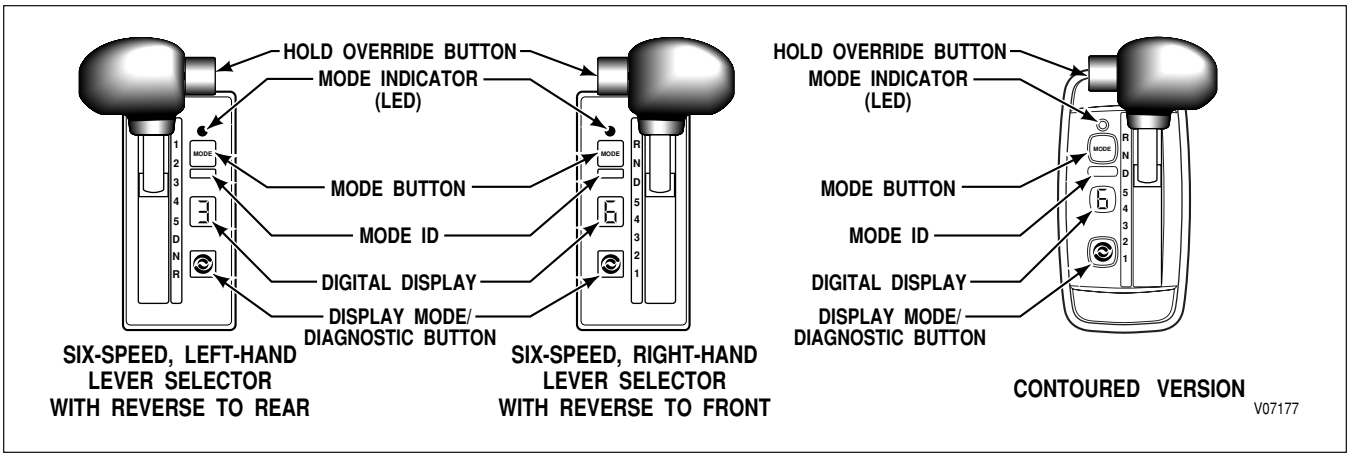

Figure 1–5. Typical Lever Shift Selector

Copyright © 2005 General Motors Corp.

https://truckmanualshub.com/

GENERAL DESCRIPTION

1–4. THROTTLE POSITION SENSOR *(Figure 1–6)*

The Throttle Position Sensor (TPS) can be mounted to the engine, chassis, or transmission. The TPS contains a pull actuation cable and a potentiometer. One end of the cable is attached to the engine fuel lever and the other, inside a protective housing, to the TPS potentiometer. Output voltage from the TPS is directed to the ECU through the external harness. The voltage signal indicates the throttle position and, in combination with other input data, determines shift timing.

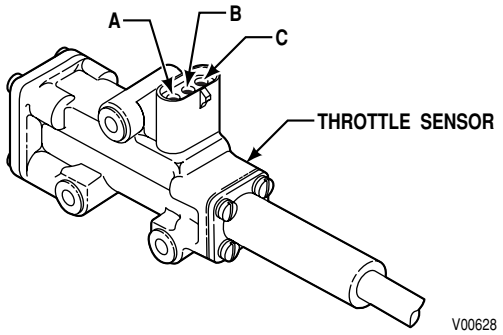

Figure 1–6. Throttle Position Sensor (Without Mounting Brackets)

1–5. SPEED SENSORS *(Figure 1–7)*

The following three sensors provide information to the ECU:

- Engine speed–signal is generated by ribs on the torque converter pump.
- Turbine speed–signal is generated by the rotating-clutch housing spline contours.
- Output speed–signal is generated by a toothed member attached to the output shaft (except for the 3000 Product Family 7-speed models, where the toothed member is the transfer case idler gear).

The speed ratios between the various speed sensors allow the ECU to determine if the transmission is in the selected range. Speed sensor information is also used to control the timing of clutch apply pressures, resulting in the smoothest shifts possible. Hydraulic problems are detected by comparing the speed sensor information for the current range to that range's speed sensor information stored in the ECU memory.

Copyright © 2005 General Motors Corp.

https://truckmanualshub.com/

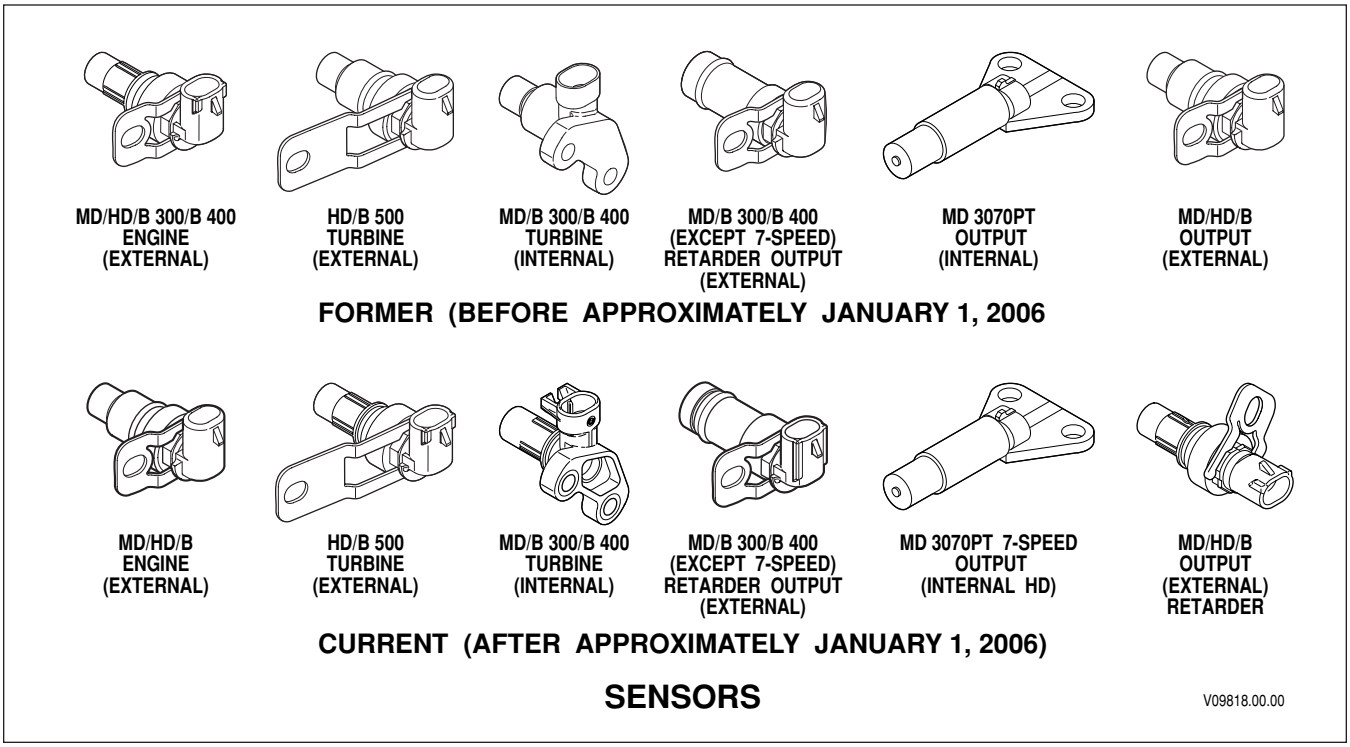

Figure 1–7. Speed Sensors

1–6. CONTROL MODULE *(Figure 1–8)*

Pulse width modulated solenoids are used in the valve bodies. For valve locations, refer to SIL 27-WT-93.

The WTEC III Series transmission control module contains a channel plate on which is mounted a:

- Main valve body assembly.
- Stationary-clutch valve body assembly.
- Rotating-clutch valve body assembly.

The main valve body assembly contains:

- G solenoid and the C1 and C2 latch valves controlled by the solenoid.
- Main and lube regulator valves.
- Control main and converter regulator valves.
- Converter flow valve and exhaust backfill valves.

The stationary-clutch valve body assembly contains:

- C solenoid (C3)
- D solenoid (C4)
- E solenoid (C5)
- Solenoid regulator valves controlled by the solenoids
- C3 accumulator relay valve

 Copyright © 2005 General Motors Corp.

https://truckmanualshub.com/

GENERAL DESCRIPTION

The rotating-clutch valve body assembly contains:

- A solenoid (C1)
- B solenoid (C2)
- F solenoid (lockup)
- Solenoid regulator valves controlled by the solenoids
- C3 pressure switch

The low valve body assembly (3000 and 4000 Product Families 7-speed) contains N and J solenoids.

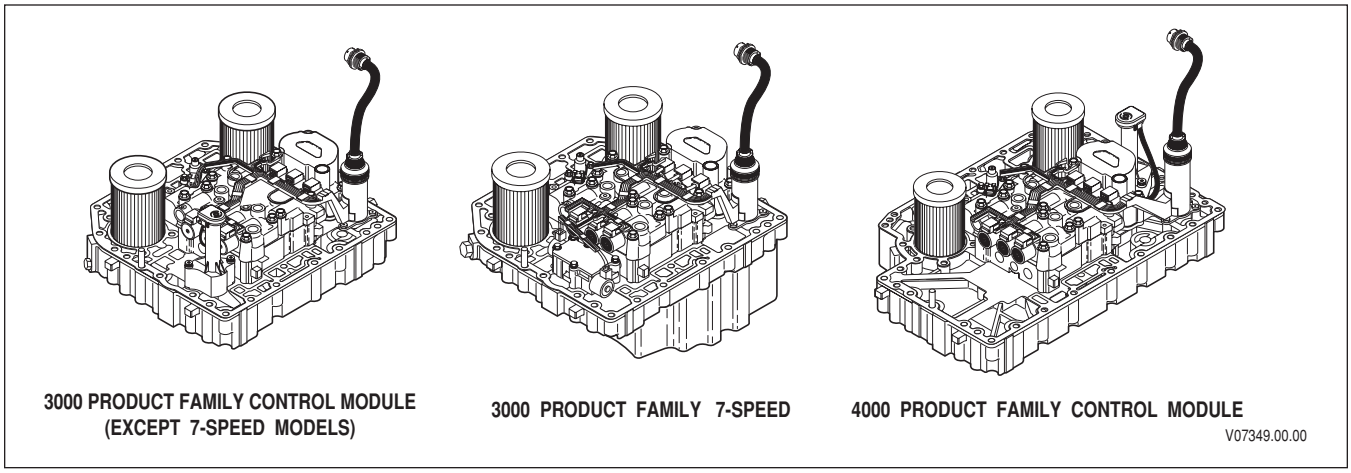

Figure 1–8. WTEC III Control Modules

A temperature sensor (thermistor) is located in the internal wiring harness. Changes in sump fluid temperature are indicated by changes in sensor resistance which changes the signal sent to the ECU. Refer to Figure 6–8 in Section 6, Code 24.

The oil level sensor (OLS) is a float type device mounted on the control module channel plate. The OLS senses transmission fluid level by electronically measuring the buoyancy forces on the float. The sensor operates on 5 VDC supplied by the ECU. The oil level sensor is standard on 3000 and 4000 Product Families transmissions. An OLS is required on all models with a shallow sump but is optional on other models. The oil level sensor is not available on the 3000 Product Family 7-speed models.

The C3 pressure switch is mounted on the rotating-clutch valve body assembly and indicates when pressure exists in the C3 clutch-apply passage. An accumulator/relay valve is in-line ahead of the C3 pressure switch and prevents high frequency hydraulic pulses generated by the C3 solenoid from cycling the C3 pressure switch.

Also mounted on the control module is the turbine speed sensor for the 3000 Product Family transmissions. The turbine speed sensor is directed at the rotating-clutch housing. The turbine speed sensor on the 4000 Product Family transmissions is located on the outside of the main housing.

Copyright © 2005 General Motors Corp.

https://truckmanualshub.com/

GENERAL DESCRIPTION

1–7. WIRING HARNESSES

A. External Wiring Harness *(Figure 1–9)*

The ECU uses three connectors labeled Black, Blue, and Gray, which are used to receive input from the following:

Transmission	TPS	Diagnostic tool connector
Engine	Vehicle interface module (VIM)	Retarder
Turbine	Retarder control module	Retarder temperature sensor
Output speed sensor	Shift selector	Accumulator

Many harnesses will include a bulkhead fitting to separate cab and chassis components. Also, many different styles and materials for harnesses are likely to be encountered.

NOTE: ***Allison Transmission is providing for service of wiring harnesses and wiring harness components as follows:***

- ***Repair parts for the internal wiring harness and for wiring harness components attached to the shift selector will be available through the Allison Transmission Parts Distribution Center (PDC). Use the P/N from your appropriate parts catalog or from Appendix E in this manual. Allison Transmission is responsible for warranty on these parts.***
- ***Repair parts for the external harnesses and external harness components must be obtained from St. Clair Technologies Inc. (SCTI). SCTI provides parts to any Allison customer or OEM and is responsible for warranty on these parts. SCTI recognizes Allison Transmission, manufacturers, and SCTI part numbers. SCTI provides a technical HELPLINE at 519-627-1673 (Wallaceburg). SCTI will have parts catalogs available. The SCTI addresses and phone numbers for parts outlets are:***

St. Clair Technologies, Inc.
920 Old Glass Road
Wallaceburg, Ontario, Canada N8A 4L8
Phone: 519-627-1673
Fax: 519-627-4227

St. Clair Technologies, Inc.
Calle Damanti S/N Col
Guadalupe—Guaymas
Sonora, Mexico CP85440
Phone: 011-526 2222-43834
Fax: 011-526-2222-43553

- ***St. Clair Technologies, Inc. stocks a WTEC III external harness repair kit, P/N 29532362, as a source for some external harness repair parts. SCTI is the source for external harness repair parts.***

Copyright © 2005 General Motors Corp.

https://truckmanualshub.com/

GENERAL DESCRIPTION

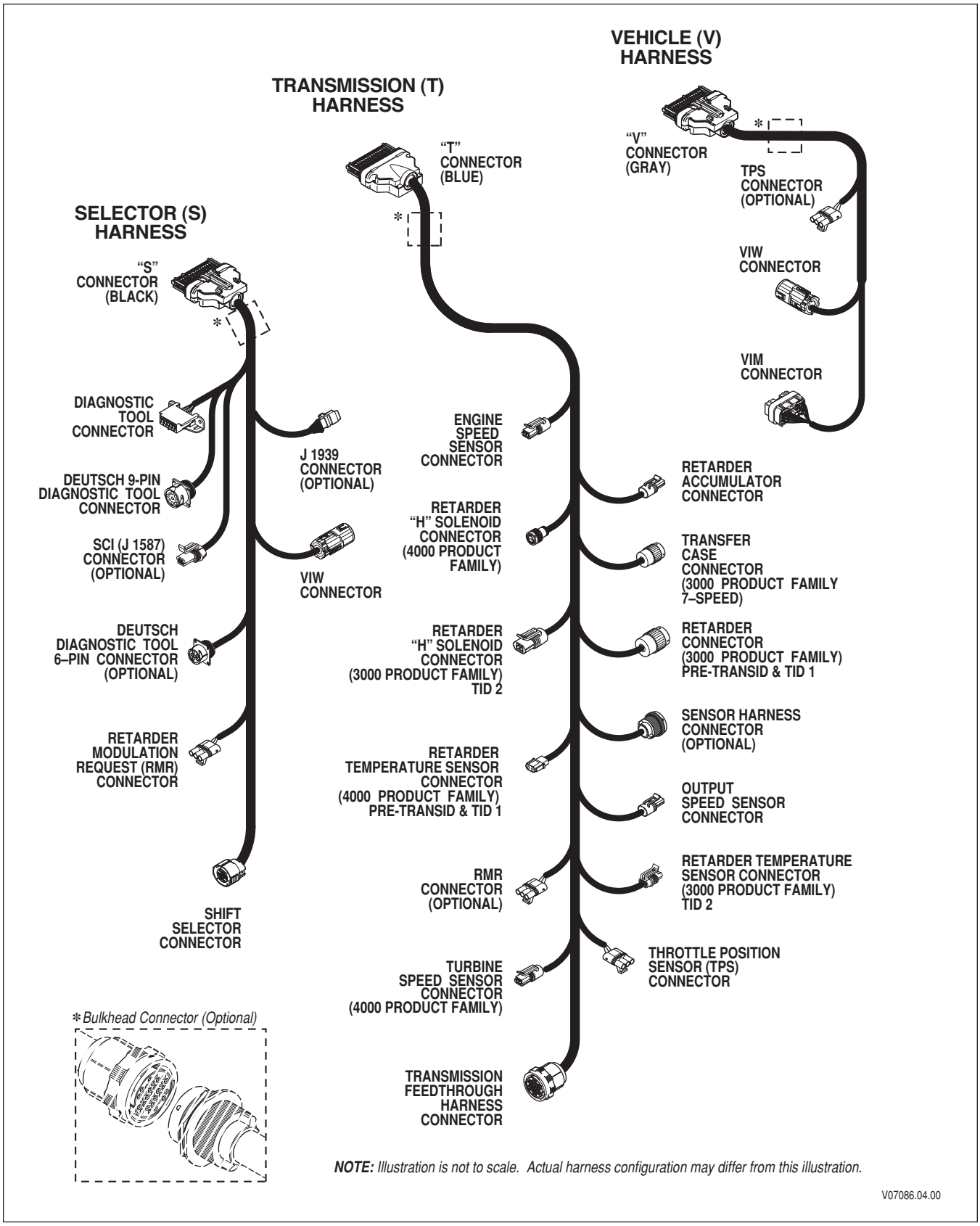

Figure 1–9. WTEC III External Wiring Harnesses

Copyright © 2005 General Motors Corp.

https://truckmanualshub.com/

GENERAL DESCRIPTION

B. Internal Wiring Harness *(Figure 1–10)*

The internal wiring harness provides connection between the external harness, the pulse width modulated solenoids, oil level sensor, C3 pressure switch, and the temperature sensor.

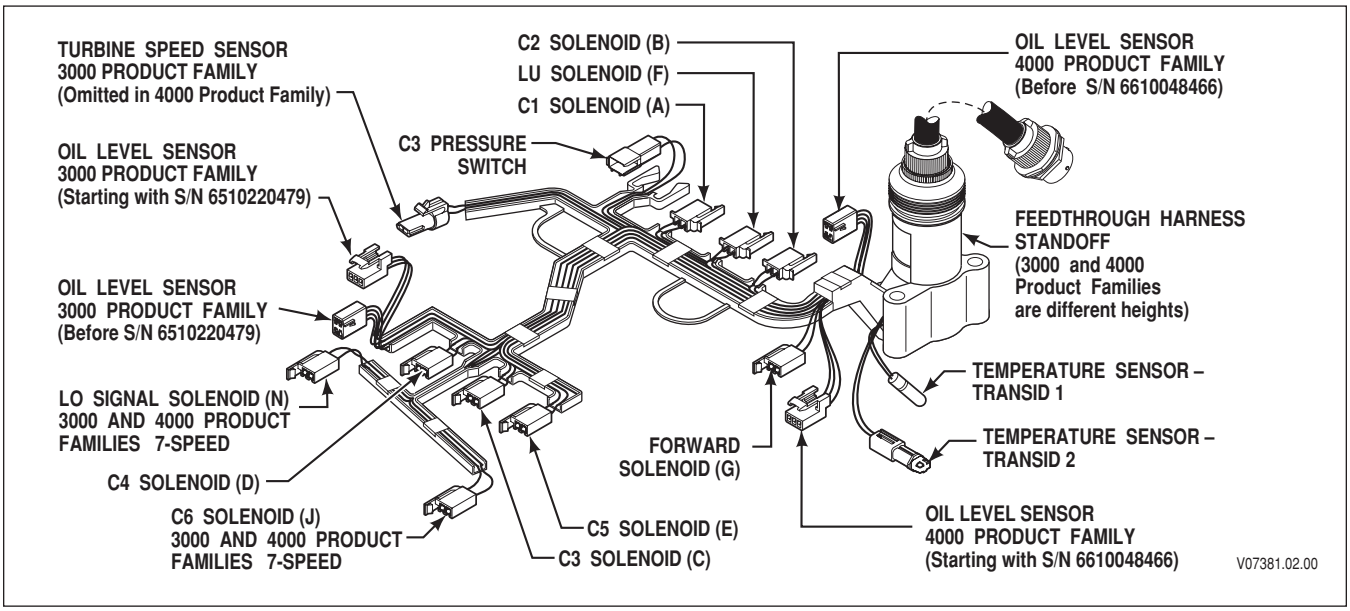

Figure 1–10. WTEC III Internal Wiring Harness

1–8. VEHICLE INTERFACE MODULE *(Figure 1–11)*

The vehicle interface module (VIM) provides relays, fuses, and connection points for interface with the output side of the vehicle electrical system. VIMs are available for both 12V and 24V electrical systems. The VIM for 12V systems uses all 12V relays. The VIM for 24V systems has all 24V relays. Refer to the Parts Catalog for the transmission assembly number that you are servicing for detailed parts information. Refer to Pages D–30 and D–31 for VIM wire number and terminal information.

Some OEMs may provide their own equivalent for the VIM which performs the same functions as the VIM shown in Figure 1–11.

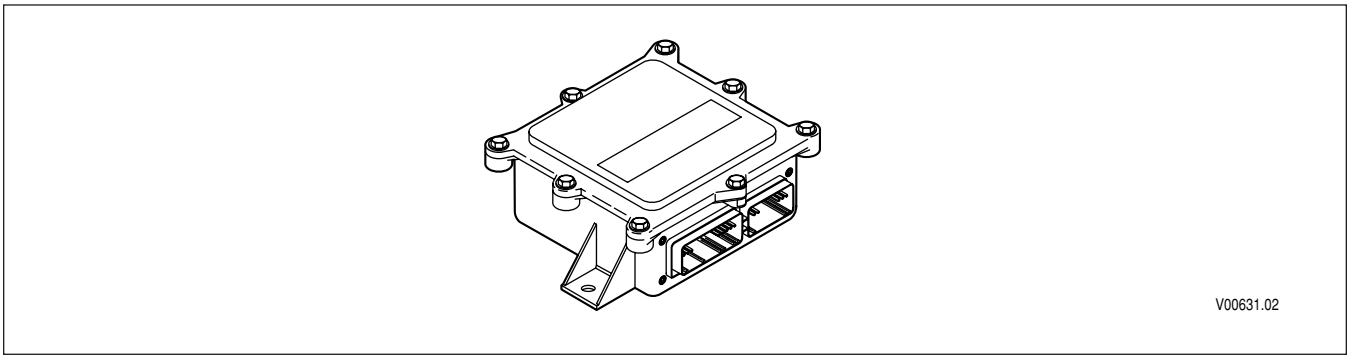

Figure 1–11. Vehicle Interface Module (VIM)

Copyright © 2005 General Motors Corp.

https://truckmanualshub.com/

GENERAL DESCRIPTION

1–9. AUTODETECT FEATURE (V8, V8A, V9 SOFTWARE)

Autodetect is active on the first 24 engine starts or a larger calibration number of engine starts, depending upon the component or sensor being detected (details follow in A through D below). Autodetect takes place within the first 30 seconds of each engine start monitored. Autodetect searches for the presence of the following transmission components or data inputs:

Retarder	Present, Not Present
Oil level sensor (OLS)	Present, Not Present
Throttle	Analog, J1939, J1587
Engine coolant temperature	Analog, J1939, J1587

Even after auotdetect has been completed, it can be reset to monitor an additional group of engine starts. Reset may be necessary if a device known to be present is not detected or if an autodetectable component or sensor was added after the initial vehicle build. Reset is accomplished by using Allison DOC™ For PC–Service Tool. Select “RESET AUTODETECT INFORMATION.” Allison DOC™ For PC–Service Tool can also be used to override autodetect and manually enter the component or sensor to be recognized by the ECU by changing appropriate “customer modifiable constants”.

The four items above are the only customer modifiable constants (CMCs) that are autodetected. Other CMCs can be changed at any time and are not related to autodetect. Consult Allison publication GN3433EN, User Guide, for detailed instructions related to WTEC III “customer modified constants.” Additional details for each of the four autodetectable features are given below.

A. Retarder

Autodetect searches for the presence of the H (retarder) solenoid during the first 24 engine ignition cycles. The H solenoid **must be present** on the 24th engine start or the retarder is not detected and will not function on subsequent engine starts.

WARNING

If the retarder is present but not detected by autodetect, the retarder will not function. Be sure to test for proper retarder function immediately after the 24th engine start. If the retarder is not functioning, test H solenoid for open, short-to-ground, or short-to-battery condition. Use Allison DOC™ For PC–Service Tool to reset autodetect or to manually select the presence of the retarder after the H solenoid circuit is repaired.

B. Oil Level Sensor (OLS)

NOTE: ***If an OLS is known to be present, but has not been detected, a possible cause is that the transmission fluid level is too low. Determine the fluid level before beginning OLS troubleshooting.***

No oil level sensor diagnostics take place until the OLS is detected. Frequently test for the presence of oil level diagnostics if the transmission is known to contain an OLS. If an OLS is not detected during the first 24 engine starts, autodetect continues for a larger calibration number of engine starts. Autodetect stops when an OLS is detected or when the calibration number of starts is reached. When the larger calibration number of engine starts is reached, the ECU concludes that no OLS is present. If an OLS is known to be present, but has not been detected, troubleshooting the OLS circuit is required. After the OLS circuit is repaired, reset autodetect or manually select the OLS function using Allison DOC™ For PC–Service Tool.

Copyright © 2005 General Motors Corp.

https://truckmanualshub.com/

C. Throttle Source (V8, V8A Software—See Paragraph 1–10C For V9A)

Whenever autodetect is functioning and no throttle source is found, a code 26 00 is logged. If a datalink throttle source (J 1939 and J 1587) is detected, autodetect stops looking for that function. However, if no analog throttle source was detected prior to engine start 25, autodetect continues for engine starts 25 through a calibration number. Autodetect for analog throttle stops as soon as a device is detected or when the calibration number of starts is reached. If an analog throttle source is known to be present, but is not detected, troubleshooting of the analog throttle circuit is required. After the analog throttle circuit is repaired, reset autodetect or manually select the analog throttle function using Allison DOC™ For PC–Service Tool. An engine throttle source **must be present.**

A pulse width modulated (PWM) throttle source requires an unique calibration or **must be** manually selected using Allison DOC™ For PC–Service Tool.

D. Engine Coolant Temperature Sensor Source

Autodetect looks for an engine coolant temperature source during the first 24 engine starts. However, code 26 11 is not logged unless the calibration calls for engine coolant temperature data to be used for retarder capacity reduction or preselected downshifts due to retarder overheating. Autodetect remembers whatever engine coolant temperature source was present on engine start 24. If no analog engine coolant temperature source is found on engine start 24, autodetect concludes that no sensor is present. Therefore, if an engine coolant temperature source is known to be present at engine start 24, but is not detected, troubleshooting of the engine coolant temperature circuit is required. After the engine coolant temperature circuit is repaired, reset autodetect or manually select the engine coolant temperature function using Allison DOC™ For PC–Service Tool.

1–10. AUTODETECT FEATURE (V9A, V9B, AND V9C SOFTWARE)

A. Retarder

Retarder autodetect software version V9A will countdown for a maximum of 25 ignition cycles while recording detections of a retarder.

Retarder autodetect software version V9B and V9C will countdown for a maximum of 35 ignition cycles while recording detections of a retarder.

A retarder will be identified as present and the retarder autodetect logic will stop once it is detected for three consecutive ignition cycles. If the ignition cycle counter completes the 25 cycles (V9A) or 35 cycles (V9B, V9C) before there are three consecutive detections of a retarder, the software will log that there is not retarder present and the retarder autodetect logic will stop.

B. Oil Level Sensor (OLS)

OLS autodetect will countdown for a maximum of 25 engine starts while recording detections of an OLS. An OLS will be identified as present and the OLS autodetect logic will stop once it is detected for:

- Five consecutive engine starts for software version V9A
- Three consecutive starts for software version V9B
- One engine start for software version V9C.

If the engine start counter completes 25 cycles before an OLS is detected (depending on the software version specifications above), the software will log that there is not OLS present and the OLS autodetect logic will stop. OLS detection **must occur** within 12.5 seconds on any given engine start.

Copyright © 2005 General Motors Corp.

https://truckmanualshub.com/

Software version V9C will autodetect before an engine start if accumulated counts are greater than 100 or after an engine start if accumulated counts are greater than 25 but less than 100. **No autodetect occurs** if accumulated counts are less than 25.

C. Throttle Source (Also Applies to V9 Software)

Throttle autodetect will increment a counter for a throttle source on each engine start during which the possible throttle source is detected. When the counter for any of the sources indicates five consecutive detections, the software will set a "confidence flag" to indicate that this is an available throttle source. Multiple throttle sources can be detected on a single engine start and multiple confidence flags can be set. There is no limit to the number of engine starts for autodetection of the throttle source until a confidence flag is set for a source. Once a confidence flag is set for any one of the sources, a counter begins to countdown for 15 additional engine starts. During the entire autodetect period, the software will use the highest priority source as the throttle source if multiple sources are detected before any confidence flags are set. Once a confidence flag is set, that source is used as the source for the throttle signal. When the countdown period is complete, the software will use the highest priority throttle source having a confidence flag set and the autodetect logic will stop.

D. Engine Coolant Temperature

Engine coolant temperature sensor autodetect will countdown for a total of 25 engine starts while recording detections of engine coolant temperature sources. A "confidence flag" will be set once a source is detected for five consecutive engine starts. Multiple sources detected before a confidence flag is set or multiple confidence flags will result in the highest priority source being used as the engine coolant temperature source. Multiple sources can be detected on a single engine start cycle.

1–11. TRANSID FEATURE

A. General Description

The TransID feature has been provided so that Allison Transmission can make component changes which require calibration changes but still retain both the original transmission assembly number (A/N) before feature based ordering (FBO) and the original calibrated ECU A/N. The purpose of TransID is to reduce the need for OEMs to use cross-reference lists of transmission and calibrated ECU A/Ns when such changes to the transmission are made. Since FBO began in April, 1998, the OEM now needs to be sure the ECU being used is compatible with the TransID level stamped on the nameplate of the transmission.

The basis for the TransID system is the creation of a TransID wire in the WTEC III system to provide the signal to the ECU of the TransID level of the transmission. This wire will at first be connected directly to the Analog Return (wire 135) to signal TransID level 1 (TID 1). TransID levels 2 through 8 will then be indicated by connecting the TransID wire in sequence to the return of solenoids A, B, C, D, E, G, and F. Corresponding to the hardware changes is the ability in the V8A and later WTEC III ECU to contain up to eight calibrations. The connection point of the TransID wire will provide the signal to tell the ECU which calibration is required by the transmission.

Whenever a TransID level change is to be made, the new TransID level calibrations will be placed in the PROM Calibration Configurator System (PCCS) before the change(s) is (are) made in production to the transmissions. All ECUs programmed and sold after that date will then be loaded with the new TransID level calibration. These ECUs will contain calibrations for the new level transmission and all previous TransID levels and will automatically load the correct calibration for the transmission based on the TransID signal sensed by AutoDetect during the first 25 engine starts. This eliminates worry on the part of the OEM of coordinating the implementation of the new ECU and the new transmission and allows their focus to be on using the stock of the earlier level ECU.

Copyright © 2005 General Motors Corp.

https://truckmanualshub.com/

GENERAL DESCRIPTION

B. Transmission Changes Versus TransID Number

1. TransID 1

The internal wiring harness wiring change to make a TransID 1 (TID 1) transmission was put into production before the introduction of the WTEC III system. The TID 1 internal harness was made by connecting the C3 pressure switch ground (digital/signal ground; WTEC II wire 161) to the sump temperature sensor and OLS ground (analog ground; wire 135) in the internal harness. In WTEC II, the signal ground wire (wire 161) is routed through the transmission connector, terminal W, and then to the ECU, terminal B27. In WTEC III, this same wire in the internal harness becomes the TID wire (wire 195), and it goes to the ECU, terminal T13 (blue connector). The purpose of TID 1 was to provide a common transmission for use with both WTEC II and WTEC III systems (V7A and V8).

The only difference between a pre-TID transmission and a TID 1 transmission is the internal wiring harness which connects the digital and analog grounds on the TID 1 harness. Adapter harness P/N 200100 can be ordered from St. Clair Technologies to provide the same connection outside the transmission and allow a pre-TransID transmission to be “converted” to a TransID 1 transmission.

All models of the 3000 and 4000 Product Families transmissions were built with the TID 1 internal (feedthrough) harness beginning in September, 1996. Two changes were rolled into this update: the wiring change for TID 1 and a change to use a molded channel rather than the braided covering which was previously used. Both changes were rolled into the same internal harness P/N even though there was a delay in implementing the channel which resulted in the two serial number (S/N) breaks. Table 1–1 lists the harness P/Ns for the different transmission models along with the S/Ns for both changes for each harness.

Table 1–1. TransID 1 S/N Breakpoint

Transmission Model	Pre-TransID Harness P/N*	TransID 1 Harness*	S/N at Wiring Change	S/N at U-Channel
3000 Product Family w/ OLS	29516322	29529472	6510088864	6510096671
3000 Product Family w/o OLS	29516323	29529473	6510089316	6510096683
3000 Product Family 7-Speed	29516324	29529474	6510090786	6510096675
4000 Product Family w/ OLS	29516325	29529475	6610014067	6610015591
4000 Product Family w/o OLS	29516326	29529476	6610014084	6610015700
4000 Product Family 7-Speed	N/A	N/A	N/A	N/A
*NOTE: These P/Ns are no longer serviced, refer to Table 1–4 for current P/Ns.				

2. TransID 2

The purpose of the TransID 2 (TID 2) change is to indicate the use of new sump and retarder temperature sensors (thermistors) and a new 3000 Product Family retarder design. The new retarder requires a different calibration than the old retarder. Retarder performance complaints will occur if the new retarder is controlled by the old retarder calibration or the old retarder is controlled by the new retarder calibration.

TID 2 internal harnesses contain both the new sump temperature sensor and a new connection point for the TID wire. The TID wire (195) is connected to Solenoid A ground (wire 120) to signal TID 2 to the ECU. The new temperature sensors are discussed below.

A TID 2 transmission will only work with a V8A or later ECU (WTEC III) and V8A and later ECUs are calibrated to accommodate both TID 1 and TID 2 transmissions. The 4000 Product Family 7-Speed transmissions were equipped with TID 2 at the start of production. The 3000 and 4000 Product Families transmissions produced before April 3, 2000 were TID 2 units.

Copyright © 2005 General Motors Corp.

https://truckmanualshub.com/

GENERAL DESCRIPTION

The internal harness change to all models for TID 2 production began in late December, 1997. The S/N breakpoints are shown in Table 1–2.

Table 1–2. TransID 2 S/N Breakpoint

Transmission Model	TransID 1 Harness P/N*	TransID 2 Harness P/N*	S/N at Thermistor and Wiring Change
3000 Product Family w/ OLS	29529472	29533652	6510141464
3000 Product Family w/o OLS	29529473	29533653	6510141470
3000 Product Family 7-Speed	29529474	29533654	6510142172
4000 Product Family w/ OLS	29529475	29533655	6610026328
4000 Product Family w/o OLS	29529476	29533656	6610026319
4000 Product Family 7-Speed	N/A	29533657	6610034908 (start of production)
*NOTE: These P/Ns are no longer serviced, refer to Table 1–4 for current P/Ns.			

The new retarder thermistor used on TID 2 retarder model transmissions has a molded connector and is the same on all TID 2 retarders. The TID 1 and pre-TID retarder thermistor had a two terminal connector attached to it when it was used on 4000 Product Family transmissions. It was part of a retarder harness assembly when used on 3000 Product Family transmissions. Refer to Appendix Q which describes the new and old temperature sensors. A graph and a table of resistance values for different temperatures are also included in Appendix Q.

Table 1–3 shows the old (pre-TID and TID 1) and the new (TID 2) part numbers of the retarder temperature sensors and the serial number when the change was made.

Table 1–3. New Retarder Temperature Sensor S/N Breakpoint

Transmission Model	Former Thermistor Used	P/N Where Former Thermistor Used	New Thermistor P/N (TID 2)	First S/N For New Thermistor
3000 Product Family	built into retarder harness	29510662	15326309	6510142059
4000 Product Family	built with connector attached	29511861	15326309	6610026472

3. TransID 3

Starting April 3, 2000, the TID feature was changed from TID 2 to TID 3. A new internal harness was released to implement the TID 3 feature. Figure J–3 (Appendix J) shows the wiring schematic for the new internal harness. TID 1 and TID 2 internal harnesses have been maintained for service units built before April 3, 2000. TID 3 is required to make sure that the auto-detect feature selects the proper calibration for the new friction plate material.

Version 8A software was updated to include TID 3 capability as of October 1999. Table 1–4 shows the new internal harness part numbers for each of the control module configurations. Also reference Table 1–5 for transmission/ECU compatibility information. The 3000 and 4000 Product Families transmissions produced starting April 3, 2000 were TID 3 units. All T Series transmissions were TID 3 at introduction.

Copyright © 2005 General Motors Corp.

https://truckmanualshub.com/

GENERAL DESCRIPTION

Table 1–4. Current Internal Harness Service Kit† P/N by TransID Version

Transmission	3000 and 4000 Product Families Internal Harness Service Kits		
	TransID 1	TransID 2 **	TransID 3***
3000 Product Family w/o OLS	29542683	29542680	29542660
3000 Product Family w/ OLS (old)*	29542682	29542677	N/A
3000 Product Family w/ OLS (new)*	29542651	29542671	29542681
3000 Product Family 7-Speed	29542684	29542679	29542687
4000 Product Family w/o OLS	29542686	29542649	29542688
4000 Product Family w/ OLS (old)*	29542685	29542648	N/A
4000 Product Family w/ OLS (new)*	29544141	29542670	29542689
4000 Product Family 7-Speed w/o OLS	N/A	29542650	29542690
4000 Product Family 7-Speed w/ OLS	N/A	N/A	29542691

* Reference SIL 19-WT-99
** Reference SIL 7-WT-98
*** Reference SIL 4-WT-00
† The key words associated with this reference are “current” and “kits”.
N/A Not Applicable

C. Compatibility Between TransID Level And ECU Calibration Level

Table 1–5 shows the compatibility of the different ECU software levels with the different TID level transmissions.

Table 1–5. ECU/TransID Compatibility

	CIN Compatibility Number	Software Level	Compatible with TransID Level	ECU Production Dates
WTEC II	07	V6E	pre-TID and TID 1	until 9/94
	08	V7 and V7A	pre-TID and TID 1	9/94 until 12/97
WTEC III	0A	V8	TID 1	2/97 until 9/97
	0B	V8A	TID 1 and 2	beginning 10/97
	0C	V9	TID 1, 2, and 3	beginning 4/00
	0D	V9A	TID 1, 2, and 3	beginning 4/01

The manufacture and sale of both WTEC II and WTEC III ECUs during most of 1997 required a means of using a common transmission with either a WTEC II or a WTEC III ECU. A TID 1 transmission is the common transmission configuration for both control systems and production began in September, 1996 (refer to Table 1–3). A TID level 1 transmission is compatible with any Allison-supplied ECU.

Pre-TransID transmissions are only compatible with V6E, V7, and V7A ECUs. Pre-TransID transmissions were produced before the first S/N break in Table 1–3.

TransID level 2 transmissions were produced beginning in late December, 1997 (refer to Table 1–5). A TransID 2 transmission is compatible with V8A and later ECUs only.

TransID level 3 transmissions were produced beginning April 3, 2000 (refer to Table 1–5). A TransID 3 transmission is compatible with V8A and later ECUs only. Software V9 or V9A is required to use Reduced Engine Load at Stop (RELS). Refer to Table 1–6 for S/N break points.

Table 1–6. TID 3 S/N Break Point

Model	S/N Break
3000 Product Family	6510262117
4000 Product Family	6610062126

Copyright © 2005 General Motors Corp.

https://truckmanualshub.com/

GENERAL DESCRIPTION

The following table shows compatibility information between transmission and vehicle configuration.

Transmission Configuration	Vehicle Configuration (ECU, Shifter, and Wiring)				
	WTEC II, C6E; CIN 07	**WTEC II, V7; CIN 08**	**WTEC III, V8; CIN 0A; TID1 (accommodates both lockup clutches after 8/25/97)**	**WTEC III, V8A; 0B; TID1 & 2 (+TID 3 after 10/24/99, but will not handle TELS)**	**WTEC III, V9 through V9x*; CIN 0C through 0F; TID1, 2, & 3 (required for RELS)**
Pre-TID 3000 and 4000 Product Families; Raybestos plates only	everything works OK; no cal change required or available if Luk damper/friction material used; replace vehicle harness connector with 29519127 kit	everything works OK; no cal change required or available if Luk damper/friction material used, but latest cal has changes to better match the friction material	will not work unless TID1 level trans; codes 32 xx, 55 xx; use adapter 200100 to make it a TID1; recal if Luk damper/friction material used, because latest cal has changes to better match the friction material	will not work unless TID1 level trans; codes 32 xx, 55 xx; use adapter 200100 to make it a TID1; works with Luk or BW damper	will not work unless TID1 level trans; codes 32 xx, 55 xx; use adapter 200100 to make it a TID1; works with Luk or BW damper
TID1: 3000 and 4000 Product Families; Raybestos plates only	everything works OK; no cal change required or available if Luk damper/friction material used; replace vehicle harness connector with 29519127 kit	everything works OK; recal if Luk damper/friction material used, because latest cal has changes to better match the friction material	everything works OK; recal if Luk damper/friction material used, because latest cal has changes to better match the friction material	everything works OK; uses TID1 cal	everything works OK; uses TID1 cal
TID2: 3000 and 4000 Product Families; New style sump and retarder temp sensors; 3000 Product Family new style retarder; Raybestos plates only	will not work; codes 44 12, 33 23, 24 23, 33 12; retarder codes 61 00, 62 23, and 62 12; non-rtdr models can work if changed back to TID1 internal harness; 4000 Product Family rtdr models require change back to old style retarder temp sensor; 3000 Product Family rtdr models require change back to old style retarder; no cal change required or available if Luk damper/friction material used; if converted, replace vehicle harness connector with 2951927 kit	will not work; codes 44 12, 33 23, 24 23, 33 12; retarder codes 61 00, 62 23, and 62 12; non-rtdr models can work if changed back to TID1 internal harness; 4000 Product Family rtdr models require change back to old style retarder temp sensor; 3000 Product Family rtdr models require change back to old style retarder; recal if Luk damper/friction material used, because latest cal has changes to better match the friction material	will not work; will use TID1 cal and generate codes: 33 23, 24 23, 33 12; retarder codes 61 00, 62 23, and 62 12; recal to V8A (CIN 0B)	everything works OK; uses TID2 cal	everything works OK; uses TID2 cal
TID2: 3000 and 4000 Product Families; New style sump and retarder temp sensors; 3000 Product Family new style retarder; Dynax plates only	will not work; code 44 12 and temp sensor codes; requires WTEC III, V8A, V9 through V9x* system or overhaul to change back to Raybestos clutch plates	will not work; code 44 12 and temp sensor codes; requires WTEC III, V8A, V9 through V9x* system or overhaul to change back to Raybestos clutch plates	will not work; generate codes: 33 23, 24 23, 33 12; retarder codes 61 00, 62 23, and 62 12; Shift quality problems because of clutch material change; recal ECU to V8A, V9 through V9x*; if RELS required, replace ECU with V9	will not work if cal installed before 10/24/99; will not work with RELS; generate code 36 01 and have shift quality problems because of clutch material change; recal ECU to latest V8A if previous cal installed before 10/24/99; if RELS required, replace ECU withV9 through V9x*	everything works OK; uses TID3 cal

*V9x refers to the latest V9 version

Copyright © 2005 General Motors Corp.

Using New Replacement Transmissions (TID 3)

Transmission Configuration			ECU, Shifter, Vehicle harness configuration:		
If this model/configuration transmission is replaced by a new TransID 3 transmission (with Dynax clutch plates),			one of the following modifications are necessary to make it compatible with **vehicles of this configuration**:		
TID level of original trans in vehicle	Key Characteristics	Model	WTEC 2; CIN 07… and 08…	WTEC 3; V8/V8A; CIN 0B…	WTEC 3; V9/V9A; CIN 0D… (this level ECU and software might be found installed in cases where the WTEC 3, V8/V8A ECU was replaced)
pre-TID	• Former MD retarder (pre-1998 retarder) • Former temp sensors • Post-block	MD/B300	TID1 internal harness + Dynax cal	Configuration not released	Configuration not released
		MDR/B300R	TID1 internal harness + Dynax cal + New Rtdr cal + adapter harness (w/old temp sensor)	Configuration not released	Configuration not released
		MD3066/B400	TID1 internal harness + Dynax cal	Configuration not released	Configuration not released
		MD3066/B400R	TID1 internal harness + Dynax cal + New Rtdr cal + adapter harness (w/old temp sensor)	Configuration not released	Configuration not released
		MD7	TID1 internal harness + Dynax cal	Configuration not released	Configuration not released
		HD/B500	TID1 internal harness + Dynax cal	Configuration not released	Configuration not released
		HDR/B500R	TID1 internal harness + Dynax cal + old rtdr temp sensor	Configuration not released	Configuration not released
TID1	• Former MD retarder (pre-1998 retarder) • Former temp sensors	MD/B300	TID1 internal harness + Dynax cal	Update calibration	No changes needed
		MDR/B300R	TID1 internal harness + Dynax cal + New Rtdr cal + adapter harness (w/old temp sensor)	Update calibration + adapter harness (w/o temp sensor)	Use adapter harness (w/o temp sensor)
		MD3066/B400	TID1 internal harness	Update calibration	No changes needed
		MD3066/B400R	TID1 internal harness + New Rtdr cal + adapter harness (w/old temp sensor)	Update calibration + adapter harness (w/o temp sensor)	Use adapter harness (w/o temp sensor)
		MD7	TID1 internal harness + Dynax cal	Update calibration	No changes needed
		HD/B500	TID1 internal harness + Dynax cal	Update calibration	No changes needed
		HDR/B500R	TID1 internal harness + Dynax cal + old rtdr temp sensor	Update calibration+ new rtdr temp sensor connector	new rtdr temp sensor connector
TID2	• Current MD retarder • Current temperature sensors	MD/B300	Configuration not released	Update calibration if installed prior to 10/24/99	No changes needed
		MDR/B300R	Configuration not released	Update calibration if installed prior to 10/24/99	No changes needed
		MD3066/B400/3000MH	Configuration not released	Update calibration if installed prior to 10/24/99	No changes needed
		MD3066R/B400R/3000MHR	Configuration not released	Update calibration if installed prior to 10/24/99	No changes needed
		MD7	Configuration not released	Update calibration if installed prior to 10/24/99	No changes needed
		HD/B500/4000MH	Configuration not released	Update calibration if installed prior to 10/24/99	No changes needed
		HDR/B500R/4000MHR	Configuration not released	Update calibration if installed prior to 10/24/99	No changes needed
		HD7	Configuration not released	Update calibration if installed prior to 10/24/99	No changes needed
		HD7R	Configuration not released	Update calibration if installed prior to 10/24/99	No changes needed
TID3	• Current MD retarder • Dynax clutch plates	3000 Product Family—All Models	Configuration not released	Update calibration if installed prior to 10/24/99	No changes needed
		4000 Product Family—All Models	Configuration not released	Update calibration if installed prior to 10/24/99	No changes needed

Copyright © 2005 General Motors Corp.

https://truckmanualshub.com/

Rebuilding With Dynax Clutch Plates

Transmission Configuration			ECU, Shifter, Vehicle harness configuration:		
If this model/configuration transmission is rebuilt with Dynax clutch plates,			one of the following modifications are necessary to make it compatible with vehicles of this configuration:		
TID level of original trans in vehicle	Key Characteristics	Model	WTEC 2; CIN 07… and 08…	WTEC 3; V8/V8A; CIN 0B…	WTEC 3; V9/V9A; CIN 0D… (this level ECU and software might be found installed in cases where the WTEC 3, V8/V8A ECU was replaced)
pre-TID	• Former MD retarder (pre-1998 retarder) • Former temp sensors • Post-block	MD/B300	pre-TID or TID1 internal harness + Dynax cal	Configuration not released	Configuration not released
		MDR/B300R	pre-TID or TID1 internal harness + Dynax cal	Configuration not released	Configuration not released
		MD3066/B400	pre-TID or TID1 internal harness + Dynax cal	Configuration not released	Configuration not released
		MD3066/B400R	pre-TID or TID1 internal harness + Dynax cal	Configuration not released	Configuration not released
		MD7	pre-TID or TID1 internal harness + Dynax cal	Configuration not released	Configuration not released
		HD/B500	pre-TID or TID1 internal harness + Dynax cal	Configuration not released	Configuration not released
		HDR/B500R	pre-TID or TID1 internal harness + Dynax cal	Configuration not released	Configuration not released
TID1	• Former MD retarder (pre-1998 retarder) • Former temp sensors	MD/B300	Retain TID 1 + Dynax cal	TID 3 internal harness + updated calibration	TID 3 internal harness + updated calibration
		MDR/B300R	Retain TID 1 + Dynax cal	TID1 internal harness + Dynax cal	TID1 internal harness + Dynax cal
		MD3066/B400	Retain TID 1	Retain TID 1 or install TID 3 internal harness + updated cal	Retain TID 1 or install TID 3 internal harness + updated cal
		MD3066/B400R	Retain TID 1	Retain TID 1	Retain TID 1
		MD7	Retain TID 1 + Dynax cal	TID 3 internal harness + updated calibration	TID 3 internal harness + updated calibration
		HD/B500	Retain TID 1 + Dynax cal	TID 3 internal harness + updated calibration	TID 3 internal harness + updated calibration
		HDR/B500R	Retain TID 1 + Dynax cal	TID 3 internal harness + new rtdr temp sensor and connector	TID 3 internal harness + new rtdr temp sensor and connector
TID2	• Current MD retarder • Current temperature sensors	MD/B300	Configuration not released	TID 3 internal harness + updated calibration	TID 3 internal harness
		MDR/B300R	Configuration not released	TID 3 internal harness + updated calibration	TID 3 internal harness
		MD3066/B400/3000MH	Configuration not released		No changes needed
		MD3066R/B400R/ 3000MHR	Configuration not released		No changes needed
		MD7	Configuration not released	TID 3 internal harness + updated calibration	TID 3 internal harness
		HD/B500/4000MH	Configuration not released	TID 3 internal harness + updated calibration	TID 3 internal harness
		HDR/B500R/4000MHR	Configuration not released	TID 3 internal harness + updated calibration	TID 3 internal harness
		HD7	Configuration not released	TID 3 internal harness + updated calibration	TID 3 internal harness
		HD7R	Configuration not released	TID 3 internal harness + updated calibration	TID 3 internal harness
TID3	• Current MD retarder • Dynax clutch plates	3000 Product Family—All Models	Configuration not released	No changes needed	No changes needed
		4000 Product Family—All Models	Configuration not released	No changes needed	No changes needed

Copyright © 2005 General Motors Corp.

https://truckmanualshub.com/

GENERAL DESCRIPTION

NOTES

Copyright © 2005 General Motors Corp.

https://truckmanualshub.com/

SECTION 2—DEFINITIONS AND ABBREVIATIONS

2–1. CHECK TRANS LIGHT

When the ECU detects a serious fault, the **CHECK TRANS** light (usually located on the vehicle instrument panel) illuminates and action is automatically taken to protect operator, vehicle, and the transmission. A diagnostic code will nearly always be registered when the **CHECK TRANS** light is on; however, not all diagnostic codes will turn on the **CHECK TRANS** light. Codes related to the **CHECK TRANS** light are detailed in the code chart (refer to Section 6).

Illumination of the **CHECK TRANS** light indicates that a condition was detected that requires service attention. Operation may or may not be restricted but even when restricted will allow the vehicle to reach a service assistance location. Depending upon the cause for the **CHECK TRANS** light illumination, the ECU may or may not respond to shift selector requests. The transmission may be locked in a range. That range will be shown on the shift selector display. Both upshifts and downshifts may be restricted when the **CHECK TRANS** light is illuminated. Seek service assistance as soon as possible.

Each time the engine is started, the **CHECK TRANS** light illuminates briefly and then goes off. This momentary lighting shows the light circuit is working properly. If the light does not come on during engine start, request service immediately.

2–2. ALLISON TRANSMISSION DIAGNOSTIC TOOL

Allison DOC™ (Diagnostic Optimized Connection) For PC is a PC-based service tool for use with 3000 and 4000 Product Families transmissions. The Allison DOC™ for PC–Service Tool is a full-feature diagnostic software application supporting WTEC II and WTEC III control systems. When installed on the user's own PC, it will allow the technician to acquire data from the transmission's control system and through the use of embedded troubleshooting manuals, conduct systematic troubleshooting of transmission complaints.

Basic Features

Allison DOC™ For PC–Service Tool uses a Windows style GUI and includes:

- User selected views of multiple transmission parameters.
- View active and historical diagnostic trouble codes (DTCs).
- Graphical instrument panel view of transmission parameters.
- Strip chart function .
- User configurable Snapshot function.
- User configurable Print function.
- Code driven links to embedded WTEC II, WTEC III (Pre-4th Generation), and 4th Generation (3000 and 4000 Product Families) Troubleshooting Manuals.
- Reprogramming capability (available after satisfying Allison Transmission training certification requirements).
- Demo Mode which allows the user to practice the program without being connected to a vehicle.
- New animated, screen by screen, help support (found in Help, Video-based training materials, Allison DOC™ For PC–Service Tool Training Videos).
- Application Configuration: This menu function serves as the platform for three different features.
  - (1) General tab, which allows the user to select language (English only at this time), and unit of measure.
  - (2) ECU/TCM Reprogramming tab, used to enable the reprogramming capability of the Allison DOC™ For PC–Service Tool.
  - (3) Update Application tab, will access a web URL that will contain minor updates for the diagnostic tool to support changes in the various transmission control systems.
- Data Bus Viewer allows the user to capture (see and save) data transmitted on the various vehicle data buses supported by Allison DOC™ For PC–Service Tool (J1708, J1939, GMLAN, and J1850).
- Printed user's manual and laminated Job Aid Card.

Copyright © 2005 General Motors Corp.

https://truckmanualshub.com/

DEFINITIONS AND ABBREVIATIONS

- Adobe® Acrobat® 7.5 bundled on the CD for reading the Troubleshooting Manual.
- Microsoft® Media Player® 6.4 and 7.0 bundled on the CD for displaying various and updated training videos (available from the application Help menu).
- Ability to generate and display TRANSHEALTH™ reports.

PC Platform Definition

Allison DOC™ For PC–Service Tool has been tested with and is known to operate on PCs with the following configurations*:

- Microsoft® Windows® XP® Professional and Window® 2000 (SP4 or later)
- 600 MB free hard drive space required to install the program (sufficient free hard disk space will be required by the operating system after the software installation to run the program)
- 128 MB of RAM (256 MB or greater recommended)
- Pentium® III Processor—800MHz (Pentium® IV—2.0GHz or greater recommended)
- Internet connection capability (Internet Explorer 5.0.1 or greater)—A broadband Internet connection is highly recommended for receiving updates and file downloads
- One available USB port—USB 1.1 (USB 2.0 recommended)
- 16x CD-ROM (48x or greater recommended)
- Full administrative privileges are required to install, update, and run Allison DOC™ and Allison TCM Reflash
- A PCMCIA slot might be required depending on the type of Softing CAN product being used as a translator device (if any)

NOTE:

- Error messages, sudden disconnections, and poor performance are some of the results users will experience if Allison DOC™ For PC–Service Tool V6.0.0 is installed on PCs that do not meet one or more of the above specifications.
- For the latest requirements, please refer to ***www.allisontransmission.com/Service/Electronic (Diagnostic) Tools/Requirements*** or the latest revision of Service Information Letter 25-TR-06.

NOTE: Additional information available in Appendix N.

Copyright © 2005 General Motors Corp.

https://truckmanualshub.com/

DEFINITIONS AND ABBREVIATIONS

2–3. ABBREVIATIONS

A/N	Assembly Number
ABS	Anti-lock Brake System—OEM-provided means to detect and prevent wheel stoppage to enhance vehicle handling. Retarder and engine brakes will not apply when ABS is active.
AFRI	Auxiliary Function Range Inhibit
Amp	Unit of electrical current
API	Application Program Interface
ASIC	Application Specific Integrated Circuit
AT	Allison Transmission
C3PS	C3 Pressure Switch—Pressure switch to signal the presence or absence of pressure in the C3 clutch-apply circuit
CAN	Controller Area Network—A network for all SAE J1939 communications in a vehicle (engine, transmission, ABS, etc.)
CCVS	Cruise Control Vehicle Speed
CIN	Calibration Identification Number
CMC	Customer Modifiable Constant
COP	Computer Operating Properly—Hardware protection which causes the ECU to reset if software gets lost
CT	Closed Throttle
DMM	Digital Multimeter
DMOEM	Distributor Managed Original Equipment Manufacturer
DNA	Does Not Adapt—Adaptive shift control is disabled
DNS	DO NOT SHIFT—Refers to the DO NOT SHIFT diagnostic response during which the CHECK TRANS light is illuminated and the transmission will not shift and will not respond to the Shift Selector
DOC™	Diagnostic Optimized Connection
DPA	Dearborn Protocol Adapter
DTC	Diagnostic Trouble Code
DVOM	Digital volt/ohmmeter
ECU	Electronic Control Unit (also commonly referred to as the “computer”)
EMI	ElectroMagnetic Interference
FBO	Feature Based Ordering
FCC	Federal Communications Commission
GPI	General Purpose Input—Input signal to the ECU to request a special operating mode or condition
GPO	General Purpose Output—Output signal from the ECU to control vehicle components (such as PTOs, backup lights, etc.) or allow a special operating mode or condition
GUI	Graphical User Interface

Copyright © 2005 General Motors Corp.

https://truckmanualshub.com/

DEFINITIONS AND ABBREVIATIONS

2–3. ABBREVIATIONS *(cont'd)*

J1587	Engine/transmission serial data communications link
J1939	High-speed vehicle serial data communications link
LED	Light-Emitting Diode—Electronic device used for illumination
LRTP	Low Range Torque Protection
MB	Mega Byte
LU	Lockup
NNC	Neutral No Clutches—Neutral commanded with no clutches applied
NVL	Neutral Very Low—The ECU has sensed turbine speed below 150 rpm when output speed is below 100 rpm and engine speed is above 400 rpm when N (Neutral) was selected. This is usually caused by a dragging C1 or C3 clutch or a failed turbine speed sensor. NVL is attained by turning D solenoid "ON" (in addition to E solenoid) and the C4 and C5 clutches are applied to lock the transmission output.
OEM	Original Equipment Manufacturer—Maker of vehicle or equipment
Ohm	Unit of electrical resistance
OL	Over Limit or Oil Level—For Over Limit see "∞". Indicates Oil Level is being displayed on a shift selector
OLS	Oil Level Sensor—Electronic device (optional) on control module for indicating transmission fluid level
PC	Personal Computer
PCCS	PROM Calibration Configurator System
PCMCIA	Personal Computer Memory Card International Association—Memory device for use with Pro-Link® containing Allison Transmission programming and diagnostics
P/N	Part Number
PROM	Programmable Read Only Memory
PSS	Primary Shift Selector—Main shift selector in a two-selector control system.
PTO	Power Takeoff
PWM Solenoid	Pulse Width Modulated Solenoid—Solenoids are controlled by pulse width modulation. Solenoid control of clutch pressures is based on the solenoid's duty cycle. Duty cycle is determined by the ratio of solenoid's on-time to off-time.
RELS	Reduced Engine Load at Stop
RFI	Radio Frequency Interference
RMR	Retarder Modulation Request—Signal from a retarder control device
RPR	Return to Previous Range—Diagnostic response in which the transmission is commanded to return to previously commanded range
RSI	Remote Serial Interface
RTDR	Retarder
SBS	Service Brake Status

Copyright © 2005 General Motors Corp.

https://truckmanualshub.com/

DEFINITIONS AND ABBREVIATIONS

2–3. ABBREVIATIONS *(cont'd)*

SCI	Serial Communication Interface—Used to transmit data and messages between the diagnostic tool and the ECU and other systems such as electronically-controlled engines.
SCTI	St. Clair Technologies, Inc.
S/N	Serial Number
SOL OFF	All SOLenoids OFF
SPI	Serial Peripheral Interface—The means of communication between the microprocessor and the interface circuits
SSS	Secondary Shift Selector—Alternate shift selector in a two-selector control system
TID	TransID—A feature which allows the ECU to know the transmission configuration and provide the corresponding calibration required
TIDCAP CAL	TransID Capable Calibration
TPS	Throttle Position Sensor—Potentiometer for signaling the position of the engine fuel control lever
V	Version—Abbreviation used in describing ECU software levels
VDC	Volts Direct Current (DC)
VIM	Vehicle Interface Module—A watertight box containing relays and fuses—interfaces the transmission electronic control system with components on the vehicle
VIW	Vehicle Interface Wiring—Interfaces ECU programmed input and output functions with the vehicle wiring
Volt	Unit of electrical force
VOM	Volt/ohmmeter
WOT	Wide Open Throttle
WTEC	World Transmission Electronic Controls
∞	Infinity—Condition of a circuit with higher resistance than can be measured, effectively an open circuit

Copyright © 2005 General Motors Corp.

https://truckmanualshub.com/

DEFINITIONS AND ABBREVIATIONS

NOTES

Copyright © 2005 General Motors Corp.

https://truckmanualshub.com/

SECTION 3—BASIC KNOWLEDGE

3–1. BASIC KNOWLEDGE REQUIRED

To service WTEC III Electronic Controls, the technician must understand basic electrical concepts. Technicians need to know how to use a volt/ohmmeter (VOM) to make resistance and continuity tests. Most troubleshooting consists of testing for resistance, continuity, and shorts between wires and to ground. The technician should be able to use jumper wires and breakout harnesses and connectors. Technicians unsure of making the required tests should ask questions of experienced personnel or find instruction.

The technician should also have the mechanical aptitude required to connect pressure gauges or transducers to identified pressure ports used in the troubleshooting process. Pressure tap locations and pressure values are shown in Appendix B—Checking Clutch Pressures.

Input power, ground, neutral start circuitry, etc., can cause problems with electronic controls or vehicle functioning and may not generate a diagnostic code. A working knowledge of WTEC III Series Electronic Controls vehicle installation is necessary in troubleshooting installation-related problems.

Refer to Section 8 for information concerning performance complaints (non-code) troubleshooting. A complete wiring schematic is shown in Appendix J. Refer to the WTEC III Controls and General Information Tech Data for information concerning electronic controls installation and the Installation Checklist. Reliable transmission operation and performance depend upon a correctly installed transmission. Review the Installation Checklist in the 3000 and 4000 Product Families transmissions Tech Data Books for proper installation.

NOTE: ***Allison Transmission is providing for service of wiring harnesses and wiring harness components as follows:***

- ***Repair parts for the internal wiring harness and for wiring harness components attached to the shift selector will be available through the Allison Transmission Parts Distribution Center (PDC). Use the P/N from your appropriate parts catalog or from Appendix E in this manual. Allison Transmission is responsible for warranty on these parts.***
- ***Repair parts for the external harnesses and external harness components must be obtained from St. Clair Technologies Inc. (SCTI). SCTI provides parts to any Allison customer or OEM and is responsible for warranty on these parts. SCTI recognizes Allison Transmission, manufacturers, and SCTI part numbers. SCTI provides a technical HELPLINE at 519-627-1673 (Wallaceburg). SCTI will have parts catalogs available. The SCTI addresses and phone numbers for parts outlets are:***

St. Clair Technologies, Inc.
920 Old Glass Road
Wallaceburg, Ontario, Canada N8A 4L8
Phone: 519-627-1673
Fax: 519-627-4227

St. Clair Technologies, Inc.
Calle Damanti S/N Col
Guadalupe—Guaymas
Sonora, Mexico CP85440
Phone: 011-526 2222-43834
Fax: 011-526-2222-43553

- ***St. Clair Technologies, Inc. stocks a WTEC III external harness repair kit, P/N 29532362, as a source for some external harness repair parts. SCTI is the source for external harness repair parts.***

Copyright © 2005 General Motors Corp.

https://truckmanualshub.com/

BASIC KNOWLEDGE

3–2. USING THE TROUBLESHOOTING MANUAL

Use this manual as an aid to troubleshooting the WTEC III Electronic Controls. Every possible problem and its solution cannot be encompassed by any manual. However, this manual does provide a starting point from which most problems can be resolved.

Once a problem solution is discovered in the manual do not look further for other solutions. It is necessary to determine *why* a problem occurred. For example, taping a wire that has been rubbing on a frame rail will not correct the problem unless the rubbing contact is eliminated.

3–3. SYSTEM OVERVIEW

WTEC III Electronic Control functions are controlled by the ECU. The ECU reads the following to determine when to command a shift:

- Shift selector range selection
- Output speed
- Throttle position.

In order to control the oncoming and off-going clutches during a shift, the ECU monitors:

- Turbine speed
- Output speed
- Throttle position.

When the ECU detects an electrical fault, it logs a diagnostic code indicating the faulty circuit and may alter the transmission operation to prevent or reduce damage.

When the ECU detects a non-electrical problem while trying to make a shift, the ECU may try that shift a second or third time before setting a diagnostic code. Once that shift has been retried, and a fault is still detected, the ECU sets a diagnostic code and holds the transmission in a fail-to-range mode of operation.

3–4. IMPORTANT INFORMATION IN THE TROUBLESHOOTING PROCESS

Before beginning the troubleshooting process, read and understand the following:

- WTEC III wire identification presents the wire number followed by the ECU terminal source (i.e., 157-S30). If there is a letter suffix following the wire number, there is a splice between the ECU source and wire destination (i.e., 136A-S16).
- Shut off the engine and ignition before any harness connectors are disconnected or connected.
- Remember to do the following when testing for shorts and opens:
  - Minimize movement of wiring harnesses when looking for shorts. Shorts involve wire-to-wire or wire-to-ground contacts and moving the harnesses may eliminate the problem.
  - Wiggle connectors, harnesses, and splices when looking for opens. This simulates vehicle movements which occur during actual operation.

Copyright © 2005 General Motors Corp.

https://truckmanualshub.com/

BASIC KNOWLEDGE

- When disconnecting a harness connector, be sure the pulling force is applied to the connector itself and **not the wires** extending from the connector.
- Resistance tests involving wiring between the ECU connectors and other components adds about one ohm of resistance to the component resistance shown.
- Inspect all connector terminals for damage. Terminals may have been bent or have lost the necessary tension to maintain firm contact.
- Clean dirty terminals or connectors with isopropyl alcohol and a cotton swab, or a good quality, non-residue, non-lubricating, cleaning solvent such as LPS Electro Contact Cleaner® or LPS NoFlash Electro Contact Cleaner®.

CAUTION: The cleaning solvent **must not be:**

- Chlorine based
- Contain petroleum distillates
- Conduct electricity.

The cleaning solvent should evaporate quickly to prevent the possibility of condensation within the connectors. Always blow or shake any excess cleaner from the connector before assembling it to its mating connector or hardware. Cleaner trapped in the connector can affect the connector seal. Refer to SIL 17-TR-94 for detailed information on the recommended cleaners.

CAUTION: Care should be taken when welding on a vehicle equipped with electronic controls. Refer to Appendix G, Paragraph 1–1.

- Diagnostic codes displayed after system power is turned on with a harness connector disconnected, can be ignored and cleared from memory. Refer to Section 6, Diagnostic Codes, for the code clearing procedure.

3–5. BEGINNING THE TROUBLESHOOTING PROCESS

NOTE: ***Whenever a transmission is overhauled, exchanged, or has undergone internal repairs, the Electronic Control Unit (ECU) must be "RESET TO UNADAPTED SHIFTS." See Service Information Letter 16-WT-96, Revision A for further details.***

1. Begin troubleshooting by determining the transmission fluid level and ECU input voltage. Remember that some problems may be temperature related. Troubleshoot at the temperature level where the problem occurs. Investigate diagnostic codes by:
   - Using the shift selector display (refer to Paragraph 6–2 for code reading).
   - Using the Allison DOC™ For PC–Service Tool.
2. When a problem exists but a diagnostic code is not indicated, refer to the Performance Complaint Section (Section 8) for a listing of various electrical and hydraulic problems, their causes, and remedies.

Copyright © 2005 General Motors Corp.

https://truckmanualshub.com/

BASIC KNOWLEDGE

3. If a diagnostic code is found in the ECU memory, record all available code information and clear the active indicator. Refer to Section 6.

4. Test drive the vehicle to confirm a diagnostic code or performance complaint.

   - If the code reappears, refer to the Diagnostic Code section (Section 6) and the appropriate code chart. The Diagnostic Code section lists diagnostic codes and their description. Locate the appropriate troubleshooting chart and follow the instructions.
   - If the code does not reappear, it may be an intermittent problem. Use Allison DOC™ For PC–Service Tool and the code display procedure described in Section 6. The code display procedure will indicate the number of times the diagnostic code has occurred. Refer to the troubleshooting chart for the possible cause(s) of the problem.
   - Appendix A deals with the identification of potential circuit problems. Refer to Appendix A if a circuit problem is suspected.

5. If difficulties arise, you have unanswered questions, or if you are unable to quickly identify the root cause during troubleshooting, please contact the Technical Assistance Center (TAC):

   Technical Assistance Center
   PO Box 894, Mail Code 462-470-PF9
   Indianapolis, IN 46206-0894
   Phone: 1-800-252-5283

NOTE: ***Information concerning specific items is contained in the appendices located in the back of this manual. The appendices are referred to throughout the manual.***

Copyright © 2005 General Motors Corp.

https://truckmanualshub.com/

SECTION 4—WIRE TESTING PROCEDURES

4–1. TESTING FOR OPENS, SHORTS BETWEEN WIRES, AND SHORTS-TO-GROUND

(Use Digital Volt/Ohmmeter J 34520-A and Jumper Wire Set J 39197)

NOTE: Please refer to Paragraph 3–5 to begin the troubleshooting process.

1. Make sure all connectors are tightly connected and re-test the circuit.
2. Disconnect and inspect all connectors.
3. Thoroughly clean corroded or dirty terminals. If dirty or corroded terminals are the probable cause of the problems, reconnect the clean connectors and operate the vehicle normally. If the problem recurs, proceed with Step 4.

CAUTION:

The cleaning solvent **must not be:**

- Chlorine based
- Contain petroleum distillates
- Conduct electricity.

The cleaning solvent should evaporate quickly to prevent the possibility of condensation within the connectors. Always blow or shake any excess cleaner from the connector before assembling it to its mating connector or hardware. Cleaner trapped in the connector can affect the connector seal. Refer to SIL 17-TR-94 for detailed information on the recommended cleaners.

4. Review the WTEC III wire numbering system described in Paragraph 3–4.
5. If all connectors are clean and connected correctly, determine which wires in the chassis harness are indicated by the diagnostic code. For example, Code 41 12, indicates an open or short-to-ground in the solenoid A circuit—wires 102-T1 and 120-T4.

   a. Test the continuity of wires 102-T1 and 120-T4 by performing the following (refer to Figure 4–1):

      (1) Disconnect the blue “T” connector from the ECU and disconnect the harness from the transmission main connector. At one end of the harness, using jumper wire kit J 39197 and connector probes in J 39775-CP, connect wire 102-T1 and 120-T4 to each other, being careful not to distort the terminals. Jumping the wires together creates a circuit between wires 102-T1 and 120-T4.

      (2) On the opposite end of the harness, test the continuity of the jumpered pair. No continuity in a jumpered pair circuit (infinite resistance reading) indicates an open in the wire being tested. Locate and repair the damaged portion of the wire.

   b. If the continuity test is good (0–2 Ohms resistance), remove the jumpers. Test the harness for shorts between wires and shorts-to-ground by performing the following (refer to Figure 4–2):

      (1) At the ECU end of the harness, touch one probe of a volt/ohmmeter (VOM) to one wire of the circuit being tested and touch the other probe to each terminal in the same connector, then touch the probe to chassis ground and to the transmission main housing. Do this for both wires in the circuit being tested.

      (2) If at any time the VOM shows zero to low resistance, or the meter’s continuity beeper sounds, there is a short between the two points being probed—wire-to-wire or wire-to-ground. Isolate and repair the short.

Copyright © 2005 General Motors Corp.

https://truckmanualshub.com/

WIRE TESTING PROCEDURES

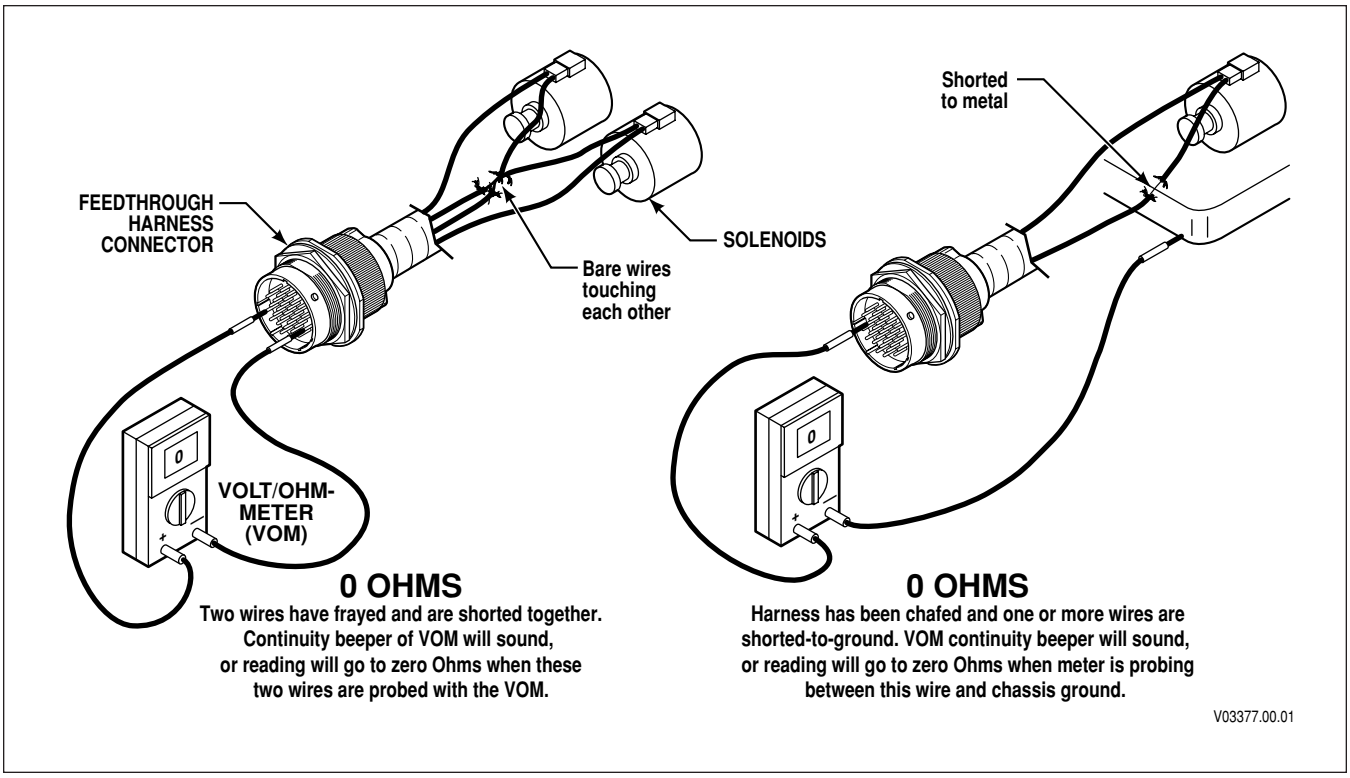

Figure 4–1. Open Circuit

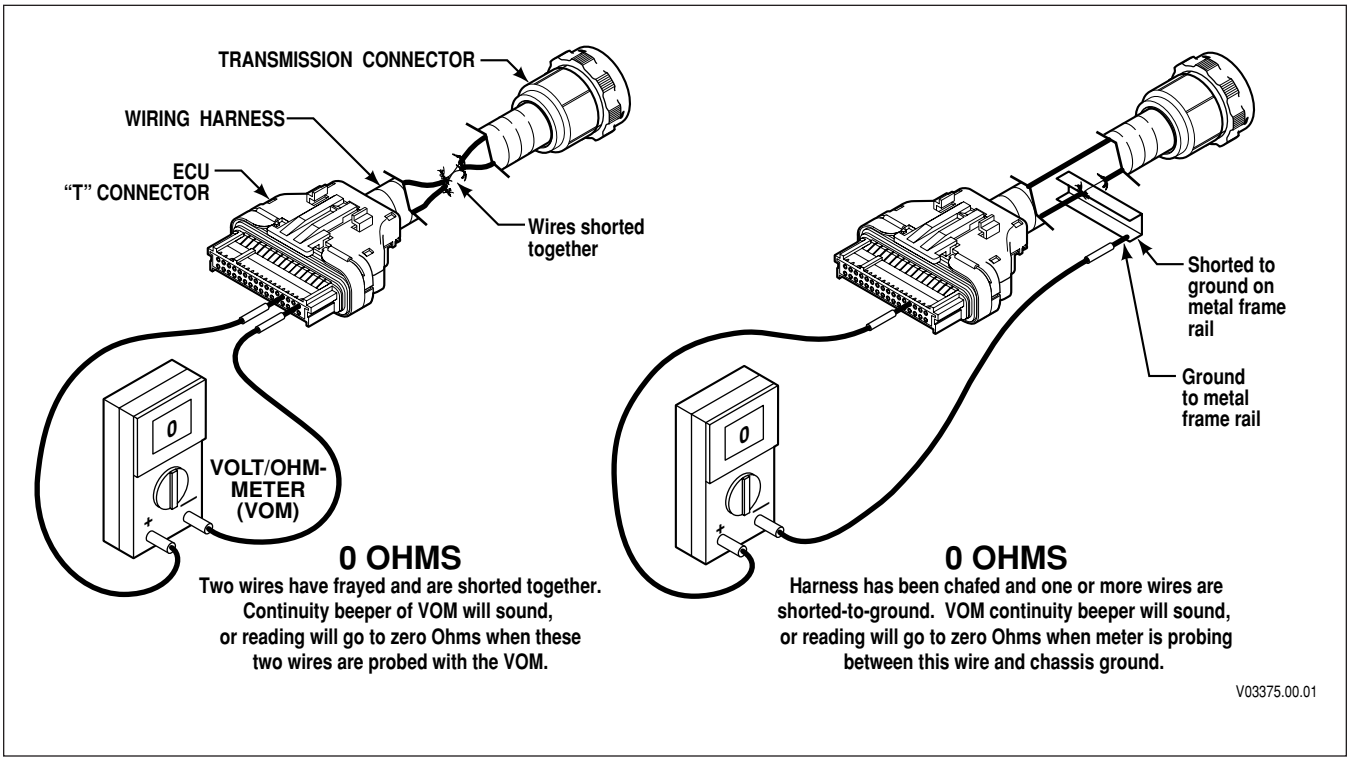

Figure 4–2. Short Between Wires and to Ground

Copyright © 2005 General Motors Corp.

https://truckmanualshub.com/

WIRE TESTING PROCEDURES

4–2. TESTING AT TRANSMISSION CONNECTOR AND THE INTERNAL HARNESS FOR OPENS, SHORTS BETWEEN WIRES, AND SHORTS-TO-GROUND

1. Disconnect the external wiring harness from the transmission.
2. Inspect the connectors. Any terminals which are corroded or dirty must be thoroughly cleaned.

CAUTION:

The cleaning solvent **must not be:**

- Chlorine based
- Contain petroleum distillates
- Conduct electricity.

The cleaning solvent should evaporate quickly to prevent the possibility of condensation within the connectors. Always blow or shake any excess cleaner from the connector before assembling it to its mating connector or hardware. Cleaner trapped in the connector can affect the connector seal. Refer to SIL 17-TR-94 for detailed information on the recommended cleaners.

3. If the connectors are clean and connected correctly, determine which wires in the harness to test. Use the diagnostic code system schematic to locate the wire terminals. For this example, Code 41 12 indicates an open or short-to-ground in solenoid “A” circuit—wires 102-T1 and 120-T4 (refer to Figures 4–3 and 4–4).
   a. At the transmission connector, test the resistance of the solenoid A circuit. Resistance of a solenoid circuit should be 2.4–5 Ohms—covering a temperature range of –18°C to 149°C (0°F to 300°F). Refer to Solenoid Resistance vs. Temperature chart in Appendix K. No continuity in the circuit (infinite resistance) indicates an open in the internal harness, the feedthrough connector, or the solenoid coil. Locate and repair the open in the internal harness or replace the internal harness, replace the feedthrough connector, or replace the solenoid.

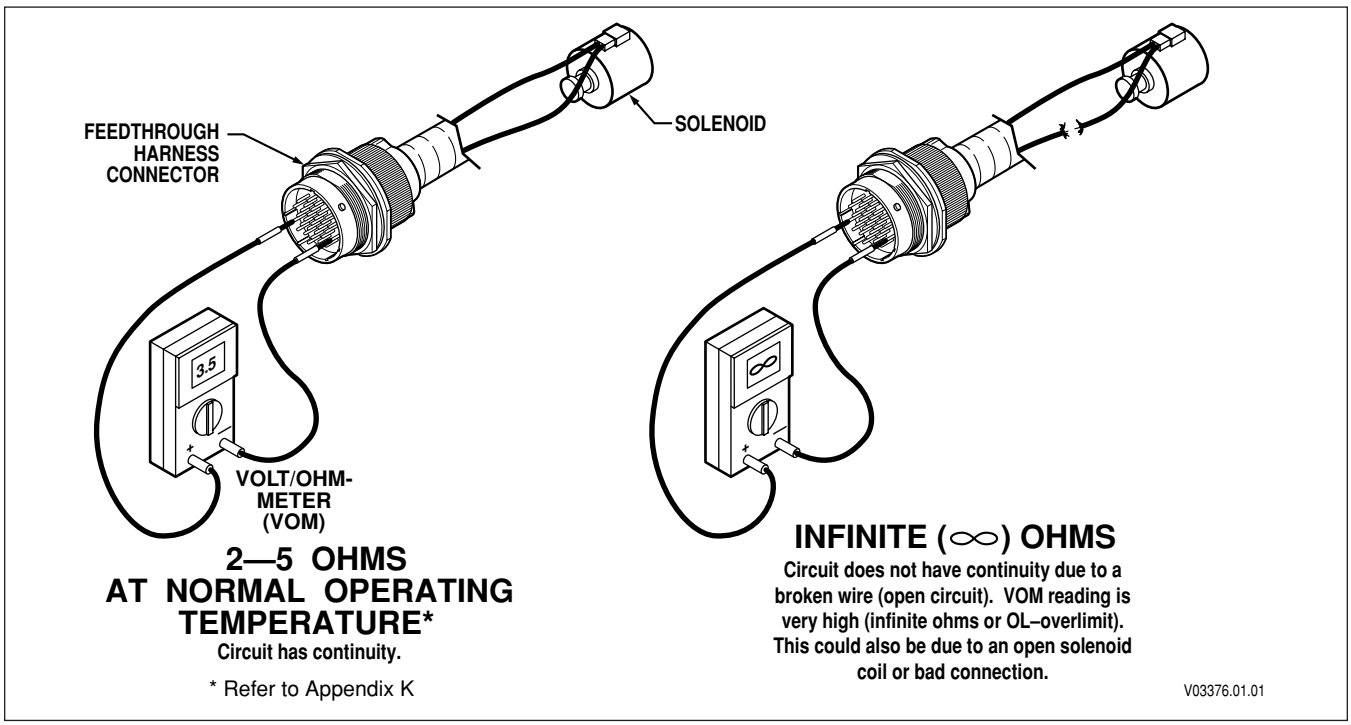

Figure 4–3. Testing for Continuity

Copyright © 2005 General Motors Corp.

https://truckmanualshub.com/

WIRE TESTING PROCEDURES

b. If the resistance test is good, test the harness for shorts between wires and to ground by performing the following (refer to Figure 4–4):

(1) At the transmission connector, touch one probe of the VOM to one wire of the circuit being tested and touch the other probe to each terminal in the connector and to chassis ground and the transmission main housing. Do this for both wires in the circuit being tested.

(2) If the VOM shows zero to low resistance, or the continuity beeper sounds, there is a short between the two points being probed, wire-to-wire or wire-to-ground. An indication of a short may be caused by a splice to the wire being tested. Inspect the wiring diagram in Appendix J for splice locations. If the short is not a splice, then isolate and repair the short.

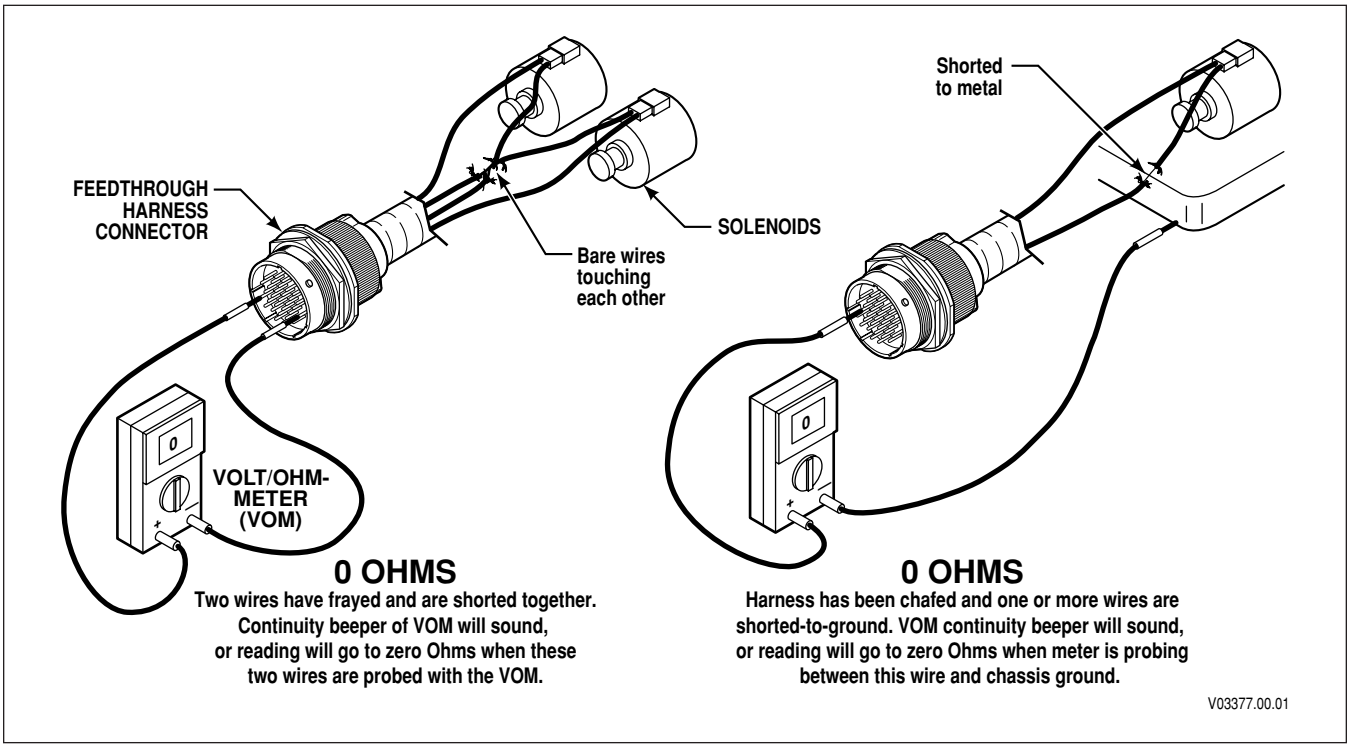

Figure 4–4. Short Between Wires and to Ground

NOTE: ***When conducting circuit tests that include the external harness, add one (1) Ohm to the values shown. Speed sensor resistance is 270–330 Ohms. C3 pressure switch resistance is two (2) Ohms maximum when switch is closed and 20,000 Ohms minimum when switch is open.***

Copyright © 2005 General Motors Corp.

https://truckmanualshub.com/

SECTION 5—OIL LEVEL SENSOR

5–1. INTRODUCTION

The Oil Level Sensor (refer to Figure 5–1) provides a means of electronically determining the transmission fluid level from:

- The shift selector display.
- Allison DOC™ For PC–Service Tool.
- A customer-furnished remote display.

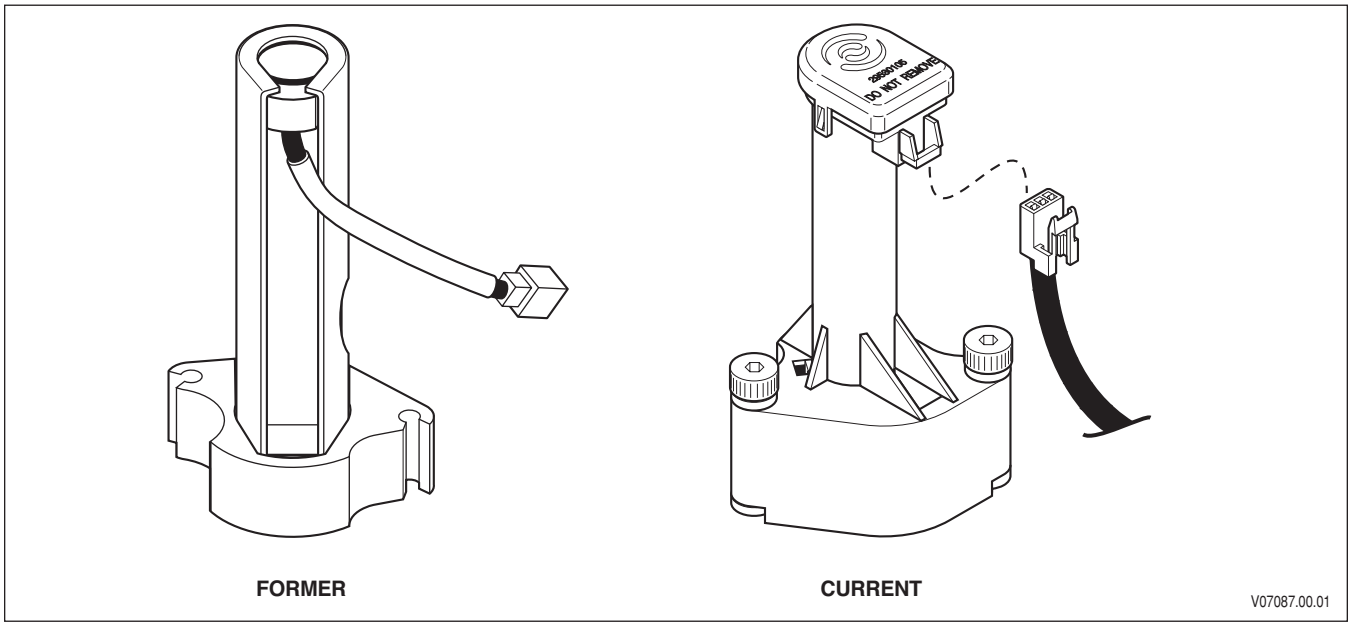

Figure 5–1. Oil Level Sensor

The former OLS is no longer serviced. The current OLS is a one-piece unit with a molded 3-terminal connector built into the sensor housing (refer to Figure 5–1 and SIL 19-WT-99 for more details). The internal wiring harnesses have been redesigned to include the 3-terminal connector for the OLS and to lengthen the branch to the OLS.

NOTE: The OLS is standard on the 3000 MH, 4000 MH, and all T Series transmissions.

Figure 5–2 shows the position and orientation of the OLS on the control modules of the 3000 and 4000 Product Families transmissions.The OLS **must be** correctly positioned, so the internal harness connector reaches the connector on the sensor. The control module must fit onto the transmission main case without interference. The one piece design reduces the complexity of the manufacturing and installation of the sensor. The current OLS uses shoulder bolts and Viton® ferrules to provide vibration dampening in the mounting. The current OLS became effective with the following S/Ns:

3000 Product Family:	6510220479
4000 Product Family:	6610048466, Except S/N 6610052000 through 6610052184 (S/Ns 6610052000 through 6610052184 were built on a 2nd assembly line with the former OLS.)

The current sensor can be used in place of the former sensor by using a short harness adapter between the 4-terminal (2 x 2) connector on the former internal wiring harness and the new 3-terminal (1 x 3) connector of the new OLS. A kit is available for replacing the former sensor. It includes the current sensor, mounting bolts, and the harness adapter so that the old internal harness can be re-used. Transmissions built after the serial number break will have the current sensor and a new internal wiring harness using the 3-terminal connector. The former OLS is completely cancelled. The former internal harnesses will be maintained for service of transmissions re-using the former OLS. Refer to most recent parts catalogs PC2150EN and PC2456EN for part number information.

Copyright © 2005 General Motors Corp.

https://truckmanualshub.com/

OIL LEVEL SENSOR

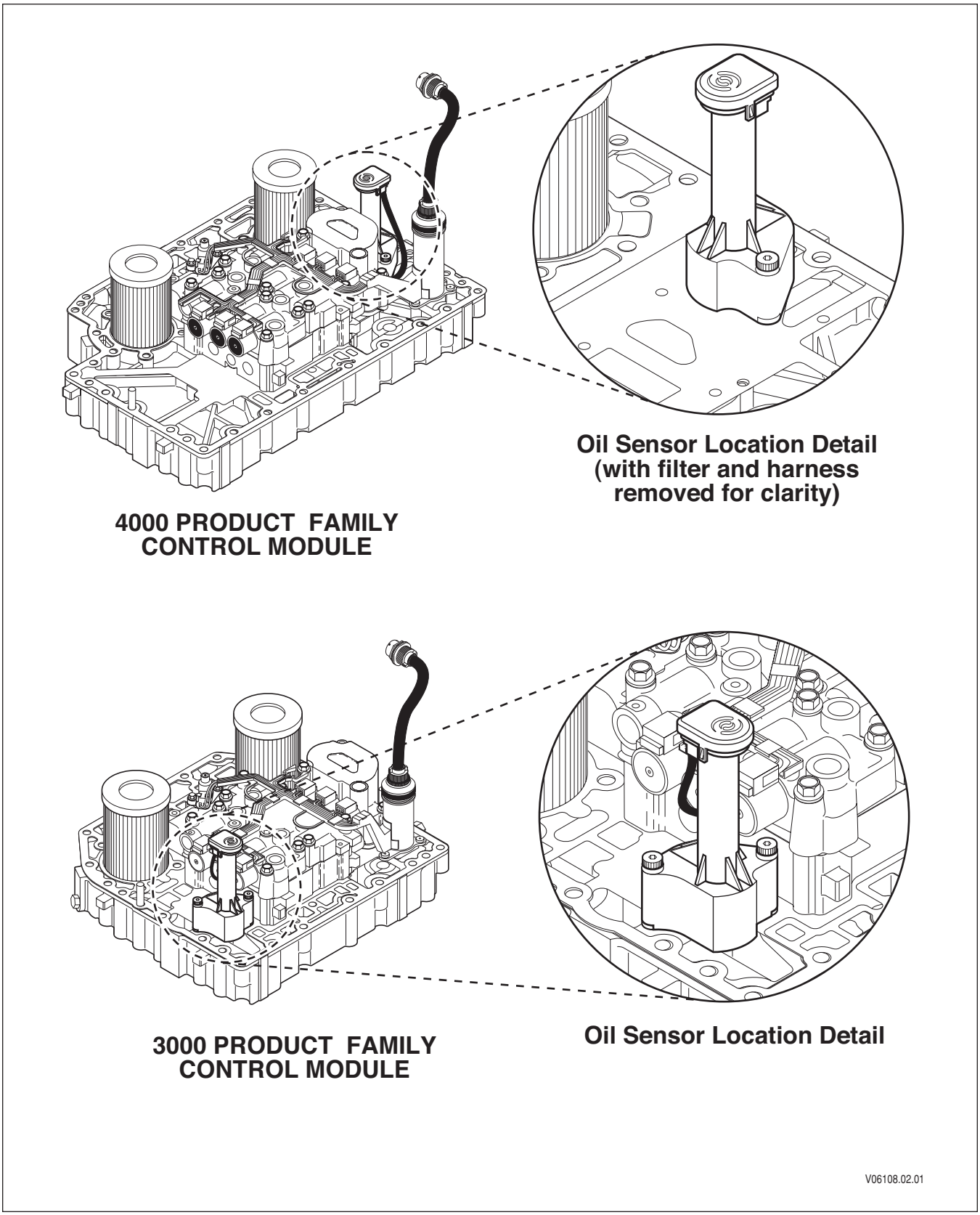

Figure 5–2. Current Oil Level Sensor Orientation

Copyright © 2005 General Motors Corp.

https://truckmanualshub.com/

OIL LEVEL SENSOR

5–2. ELECTRONIC FLUID LEVEL CHECK (SHIFT SELECTOR)

CAUTION:	A low or high fluid level causes overheating and irregular shift patterns. An incorrect fluid level can damage the transmission.

NOTE: ***The pushbutton and lever shift selectors can display one character at one time. The strip pushbutton shift selector does not have diagnostic or display capability. Allison DOC™ For PC or a customer-furnished remote display must be used to obtain fluid level information when using the strip pushbutton shift selector.***

A. Fluid Level Check Procedure

1. Park the vehicle on a level surface and shift to **N** (Neutral). Apply the parking brake.
2. On the Pushbutton shift selector, simultaneously press the ↑ (Up) and ↓ (Down) arrow buttons once.
3. On the Lever shift selector, press the "display mode" button once.
4. For a strip pushbutton shift selector, refer to Allison publication GN3433EN, User Guide for Allison DOC™ For PC–Service Tool, or to Appendix N in this manual.

NOTE: ***The ECU may delay the fluid level check until the following conditions are met:***

- ***The fluid temperature is between 60°C (140°F) and 104°C (220°F).***
- ***The transmission is in N (Neutral).***
- ***The vehicle has been stationary for approximately two minutes to allow the fluid to settle.***
- ***The engine is at idle (below 1000 rpm—not "fast" idle).***

See "Invalid for Display" information in Steps (8) and (9).

5. Correct fluid level is reported when **o**, **L** is displayed (**o**, **L** indicates the Oil Level Check Mode), followed by **o**, **K**. The **o**, **K** display indicates the fluid level is within the proper fluid level zone. **Remember that the display occurs one character at a time.** The sensor display and the transmission dipstick may not agree exactly because the oil level sensor compensates for fluid temperature.

   Example: **o**, **L**; **o**, **K**—Indicates correct fluid level.

6. Low fluid level is reported when **o**, **L** is displayed, followed by **L**, **o** and a number. **L**, **o** indicates a low fluid level and the number is the number of quarts of fluid the transmission requires.

   Example: **o**, **L**; **L**, **o**; **2**—Indicates 2 additional quarts of fluid will bring the fluid level within the proper fluid level.

Copyright © 2005 General Motors Corp.

https://truckmanualshub.com/

OIL LEVEL SENSOR

7. High fluid level is reported when **o**, **L** is displayed, followed by **H**, **I** and a number. **H**, **I** indicates high fluid level and the number shows how many quarts the transmission is overfilled.

   Example: **o**, **L**, **H**, **I**, **1**—Indicates one quart of fluid above the full level.

8. An Invalid for Display condition is reported when **o**, **L** is displayed, followed by "–" and a number display. The displayed number is a fault code and indicates improper conditions or a system malfunction.

   Example: **o**, **L**, –, **7,0**—Indicates an Invalid for Display condition and fault code 70.

9. Invalid for Display is activated when conditions do not allow the fluid level to be checked electronically. Review the following codes and conditions, and correct as necessary.

Table 5–1. Invalid for Display Codes

CODE		CAUSE OF CODE
X*	—	Settling time too short
5,0	—	Engine speed (rpm) too low
5,9	—	Engine speed (rpm) too high
6,5	—	**N** (Neutral) must be selected
7,0	—	Sump fluid temperature too low
7,9	—	Sump fluid temperature too high
8,9	—	Output shaft rotation
9,5	—	Sensor failure**

* A number between 8 and 1 that flashes during the count-down period.
** Speed sensor, throttle sensor, temperature sensor, or oil level sensor.

10. To exit the fluid level display mode:

   - Pushbutton shift selector—press the **N** (Neutral) pushbutton or press ↑ and ↓ arrow pushbuttons simultaneously two times.
   - Lever shift selector—press the "display mode" button two times or move the lever.

Copyright © 2005 General Motors Corp.

https://truckmanualshub.com/

OIL LEVEL SENSOR

5–3. ELECTRONIC FLUID LEVEL CHECK (Allison DOC™ For PC–Service Tool)

Allison DOC™ For PC–Service Tool can also be used to electronically determine the transmission's fluid level. Further detail is provided in Appendix N of this manual.

CAUTION: A low or high fluid level causes overheating and irregular shift patterns and, if not corrected, can damage the transmission.

A. Fluid Level Check Procedure

1. Connect the Allison DOC™ For PC–Service Tool to the diagnostic tool connector (Figure 1–2).
2. Scroll down the Diagnostic Data List to "OIL (+/-)" display.
3. Read the fluid level, repeat the check to confirm the first reading.

NOTE: The ECU may delay the fluid level check until the following conditions are met:

- ***The fluid temperature is between 60°C (140°F) and 104°C (220°F).***
- ***The transmission is in N (Neutral).***
- ***The vehicle has been stationary for approximately two minutes to allow the fluid to settle.***
- ***The engine is at idle.***

The reason for a delayed fluid level test is indicated on the Allison DOC™ For PC–Service Tool by one of the following diagnostic messages.

Table 5–2.

DIAGNOSTIC MESSAGE		
O L	—	SETTLING TIME (8 down to 1)
O L	—	ENGINE SPEED LO
O L	—	ENGINE SPEED HI
O L	—	SELECT **N** (NEUTRAL)
O L	—	SUMP TEMP LO
O L	—	SUMP TEMP HI
O L	—	OUTPUT SPEED HI
O L	—	CHECK CODES

Copyright © 2005 General Motors Corp.

https://truckmanualshub.com/

OIL LEVEL SENSOR

NOTES

Copyright © 2005 General Motors Corp.

https://truckmanualshub.com/

SECTION 6—DIAGNOSTIC CODES

6–1. DIAGNOSTIC CODE MEMORY

Diagnostic codes are logged in a list in memory (sometimes referred to as the queue), listing the most recently occurring code first and logging up to five codes. The codes contained in the list have information recorded as shown in the table below (codes are examples). Access to the code list position, main code, subcode and active indicator is through the shift selector display or Allison DOC™ For PC–Service Tool. Access to ignition cycle counter and event counter information is through the Allison DOC™ For PC–Service Tool only. Further details on the use of Allison DOC™ For PC–Service Tool is presented in Appendix N of this manual.

Table 6–1. Code List

Code List Position	Main Code	Subcode	Active Indicator	Ignition Cycle Counter	Event Counter
d1	21	12	YES	00	10
d2	41	12	YES	00	04
d3	23	12	NO	08	02
d4	34	12	NO	13	01
d5	56	11	NO	22	02
Displayed on shift selector and diagnostic tool d = “diagnostic”			YES = Mode Indicator (LED) illuminated	Not available on shift selector display	

The following paragraphs define the different parts of the code list.

A. Code List Position. The position which a code occupies in the code list. Positions are displayed as “d1” through “d5” (Code List Position #1 through Code List Position #5).

B. Main Code. The general condition or area of fault detected by the ECU.

C. Subcode. The specific area or condition related to the main code in which a fault is detected.

D. Active Indicator. Indicates when a diagnostic code is active. The MODE indicator LED on the shift selector is illuminated or the diagnostic tool displays **YES**.

E. Ignition Cycle Counter. Determines when inactive diagnostic codes are automatically cleared from the code list. The counter is increased by one each time a normal ECU power down occurs (ignition turned off). Inactive codes are cleared from the code list after the counter exceeds 50.

F. Event Counter. Counts the number of occurrences of a diagnostic code. If a code is already in the code list and the code is again detected, that code is moved to position d1, the active indicator is turned on, the Ignition Cycle Counter is cleared, and 1 is added to the Event Counter.

6–2. CODE READING AND CODE CLEARING

Diagnostic codes can be read and cleared by the following methods:

- Allison DOC™ For PC–Service Tool
- Diagnostic display mode on the shift selector.

The use of Allison DOC™ For PC–Service Tool is described in Allison publication GN3433EN, User Guide, that is furnished with each tool, and also in Appendix N. The method of reading and clearing codes described in this section refers to entering the diagnostic display mode of the shift selector.

Copyright © 2005 General Motors Corp.

https://truckmanualshub.com/

DIAGNOSTIC CODES

The diagnostic display mode may be entered for viewing of codes at any speed. Active codes can only be cleared when the output speed = 0 and no output speed sensor failure is active.

A. Reading Codes. Enter the diagnostic display mode by pressing the ↑ (Up) and ↓ (Down) arrow buttons at the same time on a pushbutton selector, or by momentarily pressing the "display mode" button on a lever shift selector.

NOTE: If a DO NOT SHIFT condition is present (CHECK TRANS light illuminated) at this time, the shift selector may or may not respond to requested range changes.

NOTE: If an oil level sensor is present, then fluid level will be displayed first. Diagnostic code display is achieved by simultaneously depressing the ↑ (Up) and ↓ (Down) arrow buttons a second time or the "display mode" button a second time.

The code list or queue position is the first item displayed, followed by the main code and the subcode. Each item is displayed for about one second. The display cycles continuously until the next code list position is accessed by pressing the **MODE** button. The following list represents the display cycle using code 25 11 as an example:

1. Code list position—**d**, **1**
2. Main code—**2**, **5**
3. Subcode —**1**, **1**
4. Cycle repeats—**d**, **1**, **2**, **5**, **1**, **1**

To view the second, third, fourth, and fifth positions (d2, d3, d4, and d5), momentarily press the **MODE** button as explained above.

Momentarily press the **MODE** button after the fifth position is displayed to restart the sequence of code list positions.

An active code is indicated by the illumination of the LED indicator when a code position is displayed while in the diagnostic display mode. In the normal operating mode, the LED indicator illuminates to show a secondary mode operation.

Any code position which does not have a diagnostic code logged will display "–" for both the main and subcodes. No diagnostic codes are logged after an empty code position.

B. Clearing Active Indicators. A diagnostic code's active indicator can be cleared, which allows the code inhibit to be cleared but remains in the queue as inactive.

The active indicator clearing methods are:

1. Power down—All active indicators, except code 69 34 (refer to the code chart), are cleared at ECU power down.
2. Self-clearing—Some codes will clear their active indicator when the condition causing the code is no longer detected by the ECU.

 Copyright © 2005 General Motors Corp.

https://truckmanualshub.com/

3. Manual—Some active indicators can be cleared manually, while in the diagnostic display mode, after the condition causing the code is corrected.

CAUTION:	If an active indicator is cleared while the transmission is locked in a forward range or reverse (fail-to-range), the transmission will remain in the forward range or reverse after the clearing procedure is completed. Neutral **must be** manually selected.

C. Manually Clearing Codes and Active Indicators from the Code List. To clear active indicators or all codes:

1. Enter the diagnostic display mode.
2. Press and hold the **MODE** button for approximately three seconds until the LED indicator flashes. All active indicators are cleared. To remove all inactive codes, press and hold the **MODE** button for about ten seconds until the LED indicator flashes again. All active indicators will be cleared at ECU power down.
3. Codes that cannot be manually cleared will remain.

D. Exiting the diagnostic display mode. Exit the diagnostic display mode using one of the following procedures:

1. On a pushbutton shift selector, press the ↑ (**Up**) **and** ↓ (**Down**) arrow buttons at the same time or press any range button, **D**, **N**, or **R**. The shift (**D**, **N**, or **R**) is commanded if not inhibited by an active code.
2. On a lever shift selector, momentarily press the "display mode" button or move the shift lever to any shift position other than the one it was in when the diagnostic display mode was activated. If the shift is inhibited, the ECU will continue to command the current transmission range attained and the lever should be returned to its original position.
3. Wait until timeout (approximately 10 minutes) and the system will automatically return to the normal operating mode.
4. Turn off power to the ECU (turn off the vehicle engine at the ignition switch).

6–3. DIAGNOSTIC CODE RESPONSE

The following ECU responses to a fault provide for safe transmission operation:

- **D**o **N**ot **S**hift (DNS) Response
  - Release lockup clutch and inhibit lockup operation.
  - Inhibit all shifts.
  - Turn on the **CHECK TRANS** light.
  - Display the range attained.
  - Ignore any range selection inputs from the pushbutton or lever shift selector.
- **D**o **N**ot **A**dapt (DNA) Response
  - The ECU stops adaptive shift control while the code is active. Do not adapt shifts when a code with the DNA response is active.

Copyright © 2005 General Motors Corp.

https://truckmanualshub.com/

- **SOL**enoid **OFF** (SOL OFF) Response
  - All solenoids are commanded off (turning solenoids “A” and “B” off electrically causes them to be on hydraulically).
- **R**eturn to **P**revious **R**ange (RPR) Response
  - When the speed sensor ratio or C3 pressure switch tests associated with a shift are not successful, the ECU commands the same range as commanded before the shift.
- **N**eutral **N**o **C**lutches (NNC) Response
  - When certain speed sensor ratio or C3 pressure switch tests are not successful, the ECU commands a neutral condition with no clutches applied.

6–4. SHIFT SELECTOR DISPLAYS RELATED TO ACTIVE CODES

- “Cateye”—The backward slash segment and the middle horizontal segments (-\-) may be on under the following conditions:
  - RSI link fault is active (code 23 12 or 23 14)
  - When two COP timeouts occur within two seconds of each other (reference code 69 33)
  - Shift selector display line fault is active (23 16)

- All Segments Displayed—All display segments will be illuminated if a severity 1 diagnostic code is present during initialization, or if an electrical code for solenoids A, B, C, D, E, or G is logged before initialization completes.

6–5. DIAGNOSTIC CODE LIST AND DESCRIPTION

Table 6–2. 3000 and 4000 Product Families Diagnostic Codes

Main Code	Sub-code	Description	CHECK TRANS Light	Inhibited Operation Description
13 (pg 6–19)	12	ECU input voltage, low	Yes	DNS, DNA, SOL OFF (hydraulic default)
	13	ECU input voltage, medium low	No	DNA
	23	ECU input voltage, high	Yes	DNS, SOL OFF (hydraulic default)
14 (pg 6–23)	12	Oil level sensor, failed low	No	None
	23	Oil level sensor, failed high	No	None
21 (pg 6–27)	12	Throttle position sensor, failed low	No	Use throttle default values, DNA
	23	Throttle position sensor, failed high	No	Use throttle default values, DNA
22 (pg 6–31)	14	Engine speed sensor reasonableness test	No	Use default engine speed, DNA
	15	Turbine speed sensor reasonableness test	Yes	DNS, lock in current range, DNA
	16	Output speed sensor reasonableness test	Yes (1)	DNS, lock in current range, DNA

Copyright © 2005 General Motors Corp.

https://truckmanualshub.com/

DIAGNOSTIC CODES

Table 6–2. 3000 and 4000 Product Families Diagnostic Codes *(cont'd)*

Main Code	Sub-code	Description	CHECK TRANS Light	Inhibited Operation Description
23 (pg 6–35)	12	Primary shift selector or RSI link fault	Yes	Hold in last valid direction. May cause "cateye" display.
	13	Primary shift selector mode function fault	No	Mode change not permitted
	14	Secondary shift selector or RSI link fault	Yes	Hold in last valid direction. May cause "cateye" display.
	15	Secondary shift selector mode function fault	No	Mode change not permitted
	16	Shift Selector display line fault	No	None. May cause "cateye" display.
24 (pg 6–37)	12	Sump fluid temperature, cold	Yes	DNS, lock in neutral
	23	Sump fluid temperature, hot	No	No upshifts above a calibration range
25 (pg 6–43)	00	Output speed sensor, detected at 0 output rpm, Low	Yes (1)	DNS, lock in current range (Low), DNA
	11	Output speed sensor, detected at 0 output rpm, 1st	Yes (1)	DNS, lock in current range (1st), DNA
	22	Output speed sensor, detected at 0 output rpm, 2nd	Yes (1)	DNS, lock in current range (2nd), DNA
	33	Output speed sensor, detected at 0 output rpm, 3rd	Yes (1)	DNS, lock in current range (3rd), DNA
	44	Output speed sensor, detected at 0 output rpm, 4th	Yes (1)	DNS, lock in current range (4th), DNA
	55	Output speed sensor, detected at 0 output rpm, 5th	Yes (1)	DNS, lock in current range (5th), DNA
	66	Output speed sensor, detected at 0 output rpm, 6th	Yes (1)	DNS, lock in current range (6th), DNA
	77	Output speed sensor, detected at 0 output rpm, Reverse range	Yes (1)	DNS, lock in current range (R), DNA
26 (pg 6–45)	00	Throttle source not detected	Yes	Use throttle default values, DNA
	11	Engine coolant source not detected	No	Use default value of –18˚C (0˚F)
32 (pg 6–47)	00	C3 pressure switch open, Low range	Yes	DNS, lock in current range (Low), DNA
	33	C3 pressure switch open, 3rd range	Yes	DNS, lock in current range (3rd), DNA
	55	C3 pressure switch open, 5th range	Yes	DNS, lock in current range (5th), DNA
	77	C3 pressure switch open, Reverse range	Yes	DNS, lock in current range (R), DNA
33 (pg 6–51)	12	Sump oil temperature sensor failed low	No	Use default value of 93˚C (200˚F)
	23	Sump oil temperature sensor failed high	No	Use default value of 93˚C (200˚F)

Copyright © 2005 General Motors Corp.

https://truckmanualshub.com/

DIAGNOSTIC CODES

Table 6–2. 3000 and 4000 Product Families Diagnostic Codes *(cont'd)*

Main Code	Sub-code	Description	CHECK TRANS Light	Inhibited Operation Description
34 (pg 6–53)	12	Factory calibration compatibility number wrong	Yes(5)	DNS, SOL OFF (hydraulic default), DNA
	13	Factory calibration block checksum	Yes(5)	DNS, SOL OFF (hydraulic default), DNA
	14	Power off block checksum	No	Use previous location, or factory calibration and reset adaptive, DNA
	15	Diagnostic queue block checksum	No	Use previous location, or clear diagnostic queue, DNA
	16	Real time block checksum	Yes	DNS, SOL OFF (hydraulic default), DNA
	17	Customer modifiable constants checksum	Yes(5)	DNS, SOL OFF (hydraulic default), DNA
35 (pg 6–55)	00	Power interruption (code set after power restored)	No	None (hydraulic default during interruption)
	16	Real time write interruption	Yes	DNS, SOL OFF (hydraulic default), DNA
36 (pg 6–57)	00	Hardware/software not compatible	Yes (2)	DNS, SOL OFF (hydraulic default), DNA
	01	TID not compatible with hardware/ software	Yes(7)	Use TIDCAP cal
	02	TID did not complete	Yes(7)	Use TIDCAP cal, code 42 XX or 69 XX may be logged
42 (pg 6–59)	12	Short-to-battery, A solenoid circuit	Yes	DNS, SOL OFF, DNA
	13	Short-to-battery, B solenoid circuit	Yes	DNS, SOL OFF, DNA
	14	Short-to-battery, C solenoid circuit	Yes	DNS, SOL OFF, DNA
	15	Short-to-battery, D solenoid circuit	Yes	DNS, SOL OFF, DNA
	16	Short-to-battery, E solenoid circuit	Yes	DNS, SOL OFF, DNA
	21	Short-to-battery, F solenoid circuit	No	Lockup inhibited, DNA
	22	Short-to-battery, G solenoid circuit	Yes	DNS, SOL OFF, DNA
	23	Short-to-battery, H solenoid circuit	No	Differential lock inhibited (3070 only), retarder inhibited
	24	Short-to-battery, J solenoid circuit	No	Low and 1st inhibited
	26	Short-to-battery, N solenoid circuit	No	Low and 1st inhibited, allow retarder
44 (pg 6–63)	12	Short-to-ground, A solenoid circuit	Yes	DNS, SOL OFF (hydraulic default), DNA
	13	Short-to-ground, B solenoid circuit	Yes	DNS, SOL OFF (hydraulic default), DNA
	14	Short-to-ground, C solenoid circuit	Yes	DNS, SOL OFF (hydraulic default), DNA
	15	Short-to-ground, D solenoid circuit	Yes	DNS, SOL OFF (hydraulic default), DNA
	16	Short-to-ground, E solenoid circuit	Yes	DNS, SOL OFF (hydraulic default), DNA
	21	Short-to-ground, F solenoid circuit	No	Lockup inhibited, DNA
	22	Short-to-ground, G solenoid circuit	Yes	DNS, SOL OFF (hydraulic default), DNA

Copyright © 2005 General Motors Corp.

https://truckmanualshub.com/

DIAGNOSTIC CODES

Table 6–2. 3000 and 4000 Product Families Diagnostic Codes *(cont'd)*

Main Code	Sub-code	Description	CHECK TRANS Light	Inhibited Operation Description
44 *(cont'd)*	23	Short-to-ground, H solenoid circuit	No	Differential lock inhibited (3070 only), retarder operation inhibited
	24	Short-to-ground, J solenoid circuit	No	Low and 1st inhibited
	26	Short-to-ground, N solenoid circuit	No	Low and 1st inhibited, retarder allowed
45 (pg 6–67)	12	Open circuit, A solenoid circuit	Yes	DNS, SOL OFF (hydraulic default), DNA
	13	Open circuit, B solenoid circuit	Yes	DNS, SOL OFF (hydraulic default), DNA
	14	Open circuit, C solenoid circuit	Yes	DNS, SOL OFF (hydraulic default), DNA
	15	Open circuit, D solenoid circuit	Yes	DNS, SOL OFF (hydraulic default), DNA
	16	Open circuit, E solenoid circuit	Yes	DNS, SOL OFF (hydraulic default), DNA
	21	Open circuit, F solenoid circuit	No	Lockup inhibited, DNA
	22	Open circuit, G solenoid circuit	Yes	DNS, SOL OFF (hydraulic default), DNA
	23	Open circuit, H solenoid circuit	No	Differential lock inhibited (3070 only), retarder inhibited
	24	Open circuit, J solenoid circuit	No	Low and 1st inhibited
	26	Open circuit, N solenoid circuit	No	Low and 1st inhibited, retarder allowed
46 (pg 6–71)	21	Overcurrent, F solenoid circuit	No	Lockup inhibited, DNA
	26	Overcurrent, N and H solenoid circuit	No	Low and first inhibited or retarder inhibited, DNA
	27	Overcurrent, A-Hi solenoid circuit	Yes	DNS, SOL OFF (hydraulic default), DNA
51 (pg 6–73)	01	Offgoing ratio test (during shift), Low to 1	Yes	DNS, RPR, DNA
	10	Offgoing ratio test (during shift), 1 to Low	Yes	DNS, RPR, DNA
	12	Offgoing ratio test (during shift), 1 to 2	Yes	DNS, RPR, DNA
	21	Offgoing ratio test (during shift), 2 to 1	Yes	DNS, RPR, DNA
	23	Offgoing ratio test (during shift), 2 to 3	Yes	DNS, RPR, DNA
	24	Offgoing ratio test (during shift), 2 to 4	Yes	DNS, RPR, DNA
	35	Offgoing ratio test (during shift), 3 to 5	Yes	DNS, RPR, DNA
	42	Offgoing ratio test (during shift), 4 to 2	Yes	DNS, RPR, DNA
	43	Offgoing ratio test (during shift), 4 to 3	Yes (1)	DNS, RPR, DNA
	45	Offgoing ratio test (during shift), 4 to 5	Yes (1)	DNS, RPR, DNA

Copyright © 2005 General Motors Corp.

https://truckmanualshub.com/

DIAGNOSTIC CODES

Table 6–2. 3000 and 4000 Product Families Diagnostic Codes *(cont'd)*

Main Code	Sub-code	Description	CHECK TRANS Light	Inhibited Operation Description
51 *(cont'd)*	46	Offgoing ratio test (during shift), 4 to 6	Yes	DNS, RPR, DNA
	53	Offgoing ratio test (during shift), 5 to 3	Yes	DNS, RPR, DNA
	64	Offgoing ratio test (during shift), 6 to 4	Yes	DNS, RPR, DNA
	65	Offgoing ratio test (during shift), 6 to 5	Yes	DNS, RPR, DNA
	XY	Offgoing ratio test, X to Y (3)		
52 (pg 6–74)	01	Offgoing C3PS test (during shift), Low to 1	Yes	DNS, RPR, DNA
	08	Offgoing C3PS test (during shift), Low to N1	Yes	DNS, NNC, DNA
	32	Offgoing C3PS test (during shift), 3 to 2	Yes	DNS, RPR, DNA
	34	Offgoing C3PS test (during shift), 3 to 4	Yes	DNS, RPR, DNA
	54	Offgoing C3PS test (during shift), 5 to 4	Yes	DNS, RPR, DNA
	56	Offgoing C3PS test (during shift), 5 to 6	Yes	DNS, RPR, DNA
	71	Offgoing C3PS test (during shift), R to 1	Yes	DNS, NNC, DNA
	72	Offgoing C3PS test (during shift), R to 2	Yes	DNS, NNC, DNA
	78	Offgoing C3PS test (during shift), R to N1	Yes	DNS, NNC, DNA
	99	Offgoing C3PS test (during shift), N3 to N2	Yes	DNS, RPR, DNA
	XY	Offgoing C3PS test, X to Y (3)		
53 (pg 6–76)	08	Offgoing speed test (during shift), L to N1	Yes (1)	DNS, NNC, DNA
	09	Offgoing speed test (during shift), L to NNC	Yes (1)	DNS, NNC
	18	Offgoing speed test (during shift), 1 to N1	Yes (1)	DNS, NNC, DNA
	19	Offgoing speed test (during shift), 1 to RELS	No	RPR, 1–RELS inhibited
	28	Offgoing speed test (during shift), 2 to N1	Yes (1)	DNS, NNC, DNA

Copyright © 2005 General Motors Corp.

https://truckmanualshub.com/

DIAGNOSTIC CODES

Table 6–2. 3000 and 4000 Product Families Diagnostic Codes *(cont'd)*

Main Code	Sub-code	Description	CHECK TRANS Light	Inhibited Operation Description
53 *(cont'd)*	29	Offgoing speed test (during shift), 2 to N2	Yes (1)	DNS, RPR, DNA
	38	Offgoing speed test (during shift), 3 to N1	Yes (1)	DNS, NNC, DNA
	39	Offgoing speed test (during shift), 3 to N3	Yes (1)	DNS, RPR, DNA
	48	Offgoing speed test (during shift), 4 to N1	Yes (1)	DNS, NNC, DNA
	49	Offgoing speed test (during shift), 4 to N3	Yes (1)	DNS, RPR, DNA
	58	Offgoing speed test (during shift), 5 to N1	Yes (1)	DNS, NNC, DNA
	59	Offgoing speed test (during shift), 5 to N3	Yes (1)	DNS, RPR, DNA
	68	Offgoing speed test (during shift), 6 to N1	Yes (1)	DNS, NNC, DNA
	69	Offgoing speed test (during shift), 6 to N4	Yes (1)	DNS, RPR, DNA
	78	Offgoing speed test (during shift), R to N1	Yes	DNS, NNC, DNA
	99	Offgoing speed test (during shift), N2 to N3 or N3 to N2	Yes	DNS, RPR, DNA
	XY	Offgoing speed test (during shift), X to Y (3)		
54 (pg 6–78)	01	Oncoming ratio test (after shift), L to 1	Yes	DNS, RPR, DNA
	07	Oncoming ratio test (after shift), L to R	Yes	DNS, NNC, DNA
	10	Oncoming ratio test (after shift), 1 to L	Yes	DNS, RPR, DNA
	12	Oncoming ratio test (after shift), 1 to 2	Yes	DNS, RPR, DNA
	17	Oncoming ratio test (after shift), 1 to R	Yes	DNS, NNC, DNA
	21	Oncoming ratio test (after shift), 2 to 1	Yes	DNS, RPR, DNA
	23	Oncoming ratio test (after shift), 2 to 3	Yes	DNS, RPR, DNA
	24	Oncoming ratio test (during shift), 2 to 4	Yes	DNS, RPR, DNA
	27	Oncoming ratio test (after shift), 2 to R	Yes	DNS, RPR, DNA

Copyright © 2005 General Motors Corp.

https://truckmanualshub.com/

DIAGNOSTIC CODES

Table 6–2. 3000 and 4000 Product Families Diagnostic Codes *(cont'd)*

Main Code	Sub-code	Description	CHECK TRANS Light	Inhibited Operation Description
54 *(cont'd)*	32	Oncoming ratio test (after shift), 3 to 2	Yes	DNS, RPR, DNA
	34	Oncoming ratio test (after shift), 3 to 4	Yes	DNS, RPR, DNA
	35	Oncoming ratio test (during shift), 3 to 5	Yes	DNS, RPR, DNA
	42	Oncoming ratio test (during shift), 4 to 2	Yes	DNS, RPR, DNA
	43	Oncoming ratio test (after shift), 4 to 3	Yes	DNS, RPR, DNA
	45	Oncoming ratio test (after shift), 4 to 5	Yes	DNS, RPR or SOL OFF (hydraulic default), DNA
	46	Oncoming ratio test (during shift), 4 to 6	Yes	DNS, RPR, DNA
	53	Oncoming ratio test (during shift), 5 to 3	Yes	DNS, RPR, DNA
	54	Oncoming ratio test (after shift), 5 to 4	Yes	DNS, RPR, DNA
	56	Oncoming ratio test (after shift), 5 to 6	Yes	DNS, RPR, DNA
	64	Oncoming ratio test (after shift), 6 to 4	Yes	DNS, RPR, DNA
	65	Oncoming ratio test (after shift), 6 to 5	Yes	DNS, RPR, DNA
	70	Oncoming ratio test (after shift), R to L	Yes	DNS, NNC, DNA
	71	Oncoming ratio test (after shift), R to 1	Yes	DNS, NNC, DNA
	72	Oncoming ratio test (after shift), R to 2	Yes	DNS, NNC, DNA
	80	Oncoming ratio test (after shift), N1 to L	Yes	DNS, RPR, DNA
	81	Oncoming ratio test (after shift), N1 to 1	Yes	DNS, RPR, DNA
	82	Oncoming ratio test (after shift), N1 to 2	Yes	DNS, RPR, DNA
	83	Oncoming ratio test (after shift), N1 to 3	Yes	DNS, RPR, DNA
	85	Oncoming ratio test (after shift), N1 to 5	Yes	DNS, RPR, DNA

Copyright © 2005 General Motors Corp.

https://truckmanualshub.com/

DIAGNOSTIC CODES

Table 6–2. 3000 and 4000 Product Families Diagnostic Codes *(cont'd)*

Main Code	Sub-code	Description	CHECK TRANS Light	Inhibited Operation Description
54 *(cont'd)*	86	Oncoming ratio test (after shift), N1 to 6	Yes	DNS, RPR, DNA
	87	Oncoming ratio test (after shift), N1 to Reverse	Yes	DNS, NNC, DNA
	92	Oncoming ratio test (after shift), N2 to 2	Yes	DNS, RPR, DNA
	93	Oncoming ratio test (after shift), N3 to 3	Yes	DNS, RPR, DNA
	95	Oncoming ratio test (after shift), N3 to 5	Yes	DNS, RPR, DNA
	96	Oncoming ratio test (after shift), N4 to 6	Yes	DNS, RPR, DNA
	XY	Oncoming ratio test (after shift), X to Y (3)		
55 (pg 6–81)	07	Oncoming C3PS test (after shift), Low to R	Yes (1)	DNS, NNC, DNA
	17	Oncoming C3PS test (after shift), 1 to R	Yes (1)	DNS, NNC, DNA
	27	Oncoming C3PS test (after shift), 2 to R	Yes (1)	DNS, NNC, DNA
	87	Oncoming C3PS test (after shift), N1 to R	Yes	DNS, RPR, DNA
	97	Oncoming C3PS test (after shift), NVL to R	Yes (1)	DNS, NNC, DNA
	XY	Oncoming C3PS test (after shift), X to Y(3)		
56 (pg 6–83)	00	Range verification test, L	Yes (1)	DNS, 1st, Low, or SOL OFF (Low), DNA
	11	Range verification ratio test, 1st	Yes	DNS, 6th, DNA
	22	Range verification ratio test, 2nd	Yes (1)	DNS, 6th or 5th, DNA
	33	Range verification ratio test, 3rd	Yes (1)	DNS, 5th or SOL OFF (4th), DNA
	44	Range verification ratio test, 4th	Yes	DNS, 3rd or 5th, DNA
	55	Range verification ratio test, 5th	Yes (1)	DNS, SOL OFF (5th) or 3rd, DNA
	66	Range verification ratio test, 6th	Yes	DNS, 5th, 3rd, or SOL OFF (3rd), DNA
	77	Range verification ratio test, R	Yes	DNS, N2 or N3, DNA
57 (pg 6–85)	11	Range verification C3PS test, 1st	Yes	DNS, SOL OFF (3rd), DNA
	22	Range verification C3PS test, 2nd	Yes	DNS, 3rd, DNA
	44	Range verification C3PS test, 4th	Yes	DNS, 5th or SOL OFF (3rd), DNA

Copyright © 2005 General Motors Corp.

https://truckmanualshub.com/

DIAGNOSTIC CODES

Table 6–2. 3000 and 4000 Product Families Diagnostic Codes *(cont'd)*

Main Code	Sub-code	Description	CHECK TRANS Light	Inhibited Operation Description
57 *(cont'd)*	66	Range verification C3PS test, 6th	Yes	DNS, SOL OFF (5th), DNA
	88	Range verification C3PS test, N1	Yes	DNS, N3, DNA
	99	Range verification C3PS test, N2 or N4	Yes	DNS, N3, DNA
61 (pg 6–86)	00	Retarder oil temperature, hot	No	None
62 (pg 6–89)	12	Retarder temperature sensor failed low	No	None
	23	Retarder temperature sensor failed high	No	None
	32	Engine coolant sensor failed low	No	Use default value of 0˚F
	33	Engine coolant sensor failed high	No	Use default value of 0˚F
63 (pg 6–91)	00	Input function fault	Yes(7)	Does not prevent neutral to range shifts for Aux Function Range Inhibit-Special when two signals required are not "on" within 120 seconds of each other.
	26	Kickdown input failed on	No	Kickdown operation inhibited
	40	Service brake status input failed on	No	No auto Neutral to Drive shifts for refuse packer. (I/O package #41). No retarder if a TPS code is also active
	41	Pump/pack and a neutral general purpose input	No	No auto N–D shifts for refuse packer (I/O package #41)
	47	RELS input failed on	No	1–RELS shift inhibited
64 (pg 6–95)	12	Retarder modulation request sensor failed low	No	Retarder operation inhibited
	23	Retarder modulation request sensor failed high	No	Retarder operation inhibited
65 (pg 6–97)	00	Engine rating too high	Yes	DNS, DNA, Lock-in-current range
	11	Engine not responding to J1939 LRTP torque limits	Yes	Transmission not inhibited
	12	Engine not responding to J1939 MAX default torque	Yes	Transmission not inhibited
66 (pg 6–99)	00	Serial communications interface fault	No	Use default throttle values, DNA
	11	SCI engine coolant source fault	No	Use default value of 0˚F
	22	J1939 Retarder request fault	No	Retarder operation limited
	33	J1939 Driver demand torque fault	Yes(7) in V9A	J1939 engine torque reduction inhibited, DNA(6)
	34	Engine not responding to J1939 SEM control	No	J1939 engine torque reduction inhibited, DNA(6)

Copyright © 2005 General Motors Corp.

https://truckmanualshub.com/

DIAGNOSTIC CODES

Table 6–2. 3000 and 4000 Product Families Diagnostic Codes *(cont'd)*

Main Code	Sub-code	Description	CHECK TRANS Light	Inhibited Operation Description
69 (pg 6–100)	27	ECU, inoperative A-Hi switch	Yes	DNS, NNC, DNA
	28	ECU, inoperative F-Hi switch	Yes	Lockup inhibited, DNA
	29	ECU, inoperative N and H-Hi switch	No	Low and first inhibited, retarder inhibited, DNA
	33	ECU, Computer Operating Properly (COP) timeout	No	Reset ECU, shutdown ECU on 2nd occurrence (power loss; hydraulic defaults). May cause "cateye" display or all segments blank display, DNA(4)
	34	ECU, write timeout	Yes	DNS, SOL OFF (hydraulic default), DNA
	35	ECU, checksum test	No	Induce COP timeout (reset ECU), DNA(4)
	36	ECU, RAM self test	No	Induce COP timeout (reset ECU), DNA(4)
	39	Communication chip addressing error	No	Use defaults for J1939 data, DNA
	41	ECU, I/O ASIC addressing test	No	Induce COP timeout (reset ECU), DNA(4)
	42	SPI output failure	Yes	GPO 1–8 and reverse warning inoperable
	43	SPI input failure	Yes	DNS, lock-in-range, DNA
70	12	Software, minor loop overrun	No	Induce COP timeout (reset ECU)
	13	Illegal write to address $0000	No	Induce COP timeout (reset ECU)
	14	Software, major loop overrun	No	Induce COP timeout (reset ECU)

NOTES

(1) This code is logged to real time to protect the transmission in case a loss of power to the ECU (Power Interruption, code 35 00) occurs.

(2) The ECU hardware or software must be changed so that they are compatible.

(3) Additional codes could be logged for other shifts where X indicates range shifted from and Y indicates range shifted to.

(4) The COP reset will clear the active inhibit.

(5) The factory calibration must be rewritten to the ECU, or a different factory calibration is required to match the software in the ECU.

(6) Do not adapt torque managed shifts when this code is active.

(7) If in calibration

Copyright © 2005 General Motors Corp.

https://truckmanualshub.com/

DIAGNOSTIC CODES

NOTES

Copyright © 2005 General Motors Corp.

https://truckmanualshub.com/

TRANSMISSION COMPONENT WIRING DIAGRAMS AND DIAGNOSTICS

Copyright © 2005 General Motors Corp.

https://truckmanualshub.com/

DIAGNOSTIC CODES

6–6. DIAGNOSTIC CODE TROUBLESHOOTING

A. Beginning The Troubleshooting Process

1. Begin troubleshooting by determining the transmission fluid level and ECU input voltage. View diagnostic codes by using:
   - The shift selector display
   - Allison DOC™ For PC–Service Tool
2. When a problem exists but a diagnostic code is not indicated, refer to Section 8, General Troubleshooting of Performance Complaints for a listing of various electrical and hydraulic problems, their causes, and remedies.
3. If a diagnostic code is found in the ECU memory, record all available code information and clear the active indicator. Refer to Paragraph 6–2.
4. Test drive the vehicle to confirm a diagnostic code or performance complaint.
   - If the code reappears, refer to Paragraph 6–5, Table 6–2. Table 6–2 lists diagnostic codes and their description.
   - If the code does not reappear, it may be an intermittent problem. Use Allison DOC™ For PC–Service Tool or the code display procedure described in Paragraph 6–2.
   - The code display procedure will indicate the number of times the diagnostic code has occurred. Refer to Section 8, General Troubleshooting of Performance Complaints, for the possible cause(s) of the problem.
   - Use pressure gauges as necessary to evaluate hydraulic conditions.
   - Appendix A deals with the identification of potential circuit problems. Refer to Appendix A if a circuit problem is suspected.
5. If difficulties arise, you have unanswered questions, or if you are unable to quickly identify the root cause during troubleshooting, please contact the Technical Assistance Center (TAC):

   Technical Assistance Center
   PO Box 894, Mail Code 462-470-PF9
   Indianapolis, IN 46206-0894
   Phone: 1-800-252-5283

NOTE: ***Information concerning specific items is contained in the appendices located in the back of this manual. The appendices are referred to throughout the manual.***

B. Solenoid Locations

Solenoid locations in the control module are as illustrated in Figure 6–1. Refer to Figure 6–1 as necessary when using the diagnostic code schematics.

C. Diagnostic Code Schematics

The diagnostic code schematics in this section show wiring for both the optional oil level sensor and retarder, where applicable. If your transmission is not equipped with an oil level sensor or retarder, disregard the portions of the schematic pertaining to those optional pieces of equipment. Refer to the appropriate transmission service manual for solenoid replacement procedures.

 Copyright © 2005 General Motors Corp.

https://truckmanualshub.com/

DIAGNOSTIC CODES

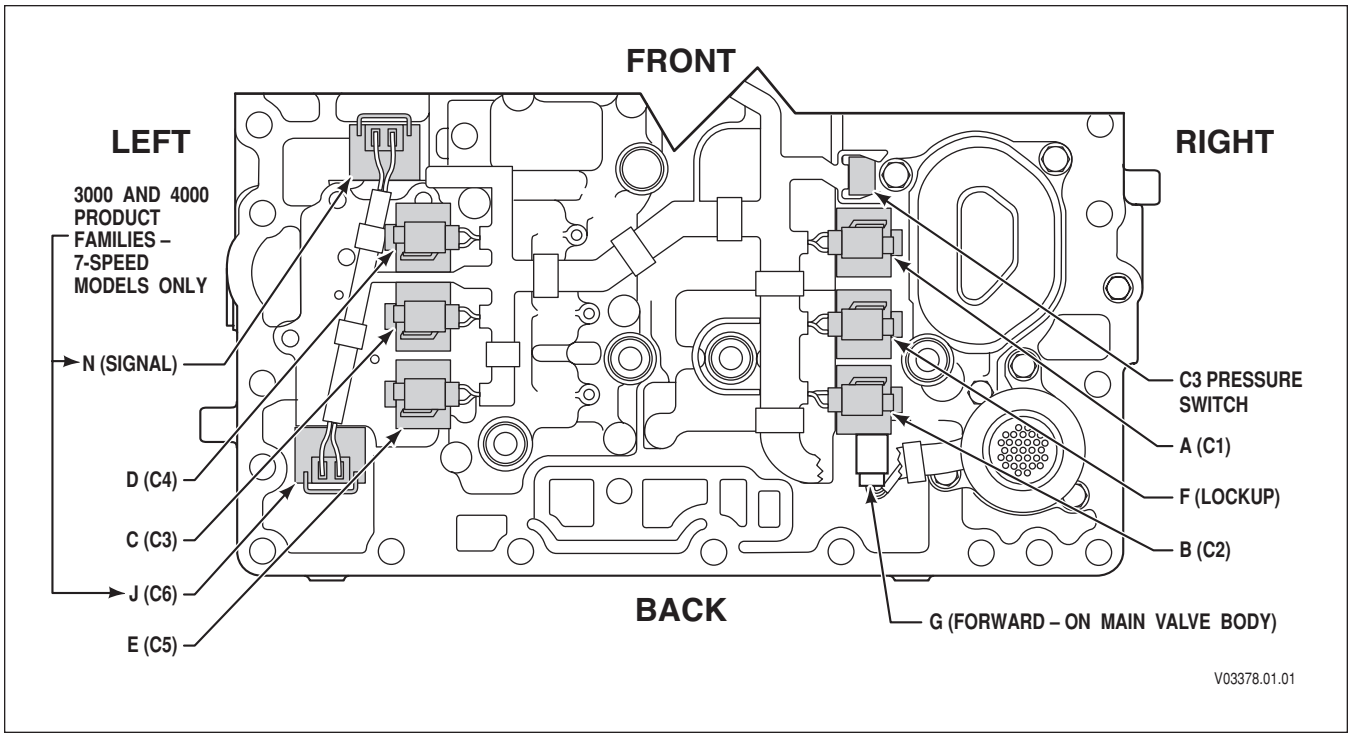

Figure 6–1. Control Module Solenoid Location

D. Wire/Terminal Numbering Scheme

WTEC III wire identification presents the wire number followed by the ECU terminal source (i.e., 157-S30). This is done to retain the wire number/function assignments from WTEC II and indicate the ECU connector and terminal origination for WTEC III. If there is a letter suffix following the wire number, there is a splice between the ECU source and wire destination (i.e., 136A-S16).

Copyright © 2005 General Motors Corp.

https://truckmanualshub.com/

CODE 13 XX—ECU INPUT VOLTAGE

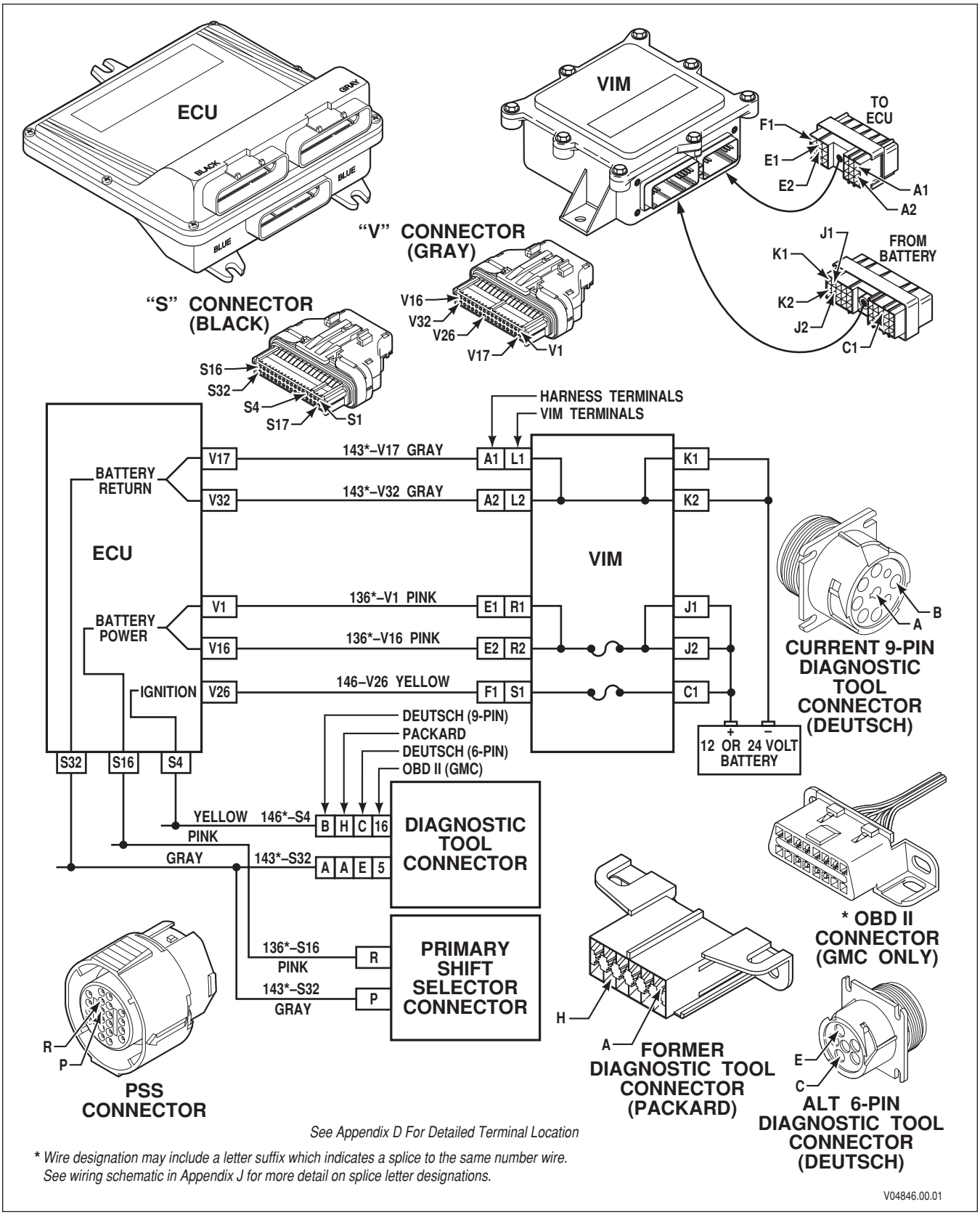

Figure 6–2. Code 13 Schematic Drawing

Copyright © 2005 General Motors Corp.

https://truckmanualshub.com/

CODE 13 XX—ECU INPUT VOLTAGE *(Figure 6–2)*

Main code 13 indicates either a high or low input voltage. Low voltage is less than 8 volts. High voltage is over 33 volts.

Common causes for a low voltage code are:

- Bad batteries
- Faulty vehicle charging system
- No dedicated power and ground connection directly to the battery or through an electronic bus bar to the battery

Common causes for the high voltage code are:

- Faulty vehicle alternator
- Faulty vehicle voltage regulator

In the event of a power loss, the transmission fails to the ranges indicated in the following, depending upon which latch valve releases first:

Attained Range	Fail to Range
Reverse and neutral	Neutral
Low, 1	3C
2, 3, 4	4C usually, 3C sometimes
5	4C usually, 5C sometimes
6	5C

Main Code	Subcode	Meaning
13	12	Battery voltage to the ECU too low
13	13	Battery voltage to the ECU too low (medium)
13	23	Battery voltage to the ECU too high

A. Active Indicator Clearing Procedure:

- Power down
- Manual
- Self-clearing

B. Troubleshooting:

1. Connect the diagnostic tool and turn on vehicle ignition. Select Diagnostic Data to find input voltage. Record reading.

2. Turn off vehicle ignition and remove the connectors from the ECU.

3. Test system voltage at wire 136A and 136C, pin V1 and V16. If power is low or high at this point, and the diagnostic tool reading is also low or high, the vehicle wiring is suspect. Test for fuse problems, lack of battery-direct power and ground, faulty charging system/batteries, and loose or dirty connections (see Appendix A). Power may also be low or high at pins V1 and V16 (system power) if the batteries/charging system is faulty. Bad grounds may also cause incorrect input power readings.

Copyright © 2005 General Motors Corp.

https://truckmanualshub.com/

CODE 13 XX—ECU INPUT VOLTAGE *(Figure 6–2)*

4. If power is correct but the diagnostic tool reading indicates incorrect voltage, closely inspect terminals V1 and V16 or S16; make sure they are not corroded or deformed. Clean or replace as necessary (see Appendix E, Paragraph 1–1).
5. If the voltage condition is intermittent, closely inspect the vehicle wiring for transmission system power and grounds. Test for loose, dirty, or painted connections. Test the VIM for loose, incorrect, or overheating relays or fuses. Test for wires that are chafed and touching other components.

CAUTION: Using an unmatched ECU/CIN combination may result in additional codes being set or in transmission clutch damage. Using an ECU from another vehicle is not a recommended procedure where the test will involve driving the vehicle. This is because the stored adaptive information is tuned to the original vehicle's transmission and those adaptive settings may not perform as expected in another vehicle. Transmission performance could be worse and damage to the clutches may occur.

NOTE: ***If using an ECU from another vehicle is unavoidable, the ECU must be set to unadapted shifts and the vehicle must be driven carefully to adapt the shifts to the test vehicle. Refer to Service Information Letter 16-WT-96 for the correct procedure. Be sure to reset the ECU to unadapted shifts when it is returned to the original vehicle.***

6. If the condition persists, replace the ECU with a test diagnostic ECU (P/N must match and it is recommended that the controller be loaded with the latest version of the CIN). If replacing the ECU corrects the problem, reinstall the original (bad) ECU to confirm that the problem is in the ECU. If the original ECU now works, inspect the ECU connectors for corrosion or damage which may cause an intermittent condition. If the original problem recurs, install a replacement ECU.

Table 6–3. Voltage Chart

Voltage	Condition
33.0 (High Set Point)	High Fail Limit
32.0	Maximum Continuous ECU Voltage
10.0 (Medium Low Set Point)	Cannot Compensate With Sub-Modulation (Bad Shifts). Adaptive logic stops functioning
8.0	Low Voltage Fail Limit, Set Code, DNS
7.0 (Low Set Point)	Software Off (ECU loses power)
4.5	Neutral Start Off

Copyright © 2005 General Motors Corp.

https://truckmanualshub.com/

DIAGNOSTIC CODES

NOTES

Copyright © 2005 General Motors Corp.

https://truckmanualshub.com/

CODE 14 XX—OIL LEVEL SENSOR (OLS)

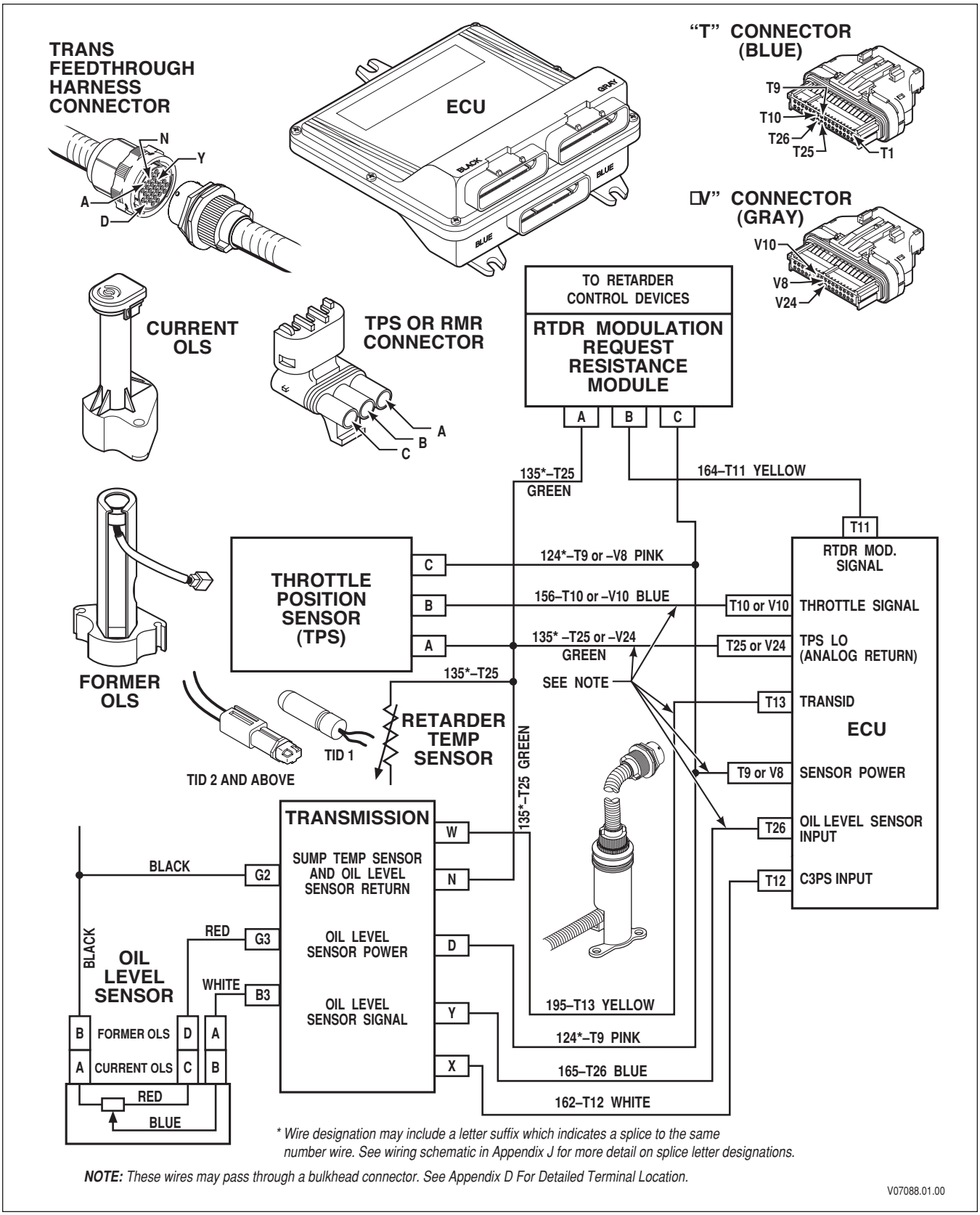

Figure 6–3. Code 14 Schematic Drawing

Copyright © 2005 General Motors Corp.

https://truckmanualshub.com/

CODE 14 XX—OIL LEVEL SENSOR (OLS) *(Figure 6-3)*

The oil level sensor (OLS) **must have been** recognized by autodetect or manually selected using Allison DOC™ For PC–Service Tool before these codes can be logged. Refer to Allison publication GN3433EN, User Guide for Allison DOC™ For PC–Service Tool. See Paragraphs 1–9 and 1–10 for further information.

Code 14 12 indicates the ECU has detected a voltage signal in the low error zone.

Code 14 12 can be caused by:

- Faulty wiring to the OLS
- A faulty OLS
- A faulty ECU.

CAUTION: Never use a volt/ohmmeter to measure any parameters on the OLS. Damage to the OLS will result.

OLS ground wire 135B is common to the TPS and the RMR devices. A power wire short-to-ground for any of these devices will cause “sensor failed low” codes (21 12 and 64 12) and shutdown of the electronic pushbutton or lever selector. An OLS signal open or short-to-ground results in a code 14 12 only. Code 14 23 should not occur in most instances. However, this code may be set if wire 165 (OLS Signal) is shorted to a wire carrying greater than 5.0V which is the maximum voltage signal from the oil level sensor.

A permanent maximum voltage signal generates a steady OLS sensor maximum count and a maximum fluid level overfill indication. A maximum overfill indication occurs if signal wire 165 or power wire 124 is shorted to battery or the ground wire (wire 135) is open between the OLS and the sump temperature sensor branch. An open in the ground circuit wire 135 in the portion common to the OLS, TPS and RMR devices results in code 14 12, 21 23, and 64 23.

If the ECU software supports it, oil level sensor counts can be read by the Allison DOC™ For PC–Service Tool. For a complete description of fluid level checking procedures using the oil level sensor, see Section 5. Normal operation of the OLS can be checked as follows: Attach the diagnostic tool and display OIL LEVEL COUNTS. Read the number of counts when the engine is not running, but the ignition is ON. The count reading should be near 255. Start the engine and observe the counts. In normal operation, the count should be 100–200 because the oil level drops when the engine starts and oil from the sump is delivered to other parts of the transmission.

NOTE: ***Intermittent connections or lack of battery-direct power and ground connections can cause this and other electronic control codes.***

Main Code	Subcode	Meaning
14	12	Oil level sensor failed low
14	23	Oil level sensor failed high (not used)

A. Active Indicator Clearing Procedure:

- Power down
- Manual
- Self-clearing

Copyright © 2005 General Motors Corp.

https://truckmanualshub.com/

CODE 14 XX—OIL LEVEL SENSOR (OLS) *(Figure 6–3)*

NOTE: Before troubleshooting, read Paragraph 6–6. Also, check the following:

- ***Fluid level, using dipstick***
- ***Battery voltage***
- ***ECU input voltage***
- ***Other diagnostic codes***

B. Troubleshooting:

The following procedure is to find the cause for an OLS problem. The procedure is sequential. Follow the procedure until the cause for the OLS problem is found and repaired. Once the problem is found and repaired, STOP. For example, if the problem is fixed in Step (3), there is no need to continue to the other steps.

1. Disconnect the external wiring harness at the transmission feedthrough connector. With the ignition ON, verify there is 5.0 VDC between the OLS power and ground pins (see page D–10) on the external harness connector. This is to verify that power and ground are getting to the OLS. If the 5.0 VDC is not present, check the wiring for the OLS power and ground circuits (wires 124–T9 and 135–T25, respectively). If there are no wiring problems (opens, shorts-to-ground, shorts-to-battery), and if the 5.0 VDC is present, go to Step (2).

2. Observe the OIL LEVEL COUNTS on the diagnostic tool while jumpering the OLS power pin to the OLS signal pin. If the count jumps from 0 to 250+, the OLS signal line is good and the ECU function is good. Continue to Step (3). If the count remains at zero, locate and repair problems in the wiring of OLS signal (wire 165–T26). If there are no wiring problems, and the count still remains at zero, the ECU may be bad. Go to Step (5).

3. If all tests prior to this have been normal, the problem is either in the OLS itself, the internal harness wires or the transmission side of the feedthrough harness connection. Inspect the transmission feedthrough harness connector to be sure that the OLS power, ground and signal pins are not loose or out of position. Correct any connector problems found. Reconnect the external harness to the transmission feedthrough harness connector. See if code 14 12 recurs before continuing to Step (4).

4. Consult the appropriate transmission service manual for proper procedure and remove the control module from the transmission. Remove the OLS from the channel plate. Reconnect the external harness to the transmission feedthrough connector, if not done in Step (3). With the ignition ON, observe the oil level counts on the diagnostic tool. With the OLS in normal position, the count should be 8–35. Invert the OLS and the count should be 192–255. If the counts are abnormal, replace the sensor. Check the new sensor in both normal and inverted positions. If the counts respond correctly, the problem should be resolved. Attach the new OLS to the channel plate and reinstall the control module using the appropriate transmission Service Manual for proper procedure.

CAUTION:	Using an unmatched ECU/CIN combination may result in additional codes being set or in transmission clutch damage. Using an ECU from another vehicle is not a recommended procedure where the test will involve driving the vehicle. This is because the stored adaptive information is tuned to the original vehicle's transmission and those adaptive settings may not perform as expected in another vehicle. Transmission performance could be worse and damage to the clutches may occur.

Copyright © 2005 General Motors Corp.

https://truckmanualshub.com/

CODE 14 XX—OIL LEVEL SENSOR (OLS) *(Figure 6–3)*

NOTE: ***If using an ECU from another vehicle is unavoidable, the ECU must be set to unadapted shifts and the vehicle must be driven carefully to adapt the shifts to the test vehicle. Refer to Service Information Letter 16-WT-96 for the correct procedure. Be sure to reset the ECU to unadapted shifts when it is returned to the original vehicle.***

5. If the condition persists, replace the ECU with a test diagnostic ECU (P/N must match and it is recommended that the controller be loaded with the latest version of the CIN). If replacing the ECU corrects the problem, reinstall the original (bad) ECU to confirm that the problem is in the ECU. If the original ECU now works, inspect the ECU connectors for corrosion or damage which may cause an intermittent condition. If the original problem recurs, install a replacement ECU.

Copyright © 2005 General Motors Corp.

https://truckmanualshub.com/

CODE 21 XX—THROTTLE OR PWM FAULT

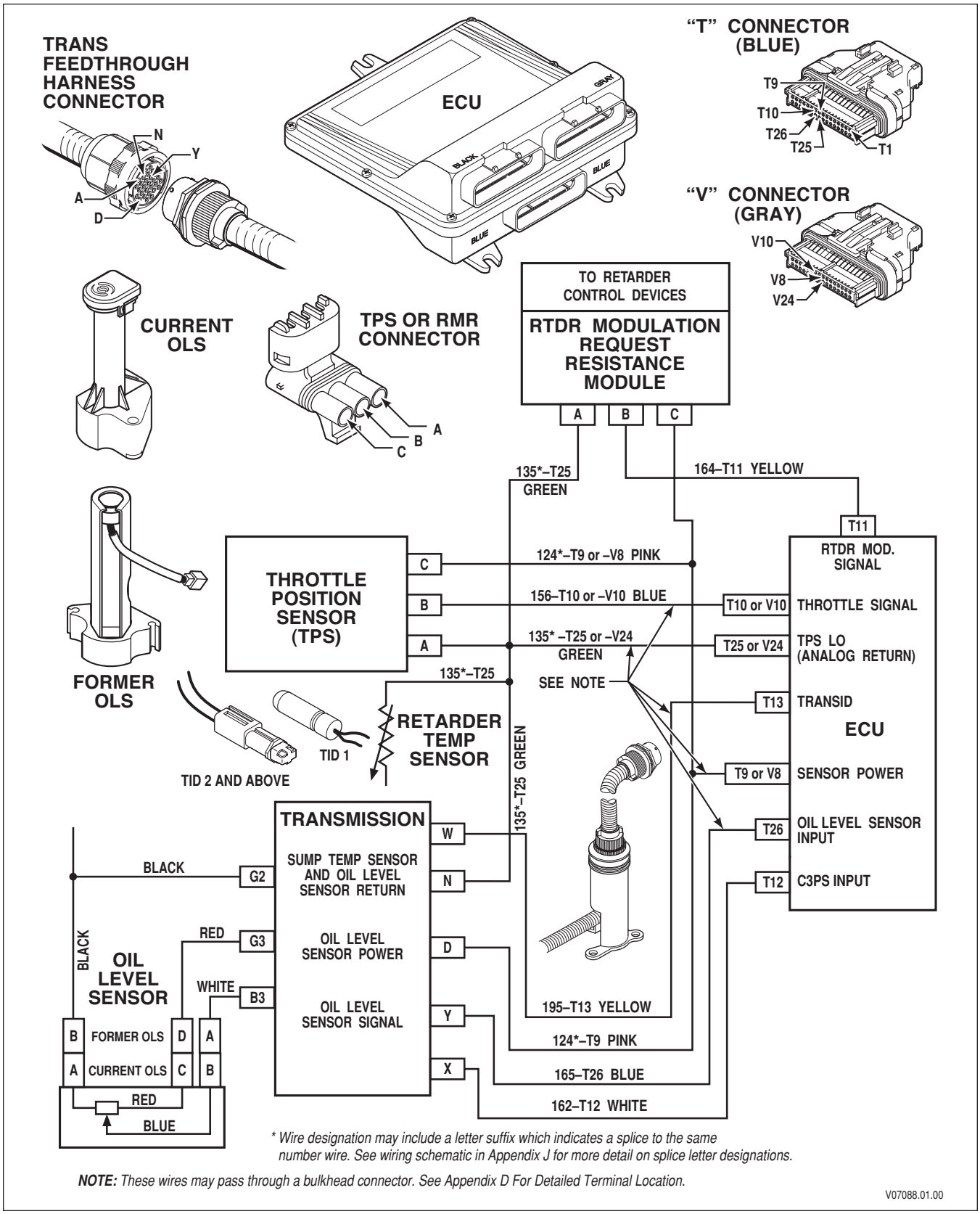

Figure 6–4. Code 21 Schematic Drawing

Copyright © 2005 General Motors Corp.

https://truckmanualshub.com/

CODE 21 XX—THROTTLE OR PWM FAULT *(Figure 6–4)*

The throttle sensor must have been recognized by autodetect or manually selected using the Allison DOC™ For PC–Service Tool before these codes can be logged. Refer to Allison publication GN3433EN, User Guide. See Paragraphs 1–9 or 1–10 for further information.

Main code 21 indicates the throttle position sensor has been retracted or extended by its linkage into an error zone. This may be due to a fault with the sensor, or a fault in the wiring to the sensor or to the ECU. This code may also indicate a PWM signal problem. A PWM signal is proportional to throttle position and comes from some source other than an analog throttle position sensor. Code 21 12 is set when the ECU receives TPS counts of 14 or less. Code 21 23 is set when the ECU senses TPS counts of 233–255. Whenever a code 21 XX condition is detected, the system uses default throttle values and shifts will not adapt.

NOTE: ***Code 21 XX in conjunction with code 33 XX or code 14 XX indicates the potential loss of common ground wire 135 between the throttle, temperature sensor, and oil level sensor.***

Main Code	Subcode	Meaning
21	12	Throttle position sensor failed low and ECU signals throttle default value
21	23	Throttle position sensor failed high and ECU signals a throttle default value

A. Active Indicator Clearing Procedure:

- Power down
- Manual
- Self-clearing

NOTE: ***Before troubleshooting, read Paragraph 6–6. Also, test the ECU input voltage.***

B. Troubleshooting:

1. Plug in the Allison DOC™ For PC–Service Tool, select Diagnostic Data, and read throttle counts and percent. If the TPS failed high (code 21 23), the problem may be toward the full throttle end of the TPS travel. If the TPS failed low (code 21 12), the problem may be at the closed throttle end of the TPS travel.

NOTE: ***Code 21 12 may occur when the throttle source is J1587 or J1939 and an analog throttle source is falsely detected. This condition may be due to a problem in an unused TPS branch of a universal external harness. To prevent this occurrence, remove wire 156 from the ECU connector and insert a cavity plug in the space vacated by the wire. Be sure that the unused TPS branch is routed away from potential induced voltage sources and the connector is protected from external contamination.***

NOTE: ***Code 21 12 can result when the +5V line (wire 124) which powers the analog sensor is shorted to ground. Wire 124 also powers the OLS, RMR, retarder temperature sensor, sump temperature sensor, and shift selector and is present in all three ECU connectors.***

2. If counts are high but the percentage never reaches 100 percent, TPS linkage may have bound up and overstroked the TPS to set a false 100 percent reading. After TPS overstroking ceases, the TPS will not automatically return to 100 percent. After the TPS is correctly installed and adjusted, use the Allison DOC™ For PC–Service Tool to reset throttle calibration or cycle the ignition

Copyright © 2005 General Motors Corp.

https://truckmanualshub.com/

CODE 21 XX—THROTTLE OR PWM FAULT *(Figure 6–4)*

5 times to reset the 0 percent and 100 percent settings. See the TPS section of this book (Appendix F) for installation and adjustment procedures.

3. If the throttle counts do not change or are erratic, test the throttle sensor wiring for opens, shorts between wires, or shorts-to-ground. Also check for correct TPS voltages using test wiring harness J 41339. If wiring problems are found, isolate and repair the fault. Refer to Appendix E for repair information.
4. If the wiring is satisfactory, replace the throttle position sensor and adjust its linkage so the counts are not in the error zones (Appendix F).
5. If the throttle sensor and its linkage adjustment are correct and the wiring to the sensor is satisfactory, the condition is intermittent. Replace the sensor and properly adjust the new sensor.
6. If the condition recurs, use a spare wire, if available, or provide a new wire (St. Clair P/N 200153 may be used for this purpose) for the throttle sensor circuit. See Appendix E for connector repair information.

CAUTION:	Using an unmatched ECU/CIN combination may result in additional codes being set or in transmission clutch damage. Using an ECU from another vehicle is not a recommended procedure where the test will involve driving the vehicle. This is because the stored adaptive information is tuned to the original vehicle's transmission and those adaptive settings may not perform as expected in another vehicle. Transmission performance could be worse and damage to the clutches may occur.

NOTE: ***If using an ECU from another vehicle is unavoidable, the ECU must be set to unadapted shifts and the vehicle must be driven carefully to adapt the shifts to the test vehicle. Refer to Service Information Letter 16-WT-96 for the correct procedure. Be sure to reset the ECU to unadapted shifts when it is returned to the original vehicle.***

7. If the condition persists, replace the ECU with a test diagnostic ECU (P/N must match and it is recommended that the controller be loaded with the latest version of the CIN). If replacing the ECU corrects the problem, reinstall the original (bad) ECU to confirm that the problem is in the ECU. If the original ECU now works, inspect the ECU connectors for corrosion or damage which may cause an intermittent condition. If the original problem recurs, install a replacement ECU.

NOTE: ***A good throttle position sensor should have resistance of:***

(1) 9000–15,000 Ohms across terminals A and C.

(2) 500 Ohms, moving to 9000–15,000 Ohms as TPS is stroked (measured across terminals A and B).

Copyright © 2005 General Motors Corp.

https://truckmanualshub.com/

DIAGNOSTIC CODES

NOTES

Copyright © 2005 General Motors Corp.

https://truckmanualshub.com/

CODE 22 XX—SPEED SENSOR/CIRCUITRY FAULT

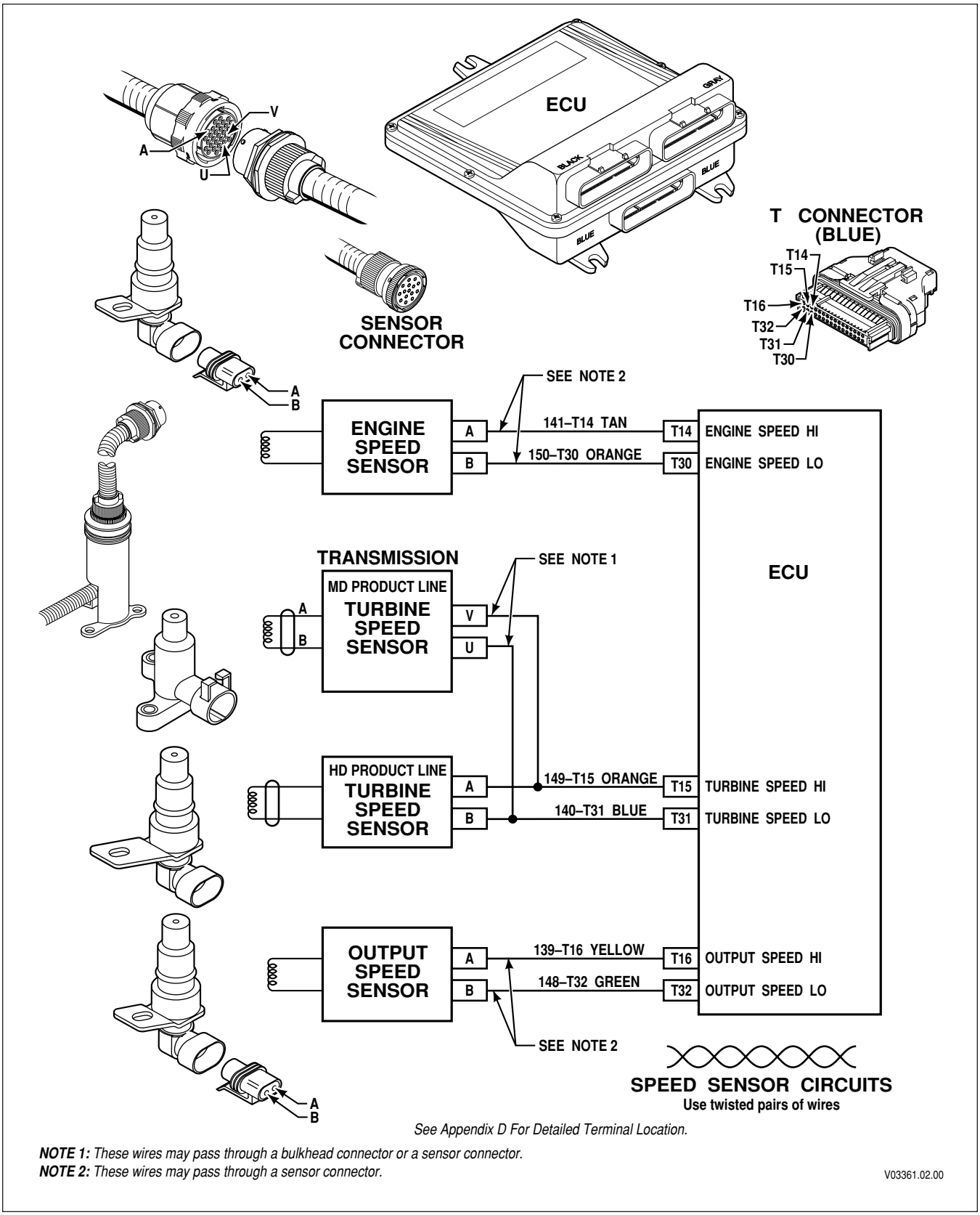

Figure 6–5. Code 22 Schematic Drawing

Copyright © 2005 General Motors Corp.

https://truckmanualshub.com/

CODE 22 XX—SPEED SENSOR/CIRCUITRY FAULT *(Figure 6–5)*

Main code 22 indicates a fault within a speed sensor, the wiring to a speed sensor, incorrect speed sensor gap, or damaged bumps or teeth which create the speed signal. This fault is determined by the reasonableness of a speed sensor signal when compared with the other two speed sensors and the commanded range. A speed sensor will not pass the reasonableness test if there is no signal at all from that sensor when a signal should be present.

NOTE: ***If turbine speed is below 150 rpm when output speed is below 100 rpm and engine speed is above 400 rpm, Neutral Very Low (NVL) is commanded when N (Neutral) is the range selected. NVL is attained by turning D solenoid "ON" in addition to E solenoid. This causes the output to be locked (C4 and C5 clutch applied).***

NOTE: ***If the engine speed sensor code (22 14) is active and a range verification test is failed, the range verification code will not be set but a DO NOT SHIFT response is commanded.***

Main Code	Subcode	Failed Sensor
22	14	Engine Speed
22	15	Turbine Speed
22	16	Output Speed

A. Active Indicator Clearing Procedure:

- Power down
- Manual
- Self-clearing

NOTE: ***Before troubleshooting, read Paragraph 6–6. Also, test the ECU input voltage.***

B. Troubleshooting:

1. Check to see if the sensor is loose, missing, or disconnected. If not, disconnect the wiring harness from the sensor and measure the resistance of the sensor (see chart below). Also check the terminals for dirt, corrosion, or damage. If resistance is not correct, replace the sensor.

Table 6–1. Speed Sensor Temperature Resistance

Current Resistance (Ohms) January, 2006	Former Resistance (Ohms) Before January, 2006	Temp ˚F	Temp ˚C
250	200	–40	–40
340	300	68	20
450	400	230	110

2. Remove the transmission harness connector from the ECU. Test the sensor circuit (in the external harness) for open wires, shorts between wires, or shorts-to-ground. Isolate and repair any faults. Refer to Appendix E for repair information.

3. If no opens or shorts are found, the condition must be intermittent. Replace the sensor indicated by the trouble code. Before replacing a speed sensor, check the sensor for physical damage or contamination. Refer to the appropriate transmission service manual for proper replacement procedure.

4. If the condition recurs, install new wiring (twisted-pair) for the sensor circuit between the ECU and the transmission. Use St. Clair P/N 200153 Service Harness Twisted Pair for this purpose.

Copyright © 2005 General Motors Corp.

https://truckmanualshub.com/

CODE 22 XX—SPEED SENSOR/CIRCUITRY FAULT *(Figure 6–5)*

5. If the condition again recurs, connect the diagnostic tool and select the speed signal indicated by the trouble code. Drive the vehicle and watch the speed reading on the diagnostic tool. If the signal is erratic, sensor gap, vehicle vibration, an external AC signal source, or intermittent connector contact may be inducing the erratic signal. Inspect the sensor and its surroundings for irregularities that would affect sensor gap. Isolate and correct any abnormal vehicle vibrations (particularly driveline and abnormal engine torsionals). Refer to 3000 or 4000 Product Families Allison Tech Data Section C, Installation Data. Recheck the sensor wiring for intermittent conditions (Appendix A).

CAUTION: Using an unmatched ECU/CIN combination may result in additional codes being set or in transmission clutch damage. Using an ECU from another vehicle is not a recommended procedure where the test will involve driving the vehicle. This is because the stored adaptive information is tuned to the original vehicle's transmission and those adaptive settings may not perform as expected in another vehicle. Transmission performance could be worse and damage to the clutches may occur.

NOTE: ***If using an ECU from another vehicle is unavoidable, the ECU must be set to unadapted shifts and the vehicle must be driven carefully to adapt the shifts to the test vehicle. Refer to Service Information Letter 16-WT-96 for the correct procedure. Be sure to reset the ECU to unadapted shifts when it is returned to the original vehicle.***

6. If the condition persists, replace the ECU with a test diagnostic ECU (P/N must match and it is recommended that the controller be loaded with the latest version of the CIN). If replacing the ECU corrects the problem, reinstall the original (bad) ECU to confirm that the problem is in the ECU. If the original ECU now works, inspect the ECU connectors for corrosion or damage which may cause an intermittent condition. If the original problem recurs, install a replacement ECU.

Copyright © 2005 General Motors Corp.

https://truckmanualshub.com/

DIAGNOSTIC CODES

NOTES

Copyright © 2005 General Motors Corp.

https://truckmanualshub.com/

CODE 23 XX—SHIFT SELECTOR

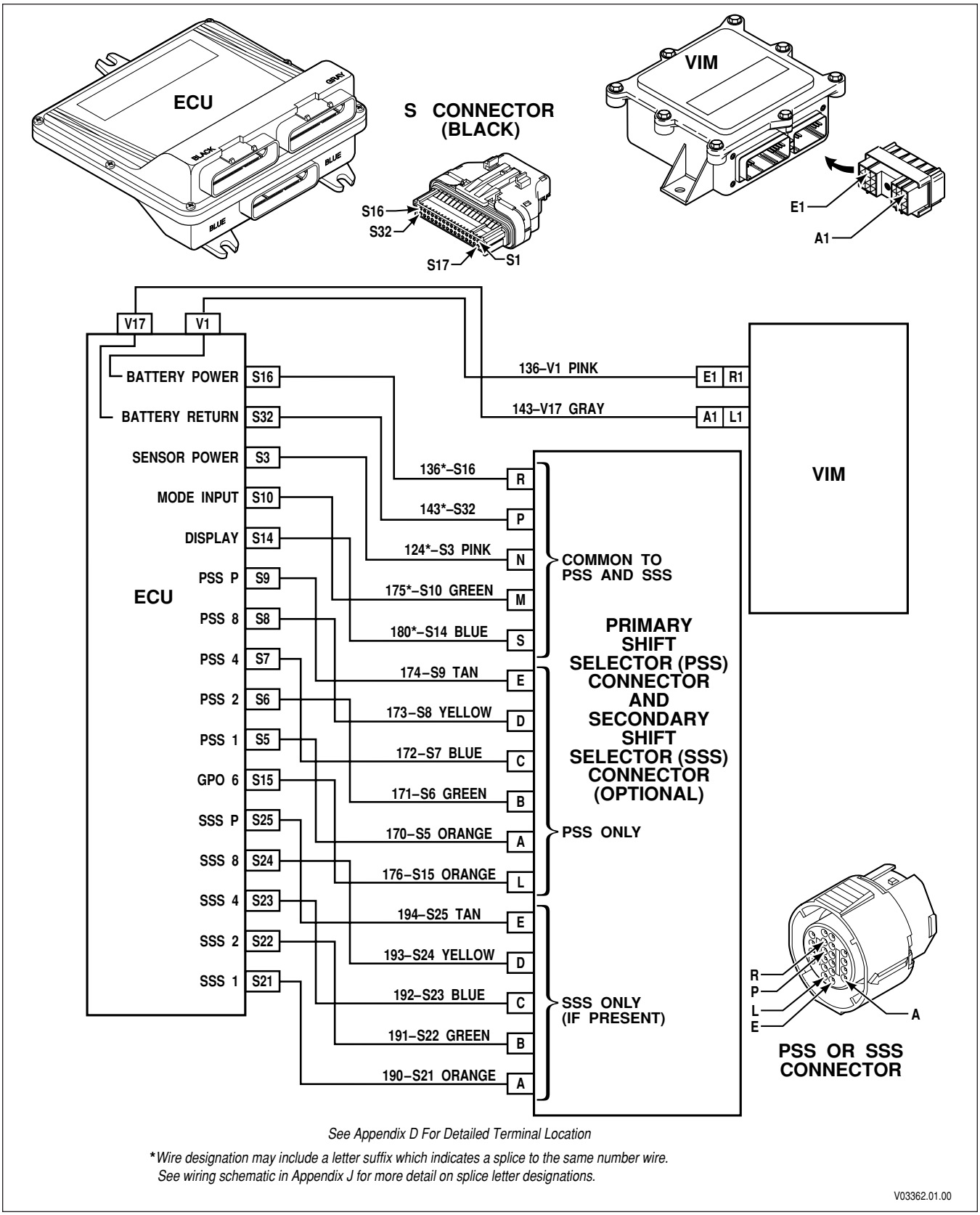

Figure 6–6. Code 23 Schematic Drawing

Copyright © 2005 General Motors Corp.

https://truckmanualshub.com/

CODE 23 XX—SHIFT SELECTOR *(Figure 6–6)*

Main code 23 indicates a fault with a shift selector or the wiring between a shift selector and the ECU.

Main Code	Subcode	Meaning
23	12	Primary shift selector fault—a “cateye” (-/-) type display may occur
23	13	Primary shift selector mode function fault. Mode change not permitted
23	14	Secondary shift selector fault—a “cateye” (-/-) type display may occur
23	15	Secondary shift selector mode function fault. Mode change not permitted
23	16	Shift selector display line fault

A. Active Indicator Clearing Procedure:

- Power down
- Manual
- Self-clearing

NOTE: Before troubleshooting, read Paragraph 6–6.

B. Troubleshooting:

1. Clear the active indicator for code 23 XX. If code recurs, continue to Step (2).
2. Test for a poor connection at the shift selector.

NOTE: Code 23 12 can result when the +5V line (wire 124) which powers the shift selector is shorted to ground. Wire 124 also powers the TPS, OLS, RMR, retarder temperature sensor, and sump oil temperature sensor and is present in all three ECU connectors.

3. Disconnect the selector “S” harness connector from the ECU and from the shift selector and test for opens, shorts, and shorts-to-ground between the shift selector and ECU (refer to Section 4). Repair as needed (refer to Appendix E).
4. If no problem is found with the shift selector connection or wiring, replace the shift selector.
5. If the condition persists, replace the ECU. If replacing the ECU corrects the problem, reinstall the original (bad) ECU to confirm that the problem is in the ECU. If the original ECU now works, inspect the ECU connectors for any corrosion or damage which may cause an intermittent condition. If the original problem recurs, reinstall the replacement ECU.

Copyright © 2005 General Motors Corp.

https://truckmanualshub.com/

CODE 24 XX—SUMP FLUID TEMPERATURE

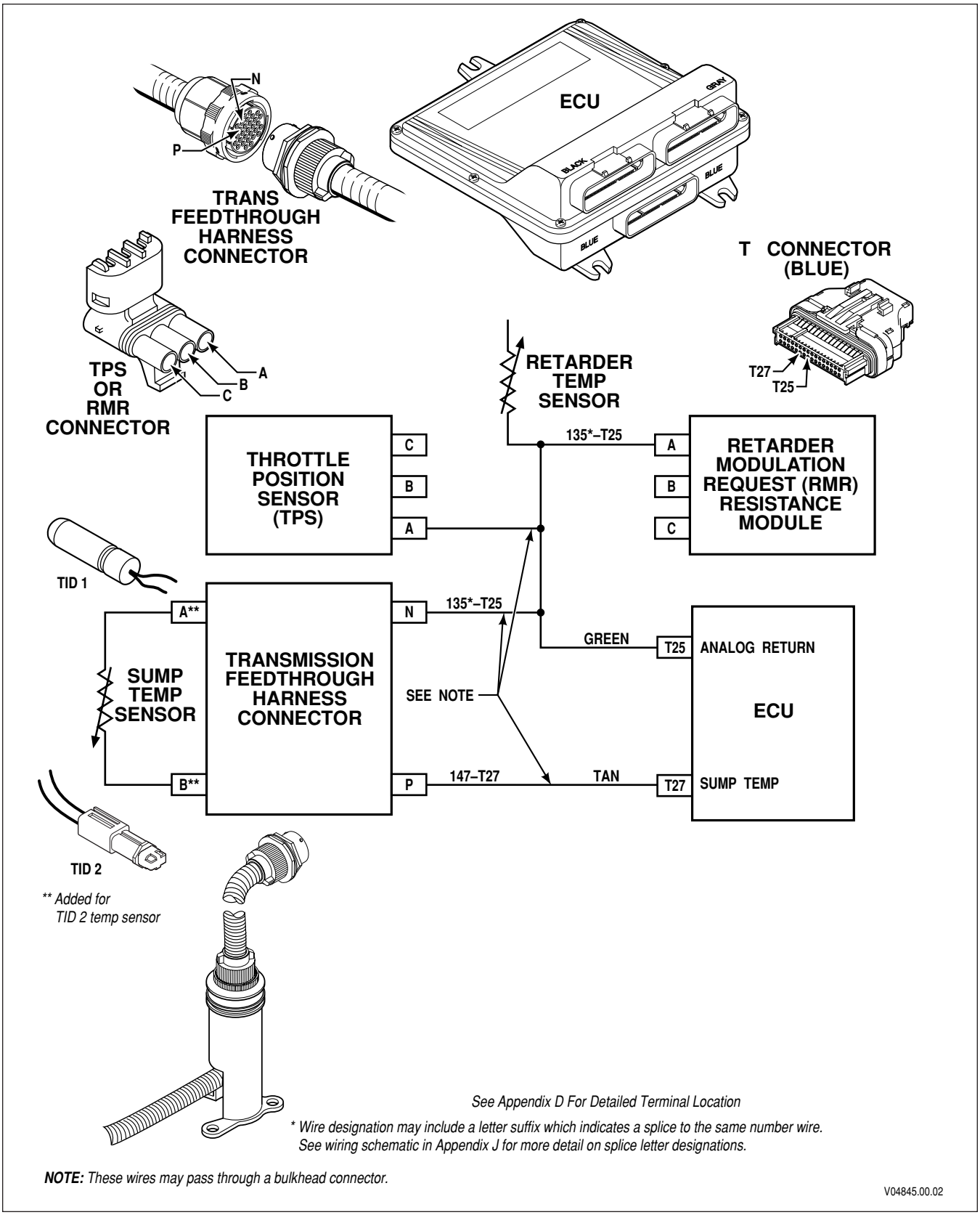

Figure 6–7. Code 24 Schematic Drawing

Copyright © 2005 General Motors Corp.

https://truckmanualshub.com/

CODE 24 XX—SUMP FLUID TEMPERATURE *(Figure 6–7)*

Main code 24 indicates the ECU has detected either a high or low fluid temperature in the transmission sump (via the sump temperature sensor in the internal harness). All shifts are inhibited when code 24 12 is set (only Neutral range operation is allowed). No upshifts are allowed above a calibration range when code 24 23 is set. All inhibits are cleared when the temperature conditions are normal. A related code is 33 12 which indicates a temperature reading outside the usable range of the sensor and indicates a probable sensor failure.

NOTE: ***When an ECU with a version 8 calibration (CIN=0A...) is used with a TransID 2 transmission, 24 XX codes are set because the ECU does not have the proper calibrations for the TID 2 thermistors. The ECU calibration must be updated to version 8A or later (CIN=0B).***

TransID (TID) information related to thermistor changes is in Paragraph 1–11 and detailed troubleshooting information for TID 2 thermistors is shown in Appendix Q.

Main Code	Subcode	Meaning
24	12	Sump fluid temperature cold
24	23	Sump fluid temperature hot

A. Active Indicator Clearing Procedure:

- Power down
- Manual
- Self-clearing

NOTE: ***Before troubleshooting, read Paragraph 6–6. Also, test the ECU input voltage.***

B. Troubleshooting:

Code 24 12:

1. If the outside temperature is between –32˚C (–26˚F) and –7˚C (+19˚F), the ECU will allow reverse, neutral, and second-range start operation. Only hold override upshifts are allowed. Refer to Table 6–4. The sump **must be** warmed to an acceptable temperature to avoid logging codes and transmission diagnostic response.

NOTE: ***Code 24 12 can result when the +5V line (wire 124) which powers the sump temperature sensor is shorted to ground. Wire 124 also powers the TPS, OLS, RMR, retarder temperature sensor, and shift selectors and is present in all three ECU connectors.***

2. After allowing the temperatures to normalize, if ambient temperature does not match the sump temperature reading (test using the Allison DOC™ For PC–Service Tool), compare resistance versus sump fluid temperature. Refer to Figure 6–8 for TID 1 thermistors and Appendix Q for TID 2 thermistors. If resistance test is acceptable, then test the sensor wiring for opens, shorts, or shorts-to-ground.

3. If the sensor wiring is satisfactory, drain the fluid, remove the control module, and replace the temperature sensor. Refer to the appropriate transmission service manual.

CAUTION: Using an unmatched ECU/CIN combination may result in additional codes being set or in transmission clutch damage. Using an ECU from another vehicle is not a recommended procedure where the test will involve driving the vehicle. This is because the stored adaptive information is tuned to the original vehicle's transmission and those adaptive settings may not perform as expected in another vehicle. Transmission performance could be worse and damage to the clutches may occur.

Copyright © 2005 General Motors Corp.

https://truckmanualshub.com/

CODE 24 XX—SUMP FLUID TEMPERATURE *(Figures 6–7, 6–8)*

NOTE: ***If using an ECU from another vehicle is unavoidable, the ECU must be set to unadapted shifts and the vehicle must be driven carefully to adapt the shifts to the test vehicle. Refer to Service Information Letter 16-WT-96 for the correct procedure. Be sure to reset the ECU to unadapted shifts when it is returned to the original vehicle.***

4. If the condition persists, replace the ECU with a test diagnostic ECU (P/N must match and it is recommended that the controller be loaded with the latest version of the CIN). If replacing the ECU corrects the problem, reinstall the original (bad) ECU to confirm that the problem is in the ECU. If the original ECU now works, inspect the ECU connectors for corrosion or damage which may cause an intermittent condition. If the original problem recurs, install a replacement ECU.

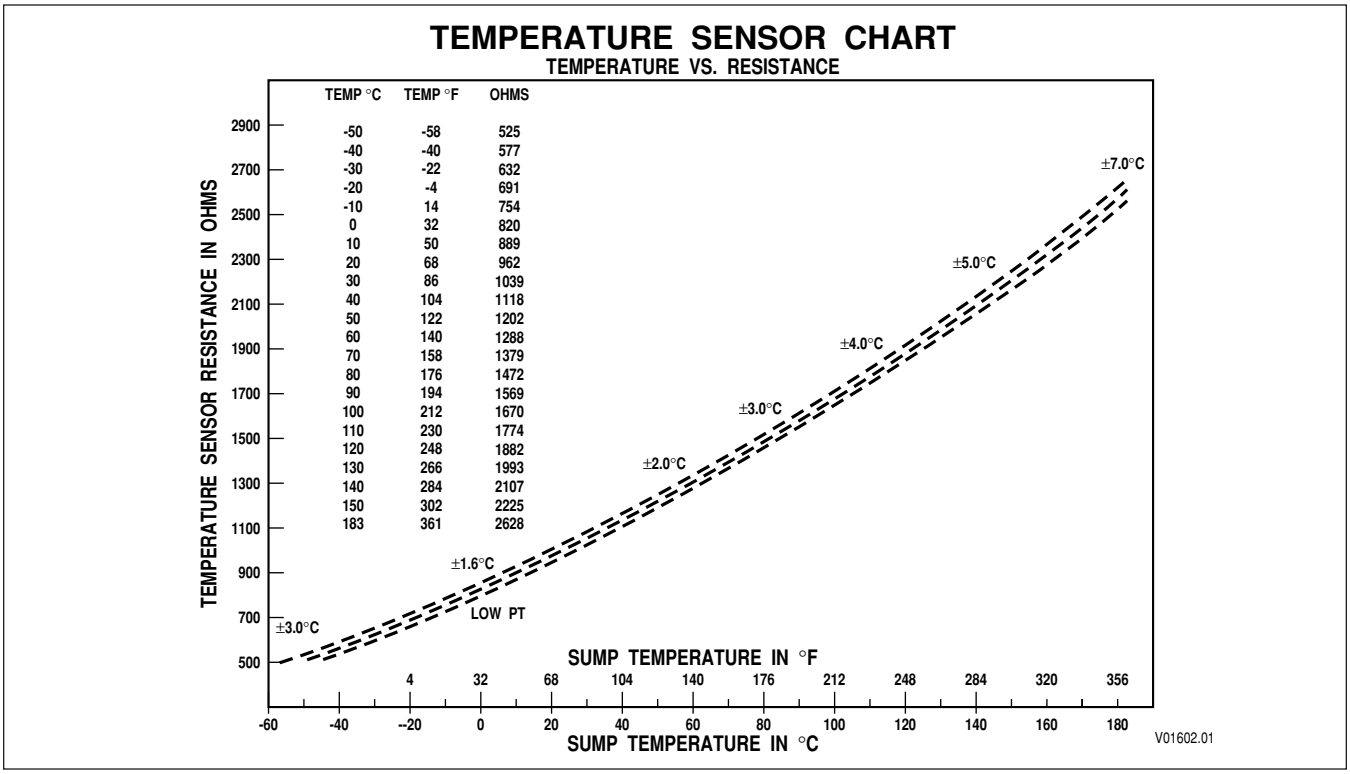

Figure 6–8. TransID 1 Temperature Sensor Chart

Copyright © 2005 General Motors Corp.

https://truckmanualshub.com/

CODE 24 XX—SUMP FLUID TEMPERATURE *(Figures 6–7, 6–8)*

Table 6–4. Transmission Operation as a Function of Temperature

Condition	V8		V8A, V9, V9A, V9B		V9C	
	OA		OB, OC, OD, OE		OF	
	ºC	ºF	ºC	ºF	ºC	ºF
Temperature sensor failed high (see code 33 23)	177	350	182	359	182	359
Hot fluid (code 24 23)—adaptive turned off; limited to 4th range or hold override upshifts beyond 4th range (not limited in "emergency" calibration)	128	262	128	262	instantly @ >132; 60 sec @ >128; 15 min @ >121	instantly @ >270; 60 sec @ >262; 15 min @ >250
Output function "on" for sump temp above this temperature	121	250	121	250	instantly @ >132; 60 sec @ >128; 15 min @ >121	instantly @ >270; 60 sec @ >262; 15 min @ >250
Code 24 23 and Output function "off" for sump temp below this temperature	116	240	116	240	118	244
Retarder cutback begins	N/A	N/A	N/A	N/A	117	242
Cool/cold fluid; adaptive turned off	34	93	21	70	21	70
Turbine reasonableness and speed tie-up tests turned off	0	32	1	34	1	34
Medium cold fluid; R, N, D allowed, 2nd range start (hold override upshifts only)	–7	19	–6	22	–6	22
All C3 Pressure Switch tests turned off	–32	-25	–23	–10	–23	–10
Temperature sensor failed low (refer to code 33 12)	–45	-49	–42	–44	–42	–44

Code 24 23:

1. Install temperature gauges for transmission temperature and engine water temperature. Drive the vehicle. Verify that the code can be reproduced and verify the reading shown on the Allison DOC™ For PC–Service Tool. Observe the gauges and be sure the fluid is hot when the code is produced.

2. If the fluid is not hot when the code is produced, remove the transmission "T" harness connector at the ECU and the transmission. Test the fluid temperature sensor wiring for opens, shorts, and shorts-to-ground. Compare the resistance readings of the sensor and the actual temperature as shown on the gauge with Figure 6–8 for TID 1 thermistors and Appendix Q for TID 2 thermistors. If wiring problems or a great difference between temperature and resistance compared with the chart are found, drain the fluid, remove the control module, and replace the temperature sensor. Refer to the proper transmission service manual. If wiring problems are found, repair or replace as necessary.

3. If the fluid is hot when the code is produced, observe the gauges to see if the engine became hot before the transmission. If the engine cooling system is overheating and heating the transmission, the problem is with the engine or its cooling system.

4. If the transmission became hot before the engine, allow the vehicle to idle for 3–5 minutes and check the transmission fluid level. Correct the fluid level if necessary.

5. Attach pressure gauges to the cooling system (from a "to cooler" connection to a point after the cooling circuit filter) and test for pressure drop problems. If pressure drop is excessive (Table 6–5), check for a plugged cooler filter, collapsed lines, obstructions, etc.

Copyright © 2005 General Motors Corp.

https://truckmanualshub.com/

CODE 24 XX—SUMP FLUID TEMPERATURE *(Figures 6–7, 6–8)*

6. If the fluid level is correct and the cooling circuits satisfactory, drain the fluid, remove the control module, and inspect for damaged valve body gaskets. Replace any damaged gaskets. Refer to the appropriate transmission service manual.

7. If no problems are found in the control module area, remove the transmission and disassemble, inspecting for causes of overheating (stuck stator, plugged orifices, dragging clutches, etc.). Refer to the proper transmission service manual.

Table 6–5. External Hydraulic Circuit Characteristics
Basic, PTO, 93˚C (200˚F) Sump Temperature

4000 PRODUCT FAMILY

CONVERTER OPERATION MAXIMUM COOLER FLOW AT MINIMUM PRESSURE DROP				
Input	Flow		Pressure Drop	
rpm	L/s	gpm	kPa	psi
600	0.22	3.4	0	0
900	0.38	6.1	0	0
1200	0.55	8.7	0	0
1500	0.80	12.7	0	0
1800	1.03	16.4	0	0
2100	1.13	18.0	0	0
2300	1.20	19.0	0	0

CONVERTER OPERATION COOLER FLOW AT MAXIMUM ALLOWABLE PRESSURE DROP				
Input	Flow		Pressure Drop	
rpm	L/s	gpm	kPa	psi
600	0.20	3.2	31	4.5
900	0.37	5.8	63	9.1
1200	0.55	8.7	108	15.7
1500	0.77	12.2	167	24.2
1800	0.92	14.5	213	30.9
2100	0.97	15.3	238	34.5
2300	1.00	15.9	250	36.3

Table 6–6. External Hydraulic Circuit Characteristics
Basic, PTO, 93˚C (200˚F) Sump Temperature

3000 PRODUCT FAMILY

CONVERTER OPERATION MAXIMUM COOLER FLOW AT MINIMUM PRESSURE DROP				
Input	Flow		Pressure Drop	
rpm	L/s	gpm	kPa	psi
600	0.10	1.6	0	0
800	0.23	3.7	0	0
1200	0.47	7.4	0	0
1400	0.61	9.7	0	0
1600	0.74	11.7	0	0
2000	0.94	14.9	0	0
2400	1.19	18.9	0	0
3200	1.28	20.3	0	0

LOCKUP OPERATION MAXIMUM COOLER FLOW AT MINIMUM PRESSURE DROP				
Input	Flow		Pressure Drop	
rpm	L/s	gpm	kPa	psi
600	0.10	1.6	0	0
800	0.23	3.7	0	0
1200	0.50	7.9	0	0
1400	0.63	10.0	0	0
1600	0.77	12.2	0	0
2000	0.95	15.1	0	0
2400	1.12	17.8	0	0
2800	1.22	19.3	0	0
3200	1.28	20.3	0	0

Copyright © 2005 General Motors Corp.

https://truckmanualshub.com/

CODE 24 XX—SUMP FLUID TEMPERATURE *(Figures 6–7, 6–8)*

CONVERTER OPERATION MAXIMUM ALLOWABLE PRESSURE DROP				
Input	Flow		Pressure Drop	
rpm	L/s	gpm	kPa	psi
600	0.10	1.6	10	1.5
800	0.22	3.5	40	5.8
1200	0.45	7.1	159	23.1
1400	0.57	9.0	252	36.6
1600	0.67	10.6	338	49.0
2000	0.80	12.7	481	69.8
2400	0.85	13.5	549	79.6
3200	0.85	13.5	549	79.6

LOCKUP OPERATION MAXIMUM ALLOWABLE PRESSURE DROP				
Input	Flow		Pressure Drop	
rpm	L/s	gpm	kPa	psi
600	0.10	1.6	5	0.7
800	0.23	3.7	46	6.7
1200	0.48	7.6	148	21.5
1400	0.62	9.8	247	35.8
1600	0.73	11.6	346	50.2
2000	0.90	14.3	561	81.4
2400	1.07	17.0	737	106.9
2800	1.10	17.4	770	111.7
3200	1.10	17.4	791	114.7

Copyright © 2005 General Motors Corp.

https://truckmanualshub.com/

CODE 25 XX—OUTPUT SPEED SENSOR, DETECTED AT ZERO SPEED, X RANGE

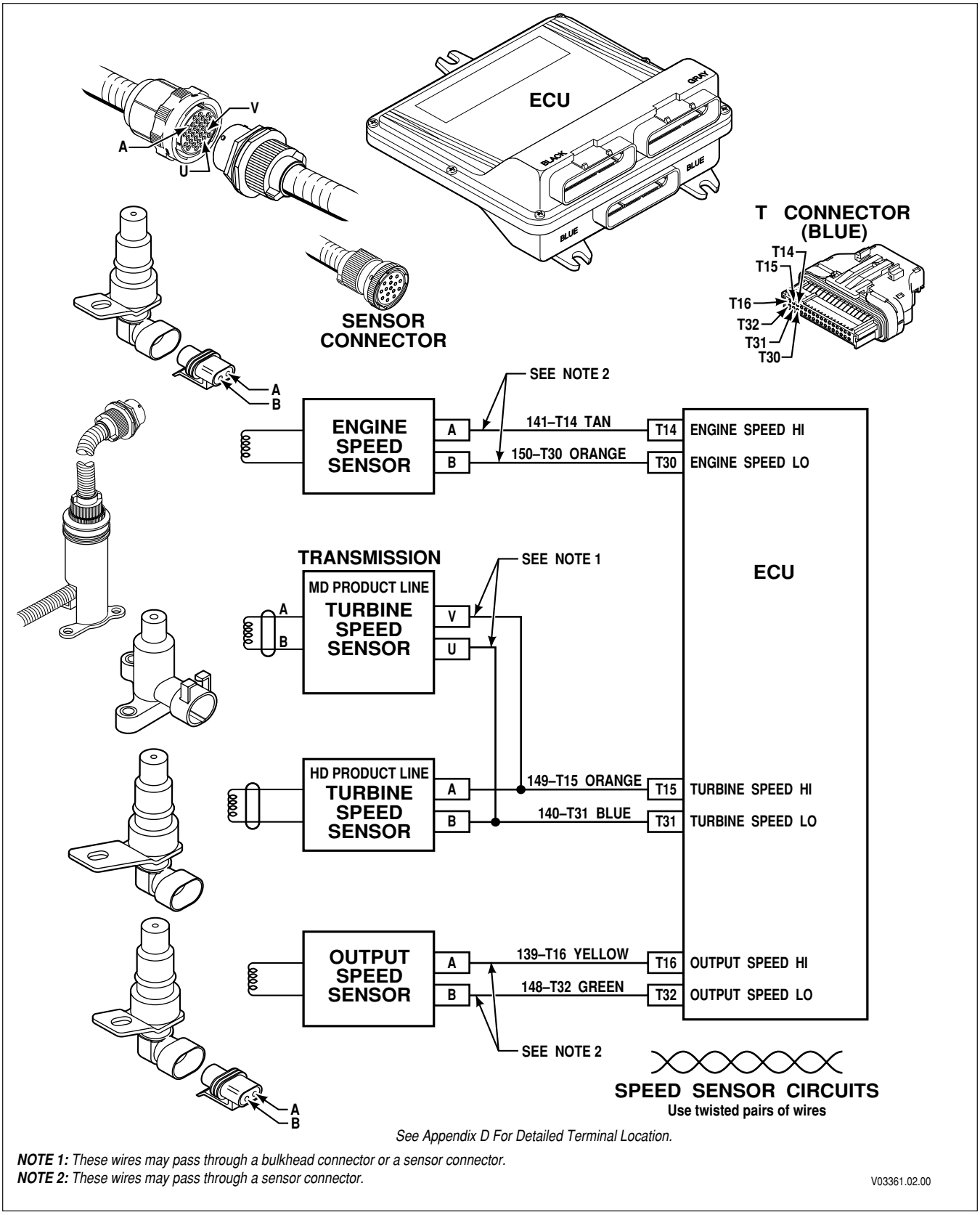

Figure 6–9. Code 25 Schematic Drawing

Copyright © 2005 General Motors Corp.

https://truckmanualshub.com/

CODE 25 XX—OUTPUT SPEED SENSOR, DETECTED AT ZERO SPEED, X RANGE *(Figure 6–9)*

Main code 25 occurs if the output speed sensor reports a zero speed reading while both engine and turbine speeds are approximately equal, turbine speed is above a calibration value, and neutral is not selected or commanded. Main code 25 indicates either the output speed sensor has failed or the required oncoming clutch or clutches did not come on. Code 25 11 can be generated by a false turbine speed reading. This may be due to crosstalk between solenoid and turbine speed sensor circuits caused by direct wire-to-wire short or by water in the electrical connectors. See Section 4 for corrective action.

NOTE: If code 25 XX is in memory at ECU initialization (ignition on), all display segments are illuminated.

Main Code	Subcode	Meaning	Applied Clutches
25	00	Output speed sensor, detected at zero speed, Low range	C3, C6
25	11	Output speed sensor, detected at zero speed, 1st range	C1, C5
25	22	Output speed sensor, detected at zero speed, 2nd range	C1, C4
25	33	Output speed sensor, detected at zero speed, 3rd range	C1, C3
25	44	Output speed sensor, detected at zero speed, 4th range	C1, C2
25	55	Output speed sensor, detected at zero speed, 5th range	C2, C3
25	66	Output speed sensor, detected at zero speed, 6th range	C2, C4
25	77	Output speed sensor, detected at zero speed, Reverse	C3, C5

A. Active Indicator Clearing Procedure:

- Power down
- Manual
- Self-clearing

NOTE: Before troubleshooting, read Paragraph 6–6. Also, test battery and ECU input voltages.

NOTE: Intermittent connections or lack of battery-direct power and ground connections can cause this and other codes.

B. Troubleshooting:

1. Check the transmission fluid level and be sure of correct fluid level.
2. Check for the presence of code 22 16. If code 22 16 is in the code list, go to code 22 XX section and follow troubleshooting steps for code 22 16.
3. Connect the Allison DOC™ For PC–Service Tool with ignition on, engine off; check for indication of turbine speed. If turbine speed is indicated, refer to Paragraph 4–2 for corrective action.
4. If the output speed sensor and wiring are satisfactory, install pressure gauges into the appropriate clutch pressure taps. See the appropriate transmission service manual or Appendix B in this manual and make the shift again. See if either of the clutches has low or no pressure. Lack of pressure in C1 in first range may be due to a G solenoid stuck closed. Lack of pressure in C5 in first range may be due to an E solenoid stuck closed.
5. If a clutch is leaking pressure, drain the fluid, remove the control module and check for damaged valve body gaskets and stuck or sticky valves. If no problems are found, replace the solenoids for the clutches used in the range indicated by the code (Figure 6–1). Refer to the appropriate transmission service manual for replacement procedure.

Copyright © 2005 General Motors Corp.

https://truckmanualshub.com/

CODE 25 XX—OUTPUT SPEED SENSOR, DETECTED AT ZERO SPEED, X RANGE *(Figure 6–9)*

6. If, after detecting leaking pressure and replacing solenoids, the problem persists, check for worn clutch or piston seals. Remove the transmission and repair or replace as necessary. Refer to the proper transmission service manual.

7. This code requires accurate output and turbine speed readings. If there were no transmission problems detected, use the diagnostic tool and watch the speed readings for noise (erratic signals) from low speed to high speed in the range indicated by the code.

8. If a noisy sensor is found, test the sensor resistance (refer to the sensor resistance chart below) and test its wiring for opens, shorts, and shorts-to-ground (see code 22 XX). Also closely inspect the terminals in the connectors for corrosion, contamination, or damage. Be sure the wiring to the sensors is a properly twisted wire pair. Remove sensor and inspect for damage at the tone wheel end. Inspect for looseness of the tone wheel. Refer to the appropriate service manual if repair of a loose tone wheel is necessary. Replace the sensor if it is damaged or if its resistance is incorrect and isolate and repair any noted wiring problems. Refer to the appropriate service manual for proper procedure. Use St. Clair P/N 200153 Service Harness Twisted Pair for this procedure.

Table 6–2. Speed Sensor Temperature Resistance

Current Resistance (Ohms) January, 2006	Former Resistance (Ohms) Before January, 2006	Temp ˚F	Temp ˚C
250	200	–40	–40
340	300	68	20
450	400	230	110

9. If no apparent cause for the code can be located, replace the turbine and output speed sensors. Refer to the appropriate transmission service manual for proper procedure.

CAUTION: Using an unmatched ECU/CIN combination may result in additional codes being set or in transmission clutch damage. Using an ECU from another vehicle is not a recommended procedure where the test will involve driving the vehicle. This is because the stored adaptive information is tuned to the original vehicle's transmission and those adaptive settings may not perform as expected in another vehicle. Transmission performance could be worse and damage to the clutches may occur.

NOTE: ***If using an ECU from another vehicle is unavoidable, the ECU must be set to unadapted shifts and the vehicle must be driven carefully to adapt the shifts to the test vehicle. Refer to Service Information Letter 16-WT-96 for the correct procedure. Be sure to reset the ECU to unadapted shifts when it is returned to the original vehicle.***

10. If the condition persists, replace the ECU with a test diagnostic ECU (P/N must match and it is recommended that the controller be loaded with the latest version of the CIN). If replacing the ECU corrects the problem, reinstall the original (bad) ECU to confirm that the problem is in the ECU. If the original ECU now works, inspect the ECU connectors for corrosion or damage which may cause an intermittent condition. If the original problem recurs, install a replacement ECU.

 Copyright © 2005 General Motors Corp.

https://truckmanualshub.com/

CODE 26 XX—THROTTLE SOURCE/ENGINE COOLANT SOURCE NOT DETECTED

Main code 26 occurs when the ECU has not detected either a throttle source or an engine coolant source. This is a new code related to the autodetect feature which is described in Paragraphs 1–9 or 1–10.

Main Code	Subcode	Meaning
26	00	Throttle source not detected
26	11	Engine coolant source not detected

Code 26 00 means the ECU has not detected the presence of engine throttle data or analog circuitry. For details about autodetect or using the Allison DOC™ For PC–Service Tool to select a throttle source, see Paragraphs 1–9 or 1–10 and Allison publication GN3433EN, User Guide for the Allison DOC™ For PC–Service Tool.

Code 26 11 means that the ECU has not detected the presence of engine coolant temperature data or analog circuitry. For details about autodetect or using Allison DOC™ For PC–Service Tool to select an engine coolant temperature source, see Paragraphs 1–9 or 1–10 and Allison publication GN3433EN, User Guide for the Allison DOC™ For PC–Service Tool.

A. Active Indicator Clearing Procedure

- Power down
- Manual

B. Troubleshooting

1. When code 26 00 is logged and an analog TPS is known to be installed, refer to code 21 XX for troubleshooting steps. If a J1587 or J1939 throttle signal is used, refer to code 66 00 for troubleshooting steps.
2. When code 26 11 is logged and an analog engine coolant temperature sensor is being used, refer to code 62 XX for troubleshooting steps. If a J1587 or J1939 engine coolant temperature signal is being used, refer to code 66 00 for troubleshooting steps.

Copyright © 2005 General Motors Corp.

https://truckmanualshub.com/

CODE 32 XX—C3 PRESSURE SWITCH

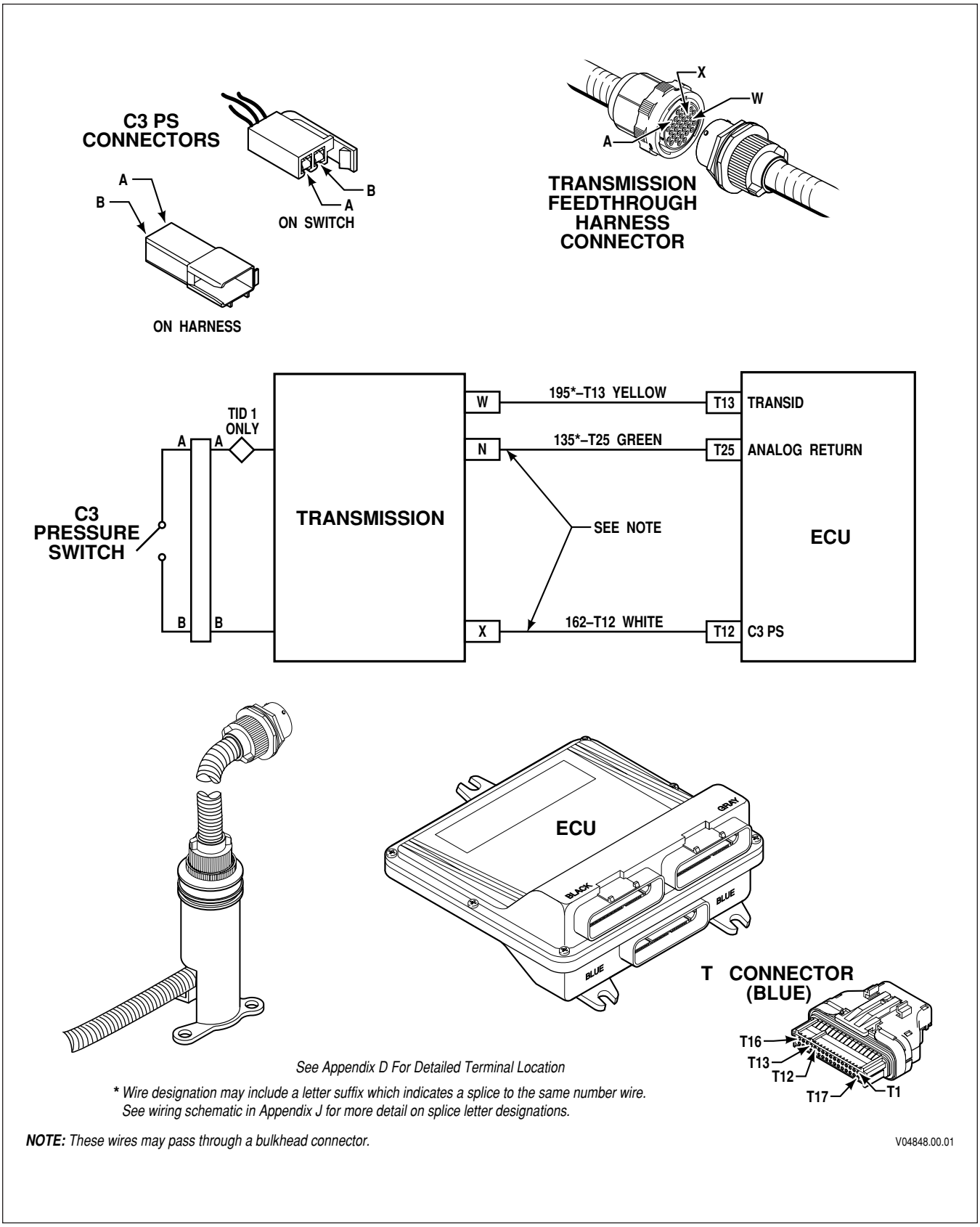

Figure 6–10. Code 32 Schematic Drawing

Copyright © 2005 General Motors Corp.

https://truckmanualshub.com/

CODE 32 XX—C3 PRESSURE SWITCH *(Figure 6–10)*

Main code 32 indicates the transmission gear ratio is correct, but the C3 pressure switch is open when it should be closed.

NOTE: ***When an ECU with a version 8 or 8A calibration is used with a pre-TransID transmission, 32 XX codes are set because the ECU sees wire 195 is open. To correct this condition, convert to a TID 1 internal harness or install Adapter P/N 200100 available from St. Clair Technologies. See addresses on Page 1–7.***

Further TransID (TID) information is in Paragraph 1–11.

Main Code	Subcode	Meaning
32	00	C3 switch open in low range (MD 3070 or HD 4070 only)
32	33	C3 switch open in third range
32	55	C3 switch open in fifth range
32	77	C3 switch open in reverse range

A. Active Indicator Clearing Procedure:

- Power down
- Manual
- Self-clearing

NOTE: ***Before troubleshooting, read Paragraph 6–6. Also, test battery and ECU input voltages.***

B. Troubleshooting:

1. Disconnect the transmission “T” harness connector at the ECU and the transmission. Test the C3 switch circuit for opens, shorts to other wires, shorts-to-ground, or short-to-battery. If wiring problems are found, isolate and repair. The C3 pressure switch closes at 206.8 ± 48 kPa (30 ± 7 psi); resistance should be 2 Ohms maximum when the switch is closed and 20,000 to infinity when the switch is open. Infinity is often indicated as OL (over limit) on a DVOM.

2. If problems are not found in the external harness, drain the fluid, remove the control module, and test the internal harness for opens, shorts between wires, or shorts-to-ground. Refer to the appropriate transmission service manual. If wiring problems are found, isolate and repair (see Appendix E, Paragraph 1–9).

3. If no wiring problems are found, replace the C3 pressure switch. Refer to the appropriate transmission service manual.

4. If the problem recurs, use a spare wire, if available, or provide a new wire (St. Clair P/N 200153 may be used for this purpose) for the C3 pressure switch circuit.

5. If the problem recurs again, replace the internal harness.

CAUTION: Using an unmatched ECU/CIN combination may result in additional codes being set or in transmission clutch damage. Using an ECU from another vehicle is not a recommended procedure where the test will involve driving the vehicle. This is because the stored adaptive information is tuned to the original vehicle's transmission and those adaptive settings may not perform as expected in another vehicle. Transmission performance could be worse and damage to the clutches may occur.

Copyright © 2005 General Motors Corp.

https://truckmanualshub.com/

CODE 32 XX—C3 PRESSURE SWITCH *(Figure 6–10)*

NOTE: ***If using an ECU from another vehicle is unavoidable, the ECU must be set to unadapted shifts and the vehicle must be driven carefully to adapt the shifts to the test vehicle. Refer to Service Information Letter 16-WT-96 for the correct procedure. Be sure to reset the ECU to unadapted shifts when it is returned to the original vehicle.***

6. If the condition persists, replace the ECU with a test diagnostic ECU (P/N must match and it is recommended that the controller be loaded with the latest version of the CIN). If replacing the ECU corrects the problem, reinstall the original (bad) ECU to confirm that the problem is in the ECU. If the original ECU now works, inspect the ECU connectors for corrosion or damage which may cause an intermittent condition. If the original problem recurs, install a replacement ECU.

Copyright © 2005 General Motors Corp.

https://truckmanualshub.com/

DIAGNOSTIC CODES

NOTES

Copyright © 2005 General Motors Corp.

https://truckmanualshub.com/

CODE 33 XX—SUMP OIL TEMPERATURE SENSOR

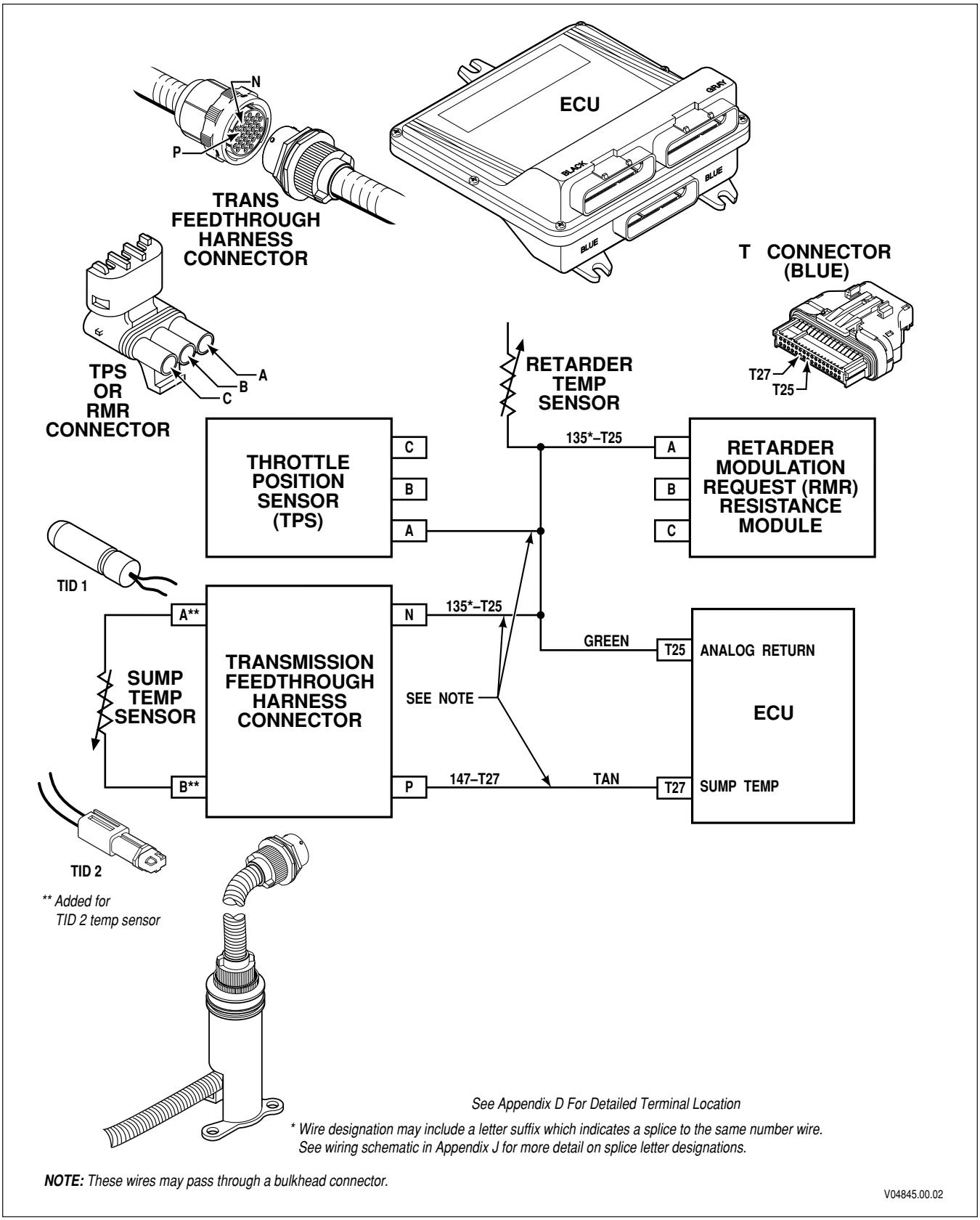

Figure 6–11. Code 33 Schematic Drawing

Copyright © 2005 General Motors Corp.

https://truckmanualshub.com/

CODE 33 XX—SUMP OIL TEMPERATURE SENSOR *(Figure 6–11)*

NOTE: ***When an ECU with a version 8 calibration (CIN=0A...) is used with a TransID 2 transmission, 33 XX codes are set because the ECU does not have the proper calibrations for the TID 2 thermistors. The ECU calibration must be updated to version 8A (CIN=0B...).***

TransID (TID) information related to thermistor changes is in Paragraph 1–11 and detailed troubleshooting information for TID 2 thermistors is shown in Appendix Q.

Main code 33 indicates the sump temperature sensor is providing a signal outside the usable range of the ECU. This code indicates the sensor failed showing abnormally high or low temperature readings. Main code 33 can be caused by a component or circuit failure or by extremely high or low temperatures. There are no operational inhibits related to main code 33. The ECU assumes a hardware failure and that transmission temperatures are normal (93ºC; 200ºF). Temperatures above or below normal cause poor shift quality.

NOTE: ***Code 33 23 in conjunction with code 21 23 indicates the loss of common ground (wire 135) between the throttle and temperature sensors.***

Main Code	Subcode	Meaning
33	12	Sump oil temperature sensor failed low
33	23	Sump oil temperature sensor failed high

A. Active Indicator Clearing Procedure:

- Power down
- Manual
- Self-clearing

NOTE: ***Before troubleshooting, read Paragraph 6–6. Also, check the transmission fluid level.***

B. Troubleshooting:

NOTE: ***Code 33 12 can be caused when the +5V power line (wire 124) is shorted to ground or open. Wire 124 also provides power for the OLS, TPS, RMR, retarder temperature sensor, and shift selectors and is present in all three ECU connectors.***

1. If possible, test the sump temperature with a Allison DOC™ for PC–Service Tool. Use the fastest sample rate available on the Allison DOC™ for PC–Service Tool. This is necessary to catch momentary changes due to an intermittent open or short to ground. If Allison DOC™ for PC–Service Tool is not available, use the shift selector display to determine if the code is active (Paragraph 6–2). Disconnect the transmission “T” harness at the ECU and test the resistance of the sensor and compare with Figure 6–12 for TID 1 and earlier sensors. Refer to Appendix Q for TID 2 and later sensors.
2. If Step 1 reveals that the extreme temperature indication is no longer present, the temperature limit could have been reached due to operational or ambient temperature extremes. Also, you may be experiencing an intermittent problem and the code will not be active. Proceed cautiously, it is unlikely there is a sensor hardware fault.
3. Disconnect the external harness at the transmission. Inspect the connectors and terminals for dirt, corrosion, or damage. Clean or replace as necessary.
4. Test the sensor wires in the external harness for opens (code 33 23), shorts between wires, or shorts-to-ground (code 33 12—refer to Section 4). If wiring problems are found, isolate and repair as described in Appendix E.

Copyright © 2005 General Motors Corp.

https://truckmanualshub.com/

CODE 33 XX—SUMP OIL TEMPERATURE SENSOR *(Figure 6–11)*

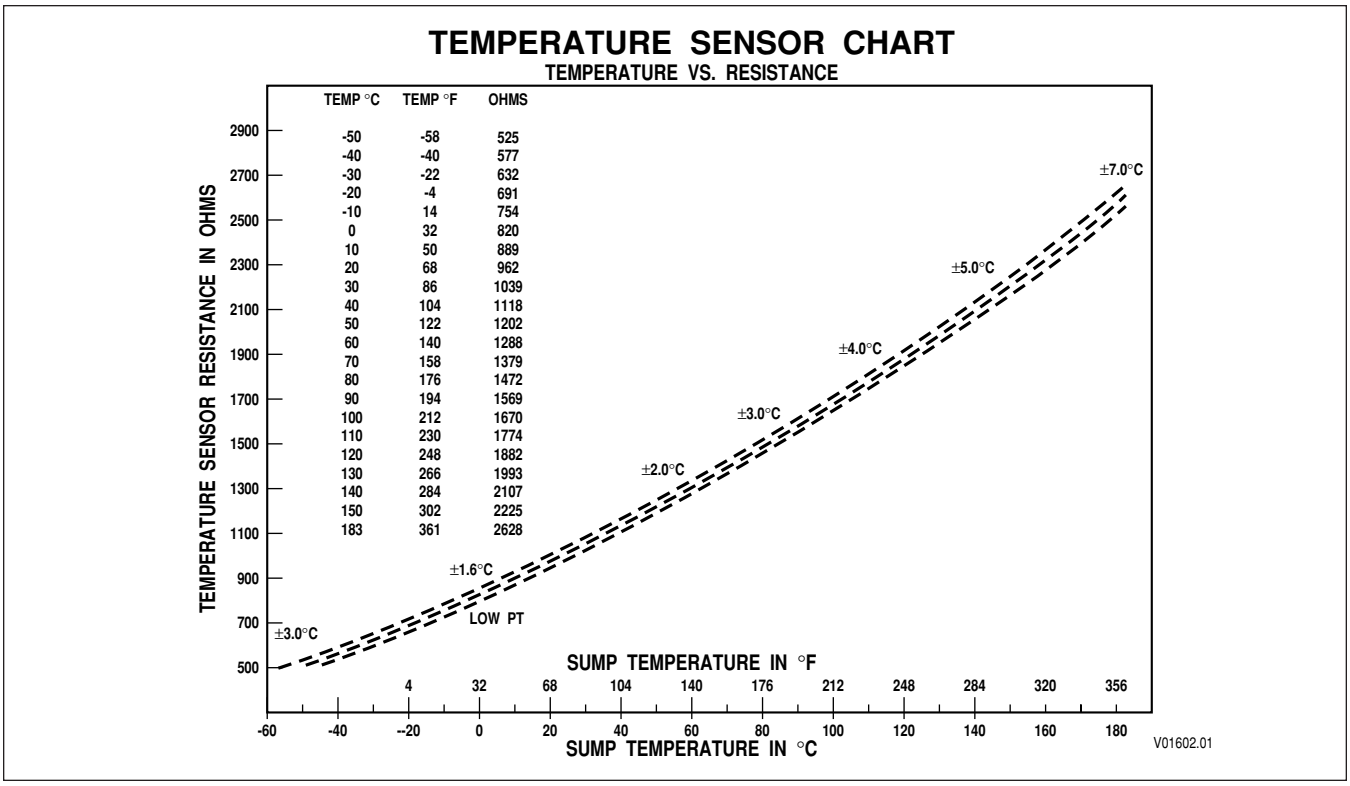

Figure 6–12. Temperature Sensor Chart (TID 1 and Earlier Sensors)

5. If no harness problems are found, inspect the feedthrough harness for damage. If the feedthrough harness connector is satisfactory, drain the fluid and remove the control module. Inspect for chafing of the sensor wires, especially near the separator plate. Eliminate the chafe point. If no chafe point is found, replace the sensor. Refer to the transmission service manual and Appendix E, Paragraph 1–12 in this manual.

6. If the problem recurs, use a spare wire, if available, or provide a new wire (St. Clair P/N 200153 may be used for this purpose) for the temperature sensor circuit.

CAUTION: Using an unmatched ECU/CIN combination may result in additional codes being set or in transmission clutch damage. Using an ECU from another vehicle is not a recommended procedure where the test will involve driving the vehicle. This is because the stored adaptive information is tuned to the original vehicle's transmission and those adaptive settings may not perform as expected in another vehicle. Transmission performance could be worse and damage to the clutches may occur.

NOTE: ***If using an ECU from another vehicle is unavoidable, the ECU must be set to unadapted shifts and the vehicle must be driven carefully to adapt the shifts to the test vehicle. Refer to Service Information Letter 16-WT-96 for the correct procedure. Be sure to reset the ECU to unadapted shifts when it is returned to the original vehicle.***

7. If the condition persists, replace the ECU with a test diagnostic ECU (P/N must match and it is recommended that the controller be loaded with the latest version of the CIN). If replacing the ECU corrects the problem, reinstall the original (bad) ECU to confirm that the problem is in the ECU. If the original ECU now works, inspect the ECU connectors for corrosion or damage which may cause an intermittent condition. If the original problem recurs, install a replacement ECU.

 Copyright © 2005 General Motors Corp.

https://truckmanualshub.com/

CODE 34 XX—CALIBRATION COMPATIBILITY OR CHECKSUM FAULT

Main code 34 indicates there is a problem with the calibration.

Main Code	Subcode	Meaning
34	12	Factory calibration compatibility number wrong
34	13	Factory calibration checksum
34	14	Power off block checksum
34	15	Diagnostic queue block checksum
34	16	Real-time block checksum
34	17	Customer modifiable constants checksum

A. Active Indicator Clearing Procedure:

- Power down

NOTE: ***Copying the current calibration from the ECU and reloading it will not correct the fault. The calibration must be downloaded directly from PCCS.***

B. Troubleshooting:

1. If the code set is 34 14 and it occurs in conjunction with code 35 00, proceed to find the cause for code 35 00 and correct it.
2. After the cause for code 35 00 has been corrected, drive the vehicle to see if code 34 14 recurs. If code 34 14 recurs, proceed to Step 3.
3. Reprogram the correct calibration. Contact your nearest Allison distributor/dealer location qualified to do recalibration. Be certain the calibration and the software level are compatible.
4. If the code recurs after reprogramming, replace the ECU.
5. If the code set is 34 17, reprogram the GPI/GPO package after re-calibration of the ECU.

Copyright © 2005 General Motors Corp.

https://truckmanualshub.com/

CODE 35 XX—POWER INTERRUPTION

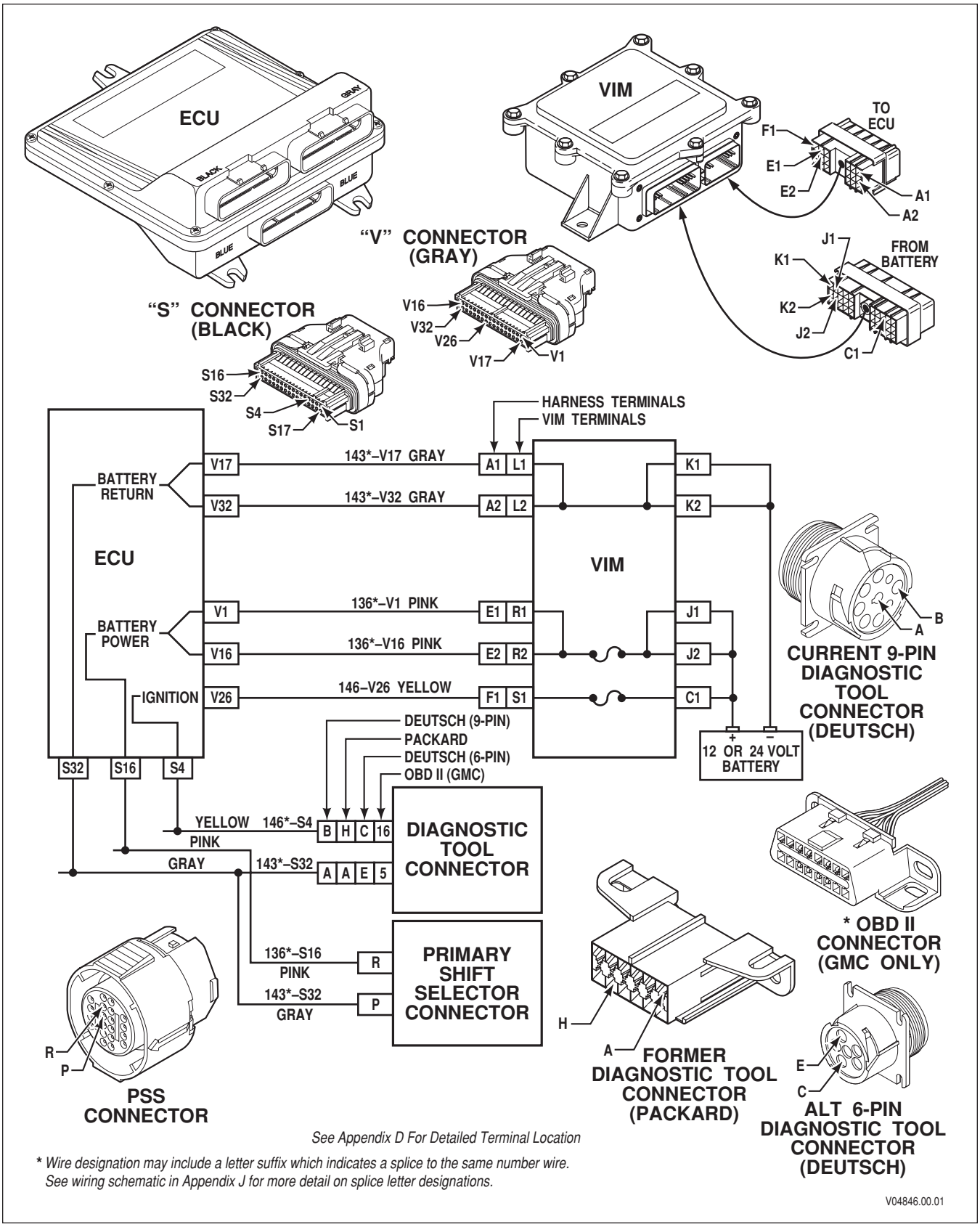

Figure 6–13. Code 35 Schematic Drawing

Copyright © 2005 General Motors Corp.

https://truckmanualshub.com/

CODE 35 XX—POWER INTERRUPTION *(Figure 6–13)*

Main code 35 indicates the ECU has detected a complete power loss before the ignition was turned off or before ECU shutdown is completed. When this happens, the ECU is not able to save the current operating parameters in memory before turning itself off.

Main Code	Subcode	Meaning
35	00	Power interruption. (Not an active code; only appears after power is restored.) During power interruption, DNS light is not illuminated and the transmission will not shift.
35	16	Real-time write interruption. (Power interruption at the same time the ECU is recording a critical code to the real-time section.)

A. Active Indicator Clearing Procedure:

- Power down
- Manual—subcode 16

NOTE: Before troubleshooting, read Paragraph 6–6. Also, test battery and ECU input voltages.

B. Troubleshooting:

1. If the vehicle has a master switch controlling battery power to the ECU and an ignition switch, turning the master switch off before turning the ignition switch off can cause this code. Turning the master switch off before ECU shutdown is completed will also cause this code. No troubleshooting is necessary.

2. If improper switch sequencing is not the cause, test ECU power and ground for opens, shorts, and shorts-to-ground. Not using battery-direct power and battery ground connections can cause this code. A defective charging system, or open battery fuse or fusible link can also cause this code. The battery fuse or fusible link may be at the battery or in the VIM. Dirty, corroded, or painted power and ground connections can also cause this code.

CAUTION: Using an unmatched ECU/CIN combination may result in additional codes being set or in transmission clutch damage. Using an ECU from another vehicle is not a recommended procedure where the test will involve driving the vehicle. This is because the stored adaptive information is tuned to the original vehicle's transmission and those adaptive settings may not perform as expected in another vehicle. Transmission performance could be worse and damage to the clutches may occur.

NOTE: If using an ECU from another vehicle is unavoidable, the ECU must be set to unadapted shifts and the vehicle must be driven carefully to adapt the shifts to the test vehicle. Refer to Service Information Letter 16-WT-96 for the correct procedure. Be sure to reset the ECU to unadapted shifts when it is returned to the original vehicle.

3. If all system power and ground connections are satisfactory and the problem persists, replace the ECU with a test diagnostic ECU (P/N must match and it is recommended that the controller be loaded with the latest version of the CIN). If replacing the ECU corrects the problem, reinstall the original (bad) ECU to confirm that the problem is in the ECU. If the original ECU now works, inspect the ECU connectors for corrosion or damage which may cause an intermittent condition. If the original problem recurs, install a replacement ECU.

Copyright © 2005 General Motors Corp.

https://truckmanualshub.com/

DIAGNOSTIC CODES

NOTES

Copyright © 2005 General Motors Corp.

https://truckmanualshub.com/

CODE 36 XX—HARDWARE AND SOFTWARE NOT COMPATIBLE

Main code 36 indicates the system has detected a mismatch between the ECU hardware and the ECU software or that there is a TransID (TID) problem.

Main Code	Subcode	Meaning
36	00	Mismatch between ECU hardware and software
36	01	TransID not compatible with hardware/software
36	02	TransID did not complete

A. Active Indicator Clearing Procedure:

- Power down

B. Troubleshooting:

1. Correction for code 36 00 requires the installation of software that is compatible with the ECU hardware involved. (If a different calibration is required, update the ECU hardware to be compatible.)
2. Correction for code 36 01 is to update the ECU calibration. Installation of the latest calibration makes the ECU compatible with the latest TransID configuration.

NOTE: For further information about TransID see Paragraph 1–11 and SIL 7-WT-98.

3. Correction for code 36 02 is to troubleshoot TransID wire 195 and the complete TransID circuit. This code is caused by a short-to-battery of wire 195, but has also been caused by a soft short in the solenoid associated with TransID (B solenoid for TransID 3 units). Rough shifting may accompany the setting of this code since a default calibration value is used instead of the adapted calibration value. Codes 42 XX or 69 XX may be associated with this code.

Copyright © 2005 General Motors Corp.

https://truckmanualshub.com/

CODE 42 XX—SHORT-TO-BATTERY IN SOLENOID CIRCUIT

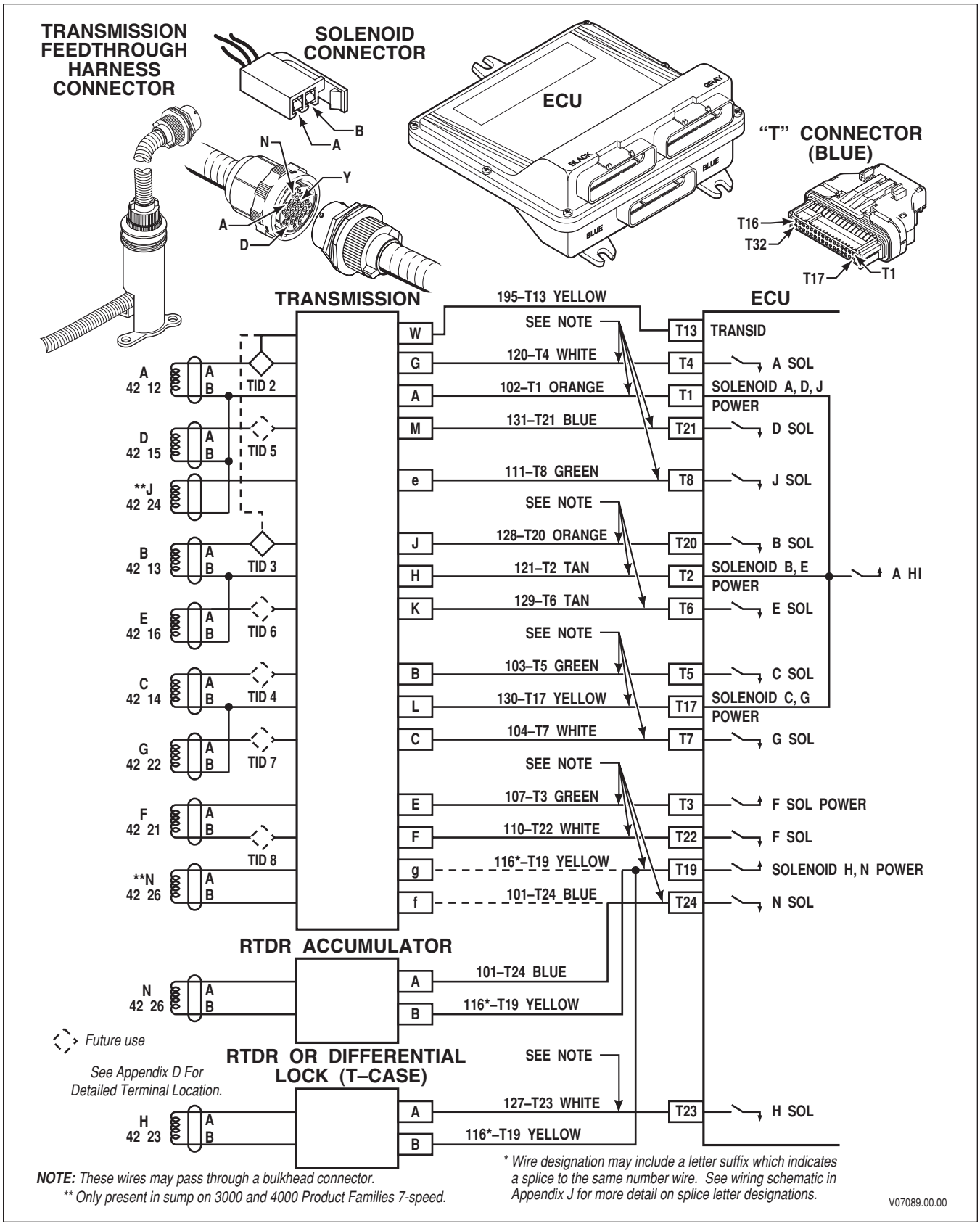

Figure 6–14. Code 42 Schematic Drawing

Copyright © 2005 General Motors Corp.

https://truckmanualshub.com/

CODE 42 XX—SHORT-TO-BATTERY IN SOLENOID CIRCUIT *(Figure 6–14)*

Main code 42 indicates the ECU has detected a short-to-battery condition in a solenoid wiring circuit. The **DO NOT SHIFT** response is activated when some subcodes are detected, all solenoids are turned off and the **CHECK TRANS** light is illuminated. All solenoids have a driver on the low (ground) side which can turn off the solenoid. All solenoids also have a driver on the high (power) side of the solenoid. Even though the high side driver can be turned off, a short-to-battery means the solenoid is continuously powered at an unregulated 12V or 24V instead of a regulated (pulse width modulated) voltage. The low side driver will not tolerate direct battery current and will open, causing the solenoid to be de-energized.

NOTE: ***For subcodes 12, 13, 14, 15, 16, 22—neutral start is inoperable; all display segments are on if the code is logged during ECU initialization (ignition on). Subcodes 21, 23, 24, and 26 will not trigger the CHECK TRANS light.***

Main Code	Subcode	Meaning
42	12	Short-to-battery A Solenoid Circuit
42	13	Short-to-battery B Solenoid Circuit
42	14	Short-to-battery C Solenoid Circuit
42	15	Short-to-battery D Solenoid Circuit
42	16	Short-to-battery E Solenoid Circuit
42	21	Short-to-battery F Solenoid Circuit
42	22	Short-to-battery G Solenoid Circuit
42	23	Short-to-battery H Solenoid Circuit
42	24	Short-to-battery J Solenoid Circuit
42	26	Short-to-battery N Solenoid Circuit

A. Active Indicator Clearing Procedure:

- Power down
- Manual

NOTE: ***Intermittent connections or lack of battery-direct power and ground connections may cause this and other codes.***

NOTE: ***Before troubleshooting, read Paragraph 6–6. Also, test battery and ECU input voltages.***

NOTE: ***Energizing the solenoids and listening for ball/plunger movement is sometimes useful in troubleshooting.***

NOTE: ***"N" solenoid on the retarder accumulator has either a 12.5 ± 1.5 Ohm coil or a 23.5 ± 2.4 Ohm coil and is not correlated to sump temperature.***

PROBING THE CONNECTOR

When testing the control system from the feedthrough connector with the internal harness connected, the resistance of each solenoid can be measured by using a VOM. Refer to Figure 6–15 for solenoid resistance versus temperature.

Copyright © 2005 General Motors Corp.

https://truckmanualshub.com/

CODE 42 XX—SHORT-TO-BATTERY IN SOLENOID CIRCUIT *(Figure 6–14)*

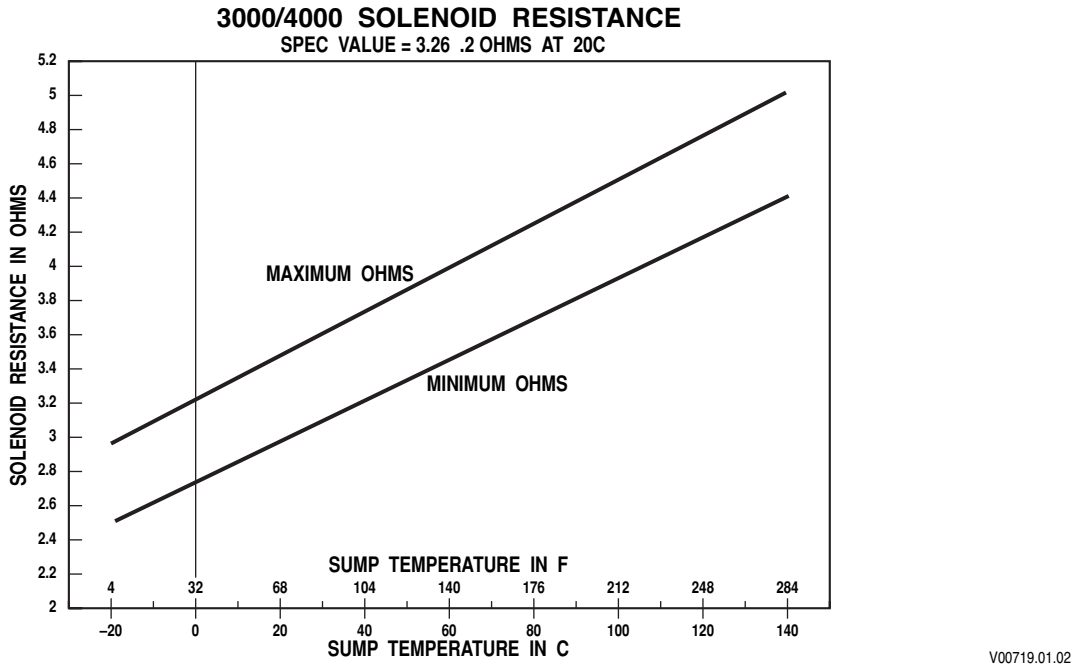

Figure 6–15. Solenoid Resistance vs. Temperature

B. Troubleshooting:

1. Make sure the transmission connector is tightly connected. If the connector is properly connected, disconnect the wiring harness at the transmission. Inspect the connector for corroded or damaged terminals. Clean or replace as necessary.

2. Test each solenoid circuit at the transmission connector for shorts between the solenoid circuit being diagnosed and all other terminals in the connector. This test may be simplified by using the J 41612 test tool. Refer to the system schematic and/or chart to identify wires in the internal harness which are connected. If a short is found, isolate and repair the short. The short will probably be in the internal wiring harness.

3. If multiple code 42s occur (42 12, 42 13, 42 14, 42 12, 42 16, 42 22, and 42 24), and wiring and solenoids test okay, the A-Hi driver is probably failed open.

4. Replace the ECU. If replacing the ECU corrects the problem, reinstall the original (bad) ECU to confirm that the problem is in the ECU. If the problem recurs, reinstall the new ECU to complete the repair.

5. If code 42 21 occurs repeatedly and the F solenoid and wiring test okay, the F-Hi or F-Lo driver may be failed open. Follow Step (4) above.

6. If codes 42 23 and 42 26 occur repeatedly and solenoids and wiring test okay, the H and N-Hi driver may be failed open. Follow Step (4) above.

7. If the short is not found at the transmission connector, disconnect the transmission “T” harness connector at the ECU and test the wires of the solenoid circuit for shorts between the solenoid wires. If the short is found in one of the wires, isolate and repair it. Use a spare wire, if available, or provide a new wire (St. Clair P/N 200153 may be used for this purpose).

 Copyright © 2005 General Motors Corp.

https://truckmanualshub.com/

CODE 42 XX—SHORT-TO-BATTERY IN SOLENOID CIRCUIT *(Figure 6–14)*

8. If the short is not found in either the transmission or the harness, the condition must be intermittent.
9. Drain the fluid, remove the control module (refer to the appropriate transmission service manual) and closely inspect the internal harness for damage. Repair or replace as necessary.
10. If the condition recurs, use a spare wire, if available, or provide a new wire (St. Clair P/N 200153 may be used for this purpose) for the solenoid circuit indicated by the trouble code. Refer to Appendix E for connector assembly/disassembly information.

CAUTION:	Using an unmatched ECU/CIN combination may result in additional codes being set or in transmission clutch damage. Using an ECU from another vehicle is not a recommended procedure where the test will involve driving the vehicle. This is because the stored adaptive information is tuned to the original vehicle's transmission and those adaptive settings may not perform as expected in another vehicle. Transmission performance could be worse and damage to the clutches may occur.

NOTE: ***If using an ECU from another vehicle is unavoidable, the ECU must be set to unadapted shifts and the vehicle must be driven carefully to adapt the shifts to the test vehicle. Refer to Service Information Letter 16-WT-96 for the correct procedure. Be sure to reset the ECU to unadapted shifts when it is returned to the original vehicle.***

11. If the condition persists, replace the ECU with a test diagnostic ECU (P/N must match and it is recommended that the controller be loaded with the latest version of the CIN). If replacing the ECU corrects the problem, reinstall the original (bad) ECU to confirm that the problem is in the ECU. If the original ECU now works, inspect the ECU connectors for corrosion or damage which may cause an intermittent condition. If the original problem recurs, install a replacement ECU.

Copyright © 2005 General Motors Corp.

https://truckmanualshub.com/

CODE 44 XX—SHORT-TO-GROUND IN SOLENOID CIRCUIT

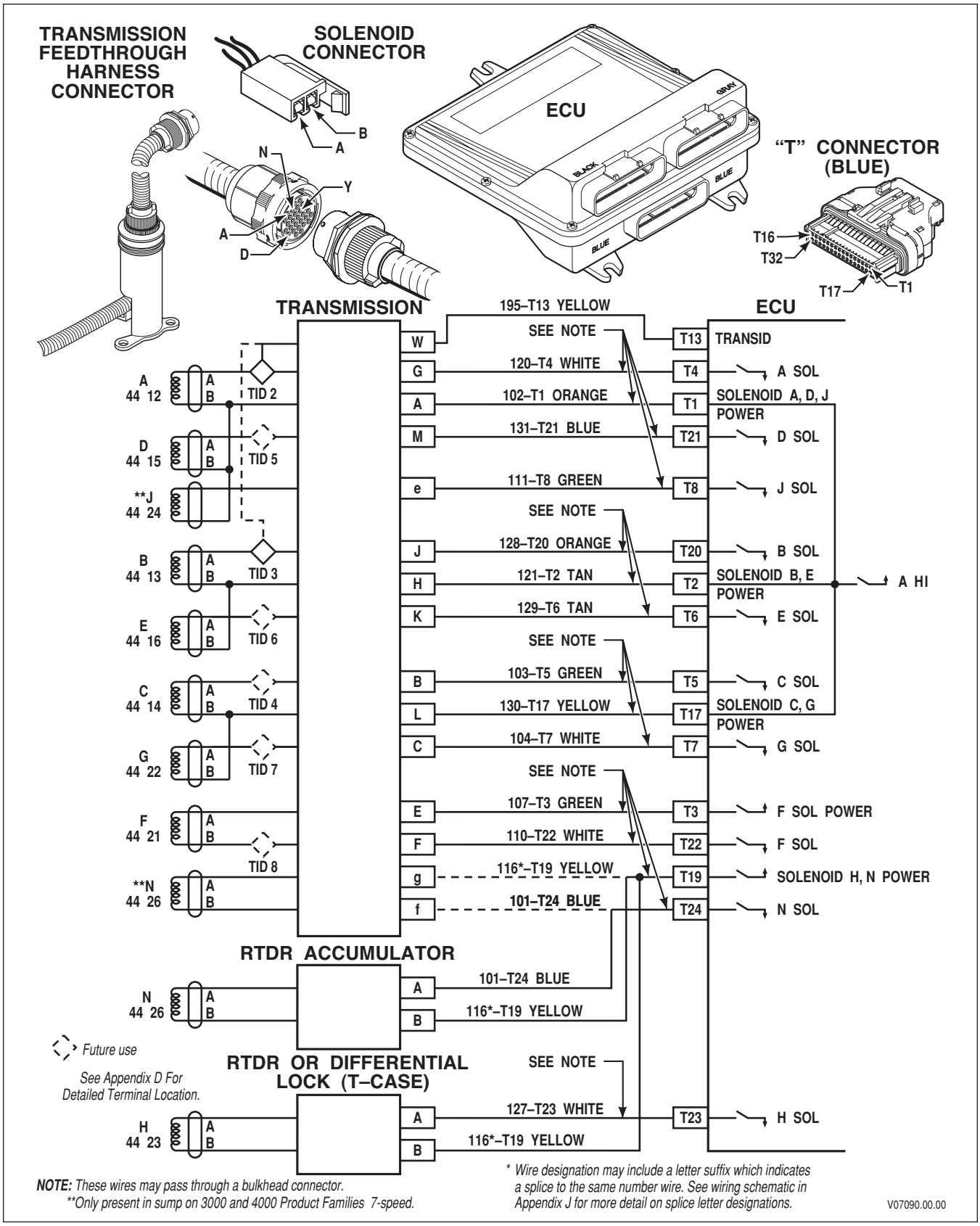

Figure 6–16. Code 44 Schematic Drawing

Copyright © 2005 General Motors Corp.

https://truckmanualshub.com/

CODE 44 XX—SHORT-TO-GROUND IN SOLENOID CIRCUIT *(Figure 6–16)*

Main code 44 indicates the ECU has detected a short-to-ground in a solenoid or its wiring. The **DO NOT SHIFT** response is activated when some subcodes are detected, all solenoids are turned off, and the **CHECK TRANS** light is illuminated.

NOTE: Code 44 XX may be caused by a short-to-ground of wire 195 (TransID).

NOTE: For subcodes 12, 13, 14, 15, 16, 22—neutral start is inoperable. Subcodes 21, 23, 24, and 26 do not trigger the CHECK TRANS light.

Main Code	Subcode	Meaning
44	12	Short-to-ground A Solenoid Circuit
44	13	Short-to-ground B Solenoid Circuit
44	14	Short-to-ground C Solenoid Circuit
44	15	Short-to-ground D Solenoid Circuit
44	16	Short-to-ground E Solenoid Circuit
44	21	Short-to-ground F Solenoid Circuit
44	22	Short-to-ground G Solenoid Circuit
44	23	Short-to-ground H Solenoid Circuit
44	24	Short-to-ground J Solenoid Circuit
44	26	Short-to-ground N Solenoid Circuit

A. Active Indicator Clearing Procedure:

- Power down
- Manual

NOTE: Intermittent connections or lack of battery-direct power and ground connections may cause this and other codes.

NOTE: Before troubleshooting, read Paragraph 6–6. Also, test battery and ECU input voltages.

PROBING THE CONNECTOR

When testing the control module solenoids from the feedthrough connector with the internal harness connected, the resistance of each solenoid can be checked using a VOM. Refer to Figure 6–17 for resistance values versus temperature.

Copyright © 2005 General Motors Corp.

https://truckmanualshub.com/

CODE 44 XX—SHORT-TO-GROUND IN SOLENOID CIRCUIT *(Figure 6–16)*

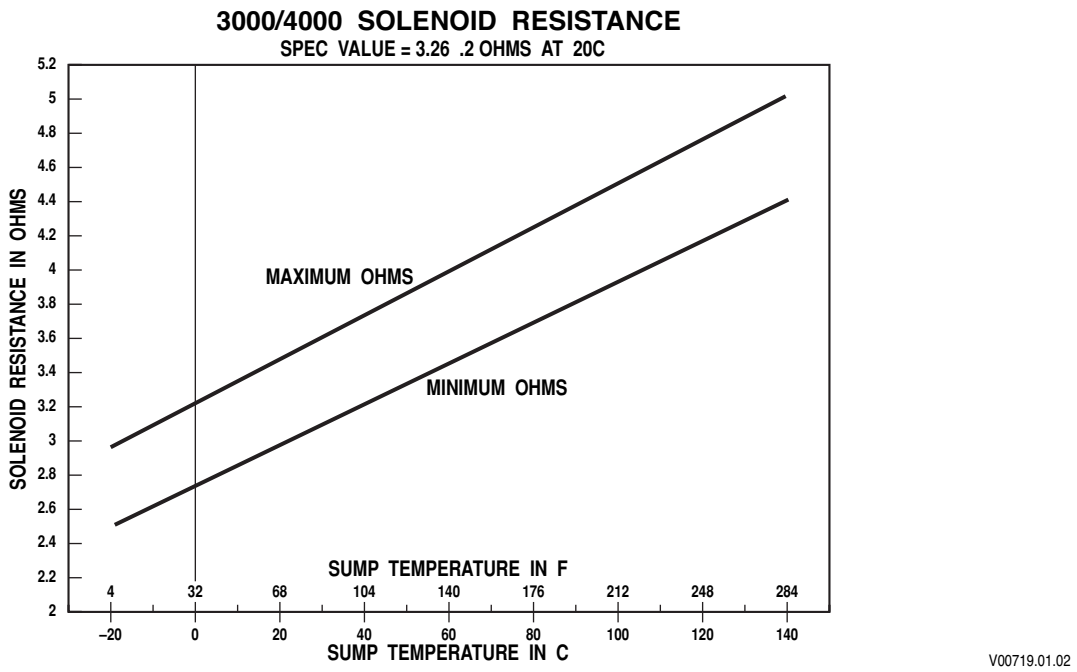

Figure 6–17. Solenoid Resistance vs. Temperature

B. Troubleshooting:

1. Inspect the transmission connector and make sure it is tightly connected. If the connector is properly connected, disconnect the harness at the transmission and inspect the terminals in the transmission harness and feedthrough harness connectors. Clean or replace as necessary (Appendix D).

2. If the connector is connected, clean, and not damaged, test the solenoid circuit in the transmission for shorts to other wires. (Tool J 41612 may be useful in making this test.) Refer to the system schematic and/or chart to identify wires in the internal harness which are connected. If the short circuit is found, drain the fluid, remove the control module (refer to the appropriate transmission service manual), and isolate the short. The short is probably in the feedthrough harness, or the solenoid itself. Refer to Figure 6–1 for solenoid locations.

3. If a short is not found in the transmission, disconnect the transmission harness connector at the ECU and inspect the terminals for damage or contamination. Clean or replace as necessary. If the terminals are satisfactory, test the wires of the solenoid circuit in the transmission harness for shorts-to-ground or shorts between wires. If a short is found in one of the wires, isolate and repair it or use a spare wire, if available, or provide a new wire (St. Clair P/N 200153 may be used for this purpose) in the external harness. Refer to Appendix E for connector/terminal repair information.

4. If the short is not found in either the transmission or the harness, the condition must be intermittent.

5. Drain the fluid, remove the control module, and closely inspect the solenoid and internal harness for damage. Repair or replace as necessary. Refer to the appropriate transmission service manual.

 Copyright © 2005 General Motors Corp.

https://truckmanualshub.com/

CODE 44 XX—SHORT-TO-GROUND IN SOLENOID CIRCUIT *(Figure 6–16)*

6. If the condition recurs, use a spare wire, if available, or provide a new wire (St. Clair P/N 200153 may be used for this purpose) for the solenoid circuit indicated by the diagnostic code. Refer to Appendix E for connector assembly/disassembly information.

CAUTION:	Using an unmatched ECU/CIN combination may result in additional codes being set or in transmission clutch damage. Using an ECU from another vehicle is not a recommended procedure where the test will involve driving the vehicle. This is because the stored adaptive information is tuned to the original vehicle's transmission and those adaptive settings may not perform as expected in another vehicle. Transmission performance could be worse and damage to the clutches may occur.

NOTE: ***If using an ECU from another vehicle is unavoidable, the ECU must be set to unadapted shifts and the vehicle must be driven carefully to adapt the shifts to the test vehicle. Refer to Service Information Letter 16-WT-96 for the correct procedure. Be sure to reset the ECU to unadapted shifts when it is returned to the original vehicle.***

7. If the condition persists, replace the ECU with a test diagnostic ECU (P/N must match and it is recommended that the controller be loaded with the latest version of the CIN). If replacing the ECU corrects the problem, reinstall the original (bad) ECU to confirm that the problem is in the ECU. If the original ECU now works, inspect the ECU connectors for corrosion or damage which may cause an intermittent condition. If the original problem recurs, install a replacement ECU.

Copyright © 2005 General Motors Corp.

https://truckmanualshub.com/

CODE 45 XX—OPEN CONDITION IN SOLENOID CIRCUIT

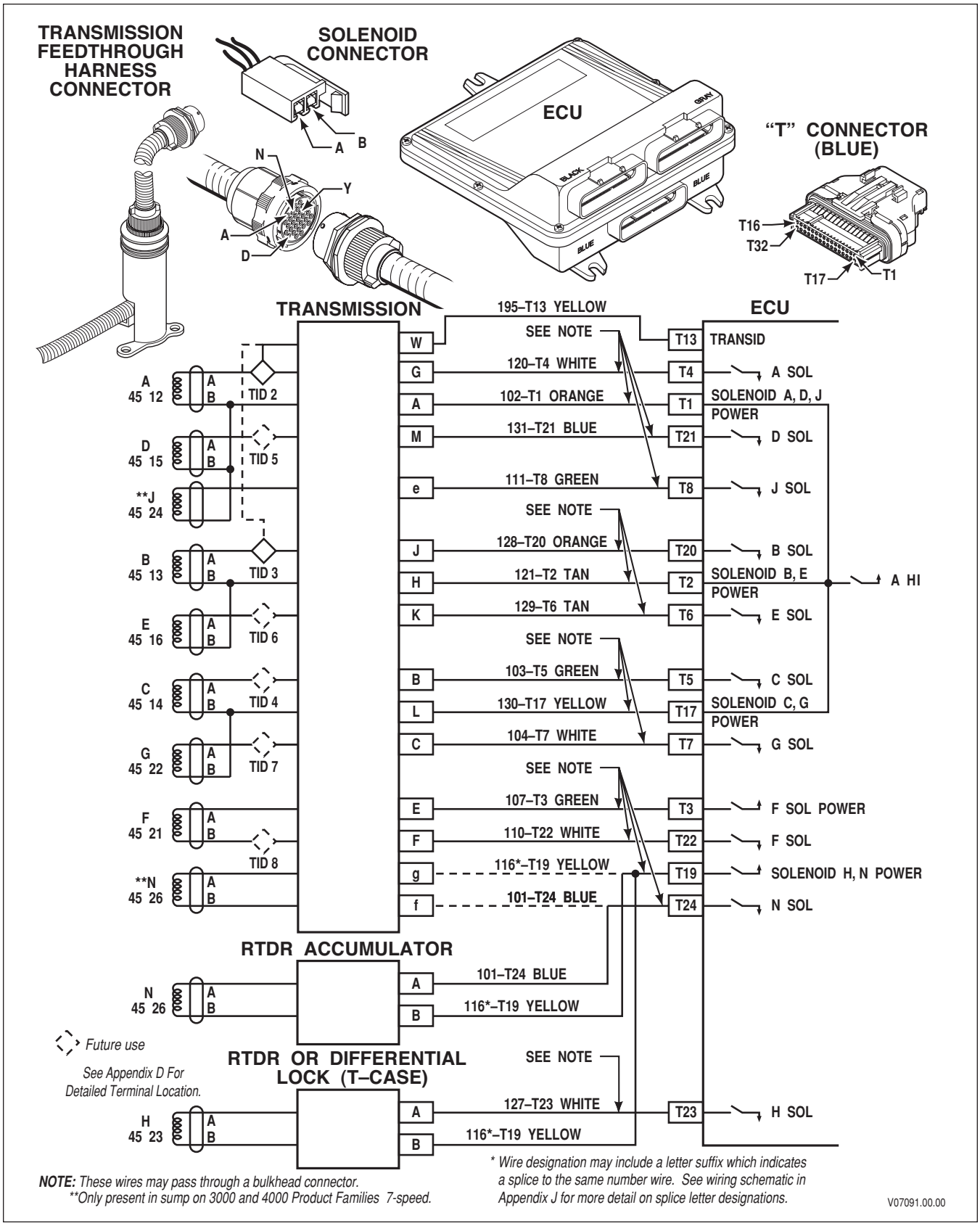

Figure 6–18. Code 45 Schematic Drawing

Copyright © 2005 General Motors Corp.

https://truckmanualshub.com/

CODE 45 XX—OPEN CONDITION IN SOLENOID CIRCUIT *(Figure 6–18)*

Main code 45 indicates the ECU has detected either an open circuit condition in a solenoid coil or the wiring to that solenoid. The **DO NOT SHIFT** response is activated when some subcodes are detected, all solenoids are turned off, and the **CHECK TRANS** light is illuminated.

Main Code	Subcode	Meaning
45	12	Open Circuit A Solenoid Circuit
45	13	Open Circuit B Solenoid Circuit
45	14	Open Circuit C Solenoid Circuit
45	15	Open Circuit D Solenoid Circuit
45	16	Open Circuit E Solenoid Circuit
45	21	Open Circuit F Solenoid Circuit
45	22	Open Circuit G Solenoid Circuit
45	23	Open Circuit H Solenoid Circuit
45	24	Open Circuit J Solenoid Circuit
45	26	Open Circuit N Solenoid Circuit

A. Active Indicator Clearing Procedure:

- Power down
- Manual

NOTE: ***Intermittent connections or lack of battery-direct power and ground connections may cause this and other codes.***

NOTE: ***Before troubleshooting, read Paragraph 6–6. Also, test battery and ECU input voltages.***

PROBING THE CONNECTOR

When testing the control module solenoids from the feedthrough connector with the internal harness connected, the resistance of each solenoid can be checked using a VOM. Refer to Figure 6–19 for solenoid resistance values versus temperature.

Copyright © 2005 General Motors Corp.

https://truckmanualshub.com/

CODE 45 XX—OPEN CONDITION IN SOLENOID CIRCUIT *(Figure 6–18)*

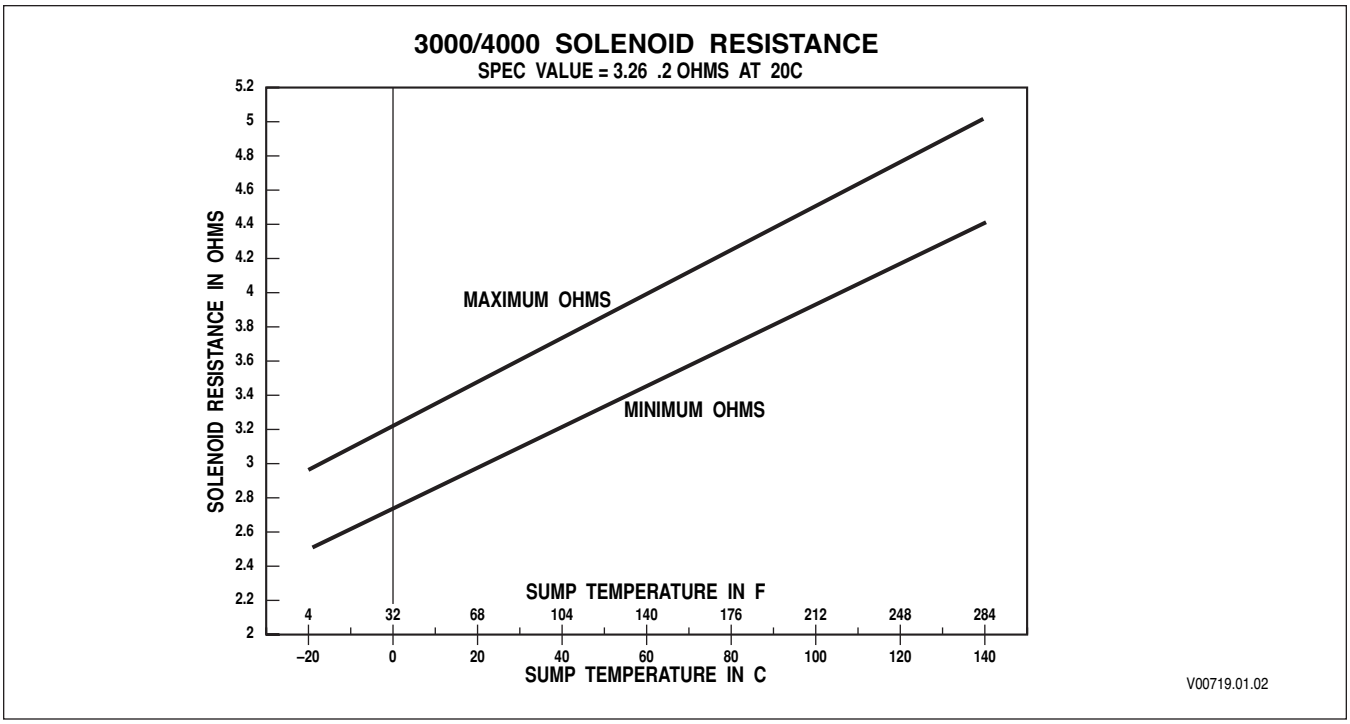

Figure 6–19. Solenoid Resistance vs. Temperature

B. Troubleshooting:

1. Inspect the transmission connector and make sure it is tightly connected. If the connector is properly connected, disconnect the harness at the feedthrough harness connector and inspect the terminals in the transmission harness and feedthrough harness connectors. Clean or replace as necessary (Appendix E).

2. If the connector is connected, clean, and not damaged, test the solenoid circuit in the transmission for opens. Refer to the system schematic and/or chart to identify wires in the internal harness which are connected. If the open circuit is found, drain the fluid, remove the control module (refer to the appropriate transmission service manual), and isolate the open. The fault will be in the feedthrough harness or the solenoid itself. Refer to Figure 6–1 for solenoid locations.

3. If the open is not found at the transmission connector, disconnect the transmission harness connector at the ECU and inspect the terminals in the connector and the ECU for damage or contamination. Clean or replace as necessary. If the terminals are satisfactory, test the wires of the solenoid circuit in the transmission harness for continuity. If the open is found in one of the wires, isolate and repair it. If this is not feasible, use a spare wire, if available, or provide a new wire (St. Clair P/N 200153 may be used for this purpose). Refer to Appendix E for information on connector/wire repair.

4. If multiple code 45s occur (45 12, 45 13, 45 14, 45 15, 45 16, 45 22, and 45 24), and wiring and solenoids test okay, the A-Hi driver is probably failed open.

 Copyright © 2005 General Motors Corp.

https://truckmanualshub.com/

CODE 45 XX—OPEN CONDITION IN SOLENOID CIRCUIT *(Figure 6–18)*

CAUTION:	Using an unmatched ECU/CIN combination may result in additional codes being set or in transmission clutch damage. Using an ECU from another vehicle is not a recommended procedure where the test will involve driving the vehicle. This is because the stored adaptive information is tuned to the original vehicle's transmission and those adaptive settings may not perform as expected in another vehicle. Transmission performance could be worse and damage to the clutches may occur.

NOTE: ***If using an ECU from another vehicle is unavoidable, the ECU must be set to unadapted shifts and the vehicle must be driven carefully to adapt the shifts to the test vehicle. Refer to Service Information Letter 16-WT-96 for the correct procedure. Be sure to reset the ECU to unadapted shifts when it is returned to the original vehicle.***

5. If the condition persists, replace the ECU with a test diagnostic ECU (P/N must match and it is recommended that the controller be loaded with the latest version of the CIN). If replacing the ECU corrects the problem, reinstall the original (bad) ECU to confirm that the problem is in the ECU. If the original ECU now works, inspect the ECU connectors for corrosion or damage which may cause an intermittent condition. If the original problem recurs, install a replacement ECU.

6. If code 45 21 occurs repeatedly and the F solenoid and wiring test okay, the F-Hi or F-Lo driver may be failed open. Follow Step (5) above.

7. If codes 45 23 and 45 26 occur repeatedly and solenoids and wiring test okay, the H and N-Hi driver may be failed open. Follow Step (5) above.

8. If the open is not found in either the transmission or the harness or the ECU drivers, the condition must be intermittent.

9. Drain the fluid, remove the control module, and closely inspect the solenoid and internal harness for damage. Repair or replace as necessary. Refer to the transmission Service Manual.

10. If the condition recurs, use a spare wire, if available, or provide a new wire (St. Clair P/N 200153 may be used for this purpose) for the solenoid circuit indicated by the diagnostic code. See Appendix E for information on connector assembly/disassembly.

CAUTION:	Using an unmatched ECU/CIN combination may result in additional codes being set or in transmission clutch damage. Using an ECU from another vehicle is not a recommended procedure where the test will involve driving the vehicle. This is because the stored adaptive information is tuned to the original vehicle's transmission and those adaptive settings may not perform as expected in another vehicle. Transmission performance could be worse and damage to the clutches may occur.

NOTE: ***If using an ECU from another vehicle is unavoidable, the ECU must be set to unadapted shifts and the vehicle must be driven carefully to adapt the shifts to the test vehicle. Refer to Service Information Letter 16-WT-96 for the correct procedure. Be sure to reset the ECU to unadapted shifts when it is returned to the original vehicle.***

11. If the condition persists, replace the ECU with a test diagnostic ECU (P/N must match and it is recommended that the controller be loaded with the latest version of the CIN). If replacing the ECU corrects the problem, reinstall the original (bad) ECU to confirm that the problem is in the ECU. If the original ECU now works, inspect the ECU connectors for corrosion or damage which may cause an intermittent condition. If the original problem recurs, install a replacement ECU.

Copyright © 2005 General Motors Corp.

https://truckmanualshub.com/

CODE 46 XX—OVERCURRENT TO SOLENOIDS

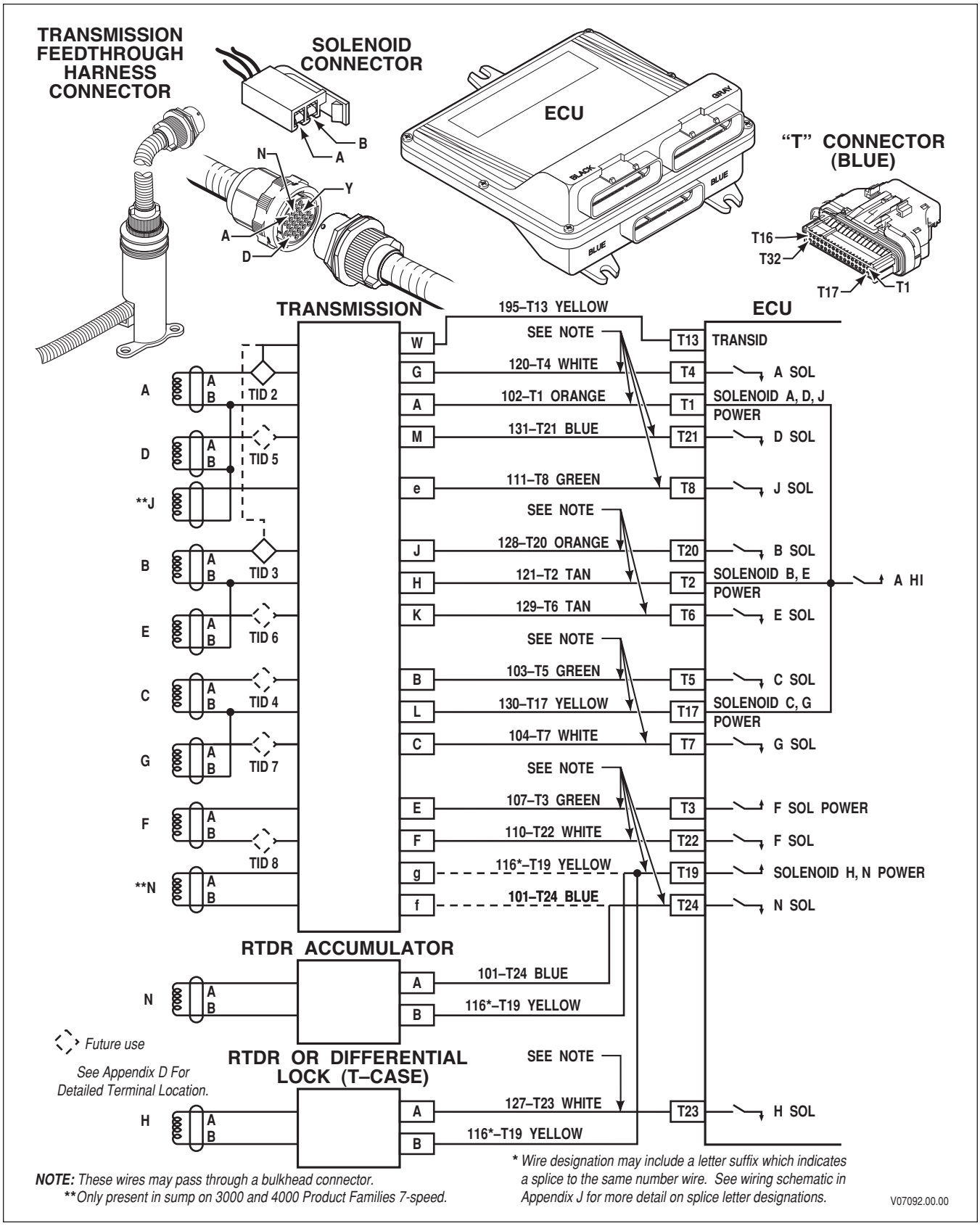

Figure 6–20. Code 46 Schematic Drawing

Copyright © 2005 General Motors Corp.

https://truckmanualshub.com/

CODE 46 XX—OVERCURRENT TO SOLENOIDS *(Figure 6–20)*

Main code 46 indicates that an overcurrent condition exists in one of the switches sending power to the transmission control solenoids.

Main Code	Subcode	Meaning
46	21	Overcurrent, F-High solenoid circuit
46	26	Overcurrent, N and H-High solenoid circuit
46	27	Overcurrent, A-High solenoid circuit

A. Active Indicator Clearing Procedure:

- Power down
- Manual

B. Troubleshooting:

1. Probable cause is a wiring problem. A solenoid wire is probably shorted to ground or the solenoid has a shorted coil which would cause an overcurrent condition. May also be an ECU problem.

NOTE: Code 46 XX may be caused by a short-to-ground of wire 195 (TransID).

2. Follow the troubleshooting steps for code 44 XX.

Copyright © 2005 General Motors Corp.

https://truckmanualshub.com/

CODE 51 XX—OFFGOING RATIO TEST DURING SHIFT (TIE-UP TEST)

Main code 51 indicates a failed offgoing ratio test. An offgoing ratio test occurs during a shift and uses turbine and output speed sensor readings to calculate the ratio between them. The calculated speed sensor ratio is then compared to the programmed speed sensor ratio of the commanded range. After a shift is commanded, the ECU, after a period of time, expects the old ratio to be gone. If the ratio does not change properly, the ECU assumes the offgoing clutch did not release. The shift is retried if conditions still exist to schedule the shift. If the second shift is not successfully completed, code 51 XX is set and the ECU returns the transmission to the previous range. Additional codes could be logged for other shifts where "X" indicates the range from and "Y" indicates the range to.

NOTE: This test is not performed below a calibrated transmission output speed of 200 rpm.

Main Code	Subcode	Meaning
51	01	Low–1 upshift
51	10	1–Low downshift
51	12	1–2 upshift
51	21	2–1 downshift
51	23	2–3 upshift
51	24	2–4 upshift
51	35	3–5 upshift
51	42	4–2 downshift
51	43	4–3 downshift
51	45	4–5 upshift
51	46	4–6 upshift
51	53	5–3 downshift
51	64	6–4 downshift
51	65	6–5 downshift
51	XY	X–Y upshift or downshift

A. Active Indicator Clearing Procedure:

- Power down
- Manual—subcodes 01, 10, 12, 21, 23, 24, 46, 64, and 65

NOTE: Before troubleshooting, read Paragraph 6–6. Also, test battery and ECU input voltages.

NOTE: Intermittent connections or lack of battery-direct power and ground connections may cause this and other codes.

B. Troubleshooting:

NOTE: When a shift completes before the offgoing ratio test completes, an incorrect code 53 12 may be set instead of 51 12. This should be corrected in software versions 9B and later.

1. Incorrect fluid level can cause 51 series codes. Allow the vehicle to idle for 3–4 minutes and inspect the transmission fluid level. If level is not correct, add or drain fluid to correct level.

2. If the fluid level is correct, connect a pressure gauge into the pressure tap for the offgoing clutch indicated by the code (refer to solenoid and clutch chart, Appendix C). Make the shift indicated by the subcode or use the Allison DOC™ For PC–Service Tool clutch test mode to put the

 Copyright © 2005 General Motors Corp.

https://truckmanualshub.com/

CODE 51 XX—OFFGOING RATIO TEST DURING SHIFT (TIE-UP TEST)

transmission in the off-going and oncoming ranges. Refer to Appendix B for clutch pressure test information.

3. If the offgoing clutch stays pressurized, drain the fluid, remove the control module, disassemble the control module and clean it, inspecting for damaged valve body gaskets and stuck or sticky valves. Inspect the transmission for signs of clutch damage indicating the need to remove and overhaul the transmission. Refer to the appropriate transmission service manual.
4. If the problem has not been isolated, replace the solenoid for the offgoing clutch. Refer to the appropriate transmission service manual.

CAUTION:	Using an unmatched ECU/CIN combination may result in additional codes being set or in transmission clutch damage. Using an ECU from another vehicle is not a recommended procedure where the test will involve driving the vehicle. This is because the stored adaptive information is tuned to the original vehicle's transmission and those adaptive settings may not perform as expected in another vehicle. Transmission performance could be worse and damage to the clutches may occur.

NOTE: ***If using an ECU from another vehicle is unavoidable, the ECU must be set to unadapted shifts and the vehicle must be driven carefully to adapt the shifts to the test vehicle. Refer to Service Information Letter 16-WT-96 for the correct procedure. Be sure to reset the ECU to unadapted shifts when it is returned to the original vehicle.***

5. If the condition persists, replace the ECU with a test diagnostic ECU (P/N must match and it is recommended that the controller be loaded with the latest version of the CIN). If replacing the ECU corrects the problem, reinstall the original (bad) ECU to confirm that the problem is in the ECU. If the original ECU now works, inspect the ECU connectors for corrosion or damage which may cause an intermittent condition. If the original problem recurs, install a replacement ECU.

Copyright © 2005 General Motors Corp.

https://truckmanualshub.com/

CODE 52 XX—OFFGOING C3 PRESSURE SWITCH TEST DURING SHIFT

Main code 52 indicates a failed C3 pressure switch test. When a shift is commanded and C3 is the offgoing clutch, the ECU expects the C3 pressure switch to open within a period of time after the shift is commanded. If the ECU does not see the switch open, it assumes C3 has not released. If conditions for a shift exist, the shift is retried. If the C3 pressure switch still remains closed, the code is logged and the **DO NOT SHIFT** response is commanded. If the code is set during a direction change, neutral with no clutches is commanded, otherwise the transmission is commanded to the previous range. Additional codes could be logged for other shifts where "X" indicates the range from and "Y" indicates the range to.

NOTE: C3 tests are turned off below a calibrated temperature of –32ºC (–25˚F).

Main Code	Subcode	Meaning
52	01	L–1 upshift
52	08	L–N1 shift
52	32	3–2 downshift
52	34	3–4 upshift
52	54	5–4 downshift
52	56	5–6 upshift
52	71	R–1 shift
52	72	R–2 shift
52	78	R–N1 shift
52	99	N3–N2 shift
52	XY	X–Y shift

A. Active Indicator Clearing Procedure:

- Power down
- Manual

NOTE: Before troubleshooting, read Paragraph 6–6. Also, test battery and ECU input voltages.

NOTE: Intermittent connections or lack of battery-direct power and ground connections may cause this and other codes.

B. Troubleshooting:

1. Use the Allison DOC™ For PC–Service Tool to check the state of the C3 pressure switch.
2. Test the C3 pressure switch wiring for a short-to-ground or a switch stuck closed (refer to code 32 XX). If a short is found, isolate and repair; or replace the switch if it is stuck closed.
3. If a fault is not found with the C3 pressure switch or circuitry, connect a pressure gauge to the C3 pressure tap.
4. Drive the vehicle to make the shift indicated by the subcode or use the Allison DOC™ For PC–Service Tool clutch test mode. Compare actual C3 pressure value with the table of specifications in Appendix B.

 Copyright © 2005 General Motors Corp.

https://truckmanualshub.com/

CODE 52 XX—OFFGOING C3 PRESSURE SWITCH TEST DURING SHIFT

5. If C3 is being held on hydraulically (C3 remains pressurized), drain the fluid, remove the control module, disassemble and clean the control module, checking for damaged valve body gaskets or stuck and sticky valves. See the appropriate transmission service manual.
6. If the problem recurs, use a spare wire, if available, or provide a new wire (St. Clair P/N 200153 may be used for this purpose) for the C3 pressure switch in the external harness. Refer to Appendix E for connector service information.
7. If the problem again recurs, replace the C solenoid. Refer to the appropriate transmission service manual.

CAUTION:	Using an unmatched ECU/CIN combination may result in additional codes being set or in transmission clutch damage. Using an ECU from another vehicle is not a recommended procedure where the test will involve driving the vehicle. This is because the stored adaptive information is tuned to the original vehicle's transmission and those adaptive settings may not perform as expected in another vehicle. Transmission performance could be worse and damage to the clutches may occur.

NOTE: ***If using an ECU from another vehicle is unavoidable, the ECU must be set to unadapted shifts and the vehicle must be driven carefully to adapt the shifts to the test vehicle. Refer to Service Information Letter 16-WT-96 for the correct procedure. Be sure to reset the ECU to unadapted shifts when it is returned to the original vehicle.***

8. If the condition persists, replace the ECU with a test diagnostic ECU (P/N must match and it is recommended that the controller be loaded with the latest version of the CIN). If replacing the ECU corrects the problem, reinstall the original (bad) ECU to confirm that the problem is in the ECU. If the original ECU now works, inspect the ECU connectors for corrosion or damage which may cause an intermittent condition. If the original problem recurs, install a replacement ECU.

Copyright © 2005 General Motors Corp.

https://truckmanualshub.com/

CODE 53 XX—OFFGOING SPEED TEST (DURING SHIFT)

Main code 53 indicates a failed offgoing speed test. The speed test during a shift is designed to ensure neutral is attained during shifts to neutral. This test compares engine speed to turbine speed. If neutral is selected and turbine speed is found to be much lower than engine speed, the ECU sees this as neutral not being attained. The transmission is commanded to Neutral with No Clutches and code 53 XX is set. Additional codes could be logged for other shifts where "X" indicates the range from and "Y" indicates the range to.

NOTE: ***This test is not performed if neutral output is below 200 rpm or when temperatures are below a calibrated 0˚C (32˚F).***

Main Code	Subcode	Meaning
53	08	L–N1 shift
53	09	L–NNC shift
53	18	1–N1 shift
53	19	1–RELS shift
53	28	2–N1 shift
53	29	2–N2 shift
53	38	3–N1 shift
53	39	3–N3 shift
53	48	4–N1 shift
53	49	4–N3 shift
53	58	5–N1 shift
53	59	5–N3 shift
53	68	6–N1 shift
53	69	6–N4 shift
53	78	R–N1 shift
53	99	N3–N2 or N2–N3 shift
53	XY	X–Y shift

A. Active Indicator Clearing Procedure:

- Power down
- Manual—subcodes 19, 78, and 99 only

NOTE: ***Before troubleshooting, read Paragraph 6–6. Also, test battery and ECU input voltages.***

NOTE: ***Intermittent connections or lack of battery-direct power and ground connections may cause this and other codes.***

B. Troubleshooting:

NOTE: ***When a shift completes before the offgoing ratio test completes, an incorrect code 53 12 may be set instead of 51 12. This should be corrected in software versions 9B and later.***

1. Be sure the transmission is warm and the fluid level is correct. Correct transmission fluid level as necessary.

 Copyright © 2005 General Motors Corp.

https://truckmanualshub.com/

CODE 53 XX—OFFGOING SPEED TEST (DURING SHIFT)

2. Using Allison DOC™ For PC–Service Tool, test the engine and turbine speed sensor signals under steady conditions. If a tachometer is available, compare the tachometer reading with the engine rpm reading on the diagnostic tool. Test signals in neutral, at idle, high idle, and maximum no load rpm. If a signal is erratic, test sensor wiring for opens, shorts, and shorts-to-ground (refer to code 22 XX). Inspect all connections for dirt and corrosion. If wiring problems are found, repair or replace as necessary. Refer to Appendix E for connector service information.

3. If fluid and wiring are satisfactory, install a pressure gauge in the pressure tap for the offgoing clutch. Make the shift indicated by the subcode using the clutch test mode of the Allison DOC™ For PC–Service Tool. If the pressure gauge shows clutch pressure (above 55 kPa or 8 psi) remains in the offgoing clutch, drain the fluid and remove the control module. Refer to the appropriate transmission service manual. Disassemble and clean the control module and inspect for damaged valve body gaskets and stuck or sticky valves, particularly latch valves and solenoid second-stage valves.

4. If excessive clutch pressure is not remaining in the offgoing clutch, replace the engine speed sensor and the turbine speed sensor. Refer to the appropriate transmission service manual.

5. If the control module is removed to replace the turbine speed sensor (3000 Product Family), clean the control module and inspect for stuck or sticky valves (particularly the latch valves and solenoid G second stage valve). Inspect the rotating clutch drum to which the turbine speed sensor is directed for damage, contamination, or signs of contact between the drum and the sensor.

6. If the problem recurs, replace the solenoid(s) for the offgoing clutch(es). Refer to the appropriate transmission service manual.

7. If the problem again recurs, the offgoing clutch must be held on mechanically (coned, burned, etc.). Remove the transmission and repair or rebuild as necessary. Refer to the appropriate transmission service manual.

CAUTION:	Using an unmatched ECU/CIN combination may result in additional codes being set or in transmission clutch damage. Using an ECU from another vehicle is not a recommended procedure where the test will involve driving the vehicle. This is because the stored adaptive information is tuned to the original vehicle's transmission and those adaptive settings may not perform as expected in another vehicle. Transmission performance could be worse and damage to the clutches may occur.

NOTE: ***If using an ECU from another vehicle is unavoidable, the ECU must be set to unadapted shifts and the vehicle must be driven carefully to adapt the shifts to the test vehicle. Refer to Service Information Letter 16-WT-96 for the correct procedure. Be sure to reset the ECU to unadapted shifts when it is returned to the original vehicle.***

8. If the condition persists, replace the ECU with a test diagnostic ECU (P/N must match and it is recommended that the controller be loaded with the latest version of the CIN). If replacing the ECU corrects the problem, reinstall the original (bad) ECU to confirm that the problem is in the ECU. If the original ECU now works, inspect the ECU connectors for corrosion or damage which may cause an intermittent condition. If the original problem recurs, install a replacement ECU.

Copyright © 2005 General Motors Corp.

https://truckmanualshub.com/

CODE 54 XX—ONCOMING SPEED TEST (AFTER SHIFT)

Main code 54 indicates a failed oncoming ratio test. The ratio test after a shift is failed when the ECU has commanded the end of a shift and has not seen the transmission shift into the target range (comparing turbine and output speeds). Erratic readings from speed sensors are a likely cause of an oncoming ratio test failure. If conditions for a shift still exist, the shift will be retried one more time. If the ratio test is still not met, a code is logged and the **DO NOT SHIFT** response is commanded. If the code is set during a direction change, Neutral with No Clutches is commanded, otherwise the transmission is commanded to the previous range. **Code 54 12 can also be caused by the ECU being calibrated for a close ratio transmission and installed with a wide ratio transmission, or vice versa.** Additional codes could be logged for other shifts where "X" indicates the range from and "Y" indicates the range to.

NOTE: ***This test is not performed below a calibrated transmission output speed of 200 rpm.***

Main Code	Subcode	Meaning
54	01	L–1 upshift
54	07	L–R shift
54	10	1–L downshift
54	12	1–2 upshift—may be incorrect calibration (wide ratio vs. close ratio or 3000 Product Family vs. 4000 Product Family)
54	17	1–R shift
54	21	2–1 downshift
54	23	2–3 upshift
54	24	2–4 upshift
54	27	2–R shift
54	32	3–2 downshift
54	34	3–4 upshift
54	35	3–5 upshift
54	42	4–2 downshift
54	43	4–3 downshift
54	45	4–5 upshift
54	46	4–6 downshift
54	53	5–3 downshift
54	54	5–4 downshift
54	56	5–6 upshift
54	64	6–4 downshift
54	65	6–5 downshift
54	70	R–L shift
54	71	R–1 shift
54	72	R–2 shift
54	80	N1–L shift
54	81	N1–1 shift
54	82	N1–2 shift
54	83	N1–3 shift
54	85	N1–5 shift
54	86	N1–6 shift
54	87	N1–R shift—associated with loose output speed tone wheel on 3000 Product Family transmissions
54	92	N2–2 shift
54	93	N3–3 shift
54	95	N3–5 shift
54	96	N4–6 shift
54	XY	X to Y shift

Copyright © 2005 General Motors Corp.

https://truckmanualshub.com/

CODE 54 XX—ONCOMING SPEED TEST (AFTER SHIFT)

A. Active Indicator Clearing Procedure:

- Power down
- Manual

NOTE: ***Before troubleshooting, read Paragraph 6–6. Also, test battery and ECU input voltages.***

NOTE: ***Intermittent connections or lack of battery-direct power and ground connections may cause this and other codes.***

B. Troubleshooting:

1. After the transmission is at operating temperature, allow the vehicle to idle on level ground for 3–4 minutes. Measure transmission fluid level. If improper fluid level is found, correct as necessary. Improper fluid level could be the cause of the code (not enough or too much fluid may produce inadequate clutch pressure).

2. Connect a pressure gauge and check main pressure. If pressure is not adequate, the pump is possibly worn. Refer to Appendix B for main pressure specifications.

3. If the fluid level is correct, check the turbine and output speed sensors for accurate, steady signals using the diagnostic tool (test with vehicle stopped and in range to confirm a zero speed reading from the turbine and output speed sensors). Test the wiring for opens and shorts (refer to code 22 XX) and the sensor coils for proper resistance. If problems are found, repair or replace as necessary. Remove speed sensor and check for a loose tone wheel or irregular tooth spaces on the tone wheel.

4. If sensor and wiring resistance are acceptable, connect a pressure gauge(s) to the pressure tap for the oncoming clutches indicated by the subcode. Refer to solenoid and clutch chart in Appendix C. Make the shift indicated by the code by operating the vehicle or by using the diagnostic tool's clutch test mode.

5. If the clutch pressure does not show on the gauge(s), the control module is probably not commanding the clutch on. Drain the fluid and remove the control module. Refer to the appropriate transmission service manual. Disassemble and clean the control module and inspect for stuck or sticking valves.

6. Internal leakage is indicated by the clutch pressure gauge showing that pressure is being sent to the clutch but the clutch fails to hold. The fault may be: missing or damaged face seals, burnt clutch, leaking piston sealrings, or damaged control module gaskets. Drain the fluid and remove the control module. Refer to the appropriate transmission service manual. Inspect the face seals and control module gaskets. If the seals and gaskets are satisfactory, replace the solenoid(s) indicated by the code. If replacing the solenoid does not eliminate the code, remove the transmission and repair as necessary.

7. If clutch pressures are correct and the clutch appears to be holding, replace the output and turbine speed sensors. Refer to the appropriate transmission service manual for the proper procedure.

8. If the problem recurs, use the diagnostic tool to check the speed sensor signals for erratic readings. Possible causes of erratic speed readings are: loose sensors, intermittent contact in the wiring, vehicle-induced vibrations, or speed sensor wiring that is not a properly twisted-pair. If necessary,

Copyright © 2005 General Motors Corp.

https://truckmanualshub.com/

CODE 54 XX—ONCOMING SPEED TEST (AFTER SHIFT)

use a twisted-pair for a new speed sensor circuit—Service Harness Twisted Pair P/N 200153 is available from St. Clair Technologies for this purpose.

CAUTION:	Using an unmatched ECU/CIN combination may result in additional codes being set or in transmission clutch damage. Using an ECU from another vehicle is not a recommended procedure where the test will involve driving the vehicle. This is because the stored adaptive information is tuned to the original vehicle's transmission and those adaptive settings may not perform as expected in another vehicle. Transmission performance could be worse and damage to the clutches may occur.

NOTE: ***If using an ECU from another vehicle is unavoidable, the ECU must be set to unadapted shifts and the vehicle must be driven carefully to adapt the shifts to the test vehicle. Refer to Service Information Letter 16-WT-96 for the correct procedure. Be sure to reset the ECU to unadapted shifts when it is returned to the original vehicle.***

9. If the condition persists, replace the ECU with a test diagnostic ECU (P/N must match and it is recommended that the controller be loaded with the latest version of the CIN). If replacing the ECU corrects the problem, reinstall the original (bad) ECU to confirm that the problem is in the ECU. If the original ECU now works, inspect the ECU connectors for corrosion or damage which may cause an intermittent condition. If the original problem recurs, install a replacement ECU.

Copyright © 2005 General Motors Corp.

https://truckmanualshub.com/

CODE 55 XX—ONCOMING C3 PRESSURE SWITCH (AFTER SHIFT)

Main code 55 indicates the C3 clutch is the oncoming clutch in a shift and the C3 pressure switch did not close at the end of the shift. When this code is set, the **DO NOT SHIFT** response and **Neutral with No Clutches** is commanded. On the N1 to R shift the transmission is commanded to the previous range. Additional codes could be logged for other shifts where "X" indicates the range from and "Y" indicates the range to.

NOTE: ***When an ECU with a version 8, 8A, 9, or 9A calibration is used with a pre-TransID transmission, 55 XX codes are set because the ECU sees wire 195 is open. To correct this condition, convert to a TID 1 internal harness or install Adapter P/N 200100 available from St. Clair Technologies.***

Further TransID (TID) information is in Paragraph 1–11.

Main Code	Subcode	Meaning
55	07*	Oncoming C3PS (after shift), L–R shift
55	17*	Oncoming C3PS (after shift), 1–R shift
55	27*	Oncoming C3PS (after shift), 2–R shift
55	87	Oncoming C3PS (after shift), N1–R shift
55	97	Oncoming C3PS (after shift), N1–L to R shift
55	XY	Oncoming C3PS (after shift), X to Y shift

****NOTE:*** ***When sump temperature is below 10˚C (50˚F), and transmission fluid is C-4 (not DEXRON®), follow this procedure when making directional change shifts:***

- ***To shift from forward to reverse; select N (Neutral) and then R (Reverse).***
- ***Failure to follow this procedure may cause illumination of the CHECK TRANS light and then transmission operation will be restricted to N (Neutral).***

A. Active Indicator Clearing Procedure:

- Power down
- Manual—subcode 87 only

NOTE: ***Intermittent connections or lack of battery-direct power and ground connections may cause this and other codes.***

NOTE: ***Test battery and ECU input voltages before troubleshooting.***

B. Troubleshooting:

NOTE: ***Do not bring the transmission to operating temperature if the problem occurs at sump temperatures below that level. Do troubleshooting at the temperature level where the problem occurs.***

1. After the transmission is at operating temperature, allow vehicle engine to idle on level ground for 3–4 minutes. Check transmission fluid level. If improper fluid level is found, correct as necessary. Improper fluid level could be the cause of the code (not enough or too much fluid may produce inadequate clutch pressure).
2. Connect a pressure gauge and check main pressure. If pressure is not adequate, the pump is possibly worn. Refer to Appendix B for main pressure specifications.

Copyright © 2005 General Motors Corp.

https://truckmanualshub.com/

CODE 55 XX—ONCOMING C3 PRESSURE SWITCH (AFTER SHIFT)

3. If fluid level and main pressure are adequate, connect a pressure gauge to the C3 pressure tap on the transmission and make the shift indicated by operating the vehicle using the Allison DOC™ For PC–Service Tool's CLUTCH TEST MODE.

NOTE: ***When using the CLUTCH TEST MODE on the Allison DOC™ For PC–Service Tool, be sure to use the correct pressure specification. If testing is done with the vehicle stopped, the lockup clutch is not applied, so use the clutch pressure specification for converter operation (see Appendix B; pressure in 3C would be the same as in 2C). If testing is done with the vehicle moving, the lockup clutch may be applied depending upon the vehicle speed and throttle position. Be sure to use the clutch pressure specification for lockup operation (Appendix B).***

4. If, when making the shift and producing the code, the C3 clutch does not show any pressure, drain the fluid and remove the control module (refer to the appropriate transmission service manual). Disassemble, clean, and inspect the control module for stuck or sticky valves (particularly the C solenoid second stage valve and C-1 latch valve). If no obvious problems are found, replace the C solenoid and reassemble (see Figure 6–1 for location of the C solenoid).

5. If the gauge shows inadequate pressure being sent to the clutch, the clutch is probably worn, has leaking piston or face seals, or the control module gaskets are damaged. See Appendix B for clutch pressure specification. Drain the fluid, remove the control module and inspect the face seals and valve body gaskets. If the face seals or control module gaskets are not damaged, remove and repair the transmission. Refer to the appropriate transmission service manual for repair procedure.

6. If the gauge shows adequate clutch apply pressure, the problem is with the C3 pressure switch or its wires. Check the C3 pressure switch wires in the transmission harness for opens, shorts, or shorts-to-ground (see code 32 XX). If found, isolate and repair the C3 pressure switch circuit. Refer to Appendix E for connector service information.

NOTE: ***A leakage problem may be temperature related. Be sure to check pressures at the sump temperature where the problem occurred.***

7. If the problem is not in the transmission harness, drain the fluid and remove the control module. Test the feedthrough harness assembly for opens. If wiring problems are found, repair as necessary (refer to Appendix E). If no wiring problems are found, replace the C3 pressure switch (see Figure 6–1 for the location). Refer to the appropriate transmission service manual for proper procedure.

CAUTION:	Using an unmatched ECU/CIN combination may result in additional codes being set or in transmission clutch damage. Using an ECU from another vehicle is not a recommended procedure where the test will involve driving the vehicle. This is because the stored adaptive information is tuned to the original vehicle's transmission and those adaptive settings may not perform as expected in another vehicle. Transmission performance could be worse and damage to the clutches may occur.

NOTE: ***If using an ECU from another vehicle is unavoidable, the ECU must be set to unadapted shifts and the vehicle must be driven carefully to adapt the shifts to the test vehicle. Refer to Service Information Letter 16-WT-96 for the correct procedure. Be sure to reset the ECU to unadapted shifts when it is returned to the original vehicle.***

8. If the condition persists, replace the ECU with a test diagnostic ECU (P/N must match and it is recommended that the controller be loaded with the latest version of the CIN). If replacing the ECU corrects the problem, reinstall the original (bad) ECU to confirm that the problem is in the ECU. If the original ECU now works, inspect the ECU connectors for corrosion or damage which may cause an intermittent condition. If the original problem recurs, install a replacement ECU.

 Copyright © 2005 General Motors Corp.

https://truckmanualshub.com/

CODE 56 XX—RANGE VERIFICATION RATIO TEST (BETWEEN SHIFTS)

Main code 56 indicates a failed range verification speed sensor ratio test. The ratio test occurs after a shift and determines if a clutch has lost torque carrying capability. If output speed is above programmed output speed for a range but the correct speed sensor ratio is not present, the **DO NOT SHIFT** response is commanded and a range which can carry the torque without damage is commanded or attempted. Turbine and output speed sensor readings are used to calculate the actual ratio that is compared to the commanded ratio. **Main code 56 can also be caused by the ECU being calibrated for a close ratio transmission and installed with a wide ratio transmission, or vice versa.**

Main Code	Subcode	Meaning
56	00	Range verification ratio test (between shifts) L
56	11	Range verification ratio test (between shifts) 1
56	22	Range verification ratio test (between shifts) 2
56	33	Range verification ratio test (between shifts) 3
56	44	Range verification ratio test (between shifts) 4
56	55	Range verification ratio test (between shifts) 5
56	66	Range verification ratio test (between shifts) 6
56	77	Range verification ratio test (between shifts) R

A. Active Indicator Clearing Procedure:

- Power down
- Manual—subcodes 11, 44, 66, and 77 only

NOTE: ***When a code 22 16 (output speed fault) is also present, follow the troubleshooting sequence for code 22 16 first. After completing the 22 16 sequence, drive the vehicle to see if a code 56 XX recurs.***

NOTE: ***Before troubleshooting, read Paragraph 6–6. Also, test battery and ECU input voltages.***

NOTE: ***Intermittent connections or lack of battery-direct power and ground connections may cause this and other codes.***

B. Troubleshooting:

1. After the transmission is at operating temperature, allow vehicle engine to idle on level ground for 3–4 minutes. Check the transmission fluid level. If improper fluid level is found, correct as necessary. Improper fluid level could be the cause of the code. Not enough or too much fluid may produce inadequate clutch pressure.

2. Connect a pressure gauge and check main pressure. If the pressure is not adequate, the pump is probably worn. Refer to Appendix B for main pressure specifications.

3. If main pressure is adequate, test clutch pressure for the range indicated by following the procedure in Appendix B. The transmission range indicated by the trouble code can be found by referring to the solenoid and clutch chart in Appendix C. Drive the vehicle or use the diagnostic tool's clutch test mode and check clutch pressure.

4. If a clutch is leaking pressure, drain the fluid, remove the control module and check for damaged control module gaskets and stuck or sticking valves. Refer to the appropriate transmission service manual. Also look for damaged or missing face seals. If no problems are found, replace the solenoids for the clutches used in the range indicated by the code.

Copyright © 2005 General Motors Corp.

https://truckmanualshub.com/

CODE 56 XX—RANGE VERIFICATION RATIO TEST (BETWEEN SHIFTS)

5. If replacing solenoids does not correct the pressure problem, a worn clutch or worn piston seals are probably the source of the pressure leak. Remove the transmission and repair or replace as necessary. Refer to the appropriate transmission service manual.
6. This code requires accurate output and turbine speed readings. If there were no transmission problems detected, use the Allison DOC™ For PC–Service Tool and test the speed sensor signals for noise (erratic signals) from low speed to high speed in the range indicated by the code.
7. If a noisy sensor is found, test the resistance of the sensor (refer to the code 22 XX, Table 6–1) and wiring for opens, shorts, and shorts-to-ground (refer to code 22 XX). Carefully inspect the terminals in the connectors for corrosion, contamination, or damage. Be sure the wiring to the sensors is a properly twisted wire pair. Replace a speed sensor if its resistance is incorrect. Isolate and repair any wiring problems. (Use a twisted-pair if a new speed sensor circuit is needed—Service Harness Twisted Pair P/N 200153 is available from St. Clair Technologies for this purpose.)
8. If no apparent cause for the code can be found, replace the turbine and output speed sensors (refer to the appropriate transmission service manual for proper procedure).

CAUTION:	Using an unmatched ECU/CIN combination may result in additional codes being set or in transmission clutch damage. Using an ECU from another vehicle is not a recommended procedure where the test will involve driving the vehicle. This is because the stored adaptive information is tuned to the original vehicle's transmission and those adaptive settings may not perform as expected in another vehicle. Transmission performance could be worse and damage to the clutches may occur.

NOTE: ***If using an ECU from another vehicle is unavoidable, the ECU must be set to unadapted shifts and the vehicle must be driven carefully to adapt the shifts to the test vehicle. Refer to Service Information Letter 16-WT-96 for the correct procedure. Be sure to reset the ECU to unadapted shifts when it is returned to the original vehicle.***

9. If the condition persists, replace the ECU with a test diagnostic ECU (P/N must match and it is recommended that the controller be loaded with the latest version of the CIN). If replacing the ECU corrects the problem, reinstall the original (bad) ECU to confirm that the problem is in the ECU. If the original ECU now works, inspect the ECU connectors for corrosion or damage which may cause an intermittent condition. If the original problem recurs, install a replacement ECU.

Copyright © 2005 General Motors Corp.

https://truckmanualshub.com/

CODE 57 XX—RANGE VERIFICATION C3 PRESSURE TEST (BETWEEN SHIFTS)

Main code 57 indicates failure of the range verification C3 pressure switch test. This test determines if the C3 pressure switch is closed when it should be open. The test occurs when a range is commanded that does not use the C3 clutch (neutral, 1, 2, 4, and 6). The code is set if the C3 pressure switch is closed when it should be open. If C3 clutch comes on when not needed, three clutches are applied and a transmission tie-up occurs. The ECU will command a range which does use the C3 clutch and activate the **DO NOT SHIFT** response.

Main Code	Subcode	Meaning	Replace Solenoid
57	11	Range verification C3 pressure switch while in 1st	B
57	22	Range verification C3 pressure switch while in 2nd	C
57	44	Range verification C3 pressure switch while in 4th	C
57	66	Range verification C3 pressure switch while in 6th	A
57	88	Range verification C3 pressure switch while in N1	C
57	99	Range verification C3 pressure switch while in N2 or N4	C

A. Active Indicator Clearing Procedure:

- Power down
- Manual

NOTE: ***Before troubleshooting, read Paragraph 6–6. Also, test battery and ECU input voltages.***

NOTE: ***Intermittent connections or lack of battery-direct power and ground connections may cause this and other codes.***

B. Troubleshooting:

1. Disconnect the harness from the transmission. Test the C3 pressure switch circuit at the feedthrough harness connector for continuity (refer to code 32 XX).
2. Continuity at the feedthrough harness connector indicates the C3 pressure switch is closed or the C3 circuit is shorted together. Drain the fluid and remove the control module. Refer to the appropriate transmission service manual. Isolate the short. The fault is either a shorted feedthrough harness or stuck C3 pressure switch. Repair or replace as necessary.
3. If there is no continuity at the transmission, disconnect the transmission harness connector from the ECU and test the C3 pressure switch wires in the transmission harness for shorts. Use the system wiring diagram to identify wires which are connected. If a shorted C3 pressure switch circuit in the external harness is found, isolate and repair.
4. If the C3 pressure switch or circuit is not shorted either in the transmission or the external harness, connect a pressure gauge in the C3 pressure tap. Refer to Appendix B for pressure tap location. Drive the vehicle in the range indicated by the code or use the diagnostic tool's clutch test mode to attain that range.
5. If the gauge shows C3 pressure is present in the range indicated by the subcode, drain the fluid and remove the control module. Refer to the appropriate transmission service manual. Inspect for damaged valve body gaskets or stuck or sticking valves. Repair or replace as necessary. If no obvious defects are found, replace the listed solenoid.
6. If the gauge shows C3 pressure is not present in the range indicated by the subcode, drain the fluid and remove the control module. Refer to the appropriate transmission service manual. Replace the C3 pressure switch.
7. If the condition persists, replace the ECU. If replacing the ECU corrects the problem, reinstall the original (bad) ECU to confirm that the problem is in the ECU. If the original ECU now works, inspect the ECU connectors for any corrosion or damage which may cause an intermittent condition. If the original problem reoccurs, reinstall the replacement ECU.

Copyright © 2005 General Motors Corp.

https://truckmanualshub.com/

CODE 61 XX—RETARDER OIL TEMPERATURE HOT

Main code 61 indicates the ECU has detected a hot fluid condition in the output retarder. Table 6–7 shows what actions are taken by the ECU at elevated retarder temperatures.

A. Active Indicator Clearing Procedure:

- Power down
- Manual
- Self-clearing

B. Troubleshooting

Possible causes (but not all causes) for hot fluid are:

1. Prolonged retarder use.
2. TID 2 transmission with ECU prior to Version 8A.
3. Low fluid level.
4. High fluid level.
5. A retarder apply system that allows the throttle and retarder to be applied simultaneously.
6. Cooler inadequately sized for retarder.

If the validity of the hot fluid diagnosis is in question, temperature can be checked by using a temperature gauge at the retarder-out port or by reading retarder temperature with the Allison DOC™ For PC–Service Tool. Another method of checking retarder temperature is to remove the "T" connector at the ECU and measure resistance (Ohms) between terminals T28 and T25. Compare the resistance value to the value in Figure 6–21 to see if the result is within the expected operating range. For TID 2 thermistors, see Appendix Q for resistance versus temperature table.

Table 6–7. Transmission Retarder Operation as a Function of Temperature

Products	Models	Description	Version 8		Version 8A to 9B		Version 9C	
			°C	°F	°C	°F	°C	°F
3000 and 4000	Retarder	Light ON	166	330	169	337	173	343
		Light OFF	159	318	162	323	162	323
		Set Hot Code (61 00)	168	335	173	343	173	343
		Clear Active Indicator	162	323	165	329	165	329
		Retarder capacity reduction begins	NA	NA	151	304	151	304
		Auto Preselect ON (after 12 seconds of retarder apply at retarder temperature shown). Auto Preselect remains on until retarder is deactivated	143	290	143	290	143	290
		Auto Preselect ON (after 12 seconds of retarder apply at engine water temperature shown). Auto Preselect remains on until retarder is deactivated	82–124	180–255	82–124	180–255	82–124	180–255

NOTE: Use Allison DOC™ For PC diagnostic tool to determine the software version being used.

Copyright © 2005 General Motors Corp.

https://truckmanualshub.com/

CODE 61 XX—RETARDER OIL TEMPERATURE HOT

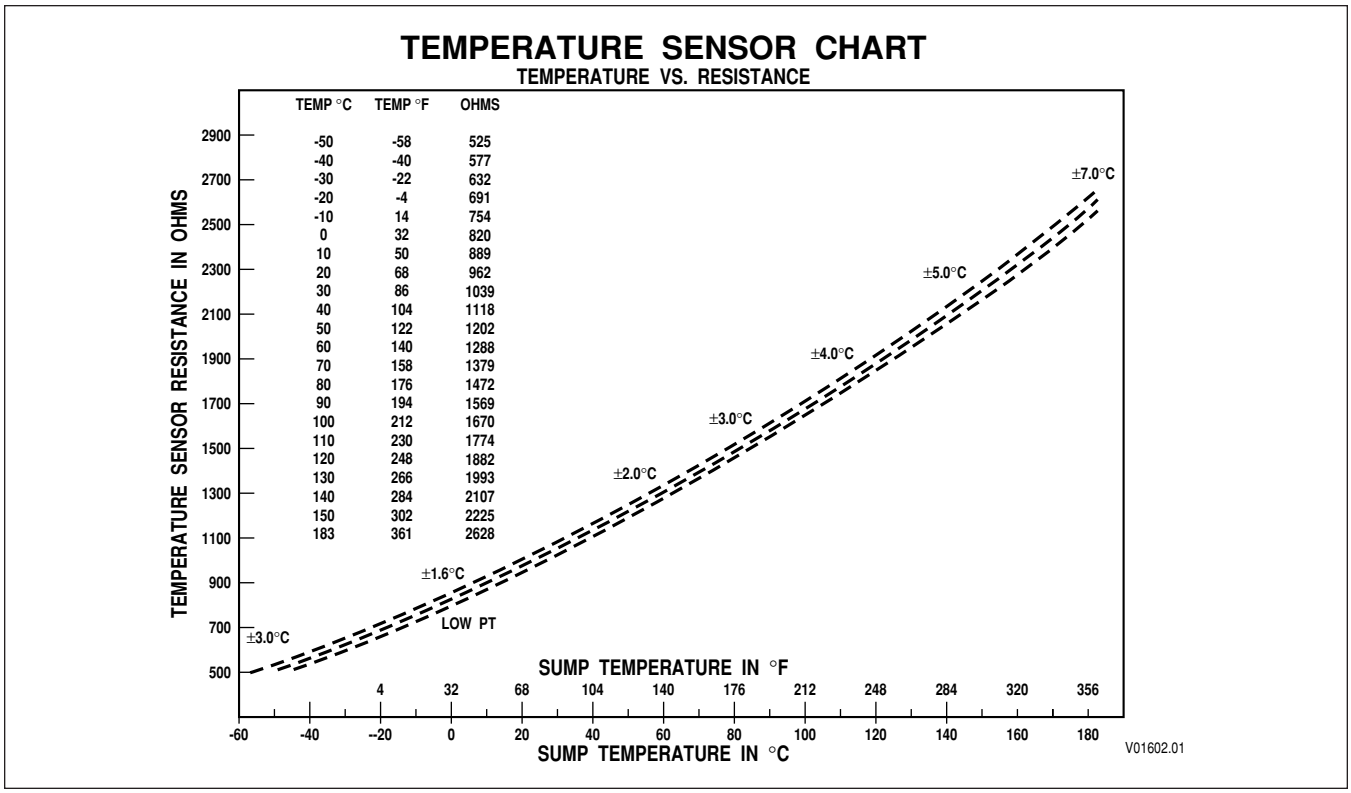

Figure 6–21. Temperature Sensor Chart (Sensors Before TID 2)

The retarder temperature sensor is located externally on the 4000 Product Family transmission retarder housing and under the plate on 3000 Product Family transmission retarder housings for units built prior to January 1, 1998. 3000 Product Family transmissions built after January 1, 1998 have a temperature sensor located externally on the retarder housing. When retarder temperature reaches a preset level, a retarder hot temperature light is illuminated.

Copyright © 2005 General Motors Corp.

https://truckmanualshub.com/

CODE 62 XX—RETARDER TEMPERATURE SENSOR

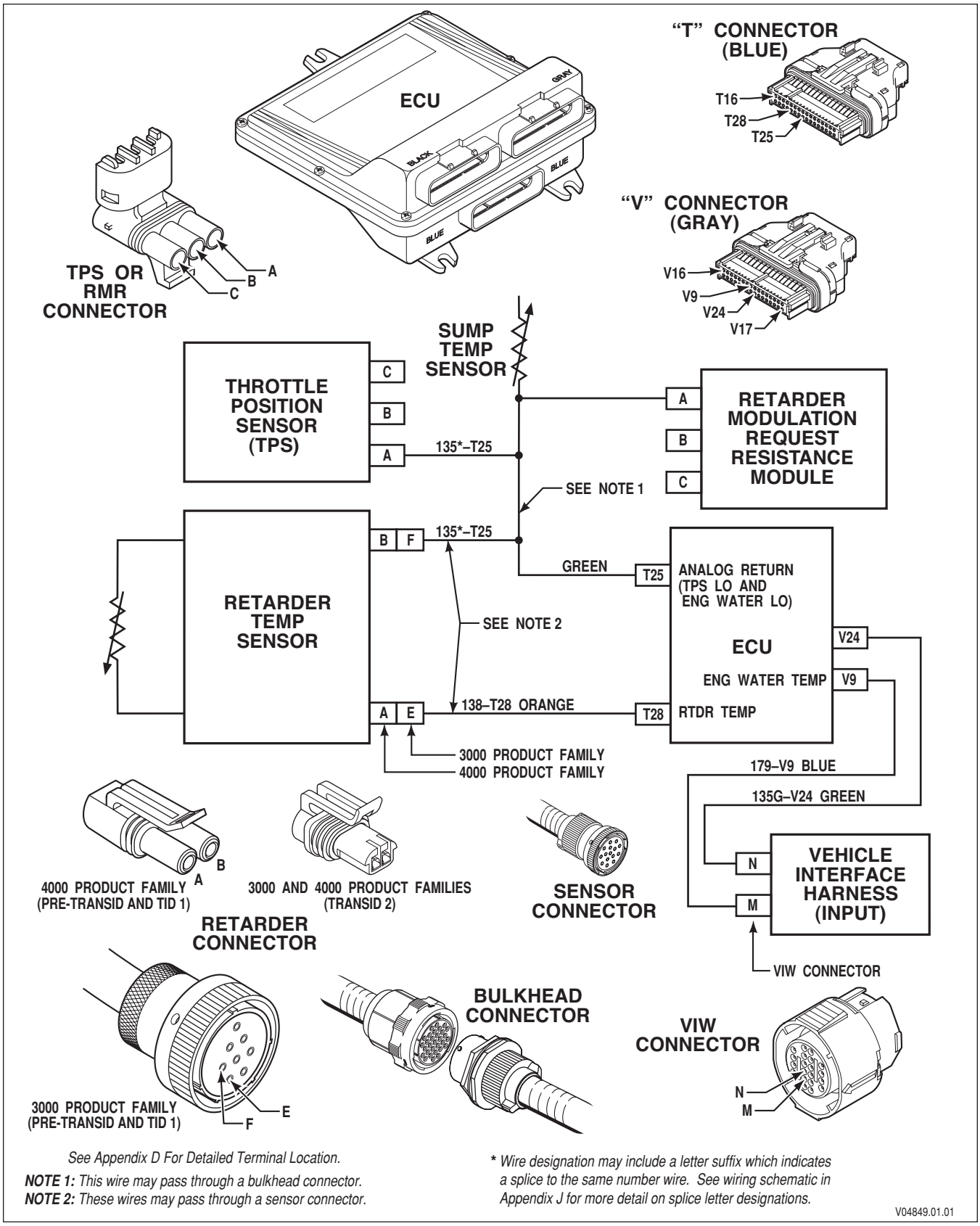

Figure 6–22. Code 62 Schematic Drawing

Copyright © 2005 General Motors Corp.

https://truckmanualshub.com/

CODE 62 XX—RETARDER TEMPERATURE SENSOR *(Figure 6–22)*

NOTE: ***When an ECU with a version 8 (CIN 0A...) calibration is used with a TransID 2 transmission, 62 XX codes are set because the ECU does not have the proper calibrations for the TID 2 thermistors. The ECU calibration must be updated to version 8A (CIN 0B...).***

TransID (TID) information related to thermistor changes is in Paragraph 1–11 and detailed troubleshooting information for TID 2 thermistors is shown in Appendix Q.

Main code 62 indicates the retarder temperature sensor or engine coolant sensor or circuitry is providing a signal outside the usable range of the ECU. Main code 62 can be the result of a hardware failure or an actual extremely high or low temperature condition.

Main Code	Subcode	Meaning
62	12	Retarder temperature sensor failed low (–45˚C; –49˚F)
62	23	Retarder temperature sensor failed high (178˚C; 352˚F)
62	32	Engine coolant sensor failed low
62	33	Engine coolant sensor failed high

A. Active Indicator Clearing Procedure:

- Power down
- Manual
- Self-clearing—subcodes 32 and 33

NOTE: ***Before troubleshooting, read Paragraph 6–6. Also, check the transmission fluid level.***

B. Troubleshooting:

NOTE: ***A combination of codes 62 23, 33 23, and 21 23 indicates a problem with one of the branches of the common ground wire (wire 135) between the throttle and temperature sensors.***

NOTE: ***Code 62 12 can be caused when the +5V power line (wire 124) is shorted to ground or open. Wire 124 also provides power for the OLS, TPS, RMR, sump temperature sensor, and shift selectors and is present in all three ECU connectors.***

1. Test the retarder temperature or engine coolant temperature with the Allison DOC™ For PC–Service Tool. If it is not available, use the shift selector display to determine if the code is active (cycle the ignition on and off at least once since the code was logged to clear the code's active indicator). If a condition that is unreasonable for the current conditions exists, go to Step 3.

2. If Step 1 reveals that the extreme temperature indication is no longer present, the temperature limit could have been reached due to operational or ambient temperature extremes. Proceed cautiously as it is unlikely there is a sensor hardware fault.

3. Remove the connector at the ECU. Measure resistance between harness terminals T25 and T28 or between harness terminals V9 and V24. Compare resistance value to chart (Figure 6–21) to see if reading is within expected operating range.

4. Disconnect the sensor connector and remove the connector at the ECU. Check the sensor and the ECU terminals for dirt, corrosion, and damage. Clean or replace as necessary.

Copyright © 2005 General Motors Corp.

https://truckmanualshub.com/

CODE 62 XX—RETARDER TEMPERATURE SENSOR *(Figure 6–22)*

5. Test the temperature sensor circuit for opens (code 62 23 or 62 33), shorts between wires, and short-to-ground (code 62 12 or 62 32). If a wiring problem is found, isolate and repair. Refer to Appendix E for connector service information.

6. If no wiring problem is found, replace the retarder or engine coolant temperature sensor. Refer to the appropriate transmission or vehicle service manual for proper procedure.

7. If the problem recurs, use a spare wire, if available, or provide a new wire (St. Clair P/N 200153 may be used for this purpose) for the retarder or engine coolant temperature circuit. Refer to Appendix E for connector service information.

CAUTION: Using an unmatched ECU/CIN combination may result in additional codes being set or in transmission clutch damage. Using an ECU from another vehicle is not a recommended procedure where the test will involve driving the vehicle. This is because the stored adaptive information is tuned to the original vehicle's transmission and those adaptive settings may not perform as expected in another vehicle. Transmission performance could be worse and damage to the clutches may occur.

NOTE: ***If using an ECU from another vehicle is unavoidable, the ECU must be set to unadapted shifts and the vehicle must be driven carefully to adapt the shifts to the test vehicle. Refer to Service Information Letter 16-WT-96 for the correct procedure. Be sure to reset the ECU to unadapted shifts when it is returned to the original vehicle.***

8. If the condition persists, replace the ECU with a test diagnostic ECU (P/N must match and it is recommended that the controller be loaded with the latest version of the CIN). If replacing the ECU corrects the problem, reinstall the original (bad) ECU to confirm that the problem is in the ECU. If the original ECU now works, inspect the ECU connectors for corrosion or damage which may cause an intermittent condition. If the original problem recurs, install a replacement ECU.

Copyright © 2005 General Motors Corp.

https://truckmanualshub.com/

CODE 63 XX—INPUT FUNCTION FAULT

Code 63 00 is set when one of the two inputs for an input function Auxiliary Function Range Inhibit (Special) is in a different state (on or off) from the other input for longer than two minutes. When this condition is detected, code 63 00 is set. The transmission will not be inhibited in shifting from neutral to range.

Main Code	Subcode	Meaning
63	00	Auxiliary Function Range Inhibit (Special) inputs states are different
63	26	Kickdown input failed on (software version 8 only)
63	40	Service brake status failed on
63	41	Pump/pack and a neutral general purpose input
63	47	RELS input failed on

Subcode 26 is set when this function (Kickdown) is selected by calibration, the calibration designated input is active for a calibration time, and throttle position is less than the calibration value defined. The kickdown shift schedule is inhibited when subcode 26 is active. The service indicator will be turned on if it is selected by the calibration. The kickdown shift schedule is not inhibited, the code is cleared and the service indicator will be turned off if the kickdown input remains inactive for the calibration time period while throttle position is less than the calibration value. This diagnostic and code has been removed from software version 8A.

Subcode 40 is set when this function (Service Brake Status) is selected by calibration, and the specified input remains active for a calibration number of consecutive acceleration events. The service indicator will be turned on if it is selected by the calibration. A vehicle acceleration event is defined as an increase in transmission output speed from 1 rpm to a calibration value. The operation of the Automatic Neutral For Refuse Packer will be limited when this code is active. The active inhibit for this code is self-cleared and the service indicator will be turned off if the designated input for the Service Brake Status function becomes inactive.

Subcode 41 is set when the states of the calibration inputs are different for a calibration number of consecutive updates. The inputs in this case are Pump/Pack Enable and Automatic Neutral For Refuse Packer. The service display will also be turned ON if selected by calibration.

A. Active Indicator Clearing Procedure:

- Power down
- Manual—subcodes 26, 40, 41, and 47
- Self-clearing—subcodes 26, 40, 41, and 47

B. Troubleshooting:

1. Code 63 00
   a. Use the Allison DOC™ For PC–Service Tool to identify the two input wires programmed with Auxiliary Function Range Inhibit (Special). Inspect the input wiring, connectors, and switches to determine why the input states are different. Correct any problems which are found.
   b. If the condition persists, replace the ECU. If replacing the ECU corrects the problem, reinstall the original (bad) ECU to confirm that the problem is in the ECU. If the original ECU now works, inspect the ECU connectors for any corrosion or damage which may cause an intermittent condition. If the original problem recurs, reinstall the replacement ECU.
2. Code 63 26

   Inspect kickdown switch circuit.

Copyright © 2005 General Motors Corp.

https://truckmanualshub.com/

CODE 63 XX—INPUT FUNCTION FAULT

3. Code 63 40

   Input function ‘E’–Single Input Auxiliary Function Range Inhibit (AFRI)–uses wire 155 as its sole input. Since the introduction of V9C software, Allison Transmission provides J1939 support so that OEMs can eliminate or supplement the hard-wired input if use of a brake switch input is installed. If AFRI has been enabled in calibration but the appropriate inputs are not connected (wire 155) and/or not supported over J1939, the transmission can not be shifted out of neutral.

   If reception is lost or indicates ‘Error’ or ‘Not Available’ when a Cruise Control Vehicle Speed (CCVS) *Brake Switch* is used as a Service Brake Status (SBS) input, the transmission assumes that the brake pedal is released. This results in shifts being continuously inhibited.

   If both wire 155 and CCVS *Brake Switch* are enabled in calibration for use with AFRI, both inputs are continually monitored by the ECU. Shifts from neutral are inhibited until both the hard-wire input is closed and CCVS *Brake Switch* indicates ‘brake pedal depressed’. When an installation includes both hard-wired and datalink sources, the transmission assumes that the service brake is being applied if either or both of the sources indicate so.

   a. Test service brake status switch circuit for:
      - Bus loading
      - Wire integrity failure
      - Electrical noise
      - Improper implementation of function

   NOTE: If the transmission fails to receive CCVS Brake Switch for any reason, transmission operation will continue as if the brakes had not been applied.

   b. The source of input on wire 155 **must be** determined before corrections can be made that caused code 63 40 to be logged.

   c. Either the proper connections **must be** made or the function **must be** turned off.

   NOTE:

   - ***If a device on the J1939 datalink is broadcasting Cruise Control Vehicle Speed (CCVS) Brake Switch, it is monitored as a Service Brake Status (SBS) input even if the vehicle OEM intended for the SBS to only use the traditional hard-wire input.***

   - ***If a J1939 device (such as the engine) broadcasts CCVS Brake Switch with no brake switch input connected, that device may incorrectly and continually broadcast that the brake pedal is being depressed. This will effectively cause the Service Brake Status function to be stuck in an ‘active’ state and fault code 63 40 will be logged by the ECU.***

4. Code 63 41

   Use the Allison DOC™ For PC–Service Tool to identify the two wires associated with the input functions for Pump/Pack Enable and Automatic Neutral For Refuse Packer. Inspect the input wiring, connectors, and switches to determine why the input states are different. Correct problems which are found. There is further information on these input functions on pages P–32, P–33, and P–38 through P–41.

Copyright © 2005 General Motors Corp.

https://truckmanualshub.com/

CODE 63 XX—RETARDER MODULATION REQUEST DEVICE FAULT

5. Code 63 47

   Test the RELS input wire (number 178V28) for short-to-ground that would provide a false signal of RELS operation. Also, check the brake pressure switch which may be stuck in the “ON” (closed) position. This code sets when a calibration number of throttle increases above a calibration percent throttle opening occur when the RELS signal is active.

Copyright © 2005 General Motors Corp.

https://truckmanualshub.com/

CODE 64 XX—RETARDER MODULATION REQUEST DEVICE FAULT *(Figure 6–23)*

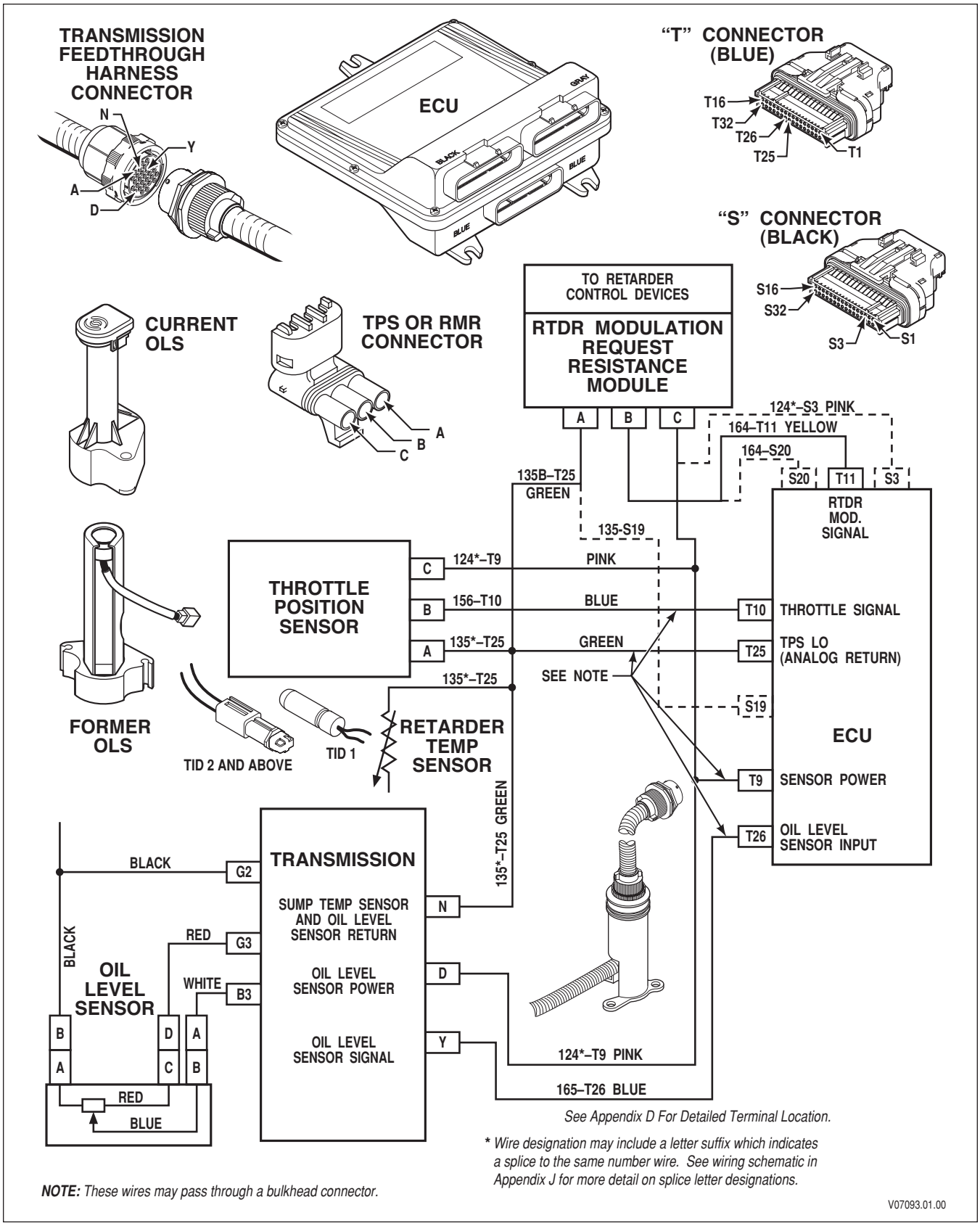

Figure 6–23. Code 64 Schematic Drawing

Copyright © 2005 General Motors Corp.

https://truckmanualshub.com/

CODE 64 XX—RETARDER MODULATION REQUEST DEVICE FAULT *(Figure 6–23)*

Main code 64 indicates the ECU has detected a voltage signal from the retarder modulation request sensor (consisting of a module and a retarder control device) in either the high or low error zone. These codes can be caused by faulty wiring, faulty connections to the resistance module or retarder control device, a faulty resistance module, a faulty retarder control device, or a faulty ECU. Power wire 124 and ground wire 135 for the retarder modulation request sensor are a common power and ground with the TPS and OLS devices. A short-to-ground on the common power wire causes a “sensor failed low” code for the other devices (codes 21 12, and 14 12). An open or a short-to-ground on retarder modulation request sensor signal wire 164 results in a code 64 12 only.

A TPS failure changes the status of the output retarder. The retarder is enabled by the Service Brake Status (wire 137) when a TPS code is active (21 XX). If a code 63 40 is also active, the Service Brake Status (wire 137) is ignored and the retarder will not work. Retarder response problems may not cause retarder modulation request sensor diagnostic codes. If response questions occur, test the retarder control devices for proper voltage signals at each of the percentage of retarder application settings. Table 6–8 contains the voltage measurements for each device’s application percentage and resistances measured across terminals A and C of the retarder request sensor. **Use test wiring harness J 41339 when conducting voltage tests.**

Main Code	Subcode	Meaning
64	12	Retarder Modulation Request sensor failed Low (14 counts and below)
64	23	Retarder Modulation Request sensor failed High (232 counts and above)

A. Active Indicator Clearing Procedure:

- Power down

NOTE: ***Before troubleshooting, read Paragraph 6–6. Also, test battery and ECU input voltages.***

NOTE: ***Intermittent connections or lack of battery-direct power and ground connections can cause this and other electronic control codes.***

B. Troubleshooting:

NOTE: ***Code 64 12 can be caused when the +5V power line (wire 124) is shorted to ground or open. Wire 124 also provides power for the OLS, TPS, sump temperature sensor, retarder temperature sensor, and shift selectors and is present in all three ECU connectors.***

1. Plug in the Allison DOC™ For PC–Service Tool and set to read retarder counts and percent (0 percent will be between 15 and 60 counts and 100 percent will be between 150 and 233 counts). A retarder request sensor failed high code can be caused by a short-to-battery of either signal wire 164 or power wire 124 or an open on ground wire 135. An open in the portion of the ground circuit common to the TPS and OLS devices will also result in a code 21 23 and a high fluid level reading. A retarder request sensor failed low code can be caused by an open or short-to-ground on either signal wire 164 or power wire 124.
2. Isolate and repair any wiring problems found. Refer to Appendix E for connector service information.
3. If no wiring or connector problems are found, test the retarder request sensor voltages for each position on each of the retarder request sensors used on the vehicle. If two resistance modules are used, disconnect one of them when measuring voltage signals from the other. If problems are found, replace the resistance modules or retarder control devices.

CAUTION: Using an unmatched ECU/CIN combination may result in additional codes being set or in transmission clutch damage. Using an ECU from another vehicle is not a recommended procedure where the test will involve driving the vehicle. This is because the stored adaptive information is tuned to the original vehicle's transmission and those adaptive settings may not perform as expected in another vehicle. Transmission performance could be worse and damage to the clutches may occur.

Copyright © 2005 General Motors Corp.

https://truckmanualshub.com/

CODE 64 XX—RETARDER MODULATION REQUEST DEVICE FAULT *(Figure 6–23)*

NOTE: ***If using an ECU from another vehicle is unavoidable, the ECU must be set to unadapted shifts and the vehicle must be driven carefully to adapt the shifts to the test vehicle. Refer to Service Information Letter 16-WT-96 for the correct procedure. Be sure to reset the ECU to unadapted shifts when it is returned to the original vehicle.***

4. If the condition persists, replace the ECU with a test diagnostic ECU (P/N must match and it is recommended that the controller be loaded with the latest version of the CIN). If replacing the ECU corrects the problem, reinstall the original (bad) ECU to confirm that the problem is in the ECU. If the original ECU now works, inspect the ECU connectors for corrosion or damage which may cause an intermittent condition. If the original problem recurs, install a replacement ECU.

Table 6–8. RMR Device Resistance Tests

	Resistance Test in Resistance Module*		Voltage Signal **		Wiring to Control Device
Description	**Terminals**	**Resistance ± 5%**	**% Retarder Application**	**Voltage ± 0.2V**	**Device Terminal**
Auto Full On	A to C	12K	100	3.6	No connections
Pressure Switch					
Full On	A to C	32K	0	1.1	A
High			100	3.6	B
3-Step E-10R Bendix	A to C	32K	0	1.1	A
Pedal			32	1.9	B
			58	2.8	C
			100	3.6	D
6-Step Hand Lever —	A to C	32K			
Off			0	1.1	+
Position 1			14	1.5	1
Position 2			28	1.9	2
Position 3			45	2.3	3
Position 4			65	2.8	4
Position 5			82	3.2	5
Position 6			100	3.6	6
Auto ½ On	A to C	12K	50	2.4	No connections
3 Pressure Switches —	A to C	32K	0	1.1	
Low			32	1.9	A and B
Medium			68	2.8	A and B
High			100	3.6	A and B
Auto ⅓ On	A to C	21.4K			
2 Pressure Switches					
Auto			32	1.9	A
Medium			68	2.8	B
High			100	3.6	A and B
Dedicated Pedal	No Checks	Interface not a resistance module	0	0.7–1.2	A
			100	3.4–3.5	B
					C

* Resistance module must be disconnected from the wiring harness and retarder control devices
** These voltages must be measured between terminals A and B.

 Copyright © 2005 General Motors Corp.

https://truckmanualshub.com/

CODE 65 XX—ENGINE RATING HIGH

Main code 65 indicates the vehicle's engine horsepower/governor speed rating is too high. This code is set only when computer-controlled engines are used. Code 65 means the engine computer is able to tell the transmission that the engine horsepower and/or governor speed is beyond the transmission rating or does not match the transmission shift calibration.

Main Code	Subcode	Meaning
65	11	Engine Not Responding To J1939 LRTP Torque Limits
65	12	Engine Not Responding To J1939 MAX Default Torque

A. Active Indicator Clearing* Procedure:

- Manual
- Self-clearing

B. Troubleshooting

The transmission is not inhibited when code 65 is set. It is possible that the transmission calibration selected for this engine is improper. Contact the local Allison Transmission distributor for assistance in selecting a proper calibration.

If the engine is beyond transmission ratings, contact the vehicle OEM for correction. The local AT regional representative may also be contacted for assistance.

This code cannot be cleared until the proper level engine is installed or the transmission is properly calibrated.

1. Code 65 11

   This code can be set any time the engine does not respond to LRTP request from the transmission.

   a. Test the J1939 communication link for a response from the engine to the TSC1 command between shifts.

   b. Verify that engine and transmission calibrations are compatible.

   c. Determine if other J1939 controllers have been added recently (such as headway controllers).

2. Code 65 12

   This code can be set during vehicle build or vehicle repower if engine torque message is too high/low or there is no response from the engine. The engine knows the max torque limit to use when communication with the transmission is lost. The transmission will ask three times. If no response or the response is out of the limit (–10/+5 N·m), code 65 12 will be set.

   a. Test the J1939 communication link for a response from the engine to a max default torque message during shifts.

   b. Verify that engine and transmission calibrations are compatible.

*NOTE: This code will not be cleared by power down.

Copyright © 2005 General Motors Corp.

https://truckmanualshub.com/

CODE 66 XX—SCI (SERIAL COMMUNICATION INTERFACE) FAULT *(Figure 6–24)*

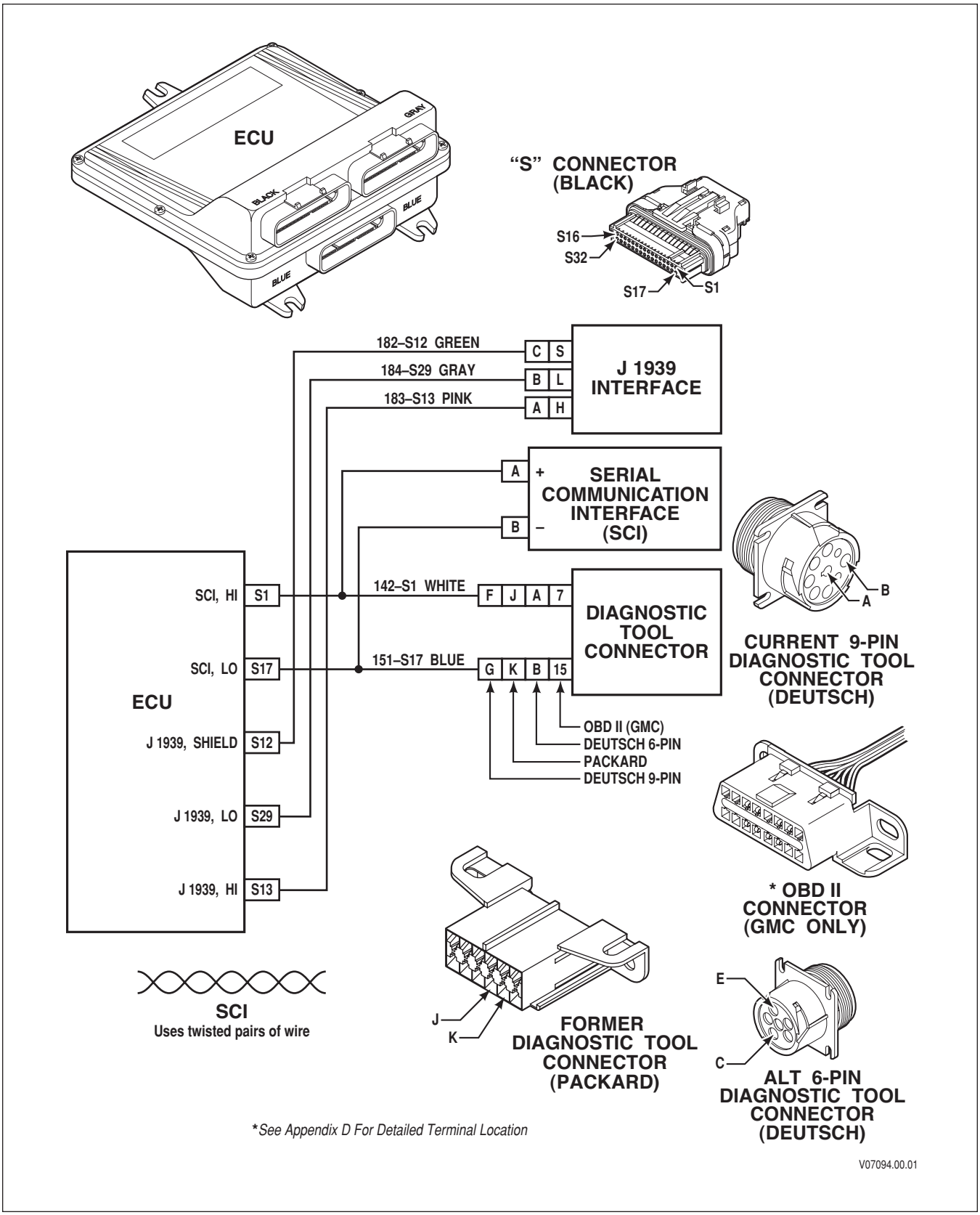

Figure 6–24. Code 66 Schematic Drawing

Copyright © 2005 General Motors Corp.

https://truckmanualshub.com/

CODE 66 XX—SCI (SERIAL COMMUNICATION INTERFACE) FAULT *(Figure 6–24)*

The datalink for throttle sensor or engine coolant temperature must have been recognized by autodetect or manually selected using the Allison DOC™ For PC–Service Tool before these codes can be logged. See Allison publication GN3433EN, User Manual for Allison DOC™ For PC–Service Tool. Go to Paragraphs 1–9 or 1–10 for further information.

Main code 66 indicates the ECU is expecting to get its throttle position signal or engine coolant signal across a serial communication interface from a computer-controlled engine. Either the engine computer is not sending the throttle or engine coolant information or the wiring between the engine and transmission computers has failed.

Code 66 00 can occur when the transmission ECU remains powered when the engine ECM is powered down. The transmission sees this as a communication link failure.

Main Code	Subcode	Meaning
66	00	SCI (Serial Communication Interface) fault
66	11	SCI Engine coolant source fault
66	22	J1939 Retarder request fault
66	33	J1939 Derived demand torque fault
66	34	Engine not responding to J1939 SEM control

A. Active Indicator Clearing Procedure:

- Power down—subcodes 00, 11, and 22
- Manual
- Self-clearing—subcodes 00, 11, and 33

B. Troubleshooting:

1. Test for a throttle signal or engine coolant signal from the engine to the transmission, an engine computer malfunction, an engine throttle fault, or an engine coolant fault.

NOTE: Throttle position data sent from a computer-controlled engine may register a low number of counts on the Allison DOC™ For PC–Service Tool, but the counts will not change as throttle percentage is changed.

2. Test wires 142 and 151 between the engine and transmission ECU for an open or short. Inspect that all connectors are clean and tightly connected.

NOTE: These codes can also be set if J1939 communications fail. Check wires 183-S13, 184-S29, and 182-S12 for opens or shorts.

3. Use the Allison DOC™ For PC–Service Tool to see if the ECU is receiving power when it should not.
4. Code 66 22

   This code is set when J1939 communication is incorrect or interrupted. Find the cause for the communication problem.

5. Code 66 33

   This code is set when Derived Demand Torque is not being received from the engine. This code indicates a problem with either the CAN link or the engine. Troubleshoot the wiring as described in the NOTE following Step 2 above. If wiring tests okay, go to vehicle or engine OEM for engine controls check.

6. Code 66 34

   This code indicates the engine is communicating but is not responding to torque reduction commands. Troubleshoot as if code 66 00 is active. If no transmission problems were found, go to vehicle or engine OEM for engine controls test.

Copyright © 2005 General Motors Corp.

https://truckmanualshub.com/

CODE 69 XX—ECU MALFUNCTION

Main code 69 indicates a problem which has been identified as being from within the ECU.

A “cateye” display or a blank display may occur with subcode 33.

Main Code	Subcode	Meaning
69	27	ECU, Inoperative A-Hi switch
69	28	ECU, Inoperative F-Hi switch
69	29	ECU, Inoperative N-Hi and H-Hi switch
69	33	ECU, computer operating properly timeout
69	34	ECU, EEPROM write timeout
69	35	ECU, EEPROM checksum
69	36	ECU, RAM self-check failure
69	39	Communication chip addressing error
69	41	ECU, I/O ASIC addressing test
69	42	SPI output failure
69	43	SPI input failure

A. Active Indicator Clearing Procedure:

- Power down
- Manual—subcodes 27, 28, 29, and 39
- Self-clearing—subcode 42 and subcodes 33, 35, 36, and 41; after an ECU reset

NOTE: Subcode 34 cannot be cleared.

B. Troubleshooting:

1. For subcodes 27, 28, and 29, check for shorts to battery before replacing the ECU. Follow the troubleshooting steps for code 42 XX for checking shorts to battery. If no shorts are found, replace the ECU. If replacing the ECU corrects the problem, reinstall the original (bad) ECU to confirm that the problem is in the ECU. If the problem recurs, reinstall the new ECU to complete the repair.
2. For all other subcodes, replace the ECU.

Copyright © 2005 General Motors Corp.

https://truckmanualshub.com/

SECTION 7—INPUT AND OUTPUT FUNCTIONS

7–1. INPUT FUNCTIONS

Input functions are signals sent into the ECU that prompt the ECU to take action. Input functions are activated and deactivated by switched ignition power or ground (wire 161B) to the ECU (wired through the VIW), or through the **MODE** button on the shift selector. The following input functions can be activated using the **MODE** button:

- Secondary Shift Schedule
- D1 Selection (Available With Pushbutton Selector Only)
- PTO Enable
- Auto 2–1 Preselect for 7-Speeds

The wiring schematic in Appendix J illustrates installation requirements for input functions and designates specific wire numbers in the transmission control system to be used for the activation of these input functions. The wiring schematic in Appendix J should be used for reference only. Ask the vehicle manufacturer which input functions are programmed, which wires are used, and whether voltage input was positive or ground. Wiring schematics for input and output functions are shown in Appendix P. The Allison DOC™ For PC–Service Tool can also be utilized to determine which wire was programmed for a particular input function and the wiring schematic can be consulted to find out if input to the ECU is + or – voltage. For more detailed information on input functions and other inhibits, refer to Allison Tech Data, WTEC III Controls and Information.

NOTE: ***The schematic in Appendix J shows the intended use of the control features specified. These features have only been validated in the configuration shown. ANY USE OF THESE FEATURES WHICH DIFFERS FROM WHAT IS SHOWN IS NOT THE RESPONSIBILITY OF ALLISON TRANSMISSION.***

CAUTION: Never use chassis ground as an **INPUT FUNCTION** ground. Chassis ground can carry voltage potential of 1 or 2 volts above battery ground. This non-approved input will “confuse” the ECU and cause erroneous input results. Be sure to use wire 161 which is signal ground.

Activating an input function can inhibit transmission operation in the same manner as a diagnostic code. Use the Allison DOC™ For PC–Service Tool to verify an active input function or a diagnostic code inhibit. For more detailed information on input functions and other inhibits, refer to Allison Tech Data, WTEC III Controls and Information.

The maximum number of input and output functions which may be used in any installation depends upon the transmission model and its features. Refer to Table 7–1.

Table 7–1. Input/Output Function Availability

Transmission Model	Auxiliary Transmission Controls Functions	Number Of Input Functions	Number Of Output Functions
6-Speed Models and 4000 Product Family 7-speed models	Retarder	10 + Mode Button	6
3000 Product Family 7-speed models	Transfer Case	11 + Mode Button	6

Copyright © 2005 General Motors Corp.

https://truckmanualshub.com/

INPUT AND OUTPUT FUNCTIONS

The following input functions inhibit direction change shifts (forward to reverse or reverse to forward):

- Auxiliary Function Range Inhibit (standard)
- Auxiliary Function Range Inhibit (special)
- Quick to Neutral, Pump Option
- Automatic Neutral for PTO
- Automatic Neutral at Stop
- Reverse Enable
- Automatic Neutral for Refuse Packers
- Automatic Neutral for Refuse Packers with Service Brake Input
- Direction Change Enable

The following input functions lock the transmission in fourth range:

- Fire Truck Pump Mode
- Fourth Lockup Pump Mode

The following input functions preselect a lower range:

- Engine Brake and Preselect Request (standard)
- Engine Brake and Preselect Request (special)

The following input functions inhibit upshifts:

- D1 Selection
- Auxiliary Hold

The following input functions inhibit lockup shifts:

- Manual Lockup
- Anti-lock Brake Response

The following input function inhibits range and lockup shifts at high horsepower:

- Shift Enable/Shift in Process (Oil Field Application)

The following functions are general restrictions to normal operation:

- High Input Speed causes neutral to range inhibit
- Medium Cold Oil causes operation confined to **R** (Reverse), **N** (Neutral), and **2**nd range start
- Hot Oil restricts operation to **4**th range maximum (except emergency applications)
- Two Speed Axle Enable permits change only at low output speed and throttle
- Special Pattern Logic monitors **N** to **D** or **N** to **R** shifts. If engine throttle or output speed is too high, the transmission remains in **N** (Neutral).
- Wheel Lock disengages the lockup clutch and inhibits forward range downshifts and shifts to reverse
- Anti-lock Brake Response deactivates the retarder and disengages the lockup clutch
- High Throttle during **N** (Neutral) to any range shift causes a revised clutch pressure apply rate and turns off shift adaptive
- Power loss to the ECU restricts operation to certain ranges. For exact range, see code 13 XX in Section 6.

The following input function limits operation to **1**st range and **N** (Neutral):

- Refuse Vehicle Step Switch

Copyright © 2005 General Motors Corp.

https://truckmanualshub.com/

INPUT AND OUTPUT FUNCTIONS

7–2. OUTPUT FUNCTIONS

Output functions are signals sent out by the ECU that activate or control devices or mechanisms. These control devices or mechanisms are controlled by relays or direct connection signals from the ECU.

Many input and output functions are closely related. For instance, the PTO Enable option (input function) also includes PTO Output wiring information. When searching for output function information, be sure to check any related input function information references.

The wiring schematics in Appendix J and Appendix P illustrate installation requirements for output functions as well as input functions and designate specific wire numbers in the transmission control system to be used for the activation of these output functions. The wiring schematics in Appendix J should be used for reference only. Ask the vehicle manufacturer which specific output functions are programmed and which wires are used. Output function polarity is not significant when an Allison-supplied VIM is used. The Allison DOC™ For PC–Service Tool can also be utilized to determine which wire was programmed for a particular output function. For more detailed information on output functions, refer to Allison Tech Data “WTEC III Controls and General Information.” The schematics in Appendix P are from Allison Tech Data.

Copyright © 2005 General Motors Corp.

https://truckmanualshub.com/

INPUT AND OUTPUT FUNCTIONS

NOTES

Copyright © 2005 General Motors Corp.

https://truckmanualshub.com/

SECTION 8—GENERAL TROUBLESHOOTING OF PERFORMANCE COMPLAINTS

IMPORTANT:

Make the following general determinations before beginning specific troubleshooting, removing the transmission, or removing attached components.

- Are there active diagnostic codes?
- Is the lever shift selector lever in **N** (Neutral) to allow starting the engine?
- Is the battery properly connected and charged?
- Is isolated battery properly connected (if used)?
- Is the fluid level correct?
- Is voltage to the ECU correct?
- Is the engine properly tuned?
- Is fuel flow to the engine correct?
- Are wheel chocks in place?
- Is air flow to the cooler and radiator unrestricted?
- Is the driveline properly connected?
- Are there signs of fluid leakage under the vehicle? What is the origination point?
- Are hydraulic connections correctly made and not leaking?
- Is vehicle acceleration from a stop changed?
- Are electrical connections correctly made?
- Are there any other obvious vehicle or transmission problems?
- Are clutch pressures within specified limits?

After making these general determinations use the various sections of this manual to isolate the listed problems. The following charts address specific vehicle complaints. Some complaints involve diagnostic codes, so all troubleshooting tests should involve testing the system for diagnostic codes.

Copyright © 2005 General Motors Corp.

https://truckmanualshub.com/

GENERAL TROUBLESHOOTING OF PERFORMANCE COMPLAINTS

Table 8–1. Troubleshooting Performance Complaints

Problem	Probable Cause	Suggested Remedy
	SHIFT SELECTOR	
A. Shift selector displays "cateye" and vehicle is not operable	No communication between the ECU and a remote shift selector	Refer to code 23 XX in Troubleshooting Procedure
B. Shift selector display is blank	VIM Fuse is blown	Replace VIM fuse
	Fuse blown in OEM substitute	Replace fuse for VIM
	Failed SDL (Serial Data Link)	Should change to "cateye" within 12 seconds (see Code 23 16)
C. Shift selector not lighted at night (when headlights are on)	Wires 186, 187, or 188 are not connected or are improperly connected.	Find wires 186, 187, and 188 and connect them or install wires, if necessary.
	STARTING	
Vehicle will not start (engine will not crank)	Lever shift selector not in neutral	Select **N** (Neutral) and restart
	Dead battery	Recharge battery
	Disconnected battery	Reconnect battery
	Faulty starter circuit	Repair vehicle starter circuit
	Faulty neutral start relay	Replace neutral start relay
	Faulty wiring in neutral start circuit	Repair wiring
	Calibration programmed to J1939 Neutral Start message (Neutral Start relay not used)	Troubleshoot J1939 wiring (CAN link)
	Voltage to ECU too low	Test battery and charging system voltage
	Faulty ignition wire (146)	Repair wire 146
	Faulty lever shift selector	Replace lever shift selector
	Lack of battery voltage on Circuit 123 from ECU when in neutral	Repair Circuit 123 or replace ECU
All display segments of display lighted	No calibration installed in ECU	Load Calibration
	Voltage to ECU too low	Test battery and charging system voltage

Copyright © 2005 General Motors Corp.

https://truckmanualshub.com/

GENERAL TROUBLESHOOTING OF PERFORMANCE COMPLAINTS

Table 8–1. Troubleshooting Performance Complaints *(cont'd)*

Problem	Probable Cause	Suggested Remedy
	CHECK TRANS LIGHT	
A. CHECK TRANS light will not go out at start-up and vehicle drives normally	Faulty **CHECK TRANS** light, relay, or circuit.	Replace relay or repair circuit
	An LED rather than a lamp is installed for the **CHECK TRANS** light and the LED is partially lighted from leakage current	Install a lamp rather than an LED for the **CHECK TRANS** light
B. CHECK TRANS light will not go out at start-up and vehicle does not drive	Faulty ECU	Replace the ECU
	Engine does not start	Repair engine starting system
	Faulty harness	Repair harness (Section 4 and Appendix E)
	Faulty interface wiring to vehicle electrical system	Repair wiring (Appendix E)
	Faulty ECU	Replace the ECU
C. CHECK TRANS light flashes intermittently	Intermittent power to ECU	Test input power to the ECU and correct if necessary
	Loose wiring to **CHECK TRANS** light	Repair wiring
	Faulty or incorrect ground wire attachment	Repair ground circuit
	Intermittent opening in Circuit 115	Repair Circuit 115
D. No **CHECK TRANS** light at ignition	Faulty light bulb or socket	Replace light bulb or socket
	Incorrect wiring to and from **CHECK TRANS** light bulb	Repair wiring (Appendix E)
	Faulty wiring harness	Test wiring between ECU and **CHECK TRANS** light, and repair where necessary (Appendix E)
	Circuit 115 open	Repair Circuit 115
	Vehicle wired for J1939 CHECK TRANS light but calibration doesn't support that message	Reprogram with correct calibration
	Faulty ECU	Replace ECU
E. No **CHECK TRANS** light when active diagnostic code should turn on **CHECK TRANS** light	Vehicle wired for J1939 **CHECK TRANS** light but calibration doesn't support that message	Reprogram with correct calibration

Copyright © 2005 General Motors Corp.

https://truckmanualshub.com/

GENERAL TROUBLESHOOTING OF PERFORMANCE COMPLAINTS

Table 8–1. Troubleshooting Performance Complaints *(cont'd)*

Problem	Probable Cause	Suggested Remedy
	SHUTDOWN	
ECU will not turn off when ignition switch off	Faulty ignition switch	Replace ignition switch
	Externally-generated speed sensor signal(s). Refer to Appendix L for detailed inspection.	Find source of false speed sensor signal(s) and correct problem
	SHIFTING/PERFORMANCE	
A. Transmission will not shift to forward or reverse (stays in neutral)	Engine rpm too high①	Reduce engine rpm. Also, it may be necessary to reselect **N**eutral and then **D** or **R**.
	Low fluid level	Add fluid to proper level. Refer to appropriate transmission mechanic's tips for proper dipstick calibration.
	Throttle position sensor or linkage is not functioning properly①	Refer to throttle position sensor for correct set-up (Appendix F)
	Voltage to ECU too low①	Test vehicle battery and charging system
	Shift selector is not functioning properly	Replace shift selector
	Disconnected or dirty connectors	Perform connector inspection (Appendix E)
	Faulty wiring harnesses	Repair harness (Appendix E)
	Speed sensor(s) not functioning properly①	Repair or replace speed sensor(s) or circuitry. Refer to transmission service manual and Appendix E.
	Faulty ECU	Replace the ECU
	Input function wire open and "auxiliary function range inhibit", or "direction change enable" in the calibration①	Test input function programming with Allison DOC™ For PC–Service Tool. Correct wiring or switch problem which does not allow input function wire to be grounded.
	"Auxiliary Function Range Inhibit-Standard" or "direction change enable"—hooked up to brake pressure①	Apply brakes with high force

Copyright © 2005 General Motors Corp.

https://truckmanualshub.com/

GENERAL TROUBLESHOOTING OF PERFORMANCE COMPLAINTS

Table 8–1. Troubleshooting Performance Complaints *(cont'd)*

Problem	Probable Cause	Suggested Remedy
B. Transmission will not stay in forward or reverse	Auto-neutral or quick-to-neutral circuit (input function) faulty	Repair quick-to-neutral circuit
	Leaking at solenoid assembly	Rebuild solenoid assembly. Refer to transmission service manual.
	Faulty solenoid—leaking	Replace solenoid. Refer to transmission service manual.
C. Transmission will not make a specific shift	Low engine power	Correct engine problem. Refer to engine service manual.
	Incorrect fluid level	Correct fluid level. Refer to appropriate transmission mechanic's tips for proper dipstick calibration.
	Extreme fluid temperature	Inspect cooling system and fluid level
	Faulty speed sensor/circuit	Repair circuit or replace speed sensor(s) (see code 22 XX)
	Faulty temperature sensor/circuit	Test for temperature reading which inhibits shifts
	Incorrect calibration	Install proper calibration
	Faulty shift selector	Replace shift selector
	Hydraulic problem	Refer to Range Clutch Troubleshooting section
	Faulty ECU	Replace ECU
D. Transmission lockup clutch will not engage	ABS fault active	Correct ABS fault. Upgrade software to S02 or later.
E. Transmission does not shift properly (rough shifts, shifts occurring at too low or too high speed)	Engine idle speed too fast (neutral to range shift)	Adjust engine idle speed. Refer to Vehicle Service Manual.
	Faulty throttle sensor/circuit	Refer to throttle sensor section for installation and operation information (Appendix F)

Copyright © 2005 General Motors Corp.

https://truckmanualshub.com/

GENERAL TROUBLESHOOTING OF PERFORMANCE COMPLAINTS

Table 8–1. Troubleshooting Performance Complaints *(cont'd)*

Problem	Probable Cause	Suggested Remedy
E. Transmission does not shift properly (rough shifts, shifts occurring at too low or too high speed) *(cont'd)*	ECU input voltage low	Test power, ground, charging system, and battery function
	Incorrect shift calibration for vehicle	Install correct calibration
	Instrument panel tachometer incorrect	Repair or replace tachometer
	Incorrectly calibrated electronic speedometer	Calibrate electronic speedometer
	Faulty speed sensor/circuit	Repair circuit or replace speed sensor (see code 22 XX)
	Loose speed sensor	Tighten speed sensor retaining bracket bolt
	Incorrect fluid level	Correct fluid level. Refer to appropriate mechanic's tips for proper dipstick calibration.
	Crossed wires in harness	Inspect for crossed wires and correct
	Intermittent problems	Inspect wiring harnesses and connectors (Appendix E)
	Loose or damaged output speed signal wheel (3000 only)	Replace output speed signal wheel
	Loose or damaged output bearing nut sensor (4000 only)	Tighten or replace output bearing nut sensor retainer
	Control spool valve sticking	Overhaul valve body assembly. Refer to the appropriate transmission service manual.
	Sticking stage 2 solenoid valve	Overhaul valve body assembly Refer to the appropriate transmission service manual.
	Incorrect calibration	Install correct calibration
	ECU input voltage low	Test power, ground, charging system, and battery function
	Incorrect shift calibration for vehicle	Install correct calibration

Copyright © 2005 General Motors Corp.

https://truckmanualshub.com/

GENERAL TROUBLESHOOTING OF PERFORMANCE COMPLAINTS

Table 8–1. Troubleshooting Performance Complaints *(cont'd)*

Problem	Probable Cause	Suggested Remedy
F. Excessive flare—engine overspeed on full-throttle upshifts	TPS Adjustment: — Overstroke	— Adjust TPS linkage for proper stroke (Appendix F)
	— Loose	— Tighten loose bolts or connections
	Incorrect calibration	Correct calibration
	ECU input voltage low	Inspect electrical system and all connections from battery and ECU
	Incorrect fluid level	Add fluid to proper level. Refer to the appropriate transmission mechanic's tips for proper dipstick calibration.
	Low main pressure	Refer to the Low Pressure section in this Table
	Erratic speed sensor signal	Refer to code 22 XX
	Sticking stage 2 solenoid valve	Clean and repair stage 2 valve. Refer to the appropriate transmission service manual, module rebuild section.
	Piston seals leaking or clutch plates slipping in range involved (refer to the Range Clutch Troubleshooting section in this Table)	Overhaul transmission. Refer to the appropriate transmission service manual.
CRUISE CONTROL COMPLAINTS		
Cruise control shift cycles	Performance shift schedule is being used.	Switch to economy shift schedule.
	Incorrect droop settings	Modify engine droop settings to provide a larger speed variation before reaction occurs (CAT engines should be set on "soft cruise". Cummins engines droop settings should be +2 mph and –3 mph.)
	Cruise Control calibration not present in Version 9 software	Update ECU software from V9 to V9A which has the cruise control shift schedule.

Copyright © 2005 General Motors Corp.

https://truckmanualshub.com/

GENERAL TROUBLESHOOTING OF PERFORMANCE COMPLAINTS

Table 8–1. Troubleshooting Performance Complaints *(cont'd)*

Problem	Probable Cause	Suggested Remedy
RETARDER PERFORMANCE COMPLAINTS		
A. Retarder does not apply	Retarder enable input not activated	Turn on retarder enable switch (if present).
	Retarder enable switch not working	Replace retarder enable switch (if present).
	ABS input is active (if vehicle is equipped with ABS)	None—This is normal. If ABS is active, retarder will not apply.
	Retarder Request below 10.2 percent	Use diagnostic tool to determine counts signaled by each RMR device present. At least 15 counts are required for some retarder apply and 150–232 counts are required for full apply. Replace RMR device, based on test results.
	Closed throttle not sensed	Use diagnostic tool to test throttle signal. Throttle must be below 9.8 percent before retarder will apply. Readjust or replace TPS. **Exception**: If TPS has failed and Service Brake Status input is sensed by ECU, the retarder will still be applied.
	Active code inhibiting retarder	Correct cause for setting these codes: 42 23, 44 23, 45 23, 46 26, 64 12, 64 23, or 69 29
	Transmission output speed below 350 rpm (450 rpm for 4000 Product Family)	Raise output speed to above 350 rpm (450 rpm for 4000 Product Family)
	Transmission not in a forward range	Shift to a forward range
B. Reduced retarder effect	Retarder accumulator solenoid not being energized	Correct cause for setting these codes: 42 26, 44 26, 45 26, or 69 26.
	ECU sensing false overheat condition	Use diagnostic tool or VOM to test retarder temperature sensor. Replace sensor as required.
	Normal response to overheating: • higher retarder fluid temperature • higher engine coolant temperature • higher sump temperature (V9C only)	See Table 6–7 in Section 6 (Code 61)

Copyright © 2005 General Motors Corp.

https://truckmanualshub.com/

GENERAL TROUBLESHOOTING OF PERFORMANCE COMPLAINTS

Table 8–1. Troubleshooting Performance Complaints *(cont'd)*

Problem	Probable Cause	Suggested Remedy
C. Less retarder effect than expected	Transmission fluid aerated due to incorrect level	Determine transmission fluid level and correct as required.
	Wrong retarder control regulator valve spring	Test retarder charging pressure. Change retarder control valve regulator spring, if necessary. Refer to Allison publication PO2454EN 3000 and 4000 Product Families Principles of Operation.
ABNORMAL ACTIVITIES OR RESPONSES		
A. Excessive creep in first and reverse gears	Engine idle speed too high	Adjust to correct idle speed—between 500–800 rpm. Refer to vehicle service manual.
B. No response to shift selector	Shift selector not properly connected	Test shift selector response with diagnostic tool. If no response, check remote connection and replace if necessary
	Using wrong selector on dual station equipment	Use other selector
	Faulty shift selector	Replace shift selector
	Incorrect fluid level	Correct fluid level. Refer to the appropriate transmission mechanic's tips for proper dipstick calibration.
	Main pressure low	Refer to Low Pressure section
	Control spool valves sticking (C1, C3, or C5 clutch pressure low)	Overhaul valve body assembly. Refer to the appropriate transmission service manual.
C. Vehicle moves forward in neutral②	C1 clutch failed or not released	Rebuild C1 clutch. Refer to transmission service manual.
D. Vehicle moves backward in neutral②	C3 clutch failed or not released	Rebuild C3 clutch assembly. Refer to the appropriate transmission service manual.
RANGE CLUTCH TROUBLESHOOTING SECTION		
Excessive slippage and clutch chatter	Incorrect calibration	Verify calibration
	ECU input voltage low	Test power, ground, charging system, and battery functions

Copyright © 2005 General Motors Corp.

https://truckmanualshub.com/

GENERAL TROUBLESHOOTING OF PERFORMANCE COMPLAINTS

Table 8–1. Troubleshooting Performance Complaints *(cont'd)*

Problem	Probable Cause	Suggested Remedy
Excessive slippage and clutch chatter *(cont'd)*	Throttle position sensor out of adjustment or failed	Adjust or replace throttle position sensor (Appendix F)
	Incorrect speed sensor readings	See code 22 XX
	Incorrect fluid level	Correct fluid level. Refer to the appropriate transmission mechanic's tips for proper dipstick calibration measurements.
	Main pressure low	Refer to the Low Pressure section in this Table
	Lockup clutch not applied	Inspect lockup clutch system wiring, pressure, and controls; repair as necessary. Refer to the appropriate transmission service manual.③
A. Ranges 1, 2, 3, 4 only (6-Speed) Ranges 2, 3, 4, 5 only (7-Speed)	C1 clutch slipping, leaks at splitline gasket, leaks at rotating clutch seals, leaks at piston seals, C1 clutch plates worn	Inspect control module gasket, C1 clutch plates, and piston and rotating seals; replace/rebuild as necessary. Refer to the appropriate transmission service manual.③
B. Ranges 4, 5, 6 only (6-Speed) Ranges 5, 6, 7 only (7-Speed)	C2 clutch slipping, leaks at splitline gasket, leaks at rotating clutch seals, leaks at piston seals, C2 clutch plates worn	Inspect control module gasket, C2 clutch plates, and piston and rotating seals; replace/rebuild as necessary. Refer to the appropriate transmission service manual.③
C. Ranges 3, 5, R only (6-Speed) Ranges 1, 4, 6, R only (7-Speed)	C3 clutch slipping, leaks at face seals, leaks at piston seals, C3 clutch plates worn	Inspect control module face seals, C3 clutch plates, and piston seals; replace/rebuild as necessary. Refer to the appropriate transmission service manual.③
D. Ranges 2, 6 only (6-Speed) Ranges 3, 7 only (7-Speed)	C4 clutch slipping, leaks at face seals, leaks at piston seals, C4 clutch plates worn	Inspect control module face seals, C4 clutch plates, and piston seals; replace/rebuild as necessary. Refer to the appropriate transmission service manual.③
E. Ranges 1, R only (6-Speed) Ranges 2, R only (7-Speed)	C5 clutch slipping, leaks at face seals, leaks at piston seals, C5 clutch plates worn	Inspect control module face seals, C5 clutch plates, and piston seals; replace/rebuild as necessary. Refer to the appropriate transmission service manual.③

Copyright © 2005 General Motors Corp.

https://truckmanualshub.com/

GENERAL TROUBLESHOOTING OF PERFORMANCE COMPLAINTS

Table 8–1. Troubleshooting Performance Complaints *(cont'd)*

Problem	Probable Cause	Suggested Remedy
F. Range Lo only (7-Speed)	C6 clutch slipping, leaks at splitline gasket(s), leaks at piston seals, C6 clutch plates worn	Inspect control module gasket, adapter gasket, T-Case gasket(s) C6 clutch plates, and piston seals; replace/rebuild as necessary. Refer to the appropriate transmission service manual.③
	LOW PRESSURE SECTION	
A. Low main pressure in all ranges (Including C6, T-Case)	Incorrect fluid level	Correct fluid level. Refer to the appropriate transmission mechanic's tips for correct dipstick calibration.
	Oil filter element clogged or faulty	Replace oil filter. Refer to the appropriate transmission mechanic's tips.
	Plugged or faulty suction filter	Clean or replace oil suction filter element and refill the transmission. Refer to the appropriate transmission service manual.
	Main pressure regulator valve sticking	Overhaul control module assembly. Refer to the appropriate transmission service manual.
	Main pressure regulator valve spring weak, broken, or missing	Test spring and replace if necessary. Refer to the appropriate transmission service manual.
	Control module body leakage (separator plate not flat, separator plate gasket leakage, loose control valve body bolts)	Replace or rebuild control module assembly. Care should be taken when removing and labeling shift springs. Refer to the appropriate transmission service manual.
	Faulty or incorrect fluid pressure gauge	Repair or replace gauge
	Oil pump worn or damaged	Replace or rebuild oil pump. Refer to the appropriate transmission service manual.
B. Clutch pressure low in specific ranges, normal pressure in other ranges		See Range Clutch Troubleshooting section and Appendix B

Copyright © 2005 General Motors Corp.

https://truckmanualshub.com/

GENERAL TROUBLESHOOTING OF PERFORMANCE COMPLAINTS

Table 8–1. Troubleshooting Performance Complaints *(cont'd)*

Problem	Probable Cause	Suggested Remedy
C. Low lubrication pressure	Incorrect fluid level	Correct fluid level. Refer to the appropriate transmission mechanic's tips for proper dipstick calibration.
	Plugged lube filter	Change filter. Refer to the appropriate transmission mechanic's tips.
	Excessive internal fluid leakage	Test other pressures (above items); also inspect control module mounting bolts; lubrication valve and spring. Refer to the appropriate transmission service manual.
	Broken or damaged converter regulator valve retaining pin	Replace damaged or broken parts. Refer to the appropriate transmission service manual.
	Cooler lines restricted or leaking	Inspect for kinks, leakage; reroute or replace lines as necessary
	Lubrication valve sticking	Replace lubrication valve
	Cooler plugged	Clean or replace cooler
	Faulty gauge	Repair or replace gauge
ABNORMAL STALL SPEEDS (Stall In First Range—6-Speed) (Stall In Second Range—7-Speed)		
A. High stall speeds	Not in gear	Select **D** (Drive)
	Low fluid level, aerated fluid	Add fluid to proper level. Refer to the appropriate transmission mechanic's tips for proper dipstick calibration.
	Incorrect torque converter	Replace torque converter. Refer to the appropriate transmission service manual.
	Clutch pressure low	Refer to Low Pressure section of this Table and Appendix B
	C1 or C5 clutch slipping. (7-speed, 2nd gear start) (6-speed, 1st gear start) *Note:* Use the diagnostic tool to check turbine speed	Rebuild C1 or C5 clutch. Refer to transmission service manual.
	Higher power engine	Confirm proper engine match

Copyright © 2005 General Motors Corp.

https://truckmanualshub.com/

GENERAL TROUBLESHOOTING OF PERFORMANCE COMPLAINTS

Table 8–1. Troubleshooting Performance Complaints *(cont'd)*

Problem	Probable Cause	Suggested Remedy
B. Low stall speeds	Engine not performing efficiently (may be due to plugged or restricted injectors, high altitude conditions, dirty air filters, out of time, throttle linkage, electronic engine controls problem)	Refer to vehicle engine manufacturer's manual or vehicle service manual.
	Stall speeds of 66 percent of normal implies freewheeling stator	Replace or rebuild converter assembly. Refer to the appropriate transmission service manual.
	Incorrect torque converter	Install correct torque converter. Refer to transmission Service Manual.
	FLUID/LEAKS/NOISE	
A. Overheating in all ranges	Aerated fluid—incorrect fluid level	Adjust fluid to proper level, test for defective pump. Refer to the appropriate transmission mechanic's tips and service manual.
	Air flow to cooler obstructed	Remove air flow obstruction
	Engine overheat	Correct overheat situation. Refer to vehicle service manual.
	Inaccurate temperature gauge or sending unit	Replace gauge and/or sending unit
	Inaccurate sump temperature sensor	Replace temperature sensor or internal harness. Refer to the appropriate transmission service manual.
	Transmission cooler lines reversed	Connect cooler lines properly (oil and water should flow in opposite directions)
	Fluid cooler lines restricted	Remove restrictions, clean or replace lines. Refer to vehicle service manual.
	Torque converter (wrong converter, no lockup, stuck stator, or slipping stator)	Replace or repair converter assembly. Refer to the appropriate transmission service manual. *Note:* Stuck stator will not allow cool down in neutral
	Cooler flow loss due to internal leakage	Overhaul transmission. Refer to the appropriate transmission service manual.
	Inadequate cooler sizing	See vehicle OEM for specifications

Copyright © 2005 General Motors Corp.

https://truckmanualshub.com/

GENERAL TROUBLESHOOTING OF PERFORMANCE COMPLAINTS

Table 8–1. Troubleshooting Performance Complaints *(cont'd)*

Problem	Probable Cause	Suggested Remedy
A. Overheating in all ranges (cont'd)	Excessive cooler circuit pressure drop	Inspect for plugged cooler, lines too small, collapsed hose, too many elbows in circuit
B. Fluid comes out of the fluid fill tube and/or breather	Dipstick loose	Tighten cap, replace if necessary
	Fluid level too high	Drain to proper level. Refer to the appropriate transmission mechanic's tips.
	Fluid level too low	Add fluid to proper level
	Breather stopped up—clogged	Clean or replace breather. Refer to the appropriate transmission service manual.
	Fluid contaminated with foreign liquid	Drain and replace fluid. Locate and fix source of additional fluid. Refer to the appropriate transmission service manual.
	Dipstick or fill tube seal worn	Replace seals or dipstick
	Incorrect dipstick marking	Calibrate dipstick. Refer to the appropriate transmission mechanic's tips.
C. Noise occurring intermittently (buzzing)	Low fluid level	Add fluid to proper level. Refer to the appropriate transmission mechanic's tips for proper dipstick calibration.
	Air leak in oil suction screen canister	Replace oil suction screen canister. Refer to the appropriate transmission service manual.
	Clogged filters	Replace filters. Refer to the appropriate transmission mechanic's tips.
	Aerated fluid causes noisy pump	Correct fluid level. Refer to the appropriate transmission mechanic's tips for proper dipstick calibration.
	Low main pressure causes main regulator valve to oscillate	See Low Pressure section
D. Leaking fluid (output shaft)	Faulty or missing seal at output flange	Install new lip-type seal in rear of transmission housing. Refer to the appropriate transmission service manual.

Copyright © 2005 General Motors Corp.

https://truckmanualshub.com/

GENERAL TROUBLESHOOTING OF PERFORMANCE COMPLAINTS

Table 8–1. Troubleshooting Performance Complaints *(cont'd)*

Problem	Probable Cause	Suggested Remedy
D. Leaking fluid (output shaft) *(cont'd)*	Machine lead on output flange seal surface	Replace flange
	Flange worn at seal surface	Replace flange
	Insufficient seal around seal OD	When replacing seal, apply sealant. Refer to the appropriate transmission service manual.
	Damaged, missing, or loose output flange bolts	Replace and/or tighten output flange bolts
	Damaged or missing flange button O-ring	Replace flange button O-ring
	Damaged or missing bolt O-rings	Replace O-rings
E. Transmission input	Front seal leaks	Replace front seal. Refer to transmission service manual.
	Converter leaks	Inspect converter seals, cracked converter pump tangs, converter cover, or converter housing porosity; replace parts as required. Refer to the appropriate transmission service manual.
	PTO driveline out of specification	Bring driveline into specification
F. Dirty fluid	Failure to change fluid and filters	Change fluid and install new filters. Refer to the appropriate transmission mechanic's tips.
	Excessive heat	Refer to the Overheating section in this table
	Damaged fluid filter/seals	Replace oil filter/seals. Refer to the appropriate transmission mechanic's tips.
	Substandard fluid	Use recommended fluid. Refer to the appropriate transmission mechanic's tips.
	Clutch/transmission failure	Overhaul transmission. Refer to the appropriate transmission service manual.

Copyright © 2005 General Motors Corp.

https://truckmanualshub.com/

GENERAL TROUBLESHOOTING OF PERFORMANCE COMPLAINTS

Table 8–1. Troubleshooting Performance Complaints *(cont'd)*

Problem	Probable Cause	Suggested Remedy
	POWER TAKEOFF (PTO)④	
A. Leaks	Damaged or cocked seal	Replace seal
	PTO flange grooved at seal	Replace PTO flange
	Loose flange	Inspect flange and bolts; replace if necessary and properly tighten bolts
	Loose bolts or damaged gaskets	Replace gasket and/or properly tighten bolts
	Loose or damaged hydraulic lines (clutched drive)	Tighten fittings. Replace if necessary.
B. Noisy PTO	Faulty driven component	Replace faulty driven component
	Gears or bearings worn, damaged, or contaminated	Rebuild PTO with new gears or bearings
C. No or intermittent operation (clutched drive)	Electrical problem (switch, connectors, solenoid, or wires)	Inspect for electrical problem and repair (Appendix E)
	Damaged or worn clutch	Rebuild clutch assembly
	Clutch piston seals damaged or missing	Rebuild clutch assembly
	Inadequate fluid pressure to PTO	Inspect and repair fluid pressure supply; line kinked, loose, or plugged; orifice too small
	Engine speed outside operating band	Increase or reduce engine speed to move within operating band
	Drive or driven gear teeth damaged	Replace damaged gears. Refer to the appropriate transmission service manual.
	TRANSFER CASE (T-CASE)	
A. Will not go into first range	TPS adjustment	Properly adjust TPS (Appendix F)
	Engine speed too high	Reduce Engine Speed
	Wrong calibration	Calibrate properly
	Wrong control module (6 speed instead of 7 speed)	Install correct control module
	Faulty wiring, solenoid connectors	Inspect wiring and connectors in control module. Refer to the appropriate transmission service manual.

Copyright © 2005 General Motors Corp.

https://truckmanualshub.com/

GENERAL TROUBLESHOOTING OF PERFORMANCE COMPLAINTS

Table 8–1. Troubleshooting Performance Complaints *(cont'd)*

Problem	Probable Cause	Suggested Remedy
A. Will not go into first range *(cont'd)*	Faulty C6 seals	Replace C6 piston seals. Refer to the appropriate transmission service manual.
	Worn C6 clutch plates	Rebuild C6. Refer to the appropriate transmission service manual.
B. Makes excessive noise	Improperly shimmed bearings	Inspect all T-case bearings as directed in transmission repair manual. Reshim as necessary.
C. No front output drive	Differential clutch bad (C7 piston seals, C7 rotating seals, C7 clutch plates, C7 check ball)	Rebuild differential clutch. Refer to the appropriate transmission service manual.
	C7 electrical (wires, solenoids, terminals, connectors)	Inspect and repair C7 electrical system (Appendix E)
D. Transmission fluid leaks	Damaged output seal, output flange seal journal, gasketed mating surfaces, bearing endcaps, electrical connector, oil scavenge line	Determine source of leak and repair. Refer to the appropriate transmission service manual.

FOOT NOTES:

① Flashing digital display on shifter.

② Refer to explanation of NVL in Section 2–3, Abbreviation.

③ Refer to Appendix B, test main pressure, clutch pressure, and pressure specifications.

④ Contact the nearest Allison Transmission dealer/distributor with specific questions relating to PTO repair.

Copyright © 2005 General Motors Corp.

https://truckmanualshub.com/

GENERAL TROUBLESHOOTING OF PERFORMANCE COMPLAINTS

Table 8–2. Resistance Module Troubleshooting Data

Description	Resistance Check in Resistance Module*		Voltage Signal**		Wiring to Control Device
	Terminals	Resistance—Ohms ± 5%	% Retarder Application	Voltage ± 0.2V	Device Terminal
Auto Full On	A to C	12K	100	3.6	No connections
Pressure Switch Full On High	A to C	32K	0 100	1.1 3.6	A B
3-Step E-10R Bendix Pedal	A to C	32K	0 32 58 100	1.1 1.9 2.8 3.6	A B C D
6-Step Hand Lever — Off Position 1 Position 2 Position 3 Position 4 Position 5 Position 6	A to C	32K	 0 16 28 48 65 84 100	 1.1 1.5 1.9 2.3 2.8 3.2 3.6	 + 1 2 3 4 5 6
Auto 1/2 On	A to C	12K	50	2.4	No connections
3 Pressure Switches — Low Medium High	A to C	32K	0 32 68 100	1.1 1.9 2.3 3.6	 A B A B A B
Auto 1/3 On 2 Pressure Switches Auto Medium High	A to C	21.4K	 32 68 100	 1.9 2.8 3.6	 A B A B
Dedicated Pedal	No Checks	Interface not a resistance module	0 100	0.7–1.2 3.4–3.5	A B C

* Resistance module must be disconnected from the wiring harness and retarder control devices.
** These voltages must be measured between terminals A and B.

Copyright © 2005 General Motors Corp.

https://truckmanualshub.com/

APPENDICES

Appendix A	Identification of Potential Circuit Problems
Appendix B	Measuring Clutch and Retarder Pressures
Appendix C	Solenoid and Clutch Chart
Appendix D	Wire/Connector Chart
Appendix E	Connector Part Numbers, Terminal Part Numbers, Tool Part Numbers, and Repair Instructions
Appendix F	Throttle Position Sensor Adjustment
Appendix G	Welding on Vehicle/Vehicle Interface Module
Appendix H	Hydraulic Schematics
Appendix J	3000 and 4000 Product Families Wiring Schematic
Appendix K	TransID 1 Temperature Sensor and Solenoid Resistance Charts
Appendix L	Externally-Generated Electronic Interference
Appendix M	Diagnostic Tree—3000 and 4000 Product Families Hydraulic System
Appendix N	Diagnostic Tool Information
Appendix P	Input/Output Functions
Appendix Q	TransID 2 and 3 Thermistor Troubleshooting Information
Appendix R	SAE J1939 Communication Link

Copyright © 2005 General Motors Corp.

https://truckmanualshub.com/

APPENDICES

NOTES

Copyright © 2005 General Motors Corp.

https://truckmanualshub.com/

APPENDIX A—IDENTIFICATION OF POTENTIAL CIRCUIT PROBLEMS

Intermittent codes are a result of faults that are detected, logged, and then disappear, only to recur later. If, when troubleshooting, a code is cleared in anticipation of it recurring and it does not, check the items in the following list for the fault's source.

A. Circuit Inspection

1. Intermittent power/ground problems—can cause voltage problems during ECU diagnostic checks which can set various codes depending upon where the ECU was in the diagnostic process.
2. Damaged terminals.
3. Dirty or corroded terminals.
4. Terminals not fully seated in the connector. Inspect indicated wires by uncoupling connector and gently pulling on the wire at the rear of the connector to test for excessive terminal movement.
5. Connectors not fully mated. Inspect for missing or damaged locktabs.
6. Screws or other sharp pointed objects pushed into or through one of the harnesses.
7. Harnesses which have rubbed through and may be allowing intermittent electrical contact between two wires or between wires and vehicle frame members.
8. Broken wires within the braiding and insulation.

B. Finding an Intermittent Fault Condition

To find a fault, like one of those listed, examine all connectors and the external wiring harnesses. Harness routing may make it difficult to see or feel the complete harness. However, it is important to thoroughly check each harness for chafed or damaged areas. Road vibrations and bumps can damage a poorly installed harness by moving it against sharp edges and cause some of the faults. If a visual inspection does not identify a cause, move and wiggle the harness by hand until the fault is duplicated.

The next most probable cause of an intermittent code is an electronic part exposed to excessive vibration, heat, or moisture. Examples of this are:

1. Exposed harness wires subjected to moisture.
2. A defective connector seal allows moisture to enter the connector or part.
3. An electronic part (ECU, shift selector, solenoid, or throttle sensor) affected by vibration, heat, or moisture may cause abnormal electrical conditions within the part.

When troubleshooting Item 3, eliminate all other possible causes before replacing any parts.

Another cause of intermittent codes is good parts in an abnormal environment. The abnormal environment will usually include excessive heat, moisture, or voltage. For example, an ECU that receives excessive voltage will generate a diagnostic code as it senses high voltage in a circuit. The code may not be repeated consistently because different circuits may have this condition on each check. The last step in finding an intermittent code is to observe if the code is set during sudden changes in the operating environment.

Troubleshooting an intermittent code requires looking for common conditions that are present whenever the code is diagnosed.

Copyright © 2005 General Motors Corp.

https://truckmanualshub.com/

APPENDIX A—IDENTIFICATION OF POTENTIAL CIRCUIT PROBLEMS

C. Recurring Conditions

A recurring condition might be:

- Rain
- Outside temperature above or below a certain temperature
- Only on right-hand or left-hand turns
- When the vehicle hits a bump, etc.

If such a condition can be related to the code, it is easier to find the cause. If the time between code occurrences is very short, troubleshooting is easier than if it is several weeks or more between code occurrences.

Copyright © 2005 General Motors Corp.

https://truckmanualshub.com/

APPENDIX B—MEASURING CLUTCH AND RETARDER PRESSURES

Measuring individual clutch pressures helps to determine if a transmission malfunction is due to a mechanical or an electrical problem. Properly making these pressure tests requires transmission and vehicle (or test stand) preparation, recording of data, and comparing recorded data against specifications provided. These instructions are for all 3000 and 4000 Product Families transmissions.

NOTE: ***See if there are diagnostic codes set which are related to the transmission difficulty you are evaluating. Proceed to make mechanical preparations for measuring clutch pressures after codes have first been evaluated.***

A. Transmission and Vehicle Preparation

1. Remove the plugs from the pressure tap locations where measurement is desired (refer to Figure B–1).

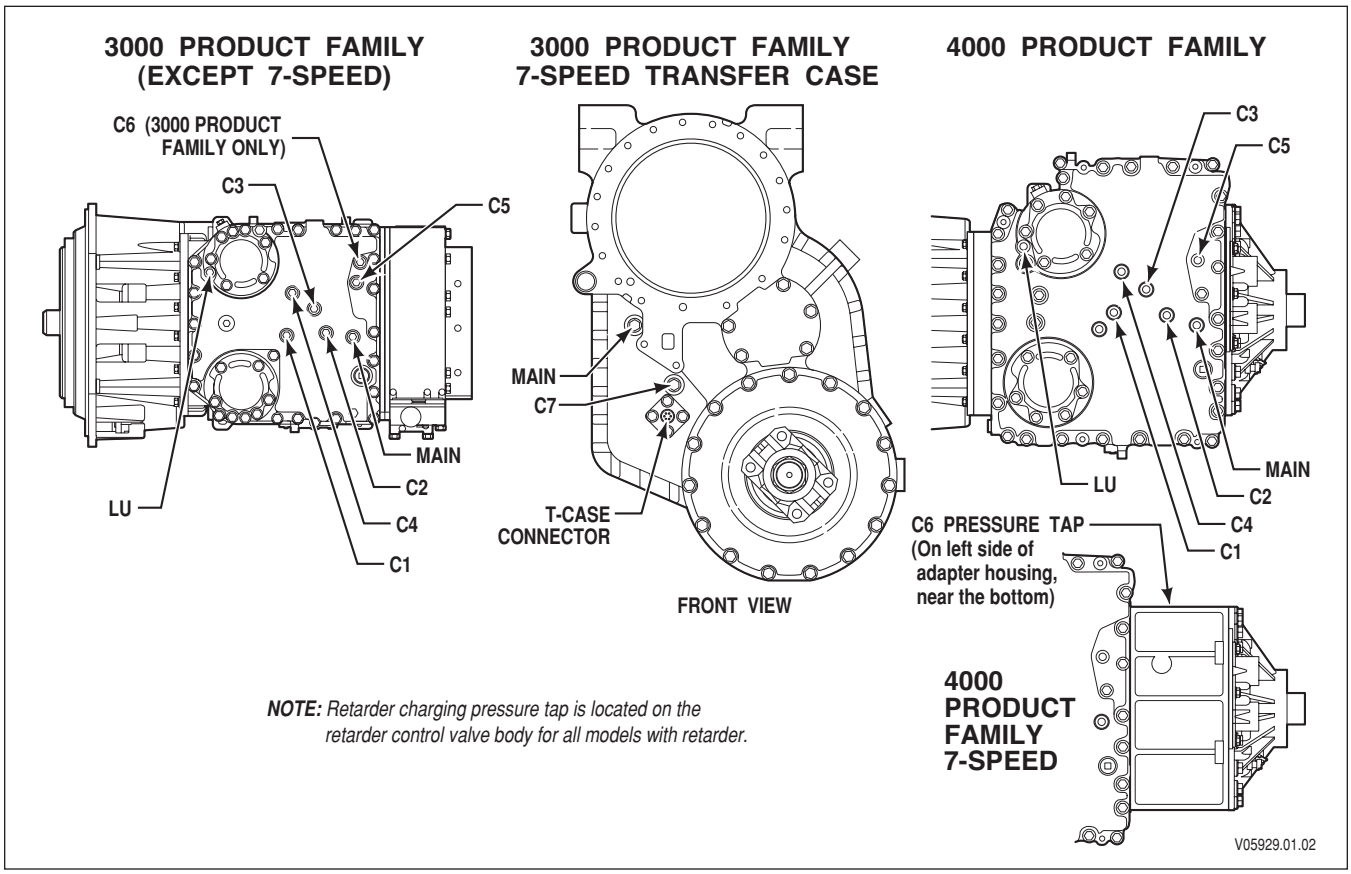

Figure B–1. Clutch Pressure Test Points

CAUTION:	Be sure that the hydraulic fittings have the same thread as the plugs removed (7/16-20 UNF-2A). Also please note that these fittings must be straight thread, O-ring style. Failure to do this will result in damage to the control module.

2. Install hydraulic fittings suitable for attaching pressure gauges or transducers.
3. Connect pressure gauges or transducers. Pressure gauge set J 26417-A is available for this purpose. Refer to Table B–2 for pressure levels expected.

Copyright © 2005 General Motors Corp.

https://truckmanualshub.com/

APPENDIX B—MEASURING CLUTCH AND RETARDER PRESSURES

4. Be sure that engine speed can be monitored (Allison DOC™ For PC–Service Tool may be used for this purpose).

5. Be sure that transmission sump fluid temperature can be measured (Allison DOC™ For PC–Service tool may be used for this purpose).

6. Be sure that the transmission has enough fluid for cold operation until an operating temperature fluid level can be set.

7. Bring the transmission to normal operating temperature of 71–93ºC (160–200ºF). Inspect for fluid leaks in the added pressure gauge/transducer lines. Repair leaks as needed. Be sure that fluid level is correct.

B. Recording Data

1. Use the Allison DOC™ For PC–Service Tool, which allows measuring of individual range clutch pressures, with the vehicle stationary. Consult Appendix N or Allison publication GN3433EN, User Guide for Allison DOC™ For PC–Service Tool, for Action Request and select Clutch Test Mode. Follow instructions to measure clutch pressures in individual ranges.

NOTE: ***Measure lockup clutch pressure by driving the vehicle in a range where lockup can be obtained. Record the pressure values at the engine speed and sump fluid temperature values shown in Table B–1. The lockup clutch is functioning correctly when engine speed and turbine speed values are equal as recorded from Allison DOC™ For PC–Service Tool.***

2. Consult Table B–1 and locate the transmission model that you are testing.

3. Operate the transmission at the conditions shown in Table B–1 and record engine speed, transmission sump fluid temperature, main hydraulic pressure, and clutch pressures in the ranges where a problem is suspected.

Table B–1. Clutch Pressure Test Conditions

Transmission Model/ Test Type	Engine rpm	Sump Fluid Temperature	Range	Clutches Pressurized
All Models (except 3000 Product Family)—Idle Check	580–620	71–93ºC (160–200ºF)	Neutral Reverse 1C 2C (2nd range start)	C5 C3 C5 C1 C5 C1 C4
3000 Product Family—Idle Check	580–620	71–93ºC (160–200ºF)	Neutral Reverse LowC 1C	C5 C3 C5 C3 C6 C1 C5
3000 Product Family (except 7-Speed Models)—High Speed	2080–2120	71–93ºC (160–200ºF)	Reverse Neutral 1C 2C 2L 3L 4L 5L 6L	C3 C5 C5 C1 C5 C1 C4 C1 C4 LU C1 C3 LU C1 C2 LU C2 C3 LU C2 C4 LU

Copyright © 2005 General Motors Corp.

https://truckmanualshub.com/

APPENDIX B—MEASURING CLUTCH AND RETARDER PRESSURES

Table B–1. Clutch Pressure Test Conditions *(cont'd)*

Transmission Model/ Test Type	Engine rpm	Sump Fluid Temperature	Range	Clutches Pressurized
3000 Product Family 7-Speed Models—High Speed	2080–2120	71–93ºC (160–200ºF)	Reverse	C3 C5
			Neutral	C5
			LowC	C3 C6
			1C	C1 C5
			2C	C1 C4
			2L	C1 C4 LU
			3L	C1 C3 LU
			4L	C1 C2 LU
			5L	C2 C3 LU
			6L	C2 C4 LU
4000 Product Family—High Speed	1780–1820	71–93ºC (160–200ºF)	Reverse	C3 C5
			Neutral	C5
			LowC**	C1 C6
			1C	C1 C5
			2C	C1 C4
			2L	C1 C4 LU
			3L	C1 C3 LU
			4L	C1 C2 LU
			5L	C2 C3 LU
			6L	C2 C4 LU
			** Only applies to HD 4070.	

C. Comparing Recorded Data to Specifications

1. Be sure that engine speed and transmission sump fluid temperatures were within the values specified in Table B–1.
2. Compare the main pressure and clutch pressure data, recorded in Step B, with the specifications in Table B–2.
3. If clutch pressures are within specifications, return the transmission and vehicle to their original configuration and proceed with electrical troubleshooting.
4. If clutch pressures are not within specification, take corrective action to replace the internal parts of the transmission necessary to correct the problem. Refer to the Transmission Service Manual for the model being checked.
5. Re-test pressure values after the transmission has been repaired.
6. Return the transmission to its original configuration. Remove instrumentation and reinstall any components removed for the pressure testing.

Copyright © 2005 General Motors Corp.

https://truckmanualshub.com/

Table B–2. Main Pressure and Clutch Pressure Specifications (Sump Fluid Temperature Same as in Table B–1)

Transmission Model/Test Type	Engine rpm	Range	Clutches Applied	Main Press. Spec kPa [psi]	Range Clutch Press. Spec* kPa [psi]	Conv. Out Press. Spec kPa [psi]	Lube Press. Spec kPa [psi]	LU Clutch Press. Spec* kPa [psi]	D'box Main Press. Spec kPa [psi]
3000 Product Family—Idle (Except 7-Speed Models)	580–620	Neutral	C5	1400–2000 [203–290]	0–40 (C5) [0–5.8]		—		
		Reverse	C3 C5	1400–2000 [203–290]	0–40 (C3 And C5) [0–5.8]		3.5 min. [0.5 min.]		
		1C	C1 C5	1300–1970 [189–286]	0–70 (C1) [0–10] 0–40 (C5) [0–5.8]		3.5 min. [0.5 min.]		
		2C	C1 C4	1300–1970 [189–286]	0–70 (C1) [0–10] 0–40 (C4) [0–5.8]		3.5 min. [0.5 min.]		
3000 Product Family 7-Speed Models—Idle		Neutral	C5	1400–2000 [203–290]	0–40 (C5) [0–5.8]		—		1400–2000 [203–290]
		Reverse	C3 C5	1400–2000 [203–290]	0–40 (C3 And C5) [0–5.8]		3.5 min. [0.5 min.]		1400–2000 [203–290]
		LowC	C3 C6	1300–1970 [189–286]	0–40 (C3 And C6) [0–5.8]		3.5 min. [0.5 min.]		1300–1970 [189–286]
		1C	C1 C5	1300–1970 [189–286]	0–70 (C1) [0–10] 0–40 (C5) [0–5.8]		3.5 min. [0.5 min.]		1300–1970 [189–286]
3000 Product Family—High Speed (Except 7-Speed Models)	2080–2120	Neutral	C5	1825–2025 [265–294]	0–40 (C5) [0–5.8]	310–410 [45–60]	130–230 [19–33]		
		Reverse	C3 C5	1825–2025 [265–294]	0–40 (C3 And C5) [0–5.8]	310–410 [45–60]	130–230 [19–33]		
		1C	C1 C5	1560–1780 [226–258]	0–70 (C1) [0–10] 0–40 (C5) [0–5.8]	310–410 [45–60]	130–230 [19–33]		

* Subtract clutch pressure from main pressure; the difference must fall within the specifications given (unless a pressure range is supplied).

Copyright © 2005 General Motors Corp.

https://truckmanualshub.com/

Table B–2. Main Pressure and Clutch Pressure Specifications (Sump Fluid Temperature Same as in Table B–1) *(cont'd)*

Transmission Model/Test Type	Engine rpm	Range	Clutches Applied	Main Press. Spec kPa [psi]	Range Clutch Press. Spec* kPa [psi]	Conv. Out Press. Spec kPa [psi]	Lube Press. Spec kPa [psi]	LU Clutch Press. Spec* kPa [psi]	D'box Main Press. Spec kPa [psi]
3000 Product Family—High Speed (Except 7-Speed Models) *(cont'd)*	2080–2120	2C	C1 C4	1560–1780 [226–258]	0–70 (C1) [0–10] 0–40 (C4) [0–5.8]	310–410 [45–60]	130–230 [19–33]		
		2L	C1 C4 LU	1100–1240 [160–180]	0–70 (C1) [0–10] 0–40 (C4) [0–5.8]	310–410 [45–60]	130–230 [19–33]	0–60 [0–8.7]	
		3C	C1 C3	1560–1780 [226–258]	0–70 (C1) [0–10] 0–40 (C3) [0–5.8]	310–410 [45–60]	130–230 [19–33]		
		3L	C1 C3 LU	1100–1240 [160–180]	0–70 (C1) [0–10] 0–40 (C3) [0–5.8]	310–410 [45–60]	130–230 [19–33]	0–60 [0–8.7]	
		4C	C1 C2	1410–1690 [204–245]	0–70 (C1) [0–10] 0–70 (C2) [0–10]	310–410 [45–60]	120–225 [17–32]		
		4L	C1 C2 LU	1000–1240 [145–180]	0–70 (C1) [0–10] 0–70 (C2) [0–10]	310–410 [45–60]	120–225 [17–32]	0–60 [0–8.7]	
		5C	C2 C3	1410–1581 [204–229]	0–70 (C2) [0–10] 0–40 (C3) [0–5.8]	310–410 [45–60]	120–225 [17–32]		
		5L	C2 C3 LU	1000–1160 [145–168]	0–70 (C2) [0–10] 0–40 (C3) [0–5.8]	310–410 [45–60]	120–225 [17–32]	0–60 [0–8.7]	
		6C	C2 C4	1410–1581 [204–229]	0–70 (C2) [0–10] 0–40 (C4) [0–5.8]	310–410 [45–60]	120–225 [17–32]		
		6L	C2 C4 LU	1000–1160 [145–168]	0–70 (C2) [0–10] 0–40 (C4) [0–5.8]	310–410 [45–60]	120–225 [17–32]	0–60 [0–8.7]	

* Subtract clutch pressure from main pressure; the difference must fall within the specifications given (unless a pressure range is supplied).

Copyright © 2005 General Motors Corp.

Table B–2. Main Pressure and Clutch Pressure Specifications (Sump Fluid Temperature Same as in Table B–1) *(cont'd)*

Transmission Model/Test Type	Engine rpm	Range	Clutches Applied	Main Press. Spec kPa [psi]	Range Clutch Press. Spec* kPa [psi]	Conv. Out Press. Spec kPa [psi]	Lube Press. Spec kPa [psi]	LU Clutch Press. Spec* kPa [psi]	D'box Main Press. Spec kPa [psi]
3000 Product Family 7-Speed Models	2080–2120	Neutral	C5	1825–2025 [265–294]	0–40 (C5) [0–5.8]	310–410 [45–60]	130–220 [19–32]		1440–1700 [209–247]
		Reverse	C3 C5	1825–2025 [265–294]	0–40 (C3 And C5) [0–5.8]	310–410 [45–60]	130–220 [19–32]		1440–1700 [209–247]
		LowC	C3 C6	1825–2025 [265–294]	0–40 (C3 And C6) [0–5.8]	310–410 [45–60]	130–220 [19–32]		1440–1700 [209–247]
		1C	C1 C5	1560–1780 [226–258]	0–70 (C1) [0–10] 0–40 (C5) [0–5.8]	310–410 [45–60]	130–220 [19–32]		1440–1700 [209–247]
		2C	C1 C4	1560–1780 [226–258]	0–70 (C1) [0–10] 0–40 (C4) [0–5.8]	310–410 [45–60]	130–220 [19–32]		1440–1700 [209–247]
		2L	C1 C4 LU	1100–1240 [160–180]	0–70 (C1) [0–10] 0–40 (C4) [0–5.8]	140–210 [20–30]	130–220 [19–32]	0–60 [0–8.7]	1440–1700 [209–247]
		3C	C1 C3	1560–1780 [226–258]	0–70 (C1) [0–10] 0–40 (C3) [0–5.8]	140–210 [20–30]	130–220 [19–32]		1440–1700 [209–247]
		3L	C1 C3 LU	1100–1240 [160–180]	0–70 (C1) [0–10] 0–40 (C3) [0–5.8]	140–210 [20–30]	130–220 [19–32]	0–60 [0–8.7]	1440–1700 [209–247]
		4C	C1 C2	1410–1690 [204–245]	0–70 (C1 And C2) [0–10]	140–210 [20–30]	125–220 [18–32]		1440–1700 [209–247]
		4L	C1 C2 LU	1000–1240 [145–180]	0–70 (C1 And C2) [0–10]	140–210 [20–30]	125–220 [18–32]	0–60 [0–8.7]	1440–1700 [209–247]
		5C	C2 C3	1410–1581 [204–229]	0–70 (C2) [0–10] 0–40 (C3) [0–5.8]	140–210 [20–30]	125–220 [18–32]		1440–1700 [209–247]

* Subtract clutch pressure from main pressure; the difference must fall within the specifications given (unless a pressure range is supplied).

Copyright © 2005 General Motors Corp.

Table B–2. Main Pressure and Clutch Pressure Specifications (Sump Fluid Temperature Same as in Table B–1) *(cont'd)*

Transmission Model/Test Type	Engine rpm	Range	Clutches Applied	Main Press. Spec kPa [psi]	Range Clutch Press. Spec* kPa [psi]	Conv. Out Press. Spec kPa [psi]	Lube Press. Spec kPa [psi]	LU Clutch Press. Spec* kPa [psi]	D'box Main Press. Spec kPa [psi]
3000 Product Family 7-Speed Models *(cont'd)*	2080–2120	5L	C2 C3 LU	1000–1160 [145–168]	0–70 (C2) [0–10] 0–40 (C3) [0–5.8]	140–210 [20–30]	125–220 [18–32]	0–60 [0–8.7]	1440–1700 [209–247]
		6C	C2 C4	1410–1581 [204–229]	0–70 (C2) [0–10] 0–40 (C4) [0–5.8]	140–210 [20–30]	125–220 [18–32]		1440–1700 [209–247]
		6L	C2 C4 LU	1000–1160 [145–168]	0–70 (C2) [0–10] 0–40 (C4) [0–5.8]	140–210 [20–30]	125–220 [18–32]	0–60 [0–8.7]	1440–1700 [209–247]
4000 Product Family—Idle	580–620	Neutral	C5	1500–2200 [218–319]	0–40 (C5) [0–5.8]		—		
		Reverse	C3 C5	1500–2200 [218–319]	0–40 (C3 And C5) [0–5.8]		3.5 min. [0.5 min.]		
		1C	C1 C5	1300–1800 [189–261]	0–70 (C1) [0–10] 0–40 (C5) [0–5.8]		3.5 min. [0.5 min.]		
		2C	C1 C4	1300–1800 [189–261]	0–70 (C1) [0–10] 0–40 (C4) [0–5.8]		3.5 min. [0.5 min.]		
4000 Product Family—High Speed	1780–1820	Neutral	C5	1800–2200 [261–319]	0–40 (C5) [0–5.8]	75–300 [11–44]	50–190 [7–28]		
		Reverse	C3 C5	1800–2200 [261–319]	0–40 (C3 And C5) [0–5.8]	170–300 [25–44]	120–190 [17–28]		
		LowC**	C3 C6	1550–1800 [225–261]	0–40 (C3 And C6) [0–5.8]	170–300 [25–44]	120–190 [17–28]		
		1C	C1 C5	1550–1800 [225–261]	0–70 (C1) [0–10] 0–40 (C5) [0–5.8]	170–300 [25–44]	120–190 [17–28]		

* Subtract clutch pressure from main pressure; the difference must fall within the specifications given (unless a pressure range is supplied).
** 4000 Product Family 7-Speed Models Only.

Copyright © 2005 General Motors Corp.

https://truckmanualshub.com/

Table B–2. Main Pressure and Clutch Pressure Specifications (Sump Fluid Temperature Same as in Table B–1) *(cont'd)*

Transmission Model/Test Type	Engine rpm	Range	Clutches Applied	Main Press. Spec kPa [psi]	Range Clutch Press. Spec* kPa [psi]	Conv. Out Press. Spec kPa [psi]	Lube Press. Spec kPa [psi]	LU Clutch Press. Spec* kPa [psi]	D'box Main Press. Spec kPa [psi]
4000 Product Family—High Speed *(cont'd)*	1780–1820	2C	C1 C4	1550–1800 [225–261]	0–70 (C1) [0–10] 0–40 (C4) [0–5.8]	170–300 [25–44]	120–190 [17–28]		
		2L	C1 C4 LU	1050–1400 [152–203]	0–70 (C1) [0–10] 0–40 (C4) [0–5.8]	200–350 [29–51]	140–190 [20–28]	0–60 [0–8.7]	
		3C	C1 C3	1550–1800 [225–261]	0–70 (C1) [0–10] 0–40(C3) [0–5.8]	170–300 [25–44]	120–190 [17–28]		
		3L	C1 C3 LU	1050–1400 [152–203]	0–70 (C1) [0–10] 0–40 (C3) [0–5.8]	200–350 [29–51]	140–190 [20–28]	0–60 [0–8.7]	
		4C	C1 C2	1550–1800 [225–261]	0–70 (C1) [0–10] 0–70 (C2) [0–10]	132–250 [19–36]	92–190 [13–28]		
		4L	C1 C2 LU	1050–1400 [152–203]	0–70 (C1) [0–10] 0–70 (C2) [0–10]	160–300 [23–44]	110–150 [16–22]	0–60 [0–8.7]	
		5C	C2 C3	1268–1704 [184–247]	0–70 (C2) [0–10] 0–40 (C3) [0–5.8]	132–250 [19–36]	92–150 [13–22]		
		5L	C2 C3 LU	900–1250 [130–181]	0–70 (C2) [0–10] 0–40 (C3) [0–5.8]	160–300 [23–44]	110–150 [16–22]	0–60 [0–8.7]	
		6C	C2 C4	1268–1704 [184–247]	0–70 (C2) [0–10] 0–40 (C4) [0–5.8]	132–250 [19–36]	92–150 [13–22]		
		6L	C2 C4 LU	900–1250 [130–181]	0–70 (C2) [0–10] 0–40 (C4) [0–5.8]	160–300 [23–44]	110–150 [16–22]	0–60 [0–8.7]	

* Subtract clutch pressure from main pressure; the difference must fall within the specifications given (unless a pressure range is supplied).

Copyright © 2005 General Motors Corp.

https://truckmanualshub.com/

APPENDIX B—MEASURING CLUTCH AND RETARDER PRESSURES

D. Retarder Pressure Tests—3000 And 4000 Product Families

1. 3000 Product Family (except 3500 RDS/EVS/SP, and MD 3560) Test Conditions:
   Second Range Lockup, 100 Percent Retarder Apply, Input Speed = 1075–1125 rpm

2. 3500 RDS/EVS/SP and MD 3560 Test Conditions:
   Second Range Lockup, 100 Percent Retarder Apply, Input Speed = 1350–1400 rpm

Table B–3. Retarder Specifications At Above Test Conditions

Parameter To Check	High Capacity	Medium Capacity	Low Capacity
Main Pressure–kPa [psi]	1200–1260 [174–183]	1200–1260 [174–183]	1200–1260 [174–183]
Retarder Charge Pressure–kPa [psi] *	250–370 [36–54]	215–280 [31–41]	140–240 [20–35]
Cooler In Pressure–kPa [psi] *	250–340 [36–49]	210–300 [30–44]	140–255 [20–37]
Retarder Charge Pressure–kPa [psi] **	490–610 [71–88]	420–530 [61–77]	360–470 [52–68]
Cooler In Pressure–kPa [psi] **	470–610 [68–88]	400–530 [58–77]	340–470 [49–68]
Cooler In Temperature–˚C [˚F]	150 [300] Max (Ref)	150 [300] Max (Ref)	150 [300] Max (Ref)
* Prior to S/N 6510141464 ** Beginning with S/N 6510141464			

3. 4000 Product Family (except 4500 HS/RDS/EVS/SP and HD 4560) Test Conditions:
   Second Range Lockup, 100 Percent Retarder Apply, Input Speed = 800–850 rpm

4. 4500 HS/RDS/EVS/SP and HD 4560 Test Conditions:
   Second Range Lockup, 100 Percent Retarder Apply, Input Speed = 965–1015 rpm

Table B–4. Retarder Specifications At Above Test Conditions

Parameter To Check	High Capacity	Medium Capacity	Low Capacity
Main Pressure–kPa [psi]	1120–1270 [162–184]	1120–1270 [162–184]	1120–1270 [162–184]
Retarder Charge Pressure–kPa [psi]	375–480 [54–70]	345–450 [50–65]	325–420 [47–61]
Cooler In Pressure–kPa [psi]	360–530 [52–77]	310–510 [45–74]	290–480 [42–70]
Cooler In Temperature–˚C [˚F]	150 [300] Max (Ref)	150 [300] Max (Ref)	150 [300] Max (Ref)

Copyright © 2005 General Motors Corp.

https://truckmanualshub.com/

APPENDIX B—MEASURING CLUTCH AND RETARDER PRESSURES

NOTES

Copyright © 2005 General Motors Corp.

https://truckmanualshub.com/

APPENDIX C—SOLENOID AND CLUTCH CHART

BASIC CONFIGURATION

Range	Solenoid Non-Latching Modulating							Clutches					
	A N/O	B N/O	C N/C	D N/C	E N/C	F N/C	G N/C	C1	C2	C3	C4	C5	LU
6	X			X		0			Y		Y		0
5	X		X			0	X		Y	Y			0
4						0	X	Y	Y				0
3		X	X			0	X	Y		Y			0
2		X		X		0	X	Y			Y		0
1		X			X	0		Y				Y	0
N1	X	X		*	X	0					*	Y	0
NVL	X	X		X	X						Y	Y	
N2	X	X		X							Y		
N3	X	X	X							Y			
N4	X	X		X							Y		
R	X	X	X		X					Y		Y	

** Refer to NVL in Legend on Page C–2.*

7-SPEED CONFIGURATION (3000 and 4000 Product Families)

Range	Solenoid Non-Latching Modulating										Clutches							
	N/O	N/O	N/C	N/C	N/C	N/C	N/C	N/C	N/C	N/C								
	C1	C2	C3	C4	C5	LU	FWD	LOW	C6	DIF								
	A	B	C	D	E	F	G	N	J	H	C1	C2	C3	C4	C5	LU	C6	DIF
6	X			X		0				0		Y		Y		0		0
5	X		X			0	X			0		Y	Y			0		0
4						0	X			0	Y	Y				0		0
3		X	X			0	X			0	Y		Y			0		0
2		X		X		0	X			0	Y			Y		0		0
1		X			X	0				0					Y	0		0
LO	X					0	X	X	X	0	Y†		Y††			0	Y	0
N1	X	X		*	X					0					Y			0
N2	X	X		X			X			0				Y				0
N3	X	X	X				X			0			Y					0
N4	X	X		X			X			0				Y				0
R	X	X	X		X					0			Y		Y			0

** Refer to NVL in Legend on Page C–2.*

† 4070 only

†† 3070 only

Copyright © 2005 General Motors Corp.

https://truckmanualshub.com/

APPENDIX C—SOLENOID AND CLUTCH CHART

LEGEND

X	Indicates solenoid is electrically ON.
Y	Indicates clutch is hydraulically applied.
Blank	Indicates solenoid is electrically OFF or clutch is not hydraulically applied.
0	Optional ON or OFF.
NVL	**As a diagnostic response:** If Turbine Speed is below 150 rpm when Output Speed is below 100 rpm and Engine Speed is above 400 rpm, Neutral Very Low (**NVL**) is commanded when **N1** (Neutral) is the selected range. **NVL** is achieved by turning D solenoid "on" in addition to E solenoid being "on," which locks the output. Otherwise, D solenoid is turned off in **N1** (Neutral). **As a commanded range when shifting to Fire Truck Pump Mode:** While wire 118 is energized before wire 117 is energized when going into Fire Truck Pump Mode, Neutral Very Low (**NVL**) will be commanded to lock the output to assist the shifting of the split-shaft PTO transfer case from road mode to pump mode. While wire 118 is de-energized before wire 117 is de-energized when shifting out of Fire Truck Pump Mode, Neutral Very Low (**NVL**) will be commanded to lock the output to assist the shifting of the split-shaft PTO transfer case from pump mode to road mode.

Copyright © 2005 General Motors Corp.

https://truckmanualshub.com/

APPENDIX D—WIRE/CONNECTOR CHART

The connector information in this appendix is provided for the convenience of the servicing technician. The connector illustration and pin identifications for connection to Allison Transmission components will be accurate. Allison Transmission components are the ECU, speed sensors, retarder connectors, transmission connectors, and shift selectors. Other kinds of connectors for optional or customer-furnished components are provided based on typical past practice for an Allison-designed system.

Contact St. Clair Technologies, Inc. or your vehicle manufacturer for information on connectors not found in this appendix.

NOTE: ***The following abbreviation guide should be used to locate connector termination points for wires in the WTEC III wiring harness(es).***

Table D–1. Appendix D Abbreviation Guide

Termination Point Abbreviation	Connector Name
ARTN	Analog Return
ASOL	Solenoid A—Transmission Control Module
BSOL	Solenoid B—Transmission Control Module
C3PS	C3 Pressure Switch—Control Module
CSOL	Solenoid C—Transmission Control Module
DDRD	Diagnostic Connector—Deutsch
DDRP	Diagnostic Connector—Packard
DSOL	Solenoid D—Transmission Control Module
ECU–S	Electronic Control Unit—Selector (S) Connector
ECU–V	Electronic Control Unit—Vehicle (V) Connector
ECU–T	Electronic Control Unit—Transmission (T) Connector
ESOL	Solenoid E—Transmission Control Module
FSOL	Solenoid F—Transmission Control Module
GSOL	Solenoid G—Transmission Control Module
HSOL	Retarder H Solenoid—Retarder Housing Or Retarder Valve Body
J1939	J1939 Datalink From ECU Selector (S) Harness
JSOL	Solenoid J—Transmission Control Module (7-Speed Only)
NE	Engine Speed Sensor
NO	Output Speed Sensor
NSOL	Retarder Accumulator Solenoid
NSOL	Solenoid N—Transmission Control Module (7-Speed Only)
NT	Turbine Speed Sensor
OBDII	Diagnostic Connector—GMC On Board Diagnostics
OLS	Oil Level Sensor
PSS	Primary Shift Selector
RMOD	Retarder Module (Units Built Prior To 1/98)
RMR	Retarder Modulation Request Device
RNGTRM	Chassis Ground Ring Terminal
RTEMP	Retarder Temperature—Retarder Housing

Copyright © 2005 General Motors Corp.

https://truckmanualshub.com/

APPENDIX D—WIRE/CONNECTOR CHART

Table D–1. Appendix D Abbreviation Guide *(cont'd)*

Termination Point Abbreviation	Connector Name
SCI	Serial Communication Interface
SSS	Secondary Shift Selector
TCASE	3000 Product Family 7-Speed Transfer Case
TPS	Throttle Position Sensor
TRANS	Transmission Feedthrough Harness
VIM	Vehicle Interface Module
VIWS	Vehicle Interface Wiring—ECU Selector (S) Harness
VIWV	Vehicle Interface Wiring—ECU Vehicle (V) Harness

Copyright © 2005 General Motors Corp.

https://truckmanualshub.com/

APPENDIX D—WIRE/CONNECTOR CHART

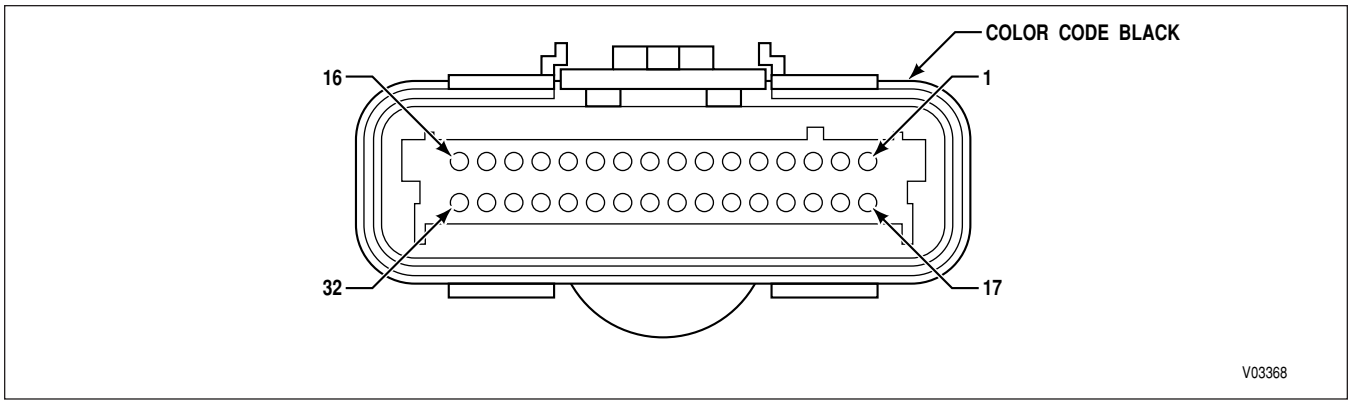

Figure D–1. ECU Connector "S"

ECU CONNECTOR "S" (BLACK)

Terminal No.	Color	Wire No.	Description	Termination Point(s)
1	White	142-S1	Serial Communication Interface, High	DDRP-J, DDRD-A, OBDII-7
2	Tan	159-S2	Diagnostic Communication Link (ISO9141)	VIWS-A
3	Pink	124-S3	Sensor Power	RMR-C, PSS-N, SSS-N
4	Yellow	146-S4	Ignition Sense	VIWS-E, DDRP-H, DDRD-C, OBDII-16
5	Orange	170-S5	Primary Shift Selector, Data Bit 1	PSS-A
6	Green	171-S6	Primary Shift Selector, Data Bit 2	PSS-B
7	Blue	172-S7	Primary Shift Selector, Data Bit 4	PSS-C
8	Yellow	173-S8	Primary Shift Selector, Data Bit 8	PSS-D
9	Tan	174-S9	Primary Shift Selector, Parity	PSS-E
10	Green	175-S10	Shift Selector Mode Input	PSS-M, SSS-M
11	Yellow	119-S11	General Purpose Input 4	VIWS-M
12	Green	182-S12	CAN Controller Shield (J1939)	J1939C
13	Pink	183-S13	CAN Controller, High (J1939)	J1939A
14	Blue	180-S14	Shift Selector Display	PSS-S, SSS-S
15	Orange	176-S15	General Purpose Output 6	PSS-L, SSS-L, VIWS-L
16	Pink	136-S16	Selector Power	PSS-R, SSS-R
17	Blue	151-S17	Serial Communication Interface, Low	DDRP-K, DDRD-B, OBDII-15
18	Tan	166-S18	General Purpose Output 7	VIWS-N
19	Green	135-S19	Analog Return	RMR-A
20	Yellow	164-S20	Retarder Modulation Request	RMR-B
21	Orange	190-S21	Secondary Shift Selector, Data Bit 1	SSS-A
22	Green	191-S22	Secondary Shift Selector, Data Bit 2	SSS-B
23	Blue	192-S23	Secondary Shift Selector, Data Bit 4	SSS-C
24	Yellow	193-S24	Secondary Shift Selector, Data Bit 8	SSS-D
25	Tan	194-S25	Secondary Shift Selector, Parity	SSS-E
26	Blue	169-S26	General Purpose Input 12	VIWS-S
27	Blue	163-S27	General Purpose Input 6	VIWS-R
28	Yellow	126-S28	General Purpose Input 9	VIWS-C
29	Gray	184-S29	CAN Controller, Low (J1939)	J1939-B
30	Tan	157-S30	Vehicle Speed	VIWS-D
31	Green	115-S31	Check Transmission	VIWS-B
32	Gray	143-S32	Selector Return	PSS-P, SSS-P, VIWS-P, DDRP-A, DDRD-E, OBDII-5

Copyright © 2005 General Motors Corp.

https://truckmanualshub.com/

APPENDIX D—WIRE/CONNECTOR CHART

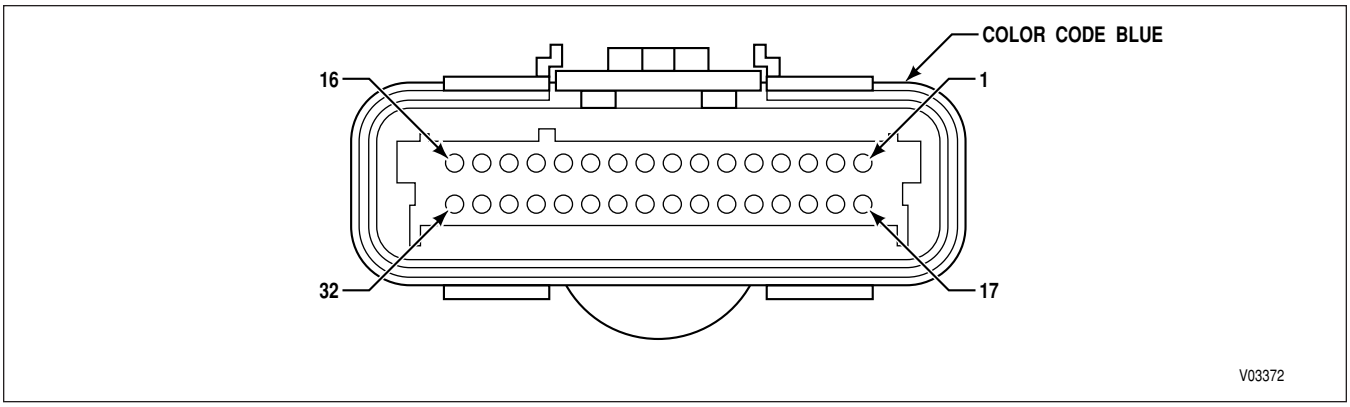

Figure D–2. ECU Connector "T"

ECU CONNECTOR "T" (BLUE)

Terminal No.	Color	Wire No.	Description	Termination Point(s)
1	Orange	102-T1	Solenoid Power, Solenoids A, D, and J (MD 3070 only)	TRANS-A
2	Tan	121-T2	Solenoid Power, Solenoids B and E	TRANS-H
3	Green	107-T3	Solenoid Power, F Solenoid	TRANS-E
4	White	120-T4	A Solenoid, Low	TRANS-G
5	Green	103-T5	C Solenoid, Low	TRANS-B
6	Tan	129-T6	E Solenoid, Low	TRANS-K
7	White	104-T7	G Solenoid, Low	TRANS-C
8	Blue	111-T8	J Solenoid, Low	TRANS-e
9	Pink	124-T9	Sensor Power	TRANS-D, TPS-C, RMR-C
10	Blue	156-T10	Throttle Position Sensor	TPS-B
11	Yellow	164-T11	Retarder Modulation Request	RMR-B
12	White	162-T12	C3 Pressure Switch Input	TRANS-X
13	Yellow	195-T13	Transmission Identification	TRANS-W
14	Tan	141-T14	Engine Speed Sensor, High	NE-A
15	Orange	149-T15	Turbine Speed Sensor, High	NT-A (4000), TRANS-V (3000)
16	Yellow	139-T16	Output Speed Sensor, High	NO-A, TCASE-C (3000 7-Speed), RMOD-C (3000 Retarder)
17	Yellow	130-T17	Solenoid Power, Solenoids C and G	TRANS-L
18				
19	Yellow	116-T19	Solenoid Power, Solenoids H and N	HSOL-B, NSOL-B, TRANS-g, TCASE-B (3000 7-Speed), RMOD-B (3000 Retarder)
20	Orange	128-T20	B Solenoid, Low	TRANS-J
21	Blue	131-T21	D Solenoid, Low	TRANS-M
22	White	110-T22	F Solenoid, Low	TRANS-F
23	White	127-T23	H Solenoid, Low	HSOL-A (4000), RMOD-A (3000 Retarder), TCASE-A (3000 7-Speed)
24	Blue	101-T24	N Solenoid, Low	NSOL-A (4000 and 3000), TRANS-f (3000 7-Speed)
25	Green	135-T25	Analog Return	RMR-A, RTEMP-B (4000), RMOD-F (3000)
26	Blue	165-T26	Oil Level Sensor Input	TRANS-Y
27	Tan	147-T27	Sump Temperature Sensor Input	TRANS-P
28	Orange	138-T28	Retarder Temperature Sensor Input	RTEMP-A (4000), RMOD-E (3000)
29				
30	Orange	150-T30	Engine Speed Sensor, Low	NE-B
31	Blue	140-T31	Turbine Speed Sensor, Low	NT-B, TRANS-U (3000)
32	Green	148-T32	Output Speed Sensor, Low	NO-B, TCASE-D (3000 7-Speed), RMOD-D (3000 Retarder)

Copyright © 2005 General Motors Corp.

https://truckmanualshub.com/

APPENDIX D—WIRE/CONNECTOR CHART

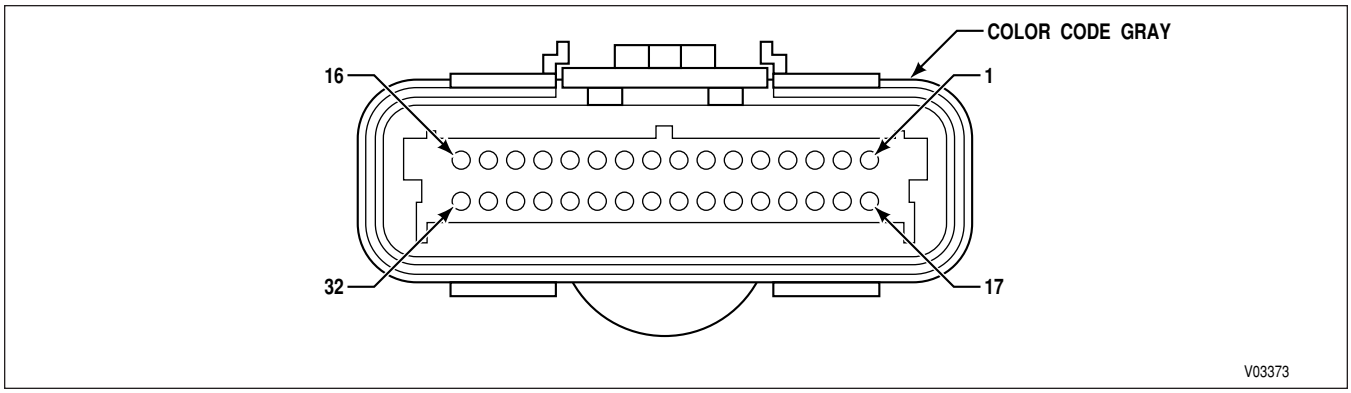

Figure D–3. ECU Connector "V"

ECU CONNECTOR "V" (GRAY)

Terminal No.	Color	Wire No.	Description	Termination Point(s)
1	Pink	136-V1	Battery Power	VIM-E1
2	White	114-V2	General Purpose Output 1	VIM-F3
3	Orange	132-V3	General Purpose Output 2	VIM-B1
4	White	113-V4	Reverse Warning	VIM-F2
5	White	167-V5	General Purpose Output 8	VIWV-V
6	Tan	123-V6	Neutral Start	VIM-D1
7				
8	Pink	124-V8	Sensor Power	TPS-C
9	Blue	179-V9	Engine Water Temperature	VIWV-M
10	Blue	156-V10	Throttle Position Sensor	TPS-B
11	Green	155-V11	General Purpose Input 1	VIWV-A
12	Yellow	153-V12	General Purpose Input 2	VIWV-B
13	Blue	118-V13	General Purpose Input 3	VIWV-C
14	Tan	177-V14	General Purpose Input 10	VIWV-S
15				
16	Pink	136-V16	Battery Power	VIM-E2
17	Gray	143-V17	Battery Return	VIM-A1
18	White	125-V18	General Purpose Output 4	VIM-C2
19	Green	105-V19	General Purpose Output 5	VIWV-E
20	Tan	157-V20	Vehicle Speed	VIM-B2
21				
22	Tan	112-V22	General Purpose Output 3	VIM-D2
23				
24	Green	135-V24	Analog Return	TPS-A, VIWV-N
25	Gray	144-V25	Case Connection	RNGTRM
26	Yellow	146-V26	Ignition Sense	VIM-F1
27	White	154-V27	General Purpose Input 5	VIWV-D
28	Orange	178-V28	General Purpose Input 11	VIWV-R
29	Orange	137-V29	General Purpose Input 7	VIWV-U
30	Green	117-V30	General Purpose Input 8	VIWV-P
31	Yellow	161-V31	Digital Return (GPI)	VIWV-L
32	Gray	143-V32	Battery Return	VIM-A2

Copyright © 2005 General Motors Corp.

https://truckmanualshub.com/

APPENDIX D—WIRE/CONNECTOR CHART

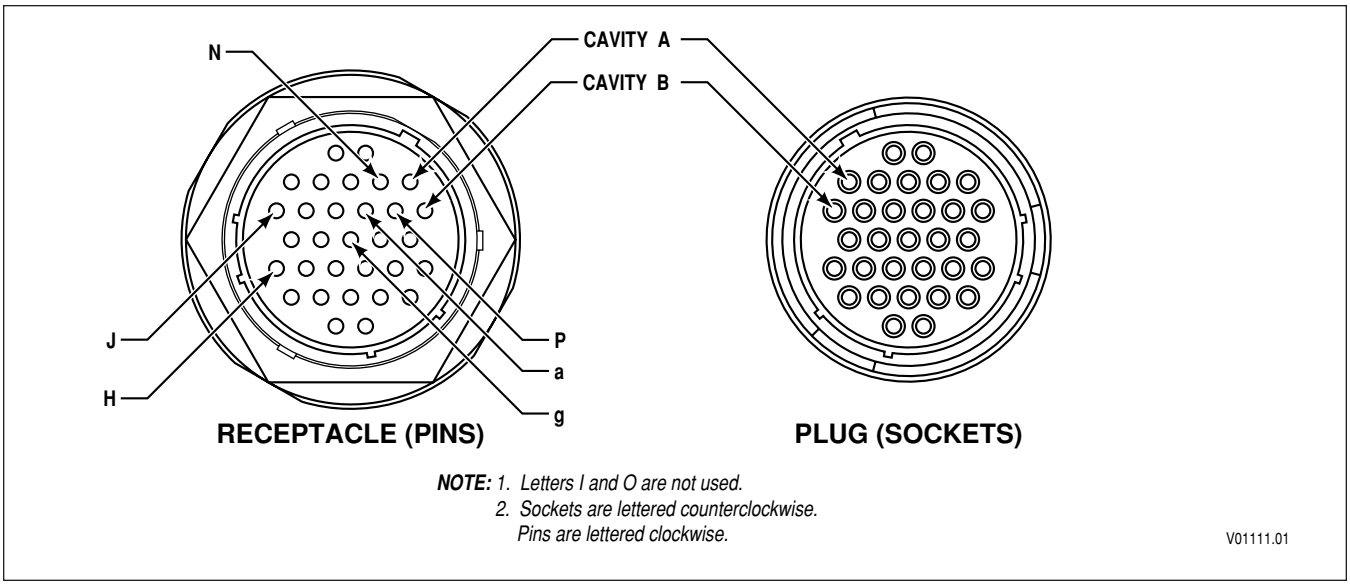

Figure D–4. Deutsch Bulkhead Connector, ECD

BULKHEAD CONNECTOR FOR "S" HARNESS (Plug With Sockets, Receptacle With Pins)

Terminal No.*	Color	Wire No.	Description	Termination Points*
A	Tan	159-S2	Diagnostic Communication Link (ISO 9141)	ECU-S2, VIWS-A
B	Green	115-S31	Check Transmission	ECU-S31, VIWS-B
C	Yellow	126-S28	General Purpose Input 9	ECU-S28, VIWS-C
D	Pink	124-S3	Sensor Power	ECU-S3, RMR-C, PSS-N, SSS-N
E	Yellow	146-S4	Ignition Sense	ECU-S4, VIWS-E, DDRP-H, DDRD-C, OBDII-16
F	Orange	170-S5	Primary Shift Selector, Data Bit 1	ECU-S5, PSS-A
G	Pink	136-S16	Selector Power	ECU-S16, PSS-R, SSS-R
H	White	142-S1	Serial Communication Interface, High	ECU-S1, DDRP-J, DDRD-A, OBDII-7, SCI-A
J	Blue	172-S7	Primary Shift Selector, Data Bit 4	ECU-S7, PSS-C
K	Blue	151-S17	Serial Communication Interface, Low	ECU-S17, DDRP-K, DDRD-B, OBDII-15, SCI-B
L	Orange	176-S15	General Purpose Output 6	ECU-S15, PSS-L, SSS-L, VIWS-L
M	Yellow	119-S11	General Purpose Input 4	ECU-S11, VIWS-M
N	Green	135-S19	Analog Return	ECU-S19, RMR-A
P	Gray	143-S32	Selector Return	ECU-S32, PSS-P, SSS-P, VIWS-P, DDRP-A, DDRD-E, OBDII-5
Q	Green	171-S6	Primary Shift Selector, Data Bit 2	ECU-S6, PSS-B
R	Blue	163-S27	General Purpose Input 6	ECU-S27, VIWS-R
S	Yellow	173-S8	Primary Shift Selector, Data Bit 8	ECU-S8, PSS-D
T	Tan	174-S9	Primary Shift Selector, Parity	ECU-S9, PSS-E
U	Green	175-S10	Shift Selector Mode Input	ECU-S10, PSS-M, SSS-M
V	Blue	180-S14	Shift Selector Display	ECU-S14, PSS-S, SSS-S
W	Tan	166-S18	General Purpose Output 7	ECU-S18, VIWS-N
X	Blue	169-S26	General Purpose Input 12	ECU-S26, VIWS-S

(continued on next page)

* Terminal number and termination points shown only apply when an Allison Transmission recommended harness configuration and bulkhead connector are used.

Copyright © 2005 General Motors Corp.

https://truckmanualshub.com/

APPENDIX D—WIRE/CONNECTOR CHART

BULKHEAD CONNECTOR FOR "S" HARNESS (Plug With Sockets, Receptacle With Pins) *(cont'd)*

Terminal No.*	Color	Wire No.	Description	Termination Points*
Y	Orange	190-S21	Secondary Shift Selector, Data Bit 1	ECU-S21, SSS-A
Z				
a	Yellow	164-S20	Retarder Modulation Request	ECU-S20, RMR-B
b	Green	191-S22	Secondary Shift Selector, Data Bit 2	ECU-S22, SSS-B
c	Blue	192-S23	Secondary Shift Selector, Data Bit 4	ECU-S23, SSS-C
d	Tan	157-S30	Vehicle Speed	ECU-S30, VIWS-D
e	Yellow	193-S24	Secondary Shift Selector, Data Bit 8	ECU-S24, SSS-D
f	Tan	194-S25	Secondary Shift Selector, Parity	ECU-S25, SSS-E
g				

BULKHEAD CONNECTOR FOR "T" HARNESS (Receptacle With Sockets, Plug With Pins)

Terminal No.*	Color	Wire No.	Description	Termination Points*
A	Orange	102-T1	Solenoid Power, Solenoids A, D, and J (MD 3070 only)	ECU-T1, TRANS-A
B	Green	103-T5	C Solenoid, Low	ECU-T5, TRANS-B
C	White	104-T7	G Solenoid, Low	ECU-T7, TRANS-C
D	Pink	124-T9	Sensor Power	ECU-T9, TRANS-D, TPS-C, RMR-C
E	Green	107-T3	Solenoid Power, F Solenoid	ECU-T3, TRANS-E
F	White	110-T22	F Solenoid, Low	ECU-T22, TRANS-F
G	White	120-T4	A Solenoid, Low	ECU-T4, TRANS-G
H	Tan	121-T2	Solenoid Power, Solenoids B and E	ECU-T2, TRANS-H
J	Orange	128-T20	B Solenoid, Low	ECU-T20, TRANS-J
K	Tan	129-T6	E Solenoid, Low	ECU-T6, TRANS-K
L	Yellow	130-T17	Solenoid Power, Solenoids C and G	ECU-T17, TRANS-L
M	Blue	131-T21	D Solenoid, Low	ECU-T21, TRANS-M
N	Green	135-T25	Analog Return	ECU-T25, TRANS-N, TPS-A, RMR-A, RTEMP-B (4000), RMOD-F (3000)
P	Tan	147-T27	Sump Temperature Sensor Input	ECU-T27, TRANS-P
Q	Green	148-T32	Output Speed Sensor, Low	ECU-T32, NO-B, TCASE-D (3000 7-Speed), RMOD-D (3000 Retarder)
R	Yellow	139-T16	Output Speed Sensor, High	ECU-T16, NO-A, TCASE-C (3000 7-Speed), RMOD-C (3000 Retarder)
S	Orange	150-T30	Engine Speed Sensor, Low	ECU-T30, NE-B
T	Tan	141-T14	Engine Speed Sensor, High	ECU-T14, NE-A
U	Blue	140-T31	Turbine Speed Sensor, Low	ECU-T31, NT-B (4000), TRANS-U (3000)
V	Orange	149-T15	Turbine Speed Sensor, High	ECU-T15, NT-A (4000), TRANS-V (3000)
W	Yellow	195-T13	Transmission Identification	ECU-T13, TRANS-W
X	White	162-T12	C3 Pressure Switch Input	ECU-T12, TRANS-X
Y	Blue	165-T26	Oil Level Sensor Input	ECU-T26, TRANS-Y
Z				
a	Yellow	164-T11	Retarder Modulation Request	ECU-T11, RMR-B
b	Blue	156-T10	Throttle Position Sensor	ECU-T10, TPS-B

(continued on next page)

* Terminal number and termination points shown only apply when an Allison Transmission recommended harness configuration and bulkhead connector are used.

Copyright © 2005 General Motors Corp.

https://truckmanualshub.com/

APPENDIX D—WIRE/CONNECTOR CHART

BULKHEAD CONNECTOR FOR "T" HARNESS (Receptacle With Sockets, Plug With Pins) *(cont'd)*

Terminal No.*	Color	Wire No.	Description	Termination Points*
c	White	127-T23	H Solenoid, Low	ECU-T23, HSOL-A (4000), RMOD-A (3000 Retarder), TCASE-A (3000 7-Speed)
d	Orange	138-T28	Retarder Temperature Sensor Input	ECU-T28, RTEMP-A (4000), RMOD-E (3000)
e	Blue	111-T8	J Solenoid, Low	ECU-T8, TRANS-e
f	Blue	101-T24	N Solenoid, Low	ECU-T24, NSOL-A (4000 and 3000), TRANS-f (3000 7-Speed)
g	Yellow	116-T19	Solenoid Power, Solenoids H and N	ECU-T19, HSOL-B, NSOL-B, TRANS-g, TCASE-B (3000 7-Speed), RMOD-B (3000 Retarder)

BULKHEAD CONNECTOR FOR "V" HARNESS (Receptacle With Sockets, Plug With Pins)

Terminal No.*	Color	Wire No.	Description	Termination Points*
A	Green	155-V11	General Purpose Input 1	ECU-V11, VIWV-A
B	Yellow	153-V12	General Purpose Input 2	ECU-V12, VIWV-B
C	Blue	118-V13	General Purpose Input 3	ECU-V13, VIWV-C
D	Pink	124-V8	Sensor Power	ECU-V8, TPS-C
E	Green	105-V19	General Purpose Output 5	ECU-V19, VIWV-E
F	Gray	143-V32	Battery Return	ECU-V32, VIM-A2
G	Gray	143-V17	Battery Return	ECU-V17, VIM-A1
H	Tan	112-V22	General Purpose Output 3	ECU-V22, VIM-D2
J	White	114-V2	General Purpose Output 1	ECU-V2, VIM-F3
K	Tan	123-V6	Neutral Start	ECU-V6, VIM-D1
L	Yellow	161-V31	Digital Return (GPI)	ECU-V31, VIWV-L
M	Blue	179-V9	Engine Water Temperature	ECU-V9, VIWV-M
N	Green	135-V24	Analog Return	ECU-V24, TPS-A, VIWV-N
P	Green	117-V30	General Purpose Input 8	ECU-V30, VIWV-P
Q	White	113-V4	Reverse Warning	ECU-V4, VIM-F2
R	Orange	178-V28	General Purpose Input 11	ECU-V28, VIWV-R
S	Tan	177-V14	General Purpose Input 10	ECU-V14, VIWV-S
T				
U	Orange	137-V29	General Purpose Input 7	ECU-V29, VIWV-U
V	White	167-V5	General Purpose Output 8	ECU-V5, VIWV-V
W	Pink	136-V16	Battery Power	ECU-V16, VIM-E2
X	Tan	157-V20	Vehicle Speed	ECU-V20, VIM-B2
Y	White	125-V18	General Purpose Output 4	ECU-V18, VIM-C2
Z				
a				
b	Blue	156-V10	Throttle Position Sensor	ECU-V10, TPS-B
c				
d	White	154-V27	General Purpose Input 5	ECU-V27, VIWV-D
e	Yellow	146-V26	Ignition Sense	ECU-V26, VIM-F1
f	Orange	132-V3	General Purpose Output 2	ECU-V3, VIM-B1
g	Pink	136-V1	Battery Power	ECU-V1, VIM-E1

* Terminal number and termination points shown only apply when an Allison Transmission recommended harness configuration and bulkhead connector are used.

Copyright © 2005 General Motors Corp.

https://truckmanualshub.com/

APPENDIX D—WIRE/CONNECTOR CHART

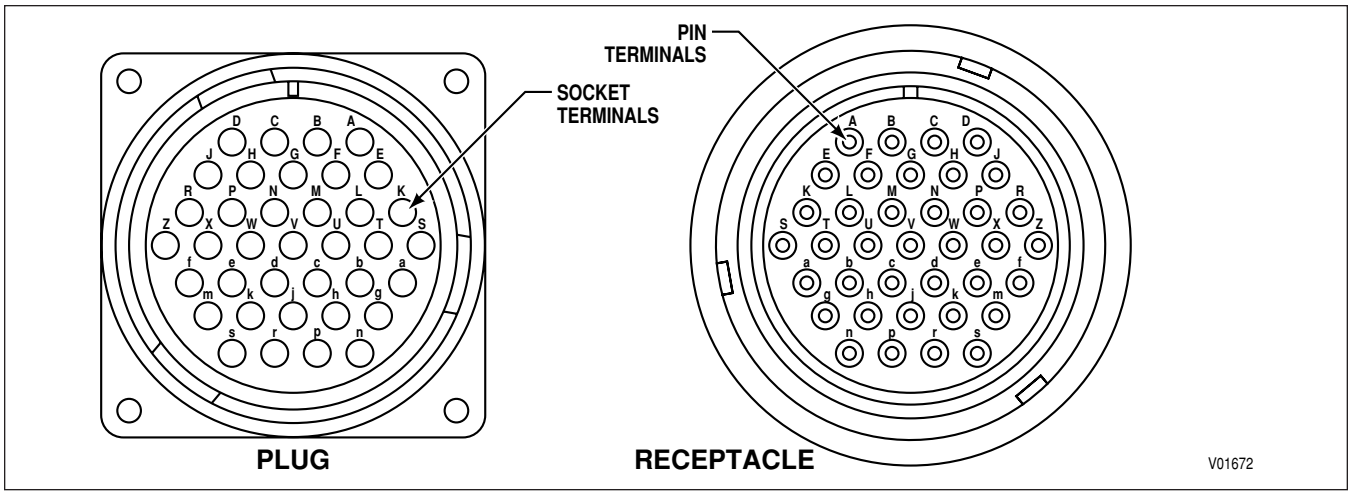

Figure D–5. Cannon 37-Way FMTV Bulkhead Connector

CANNON 37-WAY BULKHEAD CONNECTOR (FMTV ONLY)

Terminal No.	Color	Wire No.	Description	Termination Point(s)
A	Blue	101-T24	N Solenoid Low	Trans-f; ECU-T24
B	Orange	102-T1	A, D, J Solenoid Power	Trans-A; ECU-T1
C	Green	103-T5	C Solenoid Low	Trans-B; ECU-T5
D	White	104-T7	G Solenoid Low	Trans-C; ECU-T7
E	Pink	106	Sensor Power	Trans-D; TPS-C; RMR-C; 124-T9 Splice
F	Green	107-T3	F Solenoid Power	Trans-E; ECU-T3
G				
H	White	110-T22	F Solenoid Low	Trans-F; ECU-T22
J	Green	111-T8	J Solenoid Low	Trans-e; ECU-T8
K	Yellow	116-T19	H, N Solenoid Power	Trans-g; ECU-T19;
L		201	Spare	
M	White	120-T4	A Solenoid Low	Trans-G; ECU-T4
N	Tan	121-T2	B, E Solenoid Power	Trans-H; ECU-T2
P	White	127-T23	H Solenoid Low	T-case-A; ECU-T23
R	Pink	124-T9	Sensor Power	TPS-C; ECU-T9
S	Yellow	127	H Solenoid Power	T-case-B; 116-T19 Splice
T	Orange	128-T20	B Solenoid Low	Trans-J: ECU-T20
U	Tan	129-T6	E Solenoid Low	Trans-K: ECU-T6
V	Yellow	130-T17	C, G Solenoid Power	Trans-L; ECU-T17
W	Blue	131-T21	D Solenoid Low	Trans-M; ECU-T21
X		202	Spare	
Z	Green	135-T25	Analog Return	TPS-A; ECU-T25
a	Green	135B-T25	Analog Return	Trans-N; 135-T25 Splice
b				
c				
d	Tan	147-T27	Sump Temp Input	Trans-P; ECU-T27
e		203	Spare	
f	Blue	156-T10	TPS	TPS-B; ECU-T10

(continued on next page)

* Terminal number and termination points shown only apply when an Allison Transmission recommended harness configuration and bulkhead connector are used.

Copyright © 2005 General Motors Corp.

https://truckmanualshub.com/

APPENDIX D—WIRE/CONNECTOR CHART

CANNON 37-WAY BULKHEAD CONNECTOR (FMTV ONLY) *(cont'd)*

Terminal No.	Color	Wire No.	Description	Termination Point(s)
g	Green	148-T32	Output Speed-Low	T-case-D; ECU-T32
h(in)	Yellow	195-T13	TransID	ECU-T13
h(out)	Yellow	161A	TransID	Trans-W
j	White	162-T12	C3PS Input	Trans-X; ECU-T12
k	Blue	165-T26	OLS Input	Trans-Y; ECU-T26
m	Tan	141-T14	Engine Speed-High	NE-A; ECU-T14
n	Yellow	139-T16	Output Speed-High	T-case-C; ECU-T16
p	Orange	149-T15	Turbine Speed-High	Trans-V; ECU-T15
r	Blue	140-T31	Turbine Speed-Low	Trans-U; ECU-T31
s	Orange	150-T30	Engine Speed-Low	NE-B; ECU-T30

Copyright © 2005 General Motors Corp.

https://truckmanualshub.com/

APPENDIX D—WIRE/CONNECTOR CHART

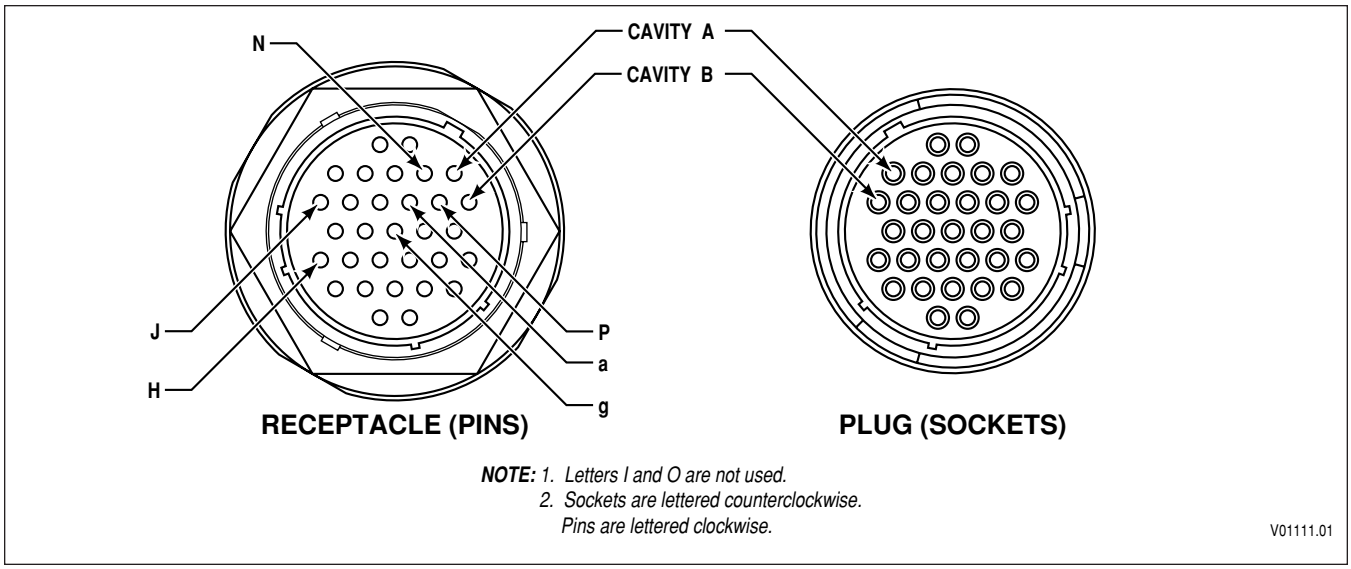

Figure D–6. Deutsch Transmission Connector, ECD

DEUTSCH TRANSMISSION CONNECTOR (Plugs With Sockets, Receptacles With Pins)

Terminal No.*	Color	Wire No.	Description	Termination Points*
A	Orange	102-T1	Solenoid Power, Solenoids A, D, and J	ECU-T1, ASOL-B, DSOL-B, JSOL-B
B	Green	103-T5	C Solenoid, Low	ECU-T5, CSOL-A
C	White	104-T7	G Solenoid, Low	ECU-T7, GSOL-A
D	Pink	124-T9	Sensor Power	ECU-T9, TPS-C, RMR-C, OLS-D
E	Green	107-T3	Solenoid Power, F Solenoid	ECU-T3, FSOL-A
F	White	110-T22	F Solenoid, Low	ECU-T22, FSOL-B
G	White	120-T4	A Solenoid, Low	ECU-T4, ASOL-A
H	Tan	121-T2	Solenoid Power, Solenoids B and E	ECU-T2, BSOL-B, ESOL-B
J	Orange	128-T20	B Solenoid, Low	ECU-T20, BSOL-A
K	Tan	129-T6	E Solenoid, Low	ECU-T6, ESOL-A
L	Yellow	130-T17	Solenoid Power, Solenoids C and G	ECU-T17, GSOL-B, CSOL-B
M	Blue	131-T21	D Solenoid, Low	ECU-T21, DSOL-A
N	Green	135-T25	Analog Return	ECU-T25, TPS-A, RMR-A, RTEMP-B (4000), RMOD-F (3000), C3PS-B, OILT-LO, OLS-B
P	Tan	147-T27	Sump Temperature Sensor Input	ECU-T27, OILT-HI
Q				
R				
S				
T				
U	Blue	140-T31	Turbine Speed Sensor, Low (3000, 3000 7-speed only)	ECU-T31, NT-B
V	Orange	149-T15	Turbine Speed Sensor, High (3000, 3000 7-speed only)	ECU-T15, NT-A
W	Yellow	195-T13	Transmission Identification (TransID)	ECU-T13, ARTN
X	White	162-T12	C3 Pressure Switch Input	ECU-T12, C3PS-A
Y	Blue	165-T26	Oil Level Sensor Input	ECU-T26, OLS-A
Z				

(continued on next page)

* Terminal number and termination points shown only apply when an Allison Transmission recommended harness configuration and bulkhead connector are used.

Copyright © 2005 General Motors Corp.

https://truckmanualshub.com/

APPENDIX D—WIRE/CONNECTOR CHART

DEUTSCH TRANSMISSION CONNECTOR (Plugs With Sockets, Receptacles With Pins) *(cont'd)*

Terminal No.*	Color	Wire No.	Description	Termination Points*
a				
b				
c				
d				
e	Blue	111-T8	J Solenoid, Low (3000 or 4000 7-Speed only)	ECU-T8, JSOL-A
f	Blue	101-T24	N Solenoid, Low (3000 or 4000 7-Speed only)	ECU-T24, NSOL-A
g	Yellow	116-T19	Solenoid Power, Solenoids H and N (3000 7-Speed only)	ECU-T19, HSOL-B, NSOL-B

* Terminal number and termination points shown only apply when an Allison Transmission recommended harness configuration and bulkhead connector are used.

Copyright © 2005 General Motors Corp.

https://truckmanualshub.com/

APPENDIX D—WIRE/CONNECTOR CHART

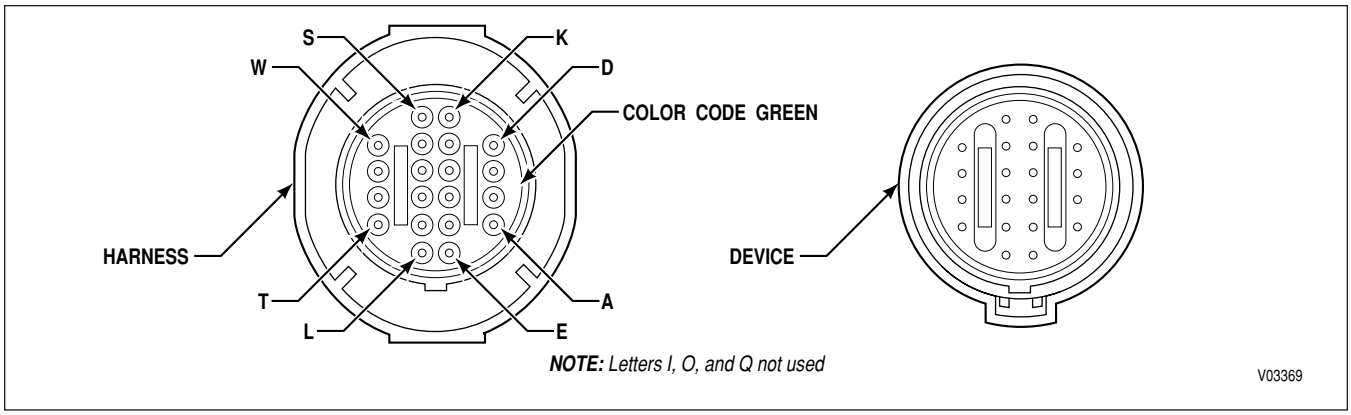

Figure D–7. Remote Selector Connector

REMOTE SHIFT SELECTOR CONNECTOR—PRIMARY SELECTOR

Terminal No.*	Color	Wire No.	Description	Termination Point(s)*
A	Orange	170-S5	Primary Shift Selector, Data Bit 1	ECU–S5
B	Green	171-S6	Primary Shift Selector, Data Bit 2	ECU–S6
C	Blue	172-S7	Primary Shift Selector, Data Bit 4	ECU–S7
D	Yellow	173-S8	Primary Shift Selector, Data Bit 8	ECU–S8
E	Tan	174-S9	Primary Shift Selector, Parity	ECU–S9
F				
G				
H				
J				
K				
L	Orange	176-S15	General Purpose Output 6	VIWS-L, ECU–S15
M	Green	175-S10	Shift Selector Mode Input	ECU–S10
N	Pink	124-S3	Sensor Power	RMR-C, ECU–S3
P	Gray	143-S32	Selector Return	VIWS-P, DDRP-A, DDRD-E, or OBDII-5, ECU–S32
R	Pink	136-S16	Selector Power	ECU–S16
S	Blue	180-S14	Shift Selector Display	ECU–S14
T	White	186	Dimmer Input A	VIWS-T
U	Yellow	187	Dimmer Input B	VIWS-U
V	Gray	188	Dimmer Ground	VIWS-V
W				

* Terminal number and termination points shown only apply when an Allison Transmission recommended harness configuration and bulkhead connector are used.

Copyright © 2005 General Motors Corp.

https://truckmanualshub.com/

APPENDIX D—WIRE/CONNECTOR CHART

REMOTE SHIFT SELECTOR CONNECTOR—SECONDARY SELECTOR

Terminal No.*	Color	Wire No.	Description	Termination Point(s)*
A	Orange	190-S5	Secondary Shift Selector, Data Bit 1	ECU–S21
B	Green	191-S6	Secondary Shift Selector, Data Bit 2	ECU–S22
C	Blue	192-S7	Secondary Shift Selector, Data Bit 4	ECU–S23
D	Yellow	193-S8	Secondary Shift Selector, Data Bit 8	ECU–S24
E	Tan	194-S9	Secondary Shift Selector, Parity	ECU–S25
F				
G				
H				
J				
K				
L	Orange	176-S15	General Purpose Output 6	VIWS-L, PSS-L, ECU–S15
M	Green	175-S10	Shift Selector Mode Input	PSS-M, ECU–S10
N	Pink	124-S3	Sensor Power	RMR-C, PSS-N, ECU–S3
P	Gray	143-S32	Selector Return	VIWS-P, PSS-P, DDRP-A, DDRD-E, or OBDII-5, ECU–S32
R	Pink	136-S16	Selector Power	PSS-R, ECU–S16
S	Blue	180-S14	Shift Selector Display	PSS-S, ECU–S14
T	White	186	Dimmer Input A	PSS-T, VIWS–T
U	Yellow	187	Dimmer Input B	PSS-U, VIWS–U
V	Gray	188	Dimmer Ground	PSS-V, VIWS–V
W				

* Terminal number and termination points shown only apply when an Allison Transmission recommended harness configuration and bulkhead connector are used.

Copyright © 2005 General Motors Corp.

https://truckmanualshub.com/

APPENDIX D—WIRE/CONNECTOR CHART

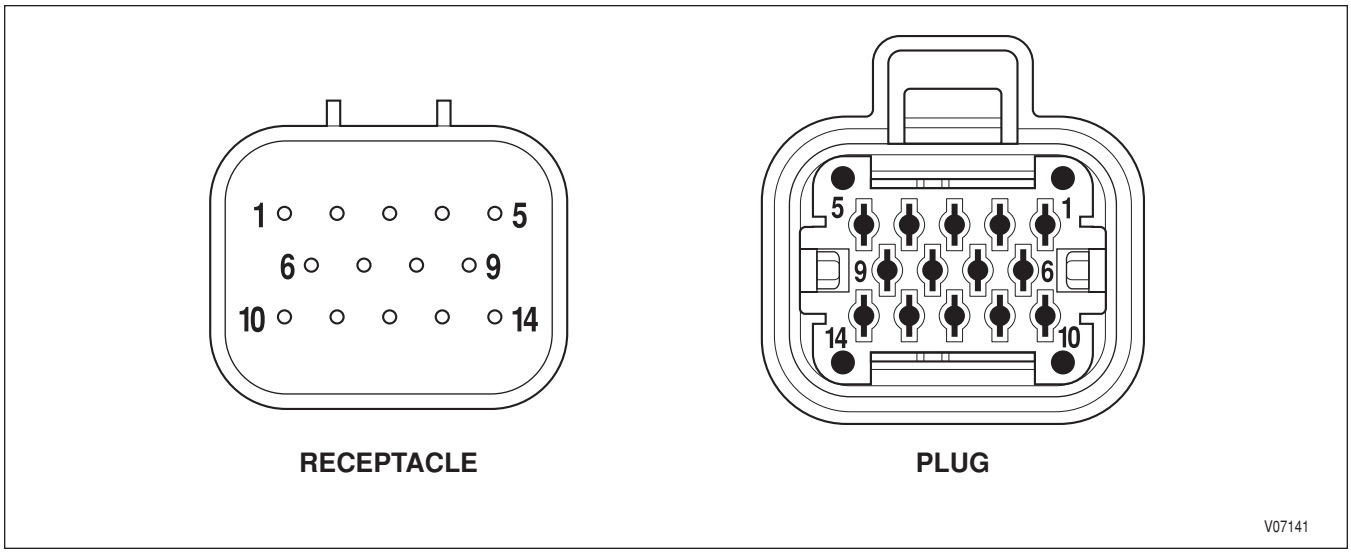

Figure D–8. Compact Pushbutton Selector Connector

COMPACT PUSHBUTTON SHIFT SELECTOR

Terminal No.*	Color	Wire No.	Description	Termination Point(s)*
1			Selector Power	ECU–S16
2			Selector Return	ECU–S32, VIWS–P, DDRP–A, DDRD–E, OBDII–5
3			Wake-up Power Input	ECU–S3, RMR–C
4			Vehicle Dimmer Input—24V	VIWS–T
5			Vehicle Dimmer Input—12V	VIWS–U
6				
7			Serial Data Link Input (Display)	ECU–S14
8			Vehicle Dimmer Return	VIWS–V
9			MODE Switch Output	ECU–S10
10			Shift Selector, Data Bit 1	ECU–S5
11			Shift Selector, Data Bit 2	ECU–S6
12			Shift Selector, Data Bit 4	ECU–S7
13			Shift Selector, Data Bit 8	ECU–S8
14			Shift Selector, Data Bit Parity	ECU–S9

* Terminal number and termination points shown only apply when an Allison Transmission recommended harness configuration and bulkhead connector are used.

Copyright © 2005 General Motors Corp.

https://truckmanualshub.com/

APPENDIX D—WIRE/CONNECTOR CHART

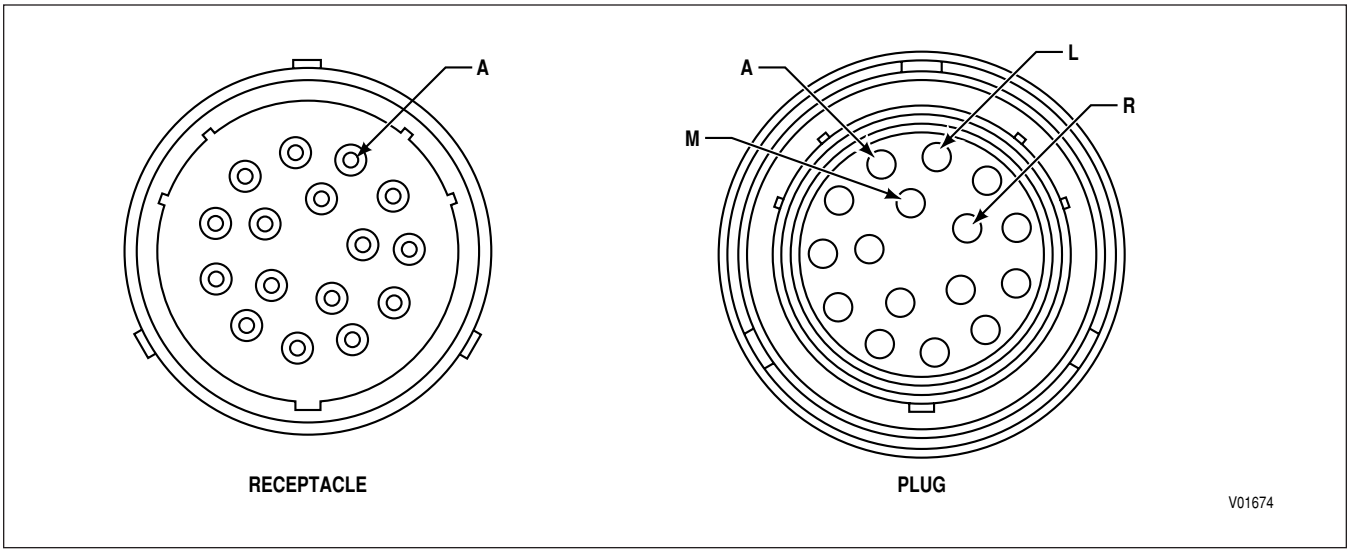

Figure D–9. Optional Deutsch Sensor Harness Connector

OPTIONAL DEUTSCH SENSOR HARNESS CONNECTOR

Terminal No.*	Color	Wire No.	Description	Termination Point(s)*
A				
B				
C	Green	135-T25	Analog Return	ECU-T25, TRANS-N, RTEMP-B (4000), RMOD-F (3000), TPS-A, RMR-A
D	Orange	138-T28	Retarder Temperature Sensor Input	ECU-T28, RTEMP-A (4000), RMOD-E (3000)
E	Yellow	116-T19	Solenoid Power, Solenoids H and N	ECU-T19, HSOL-B, NSOL-B
F	White	127-T23	H Solenoid, Low	ECU-T23, HSOL-A
G	Yellow	116-T19	Solenoid Power, Solenoids H and N	ECU-T19, HSOL-B, NSOL-B
H	Blue	101-T24	N Solenoid, Low	ECU-T24, NSOL-B
J				
K				
L	Blue	140-T31	Turbine Speed Sensor, Low	ECU-T31, NT-B (4000)
M	Orange	149-T15	Turbine Speed Sensor, High	ECU-T15, NT-A (4000)
N	Orange	150-T30	Engine Speed Sensor, Low	ECU-T30, NE-B
P	Tan	141-T14	Engine Speed Sensor, High	ECU-T14, NE-A
R	Green	148-T32	Output Speed Sensor, Low	ECU-T32, NO-B
S	Yellow	139-T16	Output Speed Sensor, High	ECU-T16, NO-A

* Terminal number and termination points shown only apply when an Allison Transmission recommended harness configuration and bulkhead connector are used.

Copyright © 2005 General Motors Corp.

https://truckmanualshub.com/

APPENDIX D—WIRE/CONNECTOR CHART

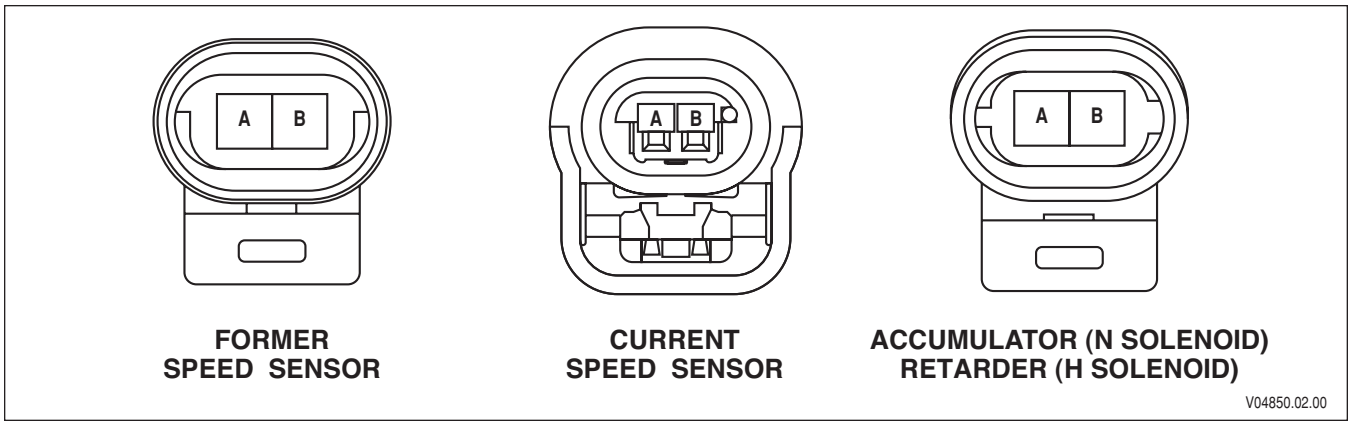

Figure D–10. Speed Sensor Connector

ENGINE SPEED SENSOR CONNECTOR

Terminal No.	Color	Wire No.	Description	Termination Point(s)
A	Tan	141-T14	Engine Speed Sensor Hi	ECU-T14
B	Orange	150-T30	Engine Speed Sensor Lo	ECU-T30

TURBINE SPEED SENSOR CONNECTOR (HD PRODUCT LINE ONLY)

Terminal No.	Color	Wire No.	Description	Termination Point(s)
A	Orange	149-T15	Turbine Speed Sensor Hi	ECU-T15
B	Blue	140-T31	Turbine Speed Sensor Lo	ECU-T31

OUTPUT SPEED SENSOR CONNECTOR

Terminal No.	Color	Wire No.	Description	Termination Point(s)
A	Yellow	139-T16	Output Speed Sensor Hi	ECU-T16
B	Green	148-T32	Output Speed Sensor Lo	ECU-T32

ACCUMULATOR (N) SOLENOID

Terminal No.	Color	Wire No.	Description	Termination Point(s)
A	Blue	101-T24	N Solenoid Lo	ECU-T24
B	Yellow	116-T19	N Solenoid Hi	ECU-T19

3000 PRODUCT FAMILY RETARDER (H SOLENOID, TID 2)

Terminal No.	Color	Wire No.	Description	Termination Point(s)
A	White	127-T23	H Solenoid Lo	ECU-T23
B	Yellow	116C-T19	H Solenoid Hi	ECU-T19

Copyright © 2005 General Motors Corp.

https://truckmanualshub.com/

APPENDIX D—WIRE/CONNECTOR CHART

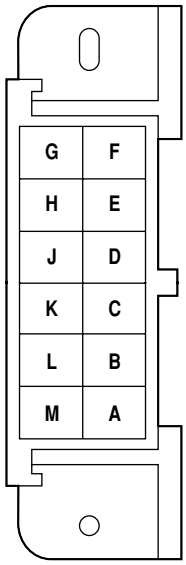

Figure D–11. Diagnostic Connector (Packard)

DIAGNOSTIC CONNECTOR

Terminal No.	Color	Wire No.	Description	Termination Point(s)
A	Gray	143-S32	Selector Return (–)	ECU-S32, VIWS-P, PSS-P, SSS-P
H	Yellow	146-S4	Ignition Signal (+)	ECU-S4, VIWS-E
J	White	142-S1	Serial Communication (+)	ECU-S1, SCI-A
K	Blue	151-S17	Serial Communication (–)	ECU-S17, SCI-B

Copyright © 2005 General Motors Corp.

https://truckmanualshub.com/

APPENDIX D—WIRE/CONNECTOR CHART

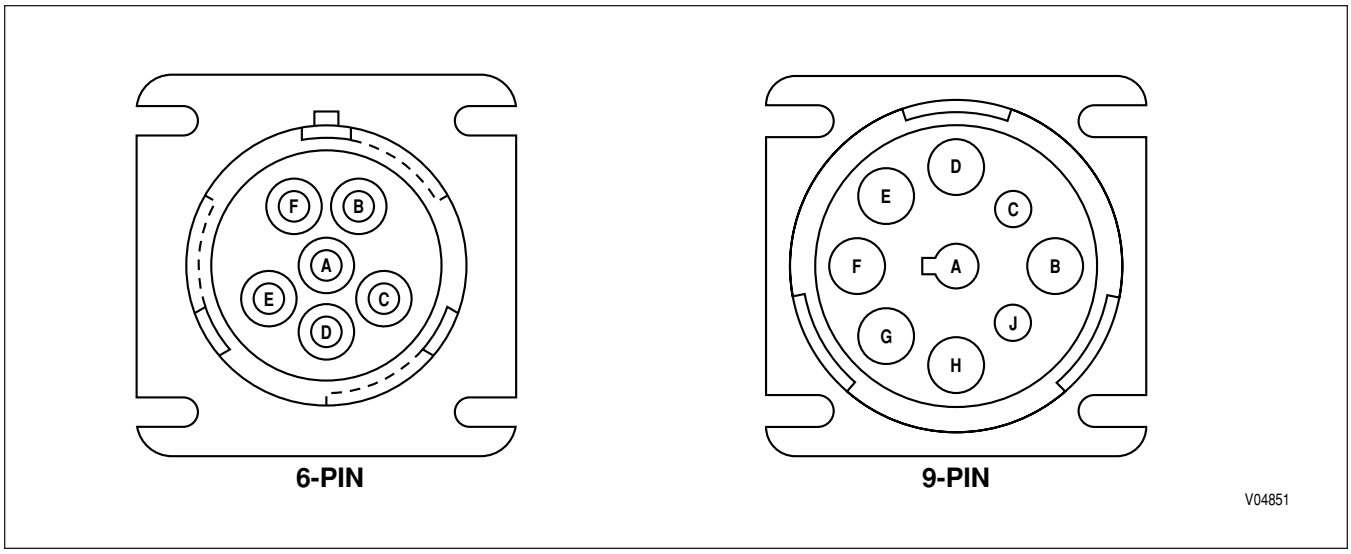

Figure D–12. Optional Deutsch Diagnostic Tool Connectors

OPTIONAL 6-PIN DIAGNOSTIC TOOL CONNECTOR

Terminal No.	Color	Wire No.	Description	Termination Point(s)
A	White	142-S1	Serial Communication (+)	ECU-S1, SCI-A
B	Blue	151-S17	Serial Communication (–)	ECU-S17, SCI-B
C	Yellow	146-S4	Ignition Signal (+)	ECU-S4, VIWS-E
D			Open	
E	Gray	143-S32	Selector Return (–)	ECU-S32, VIWS-P, PSS-P, SSS-P
F			Open	

OPTIONAL 9-PIN DIAGNOSTIC TOOL CONNECTOR

Terminal No.	Color	Wire No.	Description	Termination Point(s)
A	Gray	143-S32	Selector Return (–)	ECU-S32, VIWS-P, PSS-P, SSS-P
B	Yellow	146-S4	Ignition Power (+)	ECU-S4, VIWS-E
B (Optional)	Pink	136-S16	Battery Power (+)	ECU-S16, PSS-R, SSS-R
C	Pink	183-S13	J1939 High	ECU-S13, J1939-A/H
D	Gray	184-S29	J1939 Low	ECU-S29, J1939-B/L
E	Green	182-S12	J1939 Shield/Ground	ECU-S12, J1939-C/S
F	White	142-S1	Serial Communication (+)	ECU-S1, SCI-A
G	Blue	151-S17	Serial Communication (–)	ECU-S17, SCI-B

Copyright © 2005 General Motors Corp.

https://truckmanualshub.com/

APPENDIX D—WIRE/CONNECTOR CHART

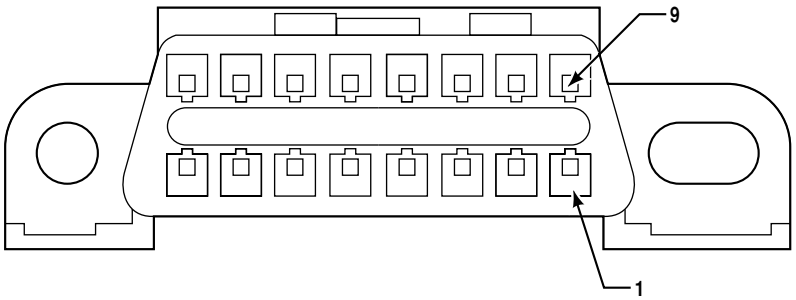

Figure D–13. GMC Connector for OBD-II Diagnostic Adapter

OPTIONAL OBD–II DIAGNOSTIC CONNECTOR

Terminal No.*	Color	Wire No.	Description	Termination Point(s)*
1				
2				
3				
4				
5	Gray	143-S32	Selector Return (–)	ECU-S32, VIWS-P, PSS-P, SSS-P
6				
7	White	142-S1	Serial Communication Interface, Hi	ECU-S1, SCI-A
8				
9				
10				
11				
12				
13				
14				
15	Blue	151-S17	Serial Communication Interface, Lo	ECU-S17, SCI-B
16	Yellow	146-S4	Ignition Sense (+)	ECU-S4, VIWS-E

* Terminal number and termination points shown only apply when an Allison Transmission recommended harness configuration and bulkhead connector are used.

Copyright © 2005 General Motors Corp.

https://truckmanualshub.com/

APPENDIX D—WIRE/CONNECTOR CHART

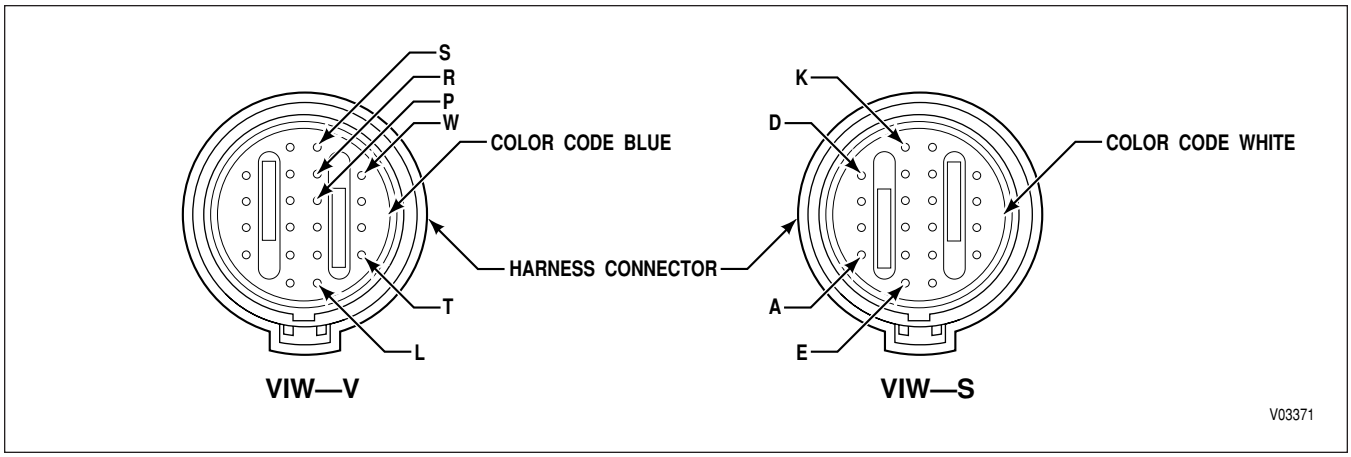

Figure D–14. VIW Connector (Packard Micro Pack)

VIW–V CONNECTOR

Terminal No.*	Color	Wire No.	Description	Termination Point(s)*
A	Green	155-V11	General Purpose Input 1	ECU-V11, VIWV-A
B	Yellow	153-V12	General Purpose Input 2	ECU-V12, VIWV-B
C	Blue	118-V13	General Purpose Input 3	ECU-V13, VIWV-C
D	White	154-V27	General Purpose Input 5	ECU-V27, VIWV-D
E	Green	105-V19	General Purpose Output 5	ECU-V19, VIWV-E
F				
G				
H				
J				
K				
L	Yellow	161-V31	Digital Return (GPI)	ECU-V31, VIWV-L
M	Blue	179-V9	Engine Water Temperature	ECU-V9, VIWV-M
N	Green	135-V24	Analog Return	ECU-V24, TPS-A, VIWV-N
P	Green	117-V30	General Purpose Input 8	ECU-V30, VIWV-P
R	Orange	178-V28	General Purpose Input 11	ECU-V28, VIWV-R
S	Tan	177-V14	General Purpose Input 10	ECU-V14, VIWV-S
T				
U	Orange	137-V29	General Purpose Input 7	ECU-V29, VIWV-U
V	White	167-V5	General Purpose Output 8	ECU-V5, VIWV-V
W				

* Terminal number and termination points shown only apply when an Allison Transmission recommended harness configuration and bulkhead connector are used.

Copyright © 2005 General Motors Corp.

https://truckmanualshub.com/

APPENDIX D—WIRE/CONNECTOR CHART

VIW–S CONNECTOR

Terminal No.*	Color	Wire No.	Description	Termination Point(s) *
A	Tan	159-S2	Diagnostic Communication Link (ISO9141)	ECU-S2, VIWS-A
B	Green	115-S31	Check Transmission	ECU-S31, VIWS-B
C	Yellow	126-S28	General Purpose Input 9	ECU-S28, VIWS-C
D	Tan	157-S30	Vehicle Speed	ECU-S30, VIWS-D
E	Yellow	146-S4	Ignition Sense	ECU-S4, VIWS-E, DDRP-H, DDRD-C
F				
G				
H				
J				
K				
L	Orange	176-S15	General Purpose Output 6	ECU-S15, VIWS-L, PSS-L, SSS-L
M	Yellow	119-S11	General Purpose Input 4	ECU-S11, VIWS-M
N	Tan	166-S18	General Purpose Output 7	ECU-S18, VIWS-N
P	Gray	143-S32	Selector Return	ECU-S32, VIWS-P, PSS-P, SSS-P, DDRP-A, DDRD-E
R	Blue	163-S27	General Purpose Input 6	ECU-S27, VIWS-R
S	Blue	169-S26	General Purpose Input 12	ECU-S26, VIWS-S
T	White	186	Dimmer Input A	VIWS-T, PSS-T, SSS-T
U	Yellow	187	Dimmer Input B	VIWS-U, PSS-U, SSS-U
V	Gray	188	Chassis Ground	VIWS-V, PSS-V, SSS-V
W				

* Terminal number and termination points shown only apply when an Allison Transmission recommended harness configuration and bulkhead connector are used.

Copyright © 2005 General Motors Corp.

https://truckmanualshub.com/

APPENDIX D—WIRE/CONNECTOR CHART

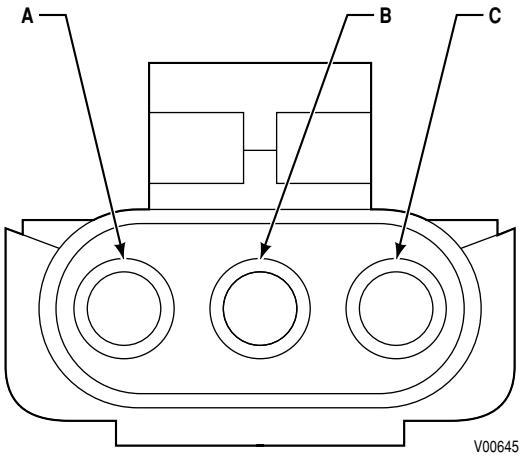

Figure D–15. TPS Connector

THROTTLE POSITION SENSOR CONNECTOR

Terminal No.	Color	Wire No.	Description	Termination Point(s)
A	Green	135-T25 or 135-V24	Analog Return	ECU-T25 or V24; TRANS-N; RMR-A, RMOD-F or B; VIWV-N
B	Blue	156-T10 or V10	TPS Signal	ECU-T10 or V10
C	Pink	124-T9 or V8	TPS Hi	ECU-T9 or V8; RMR-C

Copyright © 2005 General Motors Corp.

https://truckmanualshub.com/

APPENDIX D—WIRE/CONNECTOR CHART

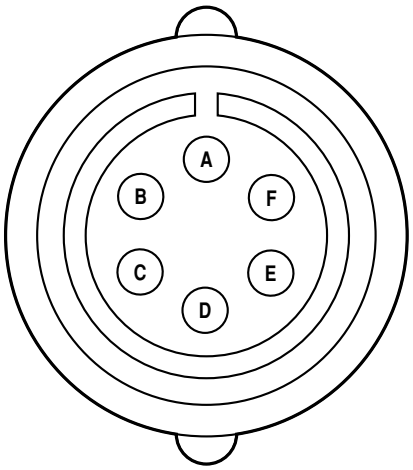

Figure D–16. Transfer Case Connector (3000 Product Family 7-Speed)

TRANSFER CASE CONNECTOR (3000 PRODUCT FAMILY 7-SPEED ONLY)

Terminal No.	Color	Wire No.	Description	Termination Point(s)
A	White	127-T23	H (Diff Lock) Solenoid Lo	ECU-T23
B	Yellow	116N-T19	H (Diff Lock) Solenoid Hi	ECU-T19, TRANS-g
C	Yellow	139-T16	Output Speed Sensor Hi	ECU-T16
D	Green	148-T32	Output Speed Sensor Lo	ECU-T32

Copyright © 2005 General Motors Corp.

https://truckmanualshub.com/

APPENDIX D—WIRE/CONNECTOR CHART

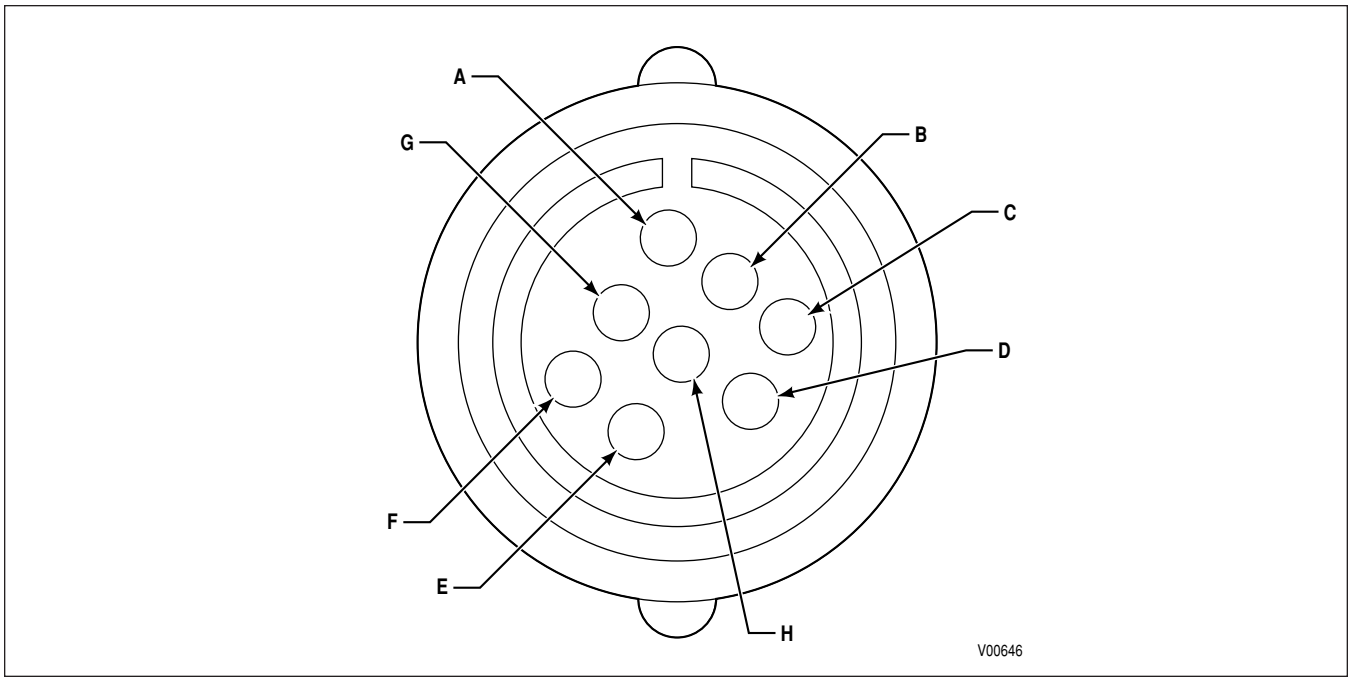

Figure D–17. Retarder Connector (3000 Product Family Pre-TransID and TID 1)

RETARDER CONNECTOR—3000 Product Family (Pre-TransID and TID 1)

Terminal No.	Color	Wire No.	Description	Termination Point(s)
A	White	127-T23	H (Rtdr Enable) Solenoid Lo	ECU-T23
B	Yellow	116-T19	H (Rtdr Enable) Solenoid Hi	ECU-T19, NSOL-B
C	Yellow	139-T16	Output Speed Sensor Hi	ECU-T16
D	Green	148-T32	Output Speed Sensor Lo	ECU-T32
E	Orange	138-T28	Retarder Temperature Input	ECU-T28
F	Green	135-T25	Analog Return	ECU-T25; TRANS-N; TPS-A, RMR-A

Copyright © 2005 General Motors Corp.

https://truckmanualshub.com/

APPENDIX D—WIRE/CONNECTOR CHART

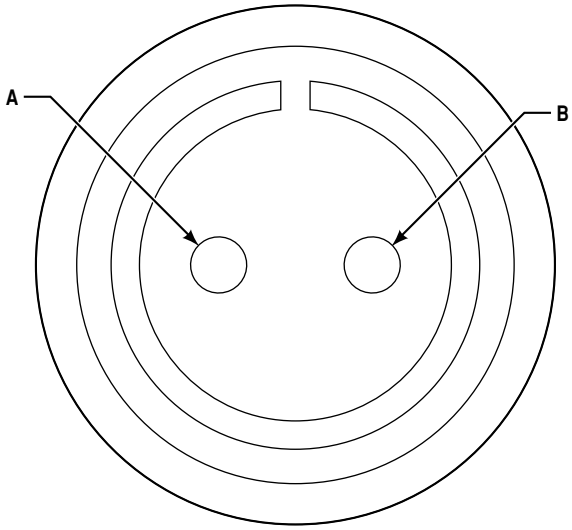

Figure D–18. Retarder Connector (3000 and 4000 Product Families)

RETARDER CONNECTOR—3000 and 4000 Product Families

Terminal No.	Color	Wire No.	Description	Termination Point(s)
A	White	127-T23	H (Retarder Enable) Solenoid Lo	ECU-T23
B	Yellow	116-T19	H (Retarder Enable) Solenoid Hi	ECU-T19, NSOL-B

Copyright © 2005 General Motors Corp.

https://truckmanualshub.com/

APPENDIX D—WIRE/CONNECTOR CHART

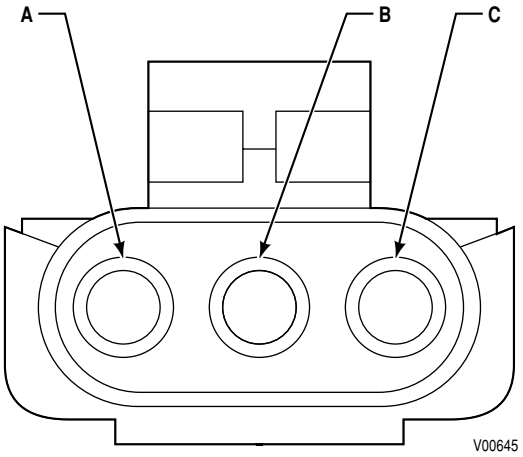

Figure D–19. Retarder Resistance Module/Interface Connector

RETARDER RESISTANCE MODULE/INTERFACE CONNECTOR

Terminal No.	Color	Wire No.	Description	Termination Point(s)
A	Green	135-T25 or S19	Analog Return	ECU-T25 or S19; TRANS-N, RMOD-F; TPS-A
B	Yellow	164-T11 or S20	Retarder Mod.	ECU-T11 or S20
C	Pink	124-T9 or S3	Retarder Mod. Hi	ECU-T9 or S3; TRANS-D, PSS-N, SSS-N

Copyright © 2005 General Motors Corp.

https://truckmanualshub.com/

APPENDIX D—WIRE/CONNECTOR CHART

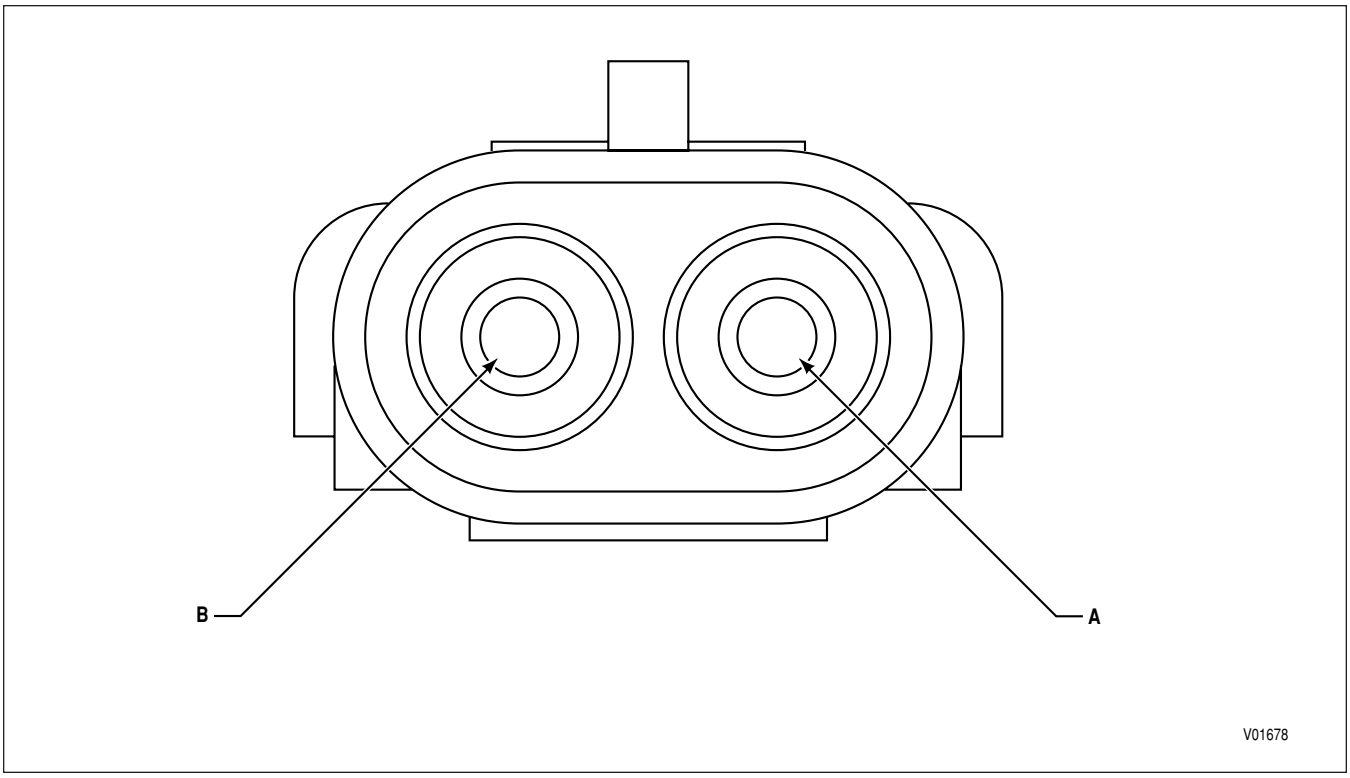

Figure D–20. Retarder Temperature Sensor Connector (4000 Product Family Pre-TransID and TID 1)

RETARDER TEMPERATURE SENSOR CONNECTOR—4000 Product Family (Pre-TransID and TransID 1)

Terminal No.	Color	Wire No.	Description	Termination Point(s)
A	Orange	138-T28	Retarder Temperature Input	ECU-T28
B	Green	135-T25	Analog Return	ECU-T25; TRANS-N; TPS-A; RMR-A

Copyright © 2005 General Motors Corp.

https://truckmanualshub.com/

APPENDIX D—WIRE/CONNECTOR CHART

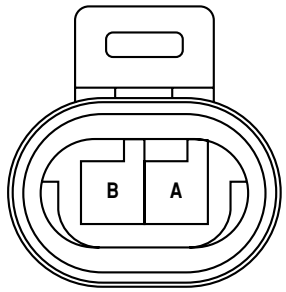

Figure D–21. Retarder Temperature Sensor Connector (3000 and 4000 Product Families, TID 2 and Later)

RETARDER TEMPERATURE SENSOR CONNECTOR— 3000 AND 4000 PRODUCT FAMILIES, TID 2 AND LATER

Terminal No.	Color	Wire No.	Description	Termination Point(s)
A	Orange	138-T28	Retarder Temperature Input	ECU-T28
B	Green	135C-T25	Analog Return	ECU-T25; TRANS-N; TPS-A

Copyright © 2005 General Motors Corp.

https://truckmanualshub.com/

APPENDIX D—WIRE/CONNECTOR CHART

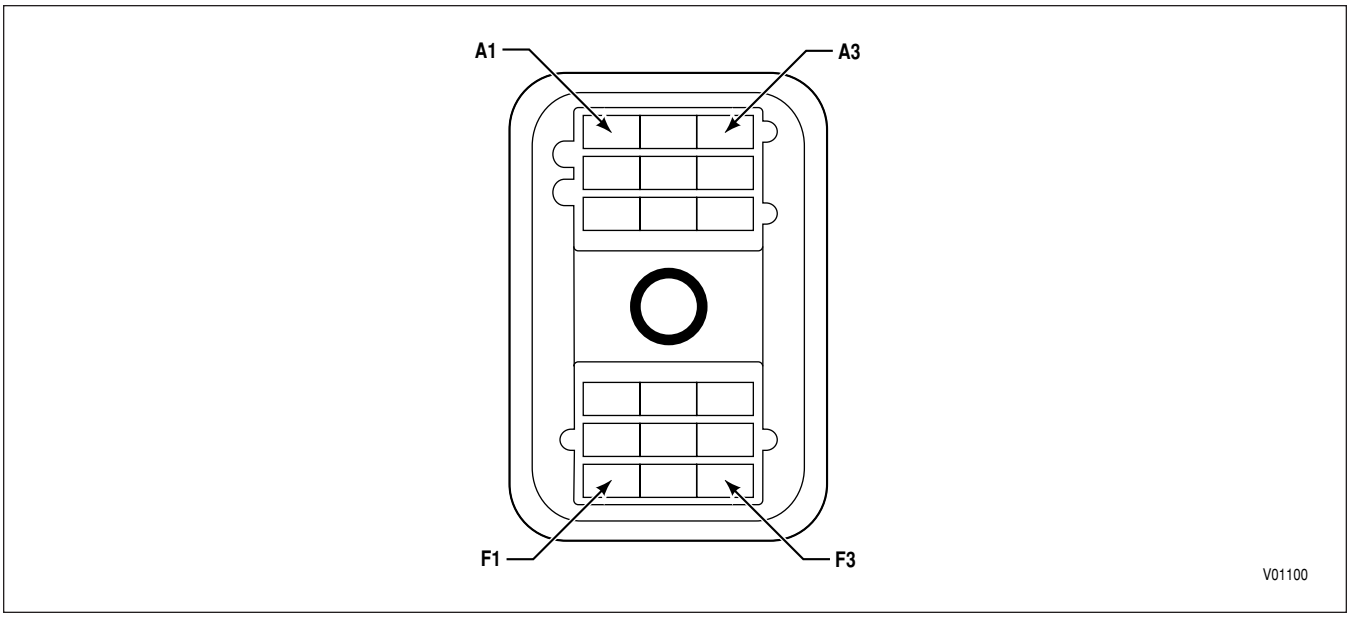

Figure D–22. VIM Connector (Harness)

VIM CONNECTOR (HARNESS)

Terminal No.	Color	Wire No.	Description	Termination Point(s)
A1	Gray	143-V17	Battery Return (–)	ECU-V17
A2	Gray	143-V32	Battery Return (–)	ECU-V32
A3			Reserved	
B1	Orange	132-V3	GPO 2	ECU-V3
B2	Tan	157-V20	Speedometer Signal	ECU-V20
B3			Reserved	
C1			Reserved	
C2	White	125-V18	GPO 4	ECU-V18
C3			Reserved	
D1	Tan	123-V6	Neutral Start	ECU-V6
D2	Tan	112-V22	GPO 3	ECU-V22
D3			Reserved	
E1	Pink	136-V1	Battery Power (+)	ECU-V1
E2	Pink	136-V16	Battery Power (+)	ECU-V16
E3			Reserved	
F1	Yellow	146-V26	Ignition Sense (+)	ECU-V26
F2	White	113-V4	Reverse Warning	ECU-V4
F3	White	114-V2	GPO 1	ECU-V2

Copyright © 2005 General Motors Corp.

https://truckmanualshub.com/

APPENDIX D—WIRE/CONNECTOR CHART

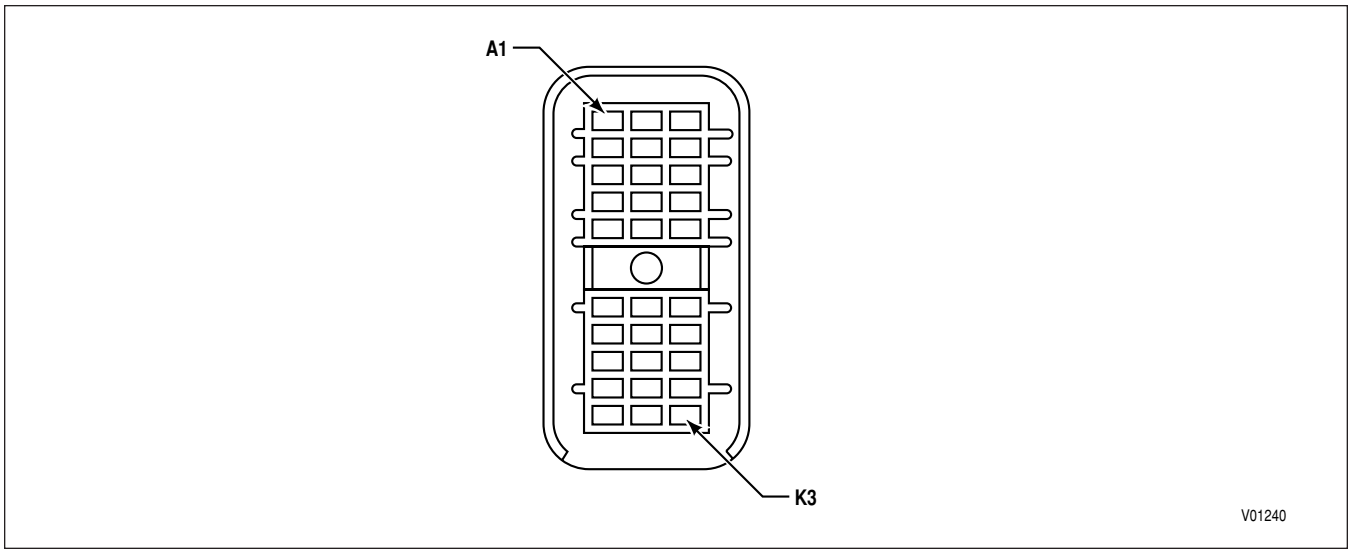

Figure D–23. VIM Connector (Harness)

VIM CONNECTOR (HARNESS 30-WAY)

Terminal No.	Color	Wire No.	Description	Termination Point(s)*
A1	Blue	313NO	Reverse Warning Relay—Normally Open	
A2	Yellow	314CM	Output Wire 114 Relay—Common	
A3	Blue	314NO	Output Wire 114 Relay—Normally Open	
B1	Yellow	313CM	Reverse Warning Relay—Common	
B2	Green	314NC	Output Wire 114 Relay—Normally Closed	
B3			Reserved	
C1	Orange	346	Ignition Power	
C2	Green	312NC	Output Wire 112 Relay—Normally Closed	
C3			Reserved	
D1	Green	325NC	Output Wire 125 Relay—Normally Closed	
D2	Green	332NC	Output Wire 132 Relay—Normally Closed	
D3			Reserved	
E1	Yellow	325CM	Output Wire 125 Relay—Common	
E2	Yellow	332CM	Output Wire 132 Relay—Common	
E3	Blue	332NO	Output Wire 132 Relay—Normally Open	
F1	Blue	323NO	Neutral Start Relay—Normally Open	
F2	Yellow	312CM	Output Wire 112 Relay—Common	
F3	Blue	312NO	Output Wire 112 Relay—Normally Open	
G1	Yellow	323CM	Neutral Start Relay—Common	
G2			Reserved	
G3			Reserved	
H1			Reserved	
H2	White	357UF	Speedometer—Unfiltered	
H3			Reserved	
J1	Pink	336A	Battery Power	
J2	Pink	336C	Battery Power	
J3			Reserved	
K1	Gray	343A	Battery Return	
K2	Gray	343C	Battery Return	
K3			Reserved	

* Termination Points are determined by OEM electrical system design.

Copyright © 2005 General Motors Corp.

https://truckmanualshub.com/

APPENDIX D—WIRE/CONNECTOR CHART

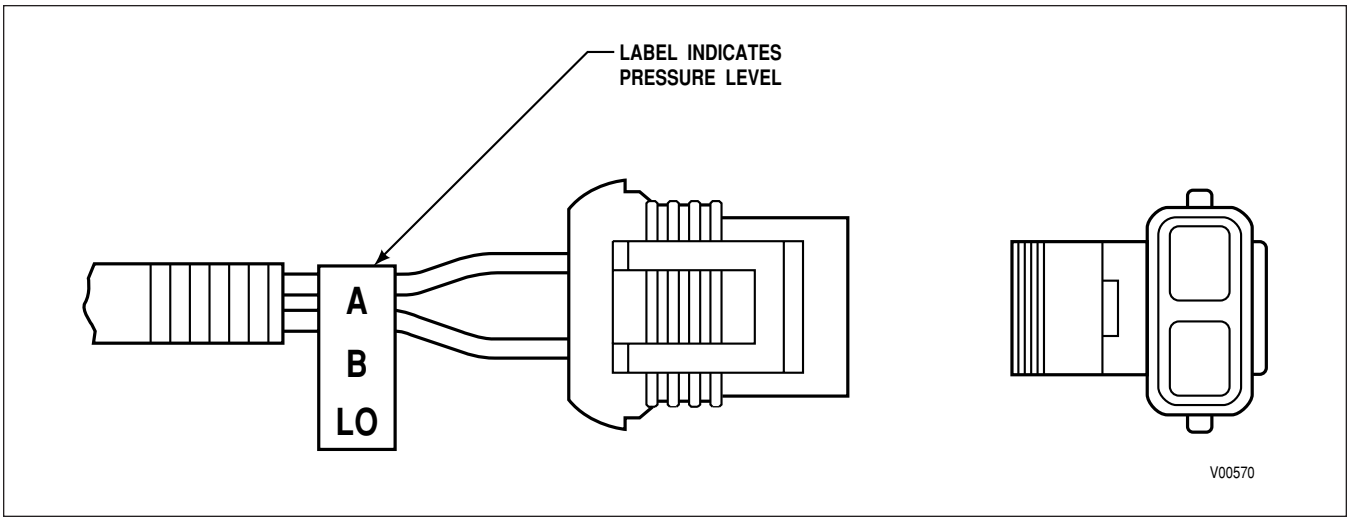

Figure D–24. Resistance Module Type 2—Single Pressure Switch and SCI Interface

RESISTANCE MODULE TYPE 2

Terminal No.
A
B

SCI INTERFACE CONNECTOR

Terminal No.	Color	Wire No.	Description	Termination Point(s)
A	White	142-S1	Serial Communication Interface, Hi	ECU-S1, DDRP-J, DDRD-A
B	Blue	151-S17	Serial Communication Interface, Lo	ECU-S17, DDRP-K, DDRD-B

Copyright © 2005 General Motors Corp.

https://truckmanualshub.com/

APPENDIX D—WIRE/CONNECTOR CHART

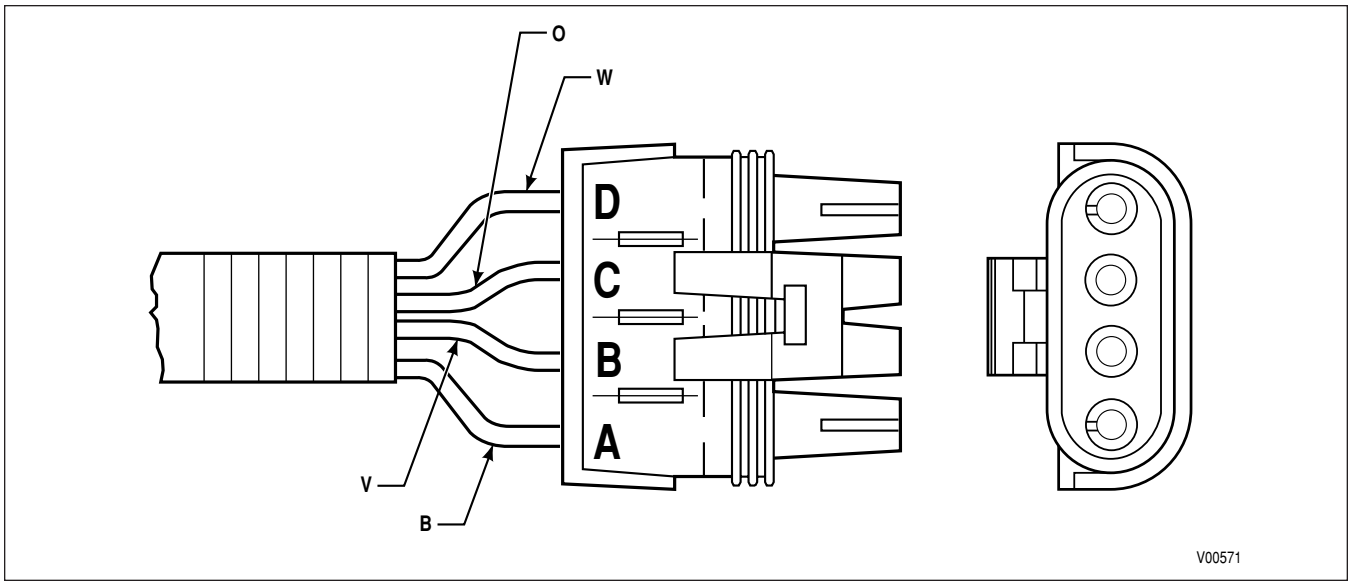

Figure D–25. Resistance Module Type 3—Bendix E-10R Pedal

RESISTANCE MODULE TYPE 3

Terminal No.	Wire Color
A	Blue
B	Violet
C	Orange
D	White

Copyright © 2005 General Motors Corp.

https://truckmanualshub.com/

APPENDIX D—WIRE/CONNECTOR CHART

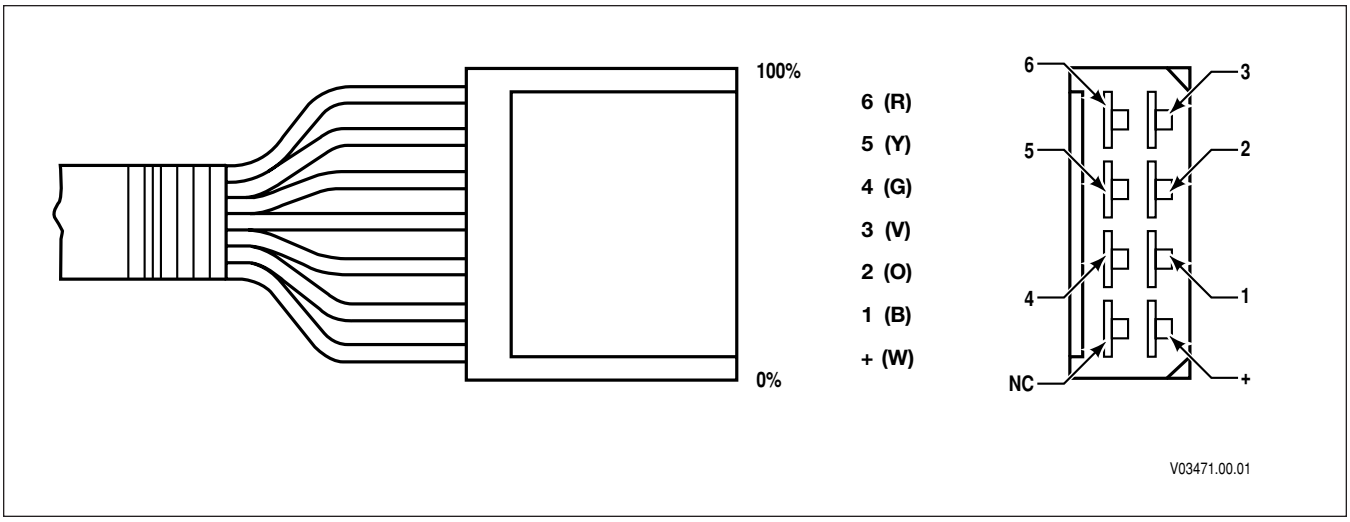

Figure D–26. Resistance Module Type 5—Hand Lever

RESISTANCE MODULE TYPE 5

Terminal No.	Wire Color
+	White
1	Blue
2	Orange
3	Violet
4	Green
5	Yellow
6	Red

Copyright © 2005 General Motors Corp.

https://truckmanualshub.com/

APPENDIX D—WIRE/CONNECTOR CHART

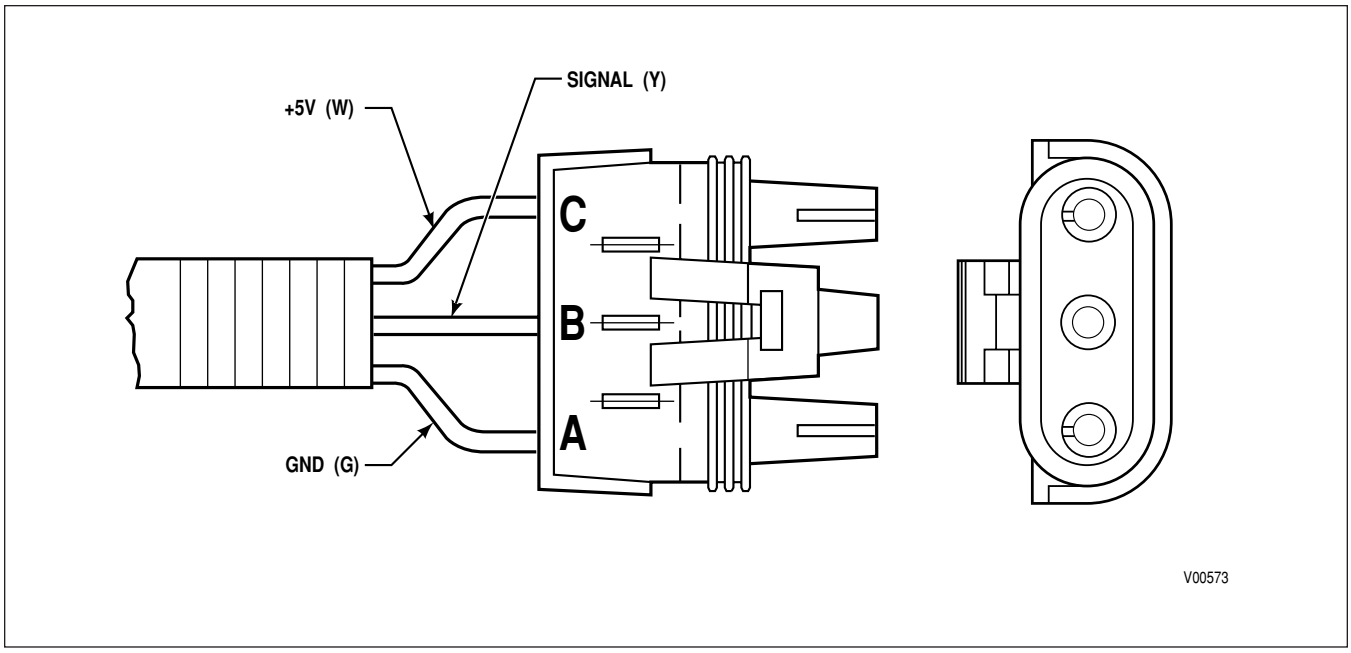

Figure D–27. Resistance Module Type 7—Dedicated Pedal

RESISTANCE MODULE TYPE 7

Terminal No.	Wire Color
A	Green
B	Yellow
C	White

Copyright © 2005 General Motors Corp.

https://truckmanualshub.com/

APPENDIX D—WIRE/CONNECTOR CHART

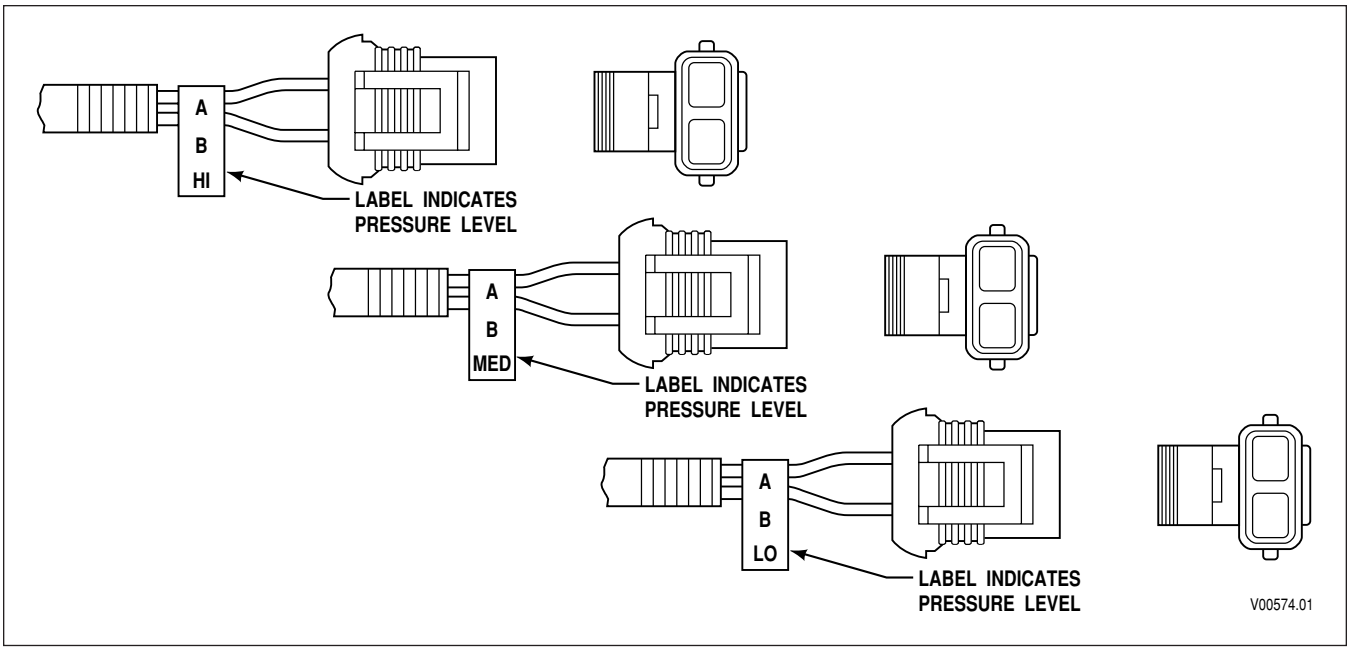

Figure D–28. Resistance Module Type 8—Three Pressure Switch

RESISTANCE MODULE TYPE 8

LOW PRESSURE

Terminal No.	Wire Color
A	White
B	Blue

MEDIUM PRESSURE

Terminal No.	Wire Color
A	White
B	Orange

HIGH PRESSURE

Terminal No.	Wire Color
A	White
B	Violet

Copyright © 2005 General Motors Corp.

https://truckmanualshub.com/

APPENDIX D—WIRE/CONNECTOR CHART

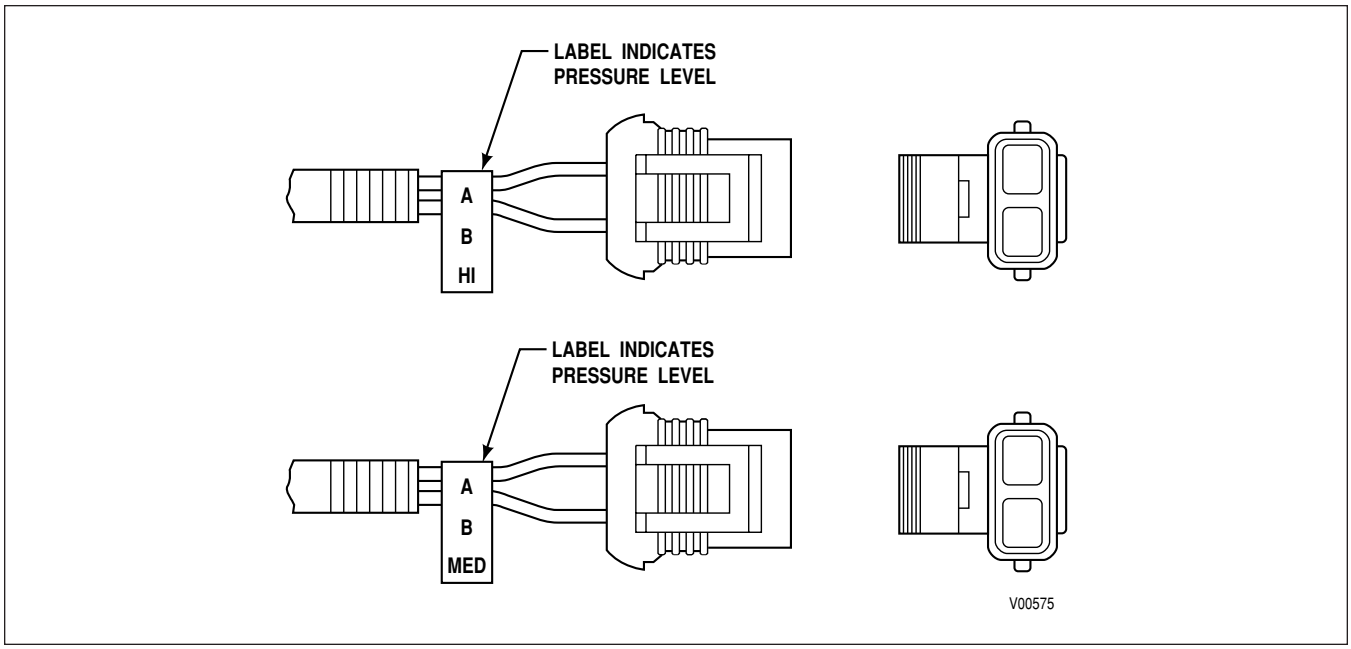

Figure D–29. Resistance Module Type 9—Two Pressure Switch

RESISTANCE MODULE TYPE 9

MEDIUM PRESSURE

Terminal No.	Wire Color
A	White
B	Orange

HIGH PRESSURE

Terminal No.	Wire Color
A	White
B	Violet

Copyright © 2005 General Motors Corp.

https://truckmanualshub.com/

APPENDIX D—WIRE/CONNECTOR CHART

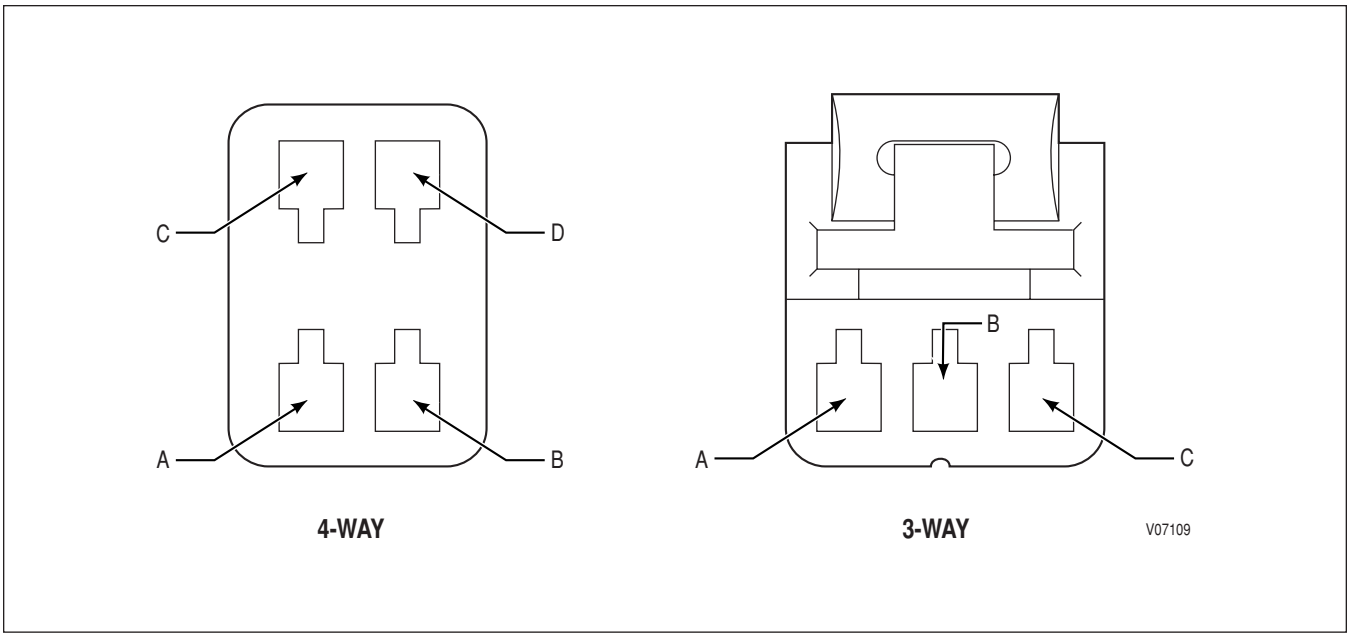

Figure D–30. Oil Level Sensor Plug

OIL LEVEL SENSOR CONNECTOR

4-WAY CONNECTOR (ORIGINAL OLS)

Terminal No.	Color	Wire No.	Description	Termination Point(s) 31-Way Feedthrough Harness Connector
A	Blue	165	Oil Level Sensor Input	Trans-Y
B	Green	135	Analog Return	Trans-N
C				
D	Pink	124	Sensor Power	Trans-D

3-WAY CONNECTOR (REDESIGNED OLS)

Terminal No.	Color	Wire No.	Description	Termination Point(s) 31-Way Feedthrough Harness Connector
A	Black	135	Analog Return	Trans-N
B	White	165	Oil Level Sensor Input	Trans-Y
C	Red	124	Sensor Power	Trans-D

Copyright © 2005 General Motors Corp.

https://truckmanualshub.com/

APPENDIX D—WIRE/CONNECTOR CHART

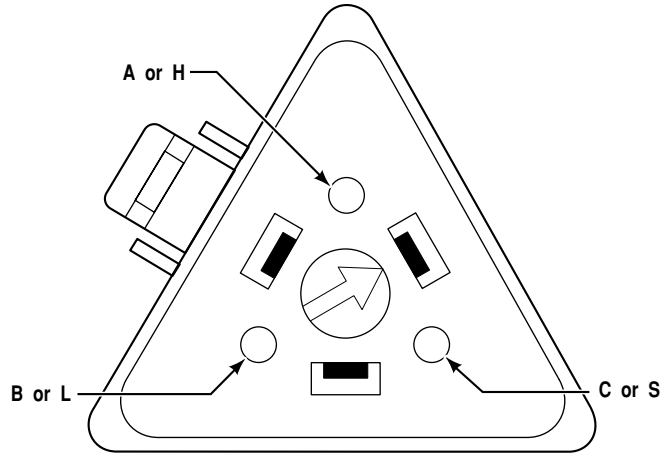

Figure D–31. J1939 Interface Connector

J1939 INTERFACE CONNECTOR

Terminal No.	Color	Wire No.	Description	Termination Point(s)
A or H	Pink	183-S13	J1939 Controller, Hi	ECU-S13
B or L	Gray	184-S29	J1939 Controller, Lo	ECU-S29
C or S	Green	182-S12	J1939 Shield	ECU-S12

Copyright © 2005 General Motors Corp.

https://truckmanualshub.com/

APPENDIX D—WIRE/CONNECTOR CHART

NOTES

Copyright © 2005 General Motors Corp.

https://truckmanualshub.com/

APPENDIX E — CONNECTOR PART NUMBERS, TERMINAL PART NUMBERS, TOOL PART NUMBERS, AND REPAIR INSTRUCTIONS

Contents **Page**

List of Special Tools Required To Service WTEC III Wiring Harnesses E–2

1–1. Delphi-Packard Micro Pack 100W Connectors (ECU, VIWV, VIWS, Shift Selectors) E–5

1–2. Delphi-Packard Metri-Pack 150 Series Connectors—Pull-to-Seat (Speed Sensor; Accumulator Solenoid; 30-Way and 18-Way VIM) E–9

1–3. Delphi-Packard Metri-Pack 150 Series Connectors—Push-to-Seat (Oil Level Sensor) E–13

1–4 Delphi-Packard Metri-Pack 150 Series Connectors—Push-to-Seat (All Models With TID 2 and Later Sump Temperature Thermistor) E–17

1–5. Delphi-Packard Metri-Pack 280 Series Connectors—Pull-to-Seat (Internal Harness Solenoid and C3 Pressure Switch) E–19

1–6. Delphi-Packard Metri-Pack 280 Series Connectors—Push-to-Seat (Diagnostic Connector) . E–21

1–7. Delphi-Packard WeatherPack Connectors (TPS; 3-Way RMR Sensor; 4000 Retarder Temperature; 3-Way RMR Device (Dedicated Pedal)) E–25

1–8. Amp Products Connectors (8-Way RMR Device (Hand Lever)) E–29

1–9. Deutsch IPD/ECD Connectors (31-Way Bulkhead; 31-Way Feedthrough Harness; 16-Way Optional Sensor Harness; 6-Way Optional Diagnostic Connector; 9-Way Optional Diagnostic Connector) E-31

1–10. ITT Cannon Connectors—Crimped (37-Way FMTV Bulkhead; 6-Way Transfer Case; 8-Way 3000 Retarder) E–35

1–11. ITT Cannon Connectors—Soldered (2-Way 4000 Retarder) E–39

1–12. Deutsch DT Series Connectors (3-Way J1939 Connector) E–43

1–13. AMP MATE-N-LOK II Connectors (Compact Shift Selector) E–47

1–14. Repair of a Broken Wire with In-Line Butt Splice E–51

1–15. List of WTEC III Connector Parts E–53

NOTE: ***Allison Transmission provides for service of wiring harnesses and wiring harness components as follows:***

- ***Repair parts for the internal wiring harness and for wiring harness components attached to the shift selector will be available through the Allison Transmission Parts Distribution Center (PDC). Use the P/N from your appropriate parts catalog or from Appendix E in this manual. Allison Transmission is responsible for warranty on these parts.***
- ***Repair parts for the external harnesses and external harness components must be obtained from St. Clair Technologies Inc. (SCTI). SCTI provides parts to any Allison customer or OEM and is responsible for warranty on these parts. SCTI recognizes Allison Transmission, manufacturers, and SCTI part numbers. SCTI provides a technical HELPLINE at 519-627-1673 (Wallaceburg). SCTI will have parts catalogs available. The SCTI addresses and phone numbers for parts outlets are:***

St. Clair Technologies, Inc.
920 Old Glass Road
Wallaceburg, Ontario, Canada N8A 4L8
Phone: 519-627-1673
Fax: 519-627-4227

St. Clair Technologies, Inc.
Calle Damanti S/N Col
Guadalupe—Guaymas
Sonora, Mexico CP85440
Phone: 011-526 2222-43834
Fax: 011-526-2222-43553

- ***St. Clair Technologies, Inc. stocks a WTEC III external harness repair kit, P/N 29532362, as a source for some external harness repair parts. SCTI is the source for external harness repair parts.***

https://truckmanualshub.com/

APPENDIX E — CONNECTOR PART NUMBERS, TERMINAL PART NUMBERS, TOOL PART NUMBERS, AND REPAIR INSTRUCTIONS

List Of Special Tools Required To Service WTEC III Wiring Harnesses

Tool Number	Tool Type	Paragraph Reference
23046604	Splice, Sealed (14–16 AWG)	1–14
23046605	Splice, Sealed (18–22 AWG)	1–14
J 25070	Heat Gun	1–14
J 34182	Crimper 1	1–9, 1–10, 1–12
J 34513	Remover 1	1–9
J 35123	Crimper (Alternate)	1–2, 1–3
J 35606	Crimper (Alternate)	1–7
J 35615	Wire Stripper 1	1–2, 1–3, 1–5, 1–14
J 35689-A	Remover	1–2, 1–3, 1–4
J 38125-6	Crimper	1–6, 1–7
J 38125-7	Crimper	1–2, 1–3, 1–5, 1–6, 1–8
J 38125-8	Crimper	1–14
J 38125-10	Remover	1–7
J 38125-13	Remover	1–5, 1–6, 1–8
J 38582-3	Remover	1–9
J 38852	Crimper (Alternate)	1–7
J 39227	Remover	1–1
J 39841	Terminal Remover/Installer (3000 Retarder Before January 1, 1998)	1–10
J 39842	Terminal Remover/Installer (3000 7-Speed T-Case)	1–10
J 41193	Connector Repair Kit (FMTV)	1–10
J 41193-1	Guide Pin	1–10
J 41193-2	Insertion Tool	1–10
J 41193-3	Terminal Remover	1–10
J 41194	Extractor/Inserter	1–9
J 42215	Crimper	1–1, 1–4
J 47027	Crimper DHD	1–9
None	50–70 Percent Tin Resin Core Solder	1–11
None	Pen-Type Soldering Iron (Max OD = 3.175 mm)	1–11
None	Desoldering Braid	1–11
58529-1	AMP Pro-Crimper II	1–13
58529-2	Die Assembly for AMP Pro-Crimper II	1–13
58440-1	Alternate AMP Hand-Crimping Tool	1–13

Copyright © 2005 General Motors Corp.

https://truckmanualshub.com/

APPENDIX E — CONNECTOR PART NUMBERS, TERMINAL PART NUMBERS, TOOL PART NUMBERS, AND REPAIR INSTRUCTIONS

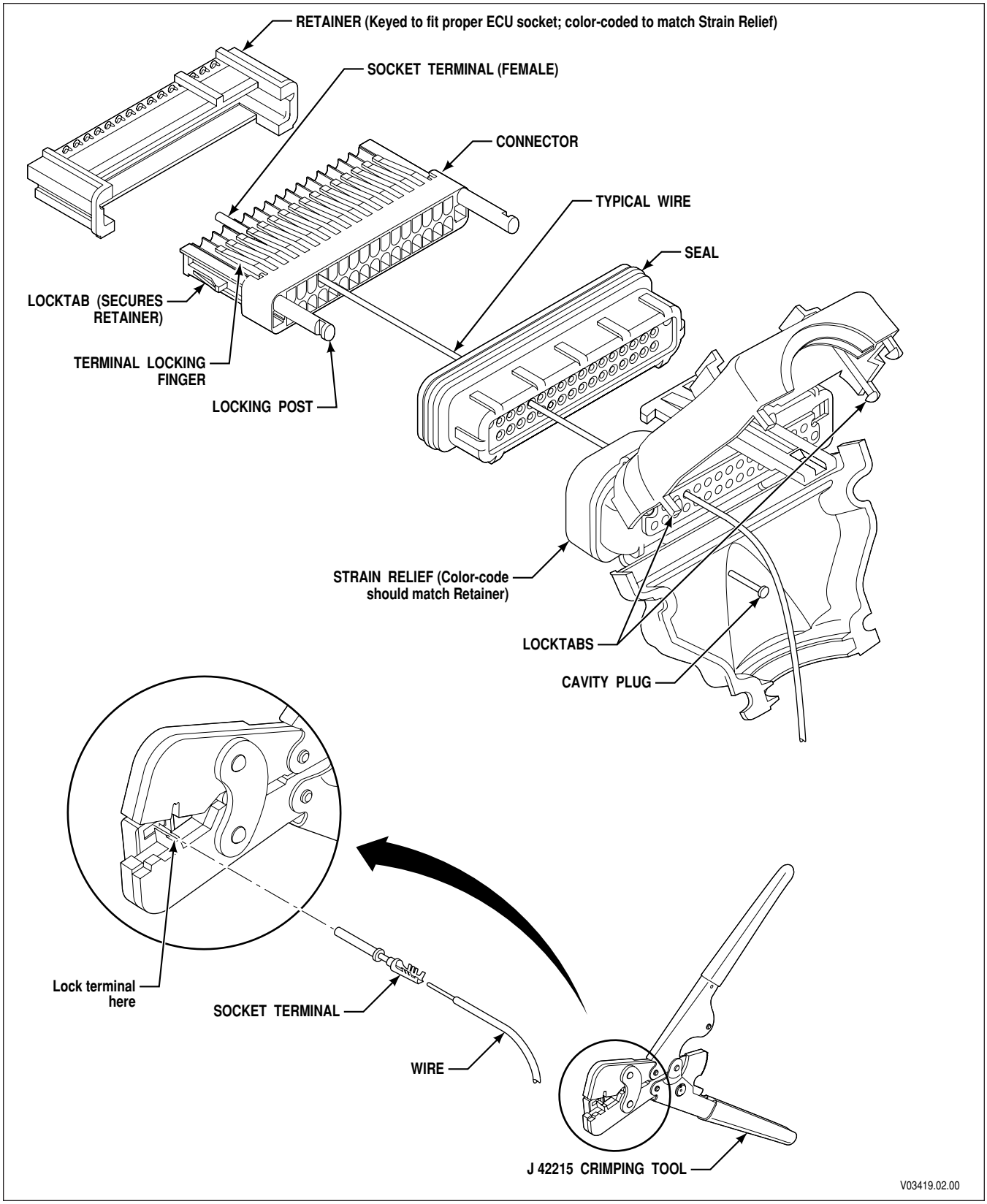

Figure E–1A. Delphi-Packard Micro Pack Connector (ECU)

Copyright © 2005 General Motors Corp.

https://truckmanualshub.com/

APPENDIX E — CONNECTOR PART NUMBERS, TERMINAL PART NUMBERS, TOOL PART NUMBERS, AND REPAIR INSTRUCTIONS

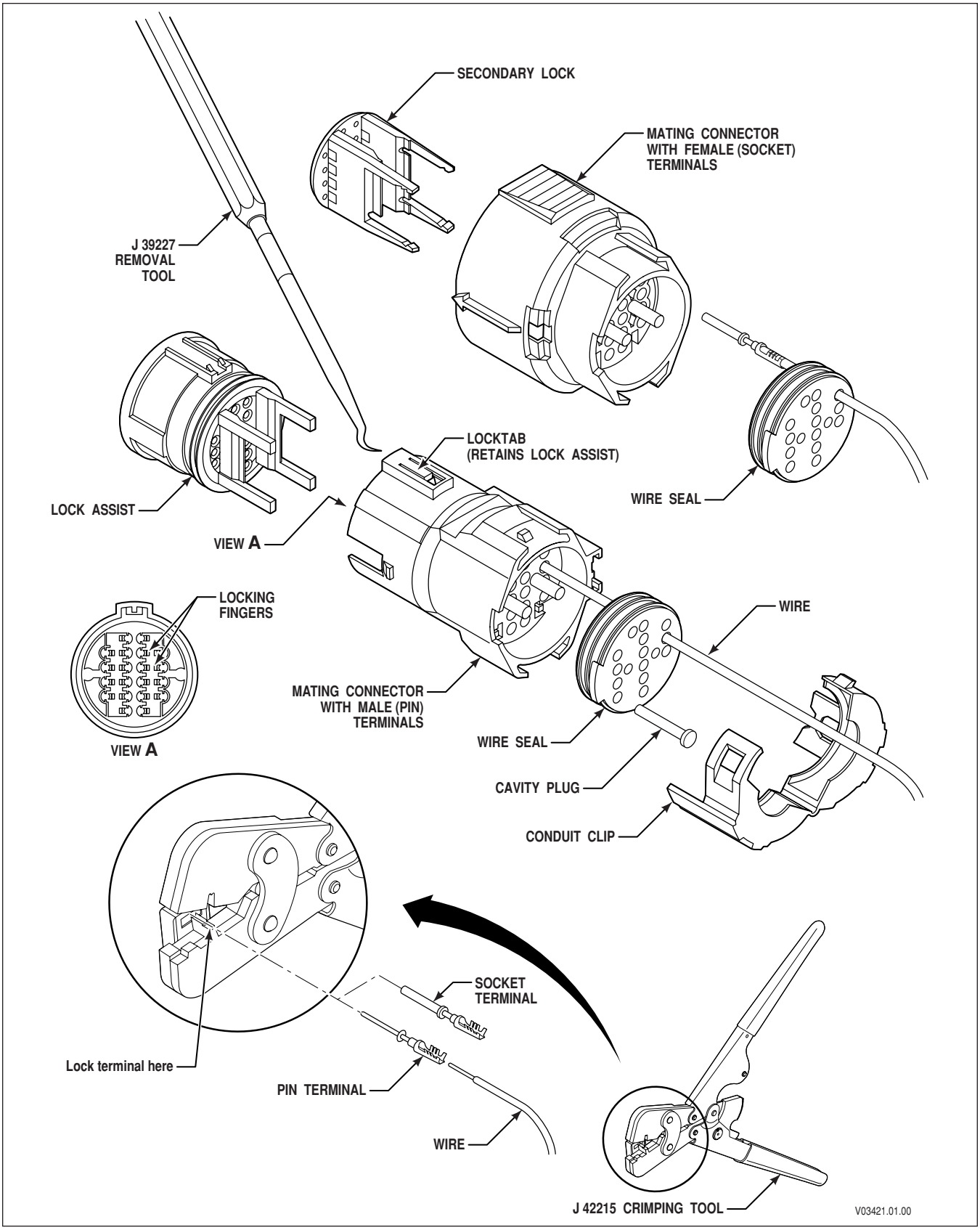

Figure E–1B. Delphi-Packard Micro Pack Connector (VIWV, VIWS, Shift Selector)

Copyright © 2005 General Motors Corp.

https://truckmanualshub.com/

APPENDIX E — CONNECTOR PART NUMBERS, TERMINAL PART NUMBERS, TOOL PART NUMBERS, AND REPAIR INSTRUCTIONS

1–1. DELPHI-PACKARD MICRO PACK 100W CONNECTORS (ECU, VIWV, VIWS, SHIFT SELECTORS)

A. Connector/Terminal Repairs

Crimping Tool	J 42215
Remover Tool	J 39227

Use	Description	Manufacturers P/N
Electronic Control Unit (Harness)	Strain Relief, 32-Way Black	12191001 *
	Seal, 32-Way	15305333 *
	Cavity Plug	12129557 *
	Connector	15305371
	Retainer, Black	12129021 *
	Terminal, Socket	12084912 *
	CPA (Connector Position Assurance)	12177289 *
	Strain Relief, 32-Way Gray	12191002 *
	Retainer, Gray	12129022 *
	Strain Relief, 32-Way Blue	12191003 *
	Retainer, Blue	12129023 *
VIWV and VIWS (Harness)	Connector, Gray	12160542
	Wire Seal, Green	12110693
VIWV Only	Lock Assist, Blue	12191177
	Terminal, Pin	12160551
	Cavity Plug	12129557 *
	Conduit Clip, Black	12176394
VIWS Only	Lock Assist, White	12191178
Shift Selector (Harness)	Connector, Gray	12160280 *
	Wire Seal, Gray	15304882 *
	Secondary Lock, Green	12160494 *
	Terminal, Socket	12084912 *
Shift Selector (Device)	Connector, Gray	12160542
(Kit P/N 29530475)	Wire Seal, Green	12110693
	Lock Assist/Seal, Green	12191176
	Conduit Clip, Black	12176394 *
VIWV and VIWS (Device)	Connector, Gray	12160280
	Wire Seal, Gray	15304882
VIWV Only	Secondary Lock, Blue	12191172
	Terminal, Socket	12084912
VIWS Only	Secondary Lock, White	12191173

* These parts are contained in Allison Kit P/N 29532362.

Copyright © 2005 General Motors Corp.

https://truckmanualshub.com/

APPENDIX E — CONNECTOR PART NUMBERS, TERMINAL PART NUMBERS, TOOL PART NUMBERS, AND REPAIR INSTRUCTIONS

B. Terminal Removal

1. ECU Harness Connectors *(Figure E–1A)*

CAUTION:	The color-code of the strain relief should match the color-code of the retainer. However, cases have been reported where this has not occurred. The retainer color-code and key configuration ensures that the proper wiring harness connector is in the right socket of the ECU. The color-code of the strain relief is of secondary importance and may not agree with the retainer. Change the strain relief to match the color-code of the retainer (Figure E–1A) when color-code mismatch is found.

   a. Use a small-bladed screwdriver to gently release the locktabs at the splitline of the strain relief.
   b. Spread the strain relief open.
   c. Remove the retainer from the connector by using a small-bladed screwdriver to depress the locktabs on the side of the connector.
   d. Remove a selected terminal by pushing forward on the wire or by lifting the locking finger and pulling the wire and terminal rearward out of the connector.

2. VIWV and VIWS Harness Connectors and Shift Selector (Device) Connectors *(Figure E–1B)*
   a. Lift locktab on the side of the connector and remove the lock assist.
   b. Open the conduit clip on the back of the connector after lifting locktabs on each side and sliding clip back to release it from connector.
   c. Use the J 39227 tool to release the locking finger inside the connector and pull the terminal/wire out the rear of the connector.

3. VIWV and VIWS (Device) Connectors and Shift Selector Harness Connectors *(Figure E–1B)*
   a. Carefully insert a small screwdriver blade between the connector body and the secondary lock. Twist/pry to remove the secondary lock from the connector body.
   b. Open the conduit clip on the back of the connector after lifting locktabs on each side and sliding clip back to release it from connector.
   c. Use the J 39227 tool to release the locking finger inside the connector and pull the terminal/wire out the rear of the connector.

C. Terminal Crimping

1. Carefully strip insulation to leave 5.0 mm ± 0.5 mm (0.20 ± 0.02 inch) of bare wire showing.
2. Insert the new terminal to be crimped in the J 42215 crimping tool. There is a spring-loaded terminal positioner at the front of the tool to hold the terminal in place. Squeeze the crimper handles for a few clicks to start the crimping process but leave room to insert the wire end.
3. Insert the bare wire end into the terminal. Squeeze the crimper handles to complete the crimping process and until the crimper handles open when released to remove the terminal/wire from the tool.

Copyright © 2005 General Motors Corp.

https://truckmanualshub.com/

APPENDIX E — CONNECTOR PART NUMBERS, TERMINAL PART NUMBERS, TOOL PART NUMBERS, AND REPAIR INSTRUCTIONS

C. Terminal Crimping ***(cont'd)***

4. Complete terminal installation for VIW and Shift Selector Connectors as follows: *(Figure E–1B)*
   a. Insert the wire seal in the back of the connector.
   b. Push the terminal/wire assembly through the proper hole in the back of the wire seal. Push the wire in until the terminal clicks into position. Gently pull rearward on the wire to be sure that the terminal is fully seated. Install cavity plugs as needed.
   c. Install the lock assist or secondary lock into the connector body.
   d. Close the conduit clip around the conduit and lock the clip into the rear of the connector body.
5. Complete terminal installation of the ECU Connectors as follows: *(Figure E–1A)*
   a. Align the locking posts on the connector with the seal and push the locking posts through the seal into the mating holes in the strain relief (if the connector was removed from the strain relief).
   b. Push the terminal/wire assembly through the proper hole in the back of the seal. Push the wire in until the terminal clicks into position.

NOTE: All terminals must be properly positioned to install the retainer in Step (5c).

   c. Install the retainer on the connector body to lock the terminals in position. Pull rearward on the wire to be sure that the terminal is fully seated. Install cavity plugs as needed.
   d. Position the conduit inside the strain relief and snap the strain relief halves together.

Copyright © 2005 General Motors Corp.

https://truckmanualshub.com/

APPENDIX E — CONNECTOR PART NUMBERS, TERMINAL PART NUMBERS, TOOL PART NUMBERS, AND REPAIR INSTRUCTIONS

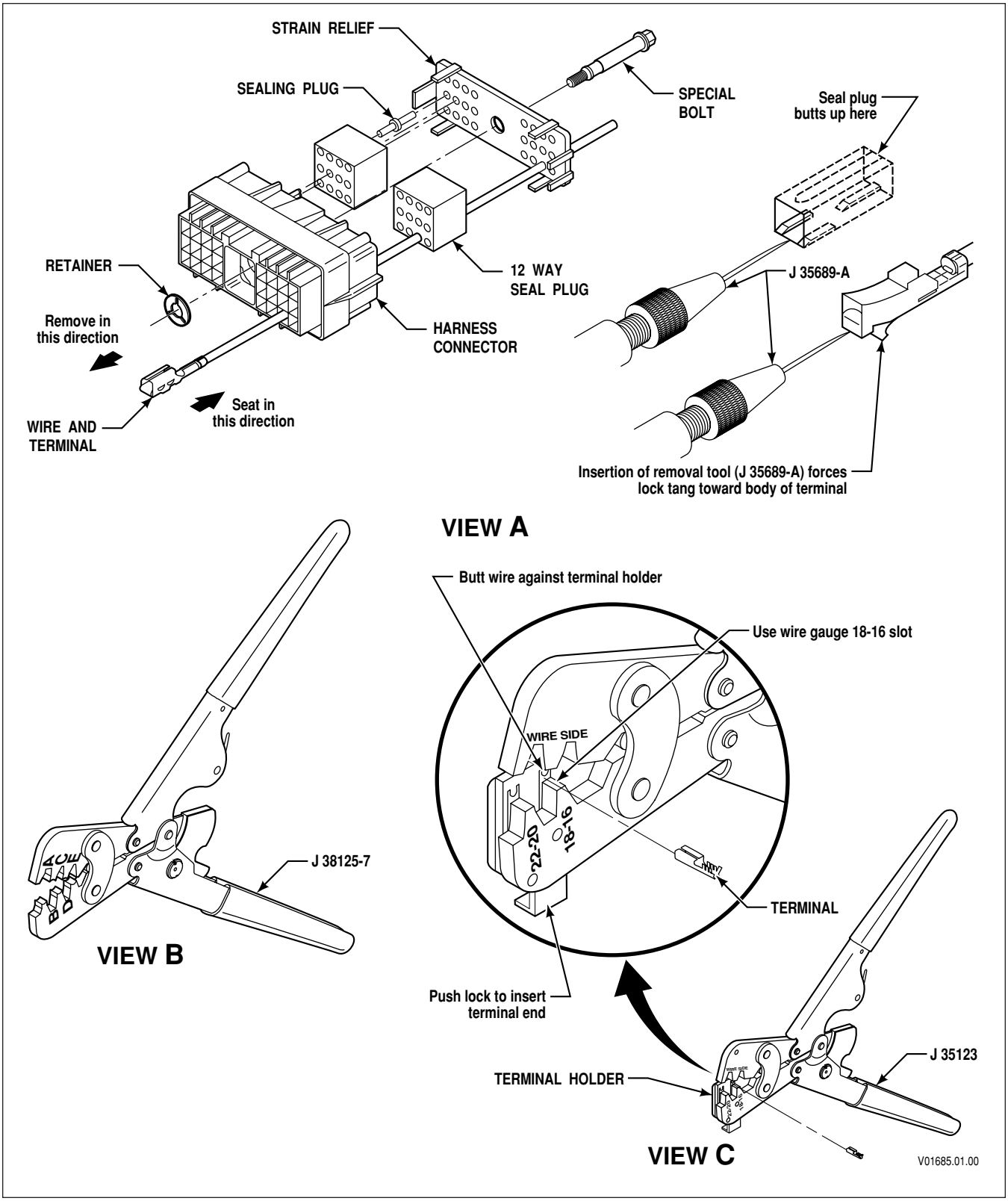

Figure E–2. Delphi-Packard Metri-Pack 150 Series Connectors—Pull-to-Seat (Speed Sensor; Accumulator Solenoid; Retarder Solenoid, TID 2; 30-Way and 18-Way VIM)

Copyright © 2005 General Motors Corp.

https://truckmanualshub.com/

APPENDIX E — CONNECTOR PART NUMBERS, TERMINAL PART NUMBERS, TOOL PART NUMBERS, AND REPAIR INSTRUCTIONS

1–2. DELPHI-PACKARD METRI-PACK 150 SERIES CONNECTORS—PULL-TO-SEAT (SPEED SENSOR; ACCUMULATOR SOLENOID; 30-WAY AND 18-WAY VIM)

A. Connector/Terminal Repairs

Wire Stripper	
Crimping Tool	J 35615
Wire Crimp	J 38125-7
Insulation Crimp	Anvil “E”
Alternate Crimping Tool	Anvil “C”
Remover Tool	J 35123
	J 35689-A

Use	Description	Manufacturers P/N
Turbine Speed	Connector	12162723
(Nt) Sensor (3000 Product Family)	Terminal	12110236
(**Former**)	Connector	12162193
Turbine Speed	Terminal	12103881
(Nt) Sensor (4000 Product Family)		
(**Former**)	Connector	12162193
Engine/Output (All Models)	Terminal	12103881
(Ne/No) Speed Sensor		
(Current)	Connector	15490464
Turbine Speed	CPA	15496486
(Nt) Sensor (4000 Product Family)	Terminal	15305350
	Cable Seal	15305351
	Convolute Capter, TPA	15358890
(Current)	Connector	15490464
Engine/Output (All Models)	CPA	15496486
(Ne/No) Speed Sensor	Terminal	15305350
	Cable Seal	15305351
	Convolute Capter, TPA	15358890
Accumulator (N Solenoid) And	Connector	12162197
Retarder (H Solenoid For TID 2)	Terminal	12103881
Vehicle Interface	Connector (VIM)	
Module (VIM)	Connector Body	12040920
	9-Way Seal (x2)	12040936
	18-Way Strain Relief	12110545
	Special Bolt	12129426
	Bolt Retainer	12034236
	Sealing Plug	12034413
	Terminal	12103881

Copyright © 2005 General Motors Corp.

https://truckmanualshub.com/

APPENDIX E — CONNECTOR PART NUMBERS, TERMINAL PART NUMBERS, TOOL PART NUMBERS, AND REPAIR INSTRUCTIONS

Vehicle Interface Module (Vehicle)	Connector (OEM)	
	Connector Body	12034397
	15-Way Seal (x2)	12040879
	30-Way Strain Relief	12110546
	Special Bolt	12129426
	Bolt Retainer	12034236
	Sealing Plug	12034413
	Terminal	12103881

B. Terminal Removal

NOTE: Do not solder crimps.

1. Insert needle end of terminal remover J 35689-A into the small notch between the connector and the terminal to be removed (Figure E–2, View A). Push the lock tang toward the terminal.
2. Push the wire and terminal out of the connector—this is a “pull-to-seat” terminal.
3. Pull terminal as far as necessary from the connector. This will be limited by the number of other wires inserted into the connector and by the distance between the back side of the connector and the beginning of the harness covering.
4. If terminal is to be replaced, cut the terminal between the core and insulation crimp to minimize wire loss.

C. Terminal Crimping—VIM And Speed Sensor Terminals (Standard Crimping Tool)

1. If a spare wire is used, the wire should be pushed through the proper hole in the strain relief (if used), through the wire seal, and out the other side of the connector before stripping.
2. Carefully strip insulation 4.5 mm ± 0.5 mm (0.18 ± 0.02 inch). Unless insulation crimp is over-tight, Automatic Wire Stripper J 35615 will remove insulation and crimp from old terminal without damaging wire.
3. Place core crimp portion of terminal on bed of anvil “E” and squeeze crimper enough to keep terminal from dropping (Figure E–2, View B).
4. Position wire core in terminal and squeeze crimper tool to complete the core crimp. **Be sure to orient the terminal so that it is properly aligned with the terminal cavity in the connector.** The terminal should be positioned so that the lock tang is on the side of the cavity which has the notch in the middle (for the remover tool).
5. Position insulation crimp of terminal on anvil “C” so that the entire insulation crimp area and a portion of the terminal between the core and insulation crimp areas are supported by the anvil. Complete the insulation crimp.
6. Be sure lock tang is lifted to allow proper reseating of the terminal.
7. Pull on the wire to pull the terminal completely into the cavity. A click will be heard and the terminal should stay in place if the wire is pushed.

Copyright © 2005 General Motors Corp.

https://truckmanualshub.com/

APPENDIX E — CONNECTOR PART NUMBERS, TERMINAL PART NUMBERS, TOOL PART NUMBERS, AND REPAIR INSTRUCTIONS

D. Terminal Crimping Using Alternate Tool J 35123

1. If a spare wire is used, the wire should be pushed through the proper hole in the strain relief (if used) and the wire seal, and out the other side of the connector prior to stripping.
2. Insert remover tool in front side of connector to release locktab and push terminal out front of connector. Pull the terminal and wire out the front of the connector to complete Steps (3) through (7).
3. Push open the terminal holder on the crimper tool J 35123 and insert a terminal into the opening marked 18–16 (Figure E–2, View C) so that the crimp ends point up. Release the terminal holder.
4. Slightly close the crimping tool (close until one click is heard) but do not start to crimp the terminal. Place the terminal on the wire so it is in the same position as it will be when pulled back into the connector. The terminal should be positioned so that the lock tang is on the side of the cavity which has the notch in the middle (for the remover tool).
5. Insert the wire into the terminal until the wire contacts the holder. By doing this, the core and insulation should be properly positioned for the core and insulation crimp wings.
6. Squeeze the crimper fully until it opens when released.
7. Open the terminal holder and remove the wire and terminal from the crimping tool.
8. Pull on the terminal to assure a tight crimp.
9. Be sure lock tang is lifted to allow proper reseating of the terminal.
10. Pull on the wire to pull the terminal completely into the cavity. A click will be heard and the terminal should stay in place if the wire is pushed.

Copyright © 2005 General Motors Corp.

https://truckmanualshub.com/

APPENDIX E — CONNECTOR PART NUMBERS, TERMINAL PART NUMBERS, TOOL PART NUMBERS, AND REPAIR INSTRUCTIONS

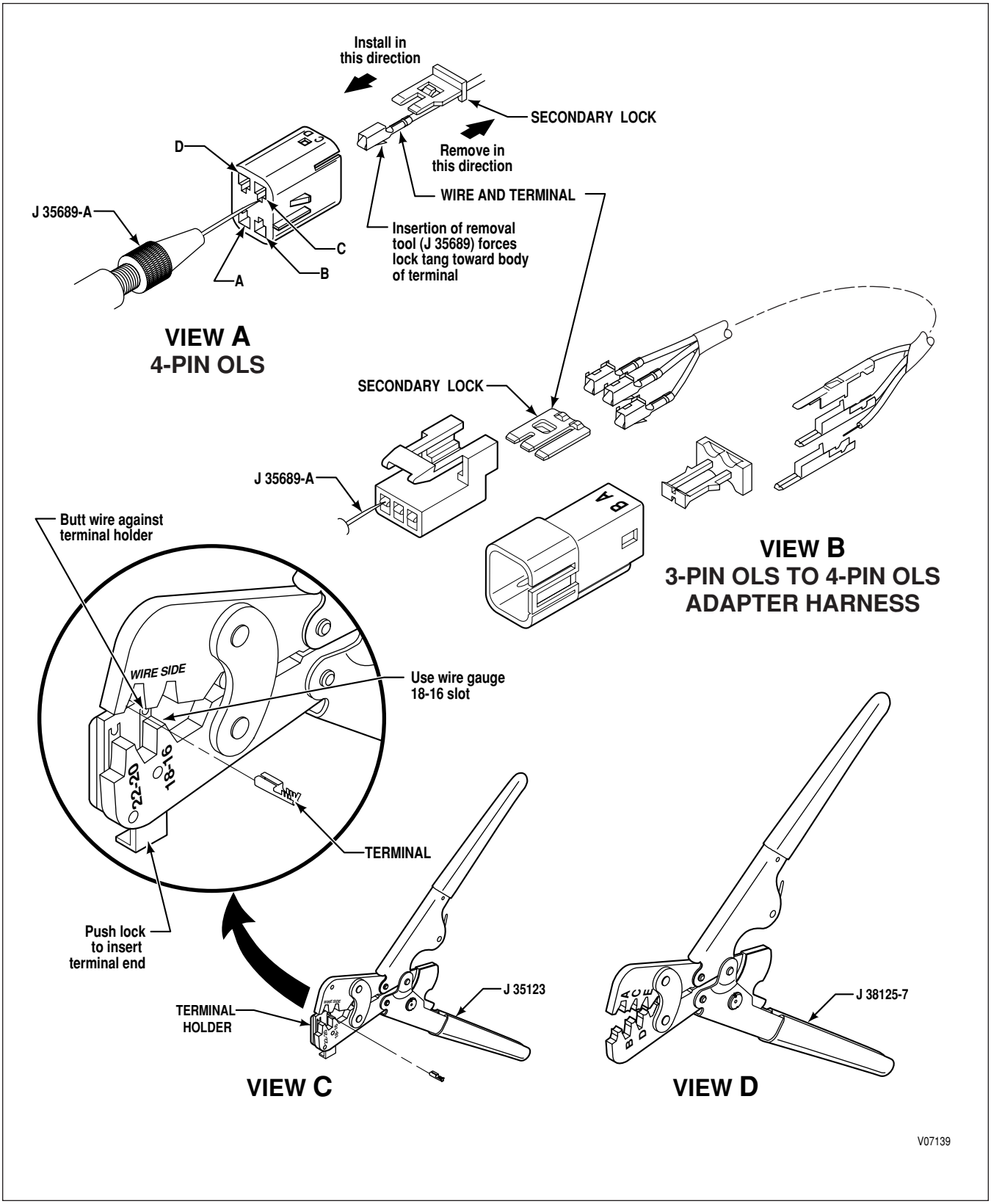

Figure E–3. Delphi-Packard Metri-Pack 150 Series Connectors—Push-to-Seat (Oil Level Sensor)

Copyright © 2005 General Motors Corp.

https://truckmanualshub.com/

APPENDIX E — CONNECTOR PART NUMBERS, TERMINAL PART NUMBERS, TOOL PART NUMBERS, AND REPAIR INSTRUCTIONS

1–3. DELPHI-PACKARD METRI-PACK 150 SERIES CONNECTORS—PUSH-TO-SEAT (OIL LEVEL SENSOR)

A. Connector/Terminal Repairs

Wire Stripper	J 35615
Crimping Tool	J 38125–7
Wire Crimp	Anvil “E”
Insulation Crimp	Anvil “C”
Alternate Crimping Tool	J 35123
Remover Tool	J 35689–A

Use	Description	Manufacturers P/N
Oil Level Sensor 4-Pin Design Used Prior To 3000 Product Family S/N 6510220479 and 4000 Product Family S/N 6610048466 (Except S/N 6610052000 through 6610052184)	4-Pin Receptacle (View B) Terminal (Pin) Secondary Lock, TPA 4-Pin Plug (View A) Terminal (Socket) Secondary Lock	12047786 12047581 12047787 12047785 12047767 12047664
Oil Level Sensor 3-Pin Design Used Starting With 3000 Product Family S/N 6510220479 and 4000 Product Family S/N 6610048466 (Except S/N 6610052000 through 6610052184)	3-Pin Plug (View B) Terminal (Socket) Secondary Lock, TPA	12064758 12047767 12047783

B. Terminal Removal

NOTE: Do not solder crimps.

1. Remove the secondary lock.
2. Insert needle end of terminal remover J 35689-A into the small notch between the connector and the terminal to be removed (Figure E–3, View A or View B). Push the lock tang toward the terminal.
3. Pull the wire and terminal out the rear of the connector—this is a “push-to-seat” terminal.
4. Pull terminal as far as necessary from the connector. This will be limited by the number of other wires inserted into the connector and by the distance between the back side of the connector and the beginning of the harness covering.
5. If terminal is to be replaced, cut the terminal between the core and insulation crimp to minimize wire loss.

Copyright © 2005 General Motors Corp.

https://truckmanualshub.com/

APPENDIX E — CONNECTOR PART NUMBERS, TERMINAL PART NUMBERS, TOOL PART NUMBERS, AND REPAIR INSTRUCTIONS

C. Terminal Crimping

1. Carefully strip insulation 4.5 mm ± 0.5 mm (0.18 ± 0.02 inch). Unless insulation crimp is over-tight, Automatic Wire Stripper J 35615 will remove insulation and crimp from old terminal without damaging wire.
2. Place core crimp portion of terminal on bed of anvil “E” and squeeze crimper enough to keep terminal from dropping (Figure E–3, View D).
3. Position wire core in terminal and squeeze crimper tool to complete the core crimp. **Be sure to orient the terminal so that it is properly aligned with the terminal cavity in the connector.** The terminal should be positioned so that the lock tang is on the side of the cavity which has the notch in the middle (for the remover tool).
4. Position insulation crimp of terminal on anvil “C” so that the entire insulation crimp area and a portion of the terminal between the core and insulation crimp areas are supported by the anvil. Complete the insulation crimp.
5. Be sure lock tang is lifted to allow proper reseating of the terminal.
6. Push on the wire until the terminal is completely into the cavity. A click will be heard and the terminal should stay in place when the wire is lightly pulled.

D. Terminal Crimping Using Alternate Tool J 35123

1. Insert remover tool in front side of connector to release locktab and pull terminal out rear of connector. Pull the terminal and wire out the rear of the connector to complete Steps (3) through (7).
2. Push open the terminal holder on the crimper tool J 35123 and insert a terminal into the opening marked 18–16 (Figure E–3, View C) so that the crimp ends point up. Release the terminal holder.
3. Slightly close the crimping tool (close until one click is heard) but do not start to crimp the terminal. Place the terminal on the wire so it is in the same position as it will be when pulled back into the connector. The terminal should be positioned so that the lock tang is on the side of the cavity which has the notch in the middle (for the remover tool).
4. Insert the wire into the terminal until the wire contacts the holder. By doing this, the core and insulation should be properly positioned for the core and insulation crimp wings.
5. Squeeze the crimper fully until it opens when released.
6. Open the terminal holder and remove the wire and terminal from the crimping tool.
7. Pull on the terminal to assure a tight crimp.
8. Be sure lock tang is lifted to allow proper reseating of the terminal.
9. Push on the wire until the terminal is completely into the cavity. A click will be heard and the terminal should stay in place if the wire is lightly pulled.

Copyright © 2005 General Motors Corp.

https://truckmanualshub.com/

APPENDIX E — CONNECTOR PART NUMBERS, TERMINAL PART NUMBERS, TOOL PART NUMBERS, AND REPAIR INSTRUCTIONS

NOTES

Copyright © 2005 General Motors Corp.

https://truckmanualshub.com/

APPENDIX E — CONNECTOR PART NUMBERS, TERMINAL PART NUMBERS, TOOL PART NUMBERS, AND REPAIR INSTRUCTIONS

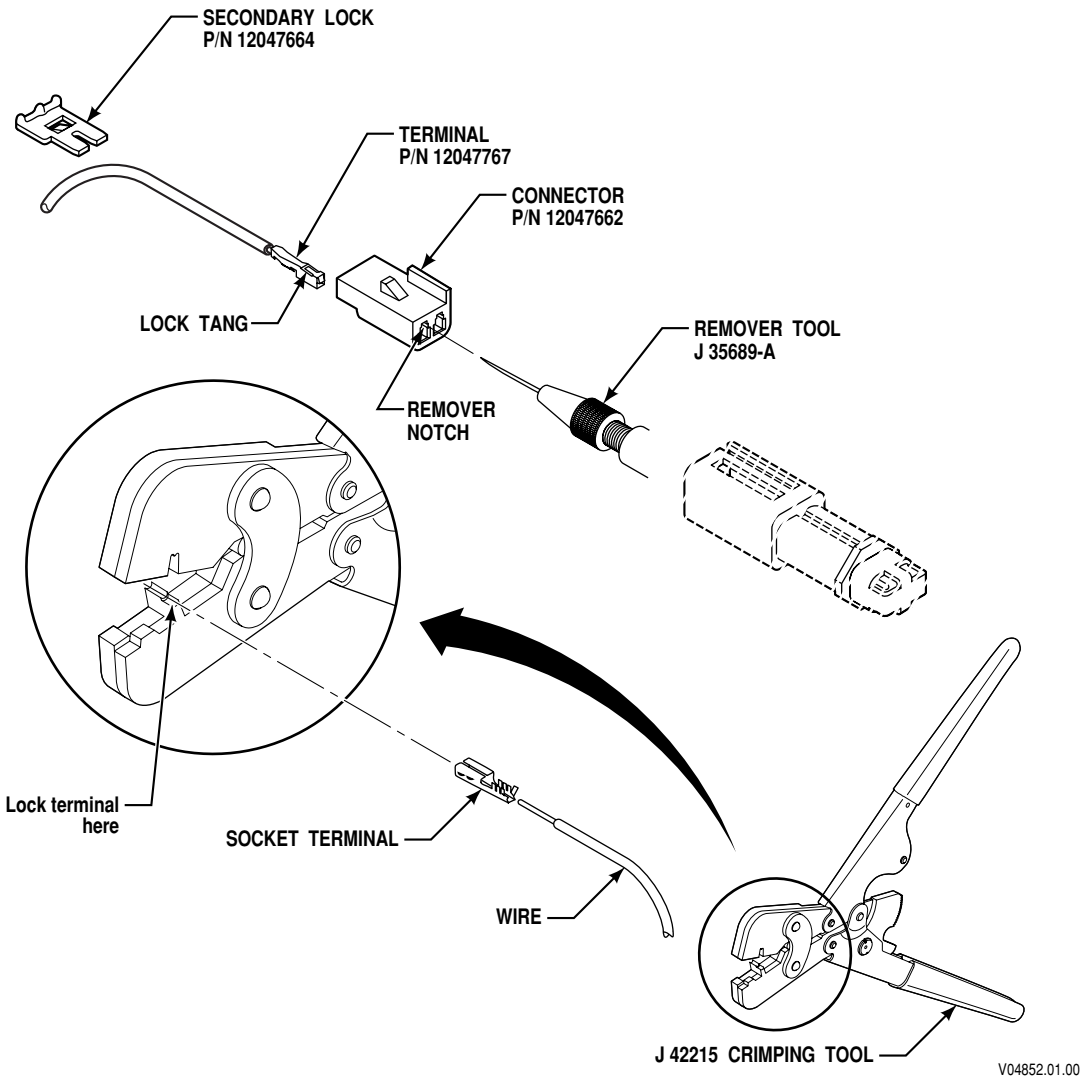

Figure E–4. Delphi-Packard Metri-Pack 150 Series Connector—Push-To-Seat (All Models With TID 2 and Later Sump Temperature Thermistor)

Copyright © 2005 General Motors Corp.

https://truckmanualshub.com/

APPENDIX E — CONNECTOR PART NUMBERS, TERMINAL PART NUMBERS, TOOL PART NUMBERS, AND REPAIR INSTRUCTIONS

1–4. DELPHI-PACKARD METRI-PACK 150 SERIES CONNECTORS—PUSH-TO-SEAT (ALL MODELS, TID 2 AND LATER SUMP TEMPERATURE THERMISTOR)

A. Connector/Terminal Repairs:

Crimping Tool	J 42215 (with terminal positioner removed)
Remover Tool	J 35689-A

Use	Description	Manufacturers P/N
All Models, TransID 2 and Later	Sump Temperature Sensor	12129691
Sump Temperature Thermistor	Connector, Black	12047662
	Terminal	12047767
	Secondary Lock	12047664

B. Terminal Removal:

1. Remove the secondary lock from the connector.
2. Insert needle end of terminal remover J 35689-A into the small notch in the front of the connector cavity of the terminal to be removed (Figure E–4).
3. Push the lock tang toward the terminal.
4. Pull the wire and terminal out of the connector.
5. Cut the terminal between the core and insulation crimp to minimize wire loss.

C. Terminal Crimping:

1. Strip insulation approximately 4.5 mm (0.18 inch).
2. Remove the spring-loaded terminal positioner from the J 42215 crimping tool.
3. Insert the new terminal to be crimped in the J 42215 crimping tool. Squeeze the crimper handles a couple clicks to start the crimping process but leave room to insert the wire end.
4. Insert the bare wire end into the terminal. Squeeze the crimper handles to complete the crimping process and until the crimper handles open when released to remove the terminal/wire from the tool.
5. Be sure the lock tang is positioned to allow proper retention of the terminal in the connector.
6. Push the terminal completely into the cavity. A click will be heard and the terminal should stay in place if the wire is pulled.
7. Install the secondary lock in the connector.

Copyright © 2005 General Motors Corp.

https://truckmanualshub.com/

APPENDIX E — CONNECTOR PART NUMBERS, TERMINAL PART NUMBERS, TOOL PART NUMBERS, AND REPAIR INSTRUCTIONS

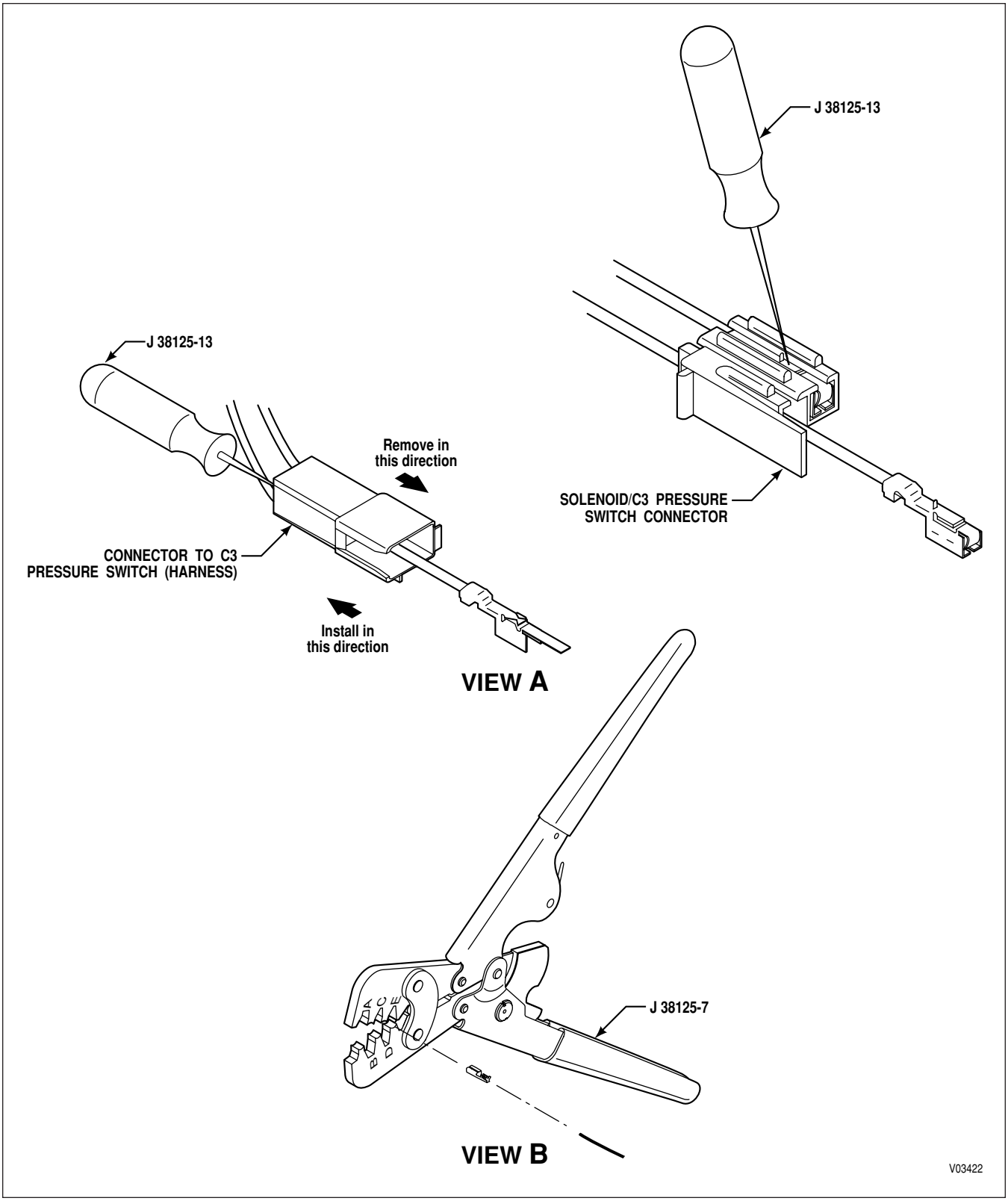

Figure E–5. Delphi-Packard Metri-Pack 280 Series Connectors—Pull-to-Seat (Internal Harness Solenoid and C3 Pressure Switch)

Copyright © 2005 General Motors Corp.

https://truckmanualshub.com/

APPENDIX E — CONNECTOR PART NUMBERS, TERMINAL PART NUMBERS, TOOL PART NUMBERS, AND REPAIR INSTRUCTIONS

1–5. DELPHI-PACKARD METRI-PACK 280 SERIES CONNECTORS—PULL-TO-SEAT (INTERNAL HARNESS SOLENOID AND C3 PRESSURE SWITCH)

A. Connector/Terminal Repairs

Wire Stripper	J 35615
Crimping Tool	J 38125-7

NOTE: ***Crimping anvils will be listed following the terminal part numbers for the various connectors in this section. The anvil for the core crimp is always listed first.***

Remover Tool	J 38125-13

Use	Description	Manufacturers P/N
Solenoid/C3 Pressure Switch (Switch)	Connector	12092420
C3 Pressure Switch (Harness)	Connector	12110139
Solenoid/C3 Pressure Switch (Switch)	Terminal (Use crimping anvils “C” and “D”)	12124639
C3 Pressure Switch (Harness)	Terminal (Use crimping anvils “C” and “D”)	12066337
Solenoid (A, B, and G)	Terminal (2 Wire) B (Use crimping anvils “A” and “B”)	12015243

B. Terminal Removal

1. Depress locktab on terminal (accessible in slot of connector) and push terminal out front of connector (Figure E–5, View A).
2. If replacing terminal, cut terminal between core and insulation crimp (to minimize wire loss).

C. Terminal Crimping

1. Carefully strip insulation 6.5 mm ± 0.5 (0.26 ± 0.02 inch). Unless insulation crimp is overtight, Automatic Wire Stripper J 35615 will remove insulation and crimp from old terminal without damaging wire.
2. Place core crimp portion of terminal on bed of anvil indicated and squeeze crimper enough to hold terminal from dropping (Figure E–5, View B).
3. Position wire core in terminal and squeeze crimper tool to complete the core crimp. Be sure to orient the terminal so that it is properly aligned with the terminal cavity in the connector. When crimping two wires in terminal P/N 12015243, strip and twist cores together before inserting into the terminal.
4. Position insulation crimp of terminal on anvil indicated so that the entire insulation crimp area and a portion of the terminal between the core and insulation crimp areas are supported by the anvil. Complete the insulation crimp.
5. Slip the wire through the slot in the connector and pull to fully seat the terminal(s).

Copyright © 2005 General Motors Corp.

https://truckmanualshub.com/

APPENDIX E — CONNECTOR PART NUMBERS, TERMINAL PART NUMBERS, TOOL PART NUMBERS, AND REPAIR INSTRUCTIONS

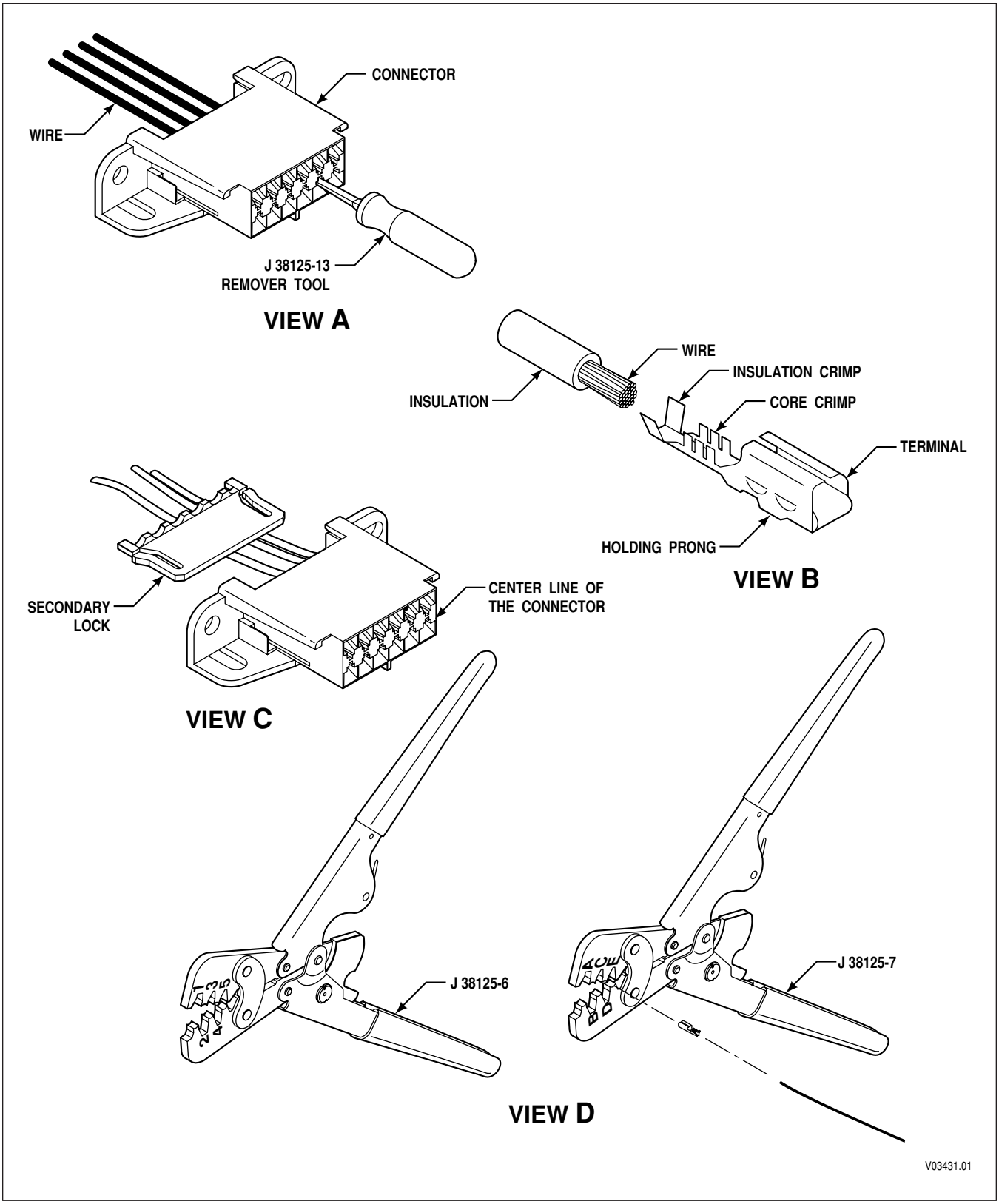

Figure E–6. Delphi-Packard Metri-Pack 280 Series Connectors—Push-to-Seat (Diagnostic Connector)

Copyright © 2005 General Motors Corp.

https://truckmanualshub.com/

APPENDIX E — CONNECTOR PART NUMBERS, TERMINAL PART NUMBERS, TOOL PART NUMBERS, AND REPAIR INSTRUCTIONS

1–6. DELPHI-PACKARD METRI-PACK 280 SERIES CONNECTORS—PUSH-TO-SEAT (DIAGNOSTIC CONNECTOR, SCI)

A. Connector/Terminal Repairs

Crimping Tool	J 38125-6 and 7
Wire Crimp	Anvil “2”
Insulation Crimp	Anvil “A”
Remover Tool	J 38125-13

Use	Description	Manufacturers P/N
Diagnostic Connector	Connector	12048105
	Terminal	12034046
	Terminal (2-Wire)	12066214
	Secondary Lock	12020219
	Cover	12048107
SCI Connector	Connector	15300002
	Terminal, Socket	12077411
	Seal, Wire	12089444
	Secondary Lock	15300014

B. Terminal Removal

1. Remove secondary lock from back of connector (Figure E–6, View C). Use a small screwdriver or pick in the slots on each side of the connector.
2. Insert remover tool J 38125-13 into open (front) end of connector at terminal to be serviced (Figure E–6, View A).
3. Push the lock tang of the terminal straight and pull wire and terminal out the back of connector.
4. If the terminal is to be replaced, cut terminal between core and insulation crimp (this minimizes wire length loss).

C. Terminal Crimping

1. Carefully strip insulation 6.0 ± 0.25 mm (0.24 ± 0.01 inch).
2. Insert terminal into crimping tool (Figure E–6, View D), anvil “2.”
3. Slightly close crimping tool to hold the terminal steady.
4. Align the terminal with its position in the connector and insert wire so that the stripped portion of the wire is in the core crimping area and the insulated portion of the wire is in the insulation crimping area (Figure E–6, View B).
5. Crimp the stripped section of the wire (Figure E–6, View D).
6. Remove the terminal from the crimping tool.
7. Use a pair of needle nose pliers, if necessary, to start the bend on the insulation crimp wings (Figure E–6, View D).
8. Crimp the insulated section of wire using anvil “A” of the crimpers shown (Figure E–6, View D).
9. Remove the terminal from the crimping tool.
10. Tug on terminal to make sure the crimp is tight.

Copyright © 2005 General Motors Corp.

https://truckmanualshub.com/

APPENDIX E — CONNECTOR PART NUMBERS, TERMINAL PART NUMBERS, TOOL PART NUMBERS, AND REPAIR INSTRUCTIONS

D. Terminal Crimping *(cont'd)*

11. Insert terminal into connector with the locktab toward the center line of the connector (Figure E–6, View C).
12. The terminal should "click" into place and you should not be able to pull the terminal out by hand.
13. Reinstall the secondary lock.

Copyright © 2005 General Motors Corp.

https://truckmanualshub.com/

APPENDIX E — CONNECTOR PART NUMBERS, TERMINAL PART NUMBERS, TOOL PART NUMBERS, AND REPAIR INSTRUCTIONS

NOTES

Copyright © 2005 General Motors Corp.

https://truckmanualshub.com/

APPENDIX E — CONNECTOR PART NUMBERS, TERMINAL PART NUMBERS, TOOL PART NUMBERS, AND REPAIR INSTRUCTIONS

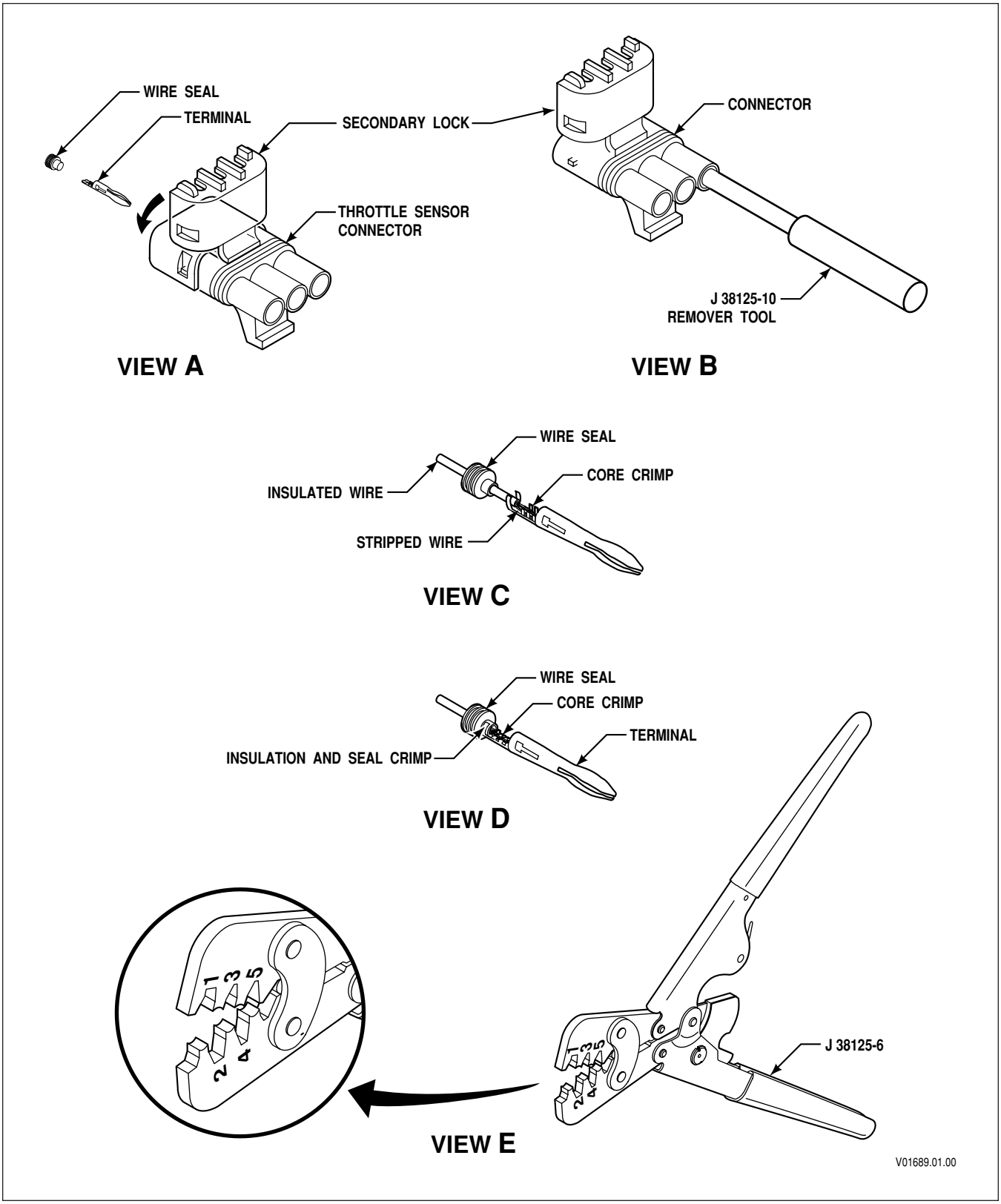

Figure E–7. Delphi-Packard WeatherPack Connectors (TPS; 3-Way RMR Sensor; 4000 Product Family Pre-TID and TID 1 Retarder Temperature; 4-Way RMR Device, Type 3; 3-Way RMR Device (Dedicated Pedal))

Copyright © 2005 General Motors Corp.

https://truckmanualshub.com/

APPENDIX E — CONNECTOR PART NUMBERS, TERMINAL PART NUMBERS, TOOL PART NUMBERS, AND REPAIR INSTRUCTIONS

1–7. DELPHI-PACKARD WEATHERPACK CONNECTORS (TPS; 3-WAY RMR SENSOR; HD RETARDER TEMPERATURE; 3-WAY RMR DEVICE (DEDICATED PEDAL))

A. Connector/Terminal Repairs

Crimping Tool	J 38125-6
Wire Crimp	Anvil “2”
Insulation Crimp	Anvil “5”
Alternate Crimping Tool	J 35606 or J 38852
Remover Tool	J 38125-10

Use	Description	Manufacturers P/N
Throttle Position (TPS)	Connector	12015793
	Terminal	12089040
	Wire Seal	12089444
RMR Device	Connector	12015795
	Terminal	12089040
	Wire Seal	12089444
Retarder Temperature Sensor	Connector	12010973
	Terminal (Socket)	12089188
	Wire Seal	12089444

B. Terminal Removal

1. Unlatch and open the secondary lock on the connector (Figure E–7, View A).
2. On the front of the connector, insert remover tool J 38125-10 over the terminal. Push the tool over the terminal and pull the terminal out of the back end of the connector (Figure E–7, View B).
3. If terminal is to be replaced, cut terminal between core and insulation crimp (this minimizes wire loss).

NOTE: ***Two special tools are available for this operation: tool J 38125-6 (Paragraph C); tool J 35606 or J 38852 (Paragraph D).***

C. Terminal Crimping Using Crimping Tool J 38125-6

1. Place the wire seal onto the wire before stripping the wire (Figure E–7, View C).
2. Strip wire to 6.0 ± 0.25 mm (0.24 ± 0.01 inch).
3. Place terminal onto crimping tool J 38125-6 (Figure E–7, View E), anvil “2.”
4. Slightly close crimping tool to hold terminal steady.
5. Insert wire so that the stripped portion of wire is in the core crimp area and the insulated portion of the wire is in the insulation crimping area (Figure E–7, View C).
6. Crimp the stripped section of the wire.
7. Remove the terminal from the crimping tool.

Copyright © 2005 General Motors Corp.

https://truckmanualshub.com/

APPENDIX E — CONNECTOR PART NUMBERS, TERMINAL PART NUMBERS, TOOL PART NUMBERS, AND REPAIR INSTRUCTIONS

C. Terminal Crimping Using Crimping Tool J 38125-6 *(cont'd)*

8. Push the wire seal into the terminal (Figure E–7, View D). The second crimp will wrap around the wire seal. This will seal the insulated area of wire.
9. Use a pair of needle nose pliers, if necessary, to squeeze the terminal wings together to fit in anvil "5."
10. Crimp wire seal in anvil "5."
11. Tug on terminal and be sure the crimp is tight.
12. Insert the terminal into the connector. The terminal will "click" into place and should not pull out.
13. Secure the secondary lock. Both sides of the connector must be latched.

D. Terminal Crimping Using Alternate Crimper Pliers J 35606 or J 38852

1. Place the wire seal onto the wire before stripping the wire (Figure E–7, View C).
2. Strip wire to 6.0 ± 0.25 mm (0.24 ± 0.01 inch).
3. Insert terminal into crimping tool J 35606 (Figure E–8, View A), opening marked 18–20.
4. Position the terminal so the crimp wings are pointing up from the bottom jaw of the crimper and are properly positioned.
5. Slightly close the crimping tool to hold the terminal steady.
6. Slide the wire seal to the edge of the insulation and insert the wire and seal into the terminal (Figure E–8, View B).
7. Position the wire and seal and squeeze the crimping tool until it opens when released.
8. Tug on terminal to be sure the crimp is tight.
9. Insert terminal into connector. The terminal will "click" into place and should not pull out.
10. Relatch the secondary lock. Both sides of the connector must be latched.

Copyright © 2005 General Motors Corp.

https://truckmanualshub.com/

APPENDIX E — CONNECTOR PART NUMBERS, TERMINAL PART NUMBERS, TOOL PART NUMBERS, AND REPAIR INSTRUCTIONS

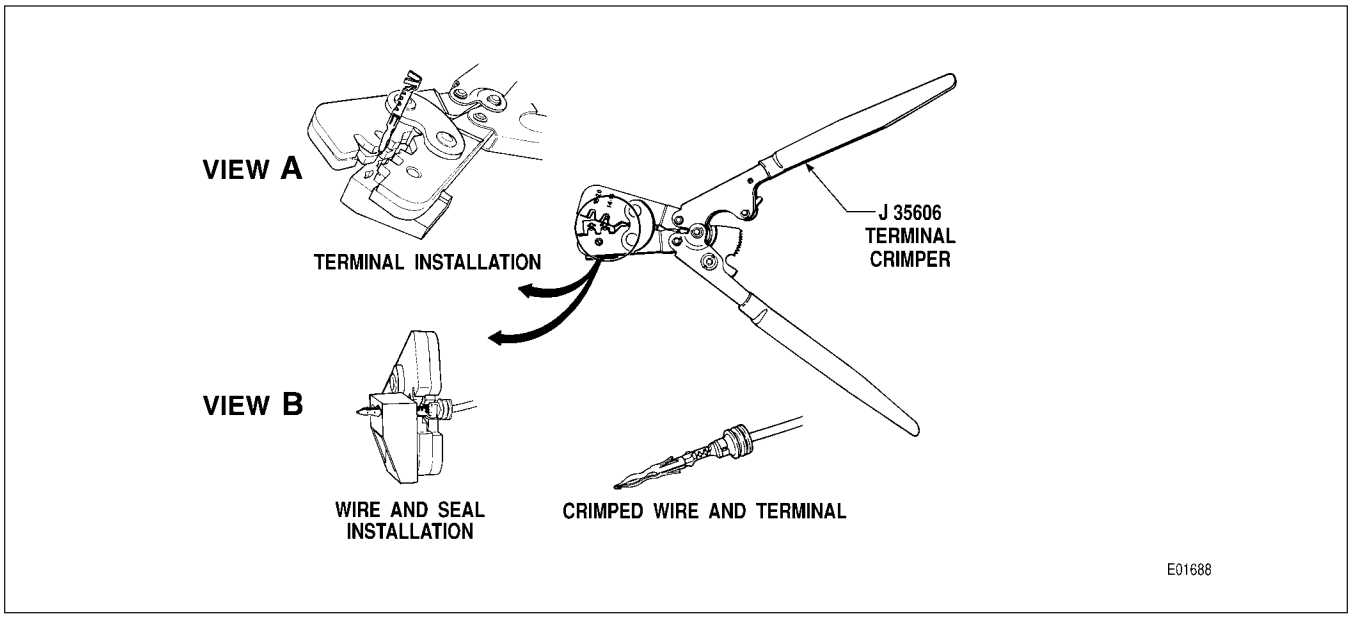

Figure E–8. Terminal Crimping With Tool J 35606

Copyright © 2005 General Motors Corp.

https://truckmanualshub.com/

APPENDIX E — CONNECTOR PART NUMBERS, TERMINAL PART NUMBERS, TOOL PART NUMBERS, AND REPAIR INSTRUCTIONS

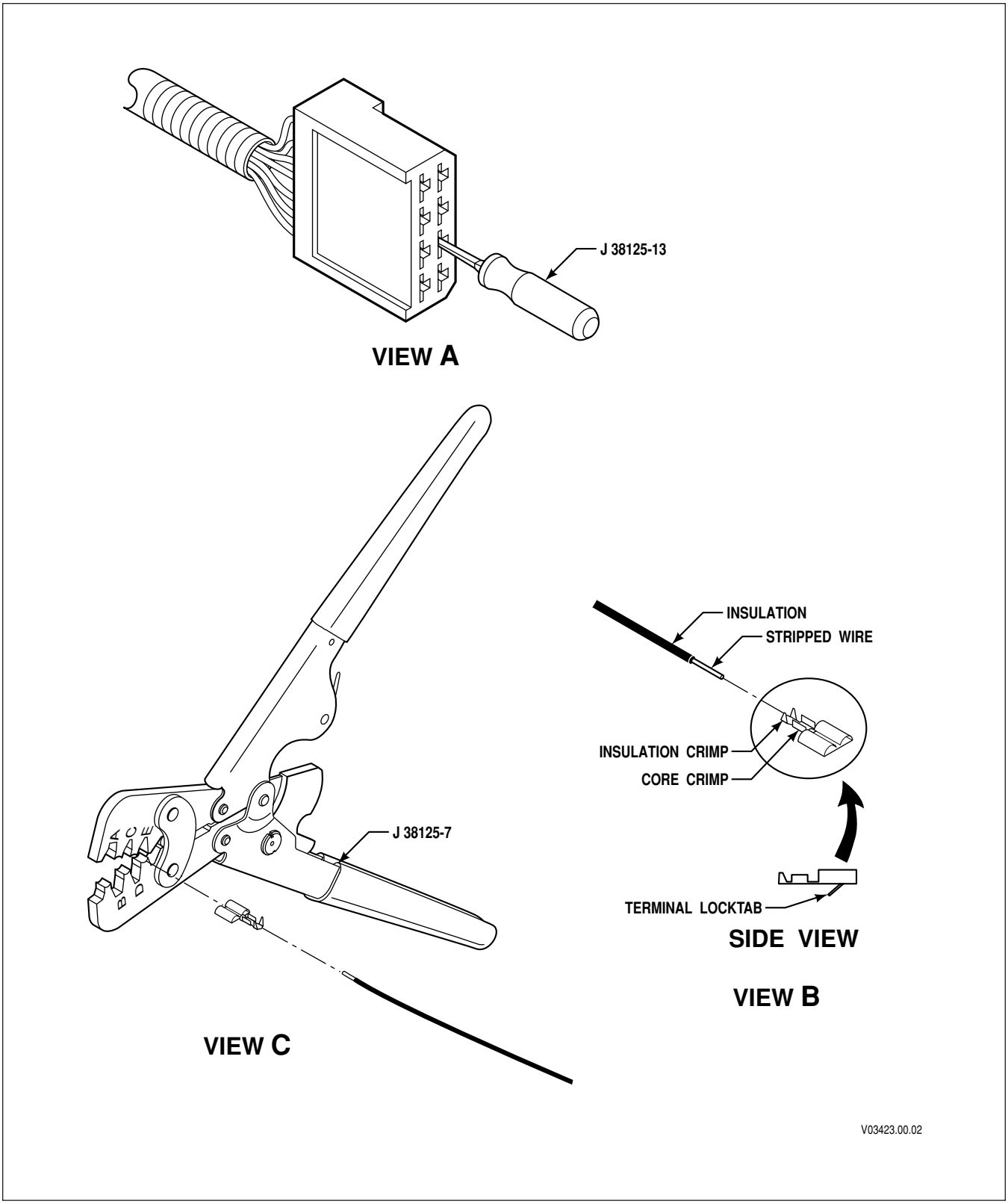

Figure E–9. Amp Products Connectors (8-Way RMR Device (Hand Lever))

Copyright © 2005 General Motors Corp.

https://truckmanualshub.com/

APPENDIX E — CONNECTOR PART NUMBERS, TERMINAL PART NUMBERS, TOOL PART NUMBERS, AND REPAIR INSTRUCTIONS

1–8. AMP PRODUCTS CONNECTORS (8-WAY RMR DEVICE (HAND LEVER))

A. Connector/Terminal Repairs

Crimping Tool	J 38125-7
Wire Crimp	Anvil “E”
Insulation Crimp	Anvil “A”
Remover Tool	J 38125-13

Use	Description	Manufacturers P/N
	8-Way Receptacle	163007-0
8-Way RMR Device (Hand Lever)	Terminal (Socket)	42100-2

B. Terminal Removal

1. Insert removal tool J 38125-13 into the small notch at the front of the connector to release the terminal locktab (Figure E–9, View A).
2. Pull the terminal and wire out the back of the connector.
3. If replacing terminal, cut terminal between core and insulation crimp (this minimizes wire loss).

C. Terminal Crimping

1. Strip wire to approximately 4.0 ± 0.25 mm (0.16 ± 0.01 inch) (Figure E–9, View B).
2. Place new terminal onto crimping tool J 38125-7, anvil “E” (Figure E–9, View C).
3. Slightly close the crimping tool to hold the terminal steady.
4. Insert the wire so that the stripped portion of the wire is in the core crimp area and the insulated portion of the wire is in the insulation crimping area.
5. Crimp the stripped section of the wire (Figure E–9, View B).
6. Remove the terminal from the crimping tool.
7. Use a pair of needle nose pliers, if necessary, to start the bend on the insulation crimp wings.
8. Crimp the insulated section of the wire using anvil “A” of the crimpers (Figure E–9, View C).
9. Remove the terminal from the crimping tool.
10. Tug on the terminal to make sure the crimp is tight.
11. Insert the terminal into the connector. The terminal will “click” into place and should not pull out.

Copyright © 2005 General Motors Corp.

https://truckmanualshub.com/

APPENDIX E — CONNECTOR PART NUMBERS, TERMINAL PART NUMBERS, TOOL PART NUMBERS, AND REPAIR INSTRUCTIONS

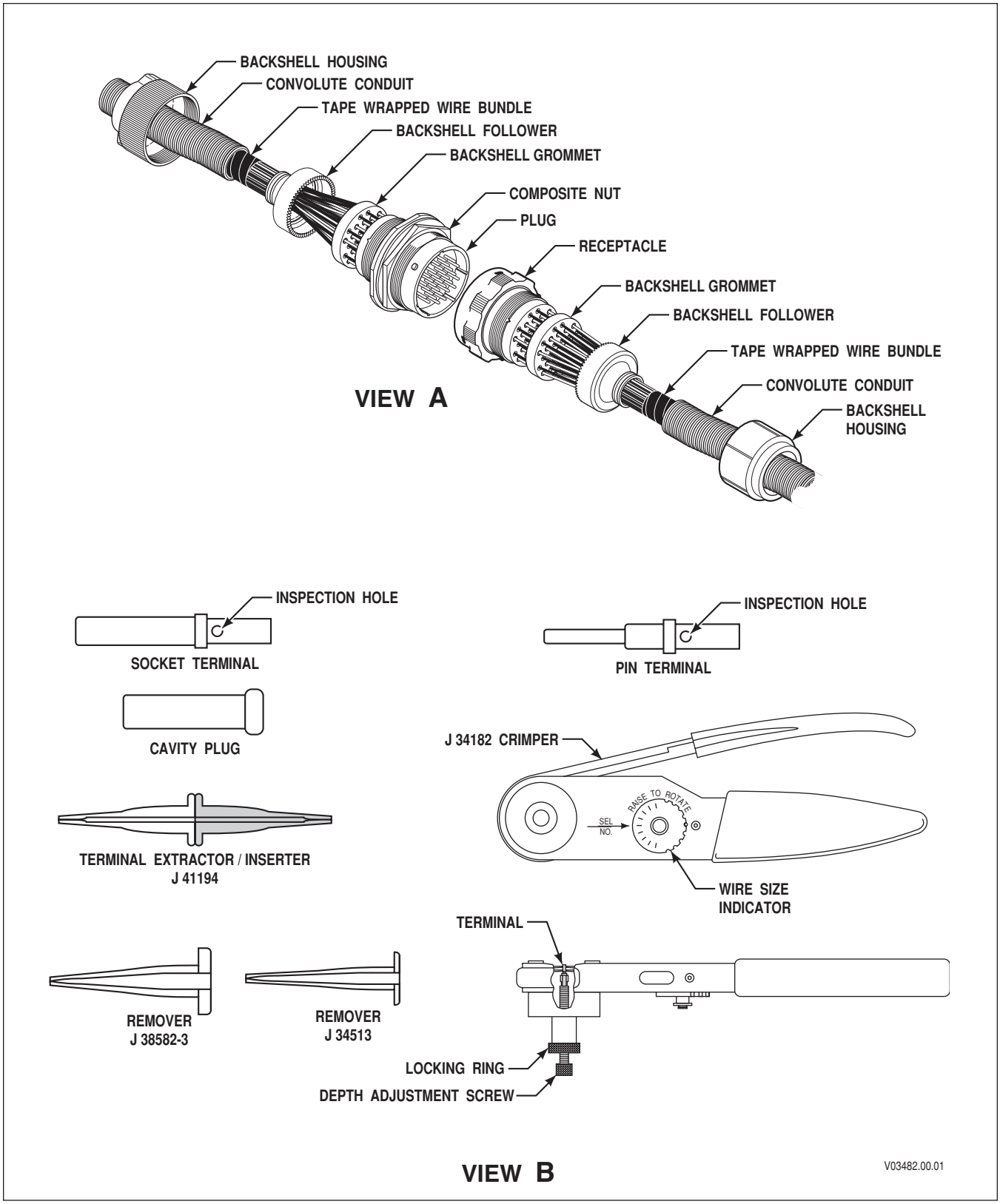

Figure E–10. Deutsch IPD/ECD Connectors (31-Way Bulkhead, 31-Way Feedthrough Harness; 16-Way Optional Sensor Harness; 6-Way Optional Diagnostic Connector)

Copyright © 2005 General Motors Corp.

https://truckmanualshub.com/

APPENDIX E — CONNECTOR PART NUMBERS, TERMINAL PART NUMBERS, TOOL PART NUMBERS, AND REPAIR INSTRUCTIONS

1–9. DEUTSCH IPD/ECD CONNECTORS (31-WAY BULKHEAD; 31-WAY FEEDTHROUGH HARNESS; 16-WAY OPTIONAL SENSOR HARNESS; 6-WAY OPTIONAL DIAGNOSTIC CONNECTOR)

A. Connector/Terminal Repairs

Crimping Tool	J 34182
Remover Tool	J 34513 (18 GA IPD Bulkhead)
Extractor/Inserter Tool	J 41194 (18 GA ECD Bulkhead)
Remover Tool (Connector)	J 38582-3 (12–14 GA)

Use	Description	Manufacturers P/N
Bulkhead Connector/ Transmission Connector—ECD	Connector Plug, 31-Way	
	31-Pin Plug	WT06B24-31SN
	Terminal (Socket)	3662-204-1690
	Cavity Plug	0613-1-1601
	Backshell Housing	WTA10-24-01/19
	Backshell Follower	WTA10-24-02/19
	Backshell Grommet	WTA10-24-03
	Connector Receptacle, 31-Way	
	31-Pin Receptacle	WT04B24-31PN
	Terminal (Pin)	3660-201-1690
	Cavity Plug	0613-1-1601
	Panel Nut	0926-208-2401
	O-Ring Seal	9013-3-0402
	Lockwasher	0914-212-2486
	Backshell Housing	WTA10-24-01/19
	Backshell Follower	WTA10-24-02/19
	Backshell Grommet	WTA10-24-03
Bulkhead Connector—ECD	Connector Plug (31-Way)	
	31-Pin Plug	WT06B24-31PN
	Terminal (Pin)	3660-201-1690
	Cavity Plug	0613-1-1601
	Backshell Housing	WTA10-24-01/19
	Backshell Follower	WTA10-24-02/19
	Backshell Grommet	WTA10-24-03
	Connector Receptacle (31-Way) (Female/Female)	
	31-Pin Receptacle	WT04B24-31SN
	Terminal (Socket)	3662-204-1690
	Cavity Plug	0613-1-1601
	Panel Nut	0926-208-2401
	O-Ring Seal	9013-3-0402
	Lockwasher	0914-212-2486
	Backshell Housing	WTA10-24-01/19
	Backshell Follower	WTA10-24-02/19
	Backshell Grommet	WTA10-24-03

Copyright © 2005 General Motors Corp.

https://truckmanualshub.com/

APPENDIX E — CONNECTOR PART NUMBERS, TERMINAL PART NUMBERS, TOOL PART NUMBERS, AND REPAIR INSTRUCTIONS

Use	Description	Manufacturers P/N
16-Way Optional Sensor Harness	16-Way Plug	WT06B20-16SN
	Terminal (Socket)	3662-204-1690
	Cavity Plug	0613-1-1601
	Backshell Housing	WTA10-20-01/16
	Backshell Follower	WTA10-20-02/16
	Backshell Grommet	WTA10-20-03
	16-Way Receptacle	WT04B20-16PN
	Terminal (Pin)	3660-201-1690
	Cavity Plug	0613-1-1601
	Panel Nut	0926-207-2087
	O-Ring Seal	9013-3-0201
	Lockwasher	9014-212-2086
	Backshell Housing	WTA10-20-01/16
	Backshell Follower	WTA10-20-02/16
	Backshell Grommet	WTA10-20-03
6-Way Optional Diagnostic Connector	6-Way Plug	HD10-6-12P
	Terminal (Pin)	0460-256-12233
	Terminal (Pin)	0460-204-0831
	Cavity Plug	114017
	Backshell	HD18-006
	Cover	HDC16-6
9-Way Optional Diagnostic Connector	9-Way Receptacle	HD10-9-1939P

NOTE: ***If it is difficult to remove or install the plug backshell, insert the plug into the receptacle, but do not lock it into place, and loosen the backshell.***

B. Terminal Removal (Figure E–18)

NOTE: ***When using remover/inserter tool J 41194, take care not to break the tip of the tool. Lay the wire in the widest part of the wire slot and work toward the tool tip.***

1. Loosen and slide the backshell along the convolute conduit.
2. Remove the convolute conduit from the base of the backshell follower. Peel enough conduit from the harness to allow working access.
3. Slide the backshell follower clear of the connector housing.
4. Remove as much tape wrap as necessary to allow working access.
5. Fully insert the proper remover/extractor tool into the back of the connector until it releases the terminal.
6. Pull the terminal, wire, and tool out the back of the connector.
7. If replacing the terminal, cut the wire through the middle of the terminal crimp (this minimizes wire loss).

C. Terminal Crimping (Figure E–10, View B)

1. Strip approximately 6–8 mm (0.236–0.315 inch) of insulation from the wire.
2. Set the crimping tool wire size to number 18 for the ECD or IPD connector. For the optional diagnostic connector, set the wire size to number 12. To set the wire size, remove the retainer pin. Lift and rotate the indicator until the correct wire number is aligned with the SEL NO. arrow. Reinstall the retainer pin.

Copyright © 2005 General Motors Corp.

https://truckmanualshub.com/

APPENDIX E — CONNECTOR PART NUMBERS, TERMINAL PART NUMBERS, TOOL PART NUMBERS, AND REPAIR INSTRUCTIONS

C. Terminal Crimping (Figure E–10, View B) *(cont'd)*

3. Insert the contact end of the terminal into crimping tool J 34182. Adjust the crimping tool depth by loosening the locking ring until the depth adjusting screw is free and turning the adjusting screw until the top of the terminal is just above flush with the crimping hole (the crimp jaws will contact the middle of the terminal barrel). Tighten the lock ring to retain the adjustment.
4. Fully insert the wire into the terminal so that the stripped portion of the wire is in the crimp area. A small section (0.5–1.0 mm (0.02–0.04 inch)) of wire will be visible above the terminal barrel.
5. Squeeze the crimping tool handle until it releases. The terminal is now crimped onto the wire.
6. Remove the terminal and wire from the crimping tool.
7. Tug on the terminal to ensure the crimp is tight.
8. For the optional diagnostic connector, apply a 25 mm (one inch) long piece of heat shrink tubing over the wire insulation just behind the terminal. Apply heat to shrink and lock tubing to the insulation.

D. Terminal Insertion (ECD Bulkhead)

NOTE: ***If replacing a backshell grommet (refer to Figure E–10, View A, showing the ECD bulkhead), make sure the backshell grommet is correctly installed. Each backshell grommet hole is marked with the terminal ID (Figure E–20) of the wire that passes through that hole. The backshell grommet holes match the pattern of either the pins or sockets in the receptacle or plug, respectively. One side of the backshell grommet is marked "PIN" and the other "SKT" or "SOC". "PIN" indicates the pin (receptacle) side of the connector and "SKT" or "SOC" the socket (plug) side. When installing the backshell grommet onto the receptacle, make sure "PIN" is showing and positioned so that the "A" terminal ID on the backshell grommet aligns with the "A" terminal ID on the receptacle. When installing the backshell grommet onto the plug, "SKT" or "SOC" must be showing and positioned so that the "A" terminal ID on the backshell grommet aligns with the "A" terminal ID on the plug. Reversing "PIN" and "SKT" or "SOC" sides of the backshell grommet will cause the backshell grommet holes to be misaligned with the holes in either the receptacle or plug. Perform Steps 1 and 2 only if the backshell grommet has been removed.***

1. Place the correct side of the backshell grommet toward the plug or receptacle and align the "A" terminal IDs.
2. Insert two cavity plugs into unused cavities to maintain the proper orientation of the terminal holes.

NOTE: ***When using remover/inserter tool J 41194, take care not to break the tip of the tool. Lay the wire in the widest part of the wire slot and work toward the tool tip (Figure E–19).***

3. Place the terminal and wire in the end of extractor/inserter tool J 41194.
4. Insert the tool through the backshell grommet, into the back of the connector, and push until the terminal is seated. Remove the remover/inserter tool.
5. Insert cavity plugs into all unused cavities.
6. Wrap plastic electrical tape around the wire bundle.
7. Reassemble the connector in the reverse order of disassembly.

E. Terminal Insertion (all connectors except ECD bulkhead)

1. Insert wire with crimped terminal through the proper hole in the grommet.
2. Keep pushing on wire until the terminal "locks" into position.

Copyright © 2005 General Motors Corp.

https://truckmanualshub.com/

APPENDIX E — CONNECTOR PART NUMBERS, TERMINAL PART NUMBERS, TOOL PART NUMBERS, AND REPAIR INSTRUCTIONS

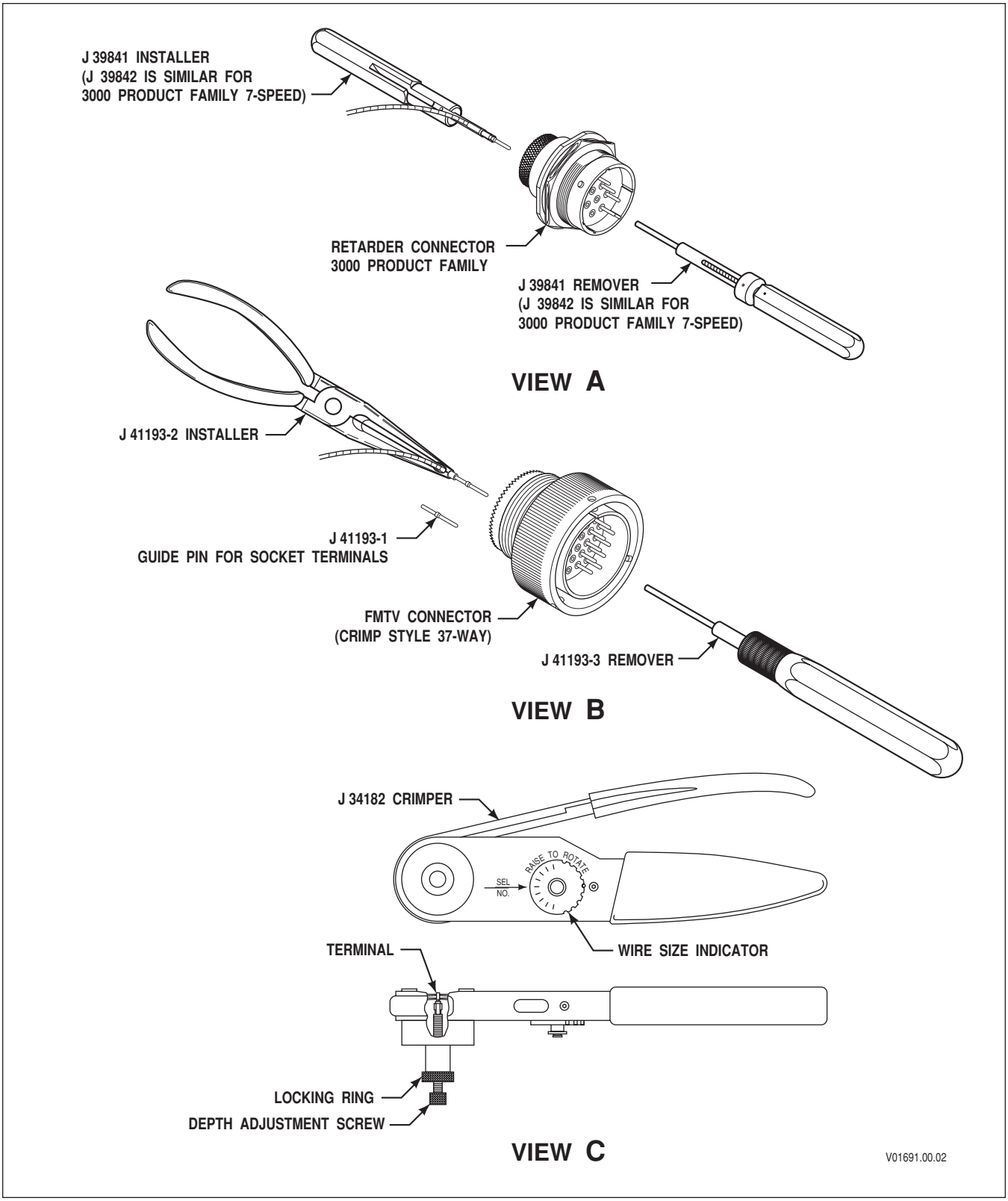

Figure E–11. ITT Cannon Connectors—Crimped (37-Way FMTV Bulkhead; 6-Way Transfer Case; 8-Way 3000 Product Family Retarder)

Copyright © 2005 General Motors Corp.

https://truckmanualshub.com/

APPENDIX E — CONNECTOR PART NUMBERS, TERMINAL PART NUMBERS, TOOL PART NUMBERS, AND REPAIR INSTRUCTIONS

1–10. ITT CANNON CONNECTORS — CRIMPED (37-WAY FMTV BULKHEAD; 6-WAY TRANSFER CASE; 8-WAY 3000 PRODUCT FAMILY RETARDER)

A. Connector/Terminal Repair

Crimping Tool	
Connector Repair Kit (FMTV)	J 34182
Guide Pin	J 41193
Insertion Tool	J 41193-1
Terminal Remover	J 41193-2
Terminal Remover/Installer	J 41193-3
(3000 Retarder Before 1/1/98)	J 39841
Terminal Remover/Installer	
(3000 7-Speed T-Case Connector)	J 39842

Use	Description	Manufacturers P/N
	37-Way Plug Assembly	CA3106E28-21P-B
3000 Product Family FMTV	37-Way Receptacle Assembly	CA3100E28-21S-B
	6-Way Plug Assembly	KPSE06E10-6S
	Terminal (Socket)	031-9174-004
3000 Product Family Transfer Case	Cavity Plug	225-0070-000
	6-Way Receptacle Assembly	KPSE07E10-6P
	Terminal (Pin)	030-9173-006
	Cavity Plug	225-0070-000
	8-Way Plug	KPSE06E16-8S
	Terminal, Socket	031-9206-006
3000 Product Family Retarder	Cavity Plug	225-0071-000
	8-Way Receptacle	KPSE07E16-8P
	Terminal (Pin)	030-9205-007
	Cavity Plug	225-0071-000

B. Terminal Removal (Figure E–11, View A and B)

1. Select the remover tool for the plug or receptacle that is being repaired.
2. For the FMTV connector, choose either the pin or socket terminal remover tip and lock it into the handle.
3. Place the tip of the remover tool over the pin or into the socket and push the contact/terminal out the rear of the connector using slow, even pressure.
4. Pull the wire and terminal out the back of the connector.
5. If replacing the terminal, cut the wire through the middle of the terminal crimp to minimize wire loss.

Copyright © 2005 General Motors Corp.

https://truckmanualshub.com/

APPENDIX E — CONNECTOR PART NUMBERS, TERMINAL PART NUMBERS, TOOL PART NUMBERS, AND REPAIR INSTRUCTIONS

C. Terminal Crimping (Figure E–11, View C)

1. Strip approximately 6–8 mm (0.24–0.31 inch) of insulation from the wire.
2. Set the crimping tool wire size to number 18. To set the wire size, remove the retainer pin. Lift and rotate the indicator until 18 is aligned with the SEL NO. arrow. Reinstall the retainer pin.
3. Insert the contact end of the terminal down into crimping tool J 34182. Adjust the crimping tool depth by loosening the locking ring until the depth adjusting screw is free and turning the adjusting screw until the wire end of the terminal is just above flush with the top of the crimping hole. The crimp jaws will now contact the middle of the terminal barrel. Tighten the lock ring to retain the adjustment.
4. Fully insert the wire into the terminal so that the stripped portion of the wire is in the crimp area. A small section (0.5–1.0 mm (0.020–0.040 inch)) of wire will be visible above the terminal barrel.
5. Squeeze the crimping tool handle until it releases. The terminal is now crimped onto the wire.
6. Remove the terminal and wire from the crimping tool.
7. Tug on the terminal to ensure the crimp is tight.

D. Terminal Insertion

1. Select the proper insertion tool for the connector or receptacle that is being reassembled.
2. Place the terminal and wire in the insertion tool (Figure E–11, View A and B).

NOTE: When installing a socket terminal for the FMTV plug, use the J 41193-1 guide pin.

3. Insert the terminal through the correct hole in the back of the connector and push until the terminal is seated. Remove the insertion tool. Check to see that the terminal is at the same height as other terminals. Tug on the wire at the rear of the connector to ensure that the terminal is locked in place.
4. Insert cavity plugs into all unused cavities.

Copyright © 2005 General Motors Corp.

https://truckmanualshub.com/

APPENDIX E — CONNECTOR PART NUMBERS, TERMINAL PART NUMBERS, TOOL PART NUMBERS, AND REPAIR INSTRUCTIONS

NOTES

Copyright © 2005 General Motors Corp.

https://truckmanualshub.com/

APPENDIX E — CONNECTOR PART NUMBERS, TERMINAL PART NUMBERS, TOOL PART NUMBERS, AND REPAIR INSTRUCTIONS

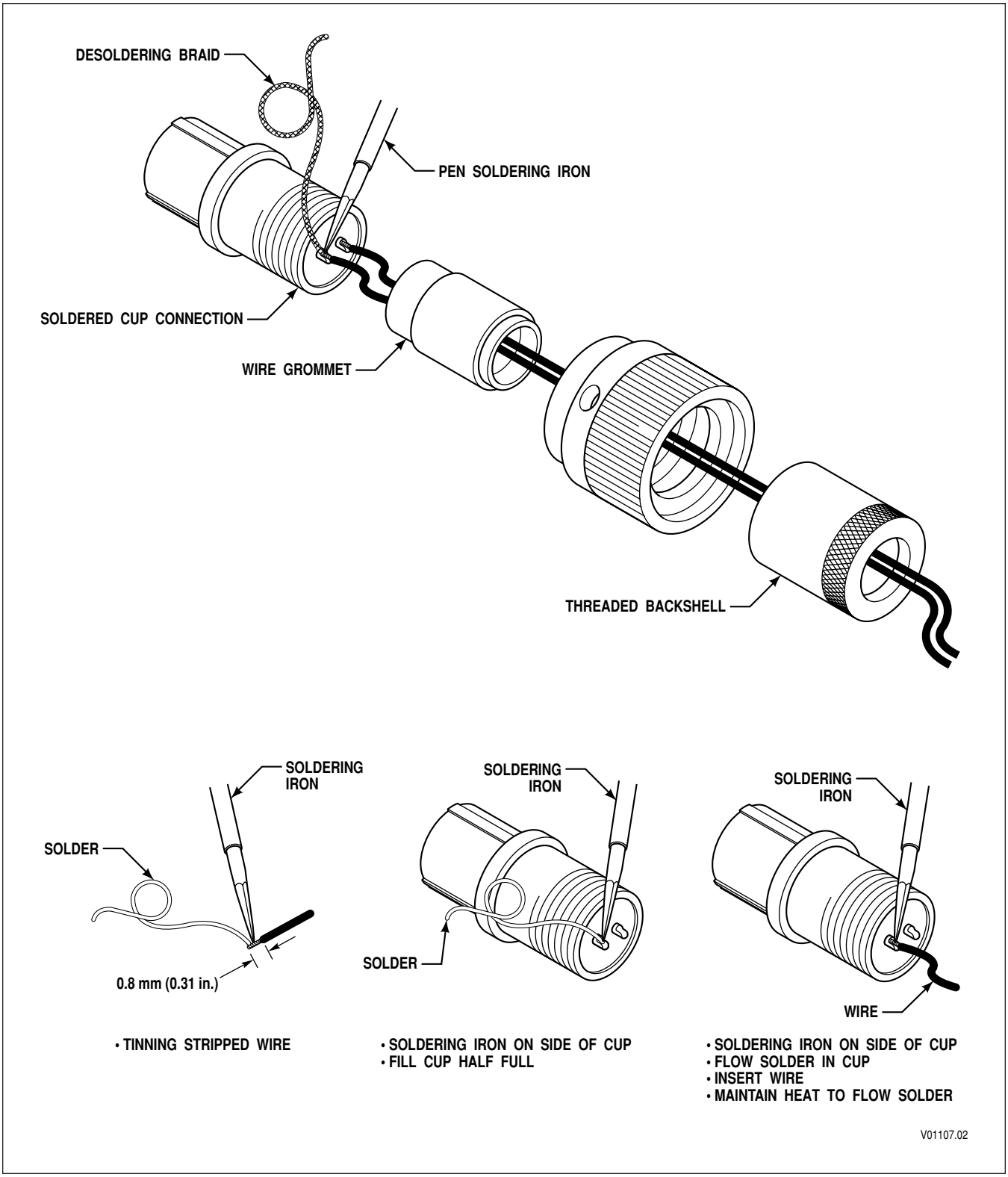

Figure E–12. ITT Cannon Connectors—Soldered (2-Way 4000 Product Family Retarder)

Copyright © 2005 General Motors Corp.

https://truckmanualshub.com/

APPENDIX E — CONNECTOR PART NUMBERS, TERMINAL PART NUMBERS, TOOL PART NUMBERS, AND REPAIR INSTRUCTIONS

1–11. ITT CANNON CONNECTORS—SOLDERED (2-WAY HD RETARDER AND MD PRE-TID AND TID 1 RETARDER)

A. Connector Terminal Repair (Figure E–12)

Use	Description	Manufacturers P/N
	Connector Plug (2-Pin)	KPT06E8-2S
Retarder Control (H Solenoid)	Terminal (Pin)	031-9074-002
(4000 Product Family Models)	Connector Receptacle	KPT07E8-2P

B. Special Tools

- 50–70 percent tin resin core solder, 18–20 SWG (0.086–1.0 mm (0.036 to 0.040 inch))
- Pen-type soldering iron (60W maximum)—tip no larger than 3.175 mm (0.125 inch)
- Desoldering braid

NOTE: ***Proper solder, techniques, equipment, and cleanliness are important to achieve a good solder joint. Clean connector and terminals being soldered of all dirt, grease, and oil. Always heat the piece onto which solder is to flow. A cold solder joint can cause intermittent continuity problems. Avoid a cold joint by heating the piece(s) being soldered to melt the solder rather than merely heating the solder until it melts. Excess solder applied to a stranded wire travels up the wire, stiffening it and making it inflexible. The wire can break at the point where the solder stops. Do not use acid core solder.***

C. Wire Removal—Desoldering

1. Unscrew the connector's backshell and slide the backshell away from the connector.
2. Slide the grommet away from the connector. Slide the grommet far enough to allow access to the terminals and wire ends. If the grommet is hard to slide, lubricate the wires with isopropyl alcohol. If necessary, move some of the harness covering. If no solder is present, proceed as in Section 1–9 for crimped terminals.
3. Place the desoldering braid (wick) on top of the soldered terminal cup and wire. Place the hot soldering iron on the desoldering braid and wait until the solder wicks up the braid, remove the wire.
4. If the other terminal is being repaired, repeat the desoldering operation on that terminal. When solder is removed, proceed as in Section 1–9 for crimped terminals.

D. Soldering Wire Into Terminal

NOTE: ***If installing a new connector on a harness, ensure the backshell and grommet are in place before soldering the wires to the terminals. Clean wires and terminals of dirt or grease.***

1. Strip approximately 8 ± 0.8 mm (0.31 ± 0.03 inch) of insulation from the wire.
2. Tin the stripped end of the wire.
3. Insert the wire through the proper hole in the grommet.

NOTE: ***Lubricate the wire(s) with isopropyl alcohol only if the wire(s) will not slide through the grommet. If installing a new connector on the harness, be sure the backshell is in place before inserting the wire(s) through the grommet.***

Copyright © 2005 General Motors Corp.

https://truckmanualshub.com/

APPENDIX E — CONNECTOR PART NUMBERS, TERMINAL PART NUMBERS, TOOL PART NUMBERS, AND REPAIR INSTRUCTIONS

D. Soldering Wire Into Terminal *(cont'd)*

4. Mount the connector in a holding fixture at a 45 degree angle. Hold the solder in the terminal cup and apply heat to the side of the cup until the solder flows.
5. Slowly feed solder into the cup until it is half-full. When the cup is half-full, remove the solder supply before removing the soldering iron. Half-fill all cup terminals that are to have wires inserted.

NOTE: ***Feed solder slowly enough to prevent a flux gas pocket from forming. A gas pocket prevents sufficient solder from flowing into the cup—a false fill. Correct a false fill by re-heating the cup and adding solder.***

6. Start at the lowest cup and apply heat to the side of the cup until the solder melts.

NOTE: ***Do not overheat the connector while soldering. If the connector gets too hot, stop work until it cools.***

7. Carefully insert the stripped end of the wire into the cup until the wire bottoms in the cup. The wire's insulation should be approximately 1.59 mm (0.0625 inch) above the solder.
8. Maintain heat until the solder has flowed in the cup and onto the wire. Overheating can cause the solder to wick up the stranded wire.

NOTE: ***Indications of a good solder connection are:***

- ***A minimum amount of solder showing***
- ***Wire strands are clearly outlined in the joint***
- ***The joint is completely covered with solder***
- ***Fillets have a smooth even contour***
- ***Edges are feathered***
- ***The joint is bright, smooth, and appears clean***

Too little solder is better than too much. If the solder wicks up the wire, the wire may break at the point at which the solder stops.

9. After soldering and inspecting all connections, remove flux residue with a contact cleaner.
10. Slide the grommet into place and screw on the backshell.

Copyright © 2005 General Motors Corp.

https://truckmanualshub.com/

APPENDIX E — CONNECTOR PART NUMBERS, TERMINAL PART NUMBERS, TOOL PART NUMBERS, AND REPAIR INSTRUCTIONS

NOTES

Copyright © 2005 General Motors Corp.

https://truckmanualshub.com/

APPENDIX E — CONNECTOR PART NUMBERS, TERMINAL PART NUMBERS, TOOL PART NUMBERS, AND REPAIR INSTRUCTIONS

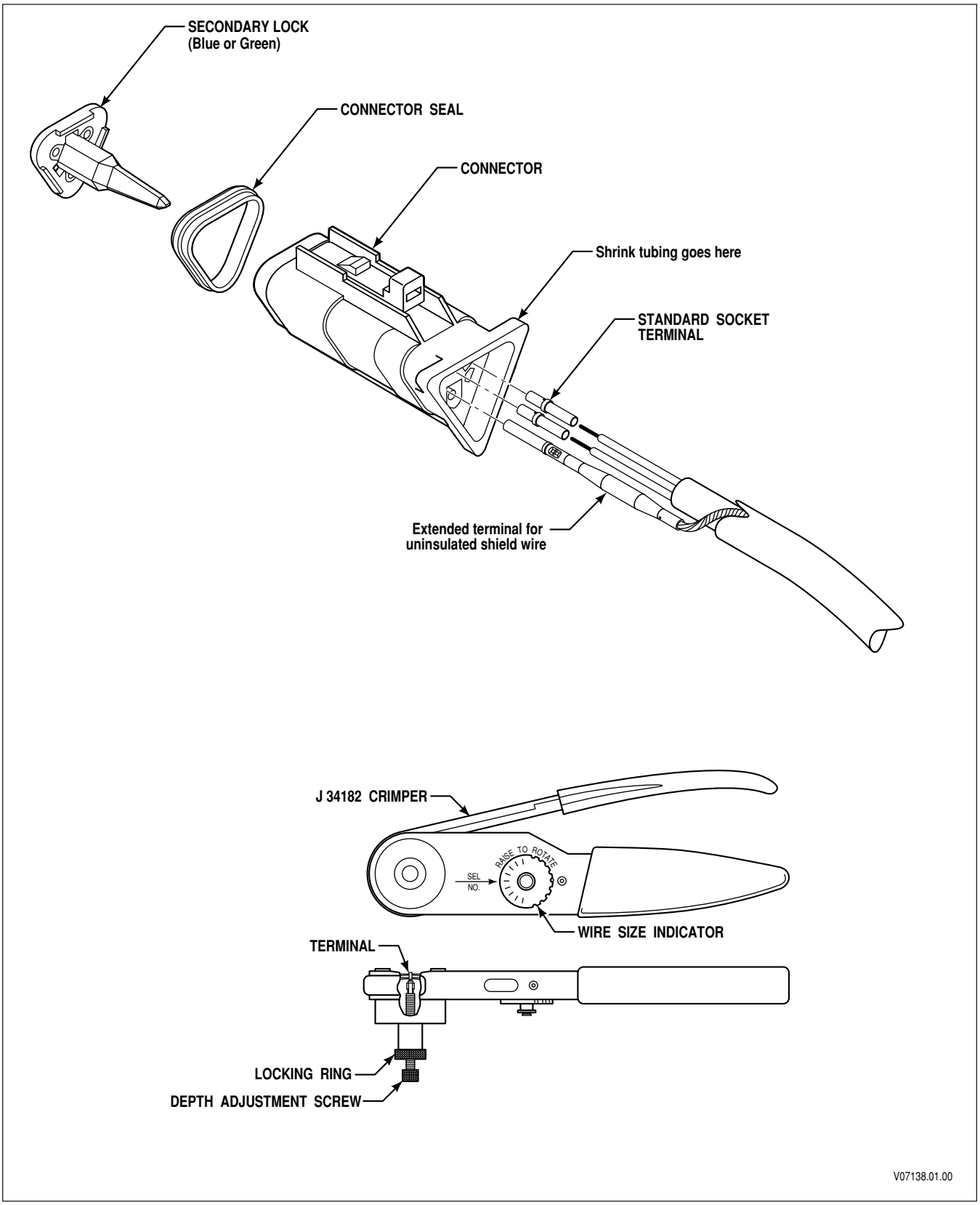

Figure E–13. Deutsch DT Series Connector (3-Way J1939 Interface)

Copyright © 2005 General Motors Corp.

https://truckmanualshub.com/

APPENDIX E — CONNECTOR PART NUMBERS, TERMINAL PART NUMBERS, TOOL PART NUMBERS, AND REPAIR INSTRUCTIONS

1–12. DEUTSCH DT SERIES CONNECTORS (3-WAY J1939 INTERFACE)

A. Connector/Terminal Repair

Crimping Tool J 34182

Use	Description	Manufacturers P/N
	Connector, Plug, 3-Way	DT06-3S-E008
	Wedgelock, Plug	W3S-1939
	Connector, Plug, 3-Way	DT06-3S-P032
	Wedgelock, Plug (Green—Diagnostic/ Controller Stubs)	W3S-P012
J1939 Interface (Early Design)	Connector, Receptacle, 3-Way	DT04-3P-E008
	Wedgelock, Receptacle	W3P
J1939 Interface (Later Design)	Contact, Pin #16	3660-201-1690
	Contact, Extended Pin	0460-247-1631
	Contact, Socket (Standard)	3662-204-1691
Common To Both Designs	Contact, Socket (Extended)	0462-221-1631

B. Terminal Removal (Figure E–13)

1. Use a small-bladed screwdriver to remove the secondary lock that holds the terminals in place.
2. Use a sharp knife to carefully remove the shrink tubing from the rear of the connector plug.
3. Use a small screwdriver to release the locking lever for all of the terminals. Pull the wire and terminal out the rear of the connector.
4. Slide a new piece of shrink tubing over the removed terminals and onto the cable.
5. If replacing the terminal, cut the wire through the middle of the terminal crimp to minimize wire loss.

C. Terminal Crimping (Figure E–13)

1. Strip 6–8 mm (0.24–0.31 inch) of insulation from the wire. There is no insulation on the shield wire.
2. Set the crimping tool wire size to number 18. To set the wire size, remove the retainer pin. Lift and rotate the indicator until 18 is aligned with the SEL NO. arrow. Reinstall the retainer pin.
3. Insert the contact end of the terminal down into crimping tool J 34182. Adjust the crimping tool depth by loosening the locking ring until the depth adjusting screw is free and turning the adjusting screw until the wire end of the terminal is just above flush with the top of the crimping hole. The depth adjustment screw will need to be backed out a large amount to accept the extended shield terminal. The crimp jaws will now contact the middle of the terminal barrel. Tighten the lock ring to retain the adjustment.
4. Fully insert the wire into the terminal so that the stripped portion of the wire is in the crimp area. A small section (0.5–1.0 mm (0.02–0.04 inch)) of wire will be visible above the terminal barrel.
5. Squeeze the crimping tool handle until it releases. The terminal is now crimped onto the wire.

Copyright © 2005 General Motors Corp.

https://truckmanualshub.com/

APPENDIX E — CONNECTOR PART NUMBERS, TERMINAL PART NUMBERS, TOOL PART NUMBERS, AND REPAIR INSTRUCTIONS

C. Terminal Crimping (Figure E–13) *(cont'd)*

6. Remove the terminal and wire from the crimping tool.
7. Tug on the terminal to ensure the crimp is tight.

D. Terminal Insertion

1. Slide the wire with crimped terminal attached into the rear of the connector.
2. Push the terminal and wire into the connector until it locks into position (Figure E–13). Check the front of the connector to see that the terminal is at the same height as other terminals. Tug on the wire at the rear of the connector to ensure that the terminal is locked in place.
3. Insert the wedge lock to hold the terminals in place. Slide the sealing plug back into place at the rear of the connector.
4. Slide the shrink tubing over the raised area at the rear of the connector. Use a heat gun to shrink the tubing into position over the connector and cable.

Copyright © 2005 General Motors Corp.

https://truckmanualshub.com/

APPENDIX E — CONNECTOR PART NUMBERS, TERMINAL PART NUMBERS, TOOL PART NUMBERS, AND REPAIR INSTRUCTIONS

NOTES

Copyright © 2005 General Motors Corp.

https://truckmanualshub.com/

APPENDIX E — CONNECTOR PART NUMBERS, TERMINAL PART NUMBERS, TOOL PART NUMBERS, AND REPAIR INSTRUCTIONS

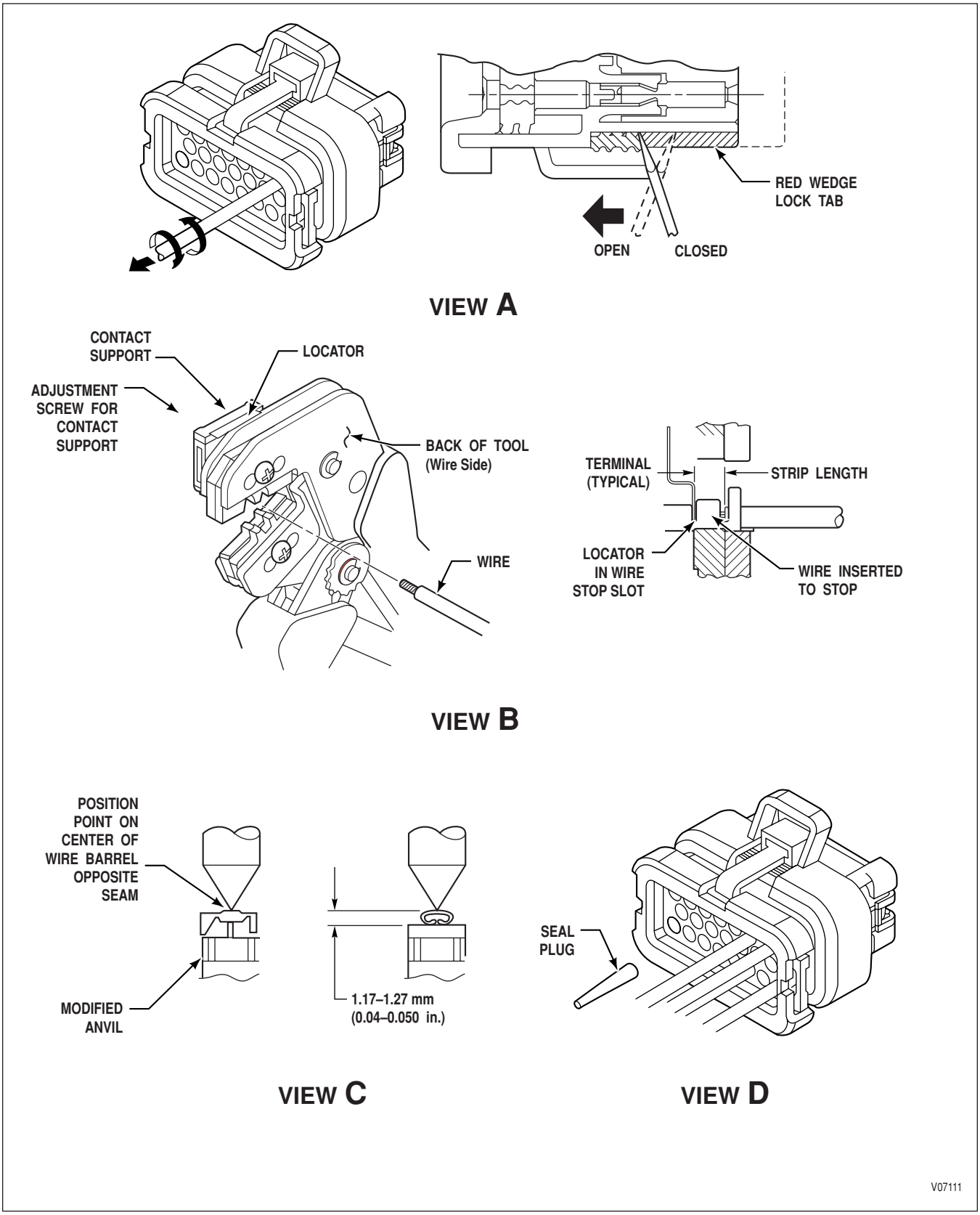

Figure E–14. AMP MATE-N-LOK II Connector (Compact Shift Selector)

Copyright © 2005 General Motors Corp.

https://truckmanualshub.com/

APPENDIX E — CONNECTOR PART NUMBERS, TERMINAL PART NUMBERS, TOOL PART NUMBERS, AND REPAIR INSTRUCTIONS

1–13. AMP MATE-N-LOK II SERIES CONNECTORS (COMPACT SHIFT SELECTOR)

NOTE: ***The repair information for the AMP connector was obtained from the following AMP publications:***

- ***Application Specification 114–16016; 20 Nov 95; Rev D***
- ***Instruction Sheet 408–9999; 10 Jan 95; Rev A***
- ***Instruction Sheet 408–9592; 22 Jul 93; Rev O***

The following information is presented for the convenience of Allison Transmission customers using the compact shift selector. Connector parts and AMP repair tools are not available through Allison Transmission. For availability of parts and tools, contact:

AMP Incorporated Customer Service; P.O. Box 3608; Harrisburg, PA 17105-3608
Technical/Tooling Assistance Center 1-800-722-1111
AMP FAX/Product Info 1-800-522-6752

A. Connector/Terminal Repair

AMP PRO-CRIMPER II Hand Tool Assembly	58529-1
with Die Assembly	58529-2
AMP Hand-Crimping Tool (Alternate)	58440-1

Use	Description	Manufacturers P/N
	Shift Selector Assembly (Serviced only as an assembly)	15752787
	Mating 14-Way Connector	1-778273-1
	Terminal, Socket	770854-3
	Seal Plug	770678-1
Compact Pushbutton Shift Selector	Wire Seal (14-Way)	
	Connector Seal	

B. Terminal Removal (Figure E–14, View A)

1. Disconnect the connector from the compact shift selector when repairs are being made.
2. Insert a 4.8 mm (0.188 inch) wide screwdriver blade between the mating seal and one of the red wedge lock tabs. Pry the wedge lock to the open position. Wedge lock will move outward about 5.5 mm (0.22 inch).

NOTE: ***Any of the wires may be removed for servicing with the wedge lock in the open position. DO NOT remove the wedge lock in order to service terminals.***

3. To remove a wire and terminal from the connector:

   Rotate the wire back and forth through a half-turn arc (quarter turn in each direction) and gently pull on the wire until the terminal is removed.

4. If replacing the terminal, cut the wire through the middle of the terminal crimp to minimize wire loss.

Copyright © 2005 General Motors Corp.

https://truckmanualshub.com/

APPENDIX E — CONNECTOR PART NUMBERS, TERMINAL PART NUMBERS, TOOL PART NUMBERS, AND REPAIR INSTRUCTIONS

C. Terminal Support Adjustment (Figure E–14, View B)

NOTE: ***The terminal support is preset prior to tool shipment, but minor adjustment may be necessary.***

1. Make a sample crimp and determine if the terminal is straight, bending upward, or bending downward.
2. If adjustment is required, loosen the screw that holds the terminal support onto the locator assembly.

NOTE: ***The tool ratchet has detents that produce audible clicks as the tool handles are closed.***

3. Place a terminal and wire into the 18 wire gauge nest and close the tool handles until the ratchet reaches the sixth click, or until the terminal support touches the terminal.
4. Slightly loosen the nut that holds the locator assembly onto the tool frame.
5. Move the terminal support as required to eliminate the bending of the contact.
6. Tighten the nut and close the handles until the ratchet releases.
7. Remove and inspect the terminal.
8. Make another sample crimp. If the contact is straight, tighten the terminal support screw. If the terminal is still being bent during crimping, repeat the adjustment procedure.

D. Terminal Crimping Using AMP PRO-CRIMPER II (Figure E–14, View B)

1. Strip 4.7–5.5 mm (0.18–0.22 inch) of insulation from the wire, being careful not to nick or cut wire strands.

NOTE: ***Be sure that the wire stripper does not leave indentations on the surface of the wire insulation. If indentations are present in the area of the wire seal, leakage may result. The insulation surface within 26 mm (1.02 inch) from the tip of the terminal must be smooth and free of residual indentations.***

2. Position the tool so the back (wire side) is facing you. Squeeze the tool handles together and allow them to open fully.
3. Holding the terminal by the mating end, insert the terminal—insulation barrel first—through the front of the tool and into the 18 wire gauge crimp section.
4. Position the terminal so the mating end of the terminal is on the locator side of the tool and the open “U” of the wire and insulation barrels face the top of the tool. Place the terminal up into the 18 gauge nest so the movable locator drops into the slot in the terminal. Butt the front end of the wire barrel against the movable locator.

CAUTION:	Ensure both sides of the insulation barrel are started evenly into the crimping section. DO NOT attempt to crimp an improperly positioned terminal.

5. Hold the terminal in position and squeeze the tool handles together until the ratchet engages sufficiently to hold the terminal in position. DO NOT deform the insulation barrel or the wire barrel.
6. Insert the stripped wire into the terminal and wire barrels until the wire is butted against the locator/wire stop.

Copyright © 2005 General Motors Corp.

https://truckmanualshub.com/

APPENDIX E — CONNECTOR PART NUMBERS, TERMINAL PART NUMBERS, TOOL PART NUMBERS, AND REPAIR INSTRUCTIONS

D. Terminal Crimping Using AMP PRO-CRIMPER II (Figure E–14, View B) *(cont'd)*

7. Holding the wire in place, squeeze the tool handles together until the ratchet releases. Allow the tool handles to open and remove the wire with the crimped terminal attached.

NOTE: Release a terminal stuck in the crimping nest by pushing downward on the top of the movable locator.

8. Be sure the finished crimp meets the size requirements shown in Figure E–14, View C.

E. Terminal Crimping Using Alternate Crimper 58440-1 (Figure E–15)

1. Strip 4.7–5.5 mm (0.18–0.22 inch) of insulation from the wire, being careful not to nick or cut wire strands.

NOTE: Be sure that the wire stripper does not leave indentations on the surface of the wire insulation. If indentations are present in the area of the wire seal, leakage may result. The insulation surface within 26 mm (1.02 inch) from the tip of the terminal must be smooth and free of residual indentations.

2. Position the tool so the back (wire side) is facing you. Squeeze the tool handles together and allow them to open fully.
3. Holding the terminal by the mating end, insert the terminal—insulation barrel first—through the front of the tool and into the 18 wire gauge crimp section.
4. Position the terminal between the crimping dies so the locator/insulation stop drops into the slot in the terminal. Butt the front end of the wire barrel against the locator/insulation stop.

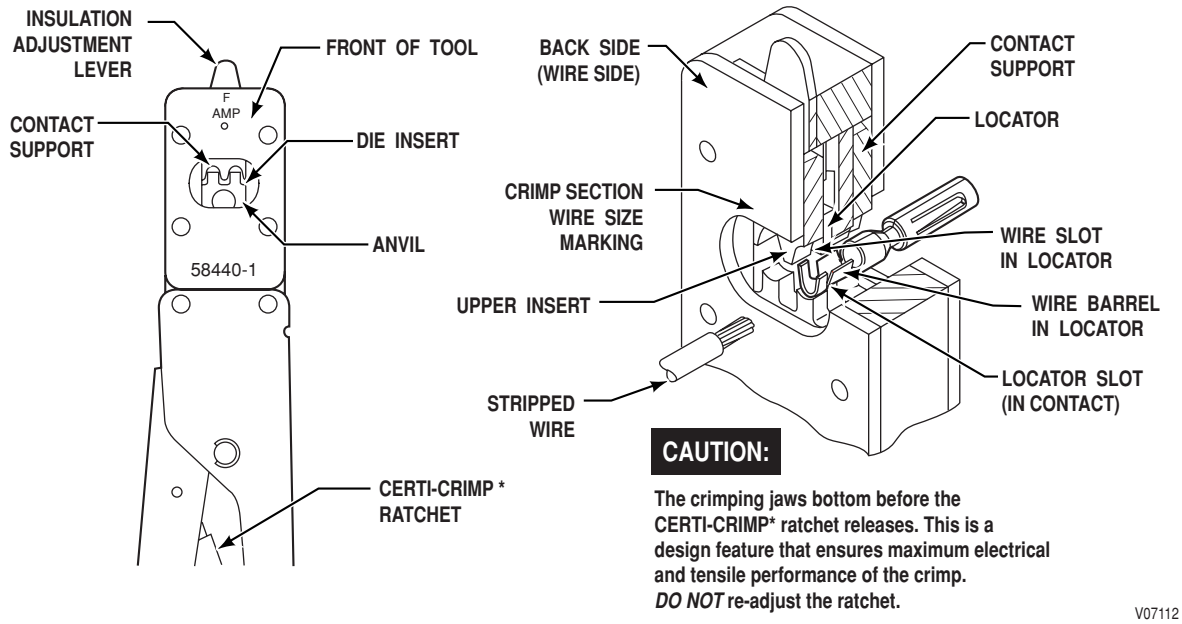

Figure E–15. Alternate AMP Crimper 58440-1

Copyright © 2005 General Motors Corp.

https://truckmanualshub.com/

APPENDIX E — CONNECTOR PART NUMBERS, TERMINAL PART NUMBERS, TOOL PART NUMBERS, AND REPAIR INSTRUCTIONS

E. Terminal Crimping Using Alternate Crimper 58440-1 (Figure E–15) *(cont'd)*

5. Hold the terminal in position and squeeze the tool handles together until the insulation barrel anvil starts entry into the upper insert to hold the terminal in position. DO NOT deform the insulation barrel or the wire barrel.
6. Insert properly stripped wire through the wire slot in the locator until the insulation butts against the locator/insulation stop.
7. Holding the wire in place, crimp the terminal to the wire by squeezing the tool handles together until the ratchet releases. Allow the tool handles to open FULLY and remove the wire with the crimped terminal attached.
8. Check to see if the insulation crimp is too tight or too loose. The crimp should hold the insulation firmly without cutting into it. Change the setting of the insulation adjustment lever as required.

F. Terminal Insertion

1. Be sure the red wedge lock is in the open position (Figure E–14, View A).
2. Slide the wire with crimped terminal attached into the rear of the connector.
3. Push the terminal and wire into the connector until it locks into position. Check the front of the connector to see that the terminal is at the same height as other terminals. Tug lightly on the wire (1–2 pound force) at the rear of the connector to ensure that the terminal is locked in place.

NOTE: ***As the terminal is pushed through the wire seal it perforates the diaphragm on the seal. If an unused location is accidentally perforated, install a P/N 770678-1 Seal Plug (large end first) as shown in Figure E–14, View D.***

4. After all terminals have been inserted, push inward on the wedge lock until it is flush with the connector. Squeeze inward on the connector locking latches to seat the wedge lock.

NOTE: ***The wedge lock has slotted openings in the front or mating end. These slots are intended to be used with circuit test tabs that are approximately 3.3 x 0.6 mm (0.130 x 0.024 inch) which prevent damage to the connector. DO NOT use a sharp point such as an ice pick!***

Copyright © 2005 General Motors Corp.

https://truckmanualshub.com/

APPENDIX E — CONNECTOR PART NUMBERS, TERMINAL PART NUMBERS, TOOL PART NUMBERS, AND REPAIR INSTRUCTIONS

1–14. REPAIR OF A BROKEN WIRE WITH IN-LINE BUTT SPLICE

A. Connector Check Before Repair

NOTE: ***Before repairing or replacing wiring harness, sensor, solenoid, switch, or ECU as indicated for a diagnosed problem, follow the procedure below:***

1. Disconnect the connector or connectors associated with the problem and inspect for:
   - Bent terminals
   - Broken terminals
   - Dirty terminals
   - Pushed back terminals
   - Missing terminals
   - Condition of mating tabs
   - Condition of mating terminals

   Ensure that terminals are secure in the connector. Clean, straighten, or replace parts as required.
2. Reconnect all previous unmated connectors. Ensure connectors are fully inserted or twisted until they lock in place. Connectors with locking tabs make an audible “click” when the lock is engaged.
3. If trouble recurs after starting the vehicle, follow proper repair procedures for trouble code or complaint.
4. If trouble does not recur, or if the correct repairs and/or replacements have been made, the problem should be corrected.

B. Special Tools

- Heat Gun, J 25070 or equivalent
- Crimping Tool for Pre-insulated Crimp J 38125-8 (Figure E–16)

NOTE: ***Use crimping anvils “F” and “G.”***

- Wire Stripper, J 35615
- Splices P/N 23046604 14–16 AWG
- Splices P/N 23046605 18–22 AWG

NOTE: ***Each splice must be properly crimped and then heated to shrink the covering to protect and insulate the splice. Insulation piercing splice clips should not be used.***

Copyright © 2005 General Motors Corp.

https://truckmanualshub.com/

APPENDIX E — CONNECTOR PART NUMBERS, TERMINAL PART NUMBERS, TOOL PART NUMBERS, AND REPAIR INSTRUCTIONS

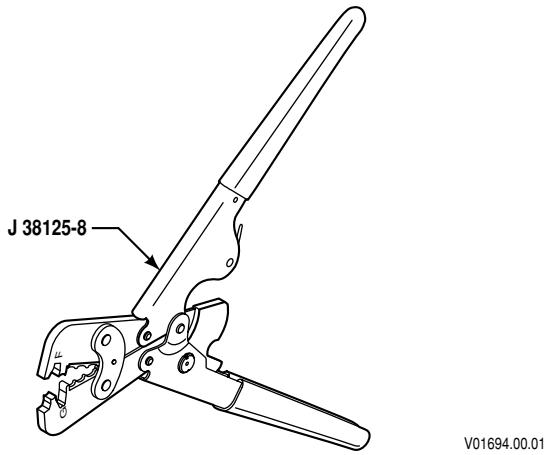

Figure E–16. Crimper J 38125-8

C. Straight Lead Repair Procedure

1. Locate damaged wire.
2. Remove insulation 8.0 mm (0.3 inch).
3. Insert one wire into crimp barrel and crimp.
4. Insert other wire into crimp barrel and crimp.
5. Pull on connection to ensure crimping integrity.
6. Heat splice with heat gun until covering shrinks and adhesive flows from under the covering.
7. The splice is now sealed and insulated. Electrical tape should not be used and is not necessary.

Copyright © 2005 General Motors Corp.

https://truckmanualshub.com/

APPENDIX E — CONNECTOR PART NUMBERS, TERMINAL PART NUMBERS, TOOL PART NUMBERS, AND REPAIR INSTRUCTIONS

NOTES

Copyright © 2005 General Motors Corp.

https://truckmanualshub.com/

APPENDIX E — CONNECTOR PART NUMBERS, TERMINAL PART NUMBERS, TOOL PART NUMBERS, AND REPAIR INSTRUCTIONS

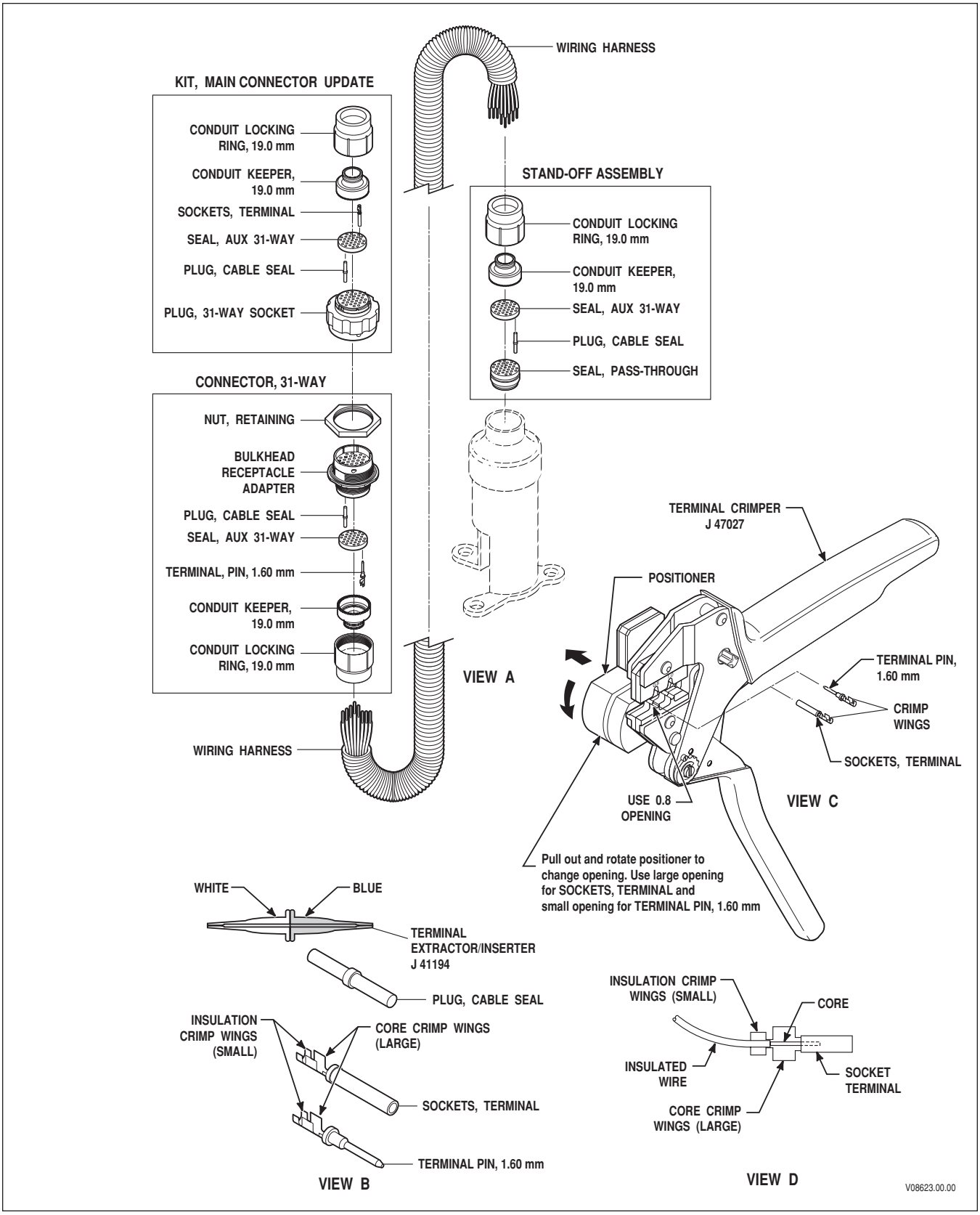

Figure E–17. Delphi-Packard (DHD) Connectors (31-Way); Crimping Tool

Copyright © 2005 General Motors Corp.

https://truckmanualshub.com/

APPENDIX E — CONNECTOR PART NUMBERS, TERMINAL PART NUMBERS, TOOL PART NUMBERS, AND REPAIR INSTRUCTIONS

1–15. DELPHI-PACKARD (DHD) 31-WAY CONNECTOR

A. Connector/Terminal Repairs And Crimping Tool (Figure E-17)

Crimping Tool	J 47027
Terminal Extractor/Inserter	J 41194

Use	Description	Manufacturers P/N
Connector, 31-Way DHD	Bulkhead Receptacle Adapter	29541278
	Terminal, Pin, 1.6 mm	29542586
	Plug, Cable Seal	12034413
	Backshell	29541284
	Conduit Retainer	29541281
	Seal, Auxiliary 31-way	29541280
	Nut, Retainer	29541276
	Seal, Pass-through	29541279
Kit, Main Connector Update - DHD	Kit, Main Connector Update	29519127
	Plug, 31-way socket	29541277
	Socket, Terminal	29542587
	Plug, Cable seal	12034413
	Backshell	29541284
	Conduit Retainer	29541281
	Seal, Auxiliary 31-way	29541280

NOTE: ***If it is difficult to remove or install the plug backshell, insert the plug into the receptacle, but do not lock it into place, and loosen the backshell.***

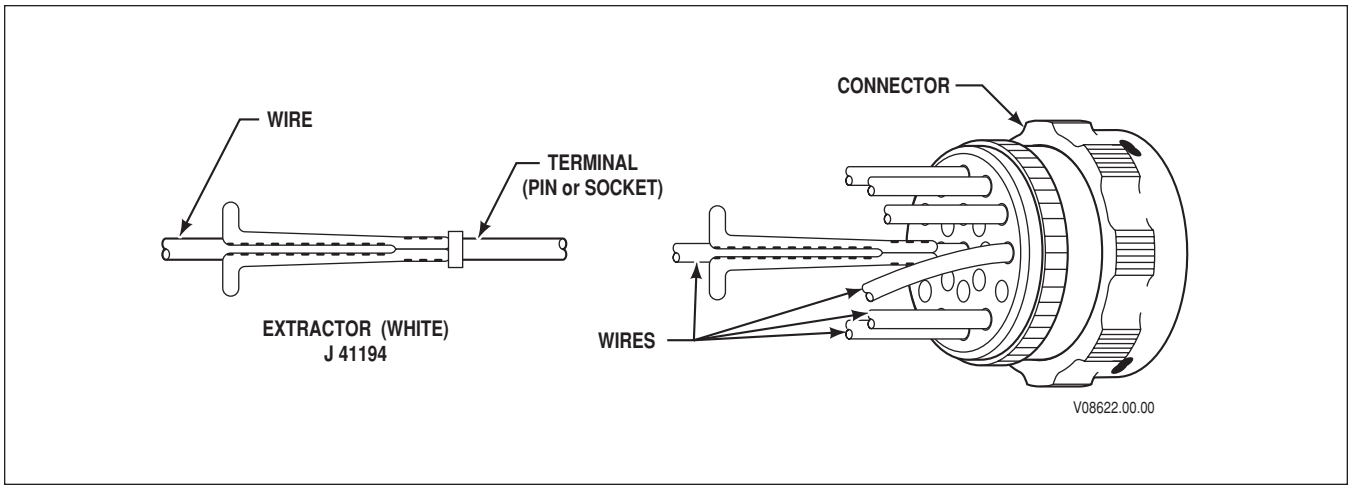

Figure E–18. Pin and Socket Extraction

Copyright © 2005 General Motors Corp.

https://truckmanualshub.com/

APPENDIX E — CONNECTOR PART NUMBERS, TERMINAL PART NUMBERS, TOOL PART NUMBERS, AND REPAIR INSTRUCTIONS

B. Pin And Socket Removal (Figure E-18)

1. Loosen and slide the backshell along the convolute conduit.
2. Remove the convolute conduit from the base of the backshell follower. Peel enough conduit from the harness to allow working access.
3. Slide the backshell follower clear of the connector housing.
4. Remove as much of the tape wrap as necessary to allow working access.

NOTE: When using extractor/inserter tool, J 41194, lay the wire in the widest part of the wire slot and work the tool tip toward the terminal being very careful so the tip of the tool is not damaged or broken.

5. Carefully insert the exposed part of the wire of a terminal pin or socket to be removed into the extractor tool (white end). Slide the tool, along with the wire, through the auxiliary seal and into the back of the connector until it releases the terminal pin or socket.
6. Pull the terminal pin or socket, wire, and tool out of the back of the connector and auxiliary seal at the same time.

If replacing the terminal, cut the wire through the middle of the terminal crimp (This minimizes wire loss).

C. Terminal Crimping (Figure E–17, View C)

1. Strip approximately 5.0– 0.5 mm (0.197–0.02 inch) of insulation from the wire (core).
2. The terminal positioner on the crimping tool must be pulled out and rotated as necessary to accommodate both the socket and pin terminals. Use the large opening for sockets and small opening for terminal pins.
3. Position the socket in the crimping tool so the crimp wings are up (Figure E–17, View C).

NOTE: It is important that the core is not inserted into the terminal any farther than is necessary to grip the insulation with the insulation crimp wings when the handle is squeezed.

4. Insert the core into the socket until the core is in the core crimp wings and the insulation is in the insulation crimp wings (Figure E–17, View D).
5. Squeeze the crimp tool handle until it releases. The socket is now crimped onto the wire and the insulation is crimped under the insulation crimp wings.
6. Lightly tug on the socket while holding the wire to be sure the crimp is tight.

Crimp the terminal pin onto the wire using Steps 1–6.

Copyright © 2005 General Motors Corp.

https://truckmanualshub.com/

APPENDIX E — CONNECTOR PART NUMBERS, TERMINAL PART NUMBERS, TOOL PART NUMBERS, AND REPAIR INSTRUCTIONS

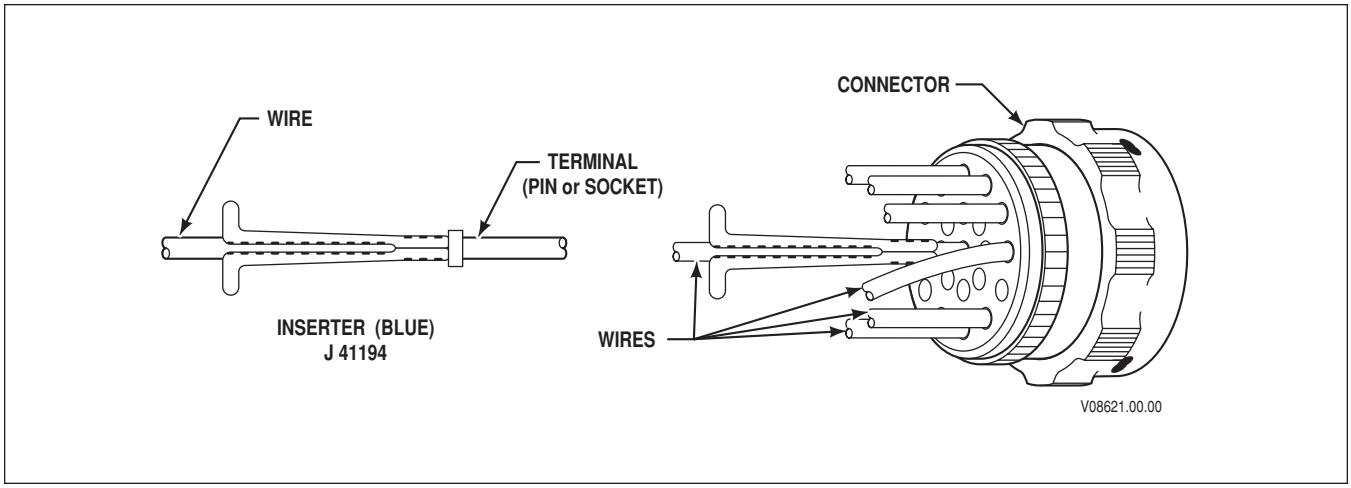

Figure E–19. Pin and Socket Insertion

D. Terminal And Socket Insertion (Figure E-19)

NOTE: If replacing an auxiliary seal (refer to Figure E-17, View A), be sure the auxiliary seal is correctly installed. Each auxiliary seal is marked with the terminal ID of the wire that passes through that hole (Figure E-20). The auxiliary seal holes match the pattern of either the pins or sockets in the bulkhead receptacle adapter or plug respectively. One side of the auxiliary seal is marked "PIN" (Figure E-20, View A) and the other side is marked "SOC" or "SKT" (Figure E-20, View B). "PIN" indicates the pin (bulkhead receptacle adapter) side of the connector. "SOC" or "SKT" indicates the socket (plug) side of the connector. When installing the auxiliary seal in the bulkhead receptacle adapter side of the connector, be sure "PIN" side is showing and position it so the "A" terminal ID on the auxiliary seal aligns with the "A" terminal ID on the bulkhead receptacle adapter. When installing the auxiliary seal on the plug side of the connector, be sure "SOC" or "SKT" is showing and position it so the "A" terminal ID on the auxiliary seal aligns with the "A" terminal ID on the plug. Reversing "PIN" and "SOC" or "SKT" sides of the auxiliary seal will cause the auxiliary seal holes to be misaligned with the holes in either the plug or bulkhead receptacle adapter. Perform Steps 1 and 2 only if the auxiliary seal has been removed.

1. Place the correct side of the auxiliary seal against the bulkhead receptacle adapter or plug and align the "A" terminal IDs.
2. Insert two cavity plugs in unused cavities to maintain the proper orientation of the terminal holes.

NOTE: Handle the J 41194 extractor/inserter tool carefully so that the tip of the tool is not damaged or broken. Lay the wire into the widest part of the wire slot and work the tool toward the terminal or socket.

3. Place the wire in the inserter tool J-41194 (blue end). Slide the tool along the wire until it touches the terminal.
4. Insert the tool through the auxiliary seal into the connector and push until the terminal or socket is seated. Remove the tool leaving the wire and terminal in place.
5. Insert cavity plugs into all unused cavities.
6. Wrap plastic tape around the wire bundle.
7. Assemble the connector in the reverse order of disassembly.

Copyright © 2005 General Motors Corp.

https://truckmanualshub.com/

APPENDIX E — CONNECTOR PART NUMBERS, TERMINAL PART NUMBERS, TOOL PART NUMBERS, AND REPAIR INSTRUCTIONS

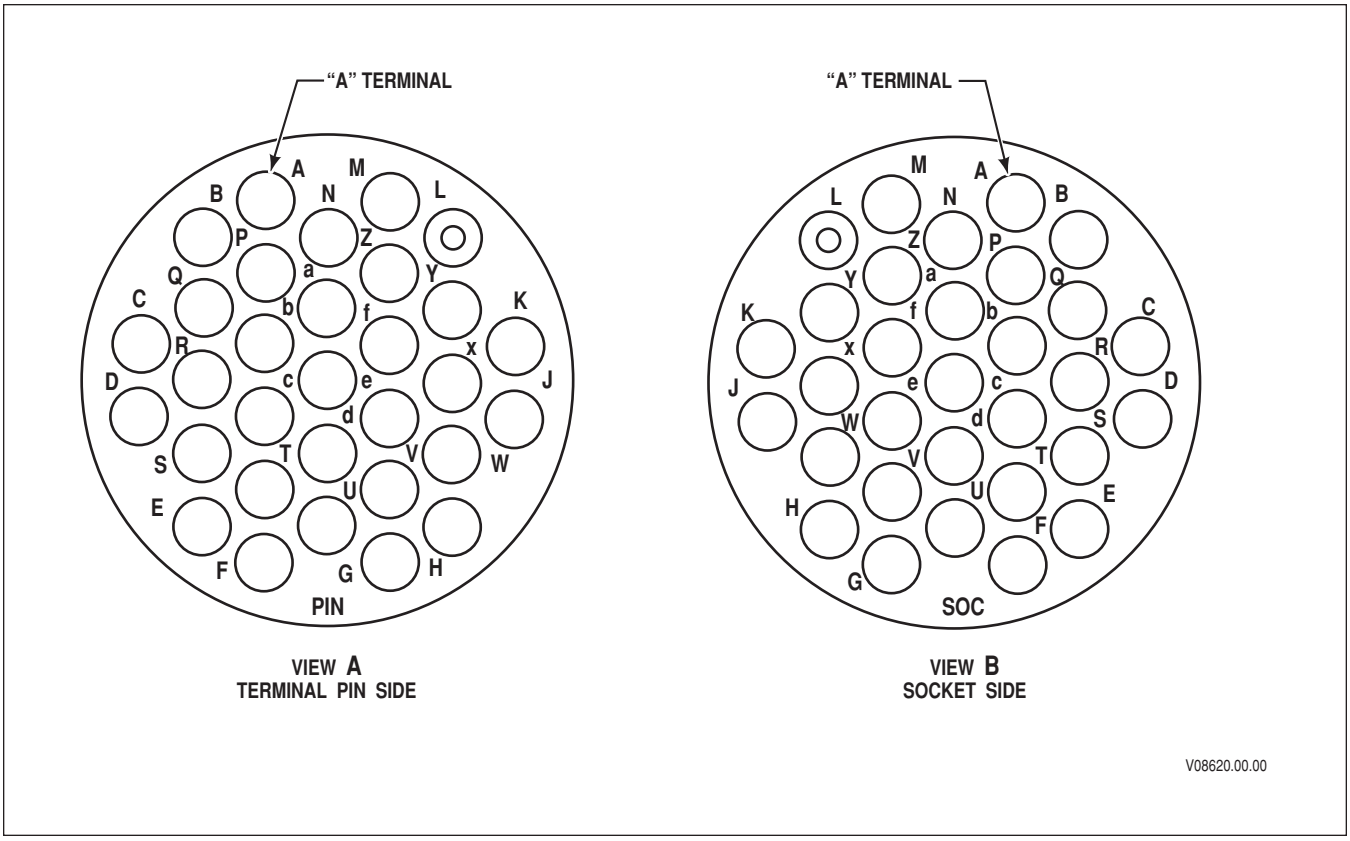

Figure E–20. Auxiliary Seal Orientation

Copyright © 2005 General Motors Corp.

https://truckmanualshub.com/

APPENDIX E — CONNECTOR PART NUMBERS, TERMINAL PART NUMBERS, TOOL PART NUMBERS, AND REPAIR INSTRUCTIONS

CONNECTOR	MFG. P/N	PART NAME	MANUFACTURER	CONFIG	MATING P/N	MFG. P/N	MATING PART NAME
ECU S	12191001	STRAIN RELIEF, 32-WAY BLACK	DELPHI-PACKARD	1-PC/ECU S	12186041	12186041	ECU HEADER
ECU S	15305333	SEAL, 32-WAY	DELPHI-PACKARD	1-PC/ECU S			
ECU S	15305371	INNER CONNECT, 32-WAY	DELPHI-PACKARD	1-PC/ECU S			
ECU S	12129021	TPA, 32-WAY BLACK	DELPHI-PACKARD	1-PC/ECU S			
ECU S	12084912	TERMINAL, SOCKET 100W	DELPHI-PACKARD	1-PC/ECU S			
ECU S	12129557	CAVITY PLUG, 100W	DELPHI-PACKARD	1-PC/ECU S			
ECU S	12177289	CPA, 32-WAY RED	DELPHI-PACKARD	1-PC/ECU S			
ECU V	12191002	STRAIN RELIEF, 32-WAY GRAY	DELPHI-PACKARD	1-PC/ECU V	12186043	12186043	ECU HEADER
ECU V	15305333	SEAL, 32-WAY	DELPHI-PACKARD	1-PC/ECU V			
ECU V	15305371	INNER CONNECT, 32-WAY	DELPHI-PACKARD	1-PC/ECU V			
ECU V	12129022	TPA, 32-WAY GRAY	DELPHI-PACKARD	1-PC/ECU V			
ECU V	12084912	TERMINAL, SOCKET 100W	DELPHI-PACKARD	1-PC/ECU V			
ECU V	12129557	CAVITY PLUG, 100W	DELPHI-PACKARD	1-PC/ECU V			
ECU V	12177289	CPA, 32-WAY RED	DELPHI-PACKARD	1-PC/ECU V			
ECU T	12191003	STRAIN RELIEF, 32-WAY BLUE	DELPHI-PACKARD	1-PC/ECU T	12129008	12129008	ECU HEADER
ECU T	15305333	SEAL, 32-WAY	DELPHI-PACKARD	1-PC/ECU T			
ECU T	15305371	INNER CONNECT, 32-WAY	DELPHI-PACKARD	1-PC/ECU T			
ECU T	12129023	TPA, 32-WAY BLUE	DELPHI-PACKARD	1-PC/ECU T			
ECU T	12084912	TERMINAL, SOCKET 100W	DELPHI-PACKARD	1-PC/ECU T			
ECU T	12129557	CAVITY PLUG, 100W	DELPHI-PACKARD	1-PC/ECU T			
ECU T	12177289	CPA, 32-WAY RED	DELPHI-PACKARD	1-PC/ECU T			
PSS/SSS	12160280	CONN 20F MIC/P 100W GRAY	DELPHI-PACKARD	1-PC/COMP S	12160542	12160542	CONN 20M MIC/P 100W GRAY
PSS/SSS	15304882	CABLE SEAL, 14F GRAY	DELPHI-PACKARD	1-PC/COMP S	12110693	12110693	CABLE SEAL, 14M GREEN
PSS/SSS	12160494	LOCK, SECONDARY 20F GREEN	DELPHI-PACKARD	1-PC/COMP S	12191176	12191176	LOCK ASSIST/SEAL, 20M GREEN
PSS/SSS	12084912	TERMINAL, SOCKET 100W	DELPHI-PACKARD	1-PC/COMP S	12160551	12160551	TERMINAL, PIN 100W
PSS/SSS	12129557	CAVITY PLUG, 100W	DELPHI-PACKARD	1-PC/COMP S	12129557	12129557	CAVITY PLUG, 100W
PSS/SSS	12176394	CONDUIT CLIP, 13 mm BLACK	DELPHI-PACKARD	1-PC/COMP S	12176394	12176394	CONDUIT CLIP, 13 mm BLACK
PSS/SSS	15752787	COMPACT SHIFT SELECTOR	ARENS	Serviced As Assy.	1-778282-1		CONNECTOR
					770854-3		TERMINAL, SOCKET
					770678-1		SEAL PLUG
							WIRE SEAL, 14-WAY
							CONNECTOR SEAL
DDR P	12048105	CONNECTOR, 12-WAY	DELPHI-PACKARD	1-PC/COMP S			DIAGNOSTIC DATA READER
DDR P	12048107	COVER, CONNECTOR	DELPHI-PACKARD	1-PC/COMP S			
DDR P	12034046	TERMINAL, 280F SPECIAL	DELPHI-PACKARD	1-PC/COMP S			
DDR P	12066214	TERMINAL, 280F (W/SCI), 2-WIRE	DELPHI-PACKARD	1-PC/COMP S			
DDR P	12020219	LOCK, SECONDARY	DELPHI-PACKARD	1-PC/COMP S			

Copyright © 2005 General Motors Corp.

APPENDIX E — CONNECTOR PART NUMBERS, TERMINAL PART NUMBERS, TOOL PART NUMBERS, AND REPAIR INSTRUCTIONS

CONNECTOR	MFG. P/N	PART NAME	MANUFACTURER	CONFIG	MATING P/N	MFG. P/N	MATING PART NAME
DDR D	HD10-6-12P	CONNECTOR, REC., 6-WAY	DEUTSCH IPD	1-PC/COMP S			DIAGNOSTIC DATA READER
DDR D	0460-256-12233	CONTACT, PIN #12	DEUTSCH IPD	1-PC/COMP S			
DDR D	0460-204-0831	CONTACT, PIN #8	DEUTSCH IPD	1-PC/COMP S			
DDR D	114017	SEALING PLUG	DEUTSCH IPD	1-PC/COMP S			
DDR D	HD18-006	BACKSHELL - STRAIN RELIEF	DEUTSCH IPD	1-PC/COMP S			
DDR D	HDC16-6	CAP, DDR CONNECTOR	DEUTSCH IPD	1-PC/COMP S			
SCI	15300027	CONNECTOR, 2-WAY	DELPHI-PACKARD	1-PC/COMP S	15300002	15300002	CONNECTOR, 2-WAY
SCI	12077411	TERMINAL, SOCKET	DELPHI-PACKARD	1-PC/COMP S	12048159	12048159	TERMINAL, PIN
SCI	12089444	SEAL, WIRE TYPE, SILICONE	DELPHI-PACKARD	1-PC/COMP S	12089444	12089444	SEAL, WIRE TYPE, SILICONE
SCI	15300014	LOCK, SECONDARY	DELPHI-PACKARD	1-PC/COMP S	15300014	15300014	LOCK, SECONDARY
J1939 Early	DT06-3S-E008	CONNECTOR, PLUG 3-WAY	DEUTSCH	1-PC/ECU S		DT04-3P-E008	CONNECTOR, REC., 3-WAY
J1939 Early	W3S	WEDGELOCK, PLUG	DEUTSCH	1-PC/ECU S		W3P	WEDGELOCK, RECEPTACLE
J1939	3662-204-1691	CONTACT, SOCKET #16	DEUTSCH	1-PC/ECU S	29511369	3660-201-1690	CONTACT, PIN #16
J1939	0462-221-1631	CONTACT, EXTENDED SOCKET	DEUTSCH	1-PC/ECU S		0460-247-1631	CONTACT, EXTENDED PIN
J1939		CABLE, J1939 DATABUS		1-PC/ECU S			
J1939 Later	DT06-3S-P032	CONNECTOR, PLUG, 3-WAY	DEUTSCH	1-PC/ECU S		DT04-3P-E008	CONNECTOR, REC., 3-WAY
J1939 Later	W3S-P012	WEDGELOCK, PLUG (GREEN)	DEUTSCH	1-PC/ECU S		W3P	WEDGELOCK, RECEPTACLE
VIM	12040920	CONNECTOR, BODY, 18-WAY	DELPHI-PACKARD	1-PC/COMP V	12052130	12052130	VIM HEADER ASSEMBLY
VIM	12040936	SEAL, 9-WAY	DELPHI-PACKARD	1-PC/COMP V			
VIM	12110545	STRAIN RELIEF, 18-WAY	DELPHI-PACKARD	1-PC/COMP V			
VIM	12129426	BOLT, 7mm HEAD EXT.	DELPHI-PACKARD	1-PC/COMP V			
VIM	12034236	RETAINER CLIP, BOLT	DELPHI-PACKARD	1-PC/COMP V			
VIM	12103881	TERMINAL, 150F	DELPHI-PACKARD	1-PC/COMP V			
VIM	12034413	CAVITY PLUG, METRI-PACK	DELPHI-PACKARD	1-PC/COMP V			
VIW S	12160542	CONN 20M MIC/P 100W GRAY	DELPHI-PACKARD	1-PC/COMP S	12160280	12160280	CONN 20F MIC/P 100W GRAY
VIW S	12110693	CABLE SEAL, 14M GREEN	DELPHI-PACKARD	1-PC/COMP S	15304882	15304882	CABLE SEAL, 14F GRAY
VIW S	12191178	LOCK ASSIST/SEAL, 20M WHITE	DELPHI-PACKARD	1-PC/COMP S	12191173	12191173	LOCK, SECONDARY 20F WHITE
VIW S	12160551	TERMINAL, PIN 100W	DELPHI-PACKARD	1-PC/COMP S	12084912	12084912	TERMINAL, SOCKET 100W
VIW S	12129557	CAVITY PLUG, 100W	DELPHI-PACKARD	1-PC/COMP S	12129557	12129557	CAVITY PLUG, 100W
VIW S	12176394	CONDUIT CLIP, 13 mm BLACK	DELPHI-PACKARD	1-PC/COMP S	12176394	12176394	CONDUIT CLIP, 13 mm BLACK
VIW V	12160542	CONN 20M MIC/P 100W GRAY	DELPHI-PACKARD	1-PC/COMP V	12160280	12160280	CONN 20F MIC/P 100W GRAY
VIW V	12110693	CABLE SEAL, 14M GREEN	DELPHI-PACKARD	1-PC/COMP V	15304882	15304882	CABLE SEAL, 14F GRAY
VIW V	12191177	LOCK ASSIST/SEAL, 20M BLUE	DELPHI-PACKARD	1-PC/COMP V	12191172	12191172	LOCK, SECONDARY 20F BLUE
VIW V	12160551	TERMINAL, PIN 100W	DELPHI-PACKARD	1-PC/COMP V	12084912	12084912	TERMINAL, SOCKET 100W
VIW V	12129557	CAVITY PLUG, 100W	DELPHI-PACKARD	1-PC/COMP V	12129557	12129557	CAVITY PLUG, 100W
VIW V	12176394	CONDUIT CLIP, 13 mm BLACK	DELPHI-PACKARD	1-PC/COMP V	12176394	12176394	CONDUIT CLIP, 13 mm BLACK
VIW V	12191505	COVER, CONNECTOR	DELPHI-PACKARD	1-PC/COMP V			
RMR	12015795	CONNECTOR, 3-WAY	DELPHI-PACKARD	1-PC/COMP S,T	12015092	12015092	CONNECTOR, SHROUD 3-WAY
RMR	12089040	TERMINAL, PIN	DELPHI-PACKARD	1-PC/COMP S,T	12089188	12089188	TERMINAL, SOCKET
RMR	12089444	SEAL, WIRE TYPE, SILICONE	DELPHI-PACKARD	1-PC/COMP S,T	12089444	12089444	SEAL, WIRE TYPE, SILICONE

Copyright © 2005 General Motors Corp.

APPENDIX E — CONNECTOR PART NUMBERS, TERMINAL PART NUMBERS, TOOL PART NUMBERS, AND REPAIR INSTRUCTIONS

CONNECTOR	MFG. P/N	PART NAME	MANUFACTURER	CONFIG	MATING P/N	MFG. P/N	MATING PART NAME
NE (Former)	12162193	CONNECTOR, 2-WAY	DELPHI-PACKARD	1-PC/COMP T	12066016		ENGINE SPEED SENSOR
NE (Former)	12103881	TERMINAL, 150F	DELPHI-PACKARD	1-PC/COMP T	Actual sensor uses molded receptacle similar to 12066016		
NO (Former)	12162193	CONNECTOR, 2-WAY	DELPHI-PACKARD	1-PC/COMP T			OUTPUT SPEED SENSOR
NO (Former)	12103881	TERMINAL, 150F	DELPHI-PACKARD	1-PC/COMP T	Actual sensor uses molded receptacle similar to 12066016		
NT (Former)	12162193	CONNECTOR, 2-WAY	DELPHI-PACKARD	1-PC/COMP T			TURBINE SPEED SENSOR
NT (Former)	12103881	TERMINAL, 150F	DELPHI-PACKARD	1-PC/COMP T	Actual sensor uses molded receptacle similar to 12066016		
NE, NO, NT (Current)	15490464 15496486 15305350 15305352 15358890	CONNECTOR, MET/P 150 CPA TERMINAL CABLE SEAL CONVOLUTED CAPTURE/ TPA	DELPHI-PACKARD	1-PC/COMP T			SPEED SENSORS; ENGINE OUTPUT TURBINE
TPS	12015793	CONNECTOR, 3-WAY	DELPHI-PACKARD	1-PC/COMP V,T			TPS HEADER
TPS	12089040	TERMINAL, PIN	DELPHI-PACKARD	1-PC/COMP V,T	TPS header similar to 12010717 connector with 12089188 sockets molded into the TPS.		
TPS	12089444	SEAL, WIRE TYPE, SILICONE	DELPHI-PACKARD	1-PC/COMP V,T			
NSOL	15326143	CONNECTOR, 2-WAY	DELPHI-PACKARD	1-PC/COMP T	12084669		ACCUMULATOR SOLENOID
NSOL	12103881	TERMINAL, 150F	DELPHI-PACKARD	1-PC/COMP T	Actual solenoid uses molded receptacle similar to 12084669		
RTEMP	12010973	CONNECTOR, SHROUD, 2-WAY	DELPHI-PACKARD	1-PC/COMP T	12015792	12015792	CONNECTOR, TOWER, 2-WAY
RTEMP	12089188	TERMINAL, SOCKET	DELPHI-PACKARD	1-PC/COMP T	12089040	12089040	TERMINAL, PIN
RTEMP	12089444	SEAL, WIRE TYPE, SILICONE	DELPHI-PACKARD	1-PC/COMP T	12089444	12089444	SEAL, SILICONE
RTEMP, V8A	12162852	CONNECTOR, 2-WAY	DELPHI-PACKARD	1-PC/COMP T	12015792	12015792	V8A RETARDER TEMPERATURE
RTEMP, V8A	12124075	TERMINAL, 150.2F	DELPHI-PACKARD	1-PC/COMP T			
XFER	KPSE06E10-6S	CONNECTOR ASSY, PLUG 6-WAY	ITT CANNON	1-PC/COMP T(7)		KPSE07E10-6P	TRANSFER CASE
RMOD	KPSE06E16-8S	CONNECTOR ASSY, PLUG 8-WAY	ITT CANNON	1-PC/COMP T	29505513	KPSE07E16-8P	CONNECTOR ASSY, REC 8-WAY
HSOLH	KPT06E8-2S	CONNECTOR ASSY, PLUG 2-WAY	ITT CANNON	1-PC/COMP T, 4000 Product Family	29505515	KPT07E8-2P	RETARDER SOLENOID, 4000 Product Family
HSOLM	12162197	CONNECTOR, 2-WAY	DELPHI-PACKARD	1-PC/COMP T, 3000 Product Family	12084669		RETARDER SOLENOID, 3000 Product Family
HSOLM	12103881	TERMINAL, 150F	DELPHI-PACKARD	1-PC/COMP T, 3000 Product Family	Actual solenoid uses molded receptacle similar to 12084669		
TRANS (Former)	WT06B24-31SN	CONNECTOR, PLUG, 31-WAY	DEUTSCH	1-PC/COMP T	29511368	WT04B24-31PN	CONNECTOR, REC., 31-WAY
TRANS (Former)	3662-204-1690	CONTACT, SOCKET #16	DEUTSCH	1-PC/COMP T	29511369	3660-201-1690	CONTACT, PIN #16
TRANS (Former)	0613-1-1601	SEALING PLUG	DEUTSCH	1-PC/COMP T	29511371	0613-1-1601	SEALING PLUG
TRANS (Former)	WTA10-24-01/19	HOUSING, BACKSHELL, 24/19	DEUTSCH	1-PC/COMP T	29514041	WTA10-24-01/19	HOUSING, BACKSHELL, 24/19
TRANS (Former)	WTA10-24-02/19	FOLLOWER, BACKSHELL, 24/19	DEUTSCH	1-PC/COMP T	29514042	WTA10-24-02/19	FOLLOWER, BACKSHELL, 24/19
TRANS (Former)	WTA10-24-03	GROMMET, BACKSHELL #24	DEUTSCH	1-PC/COMP T	29514043	WTA10-24-03	GROMMET, BACKSHELL #24

Copyright © 2005 General Motors Corp.

https://truckmanualshub.com/

APPENDIX E — CONNECTOR PART NUMBERS, TERMINAL PART NUMBERS, TOOL PART NUMBERS, AND REPAIR INSTRUCTIONS

CONNECTOR	MFG. P/N	PART NAME	MANUFACTURER	CONFIG	MATING P/N	MFG. P/N	MATING PART NAME
TRANS (Current)	15410617	PLUG, 31-WAY	DELPHI-PACKARD	1-PC/COMP T	29541278	15410618	ADAPTER, BULKHEAD
TRANS (Current)	15424450	TERMINAL, SOCKET	DELPHI-PACKARD	1-PC/COMP T	29542586	15424453	TERMINAL, PIN
TRANS (Current)	12034413	PLUG, CABLE SEAL	DELPHI-PACKARD	1-PC/COMP T	12034413	12034413	PLUG, CABLE SEAL
TRANS (Current)	15417551	BACKSHELL	DELPHI-PACKARD	1-PC/COMP T	29541284	15417551	BACKSHELL
TRANS (Current)	15410614	RETAINER, CONDUIT	DELPHI-PACKARD	1-PC/COMP T	29541281	15410614	RETAINER, CONDUIT
TRANS (Current)	15410615	SEAL, AUXILIARY 31-WAY	DELPHI-PACKARD	1-PC/COMP T	29541280	15410615	SEAL, AUXILIARY 31-WAY
TRANS (Current)			DELPHI-PACKARD	1-PC/COMP T	29541276	15410611	NUT, REATINER
BLKHD RCS	WT04B24-31SN	CONNECTOR, REC., 31-WAY	DEUTSCH	ECU T/COMP V	29511855	WT06B24-31PN	CONNECTOR, PLUG, 31-WAY
BLKHD RCS	3662-204-1690	CONTACT, SOCKET #16	DEUTSCH	ECU T/COMP V	29511369	3660-201-1690	CONTACT, PIN #16
BLKHD RCS	0613-1-1601	SEALING PLUG	DEUTSCH	ECU T/COMP V	29511371	0613-1-1601	SEALING PLUG
BLKHD RCS	WTA10-24-01/19	HOUSING, BACKSHELL, 24/19	DEUTSCH	ECU T/COMP V	29514041	WTA10-24-01/19	HOUSING, BACKSHELL, 24/19
BLKHD RCS	WTA10-24-02/19	FOLLOWER, BACKSHELL, 24/19	DEUTSCH	ECU T/COMP V	29514042	WTA10-24-02/19	FOLLOWER, BACKSHELL, 24/19
BLKHD RCS	WTA10-24-03	GROMMET, BACKSHELL #24	DEUTSCH	ECU T/COMP V	29514043	WTA10-24-03	GROMMET, BACKSHELL #24
BLKHD RCS	0926-208-2401	NUT, PANEL	DEUTSCH	ECU T/COMP V			
BLKHD RCS	9013-3-0402	O-RING	DEUTSCH	ECU T/COMP V			
BLKHD PGP	WT06B24-31PN	CONNECTOR, PLUG, 31-WAY	DEUTSCH	ECU V/COMP T	29511854	WT04B24-31SN	CONNECTOR, REC., 31-WAY
BLKHD PGP	3660-201-1690	CONTACT, PIN #16	DEUTSCH	ECU V/COMP T	29511366	3662-204-1690	CONTACT, SOCKET #16
BLKHD PGP	0613-1-1601	SEALING PLUG	DEUTSCH	ECU V/COMP T	29511371	0613-1-1601	SEALING PLUG
BLKHD PGP	WTA10-24-01/19	HOUSING, BACKSHELL, 24/19	DEUTSCH	ECU V/COMP T	29514041	WTA10-24-01/19	HOUSING, BACKSHELL, 24/19
BLKHD PGP	WTA10-24-02/19	FOLLOWER, BACKSHELL, 24/19	DEUTSCH	ECU V/COMP T	29514042	WTA10-24-02/19	FOLLOWER, BACKSHELL, 24/19
BLKHD PGP	WTA10-24-03	GROMMET, BACKSHELL #24	DEUTSCH	ECU V/COMP T	29514043	WTA10-24-03	GROMMET, BACKSHELL #24
					29527000	0926-208-2401	NUT, PANEL
					29512839	9013-3-0402	O-RING
BLKHD RCP	WTC04B24-31PN	CONNECTOR, REC., 31-WAY	DEUTSCH	COMP S	29511365	WT06B24-31SN	CONNECTOR, PLUG, 31-WAY
BLKHD RCP	3660-201-1690	CONTACT, PIN #16	DEUTSCH	COMP S	29511366	3662-204-1690	CONTACT, SOCKET #16
BLKHD RCP	0613-1-1601	SEALING PLUG	DEUTSCH	COMP S	29511371	0613-1-1601	SEALING PLUG
BLKHD RCP	WTA10-24-01/19	HOUSING, BACKSHELL, 24/19	DEUTSCH	COMP S	29514041	WTA10-24-01/19	HOUSING, BACKSHELL, 24/19
BLKHD RCP	WTA10-24-02/19	FOLLOWER, BACKSHELL, 24/19	DEUTSCH	COMP S	29514042	WTA10-24-02/19	FOLLOWER, BACKSHELL, 24/19
BLKHD RCP	WTA10-24-03	GROMMET, BACKSHELL #24	DEUTSCH	COMP S	29514043	WTA10-24-03	GROMMET, BACKSHELL #24
BLKHD RCP	0926-208-2401	NUT, PANEL	DEUTSCH	COMP S			
BLKHD RCP	9013-3-0402	O-RING	DEUTSCH	COMP S			
BLKHD PGS	WT06B24-31SN	CONNECTOR, PLUG, 31-WAY	DEUTSCH	ECU S	29511368	WT04B24-31PN	CONNECTOR, REC., 31-WAY
BLKHD PGS	3662-204-1690	CONTACT, SOCKET #16	DEUTSCH	ECU S	29511369	3660-201-1690	CONTACT, PIN #16
BLKHD PGS	0613-1-1601	SEALING PLUG	DEUTSCH	ECU S	29511371	0613-1-1601	SEALING PLUG

Copyright © 2005 General Motors Corp.

https://truckmanualshub.com/

APPENDIX E — CONNECTOR PART NUMBERS, TERMINAL PART NUMBERS, TOOL PART NUMBERS, AND REPAIR INSTRUCTIONS

CONNECTOR	MFG. P/N	PART NAME	MANUFACTURER	CONFIG	MATING P/N	MFG. P/N	MATING PART NAME
BLKHD PGS	WTA10-24-01/19	HOUSING, BACKSHELL, 24/19	DEUTSCH	ECU S	29514041	WTA10-24-01/19	HOUSING, BACKSHELL, 24/19
BLKHD PGS	WTA10-24-02/19	FOLLOWER, BACKSHELL, 24/19	DEUTSCH	ECU S	29514042	WTA10-24-02/19	FOLLOWER, BACKSHELL, 24/19
BLKHD PGS	WTA10-24-03	GROMMET, BACKSHELL #24	DEUTSCH	ECU S	29514043	WTA10-24-03	GROMMET, BACKSHELL #24
					29527000	0926-208-2401	NUT, PANEL
					29512839	9013-3-0402	O-RING
SENS	WT06B20-16SN	CONNECTOR, PLUG, 16-WAY	DEUTSCH	1-PC/COMP T (UNIV)	29516988	WT04B20-16PN	CONNECTOR, REC., 16-WAY
SENS	3662-204-1690	CONTACT, SOCKET #16	DEUTSCH	1-PC/COMP T (UNIV)	29511369	3660-201-1690	CONTACT, PIN #16
SENS	0613-1-1601	SEALING PLUG	DEUTSCH	1-PC/COMP T (UNIV)	29511371	0613-1-1601	SEALING PLUG
SENS	WTA10-20-01/16	HOUSING, BACKSHELL, 20/16	DEUTSCH	1-PC/COMP T (UNIV)	29516991	WTA10-20-01/16	HOUSING, BACKSHELL, 20/16
SENS	WTA10-20-02/16	FOLLOWER, BACKSHELL, 20/16	DEUTSCH	1-PC/COMP T (UNIV)	29516992	WTA10-20-02/16	FOLLOWER, BACKSHELL, 20/16
SENS	WTA10-20-03	GROMMET, BACKSHELL #20	DEUTSCH	1-PC/COMP T (UNIV)	29516993	WTA10-20-03	GROMMET, BACKSHELL #20
					29516989	0926-207-2087	NUT, PANEL #20
					29519126	0914-212-2086	LOCKWASHER, #20
SENSX	WT04B20-16PN	CONNECTOR, REC., 16-WAY	DEUTSCH	SENSOR	29516987	WT06B20-16SN	CONNECTOR, PLUG, 16-WAY
SENSX	3660-201-1690	CONTACT, PIN #16	DEUTSCH	SENSOR	29511366	3662-204-1690	CONTACT, SOCKET #16
SENSX	0613-1-1601	SEALING PLUG	DEUTSCH	SENSOR	29511371	0613-1-1601	SEALING PLUG
SENSX	WTA10-20-01/16	HOUSING, BACKSHELL, 20/16	DEUTSCH	SENSOR	29516991	WTA10-20-01/16	HOUSING, BACKSHELL, 20/16
SENSX	WTA10-20-02/16	FOLLOWER, BACKSHELL, 20/16	DEUTSCH	SENSOR	29516992	WTA10-20-02/16	FOLLOWER, BACKSHELL, 20/16
SENSX	WTA10-20-03	GROMMET, BACKSHELL #20	DEUTSCH	SENSOR	29516993	WTA10-20-03	GROMMET, BACKSHELL #20
SENSX	0926-207-2087	NUT, PANEL #20	DEUTSCH	SENSOR			
SENSX	0914-212-2086	LOCKWASHER, #20	DEUTSCH	SENSOR			
RTEMPX	12015792	CONNECTOR, TOWER, 2-WAY	DELPHI-PACKARD	ADAPTER (3000 Product Family, Retarder Models)	12010973	12010973	CONNECTOR, SHROUD, 2-WAY
RTEMPX	12089040	TERMINAL, PIN	DELPHI-PACKARD	ADAPTER (3000 Product Family, Retarder Models)	12089188	12089188	TERMINAL, SOCKET
RTEMPX	12089444	SEAL, SILICONE	DELPHI-PACKARD	ADAPTER (3000 Product Family, Retarder Models)	12089444	12089444	SEAL, WIRE TYPE, SILICONE
NOX	12066016	CONNECTOR, 2-WAY	DELPHI-PACKARD	ADAPTER (3000 Product Family, Retarder Models)	12162193	12162193	CONNECTOR, 2-WAY
				ADAPTER (3000 Product Family, Retarder Models)	12103881	12103881	TERMINAL, 150F
HSOLMX		CONNECTOR MOLD, 2-WAY	DELPHI-PACKARD	ADAPTER (3000 Product Family, Retarder Models)	12162197	12162197	CONNECTOR, 2-WAY
				ADAPTER (3000 Product Family, Retarder Models)	12103881	12103881	TERMINAL, 150F

Copyright © 2005 General Motors Corp.

APPENDIX E — CONNECTOR PART NUMBERS, TERMINAL PART NUMBERS, TOOL PART NUMBERS, AND REPAIR INSTRUCTIONS

CONNECTOR	MFG. P/N	PART NAME	MANUFACTURER	CONFIG	MATING P/N	MFG. P/N	MATING PART NAME
HSOLMXA	12084669	CONNECTOR, 2-WAY	DELPHI-PACKARD	ADAPTER (3000 Product Family, Retarder Models)	12162197	12162197	CONNECTOR, 2-WAY
					12103881	12103881	TERMINAL, 150F
RMRX	12015092	CONNECTOR, SHROUD 3-WAY	DELPHI-PACKARD	RES. MODULE	12015795	12015795	CONNECTOR, 3-WAY
RMRX	12089188	TERMINAL, SOCKET	DELPHI-PACKARD	RES. MODULE	12089040	12089040	TERMINAL, PIN
RMRX	12089444	SEAL, WIRE TYPE, SILICONE	DELPHI-PACKARD	RES. MODULE	12089444	12089444	SEAL, WIRE TYPE, SILICONE
SCIX	15300002	CONNECTOR, SHROUD 2-WAY	DELPHI-PACKARD	SCI ADAPTER	15300027	15300027	CONNECTOR, 2-WAY
SCIX	12048159	TERMINAL, PIN	DELPHI-PACKARD	SCI ADAPTER	12077411	12077411	TERMINAL, SOCKET
SCIX	12089444	SEAL, WIRE TYPE, SILICONE	DELPHI-PACKARD	SCI ADAPTER	12089444	12089444	SEAL, WIRE TYPE, SILICONE
SCIX	15300014	LOCK, SECONDARY	DELPHI-PACKARD	SCI ADAPTER	15300014	15300014	LOCK, SECONDARY
TRANSX (Former)	WT04B24-31PN	CONNECTOR, REC., 31-WAY	DEUTSCH	INTERNAL	29511365	WT06B24-31SN	CONNECTOR, PLUG, 31-WAY
TRANSX (Former)	3660-201-1690	CONTACT, PIN #16	DEUTSCH	INTERNAL	29511366	3662-204-1690	CONTACT, SOCKET #16
TRANSX (Former)	0613-1-1601	SEALING PLUG	DEUTSCH	INTERNAL	29511371	0613-1-1601	SEALING PLUG
TRANSX (Former)	WTA10-24-01/19	HOUSING, BACKSHELL, 24/19	DEUTSCH	INTERNAL	29514041	WTA10-24-01/19	HOUSING, BACKSHELL, 24/19
TRANSX (Former)	WTA10-24-02/19	FOLLOWER, BACKSHELL, 24/19	DEUTSCH	INTERNAL	29514042	WTA10-24-02/19	FOLLOWER, BACKSHELL, 24/19
TRANSX (Former)	WTA10-24-03	GROMMET, BACKSHELL #24	DEUTSCH	INTERNAL	29514043	WTA10-24-03	GROMMET, BACKSHELL #24
TRANSX (Current)	15410618	ADAPTER, BULKHEAD	DELPHI-PACKARD	INTERNAL	29541277	15410617	PLUG, 31-WAY
TRANSX (Current)	15424453	TERMINAL, PIN	DELPHI-PACKARD	INTERNAL	29542587	15424450	TERMINAL, SOCKET
TRANSX (Current)	12034413	PLUG, CABLE SEAL	DELPHI-PACKARD	INTERNAL	12034413	12034413	PLUG, CABLE SEAL
TRANSX (Current)	15417551	BACKSHELL	DELPHI-PACKARD	INTERNAL	29541284	15417551	BACKSHELL
TRANSX (Current)	15410614	RETAINER, CONDUIT	DELPHI-PACKARD	INTERNAL	29541281	15410614	RETAINER, CONDUIT
TRANSX (Current)	15410615	SEAL, AUXILIARY 31-WAY	DELPHI-PACKARD	INTERNAL	29541280	15410615	SEAL, AUXILIARY 31-WAY
TRANSX (Current)	15410611	NUT, REATINER	DELPHI-PACKARD	INTERNAL			
ASOL	12092420	CONNECTOR, 2-WAY SOLENOID	DELPHI-PACKARD	INTERNAL			SOLENOID A (C1)
ASOL	12124639	TERMINAL, 280 SERIES SOCKET	DELPHI-PACKARD	INTERNAL			
ASOL	12124618	TERMINAL, 280 SERIES SOCKET	DELPHI-PACKARD	INTERNAL			
BSOL	12092420	CONNECTOR, 2-WAY SOLENOID	DELPHI-PACKARD	INTERNAL			SOLENOID B (C2)

Copyright © 2005 General Motors Corp.

https://truckmanualshub.com/

APPENDIX E — CONNECTOR PART NUMBERS, TERMINAL PART NUMBERS, TOOL PART NUMBERS, AND REPAIR INSTRUCTIONS

CONNECTOR	MFG. P/N	PART NAME	MANUFACTURER	CONFIG	MATING P/N	MFG. P/N	MATING PART NAME
BSOL	12124639	TERMINAL, 280 SERIES SOCKET	DELPHI-PACKARD	INTERNAL			
BSOL	12124618	TERMINAL, 280 SERIES SOCKET	DELPHI-PACKARD	INTERNAL			
CSOL	12092420	CONNECTOR, 2-WAY SOLENOID	DELPHI-PACKARD	INTERNAL			SOLENOID C (C3)
CSOL	12124639	TERMINAL, 280 SERIES SOCKET	DELPHI-PACKARD	INTERNAL			
DSOL	12092420	CONNECTOR, 2-WAY SOLENOID	DELPHI-PACKARD	INTERNAL			SOLENOID D (C4)
DSOL	12124639	TERMINAL, 280 SERIES SOCKET	DELPHI-PACKARD	INTERNAL			
ESOL	12092420	CONNECTOR, 2-WAY SOLENOID	DELPHI-PACKARD	INTERNAL			SOLENOID E (C5)
ESOL	12124639	TERMINAL, 280 SERIES SOCKET	DELPHI-PACKARD	INTERNAL			
FSOL	12092420	CONNECTOR, 2-WAY SOLENOID	DELPHI-PACKARD	INTERNAL			SOLENOID F (LOCK-UP)
FSOL	12124639	TERMINAL, 280 SERIES SOCKET	DELPHI-PACKARD	INTERNAL			
GSOL	12092420	CONNECTOR, 2-WAY SOLENOID	DELPHI-PACKARD	INTERNAL			SOLENOID G (FORWARD)
GSOL	12124639	TERMINAL, 280 SERIES SOCKET	DELPHI-PACKARD	INTERNAL			
GSOL	12124618	TERMINAL, 280 SERIES SOCKET	DELPHI-PACKARD	INTERNAL			
JSOL	12092420	CONNECTOR, 2-WAY SOLENOID	DELPHI-PACKARD	INTERNAL (3000 Product Family, 7-Speed)			SOLENOID J (C6)
JSOL	12124639	TERMINAL, 280 SERIES SOCKET	DELPHI-PACKARD	INTERNAL (3000 Product Family, 7-Speed)			
NSOLI	12092420	CONNECTOR, 2-WAY SOLENOID	DELPHI-PACKARD	INTERNAL (3000 Product Family, 7-Speed)			SOLENOID N (LOW SIGNAL)
NSOLI	12124639	TERMINAL, 280 SERIES SOCKET	DELPHI-PACKARD	INTERNAL (3000 Product Family, 7-Speed)			
C3PS	12110139	CONNECTOR, 2-WAY C3PS	DELPHI-PACKARD	INTERNAL			C3 PRESSURE SWITCH
C3PS	12066337	TERMINAL, 280 SERIES PIN	DELPHI-PACKARD	INTERNAL			
OLS	12047785	CONNECTOR, 4-WAY OLS	DELPHI-PACKARD	INTERNAL			OIL LEVEL SENSOR
OLS	12047767	TERMINAL, 150F	DELPHI-PACKARD	INTERNAL			
OLS	12047664	LOCK, SECONDARY	DELPHI-PACKARD	INTERNAL			
OLS (3-PIN)	12064758	3-PIN PLUG (VIEW B)	DELPHI-PACKARD	INTERNAL			OIL LEVEL SENSOR
OLS (3-PIN)	12047767	TERMINAL (SOCKET)	DELPHI-PACKARD	INTERNAL			
OLS (3-PIN)	12047783	SECONDARY LOCK, TPA	DELPHI-PACKARD	INTERNAL			
NTI	12162723	CONNECTOR, 2-WAY	DELPHI-PACKARD	INTERNAL			TURBINE SPEED SENSOR
NTI	12110236	TERMINAL, 150F	DELPHI-PACKARD	INTERNAL			
OILT		SENSOR, TEMPERATURE, SUMP	PHILLIPS TECH	INTERNAL			
OILT, V8A	12129691	SENSOR, TEMPERATURE, SUMP	PHILLIPS TECH	INTERNAL			
TEMP, V8A	12047662	CONNECTOR, 2-WAY	DELPHI-PACKARD	INTERNAL	12129691	12129691	SENSOR, TEMPERATURE, SUMP
TEMP, V8A	12047664	LOCK, SECONDARY	DELPHI-PACKARD	INTERNAL			
TEMP, V8A	12047767	TERMINAL, SOCKET	DELPHI-PACKARD	INTERNAL			

Copyright © 2005 General Motors Corp.

APPENDIX E — CONNECTOR PART NUMBERS, TERMINAL PART NUMBERS, TOOL PART NUMBERS, AND REPAIR INSTRUCTIONS

CONNECTOR	MFG. P/N	PART NAME	MANUFACTURER	CONFIG	MATING P/N	MFG. P/N	MATING PART NAME
STNDMD		STANDOFF, WIRING HARNESS		INTERNAL			CONTROL MODULE, 3000 Product Family
STNDMD	WTA01-04-14	GROMMET, STANDOFF 14-BLOCK	DEUTSCH	INTERNAL			
STNDMD	12092195	O-RING, FEEDTHRU ASSEMBLY	DELPHI-PACKARD	INTERNAL			
STNDMD	WTA10-24-01/19	HOUSING, BACKSHELL, 24/19	DEUTSCH	INTERNAL			
STNDMD	WTA10-24-02/19	FOLLOWER, BACKSHELL, 24/19	DEUTSCH	INTERNAL			
STNDMD	WTA10-24-03	GROMMET, BACKSHELL #24	DEUTSCH	INTERNAL			
STNDMD	0810-205-0001	SEAL, FEEDTHRU ASSEMBLY	DEUTSCH	INTERNAL			
STNDMR		STANDOFF, WIRING HARNESS		INTERNAL/OLS			CONTROL MODULE, 3000 Product Family OLS
STNDMR	WTA01-04-12	GROMMET, STANDOFF 12-BLOCK	DEUTSCH	INTERNAL/OLS			
STNDMR	12092195	O-RING, FEEDTHRU ASSEMBLY	DELPHI-PACKARD	INTERNAL/OLS			
STNDMR	WTA10-24-01/19	HOUSING, BACKSHELL, 24/19	DEUTSCH	INTERNAL/OLS			
STNDMR	WTA10-24-02/19	FOLLOWER, BACKSHELL, 24/19	DEUTSCH	INTERNAL/OLS			
STNDMR	WTA10-24-03	GROMMET, BACKSHELL #24	DEUTSCH	INTERNAL/OLS			
STNDMR	0810-205-0001	SEAL, FEEDTHRU ASSEMBLY	DEUTSCH	INTERNAL/OLS			
STNDM7		STANDOFF, WIRING HARNESS		INTERNAL			CONTROL MODULE, 3000 Product Family 7-Speed Models
STNDM7	WTA01-04-11	GROMMET, STANDOFF 11-BLOCK	DEUTSCH	INTERNAL			
STNDM7	12092195	O-RING, FEEDTHRU ASSEMBLY	DELPHI-PACKARD	INTERNAL			
STNDM7	WTA10-24-01/19	HOUSING, BACKSHELL, 24/19	DEUTSCH	INTERNAL			
STNDM7	WTA10-24-02/19	FOLLOWER, BACKSHELL, 24/19	DEUTSCH	INTERNAL			
STNDM7	WTA10-24-03	GROMMET, BACKSHELL #24	DEUTSCH	INTERNAL			
STNDM7	0810-205-0001	SEAL, FEEDTHRU ASSEMBLY	DEUTSCH	INTERNAL			
STNDHD		STANDOFF, WIRING HARNESS		INTERNAL			CONTROL MODULE, 4000 Product Family
STNDHD	WTA01-04-16	GROMMET, STANDOFF 16-BLOCK	DEUTSCH	INTERNAL			
STNDHD	12092195	O-RING, FEEDTHRU ASSEMBLY	DELPHI-PACKARD	INTERNAL			
STNDHD	WTA10-24-01/19	HOUSING, BACKSHELL, 24/19	DEUTSCH	INTERNAL			
STNDHD	WTA10-24-02/19	FOLLOWER, BACKSHELL, 24/19	DEUTSCH	INTERNAL			
STNDHD	WTA10-24-03	GROMMET, BACKSHELL #24	DEUTSCH	INTERNAL			
STNDHD	0810-205-0001	SEAL, FEEDTHRU ASSEMBLY	DEUTSCH	INTERNAL			
STNDHR		STANDOFF, WIRING HARNESS		INTERNAL/OLS			CONTROL MODULE 4000 Product Family WITH OLS
STNDHR	WTA01-04-14	GROMMET, STANDOFF 14-BLOCK	DEUTSCH	INTERNAL/OLS			
STNDHR	12092195	O-RING, FEEDTHRU ASSEMBLY	DELPHI-PACKARD	INTERNAL/OLS			
STNDHR	WTA10-24-01/19	HOUSING, BACKSHELL, 24/19	DEUTSCH	INTERNAL/OLS			
STNDHR	WTA10-24-02/19	FOLLOWER, BACKSHELL, 24/19	DEUTSCH	INTERNAL/OLS			
STNDHR	WTA10-24-03	GROMMET, BACKSHELL #24	DEUTSCH	INTERNAL/OLS			
STNDHR	0810-205-0001	SEAL, FEEDTHRU ASSEMBLY	DEUTSCH	INTERNAL/OLS			

Copyright © 2005 General Motors Corp.

https://truckmanualshub.com/

APPENDIX E — CONNECTOR PART NUMBERS, TERMINAL PART NUMBERS, TOOL PART NUMBERS, AND REPAIR INSTRUCTIONS

CONNECTOR	MFG. P/N	PART NAME	MANUFACTURER	CONFIG	MATING P/N	MFG. P/N	MATING PART NAME
STNDH7		STANDOFF, WIRING HARNESS		INTERNAL			CONTROL MODULE 4000 Product Family 7-Speed WITH OLS
STNDH7	WTA01-04-12	GROMMET, STANDOFF 12-BLOCK	DEUTSCH	INTERNAL			
STNDH7	12092195	O-RING, FEEDTHRU ASSEMBLY	DELPHI-PACKARD	INTERNAL			
STNDH7	WTA10-24-01/19	HOUSING, BACKSHELL, 24/19	DEUTSCH	INTERNAL			
STNDH7	WTA10-24-02/19	FOLLOWER, BACKSHELL, 24/19	DEUTSCH	INTERNAL			
STNDH7	WTA10-24-03	GROMMET, BACKSHELL #24	DEUTSCH	INTERNAL			
STNDH7	0810-205-0001	SEAL, FEEDTHRU ASSEMBLY	DEUTSCH	INTERNAL			
STNDH7	0613-1-1601	SEALING PLUG	DEUTSCH	INTERNAL			
VIMX	12034397	CONNECTOR, BODY, 30-WAY	DELPHI-PACKARD	VIM WIRING			VIM HEADER
VIMX	12040879	SEAL, 15-WAY	DELPHI-PACKARD	VIM WIRING			
VIMX	12110546	STRAIN RELIEF, 30-WAY	DELPHI-PACKARD	VIM WIRING			
VIMX	12129426	BOLT, 7 mm HEAD, EXT.	DELPHI-PACKARD	VIM WIRING			
VIMX	12034236	RETAINER CLIP, BOLT	DELPHI-PACKARD	VIM WIRING			
VIMX	12103881	TERMINAL, 150F SERIES	DELPHI-PACKARD	VIM WIRING			
VIMX	12034413	CAVITY PLUG, METRI-PACK	DELPHI-PACKARD	VIM WIRING			
VIW SX	12160280	CONN 20F MIC/P 100W GRAY	DELPHI-PACKARD	VIW S WIRING	12160542	12160542	CONN 20M MIC/P 100W GRAY
VIW SX	15304882	CABLE SEAL, 14F GRAY	DELPHI-PACKARD	VIW S WIRING	12110693	12110693	CABLE SEAL, 14M GREEN
VIW SX	12191173	LOCK, SECONDARY 20F WHITE	DELPHI-PACKARD	VIW S WIRING	12191178	12191178	LOCK ASSIST/SEAL, 20M WHITE
VIW SX	12084912	TERMINAL, SOCKET 100W	DELPHI-PACKARD	VIW S WIRING	12160551	12160551	TERMINAL, PIN 100W
VIW SX	12129557	CAVITY PLUG, 100W	DELPHI-PACKARD	VIW S WIRING	12129557	12129557	CAVITY PLUG, 100W
VIW SX	12176394	CONDUIT CLIP, 13 mm BLACK	DELPHI-PACKARD	VIW S WIRING	12176394	12176394	CONDUIT CLIP, 13 mm BLACK
VIW VX	12160280	CONN 20F MIC/P 100W GRAY	DELPHI-PACKARD	VIW V WIRING	12160542	12160542	CONN 20M MIC/P 100W GRAY
VIW VX	15304882	CABLE SEAL, 14F GRAY	DELPHI-PACKARD	VIW V WIRING	12110693	12110693	CABLE SEAL, 14M GREEN
VIW VX	12191172	LOCK, SECONDARY 20F BLUE	DELPHI-PACKARD	VIW V WIRING	12191177	12191177	LOCK ASSIST/SEAL, 20M BLUE
VIW VX	12084912	TERMINAL, SOCKET 100W	DELPHI-PACKARD	VIW V WIRING	12160551	12160551	TERMINAL, PIN 100W
VIW VX	12129557	CAVITY PLUG, 100W	DELPHI-PACKARD	VIW V WIRING	12129557	12129557	CAVITY PLUG, 100W
VIW VX	12176394	CONDUIT CLIP, 13 mm BLACK	DELPHI-PACKARD	VIW V WIRING	12176394	12176394	CONDUIT CLIP, 13 mm BLACK

Copyright © 2005 General Motors Corp.

https://truckmanualshub.com/

APPENDIX E — CONNECTOR PART NUMBERS, TERMINAL PART NUMBERS, TOOL PART NUMBERS, AND REPAIR INSTRUCTIONS

NOTES

Copyright © 2005 General Motors Corp.

https://truckmanualshub.com/

APPENDIX F—THROTTLE POSITION SENSOR ADJUSTMENT

A. Description of Operation *(Figure F–1)*

1. To properly communicate throttle position to the Electronic Control Unit (ECU), the throttle position sensor (TPS) must convert its mechanical movement to an electrical form the ECU can understand. To accomplish this, contacts move across a resistive strip inside the sensor which translates position into voltage.

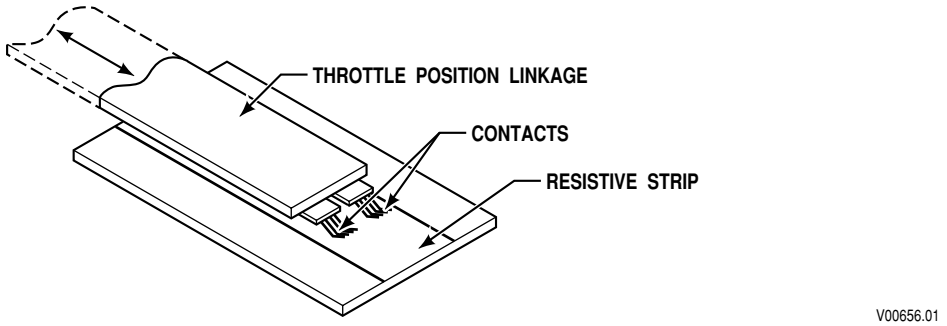

Figure F–1. Throttle Position to Voltage Conversion

2. Each position gives a different voltage. The ECU then converts the voltage to counts. Each count corresponds to approximately 0.179 mm (0.007 inch) of throttle sensor movement. Figure F–2 diagrams the counts and throttle movement relationship.

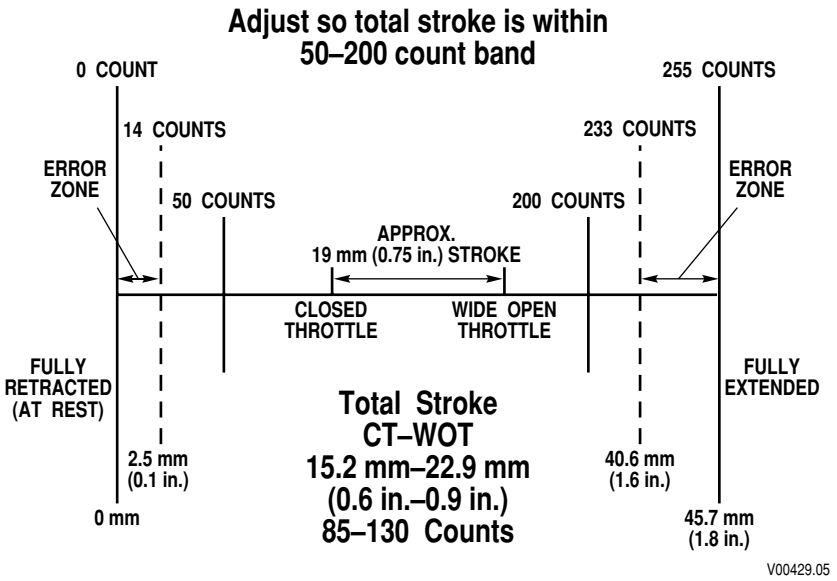

Figure F–2. Throttle Position Determination Diagram

3. Throttle percentage is proportional to counts; low counts correspond to low percent and high counts correspond to high percent (Table F–1, Page F–3).
4. The conversion from counts to percent throttle is performed easily once the idle and full throttle positions are set (see adjustment procedures below). The idle and full throttle positions correspond

Copyright © 2005 General Motors Corp.

https://truckmanualshub.com/

APPENDIX F—THROTTLE POSITION SENSOR ADJUSTMENT

to counts which can be viewed with a diagnostic tool. The ECU determines percent throttle by the equation:

$$\% \text{ Throttle} = \frac{\text{Current Count} - \text{Idle Count}}{\text{Full Throttle Count} - \text{Idle Count}} \times 100$$

Where:

Idle Count = Count on diagnostic tool when engine is idling.

Current Count = Count on diagnostic tool at the present throttle position.

Full Throttle Count = Count on diagnostic tool at wide open throttle.

NOTE: Refer to Appendix N for Allison DOC™ For PC–Service Tool information.

5. The throttle position sensor is self-calibrating within its normal operating range. Each time the vehicle is started and the ECU is initialized, the idle counts that are used for closed throttle are increased by 15 counts from its previous lowest reading. Also, the wide open throttle counts are reduced by 15 counts from its previous highest reading. Once new counts are read from the current sensor position, the idle and wide open throttle count set points are continually readjusted to the lowest and highest counts, respectively. This compensates for fuel control system wear or previous mechanical adjustment. One area of particular concern is when the throttle sensor extends into the error zone. This indicates a TPS misadjustment to the ECU and 100 percent throttle is assumed until readjustment is performed. Simply clearing the code 21 XX will not resolve the 100 percent (WOT) shifting situation.

NOTE: After replacing or adjusting the throttle position sensor linkage, the technician should use the diagnostic tool to clear the throttle calibration. Go to the Allison DOC™ For PC–Service Tool selection menu and locate ACTION REQUESTS. Select RESET THROTTLE CALIBRATION and ENTER to set the 0 percent throttle counts. After the idle counts are established, the throttle should be moved to the Full position to establish the full or Wide Open Throttle (WOT) position (100 percent). The full throttle counts will be the same as the idle counts until the throttle is moved. The full throttle counts are set when maximum travel is reached so stopping before actual full throttle will set the 100 percent point artificially low. Refer to Figure F–2 for proper counts and percentage. Refer to Figure F–3 for illustration of throttle position adjustment.

B. Throttle Position Sensor (TPS) Adjustment

When properly installed by the equipment manufacturer, the TPS should not require adjustment. Confirm that the throttle sensor is installed to manufacturer specifications before adjusting the throttle position sensor. The idle count should be 50 or higher and full throttle count 200 or lower. The TPS is self-calibrating meaning there is no optimum closed throttle or wide open throttle count value. As long as the counts are within the 50 to 200 range, the TPS is set properly. Total stroke of 85–130 counts must be maintained. Watch the movement of the throttle sensor as the controls move it through its full stroke. Be sure there is no misalignment or obstruction to smooth movement through the full stroke. Make certain the idle and full throttle positions are not in the error zones (Figure F–2). The error zones occur when the idle position is less than 14 counts, or when the full throttle position is more than 233 counts. When idle or wide open throttle positions are in the error zones, codes 21 12 and 21 23 occur, respectively. These codes cause the transmission to shift as if the throttle is fully depressed (100 percent throttle) affecting shift quality and causing decreased fuel efficiency. Code 21 XX may be caused by a short or open circuit in the chassis harness or by incorrect voltages. If this occurs, refer to code 21 XX chart.

NOTE: Use Test Harness J 41339 for measuring voltages.

Copyright © 2005 General Motors Corp.

https://truckmanualshub.com/

APPENDIX F—THROTTLE POSITION SENSOR ADJUSTMENT

Table F–1. Volts Versus Count for Throttle Sensor Display Reading

CTS	Volts	CTS	Volts	CTS	Volts	CTS	Volts	CTS	Volts	CTS	Volts
0	0	41		81		121		161		201	
1	0.0196	42		82		122		162		202	
2		43		83		123		163		203	
3		44		84		124		164		204	
4		45	0.882	85	1.666	125	2.451	165	3.235	205	4.019
5	0.098	46		86		126		166		206	
6		47		87		127		167		207	
7		48		88		128		168		208	
8		49		89		129		169		209	
9		50	0.98	90	1.764	130	2.549	170	3.333	210	4.117
10	0.196	51		91		131		171		211	
11		52		92		132		172		212	
12		53		93		133		173		213	
13		54		94		134		174		214	
14		55	1.078	95	1.863	135	2.647	175	3.431	215	4.215
15	0.276	56		96		136		176		216	
16		57		97		137		177		217	
17		58		98		138		178		218	
18		59		99		139		179		219	
19		60	1.176	100	1.96	140	2.745	180	3.529	220	4.313
20	0.392	61		101		141		181		221	
21		62		102		142		182		222	
22		63		103		143		183		223	
23		64		104		144		184		224	
24		65	1.274	105	2.058	145	2.843	185	3.627	225	4.411
25	0.49	66		106		146		186		226	
26		67		107		147		187		227	
27		68		108		148		188		228	
28		69		109		149		189		229	
29		70	1.372	110	2.156	150	2.941	190	3.725	230	4.509
30	0.588	71		111		151		191		231	
31		72		112		152		192		232	
32		73		113		153		193		233	
33		74		114		154		194		234	
34		75	1.47	115	2.225	155	3.039	195	3.823	235	4.607
35	0.686	76		116		156		196		236	
36		77		117		157		197		237	
37		78		118		158		198		238	
38		79		119		159		199		239	
39		80	1.568	120	2.353	160	3.137	200	3.921	240	4.705
40	0.784										

Copyright © 2005 General Motors Corp.

https://truckmanualshub.com/

APPENDIX F—THROTTLE POSITION SENSOR ADJUSTMENT

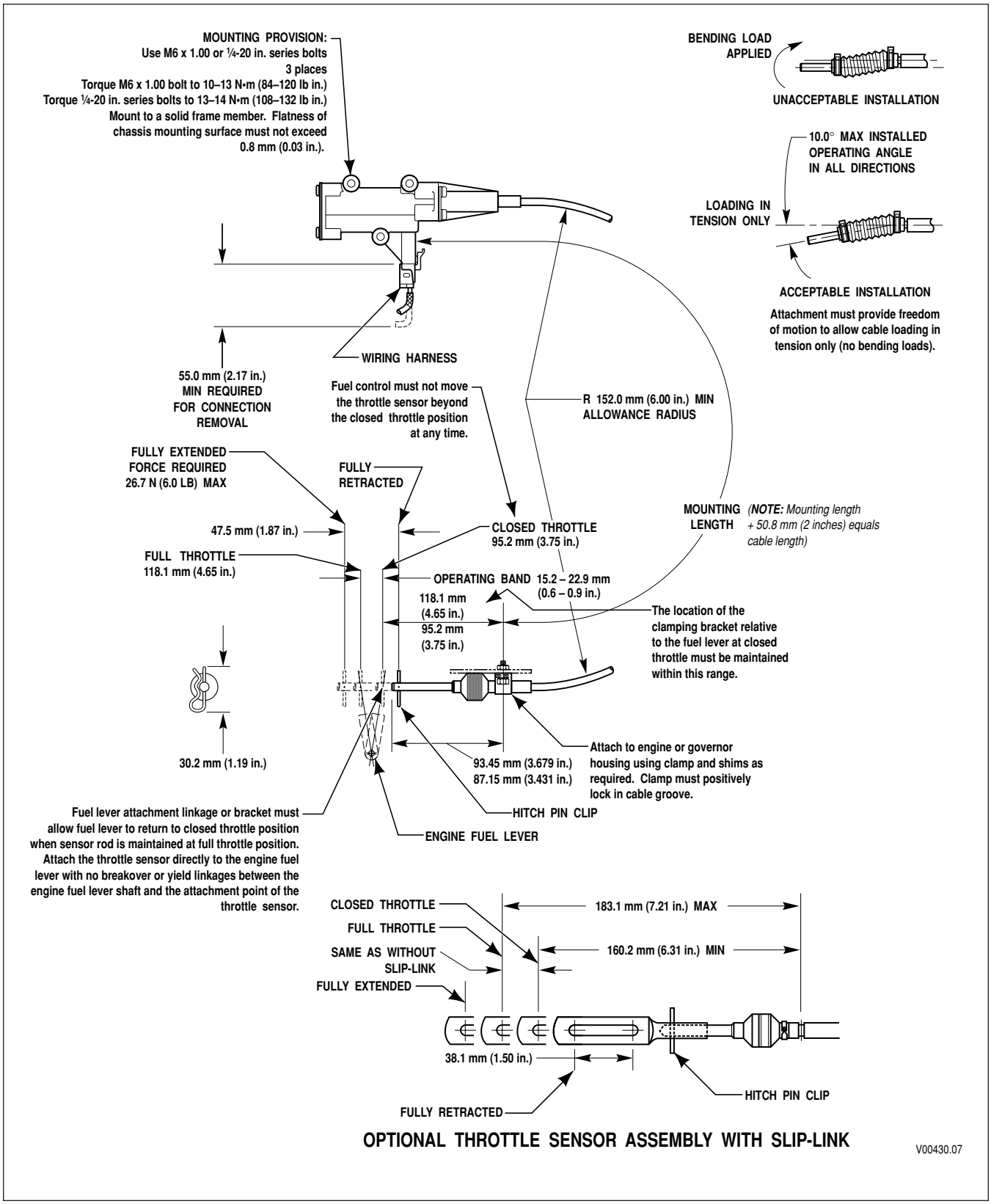

Figure F–3. Throttle Position Sensor Adjustment

Copyright © 2005 General Motors Corp.

https://truckmanualshub.com/

APPENDIX F—THROTTLE POSITION SENSOR ADJUSTMENT

Allison Transmission only supplies the detail parts of those assemblies for both service requirements and support equipment requirements to OEMs and DMOEMs. Below is the list of detail parts that are attached to the detail throttle position sensor to achieve the different configurations.

Configuration	Description	Part Number	Quantity
Chassis-mounted with Slip Link	Throttle Position Sensor x length	Various	1
	Slip Link	29503631	1
Engine-mounted with Slip Link	Throttle Position Sensor x length	Various	1
	Slip Link	29503631	1
	Engine Bracket	29500824	1
	Grommet	29509441	3
	Ferrule	29509442	3
	0.250-20 x 2.250 long; bolt with nylon patch	25944294	3
Transmission-mounted (right or left) with Slip Link	Throttle Position Sensor x length	Various	1
	Slip Link	29503631	1
	Engine Bracket	29508371	1
	Grommet	29509441	3
	Ferrule	29509442	3
	0.250-20 x 2.250 long; bolt with nylon patch	29544294	3

The bolt for attaching the throttle sensor to the ferrules in engine and transmission brackets is tightened to 8.1–11.1 N·m (72–98 lb inch).

Copyright © 2005 General Motors Corp.

https://truckmanualshub.com/

APPENDIX F—THROTTLE POSITION SENSOR ADJUSTMENT

NOTES

Copyright © 2005 General Motors Corp.

https://truckmanualshub.com/

APPENDIX G—WELDING ON VEHICLE/VEHICLE INTERFACE MODULE

1–1. WELDING ON VEHICLE

When frame or other welding is required on the vehicle, take the following precautions to protect the electronic control components:

1. Disconnect the wiring harness connectors at the transmission electronic control unit.
2. Disconnect the positive and negative battery connections, and any electronic control ground wires connected to the frame or chassis.
3. Cover electronic control components and wiring to protect them from hot sparks, etc.
4. Do not connect welding cables to electronic control components.

WARNING! **Do not jump start a vehicle with arc welding equipment. Arc welding equipment's dangerously high currents and voltages cannot be reduced to safe levels.**

1–2. VEHICLE INTERFACE MODULE

The Allison Vehicle Interface Module (VIM) containing all Allison system relays and fuses must be used as the interface to all vehicle wiring. Refer to Figure G–2 for VIM component location and pin-out.To close an open VIM, tighten the bolts in the numerical order shown in Figure G–1 to provide a sealed, water-tight box. Torque the bolts to 5–8 N·m (4–6 lb ft).

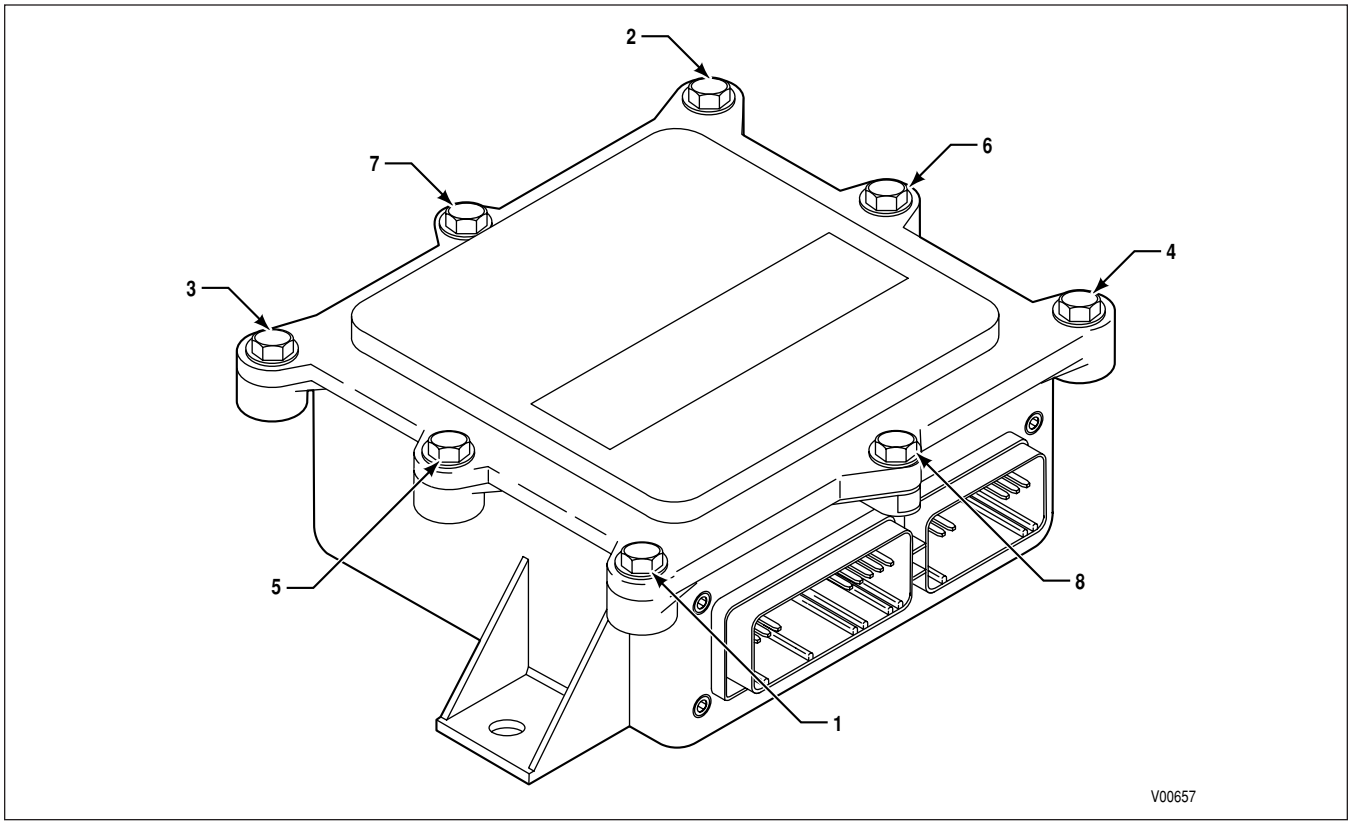

Figure G–1. Vehicle Interface Module

Copyright © 2005 General Motors Corp.

https://truckmanualshub.com/

APPENDIX G—WELDING ON VEHICLE/VEHICLE INTERFACE MODULE

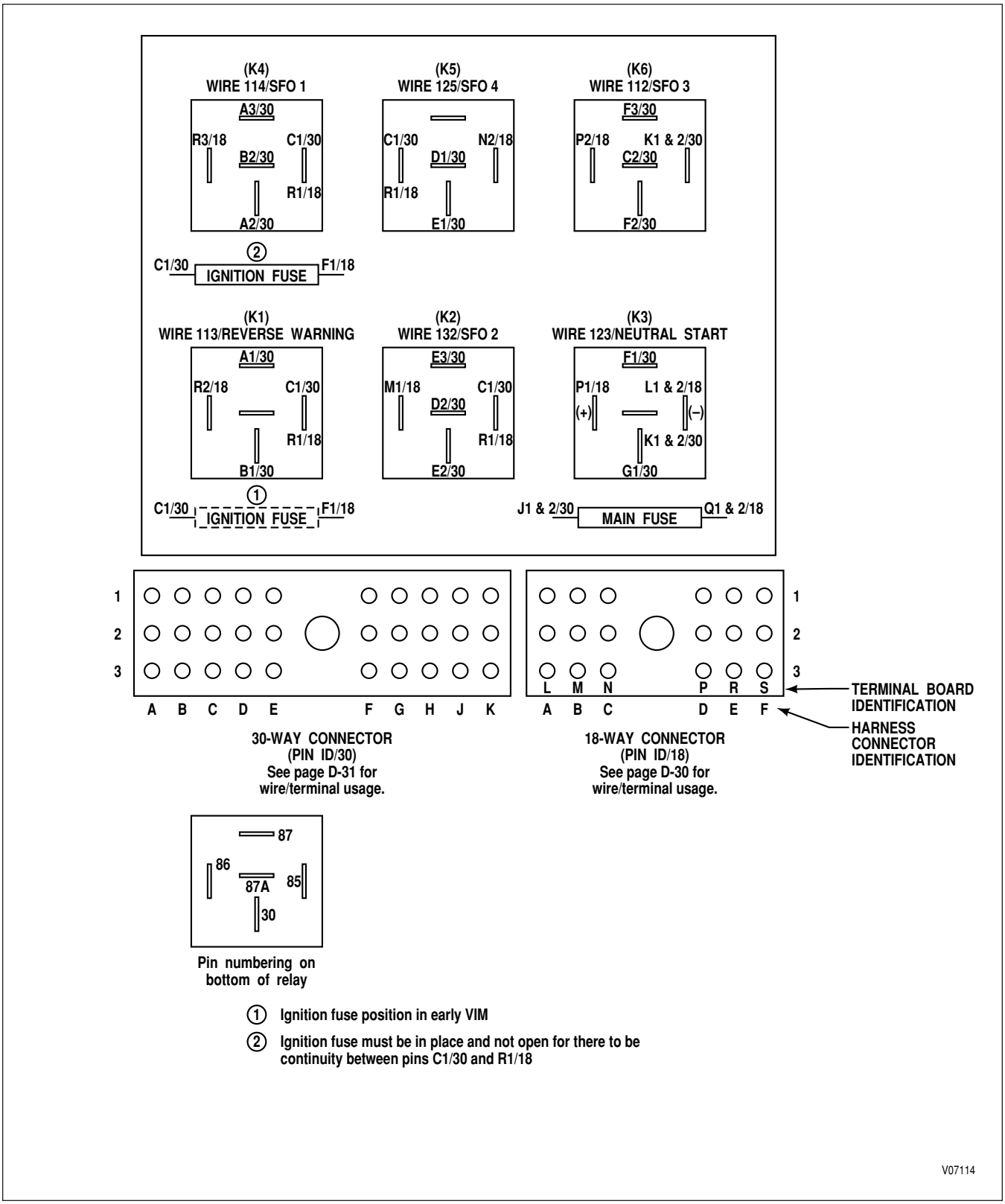

Figure G–2. VIM Components Location and Pin-Out Diagram

Copyright © 2005 General Motors Corp.

https://truckmanualshub.com/

APPENDIX H—HYDRAULIC SCHEMATICS

Figure	Description	Page No.
H–1	C2 Latch Valve	H–2
H–2	3000 and 4000 Product Families Hydraulic Schematic – Neutral	H–3
H–3	3000 and 4000 Product Families Hydraulic Schematic – Reverse	H–5
H–4	4 Hydraulic Schematic – 1st Range	H–7/H–8
H–5	3000 and 4000 Product Families Hydraulic Schematic – 1st Range (2nd Range For 4000 Product Family 7-Speed)	H–9
H–6	3000 and 4000 Product Families Hydraulic Schematic – 2nd Range (3rd Range For 4000 Product Family 7-Speed)	H–11
H–7	3000 and 4000 Product Families Hydraulic Schematic – 3rd Range (4th Range For 4000 Product Family 7-Speed)	H–13
H–8	3000 and 4000 Product Families Hydraulic Schematic – 4th Range (5th Range For 4000 Product Family 7-Speed)	H–15
H–9	3000 and 4000 Product Families Hydraulic Schematic – 5th Range (6th Range For 4000 Product Family 7-Speed)	H–17
H–10	3000 and 4000 Product Families Hydraulic Schematic – 6th Range (7th Range For 4000 Product Family 7-Speed)	H–19
H–11 through H–19	3000 Product Family 7-Speed Partial Hydraulic Schematic (Various Ranges)	H–21 through H–29
H–20 and H–21	3000 Product Family—Retarder Hydraulic Schematic (Retarders Built Prior To 1/1/98)	H–30 and H–31
H–22 and H–23	3000 Product Family—Retarder Hydraulic Schematic (Retarders Built After 1/1/98)	H–32 and H–33
H–24 and H–25	4000 Product Family—Retarder Hydraulic Schematic	H–34 and H–35

Copyright © 2005 General Motors Corp.

https://truckmanualshub.com/

APPENDIX H—HYDRAULIC SCHEMATICS

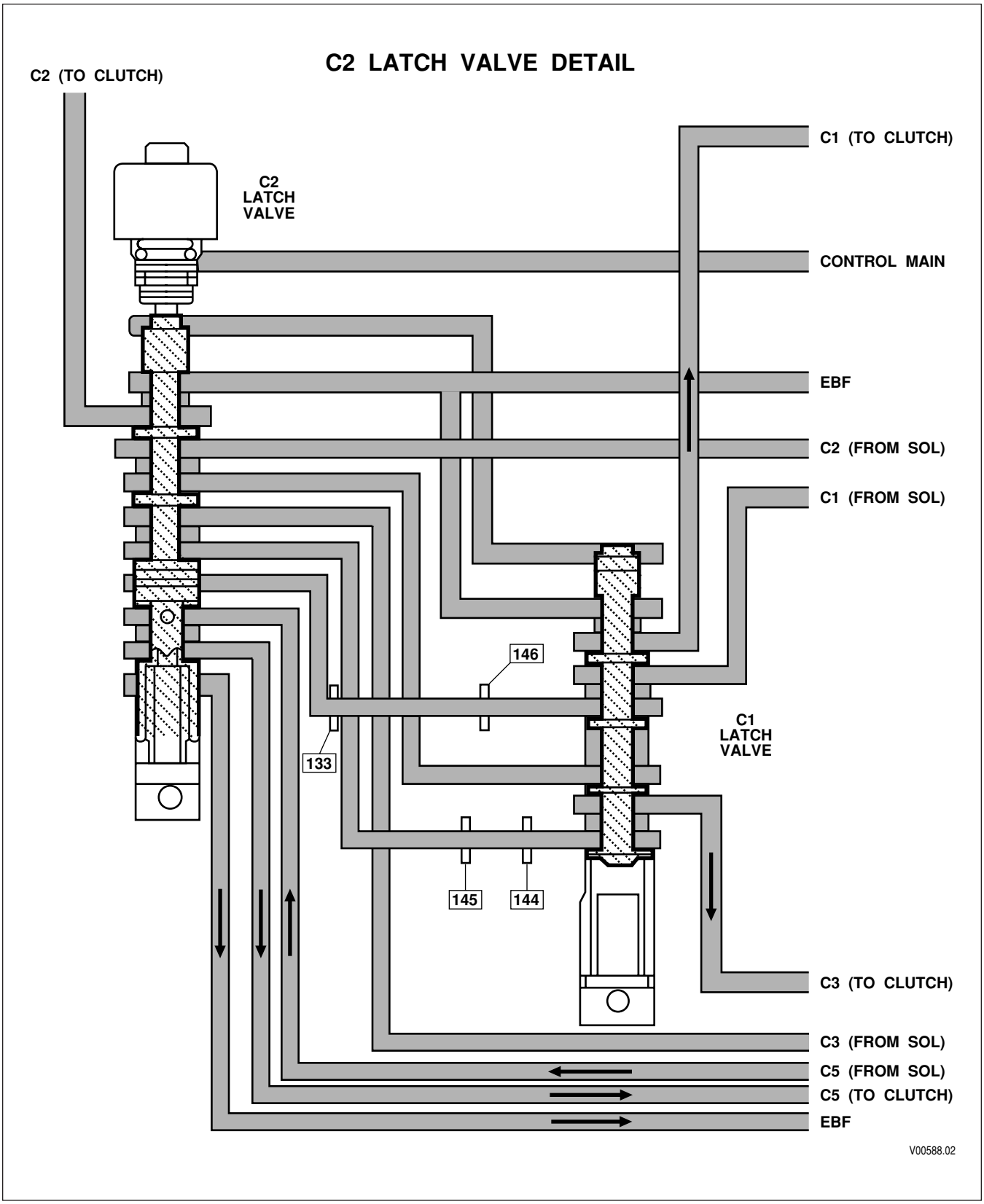

Figure H–1. C2 Latch Valve Detail

Copyright © 2005 General Motors Corp.

https://truckmanualshub.com/

APPENDIX H—HYDRAULIC SCHEMATICS

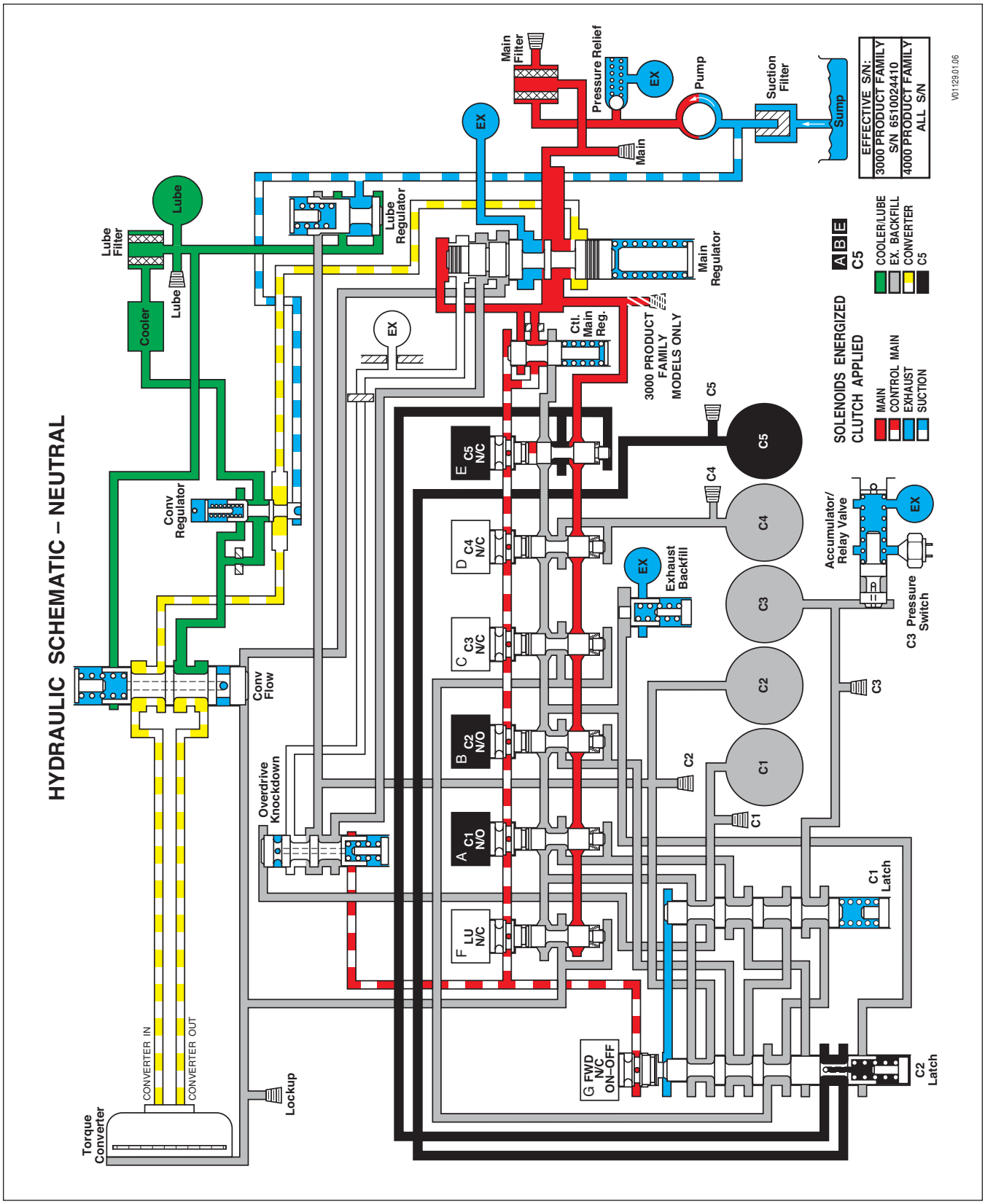

Figure H–2. 3000 and 4000 Product Families Hydraulic Schematic (Except 3000 Product Family 7-Speed)—Neutral

Copyright © 2005 General Motors Corp.

https://truckmanualshub.com/

APPENDIX H—HYDRAULIC SCHEMATICS

Copyright © 2005 General Motors Corp.

https://truckmanualshub.com/

APPENDIX H—HYDRAULIC SCHEMATICS

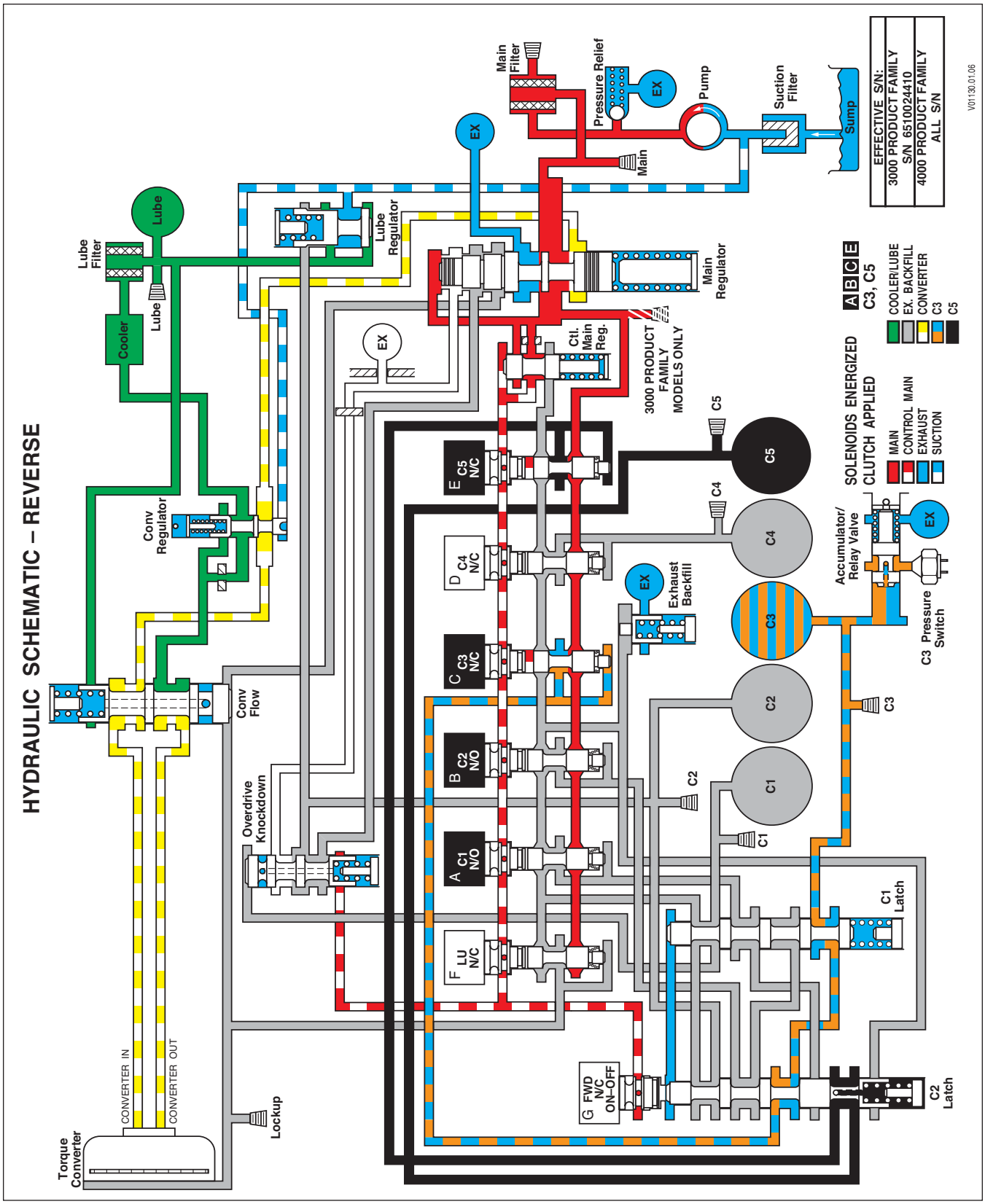

Figure H–3. 3000 and 4000 Product Families Hydraulic Schematic (Except 3000 Product Family 7-Speed)—Reverse

Copyright © 2005 General Motors Corp.

https://truckmanualshub.com/

APPENDIX H—HYDRAULIC SCHEMATICS

Copyright © 2005 General Motors Corp.

https://truckmanualshub.com/

APPENDIX H—HYDRAULIC SCHEMATICS

HYDRAULIC SCHEMATIC – FIRST RANGE

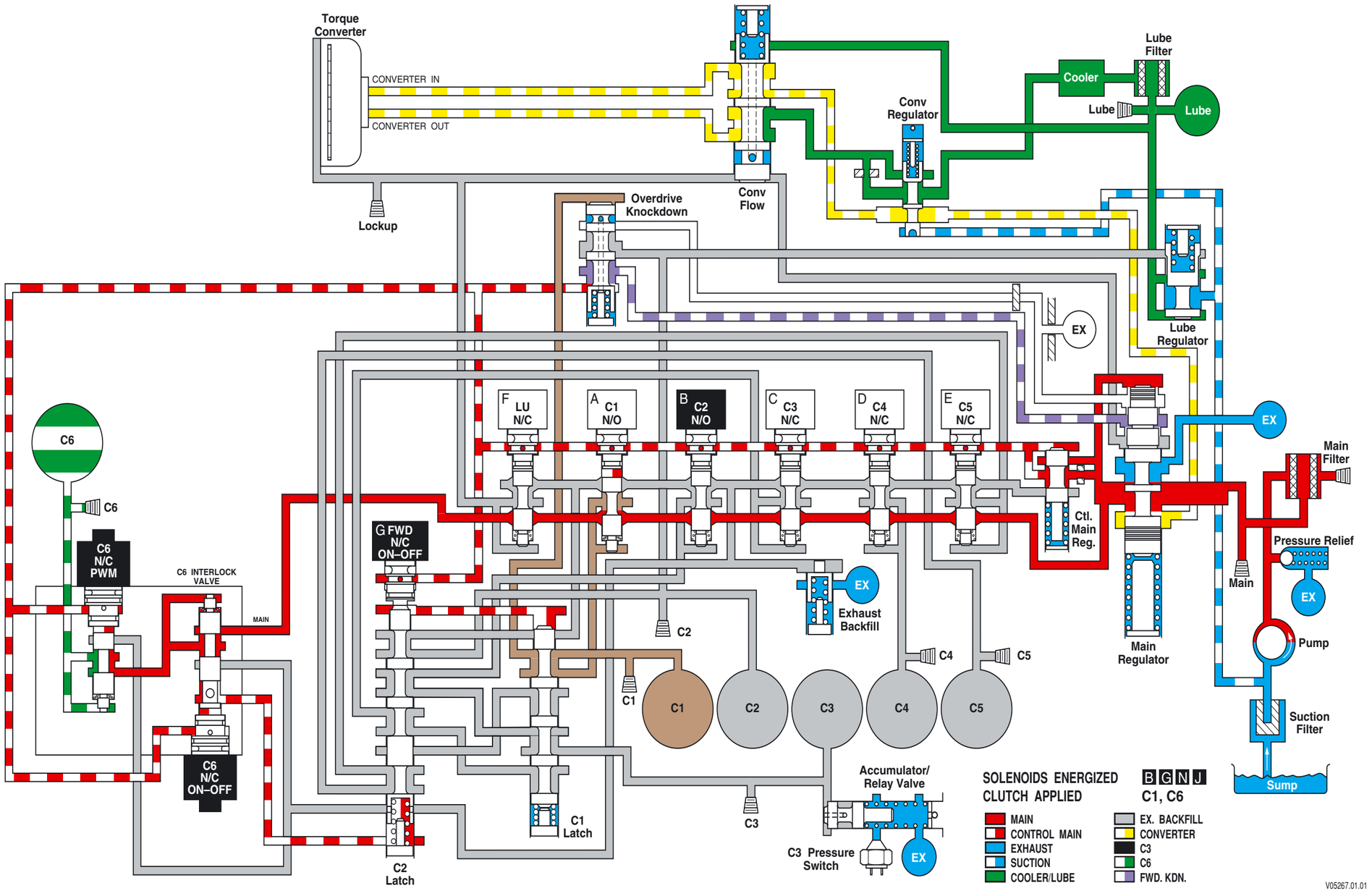

Foldout H–4. 4000 Product Family 7-Speed Hydraulic Schematic—First Range

Copyright © 2005 General Motors Corp.

https://truckmanualshub.com/

APPENDIX H—HYDRAULIC SCHEMATICS

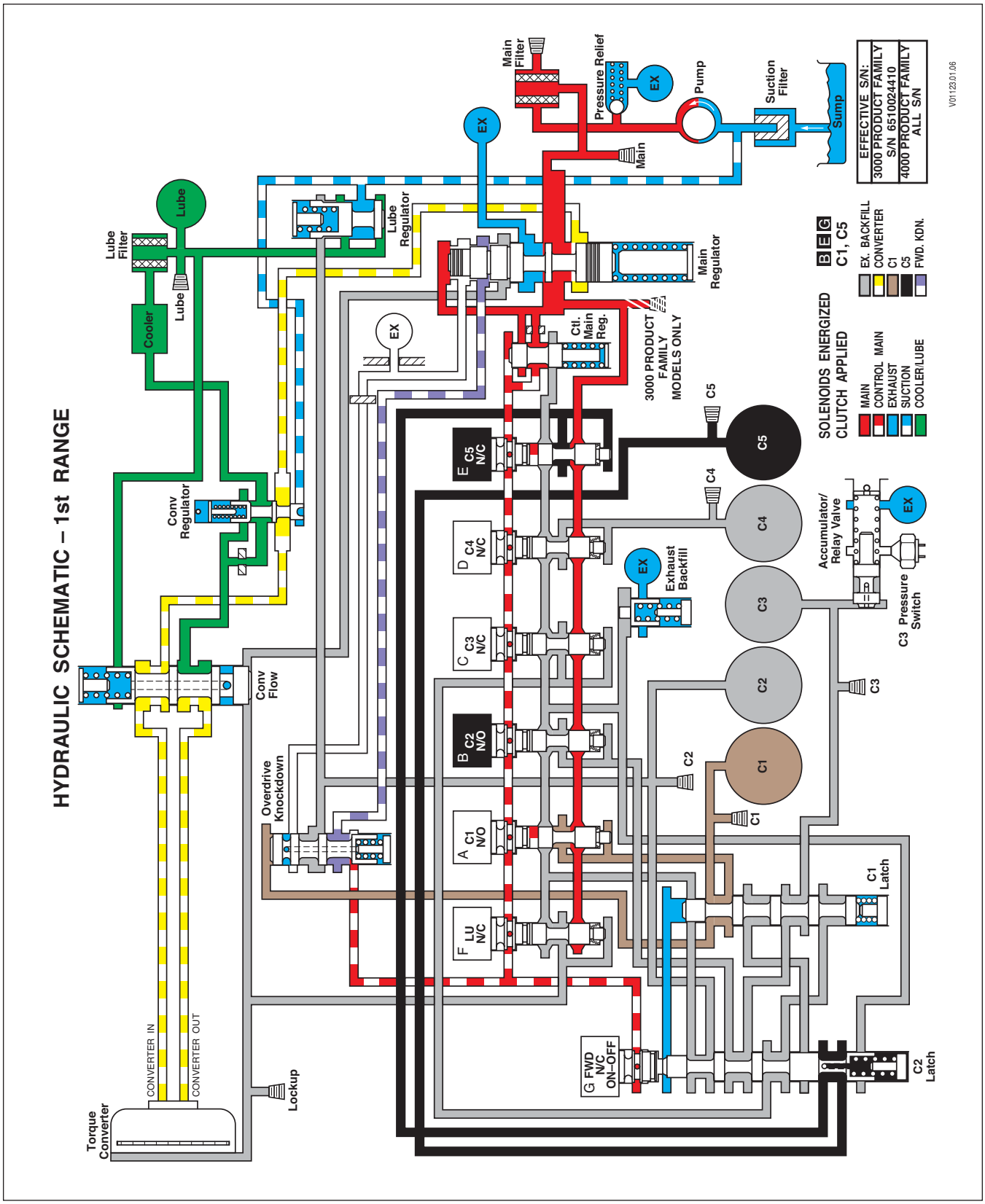

Figure H–5. 3000 and 4000 Product Families Hydraulic Schematic (Except 3000 Product Family 7-Speed) —1st Range (2nd Range for 4000 Product Family 7-Speed Models)

Copyright © 2005 General Motors Corp.

https://truckmanualshub.com/

APPENDIX H—HYDRAULIC SCHEMATICS

Copyright © 2005 General Motors Corp.

https://truckmanualshub.com/

APPENDIX H—HYDRAULIC SCHEMATICS

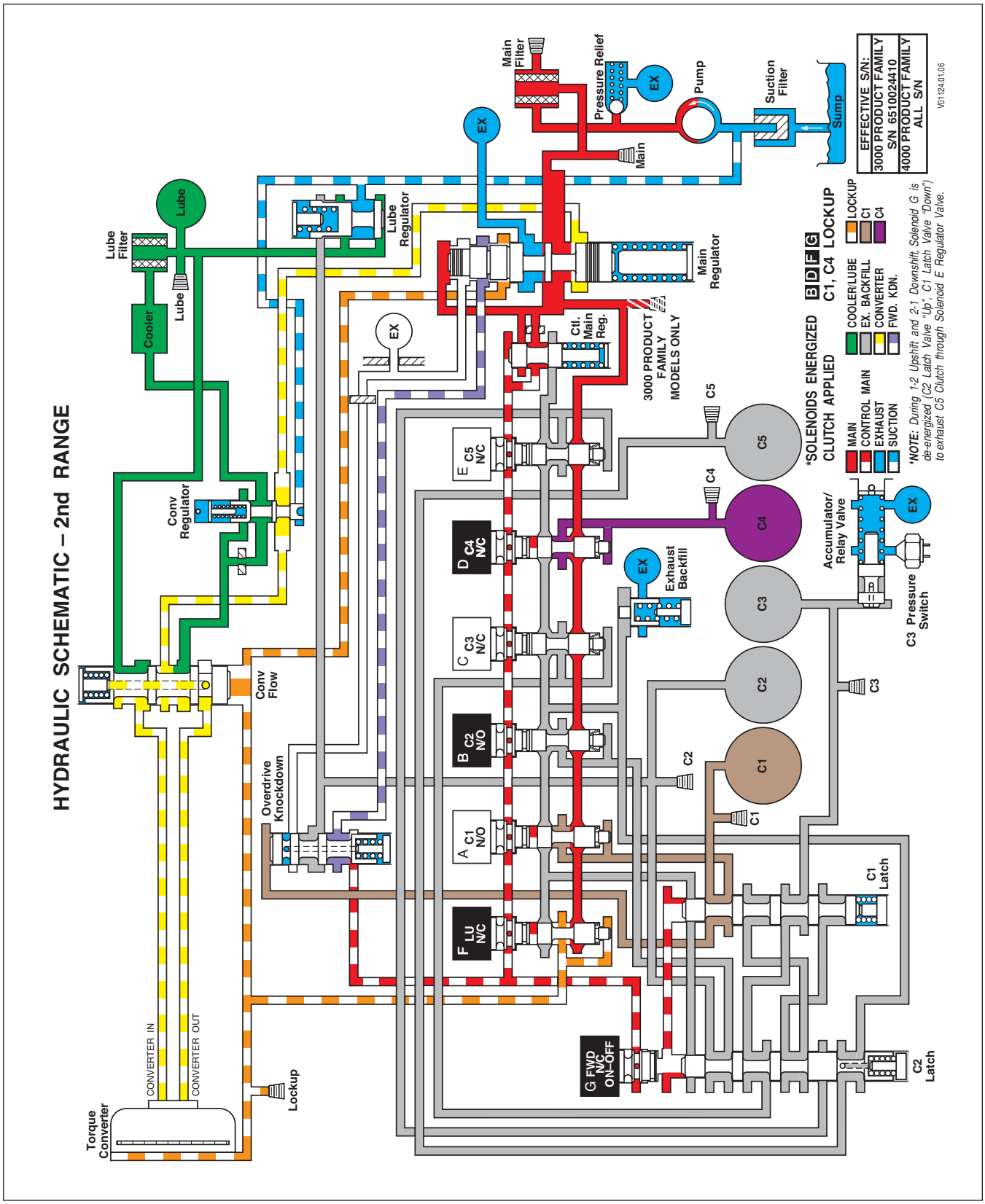

Figure H–6. 3000 and 4000 Product Families Hydraulic Schematic (Except 3000 Product Family 7-Speed)—2nd Range (3rd Range for 4000 Product Family 7-Speed Models)

Copyright © 2005 General Motors Corp.

https://truckmanualshub.com/

APPENDIX H—HYDRAULIC SCHEMATICS

Copyright © 2005 General Motors Corp.

https://truckmanualshub.com/

APPENDIX H—HYDRAULIC SCHEMATICS

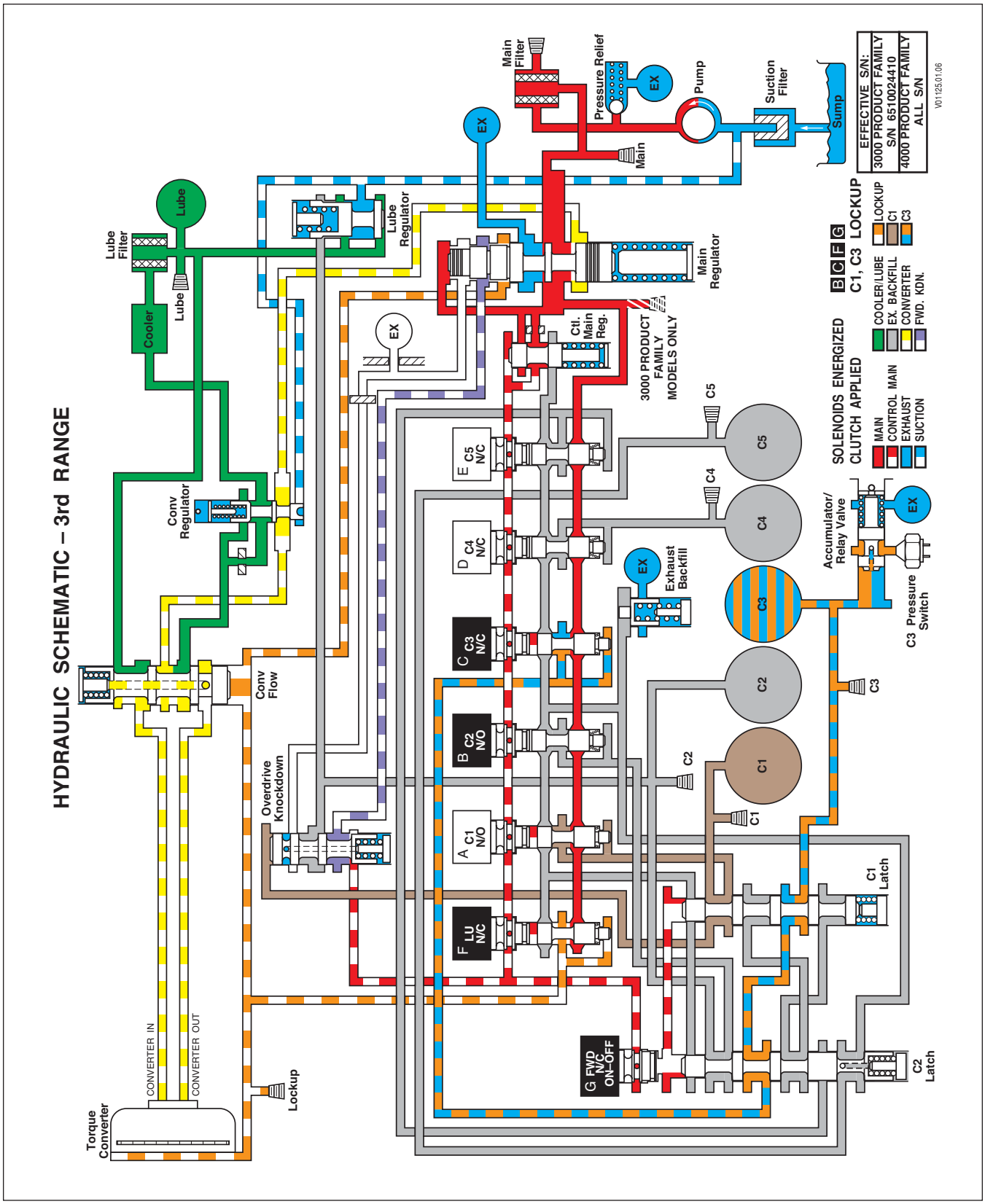

Figure H–7. 3000 and 4000 Product Families Hydraulic Schematic (Except 3000 Product Family 7-Speed)—3rd Range (4th Range for 4000 Product Family 7-Speed Models)

Copyright © 2005 General Motors Corp.

https://truckmanualshub.com/

APPENDIX H—HYDRAULIC SCHEMATICS

Copyright © 2005 General Motors Corp.

https://truckmanualshub.com/

APPENDIX H—HYDRAULIC SCHEMATICS

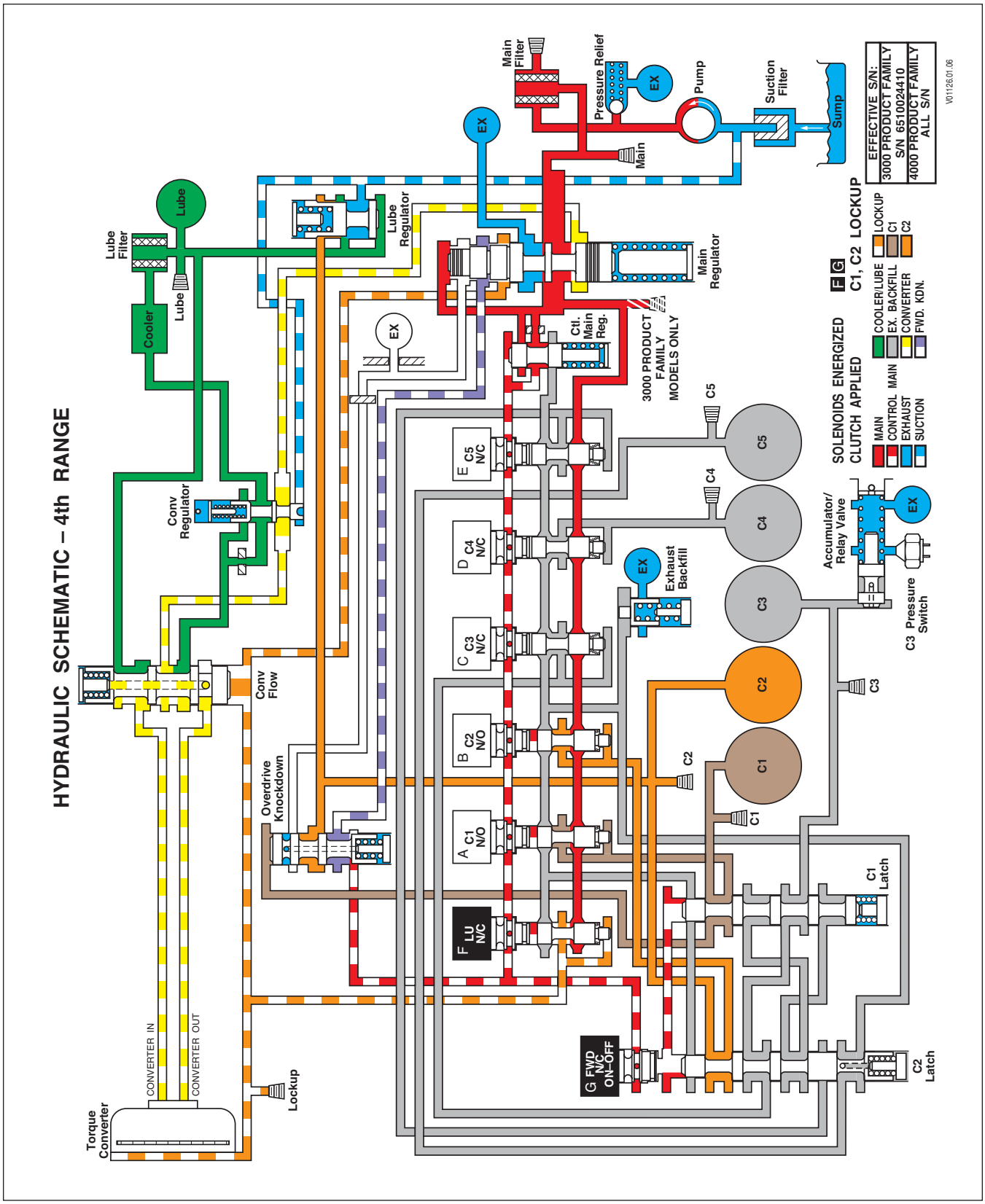

Figure H–8. 3000 and 4000 Product Families Hydraulic Schematic (Except 3000 Product Family 7-Speed)—4th Range (5th Range for 4000 Product Family 7-Speed Models)

Copyright © 2005 General Motors Corp.

https://truckmanualshub.com/

APPENDIX H—HYDRAULIC SCHEMATICS

Copyright © 2005 General Motors Corp.

https://truckmanualshub.com/

APPENDIX H—HYDRAULIC SCHEMATICS

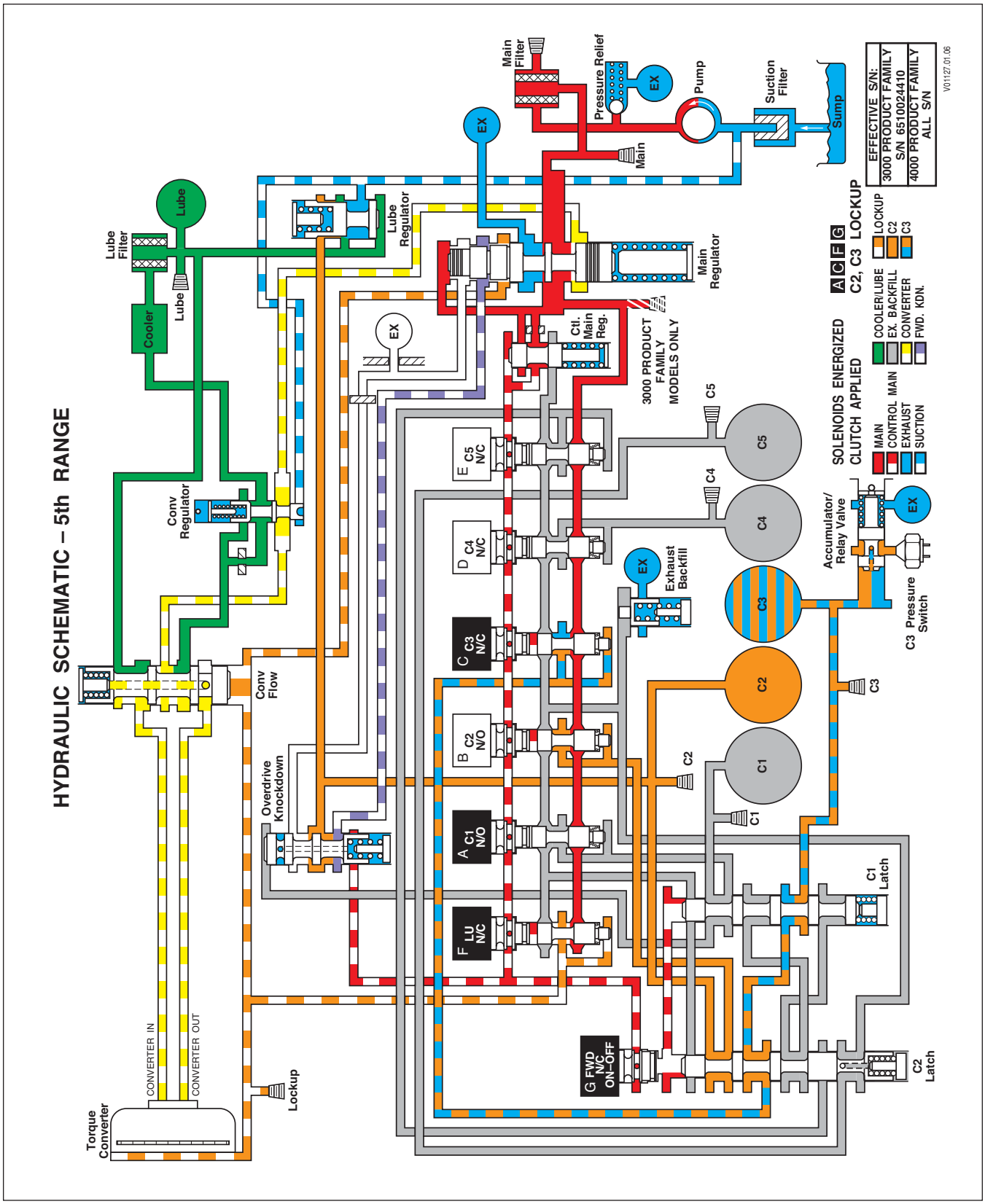

Figure H–9. 3000 and 4000 Product Families Hydraulic Schematic (Except 3000 Product Family 7-Speed)—5th Range (6th Range for 4000 Product Family 7-Speed Models)

Copyright © 2005 General Motors Corp.

https://truckmanualshub.com/

APPENDIX H—HYDRAULIC SCHEMATICS

Copyright © 2005 General Motors Corp.

https://truckmanualshub.com/

APPENDIX H—HYDRAULIC SCHEMATICS

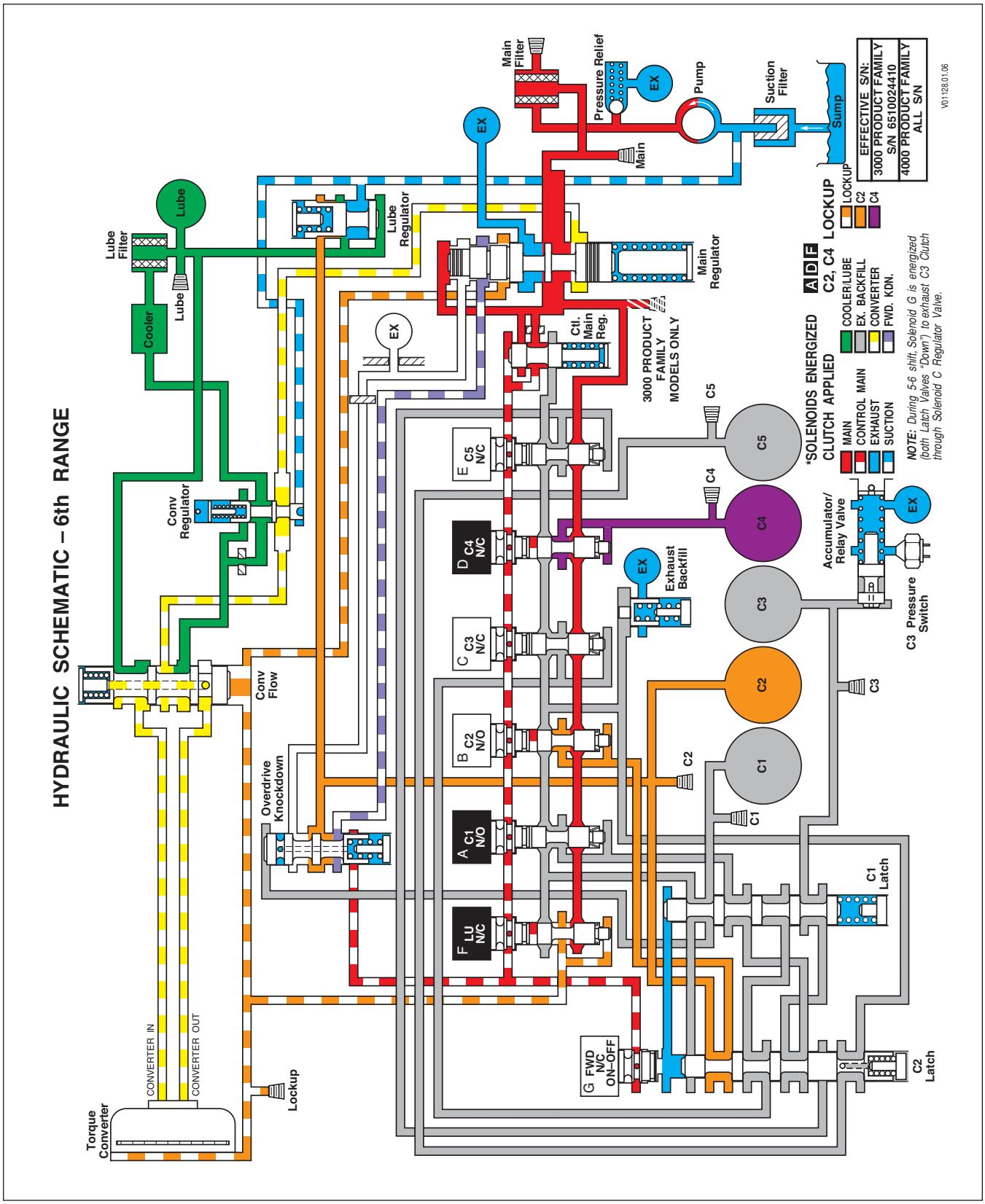

Figure H–10. 3000 and 4000 Product Families Hydraulic Schematic (Except 3000 Product Family 7-Speed)—6th Range (7th Range for 4000 Product Family 7-Speed Models)

Copyright © 2005 General Motors Corp.

https://truckmanualshub.com/

APPENDIX H—HYDRAULIC SCHEMATICS

Copyright © 2005 General Motors Corp.

https://truckmanualshub.com/

APPENDIX H—HYDRAULIC SCHEMATICS

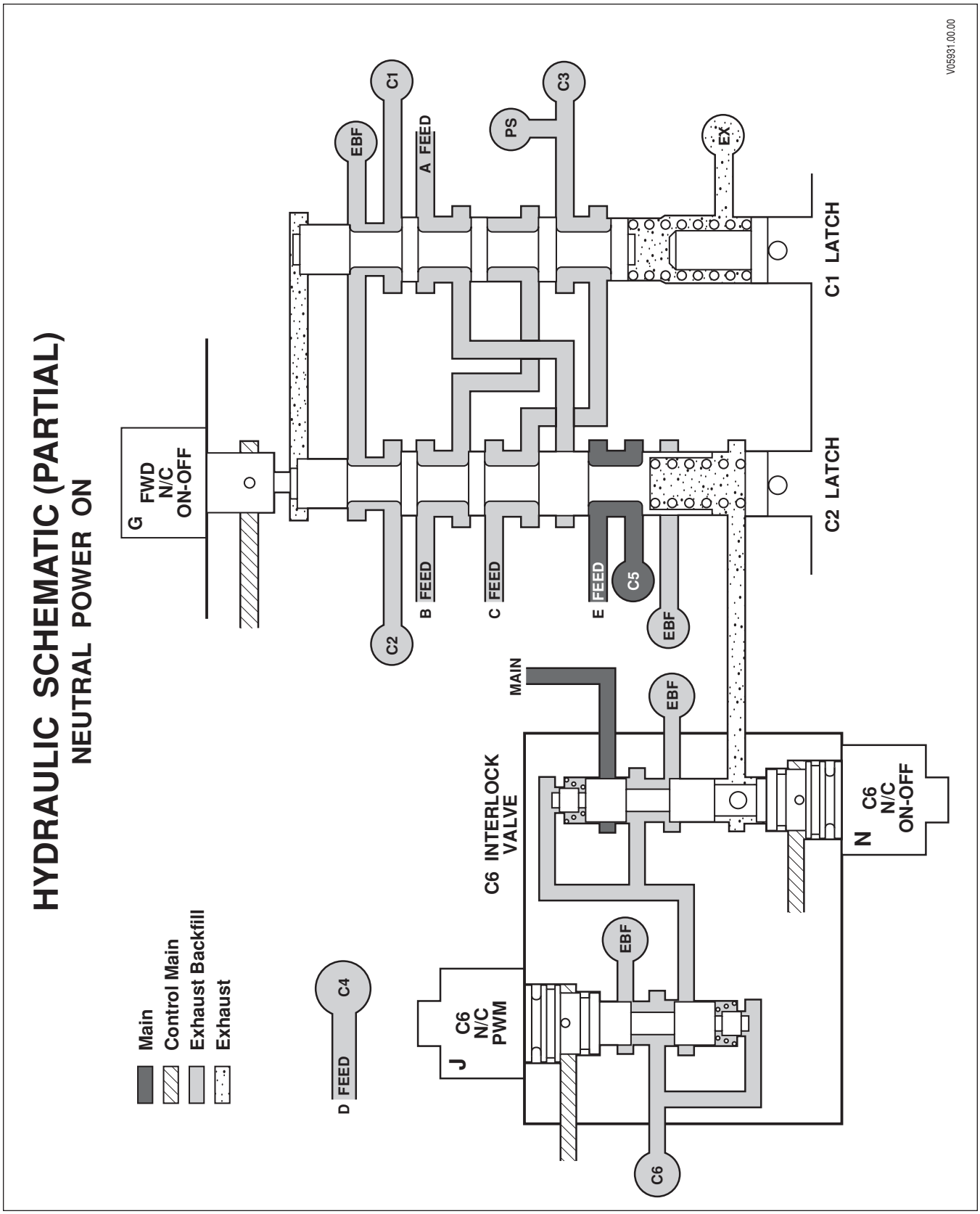

Figure H–11. 3000 Product Family 7-Speed Models Hydraulic Schematic—Neutral Power On

Copyright © 2005 General Motors Corp.

https://truckmanualshub.com/

APPENDIX H—HYDRAULIC SCHEMATICS

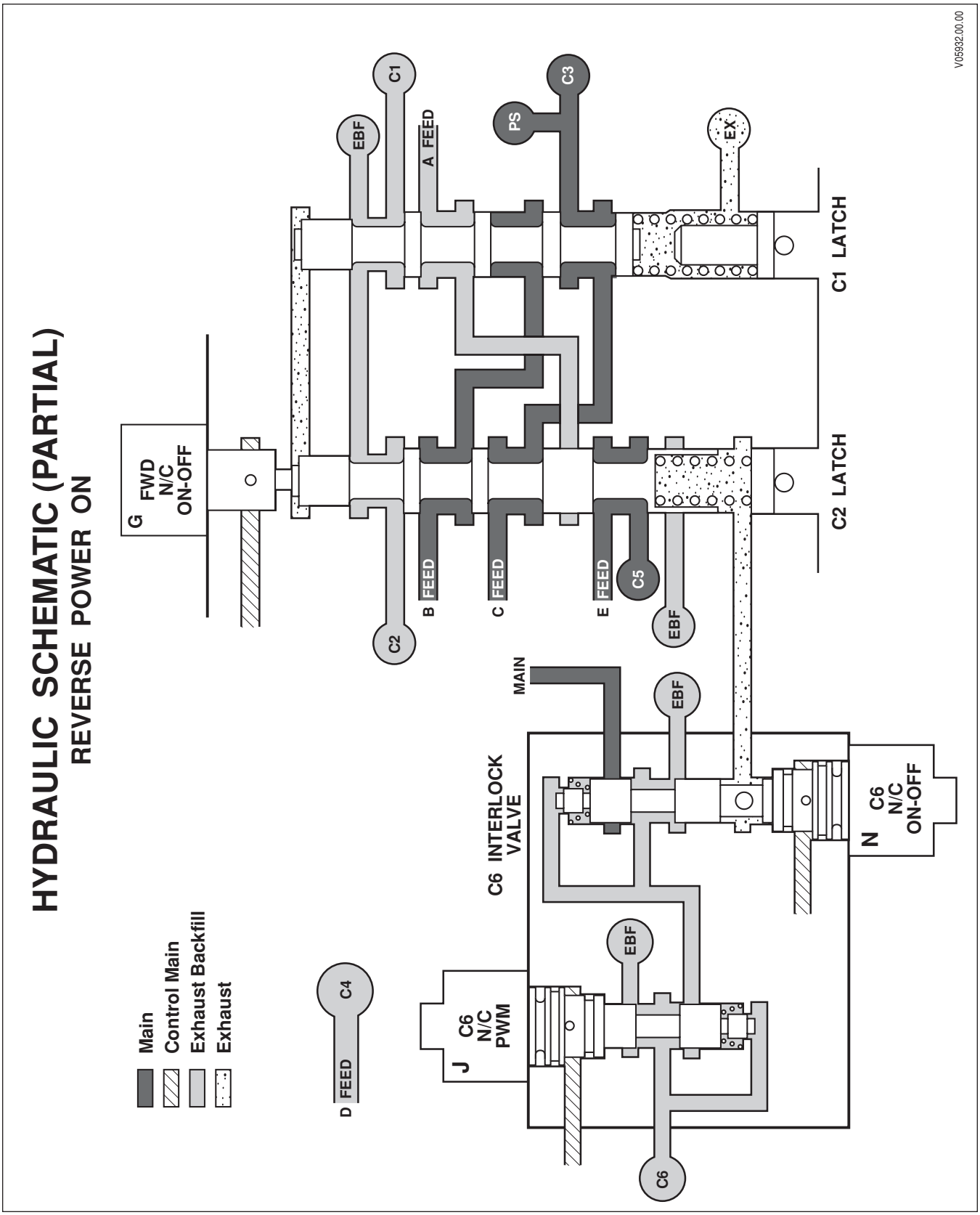

Figure H–12. 3000 Product Family 7-Speed Models Hydraulic Schematic—Reverse Power On

Copyright © 2005 General Motors Corp.

https://truckmanualshub.com/

APPENDIX H—HYDRAULIC SCHEMATICS

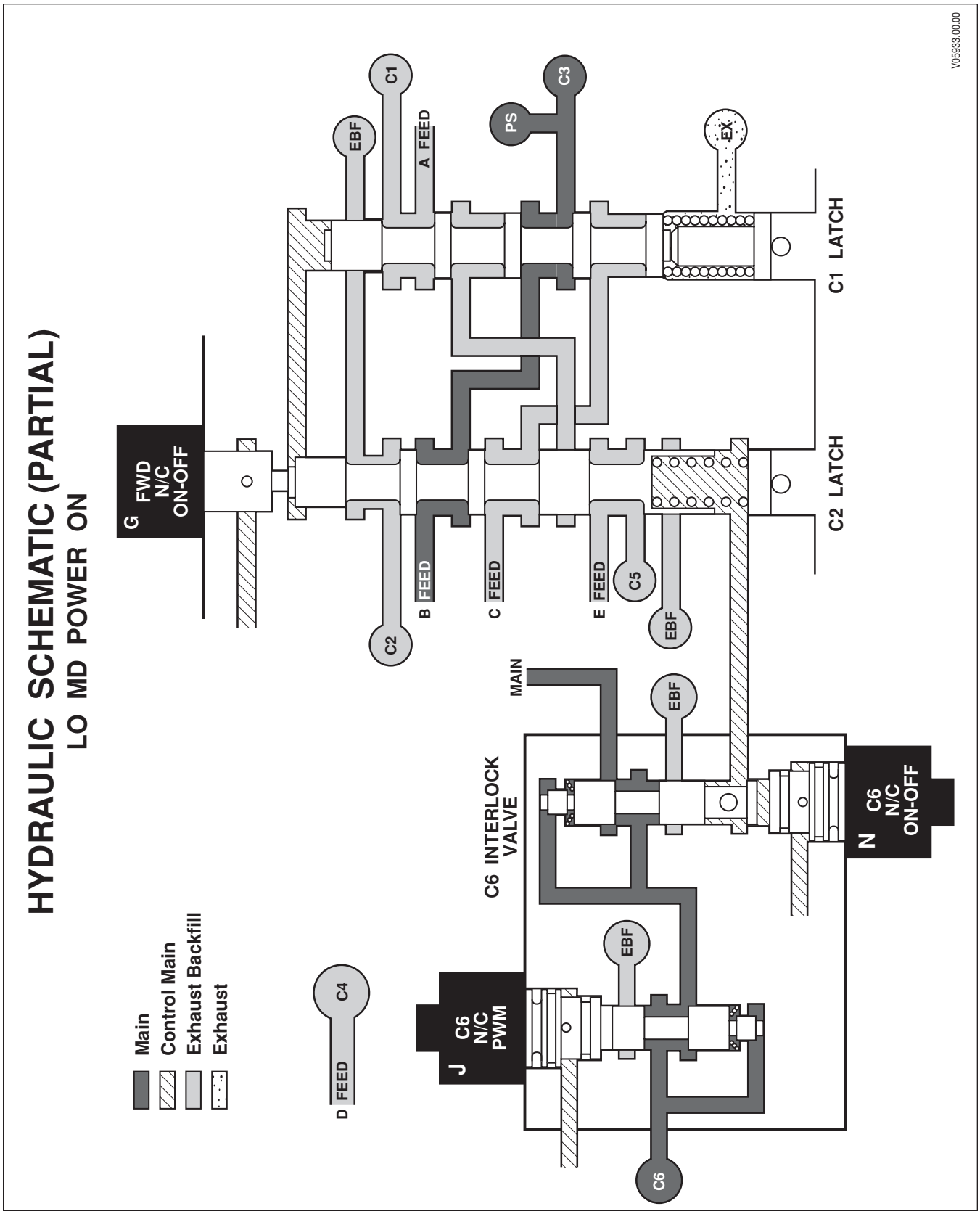

Figure H–13. 3000 Product Family 7-Speed Models Hydraulic Schematic—Lo MD Power On

Copyright © 2005 General Motors Corp.

https://truckmanualshub.com/

APPENDIX H—HYDRAULIC SCHEMATICS

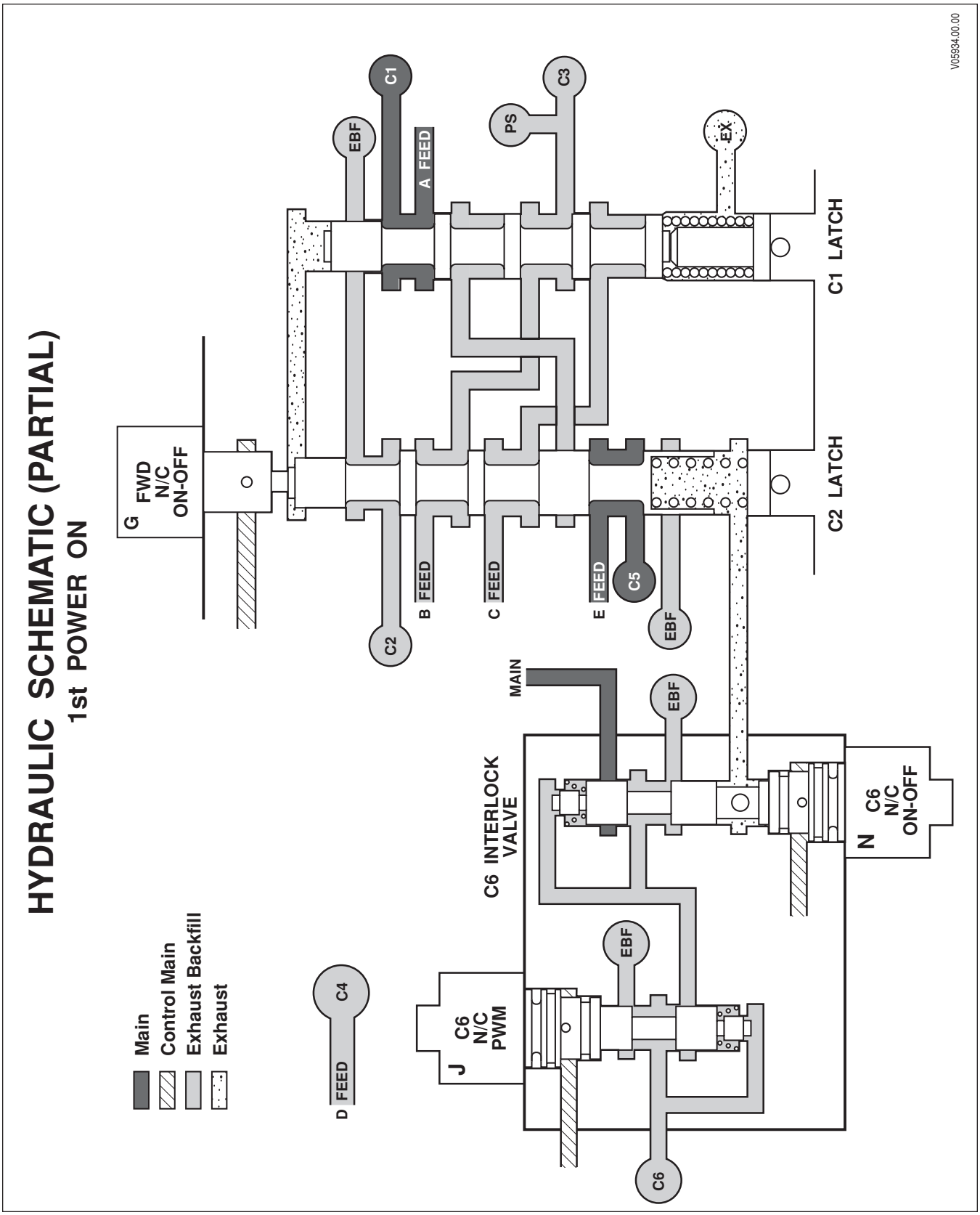

Figure H–14. 3000 Product Family 7-Speed Models Hydraulic Schematic—1st Power On

Copyright © 2005 General Motors Corp.

https://truckmanualshub.com/

APPENDIX H—HYDRAULIC SCHEMATICS

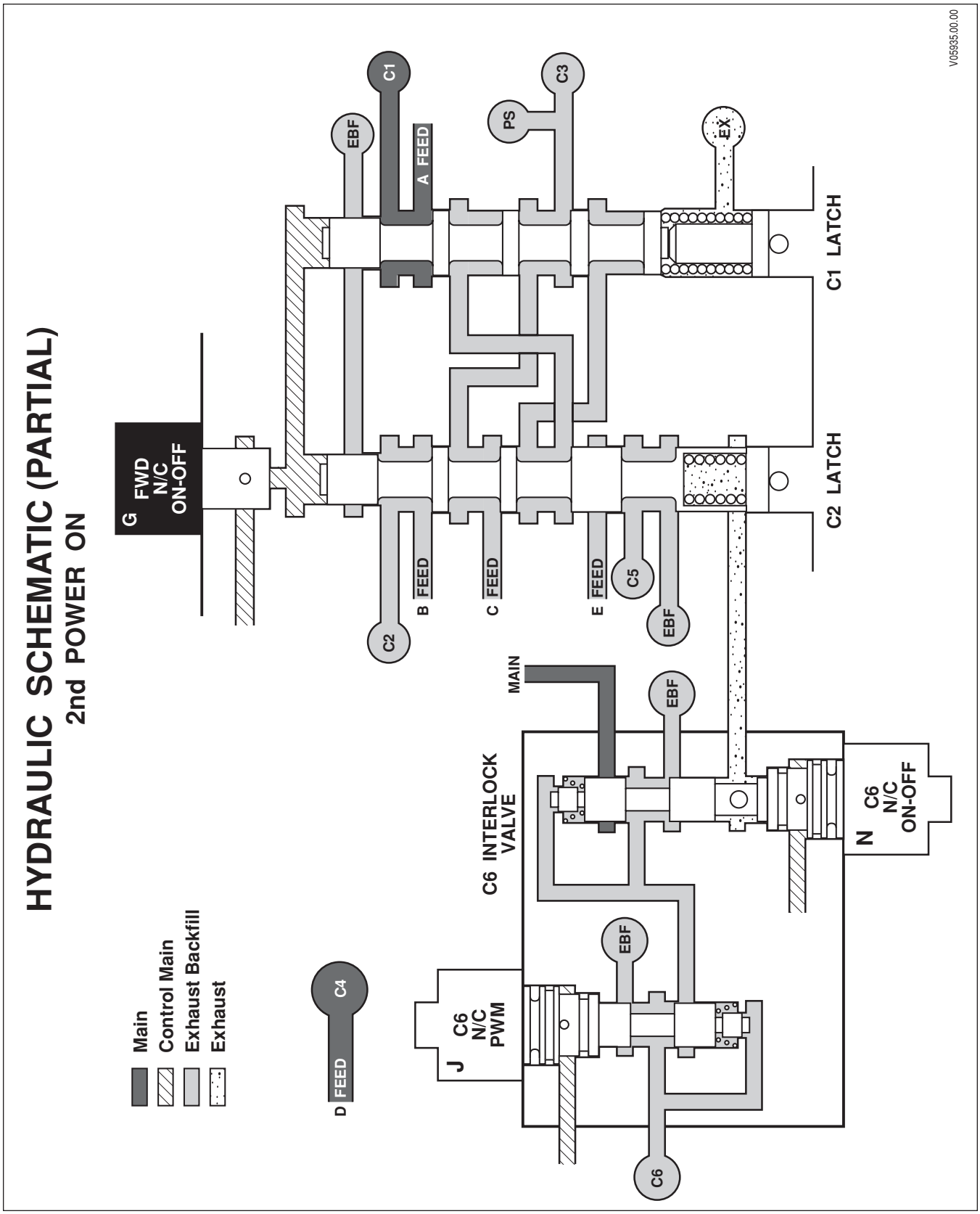

Figure H–15. 3000 Product Family 7-Speed Models Hydraulic Schematic—2nd Power On

Copyright © 2005 General Motors Corp.

https://truckmanualshub.com/

APPENDIX H—HYDRAULIC SCHEMATICS

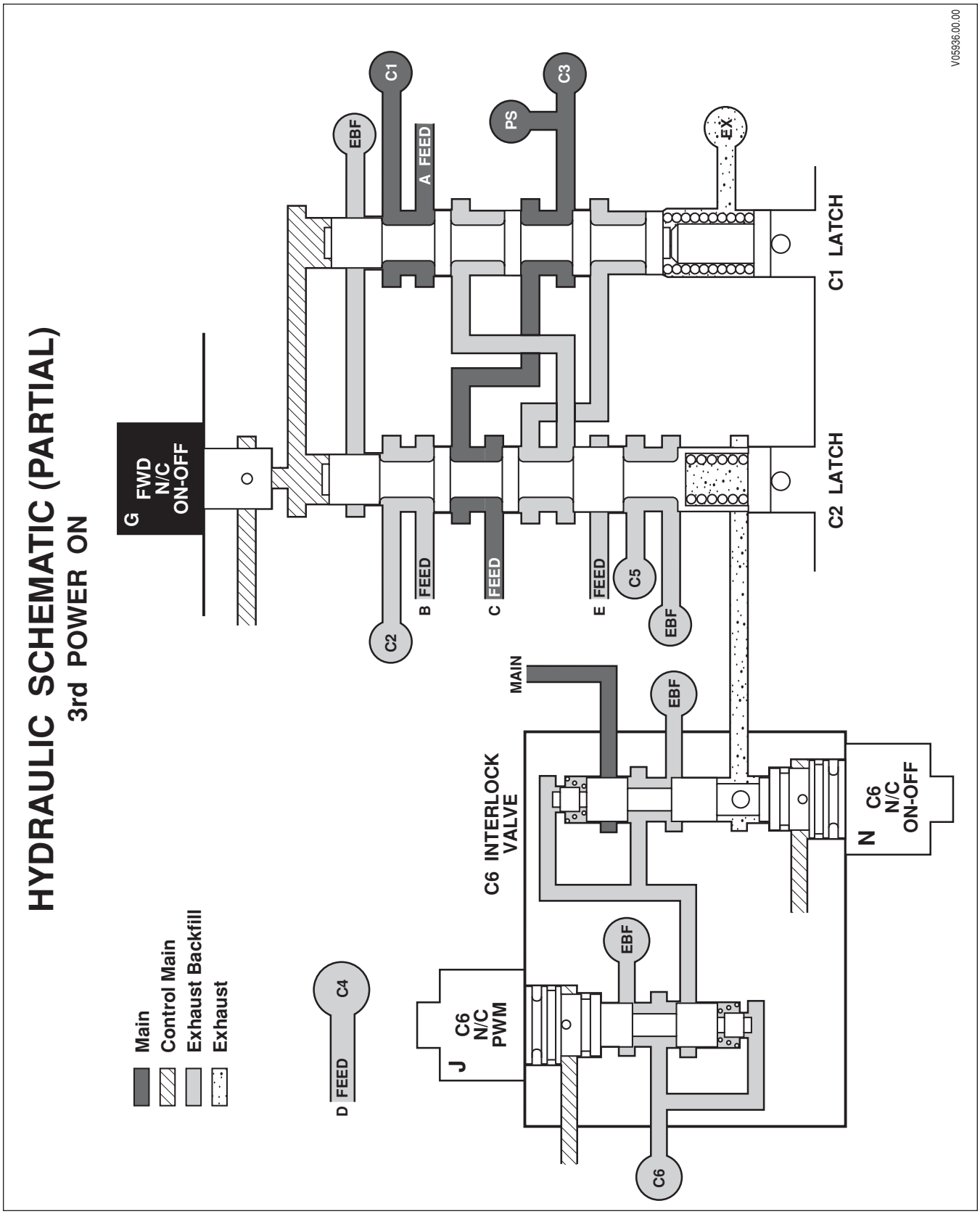

Figure H–16. 3000 Product Family 7-Speed Models Hydraulic Schematic—3rd Power On

Copyright © 2005 General Motors Corp.

https://truckmanualshub.com/

APPENDIX H—HYDRAULIC SCHEMATICS

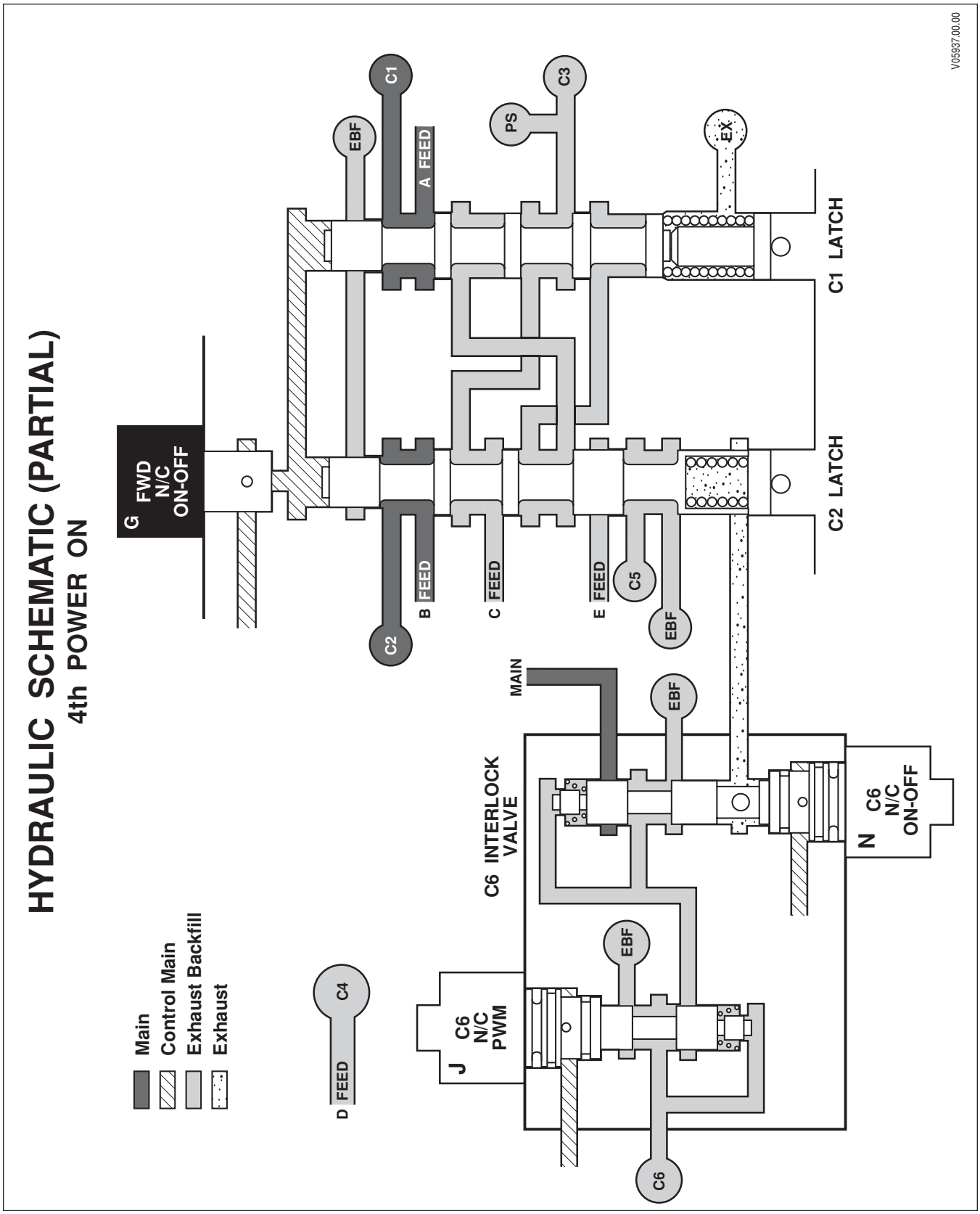

Figure H–17. 3000 Product Family 7-Speed Models Hydraulic Schematic—4th Power On

Copyright © 2005 General Motors Corp.

https://truckmanualshub.com/

APPENDIX H—HYDRAULIC SCHEMATICS

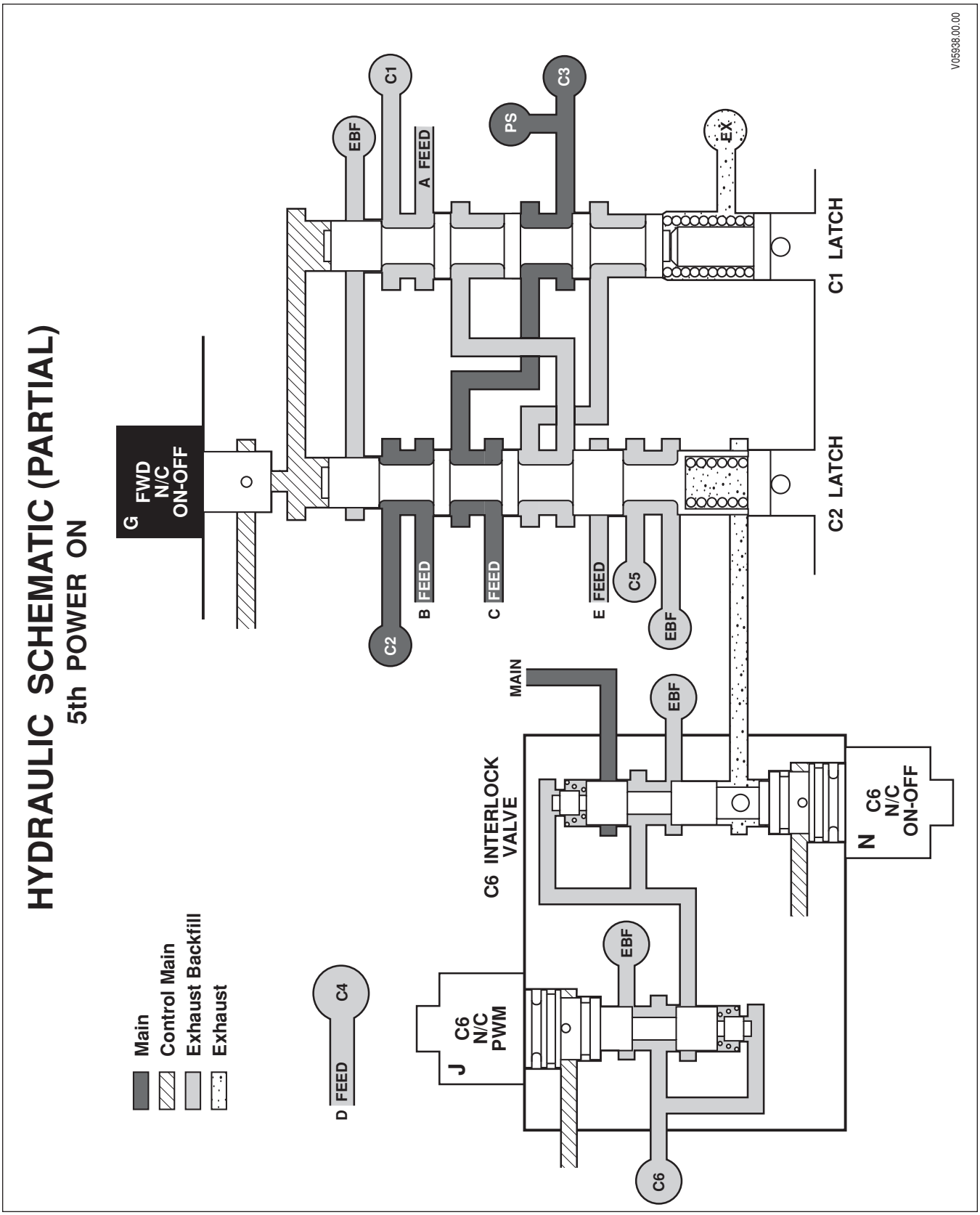

Figure H–18. 3000 Product Family 7-Speed Models Hydraulic Schematic—5th Power On

Copyright © 2005 General Motors Corp.

https://truckmanualshub.com/

APPENDIX H—HYDRAULIC SCHEMATICS

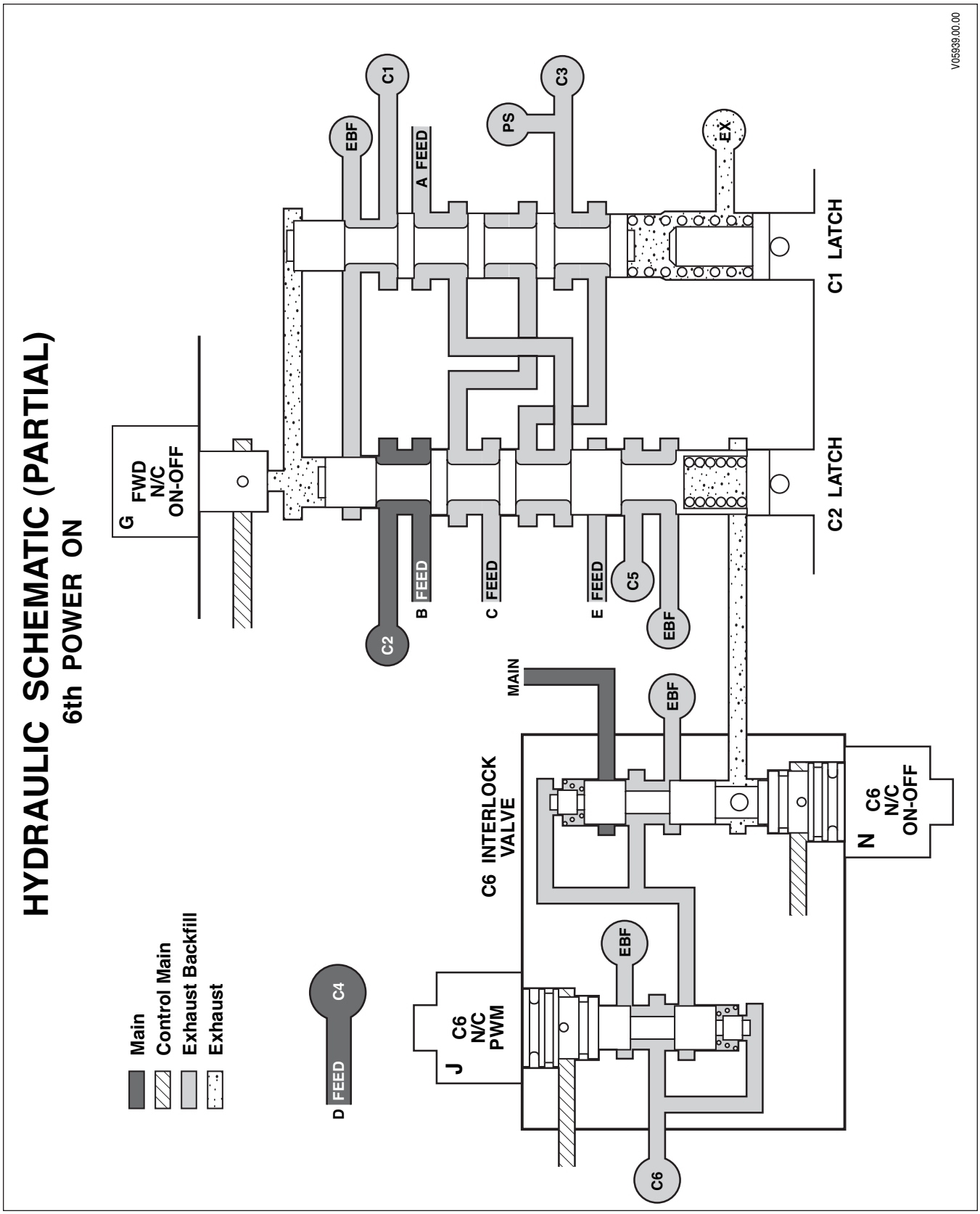

Figure H–19. 3000 Product Family 7-Speed Models Hydraulic Schematic—6th Power On

Copyright © 2005 General Motors Corp.

https://truckmanualshub.com/

APPENDIX H—HYDRAULIC SCHEMATICS

Copyright © 2005 General Motors Corp.

https://truckmanualshub.com/

APPENDIX H—HYDRAULIC SCHEMATICS

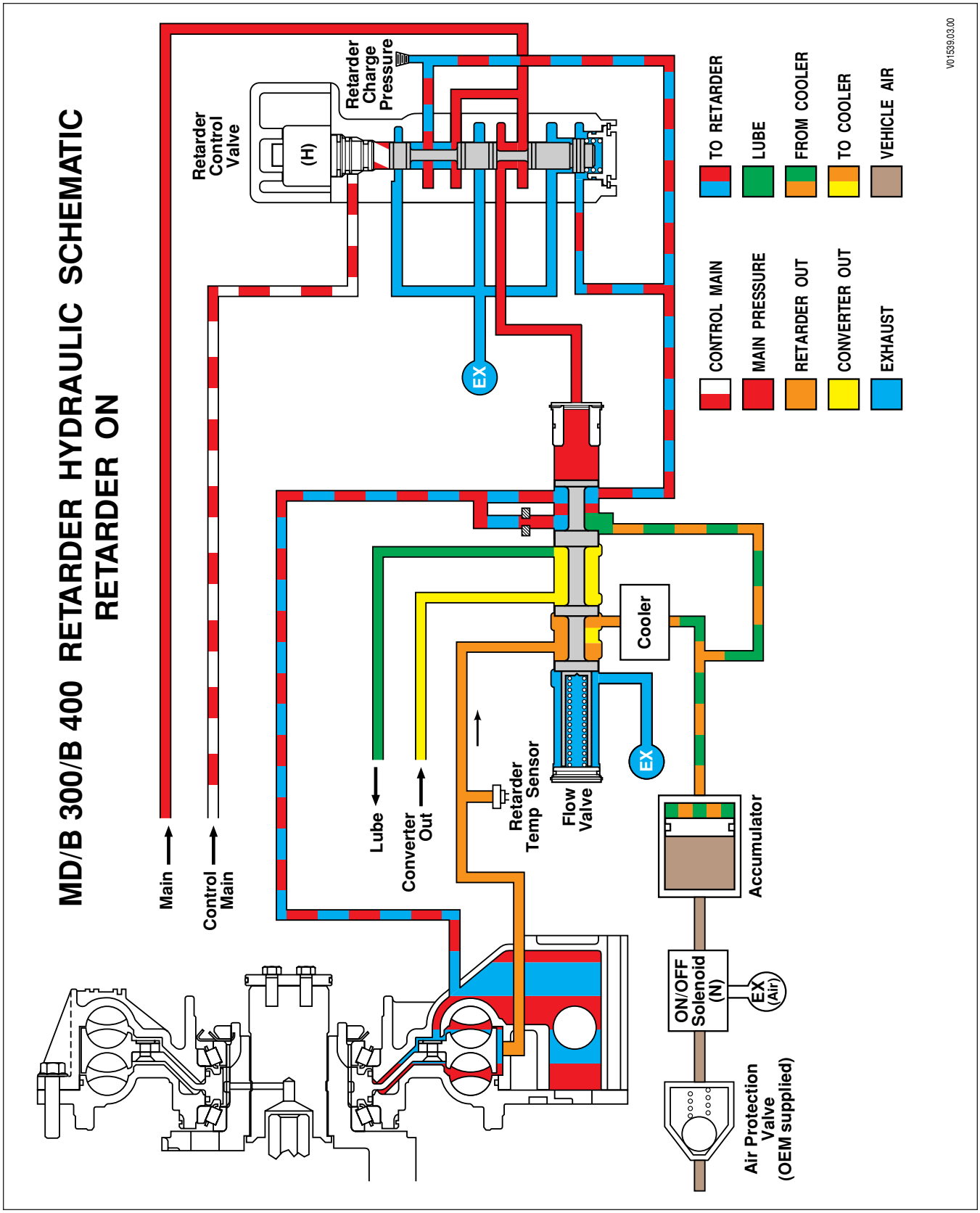

Figure H–20. 3000 Product Family Hydraulic Schematic (Retarders Built Before January 1, 1998)—Retarder On

Copyright © 2005 General Motors Corp.

https://truckmanualshub.com/

APPENDIX H—HYDRAULIC SCHEMATICS

Copyright © 2005 General Motors Corp.

https://truckmanualshub.com/

APPENDIX H—HYDRAULIC SCHEMATICS

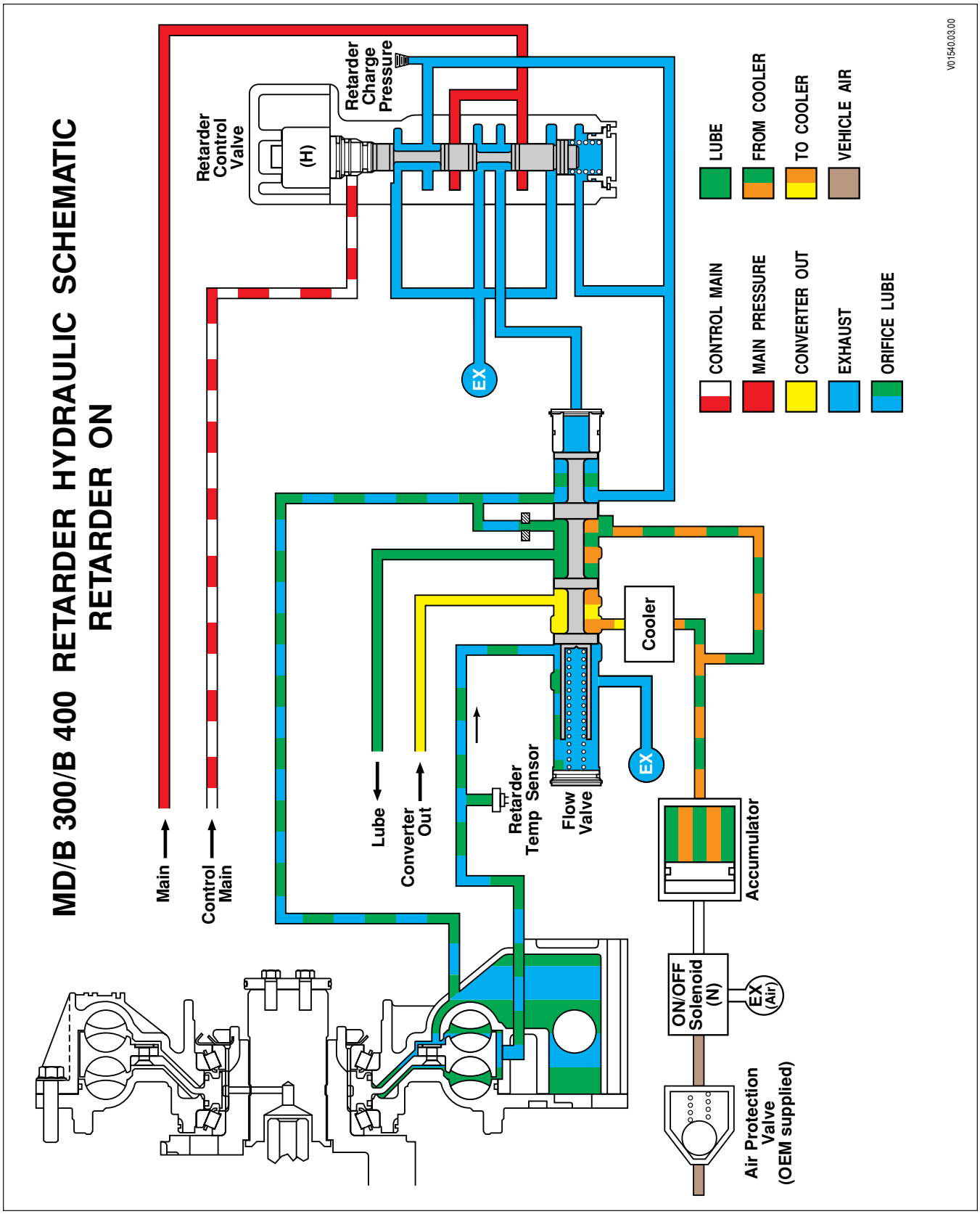

Figure H–21. 3000 Product Family Hydraulic Schematic (Retarders Built Before January 1, 1998)—Retarder Off

Copyright © 2005 General Motors Corp.

https://truckmanualshub.com/

APPENDIX H—HYDRAULIC SCHEMATICS

Copyright © 2005 General Motors Corp.

https://truckmanualshub.com/

APPENDIX H—HYDRAULIC SCHEMATICS

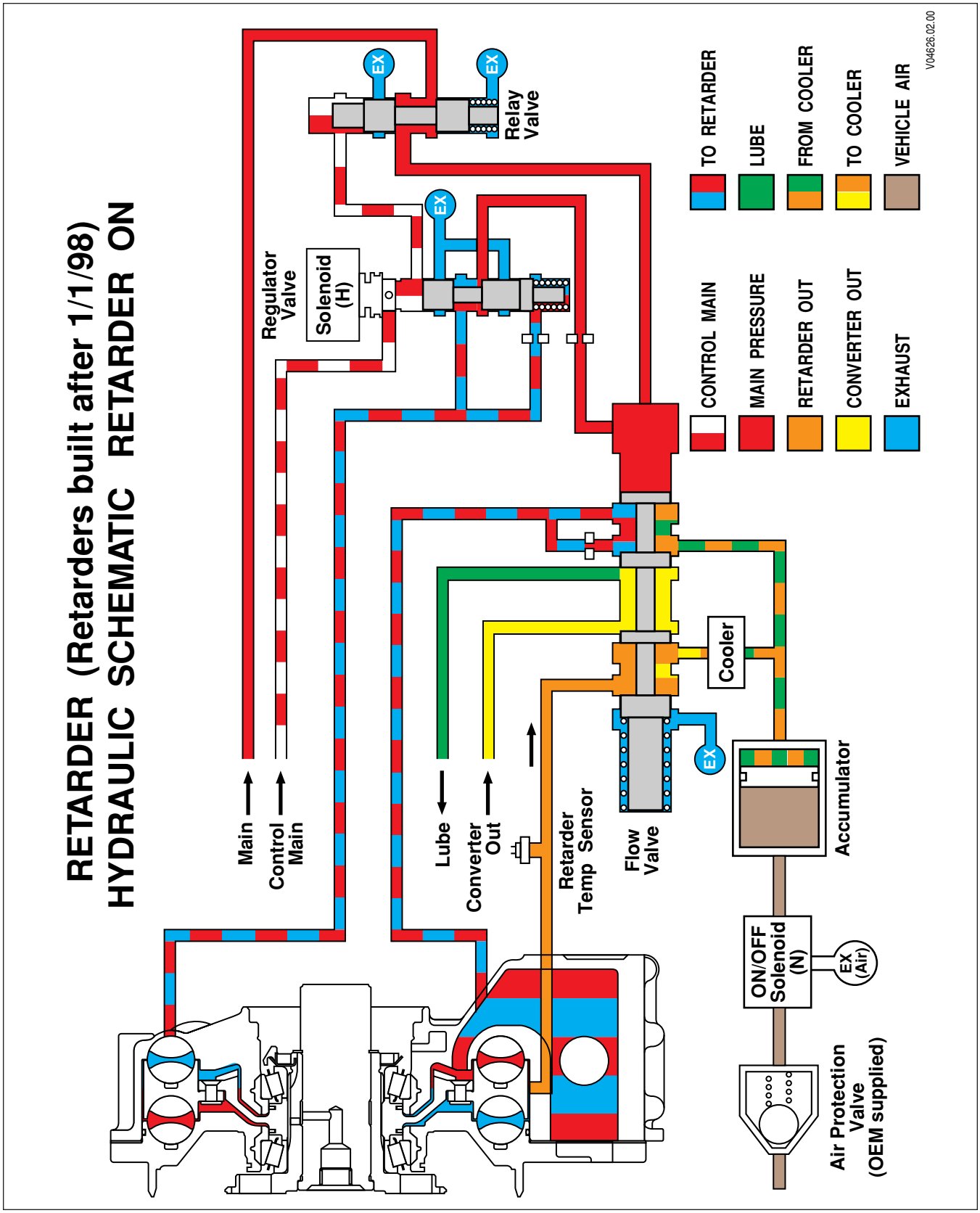

Figure H–22. 3000 Product Family Hydraulic Schematic (Retarders Built After January 1, 1998)—Retarder On

Copyright © 2005 General Motors Corp.

https://truckmanualshub.com/

APPENDIX H—HYDRAULIC SCHEMATICS

Copyright © 2005 General Motors Corp.

https://truckmanualshub.com/

APPENDIX H—HYDRAULIC SCHEMATICS

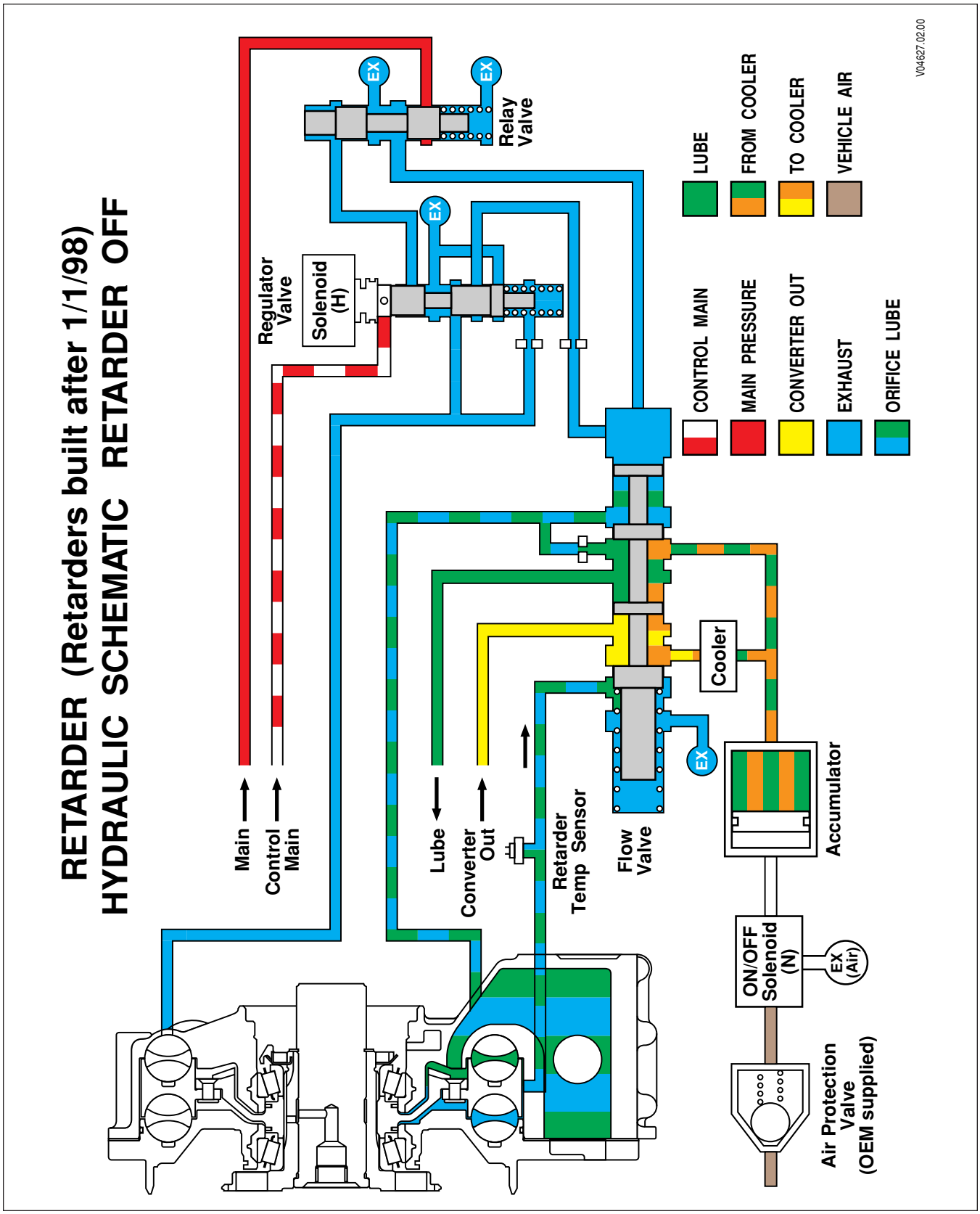

Figure H–23. 3000 Product Family Hydraulic Schematic (Retarders Built After January 1, 1998)—Retarder Off

Copyright © 2005 General Motors Corp.

https://truckmanualshub.com/

APPENDIX H—HYDRAULIC SCHEMATICS

Copyright © 2005 General Motors Corp.

https://truckmanualshub.com/

APPENDIX H—HYDRAULIC SCHEMATICS

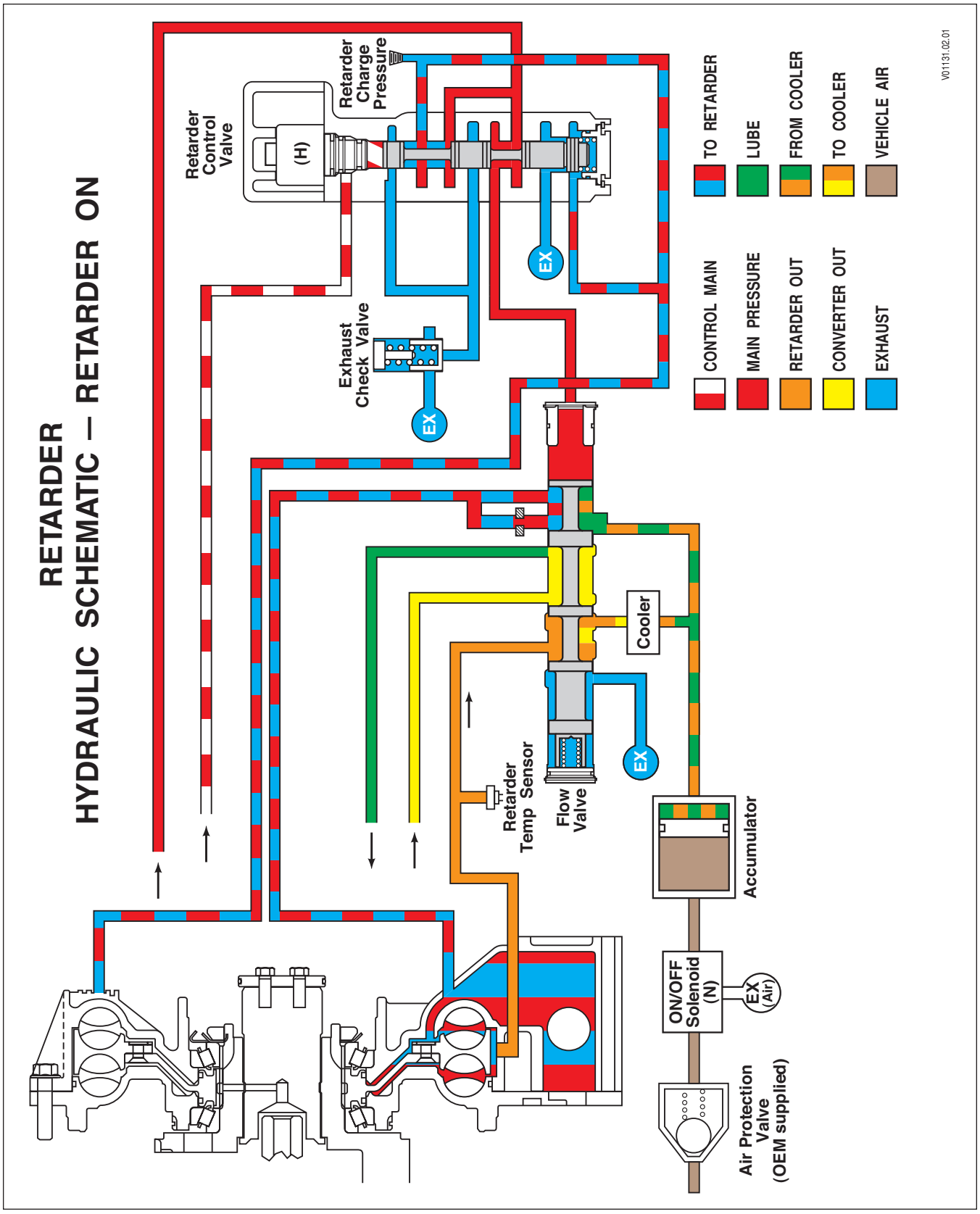

Figure H–24. 4000 Product Family Hydraulic Schematic— Retarder On

Copyright © 2005 General Motors Corp.

https://truckmanualshub.com/

APPENDIX H—HYDRAULIC SCHEMATICS

Copyright © 2005 General Motors Corp.

https://truckmanualshub.com/

APPENDIX H—HYDRAULIC SCHEMATICS

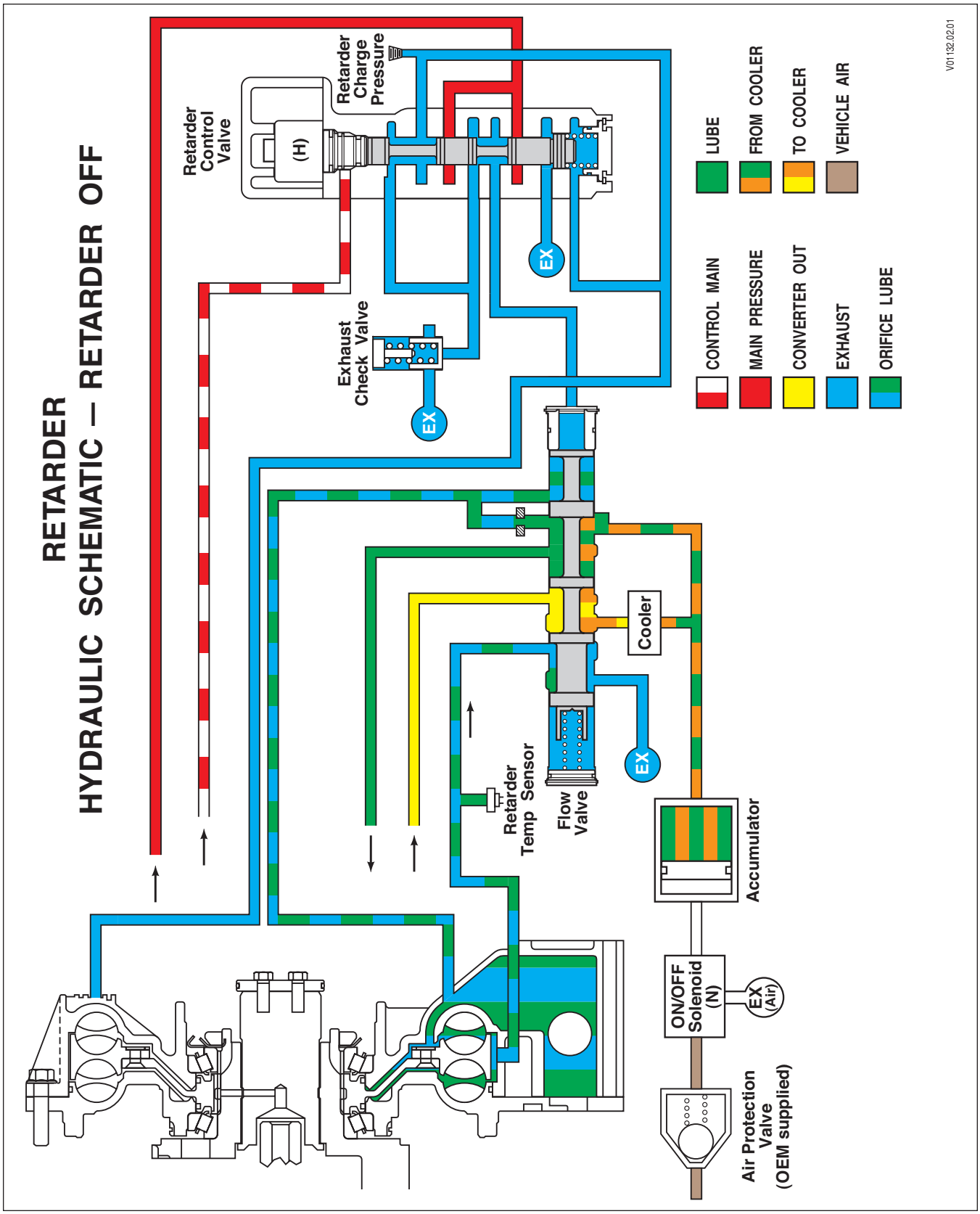

Figure H–25. 4000 Product Family Hydraulic Schematic— Retarder Off

Copyright © 2005 General Motors Corp.

https://truckmanualshub.com/

APPENDIX H—HYDRAULIC SCHEMATICS

NOTES

Copyright © 2005 General Motors Corp.

https://truckmanualshub.com/

APPENDIX J—3000 AND 4000 PRODUCT FAMILIES WIRING SCHEMATIC

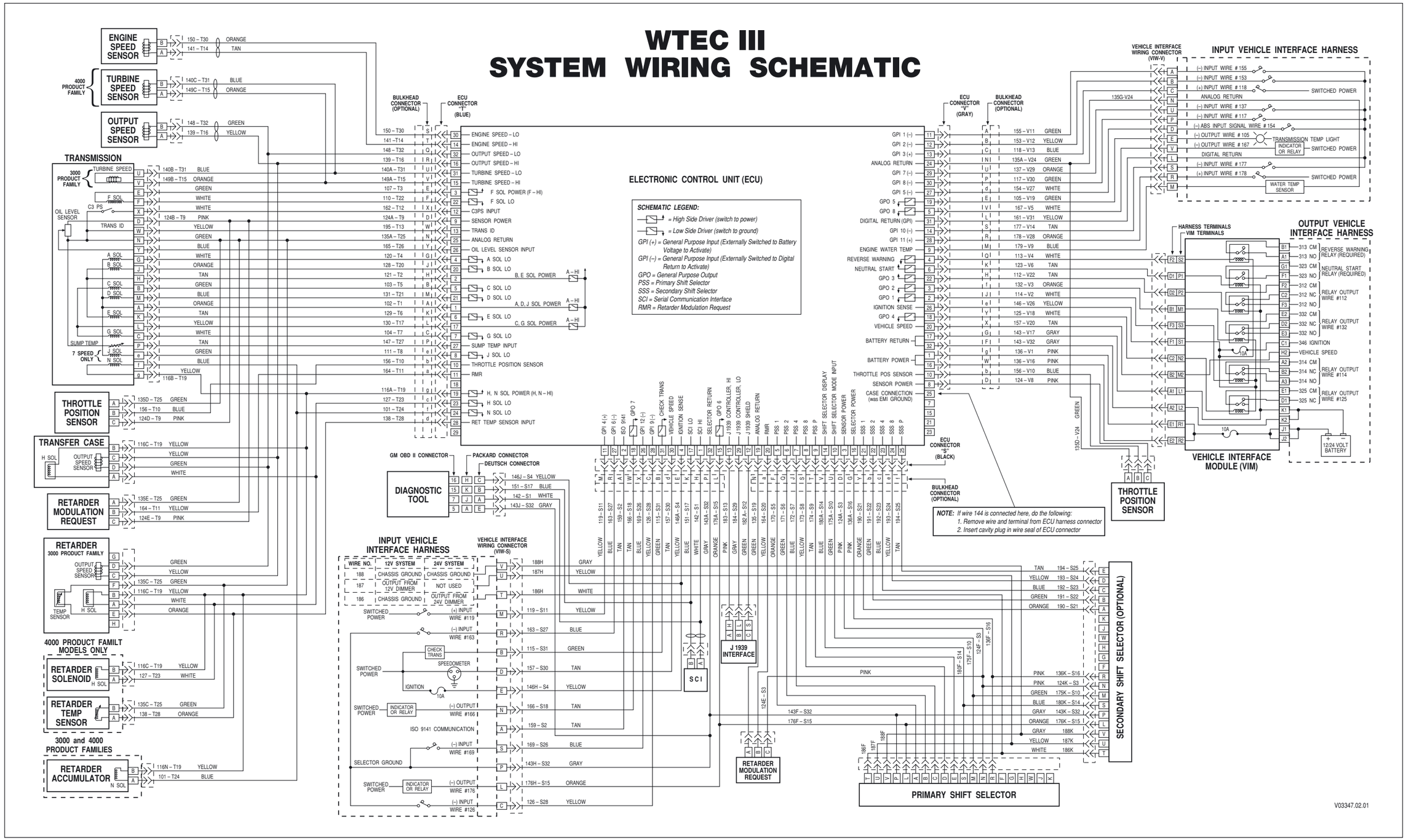

Figure J–1. 3000 and 4000 Product Families Wiring Schematic (TransID 1)

Copyright © 2005 General Motors Corp.

https://truckmanualshub.com/

APPENDIX J—3000 AND 4000 PRODUCT FAMILIES WIRING SCHEMATIC

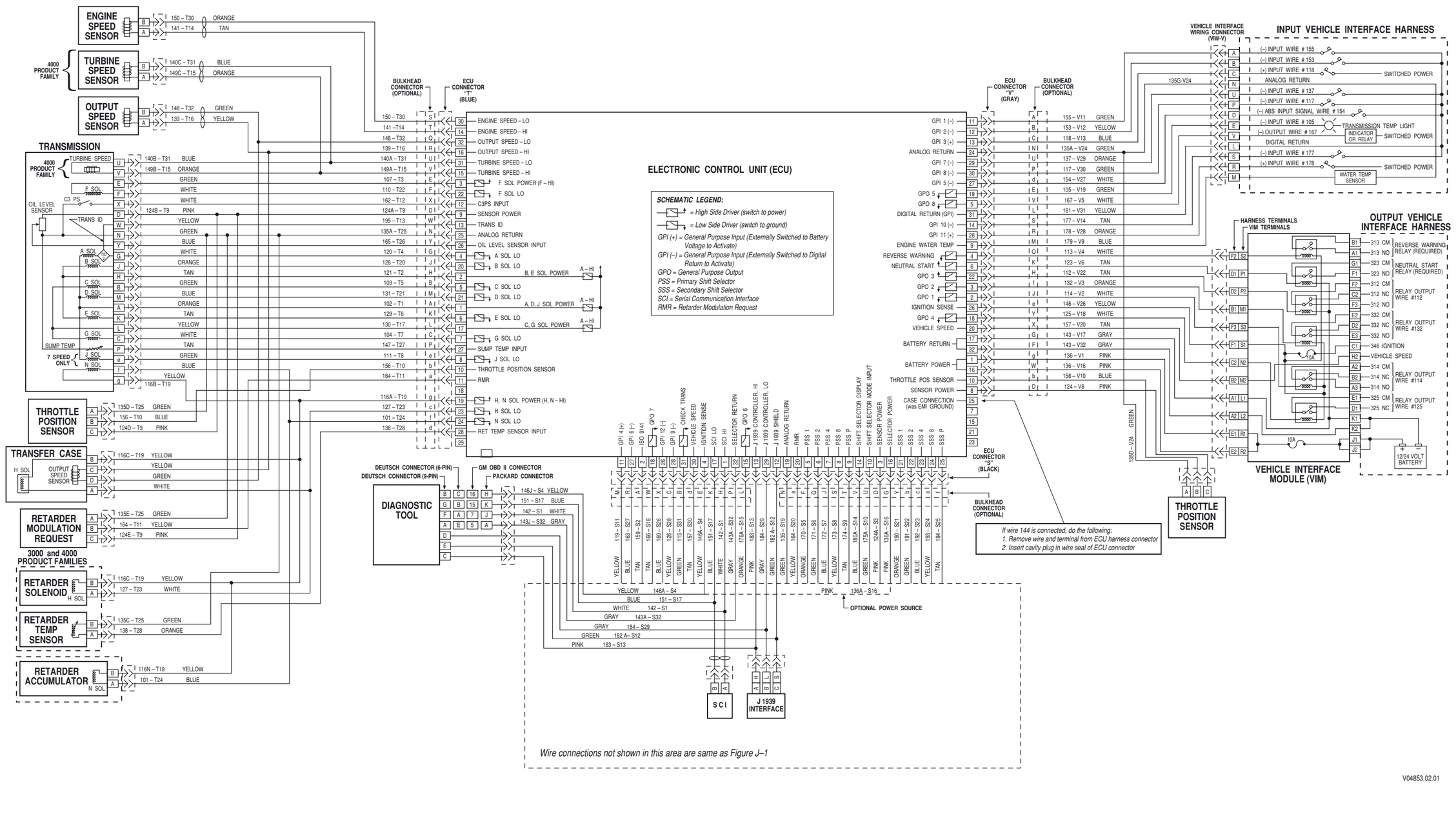

Figure J–2. 3000 and 4000 Product Families Wiring Schematic (TransID 2)

Copyright © 2005 General Motors Corp.

https://truckmanualshub.com/

APPENDIX J—3000 AND 4000 PRODUCT FAMILIES WIRING SCHEMATIC

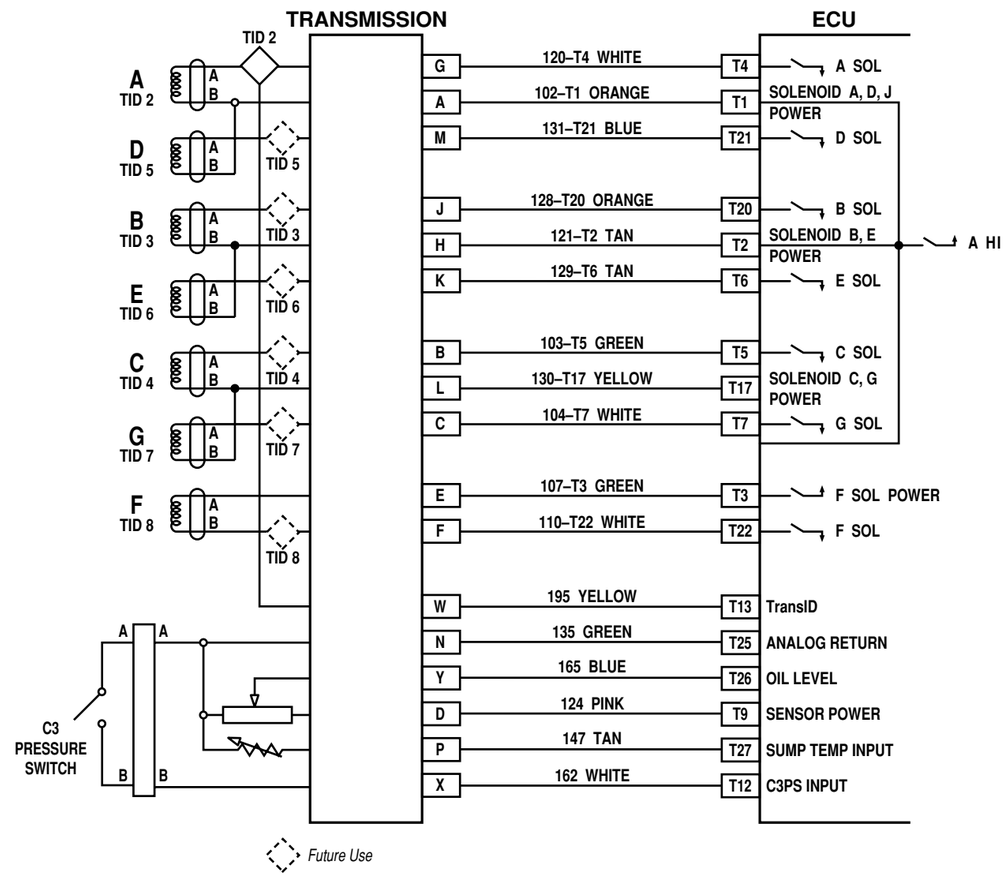

TRANSID — 2 AND FUTURE TID PROVISIONS
(Same as Figure J-1, except as shown)

TID–2 Started Production 1/5/1998
TID–3 Started Production 4/3/2000

Figure J–3. 3000 and 4000 Product Families Wiring Schematic (TransID Details)

Copyright © 2005 General Motors Corp.

https://truckmanualshub.com/

APPENDIX K—TRANSID 1 TEMPERATURE SENSOR AND SOLENOID RESISTANCE CHARTS

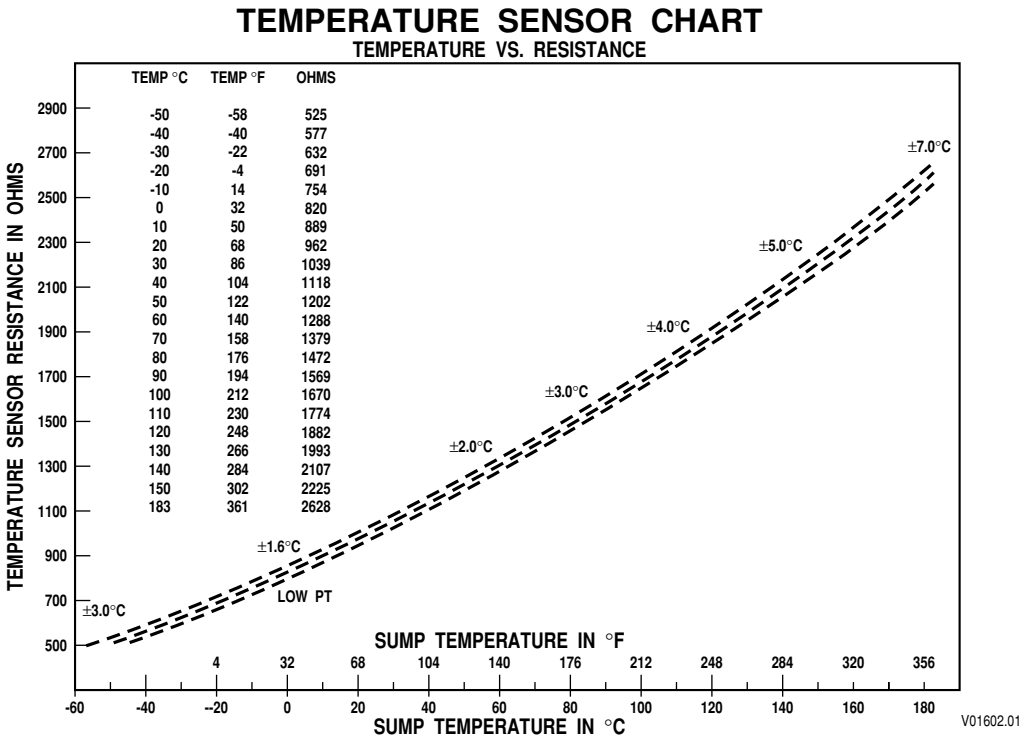

Figure K–1. TransID 1 Temperature Sensor Chart

Copyright © 2005 General Motors Corp.

https://truckmanualshub.com/

APPENDIX K—TRANSID 1 TEMPERATURE SENSOR AND SOLENOID RESISTANCE CHARTS

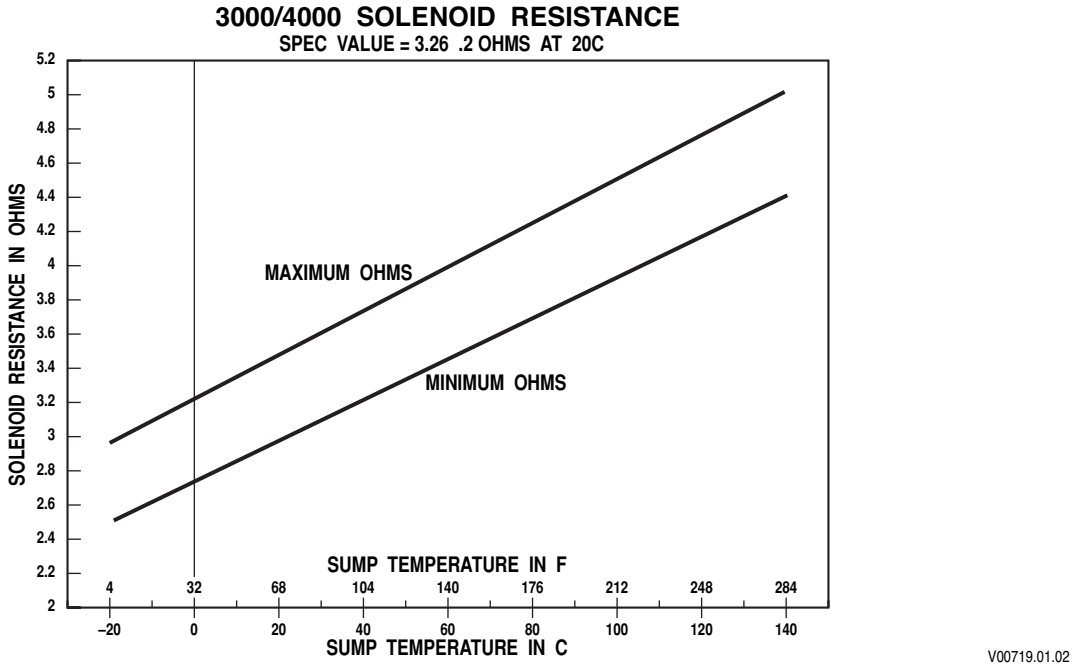

Figure K–2. Solenoid Resistance vs. Temperature Chart

Copyright © 2005 General Motors Corp.

https://truckmanualshub.com/

APPENDIX L—EXTERNALLY-GENERATED ELECTRONIC INTERFERENCE

1–1. ELECTROMAGNETIC/RADIO FREQUENCY INTERFERENCE

Be sure that the ECU for the Allison Transmission Electronic Controls is properly grounded to prevent EMI interference problems. The chassis frame must be connected to the negative post of the vehicle battery. A proper connection to the chassis frame is required. The connection must be free from rust and paint. The electrical integrity of this connection must not deteriorate with the age of the vehicle. If the ECU is cab-mounted, there must be two 1½ to 2 inch wide braided grounding straps connecting the cab structure to the chassis frame. DO NOT connect wire 144-V25 to a bus bar or to any single terminal carrying other electrical loads.

All electrical and electronic systems generate electromagnetic fields that can interfere with other electronic systems. Allison Transmission electronic transmission controls comply with Federal Communications Commission (FCC) regulations and other guidelines concerning emitted radio frequency interference for transportation electronics. The position of Allison Transmission Division of General Motors is that manufacturers and installers of EMI/RFI emitting equipment are responsible for adhering to FCC regulations and other guidelines concerning emitted radio frequency interference for transportation electronics.

Some radio-telephone or two-way communication radios (land-mobile radio), or the manner in which they are installed, can adversely affect vehicle operation or be affected by other vehicle components. Expenses incurred to protect vehicle-related systems from EMI/RFI emissions by radio-telephone or two-way communications radios (land-mobile radio) or to integrate such devices into vehicles are not the responsibility of Allison Transmission.

1–2. GENERAL GUIDELINES FOR RADIO EQUIPMENT INSTALLATION

The following general guidelines for installing radio-telephone or two-way communications radios (land-mobile radio) in a vehicle supplement, but DO NOT replace, detailed instructions provided by the radio equipment manufacturer. Detailed installation instructions are the sole responsibility of the radio equipment manufacturer.

Experience has shown that most EMI/RFI problems can be prevented or eliminated by following the guidelines. If EMI/RFI problems persist after following the guidelines and after ensuring the installation conforms to the guidelines, contact the vehicle and radio equipment manufacturers for additional installation or equipment operation instructions.

A. Transmitter Installation

1. Locate remote radio transmitters as far away from other electronic devices and as near to the side of the vehicle body as possible.
2. Mount transceivers (transmitter and receiver in one box) under the dash so as not to interfere with vehicle controls or passenger movement.

B. Antenna Installation

Each vehicle and body style react differently to radio frequency energy. When dealing with an unfamiliar vehicle, test various antenna locations by using a magnetic mount antenna and testing for adverse effects. Antenna location is a major factor in EMI/RFI problems.

C. Antenna Cable Routing

1. Use high quality, 95 percent shield coverage, coaxial (coax) cable. Route the coax well away from any electronic components.
2. Route antenna cables as far away from vehicle wiring as possible to reduce the likelihood of the vehicle wiring acting as an antenna for interference.

Copyright © 2005 General Motors Corp.

https://truckmanualshub.com/

APPENDIX L—EXTERNALLY-GENERATED ELECTRONIC INTERFERENCE

D. Radio Wiring and Connector Location

1. Connect transmitter power leads directly to the battery.
2. For transceivers (transmitter and receiver in one box) with ignition control, place a 12V power contactor at the vehicle battery. Drive the contactor coil, through an appropriate in-line fuse, from an ignition circuit not powered during engine cranking.
3. Any negative lead from a handset or control unit must return to battery negative.
4. Connect the positive lead from a handset or control unit directly to battery.
5. Fuse handset or control unit positive and negative leads separately from the transceiver negative and positive leads. Use correctly rated fuses.

E. Power and Ground Wire Routing

Route radio power and ground wires as far away as possible from electronic control modules.

F. Troubleshooting

The following are common causes of EMI/RFI problems:

- Power leads connected to points other than the battery
- Improper antenna location
- Poor shielding or connections to antenna cable
- Transmitter or transceiver wiring too close to vehicle electronics

1–3. EXTERNALLY-GENERATED SPEED SENSOR SIGNALS

A. Checking for Externally-Generated Speed Sensor Signals

Use the following procedures to determine if speed sensor signals generated by a source external to the transmission or wiring harness are present:

1. Turn ignition ON.
2. Keep engine OFF.
3. If the ECU is ON (shift selector display remains illuminated), connect the Allison DOC™ For PC–Service Tool.

NOTE: ***If false speed signals were present at the previous shutdown, the ECU might still be "on" even though the ignition is "off." The Allison DOC™ For PC–Service Tool is powered by ignition power so the ignition must be "on" to use the Allison DOC™ For PC–Service Tool to read the speed signals.***

4. Read speed sensor signals.
5. If a speed sensor signal is other than one (1) rpm, then there is a short to another circuit that is carrying an AC or PWM signal.
6. Measure the resistance of the sensor.
7. Test for shorts to other circuits within the harness or transmission connector.
8. Inspect to make sure there is no conductive material inside the connector.
9. Inspect to be sure speed sensor circuit wires are a twisted pair.
10. Inspect to be sure there is a properly grounded drain wire.
11. Test for the presence of a strong external AC signal.
12. Repair or replace parts as required.

Copyright © 2005 General Motors Corp.

https://truckmanualshub.com/

APPENDIX M—DIAGNOSTIC TREE—3000 AND 4000 HYDRAULIC SYSTEM

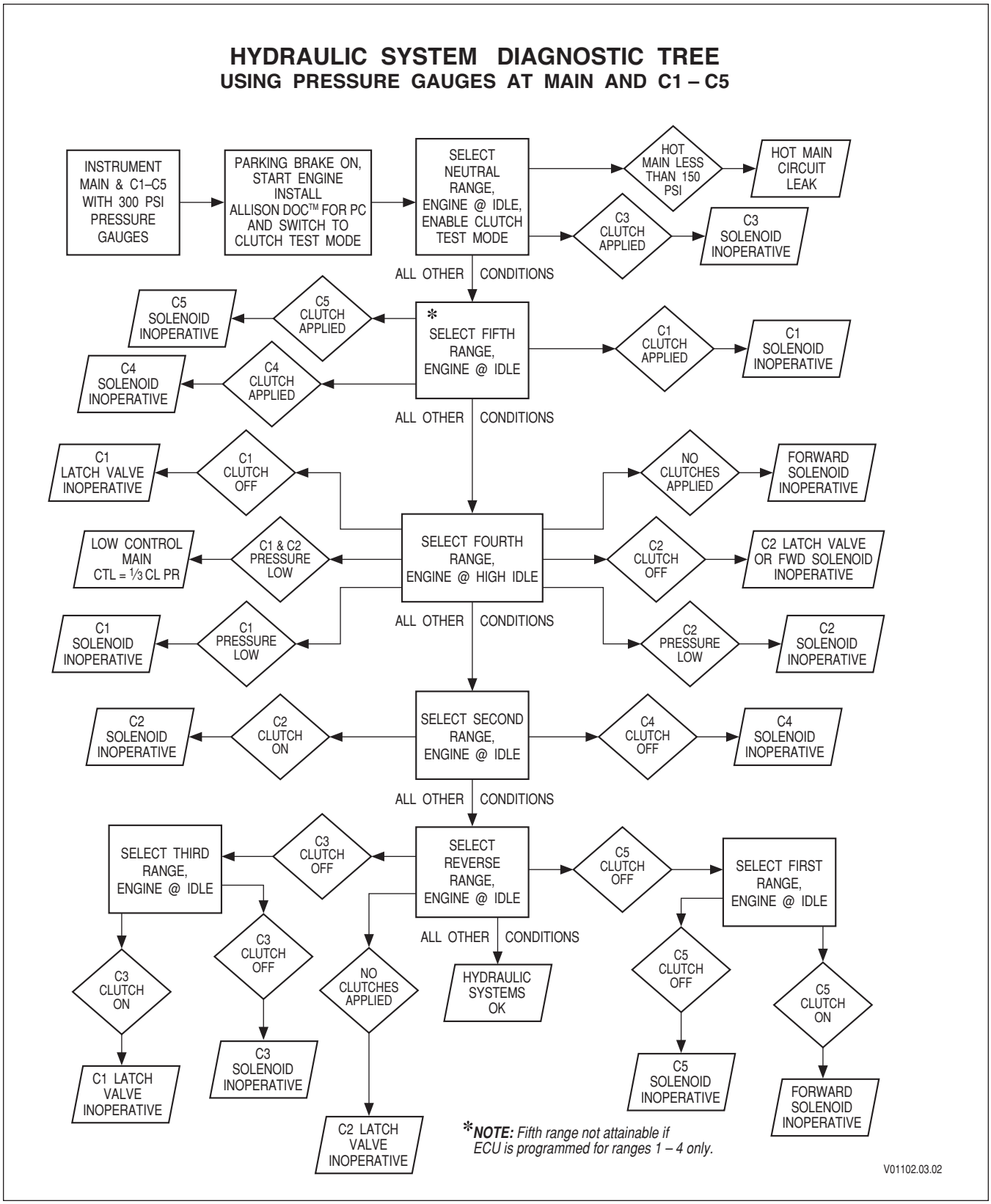

Figure M–1. Diagnostic Tree—3000 and 4000 Product Families Hydraulic System With Gauges

Copyright © 2005 General Motors Corp.

https://truckmanualshub.com/

APPENDIX M—DIAGNOSTIC TREE—3000 AND 4000 HYDRAULIC SYSTEM

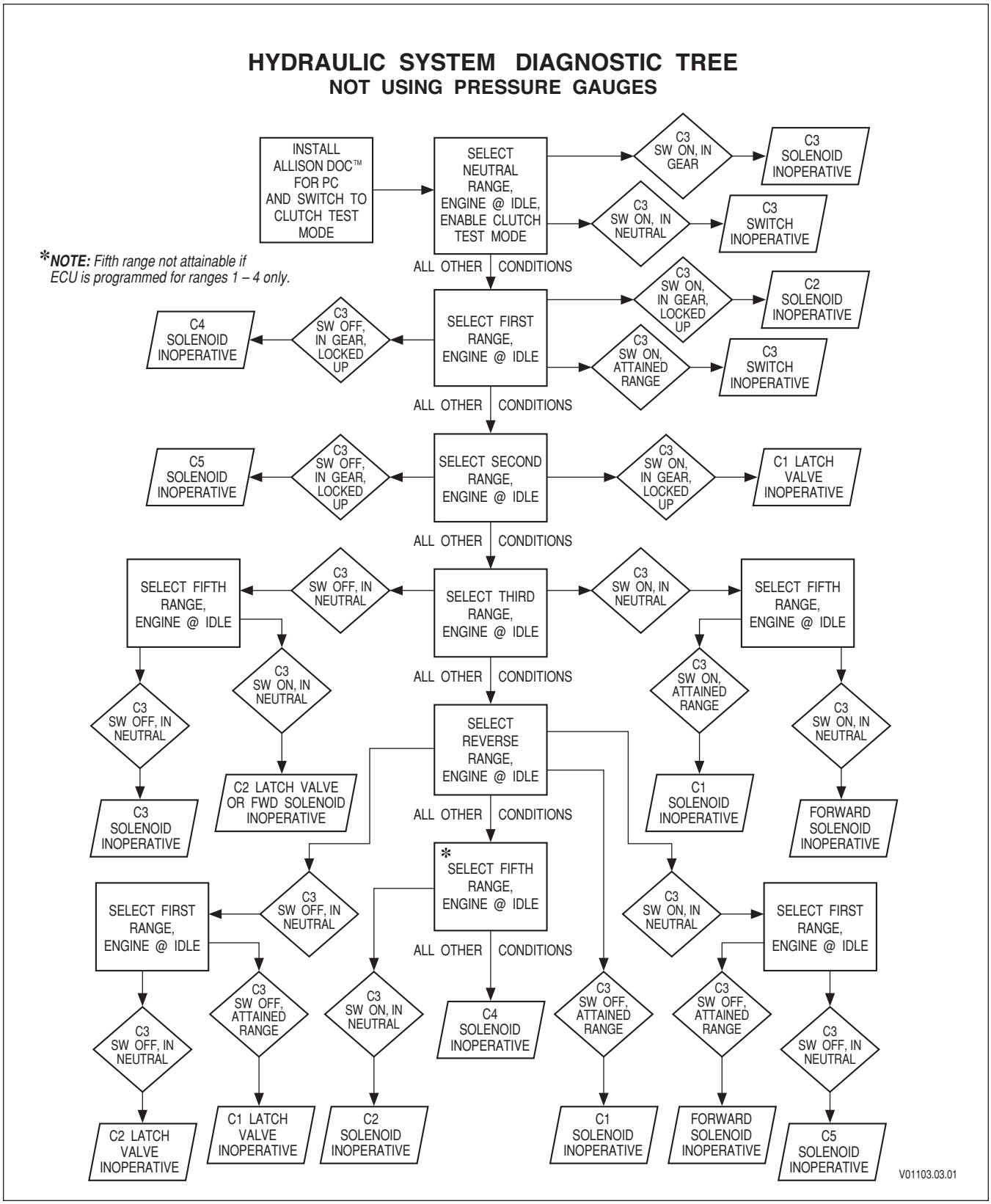

Figure M–2. Diagnostic Tree—3000 and 4000 Product Families Hydraulic System Without Gauges

Copyright © 2005 General Motors Corp.

https://truckmanualshub.com/

APPENDIX N—DIAGNOSTIC TOOL INFORMATION

Allison DOC™ For PC–Service Tool

The Allison DOC™ For PC–Service Tool is the preferred diagnostic tool of Allison Transmission. Information about translator device support, support information, essential tool status, and purchasing information is as follows:

Translator Device Support

Allison DOC™ For PC–Service Tool software has been functionally tested with the following translator devices:

- MPSI MagiKey® (PDM), Driver version 1.0 Universal

  For availability contact:

  NEXIQ Technologies (MPSI)
  6405 Nineteen Mile Road
  Sterling Heights, Michigan 48314-2115
  Phone 1-800-639-6774
  Fax 1-810-731-3348
  www.mpsilink.com

  SPX Corporation (Kent-Moore Service Solutions)
  28635 Mound Road
  Warren, MI 48092
  Phone 1-800-328-6657
  Fax 1-800-578-7375
  www.toolsfortrucks.com

- Noregon Systems Data Link Adapter (DLA)

  For availability contact:

  Noregon Systems
  500 Shepherd Street
  Winston-Salem North Carolina 27103
  Phone 1-800-570-0571
  Fax 1-336-760-2540
  www.sales@Noregon.com

- Dearborn Group Dearborn Protocol Adapter (DPA) III®, Driver version 2.3

NOTE: ***The DPA III translator device does not work with Allison DOC™ For PC–Service Tool installed in PCs with Windows 95® operating systems.***

  For availability contact:

  Dearborn Group Technology
  27007 Hill Tech Court
  Farmington Hills, MI 48331
  Phone 1-248-488-2080
  Fax 1-248-488-2082
  www.dgtech.com

- B&B Electronics device will require the user to install an additional driver set found on the Allison DOC™ For PC-service tool installation CD called “Noregon RP 1210A API

  B&B Electronics
  707 Dayton Road
  Ottawa, Il. 61350
  Phone: 1-815-433-5100
  Fax: 1-815-433-5104
  www.vehicleinterface.com

Copyright © 2005 General Motors Corp.

https://truckmanualshub.com/

APPENDIX N—DIAGNOSTIC TOOL INFORMATION

- SPX Adapter J1850-VPW, P/N: J-44652, (for vehicles equipped with a J1850 communication link)

  For availability contact:

  SPX Corporation (Kent-Moore Service Solutions)
  28635 Mound Road
  Warren, Mi. 48092
  Phone: 1-800-328-6657
  Fax: 1-800-578-7375

PC Platform Definition

Allison DOC™ For PC–Service Tool has been tested with and is known to operate on PCs with the following configurations*:

- Microsoft® Windows® XP® Professional and Window® 2000 (SP4 or later)
- 600 MB free hard drive space required to install the program (sufficient free hard disk space will be required by the operating system after the software installation to run the program)
- 128 MB of RAM (256 MB or greater recommended)
- Pentium® III Processor—800MHz (Pentium® IV—2.0GHz or greater recommended)
- Internet connection capability (Internet Explorer 5.0.1 or greater)—A broadband Internet connection is highly recommended for receiving updates and file downloads
- One available USB port—USB 1.1 (USB 2.0 recommended)
- 16x CD-ROM (48x or greater recommended)
- Full administrative privileges are required to install, update, and run Allison DOC™ and Allison TCM Reflash
- A PCMCIA slot might be required depending on the type of Softing CAN product being used as a translator device (if any)

NOTE:

- Error messages, sudden disconnections, and poor performance are some of the results users will experience if Allison DOC™ For PC–Service Tool V6.0.0 is installed on PCs that do not meet one or more of the above specifications.
- For the latest requirements, please refer to ***www.allisontransmission.com/Service/Electronic (Diagnostic) Tools/Requirements*** or the latest revision of Service Information Letter 25-TR-06.

NOTE:

- ***The Allison DOC™ For PC–Service Tool will not function correctly on PCs that do not meet the above listed definition and will not be supported.***
- ***PCCS (Production Calibration Configuration System) does not support Windows, NT®, ME® when recalibrating 3000 and 4000 Product Families transmissions.***
- ***PCCS is a separate, stand-alone software application.***
- ***For the latest requirements, please refer to www.allisontransmission.com.***

Support Information

Allison DOC™ For PC–Service Tool is shipped with:

- Extensive updated Help menu and User Guide
- Updated-laminated tri-fold Job Aid Card, JA3434EN.

Copyright © 2005 General Motors Corp.

https://truckmanualshub.com/

APPENDIX N—DIAGNOSTIC TOOL INFORMATION

All of these sources of information will provide you with the necessary guidelines to:

- Install
- Utilize
- Manipulate the software application.

The Technical Support Help Desk is available to registered owners of Allison DOC™ For PC–Service Tool and to address issues related to the installation of the application and connectivity to a vehicle. For PC or operating system problems, please contact your company information technology department or refer to the documentation provided with your PC.

Please check the Allison website, ***www.allisontransmission.com/service***, regularly for important information that could clarify some of the common questions/concerns with respect to the different Allison Transmission diagnostic tools.

Essential Tool Status

Allison DOC™ For PC–Service Tool has been classified as an ESSENTIAL TOOL for facilities authorized as 3000 and 4000 Product Families transmission maintenance overhaul service outlets. Service outlets currently enrolled in the Essential Tool program have received the traditional Essential Tool notification letter.

Reprogramming Requirements

Allison DOC™ For PC–Service Tool incorporates a reprogramming function, which allows modification of certain transmission control systems (WTEC) values*. The Allison Transmission Diagnostic Tool Service Training program or equivalent, has to be completed in order to activate the reprogramming capabilities. Appropriate proof of certification must be submitted to SPX/Kent-Moore (along with the serial number provided with the installation CD package) to receive the corresponding authorization password, which will activate the reprogramming function of the Allison DOC™ For PC–Service Tool. To learn more about course availability, please contact the local Allison Transmission distributor training facility or visit Allison Transmission website at ***www.allisontransmission.com/service/training***.

Purchasing Information

Allison DOC™ For PC–Service Tool is available on CD only and can be purchased through SPX/Kent-Moore.

For more information (price and availability), please contact:

SPX Corporation (Kent-Moore Service Solutions)
28635 Mound Road
Warren, MI 48092
Phone: 1-800-328-6657
Fax: 1-800-578-7375

****NOTE: Allison DOC™ For PC–Service Tool is the only authorized tool to reprogram ECUs.***

Copyright © 2005 General Motors Corp.

https://truckmanualshub.com/

APPENDIX N—DIAGNOSTIC TOOL INFORMATION

NOTES

Copyright © 2005 General Motors Corp.

https://truckmanualshub.com/

APPENDIX P—INPUT/OUTPUT FUNCTIONS

TABLE OF CONTENTS

Function	Description	Page
	INPUT FUNCTIONS	
A	Secondary Shift Schedule	P-3
B	D1 Selection	P-4
C	PTO Enable–Switch To Power (Wire 118)	P-5
C	PTO Enable–Switch To Ground (Wire 153)	P-6
C	PTO Enable–Using Mode Button	P-7
D	Shift Selector Transition	P-8
E	Single Input Auxiliary Function Range Inhibit	P-9
F	Dual Input Auxiliary Function Range Inhibit	P-10
G	Auxiliary Hold	P-11
H	Engine Brake Enable And Preselect Request Plus Engine Brake Enable Output Using Exhaust Brakes	P-12
H	Engine Brake Enable And Preselect Request Plus Engine Brake Enable Output Using ECM Controlled Exhaust Brakes	P-13
H	Engine Brake Enable And Preselect Request Plus Engine Brake Enable Output With Single Level Compression Brakes	P-14
H	Engine Brake Enable And Preselect Request Plus Engine Brake Enable Output With Multi-level Compression Brakes	P-15
I	European Engine Brake Enable And Preselect Request Plus Engine Brake Enable Output Using Exhaust Brakes	P-16
I	European Engine Brake Enable And Preselect Request Plus Engine Brake Enable Output With Single Level Compression Brakes	P-17
J	Fire Truck Pump Mode–Operator and Pump Activated	P-18
J	Fire Truck Pump Mode–Operator Only Activated	P-19
L	Automatic Neutral–Single Input Switched To Ground (Wire 117)	P-20
L	Automatic Neutral–Single Input Switched To Power (Wire 119)	P-21
O	Automatic Neutral	P-22
Q	Two-Speed Axle–Input And Output	P-23
V	Reverse Enable Switched To Ground	P-24
V	Reverse Enabled Switched To Power	P-25
W	Direction Change Enable Switched To Ground	P-26
W	Direction Change Enable Switched To Power	P-27
X	Shift In Process/Shift Enable	P-28
Y	Anti-Lock Brake Response With Input From ABS Controller	P-29
Y	Anti-Lock Brake Response With Brake Pressure Switch	P-30
Z	Retarder Enable	P-31
AA	Service Brake Status	P-32
AF	Differential Clutch Request	P-33

Copyright © 2005 General Motors Corp.

https://truckmanualshub.com/

APPENDIX P—INPUT/OUTPUT FUNCTIONS

TABLE OF CONTENTS

Function	Description	Page
AG	Automatic Neutral–Dual Input–Park Brake Activated	P-34
AG	Automatic Neutral–Dual Input–Work Brake Activated	P-35
AH	Kickdown	P-36
AI	Military Auxiliary Function Range Inhibit (Standard)	P-37
AJ	Fourth Lockup Pump Mode–Operator And Pump Activated	P-38
AJ	Fourth Lockup Pump Mode–Operator Only Activated	P-39
AK	Automatic Neutral–Dual Input With Service Brake Status–Automated Side Loader Activated	P-40
AK	Automatic Neutral–Dual Input With Service Brake Status–Dash Switch Activated	P-41
AK	Automatic Neutral–Dual Input With Service Brake Status–Park Brake Activated	P-42
AK	Automatic Neutral–Dual Input With Service Brake Status–Work Brake Activated	P-43
AK	Automatic Neutral–Dual Input With Service Brake Status–Emergency Vehicle Option	P-44
AL	Shift Selector Transition And Secondary Shift Schedule Without Auto Neutral	P-45
AL	Shift Selector Transition And Secondary Shift Schedule With Auto Neutral	P-46
AM	Refuse Packer Step Switch	P-47
AN	ISO 9141 Enable	P-48
AQ	Selector Display Blanking	P-49
AS	Reduced Engine Load At Stop (RELS)	P-50
OUTPUT FUNCTIONS		
A	Engine Brake Enable	P-51
BB	RELS With Service Brake Status	P-52
B	Sump/Retarder Temperature Indicator	P-53
C	Range Indicator	P-54
D	Output Speed Indicator–A	P-55
E	Output Speed Indicator–B	P-56
F	PTO Overspeed Indicator	P-57
G	PTO Enable	P-58
I	Engine Overspeed Indicator Using VIM	P-59
I	Engine Overspeed Indicator Without VIM–Switched To Ground	P-60
J	Two Speed Axle Enable	P-61
K	Lockup Indicator	P-62
N	Secondary Mode Indicator	P-63
O	Service Indicator	P-64
Q	Retarder Indicator	P-65
R	Differential Clutch Indicator	P-66
S	Neutral Indicator For PTO And PTO Enable–Pack-On-The-Fly Option	P-67
S	Neutral Indicator For PTO And PTO Enable–Neutral Operation Only	P-68

Copyright © 2005 General Motors Corp.

https://truckmanualshub.com/

APPENDIX P—INPUT/OUTPUT FUNCTIONS

WARNING! **These schematics show the intended use of the specified controls features which have been validated in the configuration shown. Any miswiring or use of these features which differs from that shown could result in damage to equipment or property, personal injury, or loss of life. ALLISON TRANSMISSION IS NOT LIABLE FOR THE CONSEQUENCES ASSOCIATED WITH MISWIRING OR UNINTENDED USE OF THESE FEATURES.**

The following schematics were taken from Tech Data entitled "WTEC III Controls." These schematics provide detailed information that is necessary to correctly perform input and output function connections. For an overview of Input/Output Functions, refer to Section 7 of this manual.

INPUT FUNCTION A. SECONDARY SHIFT SCHEDULE

USES: Provides operator selection of dual shift schedules. Can be used for performance/economy, loaded/empty, or other shift schedule combinations.

VARIABLES TO SPECIFY: None

VOCATIONS: Various

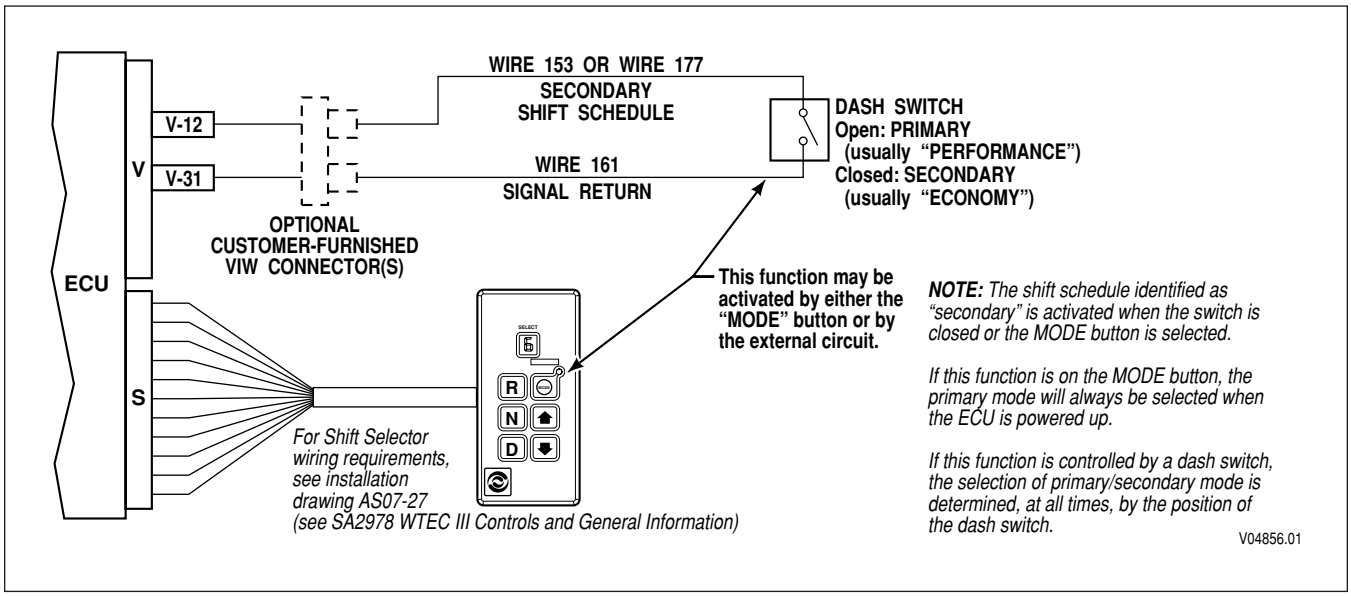

Figure P–1. Secondary Shift Schedule

This function can be provided by a J1939 message.

Copyright © 2005 General Motors Corp.

https://truckmanualshub.com/

APPENDIX P—INPUT/OUTPUT FUNCTIONS

WARNING! **These schematics show the intended use of the specified controls features which have been validated in the configuration shown. Any miswiring or use of these features which differs from that shown could result in damage to equipment or property, personal injury, or loss of life. ALLISON TRANSMISSION IS NOT LIABLE FOR THE CONSEQUENCES ASSOCIATED WITH MISWIRING OR UNINTENDED USE OF THESE FEATURES.**

INPUT FUNCTION B. D1 SELECTION

USES: Provides a convenient means of attaining 1st range hold for pushbutton shift selectors. Range to select is programmable for Primary and Secondary modes.

VARIABLES TO SPECIFY: Primary Mode selected range, Secondary Mode selected range (usually 1st range). Can be used only on the MODE button.

VOCATIONS: Various

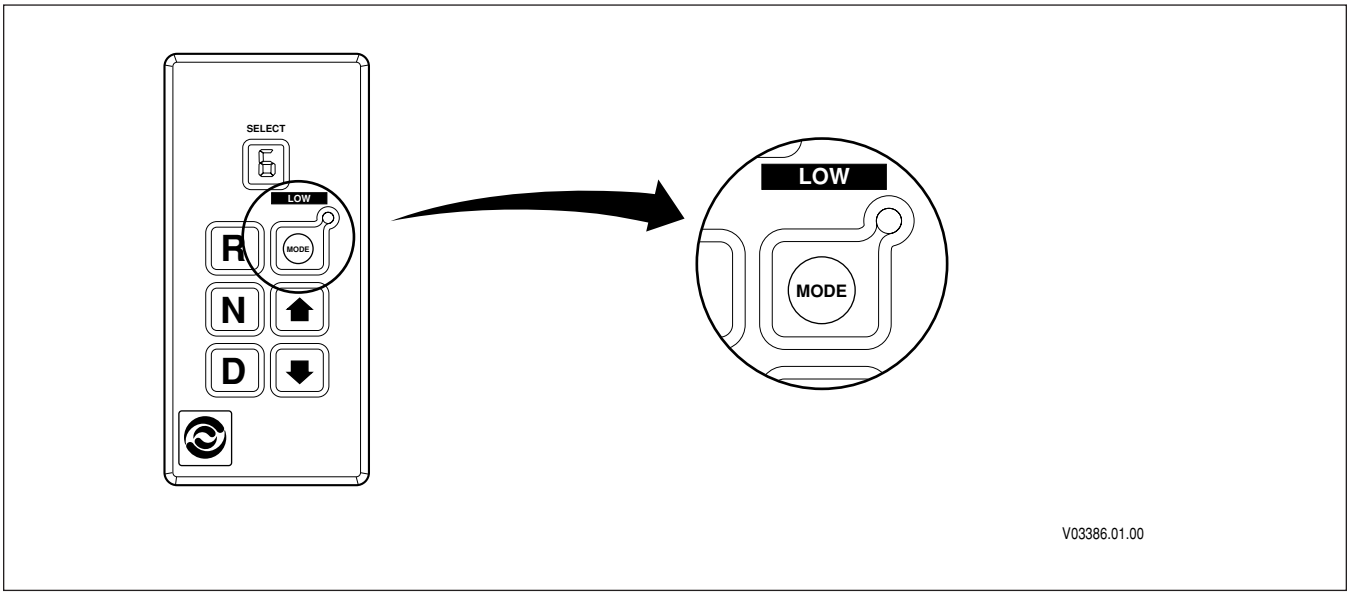

Figure P–2. D1 Selection

Copyright © 2005 General Motors Corp.

https://truckmanualshub.com/

APPENDIX P—INPUT/OUTPUT FUNCTIONS

WARNING! **These schematics show the intended use of the specified controls features which have been validated in the configuration shown. Any miswiring or use of these features which differs from that shown could result in damage to equipment or property, personal injury, or loss of life. ALLISON TRANSMISSION IS NOT LIABLE FOR THE CONSEQUENCES ASSOCIATED WITH MISWIRING OR UNINTENDED USE OF THESE FEATURES.**

INPUT FUNCTION C. PTO ENABLE—SWITCHED TO POWER (WIRE 118)

USES: Permits PTO to be engaged only when engine speed and output speed are in allowable range and throttle is low. Also disengages PTO if speeds are exceeded.

VARIABLES TO SPECIFY: Minimum and maximum engine speed for engagement, maximum engine speed for allowable operation, minimum and maximum output speed for engagement, maximum output speed for allowable operation.

VOCATIONS: Various (with use of PTO)

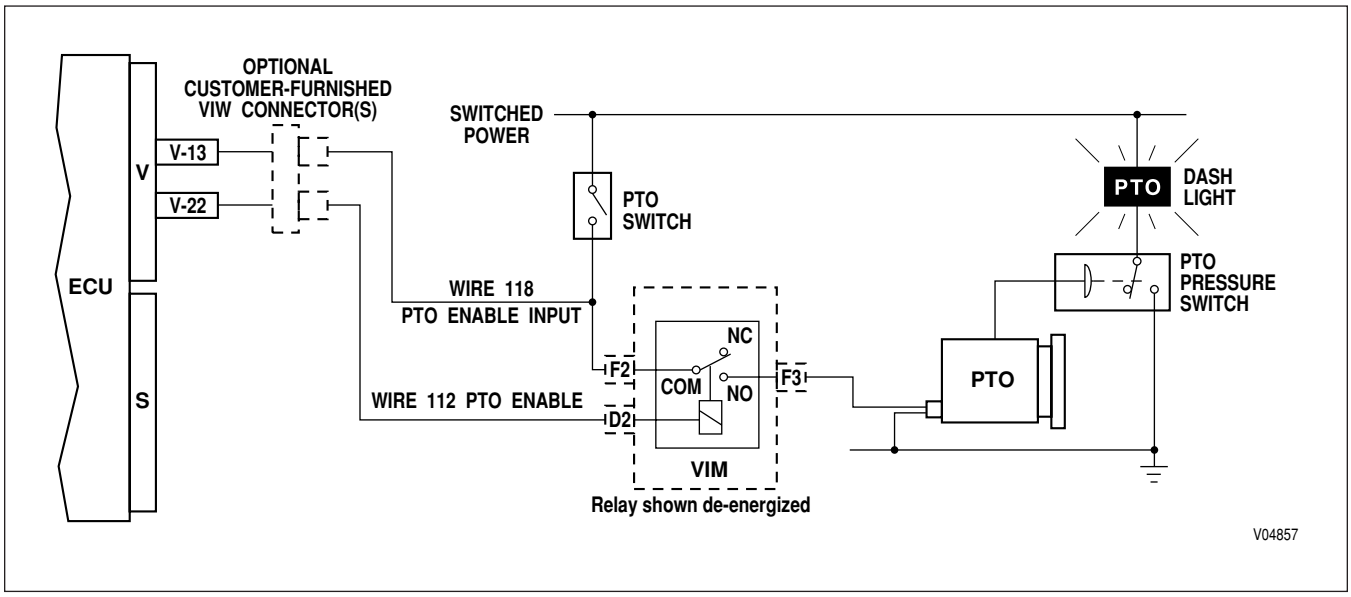

Figure P–3. PTO Enable—Switched to Power (Wire 118)

Copyright © 2005 General Motors Corp.

https://truckmanualshub.com/

APPENDIX P—INPUT/OUTPUT FUNCTIONS

WARNING! **These schematics show the intended use of the specified controls features which have been validated in the configuration shown. Any miswiring or use of these features which differs from that shown could result in damage to equipment or property, personal injury, or loss of life. ALLISON TRANSMISSION IS NOT LIABLE FOR THE CONSEQUENCES ASSOCIATED WITH MISWIRING OR UNINTENDED USE OF THESE FEATURES.**

INPUT FUNCTION C. PTO ENABLE—SWITCHED TO GROUND (WIRE 153)

USES: Permits PTO to be engaged only when engine speed and output speed are in allowable range and throttle is low. Also disengages PTO if speeds are exceeded.

VARIABLES TO SPECIFY: Minimum and maximum engine speed for engagement, maximum engine speed for allowable operation, minimum and maximum output speed for engagement, maximum output speed for allowable operation.

VOCATIONS: Various (with use of PTO)

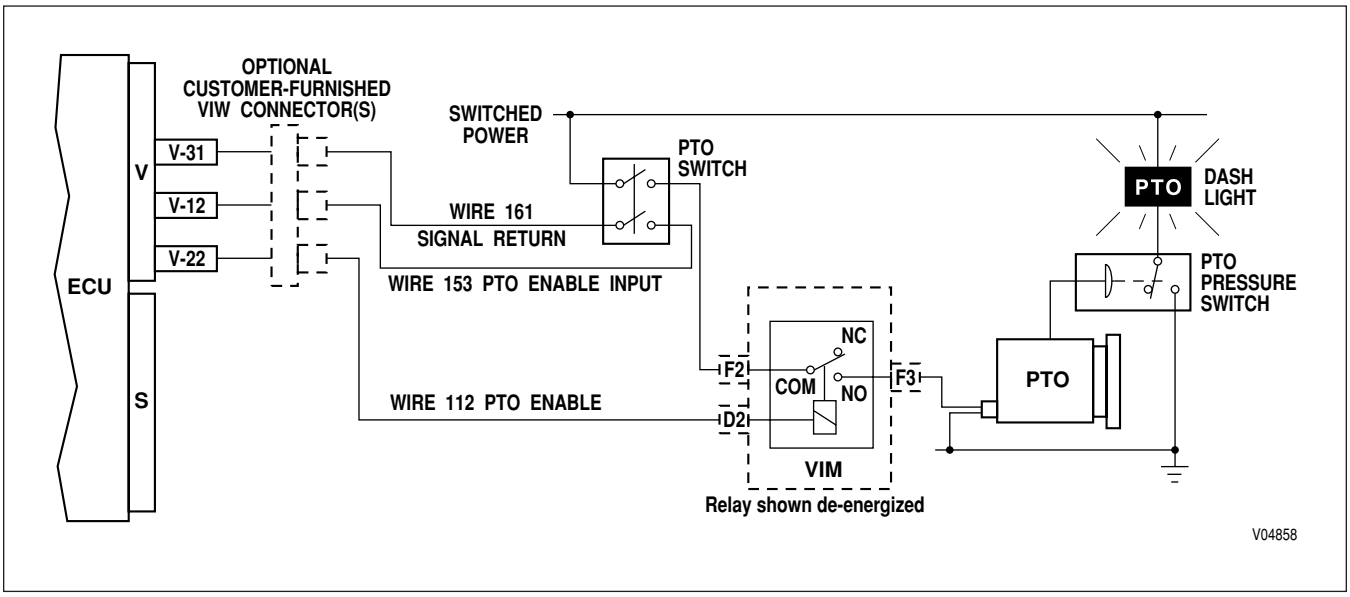

Figure P–4. PTO Enable—Switched to Ground (Wire 153)

Copyright © 2005 General Motors Corp.

https://truckmanualshub.com/

APPENDIX P—INPUT/OUTPUT FUNCTIONS

WARNING! **These schematics show the intended use of the specified controls features which have been validated in the configuration shown. Any miswiring or use of these features which differs from that shown could result in damage to equipment or property, personal injury, or loss of life. ALLISON TRANSMISSION IS NOT LIABLE FOR THE CONSEQUENCES ASSOCIATED WITH MISWIRING OR UNINTENDED USE OF THESE FEATURES.**

INPUT FUNCTION C. PTO ENABLE—USING MODE BUTTON

USES: Permits PTO to be engaged only when engine speed and output speed are in allowable range and throttle is low. Also disengages PTO if speeds are exceeded.

VARIABLES TO SPECIFY: Minimum and maximum engine speed for engagement, maximum engine speed for allowable operation, minimum and maximum output speed for engagement, maximum output speed for allowable operation.

VOCATIONS: Various (with use of PTO)

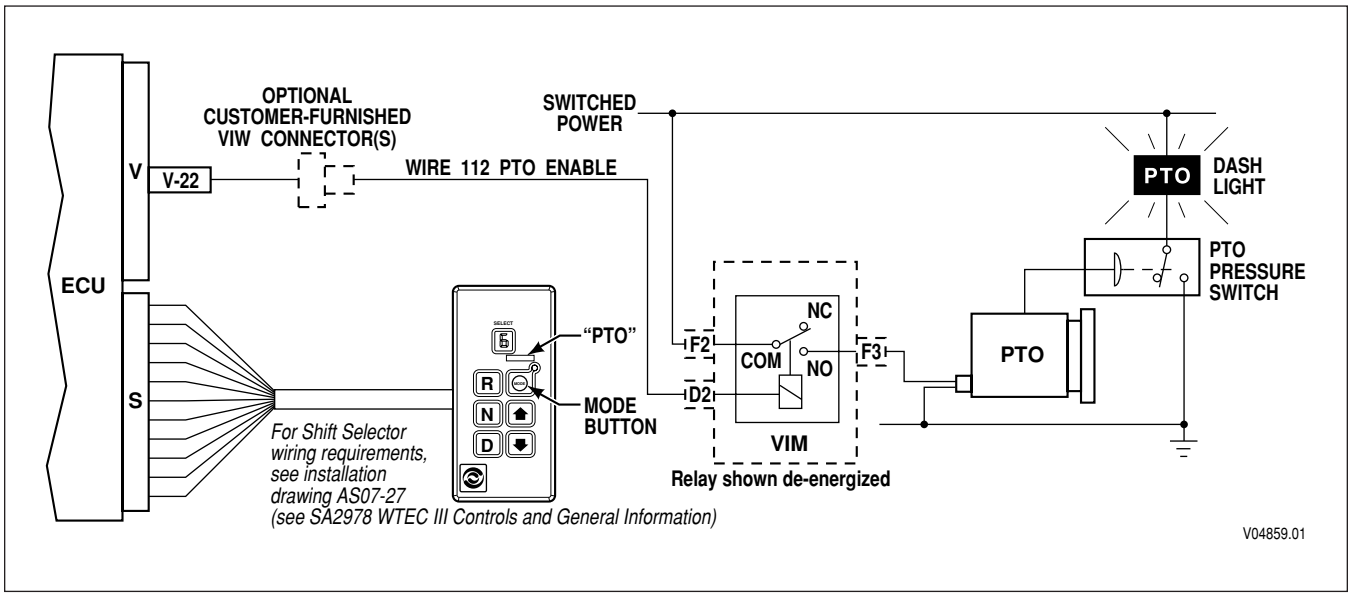

Figure P–5. PTO Enable—Using MODE Button

Copyright © 2005 General Motors Corp.

https://truckmanualshub.com/

APPENDIX P—INPUT/OUTPUT FUNCTIONS

WARNING! **These schematics show the intended use of the specified controls features which have been validated in the configuration shown. Any miswiring or use of these features which differs from that shown could result in damage to equipment or property, personal injury, or loss of life. ALLISON TRANSMISSION IS NOT LIABLE FOR THE CONSEQUENCES ASSOCIATED WITH MISWIRING OR UNINTENDED USE OF THESE FEATURES.**

INPUT FUNCTION D. SHIFT SELECTOR TRANSITION

USES: When two shift selectors are used, to select which one is active.

VARIABLES TO SPECIFY: None

VOCATIONS: Various

WARNING! **If this function is enabled in the shift calibration, the function MUST be integrated into the vehicle wiring. If the function is available in the shift calibration but will not be used in the vehicle, it MUST be disabled in the calibration.**

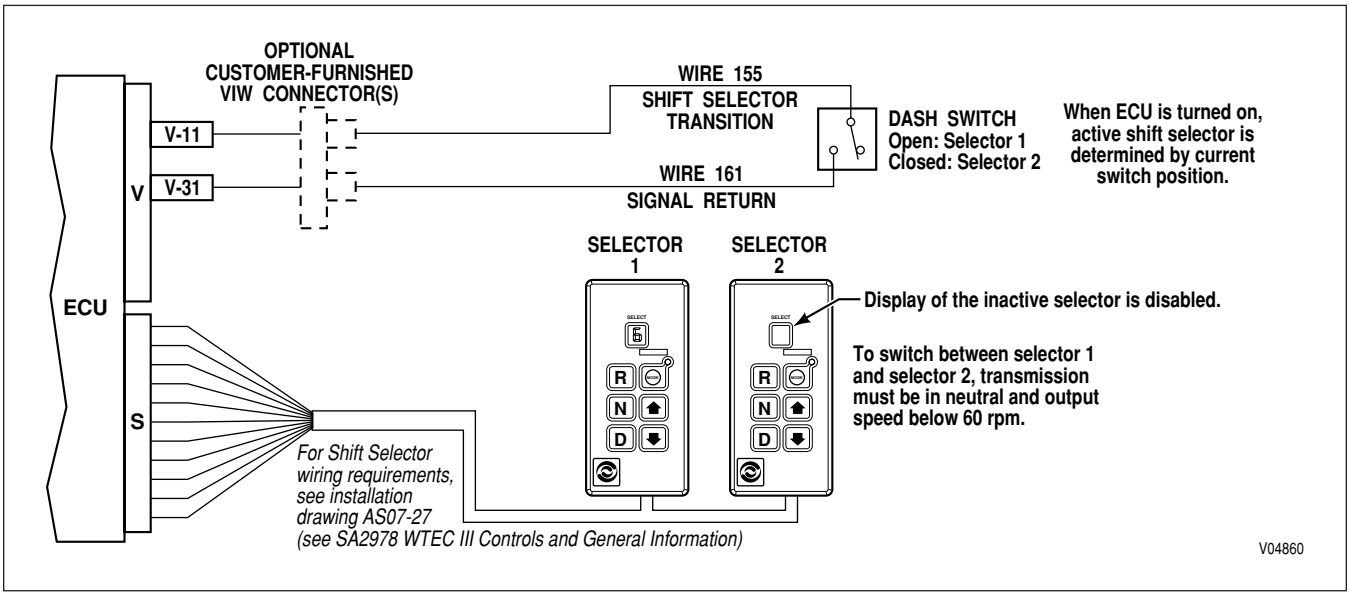

Figure P–6. Shift Selector Transition

Copyright © 2005 General Motors Corp.

https://truckmanualshub.com/

APPENDIX P—INPUT/OUTPUT FUNCTIONS

WARNING! **These schematics show the intended use of the specified controls features which have been validated in the configuration shown. Any miswiring or use of these features which differs from that shown could result in damage to equipment or property, personal injury, or loss of life. ALLISON TRANSMISSION IS NOT LIABLE FOR THE CONSEQUENCES ASSOCIATED WITH MISWIRING OR UNINTENDED USE OF THESE FEATURES.**

INPUT FUNCTION E. SINGLE INPUT AUXILIARY FUNCTION RANGE INHIBIT

USES: Prevents inadvertent range selection when auxiliary equipment is operating or prevents engagement of the transmission unless brake pedal is depressed.

VARIABLES TO SPECIFY: None

VOCATIONS: Transit bus, school bus—auxiliary equipment input; various (brake pedal input)

WARNING! **If this function is enabled in the shift calibration, the function MUST be integrated into the vehicle wiring. If the function is available in the shift calibration but will not be used in the vehicle, it MUST be disabled in the calibration.**

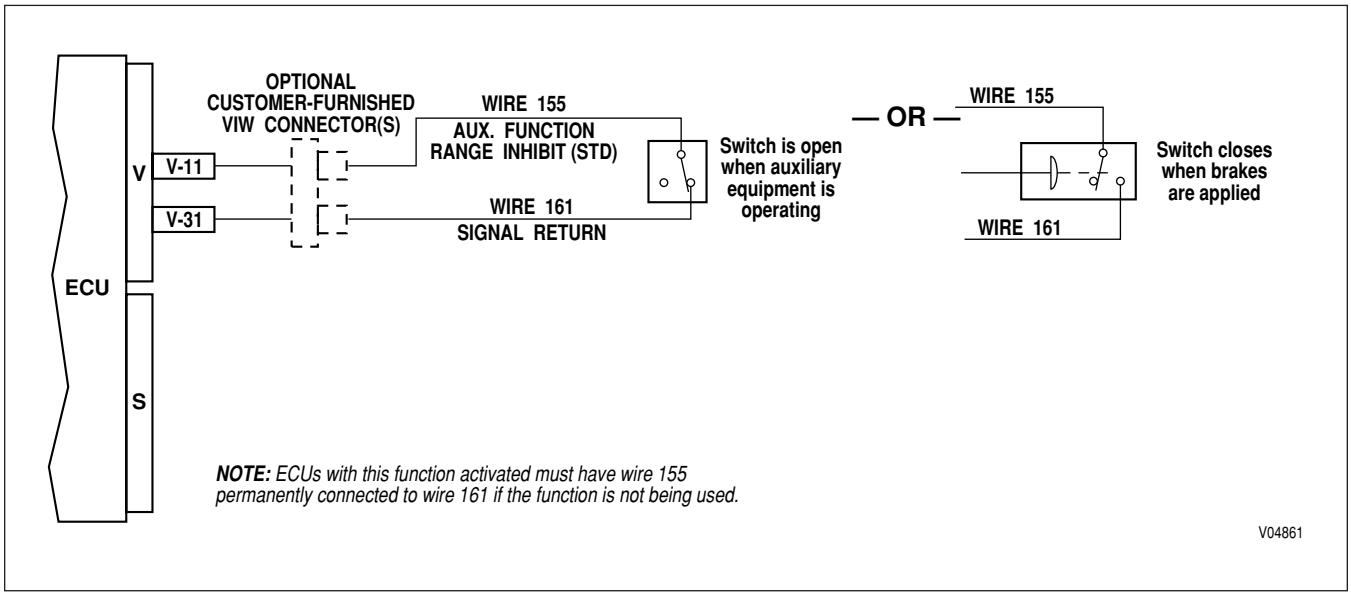

Figure P–7. Single Input Auxiliary Function Range Inhibit

This function can be provided by a J1939 message.

Copyright © 2005 General Motors Corp.

https://truckmanualshub.com/

APPENDIX P—INPUT/OUTPUT FUNCTIONS

WARNING! **These schematics show the intended use of the specified controls features which have been validated in the configuration shown. Any miswiring or use of these features which differs from that shown could result in damage to equipment or property, personal injury, or loss of life. ALLISON TRANSMISSION IS NOT LIABLE FOR THE CONSEQUENCES ASSOCIATED WITH MISWIRING OR UNINTENDED USE OF THESE FEATURES.**

INPUT FUNCTION F. DUAL INPUT AUXILIARY FUNCTION RANGE INHIBIT

USES: Prevents inadvertent range selection when auxiliary equipment is operating. Used in emergency equipment to prevent inadvertent range selection from NEUTRAL.

VARIABLES TO SPECIFY: None

VOCATIONS: Fire trucks, crash trucks

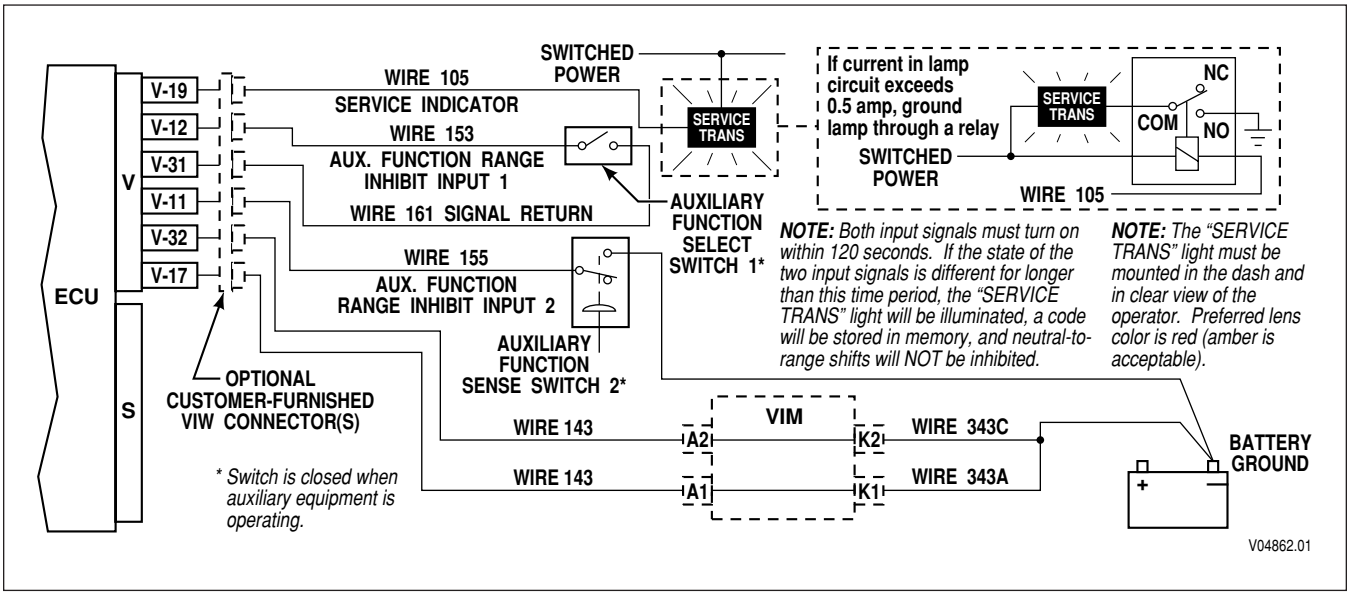

Figure P–8. Dual Input Auxiliary Function Range Inhibit

Copyright © 2005 General Motors Corp.

https://truckmanualshub.com/

APPENDIX P—INPUT/OUTPUT FUNCTIONS

WARNING! **These schematics show the intended use of the specified controls features which have been validated in the configuration shown. Any miswiring or use of these features which differs from that shown could result in damage to equipment or property, personal injury, or loss of life. ALLISON TRANSMISSION IS NOT LIABLE FOR THE CONSEQUENCES ASSOCIATED WITH MISWIRING OR UNINTENDED USE OF THESE FEATURES.**

INPUT FUNCTION G. AUXILIARY HOLD

USES: Provide a discrete input to hold the transmission in present range.

VARIABLES TO SPECIFY: None

VOCATIONS: Various

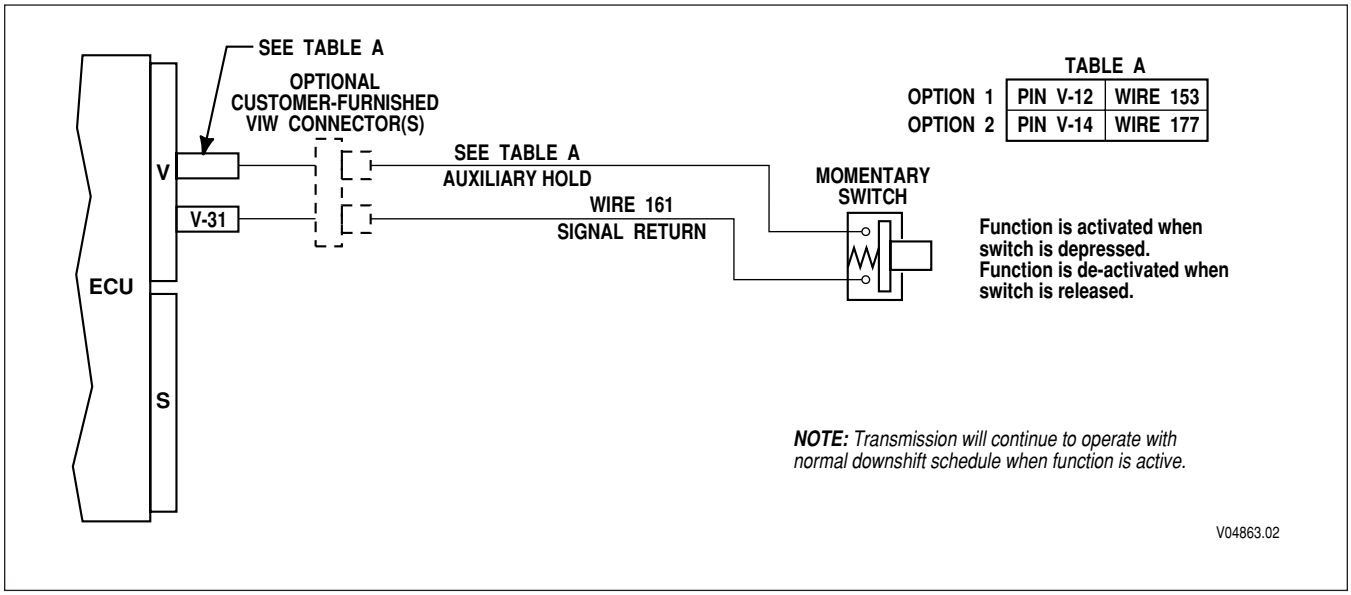

TABLE A

OPTION 1	PIN V-12	WIRE 153
OPTION 2	PIN V-14	WIRE 177

Figure P–9. Auxiliary Hold

Copyright © 2005 General Motors Corp.

https://truckmanualshub.com/

APPENDIX P—INPUT/OUTPUT FUNCTIONS

WARNING! **These schematics show the intended use of the specified controls features which have been validated in the configuration shown. Any miswiring or use of these features which differs from that shown could result in damage to equipment or property, personal injury, or loss of life. ALLISON TRANSMISSION IS NOT LIABLE FOR THE CONSEQUENCES ASSOCIATED WITH MISWIRING OR UNINTENDED USE OF THESE FEATURES.**

INPUT FUNCTION H. ENGINE BRAKE ENABLE AND PRESELECT REQUEST PLUS ENGINE BRAKE ENABLE OUTPUT USING EXHAUST BRAKES

USES: Used with engine brakes to signal the ECU that the brake is active and to provide increased braking by preselecting a lower range. Also prevents engagement of engine brake with throttle > 0 or lockup OFF.

VARIABLES TO SPECIFY: Preselect range. Standard value is second range.

VOCATIONS: Various

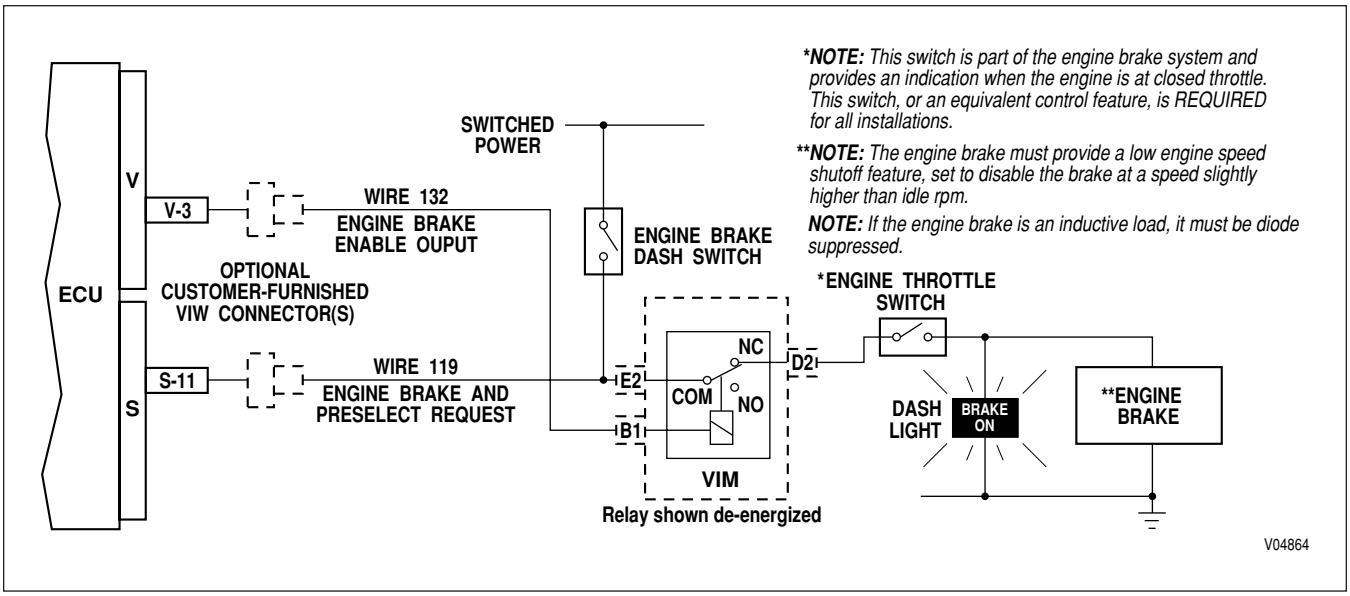

Figure P–10. Engine Brake Enable And Preselect Request Plus Engine Brake Enable Output Using Exhaust Brakes

This function can be provided by a J1939 message.

 Copyright © 2005 General Motors Corp.

https://truckmanualshub.com/

APPENDIX P—INPUT/OUTPUT FUNCTIONS

WARNING! **These schematics show the intended use of the specified controls features which have been validated in the configuration shown. Any miswiring or use of these features which differs from that shown could result in damage to equipment or property, personal injury, or loss of life. ALLISON TRANSMISSION IS NOT LIABLE FOR THE CONSEQUENCES ASSOCIATED WITH MISWIRING OR UNINTENDED USE OF THESE FEATURES.**

INPUT FUNCTION H. ENGINE BRAKE ENABLE AND PRESELECT REQUEST PLUS ENGINE BRAKE ENABLE OUTPUT USING ECM CONTROLLED EXHAUST BRAKES

USES: Used with exhaust brakes controlled by electronic engines to signal the ECU that the brake is active and to provide increased braking by preselecting a lower range. Also prevents engagement of engine brake with throttle > 0 or lockup OFF.

VARIABLES TO SPECIFY: Preselect range. Standard value is second range.

VOCATIONS: Various

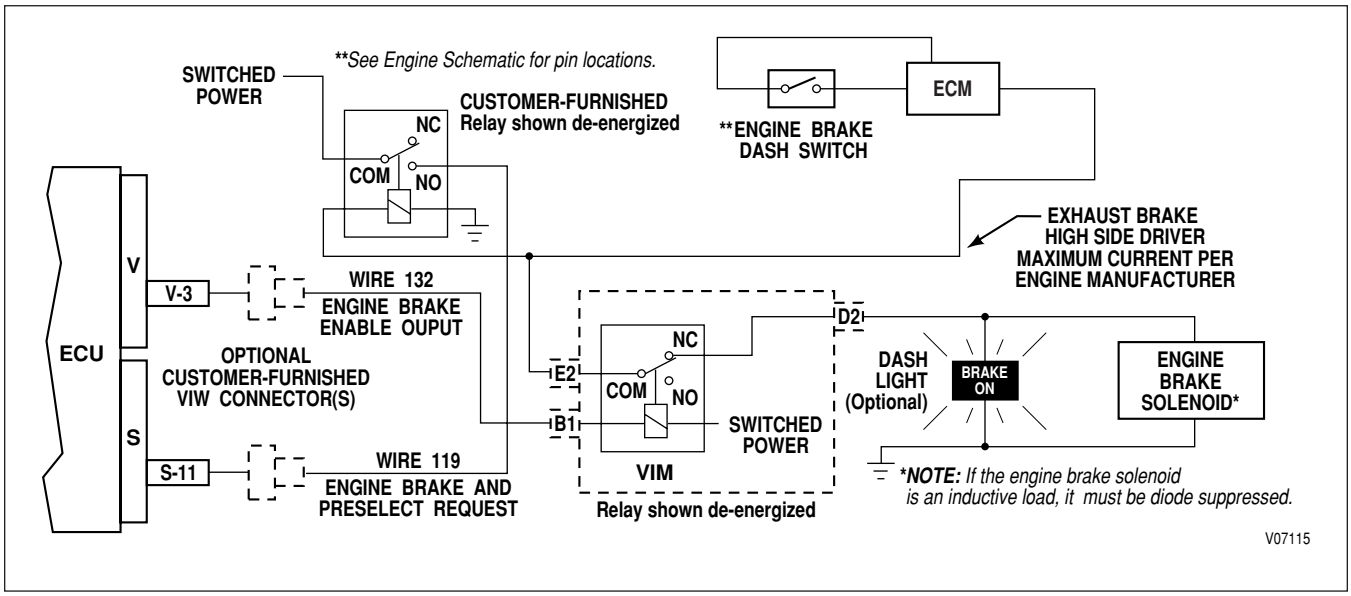

Figure P–11. Engine Brake Enable And Preselect Request Plus Engine Brake Enable Output Using ECM Controlled Exhaust Brakes

This function can be provided by a J1939 message.

Copyright © 2005 General Motors Corp.

https://truckmanualshub.com/

APPENDIX P—INPUT/OUTPUT FUNCTIONS

WARNING! **These schematics show the intended use of the specified controls features which have been validated in the configuration shown. Any miswiring or use of these features which differs from that shown could result in damage to equipment or property, personal injury, or loss of life. ALLISON TRANSMISSION IS NOT LIABLE FOR THE CONSEQUENCES ASSOCIATED WITH MISWIRING OR UNINTENDED USE OF THESE FEATURES.**

INPUT FUNCTION H. ENGINE BRAKE ENABLE AND PRESELECT REQUEST PLUS ENGINE BRAKE ENABLE OUTPUT WITH SINGLE LEVEL COMPRESSION BRAKES

USES: Used with engine brakes to signal the ECU that the brake is active and to provide increased braking by preselecting a lower range. Also prevents engagement of engine brake with throttle > 0 or lockup OFF.

VARIABLES TO SPECIFY: Preselect range. Standard value is fourth range.

VOCATIONS: Various

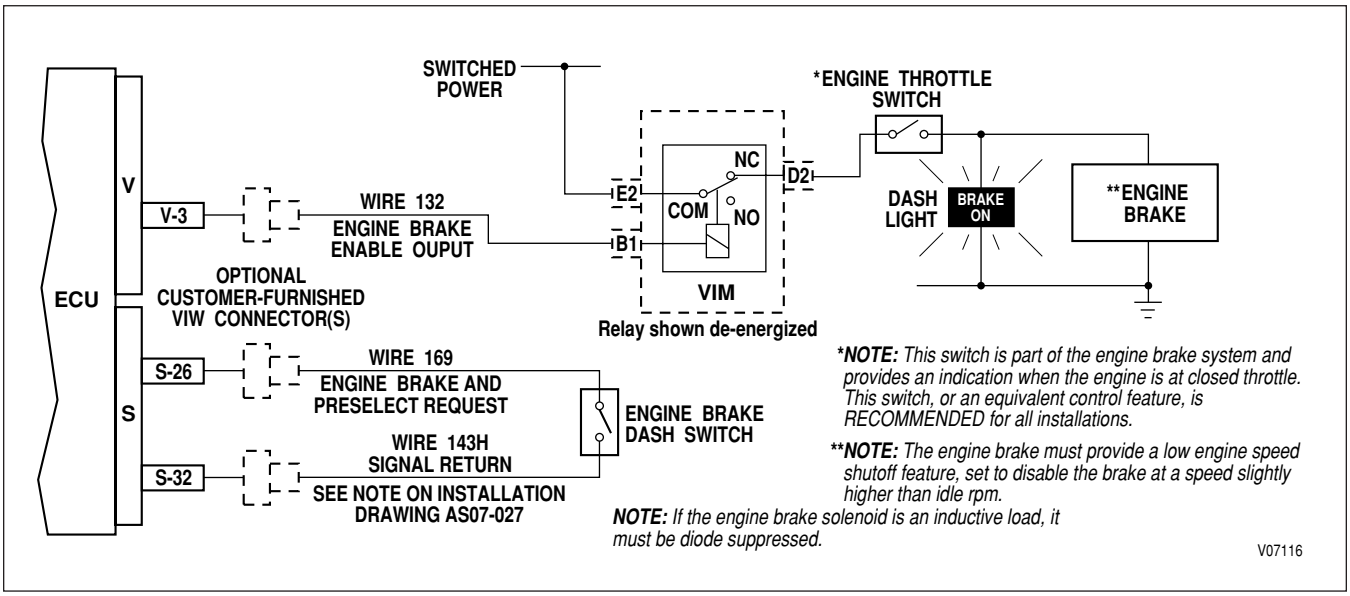

Figure P–12. Engine Brake Enable And Preselect Request Plus Engine Brake Enable Output With Single Level Compression Brakes

 Copyright © 2005 General Motors Corp.

https://truckmanualshub.com/

APPENDIX P—INPUT/OUTPUT FUNCTIONS

WARNING! **These schematics show the intended use of the specified controls features which have been validated in the configuration shown. Any miswiring or use of these features which differs from that shown could result in damage to equipment or property, personal injury, or loss of life. ALLISON TRANSMISSION IS NOT LIABLE FOR THE CONSEQUENCES ASSOCIATED WITH MISWIRING OR UNINTENDED USE OF THESE FEATURES.**

INPUT FUNCTION H. ENGINE BRAKE ENABLE AND PRESELECT REQUEST PLUS ENGINE BRAKE ENABLE OUTPUT WITH MULTI-LEVEL COMPESSION BRAKES

USES: Used with multiple-level compression brakes to signal the ECU that the brake is active and to provide increased braking by preselecting a lower range. Also prevents engagement of engine brake with throttle > 0 or lockup OFF.

VARIABLES TO SPECIFY: Preselect range. Standard value is fourth range.

VOCATIONS: Various

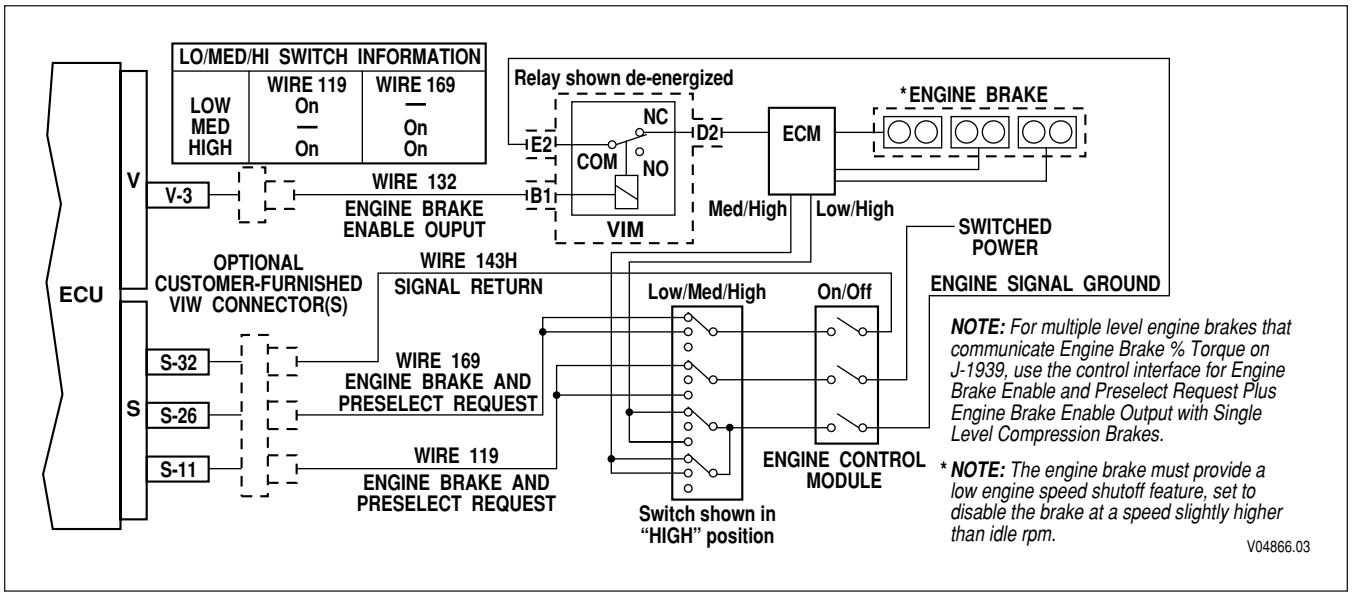

Figure P–13. Engine Brake Enable and Preselect Request Plus Engine Brake Enable Output With Multi-Level Compression Brakes

Copyright © 2005 General Motors Corp.

https://truckmanualshub.com/

APPENDIX P—INPUT/OUTPUT FUNCTIONS

WARNING! **These schematics show the intended use of the specified controls features which have been validated in the configuration shown. Any miswiring or use of these features which differs from that shown could result in damage to equipment or property, personal injury, or loss of life. ALLISON TRANSMISSION IS NOT LIABLE FOR THE CONSEQUENCES ASSOCIATED WITH MISWIRING OR UNINTENDED USE OF THESE FEATURES.**

INPUT FUNCTION I. EUROPEAN ENGINE BRAKE ENABLE AND PRESELECT REQUEST PLUS ENGINE BRAKE ENABLE OUTPUT USING EXHAUST BRAKES

Used with engine brakes to provide a signal to the ECU that the brake is active and to provide increased braking by preselecting a lower range. Also prevents engagement of engine brake with throttle > 0 or lockup OFF.

VARIABLES TO SPECIFY: Preselect range. Standard value is second range.

VOCATIONS: Various

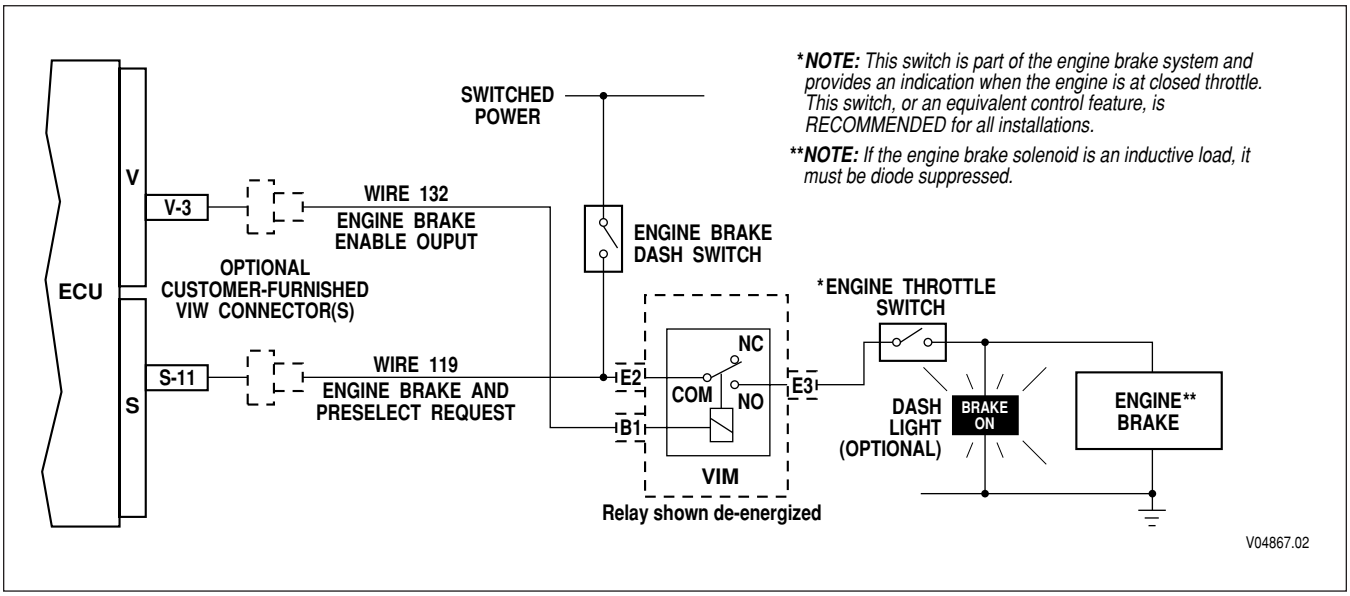

Figure P–14. European Engine Brake Enable and Preselect Request Plus Engine Brake Enable Output Using Exhaust Brakes

Copyright © 2005 General Motors Corp.

https://truckmanualshub.com/

APPENDIX P—INPUT/OUTPUT FUNCTIONS

WARNING! **These schematics show the intended use of the specified controls features which have been validated in the configuration shown. Any miswiring or use of these features which differs from that shown could result in damage to equipment or property, personal injury, or loss of life. ALLISON TRANSMISSION IS NOT LIABLE FOR THE CONSEQUENCES ASSOCIATED WITH MISWIRING OR UNINTENDED USE OF THESE FEATURES.**

INPUT FUNCTION I. EUROPEAN ENGINE BRAKE ENABLE AND PRESELECT REQUEST PLUS ENGINE BRAKE ENABLE OUTPUT WITH SINGLE LEVEL COMPRESSION BRAKES

USES: Used with engine brakes to provide a signal to the ECU that the brake is active and to provide increased braking by preselecting a lower range. Also prevents engagement of engine brake with throttle > 0 or lockup off.

VARIABLES TO SPECIFY: Preselect range. Standard value is fourth range.

VOCATIONS: Various

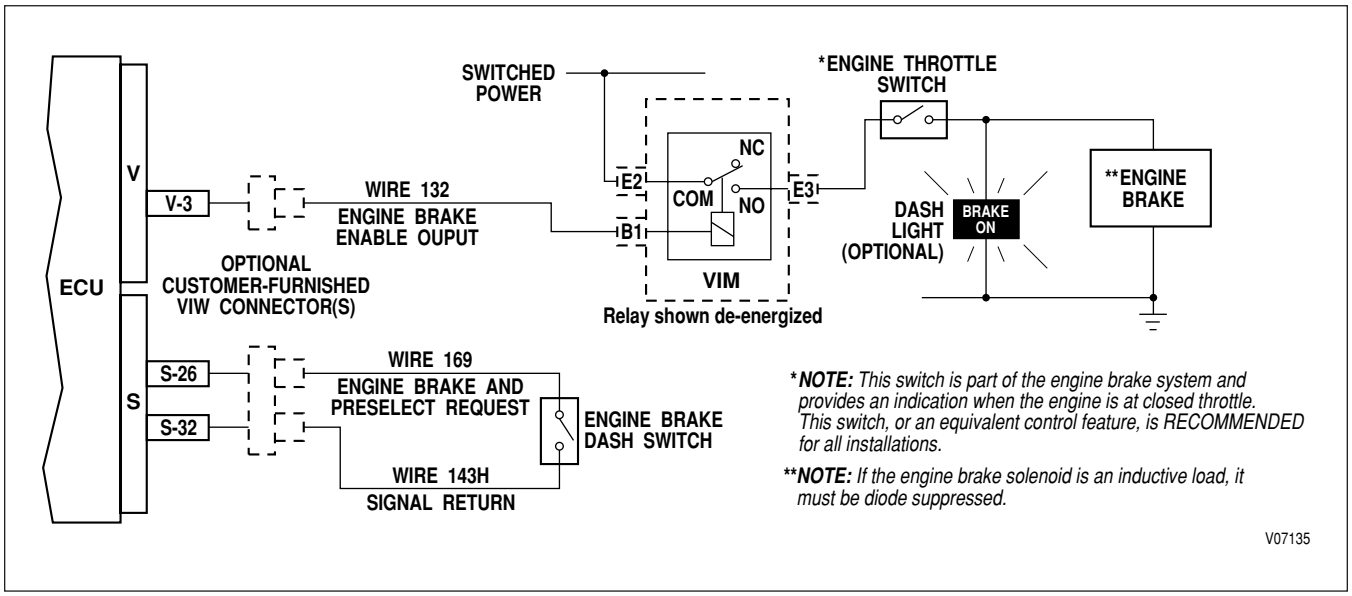

Figure P–15. European Engine Brake Enable and Preselect Request Plus Engine Brake Enable Output With Single Level Compression Brakes

Copyright © 2005 General Motors Corp.

https://truckmanualshub.com/

APPENDIX P—INPUT/OUTPUT FUNCTIONS

WARNING! **These schematics show the intended use of the specified controls features which have been validated in the configuration shown. Any miswiring or use of these features which differs from that shown could result in damage to equipment or property, personal injury, or loss of life. ALLISON TRANSMISSION IS NOT LIABLE FOR THE CONSEQUENCES ASSOCIATED WITH MISWIRING OR UNINTENDED USE OF THESE FEATURES.**

INPUT FUNCTION J. FIRE TRUCK PUMP MODE—OPERATOR AND PUMP ACTIVATED

USES: Facilitates engagement of split shaft PTO and shifts transmission to fourth range lockup.

VARIABLES TO SPECIFY: None

VOCATIONS: Fire Truck Pumpers

WARNING! **If this function is enabled in the shift calibration, the function MUST be integrated into the vehicle wiring. If the function is available in the shift calibration but will not be used in the vehicle, it MUST be disabled in the calibration.**

SYSTEM OPERATION

OPERATOR ACTION—System Response

TO ENGAGE:

1. *SELECT NEUTRAL*—Transmission shifts to Neutral.
2. *APPLY PARK BRAKE*—None
3. *SELECT PUMP*—Turns on “Pump Mode Requested” light. Turns on input signal to ECU (wire 118) which activates “fire truck” mode. When split-shaft shifts, wire 117 is activated and “Pump Engaged” light is turned on.
4. *SELECT DRIVE*—Transmission shifts to fourth lockup. “OK To Pump” light is turned on.

TO DISENGAGE:

1. *SELECT NEUTRAL*—Transmission shifts to Neutral if output shaft speed is less than 1000 rpm.
2. *SELECT ROAD MODE*—PTO disengages. If output shaft rotation continues, press the Momentary Trans. Brake Switch before selecting Road Mode. This will cause the transmission output shaft to stop if transmission is in Neutral and output shaft speed is less than 100 rpm (175 rpm beginning with V9A calibrations).

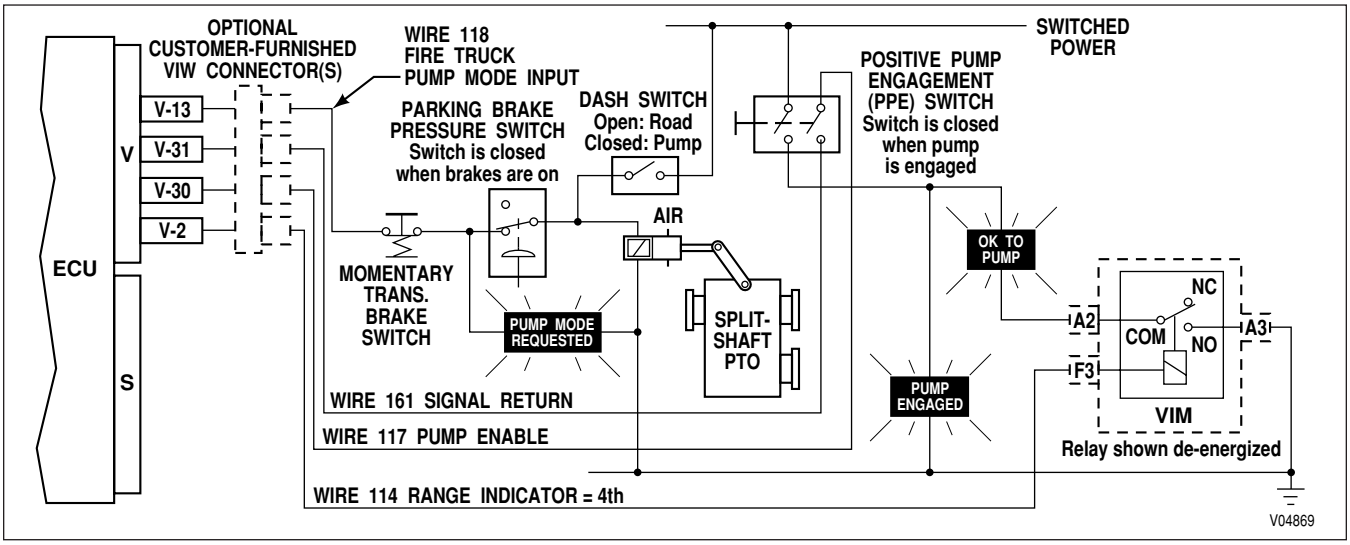

Figure P–16. Fire Truck Pump Mode—Operator and Pump Activated

Copyright © 2005 General Motors Corp.

https://truckmanualshub.com/

APPENDIX P—INPUT/OUTPUT FUNCTIONS

WARNING! **These schematics show the intended use of the specified controls features which have been validated in the configuration shown. Any miswiring or use of these features which differs from that shown could result in damage to equipment or property, personal injury, or loss of life. ALLISON TRANSMISSION IS NOT LIABLE FOR THE CONSEQUENCES ASSOCIATED WITH MISWIRING OR UNINTENDED USE OF THESE FEATURES.**

INPUT FUNCTION J. FIRE TRUCK PUMP MODE—OPERATOR ONLY ACTIVATED

USES: Facilitates engagement of split shaft PTO and shifts transmission to fourth range lockup.

VARIABLES TO SPECIFY: None

VOCATIONS: Fire Truck Pumpers

WARNING! **If this function is enabled in the shift calibration, the function MUST be integrated into the vehicle wiring. If the function is available in the shift calibration but will not be used in the vehicle, it MUST be disabled in the calibration.**

SYSTEM OPERATION

OPERATOR ACTION—System Response

TO ENGAGE:

1. SELECT NEUTRAL—Transmission shifts to Neutral.
2. APPLY PARK BRAKE—None
3. SELECT PUMP—Turns on “Pump Mode Requested” light. Turns on both input signals to ECU (wires 117 and 118) which activates “fire truck” mode. When split-shaft shifts, “Pump Engaged” light is turned on.
4. SELECT DRIVE—Transmission shifts to fourth lockup. “OK To Pump” light is turned on.

TO DISENGAGE:

1. SELECT NEUTRAL—Transmission shifts to Neutral if output shaft speed is less than 1000 rpm.
2. SELECT ROAD MODE—PTO disengages. If output shaft rotation continues, press the Momentary Trans. Brake Switch before selecting road mode. This will cause the transmission output shaft to stop if transmission is in Neutral and output shaft speed is less than 100 rpm (175 rpm beginning with V9A calibrations).

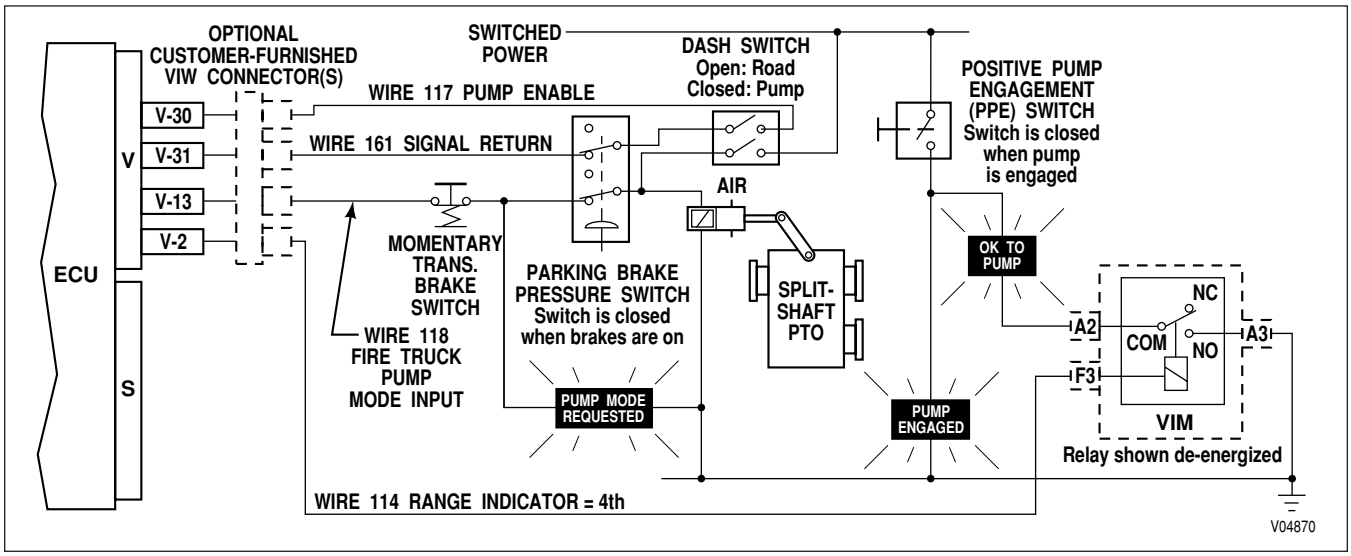

Figure P–17. Fire Truck Pump Mode—Operator Only Activated

Copyright © 2005 General Motors Corp.

https://truckmanualshub.com/

APPENDIX P—INPUT/OUTPUT FUNCTIONS

WARNING! **These schematics show the intended use of the specified controls features which have been validated in the configuration shown. Any miswiring or use of these features which differs from that shown could result in damage to equipment or property, personal injury, or loss of life. ALLISON TRANSMISSION IS NOT LIABLE FOR THE CONSEQUENCES ASSOCIATED WITH MISWIRING OR UNINTENDED USE OF THESE FEATURES.**

INPUT FUNCTION L. AUTOMATIC NEUTRAL—SINGLE INPUT SWITCHED TO GROUND (WIRE 117)

USES: Provides for automatic selection of NEUTRAL when PTO is operated regardless of range selected. Requires re-selecting range to shift out of NEUTRAL. Shown with range indicator output.

VARIABLES TO SPECIFY: Maximum output speed for activating this function. Range indicator = neutral.

VOCATIONS: Various (with use of PTO)

WARNING! **If this function is enabled in the shift calibration, the function MUST be integrated into the vehicle wiring. If the function is available in the shift calibration but will not be used in the vehicle, it MUST be disabled in the calibration.**

This function must not be used with Neutral Indicator For PTO (Output "S").

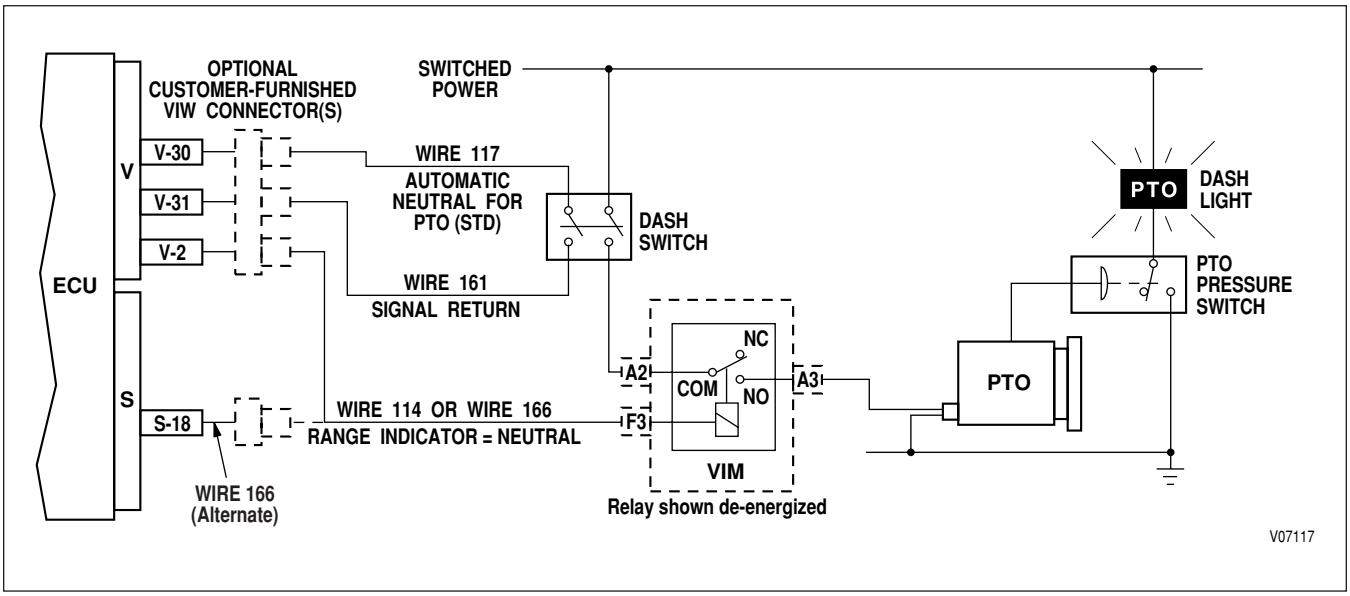

Figure P–18. Automatic Neutral—Single Input Switched to Ground (Wire 117)

Copyright © 2005 General Motors Corp.

https://truckmanualshub.com/

APPENDIX P—INPUT/OUTPUT FUNCTIONS

WARNING! **These schematics show the intended use of the specified controls features which have been validated in the configuration shown. Any miswiring or use of these features which differs from that shown could result in damage to equipment or property, personal injury, or loss of life. ALLISON TRANSMISSION IS NOT LIABLE FOR THE CONSEQUENCES ASSOCIATED WITH MISWIRING OR UNINTENDED USE OF THESE FEATURES.**

INPUT FUNCTION L. AUTOMATIC NEUTRAL—SINGLE INPUT SWITCHED TO POWER (WIRE 119)

USES: Provides for automatic selection of NEUTRAL when PTO is operated regardless of range selected. Requires re-selecting range to shift out of NEUTRAL. Shown with range indicator output.

VARIABLES TO SPECIFY: Maximum output speed for activating this function. Range indicator = neutral.

VOCATIONS: Various (with use of PTO)

WARNING! **If this function is enabled in the shift calibration, the function MUST be integrated into the vehicle wiring. If the function is available in the shift calibration but will not be used in the vehicle, it MUST be disabled in the calibration.**

This function must not be used with Neutral Indicator For PTO (Output "S").

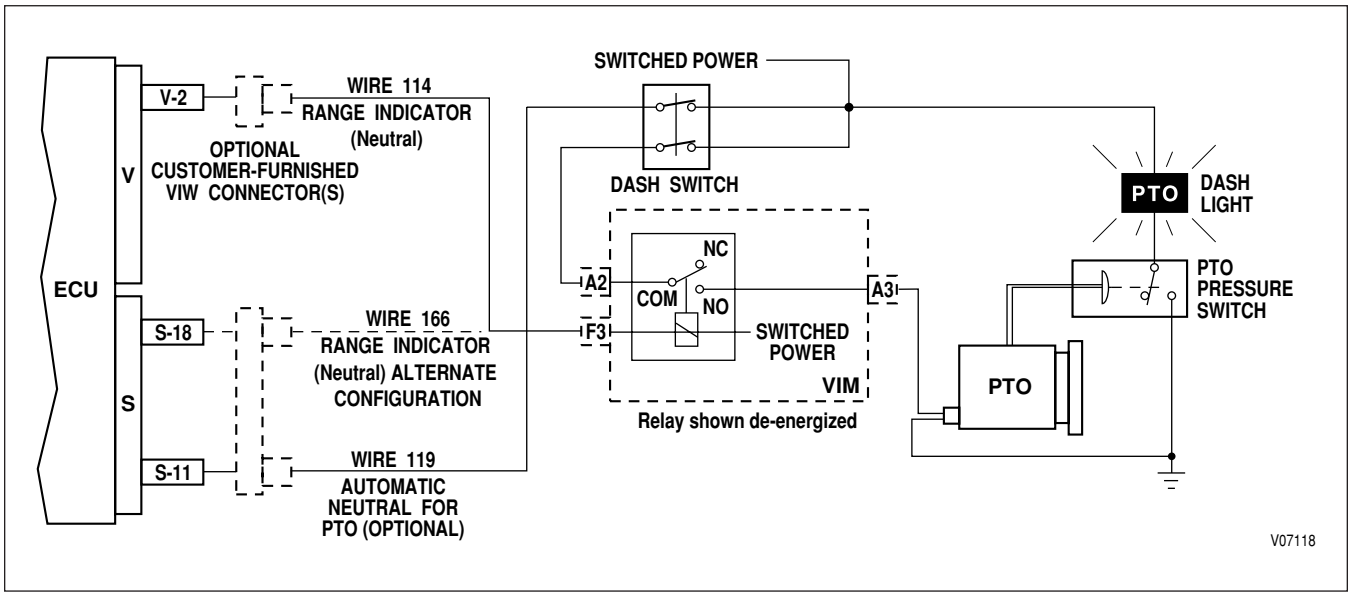

Figure P–19. Automatic Neutral—Single Input Switched to Power (Wire 119)

Copyright © 2005 General Motors Corp.

https://truckmanualshub.com/

APPENDIX P—INPUT/OUTPUT FUNCTIONS

WARNING! **These schematics show the intended use of the specified controls features which have been validated in the configuration shown. Any miswiring or use of these features which differs from that shown could result in damage to equipment or property, personal injury, or loss of life. ALLISON TRANSMISSION IS NOT LIABLE FOR THE CONSEQUENCES ASSOCIATED WITH MISWIRING OR UNINTENDED USE OF THESE FEATURES.**

INPUT FUNCTION O. AUTOMATIC NEUTRAL

USES: Automatically shifts transmission to NEUTRAL when vehicle doors are opened. Re-engages transmission in DRIVE when doors are closed.

VARIABLES TO SPECIFY: None

VOCATIONS: Transit Buses

WARNING! **If this function is enabled in the shift calibration, the function MUST be integrated into the vehicle wiring. If the function is available in the shift calibration but will not be used in the vehicle, it MUST be disabled in the calibration.**

This function must not be used with Neutral Indicator For PTO (Output "S").

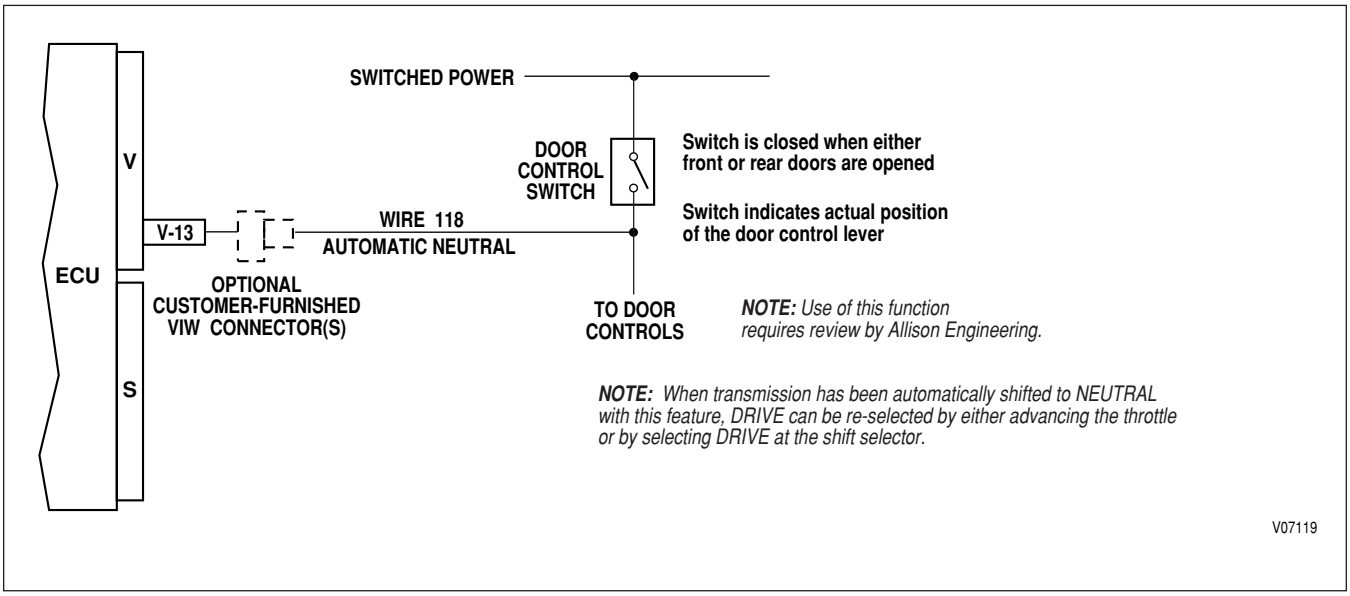

Figure P–20. Automatic Neutral

Copyright © 2005 General Motors Corp.

https://truckmanualshub.com/

APPENDIX P—INPUT/OUTPUT FUNCTIONS

WARNING! **These schematics show the intended use of the specified controls features which have been validated in the configuration shown. Any miswiring or use of these features which differs from that shown could result in damage to equipment or property, personal injury, or loss of life. ALLISON TRANSMISSION IS NOT LIABLE FOR THE CONSEQUENCES ASSOCIATED WITH MISWIRING OR UNINTENDED USE OF THESE FEATURES.**

INPUT FUNCTION Q. TWO-SPEED AXLE—INPUT AND OUTPUT

USES: Provides output speed interlock for axle engagement, input to ECU, and input to speedometer to adjust for axle ratio change.

VARIABLES TO SPECIFY: Output speed to activate, output speed to deactivate

VOCATIONS: Dump truck, refuse packer, cement mixer, two-speed axle equipped vehicles

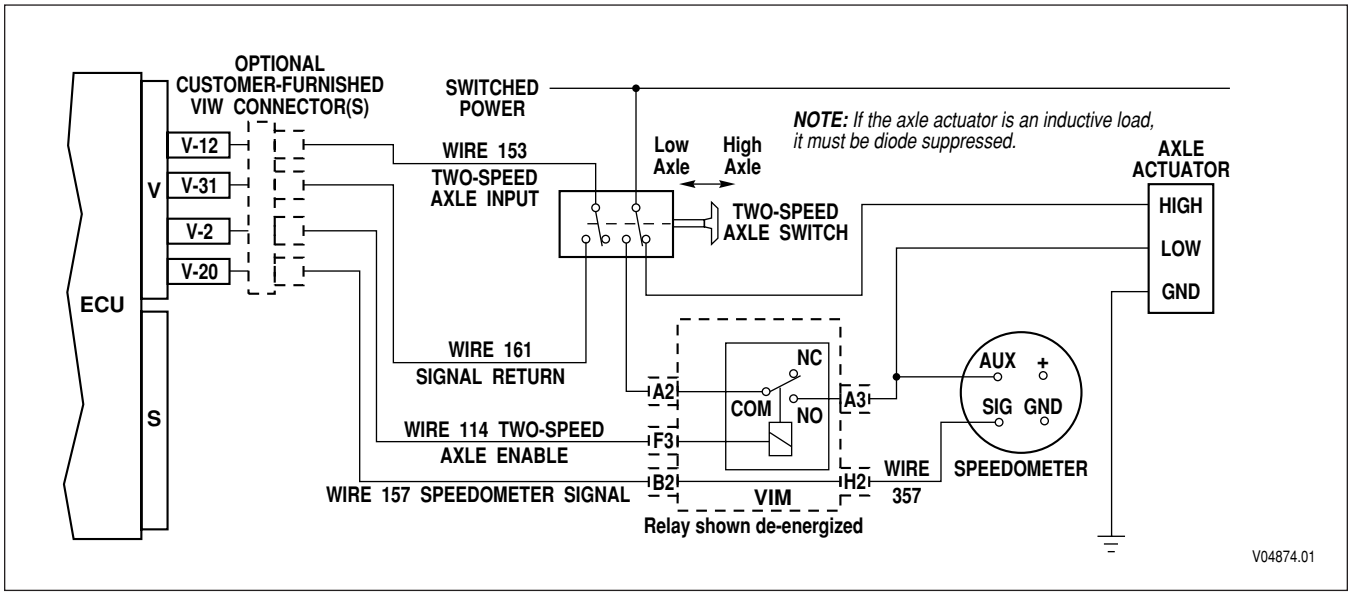

Figure P–21. Two-Speed Axle—Input and Output

Copyright © 2005 General Motors Corp.

https://truckmanualshub.com/

APPENDIX P—INPUT/OUTPUT FUNCTIONS

WARNING! **These schematics show the intended use of the specified controls features which have been validated in the configuration shown. Any miswiring or use of these features which differs from that shown could result in damage to equipment or property, personal injury, or loss of life. ALLISON TRANSMISSION IS NOT LIABLE FOR THE CONSEQUENCES ASSOCIATED WITH MISWIRING OR UNINTENDED USE OF THESE FEATURES.**

INPUT FUNCTION V. REVERSE ENABLE SWITCHED TO GROUND

USES: Provides for a separate instrument panel-mounted switch which must be pressed simultaneously with the REVERSE button to achieve Reverse.

VARIABLES TO SPECIFY: None

VOCATIONS: European transit buses and tour buses

WARNING! **If this function is enabled in the shift calibration, the function MUST be integrated into the vehicle wiring. If the function is available in the shift calibration but will not be used in the vehicle, it MUST be disabled in the calibration.**

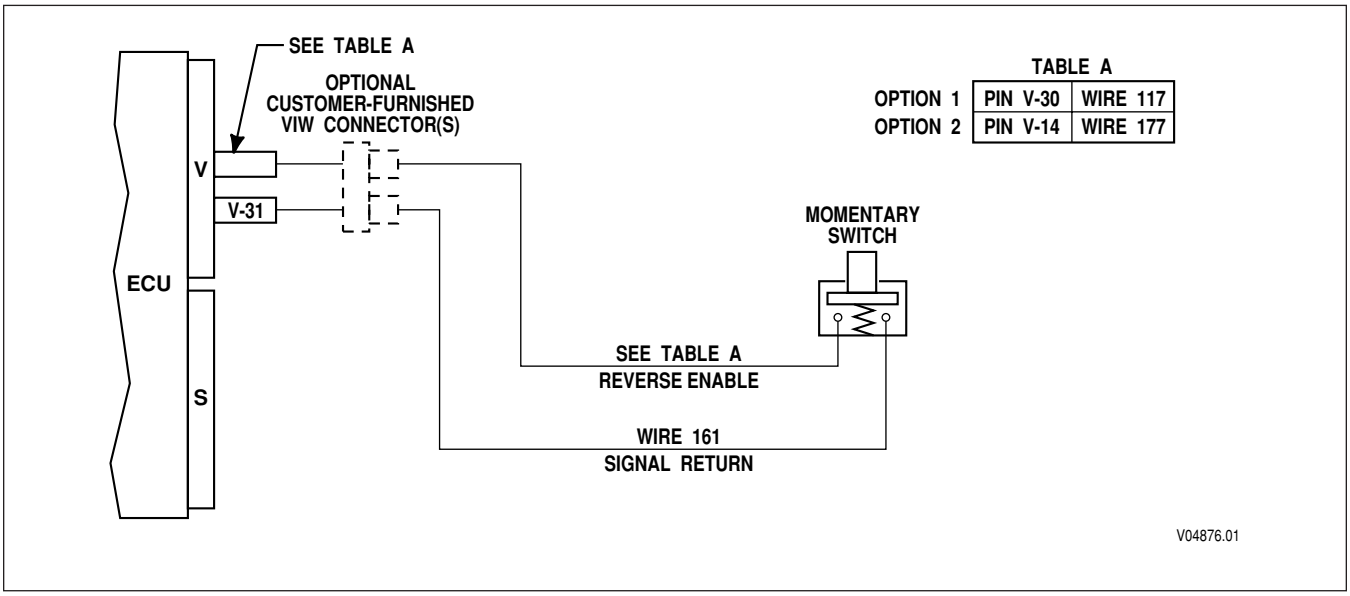

TABLE A

OPTION 1	PIN V-30	WIRE 117
OPTION 2	PIN V-14	WIRE 177

Figure P–22. Reverse Enable Switched to Ground

Copyright © 2005 General Motors Corp.

https://truckmanualshub.com/

APPENDIX P—INPUT/OUTPUT FUNCTIONS

WARNING! **These schematics show the intended use of the specified controls features which have been validated in the configuration shown. Any miswiring or use of these features which differs from that shown could result in damage to equipment or property, personal injury, or loss of life. ALLISON TRANSMISSION IS NOT LIABLE FOR THE CONSEQUENCES ASSOCIATED WITH MISWIRING OR UNINTENDED USE OF THESE FEATURES.**

INPUT FUNCTION V. REVERSE ENABLE SWITCHED TO POWER

USES: Provides for a separate instrument panel-mounted switch which must be pressed simultaneously with the REVERSE button to achieve Reverse.

VARIABLES TO SPECIFY: None

VOCATIONS: European transit buses and tour buses

WARNING! **If this function is enabled in the shift calibration, the function MUST be integrated into the vehicle wiring. If the function is available in the shift calibration but will not be used in the vehicle, it MUST be disabled in the calibration.**

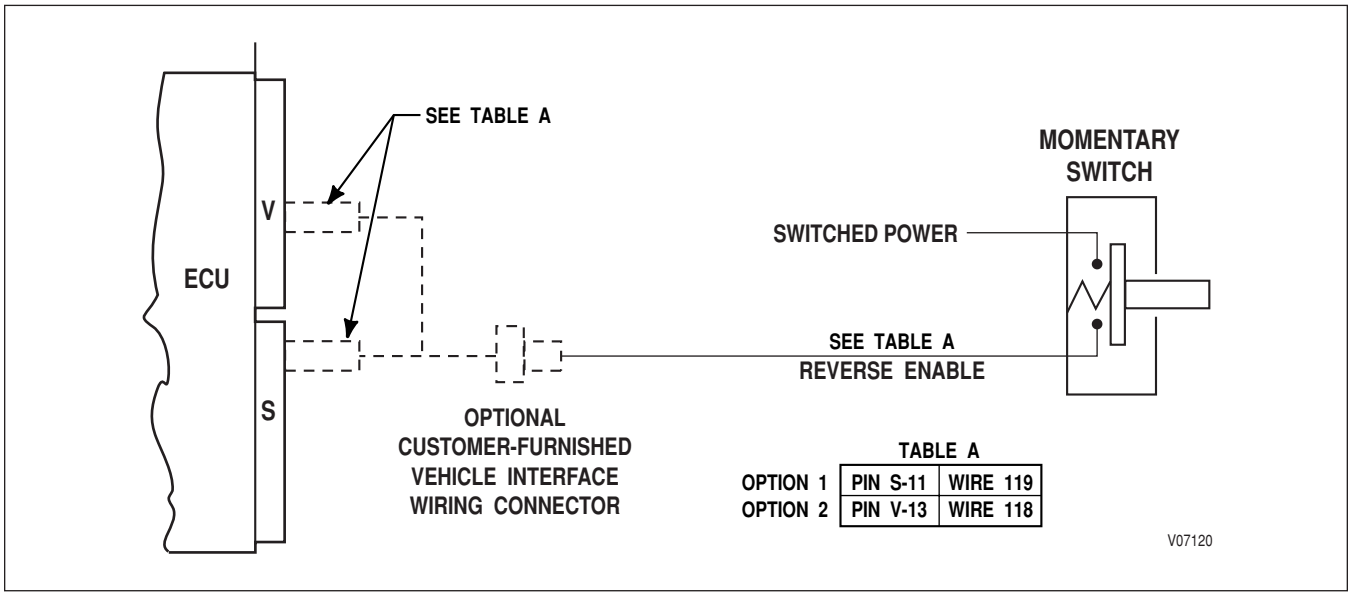

Figure P–23. Reverse Enable Switched to Power

Copyright © 2005 General Motors Corp.

https://truckmanualshub.com/

APPENDIX P—INPUT/OUTPUT FUNCTIONS

WARNING! **These schematics show the intended use of the specified controls features which have been validated in the configuration shown. Any miswiring or use of these features which differs from that shown could result in damage to equipment or property, personal injury, or loss of life. ALLISON TRANSMISSION IS NOT LIABLE FOR THE CONSEQUENCES ASSOCIATED WITH MISWIRING OR UNINTENDED USE OF THESE FEATURES.**

INPUT FUNCTION W. DIRECTION CHANGE ENABLE SWITCHED TO GROUND

USES: An active input signals the ECU to permit a requested direction change shift (Neutral to Drive, Neutral to Reverse, Reverse to Drive, or Drive to Reverse). If the Direction Change Enable input is inactive and a direction change shift is requested, the ECU will inhibit the direction change shift by forcing the transmission to Neutral. The direction change inhibit remains in effect until the Direction Change Enable input becomes active AND a range (Reverse, Neutral, or Drive) is requested at the shift selector.

VARIABLES TO SPECIFY: None

VOCATIONS: Various

WARNING! **If this function is enabled in the shift calibration, the function MUST be integrated into the vehicle wiring. If the function is available in the shift calibration but will not be used in the vehicle, it MUST be disabled in the calibration.**

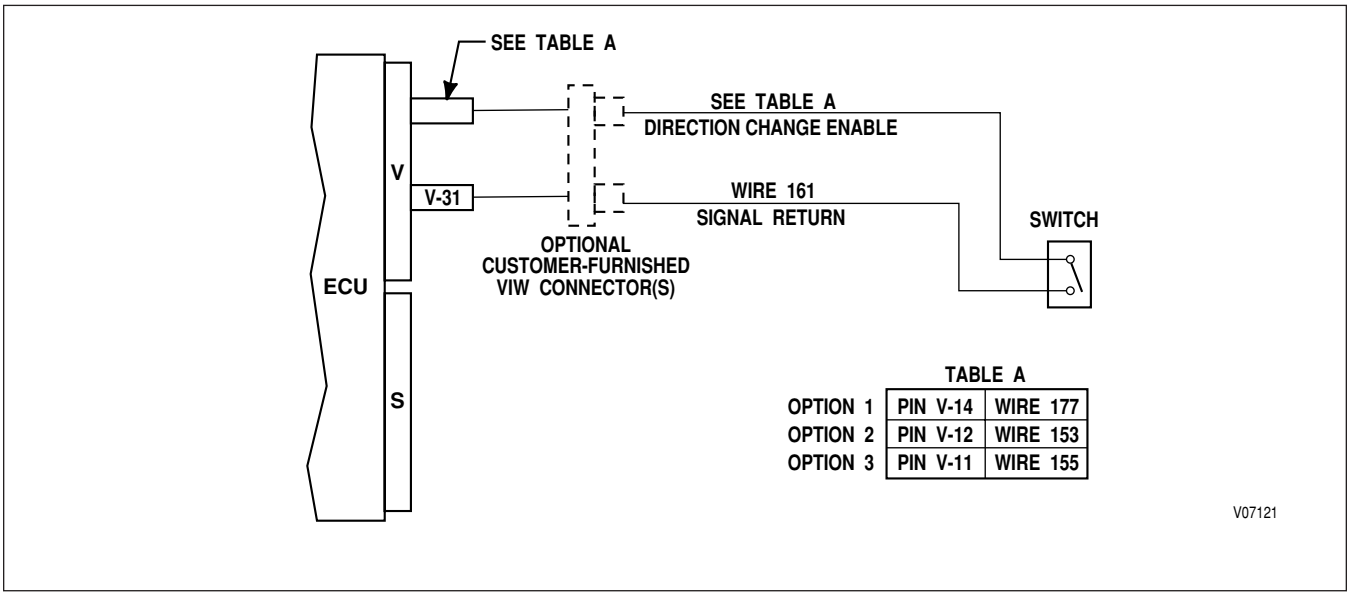

Figure P–24. Direction Change Enable Switched to Ground

This function can be provided by a J1939 message.

 Copyright © 2005 General Motors Corp.

https://truckmanualshub.com/

APPENDIX P—INPUT/OUTPUT FUNCTIONS

WARNING! **These schematics show the intended use of the specified controls features which have been validated in the configuration shown. Any miswiring or use of these features which differs from that shown could result in damage to equipment or property, personal injury, or loss of life. ALLISON TRANSMISSION IS NOT LIABLE FOR THE CONSEQUENCES ASSOCIATED WITH MISWIRING OR UNINTENDED USE OF THESE FEATURES.**

INPUT FUNCTION W. DIRECTION CHANGE ENABLE SWITCHED TO POWER

USES: An active input signals the ECU to permit a requested direction change shift (Neutral to Drive, Neutral to Reverse, Reverse to Drive, or Drive to Reverse). If the Direction Change Enable input is inactive and a direction change shift is requested, the ECU will inhibit the direction change shift by forcing the transmission to Neutral. The direction change inhibit remains in effect until the Direction Change Enable input becomes active AND a range (Reverse, Neutral, or Drive) is requested at the shift selector.

VARIABLES TO SPECIFY: None

VOCATIONS: Various

WARNING! **If this function is enabled in the shift calibration, the function MUST be integrated into the vehicle wiring. If the function is available in the shift calibration but will not be used in the vehicle, it MUST be disabled in the calibration.**

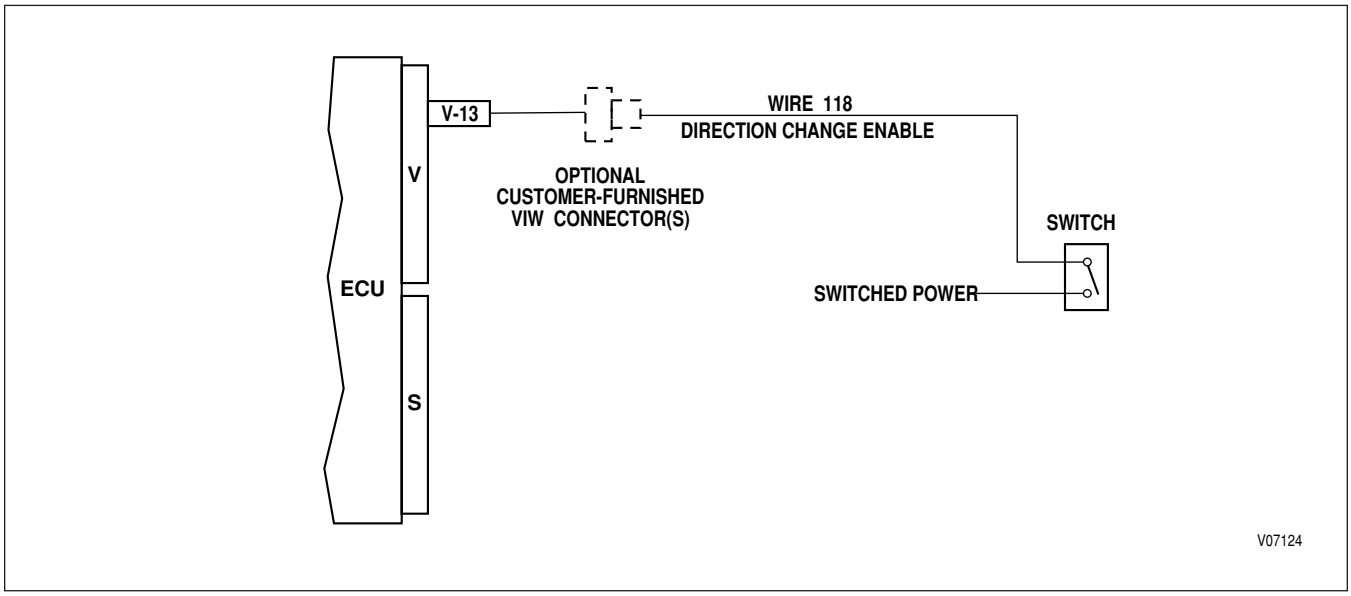

Figure P–25. Direction Change Enable Switched to Power

This function can be provided by a J1939 message.

Copyright © 2005 General Motors Corp.

https://truckmanualshub.com/

APPENDIX P—INPUT/OUTPUT FUNCTIONS

WARNING! **These schematics show the intended use of the specified controls features which have been validated in the configuration shown. Any miswiring or use of these features which differs from that shown could result in damage to equipment or property, personal injury, or loss of life. ALLISON TRANSMISSION IS NOT LIABLE FOR THE CONSEQUENCES ASSOCIATED WITH MISWIRING OR UNINTENDED USE OF THESE FEATURES.**

INPUT FUNCTION X. SHIFT IN PROCESS/SHIFT ENABLE

USES: Used to reduce engine power during a shift for high horsepower applications.

VARIABLES TO SPECIFY: None

VOCATIONS: Oil field pumping

WARNING! **If this function is enabled in the shift calibration, the function MUST be integrated into the vehicle wiring. If the function is available in the shift calibration but will not be used in the vehicle, it MUST be disabled in the calibration.**

OPERATING PROCEDURE

1. ECU sends signal (“Shift in Process”) to powertrain module that a shift is being requested.
2. Powertrain module reduces engine power and sends a signal to ECU (“Shift Enable”) indicating that it is OK to shift.
3. ECU commands shift. When shift is completed, “Shift in Process” output turns off.
4. Powertrain module turns off the Shift Enable signal.

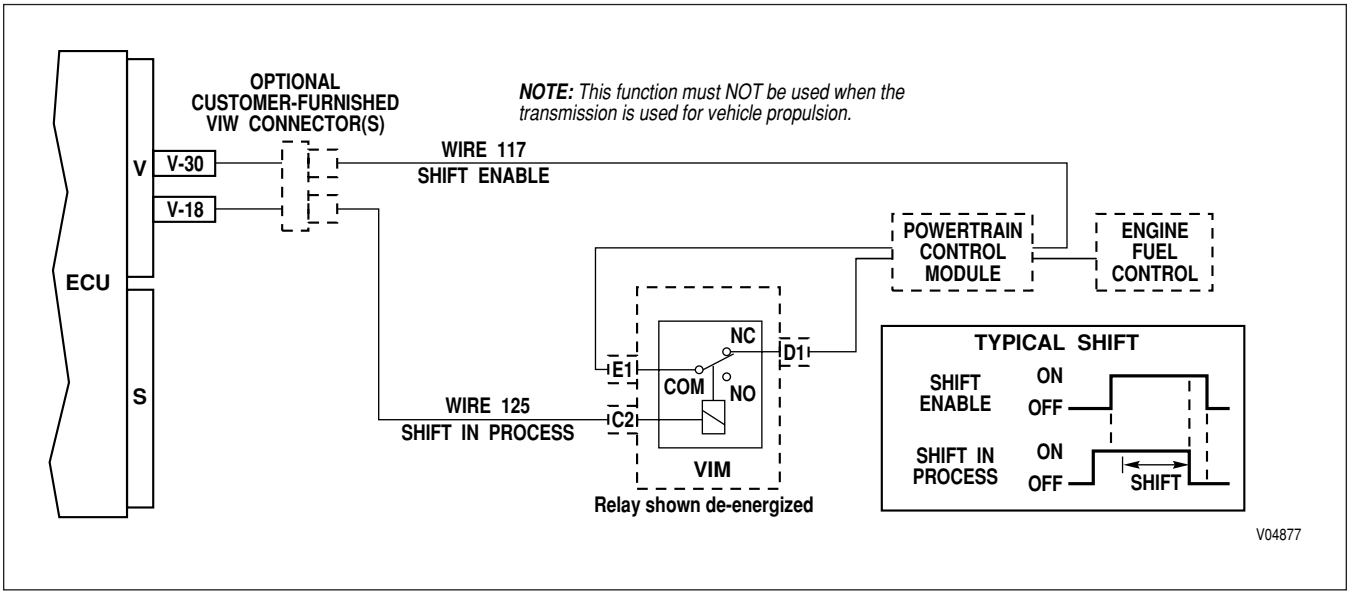

Figure P–26. Shift in Process/Shift Enable

Copyright © 2005 General Motors Corp.

https://truckmanualshub.com/

APPENDIX P—INPUT/OUTPUT FUNCTIONS

WARNING! **These schematics show the intended use of the specified controls features which have been validated in the configuration shown. Any miswiring or use of these features which differs from that shown could result in damage to equipment or property, personal injury, or loss of life. ALLISON TRANSMISSION IS NOT LIABLE FOR THE CONSEQUENCES ASSOCIATED WITH MISWIRING OR UNINTENDED USE OF THESE FEATURES.**

INPUT FUNCTION Y. ANTI-LOCK BRAKE RESPONSE WITH INPUT FROM ABS CONTROLLER

USES: Signals the ECU when ABS function is active, so that lockup clutch and retarder will be disabled.

VARIABLES TO SPECIFY: None

VOCATIONS: Various

For schematics of this function, refer to the **ANTI-LOCK BRAKES** section located in SA2978EN, WTEC III Controls And General Information, Section C

Copyright © 2005 General Motors Corp.

https://truckmanualshub.com/

APPENDIX P—INPUT/OUTPUT FUNCTIONS

WARNING! **These schematics show the intended use of the specified controls features which have been validated in the configuration shown. Any miswiring or use of these features which differs from that shown could result in damage to equipment or property, personal injury, or loss of life. ALLISON TRANSMISSION IS NOT LIABLE FOR THE CONSEQUENCES ASSOCIATED WITH MISWIRING OR UNINTENDED USE OF THESE FEATURES.**

INPUT FUNCTION Y. ANTI-LOCK BRAKE RESPONSE WITH BRAKE PRESSURE SWITCH

USES: Provides for enhanced control of lockup and retarder during hard braking conditions. Can be used separately or in conjunction with ABS.

VARIABLES TO SPECIFY: None

VOCATIONS: Various

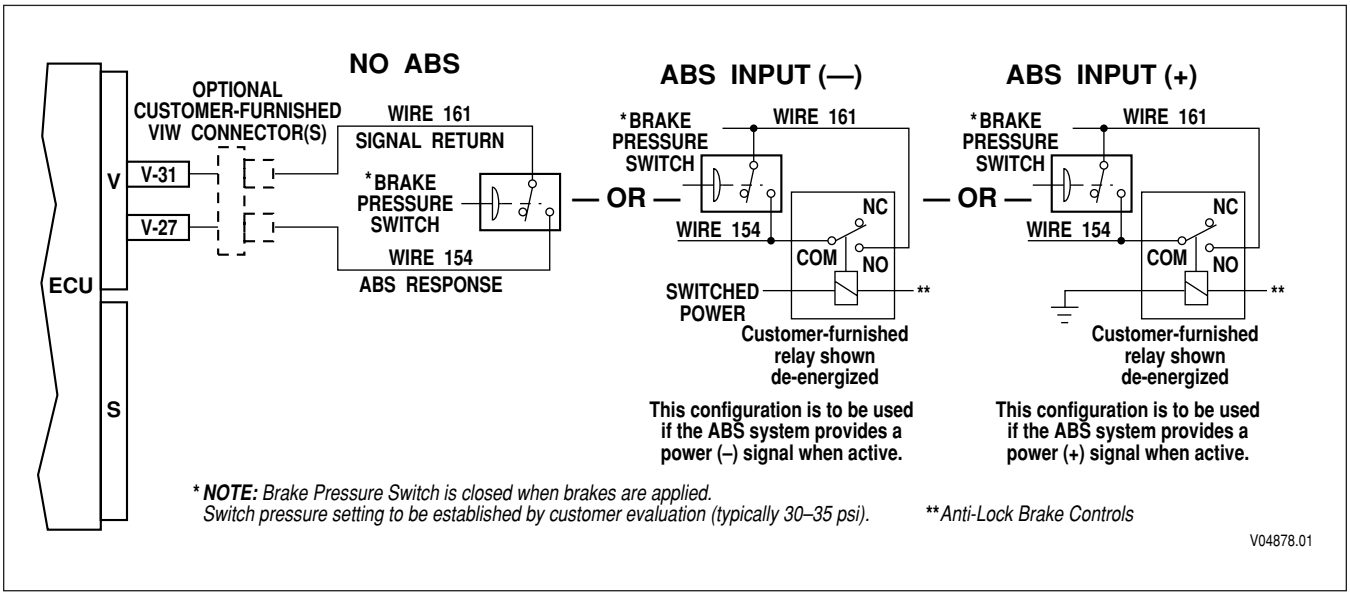

Figure P–27. Anti-Lock Brake Response With Brake Pressure Switch

Copyright © 2005 General Motors Corp.

https://truckmanualshub.com/

APPENDIX P—INPUT/OUTPUT FUNCTIONS

WARNING! **These schematics show the intended use of the specified controls features which have been validated in the configuration shown. Any miswiring or use of these features which differs from that shown could result in damage to equipment or property, personal injury, or loss of life. ALLISON TRANSMISSION IS NOT LIABLE FOR THE CONSEQUENCES ASSOCIATED WITH MISWIRING OR UNINTENDED USE OF THESE FEATURES.**

INPUT FUNCTION Z. RETARDER ENABLE

USES: Provides for operator ON/OFF control of the retarder, transmission temperature indication, and brake lights during retarder operation.

USES: None

VOCATIONS: Various. This function is **required** for retarder-equipped transmissions.

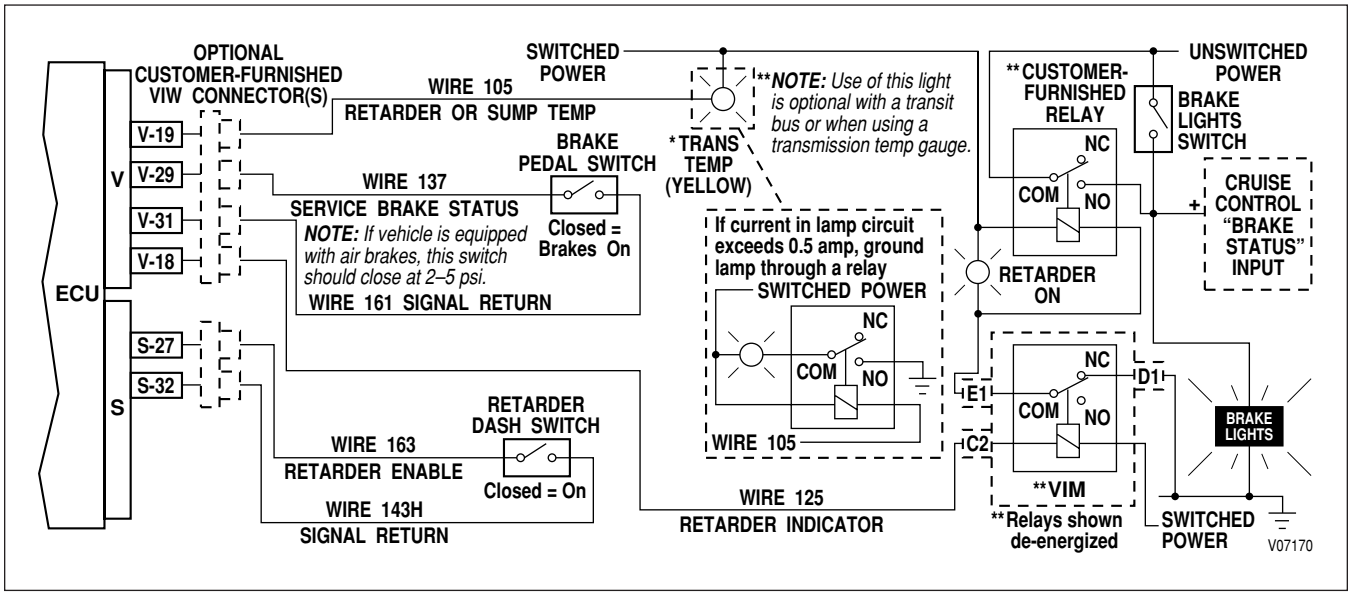

Figure P–28. Retarder Enable

Copyright © 2005 General Motors Corp.

https://truckmanualshub.com/

APPENDIX P—INPUT/OUTPUT FUNCTIONS

WARNING! **These schematics show the intended use of the specified controls features which have been validated in the configuration shown. Any miswiring or use of these features which differs from that shown could result in damage to equipment or property, personal injury, or loss of life. ALLISON TRANSMISSION IS NOT LIABLE FOR THE CONSEQUENCES ASSOCIATED WITH MISWIRING OR UNINTENDED USE OF THESE FEATURES.**

INPUT FUNCTION AA. SERVICE BRAKE STATUS

USES: Indicates to the ECU whether vehicle braking is being provided by the retarder or vehicle brakes, so that the transmission controls can be adapted accordingly.

VARIABLES TO SPECIFY: None

VOCATIONS: Various. This function is **required** for retarder-equipped transmissions.

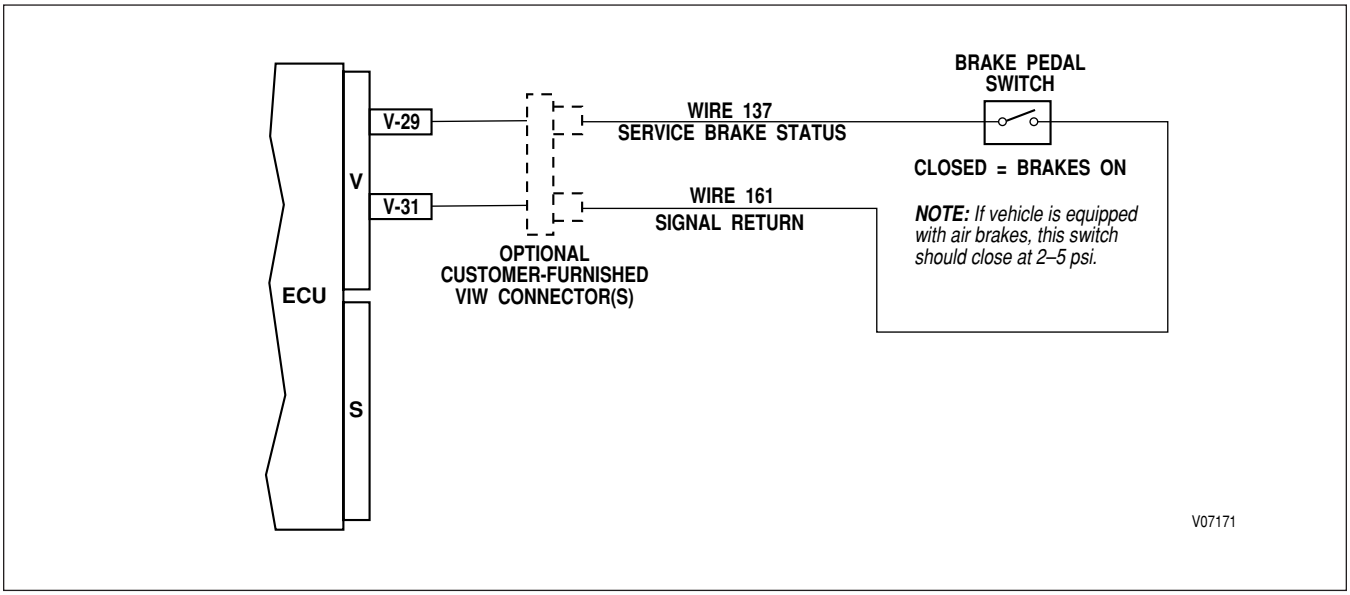

Figure P–29. Service Brake Status

Copyright © 2005 General Motors Corp.

https://truckmanualshub.com/

APPENDIX P—INPUT/OUTPUT FUNCTIONS

WARNING! **These schematics show the intended use of the specified controls features which have been validated in the configuration shown. Any miswiring or use of these features which differs from that shown could result in damage to equipment or property, personal injury, or loss of life. ALLISON TRANSMISSION IS NOT LIABLE FOR THE CONSEQUENCES ASSOCIATED WITH MISWIRING OR UNINTENDED USE OF THESE FEATURES.**

INPUT FUNCTION AF. DIFFERENTIAL CLUTCH REQUEST

USES: Provides for operator ON/OFF control of the differential locking clutch in the MD 3070PT transmission transfer case.

VARIABLES TO SPECIFY: None

VOCATIONS: Various. This function is **required** for all MD 3070PT transmissions and used only with that model.

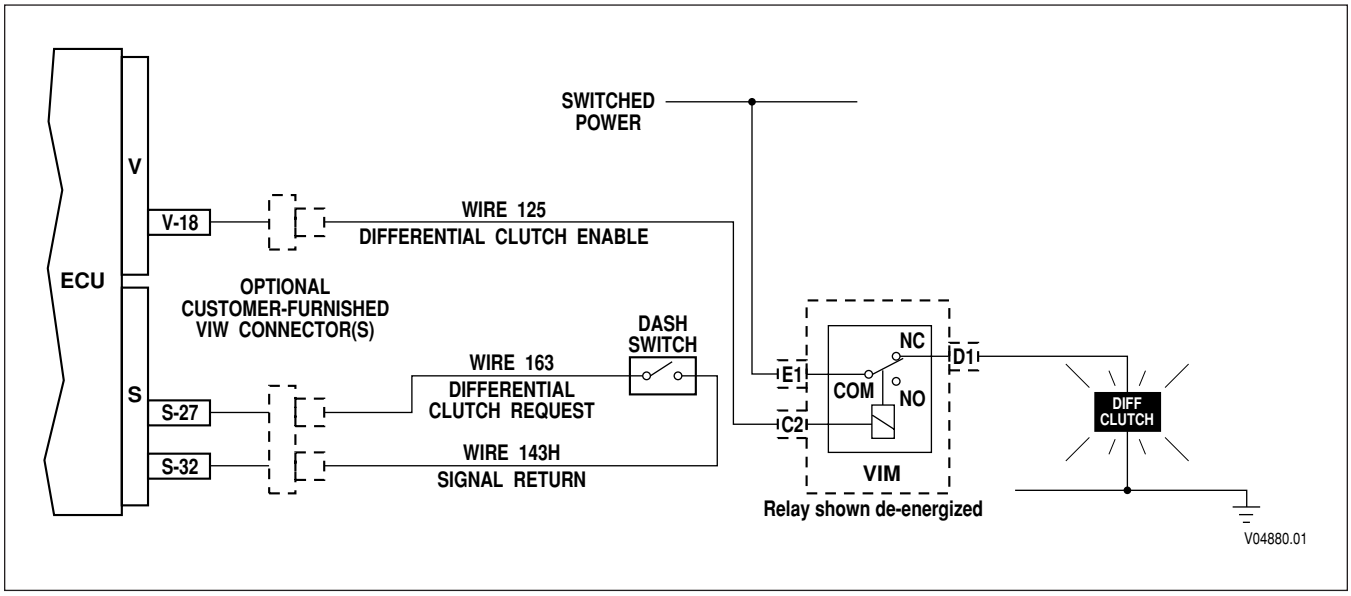

Figure P–30. Differential Clutch Request

Copyright © 2005 General Motors Corp.

https://truckmanualshub.com/

APPENDIX P—INPUT/OUTPUT FUNCTIONS

WARNING! **These schematics show the intended use of the specified controls features which have been validated in the configuration shown. Any miswiring or use of these features which differs from that shown could result in damage to equipment or property, personal injury, or loss of life. ALLISON TRANSMISSION IS NOT LIABLE FOR THE CONSEQUENCES ASSOCIATED WITH MISWIRING OR UNINTENDED USE OF THESE FEATURES.**

INPUT FUNCTION AG. AUTOMATIC NEUTRAL—DUAL INPUT—PARK BRAKE ACTIVATED

USES: Provides for automatic selection of NEUTRAL and activation of fast idle when park brake is applied. Automatically re-engages transmission when work brake is released. PTO can be enabled independent of transmission range.

VARIABLES TO SPECIFY: Max output rpm to enable Neutral, max engine rpm for PTO engagement, max engine rpm for PTO operation, max output rpm for PTO engagement, max output rpm for PTO operation.

VOCATIONS: Refuse packer, recycling truck

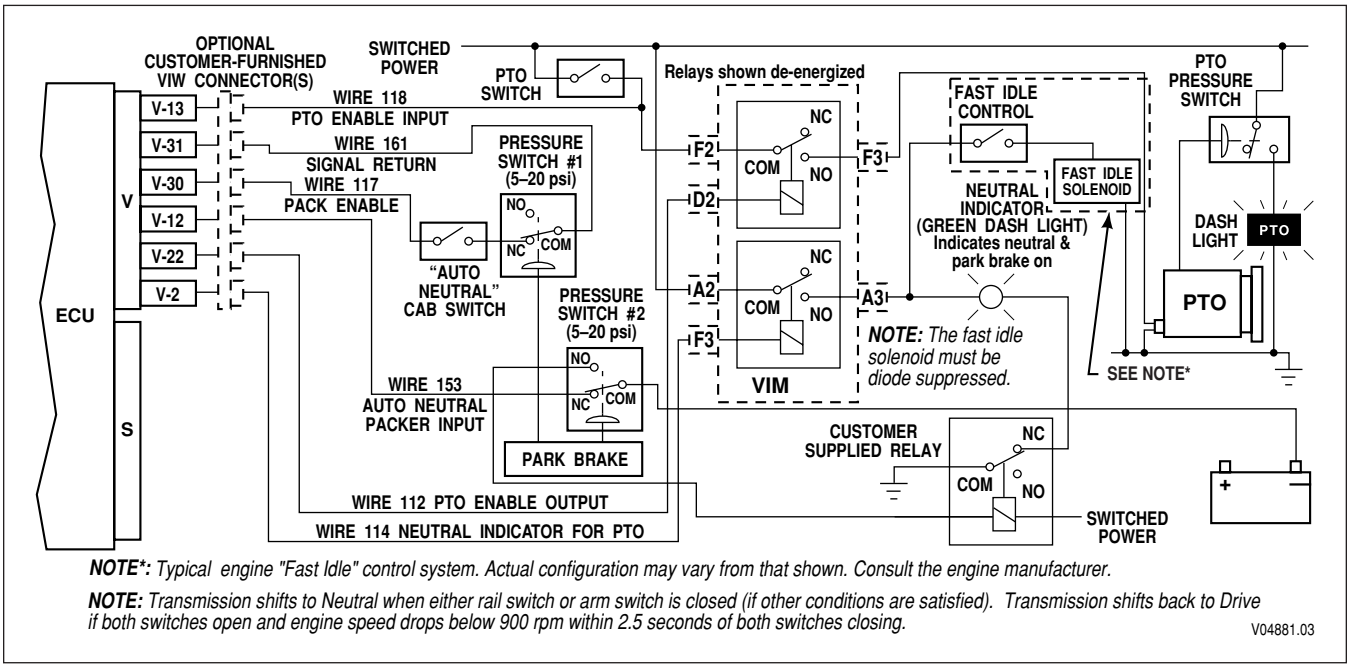

Figure P–31. Automatic Neutral—Dual Input—Park Brake Activated

Copyright © 2005 General Motors Corp.

https://truckmanualshub.com/

APPENDIX P—INPUT/OUTPUT FUNCTIONS

WARNING! **These schematics show the intended use of the specified controls features which have been validated in the configuration shown. Any miswiring or use of these features which differs from that shown could result in damage to equipment or property, personal injury, or loss of life. ALLISON TRANSMISSION IS NOT LIABLE FOR THE CONSEQUENCES ASSOCIATED WITH MISWIRING OR UNINTENDED USE OF THESE FEATURES.**

INPUT FUNCTION AG. AUTOMATIC NEUTRAL—DUAL INPUT—WORK BRAKE ACTIVATED

USES: Provides for automatic selection of NEUTRAL and activation of fast idle when work brake is applied. Automatically re-engages transmission when work brake is released. PTO can be enabled independent of transmission range.

VARIABLES TO SPECIFY: Max output rpm to enable Neutral, max engine rpm for PTO engagement, max engine rpm for PTO operation, max output rpm for PTO engagement, max output rpm for PTO operation.

VOCATIONS: Refuse packer, recycling truck

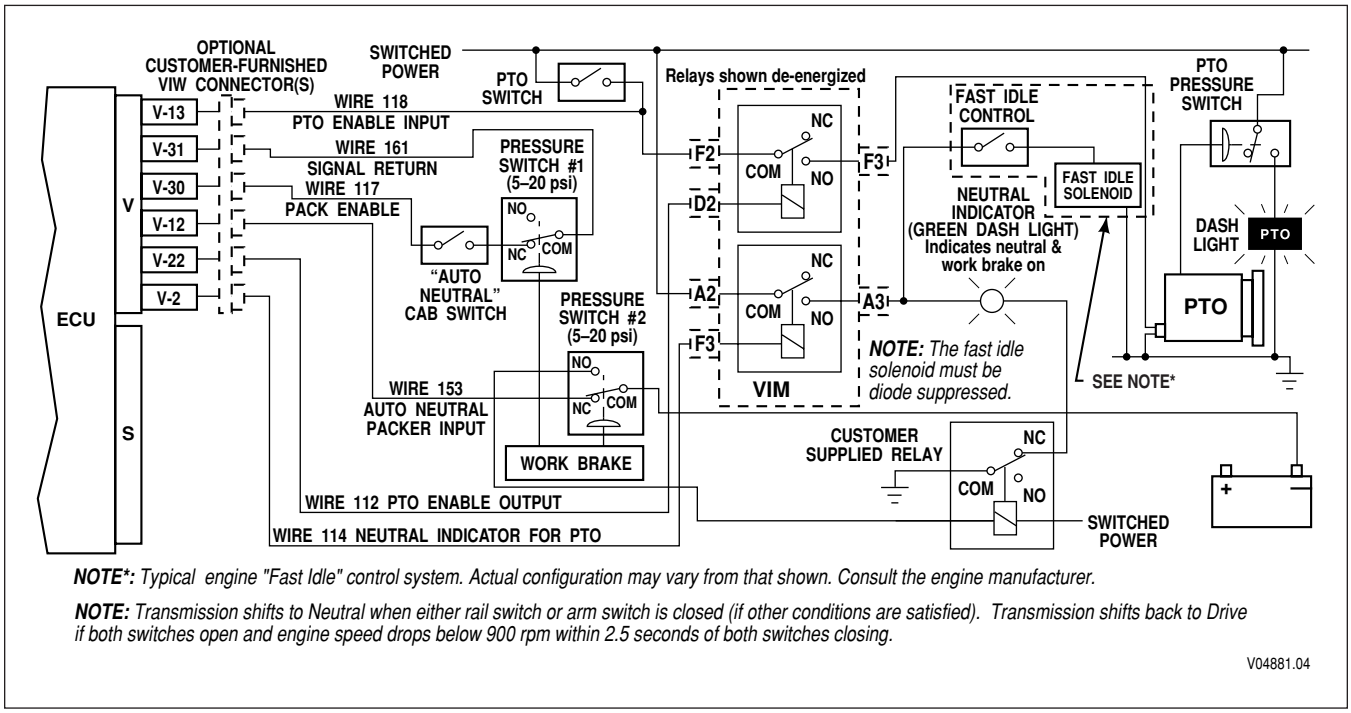

NOTE*: *Typical engine "Fast Idle" control system. Actual configuration may vary from that shown. Consult the engine manufacturer.*

NOTE: *Transmission shifts to Neutral when either rail switch or arm switch is closed (if other conditions are satisfied). Transmission shifts back to Drive if both switches open and engine speed drops below 900 rpm within 2.5 seconds of both switches closing.*

Figure P–32. Automatic Neutral—Dual Input—Work Brake Activated

Copyright © 2005 General Motors Corp.

https://truckmanualshub.com/

APPENDIX P—INPUT/OUTPUT FUNCTIONS

WARNING! **These schematics show the intended use of the specified controls features which have been validated in the configuration shown. Any miswiring or use of these features which differs from that shown could result in damage to equipment or property, personal injury, or loss of life. ALLISON TRANSMISSION IS NOT LIABLE FOR THE CONSEQUENCES ASSOCIATED WITH MISWIRING OR UNINTENDED USE OF THESE FEATURES.**

INPUT FUNCTION AH. KICKDOWN

USES: Provides both economy and performance shift points at full throttle. Operator changes from economy to performance by stepping through a detent at the throttle pedal.

VARIABLES TO SPECIFY: None

VOCATIONS: Various

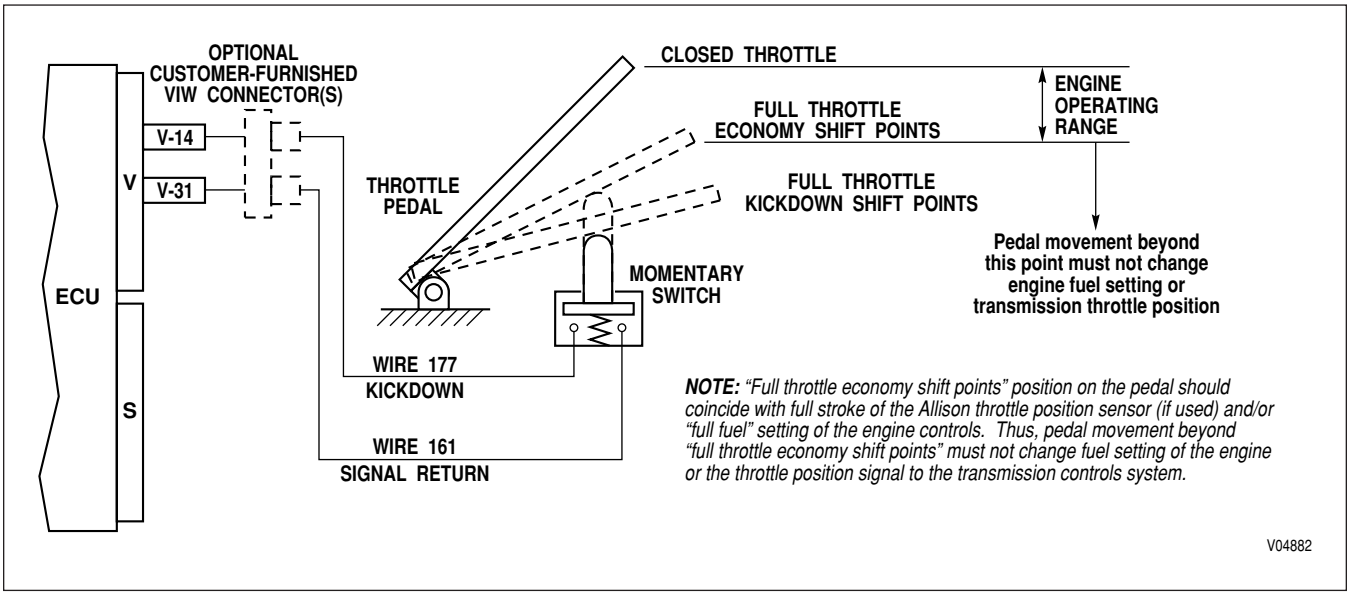

Figure P–33. Kickdown

This function can be provided by a J1939 message.

Copyright © 2005 General Motors Corp.

https://truckmanualshub.com/

APPENDIX P—INPUT/OUTPUT FUNCTIONS

WARNING! **These schematics show the intended use of the specified controls features which have been validated in the configuration shown. Any miswiring or use of these features which differs from that shown could result in damage to equipment or property, personal injury, or loss of life. ALLISON TRANSMISSION IS NOT LIABLE FOR THE CONSEQUENCES ASSOCIATED WITH MISWIRING OR UNINTENDED USE OF THESE FEATURES.**

INPUT FUNCTION AI. MILITARY AUXILIARY FUNCTION RANGE INHIBIT (STANDARD)

USES: Prevents inadvertent range selection when auxiliary equipment is operating.

VARIABLES TO SPECIFY: None

VOCATIONS: Military wheeled vehicles

WARNING! **If this function is turned "ON" in the shift calibration, the function MUST be integrated into the vehicle wiring. If the function is available in the shift calibration but will not be used in the vehicle, it MUST be turned "OFF" in the calibration.**

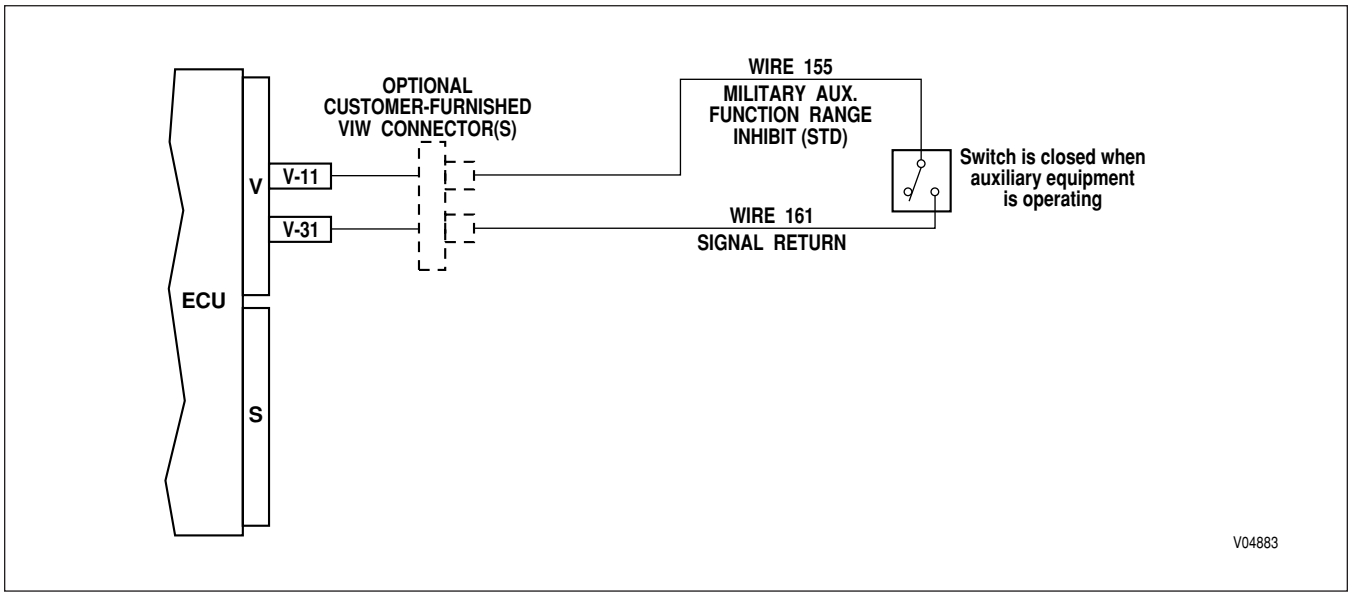

Figure P–34. Military Auxiliary Function Range Inhibit (Standard)

Copyright © 2005 General Motors Corp.

https://truckmanualshub.com/

APPENDIX P—INPUT/OUTPUT FUNCTIONS

WARNING! **These schematics show the intended use of the specified controls features which have been validated in the configuration shown. Any miswiring or use of these features which differs from that shown could result in damage to equipment or property, personal injury, or loss of life. ALLISON TRANSMISSION IS NOT LIABLE FOR THE CONSEQUENCES ASSOCIATED WITH MISWIRING OR UNINTENDED USE OF THESE FEATURES.**

INPUT FUNCTION AJ. FOURTH LOCKUP PUMP MODE—OPERATOR AND PUMP ACTIVATED

USES: Facilitates engagement of split shaft PTO and shifts transmission to fourth range lockup for driving a vehicle-mounted pump.

VARIABLES TO SPECIFY: None

VOCATIONS: Street cleaners, sewer cleaners

WARNING! **If this function is turned "ON" in the shift calibration, the function MUST be integrated into the vehicle wiring. If the function is available in the shift calibration but will not be used in the vehicle, it MUST be turned "OFF" in the calibration.**

SYSTEM OPERATION

OPERATOR ACTION—System Response

TO ENGAGE:

1. *SELECT NEUTRAL*—Transmission shifts to Neutral.
2. *APPLY PARKING BRAKE*—None
3. *SELECT PUMP*—Turns on "Pump Mode Requested" light. Turns on input signal to ECU (wire 118) which activates "fire truck" mode. When split-shaft shifts, wire 117 is activated and "Pump Engaged" light is turned on.
4. *SELECT DRIVE*—Transmission shifts to fourth lockup. "OK To Pump" light is turned on.

TO DISENGAGE:

1. *SELECT NEUTRAL*—Transmission shifts to Neutral if output rpm is less than 1000.
2. *SELECT ROAD MODE*—PTO disengages. If output shaft rotation continues, press the "Momentary Trans. Brake" switch before selecting Road Mode. This will cause the transmission output shaft to stop if transmission is in Neutral and output shaft speed is less than 100 rpm (175 rpm beginning with V9A calibrations).

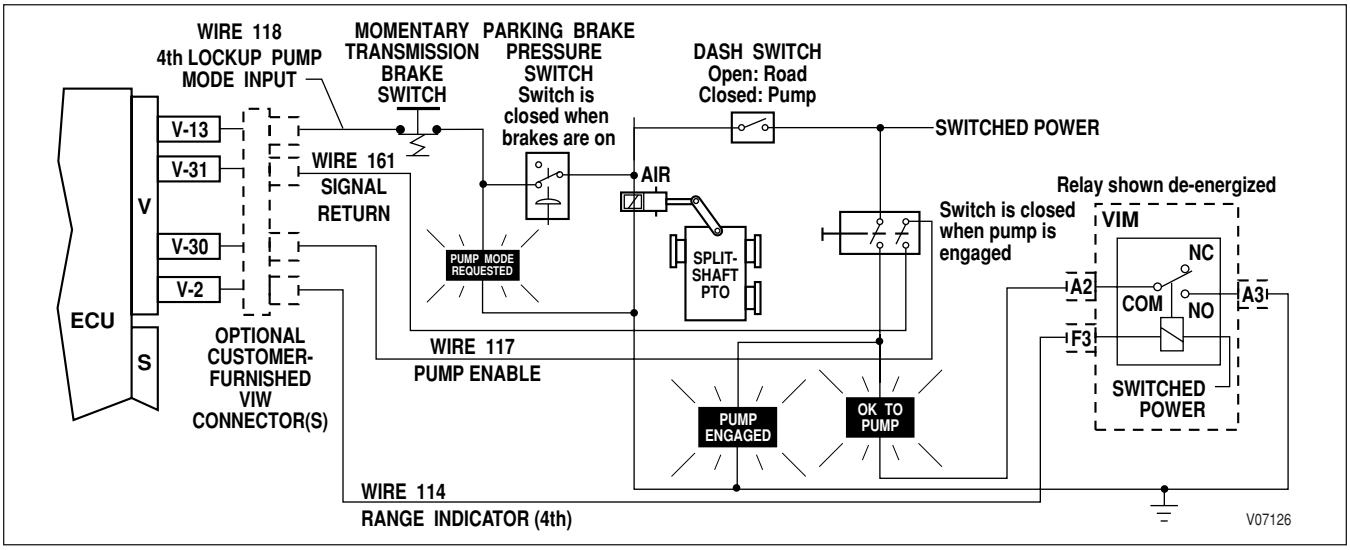

Figure P–35. Fourth Lockup Pump Mode—Operator and Pump Activated

Copyright © 2005 General Motors Corp.

https://truckmanualshub.com/

APPENDIX P—INPUT/OUTPUT FUNCTIONS

WARNING! **These schematics show the intended use of the specified controls features which have been validated in the configuration shown. Any miswiring or use of these features which differs from that shown could result in damage to equipment or property, personal injury, or loss of life. ALLISON TRANSMISSION IS NOT LIABLE FOR THE CONSEQUENCES ASSOCIATED WITH MISWIRING OR UNINTENDED USE OF THESE FEATURES.**

INPUT FUNCTION AJ. FOURTH LOCKUP PUMP MODE—OPERATOR ONLY ACTIVATED

USES: Facilitates engagement of split shaft PTO and shifts transmission to fourth range lockup for driving a vehicle-mounted pump.

VARIABLES TO SPECIFY: None

VOCATIONS: Street cleaners, sewer cleaners

WARNING! **If this function is turned "ON" in the shift calibration, the function MUST be integrated into the vehicle wiring. If the function is available in the shift calibration but will not be used in the vehicle, it MUST be turned "OFF" in the calibration.**

SYSTEM OPERATION

OPERATOR ACTION—System Response

TO ENGAGE:

1. *SELECT NEUTRAL*—Transmission shifts to Neutral.
2. *APPLY PARKING BRAKE*—None
3. *SELECT PUMP*—Turns on "Pump Mode Requested" light. Turns on both input signals to ECU (wires 117 and 118) which activates "pump" mode. When split-shaft shifts, "Pump Engaged" light is turned on.
4. *SELECT DRIVE*—Transmission shifts to fourth lockup. "OK To Pump" light is turned on.

TO DISENGAGE:

1. *SELECT NEUTRAL*—Transmission shifts to Neutral if output rpm is less than 1000.
2. *SELECT ROAD MODE*—PTO disengages. If output shaft rotation continues, press the "Momentary Trans. Brake" switch before selecting Road Mode. This will cause the transmission output shaft to stop if transmission is in Neutral and output shaft speed is less than 100 rpm (175 rpm beginning with V9A calibrations).

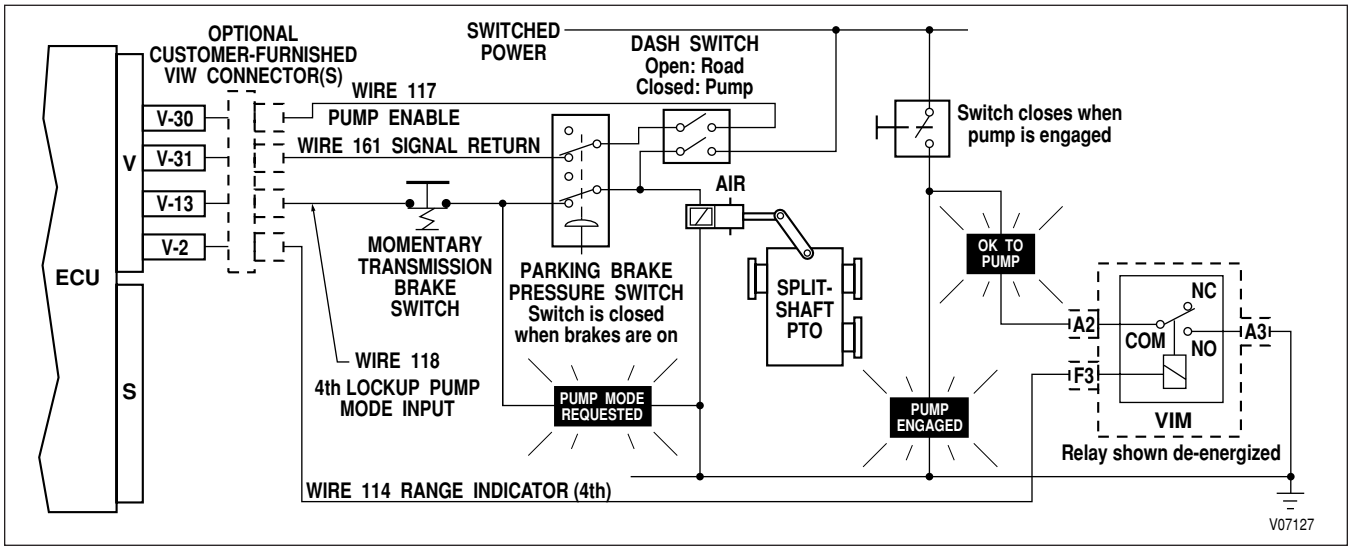

Figure P–36. Fourth Lockup Pump Mode—Operator Only Activated

Copyright © 2005 General Motors Corp.

https://truckmanualshub.com/

APPENDIX P—INPUT/OUTPUT FUNCTIONS

WARNING! **These schematics show the intended use of the specified controls features which have been validated in the configuration shown. Any miswiring or use of these features which differs from that shown could result in damage to equipment or property, personal injury, or loss of life. ALLISON TRANSMISSION IS NOT LIABLE FOR THE CONSEQUENCES ASSOCIATED WITH MISWIRING OR UNINTENDED USE OF THESE FEATURES.**

INPUT FUNCTION AK. AUTOMATIC NEUTRAL—DUAL INPUT WITH SERVICE BRAKE STATUS—AUTOMATED SIDE LOADER ACTIVATED

USES: Provides for automatic selection of NEUTRAL and activation of fast idle when loading arm is activated. Automatically re-engages transmission when loading arm is retracted if service brake is depressed. Only re-engagement of forward is allowed. Reverse is not re-engaged.

VARIABLES TO SPECIFY: Max output rpm to enable Neutral, max engine rpm for PTO engagement, max engine rpm for PTO operation, max output rpm for PTO engagement, max output rpm for PTO operation.

VOCATIONS: Refuse packer, recycling truck

WARNING! **This feature is meant to be used in applications where the vehicle operator remains in the cab. If the operator leaves the vehicle, the park brake must be engaged and Neutral must be selected prior to the operator exiting the cab. In addition, vehicles using this feature must have the following Warning sticker visible in the vehicle cab: "WARNING: Set Park Brake and select Neutral before exiting cab!"**

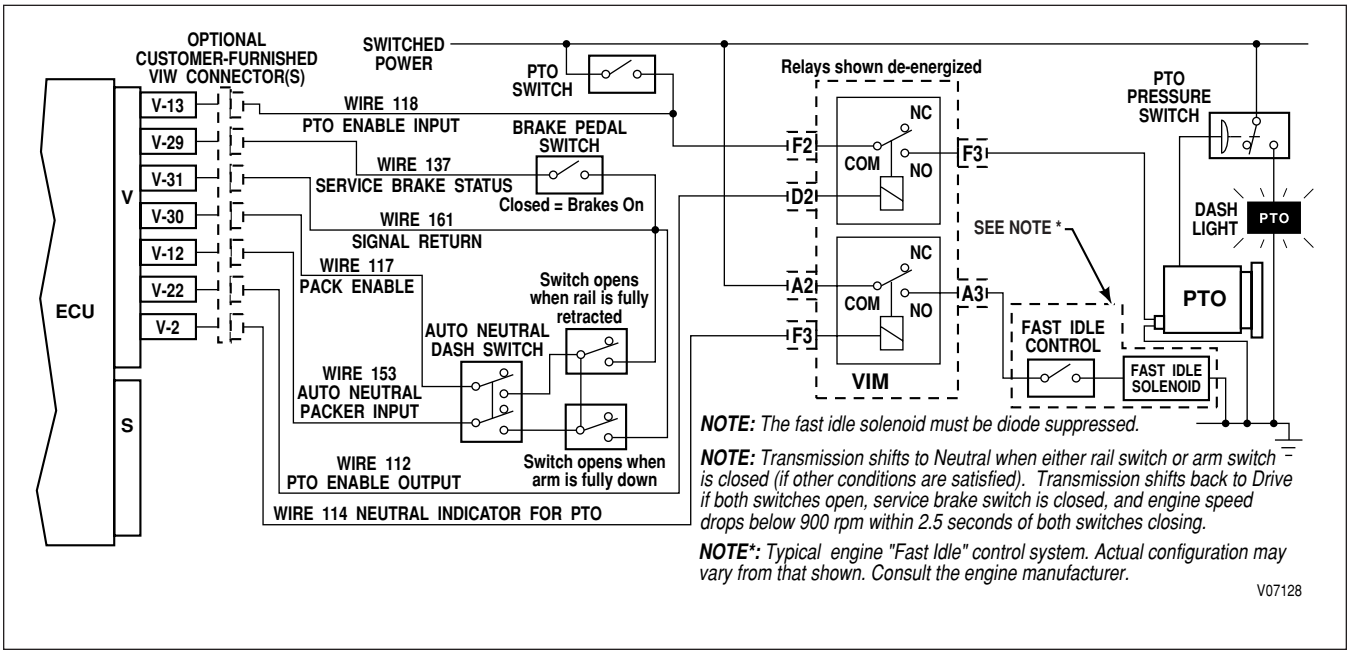

Figure P–37. Automatic Neutral—Dual Input With Service Brake Status—Automated Side Loader Activated

Copyright © 2005 General Motors Corp.

https://truckmanualshub.com/

APPENDIX P—INPUT/OUTPUT FUNCTIONS

WARNING! **These schematics show the intended use of the specified controls features which have been validated in the configuration shown. Any miswiring or use of these features which differs from that shown could result in damage to equipment or property, personal injury, or loss of life. ALLISON TRANSMISSION IS NOT LIABLE FOR THE CONSEQUENCES ASSOCIATED WITH MISWIRING OR UNINTENDED USE OF THESE FEATURES.**

INPUT FUNCTION AK. AUTOMATIC NEUTRAL—DUAL INPUT WITH SERVICE BRAKE STATUS—DASH SWITCH ACTIVATED

USES: Provides for selection of NEUTRAL and enabling fast idle through activation of a dash mounted switch. Automatically re-engages transmission when switch is opened if service brake is depressed Only re-engagement of forward is allowed. Reverse is not re-engaged.

VARIABLES TO SPECIFY: Max output rpm to enable Neutral, max engine rpm for PTO engagement, max engine rpm for PTO operation, max output rpm for PTO engagement, max output rpm for PTO operation.

VOCATIONS: Refuse packer, recycling truck

WARNING! **This feature is meant to be used in applications where the vehicle operator remains in the cab. If the operator leaves the vehicle, the park brake must be engaged and Neutral must be selected prior to the operator exiting the cab. In addition, vehicles using this feature must have the following Warning sticker visible in the vehicle cab: "WARNING: Set Park Brake and select Neutral before exiting cab!"**

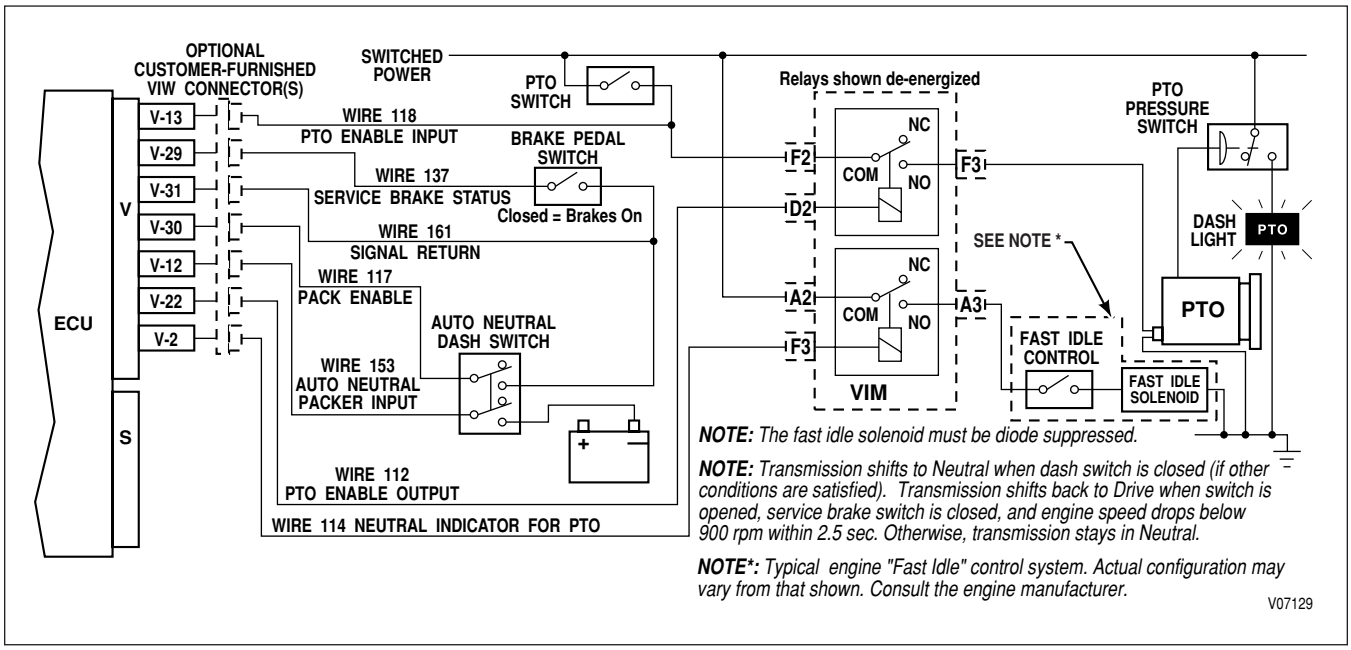

Figure P–38. Automatic Neutral—Dual Input With Service Brake Status—Dash Switch Activated

Copyright © 2005 General Motors Corp.

https://truckmanualshub.com/

APPENDIX P—INPUT/OUTPUT FUNCTIONS

WARNING! **These schematics show the intended use of the specified controls features which have been validated in the configuration shown. Any miswiring or use of these features which differs from that shown could result in damage to equipment or property, personal injury, or loss of life. ALLISON TRANSMISSION IS NOT LIABLE FOR THE CONSEQUENCES ASSOCIATED WITH MISWIRING OR UNINTENDED USE OF THESE FEATURES.**

INPUT FUNCTION AK. AUTOMATIC NEUTRAL—DUAL INPUT WITH SERVICE BRAKE STATUS—PARK BRAKE ACTIVATED

USES: Provides for automatic selection of NEUTRAL and activation of PTO when park brake is applied. Automatically re-engages transmission when park brake is released (if service brake is depressed). Only re-engagement of forward is permitted. Reverse is not re-engaged.

VARIABLES TO SPECIFY: Max output rpm to enable Neutral, max engine rpm for PTO engagement, max engine rpm for PTO operation, max output rpm for PTO engagement, max output rpm for PTO operation.

VOCATIONS: Refuse packer, recycling truck, emergency equipment.

NOTE: ***This function is also available with emergency equipment calibration features.***

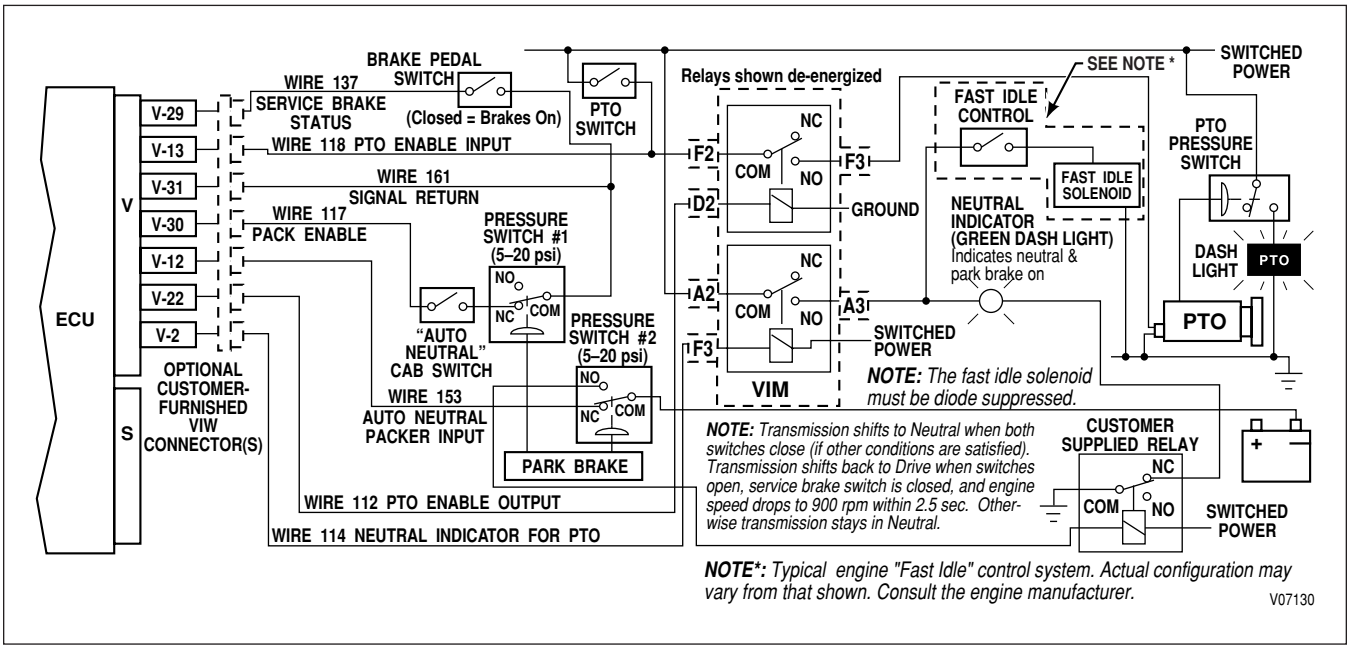

Figure P–39. Automatic Neutral—Dual Input With Service Brake Status—Park Brake Activated

Copyright © 2005 General Motors Corp.

https://truckmanualshub.com/

APPENDIX P—INPUT/OUTPUT FUNCTIONS

WARNING! **These schematics show the intended use of the specified controls features which have been validated in the configuration shown. Any miswiring or use of these features which differs from that shown could result in damage to equipment or property, personal injury, or loss of life. ALLISON TRANSMISSION IS NOT LIABLE FOR THE CONSEQUENCES ASSOCIATED WITH MISWIRING OR UNINTENDED USE OF THESE FEATURES.**

INPUT FUNCTION AK. AUTOMATIC NEUTRAL—DUAL INPUT WITH SERVICE BRAKE STATUS—WORK BRAKE ACTIVATED

USES: Provides for automatic selection of NEUTRAL and activation of PTO when work brake is applied. Automatically re-engages transmission when work brake is released (if service brake is depressed). Only re-engagement of forward is permitted. Reverse is not re-engaged.

VARIABLES TO SPECIFY: Max output rpm to enable Neutral, max engine rpm for PTO engagement, max engine rpm for PTO operation, max output rpm for PTO engagement, max output rpm for PTO operation.

VOCATIONS: Refuse packer, recycling truck

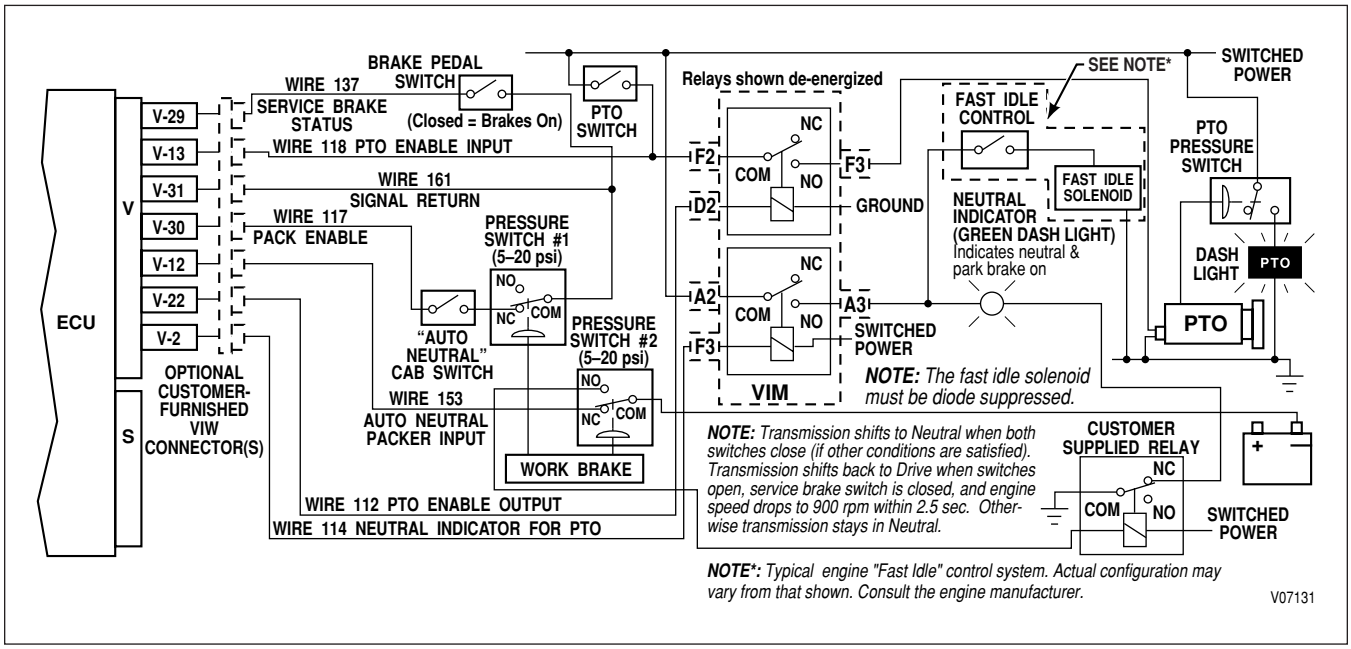

Figure P–40. Automatic Neutral—Dual Input With Service Brake Status—Work Brake Activated

Copyright © 2005 General Motors Corp.

https://truckmanualshub.com/

APPENDIX P—INPUT/OUTPUT FUNCTIONS

WARNING! **These schematics show the intended use of the specified controls features which have been validated in the configuration shown. Any miswiring or use of these features which differs from that shown could result in damage to equipment or property, personal injury, or loss of life. ALLISON TRANSMISSION IS NOT LIABLE FOR THE CONSEQUENCES ASSOCIATED WITH MISWIRING OR UNINTENDED USE OF THESE FEATURES.**

INPUT FUNCTION AK. AUTOMATIC NEUTRAL—DUAL INPUT WITH SERVICE BRAKE STATUS—EMERGENCY VEHICLE OPTION

USES: Provides for automatic selection of NEUTRAL when park brake is applied. Reselection of DRIVE or REVERSE is required. No automatic shift out of neutral when park brake is released.

VARIABLES TO SPECIFY: Max output rpm to enable Neutral.

VOCATIONS: Emergency vehicles

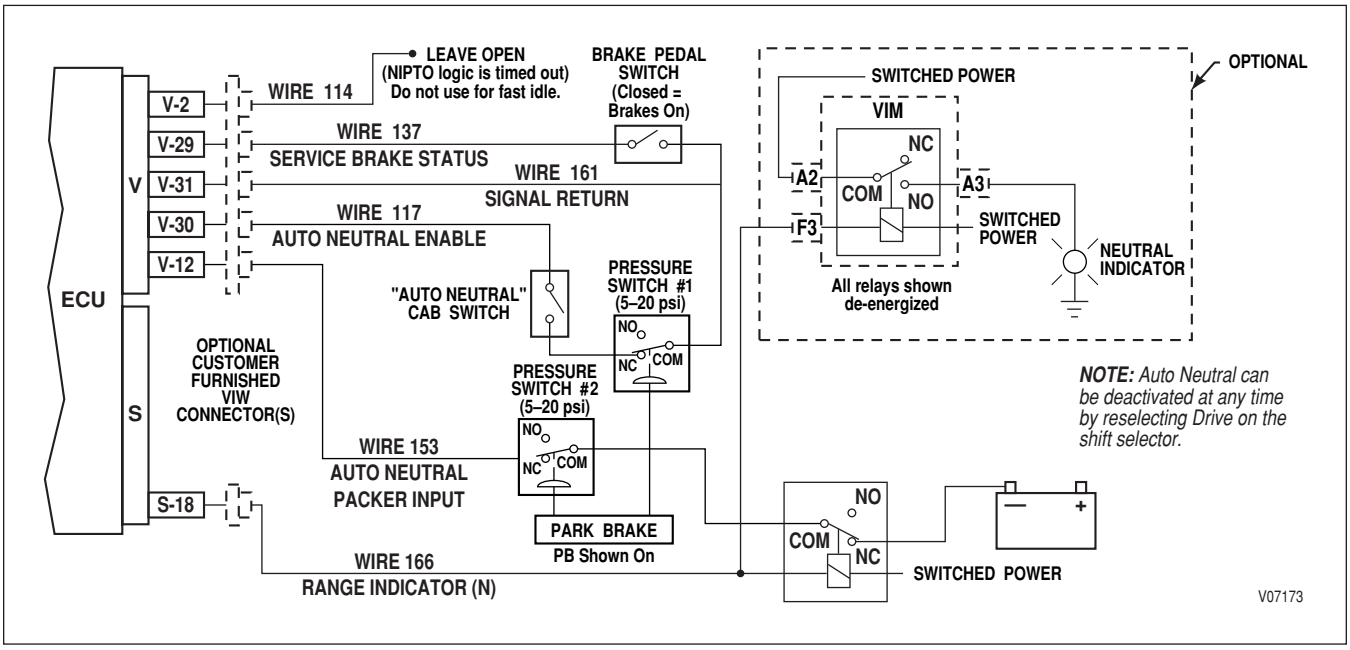

Figure P–41. Automatic Neutral—Dual Input With Service Brake Status—Emergency Vehicle Option

Copyright © 2005 General Motors Corp.

https://truckmanualshub.com/

APPENDIX P—INPUT/OUTPUT FUNCTIONS

WARNING! **These schematics show the intended use of the specified controls features which have been validated in the configuration shown. Any miswiring or use of these features which differs from that shown could result in damage to equipment or property, personal injury, or loss of life. ALLISON TRANSMISSION IS NOT LIABLE FOR THE CONSEQUENCES ASSOCIATED WITH MISWIRING OR UNINTENDED USE OF THESE FEATURES.**

INPUT FUNCTION AL. SHIFT SELECTOR TRANSITION AND SECONDARY SHIFT SCHEDULE WITHOUT AUTO NEUTRAL

USES: Provides for operator selection of dual shift selectors and shift schedules. Primary mode will always be active when shift selector 1 is selected, and secondary mode will always be active when shift selector 2 is selected.

VARIABLES TO SPECIFY: None

VOCATIONS: Dual-station refuse vehicles, crane carrier

WARNING! **If this function is enabled in the shift calibration, the function MUST be integrated into the vehicle wiring. If the function is available in the shift calibration but will not be used in the vehicle, it MUST be disabled in the calibration.**

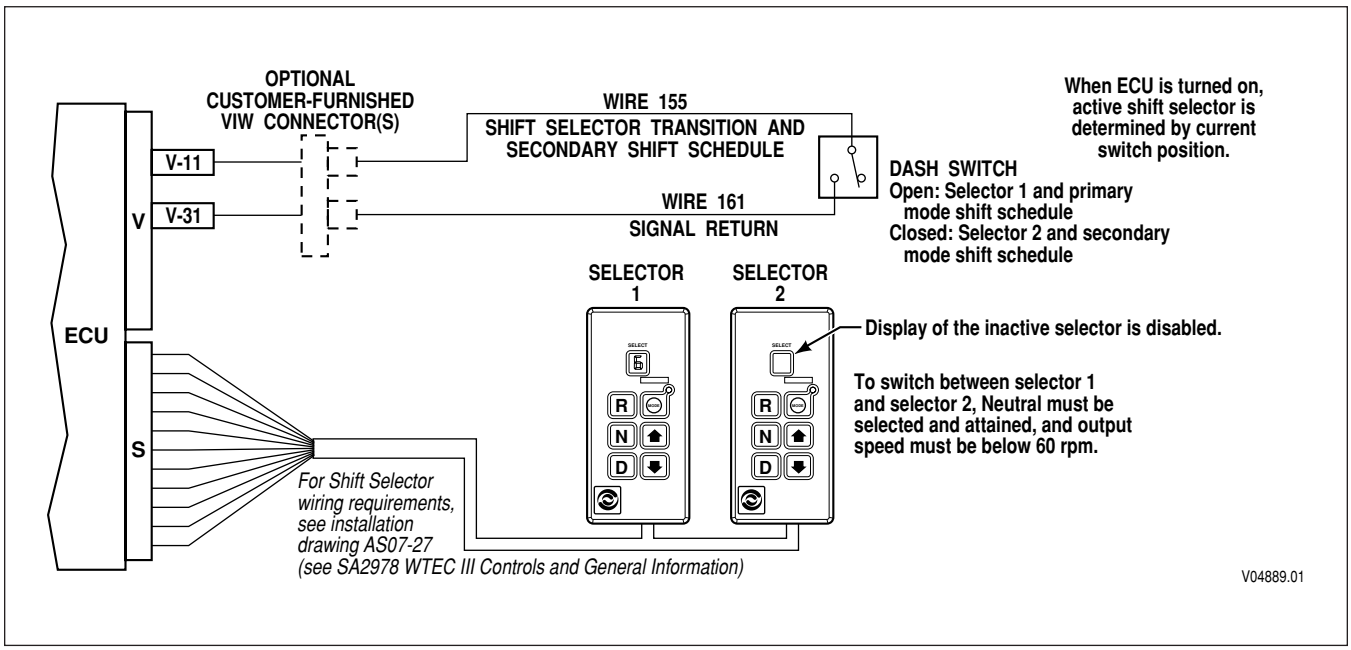

Figure P–42. Shift Selector Transition and Secondary Shift Schedule Without Auto Neutral

Copyright © 2005 General Motors Corp.

https://truckmanualshub.com/

APPENDIX P—INPUT/OUTPUT FUNCTIONS

WARNING! **These schematics show the intended use of the specified controls features which have been validated in the configuration shown. Any miswiring or use of these features which differs from that shown could result in damage to equipment or property, personal injury, or loss of life. ALLISON TRANSMISSION IS NOT LIABLE FOR THE CONSEQUENCES ASSOCIATED WITH MISWIRING OR UNINTENDED USE OF THESE FEATURES.**

INPUT FUNCTION AL. SHIFT SELECTOR TRANSITION AND SECONDARY SHIFT SCHEDULE WITH AUTO NEUTRAL

USES: Provides for operator selection of dual shift selectors and shift schedules. Primary mode will always be active when shift selector 1 is selected, and secondary mode will always be active when shift selector 2 is selected.

VARIABLES TO SPECIFY: None

VOCATIONS: Dual-station refuse vehicles

WARNING! **If this function is enabled in the shift calibration, the function MUST be integrated into the vehicle wiring. If the function is available in the shift calibration but will not be used in the vehicle, it MUST be disabled in the calibration.**

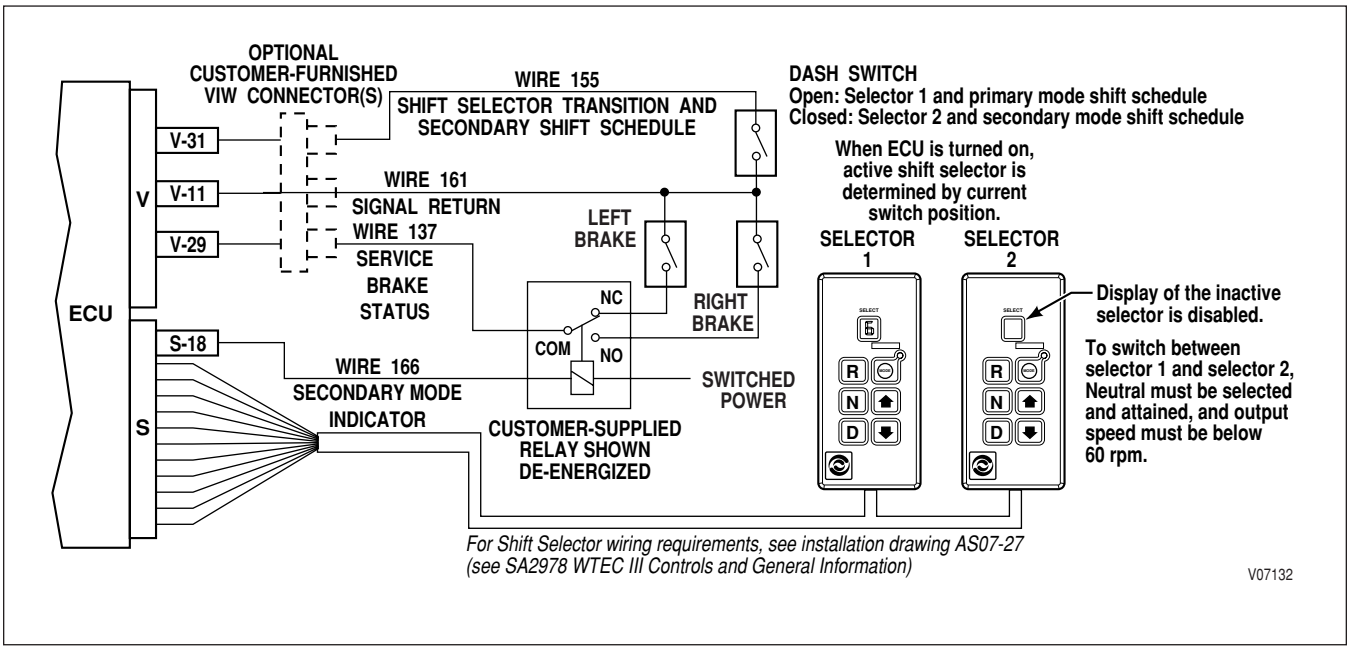

Figure P–43. Shift Selector Transition and Secondary Shift Schedule With Auto Neutral

Copyright © 2005 General Motors Corp.

https://truckmanualshub.com/

APPENDIX P—INPUT/OUTPUT FUNCTIONS

WARNING! **These schematics show the intended use of the specified controls features which have been validated in the configuration shown. Any miswiring or use of these features which differs from that shown could result in damage to equipment or property, personal injury, or loss of life. ALLISON TRANSMISSION IS NOT LIABLE FOR THE CONSEQUENCES ASSOCIATED WITH MISWIRING OR UNINTENDED USE OF THESE FEATURES.**

INPUT FUNCTION AM. REFUSE PACKER STEP SWITCH

USES: Limit operation of transmission to first range and inhibit reverse with presence of personnel on rear of vehicle.

VARIABLES TO SPECIFY: None

VOCATIONS: Refuse

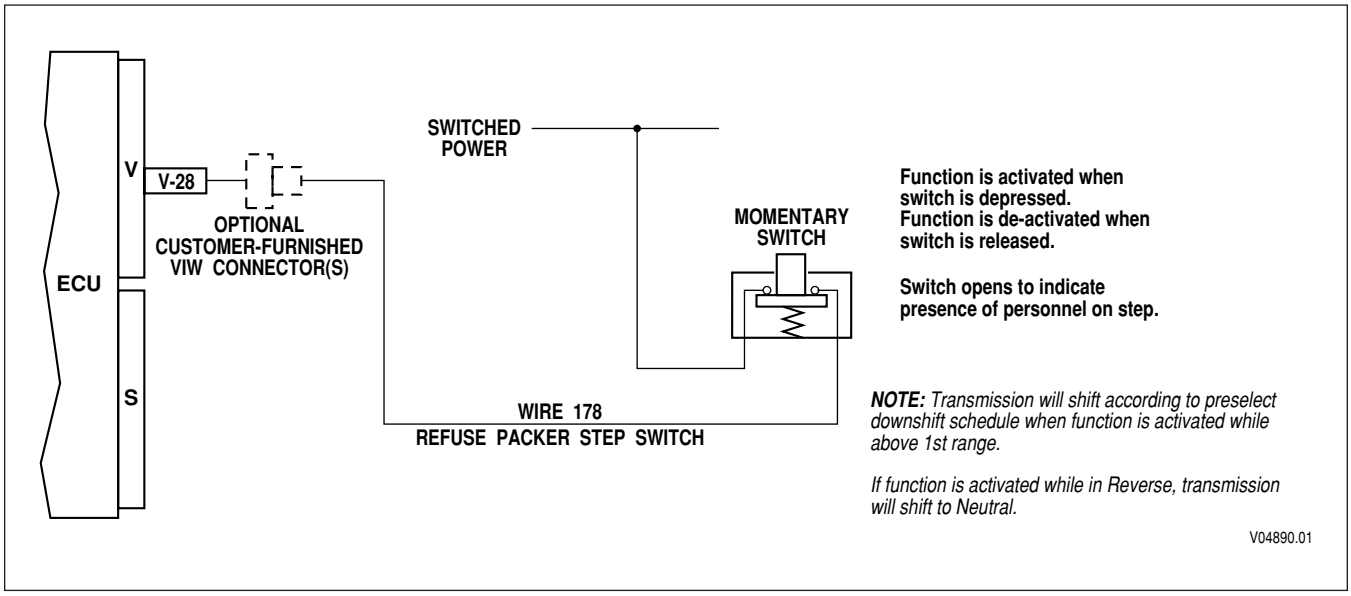

Figure P–44. Refuse Packer Step Switch

Copyright © 2005 General Motors Corp.

https://truckmanualshub.com/

APPENDIX P—INPUT/OUTPUT FUNCTIONS

WARNING! **These schematics show the intended use of the specified controls features which have been validated in the configuration shown. Any miswiring or use of these features which differs from that shown could result in damage to equipment or property, personal injury, or loss of life. ALLISON TRANSMISSION IS NOT LIABLE FOR THE CONSEQUENCES ASSOCIATED WITH MISWIRING OR UNINTENDED USE OF THESE FEATURES.**

INPUT FUNCTION AN. ISO 9141 ENABLE

USES: When this input is switched on, diagnostic information can be accessed through the ISO 9141 data link wire 159.

VARIABLES TO SPECIFY: None

VOCATIONS: Various

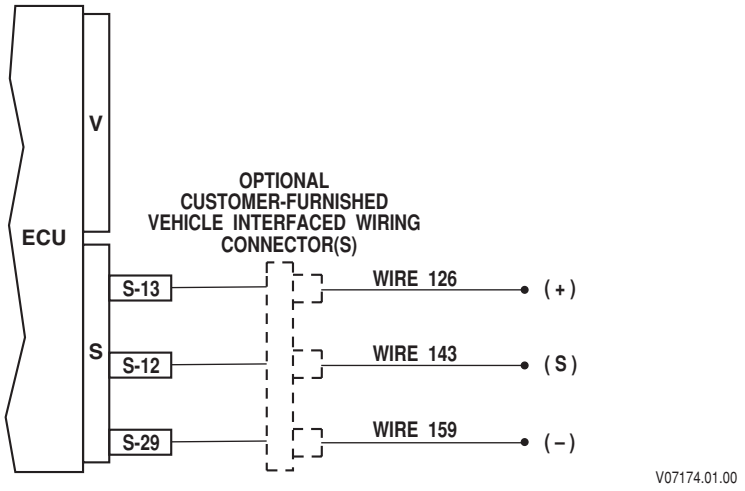

Figure P–45. ISO 9141 Enable

Copyright © 2005 General Motors Corp.

https://truckmanualshub.com/

APPENDIX P—INPUT/OUTPUT FUNCTIONS

WARNING! **These schematics show the intended use of the specified controls features which have been validated in the configuration shown. Any miswiring or use of these features which differs from that shown could result in damage to equipment or property, personal injury, or loss of life. ALLISON TRANSMISSION IS NOT LIABLE FOR THE CONSEQUENCES ASSOCIATED WITH MISWIRING OR UNINTENDED USE OF THESE FEATURES.**

INPUT FUNCTION AQ. SELECTOR DISPLAY BLANKING

USES: Blanks the digital display and mode on indicator on the lever or pushbutton shift selectors.

VARIABLES TO SPECIFY: None

VOCATIONS: Military wheeled vehicles

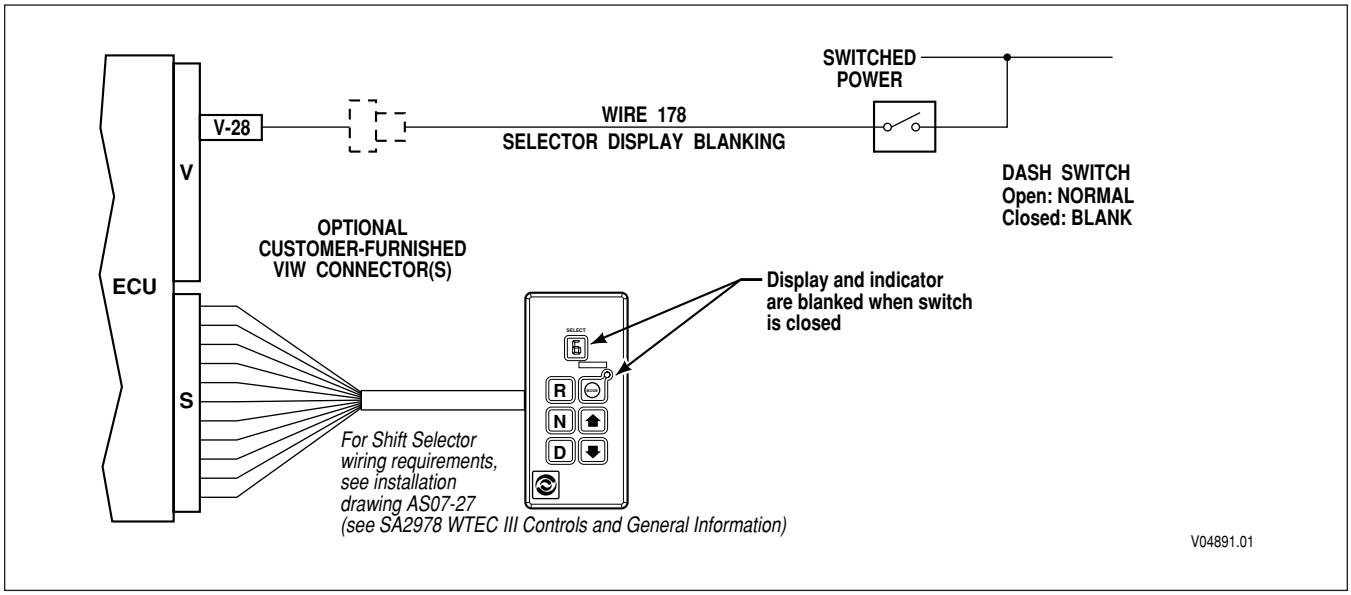

Figure P–46. Selector Display Blanking

Copyright © 2005 General Motors Corp.

https://truckmanualshub.com/

APPENDIX P—INPUT/OUTPUT FUNCTIONS

WARNING! **These schematics show the intended use of the specified controls features which have been validated in the configuration shown. Any miswiring or use of these features which differs from that shown could result in damage to equipment or property, personal injury, or loss of life. ALLISON TRANSMISSION IS NOT LIABLE FOR THE CONSEQUENCES ASSOCIATED WITH MISWIRING OR UNINTENDED USE OF THESE FEATURES.**

INPUT FUNCTION AS. REDUCED ENGINE LOAD AT STOP (RELS)

USES: Automatically activates Reduced Engine Load at Stop (RELS) when vehicle service brakes are applied, vehicle is stopped, and throttle is closed. RELS deactivates when the service brakes are released, or the throttle is advanced, or Drive is selected at the shift selector. If an “Automatic Neutral” input is activated, RELS will be deactivated.

VARIABLES TO SPECIFY: None

VOCATIONS: Transit Bus and Tour Coach

Please request Engineering Memorandum 58 (EM58) from your Allison Representative.

Copyright © 2005 General Motors Corp.

https://truckmanualshub.com/

APPENDIX P—INPUT/OUTPUT FUNCTIONS

WARNING! **These schematics show the intended use of the specified controls features which have been validated in the configuration shown. Any miswiring or use of these features which differs from that shown could result in damage to equipment or property, personal injury, or loss of life. ALLISON TRANSMISSION IS NOT LIABLE FOR THE CONSEQUENCES ASSOCIATED WITH MISWIRING OR UNINTENDED USE OF THESE FEATURES.**

OUTPUT FUNCTION A. ENGINE BRAKE ENABLE

USES: Used with engine brakes to signal the ECU that the brake is active and to provide increased braking by preselecting a lower range. Also prevents engagement of engine brake with throttle > 0 or lockup OFF.

VARIABLES TO SPECIFY: Preselect range. Standard value is second range.

VOCATIONS: Various

Refer to "*Inputs H and I: Engine Brake Enable and Preselect Request.*" This output is inverted when used with Input H.

Copyright © 2005 General Motors Corp.

https://truckmanualshub.com/

APPENDIX P—INPUT/OUTPUT FUNCTIONS

WARNING! **These schematics show the intended use of the specified controls features which have been validated in the configuration shown. Any miswiring or use of these features which differs from that shown could result in damage to equipment or property, personal injury, or loss of life. ALLISON TRANSMISSION IS NOT LIABLE FOR THE CONSEQUENCES ASSOCIATED WITH MISWIRING OR UNINTENDED USE OF THESE FEATURES.**

OUTPUT FUNCTION BB. RELS WITH SERVICE BRAKE STATUS

USES: Combines functions AA and AS on a single wire.

VARIABLES TO SPECIFY: None

VOCATIONS: Transit Bus and Tour Coach

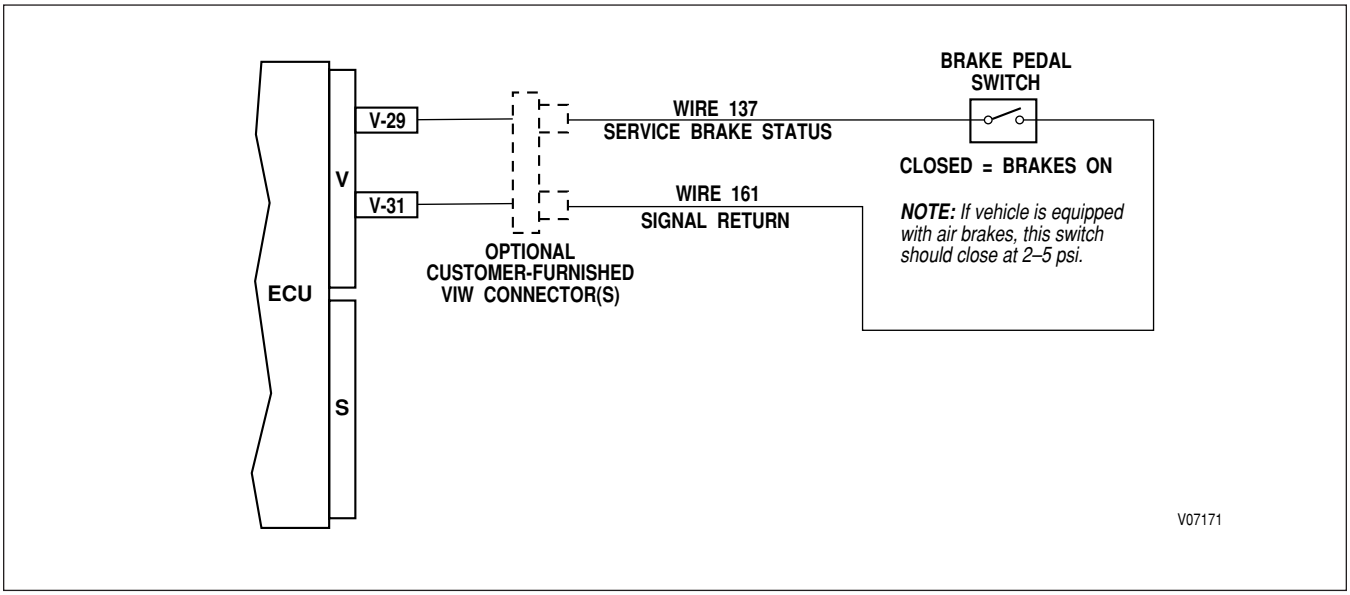

Figure P–47. RELS with Service Brake Status

Copyright © 2005 General Motors Corp.

https://truckmanualshub.com/

APPENDIX P—INPUT/OUTPUT FUNCTIONS

WARNING! **These schematics show the intended use of the specified controls features which have been validated in the configuration shown. Any miswiring or use of these features which differs from that shown could result in damage to equipment or property, personal injury, or loss of life. ALLISON TRANSMISSION IS NOT LIABLE FOR THE CONSEQUENCES ASSOCIATED WITH MISWIRING OR UNINTENDED USE OF THESE FEATURES.**

OUTPUT FUNCTION B. SUMP/RETARDER TEMPERATURE INDICATOR

USES: Turn on dash indicator when transmission sump or retarder-out temperature has exceeded specified limits.

VARIABLES TO SPECIFY: None

VOCATIONS: Various

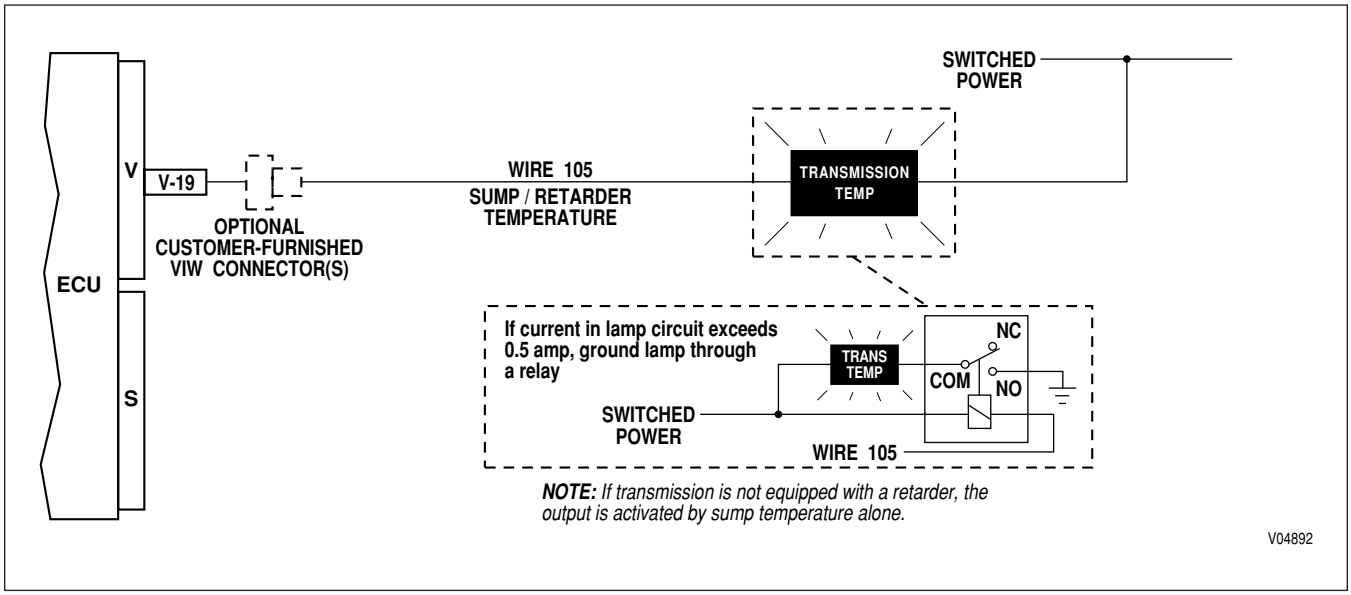

Figure P–48. Sump/Retarder Temperature Indicator

This function can be provided by a J-1939 message.

Copyright © 2005 General Motors Corp.

https://truckmanualshub.com/

APPENDIX P—INPUT/OUTPUT FUNCTIONS

WARNING! **These schematics show the intended use of the specified controls features which have been validated in the configuration shown. Any miswiring or use of these features which differs from that shown could result in damage to equipment or property, personal injury, or loss of life. ALLISON TRANSMISSION IS NOT LIABLE FOR THE CONSEQUENCES ASSOCIATED WITH MISWIRING OR UNINTENDED USE OF THESE FEATURES.**

OUTPUT FUNCTION C. RANGE INDICATOR

USES: Used with auxiliary vehicle systems to permit operation only in specified transmission range(s).

VARIABLES TO SPECIFY: Range or ranges to be indicated

VOCATIONS: Various

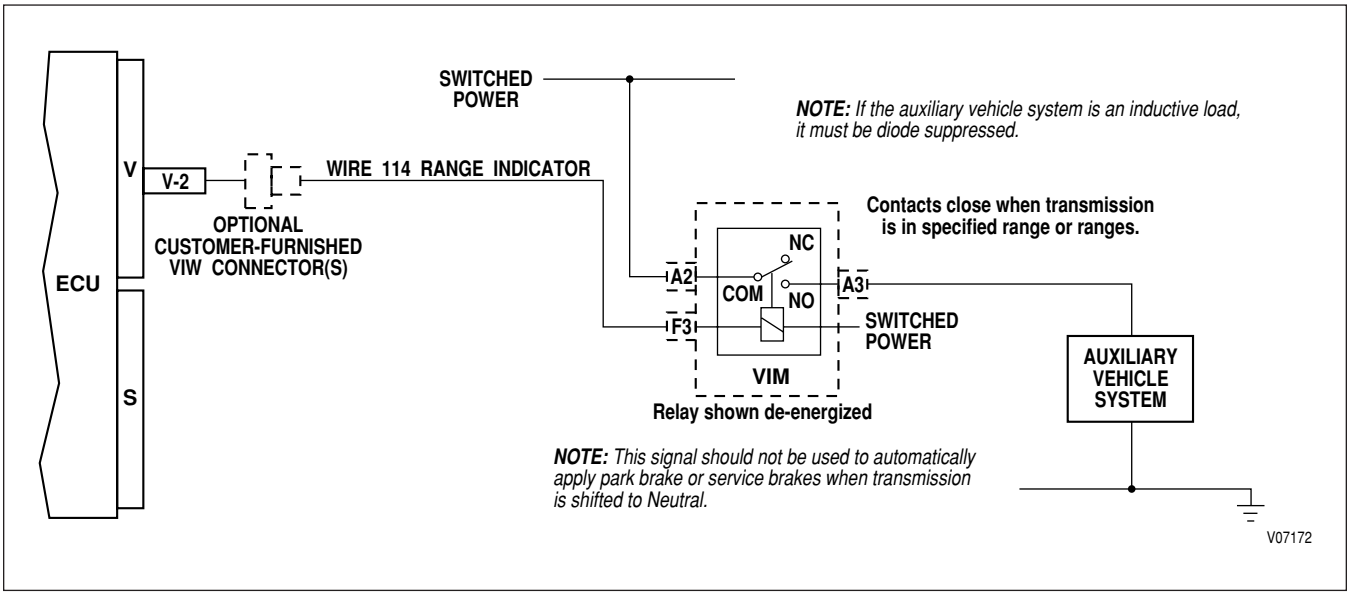

Figure P–49. Range Indicator

Copyright © 2005 General Motors Corp.

https://truckmanualshub.com/

APPENDIX P—INPUT/OUTPUT FUNCTIONS

WARNING! **These schematics show the intended use of the specified controls features which have been validated in the configuration shown. Any miswiring or use of these features which differs from that shown could result in damage to equipment or property, personal injury, or loss of life. ALLISON TRANSMISSION IS NOT LIABLE FOR THE CONSEQUENCES ASSOCIATED WITH MISWIRING OR UNINTENDED USE OF THESE FEATURES.**

OUTPUT FUNCTION D. OUTPUT SPEED INDICATOR—A

USES: To signal that the transmission output shaft has exceeded a specified value.

VARIABLES TO SPECIFY: Rpm to turn output ON and to turn output OFF. The ON value must be higher than the OFF value.

VOCATIONS: Various

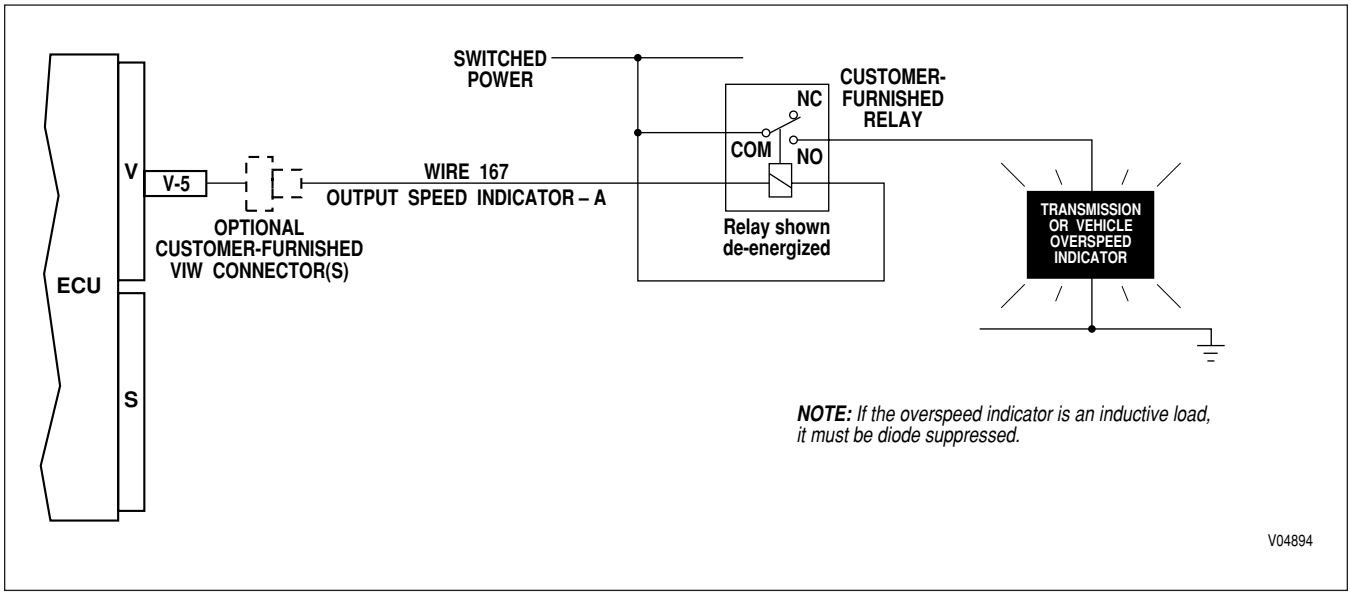

Figure P–50. Output Speed Indicator—A

Copyright © 2005 General Motors Corp.

https://truckmanualshub.com/

APPENDIX P—INPUT/OUTPUT FUNCTIONS

WARNING! **These schematics show the intended use of the specified controls features which have been validated in the configuration shown. Any miswiring or use of these features which differs from that shown could result in damage to equipment or property, personal injury, or loss of life. ALLISON TRANSMISSION IS NOT LIABLE FOR THE CONSEQUENCES ASSOCIATED WITH MISWIRING OR UNINTENDED USE OF THESE FEATURES.**

OUTPUT FUNCTION E. OUTPUT SPEED INDICATOR—B

USES: To signal that the transmission output shaft has exceeded a specified value.

VARIABLES TO SPECIFY: Rpm to turn output ON and to turn output OFF. The ON value must be higher than the OFF value.

VOCATIONS: Various

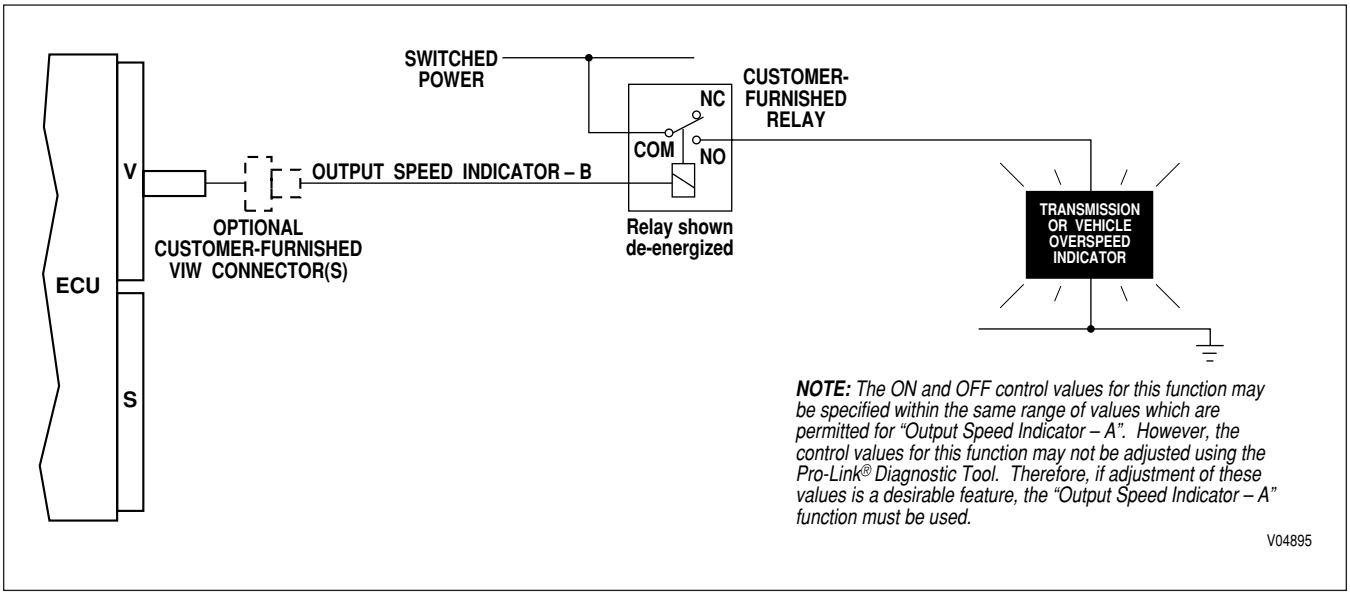

Figure P–51. Output Speed Indicator—B

This function can be provided by a J1939 message.

 Copyright © 2005 General Motors Corp.

https://truckmanualshub.com/

APPENDIX P—INPUT/OUTPUT FUNCTIONS

WARNING! **These schematics show the intended use of the specified controls features which have been validated in the configuration shown. Any miswiring or use of these features which differs from that shown could result in damage to equipment or property, personal injury, or loss of life. ALLISON TRANSMISSION IS NOT LIABLE FOR THE CONSEQUENCES ASSOCIATED WITH MISWIRING OR UNINTENDED USE OF THESE FEATURES.**

OUTPUT FUNCTION F. PTO OVERSPEED INDICATOR

USES: Turn on dash light when PTO reaches an overspeed condition.

VARIABLES TO SPECIFY: Rpm to turn ON; rpm to turn OFF.

VOCATIONS: Various

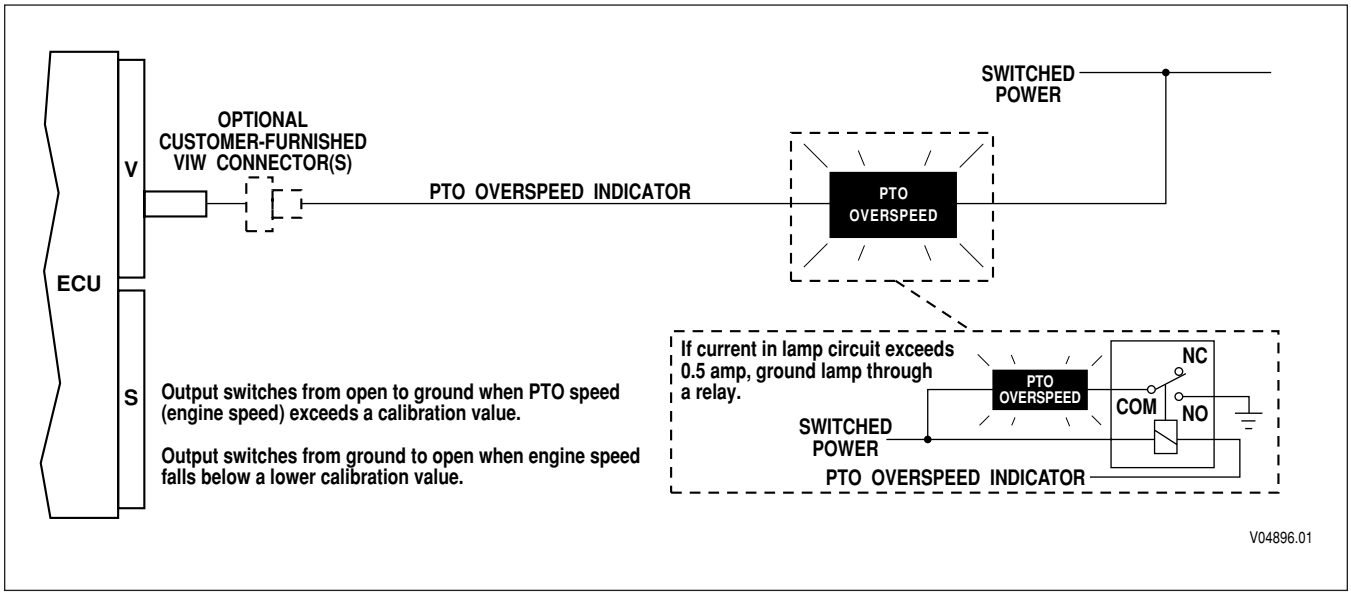

Figure P–52. PTO Overspeed Indicator

Copyright © 2005 General Motors Corp.

https://truckmanualshub.com/

APPENDIX P—INPUT/OUTPUT FUNCTIONS

WARNING! **These schematics show the intended use of the specified controls features which have been validated in the configuration shown. Any miswiring or use of these features which differs from that shown could result in damage to equipment or property, personal injury, or loss of life. ALLISON TRANSMISSION IS NOT LIABLE FOR THE CONSEQUENCES ASSOCIATED WITH MISWIRING OR UNINTENDED USE OF THESE FEATURES.**

OUTPUT FUNCTION G. PTO ENABLE

USES: Used with PTO Enable Input C. Permits PTO to be engaged only when engine speed and output speed are in allowable range and throttle is low. Also disengages PTO if speeds are exceeded.

VARIABLES TO SPECIFY: Minimum and maximum engine speed for engagement, maximum engine speed for allowable operation, minimum and maximum output speed for engagement, maximum output speed for allowable operation.

VOCATIONS: Various (with use of PTO)

Refer to *"Input C: PTO Enable"* and *"Input AG: Automatic Neutral—Dual Input."*

Copyright © 2005 General Motors Corp.

https://truckmanualshub.com/

APPENDIX P—INPUT/OUTPUT FUNCTIONS

WARNING! **These schematics show the intended use of the specified controls features which have been validated in the configuration shown. Any miswiring or use of these features which differs from that shown could result in damage to equipment or property, personal injury, or loss of life. ALLISON TRANSMISSION IS NOT LIABLE FOR THE CONSEQUENCES ASSOCIATED WITH MISWIRING OR UNINTENDED USE OF THESE FEATURES.**

OUTPUT FUNCTION I. ENGINE OVERSPEED INDICATOR USING VIM

USES: To turn on dash light when engine reaches an overspeed condition.

VARIABLES TO SPECIFY: Rpm to turn ON; rpm to turn OFF.

VOCATIONS: Various

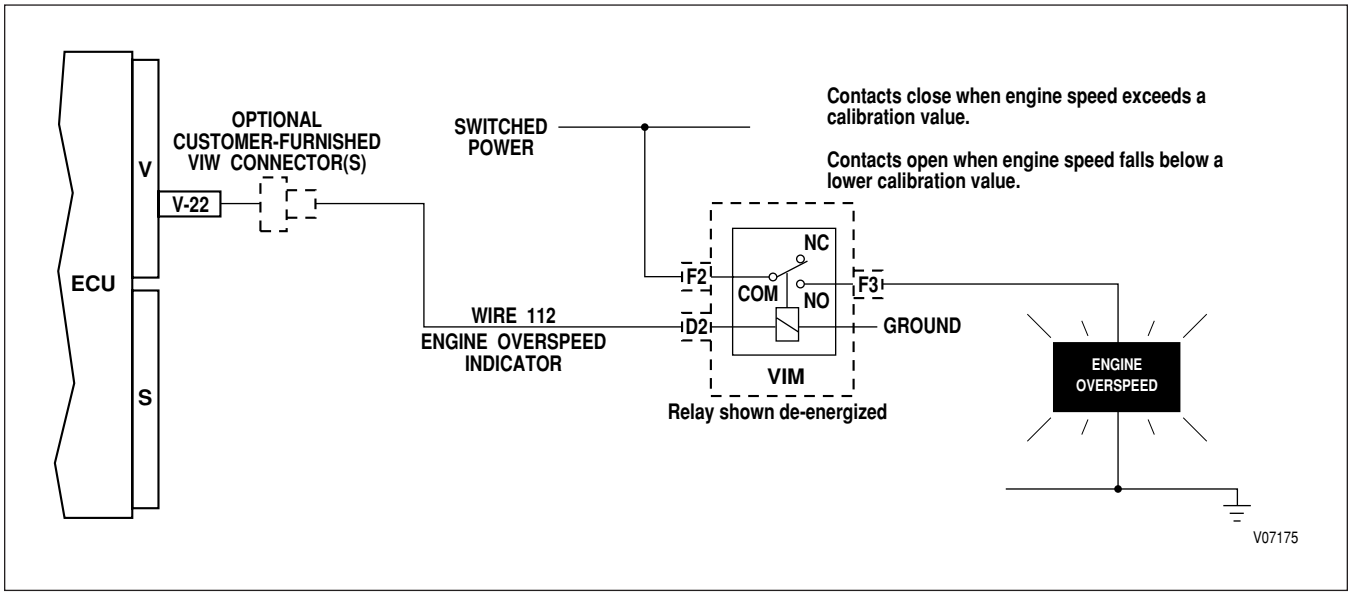

Figure P–53. Engine Overspeed Indicator Using VIM

Copyright © 2005 General Motors Corp.

https://truckmanualshub.com/

APPENDIX P—INPUT/OUTPUT FUNCTIONS

WARNING! **These schematics show the intended use of the specified controls features which have been validated in the configuration shown. Any miswiring or use of these features which differs from that shown could result in damage to equipment or property, personal injury, or loss of life. ALLISON TRANSMISSION IS NOT LIABLE FOR THE CONSEQUENCES ASSOCIATED WITH MISWIRING OR UNINTENDED USE OF THESE FEATURES.**

OUTPUT FUNCTION I. ENGINE OVERSPEED INDICATOR WITHOUT VIM—SWITCHED TO GROUND

USES: To turn on dash light when engine reaches an overspeed condition.

VARIABLES TO SPECIFY: Rpm to turn ON; rpm to turn OFF.

VOCATIONS: Various

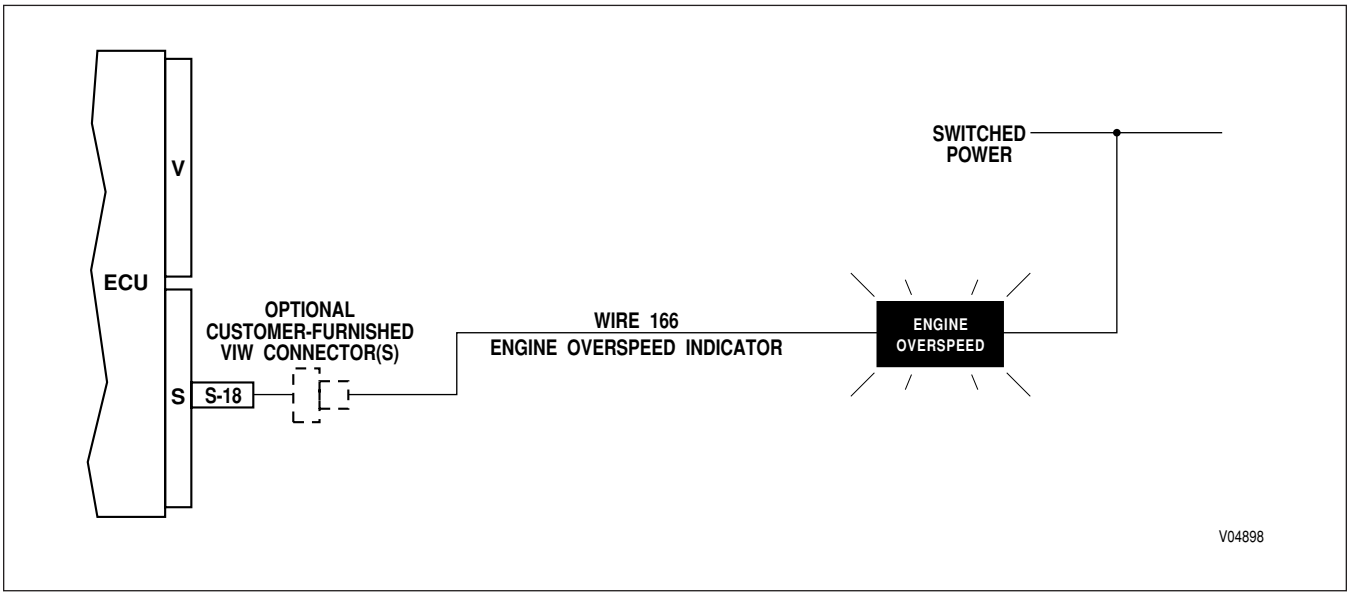

Figure P–54. Engine Overspeed Indicator Without VIM—Switched to Ground

Copyright © 2005 General Motors Corp.

https://truckmanualshub.com/

APPENDIX P—INPUT/OUTPUT FUNCTIONS

WARNING!	**These schematics show the intended use of the specified controls features which have been validated in the configuration shown. Any miswiring or use of these features which differs from that shown could result in damage to equipment or property, personal injury, or loss of life. ALLISON TRANSMISSION IS NOT LIABLE FOR THE CONSEQUENCES ASSOCIATED WITH MISWIRING OR UNINTENDED USE OF THESE FEATURES.**

OUTPUT FUNCTION J. TWO SPEED AXLE ENABLE

USES: Used with Two Speed Axle Enable input to provide a speed protected engagement of low axle.

VARIABLES TO SPECIFY: None

VOCATIONS: Various

Refer to *"Input Q: Two Speed Axle Enable"*.

Copyright © 2005 General Motors Corp.

https://truckmanualshub.com/

APPENDIX P—INPUT/OUTPUT FUNCTIONS

WARNING! **These schematics show the intended use of the specified controls features which have been validated in the configuration shown. Any miswiring or use of these features which differs from that shown could result in damage to equipment or property, personal injury, or loss of life. ALLISON TRANSMISSION IS NOT LIABLE FOR THE CONSEQUENCES ASSOCIATED WITH MISWIRING OR UNINTENDED USE OF THESE FEATURES.**

OUTPUT FUNCTION K. LOCKUP INDICATOR

USES: Turn on dash indicator when transmission lockup clutch is engaged. Used to indicate when maximum engine braking is available.

VARIABLES TO SPECIFY: None

VOCATIONS: Various

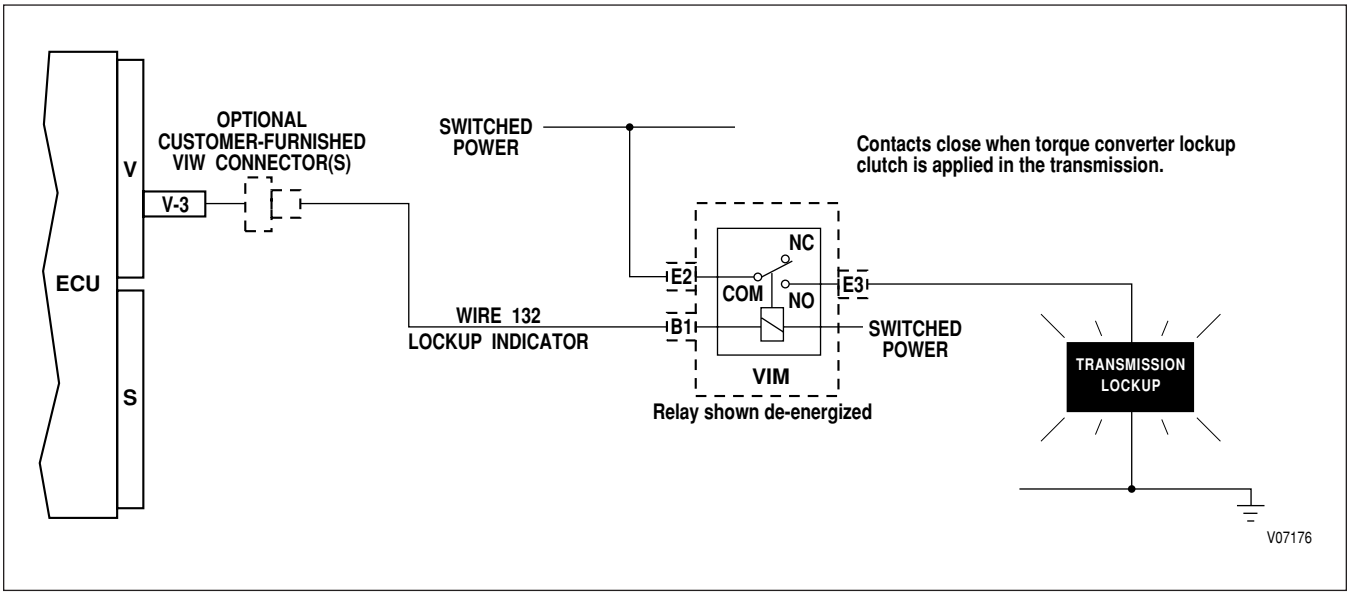

Figure P–55. Lockup Indicator

Copyright © 2005 General Motors Corp.

https://truckmanualshub.com/

APPENDIX P—INPUT/OUTPUT FUNCTIONS

WARNING! **These schematics show the intended use of the specified controls features which have been validated in the configuration shown. Any miswiring or use of these features which differs from that shown could result in damage to equipment or property, personal injury, or loss of life. ALLISON TRANSMISSION IS NOT LIABLE FOR THE CONSEQUENCES ASSOCIATED WITH MISWIRING OR UNINTENDED USE OF THESE FEATURES.**

OUTPUT FUNCTION N. SECONDARY MODE INDICATOR

USES: To indicate that Secondary Mode is active.

VARIABLES TO SPECIFY: None

VOCATIONS: Various

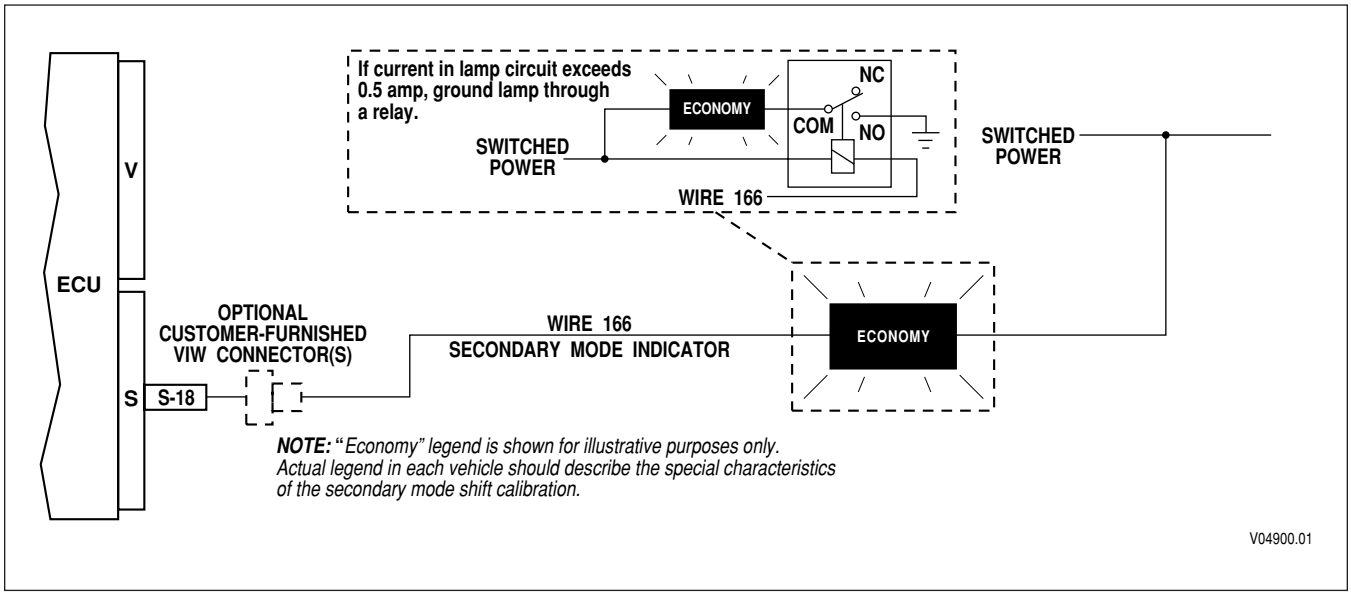

Figure P–56. Secondary Mode Indicator

This function can be provided by a J1939 message.

Copyright © 2005 General Motors Corp.

https://truckmanualshub.com/

APPENDIX P—INPUT/OUTPUT FUNCTIONS

WARNING! **These schematics show the intended use of the specified controls features which have been validated in the configuration shown. Any miswiring or use of these features which differs from that shown could result in damage to equipment or property, personal injury, or loss of life. ALLISON TRANSMISSION IS NOT LIABLE FOR THE CONSEQUENCES ASSOCIATED WITH MISWIRING OR UNINTENDED USE OF THESE FEATURES.**

OUTPUT FUNCTION O. SERVICE INDICATOR

USES: This function is required with "*Input Function F: Dual Input Auxiliary Function Range Inhibit"* to indicate that there is a problem with the vehicle wiring for the input signal. This output signal is typically used to turn on a dash-mounted light to indicate to the operator or service personnel to check for diagnostic codes stored in the ECU.

VARIABLES TO SPECIFY: None

VOCATIONS: Various

Refer to *"Input F: Dual Input Auxiliary Function Range Inhibit."*

Copyright © 2005 General Motors Corp.

https://truckmanualshub.com/

APPENDIX P—INPUT/OUTPUT FUNCTIONS

WARNING! **These schematics show the intended use of the specified controls features which have been validated in the configuration shown. Any miswiring or use of these features which differs from that shown could result in damage to equipment or property, personal injury, or loss of life. ALLISON TRANSMISSION IS NOT LIABLE FOR THE CONSEQUENCES ASSOCIATED WITH MISWIRING OR UNINTENDED USE OF THESE FEATURES.**

OUTPUT FUNCTION Q. RETARDER INDICATOR

USES: Signals that the retarder is active. Typically used to turn on the vehicle brake lights when the retarder is in use.

VARIABLES TO SPECIFY: None

VOCATIONS: Various

This function is used in conjunction with Input Function “Z”, Retarder Enable. Refer to schematic for Input Function “Z”, noting the use of wire 125.

Copyright © 2005 General Motors Corp.

https://truckmanualshub.com/

APPENDIX P—INPUT/OUTPUT FUNCTIONS

WARNING! **These schematics show the intended use of the specified controls features which have been validated in the configuration shown. Any miswiring or use of these features which differs from that shown could result in damage to equipment or property, personal injury, or loss of life. ALLISON TRANSMISSION IS NOT LIABLE FOR THE CONSEQUENCES ASSOCIATED WITH MISWIRING OR UNINTENDED USE OF THESE FEATURES.**

OUTPUT FUNCTION R. DIFFERENTIAL CLUTCH INDICATOR

USES: Signals the status of the differential clutch in the3000 Product Family 7-Speed transfer case.

VARIABLES TO SPECIFY: None

VOCATIONS: Various. This function is required for all 3000 Product Family 7-Speed transmissions and used only with that model.

Refer to *"Input AF: Differential Clutch Request."*

Copyright © 2005 General Motors Corp.

https://truckmanualshub.com/

APPENDIX P—INPUT/OUTPUT FUNCTIONS

WARNING! **These schematics show the intended use of the specified controls features which have been validated in the configuration shown. Any miswiring or use of these features which differs from that shown could result in damage to equipment or property, personal injury, or loss of life. ALLISON TRANSMISSION IS NOT LIABLE FOR THE CONSEQUENCES ASSOCIATED WITH MISWIRING OR UNINTENDED USE OF THESE FEATURES.**

OUTPUT FUNCTION S. NEUTRAL INDICATOR FOR PTO AND PTO ENABLE—PACK-ON-THE-FLY OPTION

USES: Provides for fast idle operation in neutral, “pack-on-the-fly”, and PTO engagement with overspeed protection.

VARIABLES TO SPECIFY: Max engine rpm for PTO engagement, max engine rpm for PTO operation, max output rpm for PTO engagement, max output rpm for PTO operation.

VOCATIONS: Refuse packer, recycling truck.

SYSTEM OPERATION:

Operator selects NEUTRAL to enable fast idle.

Transmission shifts to neutral if throttle and output speed are low.

When DRIVE is re-selected, fast idle is interrupted and transmission shifts to drive if engine speed drops below 900 rpm within approximately two seconds.

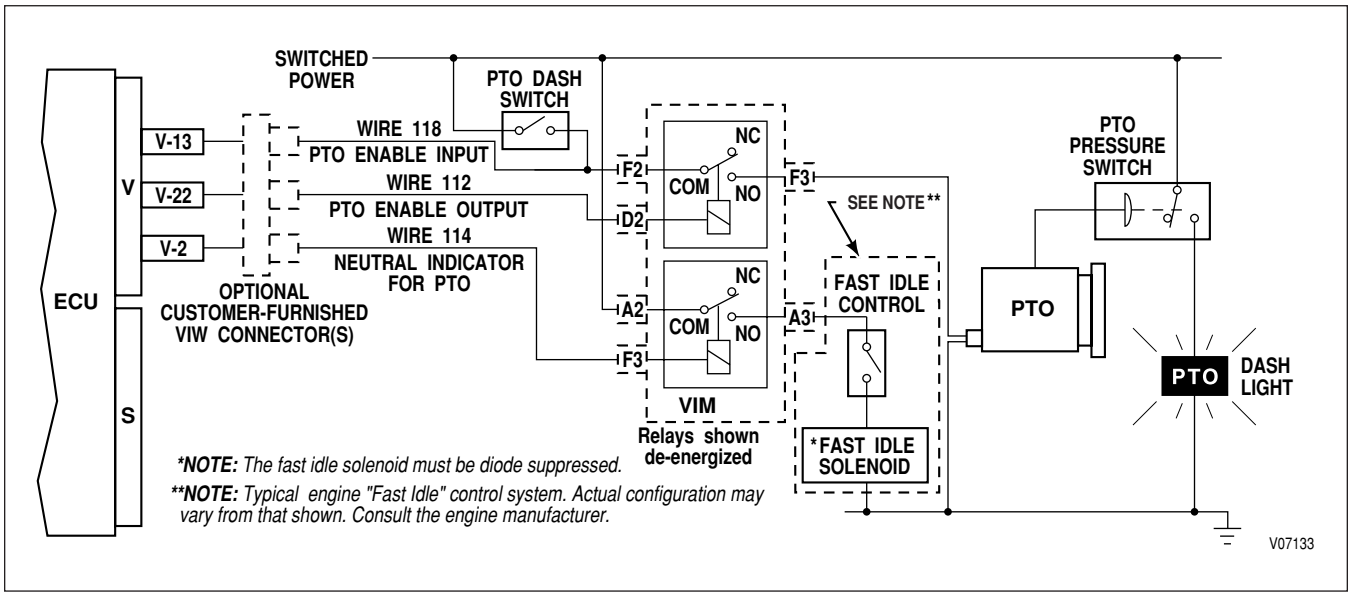

Figure P–57. Neutral Indicator for PTO and PTO Enable—Pack-On-The-Fly Option

Copyright © 2005 General Motors Corp.

https://truckmanualshub.com/

APPENDIX P—INPUT/OUTPUT FUNCTIONS

WARNING! **These schematics show the intended use of the specified controls features which have been validated in the configuration shown. Any miswiring or use of these features which differs from that shown could result in damage to equipment or property, personal injury, or loss of life. ALLISON TRANSMISSION IS NOT LIABLE FOR THE CONSEQUENCES ASSOCIATED WITH MISWIRING OR UNINTENDED USE OF THESE FEATURES.**

OUTPUT FUNCTION S. NEUTRAL INDICATOR FOR PTO AND PTO ENABLE—NEUTRAL OPERATION ONLY

USES: Provides for fast idle operation in neutral, and PTO engagement with overspeed protection.

VARIABLES TO SPECIFY: Max engine rpm for PTO engagement, max engine rpm for PTO operation, max output rpm for PTO engagement, max output rpm for PTO operation.

VOCATIONS: Refuse packer, recycling truck.

SYSTEM OPERATION:

Operator selects NEUTRAL to enable fast idle.

Transmission shifts to neutral if throttle and output speed are low.

When DRIVE is re-selected, fast idle is interrupted and transmission shifts to drive if engine speed drops below 900 rpm within approximately two seconds.

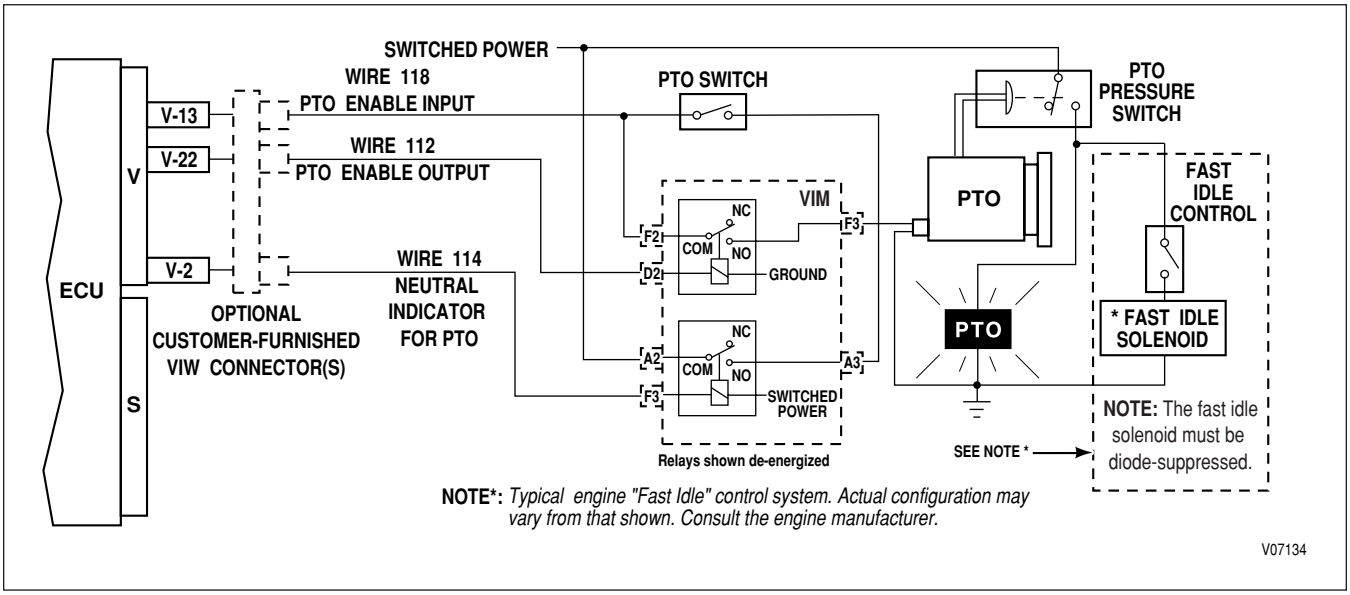

Figure P–58. Neutral Indicator for PTO and PTO Enable—Neutral Operation Only

Copyright © 2005 General Motors Corp.

https://truckmanualshub.com/

APPENDIX Q—TRANSID 2 AND 3 THERMISTOR TROUBLESHOOTING INFORMATION

Resistance vs. Temperature Characteristics

Graph Q–1 is a graph of the temperature indicated by the resistance measured in the new and the old thermistors. The new thermistors have a negative temperature coefficient which means the indicated temperature increases as the measured resistance decreases within a range of about 200,000 Ohms (Ω) down to about 50Ω for the sump thermistor and about 400,000Ω down to about 60Ω for the retarder thermistor. The old thermistors (sump and retarder) have a positive temperature coefficient which means that the indicated temperature increases as the measured resistance increases within a range from about 500Ω up to about 2500Ω. The two thermistors require different ECU calibrations. Mismatches between the ECU and the transmission can cause performance problems or diagnostic codes to be set. This is why the TID 2 transmission is not compatible with the WTEC II ECU (V6E, V7, or V7A) or with the WTEC III ECU (V8). The proper shift and temperature characteristics for both the TID 1 and the TID 2 transmission are calibrated in the V8A and later WTEC III ECU and the proper calibration will be activated by the ECU according to the TransID wire (wire 195) connection point in the internal harness.

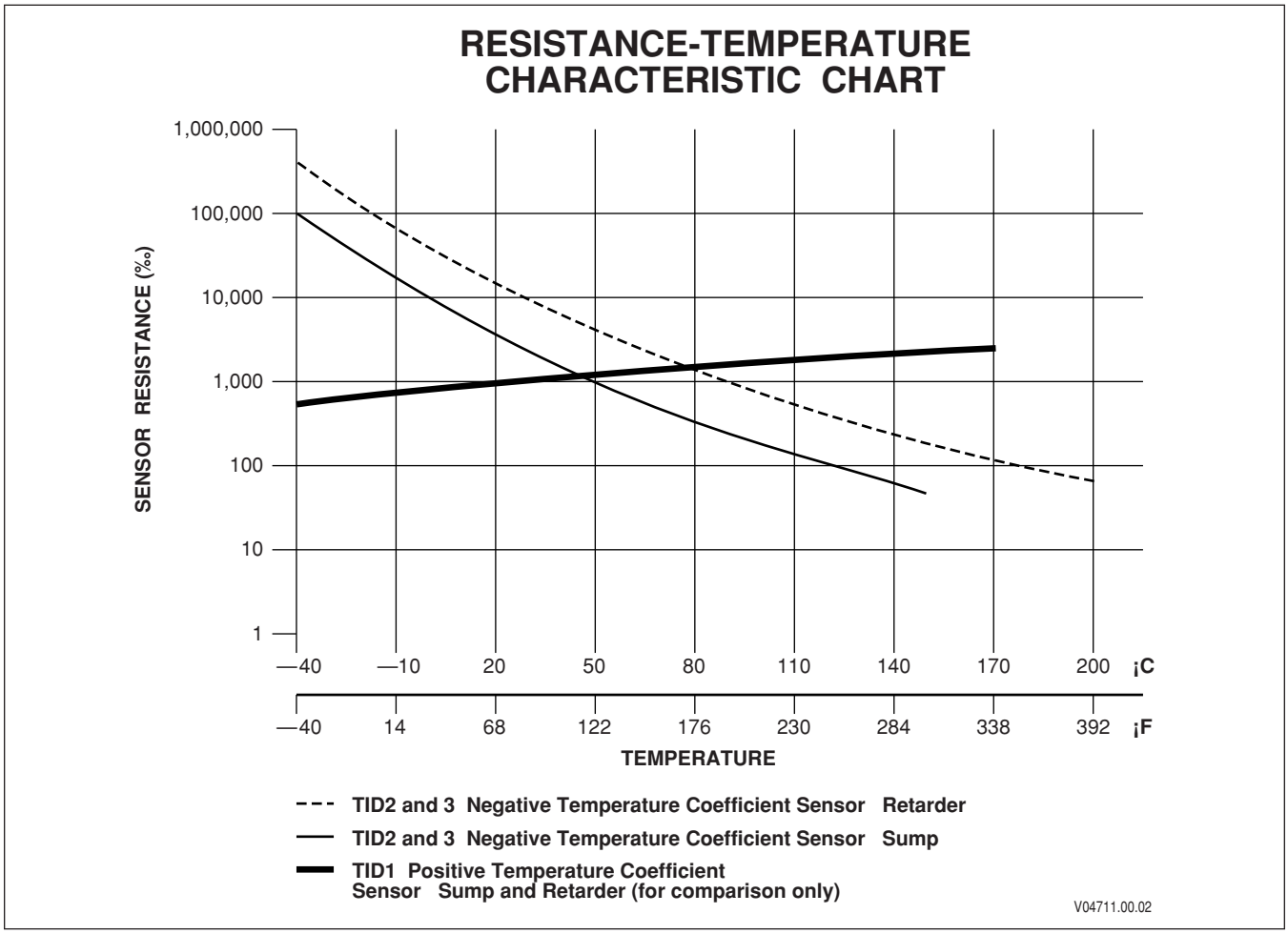

Graph Q–1. TransID Thermistor Characteristics

NOTE: ***Look carefully at the graph. The scale for the resistance (on the left side) is not constant (linear). It is logarithmic which means it can display a great range of values within a small space. Each section of the graph is ten units, but the units vary from 1 to 100,000 Ohms. The range of resistance for the old thermistor is very small when compared with that of the new thermistors.***

The following table shows the range of resistance values that correspond to either retarder or sump fluid temperature shown in one degree increments over the operating range of the thermistors.

Copyright © 2005 General Motors Corp.

https://truckmanualshub.com/

APPENDIX Q—TRANSID 2 AND 3 THERMISTOR TROUBLESHOOTING INFORMATION

TRANSID 2 THERMISTORS—RESISTANCE (OHMS) VS. TEMPERATURE

Retarder Thermistor					Sump Thermistor				
Degree C	Degree F	Lo Ohms	Nom Ohms	Hi Ohms	Degree C	Degree F	Lo Ohms	Nom Ohms	Hi Ohms
					–50	–58	182288	202642	226183
					–49	–56.2	169859	188561	210206
					–48	–54.4	158357	175549	195459
					–47	–52.6	147708	163519	181840
					–46	–50.8	137844	152390	169255
					–45	–49	128702	142089	157621
					–44	–47.2	120224	132550	146860
					–43	–45.4	112359	123711	136900
					–42	–43.6	105057	115517	127678
					–41	–41.8	98276	107917	119134
–40	–40	352399	402392	452385	–40	–40	95956	100865	107181
–39	–38.2	329878	376270	422662	–39	–38.2	89769	94317	100181
–38	–36.4	308936	352005	395074	–38	–36.4	84019	88235	93681
–37	–34.6	289453	329454	369456	–37	–34.6	78674	82582	87642
–36	–32.8	271318	308486	345655	–36	–32.8	73701	77326	82030
–35	–31	254431	288981	323531	–35	–31	69073	72437	76811
–34	–29.2	238698	270827	302956	–34	–29.2	64764	67886	71956
–33	–27.4	224033	253923	283814	–33	–27.4	60749	63649	67497
–32	–25.6	210358	238177	265995	–32	–25.6	57008	59702	63228
–31	–23.8	197600	223501	249402	–31	–23.8	53520	56024	59308
–30	–22	185693	209817	233941	–30	–22	50266	52594	55654
–29	–20.2	174574	197053	219531	–29	–20.2	47229	49394	52247
–28	–18.4	164188	185140	206093	–28	–18.4	44394	46408	49069
–27	–16.6	154480	174018	193556	–27	–16.6	41746	43620	46102
–26	–14.8	145404	163630	181856	–26	–14.8	39271	41016	43332
–25	–13	136915	153923	170930	–25	–13	36958	38583	40745
–24	–11.2	128971	144848	160724	–24	–11.2	34794	36308	38328
–23	–9.4	121534.6	136360.5	151188	–23	–9.4	32770	34181	36088
–22	–7.6	114569.9	128419.6	142269.4	–22	–7.6	30875	32190	33954
–21	–5.8	108044.7	120987	133929.3	–21	–5.8	29101	30327	31976
–20	–4	101928.7	114027.2	126125.7	–20	–4	27439	28582	30125
–19	–2.2	96194	107507.5	118821	–19	–2.2	25881	26948	28391
–18	–0.4	90814.8	101397.8	111980.7	–18	–0.4	24420	25417	26767
–17	1.4	85767	95669.8	105572.7	–17	1.4	23051	23981	25245
–16	3.2	81028.5	90297.8	99567.2	–16	3.2	21766	22634	23818
–15	5	76578.5	85257.7	93937	–15	5	20660	21371	22480
–14	6.8	72397.9	80527.1	88656.4	–14	6.8	19427	20185	21225
–13	8.6	68469	76085.4	83701.9	–13	8.6	18363	19072	20046
–12	10.4	64775.3	71913.4	79051.6	–12	10.4	17363	18026	18940

Copyright © 2005 General Motors Corp.

https://truckmanualshub.com/

APPENDIX Q—TRANSID 2 AND 3 THERMISTOR TROUBLESHOOTING INFORMATION

TRANSID 2 THERMISTORS—RESISTANCE (OHMS) VS. TEMPERATURE *(cont'd)*

Retarder Thermistor					Sump Thermistor				
Degree C	Degree F	Lo Ohms	Nom Ohms	Hi Ohms	Degree C	Degree F	Lo Ohms	Nom Ohms	Hi Ohms
–11	12.2	61301.3	67993.3	74685.3	–11	12.2	16424	17043	17900
–10	14	58033	64308.5	70584	–10	14	15540	16120	16924
–9	15.8	54956.9	60843.6	66730.3	–9	15.8	14709	15251	16006
–8	17.6	52060.8	57584.4	63108	–8	17.6	13927	14434	15143
–7	19.4	49333.13	54517.51	59701.9	–7	19.4	13190	13666	14331
–6	21.2	46763.28	51630.64	56498	–6	21.2	12497	12942	13567
–5	23	44341.27	48912.25	53483.24	–5	23	11844	12261	12848
–4	24.8	42057.81	46351.65	50645.49	–4	24.8	11228	11619	12171
–3	26.6	39904.26	43938.84	47973.42	–3	26.6	10648	11014	11533
–2	28.4	37872.55	41664.54	45456.53	–2	28.4	10101	10444	10932
–1	30.2	35955	39520	43085	–1	30.2	9585	9906	10365
0	32	34145.1	37497.4	40850	0	32	9098	9399	9831
1	33.8	32430	35590	38750	1	33.8	8638	8921	9329
2	35.6	30810	33790	36770	2	35.6	8203	8470	8854
3	37.4	29282	32092	34903	3	37.4	7793	8044	8407
4	39.2	27838	30490	33142	4	39.2	7406	7643	7985
5	41	26474	28976	31479	5	41	7041	7263	7587
6	42.8	25184	27547	29910	6	42.8	6696	6905	7211
7	44.6	23965	26197	28428	7	44.6	6369	6567	6855
8	46.4	22813	24920	27028	8	46.4	6061	6247	6519
9	48.2	21722	23713	25704	9	48.2	5769	5944	6202
10	50	20690	22572	24454	10	50	5493	5658	5902
11	51.8	19712	21492	23271	11	51.8	5231	5387	5618
12	53.6	18787	20469	22152	12	53.6	4984	5131	5349
13	55.4	17910	19502	21093	13	55.4	4750	4888	5095
14	57.2	17079	18585	20091	14	57.2	4528	4659	4854
15	59	16292	17717	19141	15	59	4318	4441	4626
16	60.8	15545	16894	18242	16	60.8	4118	4235	4410
17	62.6	14836.8	16113.8	17391	17	62.6	3929	4039	4205
18	64.4	14164.8	15374.1	16583.5	18	64.4	3750	3854	4011
19	66.2	13527	14672.6	15818.2	19	66.2	3580	3678	3827
20	68	12921.4	14006.9	15092.4	20	68	3418	3511	3653
21	69.8	12346.4	13375.1	14403.8	21	69.8	3265	3353	3487
22	71.6	11800.1	12775.3	13750.5	22	71.6	3120	3202	3330
23	73.4	11281	12205.7	13130.3	23	73.4	2981	3060	3180
24	75.2	10787.6	11664.6	12541	24	75.2	2850	2924	3039
25	77	10318.5	11150.4	11982.3	25	77	2725	2795	2904
26	78.8	9872.4	10661.7	11451	26	78.8	2606	2673	2776
27	80.6	9448	10197.1	10946.1	27	80.6	2493	2556	2655

Copyright © 2005 General Motors Corp.

https://truckmanualshub.com/

APPENDIX Q—TRANSID 2 AND 3 THERMISTOR TROUBLESHOOTING INFORMATION

TRANSID 2 THERMISTORS—RESISTANCE (OHMS) VS. TEMPERATURE *(cont'd)*

Retarder Thermistor					Sump Thermistor				
Degree C	Degree F	Lo Ohms	Nom Ohms	Hi Ohms	Degree C	Degree F	Lo Ohms	Nom Ohms	Hi Ohms
28	82.4	9755.2	9755.2	10466.2	28	82.4	2385	2445	2540
29	84.2	8659.8	9334.9	10009.9	29	84.2	2282	2340	2430
30	86	8293.8	8934.9	9575.9	30	86	2185	2240	2326
31	87.8	7945.3	8554.2	9163.1	31	87.8	2092	2144	2227
32	89.6	7613.3	8191.7	8770.2	32	89.6	2003	2053	2132
33	91.4	7296.91	7846.57	8396.2	33	91.4	1919	1967	2043
34	93.2	6995.38	7517.77	8040.17	34	93.2	1839	1884	1957
35	95	6707.92	7204.5	7701.07	35	95	1763	1806	1875
36	96.8	6433.8	6905.92	7378.04	36	96.8	1690	1731	1797
37	98.6	6172.32	6621.29	7070.25	37	98.6	1620	1660	1723
38	100.4	5922.86	6349.87	6776.89	38	100.4	1554	1592	1653
39	102.2	5685	6091	6497	39	102.2	1491	1527	1585
40	104	5457.5	5844	6231	40	104	1430	1465	1521
41	105.8	5241	5608	5976	41	105.8	1373	1406	1459
42	107.6	5033	5383	5733	42	107.6	1318	1349	1401
43	109.4	4835	5169	5502	43	109.4	1265	1296	1345
44	111.2	4646	4963	5281	44	111.2	1215	1244	1291
45	113	4465	4768	5070	45	113	1167	1195	1240
46	114.8	4293	4580	4868	46	114.8	1122	1148	1192
47	116.6	4127	4402	4676	47	116.6	1078	1103	1145
48	118.4	3969	4231	4492	48	118.4	1036	1060	1100
49	120.2	3818	4067	4316	49	120.2	996.3	1019	1058
50	122	3673	3911	4148	50	122	958.1	980.3	1017
51	123.8	3535	3761	3988	51	123.8	921.6	942.9	978.4
52	125.6	3403	3619	3835	52	125.6	886.7	907.1	941.4
53	127.4	3276	3482	3688	53	127.4	853.3	872.9	905.9
54	129.2	3155	3352	3548	54	129.2	821.4	840.1	871.9
55	131	3039	3227	3414	55	131	790.8	808.8	839.4
56	132.8	2928	3107	3286	56	132.8	761.5	778.8	808.3
57	134.6	2821	2992	3163	57	134.6	733.5	750	778.5
58	136.4	2718.9	2882.4	3046	58	136.4	706.6	722.5	750
59	138.2	2621.1	2777.3	2933.5	59	138.2	680.9	696.2	722.7
60	140	2527.2	2676.5	2825.7	60	140	656.2	670.9	696.5
61	141.8	2437.3	2579.9	2722.5	61	141.8	632.6	646.7	671.4
62	143.6	2351	2487.3	2623.6	62	143.6	609.9	623.5	647.3
63	145.4	2268.2	2398.5	2528.8	63	145.4	588.2	601.2	624.2
64	147.2	2188.8	2313.4	2438	64	147.2	567.4	579.9	602.1
65	149	2112.5	2231.7	2350.8	65	149	547.4	559.4	580.8
66	150.8	2039.3	2153.3	2267.3	66	150.8	528.2	539.8	560.5

Copyright © 2005 General Motors Corp.

https://truckmanualshub.com/

APPENDIX Q—TRANSID 2 AND 3 THERMISTOR TROUBLESHOOTING INFORMATION

TRANSID 2 THERMISTORS—RESISTANCE (OHMS) VS. TEMPERATURE *(cont'd)*

Retarder Thermistor					Sump Thermistor				
Degree C	Degree F	Lo Ohms	Nom Ohms	Hi Ohms	Degree C	Degree F	Lo Ohms	Nom Ohms	Hi Ohms
67	152.6	1969.1	2078.1	2187.1	67	152.6	509.8	520.9	540.9
68	154.4	1901.6	2005.9	2110.2	68	154.4	492.1	502.8	522.2
69	156.2	1836.8	1936.6	2036.4	69	156.2	475.2	485.4	504.1
70	158	1774.5	1870	1965.5	70	158	458.9	468.7	486.8
71	159.8	1714.6	1806.1	1897.5	71	159.8	443.2	452.7	470.2
72	161.6	1657.1	1744.6	1832.2	72	161.6	428.2	437.3	454.2
73	163.4	1601.8	1685.6	1769.4	73	163.4	413.7	422.5	438.9
74	165.2	1548.65	1628.89	1709.1	74	165.2	399.8	408.3	424.1
75	167	1497.52	1574.36	1651.21	75	167	386.5	394.6	410
76	168.8	1448.33	1521.94	1595.54	76	168.8	373.6	381.5	396.3
77	170.6	1401.01	1471.52	1542.03	77	170.6	361.3	368.9	383.2
78	172.4	1355.47	1423.03	1490.58	78	172.4	349.4	356.7	370.6
79	174.2	1311.65	1376.38	1441.11	79	174.2	338	345	358.5
80	176	1269	1331	1394	80	176	327	333.8	346.8
81	177.8	1228.3	1288.3	1348	81	177.8	316.4	322.9	335.6
82	179.6	1190	1247	1304	82	179.6	306.2	312.5	324.7
83	181.4	1152	1207	1261	83	181.4	296.4	302.5	314.3
84	183.2	1116	1168	1220	84	183.2	288.9	292.8	304.3
85	185	1081	1131	1181	85	185	277.8	283.5	294.6
86	186.8	1047	1095	1143	86	186.8	269	274.5	285.4
87	188.6	1015	1061	1107	87	188.6	260.5	265.9	276.5
88	190.4	983	1028	1072	88	190.4	253.3	257.6	268
89	192.2	953	996	1038	89	192.2	244.3	249.5	259.7
90	194	924	965	1005	90	194	236.7	241.8	251.7
91	195.8	896	935	974	91	195.8	229.4	234.4	244
92	197.6	869	906	944	92	197.6	222.3	227.2	236.6
93	199.4	843	879	915	93	199.4	215.5	220.2	229.5
94	201.2	817	852	886	94	201.2	208.9	213.5	222.6
95	203	793	826	859	95	203	202.5	207.1	215.9
96	204.8	769	801	833	96	204.8	196.4	200.9	209.5
97	206.6	747	777	808	97	206.6	190.5	194.8	203.3
98	208.4	725	754	784	98	208.4	184.8	189	197.3
99	210.2	703.6	731.8	760	99	210.2	179.2	183.4	191.5
100	212	683.2	710.2	737.3	100	212	173.9	178	185.9
101	213.8	663.4	689.4	715.3	101	213.8	168.8	172.8	180.5
102	215.6	644.4	669.3	694.1	102	215.6	163.8	167.8	175.3
103	217.4	626	649.8	673.7	103	217.4	159	162.9	170.3
104	219.2	608.2	631.1	653.9	104	219.2	154.4	158.2	165.4
105	221	591	612.9	634.9	105	221	149.9	159.6	160.7

Copyright © 2005 General Motors Corp.

https://truckmanualshub.com/

APPENDIX Q—TRANSID 2 AND 3 THERMISTOR TROUBLESHOOTING INFORMATION

TRANSID 2 THERMISTORS—RESISTANCE (OHMS) VS. TEMPERATURE *(cont'd)*

Retarder Thermistor					Sump Thermistor				
Degree C	Degree F	Lo Ohms	Nom Ohms	Hi Ohms	Degree C	Degree F	Lo Ohms	Nom Ohms	Hi Ohms
106	222.8	574.3	595.4	616.5	106	222.8	145.6	149.2	156.2
107	224.6	558.2	578.4	598.7	107	224.6	141.4	145	151.8
108	226.4	542.6	562.1	581.5	108	226.4	137.4	140.9	147.5
109	228.2	527.6	546.2	564.9	109	228.2	133.5	136.9	143.4
110	230	513	530.9	548.8	110	230	129.7	133.1	139.4
111	231.8	498.8	516.1	533.3	111	231.8	126.1	129.4	135.6
112	233.6	485.2	501.8	518.3	112	233.6	122.6	125.8	131.9
113	235.4	471.9	487.9	503.9	113	235.4	119.2	122.3	128.2
114	237.2	459.1	474.5	489.8	114	237.2	115.9	118.9	124.8
115	239	446.73	461.51	476.3	115	239	112.7	115.7	121.4
116	240.8	434.72	448.95	463.18	116	240.8	109.6	112.5	118.1
117	242.6	423.08	436.79	450.5	117	242.6	106.6	109.5	114.9
118	244.4	411.8	425.02	438.23	118	244.4	103.7	106.5	111.9
119	246.2	400.88	413.61	426.35	119	246.2	100.91	103.7	108.9
120	248	390.29	402.57	414.86	120	248	98.2	100.9	106
121	249.8	380	392	404	121	249.8	95.58	98.23	103.2
122	251.6	370.1	381.5	393	122	251.6	93.04	95.63	100.5
123	253.4	360	371	383	123	253.4	90.58	93.12	97.9
124	255.2	351	362	372	124	255.2	88.2	90.68	95.36
125	257	342	352	363	125	257	85.89	88.32	92.9
126	258.8	333	343	353	126	258.8	83.65	86.03	90.51
127	260.6	325	334	344	127	260.6	81.49	83.8	88.19
128	262.4	316	326	335	128	262.4	79.38	81.65	85.95
129	264.2	308	317	326	129	264.2	77.35	79.56	83.77
130	266	301	309	318	130	266	75.37	77.54	81.65
131	267.8	293	302	310	131	267.8	73.46	75.58	79.6
132	269.6	286	294	302	132	269.6	71.6	73.67	77.61
133	271.4	279	287	294	133	271.4	69.8	71.82	75.68
134	273.2	272	279	287	134	273.2	68.05	70.03	73.8
135	275	265	272	280	135	275	66.35	68.29	71.98
136	276.8	258	266	273	136	276.8	64.7	66.6	70.21
137	278.6	252	259	266	137	278.6	63.11	64.96	68.5
138	280.4	246	253	260	138	280.4	61.56	63.37	66.83
139	282.2	240	247	253	139	282.2	60.05	61.82	65.21
140	284	234.2	240.6	247	140	284	58.59	60.32	63.64
141	285.8	228.6	234.8	241.1	141	285.8	57.17	58.86	62.11
142	287.6	223.1	229.2	235.2	142	287.6	55.79	57.45	60.63
143	289.4	217.8	223.7	229.6	143	289.4	54.45	56.07	59.18
144	291.2	212.6	218.4	224.1	144	291.2	53.15	54.73	57.78

Copyright © 2005 General Motors Corp.

https://truckmanualshub.com/

APPENDIX Q—TRANSID 2 AND 3 THERMISTOR TROUBLESHOOTING INFORMATION

TRANSID 2 THERMISTORS—RESISTANCE (OHMS) VS. TEMPERATURE *(cont'd)*

Retarder Thermistor					Sump Thermistor				
Degree C	Degree F	Lo Ohms	Nom Ohms	Hi Ohms	Degree C	Degree F	Lo Ohms	Nom Ohms	Hi Ohms
145	293	207.6	213.2	218.8	145	293	51.89	53.43	56.42
146	294.8	202.7	208.1	213.6	146	294.8	50.66	52.17	55.09
147	296.6	197.9	203.2	208.5	147	296.6	49.47	50.94	53.81
148	298.4	193.3	198.5	203.7	148	298.4	48.31	49.75	52.55
149	300.2	188.8	193.9	198.9	149	300.2	47.18	48.59	51.34
150	302	184.4	189.4	194.3	150	302	46.09	47.46	50.15
151	303.8	180.2	185	189.8	—	—	—	—	—
152	305.6	176	180.7	185.4	—	—	—	—	—
153	307.4	172	176.6	181.2	—	—	—	—	—
154	309.2	168.1	172.6	177.1	—	—	—	—	—
155	311	164.3	168.6	173	—	—	—	—	—
156	312.8	160.54	164.84	169.1	—	—	—	—	—
157	314.6	156.93	161.13	165.33	—	—	—	—	—
158	316.4	153.42	157.53	161.63	—	—	—	—	—
159	318.2	150.01	154.01	158.02	—	—	—	—	—
160	320	146.68	150.6	154.51	—	—	—	—	—
161	321.8	143.43	147.27	151.1	—	—	—	—	—
162	323.6	140	144	148	—	—	—	—	—
163	325.4	137.2	140.9	145	—	—	—	—	—
164	327.2	134	138	141	—	—	—	—	—
165	329	131	135	138	—	—	—	—	—
166	330.8	128	132	135	—	—	—	—	—
167	332.6	126	129	132	—	—	—	—	—
168	334.4	123	126	130	—	—	—	—	—
169	336.2	120	124	127	—	—	—	—	—
170	338	118	121	124	—	—	—	—	—
171	339.8	115	118	122	—	—	—	—	—
172	341.6	113	116	119	—	—	—	—	—
173	343.4	10	113	117	—	—	—	—	—
174	345.2	108	111	114	—	—	—	—	—
175	347	106	109	112	—	—	—	—	—
176	348.8	104	107	109	—	—	—	—	—
177	350.6	101	104	107	—	—	—	—	—
178	352.4	99	102	105	—	—	—	—	—
179	354.2	97	100	103	—	—	—	—	—
180	356	95	98	101	—	—	—	—	—
181	357.8	93.4	96.1	99	—	—	—	—	—
182	359.6	91.5	94.1	96.8	—	—	—	—	—
183	361.4	89.6	92.3	94.9	—	—	—	—	—

Copyright © 2005 General Motors Corp.

https://truckmanualshub.com/

APPENDIX Q—TRANSID 2 AND 3 THERMISTOR TROUBLESHOOTING INFORMATION

TRANSID 2 THERMISTORS—RESISTANCE (OHMS) VS. TEMPERATURE *(cont'd)*

Retarder Thermistor					Sump Thermistor				
Degree C	Degree F	Lo Ohms	Nom Ohms	Hi Ohms	Degree C	Degree F	Lo Ohms	Nom Ohms	Hi Ohms
184	363.2	87.8	90.4	93	—	—	—	—	—
185	365	86.1	88.6	91.1	—	—	—	—	—
186	366.8	84.3	86.8	89.4	—	—	—	—	—
187	368.6	82.7	85.1	87.6	—	—	—	—	—
188	370.4	81	83.4	85.9	—	—	—	—	—
189	372.2	79.4	81.8	84.2	—	—	—	—	—
190	374	77.8	80.2	82.6	—	—	—	—	—
191	375.8	76.3	78.7	81	—	—	—	—	—
192	377.6	74.8	77.1	79.4	—	—	—	—	—
193	379.4	73.4	75.6	77.9	—	—	—	—	—
194	381.2	71.9	74.2	76.4	—	—	—	—	—
195	383	70.5	72.8	75	—	—	—	—	—
196	384.8	69.2	71.4	73.6	—	—	—	—	—
197	386.6	67.84	70.02	72.20	—	—	—	—	—
198	388.4	66.54	68.70	70.86	—	—	—	—	—
199	390.2	65.27	67.41	69.54	—	—	—	—	—
200	392	64.03	66.14	68.25	—	—	—	—	—
201	393.8	62.82	64.91	65.99	—	—	—	—	—
202	395.6	61.64	63.70	65.76	—	—	—	—	—
203	397.4	60.00	63.00	65.00	—	—	—	—	—
204	399.2	59.30	61.40	63.00	—	—	—	—	—

Copyright © 2005 General Motors Corp.

https://truckmanualshub.com/

APPENDIX R—SAE J1939 COMMUNICATION LINK

This Appendix is an overview of how Allison Transmission implements the J1939-based functions. The details are found in the Vehicle Function Requirements section of the Datalink Communications Tech Data. The Controller Area Network (CAN) defined by SAE J1939 enables the integration of various vehicle components into an overall vehicle system by providing a standard way of exchanging information between these modules in the vehicle. Use of a J1939 network, or datalink, for on-vehicle communication can greatly reduce the amount of wiring in a vehicle, and give many different components and subsystems access to a wider range of information.

Allison utilizes the J1939 communication link for vehicle operation controls, powertrain interaction, and conveying vehicle management information (refer to Figure R–1).*

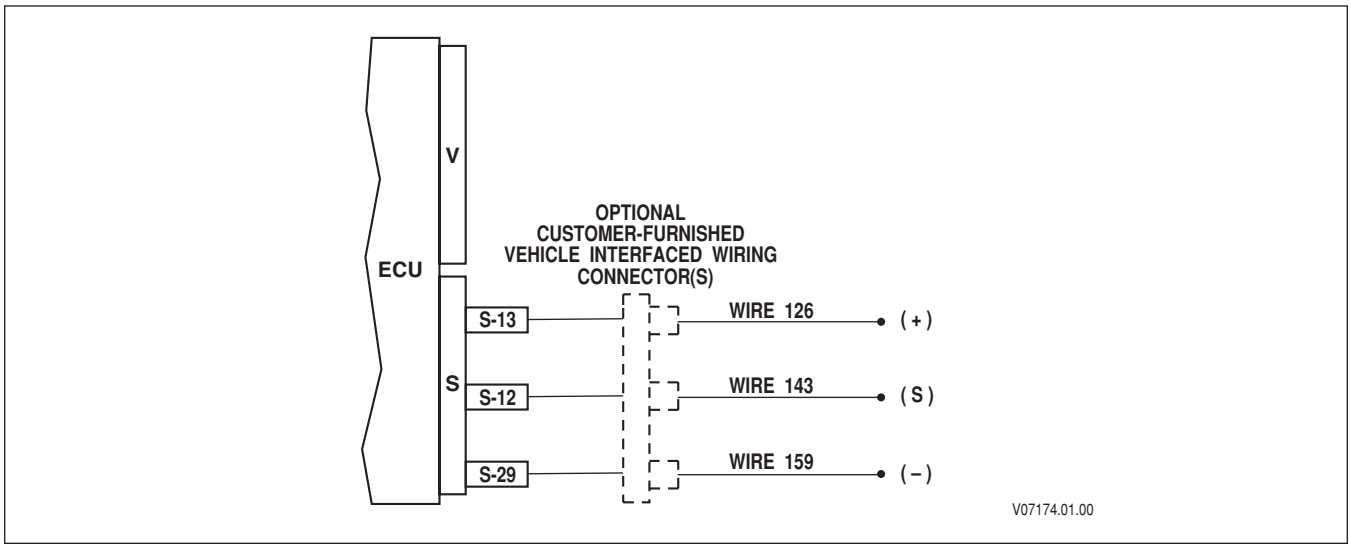

Figure R–1. J1939 Interface Wiring (ECU Pin-Out)

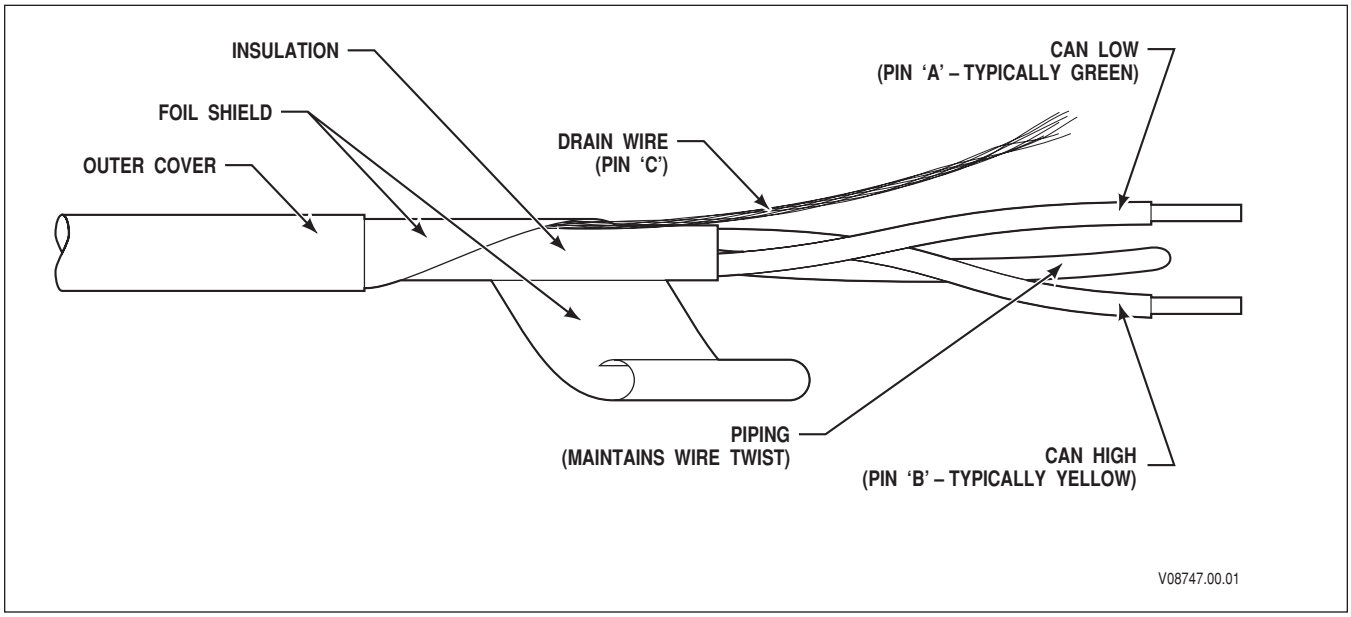

Figure R–2. J1939-11 Twisted, Shielded Pair Cable

**** NOTE: On WTEC III Control Systems, off-board communications are only enabled via J1708/J1587.***

Copyright © 2005 General Motors Corp.

https://truckmanualshub.com/

APPENDIX R—SAE J1939 COMMUNICATION LINK

WIRING

Allison recommends implementing J1939 network wiring per SAE J1939-11, which specifies 120 Ohm impedance twisted pair cable with shielding (refer to Figure R–2). The shielding greatly reduces the communication link's susceptibility to induced electromagnetic interference.

The drain wire connects to a "shield" pin on each controller on the network. These "shield pins" are not the same as ground connections; there is circuitry between the shield pin and the controller's ground connection.

In addition to the above connections, the shield drain wire should break out of the backbone in one location, preferably as close to the center as possible, and connect directly to the battery ground terminal or grounding bus bar.

Allison Transmission does not recommend the use of unshielded cabling specified in J1939-15 (often referred to as "J1939 Lite"). The lack of shielding makes the J1939 network more susceptible to electromagnetic interference, which can be extremely difficult to diagnose and correct. Many vehicle OEMs, however, opt to use J1939-15 cable due to its lower cost and greater flexibility. J1939-11 (shielded) and J1939-15 (unshielded) cable should never be mixed in a vehicle installation.

Cable suppliers include:

- Belden Wire and Cable Co.
- BICC Brand-Rex Co.
- Champlain Cable Co.
- Raychem.

J1939 networks are laid out in a linear fashion, consisting of a central "backbone" with "stubs" branching off to individual controllers or "nodes". Refer to Figure R–3 for a pictorial view of the J1939-11 "Backbone" configuration.

Regardless of the cable used, two 120 Ohm termination resistors are required, one at each end of the backbone cable (refer to Figure R–4). These resistors may be built into a receptacle connector or plug connector that contains a blue wedge lock.

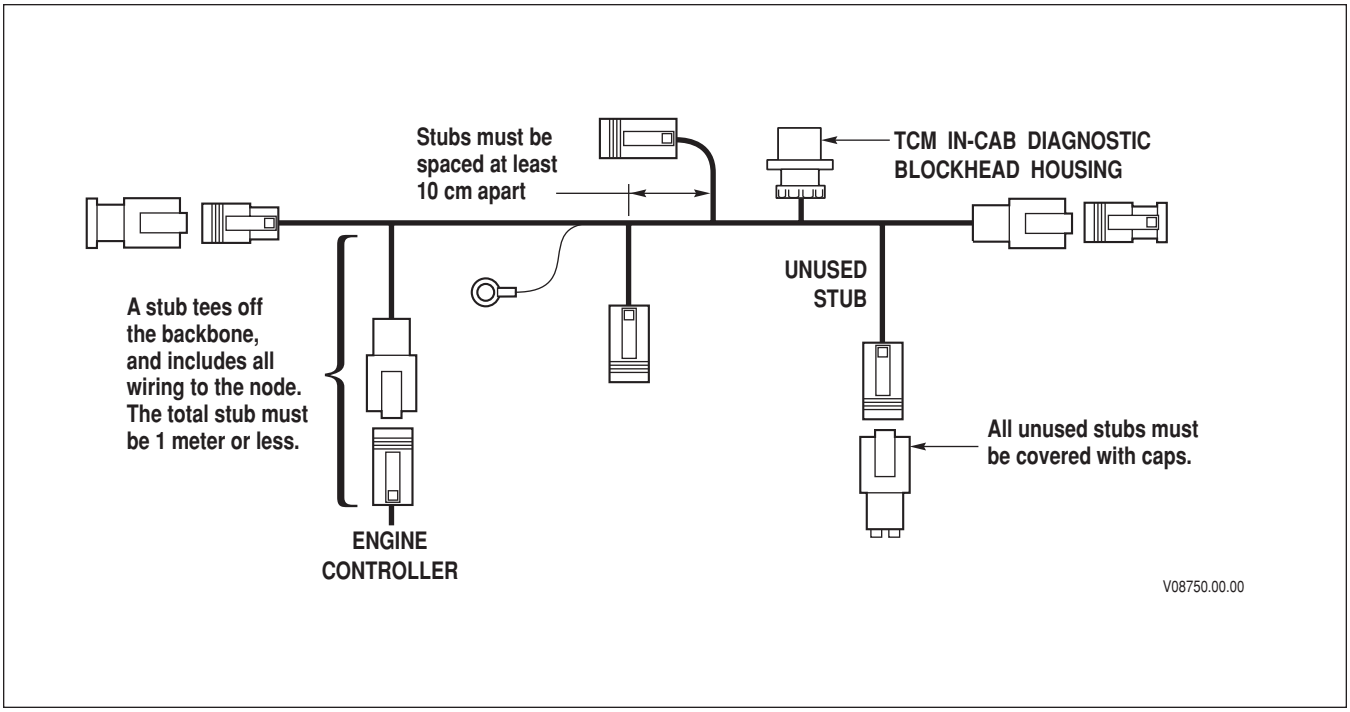

Figure R–3. J1939-11 Network Configuration

Copyright © 2005 General Motors Corp.

https://truckmanualshub.com/

APPENDIX R—SAE J1939 COMMUNICATION LINK

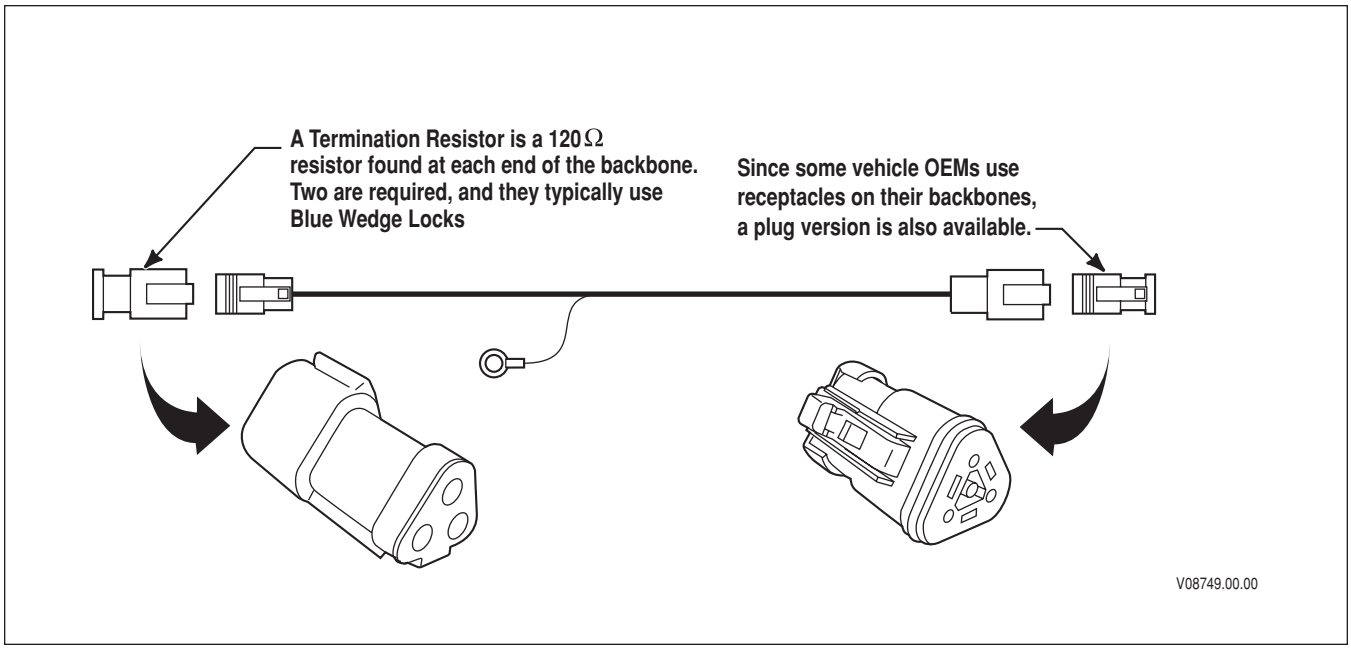

Figure R–4. Termination Resisters Requirement on J1939-11 Backbone

Typically, all connectors on the backbone and stubs are of the “plug” type. However, “receptacle” connectors may be used in some installations. Stubs and nodes use orange or green wedge locks.

The backbone may be no longer than 40 meters in length. A stub includes the length of wiring on the node, and the length from the backbone to the node must be one meter or less.

Figure R–3 shows a typical J1939-11 network cable configuration including controllers, or “nodes”. The connector for the Allison controller is a 3-way connector configured as follows (refer to Figure R–5):

- Terminal A = CAN High
- Terminal B = CAN Low
- Terminal C = CAN Shield.

Typically CAN High is a yellow wire and CAN Low is a green wire.

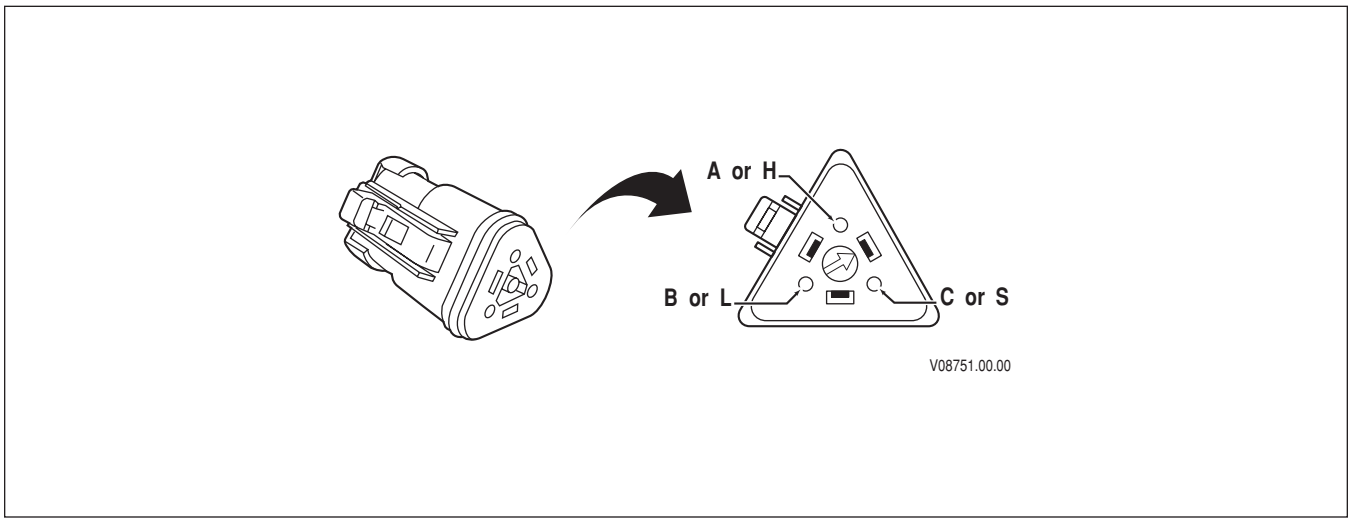

Figure R–5. 3-Way Allison Controller Connector

Copyright © 2005 General Motors Corp.

https://truckmanualshub.com/

APPENDIX R—SAE J1939 COMMUNICATION LINK

A 9-way, in-cab, diagnostic bulkhead housing, if used, will be configured as follows (Figure R–6):

- A = Ground
- B = +12 volts (unswitched)
- C = High (Yellow)
- D = Low (Green)
- E = Shield
- F = J1587 + (typically blue)
- G = J1587 – (typically white)
- H & J = For OEM use.

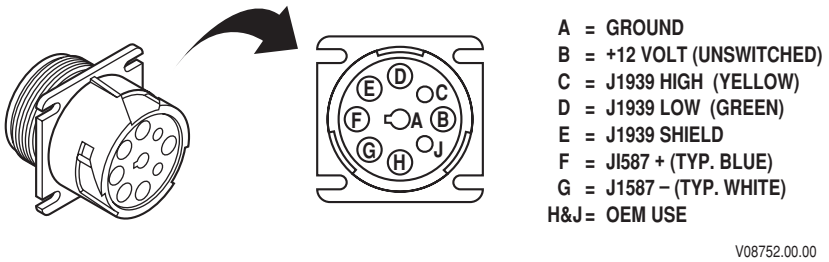

Figure R–6. 9-Way, In-Cab, Diagnostic Connector

Troubleshooting

In terms of J1939 communication, Allison Transmission is only responsible for the Allison TCM hardware, software, and calibration. Wiring issues belong solely to the vehicle manufacturer. The responsibility for putting good information on the datalink, and properly using information obtained from the datalink, belongs to each component supplier with a device connected to the datalink.

CAN vs. Traditional Wiring

A key difference between traditional analog wires and CAN datalinks is the detection of signal corruption between the communicating devices.

An analog electrical signal generated properly by a sender may be *corrupted* on the way to the receiver by such problems as electrical noise or shorts-to-ground or power. This corruption may or may not affect the value received.

CAN communication links are much more robust, as *wiring integrity cannot change the values being sent.* Wiring faults can only prevent messages from arriving at their destination. The CAN hardware makes sure that a message is accepted only and exactly as the sending node generated the message. CAN chips reject messages affected by electrical noise or wire faults.

When communication is possible and there are no wiring issues present, CAN makes certain that information is received exactly as it is sent. However, CAN cannot detect when a device is putting out bad information or when a device misuses information pulled off of the network. For example, if the ABS system sends information stating that it is active, whether it actually is or not, the TCM will still react as if the ABS is active.

 Copyright © 2005 General Motors Corp.

https://truckmanualshub.com/

APPENDIX R—SAE J1939 COMMUNICATION LINK

The CAN Community

A unique aspect of the J1939 datalink is that our controller can be one of many on the network. As such, our intended communication with certain devices (such as the engine) may be impacted by other devices on the datalink, such as an instrument cluster or body controller.

The manufacturer of each individual controller on the network is responsible to make sure that correct information is placed on the network at all times. This work should be covered during the development of any device that will connect to the J1939 network. As such, troubleshooting here will deal only in the context of wiring and calibration issues, which are most often encountered in the field.

Datalink Diagnostic Tools

Digital Multi-Meters

A Digital Multi-Meter (DMM) can be used to detect datalink activity. However, datalink voltages change extremely fast, causing meter float. DMMs are best suited to checking for proper termination resistance, or the presence of open- or short-circuits in the network wiring.

Temporary Backbone

The first step in any datalink-related problem is to determine who ‘owns’ the problem. A temporary backbone connected between the engine and transmission can be used to identify the source of the problem, eliminating many of the unknowns such as vehicle wiring, interference from another controller, etc. If the problem goes away while using the temporary backbone and returns when the OEM backbone is reconnected, it is not an Allison Transmission issue; there is a problem with the vehicle’s OEM wiring.

Wiring and Connector Failures

Wiring and connectors are the number one cause of problems in the field. Opens, shorts, and CAN high being connected to CAN low are among the most frequently encountered issues.

Termination Resistors

A J1939 network requires a 120 Ohm termination resistor at each end of the backbone (refer to Figure R–3). With all controllers powered off and both termination resistors in place, an ohmmeter should read 60 Ohms across terminals A and B of the 3-way connector (refer to Figure R–5), or Terminals C and D of the 9-way connector (refer to Figure R–6). The test can be performed with controllers connected to the backbone because the impedance at the controllers is much higher than 60 Ohms and therefore does not affect the reading.

A measurement of 120 Ohms typically indicates that either one of the two termination resistors is not in place, or there is an open somewhere in the backbone of the network.

A measurement of 0 (zero) Ohms indicates that there is a short between the CAN high and CAN low wires of the network. The short may be in the backbone itself, or in one of the stubs connecting it to a controller.

Open Circuits

Open circuits in the CAN High (A) or CAN Low (B) sides of the backbone or in any of the stubs can affect one or more controllers on the network. While an open circuit in a stub will have the most impact on the controller attached to that stub, other devices on the network who normally receive information or expect a response from that controller will be impacted as well.

When there are multiple nodes attached to the network, and their connectors are accessible, an open circuit can be tracked by moving down the backbone from stub to stub looking at the datalink information present at each connector. When there is a difference in the amount of datalink traffic between two connection points, there is likely an open circuit somewhere on the stubs or the backbone between the two connection points. A DMM may be used to detect activity.

Copyright © 2005 General Motors Corp.

https://truckmanualshub.com/

APPENDIX R—SAE J1939 COMMUNICATION LINK

Short Circuits

A short circuit can occur in the J1939 backbone or stubs between:

- CAN high and CAN low
- CAN high or CAN low and battery voltage
- CAN high or CAN low and ground

When a short circuit is present, typically multiple controllers on the network indicate an error of some sort, due to the loss of all communication between any of the nodes. For example, datalink-based instrument clusters will not function properly. Short circuits typically fall into one of the following categories:

- Mechanical failure—Insulation cut or scraped through, wires pinched, etc.
- Incorrectly wired pins on one or more of the controllers
- Missing connector seal(s), allowing water intrusion.

Inducted Noise

Inducted noise tends to be a much greater issue when J1939-15 (unshielded) cable is used. While the following routing tips are a good idea for shielded networks, they are critical when unshielded cable is used. J1939-15 cable routing must avoid the following by a minimum of 3 to 4 inches of physical separation:

- Solenoids
- Alternator
- Flasher modules
- High output CB radio
- Starter motor
- Relays
- Any high-current switching device.

Inducted noise is typically “event driven”, or associated with an activity that involves operation of a high-current load near the network wiring. For example, “everytime I use my left turn signal, the ABS lamp acts up...”

To find noise sources, monitor datalink traffic under the following conditions:

- With the key switch on: Operate every input the driver has access to, such as the CB, blower motors, fans, air conditioning, flashers, turn signals, lights, horn, brakes, etc.
- With the engine running: Exercise every function on the vehicle as is possible, such as engaging the engine fan, turning on the air conditioning compressor, operating the dump bed, etc.

If errors or pauses in datalink traffic are noted during any specific activity, investigate the network wiring near the associated component(s).

Calibrations

After wiring, calibrations are the number two cause of problems in the field. Inappropriate calibration changes in the field can affect the operation of the Allison transmission, or the entire vehicle.

If a particular transmission or vehicle function worked prior to a calibration update of one of the controllers on the J1939 datalink, but does not function properly *afterwards*, it is likely that a customer-programmable value was changed on one or more controllers during the update. The same situation can exist for software upgrades, as well.

In either event, the cause can be narrowed down by re-loading the previous software and/or calibration and determining if the issue goes away.

Copyright © 2005 General Motors Corp.

https://truckmanualshub.com/

APPENDIX R—SAE J1939 COMMUNICATION LINK

From an Allison perspective, there are two common causes of miscalibration:

- An internal "auto-detect" process was completed by the ECU before all of the appropriate controllers on the vehicle were connected to the J1939 datalink. In this case, Allison DOC™ For PC–Service Tool can be used to reset the auto-detection process.
- A calibration was constructed with an incorrect datalink package as specified in the Production Calibration Configuration System (PCCS). In this case, a new calibration with the correct package will have to be made. Table 5-1 illustrates Allison J1939 broadcast and receive parameters versus PCCS datalink package.

Outside of the Allison ECU programming, engine ECU programming can have the greatest affect on transmission operation. Electronic engines typically have many "customer programmable" items that can affect transmission operation, such as:

- Transmission type set incorrectly
- Incompatible engine governor selected
- Engine brake (compression or exhaust) options set incorrectly
- J1939 communication not activated.

Tables R–1 and R–2, on the following pages, provide an overview of J1939 messages and parameters sent and received by the WTEC III controllers. Support varies versus the datalink package in PCCS. Refer to Datalink Tech Data for details.

Copyright © 2005 General Motors Corp.

Table R–1. 4th Generation J1939 Message and Parameter Sent Overview

Message Sent	Source Address	PGN	Byte	Bits	Parameters SENT	V9-1① (Apr'00)	V9-2② (Apr'00)	V9-3③ (Apr'00)	V9A④ (Apr'01)	V9B⑤ (Apr'02)	V9C⑥ (Apr'03)
TSC1	03	00000	All	All	(Refer to Datalink Tech Data for details)	na	ON	ON	ON⑤	ON⑤	ON⑤
PGN Request	03	59904	1-3	-	PGN of requested message	na	na	na	ON	Bus Only	Bus & 3000 Product Family*
ERC1	16	61440	1	6, 5	Retarder enable brake assist switch	na	ON	ON	ON	ON	ON
				4-1	Engine / retarder torque node	na	na	PCCS	ON	ON	ON
			2	-	Actual retarder - percent torque	Special	ON	ON	ON	ON	ON
			4	2, 1	Engine coolant load increase	na	na	PCCS	PCCS	ON	ON
			5	-	SA of controlling device for retarder control	na	na	na	ON	ON	ON
ETC1	03	61442	1	6,5	Shift in progress	na	na	na	ON	ON	ON
				4,3	Torque converter lockup engaged	ON	ON	ON	ON	ON	ON
				2,1	Driveline engaged	na	na	na	ON	ON	ON
			2,3	-	Output shaft speed	ON	ON	ON	ON	ON	ON
			5	4,3	Progressive shift disable	na	na	na	ON	ON	ON
			6,7	-	Input shaft speed	na	na	na	ON	ON	ON
			8	-	SA of controlling device for transmission control	na	na	na	ON	ON	ON
ETC2	03	61445	1	-	Selected range (AT range commanded)	⑨	ON	ON	ON	ON	ON
			2,3	-	Actual gear ratio	na	ON	ON	ON	ON	ON
			4	-	Current range (AT range attained)	na	ON	ON	ON	ON	ON
			5,6	-	Trans. Request range (AT range selected)	na	Special	Special	Special	ON	ON
			7,8	-	Trans. Current range (AT range attained)	na	Special	Special	ON	ON	ON
ETC7	03	65098	1	8,7	Trans. Requests Range Display Flash State	na	na	na	na	ON	ON
				6,5	Trans. Requested Range Display Blank State	na	na	na	na	ON	ON
			2	8,7	Shift Inhibit Indicator	na	na	na	na	ON	ON
				6,5	Transmission Engine Crank Enable⑥	na	na	na	na	ON	ON
			3	8,7	Transmission Mode 1 Indicator	na	na	na	na	na	ON
				6,5	Transmission Mode 2 Indicator	na	na	na	na	na	ON
Trans. Configuration #2	03	65099	1,2	-	Transmission Torque Limit⑥	na	na	na	na	na	Special
DM1	03 or 16	65226	1	4,3	Amber Warning Light Status	na	na	na	na	⑩	ON
			Varies	Varies	Suspect Parameter Number	na	na	na	na	⑩	ON
			Varies	Varies	Failure Mode Identifier	na	na	na	na	⑩	ON

Copyright © 2005 General Motors Corp.

Table R–1. 4th Generation J1939 Message and Parameter Sent Overview *(cont'd)*

Message Sent	Source Address	PGN	Byte	Bits	Parameters SENT	V9-1① (Apr'00)	V9-2② (Apr'00)	V9-3③ (Apr'00)	V9A④ (Apr'01)	V9B⑤ (Apr'02)	V9C⑥ (Apr'03)
Retarder Configuration	16	65249	1	8-5	Retarder Location	na	na	na	na	na	Special
				4-1	Retarder Type	na	na	na	na	na	Special
			2	-	Retarder Control Method	na	na	na	na	na	Special
			17,18	-	Reference Retarder Torque	na	na	na	na	na	Special
Transmission Fluids	03	65272	5,6	-	Transmission oil temperature	ON	ON	ON	ON	ON	ON
Retarder Fluids	16	65275	2	-	Hydraulic retarder oil temperature	ON	ON	ON	ON	ON	ON

Table R–2. 4th Generation J1939 Message and Parameter Received Overview

Message Received	Source Address	PGN	Byte	Bits	Parameters RECEIVED	V9-1① (Apr'00)	V9-2② (Apr'00)	V9-3③ (Apr'00)	V9A④ (Apr'01)	V9B⑤ (Apr'02)	V9C⑥ (Apr'03)
ERC1	See Column →	61440	2	-	Actual retarder - percent torque	SA 15	SA 15	SA 15 or 41	SA 15 or 41	SA 15 or 41	SA 15 or 41
EBC1	11	61441	1	6,5	ABS active	YES	YES	YES	YES	YES	YES
EEC1	00	614448	1	4-1	Engine/retarder torque mode	YES	YES	YES	YES	YES	YES
			3	-	Actual Engine - Percent Torque	na	na	na	na	na	Special
			6	-	SA of controlling device for engine control	na	na	na	na	na	Special
			8	-	Engine demand - percent torque⑥	na	na	na	Special	Bus Only	Bus & 3000 Product Family*
EEC2	00	61443	1	6,5	Road Speed Limit Status	na	na	na	na	na	ON
				4,3	AP kickdown switch	Special	Special	Special	Special	PCCS	PCCS⑦
			2	-	Accelerator pedal (AP) position	YES	YES	YES	YES	YES	YES⑦
			3	-	Percent load at current speed	YES	YES	YES	YES	YES	YES
EEC3	00	65247	1	-	Nominal Friction - Percent Torque	na	na	na	na	Bus Only	Bus & 3000 Product Family*
Engine Configuration	00	65251	20,21	-	Reference engine torque	na	na	na	Special	Bus Only	Bus & 3000 Product Family*
			31,32	-	Engine Inertia⑥	na	na	na	na	Bus Only	Bus & 3000 Product Family*
			33,34	-	Default Engine Torque Limit for Transmission	na	na	na	na	-	Special

Copyright © 2005 General Motors Corp.

https://truckmanualshub.com/

Table R–2. 4th Generation J1939 Message and Parameter Received Overview *(cont'd)*

Message Received	Source Address	PGN	Byte	Bits	Parameters RECEIVED	V9-1① (Apr'00)	V9-2② (Apr'00)	V9-3③ (Apr'00)	V9A④ (Apr'01)	V9B⑤ (Apr'02)	V9C⑥ (Apr'03)
Component ID	00	65259	1-5	-	Make	na	na	na	na	Bus Only	Bus & 3000 Product Family*
			Varies	-	Model	na	na	na	na	Bus Only	Bus & 3000 Product Family*
Engine Temperature	00	65262	1	-	Engine coolant temperature	YES	YES	YES	YES	YES	YES
CC/VS	SA 00 or 17	65265	4	6,5	Brake switch	na	na	na	na	YES	YES⑦
			7	8-6	Cruise control state	YES	YES	YES	YES	YES	YES⑦
				5-1	PTO state	na	na	na	na	YES	YES
TSC1 to retarder	See Column →	00000	ALL	ALL	(See document text for details)	na	na	SA 17	17,33 or 00	17,33 or 00	17,33 or 00

Footnotes for Table R–2:

① V8A equivalent; only four messages broadcast and there are no TSC1 speed limits for garage shift abuse protection.

② V9 standard; Same as V8A except low risk message and speed limit control enabled.

③ Includes V9-2, plus retarder information; this is standard if J1939 RMR is selected.

④ While not shown, V9 and V8A equivalents will be available via PCCS rollover.

⑤ TSC1 message ON in all calibrations for garage shift abuse protection. Special, V9B bus calibration, and V9C bus and MD 3066 calibrations certain additional support for SEM. V9C

⑥ Parameter approved by SAE, but not in any published J1939 document yet. Refer to definition in Datalink Communications, BROADCAST PARAMETERS or PARAMETER RECEPTION sections.

⑦ Message may be multiplexed such that parameters may be received from different sources.

⑧ Received parameters may be used by the ECU; requirements for specific features are listed in Datalink Communications, VEHICLE FUNCTION REQUIREMENTS section.

⑨ When "Group 1" calibrations are rolled over for use with V9C software, this parameter will be broadcast.

⑩ While the capability to implement the "Check Trans" indicator via J1939 and DM1 was available in V9B software, it was never turned on as no OEM indicated they needed it at the time of V9B introduction.

* **Bus / MD 3066:** Parameters only used in Bus and/or MD 3066 calibrations. Might only be used if auto-detect logic AT-approved engine on the datalink.

Copyright © 2005 General Motors Corp.