https://truckmanualshub.com/

Mobile crane LTM 1130-5.1

Max. lifting capacity: 130 t
Max. lifting height: 91 m
Max. working radius: 72 m

LIEBHERR

https://truckmanualshub.com/

Mobile Crane LTM 1130-5.1
Flexible and economical to operate

https://truckmanualshub.com/

The Liebherr LTM 1130-5.1 mobile crane is characterised by its long telescopic boom, strong lifting capacities, exceptional mobility and comprehensive comfort and safety equipment. This 130-tonner features top-of-the-range technology, making it even more effective in operation.

- **60-m telescopic boom and 14 m telescopic boom extension (2 x 7 m)**
- **19-m folding fly jib, hydraulically adjustable (option)**
- **60-t overall weight, incl. 9-t ballast at 12-t axle load**
- **Vehicle width: 2.75 m with 445/95 R25 (16.00 R 25) tyres**
- **Great flexibility of use due to optimum lifting capacities with full and partial ballast**
- **Active, speed-dependent rear-axle steering**
- **Pneumatic disc brakes**

https://truckmanualshub.com/

Drivetrain

- Six-cylinder Liebherr turbo-diesel engine, 370 kW/503 hp, max. torque: 2355 Nm
- Automated ZF AS-TRONIC gearbox, 12 forward and 2 reverse speeds
- ZF intarder directly at the gearbox
- 2-stage transfer case, 0.78 km/h crawling speed
- Axles two, four and five driven, axle one as option

https://truckmanualshub.com/

State-of-the-art chassis and drive technology

High mobility and cost effectiveness

A powerful six-cylinder Liebherr turbo-diesel engine with 370 kW/503 hp ensures swift driving performance. The automatic 12-speed power shift system ZF-AS-TRONIC with intarder provides a high level of cost effectiveness and excellent comfort.

- Reduced fuel consumption through large number of gears and the efficiency of the dry coupling
- Excellent manoeuvrability and minimum crawling speed thanks to two-stage transfer case
- Wear-free braking with ZF intarder
- Telma eddy current brake optional, wear free and comfortable

Compact, agile and weight-optimised

Thanks to its extremely compact design, the LTM 1130-5.1 can operate on the smallest of construction sites. At an axle load of 12 t, it can drive with up to 9 t of ballast, making it flexible and economical to use.

- Chassis length only 12.35 m
- Smallest turning-circle radius only 10.39 m
- Vehicle width only 2.75 m, even with 445/95 R 25 (16.00 R 25) tyres
- Ballast radius only 4.20 m

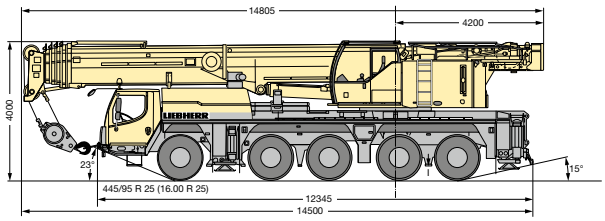

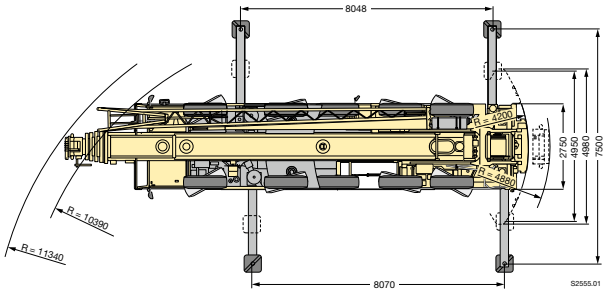

Hydro-pneumatic suspension Niveaumatik

- Maintenance-free suspension cylinders
- Large dimensions to cope with high axle loads
- Suspension travel: +150/-100 mm
- High lateral stability when cornering
- Choice of driving state using fixed programmes

Pneumatic disc brakes

- High braking power, improved control
- Improved directional stability
- No reduction in braking force at high braking temperatures (fading)
- Longer life
- Shorter labour times for changing the screening surfaces
- Brake pads with wear indicators

https://truckmanualshub.com/

Five steering programmes

- Programme selection at the touch of a button
- Clear arrangement of control elements and displays
- Programmes can be switched while driving
- Crab steering controlled in comfort via the steering wheel; no lifting of the centre axle

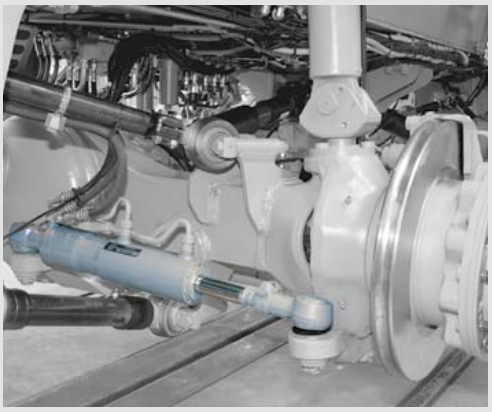

https://truckmanualshub.com/

Variable steering concept

Centring cylinder to straighten rear axles

- Automatic straightening of rear axles in case of fault

Active rear-axle steering

The rear axles are actively electro-hydraulically controlled in accordance with the speed and steering angle of the front axles. Five different steering programmes (P) can be selected at the touch of a button.

- Much-reduced tyre wear
- Improved manoeuvrability
- Stable driving behaviour even at high speeds
- All five axles can be steered

High safety standards – entire know-how from Liebherr

- Centring cylinder for automatic straightening of rear axles in case of fault
- Two independent hydraulic circuits with wheel- and engine driven hydraulic pump
- Two independent control computers

P1 Road steering

Axles 1 and 2 are steered mechanically using the steering wheel. Axles 3, 4 and 5 are actively steered, depending on speed and the front axle lock angle. At speeds of 30 km/h and over, axles 3 and 4 are set to straight-ahead position and locked; at 60 km/h and over, axle 5 is locked in the same forward position.

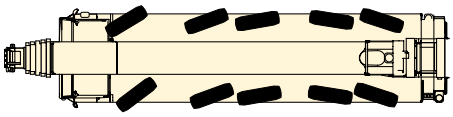

P2 All-wheel steering

The axles 3, 4 and 5 are turned depending of the axle lock of the front axles by the steering wheel so far that smallest turning radii are achieved.

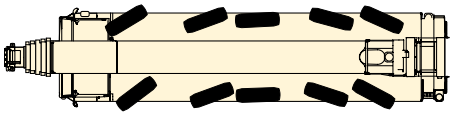

P3 Crab steering

Axles 3, 4 and 5 are turned in the same direction as the wheel lock on axles 1 and 2 using the steering wheel.

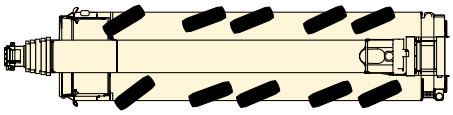

P4 Reduced swing out

The axles 3, 4 and 5 are turned depending on the axle lock of the front axles, so that the swing out of the chassis rear gets minimized.

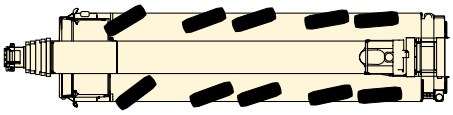

P5 Independent rear-axle steering

The axles 1 and 2 are turned by using the steering wheel; the axles 3, 4 and 5 are steered by push button independently from the axle lock of the axles 1 and 2.

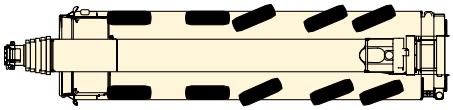

https://truckmanualshub.com/

The driver's cab

- Corrosion-resistant
- Safety glass on all sides
- Tinted glass
- Electric windows
- Heated and electronically adjustable outside mirrors
- Air-sprung driver's seat with lumbar support

https://truckmanualshub.com/

Comfort and functionality

Modern driver's cab and crane cab

Both the modern driver's cab and the crane cab that tilts backwards offer a comfortable and functional working environment. The control elements and displays are ergonomically arranged, thereby ensuring safe and fatigue-proof operation.

Speedy and safe set-up

The outrigging, ballast assembly and attachment of additional equipment have all been designed with speed, safety and comfort in mind. Specific ascents, handholds and rails are provided to ensure the safety of operating staff.

Supporting crane on outriggers – quick, comfortable and safe

- BTT blue tooth terminal, mobile control and display unit
- Electronic inclination display
- Fully automatic levelling by push button
- Engine start/stop and speed control
- Support area lighting with four integrated lights
- Support cylinder stroke: front 650 mm, rear 700 mm
- Outrigger beams 2-stage, fully hydraulic, low-maintenance extension system

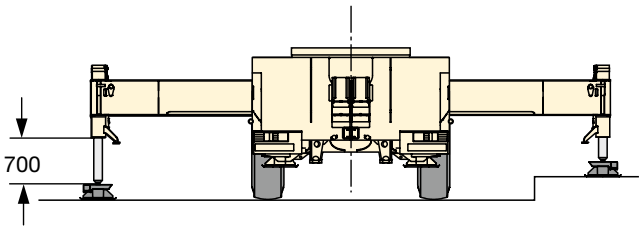

The crane cab

- Large field of vision
- Safety glazing
- Tinted window panes
- Crane driver's seat with lumbar support, multiply adjustable
- Heat and noise insulated interior cladding
- Corrosion resistant
- Working floodlight
- Can be tilted 20° backwards

https://truckmanualshub.com/

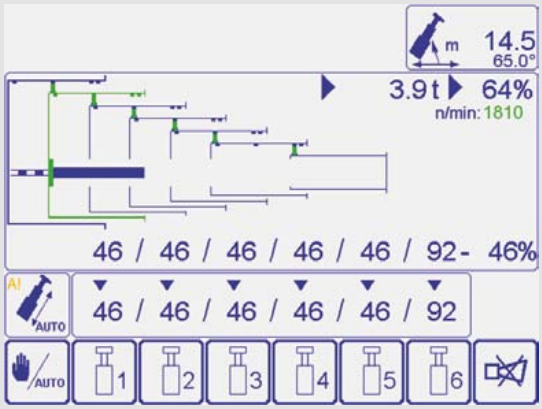

The fully automatic telescoping system „TELEMATIK“

- Greater lifting capacities with longer booms and larger radii thanks to ‚light‘ telescoping system
- One-stage hydraulic cylinder with hydraulically operated drive pin
- Maintenance-free telescoping system
- Fully automatic telescoping
- Easiest control and monitoring of telescoping action on LICCON screen

2.9 m long assembly jib

https://truckmanualshub.com/

High lifting capacities and flexible boom system

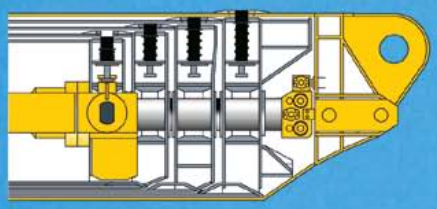

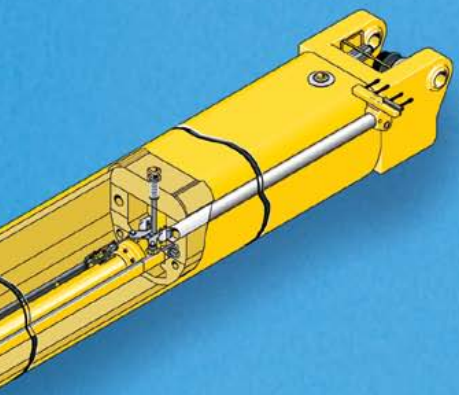

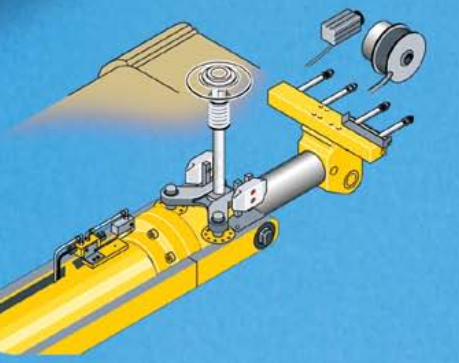

Powerful, long telescopic boom and functional lattice extensions

The telescopic boom consists of the base section and 5 telescopic sections, which can be comfortably and automatically extended and pinned to the requested length by the thousand fold proven single cylinder telescoping system TELEMATIK.

- 60 m long telescopic boom
- 10.8 m – 19 m long double swing-away jib, attachable at 0°, 20° and 40°
- Hydraulic adjustment of the swing-away jib at full load from 0° to 40° (optional), interpolation of capacities
- Hydraulic assistance for assembly of the swing-away jib with BTT
- 2 intermediate sections 7 m each for extension of the telescopic boom for operation with swing-away jib

High capacities with full counterweight as well as with partial counterweight offer a wide application of operations

- High lateral stability due to the oval boom profile
- Optimized capacities due to the numerous extension variations
- Capacity 10.5 t at 60 m long telescopic boom

High capacities at unpinned telescopic lengths

- High telescopable capacities due to interpolation
- Separate charts for holding of the load at unpinned telescopic lengths
- Display at LICCON monitor

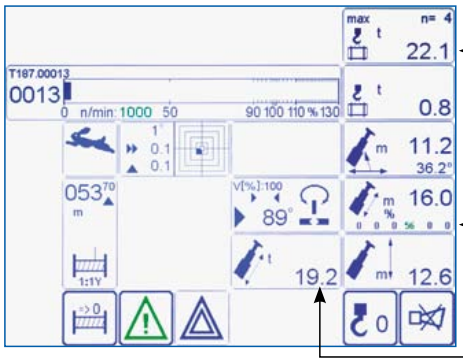

Holding capacity

Unpinned telescopic length

Telescopable capacity

Rooster sheave, foldable sidewise

Hydraulic assistance for assembly of the swing-away jib with BTT

https://truckmanualshub.com/

Hydraulic folding jib

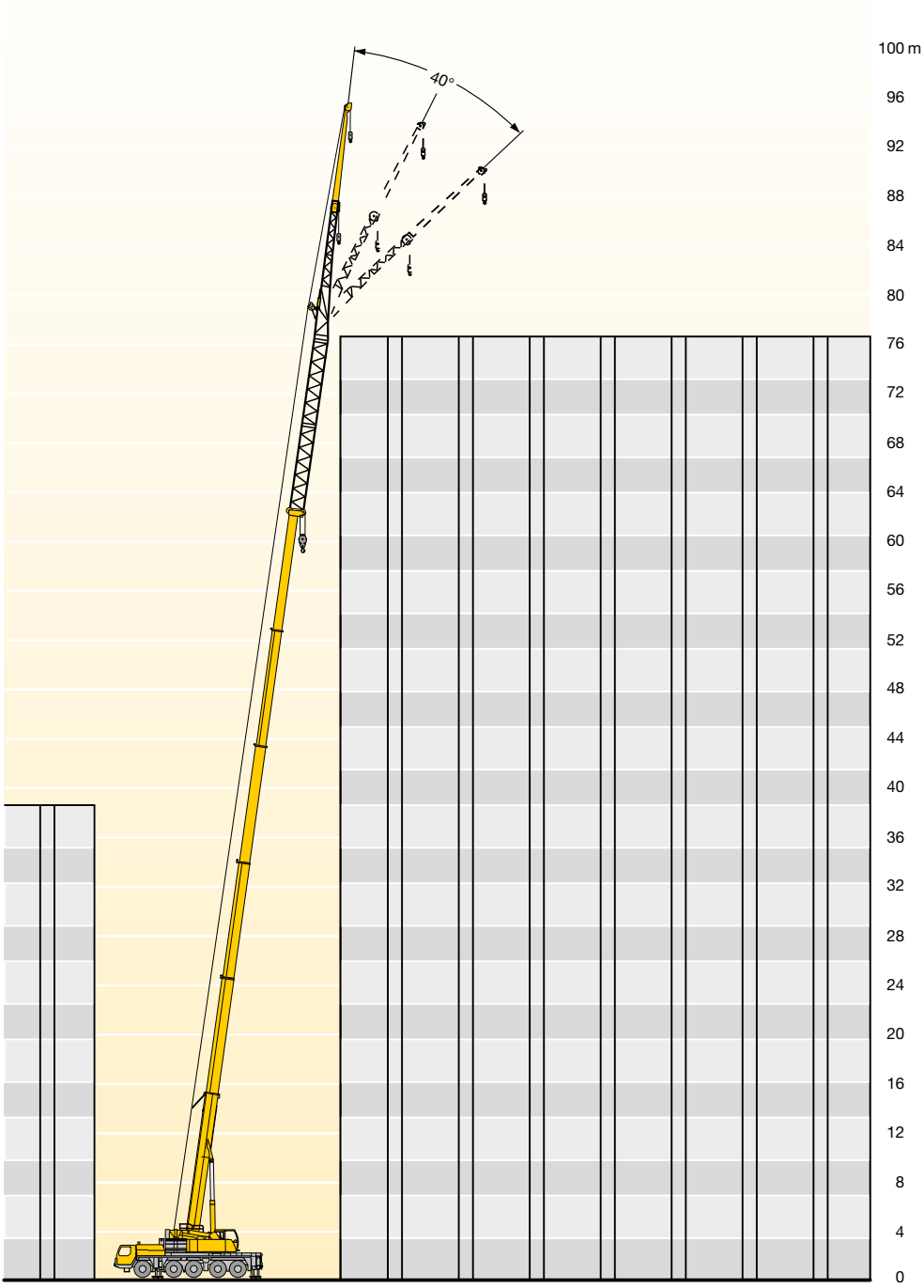

Hydraulically adjustable folding jib (0° to 40°)

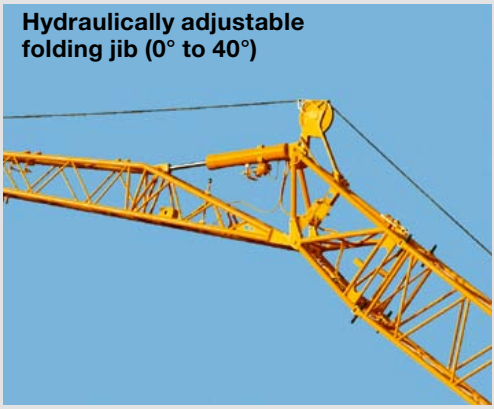

Hose reel for the hydraulic cylinder

https://truckmanualshub.com/

Variable counterweight

Ballast assembly – in a matter of minutes

- Multiple ballast variations from 2.9 t to 42 t
- Rapid ballasting with keyhole technology from within the crane cab
- Compact ballast dimensions: with a 29.3-t ballast, the ballast width is only 2.73 m
- Ballast radius: only 4.20 m
- 60-t total weight incl. 9-t ballast at 12-t axle load

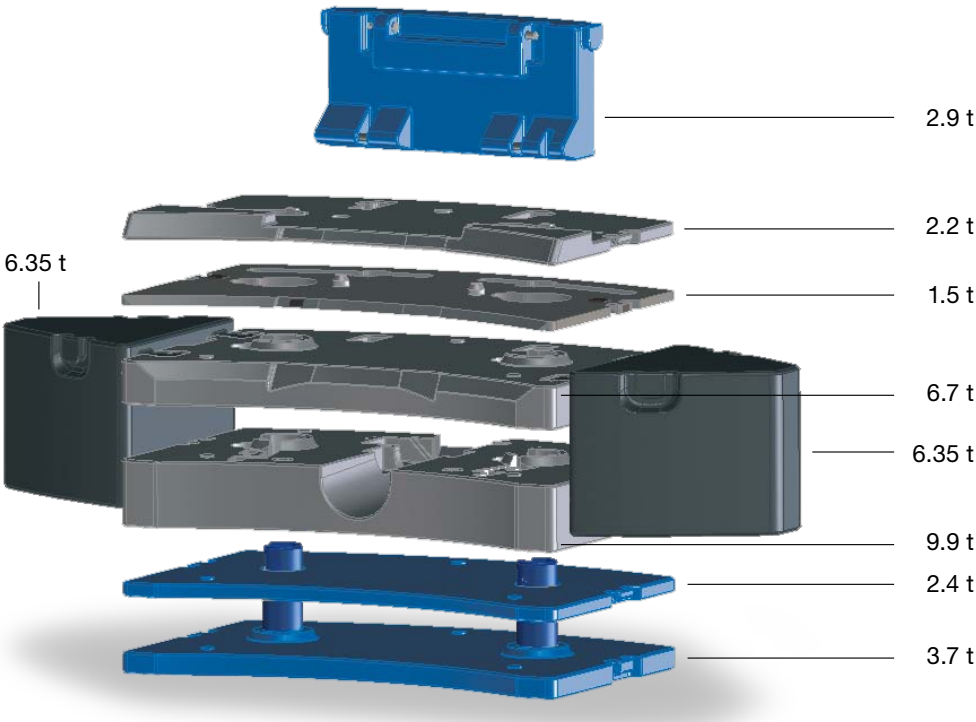

Standard ballast

Basic ballast	29.3 t
Additional ballast	12.7 t
Total	**42.0 t**

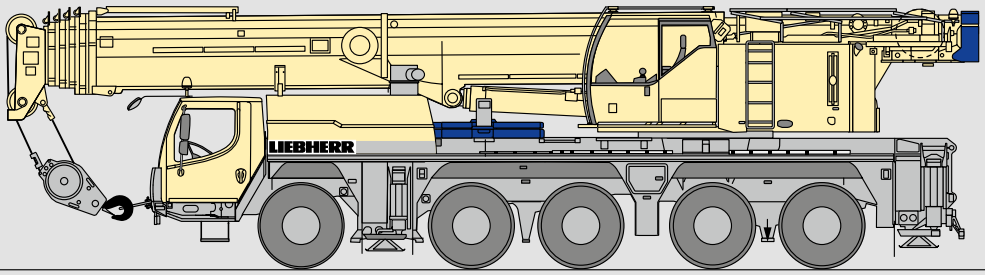

https://truckmanualshub.com/

The hoist gear

- Liebherr hoisting winch with built-in planetary gearing and spring-loaded multi-disc brake
- Line pull: 88 kN at the outer layer
- Max. rope speed: 110 m/min
- 2. hoist gear optional

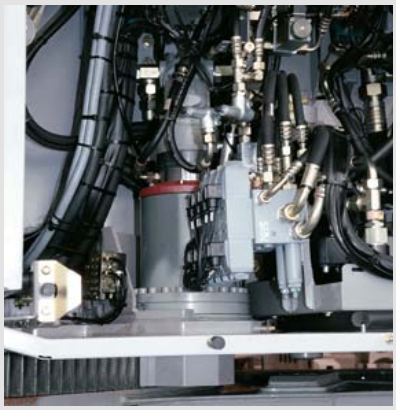

https://truckmanualshub.com/

High-power crane drive

With tried-and-tested components

The drive components for crane operation are constructed for high performance and ensure sensitive and precise load handling. They are specially designed to suit the crane's usage and have been subjected to hard endurance tests.

- Crane engine: four-cylinder Liebherr turbo-diesel engine, 129 kW/175 hp, 920 Nm max. torque, optimised fuel consumption thanks to electronic engine management
- Diesel-hydraulic crane drive, open oil circuits with electric LOAD SENSING control, four simultaneous working motions possible
- Electric/electronic SPS crane control via LICCON computer system
- Slewing gear can be switched as standard: released or hydraulically locked. The movement can thus be optimally adapted to the different operating requirements, e.g. sensitive assembly work or rapid work cycles
- Self-manufactured Liebherr winches, 88 kN line pull at the outer layer, greater line pull means less rope reeving is needed

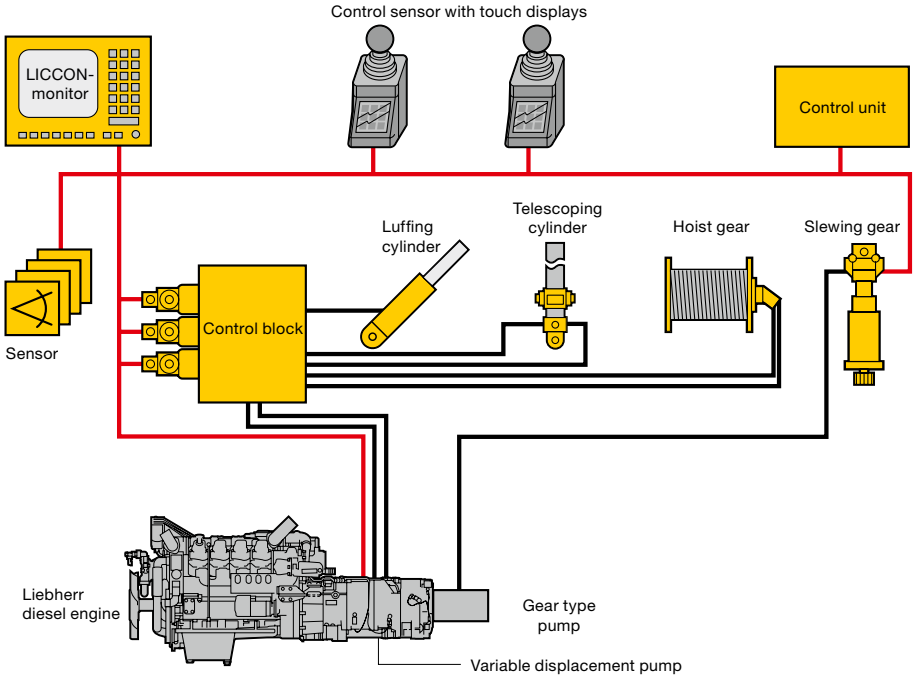

The slewing gear

- Liebherr planetary gearing, spring-loaded multi-disc brake
- Can be switched as standard: released or hydraulically locked
- Slewing speed can be steplessly adjusted from 0 to 1.5 rpm

Centralised lubrication

- Centralised lubrication system as standard for slewing ring, boom bearings, luffing ram and winch bearings
- Uniform application of lubricant
- Lubricant level visible in transparent container at all times

https://truckmanualshub.com/

The LICCON test system

- Rapid localisation of problems without any other measuring instruments
- Error code and description displayed
- Convenient interactive functions for monitoring all inputs and outputs
- Displays functions and allocation of sensors and actuators

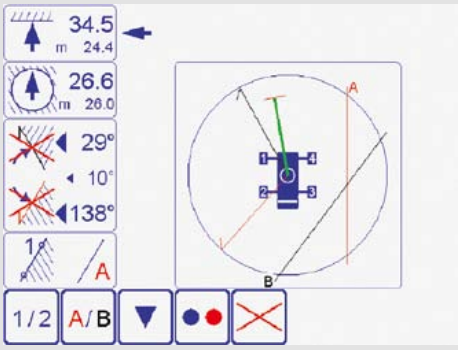

https://truckmanualshub.com/

Intelligent crane control

For functional and safe crane operation: the LICCON computer system

The soft and hardware of the mobile crane control is developed by Liebherr in-house. The centre is the LICCON computer system (Liebherr Computed Control).

- Integrated LML load moment limiter
- Key components are in-house manufactured by Liebherr
- Guaranteed spare parts availability
- Worldwide proven under the most different climate conditions
- Operator friendly

The second control generation LICCON2 is the result of a continuous development by the Liebherr specialists and enables the adaption to the constantly increasing demands of the markets due to its modern and future oriented control.

The data bus technology

Liebherr mobile cranes are completely interlaced by the data bus system. All important electric and electronic components are equipped with own micro processors and communicate with each other by only limited data cables. For the special demands of the mobile crane Liebherr has developed own data bus systems (LSB - Liebherr-System-Bus). The data bus technology improves the reliability, the comfort and the safety for road driving and crane operation:

- Higher reliability due to remarkable lesser electric cables and contacts
- Continuous self testing of the „intelligent sensors“
- Comprehensive diagnosis possibilities, fast fault finding

The LICCON work area limitation system (optional)

- Makes the crane operator's job easier by automatically monitoring workspace restrictions such as bridges, roofs, etc.
- Simple programming
- Four different limitation functions:
  - Pulley-head height limitation
  - Radius limitation
  - Slewing angle limitation
  - Edge limitation

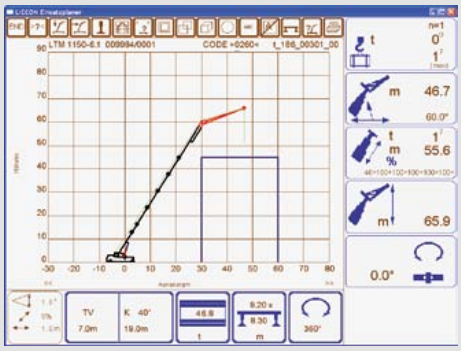

The LICCON work planner

- Computer programme for planning, simulating and documenting crane operations on a PC
- Representation of all the crane's load charts
- Automatic search for suitable crane based on load, radius and lifting height parameters
- Simulation of crane operations with outline functions and supporting force display

https://truckmanualshub.com/

LICCON2 – safe and comfortable

Attaching and detaching of the hook block

The BTT – Bluetooth Terminal offers the crane driver the possibility to attach or detach the hook block at the front of the vehicle within sight, as the hoist winch and the luffing cylinder of the telescopic boom are remote controlled.

Wireless remote control

Wireless remote control (option)

All crane motions can be controlled outside of the cab.

- Higher efficiency
- Free view and closeness to the load
- Prevention of communication errors between the crane driver and the job site personnel

Supporting the crane

By use of the BTT the mobile crane will be setup comfortably and safely. Engine start/stop and speed regulation, electronic inclination display and automatic levelling are standard. Optionally the BTT can also display the outrigger forces.

Colour monitor

The readability of the data on the monitor of the LICCON2 control system in the crane cab is enhanced by the colour display. Warnings and crane utilization are considerably better recognized.

Touch displays

Below the joy sticks integrated in the armrests the touch displays are installed, with which the various operational functions can be selected. These are beside others the supporting of the crane, the adjustment of the working floodlights as well as heater and air condition controls.

PN 205.00.E01.2012

The pictures contain also accessories and special equipment not included in the standard scope of delivery. Subject to modification

Liebherr-Werk Ehingen GmbH
Postfach 1361, 89582 Ehingen, Germany
☎ +49 7391 502-0, Fax +49 7391 502-33 99
www.liebherr.com, E-Mail: info.lwe@liebherr.com