NISSAN TRUCK

1986.0

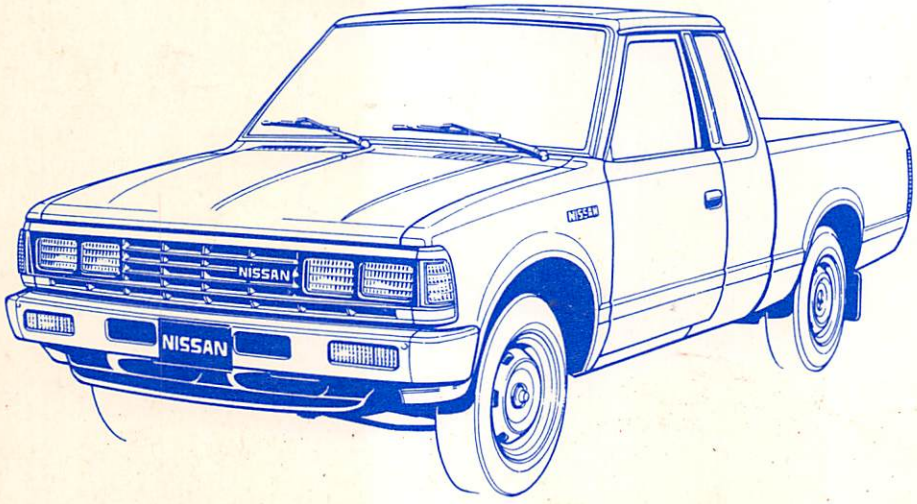

SERVICE MANUAL

NISSAN TRUCK

Model 720 Series

FOREWORD

This service manual has been prepared primarily for the purpose of assisting service personnel in providing effective service and maintenance of the 1986 NISSAN TRUCK.

This manual includes procedures for maintenance, adjustments, removal and installation, disassembly and assembly of components, and trouble-shooting.

All information, illustrations and specifications contained in this manual are based on the latest product information available at the time of publication. If your NISSAN model differs from the specifications contained in this manual, consult your NISSAN/DATSUN dealer for information.

The right is reserved to make changes in specifications and methods at any time without notice.

NISSAN MOTOR CO., LTD.

© 1985 NISSAN MOTOR CO., LTD.
Reprinted in USA
Not to be reproduced in whole or in part without the prior written permission of Nissan Motor Company Ltd., Tokyo, Japan.

QUICK REFERENCE INDEX

GENERAL INFORMATION ..... GI
MAINTENANCE ..... MA
ENGINE MECHANICAL ..... EM
ENGINE LUBRICATION & COOLING SYSTEMS LC
ENGINE FUEL & EMISSION CONTROL SYSTEM ..... EF&EC
ENGINE REMOVAL & INSTALLATION ..... ER
ENGINE CONTROL, FUEL & EXHAUST SYSTEMS ..... FE
CLUTCH CL
MANUAL TRANSMISSION ..... MT
AUTOMATIC TRANSMISSION ..... AT
TRANSFER ..... TF
PROPELLER SHAFT & DIFFERENTIAL CARRIER ..... PD
FRONT AXLE & FRONT SUSPENSION ..... FA
REAR AXLE & REAR SUSPENSION ..... RA
BRAKE SYSTEM ..... BR
STEERING SYSTEM ..... ST
BODY & FRAME ..... BF
HEATER & AIR CONDITIONER ..... HA
ELECTRICAL SYSTEM ..... EL

HOW TO USE THIS MANUAL

- This Service Manual is designed as a guide for servicing vehicles.
- This manual deals with the engine, chassis, body and electrical system.
- A **QUICK REFERENCE INDEX** is provided on the first page. Refer to this index along with the index of the particular section you wish to consult.
- The first page of each section lists the contents and gives the page numbers for the respective topics.
- **SERVICE DATA AND SPECIFICATIONS** are contained in each section.
- **TROUBLE DIAGNOSES AND CORRECTIONS** are also included in each section. This feature of the manual lists the likely causes of trouble and recommends the appropriate corrective actions to be taken.
- A list of **SPECIAL SERVICE TOOLS** is included in each section. The special service tools are designed to assist you in performing repair safely, accurately and quickly. For information concerning how to obtain special service tools, write to the following address:

  Kent-Moore Corporation
  29784 Little Mack
  Roseville, Michigan 48066

  Kent-Moore of Canada, Ltd.
  5466 Timberlea Blvd.,
  Unit 2
  Mississauga, Ontario
  Canada L4W2T7

- The measurements given in this manual are primarily expressed with the SI unit (International System of Unit), and alternately expressed in the metric system and in the yard/pound system.
- The back cover of the manual provides maintenance data for quick reference.
- In the text, the following abbreviations are used:

S.D.S.:	Service Data and Specifications	M/T, A/T:	Manual Transmission, Automatic Transmission
Ⓣ :	Tightening Torque	2WD, 4WD:	2-wheel drive vehicle, 4-wheel drive vehicle
		SST:	Special Service Tools

- The captions **CAUTION and WARNING** warn you of steps that must be followed to prevent personal injury and/or damage to some part of the vehicle.

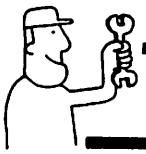

IMPORTANT SAFETY NOTICE

The proper performance of service is essential for both the safety of the mechanic and the efficient functioning of the vehicle.
The service methods in this Service Manual are described in such a manner that the service may be performed safely and accurately.
Special service tools have been designed to permit safe and proper performance of service. Be sure to use them.

Service varies with the procedures used, the skills of the mechanic and the tools and parts available. Accordingly, anyone using service procedures, tools or parts which are not specifically recommended by NISSAN must first completely satisfy himself that neither his safety nor the vehicle's safety will be jeopardized by the service method selected.

SECTION GI

CONTENTS

DIMENSIONS ..... GI- 2
MODEL VARIATION ..... GI- 3
IDENTIFICATION NUMBER ..... GI- 8
LIFTING POINTS AND TOWING GI-10
SCREW JACK GI-10
GARAGE JACK AND SAFETY STAND GI-10
TIE-DOWN GI-10
TOWING GI-10
SPECIAL SERVICE TOOLS GI-11
TIGHTENING TORQUE OF STANDARD BOLT GI-11

DIMENSIONS

Item		Vehicle model	Standard model						Heavy duty model	
			Regular Bed		Long Bed		King Cab		Heavy duty	Cab & Chassis
			4x2	4x4	4x2	4x4	4x2	4x4	4x2	
Overall length		mm (in)	4,390 (172.8)		4,750 (187.0)					–
Overall width		mm (in)	1,610 (63.4)							
Overall height		mm (in)	1,575 (62.0)	1,730 (68.1)	1,570 (61.8)	1,725 (67.9)	1,555 (61.2)	1,710 (67.3)	1,570 (61.8)	1,576 (62.1)
Wheelbase		mm (in)	2,575 (101.4)		2,815 (110.8)					
Thread	Front	mm (in)	1,315 (51.8)	1,355 (53.3)	1,315 (51.8)	1,355 (53.3)	1,315 (51.8)	1,355 (53.3)	1,315 (51.8)	
	Rear	mm (in)	1,350 (53.1)	1,360 (53.5)	1,350 (53.1)	1,360 (53.5)	1,350 (53.1)	1,360 (53.5)	1,350 (53.1)	1,530 (60.2)
Min. ground clearance		mm (in)	200 (7.9)	220 (8.7)	200 (7.9)	220 (8.7)	200 (7.9)	220 (8.7)	200 (7.9)	
Overhang to the body front end		mm (in)	750 (29.5)							
Overhang to the body rear end		mm (in)	1,065 (41.9)		1,185 (46.7)					–
Cargo space	Length	mm (in)	1,815 (71.5)		2,175 (85.6)		1,845 (72.6)		2,175 (85.6)	–
	Width	mm (in)	1,390 (54.7)							–
	Height	mm (in)	400 (15.7)							–

MODEL VARIATION

Destination		Class					Model	Engine	Transmission	Transfer	Differencial carrier Front	Differencial carrier Rear	Road wheel*1 size ... offset mm (in)	Tire
U.S.A.	California	4 x 2	Standard models	Standard wheelbase	Regular Bed	STD	NL720STV	Z24	FS5W71B	–	–	H190M	5-J x 14 ...40 (1.57) ...115 (4.53)*2 5-1/2-JJ x 14*3 (Aluminum) ...35 (1.38)	P195/75R14 P205/75R14*3
						DX	NL720TV							
						ST	NL720LTV							
						STD	NL720SKV		L3N71B			H190A		
						DX	NL720KV							
						ST	NL720LKV							
				Long wheelbase	Long Bed	STD	NLG720STV		FS5W71B			H190M		
						DX	NLG720TV							
						ST	NLG720LTV							
						STD	NLG720SKV		L3N71B			H190A		
						DX	NLG720KV							
						ST	NLG720LKV							
					King Cab	STD	KNL720STV		FS5W71B			H190M		
						DX	KNL720TV							
						ST	KNL720LTV							
						STD	KNL720SKV		L3N71B			H190A		
						DX	KNL720KV							
						ST	KNL720LKV							
			Heavy duty models		Heavy Duty	DX	ENL720TV		FS5W71B					LT195/75R14
					Cab & Chassis / Dual wheel		ENL720WTVFA (*)					C200		
		4 x 4	Standard models	Standard wheelbase	Regular Bed	STD	NLY720STV			T100L	R180		5-1/2-K x 15 ...40 (1.57) 6-JJ x 15*3 ...34 (1.34)	P215/75R15 P225/75R15*3
						DX	NLY720TV							
						ST	NLY720LTV							

(*) Variation specification

*1 Pitch circle diameter is 114.3 mm (4.50 in).
*2 For rear dual wheels
*3 For ST model

Destination		Class					Model	Engine	Transmission	Transfer	Differencial carrier		Road wheel*1 size ... offset mm (in)	Tire
											Front	Rear		
U.S.A.	California	4 x 4	Standard models	Long wheelbase	Long Bed	DX	NLGY720TV	Z24	FS5W71B	T100L	R180	C200	5-1/2-K x 15 ...40 (1.57) 6-JJ x 15*3 ...34 (1.34)	P215/75R15 P225/75R15*3
						ST	NLGY720LTV							
					King Cab	DX	KNLY720TV							
						ST	KNLY720LTV							
	Non-California	4 x 2		Standard wheelbase	Regular Bed	STD	NL720STU			–	–	H190M	5-J x 14 ...40 (1.57) ...115 (4.53)*2 5-1/2-JJ x 14*3 ...35 (1.38)	P195/75R14 P205/75R14*3
						DX	NL720TU							
						ST	NL720LTU							
						STD	NL720SKU		L3N71B			H190A		
						DX	NL720KU							
						ST	NL720LKU							
				Long wheelbase	Long Bed	STD	NLG720STU		FS5W71B			H190M		
						DX	NLG720TU							
						ST	NLG720LTU							
						STD	NLG720SKU		L3N71B			H190A		
						DX	NLG720KU							
						ST	NLG720LKU							
					King Cab	STD	KFL720STU	Z20	FS5W71B			H190M		P185/80R14
							KNL720STU	Z24						P195/75R14 P205/75R14*3
						DX	KNL720TU							
						ST	KNL720LTU							
						STD	KNL720SKU		L3N71B			H190A		
						DX	KNL720KU							
						ST	KNL720LKU							
						DX	KJL720TU	SD25	FS5W71B			H190M		

*1 Pitch circle diameter is 114.3 mm (4.50 in).
*2 For rear dual wheels
*3 For ST model

Destination		Class						Model	Engine	Transmission	Transfer	Differencial carrier		Road wheel*1 size ... offset mm (in)	Tire
												Front	Rear		
U.S.A.	Non-California	4 x 2	Heavy duty models	Long wheelbase	Heavy Duty		DX	ENL720TU	Z24	FS5W71B	–	–	H190A	5-J x 14 ...40 (1.57) ...115 (4.53)*2 5-1/2-JJ x 14*3 ...35 (1.38)	LT195/75R14
					Cab & Chassis	Dual wheel		ENL720WTUFA (*)					C200		
		4 x 4	Standard models	Standard wheelbase	Regular Bed		STD	NLY720STU			T100L	R180		5-1/2-K x 15 ...40 (1.57) 6-JJ x 15*3 ...34 (1.34)	P215/75R15 P225/75R15*3
							DX	NLY720TU							
							ST	NLY720LTU							
				Long wheelbase	Long Bed		DX	NLGY720TU							
							ST	NLGY720LTU							
					King Cab		DX	KNLY720TU							
							ST	KNLY720LTU							
Canada		4 x 2		Standard wheelbase	Regular Bed		STD	NL720STN			–	–	H190M	5-J x 14 ...40 (1.57) ...115 (4.53)*2 5-1/2-JJ x 14*3 ...35 (1.38)	P195/75R14 P205/75R14*3
								NL720SKN		L3N71B			H190A		
				Long wheelbase	Long Bed			NLG720STN		FS5W71B			H190M		
								NLG720SKN		L3N71B			H190A		
							DX	JLG720TN	SD25	FS5W71B			H190M		
					King Cab		STD	KNL720STN	Z24						
							DX	KNL720TN							
							ST	KNL720LTN							
							STD	KNL720SKN		L3N71B			H190A		
							DX	KNL720KN							
							ST	KNL720LKN							
							DX	KJL720TN	SD25	FS5W71B			H190M		
			Heavy duty models		Heavy Duty			ENL720TN	Z24				H190A		LT195/75R14
					Cab & Chassis	Dual wheel		ENL720WTNFA (*)					C200		

(*) Variation specification

*1 Pitch circle diameter is 114.3 mm (4.50 in).

*2 For rear dual wheels

*3 For ST model

Destination	Class					Model	Engine	Transmission	Transfer	Differencial carrier		Road wheel*1 size ... offset mm (in)	Tire
										Front	Rear		
Canada	4 x 4	Standard models	Standard wheelbase	Regular Bed	DX	NLY720TN	Z24	FS5W71B	T100L	R180	C200	5-1/2-K x 15 ...40 (1.57) 6-JJ x 15*3 ...34 (1.34)	P215/75R15 P225/75R15*3
			Long wheelbase	Long Bed		NLGY720TN							
				King Cab		KNLY720TN							
					ST	KNLY720LTN							

*1 Pitch circle diameter is 114.3 mm (4.50 in).

*3 For ST model

Prefix and suffix destinations

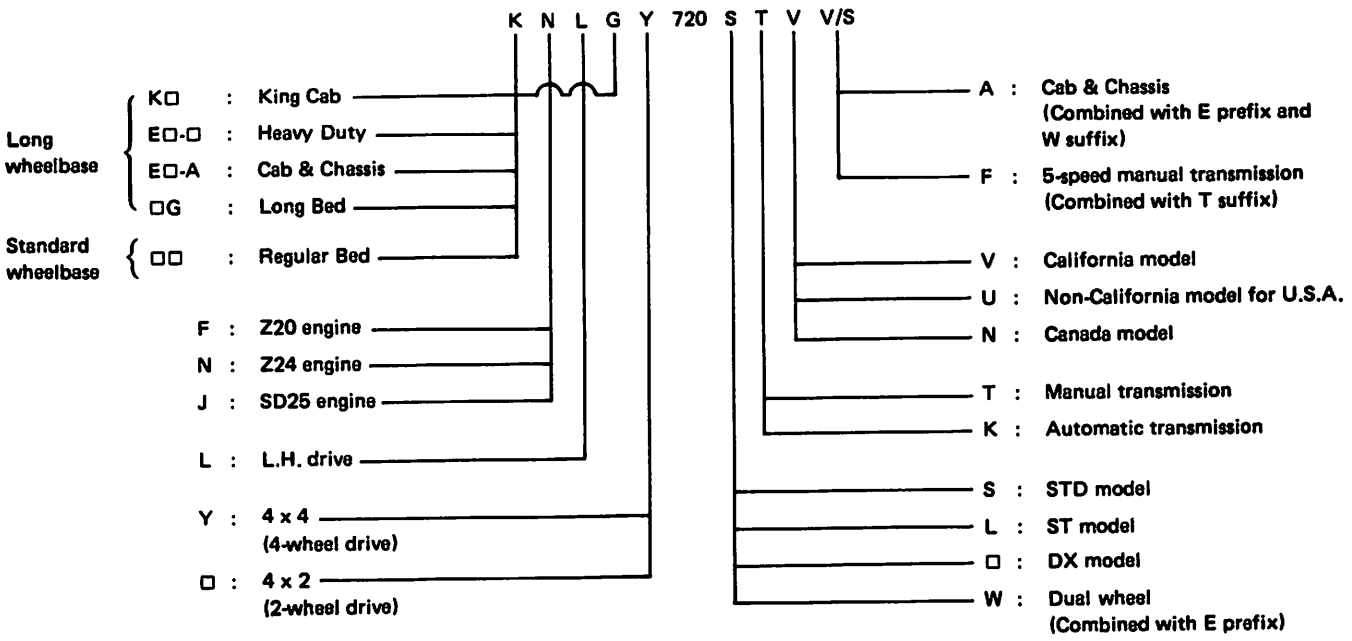

O: means no indications.

— Reference —

The model variations of the 720 series are as follows:

Class		Standard model			Heavy duty model	
Wheelbase		Standard wheelbase	Long wheelbase			
Model	4 x 2	Regular Bed	Long Bed	King Cab	*Heavy Duty	Cab & Chassis
	4 x 4	Regular Bed	Long Bed	King Cab	–	–
Cab type		Regular Cab		King Cab	Regular Cab	
Bed type		Regular Bed	Long Bed	Regular Bed	Long Bed	–
Chassis type		Standard chassis			Heavy chassis	

*: Except for Canada

IDENTIFICATION NUMBER

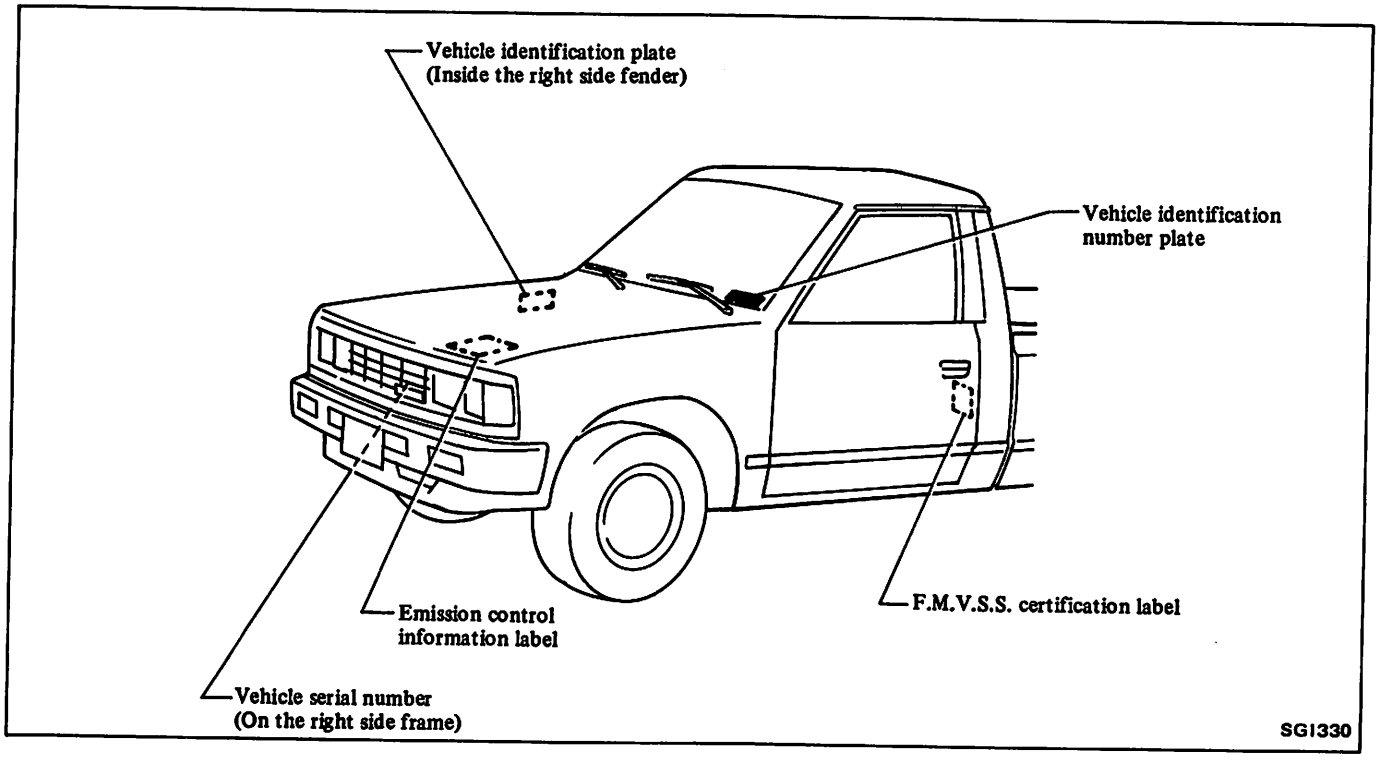

IDENTIFICATION PLATE

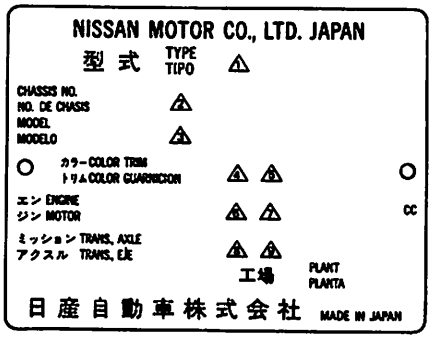

SGI315

1 Type
2 Vehicle identification number (Chassis number)
3 Model
4 Body color code
5 Trim color code
6 Engine model
7 Engine displacement
8 Transmission model
9 Axle model

ENGINE NUMBER

The engine serial number is stamped on the left side (Gasoline)/on the right side (Diesel) of the cylinder block.

Gasoline engine

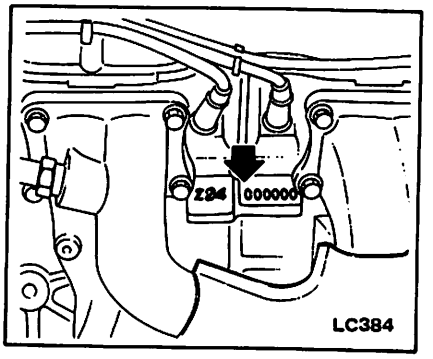

Diesel engine

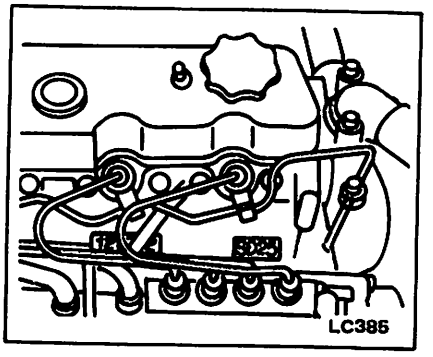

TRANSFER NUMBER

The transfer serial number is stamped on the front right face of the transfer case.

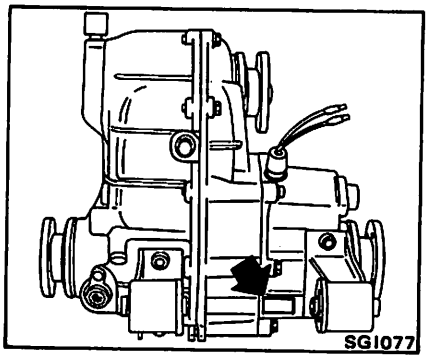

MANUAL TRANSMISSION NUMBER

The transmission serial number is stamped on the front upper face of the transmission case.

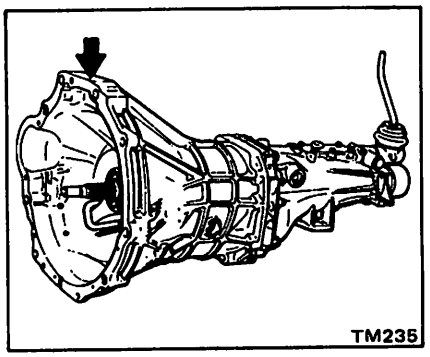

AUTOMATIC TRANSMISSION NUMBER

The transmission serial number is stamped on the right side of the transmission case.

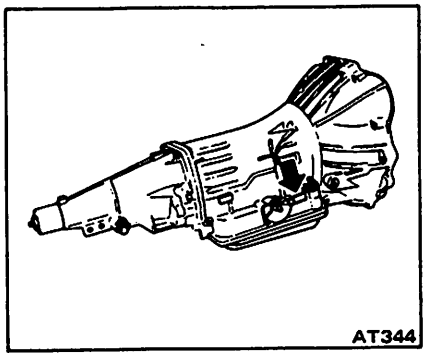

LIFTING POINTS AND TOWING

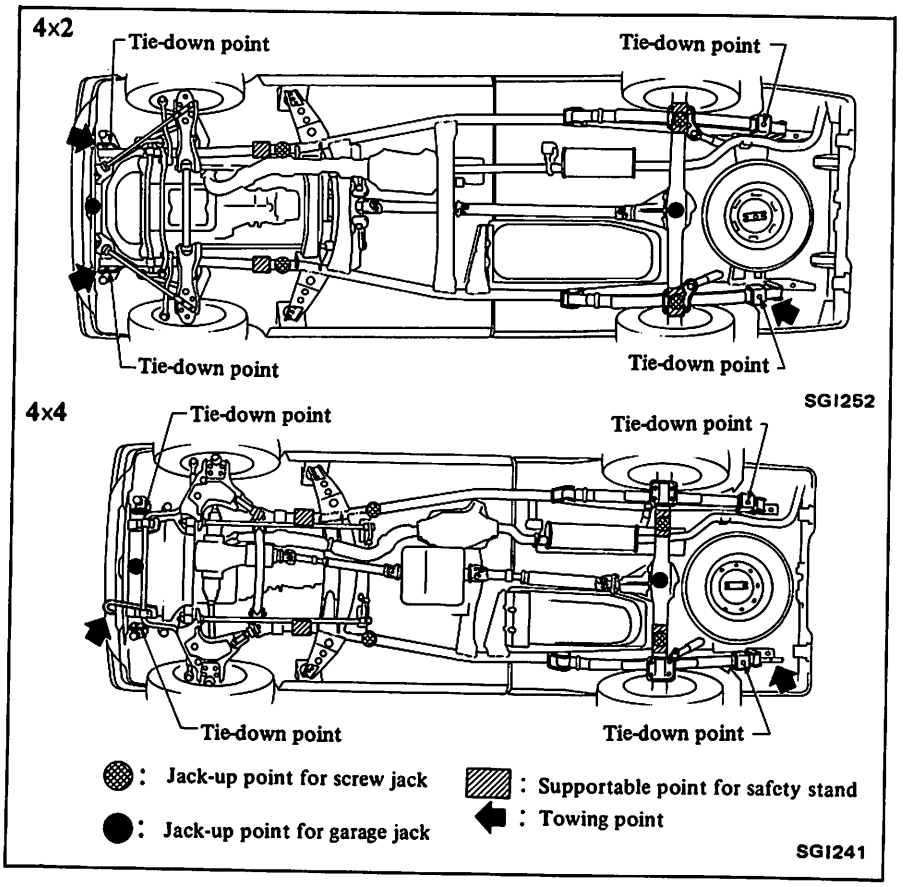

SCREW JACK

WARNING:

a. Never get under the vehicle while it is supported only by the jack.
Always use safety stands to support frame or rear axle case when you have to get beneath the vehicle.

b. Place suitable blocks at both front and rear of the wheels diagonally opposite the jack position.

CAUTION:

a. When the yellow mark appears on the screw jack, it indicates the maximum permissible height. Do not jack up further.

b. When the jack is at lower limit, do not add large force downward.

Apply the screw jack furnished with the vehicle to the position indicated below in a safe manner.

GARAGE JACK AND SAFETY STAND

WARNING:

a. When carrying out operations with the garage jack, be sure to support the vehicle with safety stands.

b. When jacking up the rear (front) of the vehicle, place the blocks at the front (rear) of the front (rear) wheels to hold them.

Apply the garage jack and safety stand to the position indicated below in a safe manner.

TIE-DOWN

FRONT SIDE

Use front tie-down points.

REAR SIDE

Use rear spring shackle for tie-down.

TOWING

CAUTION:

a. It is necessary to use proper towing equipment to avoid possible damage to the vehicle during a towing operation.
Towing is in accordance with Towing Procedure Manual at dealer side.

b. All applicable State or Provincial (in Canada) laws and local laws regarding the towing operation must be obeyed.

c. The rear left leaf spring should not be used for towing.

d. Before towing, make sure that the transmission, transfer unit, axles, steering system and power train are in good order. If any unit is damaged, a dolly must be used.

e. If the transmission and transfer are inoperative, tow the vehicle with the rear wheels off the ground, or with the propeller shaft removed.

f. When the vehicle is towed with its front wheels on the ground, secure the steering wheel in a straight ahead position with the ignition key turned in "OFF" position.

g. Set the free-running hubs at the "FREE" position. (4WD)

h. When towing an automatic transmission model, try to restrict towing speed below 30 km/h (20 MPH) and towing distance less than 30 km (20 miles).
With manual transmission model, try to restrict towing speed 80 km/h (50 MPH) and towing distance less than 80 km (50 miles).
If the speed or distance must necessarily be greater, remove the propeller shaft beforehand to prevent damage to the transmission.

i. Release the parking brake and set the gearshift and transfer control levers in "Neutral" position before starting to two the vehicle.

SPECIAL SERVICE TOOLS

Special Tools play very important role in the maintenannce of vehicles. These are essential to the safe, accurate and speedy servicing.

The working times listed in the column under FLAT RATE TIME in FLAT RATE SCHEDULE are computed based on the use of Special Tools.

The identification code of maintenance tools is made up of 2 alphabetical letters and 8-digital figures.

The heading two letters roughly classify tools or equipment as:

ST00000000: Special Tool
KV00000000: Special Tool
EM00000000: Engine Overhauling Machine
GG00000000: General Gauge
LM00000000: Garage Tool
HT00000000: Hand Tool

TIGHTENING TORQUE OF STANDARD BOLT

Grade	Nominal size	Bolt diameter mm	Pitch mm	Tightening torque		
				N·m	kg-m	ft-lb
4T	M6	6.0	1.0	3 - 4	0.3 - 0.4	2.2 - 2.9
	M8	8.0	1.25	8 - 11	0.8 - 1.1	5.8 - 8.0
			1.0	8 - 11	0.8 - 1.1	5.8 - 8.0
	M10	10.0	1.5	16 - 22	1.6 - 2.2	12 - 16
			1.25	16 - 22	1.6 - 2.2	12 - 16
	M12	12.0	1.75	26 - 36	2.7 - 3.7	20 - 27
			1.25	30 - 40	3.1 - 4.1	22 - 30
	M14	14.0	1.5	46 - 62	4.7 - 6.3	34 - 46
7T	M6	6.0	1.0	6 - 7	0.6 - 0.7	4.3 - 5.1
	M8	8.0	1.25	14 - 18	1.4 - 1.8	10 - 13
			1.0	14 - 18	1.4 - 1.8	10 - 13
	M10	10.0	1.5	25 - 35	2.6 - 3.6	19 - 26
			1.25	26 - 36	2.7 - 3.7	20 - 27
	M12	12.0	1.75	45 - 61	4.6 - 6.2	33 - 45
			1.25	50 - 68	5.1 - 6.9	37 - 50
	M14	14.0	1.5	76 - 103	7.7 - 10.5	56 - 76
9T	M6	6.0	1.0	8 - 11	0.8 - 1.1	5.8 - 8.0
	M8	8.0	1.25	19 - 25	1.9 - 2.5	14 - 18
			1.0	20 - 27	2.0 - 2.8	14 - 20
	M10	10.0	1.5	36 - 50	3.7 - 5.1	27 - 37
			1.25	39 - 51	4.0 - 5.2	29 - 38
	M12	12.0	1.75	65 - 88	6.6 - 9.0	48 - 65
			1.25	72 - 97	7.3 - 9.9	53 - 72
	M14	14.0	1.5	109 - 147	11.1 - 15.0	80 - 108

1. Special parts are excluded.
2. This standard is applicable to bolts having the following marks embossed on the bolt head.

Grade	Mark
4T	4
7T	7
9T	9

MAINTENANCE

SECTION MA

MA

CONTENTS

PERIODIC MAINTENANCE ..... MA- 2
GENERAL MAINTENANCE ..... MA- 7
LUBRICATION CHART MA-10
RECOMMENDED FUEL AND LUBRICANTS MA-11
Fuel MA-11
Lubricants MA-11
SAE viscosity number MA-11
APPROXIMATE REFILL CAPACITIES MA-12
ENGINE MAINTENANCE (Z20 & Z24) MA-13
Before engine start MA-13
After engine warm-up MA-17
DIAGNOSTIC PROCEDURE FOR PROBLEMS (Z20 & Z24) MA-21
Diagnostic procedure for carburetor engines MA-21
Diagnostic procedure for E.C.C. engine (California) MA-28
ENGINE MAINTENANCE (SD25) MA-32
Before engine start MA-32
After engine warm-up MA-34
TROUBLE DIAGNOSES AND CORRECTIONS (SD25) MA-38
CHASSIS AND BODY MAINTENANCE MA-52
Exhaust systems MA-52
Clutch MA-52
Manual transmission MA-52
Automatic transmission MA-52
Transfer MA-53
Propeller shaft and differential carrier .. MA-53
Front axle and front suspension MA-54
Rear axle and rear suspension MA-58
Brake system MA-58
Wheel and tire MA-60
Steering system MA-64
Body MA-65
SERVICE DATA AND SPECIFICATIONS (S.D.S.) MA-67
Engine maintenance MA-67
Chassis and body maintenance MA-68
SPECIAL SERVICE TOOLS MA-70

PERIODIC MAINTENANCE

The following charts show the normal maintenance schedule. Under severe driving conditions, additional or more frequent maintenance will be required. Refer to "Maintenance under severe driving conditions".

The periodic maintenance schedule is repeated beyond the last mileage and period shown by returning to the first 15,000 miles (24,000 km) or 12 months.

GASOLINE ENGINE MODELS (For U.S.A. except for California)

Emission control system maintenance

MAINTENANCE OPERATION Periodic maintenance should be performed at number of miles, kilometers or months, whichever comes first	Miles x 1,000	7.5	15	30	45	60	75	90	105	120	Reference page
	(Kilometerx 1,000)	(12)	(24)	(48)	(72)	(96)	(121)	(145)	(169)	(193)	
	Months	6	12	24	36	48	60	72	84	96	
Drive belts				I		R		I		R	MA-13
Air cleaner filter		Replace every 30,000 miles (48,000 km)									MA-13
Positive crankcase ventilation (P.C.V.) filter		See NOTE (1)*									MA-13, 14
Vapor lines				I*		I*		I*		I*	MA-14
Fuel lines (hoses, piping, connections, etc.)				I*		I*		I*		I*	MA-14
Fuel filter		See NOTE (1)*									MA-14
Engine coolant				R		R		R		R	MA-14, 15
Engine oil		R	Then replace every 7,500 miles (12,000 km) or 6 months								MA-15
Engine oil filter		R	Then replace every second oil change								MA-15
Spark plugs		Replace every 30,000 miles (48,000 km)									MA-16
Ignition wires		Inspect every 2 years*									MA-16, 17
Intake & exhaust valve clearance			A	A	A	A	A	A	A	A	MA-17
Idle rpm			I*	I*	I*	I	I*	I*	I*	I	MA-18
Automatic temperature control air cleaner		Inspect every 30,000 miles (48,000 km)*									EF & EC-38, 39
Exhaust gas sensor		Replace every 50,000 miles (80,000 km)									MA-19

Chassis and body maintenance

MAINTENANCE OPERATION Periodic maintenance should be performed at number of miles, or months, whichever comes first.	Miles x 1,000	15	30	45	60	75	90	105	120	Reference page
	(Kilometers x 1,000)	(24)	(48)	(72)	(96)	(121)	(145)	(169)	(193)	
	Months	12	24	36	48	60	72	84	96	
Brake lines & hoses		I	I	I	I	I	I	I	I	MA-58, 59
Brake pads, discs, drums & linings		Inspect every 15,000 miles (24,000 km)								MA-59
Manual and automatic transmission, transfer & differential gear oil		Inspect every 15,000 miles (24,000 km)								MA-52, 53, 54
Power steering lines & hoses		I	I	I	I	I	I	I	I	MA-65
Steering gear (box) & linkage, steering damper (4×4), axle, suspension parts & front drive shaft boots (4×4)	See NOTE (3)	I	I	I	I	I	I	I	I	MA-54, 64
Steering linkage ball joints & front suspension ball joints					I				I	MA-55
Looks, hinges & hood latch		L	L	L	L	L	L	L	L	MA-66
Front wheel bearing grease (4x2)			I		I		I		I	MA-55
Front wheel bearing grease (4×4)		I	R	I	R	I	R	I	R	MA-55
Exhaust system		I	I	I	I	I	I	I	I	MA-52
Seat belts, buckles, retractors, anchors & adjuster		I	I	I	I	I	I	I	I	MA-65

NOTE: (1) If vehicle is operated under extremely adverse weather conditions or in areas where ambient temperatures are either extremely low or extremely high, the filters might become clogged. In such an event, replace them immediately.

(2) Maintenance items and intervals with "*" are recommended by NISSAN. Other maintenance items and intervals are required.

(3) On dual wheels, wheel nuts must be retightened to torque specifications after the first 100 miles (160 km) and subsequent 600 mile (1,000 km) intervals.

Abbreviations: L = Lubricate
R = Replace
I = Inspect. Correct or replace if necessary.

GASOLINE ENGINE MODELS (For California)

Emission control system maintenance

MAINTENANCE OPERATION		MAINTENANCE INTERVAL					Reference page
Periodic maintenance should be performed at number of miles, kilometers or months, whichever comes first.	Miles x 1,000	7.5	15	30	45	60	
	(Kilometers x 1,000)	(12)	(24)	(48)	(72)	(96)	
	Months	6	12	24	36	48	
Drive belts				I		I (R*)	MA-13
Air cleaner filter		Replace every 30,000 miles (48,000 km).					MA-13
Positive crankcase ventilation (P.C.V.) filter		See NOTE (1)*.					MA-13, 14
Vapor lines				I*		I*	MA-14
Fuel lines (hoses, piping, connections, etc.)				I*		I*	MA-14
Fuel filter		See NOTE (1)*.					MA-14
Engine coolant				R		R	MA-14, 15
Engine oil & oil filter		R	Then replace every 7,500 miles (12,000 km) or 6 months.				MA-15
Spark plugs		Replace every 30,000 miles (48,000 km).					MA-16
Ignition wires		Inspect every 2 years*.					MA-16, 17
Intake & exhaust valve clearance			A	A	A	A	MA-17
Idle rpm			I*	I*	I*	I*	MA-18
Automatic temperature control air cleaner		Inspect every 30,000 miles (48,000 km)*.					EF & EC-38, 39
Exhaust gas sensor		Replace every 30,000 miles (48,000 km).					MA-19

Chassis and body maintenance

MAINTENANCE OPERATION		MAINTENANCE INTERVAL				Reference page
Periodic maintenance should be performed at number of miles, kilometers or months, whichever comes first.	Miles x 1,000	15	30	45	60	
	(Kilometers x 1,000)	(24)	(48)	(72)	(96)	
	Months	12	24	36	48	
Brake lines & hoses		I	I	I	I	MA-58, 59
Brake pads, discs, drums & linings		Inspect every 15,000 miles (24,000 km).				MA-59
Manual and automatic transmission, transfer & differential gear oil		Inspect every 15,000 miles (24,000 km).				MA-52, 53, 54
Power steering lines & hoses		I	I	I	I	MA-65
Steering gear (box) & linkage, steering damper (4x4), axle, suspension parts & front drive shaft boots (4x4)	See NOTE (3)	I	I	I	I	MA-54, 64
Steering linkage ball joints & front suspension ball joints					I	MA-55
Looks, hinges & hood latch		L	L	L	L	MA-66
Front wheel bearing grease (4x2)			I		I	MA-55
Front wheel bearing grease (4x4)		I	R	I	R	MA-55
Exhaust system		I	I	I	I	MA-52
Seat belts, buckles, retractors, anchors & adjuster		I	I	I	I	MA-65

NOTE: (1) If vehicle is operated under extremely adverse weather conditions or in areas where ambient temperatures are either extremely low or extremely high, the filters might become clogged. In such an event, replace them immediately.

(2) Maintenance items and intervals with "*" are recommended by NISSAN. Other maintenance items and intervals are required.

(3) On dual wheels, wheel nuts must be retightened to torque specifications after the first 100 miles (160 km) and subsequent 600 mile (1,000 km) intervals.

Abbreviations: L = Lubricate
R = Replace
I = Inspect. Correct or replace if necessary.

GASOLINE ENGINE MODELS (For Canada)

Emission control system maintenance

MAINTENANCE OPERATION	MAINTENANCE INTERVAL						Reference page
Periodic maintenance should be performed at number of miles, kilometers or months, whichever comes first.	Miles x 1,000	1	7.5	15	30	45	60	
	(Kilometers x 1,000)	(1.6)	(12)	(24)	(48)	(72)	(96)	
	Months	–	6	12	24	36	48	
Drive belts					I		I(R*)	MA-13
Air cleaner filter		Replace every 30,000 miles (48,000 km)						MA-13
Air injection valve filter		Replace every 30,000 miles (48,000 km)						MA-13
Positive crankcase ventilation (P.C.V.) filter		See NOTE (1)*.						MA-13, 14
Vapor lines					I*		I*	MA-14
Fuel lines (hoses, piping, connections, etc.)					I*		I*	MA-14
Fuel filter		See NOTE (1)*.						MA-14
Engine coolant					R		R	MA-14, 15
Engine oil & oil filter			R	Then replace every 7,500 miles (12,000 km) or 6 months.				MA-15
Spark plugs		Replace every 30,000 miles (48,000 km)						MA-16
Ignition wires		Inspect every 2 years*						MA-16, 17
Intake & exhaust valve clearance		A		A	A	A	A	MA-17
Idle rpm		I		I*	I*	I*	I*	MA-18
Automatic temperature control air cleaner		Inspect every 30,000 miles (48,000 km)*.						EF & EC-90, 91

Chassis and body maintenance

MAINTENANCE OPERATION		MAINTENANCE INTERVAL				Reference page
Periodic maintenance should be performed at number of miles kilometers or months, whichever comes first.	Miles x 1,000	15	30	45	60	
	(Kilometers x 1,000)	(24)	(48)	(72)	(96)	
	Months	12	24	36	48	
Brake lines & hoses		I	I	I	I	MA-58, 59
Brake pads, discs, drums & linings		Inspect every 15,000 miles (24,000 km).				MA-59
Manual and automatic transmission, transfer & differential gear oil		Inspect every 1,5000 miles (24,000 km).				MA-52, 53, 54
Power steering lines & hoses		I	I	I	I	MA-65
Steering gear (box) & linkage, steering damper (4x4), axle, suspension parts & front drive shaft boots (4x4)	See NOTE (3)	I	I	I	I	MA-54, 64
Steering linkage ball joints & front suspension ball joints					I	MA-55
Looks, hinges & hood latch		L	L	L	L	MA-66
Front wheel bearing grease (4x2)			I		I	MA-55
Front wheel bearing grease (4x4)		I	R	I	R	MA-55
Exhaust system		I	I	I	I	MA-52
Seat belts, buckles, retractors, anchors & adjuster		I	I	I	I	MA-65

NOTE: (1) If vehicle is operated under extremely adverse weather conditions or in areas where ambient temperatures are either extremely low or extremely high, the filters might become clogged. In such an event, replace them immediately.

(2) Maintenance items and intervals with "*" are recommended by NISSAN. Other maintenance items and intervals are required.

(3) On dual wheels, wheel nuts must be retightened to torque specifications after the first 100 miles (160 km) and subsequent 600 mile (1,000 km) intervals.

Abbreviations: L = Lubricate
R = Replace
I = Inspect. Correct or replace if necessary.

DIESEL ENGINE MODELS (For Canada and U.S.A. except for California)

Emission control system maintenance

MAINTENANCE OPERATION		MAINTENANCE INTERVAL									Reference page
Periodic maintenance should be performed at number of miles, kilometers or months, whichever comes first	Miles x 1,000	5	15	30	45	60	75	90	105	120	
	(Kilometers x 1,000)	(8)	(24)	(48)	(72)	(96)	(121)	(145)	(169)	(193)	
	Months	6	12	24	36	48	60	72	84	96	
Drive belts			I	I	I	I	I	I	I	I	MA-32
Air cleaner filter		Replace every 30,000 miles (48,000 km).									MA-32
Fuel lines (hoses, piping, connection, etc.)				I*		I*		I*		I*	MA-37
Rubber hoses (water, air, fuel, oil)			I	I	I	I	I	I	I	I	MA-37
Main fuel filter	See NOTE (1).			R		R		R		R	MA-33
Primary fuel filter		See NOTE (1)*									MA-33
Engine coolant				R		R		R		R	MA-32, 33
Engine oil & oil filter	See NOTE (2).	R	Then replace every 5,000 miles (8,000 km) or 6 months								MA-35, 36
Injection pump diaphragm oil		Replace every 5,000 miles (8,000 km)									MA-36
Injection nozzle tips		Inspect every 15,000 miles (24,000 km)*									MA-34
Intake & exhaust valve clearance			A	A	A	A	A	A	A	A	MA-34
Idle rpm				I		I		I		I	MA-37
Fuel injection timing		Inspect every 30,000 miles (48,000 km).									MA-33

Chassis and body maintenance

MAINTENANCE OPERATION		MAINTENANCE INTERVAL								Reference page
Periodic maintenance should be performed at number of miles, kilometers or months, whichever comes first.	Miles x 1,000	15	30	45	60	75	90	105	120	
	(Kilometers x 1,000)	(24)	(48)	(72)	(96)	(121)	(145)	(169)	(193)	
	Months	12	24	36	48	60	72	84	96	
Brake lines & hoses		I	I	I	I	I	I	I	I	MA-58, 59
Brake pads, discs, drums & linings		Inspect every 15,000 miles (24,000 km).								MA-59
Manual and automatic transmission, transfer & differential gear oil		Inspect every 15,000 miles (24,000 km).								MA-52, 53, 54
Power steering lines & hoses		I	I	I	I	I	I	I	I	MA-65
Steering gear (box) & linkage, steering damper (4x4), axle, suspension parts & front drive shaft boots (4x4)	See NOTE (4)	I	I	I	I	I	I	I	I	MA-54, 64
Steering linkage ball joints & front suspension ball joints					I				I	MA-55
Looks, hinges & hood latch		L	L	L	L	L	L	L	L	MA-66
Front wheel bearing grease (4x2)			I		I		I		I	MA-55
Front wheel bearing grease (4x4)		I	R	I	R	I	R	I	R	MA-55
Exhaust system		I	I	I	I	I	I	I	I	MA-52
Seat belts, buckles, retractors, anchors & adjuster		I	I	I	I	I	I	I	I	MA-65

NOTE: (1) If vehicle is operated under extremely adverse weather conditions or in areas where ambient temperatures are either extremely low or extremely high, the filters might become clogged. In such an event, replace them immediately.

(2) Old engine oil should be drained completely, then new oil added. Never mix new oil with old oil.

(3) Maintenance items and intervals with "*" are recommended by NISSAN. Other maintenance items and intervals are required.

(4) On dual wheels, wheel nuts must be retightened to torque specifications after the first 100 miles (160 km) and subsequent 600 mile (1,000 km) intervals.

Abbreviations: L = Lubricate
R = Replace
I = Inspect. Correct or replace if necessary.

MAINTENANCE UNDER SEVERE DRIVING CONDITIONS

The maintenance intervals shown on the preceding pages are for normal operating conditions. If the vehicle is operated under severe driving conditions as shown below, more frequent maintenance is required to be performed on the following items as shown in the table.

Severe driving conditions

A – Repeated short distance driving
B – Extensive idling
C – Driving in dusty conditions
D – Driving in extremely low or high ambient temperatures
E – Towing a trailer
F – Driving in areas using road salt or other corrosive materials
G – Driving on rough and/or muddy roads
H – Frequent driving in muddy water

Driving condition	Maintenance item	Maintenance operation	Maintenance interval	Reference page
. . C	Air cleaner filter & air injection valve filter	R	More frequently	MA-13, 32
A B C . E	Engine oil (gasoline engine)	R	Every 3,000 miles (5,000 km) or 3 months	MA-15
	Engine oil filter (gasoline engine for Canada & California)	R	Every oil change	MA-15
	Engine oil filter (gasoline engine except for the above)	R	At the first oil change then every second oil change.	MA-15
	Engine oil & oil filter (diesel engine)	R	More frequently	MA-35, 36
A . C . E F G . .	Brake pads, discs, drums & lining	I	Every 7,500 miles (12,000 km)	MA-59
. . . . E . G . .	Manual and automatic transmission, transfer & differential gear oil	R	Every 30,000 miles (48,000 km) or 24 months	MA-52, 53, 54
. . . . . G . .	Steering gear (box) & linkage, steering damper (4×4), axle & suspension parts	I	Every 7,500 miles (12,000 km) or 6 months	MA-54, 64
. . . D . F G . .	Front drive shaft boots (4×4)	I	Every 7,500 miles (12,000 km) or 6 months	MA-54
. . C D . F G . .	Steering linkage ball joints & front suspension ball joints	I	Every 7,500 miles (12,000 km) or 6 months	MA-55
. . . . E . G . .	Propeller shaft(s) (4×4)	I	Every 7,500 miles (12,000 km) or 6 months	MA-53
. . . . . F . . .	Locks, hinges & hood latch	L	Every 7,500 miles (12,000 km) or 6 months	MA-66
. . . . . H	Front wheel bearing grease (4×4)	I	Every 3,000 miles (5,000 km) or 3 months	MA-55
A . . . E F G . .	Exhaust system	I	Every 7,500 miles (12,000 km) or 6 months	MA-52

Maintenance operations: I = Inspect. Correct or replace if necessary R = Replace
L = Lubricate

GENERAL MAINTENANCE

General maintenance includes those items which should be checked during the normal day-to-day operation of the vehicle. They are essential if the vehicle is to continue operating properly. The owners can perform the checks and inspections themselves or they can have their NISSAN/DATSUN dealers do them for a nominal charge.

Item	Reference item in MA section
OUTSIDE THE VEHICLE	
Tires Check the pressure with a gauge periodically when at a service station, including the spare, and adjust to the specified pressure if necessary. Check carefully for damage, cuts or excessive wear.	• CHECKING TIRE CONDITION
Wheel nuts When checking the tires, make sure no nuts are missing, and check for any loose nuts. Tighten if necessary.	• TIRE REPLACEMENT
Tire rotation Tires should be rotated every 24,000 km (15,000 miles).	• TIRE ROTATION
Wheel alignment and balance If the vehicle should pull to either side while driving on a straight and level road, or if you detect uneven or abnormal tire wear, there may be a need for wheel alignment. If the steering wheel or seat vibrates at normal highway speeds, wheel balancing may be needed.	• CHECKING TIRE CONDITION Abnormal tire wear • CHECKING WHEEL ALIGNMENT • WHEEL INSPECTION
Windshield glass Check for abrasions or scratches.	–
Windshield wiper blades Check for cracks or wear if they do not wipe properly.	–
Doors and engine hood Check that all doors and the engine hood operate smoothly as well as the trunk lid and back hatch. Also ensure, that all latches lock securely. Lubricate if necessary. Make sure that the secondary latch keeps the hood from opening when the primary latch is released.	• LUBRICATING LOCKS, HINGES AND HOOD LATCH
INSIDE THE VEHICLE	
The maintenance items listed here should be checked on a regular basis, such as when performing periodic maintenance, cleaning the vehicle, etc.	
Lights Make sure that the headlights, stop lights, tail lights, turn signal lights, and other lights are all operating properly and installed securely. Also check headlight aim.	–
Warning lights and buzzers/chimes Make sure that all warning lights and buzzers/chimes are operating properly.	–
Horn Make sure it operates properly.	–
Windshield wiper and washer Check that the wipers and washer operate properly and that the wipers do not streak.	–

Item	Reference item in MA section
Windshield defroster Check that the air comes out of the defroster outlets properly and in sufficient quantity when operating the heater or air conditioner.	–
Rear view mirror Make sure that it is secure.	–
Sun visors Make sure that they can be moved freely and are secure.	–
Steering wheel Check that it has the specified free play. Be sure to check for changes in the steering condition, such as excessive free play, hard steering or strange noises.	**Specification** **Free play: Less than 35 mm (1.38 in)**
Seats Check front seat position controls such as seat adjusters, seatback recliner, etc. to ensure they operate smoothly and that all latches lock securely in every position. Check that the head restraints move up and down smoothly and that the locks (if so equipped) hold securely in all latched positions. Check that the latches lock securely for folding-down rear seatbacks.	–
Seat belts Check that all parts of the seat belt system e.g. buckles, anchors and retractors operate property and smoothly. Check the belt webbing for cuts, fraying, wear or damage.	• **INSPECTING SEAT BELTS, BUCKLES, ANCHORS, RETRACTORS AND ADJUSTER**
Accelerator pedal Check the pedal for smooth operation and make sure the pedal does not catch or require uneven effort.	–
Clutch pedal Make sure the pedal operates smoothly and check that it has the proper free travel.	• **ADJUSTING CLUTCH PEDAL HEIGHT AND FREE PLAY**
Brakes Check that the brake does not pull the vehicle to one side when applied.	–
Brake pedal Check the pedal for smooth operation and make sure it has the proper distance under it when depressed fully. Check the brake booster function.	• **CHECKING BRAKE PEDAL DEPRESSED HEIGHT** • **CHECKING BRAKE BOOSTER FUNCTION**
Parking brake Check that the lever has the proper travel and confirm that your vehicle is held securery on a fairly steep hill with only the parking brake applied.	• **CHECKING PARKING BRAKE**
Automatic transmission "Park" mechanism Check that the lock release button on the selector lever operates properly and smoothly. On a fairly steep hill check that your vehicle is held securely with the selector lever in the "P" position without applying any brakes.	–

Item	Reference Item in MA section
UNDER THE HOOD AND VEHICLE	
The maintenance items listed here should be checked periodically e.g. each time you check the engine oil or refuel.	
Windshield washer fluid Check that there is adequate fluid in the tank.	–
Engine coolant level Check the coolant level when the engine is cold.	–
Radiator and hoses Check the front of the radiator and clean off any dirt, insects, leaves, etc., that may have accumulated. Make sure the hoses have no cracks, deformation, rot or loose connections.	–
Brake and clutch fluid levels Make sure that the brake and clutch fluid levels are between the "MAX" and "MIN" lines on the reservoir.	• CHECKING CLUTCH FLUID LEAKS • INSPECTING BRAKE LINES & HOSES
Engine drive belts Make sure that no belt if frayed, worn, cracked or oily.	• CHECKING DRIVE BELT
Engine oil level Check the level on the dipstick after parking the vehicle on a level spot and turning off the engine.	–
Power steering fluid level Check the level when the fluid is cold and the engine is turned off.	• CHECKING POWER STEERING FLUID LEVEL
Automatic transmission fluid level Check the level on the dipstick after putting the selector lever in "P" with the engine idling.	• CHECKING AUTOMATIC TRANSMISSION FLUID LEVEL
Exhaust system Make sure there are no loose supports, cracks or holes. If the sound of the exhaust seems unusual or there is a smell of exhaust fumes, immediately locate the trouble and correct it.	• INSPECTING EXHAUST SYSTEM
Underbody The underbody is frequently exposed to corrosive substances such as those used on icy roads or to control dust. It is very important to remove these substances, otherwise rust will form on the floor pan, frame, fuel lines and around the exhaust system. At the end of winter, the underbody should be thoroughly flushed with plain water, being careful to clean those areas where mud and dirt can easily accumulate.	–
Fluid leaks Check under the vehicle for fuel, oil, water or other fluid leaks after the vehicle has been parked for a while. Water dripping from the air conditioner after use is normal. If you should notice any leaks or gasoline fumes are evident, check for the cause and correct it immediately.	• CHECKING CLUTCH FLUID LEAKS • INSPECTING MANUAL TRANSMISSION OIL • INSPECTING AUTOMATIC TRANSMISSION FLUID • INSPECTING TRANSFER OIL • INSPECTING DIFFERENTIAL GEAR OIL • INSPECTING FRONT AXLE AND SUSPENSION PARTS • INSPECTING REAR AXLE AND SUSPENSION PARTS • INSPECTING BRAKE LINES & HOSES • CHECKING POWER STEERING LINE & HOSES

LUBRICATION CHART

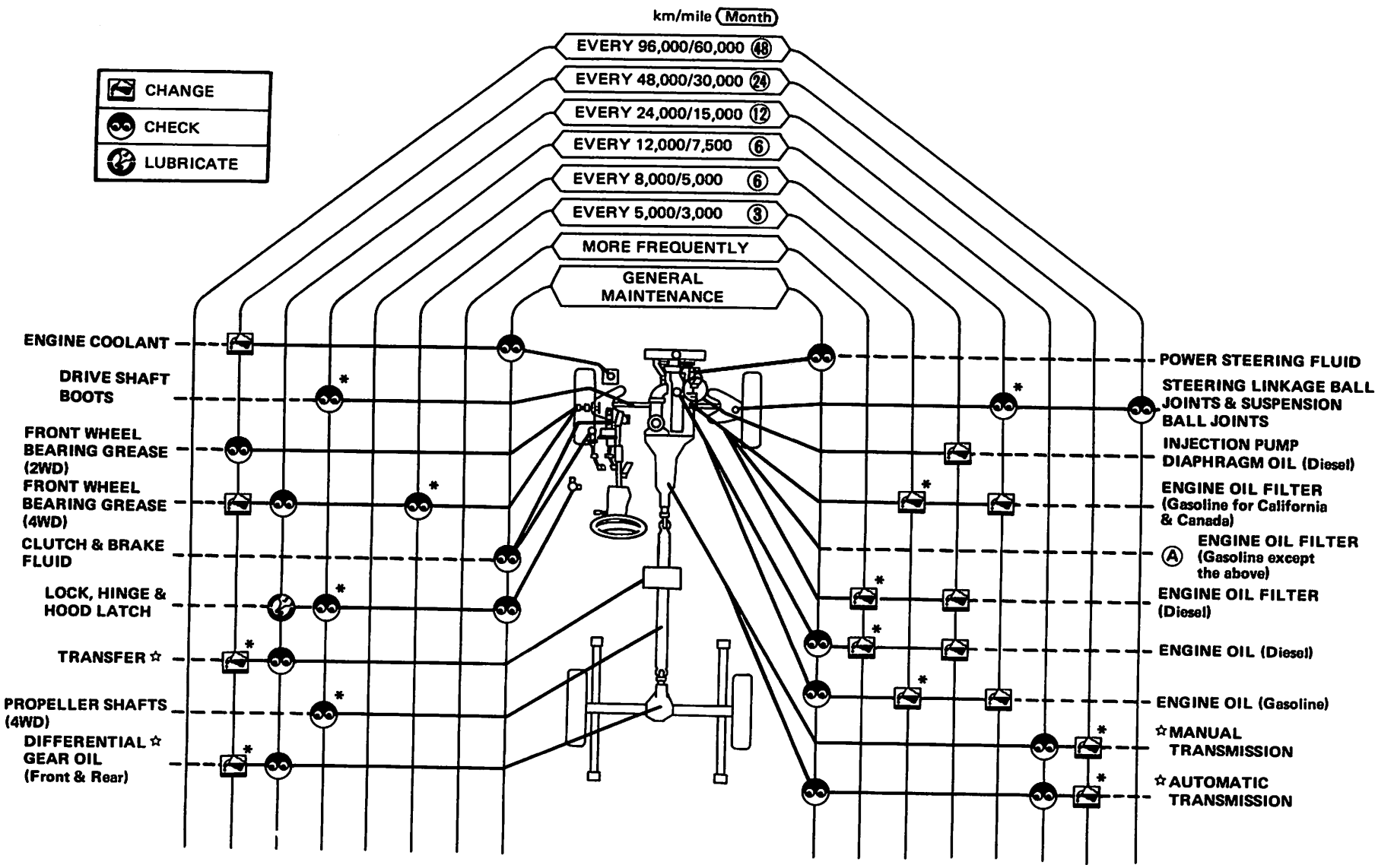

☆ : At the specified mileage (km/mile) only
* : Maintenance under severe driving conditions

Ⓐ Replace at the first oil change and then every second oil change.

SMA157B

RECOMMENDED FUEL AND LUBRICANTS

FUEL

	Outside temperature	Fuel	Octane (Gasoline)/Cetane (Diesel) number (minimum)	
			A.K.I. (Anti-Knock Index) number	Research-octane number
			$\frac{R+M}{2}$	RON
Gasoline engine	–	Unleaded gasoline*1	87	91
Diesel engine	above −7°C (20°F)	2-D Diesel fuel or equivalent blended diesel fuel	42	
	below −7°C (20°F)	1-D Diesel fuel or equivalent blended diesel fuel		

*1 The fuel filler opening is designed for use with an unleaded fuel gun [nozzle diameter less than 21.3 mm (0.84 in)] only.

SAE VISCOSITY NUMBER

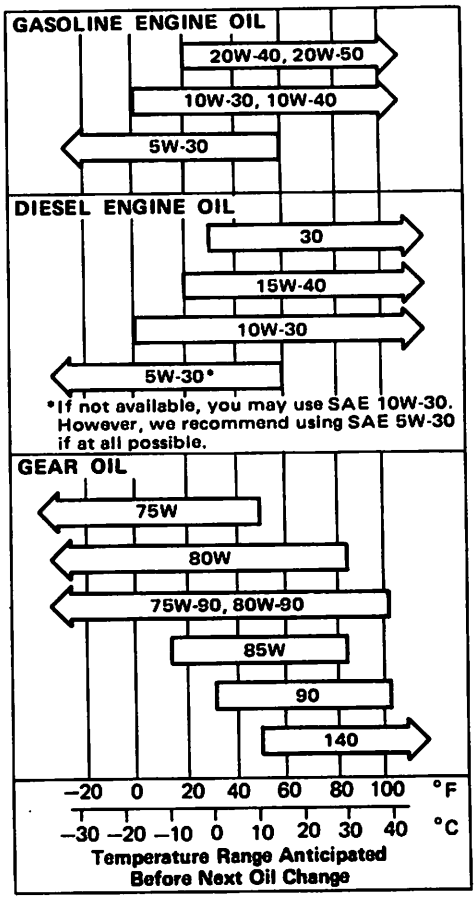

LUBRICANTS

Lubricant			Specification	Remarks
Engine oil	Gasoline		API SF (Energy Conserving Oils)*1	For further details, refer to the recommended SAE viscosity chart.
	Diesel		API SE/CC, SF/CC, SE/CD, SF/CD or CD	
Gear oil	Transmission	Gasoline	API GL-4	
		Diesel	API GL-3*2 or API GL-4	
	Transfer and steering		API GL-4	
	Differential		API GL-5	
Injection pump diaphragm oil			–	Cod liver oil
Auto free-running hub grease				Genuine NISSAN grease or its equivalent
Automatic-T/M and power steering fluid			Type DEXRON	–
Multi-purpose grease			NLGI No. 2	Lithium soap base
Brake and clutch fluid			DOT 3	US FMVSS No. 116
Anti-freeze			–	Ethylene glycol base

*1: ENERGY CONSERVING OILS
In order to improve fuel economy and conserve energy new, lower friction engine oils have been developed. These oils are readily available and can be identified by such labels as energy conserving, energy saving, improved fuel economy, etc.

*2: Use only with SAE viscosity number 90 or 140.

APPROXIMATE REFILL CAPACITIES

			US measure	Imp measure	Liter
Fuel tank					
Standard wheelbase (including King Cab)		2WD	13-1/4 gal	11 gal	50
		4WD	15-7/8 gal	13-1/4 gal	60
Long wheelbase		2WD	16-7/8 gal	14-1/8 gal	64
		4WD	19-7/8 gal	16-1/2 gal	75
Coolant (including engine and reservoir tank) (Gasoline engine)					
Manual transmission	With heater		10-3/4 qt	9 qt	10.2
	Without heater		10 qt	8-3/8 qt	9.5
Automatic transmission	With heater		10 qt	8-1/4 qt	9.4
	Without heater		9-1/4 qt	7-5/8 qt	8.7
(Diesel engine)					
Manual transmission	With heater		11-1/8 qt	9-1/4 qt	10.5
	Without heater		10-5/8 qt	8-3/4 qt	10.0
Engine oil (Gasoline engine)	With oil filter change				
		2WD	3-7/8 qt	3-1/4 qt	3.7
		4WD	4-1/4 qt	3-1/2 qt	4.0
	Without oil filter change				
		2WD	3-3/8 qt	2-7/8 qt	3.2
		4WD	3-3/4 qt	3-1/8 qt	3.5
(Diesel engine)	With oil filter change		5-5/8 qt	4-5/8 qt	5.3
	Without filter change		5-1/8 qt	4-1/4 qt	4.8
Transmission	M/T		4-1/2 pt	3-3/4 pt	2.1
	A/T		5-7/8 qt	4-7/8 qt	5.5
Transfer unit			1-1/2 qt	1-1/4 qt	1.4
Differential carrier					
Front (R180)			2-1/8 pt	1-3/4 pt	1.0
Rear (H190)		U.S.A.	2-5/8 pt	2-1/4 pt	1.25
		Canada	3-1/8 pt	2-5/8 pt	1.5
Dual wheel model (C200)			2-3/4 pt	2-1/4 pt	1.3
Steering gear					
Manual steering			3/4 pt	5/8 pt	0.33
Power steering			1-1/8 qt	7/8 qt	1.0
Windshield washer tank			2 qt	1-5/8 qt	1.85
Air conditioning system					
Compressor oil	Gasoline engine		8.5 fl oz	8.8 fl oz	0.25
	Diesel engine		8.5 fl oz	8.8 fl oz	0.25
Refrigerant			2.0 to 2.4 lb	2.0 to 2.4 lb	0.9 to 1.1 kg

ENGINE MAINTENANCE (Z20 & Z24)

BEFORE ENGINE START

CHECKING, REPLACING AND ADJUSTING DRIVE BELTS

1. Visually inspect for cracks or damage.

The belts should not touch the bottom of the pulley groove.

2. Check belt tension by pushing.
The belts should deflect by the specified amount.

Unit: mm (in)

	Used belt deflection		Set deflection of new belt
	Limit	Adjust	
Alternator	16 (0.63)	9 - 11 (0.35 - 0.43)	7 - 9 (0.28 - 0.35)
		10 - 13 (0.39 - 0.51)*	8 - 11 (0.31 - 0.43)*
A/C compressor	13 (0.51)	8 - 10 (0.31 - 0.39)	6 - 8 (0.24 - 0.31)
P/S oil pump	16 (0.63)	10 - 12 (0.39 - 0.47)	8 - 10 (0.31 - 0.39)
Applied pushing force:	98 N (10 kg, 22 lb)		

*2WD equipped M/T without A/C for Canada

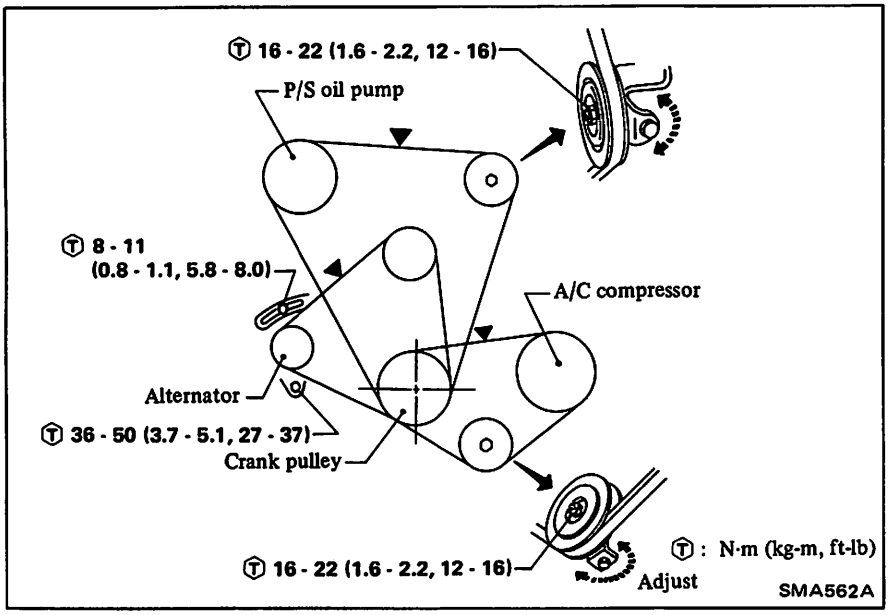

3. Adjust belt tension as follows:

Fan and alternator belt

1. Loosen the upper and lower alternator securing bolts until the alternator can be moved slightly.
2. Move the alternator with a prying bar until the belt tension is the specified amount. Then tighten the bolts securely.

Air conditioner compressor and power steering oil pump belts

1. Loosen the idler pulley lock nut.
2. Adjust the adjusting bolt until the belt tension is the specified amount.
3. Tighten the idler pulley lock nut securely.

REPLACING AIR CLEANER FILTER

The viscous paper type air cleaner filter does not require any cleaning operation between renewal.

Remove air cleaner cover and replace air cleaner filter.

When installing air cleaner cover, align both marks of cover and intake pipe.

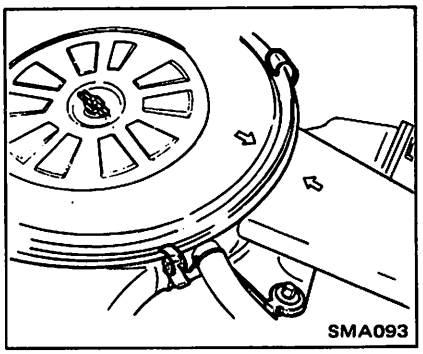

REPLACING AIR INJECTION VALVE FILTER

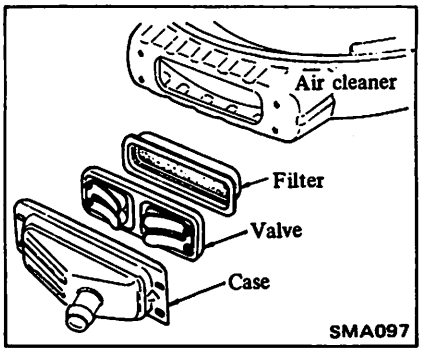

Remove air injection valve case from air cleaner, and take out air injection valve filter. Then install new air injection valve filter.

Pay strict attention to direction the valve is facing so that exhaust gas will not flow backward.

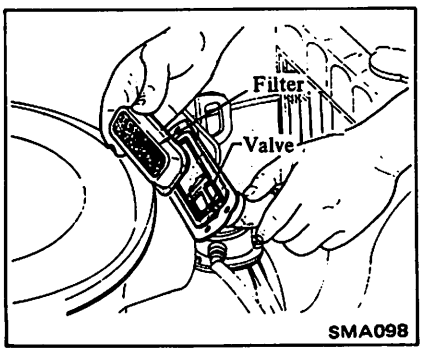

REPLACING P.C.V. VALVE FILTER

When vehicle is operated under

severe conditions, check P.C.V. filter and replace if necessary.

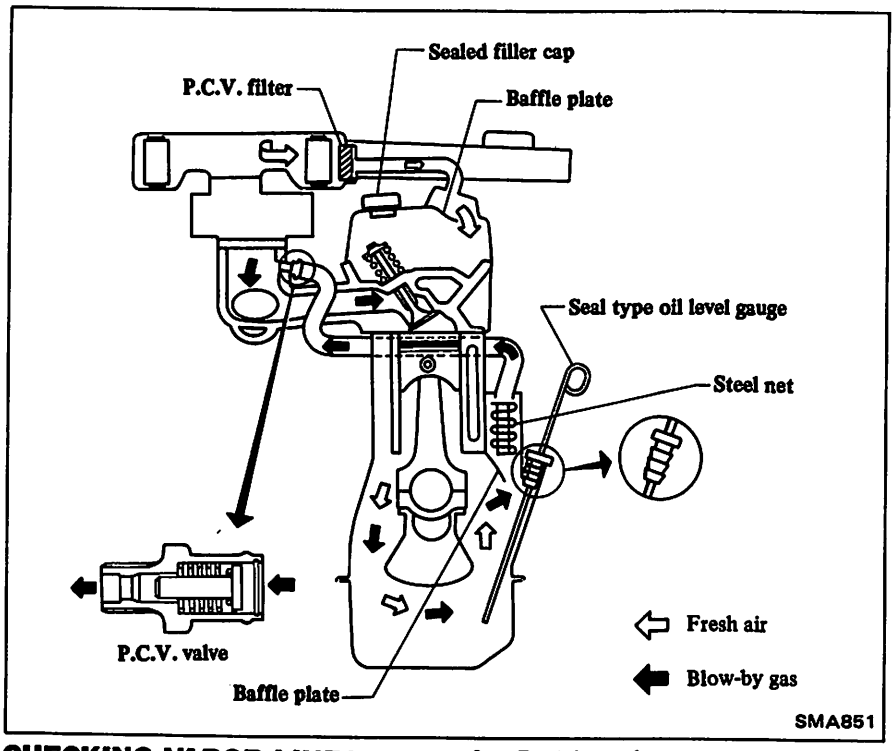

CHECKING VAPOR LINES

1. Visually inspect vapor lines for proper attachment, cracks, damage, loose connections, chafing and deterioration.
2. Check vacuum relief valve for clogging, sticking, etc.

CHECKING FUEL LINES (Hoses, piping, connections, etc.)

1. Check fuel line for leaks, particularly around connection of fuel pipe and fuel hose.
2. Retighten loose connections and replace any damage or deformed parts.

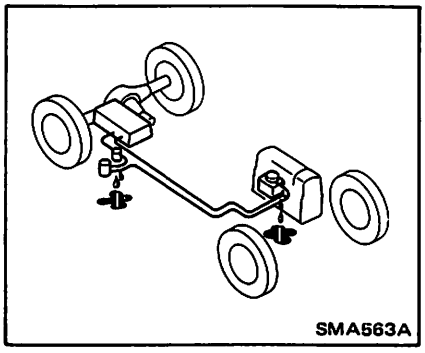

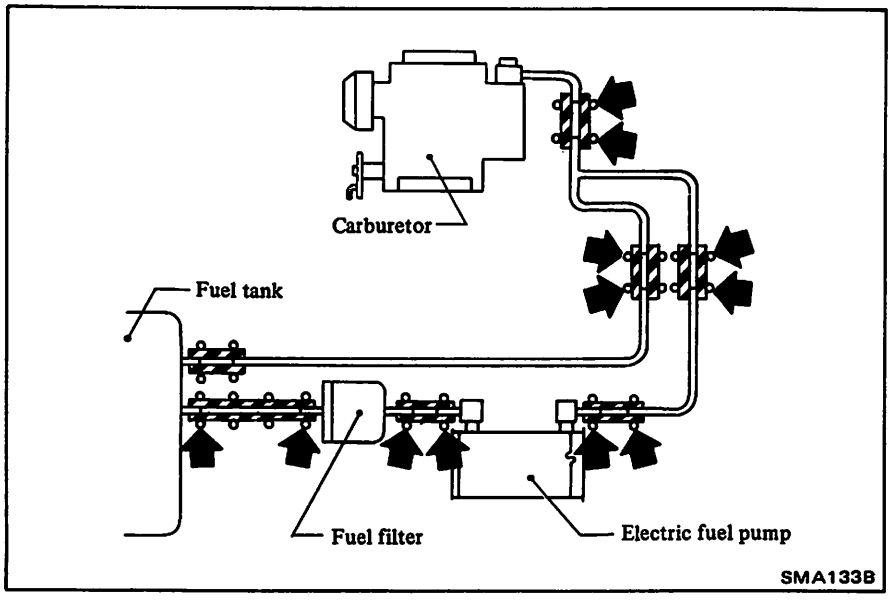

REPLACING FUEL FILTER

When vehicle is operated under severe conditions, check for a contaminated filter, and water deposit. Replace if necessary.

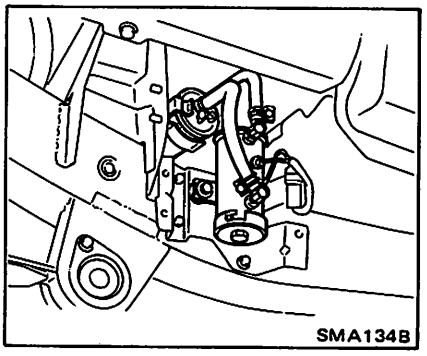

When replacing fuel filter, first remove filler cap and siphon or pump fuel from filler opening into a suitable container.

CHANGING ENGINE COOLANT

WARNING:
To avoid the danger of being scalded, never attempt to change the coolant when the engine is hot.

When changing engine coolant, on heater equipped models, set heater "TEMP" control lever at fully "HOT" position.

1. Open draincock at bottom of radiator, and remove radiator cap.

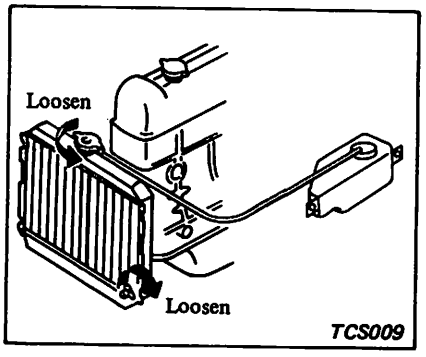

2. Remove cylinder block drain plug located at left rear of cylinder block.

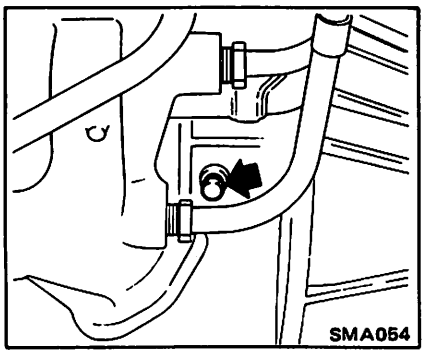

3. Drain coolant completely. Then flush cooling system.
4. Close drain cock and plug.
5. Fill radiator with coolant up to filler opening, observing instructions attached to anti-freeze container for mixing ratio of anti-freeze to water.

Cooling water capacity (including reservoir tank):

Unit: liter (US qt, Imp qt)

M/T	With heater	10.2 (10-3/4, 9)
	Without heater	9.5 (10, 8-3/8)
A/T	With heater	9.4 (10, 8-1/4)
	Without heater	8.7 (9-1/4, 7-5/8)

6. Run engine for a few minutes. If necessary, add coolant.
7. Fill reservoir tank with coolant up to "MAX" level.
8. Install radiator cap.

Check drain valve and plug for any sign of leakage.

CHANGING ENGINE OIL AND OIL FILTER

1. Start engine and warm up engine until water temperature indicator points to the middle of gauge, then stop engine.
2. Remove oil filler cap and oil pan drain plug, and allow oil to drain.

WARNING:
Be careful not to burn yourself, as the engine oil may be hot.

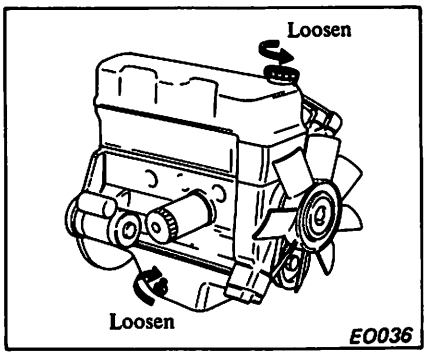

- **A milky oil indicates the presence of cooling water. Isolate the cause and take corrective measure.**
- **An oil with extremely low viscosity indicates dilution with gasoline.**

3. Clean and install oil pan drain plug with washer.

Ⓣ : Oil pan drain plug
20 - 29 N·m
(2.0 - 3.0 kg-m,
14 - 22 ft-lb)

4. Using Tool, remove oil filter.

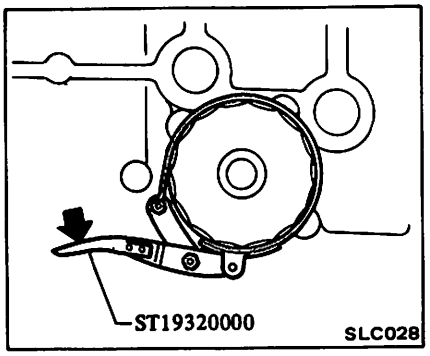

5. Wipe oil filter mounting surface with a clean rag.
6. Smear a little engine oil on rubber gasket of new oil filter.

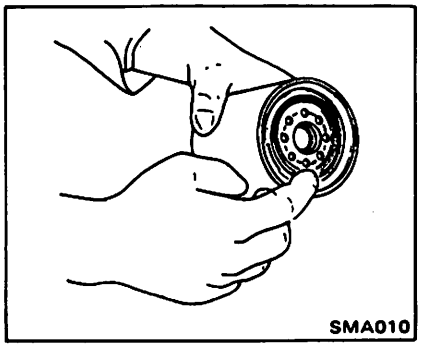

7. Turn the oil filter until it touches the oil filter bracket.
Then turn it 2/3 turn further.

If it is turned too far, oil leakage may occur.

8. Refill engine with new recommended engine oil, referring to Recommended Lubricants.

Check oil level with dipstick.

Oil capacity:

Unit: liter (US qt, Imp qt)

	2WD	4WD
With oil filter change	3.7 (3-7/8, 3-1/4)	4.0 (4-1/4, 3-1/2)
Without oil filter change	3.2 (3-3/8, 2-7/8)	3.5 (3-3/4, 3-1/8)

9. Start engine. Check area around drain plug and oil filter for any sign of oil leakage.

If any leakage is evident, these parts have not been properly installed.

10. Run engine until it reaches operating temperature. Then turn it off and wait several minutes. Check oil level. If necessary, add engine oil.

Oil level should be checked with vehicle parked on a level surface.

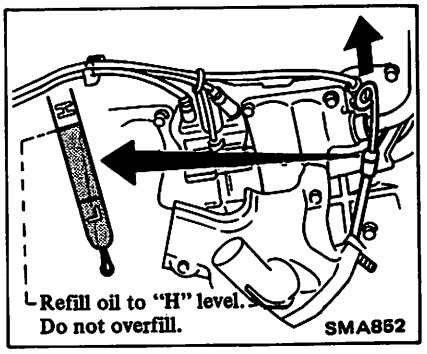

CHECKING ENGINE COMPRESSION PRESSURE

1. Warm up engine until water temperature indicator points to the middle of gauge.

2. Remove all spark plugs on one side.
3. Properly attach a compression tester to spark plug hole in cylinder being tested.

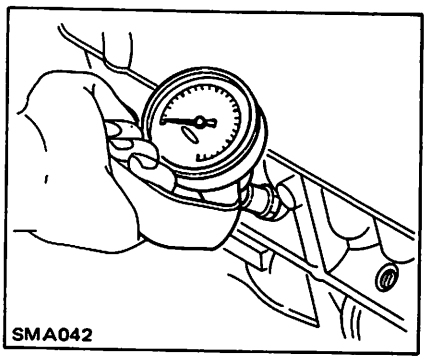

4. Depress accelerator pedal to open throttle valve fully.
5. Crank engine and read gauge indication.
- Run engine at about 350 rpm.
- Engine compression measurement should be made as quickly as possible.

Compression pressure:
kPa (kg/cm², psi)/at rpm
Standard 1,177
(12.0, 171)/350
Minimum 883
(9.0, 128)/350

6. Cylinder compression in cylinders should not be less than 80% of the highest reading.

If cylinder compression in one or more cylinders is low, pour a small quantity of engine oil into cylinders through the spark plug holes and retest compression.
- **If adding oil helps the compression pressure,** chances are that piston rings are worn or damaged.
- **If pressure stays low,** valve may be sticking or seating improperly.
- **If cylinder compression in any two adjacent cylinders is low, and if adding oil does not help the compression,** there is leakage past the gasketed surface.
  Oil and water in combustion chambers can result from this problem.

REPLACING SPARK PLUGS

1. Remove air cleaner and high tension cable.

Do not pull on the wires.

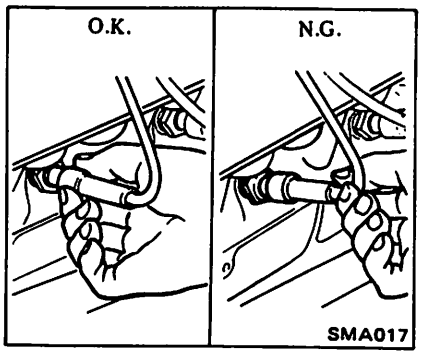

2. Remove spark plugs with spark plug wrench.

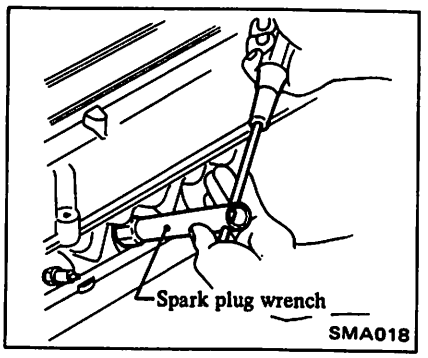

3. Using feeler gauge, check new spark plug gap.

If it is not within specified range, set gap by bending side electrode.

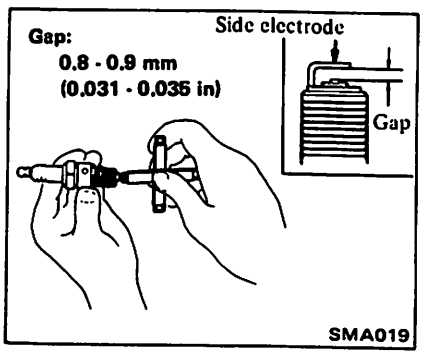

SPARK PLUG:

	Intake side	Exhaust side
Standard type	BPR6ES	BPR5ES
Hot type	BPR5ES	
Cold type	BPR7ES	BPR6ES BPR7ES

4. Install new spark plugs.
5. Reconnect high tension cable and install air cleaner.

All cables are marked to identify their original locations.

Ⓣ : Spark plug
20 - 29 N·m
(2.0 - 3.0 kg-m,
14 - 22 ft-lb)

CHECKING IGNITION WIRES

Use an ohmmeter to check resistance on high tension cables.
1. Disconnect cables from spark plugs and remove distributor cap together with high tension cables.

Do not remove cables from cap.

2. Measure resistance between cable terminal on the spark plug side and the corresponding electrode inside cap.

High tension cable resistance:
Less than 30,000 ohms

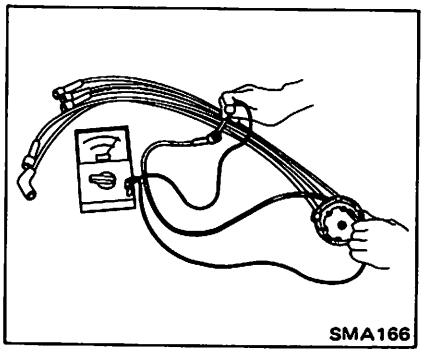

3. If the resistance is more than the limit, remove cable from cap and check the cable resistance only.

If resistance is still more than the limit, replace cable assembly.

AFTER ENGINE WARM-UP

ADJUSTING INTAKE AND EXHAUST VALVE CLEARANCE

Adjustment should be made while engine is hot.

1. Start engine and warm up engine until water temperature indicator points to the middle of gauge, then stop engine.

Valve clearance adjustment cannot be made while engine is in operation.

2. Remove air cleaner, high tension cable and valve rocker cover.
3. Rotate crankshaft.

When turning crankshaft with starter, remove high tension cable from ignition coil, then turn it.

4. Set No. 1 cylinder in top dead center on its compression stroke, and adjust valve clearance ①, ②, ④ and ⑥.
5. Again, rotate crankshaft one turn so that No. 4 cylinder is in top dead center of its compression stroke, and adjust valve clearance ③, ⑤, ⑦ and ⑧.

Valve clearance (Hot):
Intake and exhaust
0.30 mm (0.012 in)

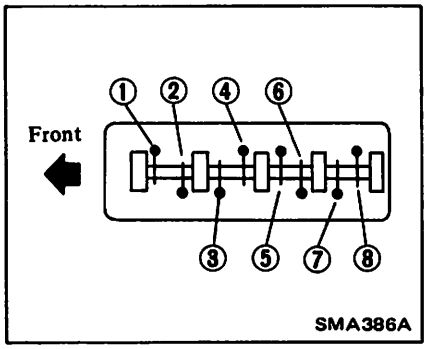

(1) Using feeler gauge, measure clearance between valve stem end and rocker arm screw.

Feeler gauge should move with a very slight drag.

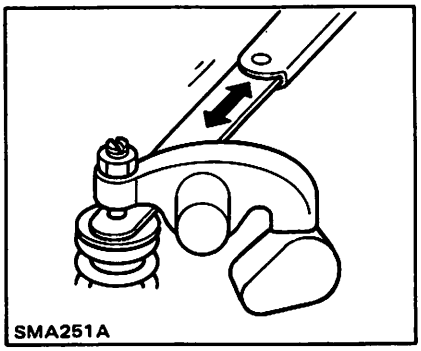

(2) If the clearance is not within specified value, loosen rocker arm nut and turn rocker arm screw to provide proper clearance.

(3) Hold rocker arm screw and tighten rocker arm nut.

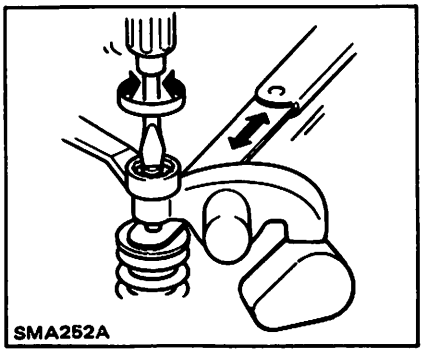

Ⓣ : Rocker arm nut
16 - 22 N·m
(1.6 - 2.2 kg-m,
12 - 16 ft-lb)

(4) Recheck clearance.
6. Install in reverse order of removal.

CHECKING AUTOMATIC TEMPERATURE CONTROL AIR CLEANER

1. Check that vacuum hoses (Intake manifold to temperature sensor, idle compensator and vacuum motor) are securely connected in correct position.
2. Check each hose for cracks or distortion.
3. Check A.T.C. system for function by proceeding as follows:

Confirm that engine is cold before starting test.

With engine turned off, check position of air control valve by hand or mirror.

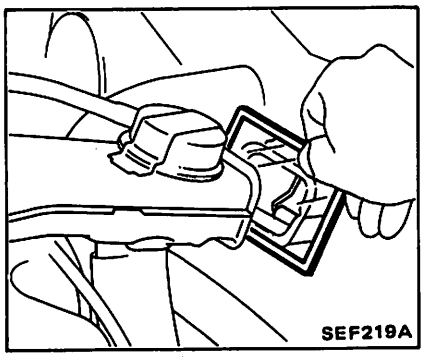

Air control valve is in correct position if its cold air inlet is open and hot air inlet is closed.

4. Start engine and keep idling.

Immediately after starting engine, air control valve is in correct position if its cold air inlet is closed and hot air inlet is open.

5. Check that air control valve gradually opens to cold air inlet side as engine warms up. When environmental temperature around temperature sensor is low, allow more time for engine warming up to facilitate smooth operation of air control valve.

If the above test reveals any problem in the operation of air control valve, carry out the further inspection described in section EF & EC.

ADJUSTING IDLE RPM

Preparation

1. Connect engine tachometer in its proper position.
2. On air conditioner equipped models, the air conditioner system should be "OFF".
3. Apply parking brake and block both front and rear wheels with chocks.
4. On California models, the electrical components (lights, heater, all accessories, etc.) should be turned off and steering wheel equipped with power assist should be kept straight ahead so that idle speed can be inspected and/or adjusted accurately. (Refer to EF & EC section.)

WARNING:

a. **Inspections should be carried out while shift lever is in "D" position on automatic transmission equipped models and in "Neutral" on manual transmission equipped models.**
b. **On automatic transmission equipped models, racing the engine should be carried out while shift lever is in "N" or "P" position and brake pedal should be depressed.**
c. **After adjustment has been made, shift the lever to "N" or "P" position.**

Maintenance procedure

START

Start engine and warm up engine until water temperature indicator points to the middle of gauge.

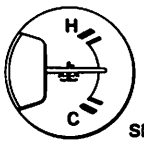

SMA566A

- Open engine hood
- Run engine about 2,000 rpm for about 2 minutes under no-load.

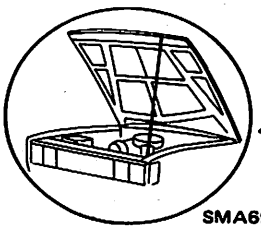
SMA691

SMA567A

Run engine for one minute at idle speed.

Check idle speed

IDLE SPEED: (rpm)

		U.S.A.			Canada
		Z20	Z24		
			Cab & Chassis	Except Cab & Chassis	
M/T	2WD	700±100	700±100	800±100	650±100
	4WD	–	–	800±100	800±100
A/T (in "D" position)		–	–	650±100	650±100

O.K. → END

N.G. → Adjust idle speed by turning throttle adjusting screw. → END

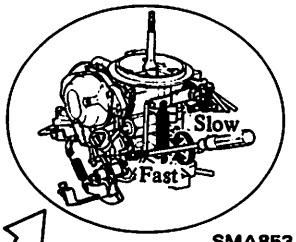

SMA853

SERVICE AND REPLACEMENT OF EXHAUST GAS SENSOR [U.S.A. models]

Non-California model	50,000 miles (80,000 km) 100,000 miles (160,000 km)
California model	30,000 miles (48,000 km) 60,000 miles (96,000 km) 90,000 miles (144,000 km)

Exhaust gas sensor should be replaced after above miles operation.
After vehicle has been operated for above miles, exhaust gas sensor warning lamp will come on to indicate that sensor should be replaced.

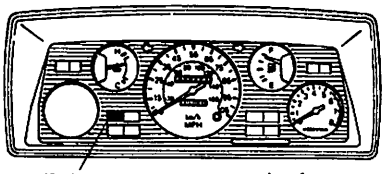

For non-California model

After replacement, disconnect warning lamp harness connector so that warning lamp will not come on thereafter.

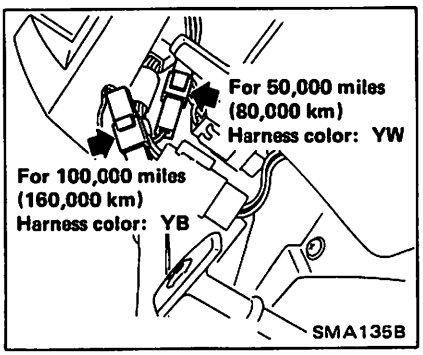

For California model

After replacement, reset warning lamp hold relay so that warning lamp will come on after the next 30,000 miles (48,000 km).
After the third replacement, disconnect warning lamp harness connector so that warning lamp will not come on thereafter.

After each replacement, check operation of exhaust gas sensor.

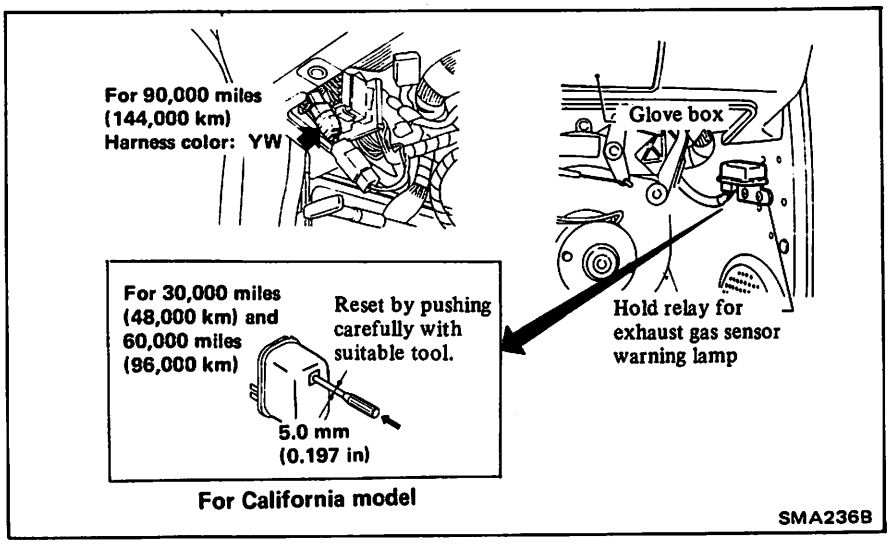

Checking procedure

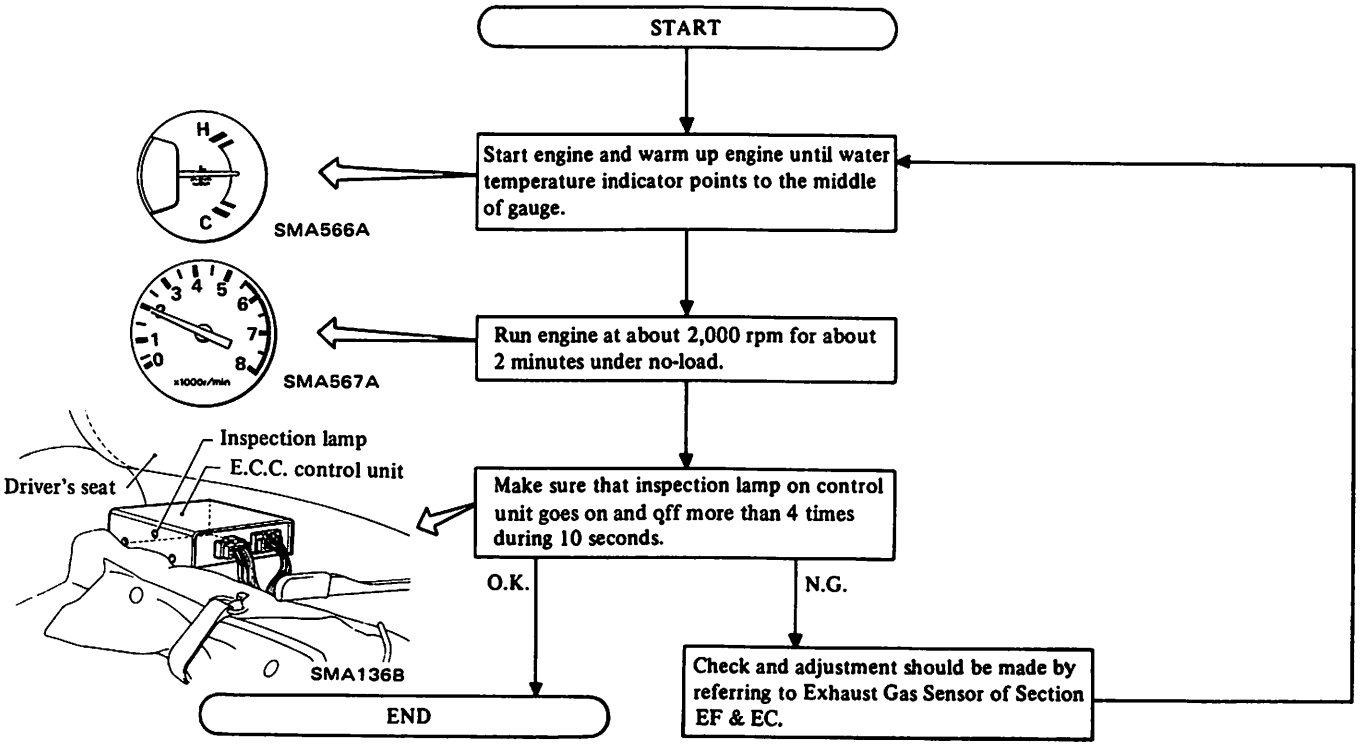

DIAGNOSTIC PROCEDURE FOR PROBLEMS (Z20 & Z24)

DIAGNOSTIC PROCEDURE FOR CARBURETOR ENGINES

DRIVEABILITY (Hesitation, surging, flat spot, backfire, afterfire, lack of power, run-on, excessive fuel consumption, etc.)

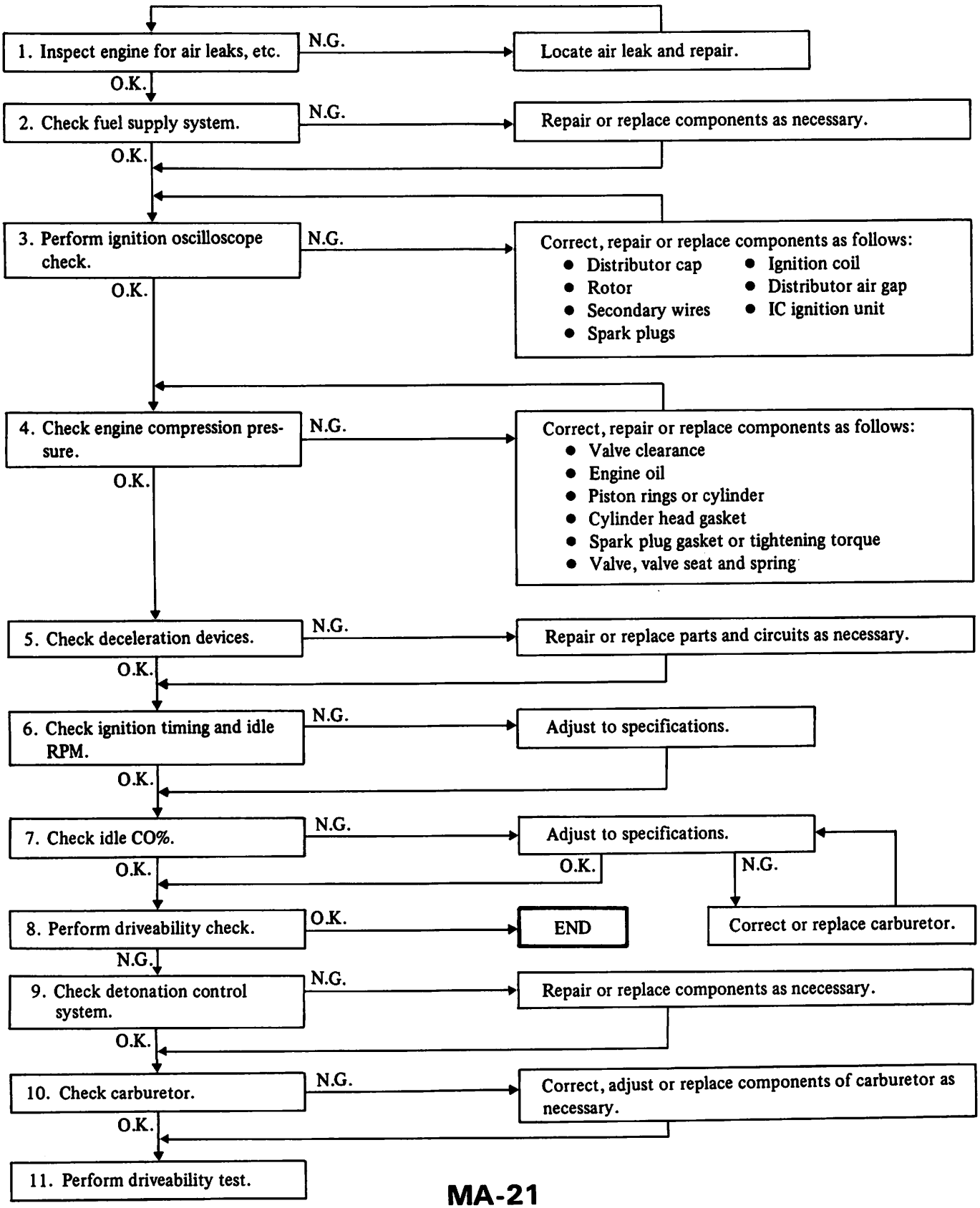

IMPROPER IDLING (Rough idle, no return to idle, high idle, etc.)

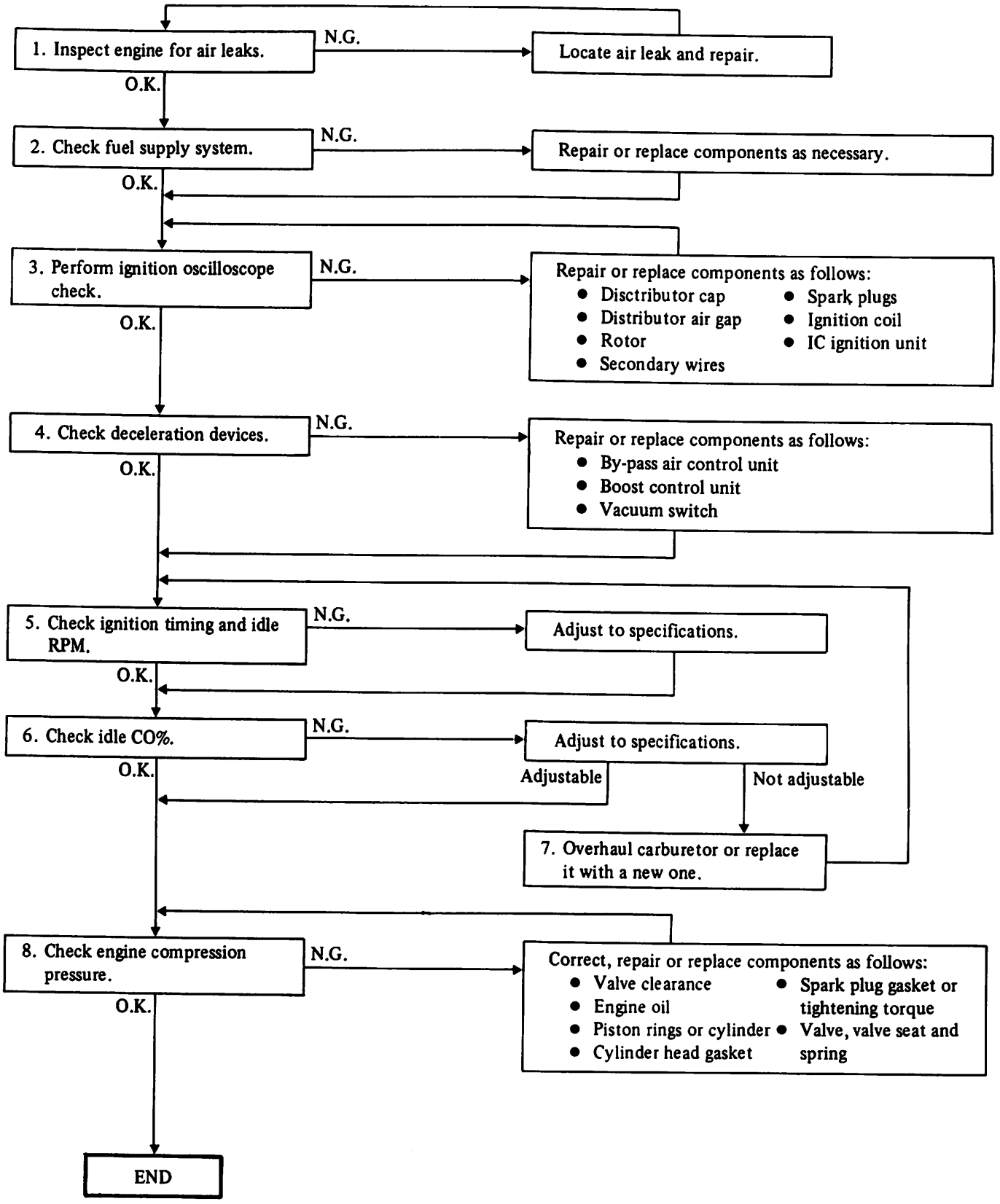

ENGINE STARTABILITY (Hard start, no start, hard restart, no restart, etc.)

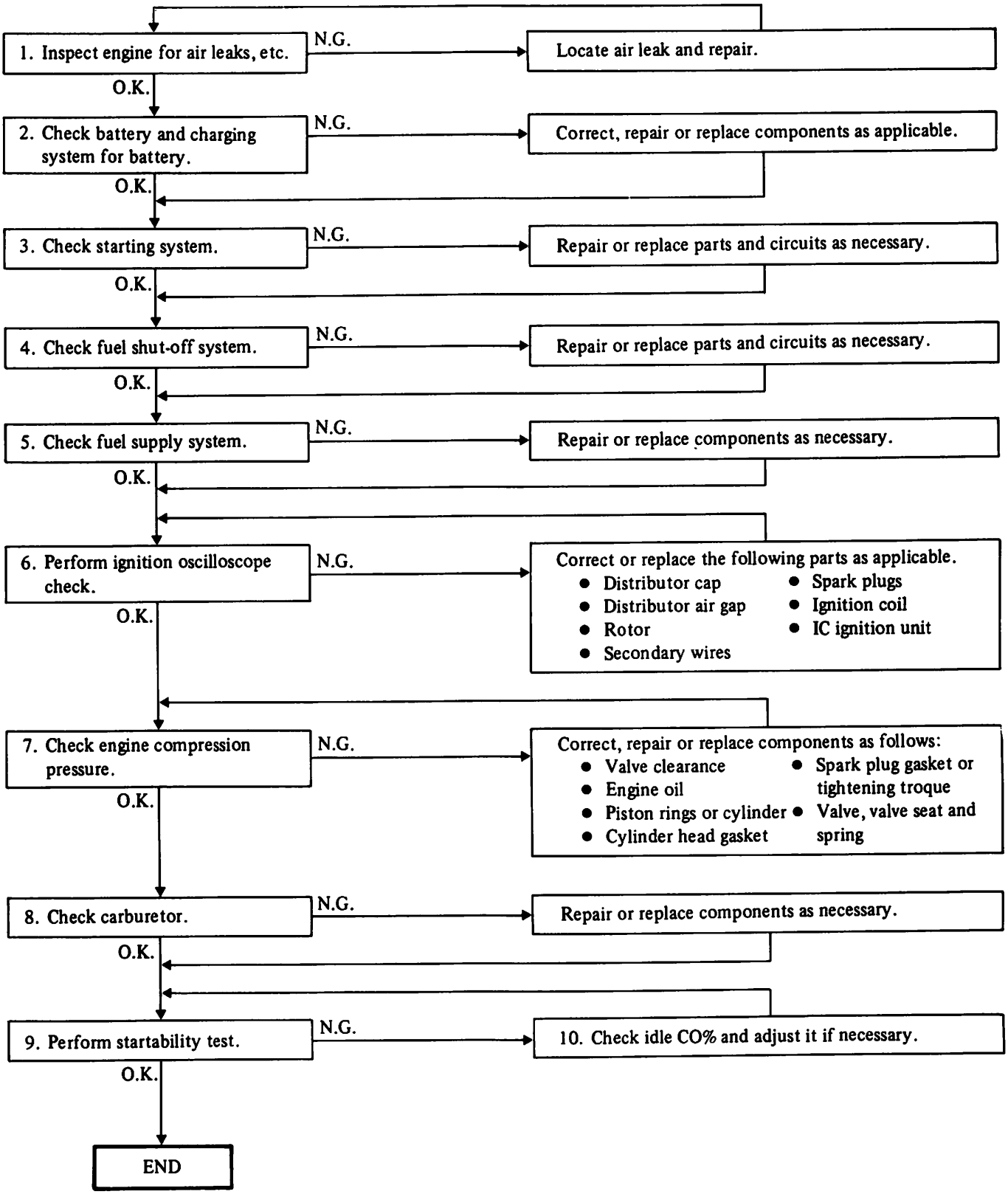

ENGINE STALL

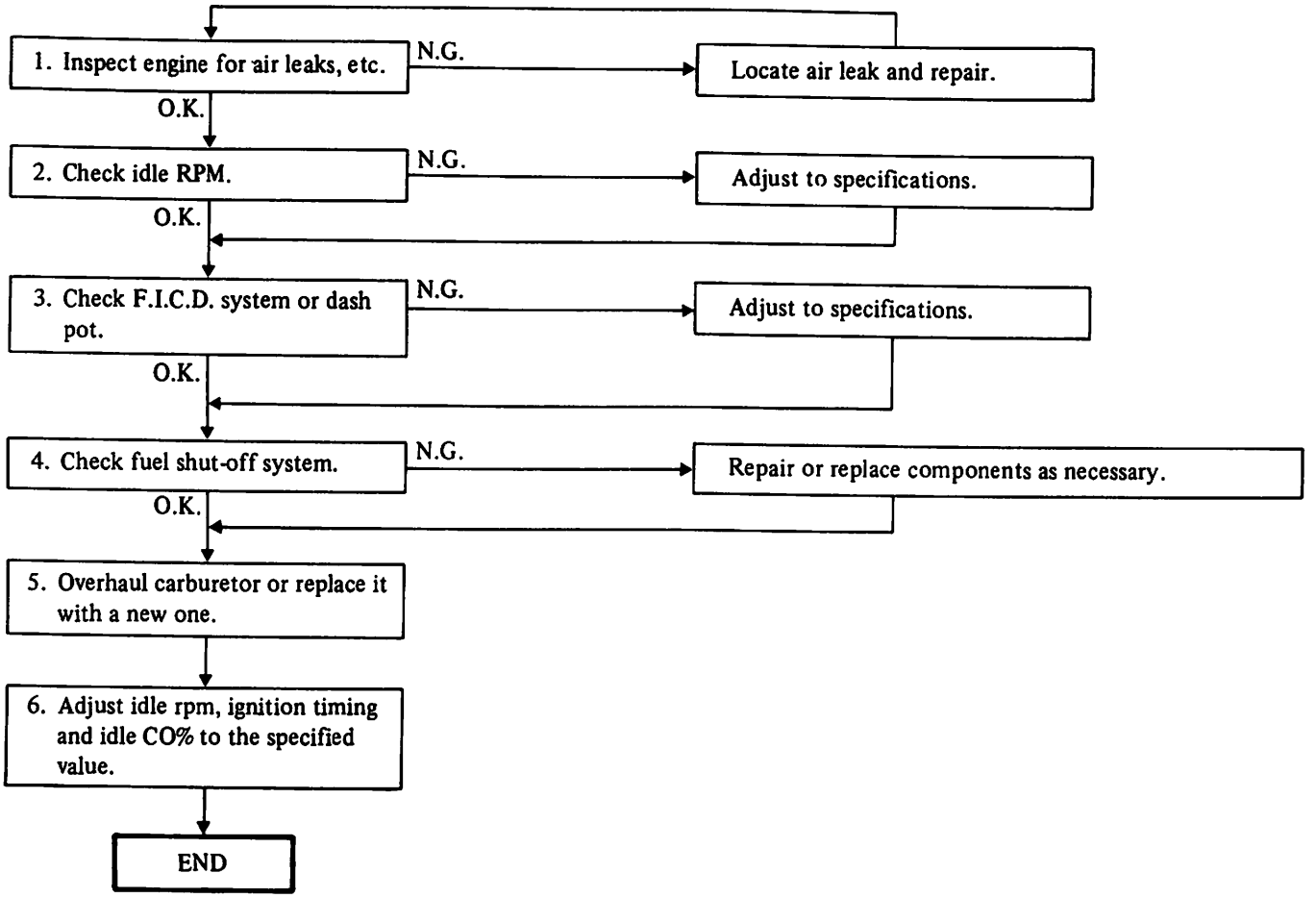

EXCESSIVE OIL CONSUMPTION

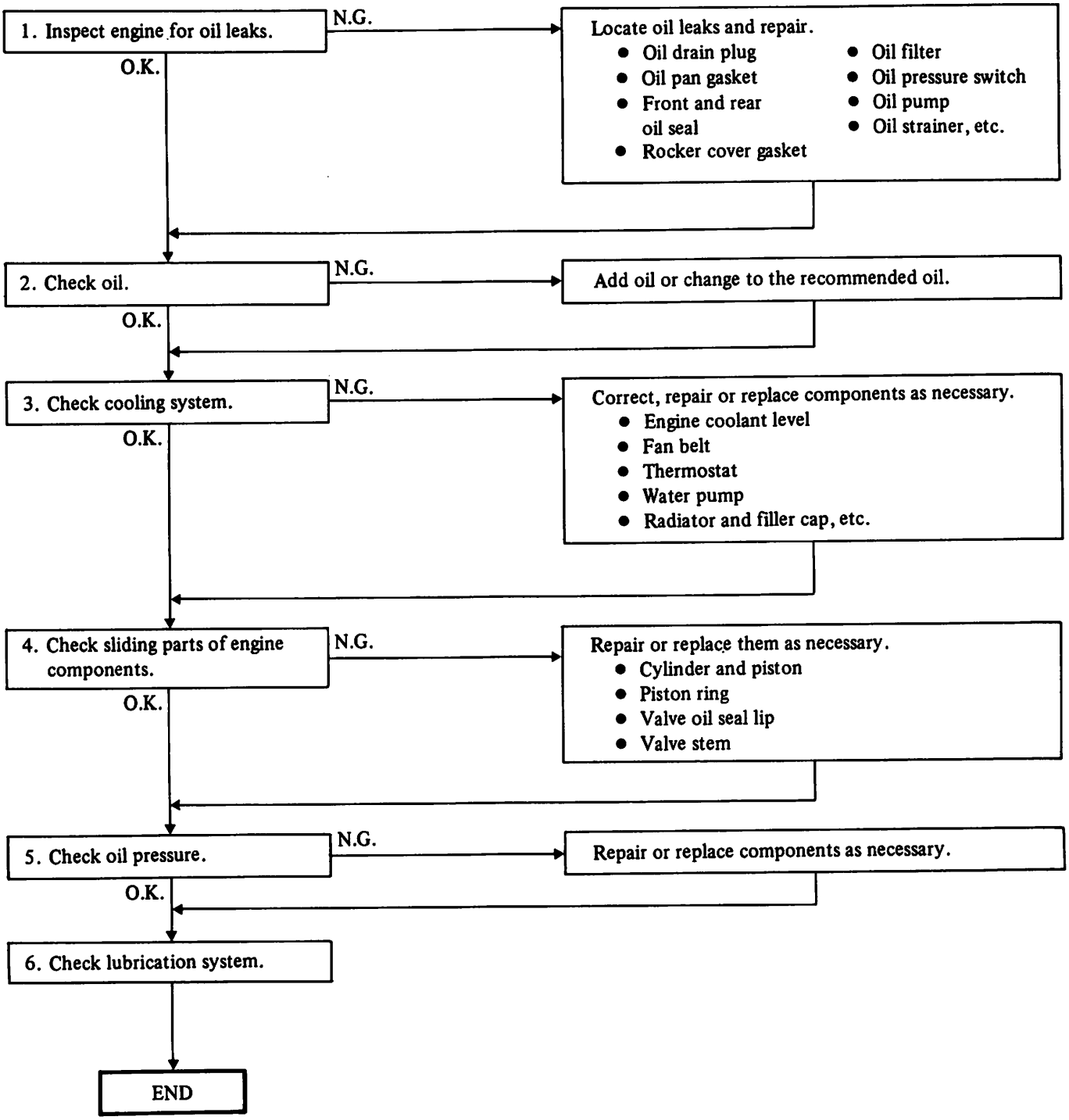

OVERHEATING

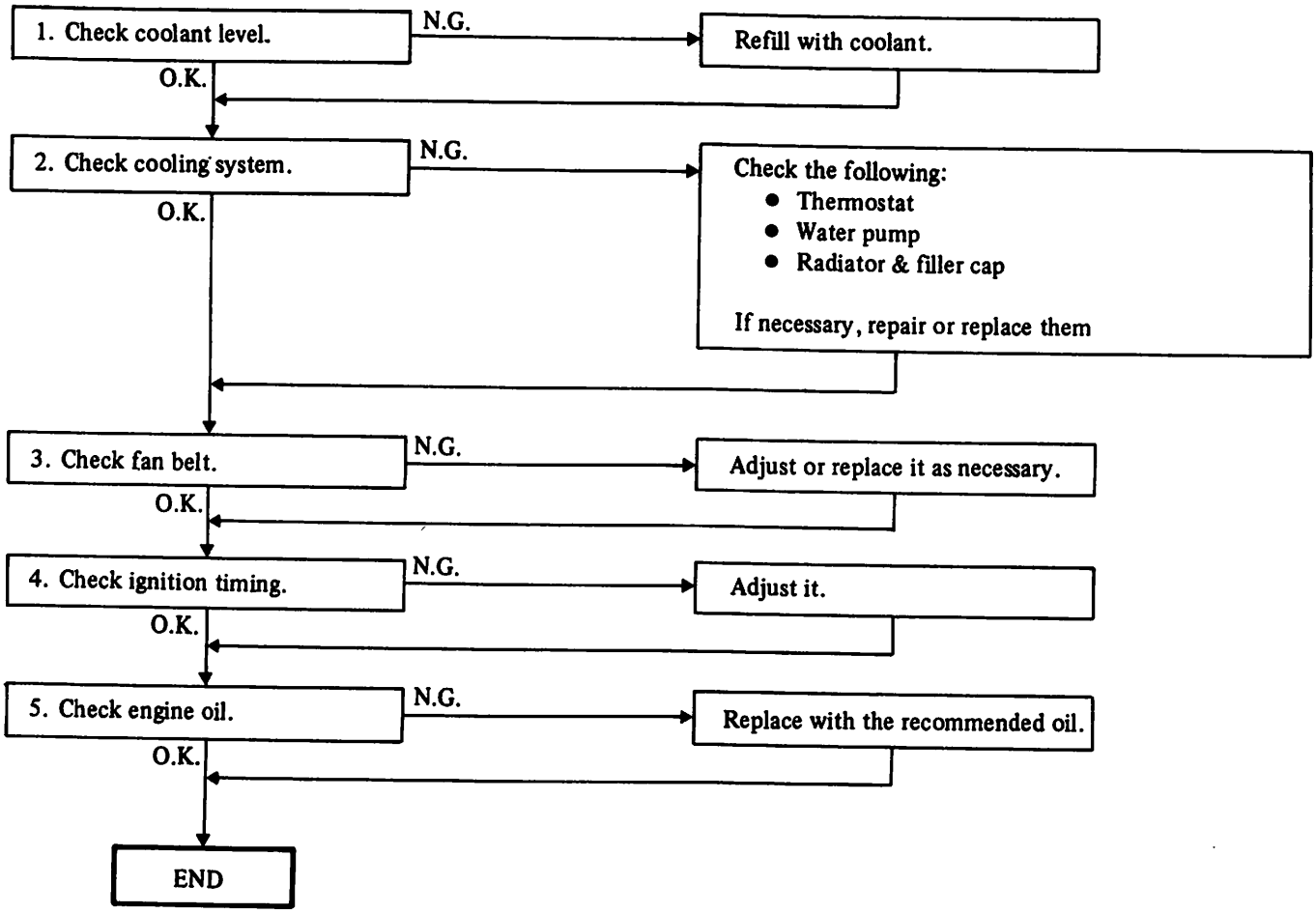

NOISY ENGINE

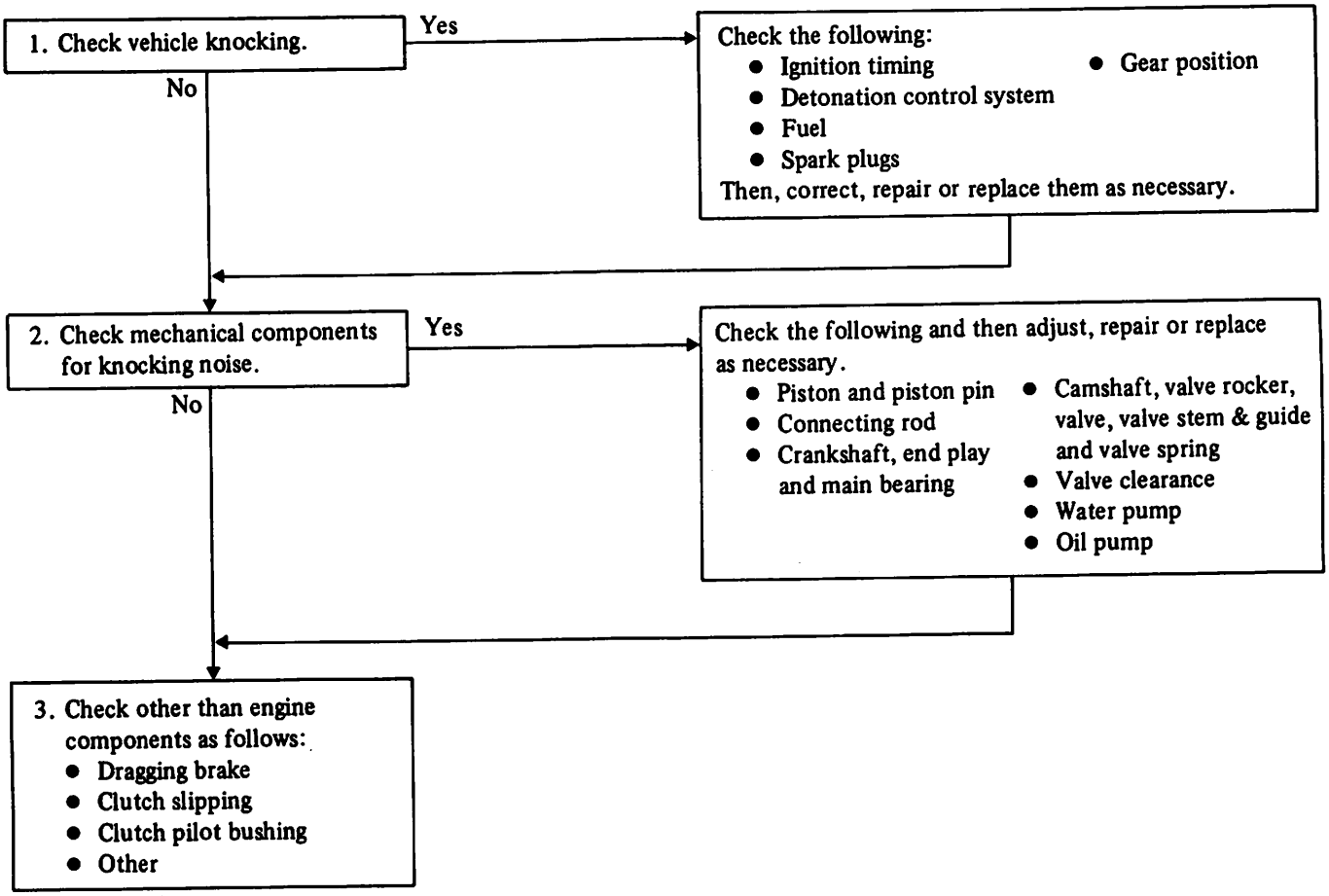

DIAGNOSTIC PROCEDURE FOR E.C.C. ENGINE (California)

INTERMITTENT PROBLEM

DIAGNOSTIC CHARTS CANNOT BE USED TO DIAGNOSE INTERMITTENT FAILURES. This is because many intermittent problems are caused at electrical connecitons, and if intermittent problems are not corrected, unnecessary component replacement will be indicated and the problems may remain. Therefore, DIAGNOSIS OF INTERMITTENT PROBLEMS SHOULD START WITH A VISUAL AND PHYSICAL INSPECTION OF THE CONNECTORS involved in the circuit, especially control unit, water temperature sensor and exhaust gas sensor connectors.

CAUTION:
When connecting or disconnecting E.C.C. harness connector to or from any E.C.C. unit, ensure that the ignition switch is in the "OFF" position and that the negative battery terminal is disconnected. Removing and installing these connectors with the ignition switch left in the "ON" position will damage control unit.

DRIVEABILITY (Hesitation, surging, flat spot, backfire, afterfire, lack of power, run-on, excessive fuel consumption, etc.)

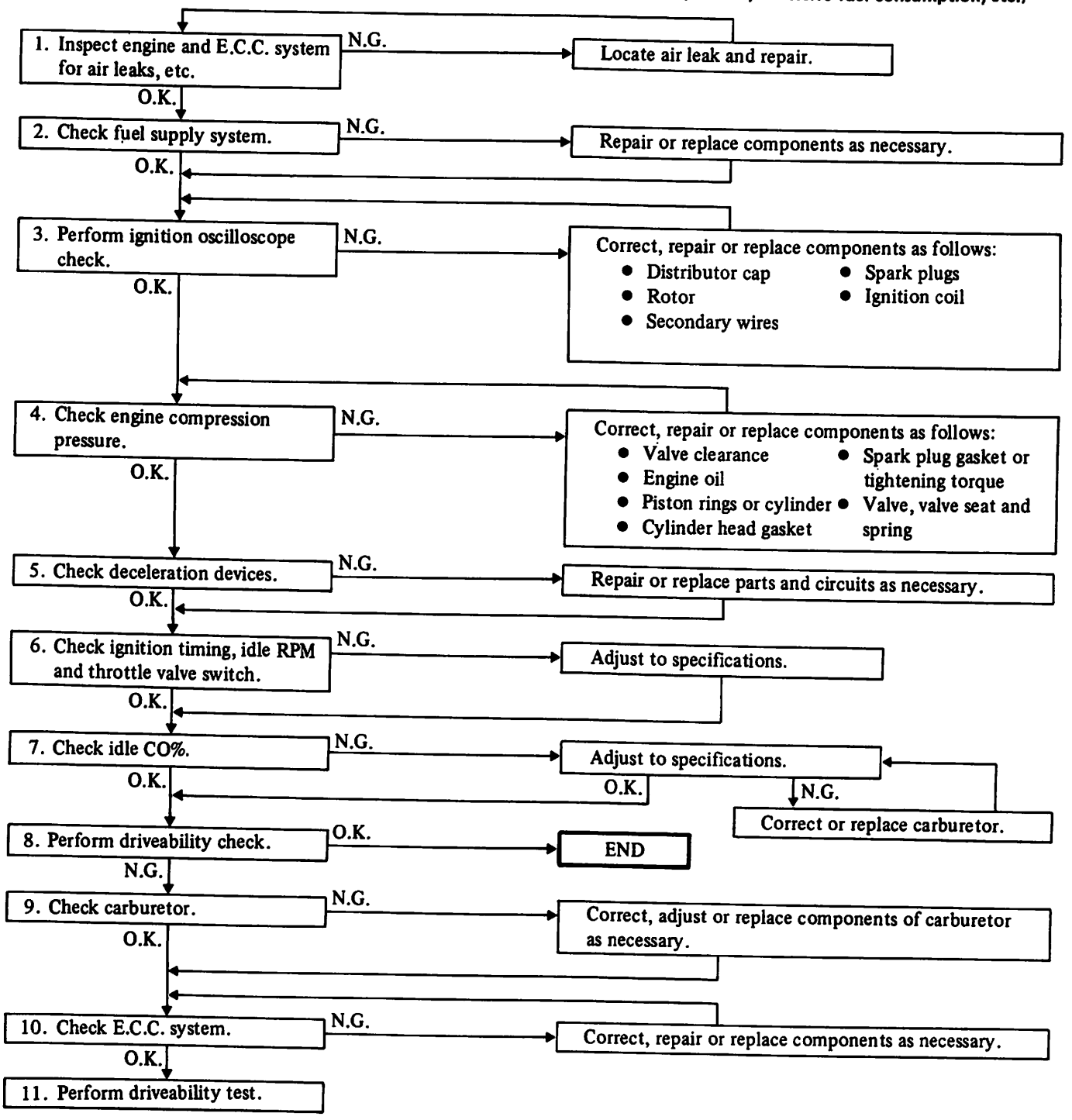

IMPROPER IDLING (Rough idle, no return to idle, high idle, etc.)

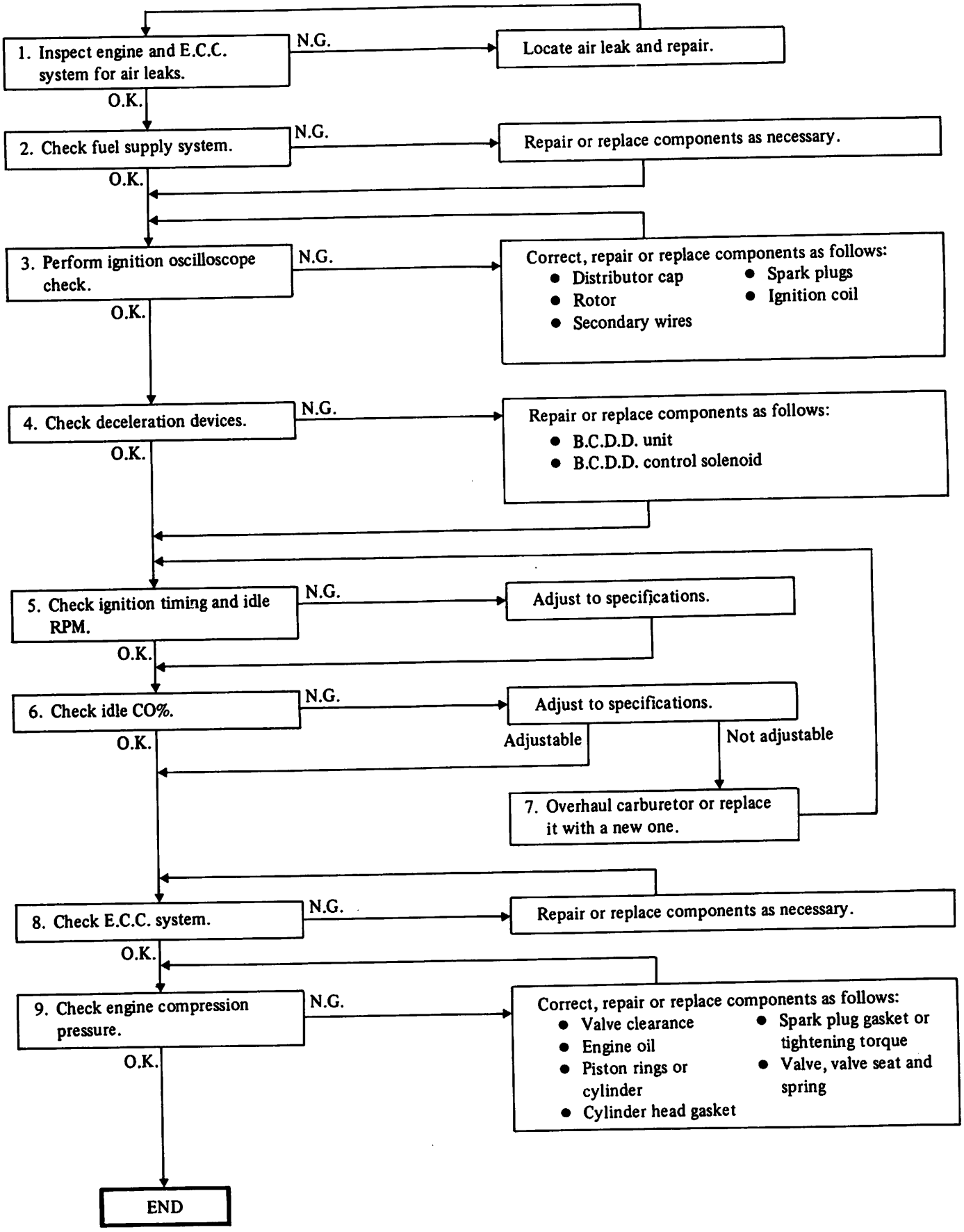

ENGINE STARTABILITY (Hard start, no start, hard restart, no restart, etc.)

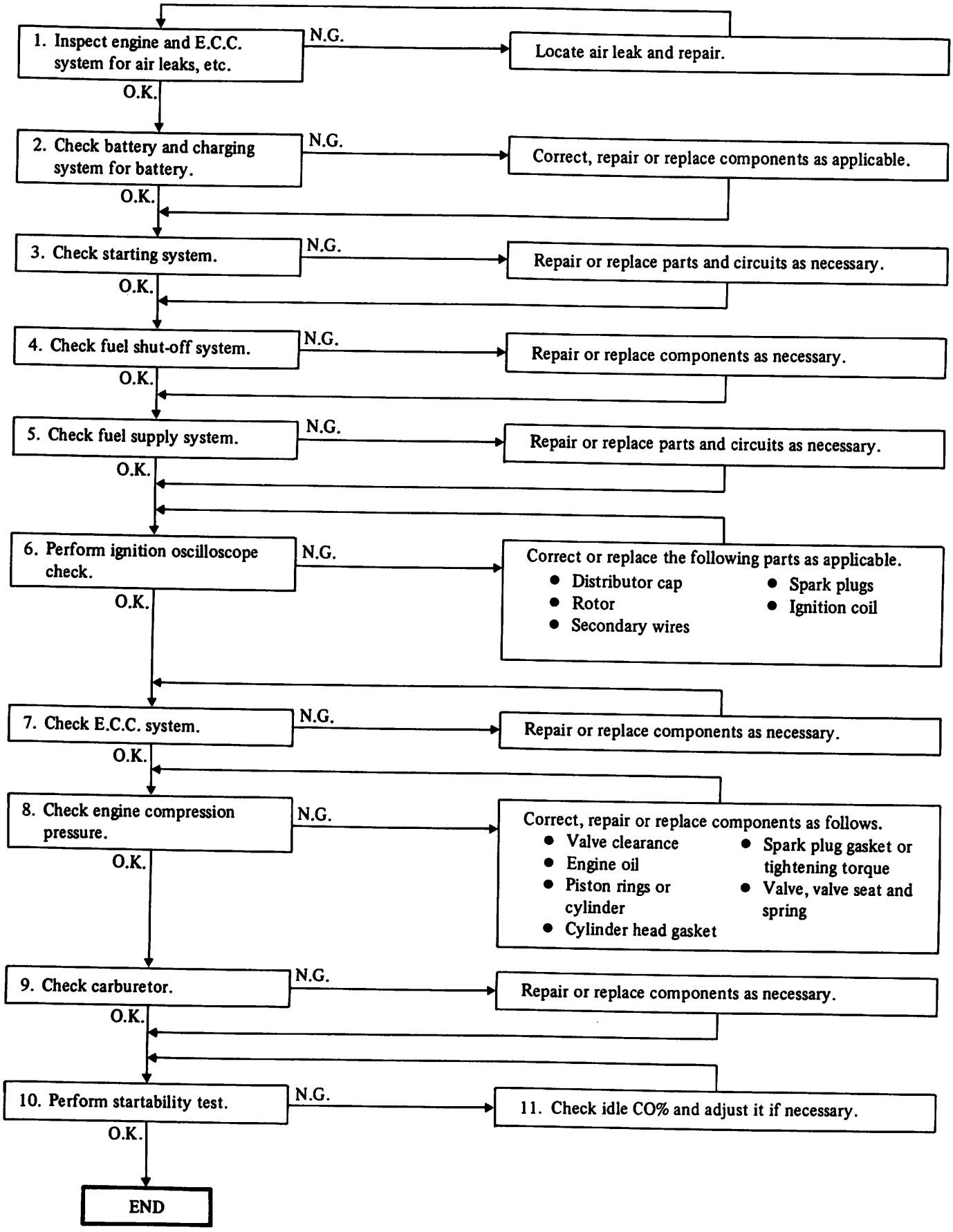

ENGINE STALL

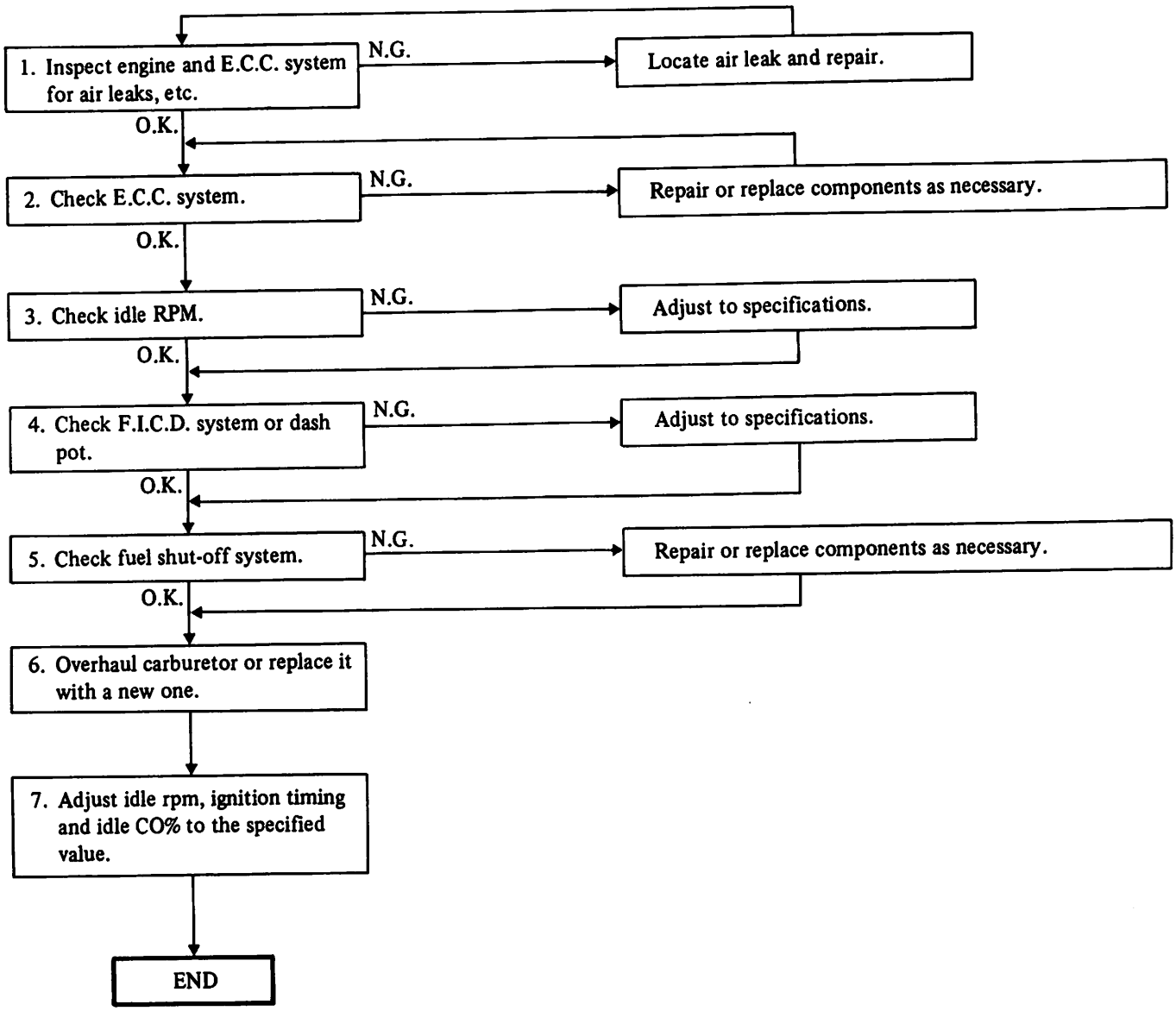

For diagnostic procedures for excessive oil consumption, overheating, noisy engine, refer to DIAGNOSTIC PROCEDURE FOR CARBURETOR ENGINES.

ENGINE MAINTENANCE (SD25)

BEFORE ENGINE START

CHECKING AND ADJUSTING DRIVE BELTS

1. Visually inspect for cracks or damage.

The belts should not touch the bottom of the pulley groove.

2. Check belt tension by pushing.
The belts should deflect by the specified amount.

Drive belt deflection:
8 - 12 mm
(0.31 - 0.47 in)
Applied pressing force:
98 N (10 kg, 22 lb)

3. Adjust belt tension as follows:

Fan belt

1. Loosen upper and lower alternator securing bolts until alternator can be moved slightly.
2. Move alternator with a prying bar until belt tension is within the specified range.
Then tighten bolts securely.

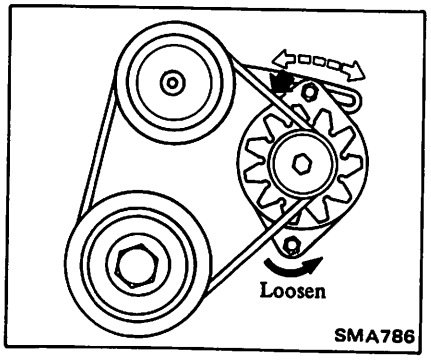

SMA786

Air conditioner compressor

1. Loosen idler pulley lock nut.
2. Turn idler pulley adjusting bolt in either direction until tension of air conditioner compressor belt is within the specified range.

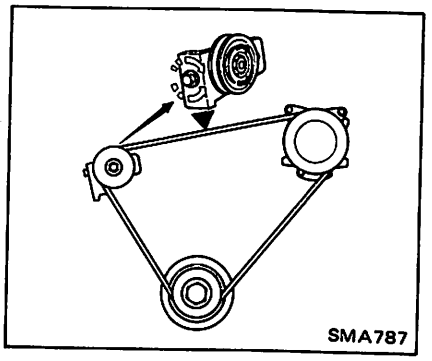
SMA787

3. Tighten idler pulley lock nut

Power steering pump belt

1. Loosen oil pump securing bolts until the pump can be moved slightly.
2. Move the pump with a prying bar until belt tension is within the specified range. Then tighten bolts securely.

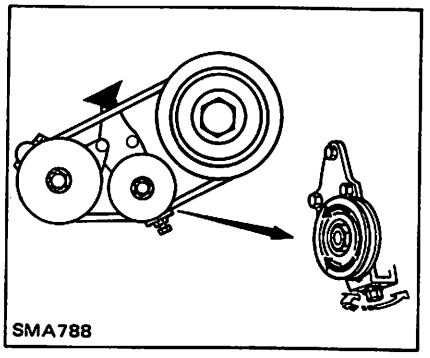
SMA788

REPLACING AIR CLEANER FILTER

The viscous paper type air cleaner filter does not require any cleaning between renewal.

1. Remove clips from air cleaner.

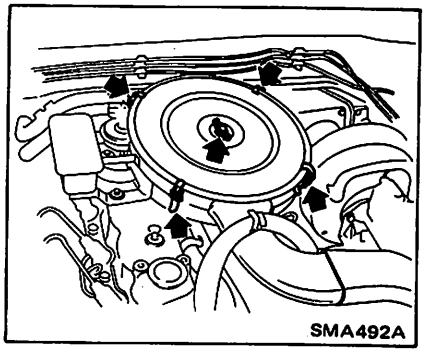
SMA492A

2. Remove air cleaner cover. Then change air cleaner element to new one.

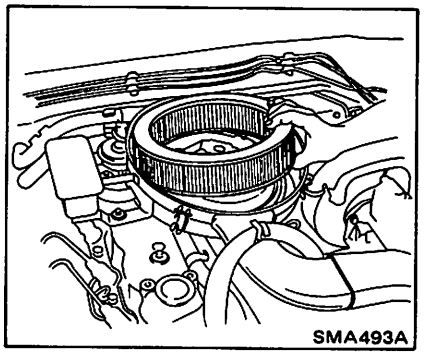
SMA493A

CHANGING ENGINE COOLANT

WARNING:
To avoid the danger of being scalded, never attempt to change the coolant when the engine is hot.

When changing engine coolant on heater equipped models, set heater "TEMP" control lever at full "HOT" position.

1. Open drain cock at bottom of radiator, and remove radiator cap.

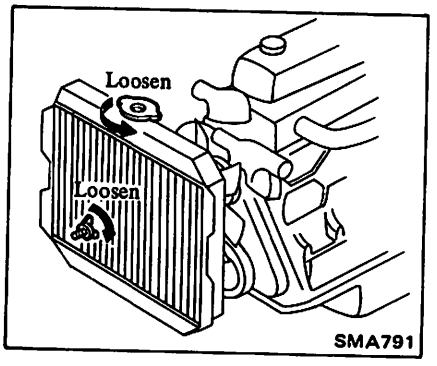

SMA791

2. Remove cylinder block drain plug located at left rear of cylinder block.

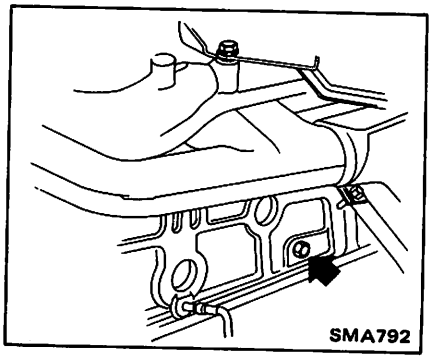
SMA792

3. Drain coolant completely.
   Then flush cooling system.
4. Close drain cock and plug.
5. Fill radiator with coolant up to filler opening, observing instructions attached to anti-freeze container for mixing ratio of anti-freeze to water.

Cooling water capacity:

Unit: liter (US qt, Imp qt)

With heater	10.5 (11-1/8, 9-1/4)
Without heater	10.0 (10-5/8, 8-3/4)

6. Run engine for a few minutes.
   If necessary, add coolant.
7. Fill reservoir tank with coolant up to "MAX" level.
8. Install radiator cap.
   Check drain cock and plug for any sign of leakage.

REPLACING MAIN FUEL FILTER

1. Remove fuel filter sensor, and drain fuel.

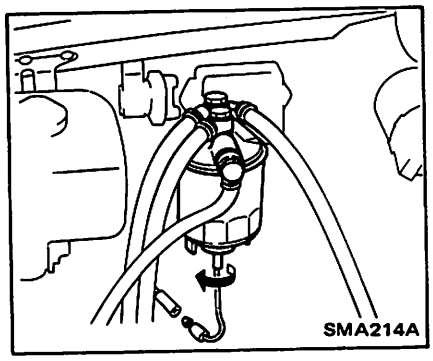

2. Remove fuel filter, using Tool.

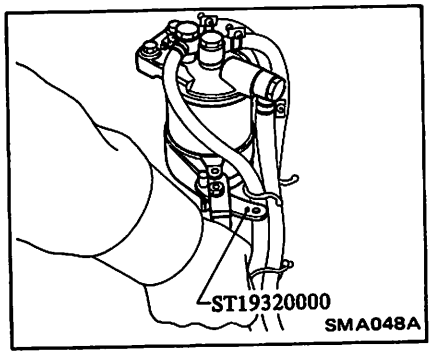

3. Connect fuel filter sensor to new fuel filter.
   Install new fuel filter.

Hand-tighten ONLY. Do not use wrench to tighten filter.

4. Connect fuel filter sensor.
5. Bleed fuel system.
   Refer to Bleeding Fuel System.

REPLACING PRIMARY FUEL FILTER

Disconnect fuel hoses from the primary fuel filter and replace it.

Plug opening for fuel hose has been eliminated from fuel filter.

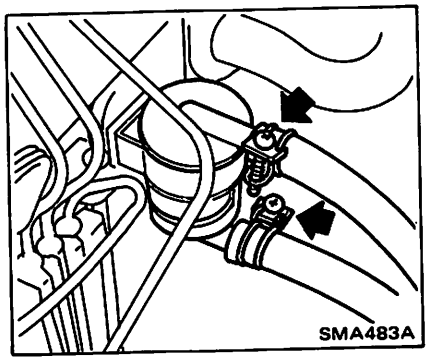

Be sure to install fuel filter with the word UPPER facing upward.

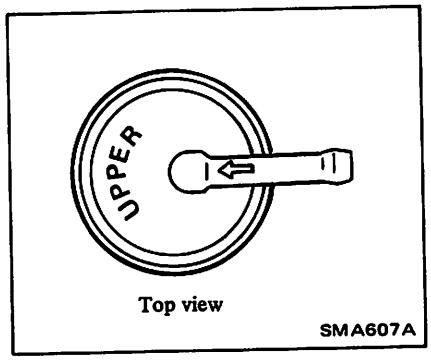

DRAIN WATER

1. Set a container or rug under fuel filter.
2. Remove fuel sensor, and drain water.

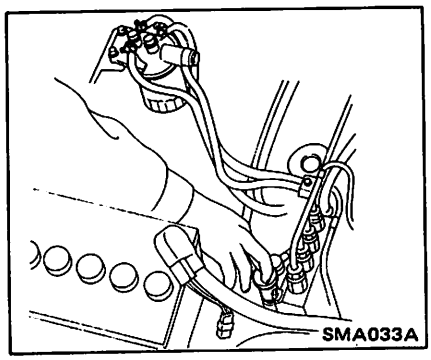

Pumping priming pump will quicken the water drainage.

3. Bleed fuel system.
   Refer to Bleeding Fuel System.

CHECKING AND ADJUSTING INJECTION TIMING

Checking and Adjusting

Check the timing marks on pump and engine front plate. If necessary move pump to align timing marks.

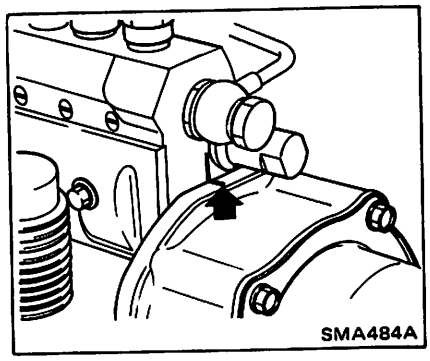

Ⓣ : Injection pump mounting bolt
20 - 25 N·m
(2.0 - 2.5 kg-m,
14 - 18 ft-lb)

BLEEDING FUEL SYSTEM

Air should be bled out of fuel system when injection pump is removed or fuel system is repaired.

1. Remove cap that covers the priming pump ②.
2. Turn printing pump ② counterclockwise.
3. Loosen air vent screw ①.
4. Move priming pump ② up and down until no further air comes out of the air vent screws ①.

5. Tighten air vent screws ①.
6. Push and turn priming pump clockwise.
7. Install cap.

WARNING:
Wipe off fuel around engine.

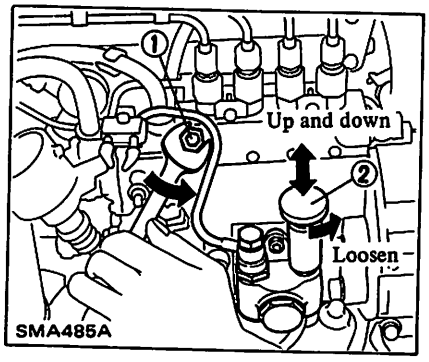

CHECKING INJECTION NOZZLE

Inspection

Check valve for nozzle tester should be closed to prevent damage to gauge.

a. Check initial injection pressure by pumping tester handle one time per second.

Initial injection pressure
Used
9,807 - 10,297 kPa
(100 - 105 kg/cm², 1,422 - 1,493 psi)
New
10,297 - 11,082 kPa
(105 - 113 kg/cm², 1,493 - 1,607 psi)

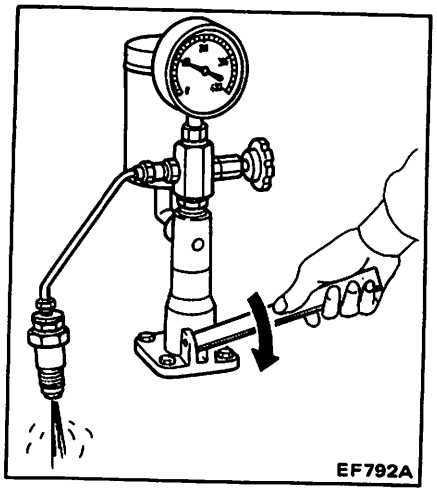

b. New nozzle requires that initial injection pressure always be checked.

c. Check spray pattern by pumping tester handle 4 to 6 times per second or more.

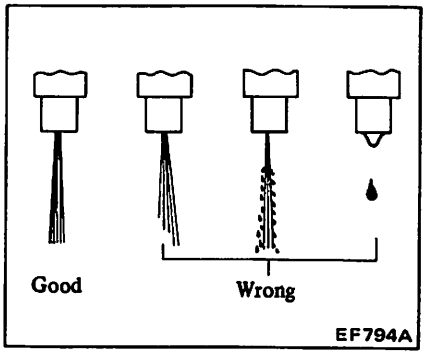

If the spray pattern is not correct, clean or replace it.

For details, refer to INJECTION NOZZLE ASSEMBLY in EF section.

AFTER ENGINE WARM-UP

ADJUSTING INTAKE AND EXHAUST VALVE CLEARANCE

Adjustment should be made while engine is hot.

1. Start engine and warm up engine until water temperature indicator points to middle of gauge, then stop engine.

Valve clearance adjustment cannot be made while engine is in operation.

2. Remove valve rocker cover.
3. Set No. 1 piston to Top Dead Center on compression stroke. Adjust clearances of ①, ②, ③ and ⑤ valves.

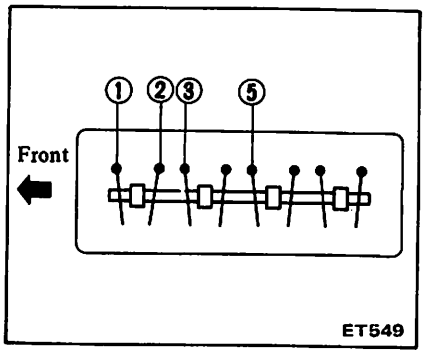

Valve clearance (Hot):
Intake & exhaust
0.35 mm (0.014 in)

(1) Using feeler gauge, measure clearance between rocker arm and valve stem.

Feeler gauge should move with a very slight drag.

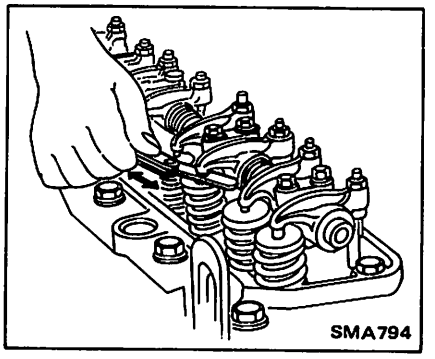

(2) If clearance is not the specified value, loosen rocker arm adjusting screw nut and turn rocker arm screw to provide proper clearance.
(3) Hold adjusting screw and tighten rocker arm nut.

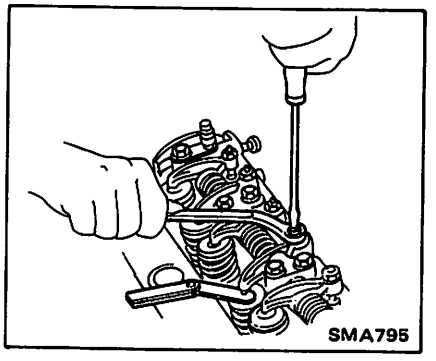

(4) Recheck clearance.

4. Bring No. 4 piston to Top Dead Center on compression stroke.

Adjust clearances of ④, ⑥, ⑦ and ⑧ valves, using same procedure as in step 3.

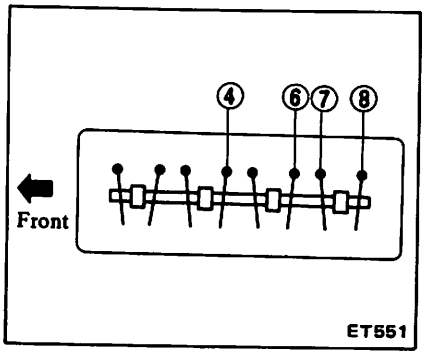

CHECKING ENGINE COMPRESSION PRESSURE

1. Warm up engine.
2. Remove following parts.
- Injection tube on nozzle side
- Spill tube assembly

When removing spill tube, hold nut and nozzle to prevent it from breaking.

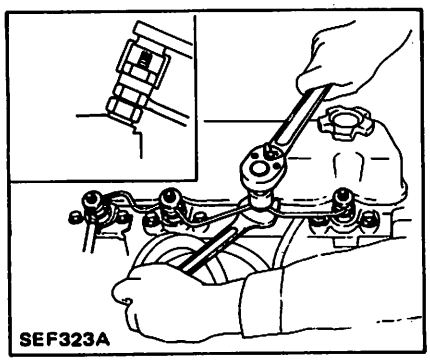

- All nozzle assemblies

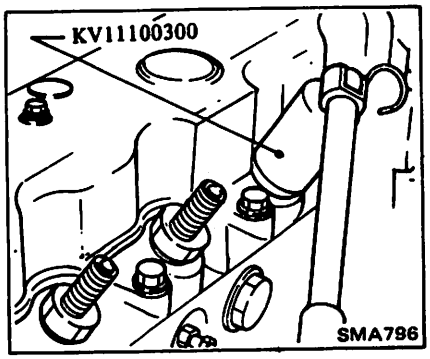

- Nozzle gaskets

3. Fit compression gauge adapter to cylinder head. Make sure bleeder of gauge is closed.

Ⓣ : Compression gauge adapter
76 - 78 N·m
(7.7 - 8.0 kg-m,
56 - 58 ft-lb)

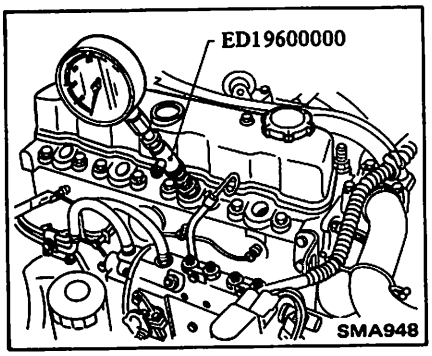

4. Set no fuel injected condition. Disconnect harness connector between injection pump control unit (D.P.C.) and injection pump controller.

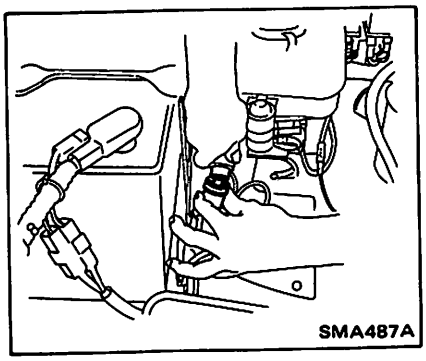

Confirm that injection pump control lever stays at the stop position.

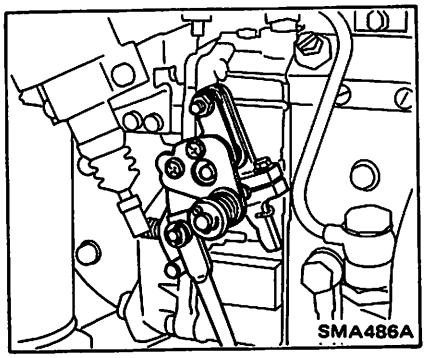

5. Depress accelerator pedal fully and crank engine, then read gauge indication.
- Engine compression measurement should be made as quickly as possible.

Compression pressure:

Unit: kPa (kg/cm^2, psi)/200 rpm

Standard	2,942 (30, 427)
Minimum	2,452 (25, 356)
Differential limit between cylinders	294 (3, 43)

6. Remove compression gauge adapter and push bleeder. Make sure that bleeder is closed before attempting to check another cylinder.

If cylinder compression in one or more cylinders is low, pour a small quantity of engine oil into cylinders through the nozzle holes and retest compression.
- If adding oil helps the compression pressure, chances are that piston rings are worn or damaged.
- If pressure stays low, valve may be sticking or seating improperly.
- If cylinder compression in any two adjacent cylinders is low, and if adding oil does not help the compression, there is leakage past the gasketed surface.
  Oil and water in combustion chambers can result from this problem.

7. Install following parts:
- Nozzle gaskets

When installing the small nozzle gasket, the installation direction is as follows.

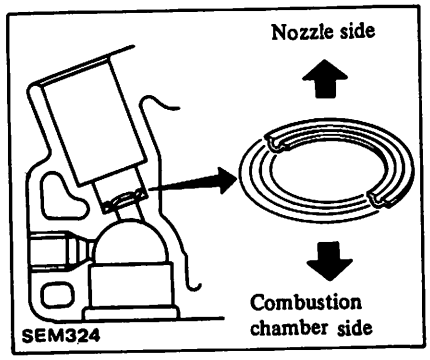

- Nozzle assemblies
- Spill tube assembly

Ⓣ Spill tube nut
39 - 49 N·m
(4 - 5 kg-m,
29 - 36 ft-lb)

- Injection tube

8. Bleed air from fuel system. Refer to BLEEDING FUEL SYSTEM.

CHANGING ENGINE OIL AND OIL FILTER

1. Start engine and warm up engine until temperature indicator points to middle of gauge, then stop engine.
2. Remove oil pan drain plug and oil filler cap, and allow oil to drain.

WARNING:
Be careful not to burn yourself, as the engine oil may be hot.

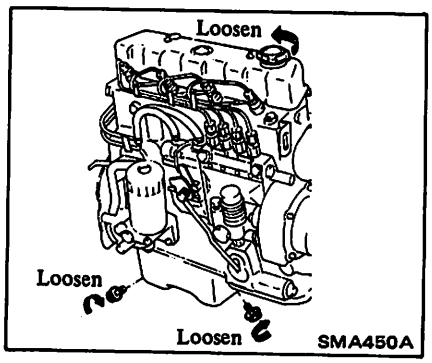

- **Be sure to drain oil, removing two oil drain plugs.**
- **A milky oil indicates the presence of cooling water. Isolate the cause and take corrective measure.**
- **An oil with extremely low viscosity indicates dilution with diesel fuel.**

3. Clean and install oil pan drain plug with washer.

Ⓣ : Oil pan drain plug
49 - 59 N·m
(5 - 6 kg-m, 36 - 43 ft-lb)

4. Using Tool, remove oil filter.

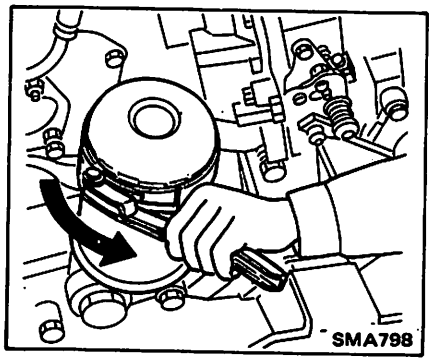

5. Wipe oil filter mounting surface with a clean rag.
6. Smear a little engine oil on rubber gasket of new filter.

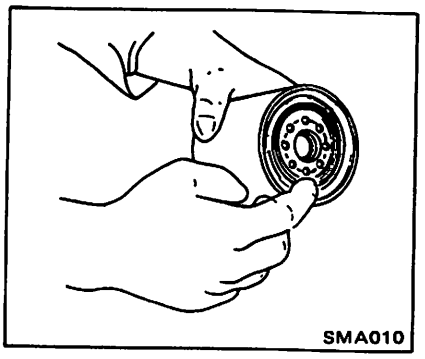

7. Turn the oil filter until it touches the oil filter bracket.
Then turn it 2/3 turn (except for California model) or 1/2 turn (for California model) further.

If it is turned too far, oil leakage may occur.

8. Refill engine with new recommended engine oil, referring to RECOMMENDED LUBRICANTS.
Check oil level with dipstick.

Oil capacity:

Unit: liter (US qt, Imp qt)

	Non-California	California
With oil filter change	5.3 (5-5/8, 4-5/8)	5.6 (5-7/8, 4-7/8)
Without oil filter change	4.8 (5-1/8, 4-1/4)	

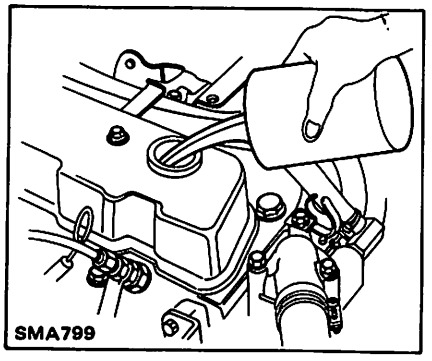

9. Start engine. Check area around drain plug and oil filter for any sign of oil leakage.

If any leakage is evident, these parts have not been properly installed.

10. Run engine until it reaches operating temperature. Then turn it off and wait several minutes.
Check oil level.
If necessary, add engine oil.

Oil level should be checked with vehicle parked on a level surface.

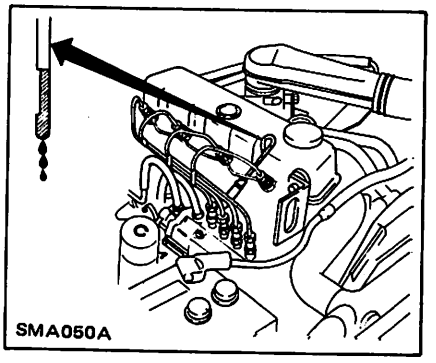

ADDING INJECTION PUMP DIAPHRAGM OIL

1. Remove filler plug located on governor atmospheric side.
2. Add recommended diaphragm oil.

Oil capacity:
4 mℓ
(0.14 US fl oz, 0.14 Imp fl oz)

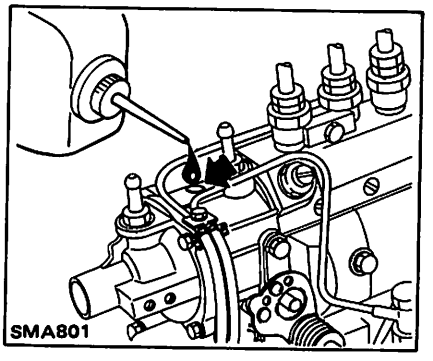

CHECKING FUEL LINES (Hoses, piping, connections, etc.)

1. Check fuel line for leaks, particularly around fuel pipe and fuel hose connections with engine running.
2. Tighten loose connections and replace any damaged or deformed parts.

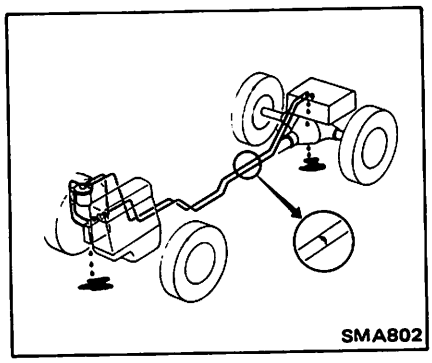

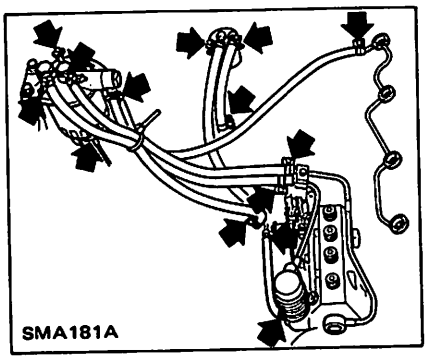

CHECKING RUBBER HOSES (Water, air vacuum and oil hoses, etc.)

1. Check injection pump governor vacuum hose and air hose, water hose and oil hose for damage, cracks or deterioration.
2. Tighten loose connections and replace any parts with cracks or deterioration.

CHECKING AND ADJUSTING IDLING SPEED

Preparation

a. **Make sure that transmission shift lever is in neutral.**
b. **Apply parking brake securely and block both front and rear wheels with chocks.**
c. **Make sure the lights, heater fan and all accessories are off.**
d. **Push in throttle control knob all the way.**

Checking

1. Start engine and warm up engine until temperature indicator points to middle of gauge, then stop engine.
2. Attach a diesel tacho tester's pick-up to No. 1 injection tube.

In order to obtain a more accurate reading of engine speed, remove the clamp on No. 1 injection tube.

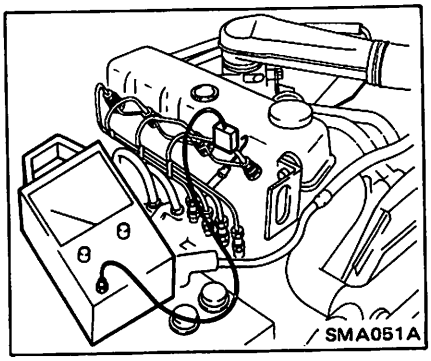

3. Run engine at about 2,000 rpm for about two minutes under no-load.
4. Run engine for one minute at idle speed, and check engine idle speed.

Idle speed: 700^{+100}_{-50} rpm

Adjusting low idle speed

1. Loosen idle adjusting screw lock nut.
2. Start engine and adjust engine rpm to the specified value by means of turning low idle adjusting screw.

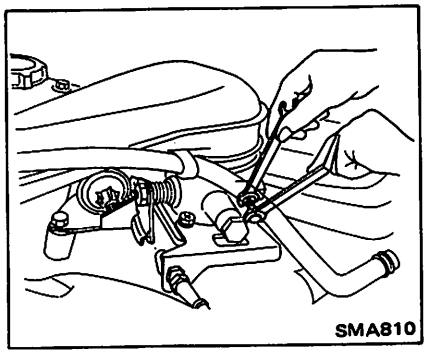

3. Tighten idle adjusting screw lock nut.

ADJUSTING DASH POT

Adjusting

After idle adjustment, dash pot adjustment must be performed.

1. Warm up engine.
2. Attach a diesel tacho tester's pick-up to No. 1 injection tube.

In order to obtain a more accurate reading of engine speed, remove the clamp on No. 1 injection tube.

3. Loosen dash pot lock nut.
4. Maintain engine speed at 1,280 to 1,350 rpm. Operate and adjust dash pot so that control lever tip contacts dash pot tip.

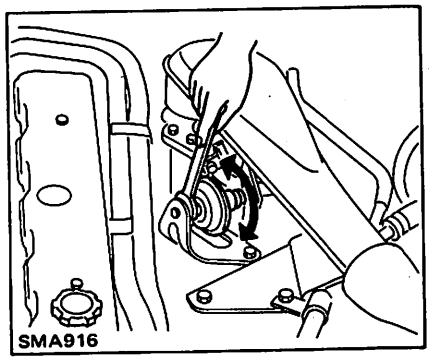

5. Tighten dash pot lock nut.

TROUBLE DIAGNOSES AND CORRECTIONS (SD25)

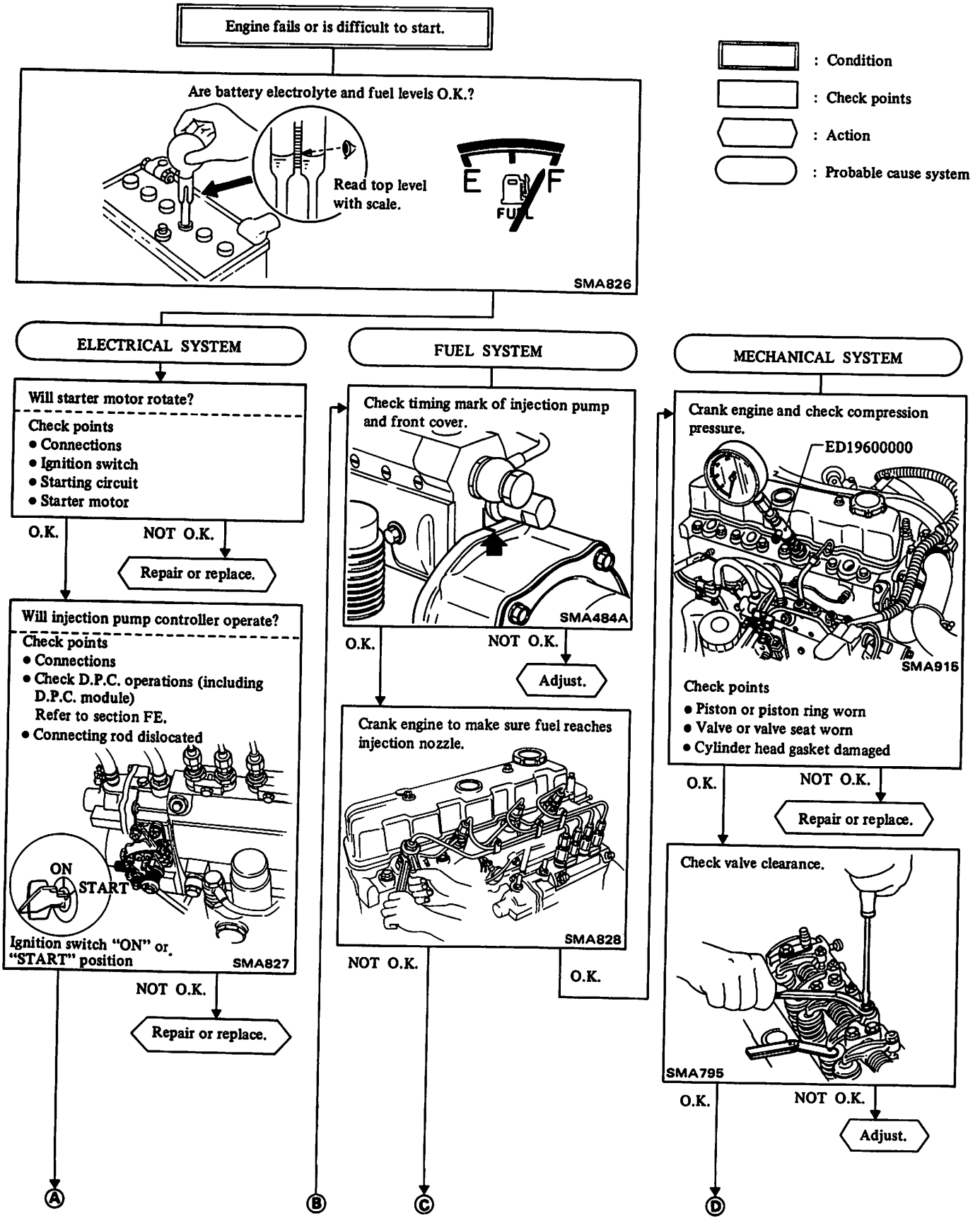

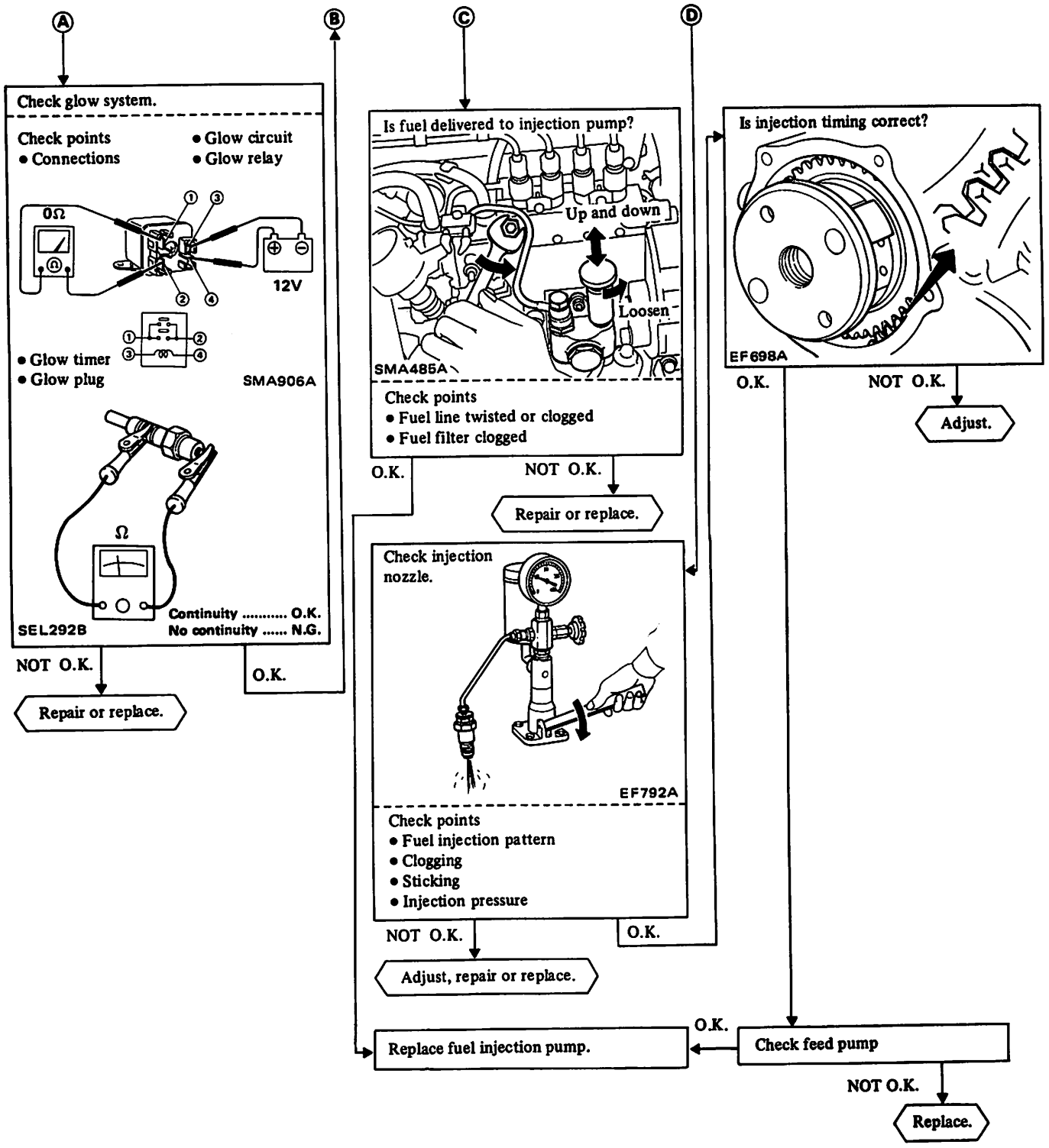
Ⓐ
Ⓑ
Ⓒ
Ⓓ
Check glow system.
Check points
• Connections
• Glow circuit
• Glow relay
0Ω
12V
• Glow timer
• Glow plug
SMA906A
Ω
SEL292B
Continuity ..... O.K.
No continuity ..... N.G.
NOT O.K.
O.K.
Repair or replace.
Is fuel delivered to injection pump?
Up and down
Loosen
SMA485A
Check points
• Fuel line twisted or clogged
• Fuel filter clogged
O.K.
NOT O.K.
Repair or replace.
Check injection nozzle.
EF792A
Check points
• Fuel injection pattern
• Clogging
• Sticking
• Injection pressure
NOT O.K.
O.K.
Adjust, repair or replace.
Is injection timing correct?
EF698A
O.K.
NOT O.K.
Adjust.
Replace fuel injection pump.
O.K.
Check feed pump
NOT O.K.
Replace.

UNSTABLE IDLING SPEED

FUEL SYSTEM

Check timing mark of injection pump and front cover.

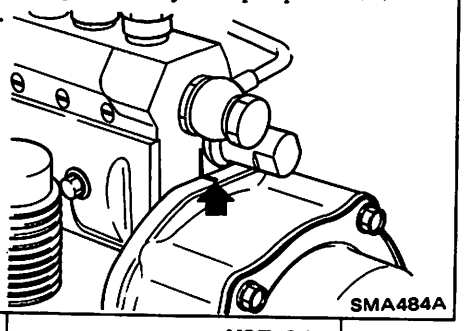

O.K. → Check idle speed.

NOT O.K. → Adjust.

Check idle speed.

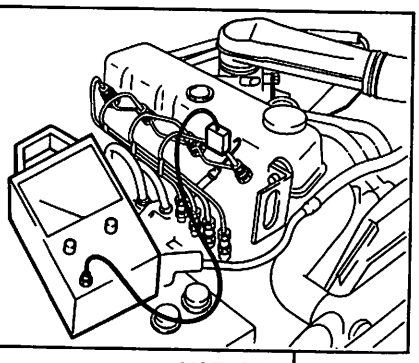

O.K. → Check fuel line.

NOT O.K. → Adjust.

Check fuel line.

Check points
- Fuel line twisted or clogged
- Fuel filter clogged
- Leaks or loose

O.K. → Purge air

NOT O.K. → Repair, retighten or replace.

Purge air

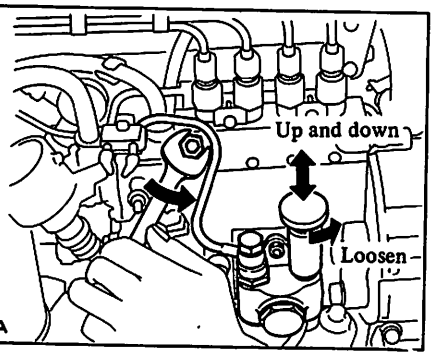

MECHANICAL SYSTEM

Is injection timing correct?

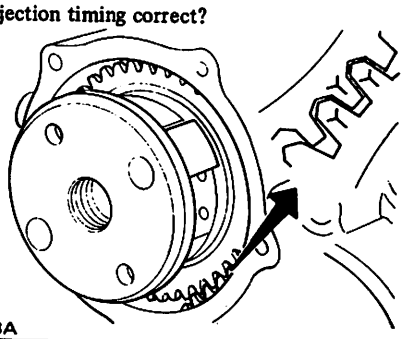

O.K. → Check valve clearance.

NOT O.K. → Adjust.

Check valve clearance.

O.K. → Check engine mounting.

NOT O.K. → Adjust.

Check engine mounting.

Check points
- Cracked
- Loose

O.K. → Ⓐ

NOT O.K. → Replace or retighten.

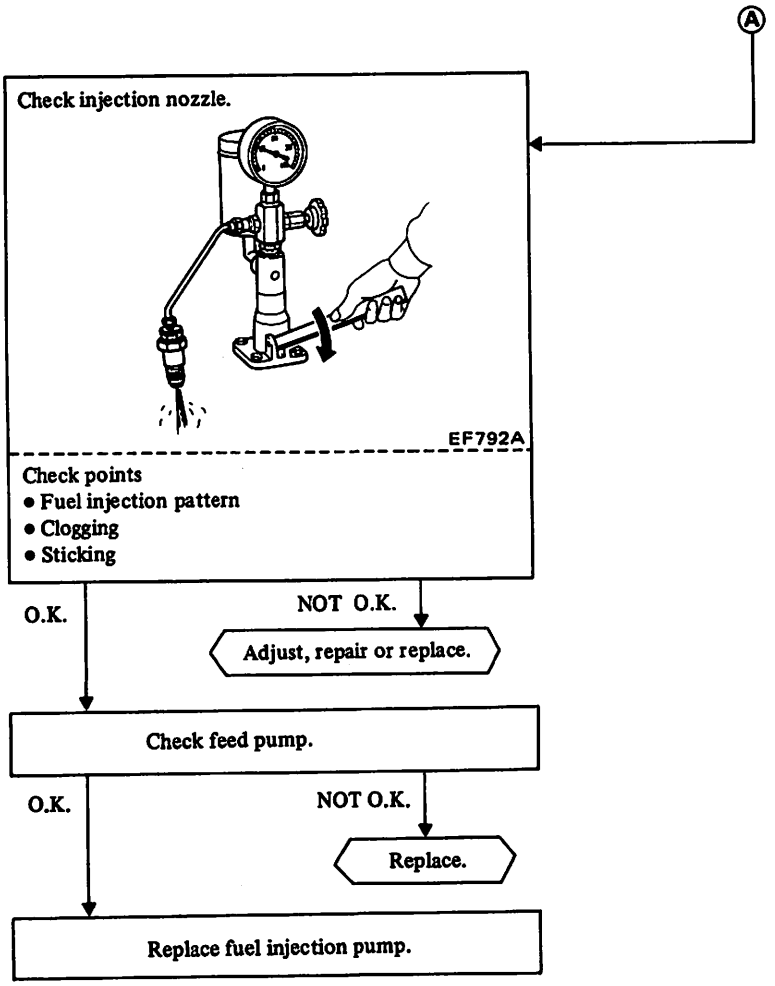
Ⓐ
Check injection nozzle.
EF792A
Check points
• Fuel injection pattern
• Clogging
• Sticking
O.K.
NOT O.K.
Adjust, repair or replace.
Check feed pump.
O.K.
NOT O.K.
Replace.
Replace fuel injection pump.

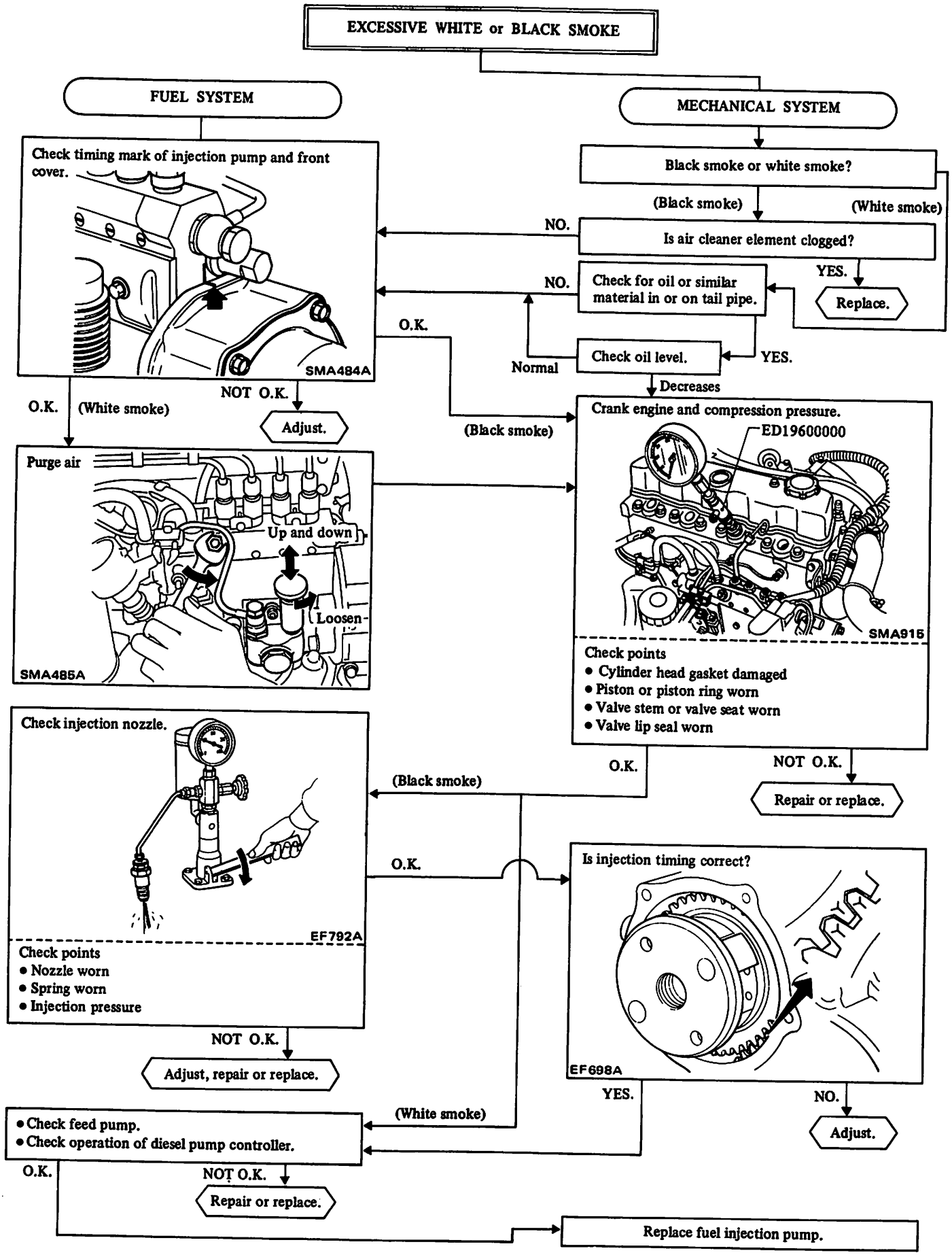
EXCESSIVE WHITE or BLACK SMOKE
FUEL SYSTEM
MECHANICAL SYSTEM
Check timing mark of injection pump and front cover.
SMA484A
Black smoke or white smoke?
(Black smoke)
(White smoke)
NO.
Is air cleaner element clogged?
YES.
Replace.
NO.
Check for oil or similar material in or on tail pipe.
O.K.
Check oil level.
YES.
Normal
Decreases
NOT O.K.
Adjust.
O.K.
(White smoke)
(Black smoke)
Crank engine and compression pressure.
ED19600000
SMA915
Purge air
Up and down
Loosen
SMA485A
Check points
• Cylinder head gasket damaged
• Piston or piston ring worn
• Valve stem or valve seat worn
• Valve lip seal worn
O.K.
NOT O.K.
Repair or replace.
Check injection nozzle.
EF792A
(Black smoke)
O.K.
Check points
• Nozzle worn
• Spring worn
• Injection pressure
NOT O.K.
Adjust, repair or replace.
Is injection timing correct?
EF698A
YES.
NO.
Adjust.
(White smoke)
• Check feed pump.
• Check operation of diesel pump controller.
O.K.
NOT O.K.
Repair or replace.
Replace fuel injection pump.

LOW POWER

FUEL SYSTEM

Fuel quality is normal.

O.K. → Does venturi's butterfly valve open fully?

NOT O.K. → Replace.

Does venturi's butterfly valve open fully?

Check points
- Accelerator pedal stroke
- Accelerator wire elongated
- Accelerator linkage stuck

O.K. → Check timing mark of injection pump and front cover.

NOT O.K. → Adjust or repair.

Check timing mark of injection pump and front cover.

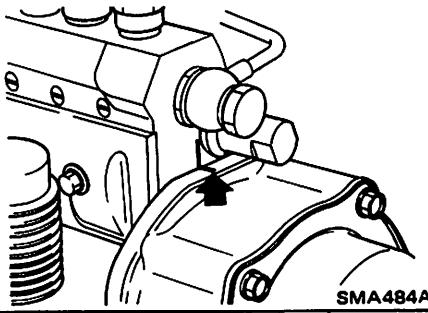

O.K. → Check fuel line.

NOT O.K. → Adjust.

Check fuel line.

Check points
- Fuel line twisted or clogged
- Fuel filter clogged
- Leaks or loose

O.K. → Purge air

NOT O.K. → Repair, retighten or replace.

Purge air

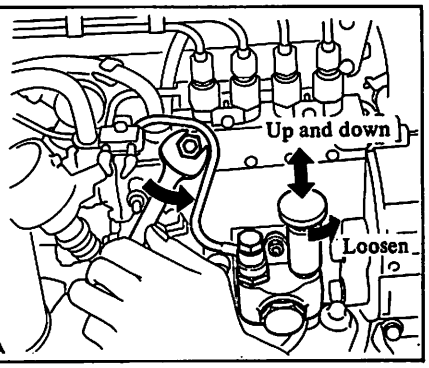

MECHANICAL SYSTEM

Check air cleaner element for clogs.

O.K. → Crank engine and check compression pressure.

NOT O.K. → Replace.

Crank engine and check compression pressure.

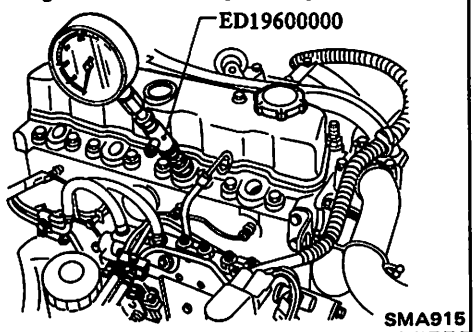

Check points
- Piston or piston ring worn
- Valve stem or valve seal worn
- Cylinder gasket damaged

O.K. → Check valve clearance

NOT O.K. → Repair or replace.

Check valve clearance

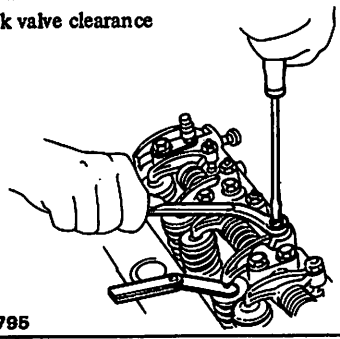

O.K. → Ⓐ

NOT O.K. → Adjust.

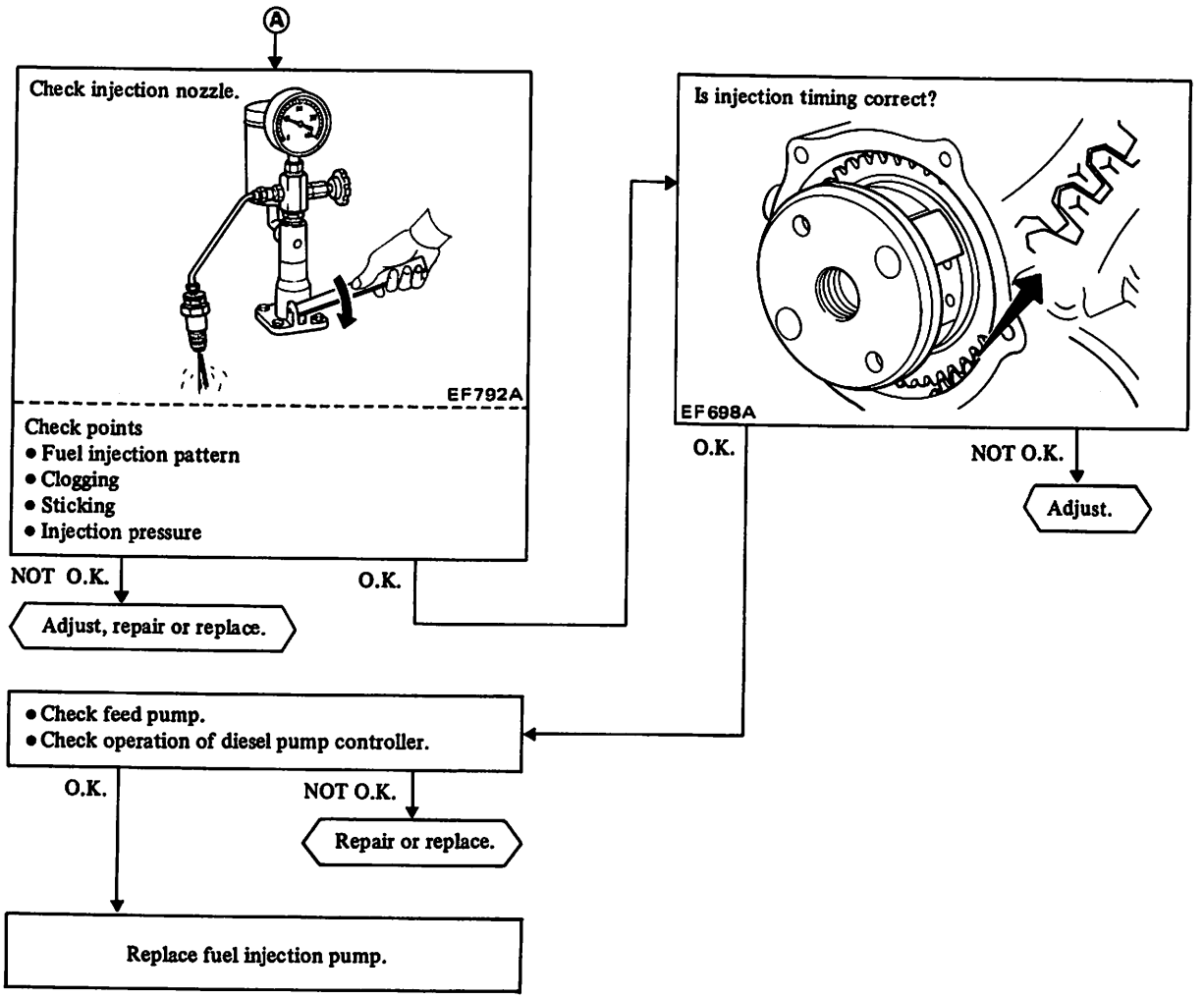
A
Check injection nozzle.
EF792A
Check points
• Fuel injection pattern
• Clogging
• Sticking
• Injection pressure
NOT O.K.
Adjust, repair or replace.
O.K.
Is injection timing correct?
EF698A
O.K.
NOT O.K.
Adjust.
• Check feed pump.
• Check operation of diesel pump controller.
O.K.
NOT O.K.
Repair or replace.
Replace fuel injection pump.

WATER LEAKAGE

RADIATOR

Check drain cock.

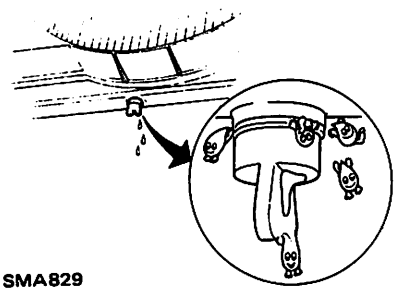

SMA829

Check points
- Packing damaged
- Drain cock loose

O.K. → Check cooling system pressure.

NOT O.K. → Retighten or replace.

Check cooling system pressure.

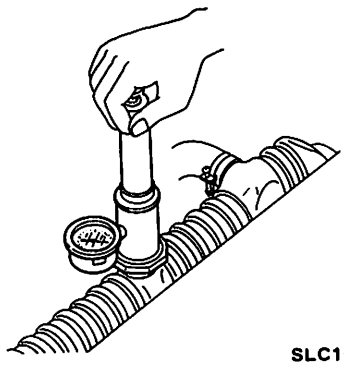

SLC165

Check points
- Radiator core clogged
- Radiator core cracked
- Radiator hose connections
- Hoses damaged
- Heater hose connections
- Heater core damaged

O.K. → Check oil cooler area.

NOT O.K. → Retighten or replace.

OIL COOLER

Check oil cooler area.

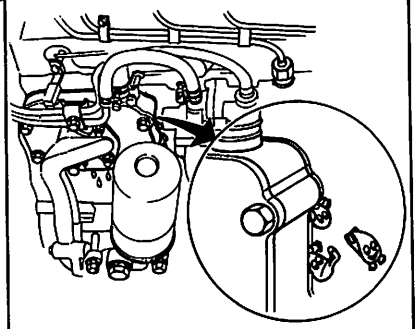

SMA488A

Check points
- Oil cooler damaged
- Oil cooler gasket damaged
- Oil cooler bolt loose
- Oil cooler hose cracked

NOT O.K. → Retighten or replace.

O.K. → Check mating area of cylinder block and head.

ENGINE COMPONENT

Check mating area of cylinder block and head.

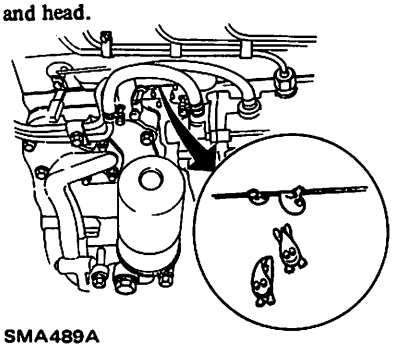

SMA489A

Check points
- Cylinder head cracked
- Cylinder head surface damaged
- Cylinder block surface damaged
- Gasket damaged
- Cylinder head bolt loose

O.K. → Check areas around blind plugs.

NOT O.K. → Retighten or replace.

Check areas around blind plugs.

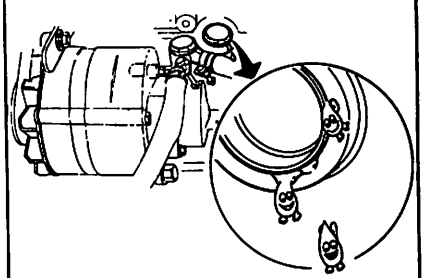

SMA832

Check points
- Blind plug damaged

O.K. → Ⓐ

NOT O.K. → Replace.

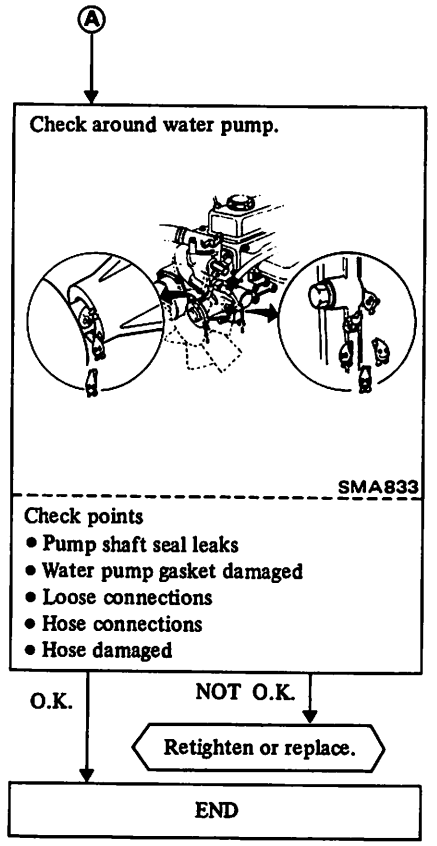
A
Check around water pump.
SMA833
Check points
• Pump shaft seal leaks
• Water pump gasket damaged
• Loose connections
• Hose connections
• Hose damaged
O.K.
NOT O.K.
Retighten or replace.
END

OIL LEAKAGE

ENGINE COMPONENT

Check rocker cover.

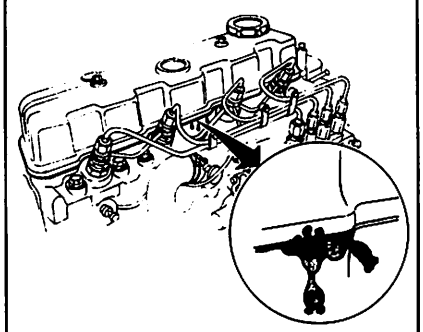

SMA834

Check points
- Rocker cover damaged
- Gasket damaged
- Rocker cover bolt loose

O.K. → Checking mating area of cylinder block and cylinder head.

NOT O.K. → Retighten or replace.

Checking mating area of cylinder block and cylinder head.

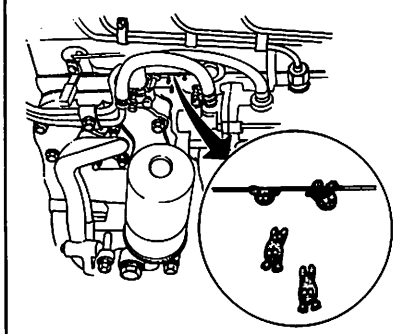

SMA490A

Check points
- Cylinder head surface damaged
- Cylinder block surface damaged
- Gasket damaged
- Cylinder head bolt loose

O.K. → Check oil cooler mounting area.

NOT O.K. → Retighten or replace.

Check oil cooler mounting area.

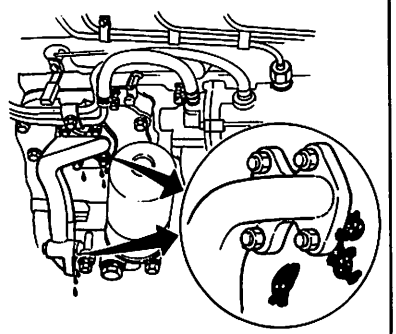

SMA491A

Check points
- Oil cooler damaged
- Oil cooler gasket damaged
- Oil cooler bolt loose

O.K. → Check alternator vacuum pump for oil leakage.

NOT O.K. → Retighten or replace.

Check alternator vacuum pump for oil leakage.

O.K. → Check mating area of oil pan and cylinder block.

NOT O.K. → Repair or replace.

Check mating area of oil pan and cylinder block.

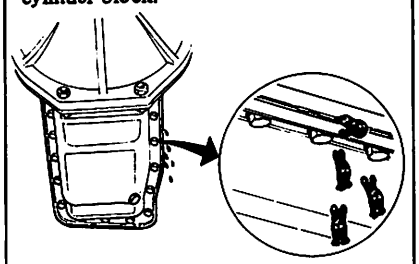

SMA837

Check points
- Oil pan damaged
- Oil pan gasket damaged
- Oil pan bolt loose

O.K. → Check oil pan drain plug.

NOT O.K. → Repair or replace.

Check oil pan drain plug.

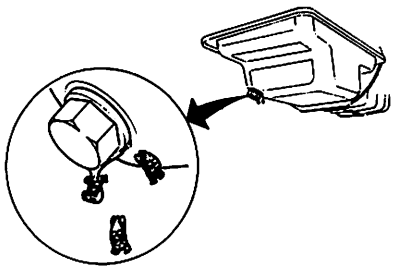

SMA838

Check points
- Drain plug loose
- Gasket damaged

O.K. → Check engine front and rear side.

NOT O.K. → Retighten or replace.

Check engine front and rear side.

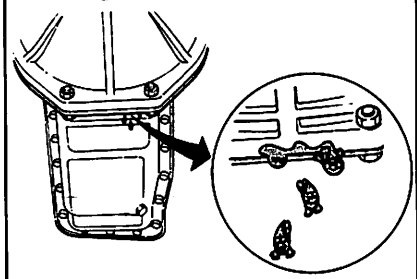

SMA839

Check points
- Check front and rear oil seal for damage.
- Cylinder block cracked

O.K. → END

NOT O.K. → Replace

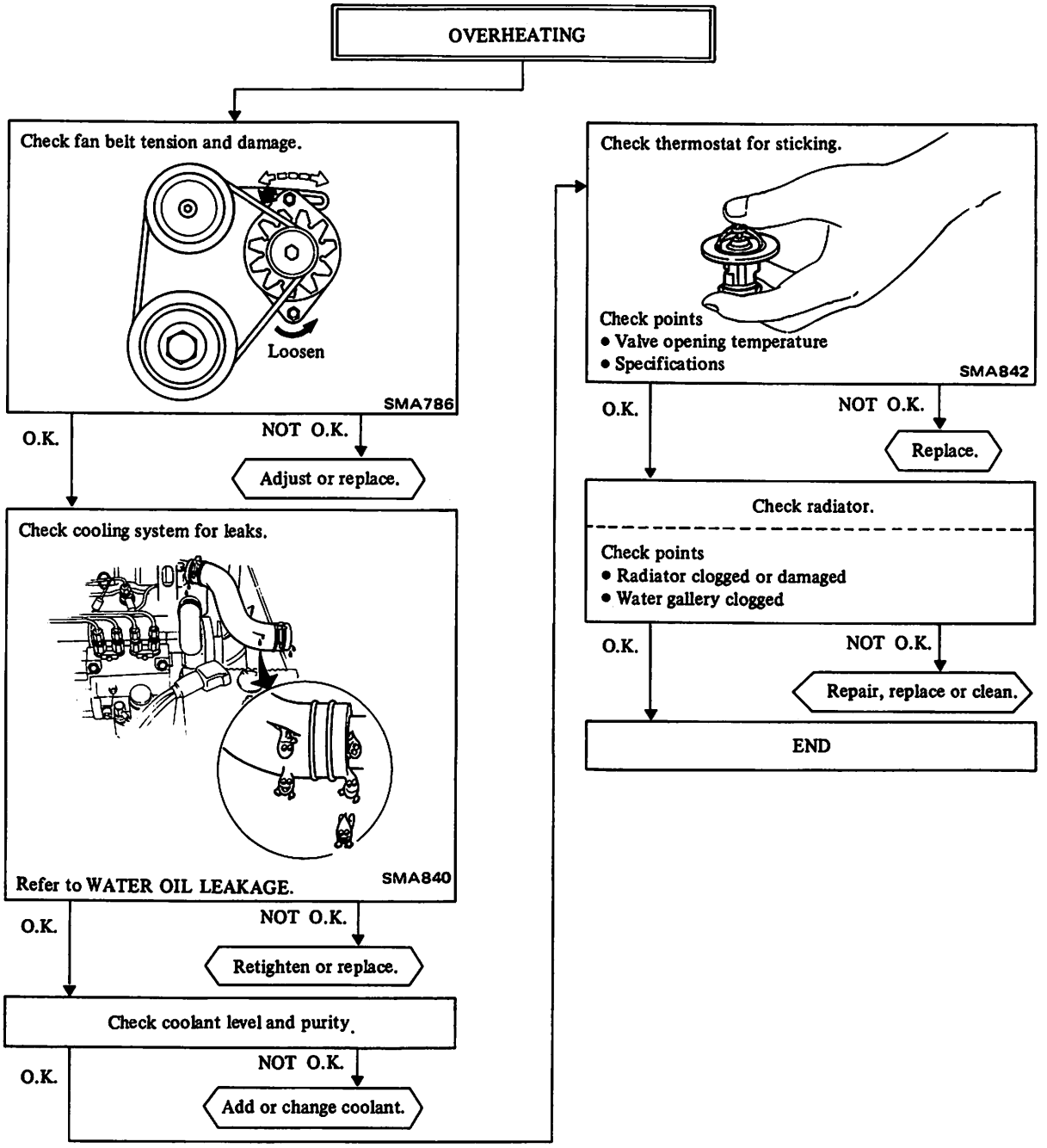
OVERHEATING
Check fan belt tension and damage.
Loosen
SMA786
O.K.
NOT O.K.
Adjust or replace.
Check cooling system for leaks.
Refer to WATER OIL LEAKAGE.
SMA840
O.K.
NOT O.K.
Retighten or replace.
Check coolant level and purity.
O.K.
NOT O.K.
Add or change coolant.
Check thermostat for sticking.
Check points
• Valve opening temperature
• Specifications
SMA842
O.K.
NOT O.K.
Replace.
Check radiator.
Check points
• Radiator clogged or damaged
• Water gallery clogged
O.K.
NOT O.K.
Repair, replace or clean.
END

ENGINE DOES NOT STOP.

Will injection pump controller operate?

Check points

- Connections
- Connecting rod dislocated
- Check D.P.C. operation

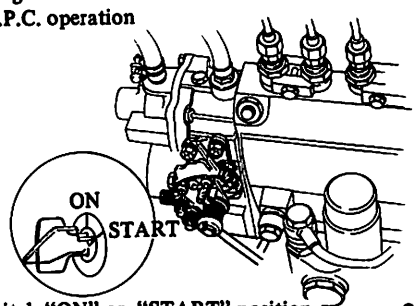

Ignition switch "ON" or "START" position

SMA827

O.K. → Check for stuck accelerator linkage.

NOT O.K. → Replace.

Check for stuck accelerator linkage.

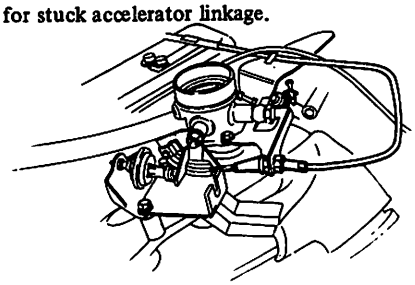

SMA844

O.K. → Replace fuel injection pump.

NOT O.K. → Repair or replace.

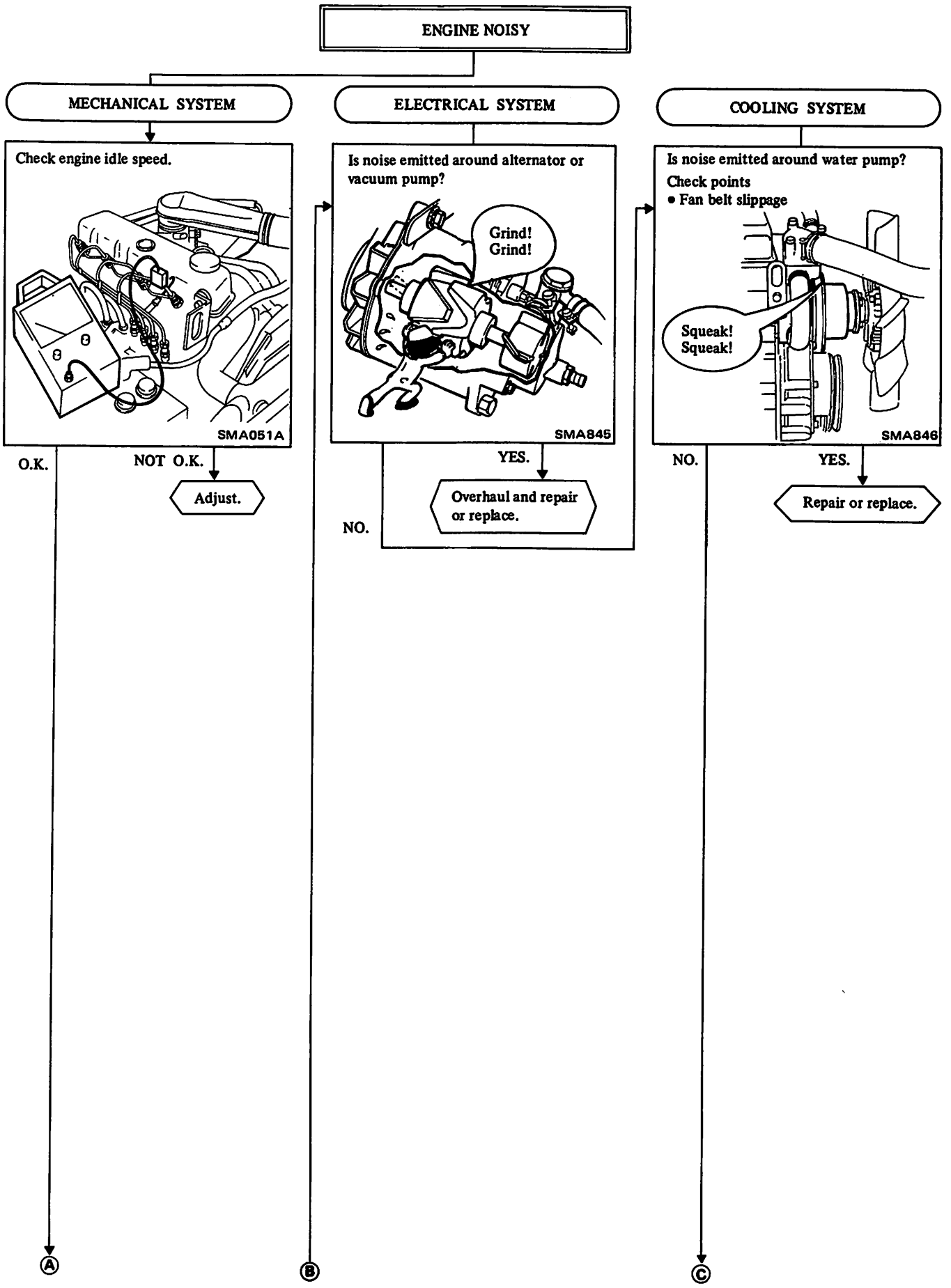
ENGINE NOISY
MECHANICAL SYSTEM
ELECTRICAL SYSTEM
COOLING SYSTEM
Check engine idle speed.
SMA051A
O.K.
NOT O.K.
Adjust.
Is noise emitted around alternator or vacuum pump?
Grind! Grind!
SMA845
YES.
Overhaul and repair or replace.
NO.
Is noise emitted around water pump?
Check points
• Fan belt slippage
Squeak! Squeak!
SMA846
NO.
YES.
Repair or replace.
A
B
C

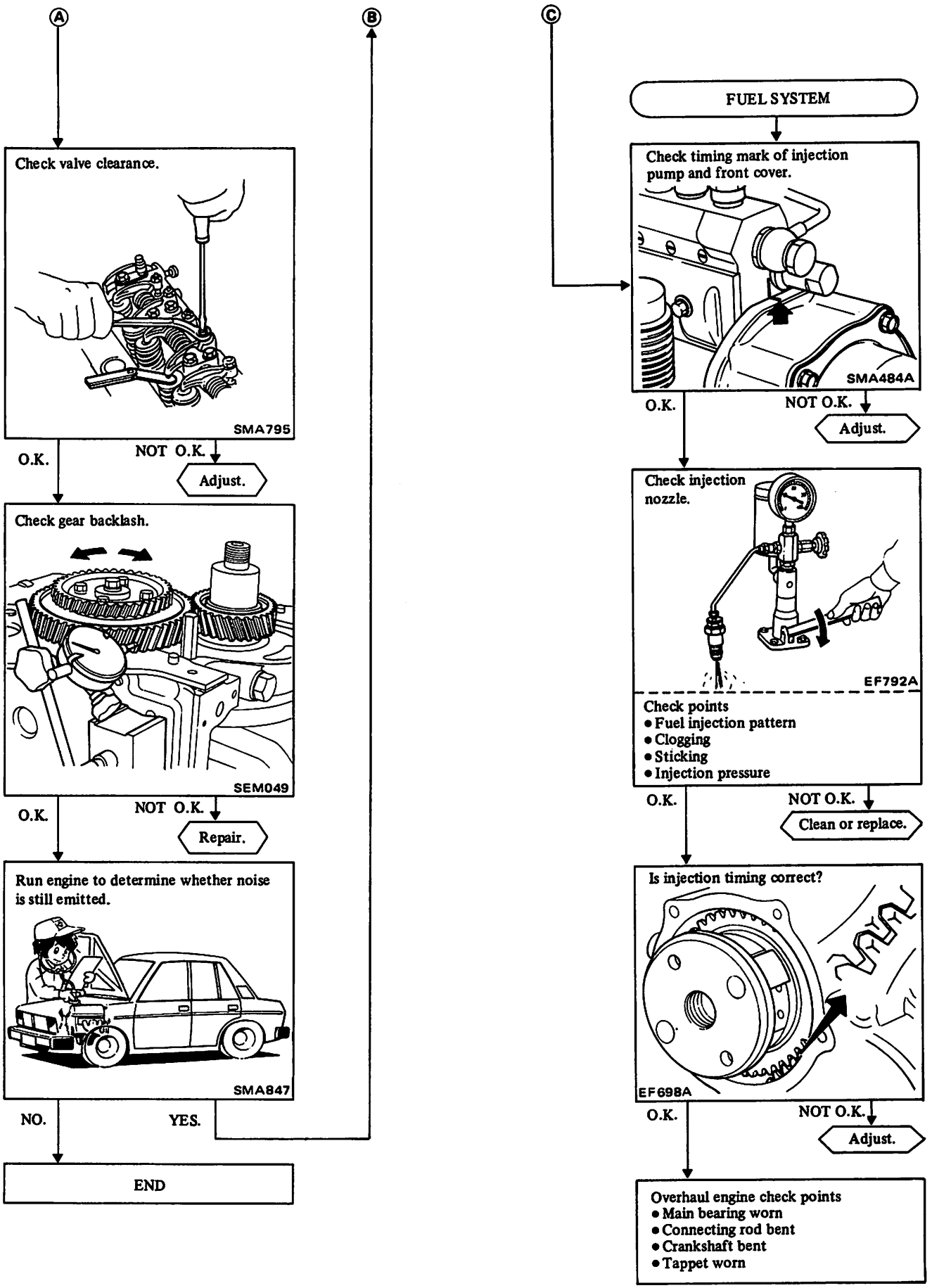
A
B
C
Check valve clearance.
SMA795
O.K.
NOT O.K.
Adjust.
Check gear backlash.
SEM049
O.K.
NOT O.K.
Repair.
Run engine to determine whether noise is still emitted.
SMA847
NO.
YES.
END
FUEL SYSTEM
Check timing mark of injection pump and front cover.
SMA484A
O.K.
NOT O.K.
Adjust.
Check injection nozzle.
EF792A
Check points
• Fuel injection pattern
• Clogging
• Sticking
• Injection pressure
O.K.
NOT O.K.
Clean or replace.
Is injection timing correct?
EF698A
O.K.
NOT O.K.
Adjust.
Overhaul engine check points
• Main bearing worn
• Connecting rod bent
• Crankshaft bent
• Tappet worn

CHASSIS AND BODY MAINTENANCE

EXHAUST SYSTEMS

INSPECTING EXHAUST SYSTEMS

Visually check the exhaust pipes, muffler, and hangers for proper attachment, leaks, cracks, chafing, abrasion, deterioration, etc.

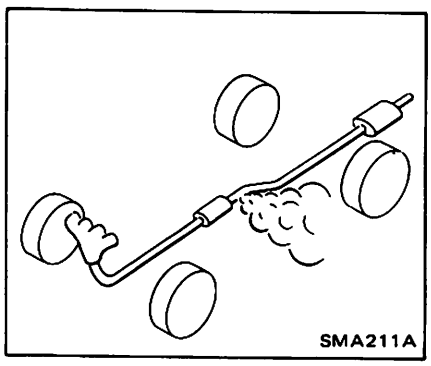

CLUTCH

CHECKING CLUTCH FLUID LEAKS

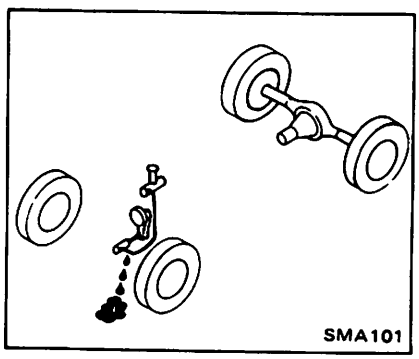

ADJUSTING CLUTCH PEDAL HEIGHT AND FREE PLAY

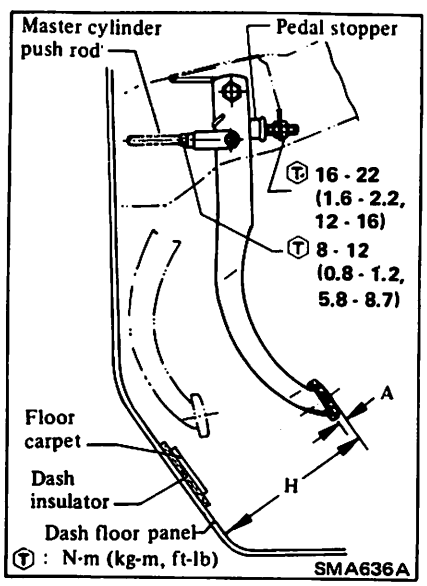

Pedal height "H":
179 - 189 mm (7.05 - 7.44 in)
Pedal free play "A":
1 - 1.5 mm (0.039 - 0.059 in)

1. Adjust pedal height with pedal stopper. Then tighten lock nut.
2. Adjust pedal free play with master cylinder push rod. Then tighten lock nut.

a. **Pedal free play means the following total measured at position of pedal pad.**
   - **Play due to clevis pin and clevis pin hole in pedal lever.**
   - **Play due to piston and piston rod.**

b. **Depress and release clutch pedal over its entire stroke to ensure that the clutch linkage operates smoothly without squeak noise, interference and binding.**

MANUAL TRANSMISSION

INSPECTING MANUAL TRANSMISSION OIL

Visually inspect for leakage.

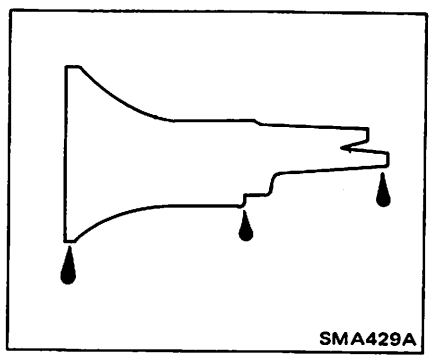

REPLACING MANUAL TRANSMISSION OIL

1. Drain oil completely.

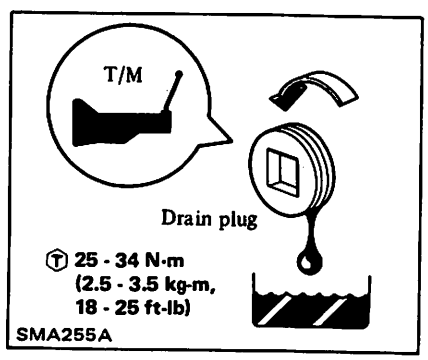

2. Refill transmission and check oil level.

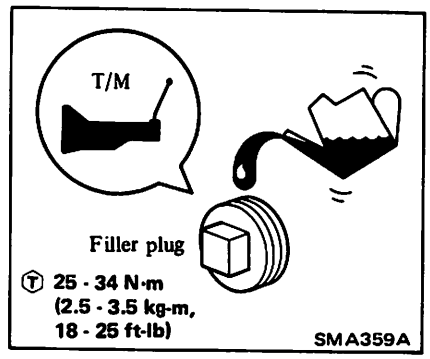

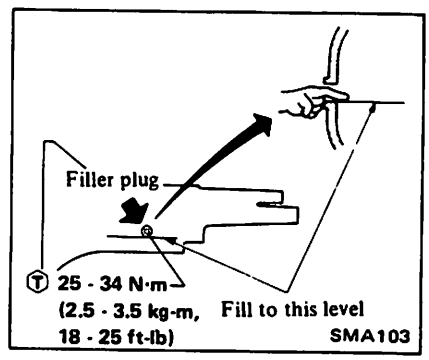

Never start engine while checking oil level.

Oil capacity:
5-speed
2.1 liters
(4-1/2 US pt, 3-3/4 Imp pt)

AUTOMATIC TRANSMISSION

INSPECTING AUTOMATIC TRANSMISSION FLUID

Visually inspect for signs of leakage.

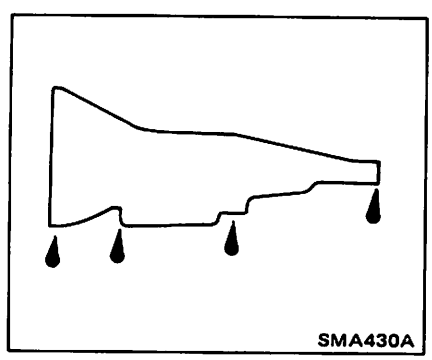

CHECKING AUTOMATIC TRANSMISSION FLUID CONDITION

Check fluid of contamination to determine condition of automatic transmission. If fluid is very dark or smells burned, the frictional material (clutches, band, etc.) may need replacement.

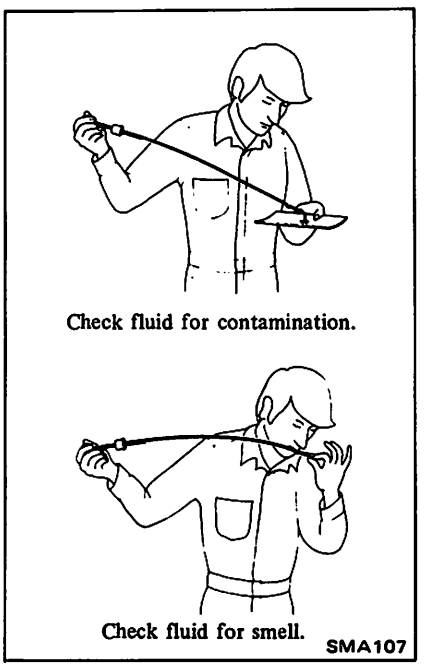

CHECKING AUTOMATIC TRANSMISSION FLUID LEVEL

Check under following conditions
(1) Place selector lever in "P" (PARK) position and idle engine.
(2) Maintain fluid temperature at 50 to 80°C (122 to 176°F).
Add oil, if necessary.

Use only automatic transmission fluid having "DEXRON" identifications in L3N71B automatic transmission.

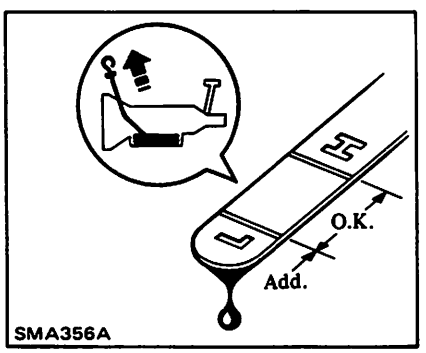

REPLACING AUTOMATIC TRANSMISSION FLUID

1. Drain fluid by removing oil pan.
2. Replace gasket with new one.
3. Refill with fluid and check fluid level.

TRANSFER

INSPECTING TRANSFER OIL

Visually inspect for leakage

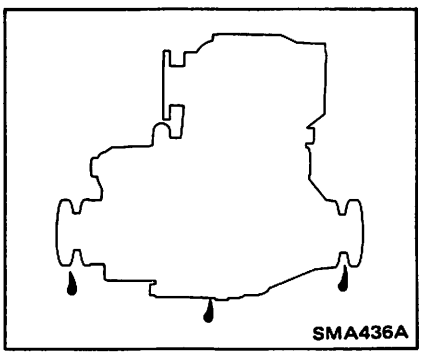

REPLACING TRANSFER OIL

1. Drain oil completely.

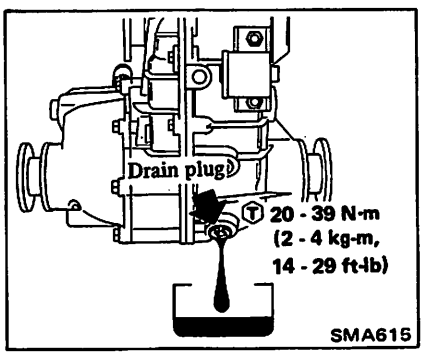

2. Refill oil and check oil level.

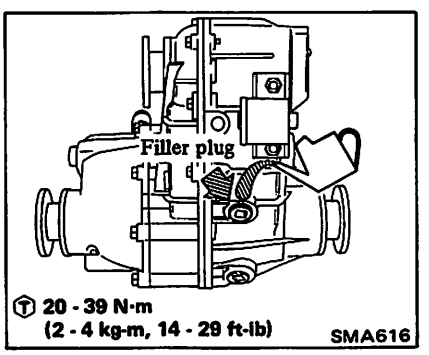

Never start engine while checking oil level.

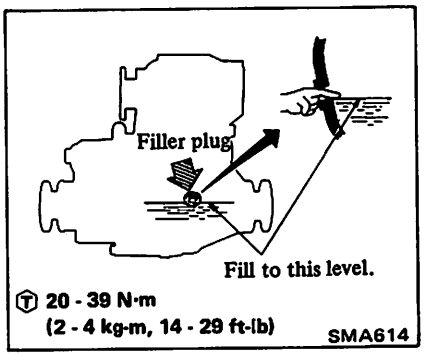

Oil capacity:
1.4 ℓ (3 US pt, 2-1/2 Imp pt)

PROPELLER SHAFT AND DIFFERENTIAL CARRIER

INSPECTING PROPELLER SHAFT

Check the propeller shaft(s) for damage, looseness and grease leakage.

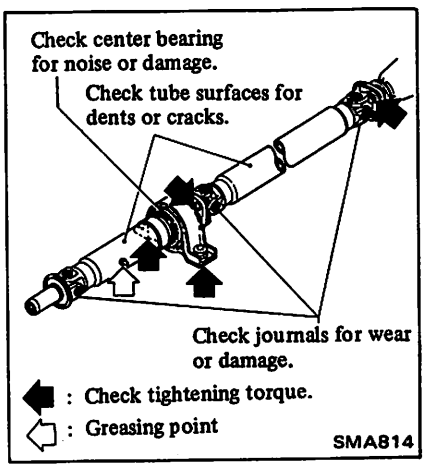

INSPECTING DIFFERENTIAL GEAR OIL

Visually inspect for leakage.

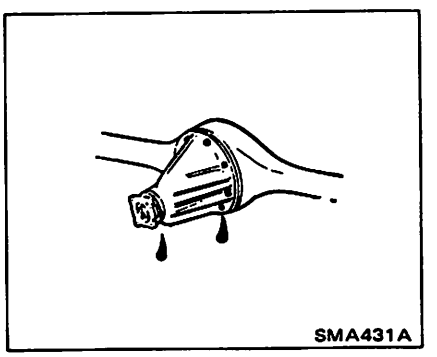

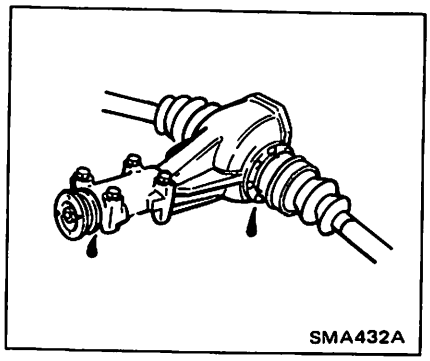

REPLACING DIFFERENTIAL CARRIER OIL

1. Drain oil completely.

Front

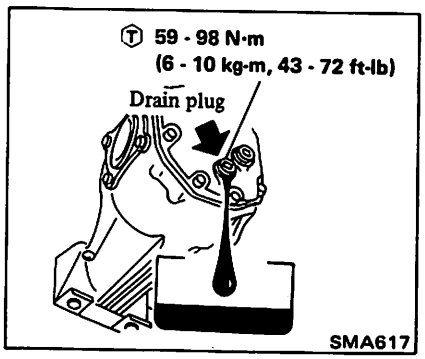

Rear

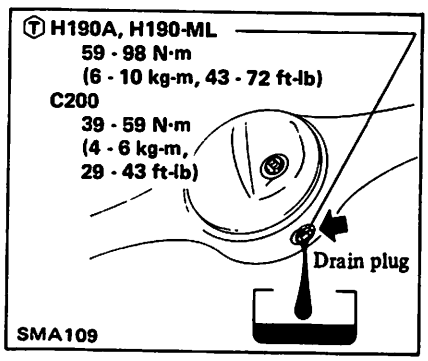

2. Refill differential carrier and check oil level.

Front

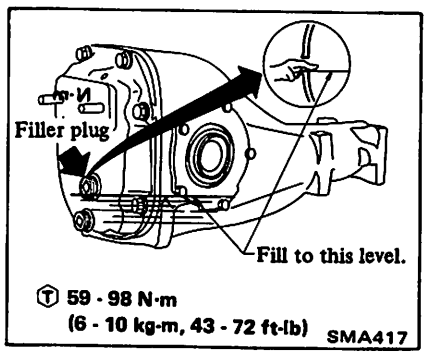

Rear

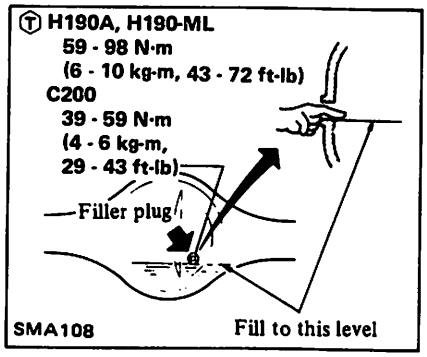

Oil capacity:

Front

R180

1.0 ℓ

(2-1/8 US pt, 1-3/4 Imp pt)

Rear

H190A, H190-ML

1.25 ℓ ... U.S.A.

(2-5/8 US pt, 2-1/4 Imp pt)

1.5 ℓ ... Canada

(3-1/8 US pt, 2-5/8 Imp pt)

C200

1.3 ℓ

(2-3/4 US pt, 2-1/4 Imp pt)

FRONT AXLE AND FRONT SUSPENSION

INSPECTING FRONT AXLE AND SUSPENSION PARTS

Check for damage, looseness and leakage of oil or grease.

1. Block rear wheels with chocks and raise front of car, and then support it with safety stand. Refer to Lifting Points and Towing (section GI).
2. Shake each front wheel by holding upper and lower surfaces of tires as shown.

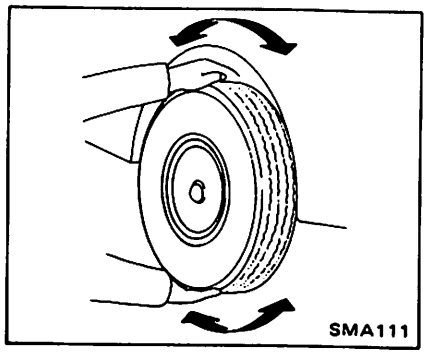

3. Check suspension parts for looseness, wear, or damage.

Retighten all loose nuts and bolts to the specified torque. Refer to section FA for tightening torque.

Replace all worn parts as described under Front Suspension (Section FA).

4. Check shock absorber for oil leakage or damage.

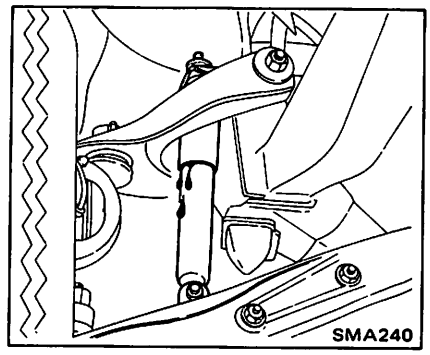

5. Remove wheel and tire assembly.
6. Check front axle parts for crack or damage.

Replace worn parts.

Refer to Front Axle (Section FA).

7. Remove brake pads.

Refer to section BR.

8. Check wheel bearing.

If there is any axial end play or if wheel bearing does not smoothly turn, adjust bearing to specifications.

Replace worn or damaged bearings.

Refer to Front Axle (Section FA).

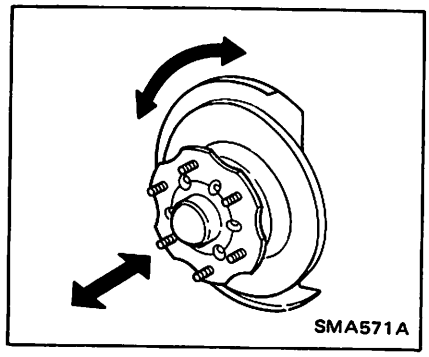

INSPECTING DRIVE SHAFT BOOTS

Check for damage looseness, and leakage of grease.

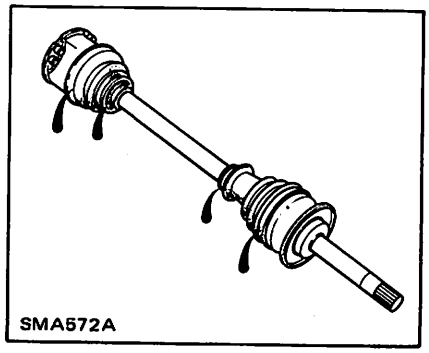

INSPECTING (REPLACING) FRONT WHEEL BEARING GREASE

1. Block rear wheel with chocks and raise front of car, and then support it with safety stands.
   Refer to Lifting Points and Towing (Section GI).
2. Remove wheel and tire.
3. Check for grease leakage from front wheel bearing grease seals by inspecting the area around them.
   Replace worn or damaged grease seal.
   Refer to Front Axle (Section FA).
4. Check wheel bearing.
   If there is any axial end play or if wheel bearing does not turn smoothly, adjust bearing to specifications.
   Replace worn or damaged bearings.
   Refer to Front Axle (Section FA).

INSPECTING STEERING LINKAGE BALL JOINT & SUSPENSION BALL JOINT

Check the ball joints for damage, looseness and grease leakage.

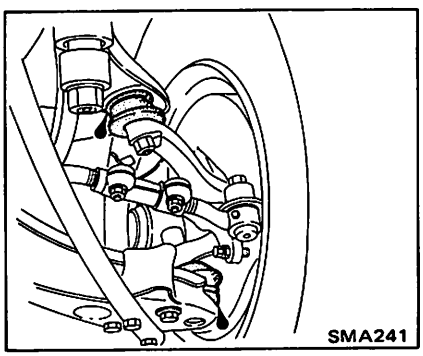

CHECKING WHEEL BEARING PRELOAD (2WD)

After wheel bearing has been replaced or front axle has been reassembled be sure to adjust wheel bearing preload as described below.

1. Before adjustment, thoroughly clean all parts to prevent possible entry of dirt.
2. Apply recommended multi-purpose grease sparingly to the following parts.
   - Threaded portion of spindle.
   - Contact surface between wheel bearing washer and outer wheel bearing.
   - Hub, hub cap and O-ring.
   - Grease seal lip.

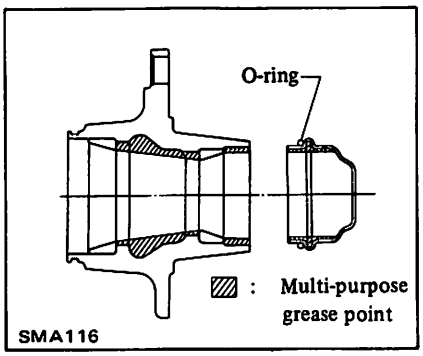

3. Tighten wheel bearing nut.

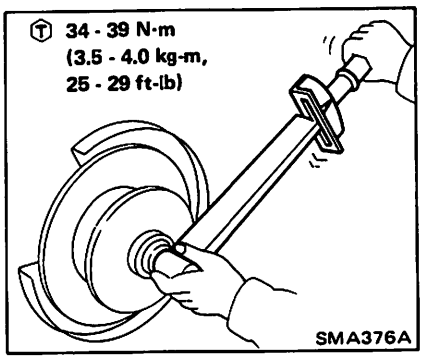

4. Turn wheel hub several times in both directions to seat wheel bearing correctly.

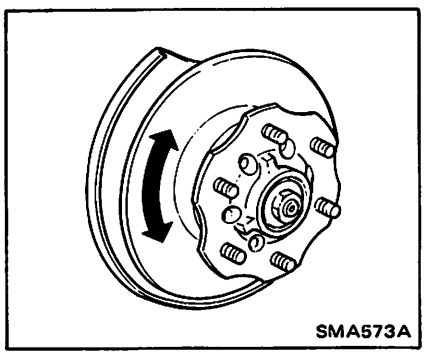

5. Again tighten wheel bearing nut.
6. Turn back wheel bearing nut 45 degrees.

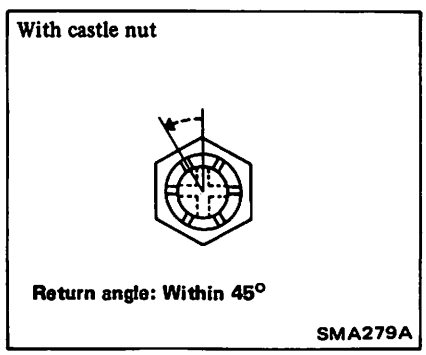

7. Install adjusting cap and tighten until any of its grooves aligns with hole in spindle. If the above procedure fails to align hole and groove, then tighten lock nut as much as 15 degrees. Install new cotter pin.

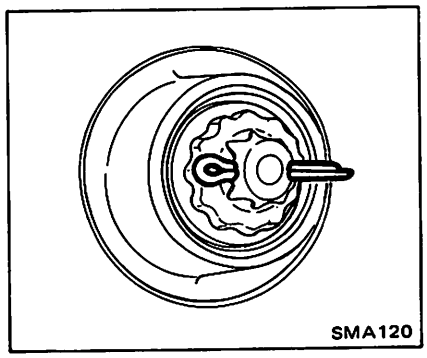

8. Measure wheel bearing preload and axial play.

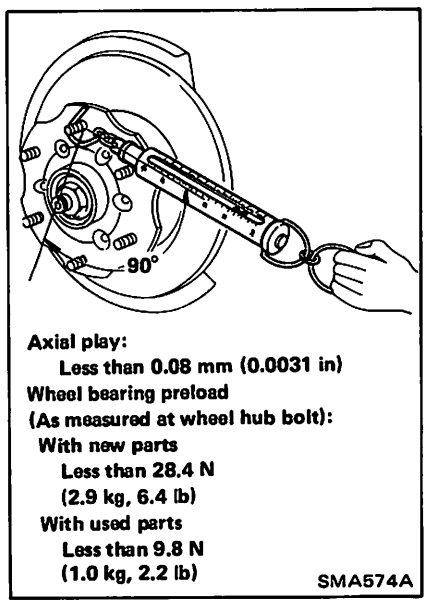

Repeat above procedures until correct starting torque is obtained.

9. Spread cotter pin.

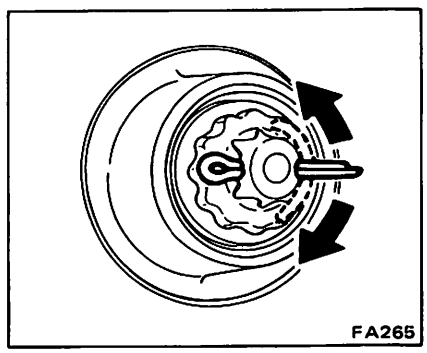

10. Install hub cap with new O-ring.

CHECKING WHEEL BEARING PRELOAD (4WD)

After wheel bearing has been replaced or front axle has been reassembled be sure to adjust wheel bearing preload as described below.

1. Before adjustment, thoroughly clean all parts to prevent possible entry of dirt.
2. Apply recommended multi-purpose grease sparingly to the following parts.
- Threaded portion of spindle.
- Contact surface between wheel bearing washer and outer wheel bearing.
- Grease seal lip.
- Wheel hub

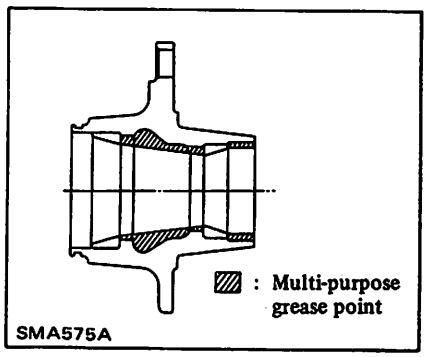

3. Tighten wheel bearing lock nut.

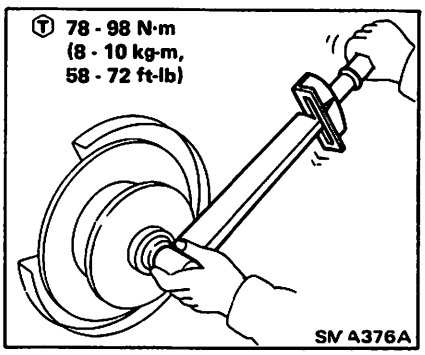

4. Loosen wheel bearing lock nut.
5. Measure wheel bearing axial end play after loosening wheel bearing lock nut.
Turn wheel hub several times in both directions.

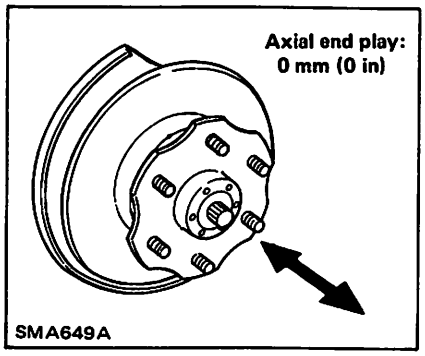

6. Measure starting force "A" at wheel hub bolt.

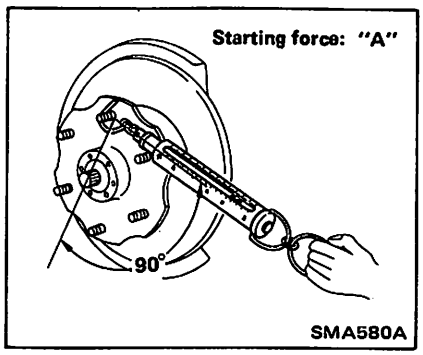

7. Turn wheel bearing lock nut.

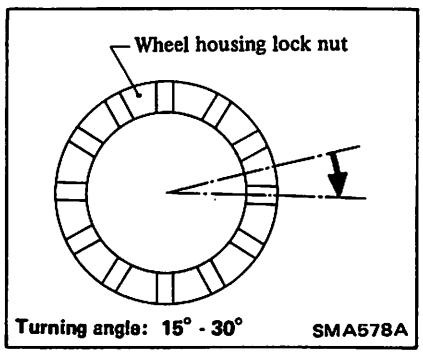

8. Fit lock washer onto lock nut.
9. Turn wheel hub several times in both directions to seat wheel bearing correctly.

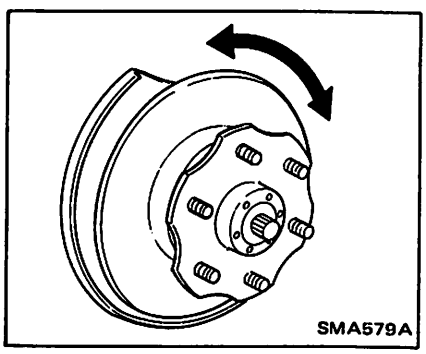

10. Measure starting force "B" at wheel hub bolt.

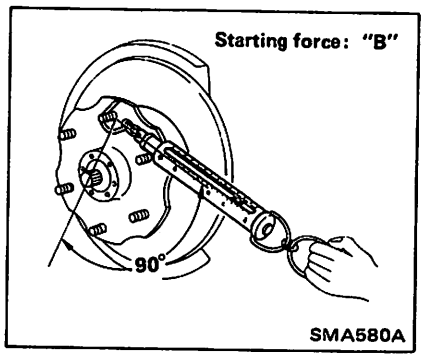

11. Wheel bearing preload "C" can be calculated as shown below.

C = B – A

Wheel bearing preload "C":
7.06 - 20.99 N
(0.72 - 2.14 kg, 1.59 - 4.72 lb)

12. Repeat above procedures until correct axial end play and wheel bearing preload are obtained.
13. Securely fit snap ring into groove of lock nut.
14. Install drive shaft into knuckle spindle. Refer to sections FA.
15. Install free-running hub and brake pads. Refer to sections FA and BR.

CHECKING WHEEL ALIGNMENT

Before checking front wheel alignment, be sure to make a preliminary inspection of all front end parts.

- **Tire pressure**
- **Wheel bearing axial play**
- **Suspension ball joint**
- **Steering gear housing looseness at frame**
- **Steering linkage and connections**
- **Shock absorber operation**
- **Tighten each front axle and suspension parts.**
- **Measure vehicle height (Unladen).**
- **Repair or replace the damaged portion or parts.**

"Unladen"
- Fuel tank, radiator and engine oil tank all full.
- Spare tire, jack, hand tools, mats in position.
- All tires inflated to specified pressure.

- All accumulation of mud, dirt and road deposits removed from chassis and underbody.

Camber and caster

Measure camber and caster angles of both right and left wheels with a suitable alignment gauge and adjust in accordance with the following procedures if necessary.

Both camber and caster angles are adjusted by increasing or decreasing the number of adjusting shims inserted between upper link spindle and frame.

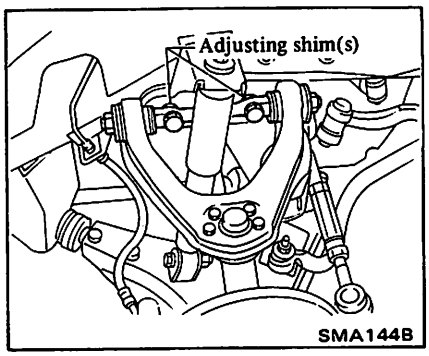

Before checking camber or caster, move vehicle up and down on turning radius gauge to minimize friction. Ensure that vehicle is in correct posture. Refer to Section FA for correct vehicle posture.

Adjusting shim:
Standard thickness
2.0 mm (0.079 in)
Adjusting shim thickness
1.0 mm (0.039 in)
2.0 mm (0.079 in)
4.0 mm (0.157 in)

WARNING:
Before removing or installing adjusting shim(s), be sure to place a jack under lower link.

- **Do not use three or more shims at one place.**
- **Total thickness of shims must be:**
  2WD within 6.0 mm (0.236 in)
  4WD within 8.0 mm (0.315 in)
- **When installing shims with pawls, always face the pawls towards spindle and insert them from bracket side. Use only one shim in a place.**

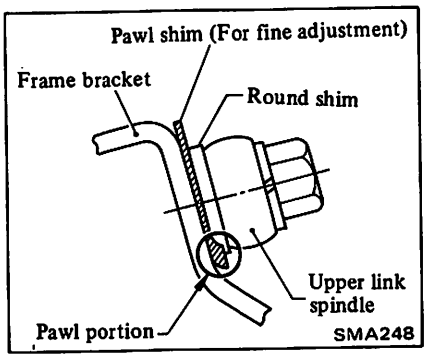

Camber

To adjust camber, equalizer thickness of front and rear shims by adding or removing shim(s).

Camber (Unladen):
2WD
0° - 1°
4WD
0°10′ - 1°10′

- When adding 1.0 mm (0.039 in) shim to each of the front and rear,

	2WD	4WD
Camber decreases	13′	13′
Caster decreases	3′	0′

Caster

To adjust caster, make a difference in thickness between front and rear shims.

Caster (Unladen):

2WD	**50′ - 1°50′**
4WD	**55′ - 1°55′**

- When front shim(s) is 1.0 mm (0.039 in) thicker than rear one(s),

	2WD	4WD
Caster decreases	32′	22′
Camber decreases	3′	6′

- When rear shim(s) is 1.0 mm (0.039 in) thicker than front one(s),
  Caster increases 29′
  Camber decreases 7′
- **Difference of total thickness of the front and rear must be within 2.0 mm (0.079 in).**
- **When caster is adjusted, camber angle changes and camber has to be measured again. If necessary, adjust camber.**

Toe-in

Measure toe-in, and make necessary adjustments. Use the following procedure when making adjustments.

1. Raise front of vehicle and mark a base line across the tread of left and right wheels.

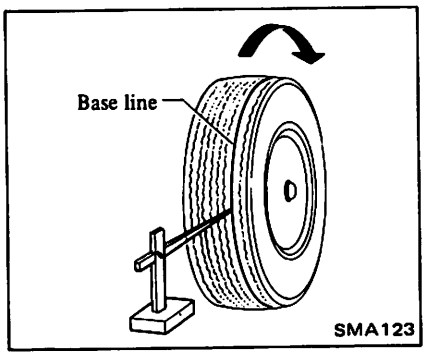

2. Set wheels in a straight-ahead position, and then lower front of vehicle.

Lower front of vehicle and move vehicle back and forth.

3. Measure toe-in and make necessary adjustments.

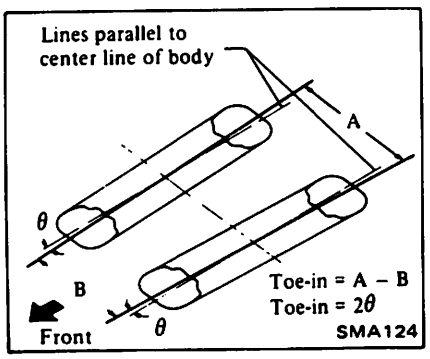

Toe-in (Unladen):
Radial tire
2WD
2 - 4 mm (0.08 - 0.16 in)
4WD
1 - 3 mm (0.04 - 0.12 in)
Bias tire
2WD
5 - 7 mm (0.20 - 0.28 in)

Toe-in can be adjusted by varying the length of steering side rods.

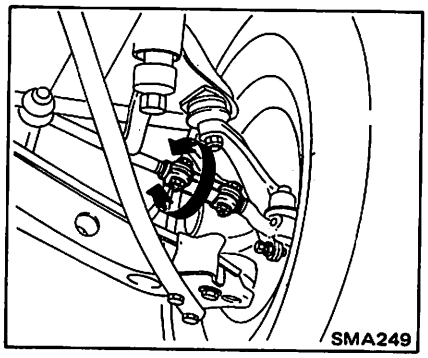

(1) If side rods have been disassembled, set the distance between inner and outer ball stud centers to the specified value "A" prior to reassembling.

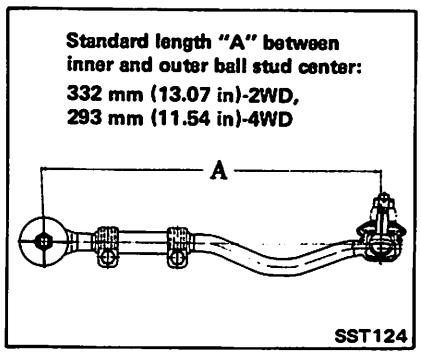

(2) Make sure that side rod bars are screwed into the adjusting bar more than 35 mm (1.38 in).

4. After correct toe-in has been obtained, tighten adjusting bar clamps.

Ⓣ : **Adjusting bar clamps**

2WD
11 - 17 N·m
(1.1 - 1.7 kg-m,
8 - 12 ft-lb)

4WD
78 - 98 N·m
(8 - 10 kg-m,
58 - 72 ft-lb)

Front wheel turning angle

1. Set wheels in straight ahead position and then move vehicle forward until front wheels rest on turning radius gauge properly.

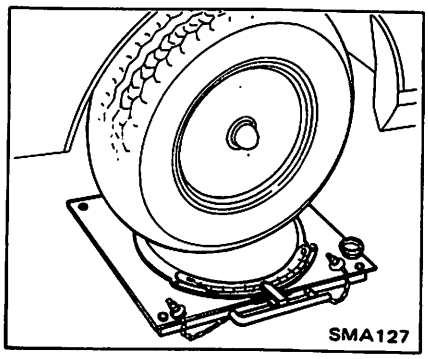

2. Remove stopper pin of turning radius gauge and then fully rotate steering wheel to the right and left; measure turning angle on inner wheel and make necessary adjustments.

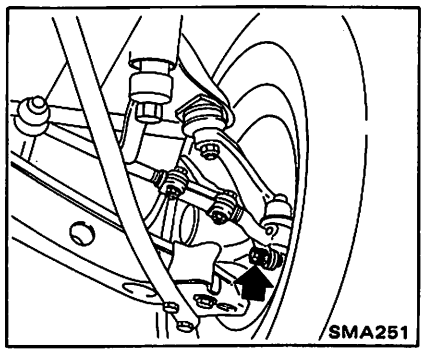

Front wheel turning angle:
Toe-out turns (When inner wheel 20°)
Outer wheel 18°
Full turns

2WD	Inner wheel	34° - 36°
	Outer wheel	31° - 33°
4WD	Inner wheel	31° - 33°
	Outer wheel	29° - 31°

Turning angle of outer wheel will automatically be set by adjusting turning angle of inner wheel to specified values.

3. After adjustment, lock adjusting lock nut.

– 4WD –

- **The adjustment should be done with nylon cap off. After tightening lock nut to specified torque, install nylon cap on bolt.**
- **Bend cotter pin around bolt.**

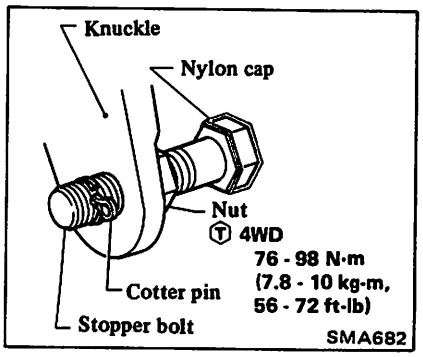

REAR AXLE AND REAR SUSPENSION

CHECKING REAR AXLE AND SUSPENSION PARTS

Check rear axle and suspension parts for looseness, wear or damage.

Retighten all loose nuts and bolts to the specified torque. Refer to Section RA for tightening torque.

Replace all worn parts as instructed under Rear Suspension (Section RA).

BRAKE SYSTEM

INSPECTING BRAKE LINES & HOSES

Check the brake lines and hoses (including brake booster vacuum hoses, connections & check valve) for proper

attachment, leaks, cracks, chafing, abrasion, deterioration, etc.

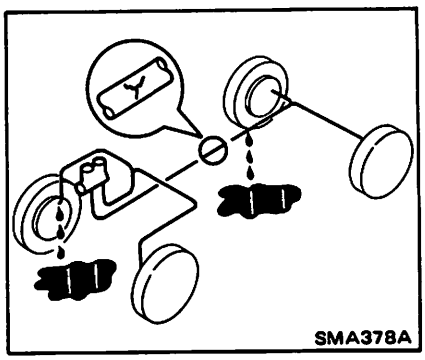

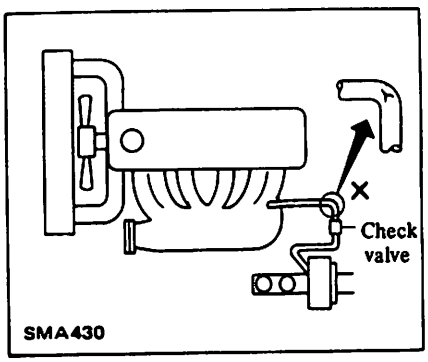

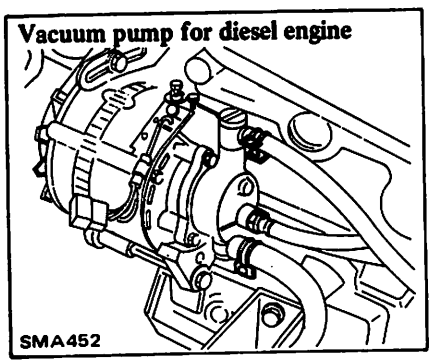

INSPECTING BRAKE PADS & DISCS

Check the parts including the other neighboring brake components for wear, deterioration and leaks.

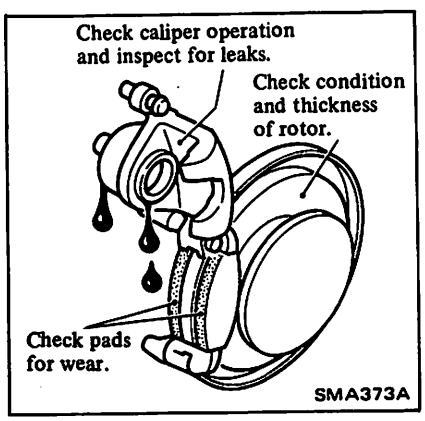

Pad wear limit

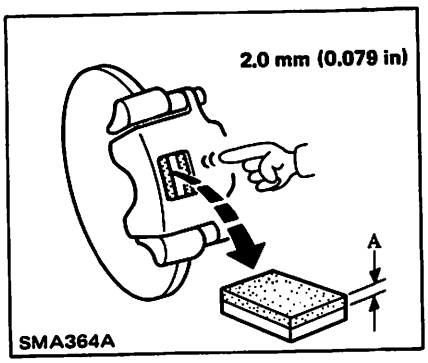

Refer to Section BR for pad replacement.

Rotor repair limit

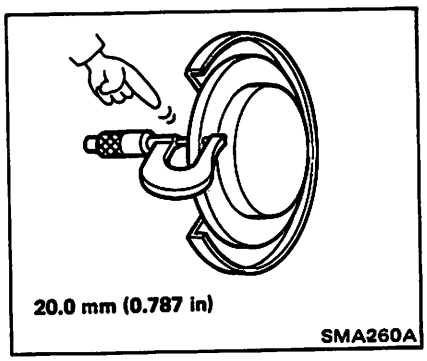

INSPECTING BRAKE DRUMS & LININGS

Check the parts including the other neighboring brake components for wear, deterioration and leaks.

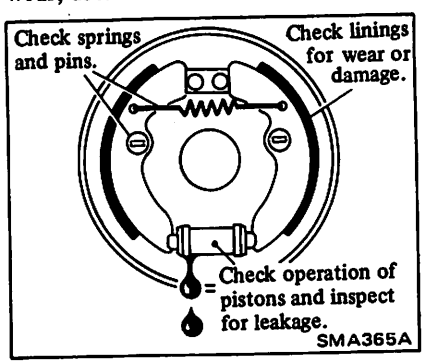

Lining wear limit

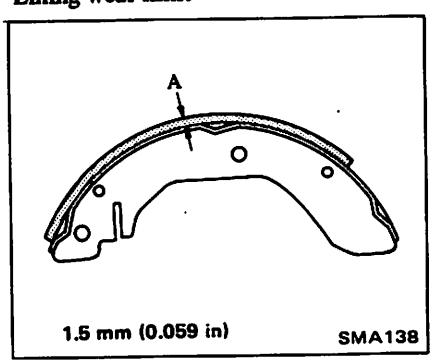

Refer to section BR for shoe replacement.

Drum repair limit

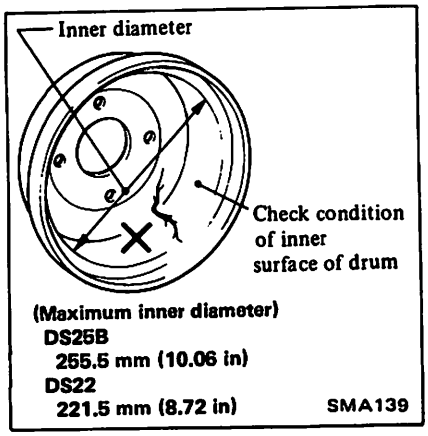

CHECKING BRAKE PEDAL HEIGHT

1. Check brake pedal free height. Adjust if necessary.

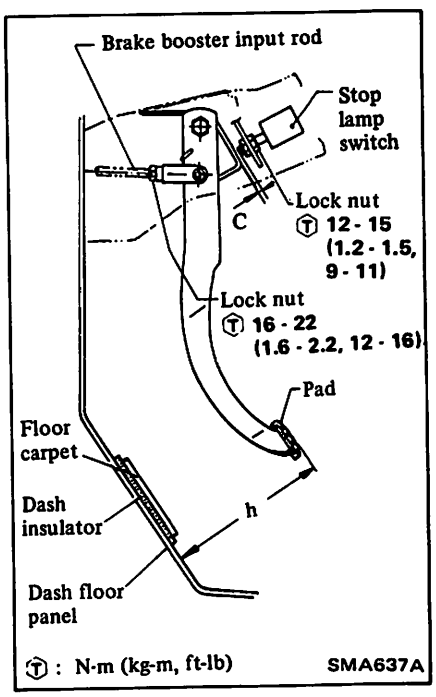

Pedal free height "h":
176 - 186 mm (6.93 - 7.32 in)
Clearance "C" between pedal stopper rubber and threaded end of brake lamp switch:
0.3 - 1.0 mm (0.012 - 0.039 in)

(1) Adjust pedal free height with brake booster input rod. Then tighten lock nut.

Be sure that the tip of input rod stays inside.

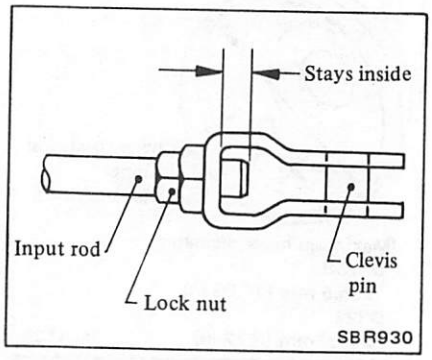

(2) Adjust clearance "C" with brake lamp switch. Then tighten lock nut.

Make sure that no depressing force is on brake booster input rod and that brake lamp is off when pedal is released.

CHECKING BRAKE PEDAL DEPRESSED HEIGHT

Check brake pedal depressed height with engine running.

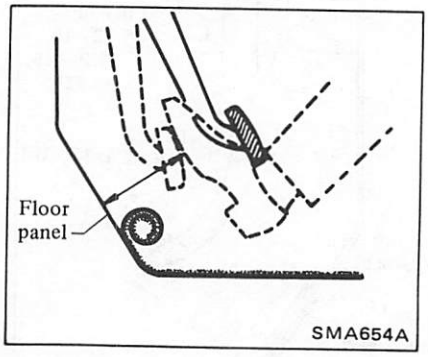

Depressed height
[Under force of 490 N (50kg, 110 lb) with engine running] :
More than 85 mm (3.35 in)

If depressed height is below the specified value, check brake system for leaks, accumulation of air or any abnormality regarding component parts (master cylinder, adjuster, etc.), and make the necessary repairs.

CHECKING BRAKE BOOSTER FUNCTION

1. Park the vehicle on a level surface and set the parking brake.
2. With the engine stopped, depress the brake pedal several times to make sure that the pedal travel distance does not change. Then, while depressing the brake pedal, start the engine. At this time, the pedal should go down a little.
3. Depress the brake pedal while running the engine. With the brake pedal depressed, stop the engine. Keeping the pedal depressed for about 30 seconds, make sure that the depressed pedal height does not change.
4. Run the engine for a minute and then stop it. Depress the brake pedal several times and make sure that the pedal travel distance decreases gradually with each depression.

CHECKING PARKING BRAKE

1. Pull lever with specified amount of force.

   Measure lever stroke with number of notches.

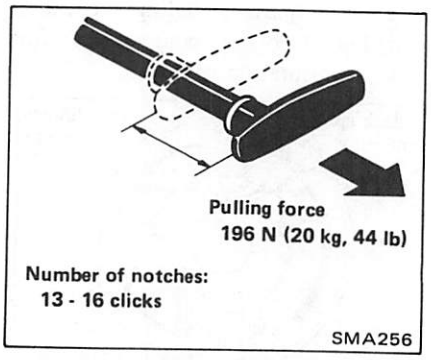

2. Use adjuster to adjust lever stroke.

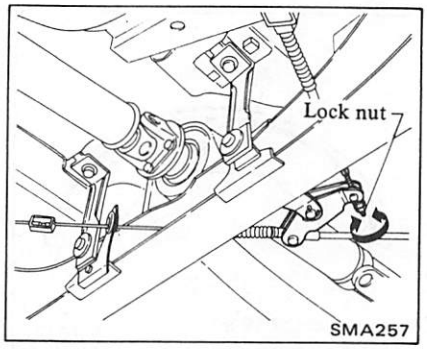

3. Bend hand brake warning lamp switch plate down so that brake warning light comes on when ratchet at hand brake lever is moved back one notch and goes out when returned to its original position.

WHEEL AND TIRE

CHECKING TIRE CONDITION

Tire condition

1. Tires are provided with "tread wear indicator" at six places around tire circumference, indicating 1.6 mm (1/16 in) tread depth. When tires wear and then marks appear, replace them with new ones.

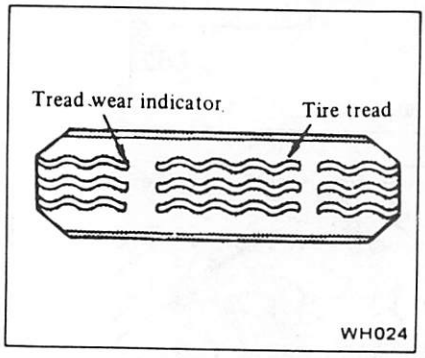

2. Remove pebbles, glass or any other foreign material embedded in tire treads.
3. Check tread and side walls for cracks, holes, separation or damage.
4. Check tire valves for air leakage.

Tire inflation

1 Check tire pressure. If necessary, adjust it to the specified value. Refer to S.D.S.

Tire pressure should be measured when tire is cold.

2. After inflating tires, valves should be checked for leakage. Whenever tire pressure is checked, be sure to tighten valve caps firmly by hand to keep dust and water out.

Abnormal tire wear

Correct abnormal tire wear according to the chart shown below.

Condition	Probable cause	Corrective action
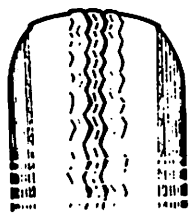 Shoulder wear	• Underinflation (both sides wear) • Incorrect wheel camber (one side wear) • Hard cornering • Lack of rotation	• Measure and adjust pressure. • Adjust camber. • Reduce speed. • Rotate tires.
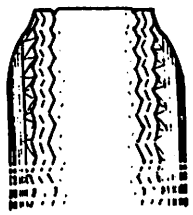 Center wear	• Overinflation • Lack of rotation	• Measure and adjust pressure. • Rotate tires.
Feathered edge Toe-in or toe-out wear	• Incorrect toe	• Adjust toe-in.
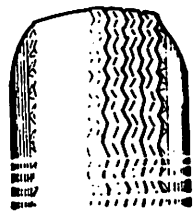 Uneven wear	• Incorrect camber or caster • Malfunctioning suspension • Unbalanced wheel • Out-of-round brake drum • Other mechanical conditions • Lack of rotation	• Adjust camber or caster. • Repair, replace or, if necessary, reinstall. • Balance or replace. • Correct or replace. • Correct or replace. • Rotate tires.

SMA068

TIRE ROTATION

1. Tires tend to wear unevenly and become unbalanced after a certain running distance. Uneven tire wear often results in tire noise which is attributed to rear axle gears, bearing, etc. Front tires also tend to wear unevenly because of improperly aligned front wheels.

2. Accordingly, to equalize tire wear, it is necessary to **rotate tires periodically.**

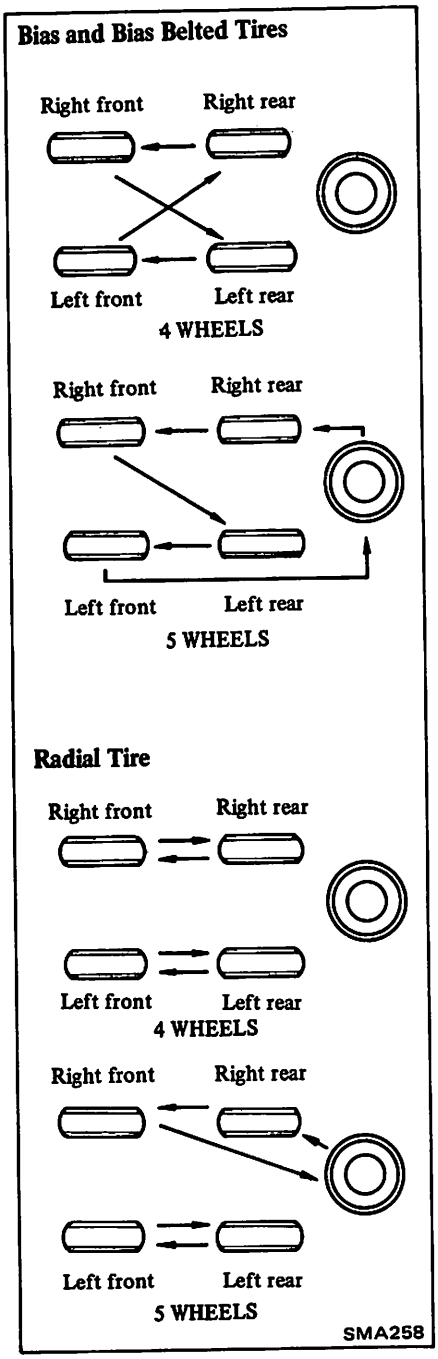

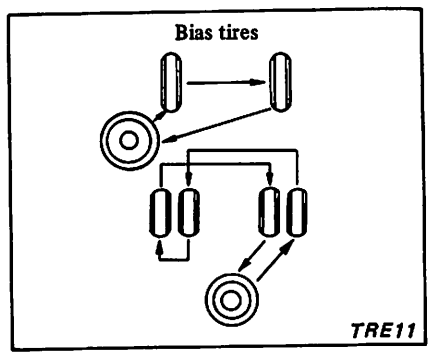

TIRE REPLACEMENT

CAUTION:
Different types of tires, such as bias, bias belted and radial tires, must not be mixed under any circumstances. Mixed use of different types of tires can adversely affect vehicle handling and may cause driver to lose control.

a. When replacing a worn or damaged tire, use a replacement tire of the same size and load carrying capacity as that with which the vehicle was equipped when manufactured. The use of different size and/or load capacity tires will not only shorten tire service life but may also result in a serious accident.
b. Do not use tires and wheels other than those recommended, and do not mix tires of different brands or tread patterns.
The use of tires and wheels other than those recommended or the mixed use of tires of different brands or tread patterns can adversely affect the ride, braking, handling, ground clearance, body-to-tire clearance, and speedometer calibration.
c. It is recommended that new tires be installed in pairs on the same axle. When replacing only one tire, it should be paired with the most tread, to equalize braking traction.
d. When replacing original tires with those tires of an optional recommended size and of different diameter, the speedometer must be recalibrated.

1. To replace a tire with a jack in a safe manner, refer to Lifting Points (Section GI) for jacking up.

WARNING:
Never get under vehicle while it is supported only by jack.
Always use safety stands to support side member of body construction when you must get beneath vehicle.

2. To install wheel, tighten wheel nuts in criss-cross fashion.

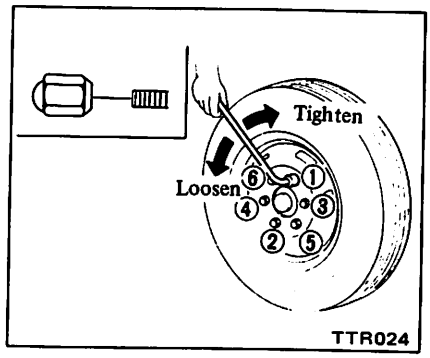

Aluminum wheel

To install an aluminum wheel, proceed as follows:
1. Snugly tighten four nuts after the wheel is positioned.

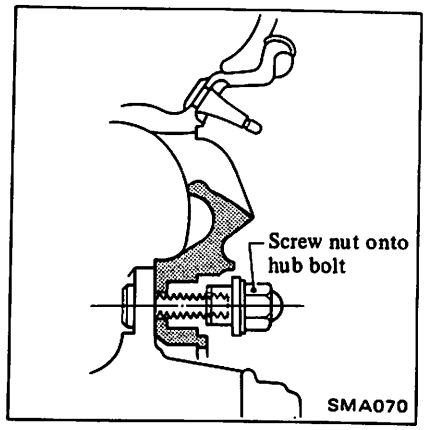

2. Slightly pull the wheel back to properly align the nuts with bolt holes in the wheel, and tighten the nuts as much as possible with your fingers.

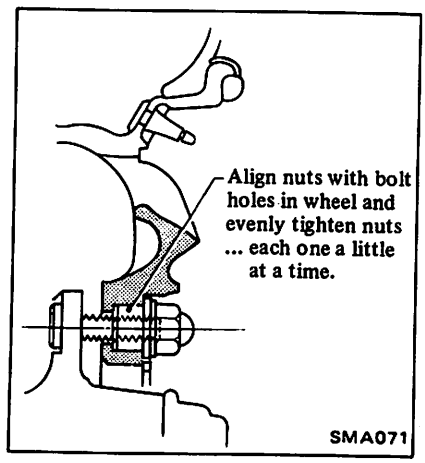

3. Tighten wheel nuts evenly with a wheel wrench in criss-cross fashion.

Be sure to check the wheel nuts for tightness, after the aluminum wheel has been run for the first 1,000 km (600 miles) (also in case of repairing flat tires, tire rotation, etc.). Retighten if necessary.

Dual rear wheel

Be sure to check the wheel nuts for tightness, after the dual rear wheel has been run for the first 160 km (100 miles) and 1,000 km (600 miles) (also in case of repairing flat tires, tire rotation, etc.). Retighten if necessary.

Wheel nut

CAUTION:
Two types of wheel nuts are used; one is designed for use with steel wheel and the other for use with aluminum wheel. Do not mix different types of wheel nuts.

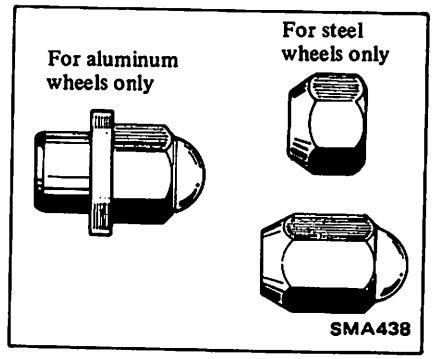

Ⓣ : Aluminum wheel
78 - 98 N·m
(8.0 - 10.0 kg-m, 58 - 72 ft-lb)
Steel wheel
Single tire
118 - 147 N·m
(12 - 15 kg-m,
87 - 108 ft-lb)
Dual tire
226 - 275 N·m
(23 - 28 kg-m,
166 - 203 ft-lb)

Be careful not to smear threaded portion of bolt and nut, and seat of nut with oil or grease.

TIRE REPAIR

Inspect tire, following the procedure shown below. If any defect is present, repair or replace as necessary.

1. Apply soapy solution or submerge tire and wheel or tube in water after inflating it to specified pressure.
2. Inspect for leaks.
3. Specially inspect for leaks around valve or wheel rim and along tread.
4. Note bead and rim where leakage occurs. Wipe water away from any area which leaks air bubbles and then mark place with chalk.
5. Remove object which caused puncture and seal the point.

a. **When repairing a puncture, use a tire repair kit furnished by any tire dealer, following instructions provided with kit.**
b. **If a puncture is too large or there is some damage to tire fabric, repair should be carried out by authorized tire dealer.**

6. Discard when any of the following problems occurs:

- Broken or damaged bead wire.
- Ply or tread separation.
- Worn fabric damage on tubeless tire.
- Cracked or damaged side wall.
- Tires with tread wear indicator showing, etc.

CAUTION:
When replacing tire, take extra care not to damage tire bead, rim-flange and bead seat.

Do not use tire irons to force beads away from wheel rim-flange; that is, always use tire replacement device whenever tire is removed.

7. Install tire, noting the following items:

a. **Install valve core and inflate to proper pressure. Check the locating rings of the tire to be sure they show around the rim flanges on both sides.**
b. **Check valves for leakage after inflating tires.**
c. **Be sure to tighten valve caps firmly by hand.**

WARNING:
When, while tire is being inflated, bead snaps over safety hump, it might break. Thus, to avoid serious personal injury, never stand over tire when inflating it. Never inflate to a pressure greater than the maximum value shown on the side wall of the tire. If beads fail to seat at that pressure, deflate the tire, lubricate it again, and then reinflate it. If the tire is overinflated, the bead might break, possibly resulting in serious personal injury.

WHEEL INSPECTION

Inspect wheel, taking care of the following points, in order to ensure satisfactory steering condition as well as maximum tire life. If any defect is present, repair or replace as necessary.
1. Check wheel rim, especially rim flange and bead seat, for rust, distortion, cracks or other faults which might cause air leaks. Function of tubeless tire depends on a good seal between tire bead and wheel rim.
2. Thoroughly remove rust, dust, oxidized rubber or sand from wheel rim.

Rim bead seats should be cleaned with wire brush, coarse steel wool, etc.

3. Examine wheel rim for lateral and radial runout, using dial gauge.

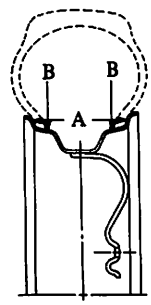

Lateral runout (A) and radial runout (B):
Steel wheel
Less than 1.2 mm (0.047 in)-2WD,
Less than 1.5 mm (0.059 in)-4WD
Aluminum wheel
Less than 0.5 mm (0.020 in)
Steel spoked wheel
Less than 1.5 mm (0.059 in)
Difference between right and left radial runout:
Steel wheel
2WD ... Less than 0.5 mm (0.020 in)
4WD ... Less than 1.0 mm (0.039 in)
Aluminum wheel
Less than 0.2 mm (0.008 in)
Steel spoked wheel
Less than 1.0 mm (0.039 in)
SMA140B

4. Replace wheel when any of the following problems occurs.

- Bent, dented or heavily rusted
- Elongated bolt holes
- Excessive lateral or radial runout
- Air leaks through welds
- Wheel nuts will not stay tight

Wheel balance

Inspect wheel and tire for wheel balance and correct it if unbalance is present, taking the following points into consideration.
1. Correct unbalance when the symptom of unbalance appears as wheel tramps and wheel shimmy.
2. Balance wheel and tire both **statically and dynamically.**

Balancing wheels

WARNING:
When balancing wheel and tire on the vehicle, be sure to observe the equipment manufacturers instructions carefully.

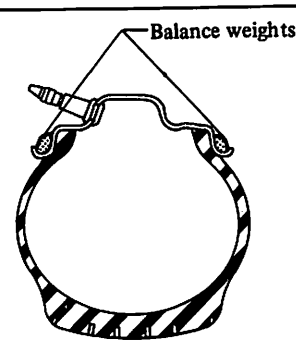

Maximum allowable unbalance at rim flange:
10 g (0.35 oz)
Balance weight:
5 - 60 g (0.18 - 2.12 oz)
at 5 g (0.18 oz) interval
SMA076

a. **Be sure to place correct balance weights on inner edge of rim.**
b. **Do not put more than two weights on each side.**
c. **Properly rebalance the wheel and tire whenever puncture is repaired.**

Cause	Wheel static unbalance	Wheel dynamic unbalance
Symptom of unbalance	Wheel tramp Wheel shimmy	Wheel shimmy
Corrective action	Balance statically	Balance dynamically

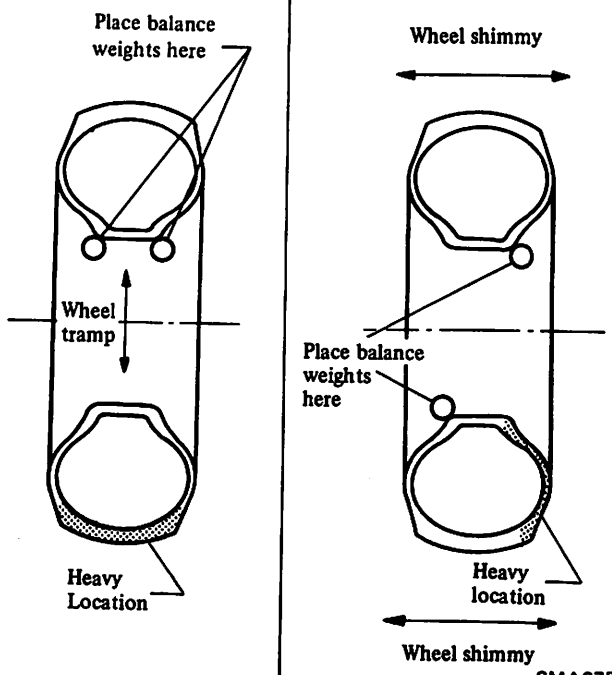

STEERING SYSTEM

CHECKING STEERING GEAR OIL LEVEL AND LEAKS

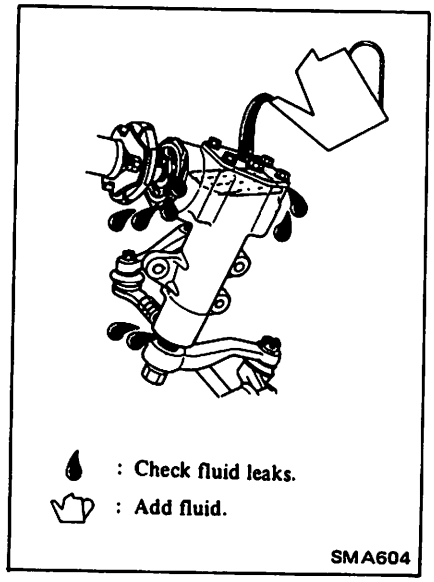

INSPECTING STEERING GEAR BOX AND LINKAGE

Check for damage, looseness and leakage of oil or grease.

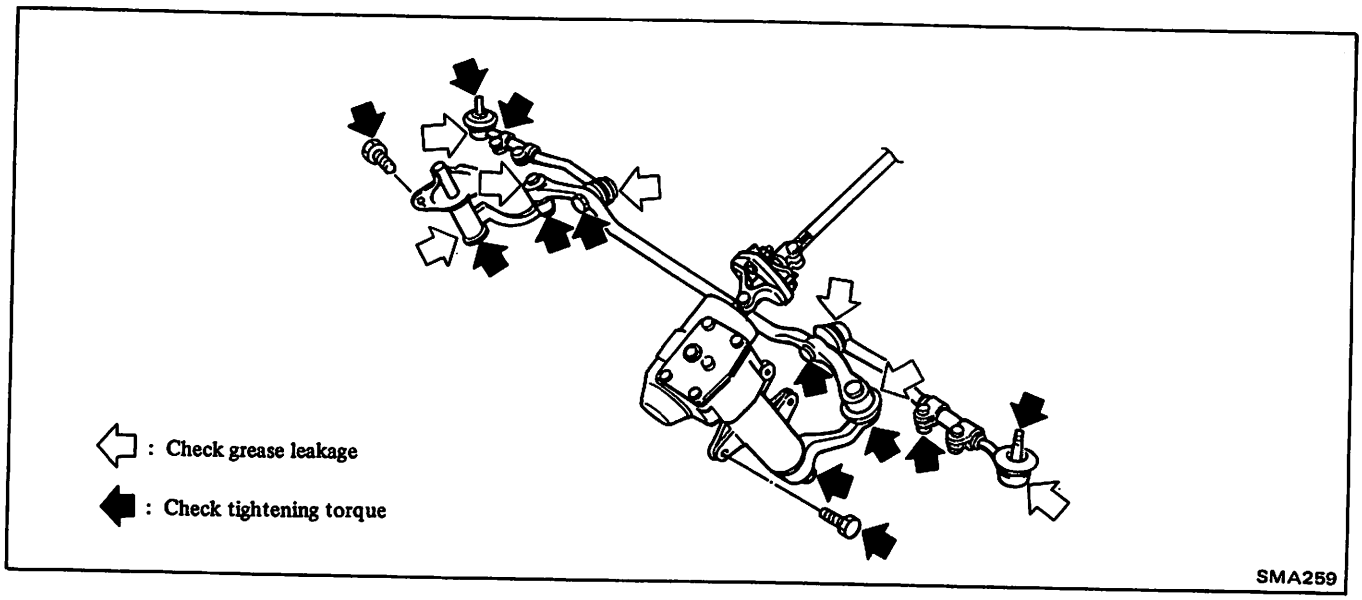

CHECKING POWER STEERING FLUID LEVEL

Check the fluid level in reservoir by observing the dipstick when the fluid is cold. Add fluid as necessary to bring the level into the proper range on dipstick.

CAUTION:
Do not overfill.

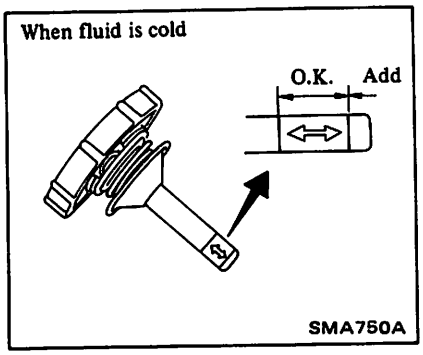

INSPECTING POWER STEERING LINES & HOSES

Check the lines & hoses for proper attachment, leaks, cracks, chafing, abrasion, deterioration, etc.

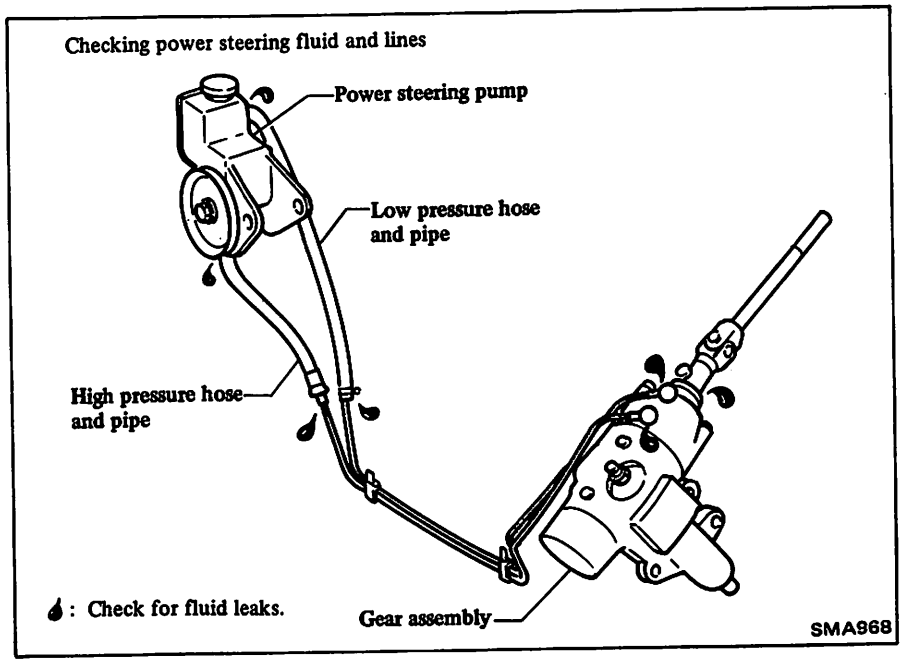

BODY

INSPECTING SEAT BELTS, BUCKLES, RETRACTORS, ANCHORS AND ADJUSTER

Check for damage, deterioration, proper functioning, smooth operation and loose mounting.

CAUTION:
1. If the vehicle is collided or overturned, replace the entire belt assembly, regardless of nature of accident.
2. If the condition of any component of a seat belt is questionable, do not have seat belt repaired, but replaced as a belt assembly.
3. If webbing is cut, frayed, or damaged, replace belt assembly.
4. Do not spill drinks, oil etc. on inner lap belt buckle. Never oil tongue and buckle.
5. Use a NISSAN genuine seat belt assembly.

Ⓣ **Anchor bolt**
24 - 31 N·m
(2.4 - 3.2 kg-m, 17 - 23 ft-lb)

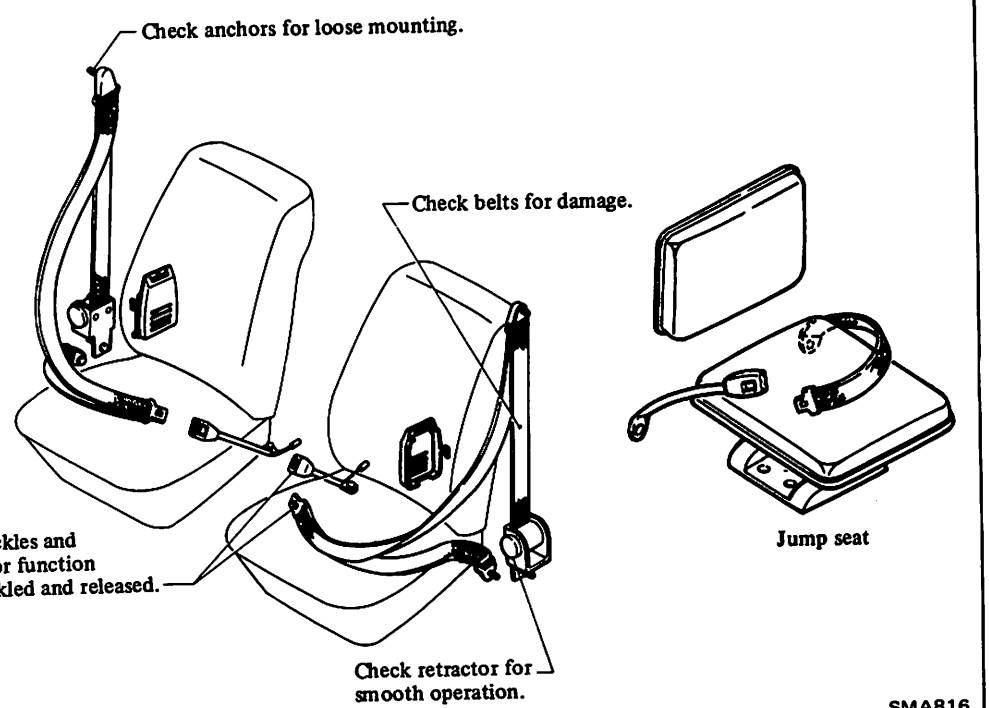

LUBRICATING LOCKS, HINGES AND HOOD LATCH

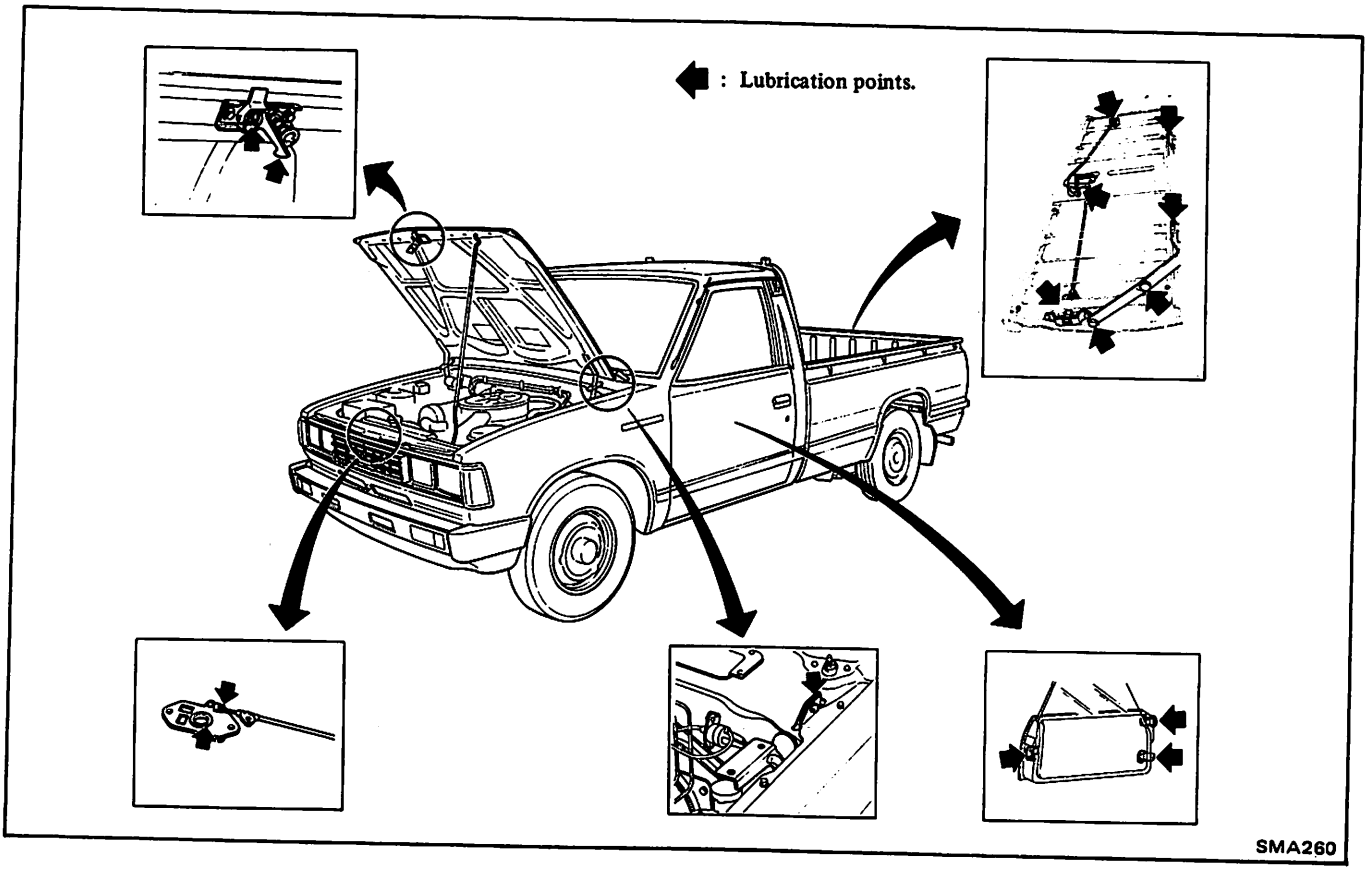

RETIGHTEN BODY MOUNTINGS

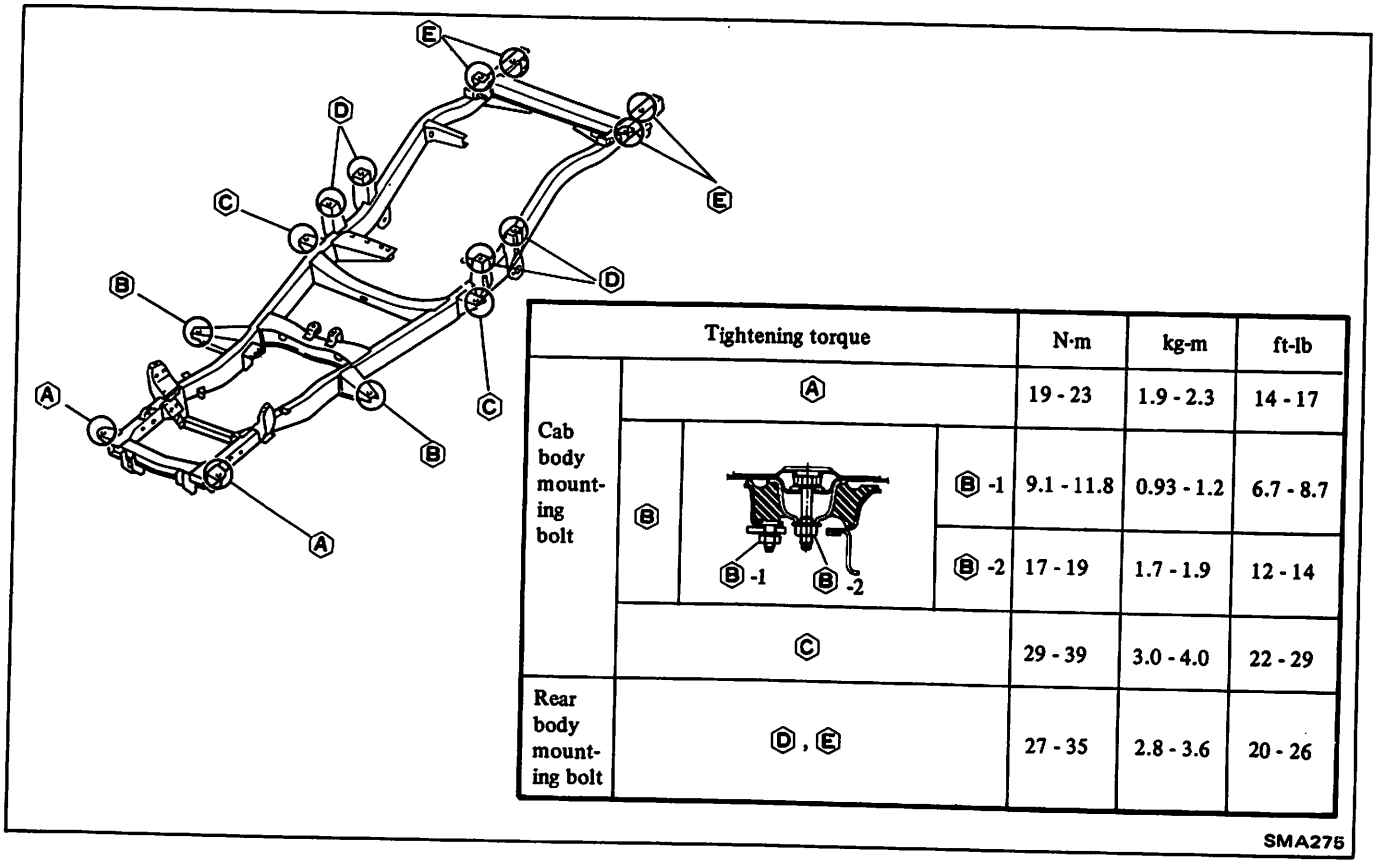

Tightening torque				N·m	kg-m	ft-lb
Cab body mounting bolt	A			19 - 23	1.9 - 2.3	14 - 17
	B	B -1	B -1	9.1 - 11.8	0.93 - 1.2	6.7 - 8.7
			B -2	17 - 19	1.7 - 1.9	12 - 14
	C			29 - 39	3.0 - 4.0	22 - 29
Rear body mounting bolt	D, E			27 - 35	2.8 - 3.6	20 - 26

SERVICE DATA AND SPECIFICATIONS (S.D.S.)

ENGINE MAINTENANCE

INSPECTION AND ADJUSTMENT

Item \ Engine	Gasoline			Diesel
Valve clearance mm (in)	Hot		Cold*1	Hot
Intake	0.30 (0.012)		0.21 (0.008)	0.35 (0.014)
Exhaust			0.23 (0.009)	
Drive belt deflection mm (in)	Used belt deflection		Set deflection of new belt	8 - 12 (0.31 - 0.47)
	Limit	Adjust		
Cooling fan	16 (0.63)	9 - 11 (0.35 - 0.43)	7 - 9 (0.28 - 0.35)	
		10 - 13 (0.39 - 0.51)*2	8 - 11 (0.31 - 0.43)*2	
Air conditioner compressor	13 (0.51)	8 - 10 (0.31 - 0.39)	6 - 8 (0.24 - 0.31)	
Power steering oil pump	16 (0.63)	10 - 12 (0.39 - 0.47)	8 - 10 (0.31 - 0.39)	
Applied pushing force N (kg, lb)	98 (10, 22)			
Compression pressure kPa (kg/cm², psi)/rpm Standard	1,177 (12.0, 171)/350			2,942 (30, 427)/200
Minimum	883 (9.0, 128)/350			2,452 (25, 356)/200
Compression differential limit between cylinders	–			294 (3, 43)/200

*1 At ambient temperature 20°C (68°F). After checking valve clearance while engine is cold, also check it when engine is hot to see if it remains within the specified value. If it does not, readjust it.

*2 2WD equipped M/T without A/C for Canada

Spark plug

	Type			Plug gap mm (in)
	Standard	Hot type	Cold type	
Intake side	BPR6ES	BPR5ES	BPR7ES	0.8 - 0.9 (0.031 - 0.035)
Exhaust side	BPR5ES		BPR6ES BPR7ES	
High tension cable resistance ohm			Less than 30,000	

Ignition timing, idle speed and idle "CO"%

Unit: B.T.D.C. degree/rpm

		U.S.A.		Canada
		Z20	Z24	
Manual transmission*	2WD	5±2°/ 700±100	3±2°/ 700±100	3±2°/ 650±100
	4WD	–	3±2°/ 800±100	3±2°/ 800±100
Automatic transmission* (in "D" position)		–	3±2°/ 650±100	3±2°/ 650±100
"CO"% at idle speed		Idle mixture screw is preset and sealed at factory		

* Ignition timing should be checked with distributor vacuum hose disconnected and plugged up.

Injection system (Diesel)

	Non-California	California
Idle speed rpm	700 $^{+100}_{-50}$	
Injection timing (B.T.D.C. degree)	16°	15°
Dash pot Touch speed rpm	1,280 - 1,350	

TIGHTENING TORQUE

Gasoline engine

Unit	N·m	kg-m	ft-lb
Rocker arm nut	16 - 22	1.6 - 2.2	12 - 16
Oil pan drain plug	20 - 29	2.0 - 3.0	14 - 22
Spark plug	20 - 29	2.0 - 3.0	14 - 22

Diesel engine

Unit	N·m	kg-m	ft-lb
Delivery valve holder	29 - 34	3.0 - 3.5	22 - 25
Injection tube flare nut	29 - 34	3.0 - 3.5	22 - 25
Injection pump securing nut	20 - 25	2.0 - 2.5	14 - 18
Injection nozzle assembly (to cylinder head)	59 - 69	6.0 - 7.0	43 - 51
Oil pan drain plug	49 - 59	5 - 6	36 - 43
Rocker arm lock nut	20 - 25	2.0 - 2.5	14 - 18
Spill tube nut	39 - 49	4 - 5	29 - 36
Rocker cover fixing bolt	10 - 13	1.0 - 1.3	7 - 9

CHASSIS AND BODY MAINTENANCE

INSPECTION AND ADJUSTMENT

Clutch

Unit: mm (in)

Pedal height "H"	179 - 189 (7.05 - 7.44)
Pedal free play "A"	1 - 1.5 (0.039 - 0.059)

Front axle and front suspension

Wheel bearing (2WD)

Axial play mm (in)	Less than 0.08 (0.0031)
Wheel bearing preload (As measured at wheel hub bolt) With new parts N (kg, lb)	Less than 28.4 (2.9, 6.4)
With used parts N (kg, lb)	Less than 9.8 (1.0, 2.2)

Wheel bearing (4WD)

Wheel bearing lock nut Tightening torque N·m (kg-m, ft-lb)	78 - 98 (8 - 10, 58 - 72)
Retightening torque after loosening wheel bearing lock nut N·m (kg-m, ft-lb)	0 (0, 0)
Axial end play mm (in)	0 (0)
Starting force at wheel hub bolt N (kg, lb)	A
Turning angle degrees	15° - 30°
Starting force at wheel hub bolt N (kg, lb)	B
Wheel bearing preload at wheel hub bolt N (kg, lb) B-A	7.06 - 20.99 (0.72 - 2.14, 1.59 - 4.72)

Wheel alignment (Unladen*)

Item \ Model		2WD	4WD
Camber	degrees	0° - 1°	0°10′ - 1°10′
Caster	degrees	50′ - 1°50′	0°55′ - 1°55′
Kingpin inclination	degrees	8°30′ - 9°30′	7°30′ - 8°30′
Toe-in Radial tire	mm (in)	2 - 4 (0.08 - 0.16)	1 - 3 (0.04 - 0.12)
	degree (Total toe-in)	22′ - 42′	10′ - 30′
Toe-in Bias tire	mm (in)	5 - 7 (0.20 - 0.28)	–
	degree (Total toe-in)	54′ - 1°17′	–
Front wheel turning angle Toe-out turns (When inner wheel is 20°) Outer wheel·degrees		18°	
Full turn Inner wheel	degrees	34° - 36°	31° - 33°
Outer wheel	dgrees	31° - 33°	29° - 31°
Standard side rod length	mm (in)	332 (13.07)	293 (11.54)

* Tankful of fuel, radiator coolant and engine oil full.
Spare tire, jack, hand tools, mats in designed position.

Camber and caster adjusting shim

Unit: mm (in)

	Thickness	Part No.
Round shim	1.0 (0.039)	54544-B9500
	2.0 (0.079)	54542-B9500
	4.0 (0.157)	54541-B9500
Shim with pawls	1.0 (0.039)	54543-J0110
	2.0 (0.079)	54544-J0110

Brake system

Unit: mm (in)

Pad wear limit	2.0 (0.079)
Rotor repair limit	20.0 (0.787)
Lining wear limit	1.5 (0.059)
Drum repair limit DS25B	255.5 (10.06)
DS22	221.5 (8.72)
Pedal free height "h"	176 - 186 (6.93 - 7.32)
Pedal depressed height [Under force of 490 N (50 kg, 110 lb) with engine running]	More than 85 (3.35)
Parking brake [at pulling force: 196 N (20 kg, 44 lb)] Number of notches	13 - 16

Wheel and tire

Tire pressure should be checked when tires are COLD.

Unit: psi (kPa)

Tire size			Load	Moderate	Heavy
2WD	P195/75R14		Front Rear	24 (165) 24 (165)	24 (165) 32 (221)
	P205/75R14		Front Rear	24 (165) 24 (165)	24 (165) 28 (196)
	LT195/75R14	Single tire	Front Rear	36 (245) 65 (451)	36 (245) 65 (451)
		Double tire	Front Rear	36 (245) 36 (245)	36 (245) 36 (245)
	P185/80R14		Front Rear	27 (188) 27 (188)	27 (188) 27 (188)
4WD	P215/75R15 P225/75R15		Front Rear	28 (196) 28 (196)	28 (196) 28 (196)

Wheel rim lateral and radial runout Steel wheel 2WD	mm (in)	Less than 1.2 (0.047)
4WD		Less than 1.5 (0.059)
Aluminum wheel		Less than 0.5 (0.020)
Steel spoked wheel		Less than 1.5 (0.059)
Difference between right and left radial runout Steel wheel 2WD	mm (in)	Less than 0.5 (0.020)
4WD		Less than 1.0 (0.039)
Aluminum wheel		Less than 0.2 (0.008)
Steel spoked wheel		Less than 1.0 (0.039)
Wheel balance (Maximum allowable unbalance at rim flange)	gr (oz)	10 (0.35)
Tire balancing weight	gr (oz)	5 - 60 (0.18 - 2.12) Spacing 5 (0.18)

TIGHTENING TORQUE

Unit		N·m	kg-m	ft-lb
Manual transmission				
Drain and filler plugs		25 - 34	2.5 - 3.5	18 - 25
Transfer				
Drain and filler plugs		20 - 39	2 - 4	14 - 29
Differential carrier				
Drain plug				
Front		39 - 59	4 - 6	29 - 43
Rear	H190	59 - 98	6 - 10	43 - 72
	C200	59 - 98	6 - 10	43 - 72
Filler plug				
Front		39 - 59	4 - 6	29 - 43
Rear	H190	59 - 98	6 - 10	43 - 72
	C200	39 - 59	4 - 6	29 - 43
Front axle and front suspension				
Side rod adjusting bar clamps	2WD	11 - 17	1.1 - 1.7	8 - 12
	4WD	78 - 98	8 - 10	58 - 72
Steering stopper bolt lock nut	2WD	26 - 36	2.7 - 3.7	20 - 27
	4WD	76 - 98	7.8 - 10	56 - 72
Brake				
Air bleed valve		7 - 9	0.7 - 0.9	5.1 - 6.5
Wheel and tire				
Wheel nut				
Aluminum wheel		78 - 98	8.0 - 10.0	58 - 72
Steel wheel				
Single tire		118 - 147	12 - 15	87 - 108
Dual tire		226 - 275	23 - 28	166 - 203

SPECIAL SERVICE TOOLS

Tool number (Kent-Moore No.)	Tool name	Engine application	
		Z20 & Z24	SD25
ED19600000 (J28830-A)	Compression gauge set	–	X
ST19320000 (J22700)	Oil filter wrench	X	X
KV11100300 (–)	Nozzle holder socket 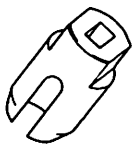	–	X

ENGINE MECHANICAL

SECTION EM

EM

CONTENTS

Z20 & Z24

ENGINE COMPONENTS (Outer parts) .... EM- 2
ENGINE COMPONENTS (Internal parts) .. EM- 3
ENGINE DISASSEMBLY ..... EM- 4
PRECAUTIONS ..... EM- 4
DISASSEMBLING ENGINE OVERALL ..... EM- 4
DISASSEMBLING PISTON AND CONNECTING ROD ..... EM- 6
DISASSEMBLING CYLINDER HEAD ..... EM- 6
INSPECTION AND REPAIR ..... EM- 7
CYLINDER HEAD ..... EM- 7
VALVE ..... EM- 8
VALVE SPRING ..... EM- 8
ROCKER ARM AND ROCKER SHAFT ..... EM- 8
CAMSHAFT AND CAMSHAFT BEARING ..... EM- 8
CYLINDER BLOCK ..... EM- 9
PISTON, PISTON PIN AND PISTON RING EM-10
CONNECTING ROD EM-10
CRANKSHAFT EM-11
MAIN BEARING AND CONNECTING ROD BEARING EM-12
MISCELLANEOUS COMPONENTS EM-12
ENGINE ASSEMBLY EM-13
PRECAUTIONS EM-13
ASSEMBLING CYLINDER HEAD EM-13
ASSEMBLING PISTON AND CONNECTING ROD .. EM-14
ASSEMBLING ENGINE OVERALL EM-15

SD25

ENGINE COMPONENTS (Outer parts) EM-19
ENGINE COMPONENTS (Internal parts) .. EM-20
ENGINE DISASSEMBLY EM-21
PRECAUTIONS EM-21
DISASSEMBLY EM-21
DISASSEMBLING PISTON AND CONNECTING ROD EM-23
DISASSEMBLING CYLINDER HEAD EM-23
INSPECTION AND REPAIR EM-24
CYLINDER HEAD AND VALVE EM-24
CAMSHAFT AND CAMSHAFT BUSHING EM-27
CYLINDER BLOCK EM-28
CYLINDER LINER EM-28
PISTON, PISTON PIN AND PISTON RINGS EM-29
CONNECTING ROD EM-29
BEARINGS EM-30
CRANKSHAFT PILOT BUSHING EM-31
COMBUSTION CHAMBER EM-31
FLYWHEEL EM-31
GEAR TRAIN EM-32
FRONT PLATE EM-32
ENGINE ASSEMBLY EM-33
PRECAUTIONS EM-33
ASSEMBLING CYLINDER HEAD EM-33
ASSEMBLING PISTON AND CONNECTING ROD .. EM-33
ASSEMBLING ENGINE OVERALL EM-33

Z20, Z24 & SD25

SERVICE DATA AND SPECIFICATIONS (S.D.S.) EM-38
GENERAL SPECIFICATIONS EM-38
INSPECTION AND ADJUSTMENT EM-38
TIGHTENING TORQUE EM-48
SPECIAL SERVICE TOOLS EM-50

ENGINE COMPONENTS (Outer parts)

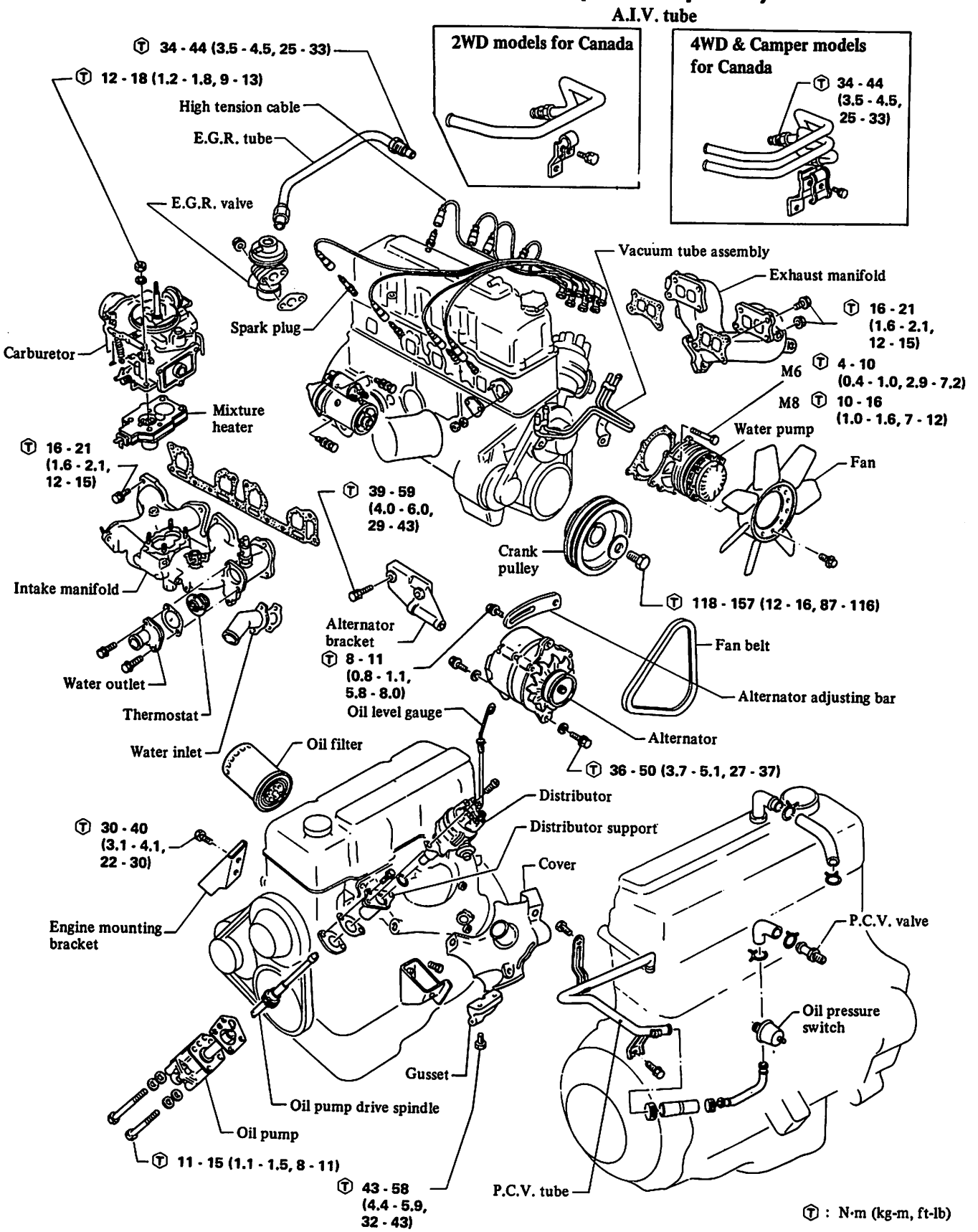

ENGINE COMPONENTS (Internal parts)

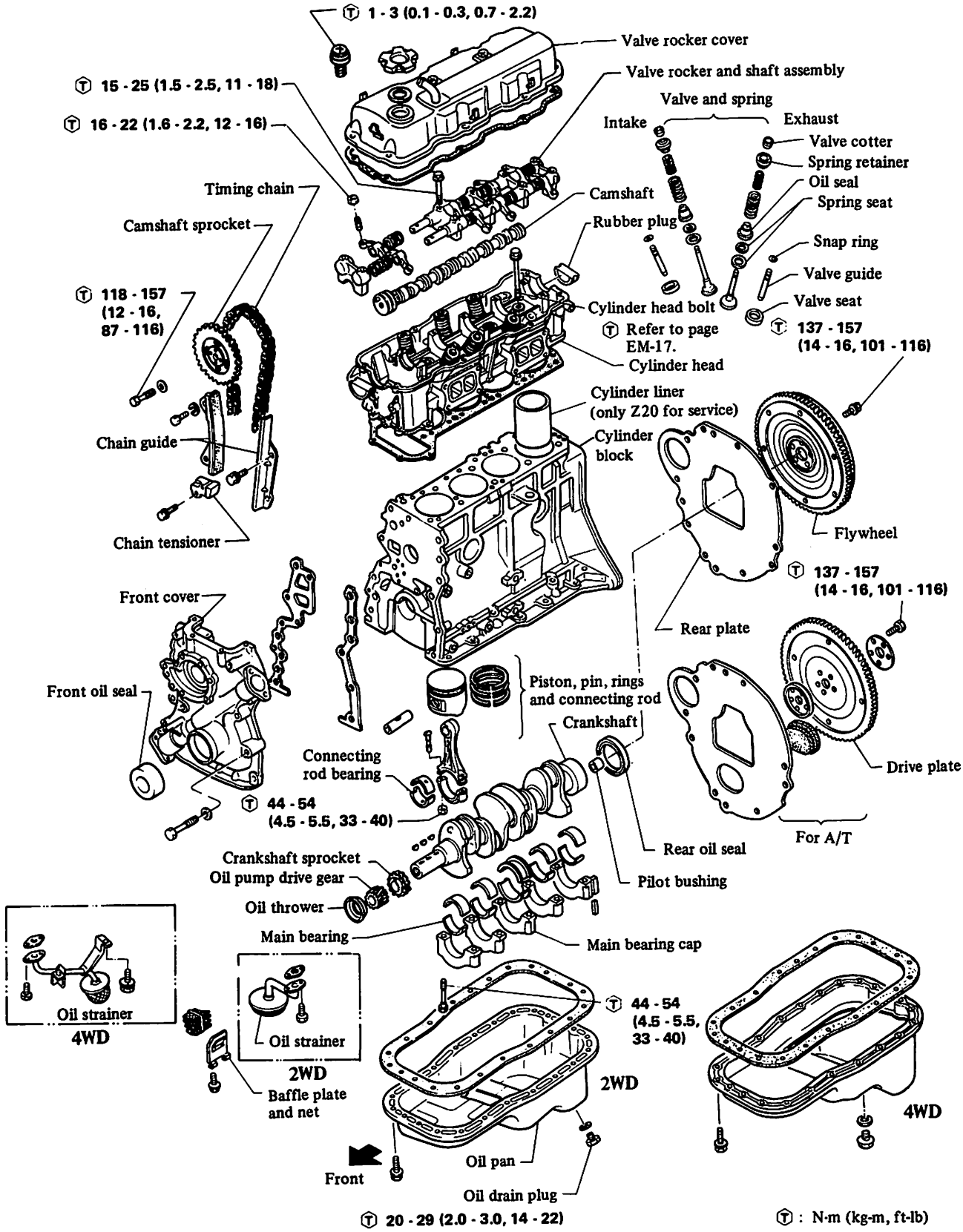

SEM040A

ENGINE DISASSEMBLY

PRECAUTIONS

Arrange the disassembled parts on the parts stand in accordance with their assembled locations, sequence, etc., so that the parts will be reassembled to their original locations. Place mating marks on the parts if necessary.

DISASSEMBLING ENGINE OVERALL

MOUNTING ENGINE ON WORK STAND

1. Remove following parts, located at rear and right side of engine.
- Starter motor
- Transmission
- Clutch cover assembly or torque converter
- Alternator and its bracket
- Engine mounting bracket
- Oil filter
- Oil pressure switch

2. Install engine attachment to cylinder block. Then, mount the engine on the work stand.

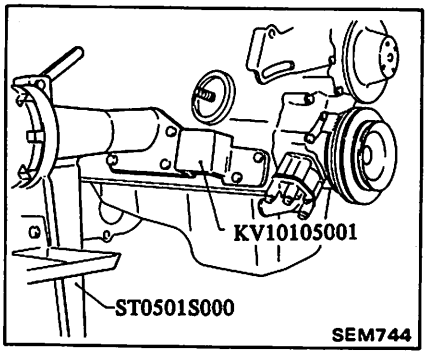

3. Drain out engine oil and coolant.

REMOVING OUTER PARTS

4. Remove following **engine front side parts.**
- Fan
- Drive belts
- Water pump
- Idler pulley for power steering (if equipped)
- Crankshaft pulley.

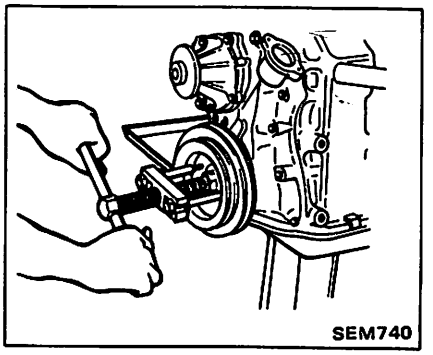

And remove following parts.
- Exhaust air induction tubes.
- Vacuum tube assembly for distributor and canister.
- Alternator adjusting bar.

5. Remove **engine left side parts**
- Distributor cap and high tension cables
- Distributor
- Engine mounting bracket.

And remove following parts.
- Oil level gauge
- Spark plugs
- Exhaust manifold with its cover and hot air duct, after removing E.G.R. tube.

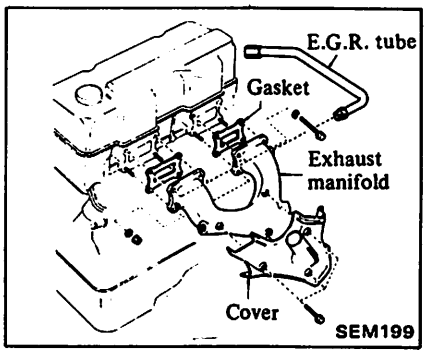

- Compressor bracket with idler pulley (if equipped).

6. Remove **engine right side parts.**
- Power steering brackets.
- Spark plugs.
- Engine mounting bracket.
- Water inlet.

And remove following parts.
(1) A.B. valve with its hose.
(2) Carburetor and insulator.
(3) P.C.V. hose.

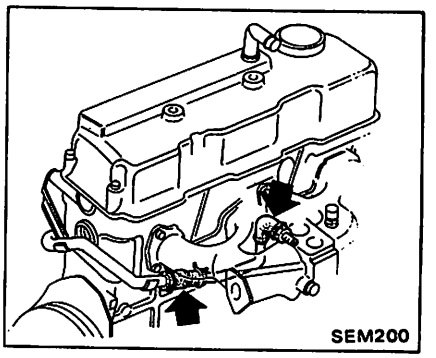

(4) Intake manifold assembly including E.G.R. valve, P.C.V. valve, water inlet, accelerator wire bracket, etc.

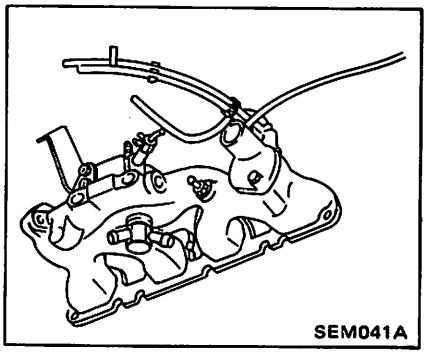

7. Remove **engine bottom side parts.**
- Oil pump and oil pump drive spindle.
- Gussets.

REMOVING INTERNAL PARTS

8. Remove oil pan and oil strainer.
9. Remove valve rocker cover.
10. Remove cylinder head assembly.

(1) Remove camshaft sprocket and slowly lower timing chain.

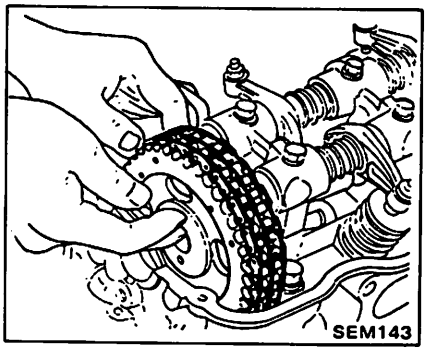

(2) Lossen cylinder head bolts in the sequence shown.

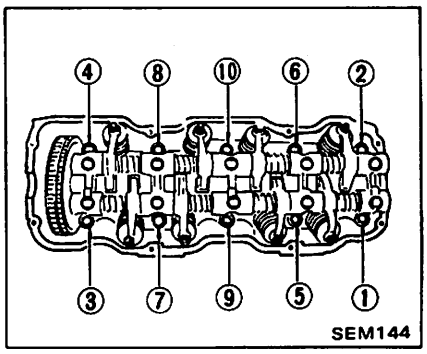

(3) Remove bolts securing cylinder head to front cover.
(4) Remove cylinder head.

When removing cylinder head from engine installed on vehicle, follow the instructions below.

a. Turn crankshaft until No. 1 piston is at T.D.C. on its compression stroke.
b. To facilitate assembling operation, scribe a mark on timing chain and camshaft sprocket with paint before removal.
c. Support timing chain by utilizing Tool between timing chains.

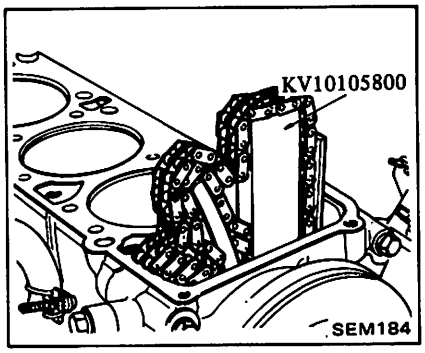

11. Remove front side parts.
(1) Front cover
(2) Chain tensioner and chain guide.
(3) Timing chain.
(4) Oil thrower, oil pump drive gear and crankshaft sprocket.

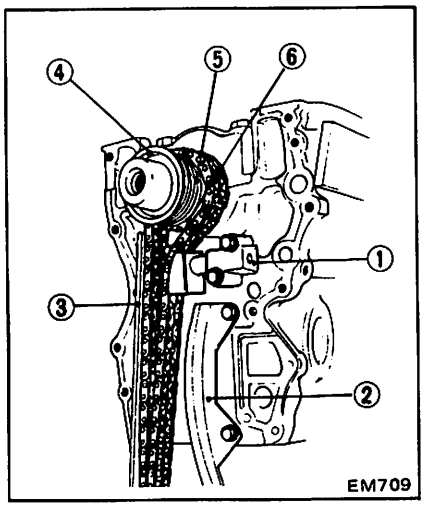

1 Chain tensioner
2 Slack side chain guide
3 Tension side chain guide
4 Oil thrower
5 Oil pump drive gear
6 Crankshaft sprocket

If it is hard to extract crankshaft sprocket, use a suitable puller.

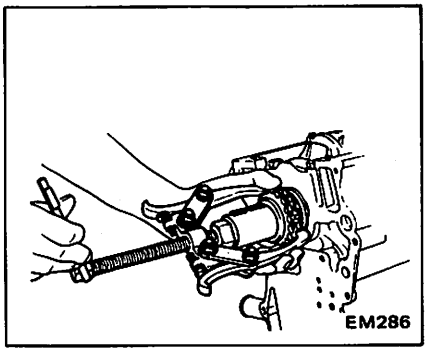

12. Remove piston and connecting rod assembly.
(1) Remove connecting rod bearing cap with bearing.
(2) Push out piston with connecting rod toward cylinder head side.

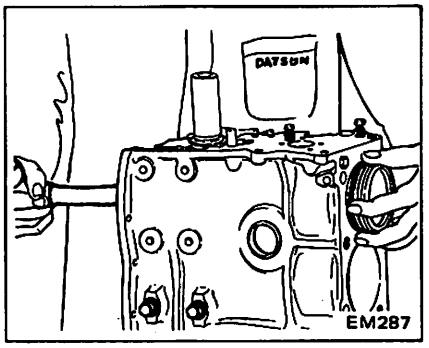

a. Piston can be easily removed by scraping carbon off top face of cylinder with a scraper.
b. Numbers are stamped on connecting rod and cap corresponding to each cylinder. Care should be taken to avoid wrong combination including bearing.

13. Remove flywheel or drive plate and rear plate.

WARNING:
When removing flywheel or drive plate, be careful not to drop it.

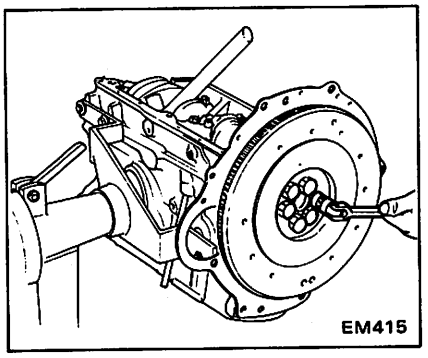

14. Remove crankshaft.
(1) Remove main bearing caps with bearings.

a. When loosening main bearing cap bolts, loosen from outside in sequence.
b. Use Tool to remove center and rear main bearing caps. Keep them in order.

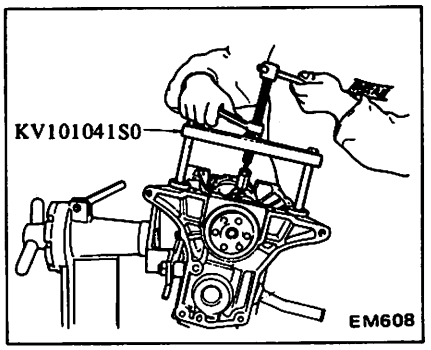

(2) Remove rear oil seal.

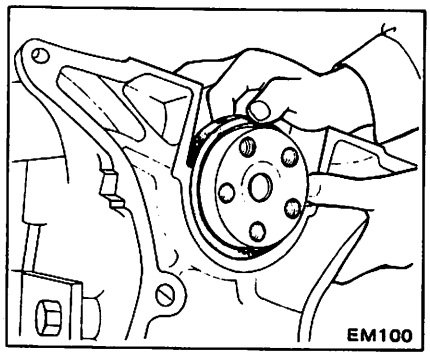

(3) Remove crankshaft.
(4) Remove main bearings at block side.
15. Remove baffle plate and steel net from cylinder block.

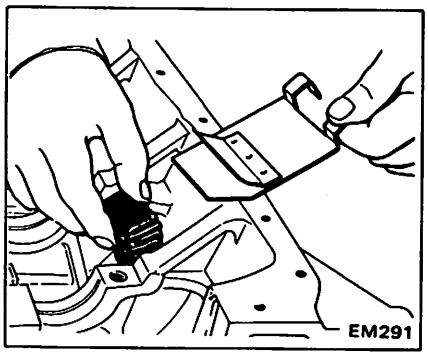

DISASSEMBLING PISTON AND CONNECTING ROD

1. Remove piston rings with a ring remover.

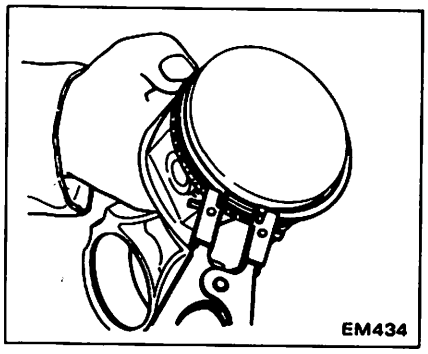

2. Press piston pin out, using press and Tool.

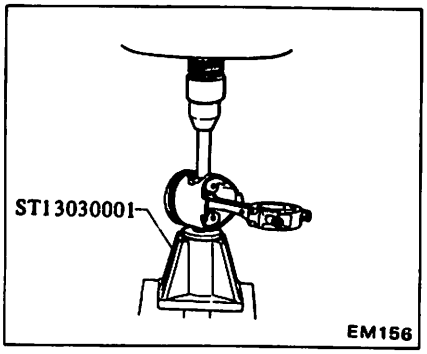

Keep the disassembled parts in order.

DISASSEMBLING CYLINDER HEAD

1. Remove rocker shaft assembly together with securing bolts.

a. Do not remove bolts at No.1 and No.5 brackets since rocker shaft bracket and rocker will spring out.
b. When loosening bolts, evenly loosen from outside in sequence.

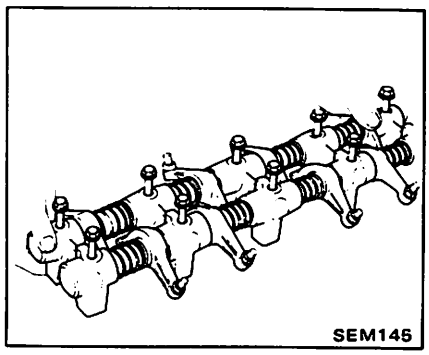

2. Remove camshaft.
3. Remove valves, valve springs and relating parts using Tool.

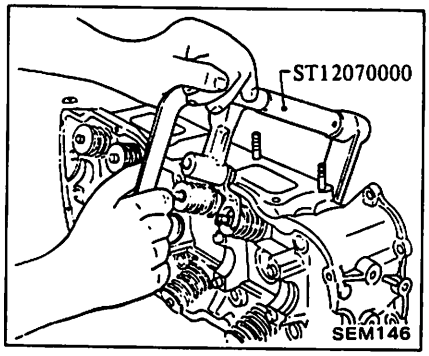

Keep the disassembled parts in order.

Replacement of valve spring/ oil seal (On-vehicle maintenance)

1. Remove rocker cover.
2. Remove rocker shaft assembly.
3. Install suitable tool in place of valve spring and valve retainer.
4. Remove spark plug.
5. Install air hose adapter into spark plug hole and apply air pressure to hold valves in place [Apply pressure of 490 kPa (5 kg/cm², 71 psi)].

When performing this operation, valves should be placed at T.D.C. on its compression stroke.

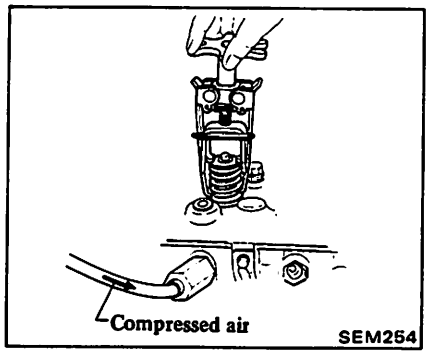

6. Remove valve spring and valve oil seal.
7. Install new part in the reverse order of removal.

INSPECTION AND REPAIR

CYLINDER HEAD

CYLINDER HEAD MATING FACE

1. Make a visual check for cracks and flaws.
2. Measure the surface of cylinder head (on cylinder block side) for warpage.

If beyond the specified limit, correct with a surface grinder.

Warpage of surface:
Limit 0.1 mm (0.004 in)

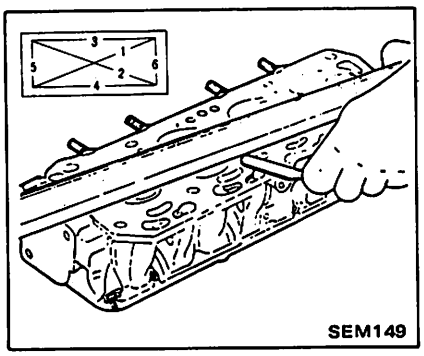

Nominal cylinder head height:
98.9 mm (3.894 in)

Surface grinding limit:

The grinding limit of cylinder head is determined by the cylinder block grinding in an engine.

Depth of cylinder head grinding is "A"

Depth of cylinder block grinding is "B"

Limit:
A + B = 0.2 mm (0.008 in)

VALVE GUIDE

Measure the clearance between valve guide and valve stem. If the clearance exceeds the specified limit, replace the worn parts or both valve and valve guide. In this case, it is essential to determine if such a clearance has been caused by a worn or bent valve stem or by a worn valve guide.

Determining clearance

1. Precise method:

(1) Measure the diameter of valve stem with a micrometer in three places; top, center and bottom.

(2) Measure valve guide bore at center using telescope hole gauge.

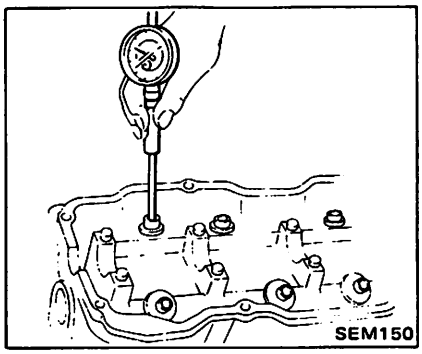

(3) Subtract the highest reading of valve stem diameter from valve guide bore to obtain the stem to guide clearance.

Stem to guide clearance:
Limit 0.1 mm (0.004 in)

2. Expedient method:

Pry valve in lateral direction, and measure deflection at stem end with dial gauge.

Stem end deflection:
Limit 0.2 mm (0.008 in)

Valve should be moved in parallel with rocker arm. (Generally, a large amount of wear occurs in this direction.)

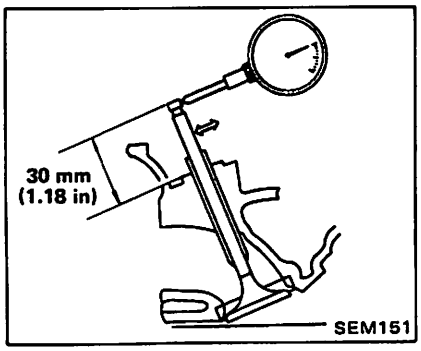

Replacing valve guide

1. To remove old guides, use Tool ST11320000 and a press (under a 2-ton pressure) or a hammer.

Drive them out toward rocker cover. Heated cylinder head will facilitate the operation.

2. Ream cylinder head valve guide hole using Tool at room temperature.

Reaming bore:
12.185 - 12.196 mm
(0.4797 - 0.4802 in)

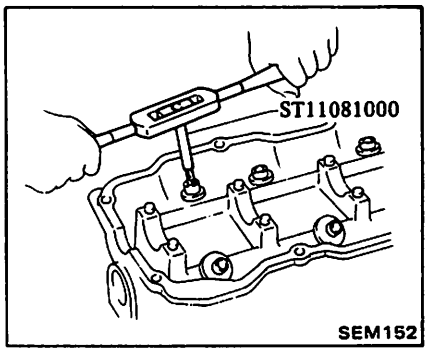

3. Fit snap ring on new valve guide and press the guide into head until snap ring comes in contact with cylinder head surface after heating cylinder head to 150 to 200°C (302 to 392°F).

Valve guide of 0.2 mm (0.008 in) oversize diameter is available for service. Refer to S. D. S.

4. Ream the bore, using Tool ST11032000.

Reaming bore:
8.000 - 8.018 mm
(0.3150 - 0.3157 in)

5. Correct valve seat surface with new valve guide as the axis.

VALVE SEAT INSERTS

Check valve seat inserts for any evidence of pitting at valve contact surface, and reseat or replace if worn out excessively.

Correct valve seat surface with Tool and grind with a grinding compound.

Valve seat insert of 0.5 mm (0.020 in) oversize is available for service.

Refer to S. D. S.

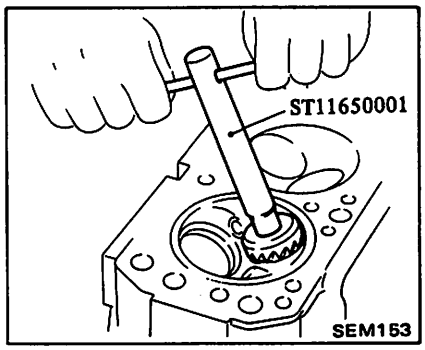

a. **When repairing valve seat, check valve guide for wear beforehand. If worn, replace it. Then correct valve seat.**
b. **The Tool should be used with both hands for uniform cutting.**

Replacing valve seat insert

1. Old insert can be removed by boring out until it collapses. The machine depth stop should be set so that boring cannot continue beyond the bottom face of the insert recess in cylinder head.
2. Select a suitable valve seat insert and check its outside diameter.
3. Machine cylinder head recess to the concentric circles to valve guide center.
4. Ream the cylinder head recess at room temperature. Refer to S.D.S.
5. Heat cylinder head to a temperature of 150 to 200°C (302 to 392°F).
6. Fit insert ensuring that it beds on the bottom face of its recess, and caulk more than 4 points.
7. Valve seats newly fitted should be cut or ground using Tool ST11650001 at the specified dimensions as shown in S.D.S.
8. Apply small amount of fine grinding compound to valve contacting face and put valve into guide. Lap valve against its seat until proper valve seating is obtained. Remove valve and then clean valve and valve seat.

VALVE

1. Check each of the intake and exhaust valve for worn, damaged or deformed valve head or stem. Correct or replace the valve that is faulty.
   Refer to S.D.S.
2. Valve face or valve stem end surface should be refaced by using a valve grinder.

Valve head margin:
Limit 0.5 mm (0.020 in)
Grinding of valve stem end:
Limit 0.5 mm (0.020 in)

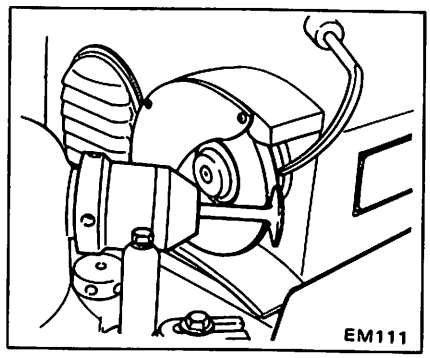

VALVE SPRING

1. Check valve spring for squareness using a steel square and surface plate. If spring is out of square "S" more than specified limit, replace with new ones.

Out of square ("S"):
Outer
Limit 2.2 mm (0.087 in)
Inner
Limit 1.9 mm (0.075 in)

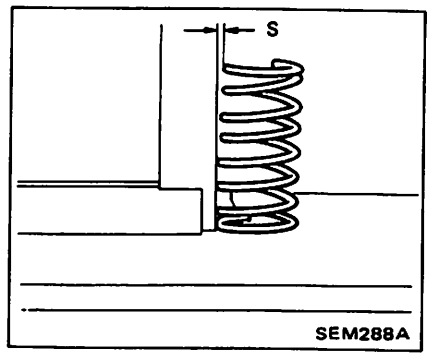

2. Measure the free length and the tension of each spring. If the measured value exceeds the specified limit, replace spring.
   Refer to S.D.S.

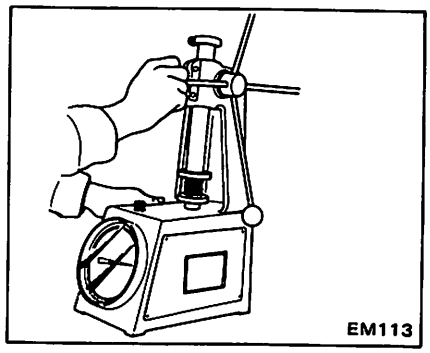

ROCKER ARM AND ROCKER SHAFT

1. Check rocker arms and shafts for sign of wear or damage, and if worn excessively, replace rocker arm and/or shaft.
2. Check oil clearance between rocker arm and rocker shaft.

Rocker arm to shaft clearance:
0.007 - 0.049 mm
(0.0003 - 0.0019 in)

CAMSHAFT AND CAMSHAFT BEARING

CAMSHAFT BEARING CLEARANCE

Measure the inside diameter of camshaft bearing with an inside dial gauge and the outside diameter of camshaft journal with a micrometer. If any malfunction is found, replace camshaft or cylinder head assembly.

Camshaft bearing clearance:
Limit 0.1 mm (0.004 in)

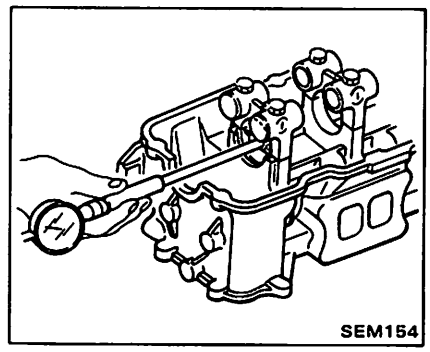

CAMSHAFT ALIGNMENT

1. Check camshaft, camshaft journal and cam surface for bend, wear or damage. If beyond the specified limits. replace the parts.

Camshaft bend:
Limit 0.2 mm (0.008 in)

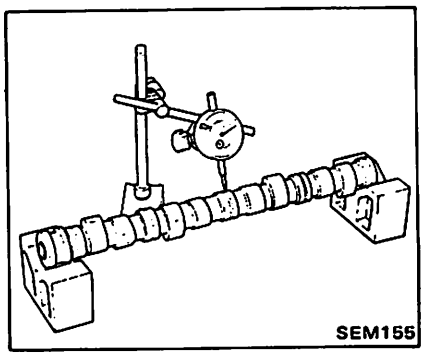

2. Measure camshaft cam height. If beyond the specified limit, replace camshaft.

Wear limit of cam height:
0.25 mm (0.0098 in)

3. Measure camshaft end play. If beyond the specified limit, replace camshaft or cylinder head assembly.

Camshaft end play:
Limit 0.2 mm (0.008 in)

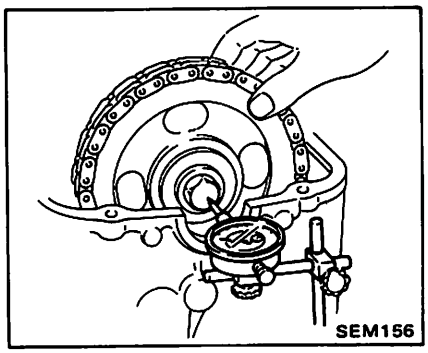

CYLINDER BLOCK

1. Visually check cylinder block for cracks or flaws.
2. Measure the top of cylinder block (cylinder head mating face) for warpage. If it exceeds the specified limit, correct with a grinder.

Warpage of surface:
Limit 0.1 mm (0.004 in)

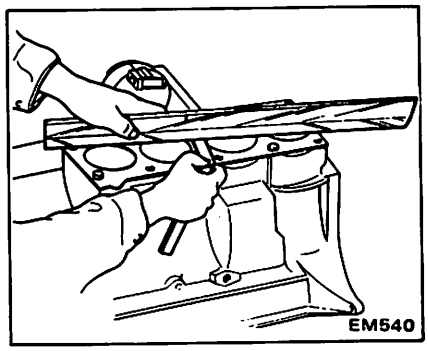

Nominal cylinder block height from crank shaft center:
Z20
227.45 mm (8.9547 in)
Z24
247.00 mm (9.7244 in)

Surface grinding limit:
The grinding limit of cylinder block is determined by the cylinder head grinding in an engine.
Depth of cylinder head grinding is "A"
Depth of cylinder block grinding is "B"
Limit:
A + B = 0.2 mm (0.008 in)

3. Using a bore gauge, measure cylinder bore for wear, out-of-round or taper. If, those are excessive, rebore the cylinder walls by means of a boring machine. Measurement should be taken along bores for taper and around bores for out-of-round.
Refer to S.D.S.

Out-of-round	**X-Y**
Taper	**A-B**

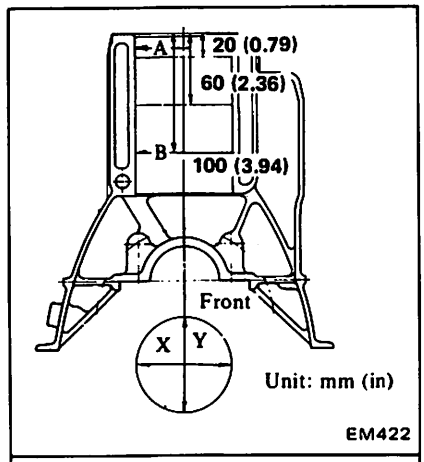

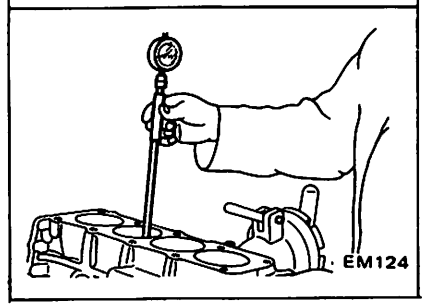

4. When wear, taper or out-of-round is minor and within the limit, remove the step at the topmost portion of cylinder using a ridge reamer or other similar tool.

CYLINDER BORING

When any cylinder needs boring, all other cylinders must also be bored at the same time.

Determining bore size

1. Determine piston oversize according to amount of wear of cylinder.

Oversize pistons are available for service. Refer to S.D.S.

2. The size to which cylinders must be honed is determined by adding piston-to-cylinder clearance to the piston skirt diameter "A".

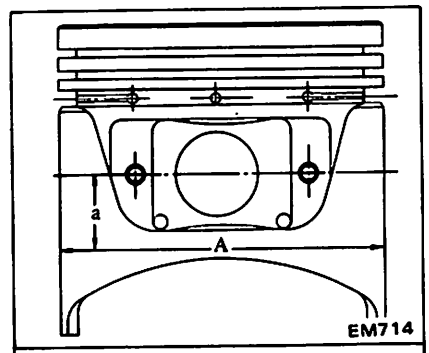

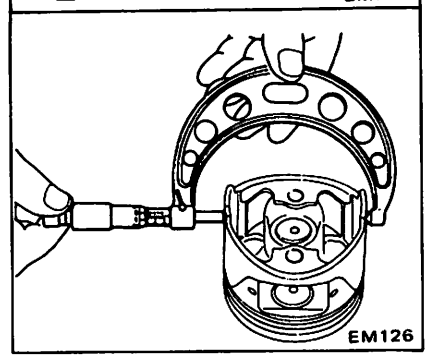

Dimension "a"
(Distance from center of pin):
Approximately
20 mm (0.79 in)

Rebored size calculation
D = A + B – C = A + [0.005 to 0.025 mm (0.0002 to 0.0010 in)]
where,
D : Honed diameter
A : Skirt diameter as measured
B : Piston-to-wall clearance
C : Machining allowance 0.02 mm (0.0008 in)

Boring

CAUTION:

a. To prevent strain due to cutting heat, bore the cylinders in the order of 2-4-1-3.

b. Before boring any cylinder, install main bearing caps in place and tighten to the specification so that the crankshaft bearing bores will not become distorted from the boring operation.

3. Do not cut too much out of cylinder bore at a time. Cut only 0.05 mm (0.0020 in) or so in diameter at a time.
4. As a final step, cylinders should be honed to size.
5. Measure the finished cylinder bore for out-of-round or tapered part.

Refer to S.D.S.

Measurement of a just machined cylinder bore requires utmost care since it is expanded by cutting heat.

Measuring piston-to-cylinder clearance

This clearance can be checked easily by using a feeler gauge and a spring balance hooked on feeler gauge, measuring the amount of force required to pull gauge out from between piston and cylinder.

Feeler gauge used:
0.04 mm (0.0016 in)
Extracting force:
2.0 - 14.7 N
(0.2 - 1.5 kg, 0.4 - 3.3 lb)

a. When measuring clearance, slowly pull feeler gauge straight upward.

b. It is recommended that piston and cylinder be heated to 20°C (68°F).

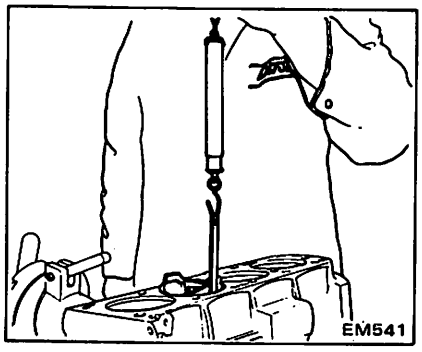

PISTON, PISTON PIN AND PISTON RING

PISTON

1. Scrape carbon off piston and ring grooves with a carbon scraper and a curved steel wire. The wire will be useful in cleaning bottom land of ring groove. Clean out oil slots in bottom land of oil ring groove.
2. Check for damage, scratches and wear. Replace if such a fault is detected.

PISTON RING

1. Measure the side clearance of rings in ring grooves as each ring is installed.

If side clearance exceeds the specified limit, replace piston together with piston ring.

Side clearance:
Limit 0.1 mm (0.004 in)

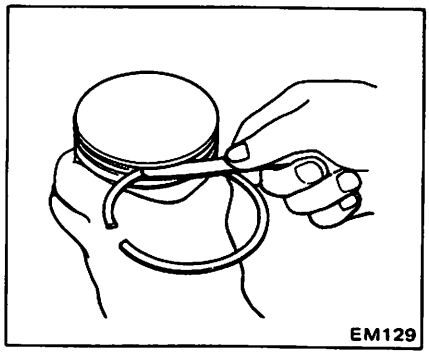

2. Measure ring gap with a feeler gauge, placing ring squarely in cylinder using piston.

Ring should be placed to diameter at upper or lower limit of ring travel.

If ring gap exceeds the specified limit, replace ring.

Ring gap:
Limit 1.0 mm (0.039 in)

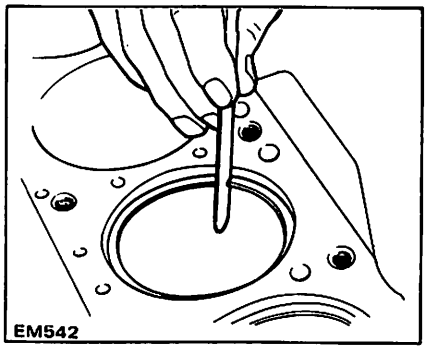

a. When piston ring only is to be replaced, without cylinder bore being corrected, measure the gap at the bottom of cylinder where the wear is minor.

b. Oversize piston rings are available for service. [0.5 mm (0.020 in), 1.0 mm (0.039 in) oversize].

PISTON PIN

1. Check for the fitting of piston pin into piston pin hole to be such an extent that it can be pressed smoothly by finger at room temperature. This piston pin must be a tight press fit into connecting rod.

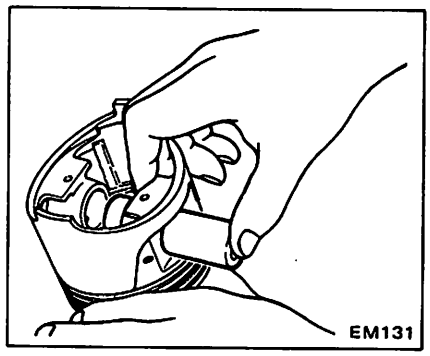

2. Measure oil clearance between piston pin and piston. If it is excessive, replace piston pin together with piston.

Piston pin to piston clearance:
0.008 - 0.012 mm
(0.0003 - 0.0005 in)

CONNECTING ROD

1. If a connecting rod has any flaw on both sides of the thrust face and the large end, correct or replace it.
2. Check connecting rod for bend or torsion using a connecting rod aligner. If bend or torsion exceeds the limit, correct or replace.

Bend and torsion
[per 100 mm (3.94 in) length] :
Limit 0.05 mm (0.0020 in)

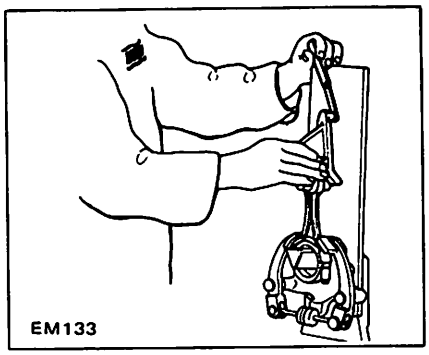

3. Install connecting rods with bearings on to corresponding crank pins and measure the thrust clearance. If the measured value exceeds the limit, replace such connecting rod.

Big end play:
Limit 0.6 mm (0.024 in)

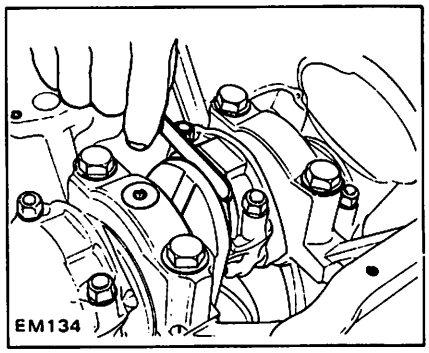

CRANKSHAFT

CRANK JOURNAL AND PIN

1. Repair or replace as required. If faults are minor, correct with fine crocus cloth.
2. Check with a micrometer journals and crank pins for taper and out-of-round. Measurement should be taken along journals for taper and around journals for out-of-round.

If out-of-round or taper exceeds the specified limit, replace or repair.

Out-of-round (X-Y):
Limit 0.03 mm (0.0012 in)
Taper (A-B):
Limit 0.03 mm (0.0012 in)

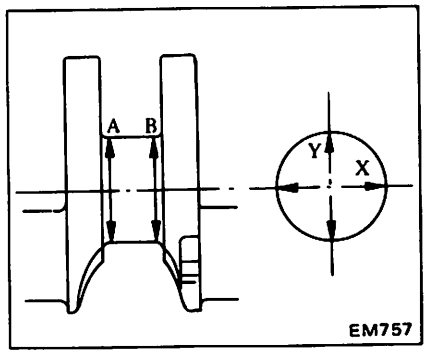

a. When regrinding crank pin and crank journal, measure fillet roll depth. Make sure the measurements exceed the specified value. if the measurements are within the specified value, do not regrind.

L: More than 0.13 mm (0.0051 in)

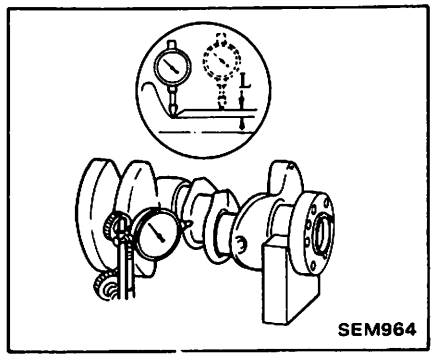

b. Do not grind off fillet roll
c. Refer to S.D.S. for regrinding crankshaft and available service parts.

BEND AND END PLAY

1. Crankshaft can be checked for bend by placing it on V-blocks and using a dial gauge with its indicating finger resting on center journal.

Bend value is half of the total indicator reading obtained when crankshaft is turned one full revolution.

If bend exceeds the specified limit, replace or repair.

Bend: Total indicator reading
Limit 0.10 mm (0.0039 in)

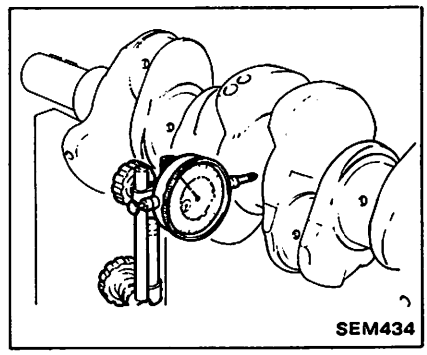

2. Install crankshaft in cylinder block and measure crankshaft free end play at center bearing.

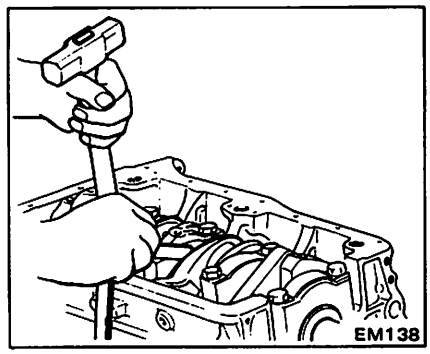

End play:
Limit 0.3 mm (0.012 in)

REPLACING PILOT BUSHING

To replace crankshaft rear pilot bushing, proceed as follows:

1. Pull out bushing using Tool.

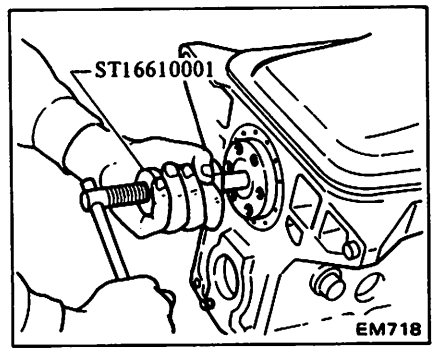

2. Before installing a new bushing, thoroughly clean bushing hole.
3. Insert pilot bushing until distance between flange end and pilot bushing is the specified distance "A".

Distance "A":
Approximately
4.0 mm (0.157 in)

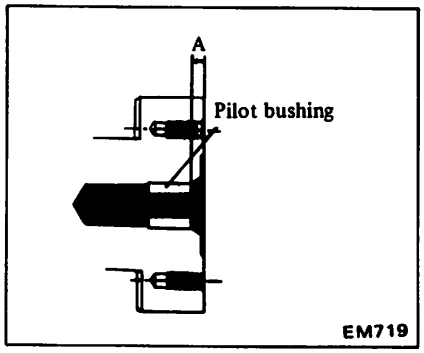

When installing pilot bushing, be careful not to damage edge of pilot bushing and not to insert excessively.

MAIN BEARING AND CONNECTING ROD BEARING

MAIN BEARING

1. Thoroughly clean all bearings and check for scratches, melt, score or wear.

Replace bearings, if any fault is detected.

2. Measure bearing clearance as follows:

(1) Cut a plastigage to the width of bearing and place it in parallel with crank journal axis, getting clear of the oil hole.

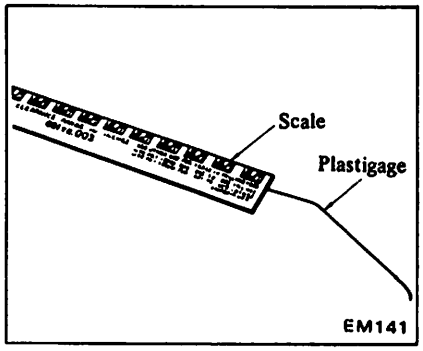

(2) Install bearing and bearing cap, with the bolts tightened to the specified torque.

Ⓣ : Main bearing cap bolt
44 - 54 N·m
(4.5 - 5.5 kg-m,
33 - 40 ft-lb)

Do not turn crankshaft while the plastigage is being inserted.

(3) Remove bearing and cap compare width of plastigage at its widest part with the scale printed in plastigage envelope.

Main bearing clearance:
Limit 0.12 mm (0.0047 in)

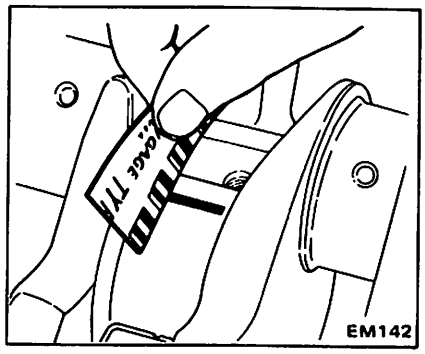

3. If clearance exceeds the specified value, replace bearing with an undersize bearing and grind crankshaft journal adequately.

Refer to S.D.S.

CONNECTING ROD BEARING

1. Measure connecting rod bearing clearance in the same manner as above.

Ⓣ : Connecting rod bearing cap nut
44 - 54 N·m
(4.5 - 5.5 kg-m,
33 - 40 ft-lb)
Connecting rod bearing clearance:
Limit 0.12 mm (0.0047 in)

2. If clearance exceeds the specified value, replace bearing with an undersize bearing and grind the crankpin adequately.

Refer to S.D.S.

MISCELLANEOUS COMPONENTS

CAMSHAFT SPROCKET

1. Check tooth surface for flaws or wear. Replace sprocket if any fault is found.
2. Install sprocket on camshaft and check for runout.

If runout exceeds the specified limit, replace camshaft sprocket.

Runout:
(Total indicator reading)
Limit 0.10 mm (0.0039 in)

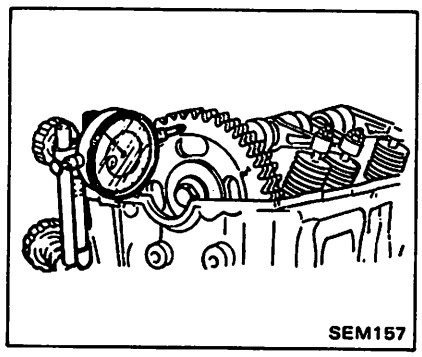

CHAIN

Check chain for damage and excessive wear at roller links. Replace if faulty.

CHAIN TENSIONER AND CHAIN GUIDE

Check for wear and breakage. Replace if necessary.

FLYWHEEL

1. Check the clutch disc contact surface on flywheel for damage or wear. Repair or replace if necessary.
2. Measure runout of the clutch disc contact surface with a dial gauge. If it exceeds the specified limit, replace it.

Runout:
(Total indicator reading)
Limit 0.15 mm (0.0059 in)

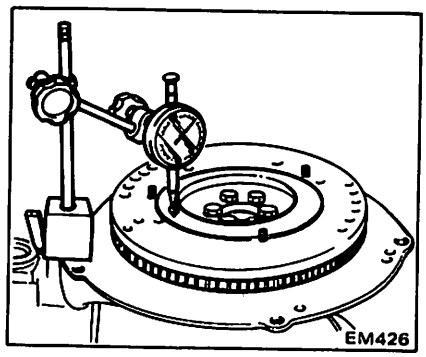

3. Check tooth surfaces of ring gear for flaws or wear.

Replace if necessary.

Replace ring gear at about 180 to 220°C (356 to 428°F).

DRIVE PLATE (A/T models)

1. Check drive plate for cracks or distorsion.

2. Check tooth surfaces of ring gear for flaws or wear.

Replace drive plate assembly if necessary.

FRONT AND REAR OIL SEAL

Check front and rear oil seals for worn or folded over sealing lip or oil leakage. If necessary, replace with a new seal. When installing a new seal, pay attention to its mounting direction.

It is good practice to renew oil seal whenever engine is overhauled.

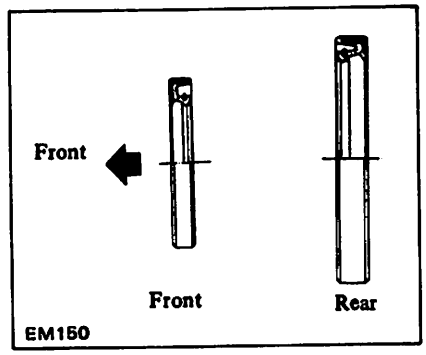

ENGINE ASSEMBLY

PRECAUTIONS

1. When installing sliding parts such as bearings, be sure to apply engine oil on the sliding surfaces.
2. Use new packings and oil seals.
3. Be sure to follow specified tightening torque and order.
4. Apply sealant to the following points.

Do not apply sealant too much.

(1) Front side of cylinder block:

Mating surface with front cover and top of front cover.

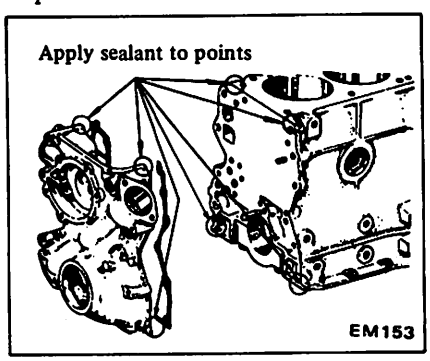

(2) Rear side of cylinder block:

Each side of rear main bearing cap and each corner of cylinder block.

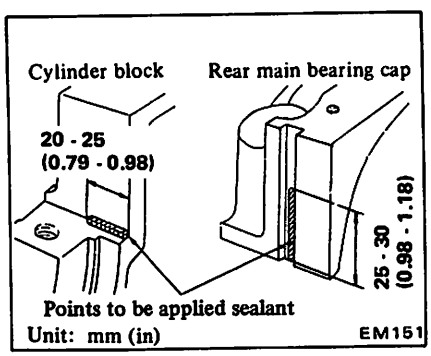

(3) Bottom side of cylinder block:

Step portions at four mating surfaces (cylinder block to front chain cover and cylinder block to rear main bearing cap).

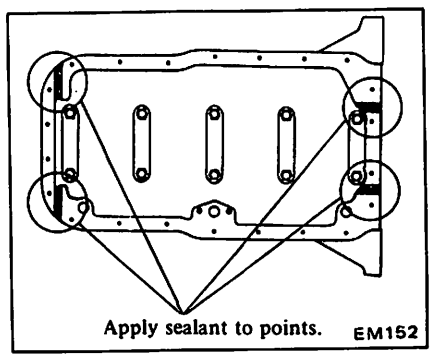

(4) Front and rear side of cylinder head:

Mating surfaces with rubber plug.

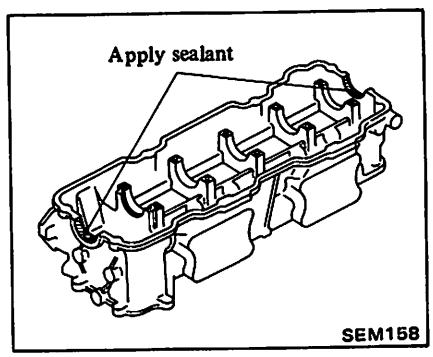

ASSEMBLING CYLINDER HEAD

1. Install valve and valve spring.

(1) Set valve spring inner and outer seat and valve oil seal.

Then insert valve into valve guide smoothly without scratching lip of seal.

(2) Install valve spring inner and outer, valve spring retainer and valve spring collets by using Tool.

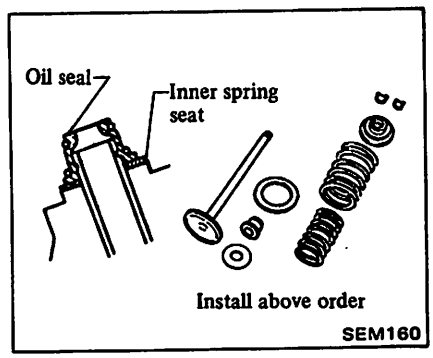

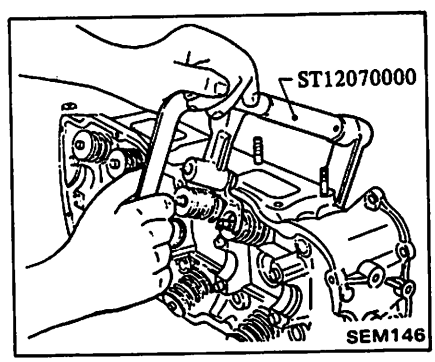

a. When installing valve, apply engine oil on the valve stem and lip of valve oil seal.

b. Check whether the valve face is free from foreign matter.

c. Inner and outer valve springs are of an uneven pitch type. Install valve spring with its narrow pitch side (painted) at cylinder head side.

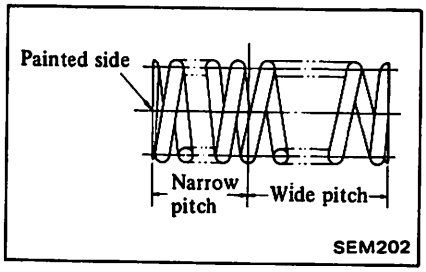

2. Make up valve rocker shaft assembly.

Install rocker shaft bracket, valve rocker, and spring on valve rocker shaft, observing the following.

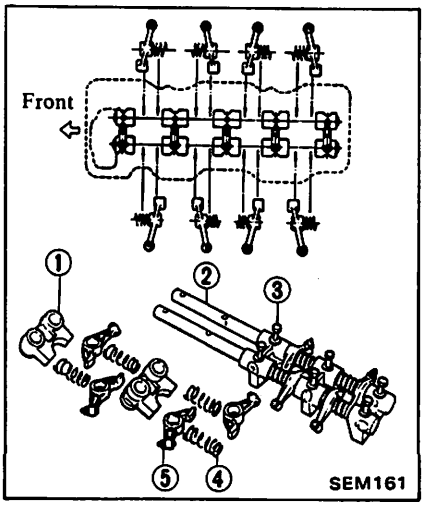

1 Rocker bracket
2 Rocker shaft
3 Bolt
4 Spring
5 Rocker arm

(1) Intake rocker shaft has identification mark (slit on front surface), but exhaust rocker shaft does not.
(2) Both rocker shafts should be assembled so that punched marks on front surfaces come to upside. Marks are used to identify oil hole direction.

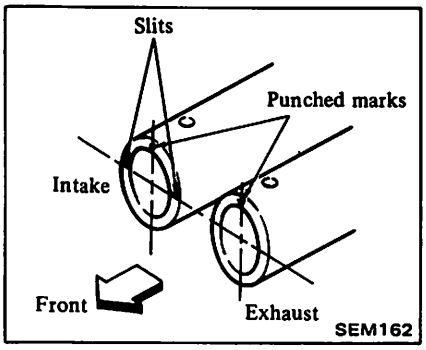

(3) Valve rocker is same for intake and exhaust and also No.1 and No.3 cylinder, and provides identification mark "1". Similarly, the one for No.2 and No.4 cylinder provides mark "2".
(4) Be careful not to miss original location of rocker shaft brackets. For this purpose, the same alphabetical identification marks are provided on each bracket and cylinder head.

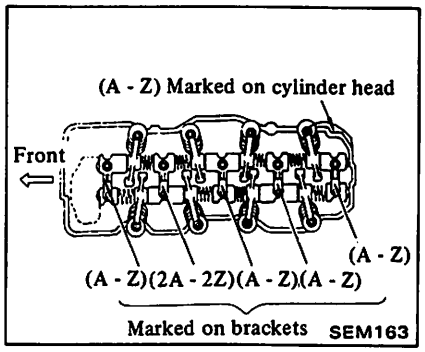

To prevent rocker shaft brackets from slipping out of rocker shafts, insert bracket bolts (any bolt will do) into bolt holes of No.1 and No.5 rocker shaft bracket.

3. Mount camshaft onto cylinder head, placing dowell pin at front end to top position.

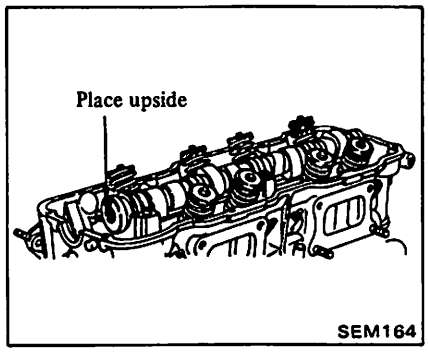

4. Mount valve rocker shaft assembly on cylinder head by accommodating to knock pin of the head. Then, tighten to the specified torque.

Ⓣ : Rocker shaft bracket bolt
15 - 25 N·m
(1.5 - 2.5 kg-m, 11 - 18 ft-lb)

a. Tighten bolts gradually, in two to three stages outwardly from center bracket.

b. When tightening bolts, make space under cylinder head since some valves will open and interfered.

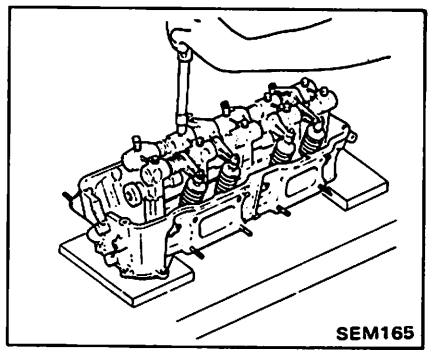

5. After assembling cylinder head, turn camshaft until No.1 piston is at T.D.C. on its compression stroke.

ASSEMBLING PISTON AND CONNECTING ROD

1. Assemble pistoins, piston pins and connecting rods of the designated cylinder.

a. Piston pin is pressed into connecting rod, and fitting force is from 4.9 to 14.7 kN (0.5 to 1.5 t, 0.6 to 1.7 US ton, 0.49 to 1.48 Imp ton) and the aid of Tool is necessary.
When pressing piston pin in connecting rod, apply engine oil to pin and small end of connecting rod.

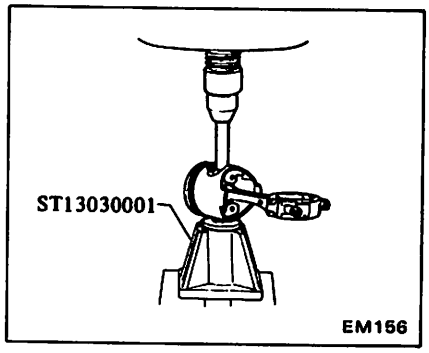

b. Arrange so that oil jet of connecting rod big end is directed toward the right side of cylinder block.

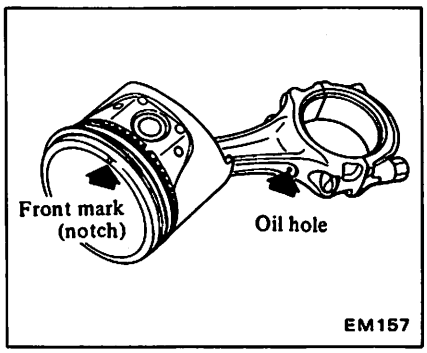

c. Connecting rods are marked at side of big end for identifying the designated cylinder.

2. Install piston rings.
Install so that stamped mark on ring faces upward.

a. Top ring is barrel face type.
b. Second ring is undercut type.
c. In the combined oil ring, upper rail is the same as lower one.

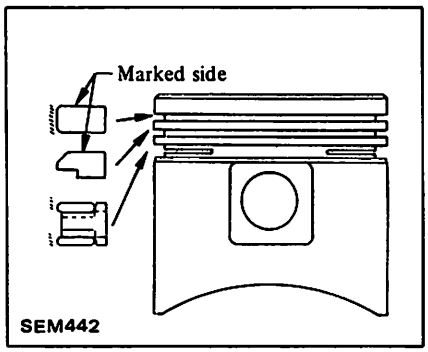

ASSEMBLING ENGINE OVERALL

INSTALLING INTERNAL PARTS

1. In the first place, mount cylinder block on work stand. (refer to engine overall disassembly).
2. Install baffle plate and steel net into crankcase.
3. Install crankshaft.
(1) Set upper main bearings at the proper portion of cylinder block.

a. Only center bearing (No. 3) is a flanged type.
b. All inter-bearings (No. 2 and No. 4) are the same type.
c. Front bearing (No. 1) is also the same type as rear bearing (No. 5).
d. Upper and lower bearings are not interchangeable. Upper ones have oil groove.

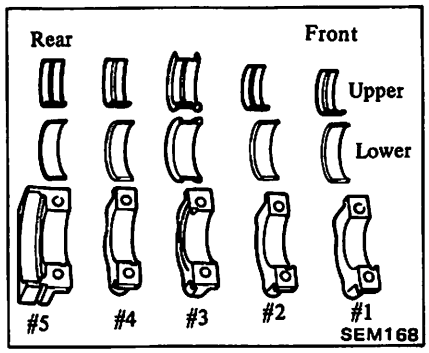

(2) Apply engine oil to main bearing surfaces on both sides of cylinder block and cap.
(3) Install crankshaft.
(4) Install lower main bearings and caps and tighten bolts to specified torque.

Ⓣ : Main bearing cap bolt
44 - 54 N·m
(4.5 - 5.5 kg-m,
33 - 40 ft-lb)

a. Apply sealant to each side of rear main bearing cap and each corner of cylinder block. Refer to Precautions.
b. Arrange the parts so that the arrow mark on bearing cap faces toward the front of engine.
c. Prior to tightening bearing cap bolts, place bearing cap in proper position by shifting crankshaft in the axial direction.
d. Tighten bearing cap bolts gradually in separating two to three stages and outwardly from center bearing in sequence.

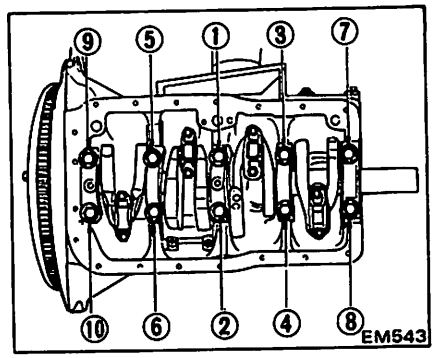

e. After securing bearing cap bolts, ascertain that crankshaft turn smoothly.

(5) Make sure that there exists proper end play of crankshaft at center bearing.

Crankshaft end play:
Limit 0.3 mm (0.012 in)

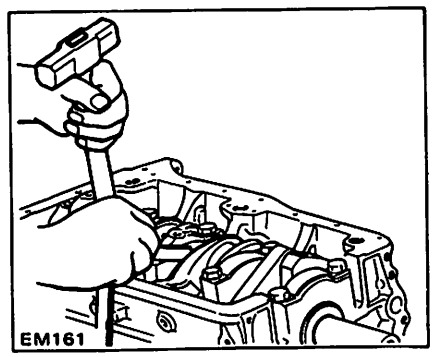

4. Apply sealant to side oil seals. Then install those into rear main bearing cap.

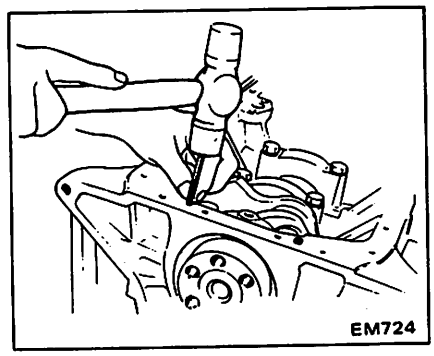

5. Install Rear oil seal using Tool.

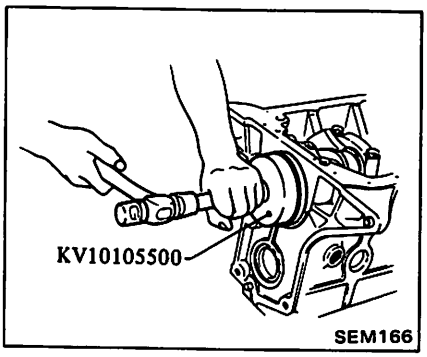

a. When installing oil seal, give coating of engine oil to sealing lip and mating shaft to prevent scratches and folded lip. Also apply coating of oil to periphery of oil seal.
b. Install oil seal with its dust seal lip at outside.

6. Install rear plate and flywheel or drive plate.

Ⓣ : Flywheel or drive plate fixing bolt
137 - 157 N·m
(14 - 16 kg-m,
101 - 116 ft-lb)

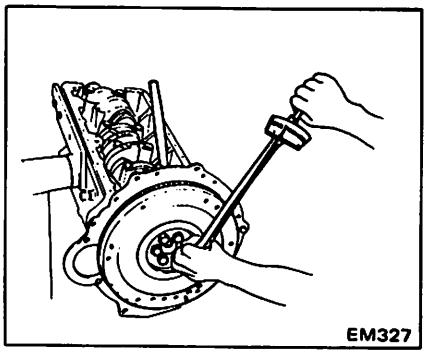

When installing flywheel or drive plate, wipe oil or foreign matter away from fitting surfaces.

7. Install pistons with connecting rod.
(1) Install them into corresponding cylinder using Tool.

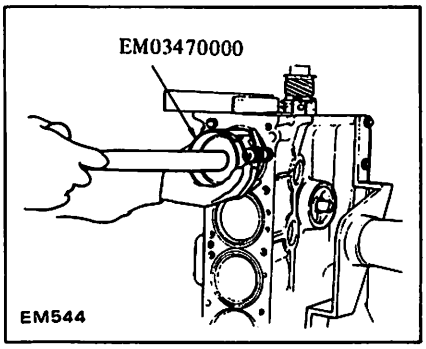

a. Apply engine oil to sliding parts.
b. Arrange so that the front mark on piston head faces to the front of engine.
c. Install piston ring as shown below.

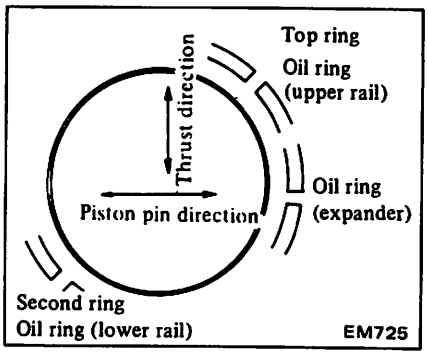

(2) Install connecting rod bearing caps.

Ⓣ : Connecting rod bearing cap nut
44 - 54 N·m
(4.5 - 5.5 kg-m,
33 - 40 ft-lb)

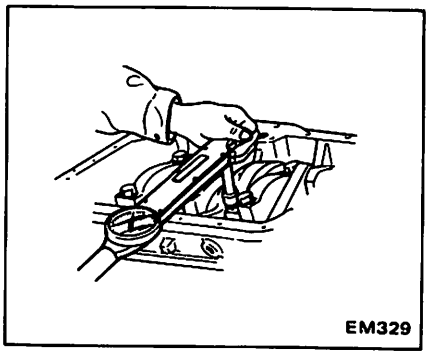

Arrange connecting rods and connecting rod caps so that the cylinder numbers face in the same direction.

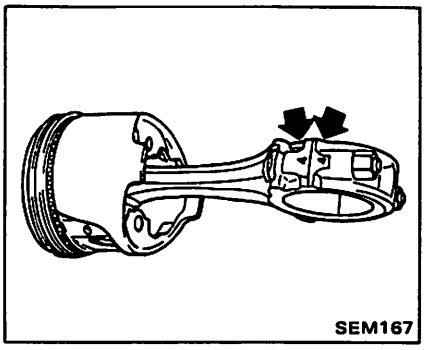

(3) Make sure that there exists proper end play at connecting rod big end.
Refer to Inspection and Repair.

8. Install cylinder head assembly through gasket by accommodating knock pin of cylinder block as follows:
(1) Thoroughly clean cylinder block and head surface.

Do not apply sealant to mating surface of cylinder block and head.

(2) Turn crankshaft until No. 1 piston is at T.D.C. on its compression stroke.
(3) When installing cylinder head, set intake and exhaust valve of No. 1 piston at T.D.C. on its compression stroke (Camshaft dowel pin is set top position).

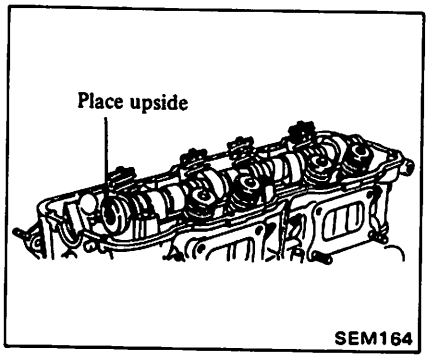

(4) Temporarily tighten two center bolts.

Ⓣ : Cylinder head bolt (Temporary)
20 N·m
(2 kg-m, 14 ft-lb)

a. Final tightening should be carried out after installing chain and front cover.
b. Do not rotate crankshaft and camshaft separately, because valves will hit head of pistons.
c. Always use new cylinder head gasket.

9. Install front side parts.
(1) Install crankshaft sprocket, oil pump drive gear and oil thrower.

a. Make sure that the mating marks of crankshaft sprocket faces to the front.
b. Install oil pump drive gear so that large chamfered inner faces rearward.

(2) Set chain on camshaft sprocket and crankshaft sprocket by aligning each mating mark. Then install camshaft sprocket to camshaft.

Ⓣ : Camshaft sprocket bolt
118 - 157 N·m
(12 - 16 kg-m,
87 - 116 ft-lb)

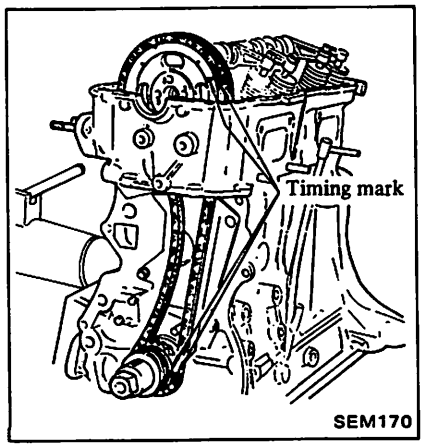

a. Set timing chain by aligning its mating marks with those of crankshaft sprocket and camshaft sprocket on the right hand side.
b. Camshaft sprocket should be installed by accommodating its No. 2 hole to knock pin of camshaft. And No. 2 timing mark must also be used.

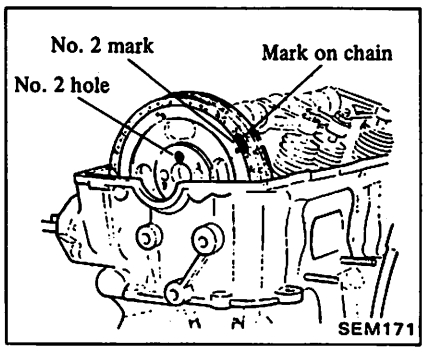

(3) Install chain guide and chain tensioner.

Ⓣ : Chain guide and tensioner bolt
6 - 10 N·m
(0.6 - 1.0 kg-m,
4.3 - 7.2 ft-lb)

Adjust the protrusion of chain tensioner spindle to 0 mm (0 in) with slack side chain guide.

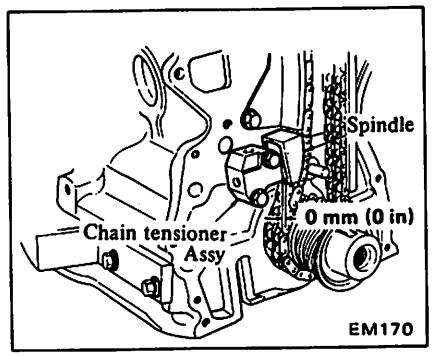

(4) Install front cover with gaskets, observing the following:

a. Before installing front cover, press new oil seal in the cover with dust seal lip at outside.
b. Apply sealant to the sealing portions designated. Refer to Precautions.
c. Apply lithium grease to sealing lip of oil seal.
d. Check the height difference between cylinder block upper face and front cover upper face. Its difference must be less than 0.15 mm (0.0059 in).
e. Note that different length of bolts are used.

Ⓣ : Front cover bolt
Size M8
10 - 16 N·m
(1.0 - 1.6 kg-m,
7 - 12 ft-lb)
Size M6
4 - 10 N·m
(0.4 - 1.0 kg-m,
2.9 - 7.2 ft-lb)

(5) Install crankshaft pulley.

Ⓣ : Crankshaft pulley bolt
118 - 157 N·m
(12 - 16 kg-m,
87 - 116 ft-lb)

10. Tighten cylinder head bolts.

- **Tightening order**

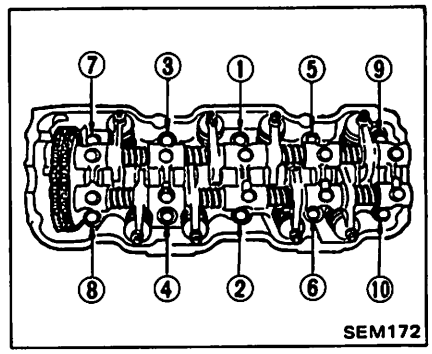

- **Tightening procedure**

(1) Tighten all bolts to 29 N·m (3.0 kg-m, 22 ft-lb).
(2) Tighten all bolts to 78 N·m (8.0 kg-m, 58 ft-lb).
(3) Loosen all bolts completely.
(4) Tighten all bolts to 29 N·m (3.0 kg-m, 22 ft-lb).
(5) Tighten all bolts to 74 to 83 N·m (7.5 to 8.5 kg-m, 54 to 61 ft-lb) or if you have an angle wrench, turn all bolts 90 to 95 degrees clockwise.

- **When performing normal maintenance and inspection, first loosen each cylinder head bolt slightly, then tighten to a torque of 74 to 83 N·m (7.5 to 8.5 kg-m, 54 to 61 ft-lb). (This should be done when engine is cold.)**

11. Adjust valve clearance to cold specifications, referring to Section MA.

Valve clearance (*Cold):

Unit: mm (in)

Intake	0.21 (0.008)
Exhaust	0.23 (0.009)

*At ambient temperature 20°C (68°F)

After engine has been assembled, finally adjust clearance to hot specifications.

12. Install valve rocker cover with gasket.

Ⓣ : Valve rocker cover bolt
1 - 3 N·m
(0.1 - 0.3 kg-m,
0.7 - 2.2 ft-lb)

a. Rocker cover bolts should be tightened in criss-cross fashion.
b. Always use new rocker cover gasket.

13. Install oil strainer and oil pan with gasket.

Ⓣ : Oil strainer bolt
10 - 16 N·m
(1.0 - 1.6 kg-m,
7 - 12 ft-lb)
Oil pan bolt
5 - 7 N·m
(0.5 - 0.7 kg-m,
3.6 - 5.1 ft-lb)

a. Apply sealant to the designated portions. Refer to Precautions.
b. Oil pan should be tightened in criss-cross pattern.
c. Always use new oil pan gasket.

INSTALLING OUTER PARTS

14. Install following parts in the reverse order of disassembly and with the specified torque if designated.

Refer to Disassembling Outer Parts and S.D.S. for tightening torque.

(1) Engine bottom side parts.

When installing oil pump and distributor driving spindle in front cover, refer to Section LC.

(2) Engine right side parts.

a. When installing intake manifold, to facilitate work, previously set the securing bolts and nut with washers at lower and center side as illustrated.

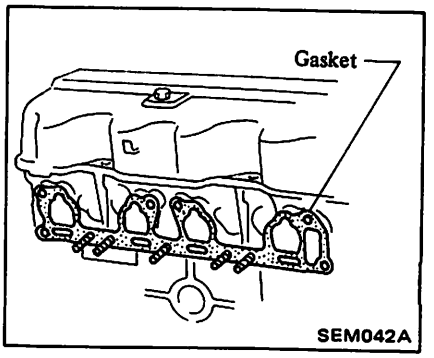

b. When installing emission control parts and vacuum pipes, refer to Section EC.
c. When installing oil filter, refer to Section MA.

(3) Engine left side parts.

a. When installing distributor, temporarily tighten ignition timing adjust screws at center of ajusting holes.
b. When installing high tension cables, clamp those as illustrated.

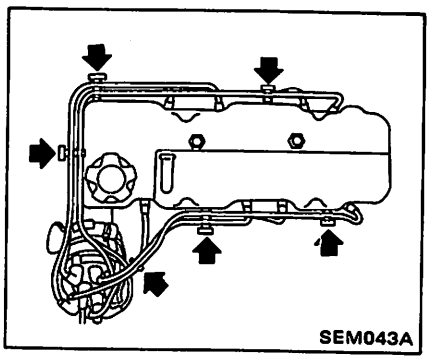

(4) Engine front side parts.

DISMOUNTING ENGINE FROM WORK STAND

15. Dismount engine in the reverse order of mounting and install engine right side and rear side parts remained with the specified torque if designated.

Refer to Mounting Engine on Work Stand and S.D.S. for tightening torque.

When installing clutch assembly, use Tool KV30100100.

16. Fill engine oil and coolant to the specified level, after engine has been installed on vehicle. Refer to Section MA.

ENGINE TUNE-UP

17. Referring to Section MA, finally adjust following items:

(1) Drive belts deflection for air conditioner compressor and power steering.

(2) Valve clearance.

Warm up engine until water temperature indicator points to middle of gauge, then adjust clearance to hot specifications.

Valve clearance (Hot):

Unit: mm (in)

Intake	0.30 (0.012)
Exhaust	0.30 (0.012)

(3) Ignition timing.
(4) Idle rpm.

ENGINE COMPONENTS (Outer parts)

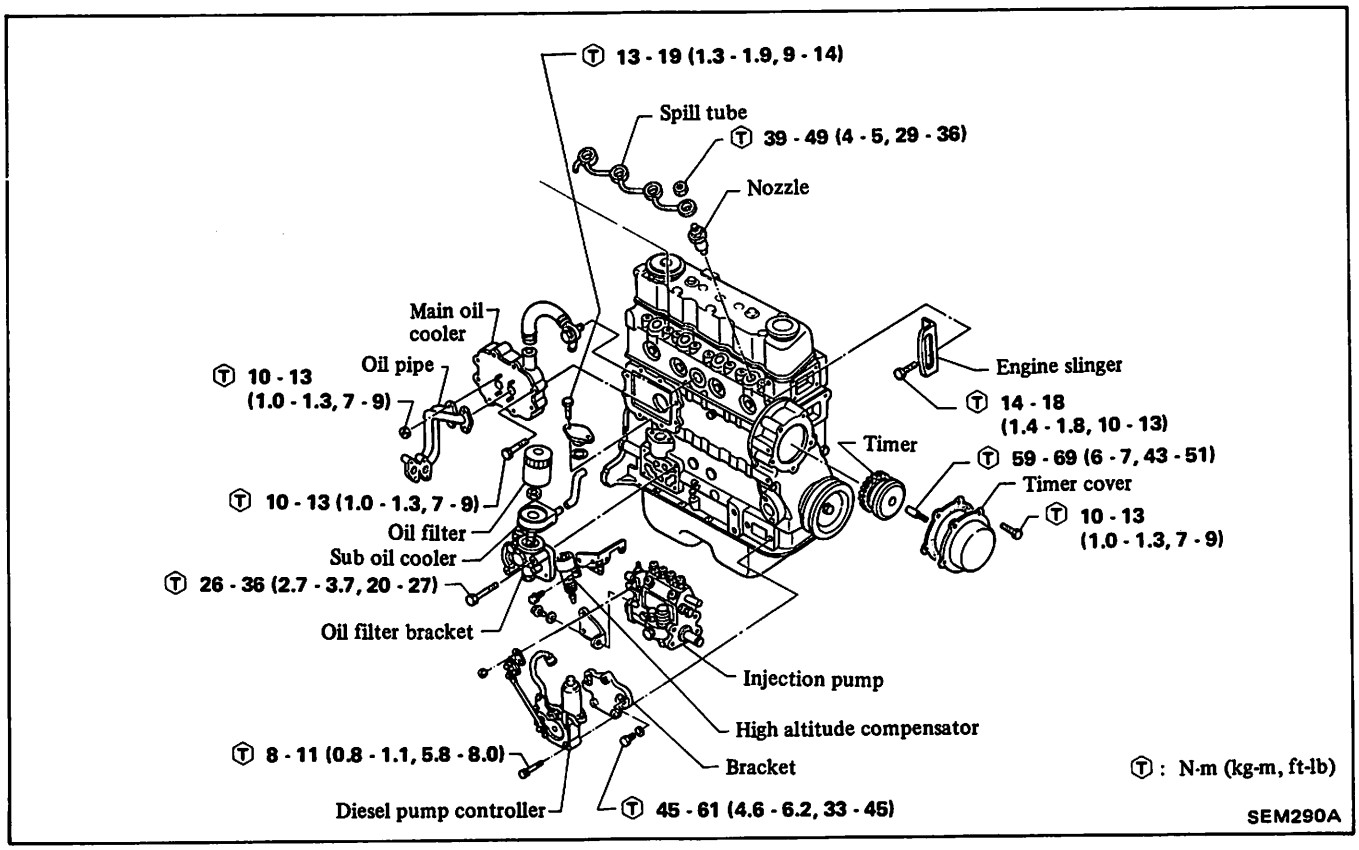

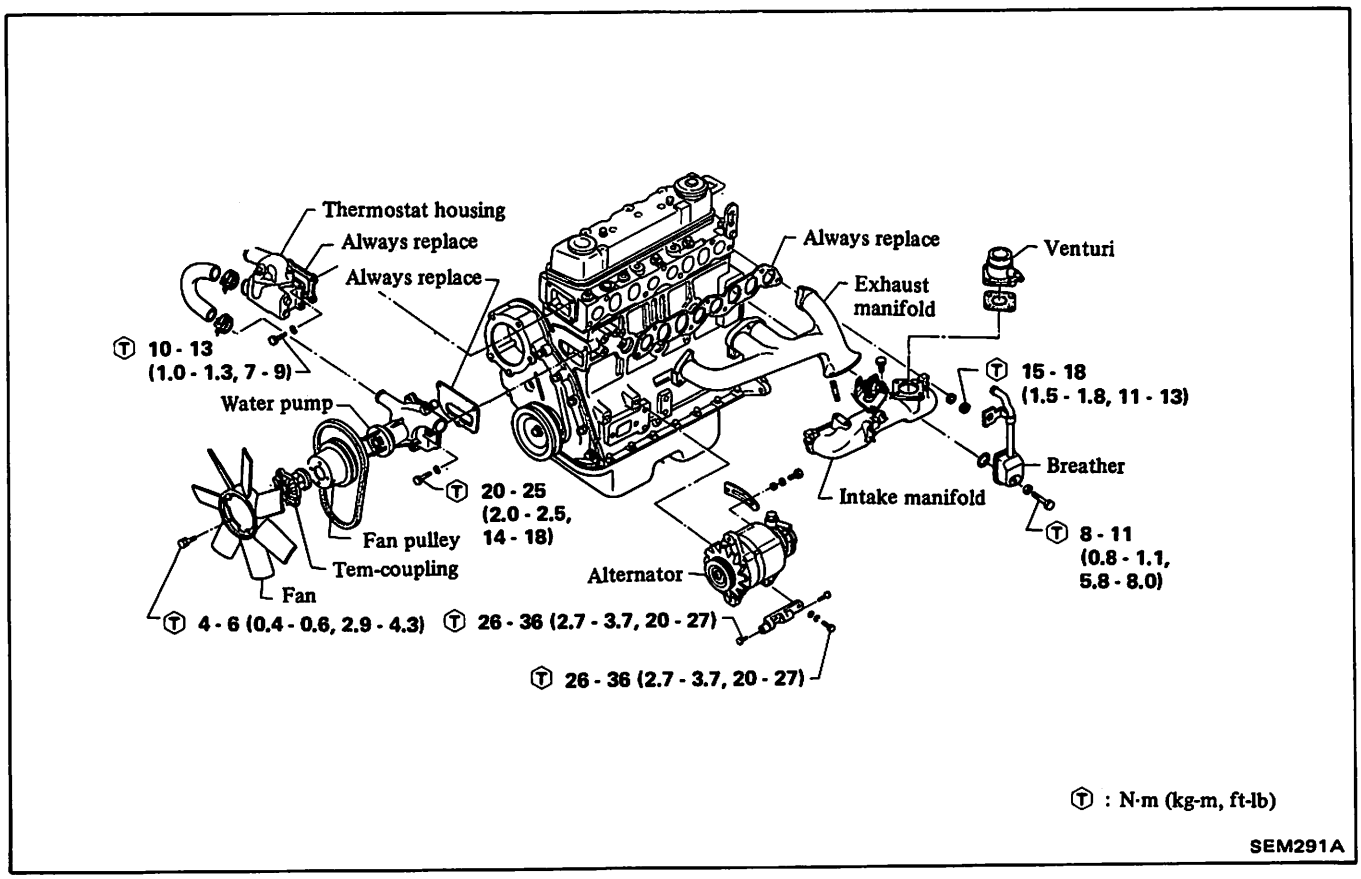

ENGINE COMPONENTS (Internal parts)

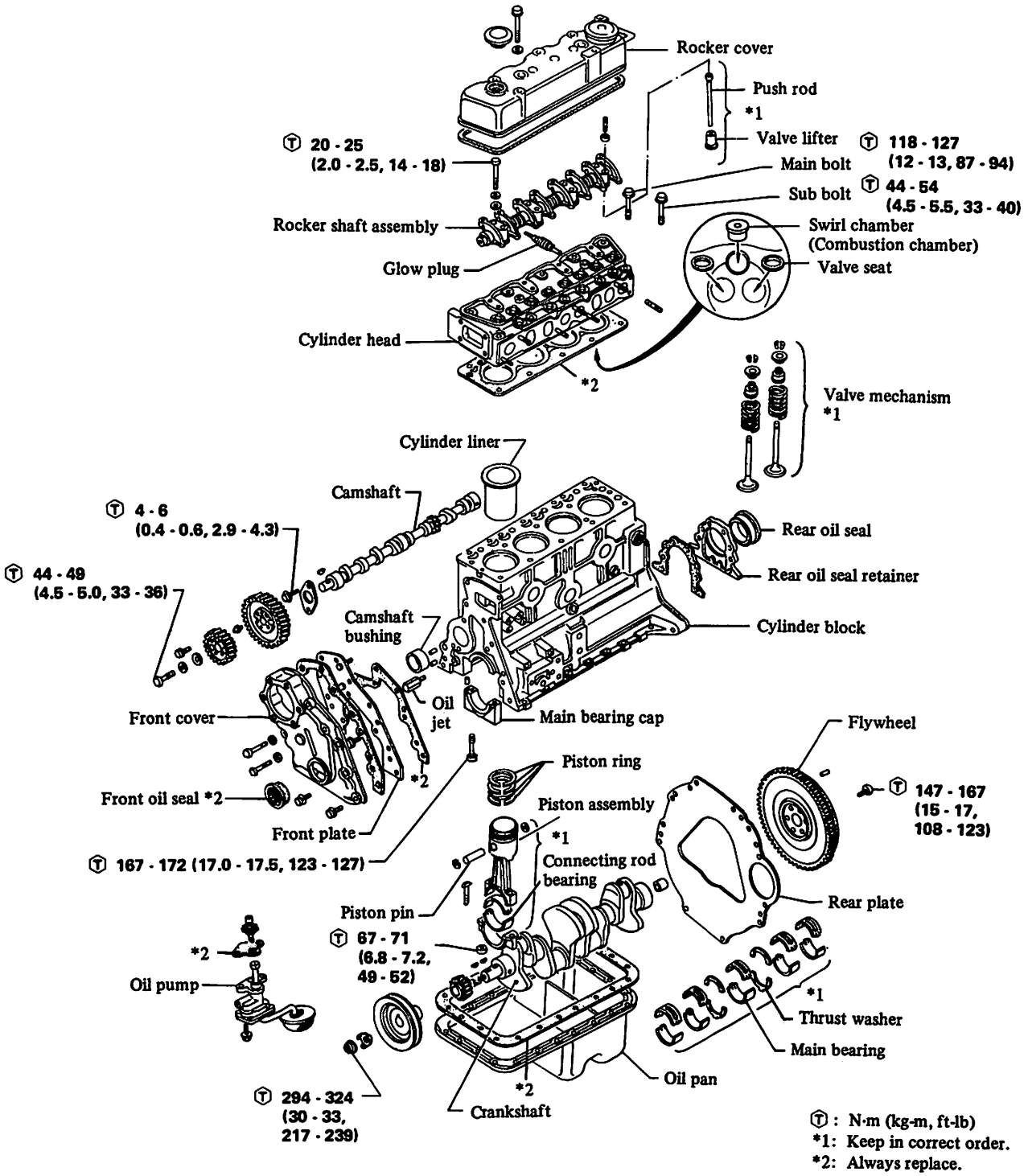

Ⓣ : N·m (kg-m, ft-lb)
*1: Keep in correct order.
*2: Always replace.

SEM048A

ENGINE DISASSEMBLY

PRECAUTIONS

Arrange the disassembled parts on the parts stand in accordance with their assembled locations, sequence, etc., so that the parts will be reassembled in their original locations. Place mating marks on the parts if necessary.

DISASSEMBLY

MOUNTING ENGINE ON WORK STAND

1. Remove rear and left side parts.
- Transmission assembly
- Clutch cover assembly
- Starter motor
- Engine mounting bracket
- Alternator assembly and fan belt
- Alternator bracket
- Intake manifold with venturi, and air duct
- Exhaust manifold & engine slinger
- Breather assembly

2. Install engine attachment on engine, using engine mounting bracket hole, air breather mounting hose and starter motor mounting holes.
3. Place both engine and attachment on engine stand.

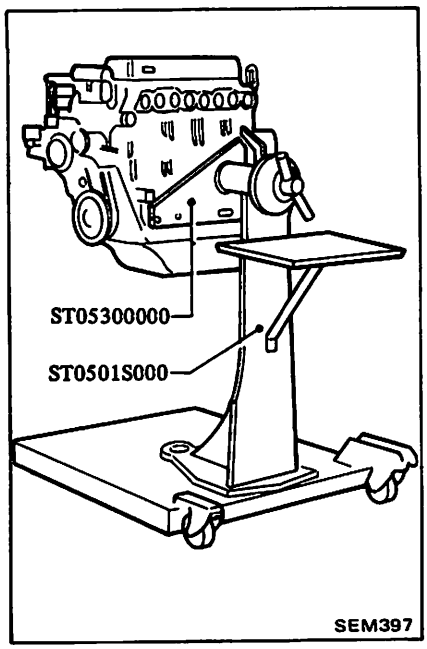

4. Install Tool to prevent crankshaft rotation.

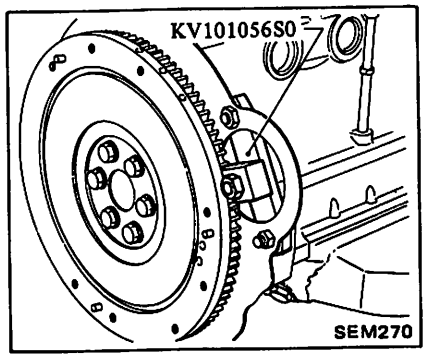

5. Drain engine oil and coolant.

MOVING OUTER PARTS

1. Remove front side engine parts.
- Fan, Tem-coupling and fan pulley
- Alternator adjusting bar
- Crank pulley
- Thermostat housing
- Water pump

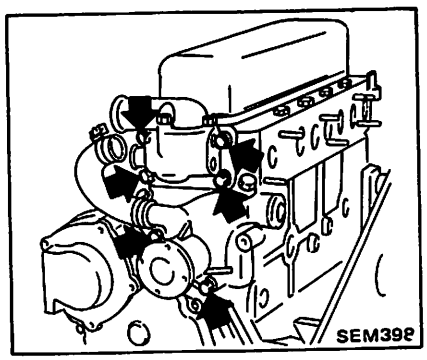

- Timer cover
- Timer

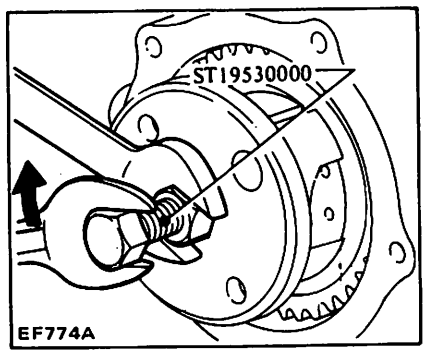

- Front cover
- Vacuum tube assembly

2. Remove right side parts.
- Fuel tube assembly

Use double wrench action.

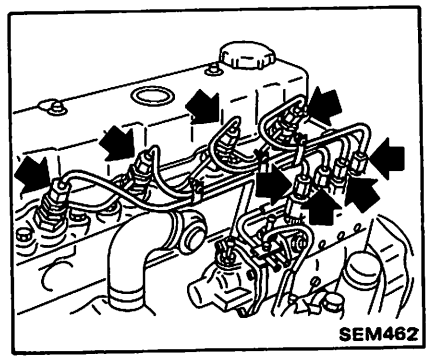

- Spill tube
- Injection nozzles
- Nozzle washers

Plug nozzle holes to prevent entry of dust and dirt.

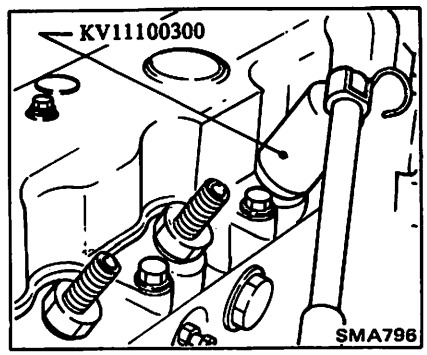

- Oil filter using Tool
- Remove injection rear bracket and oil pipe.

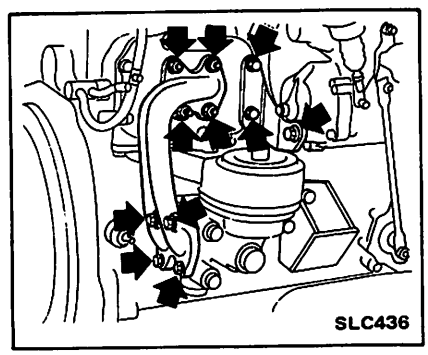

- Remove main and sub oil cooler assembly.

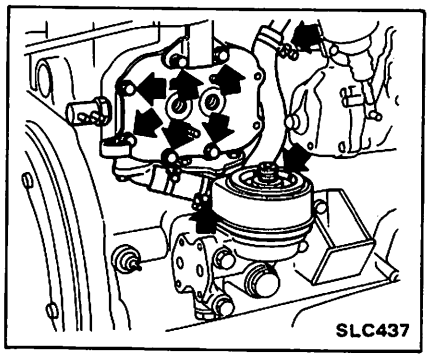

- Remove oil filter bracket.
- Injection pump assembly.

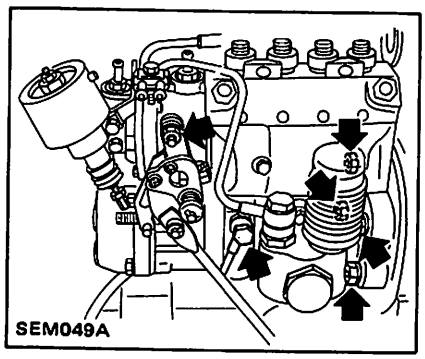

- Diesel pump controller assembly

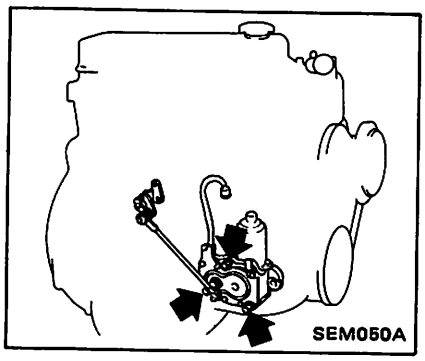

- Glow plug harness and oil cooler hose.

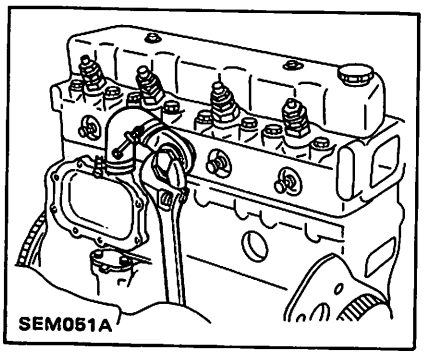

REMOVING INTERNAL PARTS

1. Remove rocker cover.
2. Remove rocker shaft assembly.

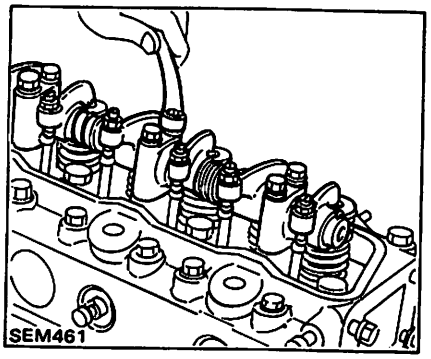

3. Remove push rods and keep them in correct order.

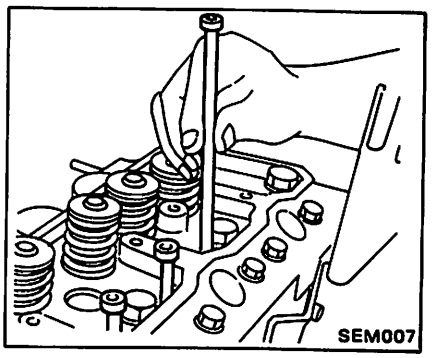

4. Remove cylinder head bolts by using Tool in the sequence shown below and then remove cylinder head assembly and cylinder head gasket assembly.

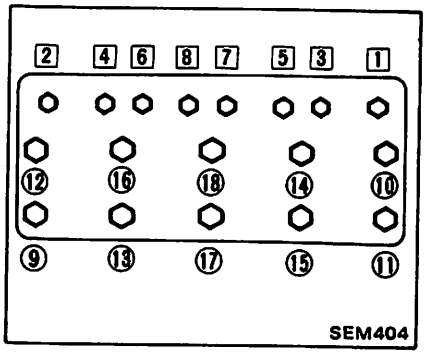

5. Remove oil pump.
(1) Remove spindle support and drive spindle.

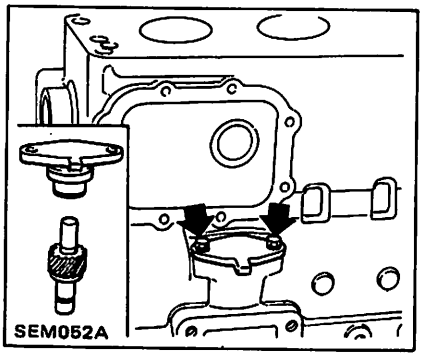

(2) Remove oil pan.
(3) Remove oil pump assembly.

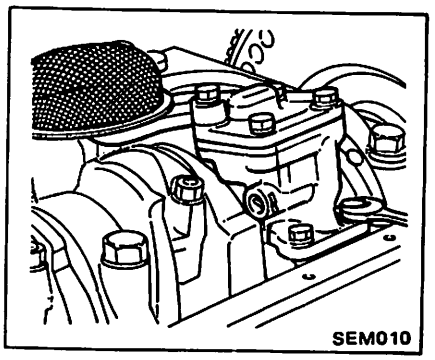

6. Remove flywheel.

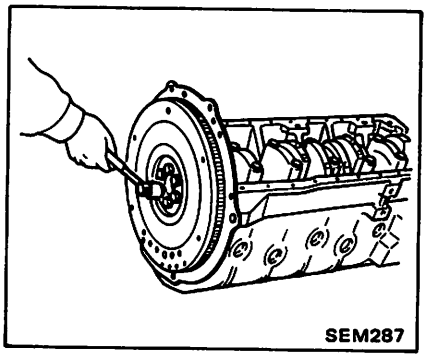

WARNING:
When removing flywheel, be careful not to drop it.

7. Remove camshaft gear.

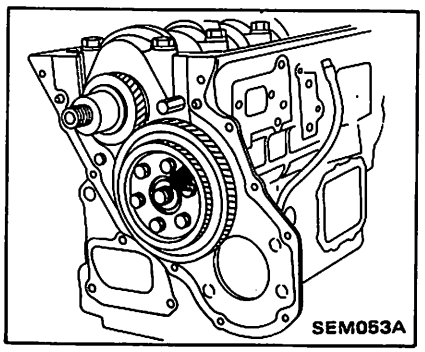

8. Remove camshaft
(1) Remove camshaft locating plate.
(2) Bring crankshaft to upper side as shown below and remove camshaft.

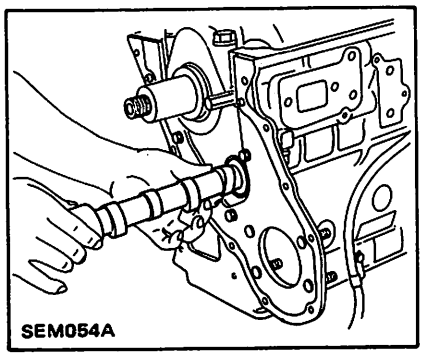

9. Remove valve lifters and **keep them in correct order.**
10. Remove crankshaft gear.
If it is difficult to extract crankshaft gear, use a suitable puller.
11. Remove front plate.

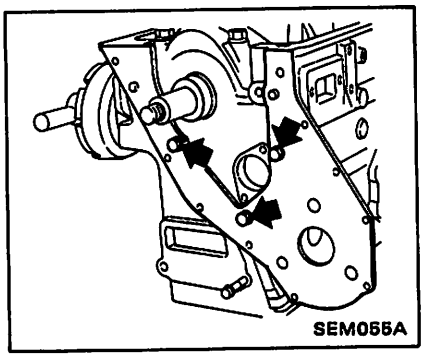

12. Remove oil jet bolts and then remove oil jet.

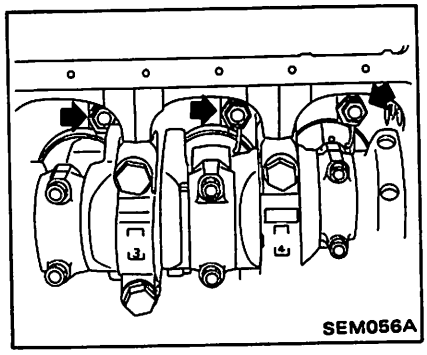

13. Pistons and connecting rod assembly
(1) Remove connecting rod caps and connecting rod bearings.
(2) Take pistons and connecting rods out of cylinder head side.

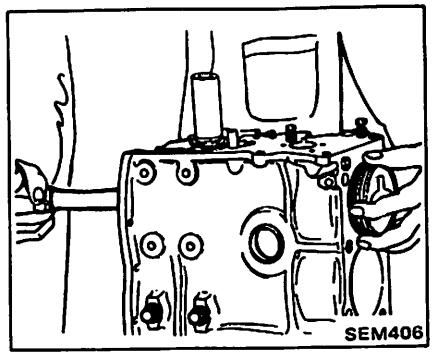

a. Piston can be easily removed by scraping carbon off top face of cylinder with a scraper.
b. Numbers are stamped on connecting rod and cap corresponding to each cylinder. Care should be taken to avoid a wrong combination including bearing.

14. Crankshaft
(1) Remove rear oil seal assembly.

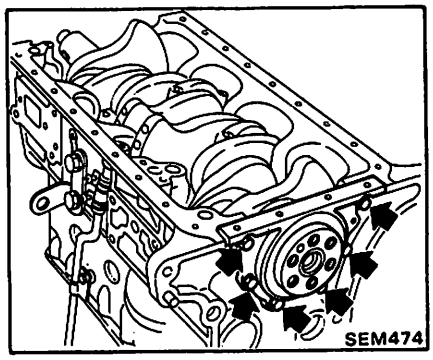

(2) Remove main bearing cap with bearing.

(3) Remove crankshaft and main bearings.
Keep main bearing in correct order.

DISASSEMBLING PISTON AND CONNECTING ROD

1. Remove piston ring with a ring remover.

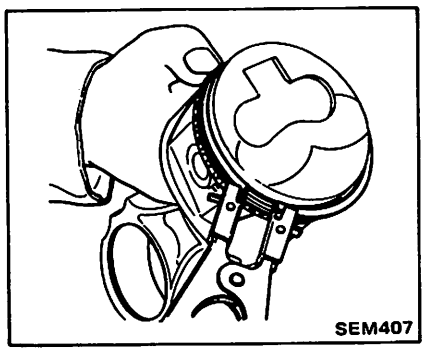

When removing piston rings, be careful not to scratch piston.

2. Remove piston snap rings, and immerse piston in oil of 80°C (176°F), and push out piston pin.

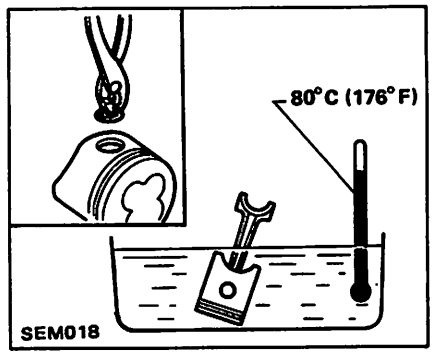

DISASSEMBLING CYLINDER HEAD

1. Remove glow plugs.

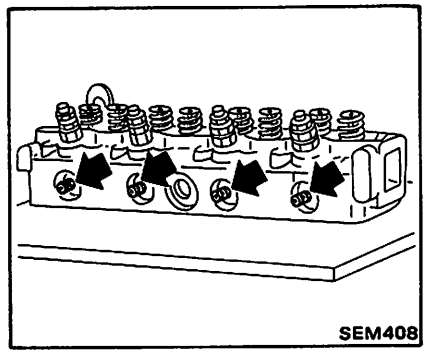

2. Remove valves, valve springs and relating parts using Tool.

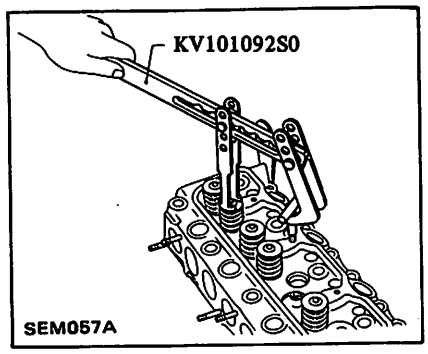

3. Remove valve stem seals.

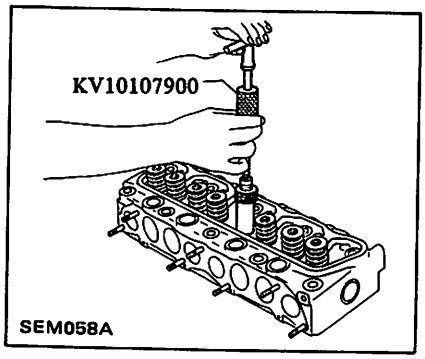

Keep valve spring and valves in correct order.

DISASSEMBLING ROCKER SHAFT

1. Remove cotter pin, washer and outer spring.
2. Remove valve rocker and rocker shaft bracket.

If it is difficult to remove rocker shaft bracket, immerse rocker shaft assembly in oil of 70°C (158°F) for a few minutes and then remove bracket.

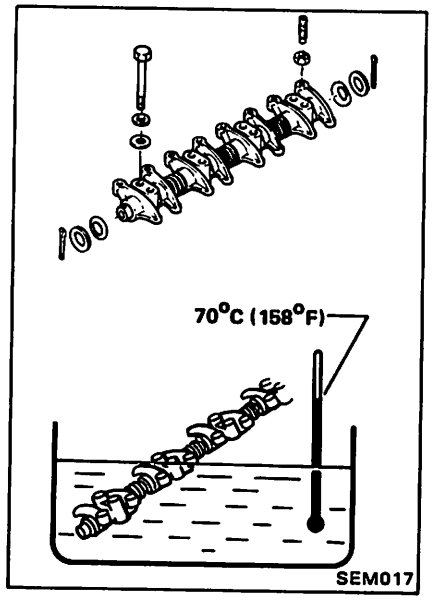

INSPECTION AND REPAIR

Clean all removed parts in cleaning oil, eliminating obstacles or dust/dirt from passages or holes. Also check these parts to make sure they are free from cracks or flaws.

CYLINDER HEAD AND VALVE

CHECKING CYLINDER HEAD MATING FACE

Measure the surface of cylinder head (on cylinder block side) for warpage.

Warpage of surface:
Less than
0.2 mm (0.008 in)

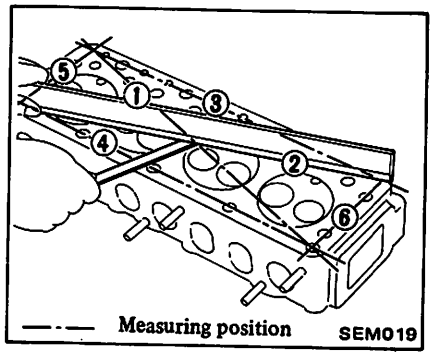

If beyond the specified limit, correct with a surface grinder.

Cylinder head height should be greater than 89.7 mm (3.531 in) after surface has been ground.

VALVE

1. Check each of the intake and exhaust valve for worn, damaged or deformed valve stems. Correct or replace the valve that is faulty.

For standard size of valve, refer to S.D.S.

2. Valve face or valve stem end surface should be refaced by using a valve grinder.

Valve face angle:
45° - 45°30′

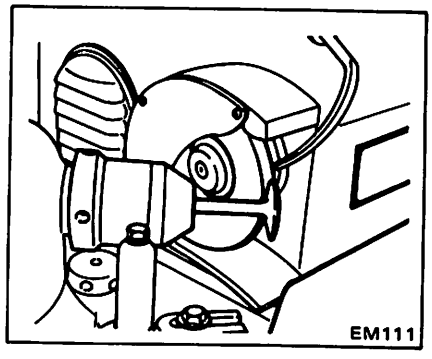

VALVE LIFTER AND PUSH ROD

Valve lifter

1. Check valve lifters for excessive wear on the face.
2. Replace with new ones if worn beyond repair.

a. Valve lifter end should be smooth.
b. Valve lifter to lifter hole clearance:

Standard
0.016 - 0.052 mm
(0.0006 - 0.0020 in)
Limit
Less than
0.10 mm (0.0039 in)

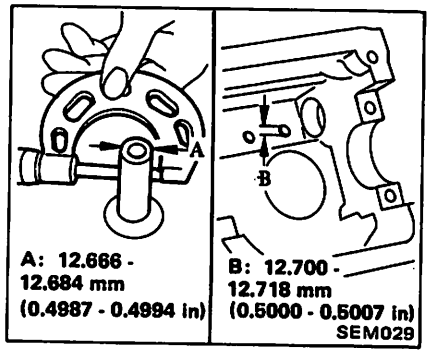

Push rod

1. Inspect push rod for excessive wear on the face.
2. Replace if worn or damaged beyond repair.
3. Check push rod for bend using a dial gauge.

Maximum allowable bend:
Less than
0.5 mm
(0.020 in)

VALVE SPRING

1. Check valve spring for squareness using a steel square and surface plate. If out of square ("S") is more than the specified limit, replace with a new one.

Out of square ("S"):
Less than
1.3 mm (0.051 in)

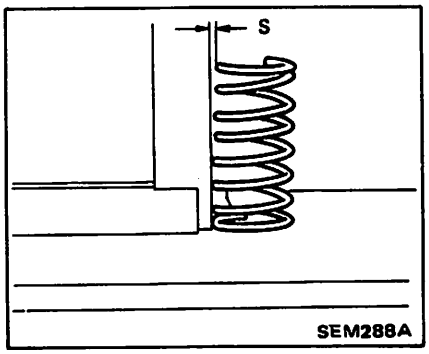

2. Measure free length and tension of spring. If measured value exceeds specified limit, replace spring.
Refer to S.D.S.

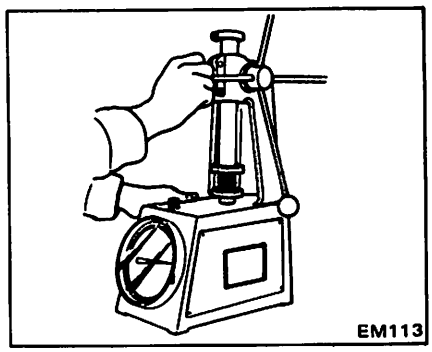

VALVE ROCKER ASSEMBLY

1. Check valve rockers, brackets and rocker shafts for scoring, wear or distortion. Replace if necessary.

2. Check clearance between valve rockers and rocker shaft. If specified clearance is exceeded, replace affected valve rockers or shafts.

Specified clearance:
Standard
0.02 - 0.05 mm
(0.0008 - 0.0020 in)
Limit
Less than
0.15 mm (0.0059 in)

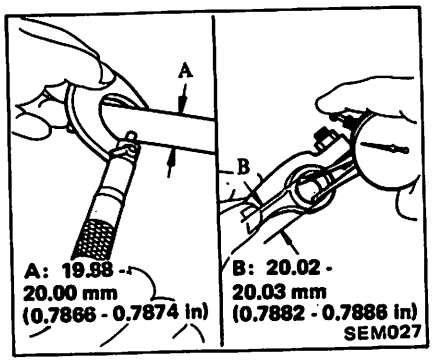

3. Check rocker shaft bend at its center. If bend is within specified limit, straighten it; and if it is greater than specified limit, replace rocker shaft.

Rocker shaft bend
(Total indicator reading):
Standard
0 - 0.1 mm (0 - 0.004 in)
Limit
Less than
0.3 mm (0.012 in)

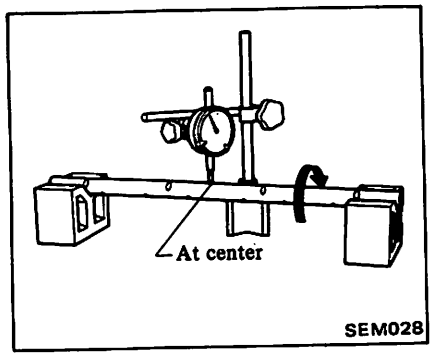

VALVE GUIDE

Measure the clearance between valve guide and valve stem. If the clearance exceeds the specified limit, replace the worn parts or both valve and valve guide. In this case, it is essential to determine if such a clearance has been caused by a worn or bend valve stem or by a worn valve guide.

Determining clearance

1. Precise method
(1) Measure diameter of valve stem in three places: top, center, and bottom. Refer to S.D.S.

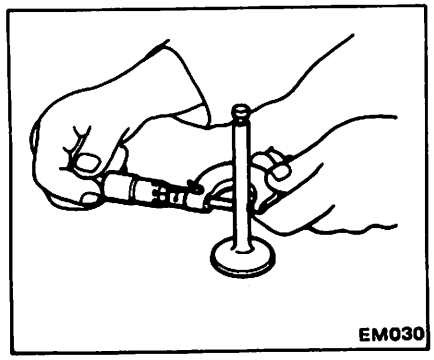

(2) Measure valve guide bore at center using telescope hole gauge.
(3) Subtract the highest reading of valve stem diameter from valve guide bore to obtain the stem to guide clearance.

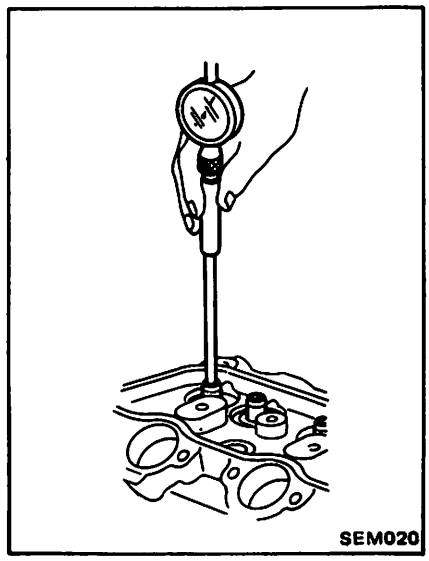

Stem to guide clearance:
Standard
Intake
0.015 - 0.045 mm
(0.0006 - 0.0018 in)
Exhaust
0.04 - 0.07 mm
(0.0016 - 0.0028 in)

Max. tolerance
Intake
Less than
0.15 mm (0.0059 in)
Exhaust
Less than
0.20 mm (0.0079 in)

2. Expedient method
Pry the valve in a lateral direction, and measure the deflection at stem tip with dial gauge.

Stem to guide clearance is 1/2 of measured value.

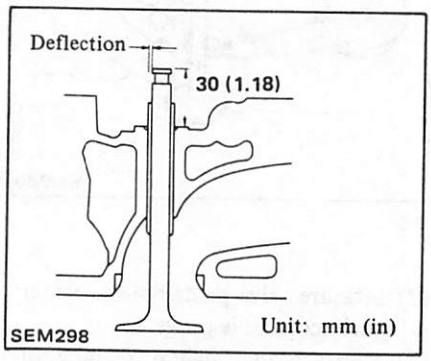

Valve should be moved in parallel with rocker arm. (Generally, a large amount of wear occurs in this direction.)

Replacement of valve guide

To remove old guides, use a press (under a 2-ton pressure) or a hammer, and Tool.
1. Drive them out using Tool.
Heating the cylinder head will facilitate the operation.

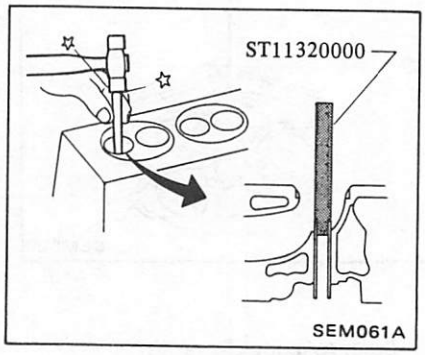

2. Install new guide onto cylinder head until the guide projects out 13 mm (0.51 in).

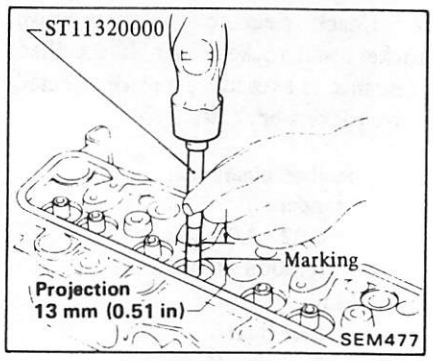

3. Ream the bore using Tool ST11032000.

Reaming bore:
8.000 - 8.015 mm
(0.3150 - 0.3156 in)

VALVE SEAT INSERTS

1. Check contact width and state of contact between valve and valve seat.

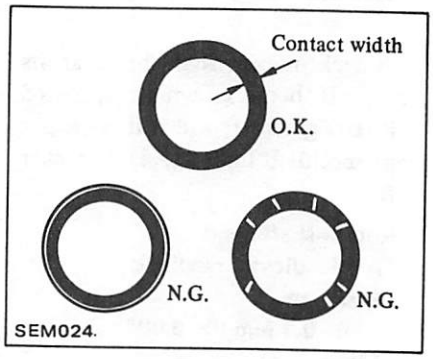

2. Reface valve seat with valve seat cutter.

Valve seat surface:
Refer to S.D.S.

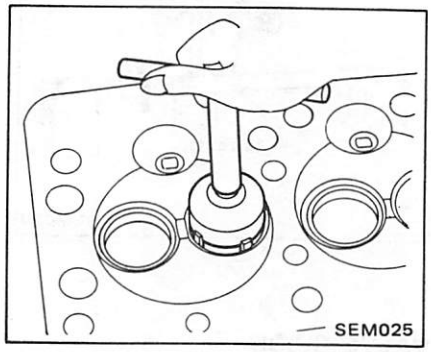

Valve seat insert replacement

1. Remove valve seats with Tool.

Place a copper seat between contact surface of Tool and cylinder head.

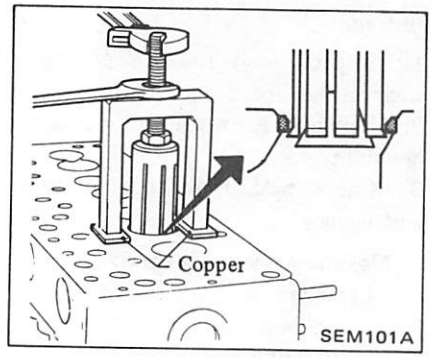

2. Install new valve seats.

Eliminate the old staked lugs (Exhaust side).

(1) Place new valve seats dry ice and allow it to cool for five minutes.

WARNING:
Do not touch cooled valve seats with bare hand.

(2) Heat cylinder head to 80°C (176°F).
(3) Install cooled valve seats on cylinder head with Tool.

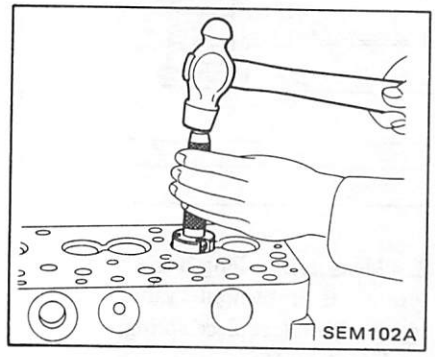

(4) Stake exhaust valve seat at five places with punch.

When staking valve seat, select different places than those staked before.

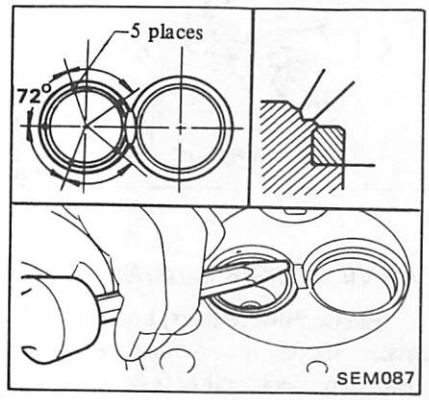

MEASURING CYLINDER HEAD-TO-VALVE DISTANCE

Measure distance from cylinder head surface to intake and exhaust valves. If specified distance is exceeded, replace valve(s) or valve seat(s).

Specified distance:
Standard
Intake
0.275 - 0.675 mm
(0.0108 - 0.0266 in)
Exhaust
0.305 - 0.695 mm
(0.0120 - 0.0274 in)
Limit
Less than 1.25 mm (0.0492 in) for intake and exhaust valves

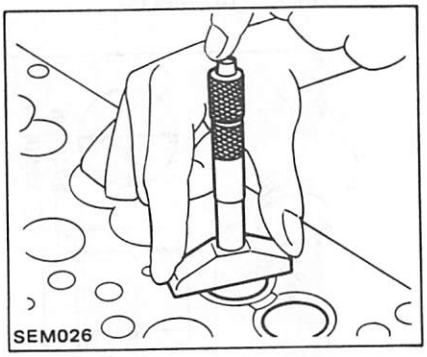

CAMSHAFT AND CAMSHAFT BUSHING

CAMSHAFT BUSHING CLEARANCE

Measure inside diameter of camshaft bushing with an inside dial gauge and outside diameter of camshaft journal with a micrometer.

Clearance between camshaft and bushing (A–B):
Standard
Front
0.024 - 0.102 mm
(0.0009 - 0.0040 in)
Center
0.037 - 0.115 mm
(0.0015 - 0.0045 in)
Rear
0.024 - 0.102 mm
(0.0009 - 0.0040 in)
Limit
Less than
0.15 mm (0.0059 in)

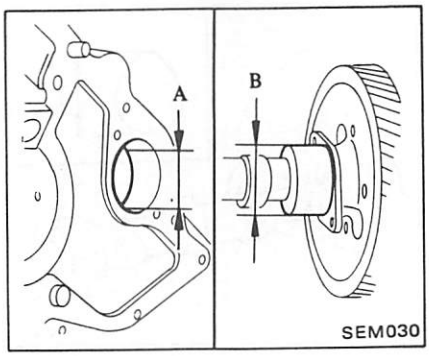

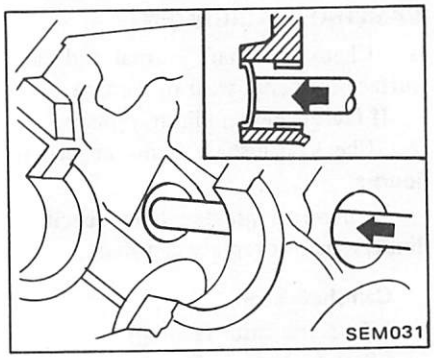

REPLACING CAMSHAFT BUSHING

1. Remove rear plug.

2. Remove camshaft bushings with Tool.

Remove bushing from front side of engine.

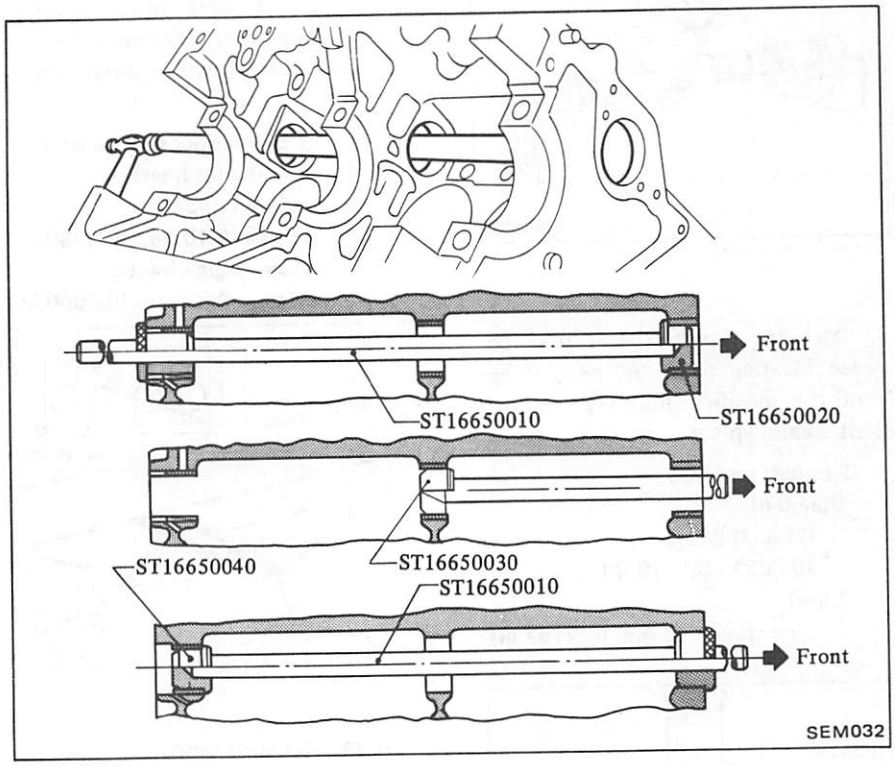

3. Install new bushings with Tool, following in the reverse order of removal.

a. Align cylinder block oil passage hole and bushing oil hole.
b. Install bushing with beveled end facing front.

4. Check camshaft bushing clearance.
5. Install new rear plug with a drift.

Apply liquid sealer.

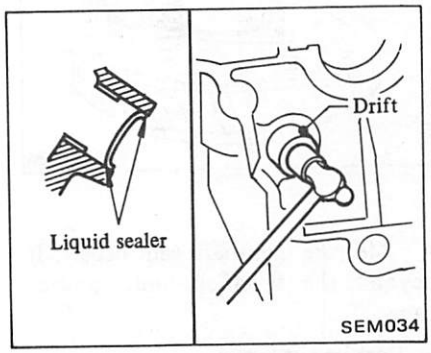

CAMSHAFT ALIGNMENT

1. Check camshaft journal and cam surface for bend, wear or damage.
   If fault is beyond limit, replace.
2. Check camshaft bend at center journal.
   If bend is greater than specified limit, repair or replace camshaft.

Camshaft bend
(Total indicator reading):
Standard
0 - 0.03 mm (0 - 0.0012 in)
Limit
Less than 0.06 mm (0.0024 in)

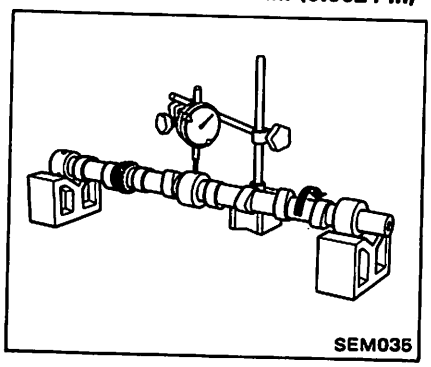

3. Measure camshaft end play between locating plate and gear. If beyond the specified limit, replace camshaft locating plate.

Camshaft end play:
Standard
0.08 - 0.28 mm
(0.0031 - 0.0110 in)
Limit
Less than 0.50 mm (0.0197 in)

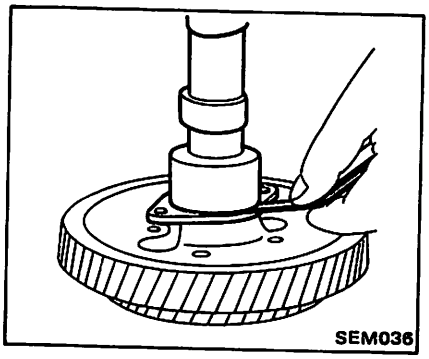

4. Measure camshaft cam height. If beyond the specified limit, replace camshaft.

Cam height limit:
36.8 mm (1.449 in)

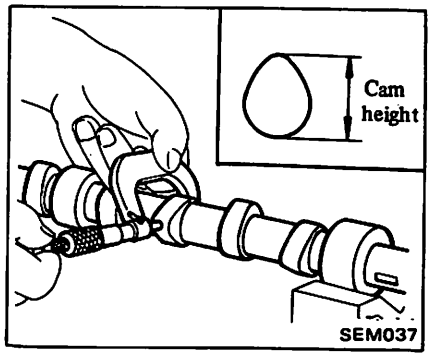

CYLINDER BLOCK

1. Check cylinder block for cracks or flaws.
2. Check cylinder block warpage with cylinder liner removed. If beyond the limit, correct with a surface grinder.

Warpage of cylinder block surface (Without cylinder liner):
Longitudinal direction
Less than 0.10 mm (0.0039 in)
Transverse angle direction
Less than 0.02 mm (0.0008 in)

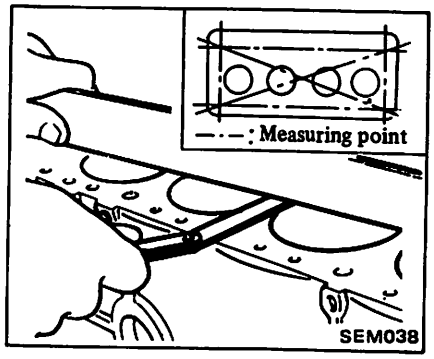

Surface grinding limit:
Height from upper face of cylinder block to crankshaft centerline should be greater than specified limit.

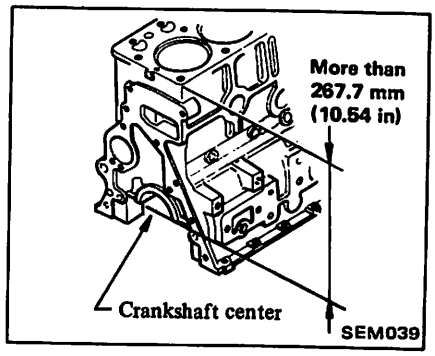

CYLINDER LINER

1. Check cylinder liner wear by means of bore diameter.

Cylinder liner bore wear limit:
Less than 0.3 mm (0.012 in)
Bore standard:
89.000 - 89.035 mm
(3.5039 - 3.5053 in)

2. Measure cylinder liner bore for out-of-round and taper with a bore gauge. If beyond the limit, replace cylinder liner.

Out-of-round (X–Y):
Standard
0.02 mm (0.0008 in)
Taper (A–B):
Standard
0.02 mm (0.0008 in)

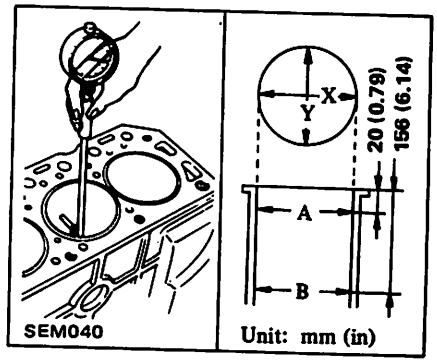

3. Check amount of projection of cylinder liner.

Cylinder liner projection:
Standard
0.02 - 0.09 mm
(0.0008 - 0.0035 in)

Deviation of each cylinder
Less than 0.05 mm (0.0020 in)

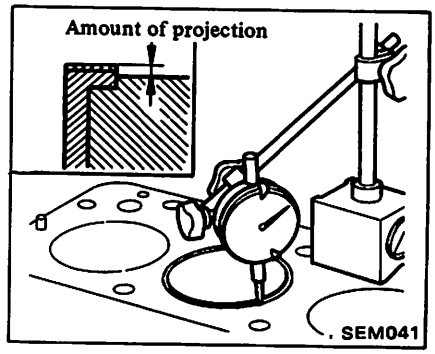

CYLINDER LINER REPLACEMENT

1. Remove cylinder liner with Tool.

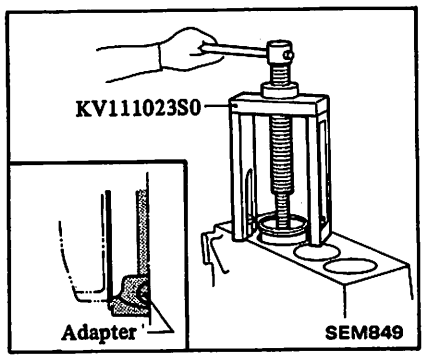

2. Install cylinder liner with Tool or press stand.

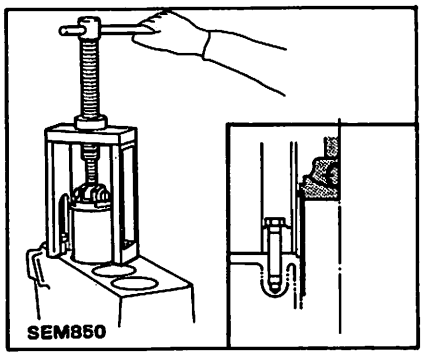

3. Check amount of projection of cylinder liner.

PISTON, PISTON PIN AND PISTON RINGS

1. Check for damage, scratches and wear. Replace if such a fault is detected.
2. Measure piston outside diameter at 70.0 mm (2.756 in) from piston head. If beyond the limit, replace piston.

Piston wear limit:
Less than 0.15 mm (0.0059 in)
Piston outside diameter:
Standard
88.905 - 88.945 mm
(3.5002 - 3.5018 in)

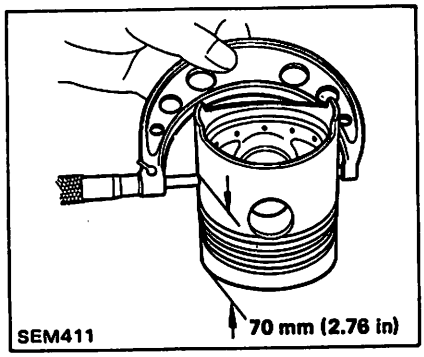

3. Measure Piston ring to ring groove clearance. If beyond the limit, replace piston rings or piston.

Piston ring to groove clearance (Side clearance):
Limit
No. 1 ring
Less than 0.5 mm (0.020 in)
No. 2 ring
Less than 0.3 mm (0.012 in)
No. 3 ring (Oil ring)
Less than 0.15 mm (0.0059 in)

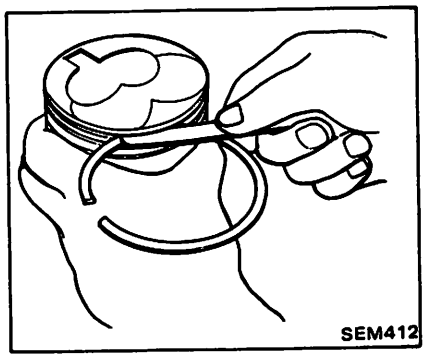

4. Measure piston ring end gap by securely placing piston ring in cylinder liner at position where cylinder bore wear is least. If beyond the maximum limit, replace piston ring.

Maximum ring gap:
1.5 mm (0.059 in)

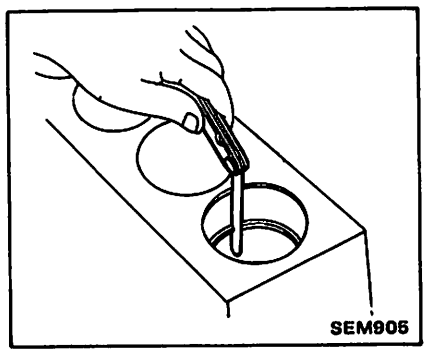

5. Measure piston pin to piston clearance. If beyond the limit, replace piston pin and piston.

Piston pin to piston clearance (A–B):
Limit
Less than 0.003 mm (0.0001 in)

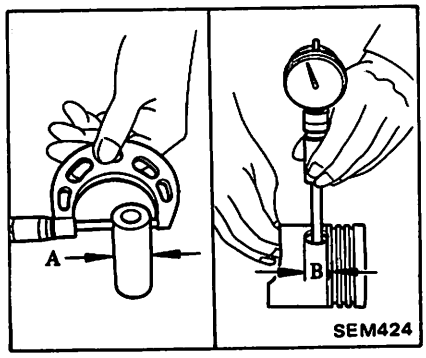

CONNECTING ROD

1. If a connecting rod has any flaw on both sides of the thrust face and the large end, correct or replace it.
2. Check connecting rod for bend or torsion using a connecting rod aligner. If bend or torsion exceeds the limit, correct or replace.

Bend and torsion [per 100 mm (3.94 in) length]:
Standard
Bend
Less than 0.05 mm (0.0020 in)
Torsion
Less than 0.05 mm (0.0020)

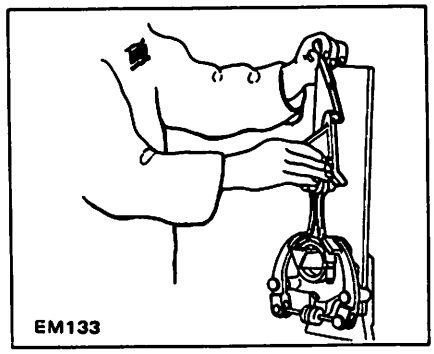

REPLACEMENT OF CONNECTING ROD SMALL END BUSHING

1. Drive in the small end bushing until it is flush with the end surface of the rod.

Be sure to align the oil holes.

2. After driving in the small end bushing, finish the bushing to the inside diameter specified by maintenance standard.

Small end bushing inside diameter:
26.025 - 26.038 mm
(1.0246 - 1.0251 in)

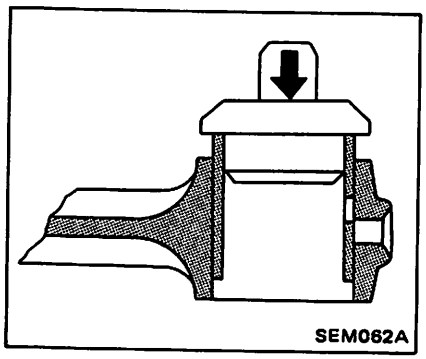

CRANKSHAFT

1. Check journal and crank pin for flaws or clogged oil passage. If necessary, replace crankshaft.
2. Check journal and crank pin for out-of-round and taper with a micrometer.
If beyond the specified value, replace or regrind crankshaft.

After regrinding crankshaft, use suitable undersize main bearing.

Out-of-round (X-Y):
Less than
0.02 mm (0.0008 in)
Taper (A-B):
Less than
0.02 mm (0.0008 in)

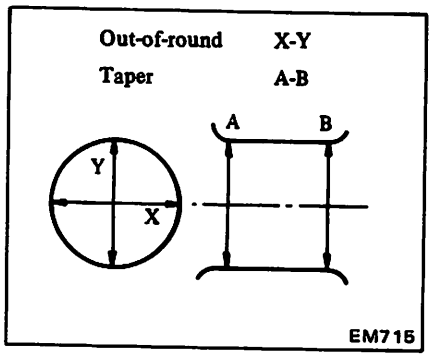

When regrinding crankshaft, finish fillets as follows:

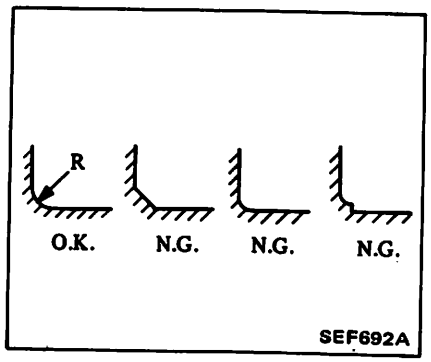

R Crank journal: 3.0 mm (0.118 in)
Crank pin: 3.5 mm (0.138 in)

Do not attempt to cut counterweight of crankshaft.

3. Check crankshaft bend on center journal. If beyond the specified value, replace or repair.

Crankshaft bend
(Total indicator reading):
Standard
0 - 0.06 mm
(0 - 0.0024 in)
Limit
Less than
0.2 mm (0.008 in)

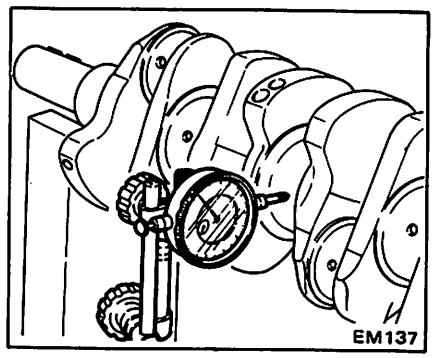

BEARINGS

MAIN BEARING OIL CLEARANCE

1. Thoroughly clean all bearings, journal and caps, and check for scratches, melt, scores or wear. Replace bearings, if any fault is detected.
2. Set main bearings on cylinder block and install crankshaft.
3. Set plastigage at each journal.

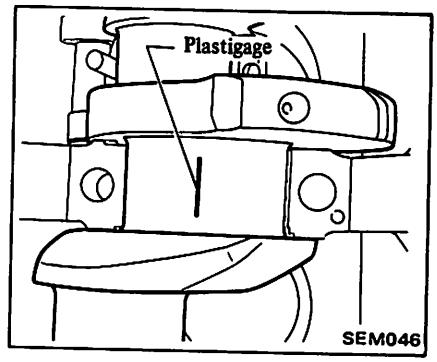

4. Install main bearing caps with main bearings and tighten.

Do not turn crankshaft.

Ⓣ : Main bearing cap bolt:
167 - 172 N·m
(17.0 - 17.5 kg-m,
123 - 127 ft-lb)

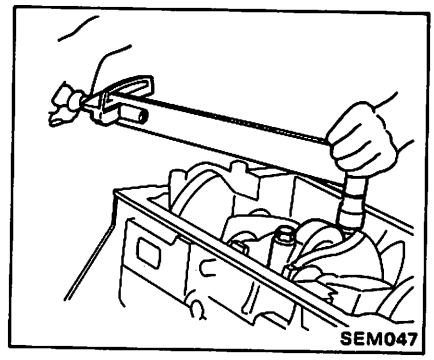

5. Remove cap and measure main bearing oil clearance with plastigage. If clearance is not within specification, replace bearings.

Main bearing oil clearance:
Standard
0.035 - 0.093 mm
(0.0014 - 0.0037 in)
Limit
Less than
0.15 mm (0.0059 in)

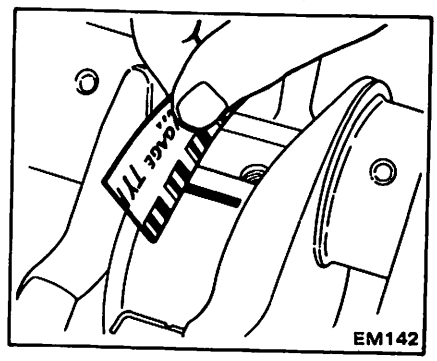

CONNECTING ROD BEARING OIL CLEARANCE

Measure connecting rod bearing oil clearance in same manner as main bearing oil clearance.

If clearance is not within specification, replace bearings.

Do not turn connecting rod or crankshaft.

Ⓣ : Connecting rod cap:
67 - 71 N·m
(6.8 - 7.2 kg-m,
49 - 52 ft-lb)

Connecting rod bearing oil clearance:
Standard
0.035 - 0.087 mm
(0.0014 - 0.0034 in)
Limit
Less than
0.15 mm (0.0059 in)

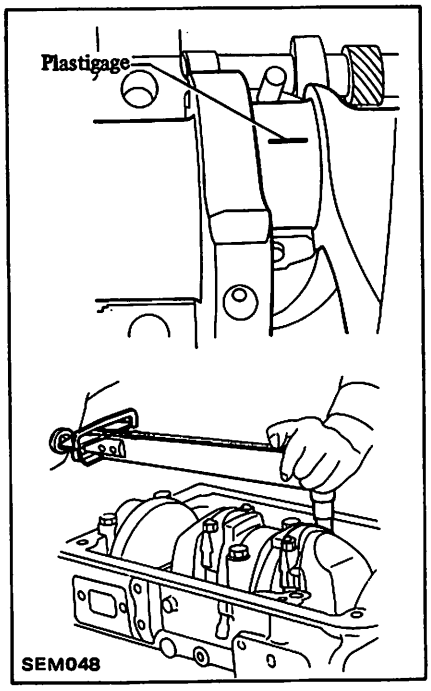

CRANKSHAFT PILOT BUSHING

CRANKSHAFT PILOT BUSHING REPLACEMENT

1. Pull out bushing with Tool.

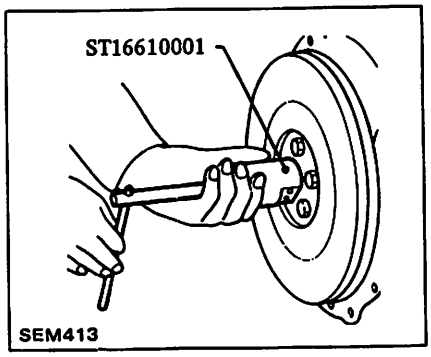

2. Insert pilot bushing until distance between flange end and bushing is specified value.

Distance "A":
Approx. 3.5 mm (0.138 in)

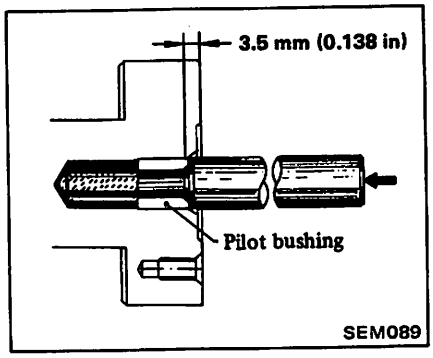

a. Do not oil bushing.
b. Do not insert excessively.

COMBUSTION CHAMBER

Check combustion chamber for cracks and other damage. If necessary, replace.

COMBUSTION CHAMBER REPLACEMENT

Usually combustion chamber should not be removed.

1. Remove combustion chamber so that cylinder head cannot be damaged.

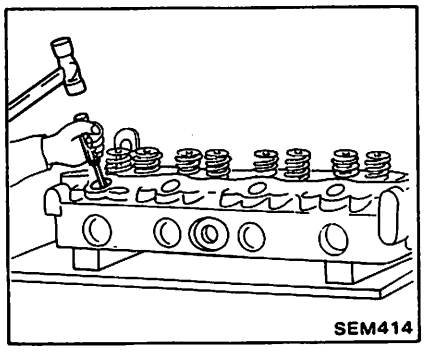

2. Install combustion chamber.
(1) Cool combustion chamber with dry ice for approximately 5 to 10 minutes.

WARNING:
Do not touch cooled combustion chamber with bare hand.

(2) Align combustion chamber knock pin with cylinder head notch, and drive in combustion chamber **with a soft hammer.**

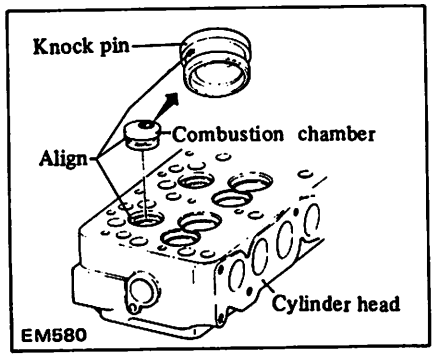

3. Check amount of protrusion of combustion chamber.

FLYWHEEL

1. Check ring gear for wear or damage. If worn or damaged excessevely, replace.

Removal and installation of ring gear requires use of hydraulic press. Heat ring gear to 180 to 200°C (356 to 392°F), thus facilitating removal and installation.

Do not heat ring gear to more than 250°C (482°F).

2. If clutch contact surface of flywheel is worn, damaged or roughened beyond limit, replace.

3. Check flywheel runout before disassembling and after assembling. If beyond the limit, replace flywheel.

Runout (Total indicator reading):
Less than 0.15 mm (0.0059 in)

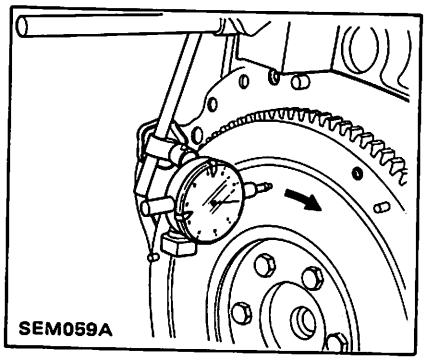

GEAR TRAIN

CAMSHAFT DRIVE GEAR

1. If gear tooth and key have scratches or are excessively worn, replace gear and key.
2. Check gear train backlash before disassembling and after assembling. If beyond the limit, replace gear.

Backlash:
Standard
0.07 - 0.20 mm
(0.0028 - 0.0079 in)
Limit
0.30 mm (0.0118 in)

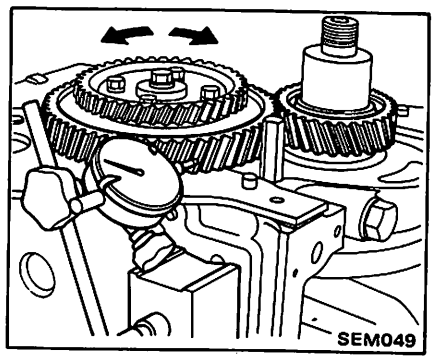

INJECTION PUMP DRIVE GEAR

Check gear backlash before disassembling and after assembling. If beyond the limit, replace idler gear or injection pump drive gear.

Gear backlash:
Standard
0.07 - 0.20 mm
(0.0028 - 0.0079 in)
Limit
0.30 mm (0.0118 in)

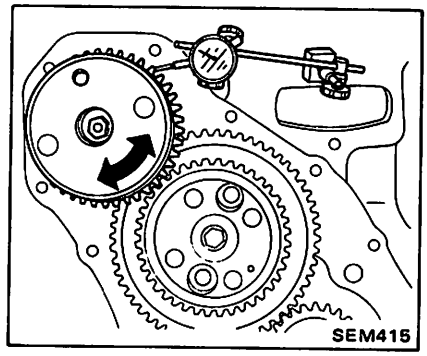

FRONT PLATE

Check front plate for warpage. If not within the limit, make flat or replace front plate.

Warpage limit:
0.2 mm (0.008 in)

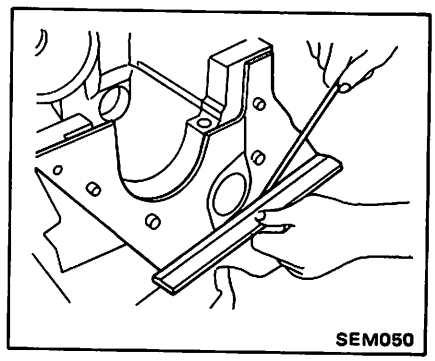

ENGINE ASSEMBLY

PRECAUTIONS

1. When installing sliding parts such as bearings, be sure to apply engine oil on the sliding surfaces.
2. Use new packing and oil seals.
3. Be sure to follow the specified order and tightening torque.

ASSEMBLING CYLINDER HEAD

1. Install valve and valve spring.

(1) Install new valve stem seal with Tool.

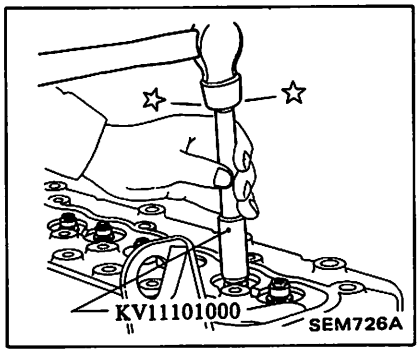

(2) Install valve, valve spring, valve spring retainer and valve spring collet by using Tool.

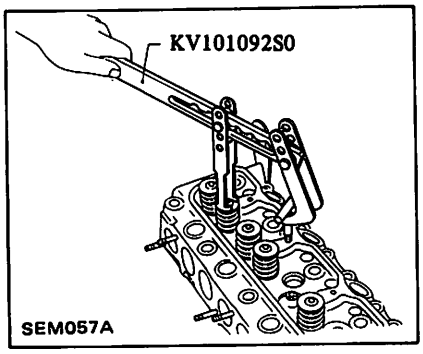

a. Install valve spring (uneven pitch type) with its narrow pitch side (red painted) at cylinder head side.

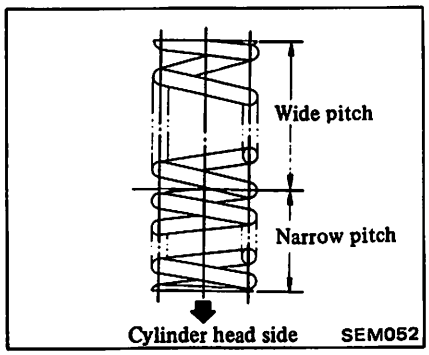

b. When installing valve, apply engine oil on the valve stem and lip of valve stem oil seal.

c. Check whether the valve face is free of foreign matter.

2. Install glow plugs.

Ⓣ : Glow plug
15 - 20 N·m
(1.5 - 2.0 kg-m,
11 - 14 ft-lb)

ASSEMBLING PISTON AND CONNECTING ROD

Assemble pistons, piston pins and connecting rods of the designated cylinders.

a. Immerse piston in oil of 80°C (176°F), and push in piston pin. Install snap ring.

b. Install connecting rod and piston so that leaf type combustion chamber on piston head is opposite the matching marks on connecting rod and cap.

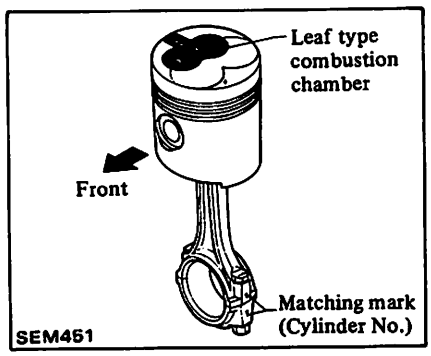

c. Install so that connecting rod big end is offset with respect to piston, and that this offset is forward on No. 1 and No. 3 cylinder with respect to engine and rearward on No. 2 and No. 4 cylinders.
Additionally, the leaf type combustion chamber on piston head must be at right side of engine.

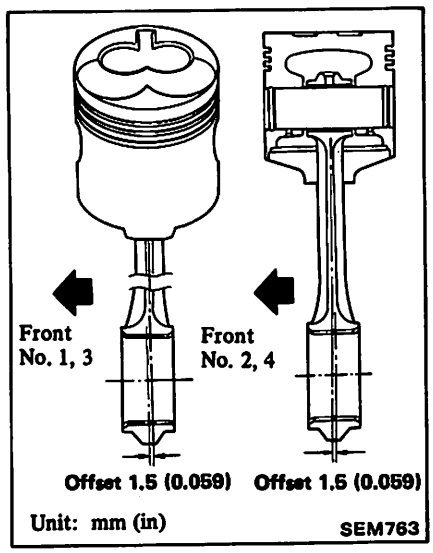

d. Install piston ring so that mark stamped on ring faces upward.

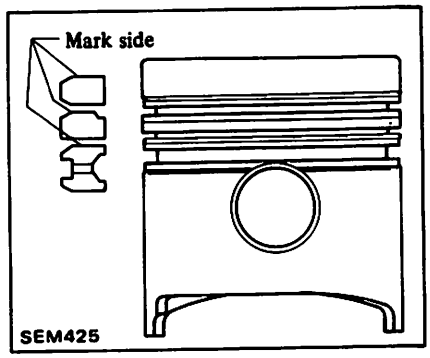

ASSEMBLING ENGINE OVERALL

INSTALLING INTERNAL PARTS

First, mount cylinder block on work stand (refer to Engine Disassembly).
Then install following parts:

1. Install front plate, and measure front plate warpage.

2. Install valve lifter with engine oil coated.
3. Install camshaft assembly with engine oil applied to bushing.
4. Crankshaft
(1) Set upper main bearings at the proper position on cylinder block.

a. Install bearing so that side with oil groove is on cylinder block side and side without oil groove is on cap side.

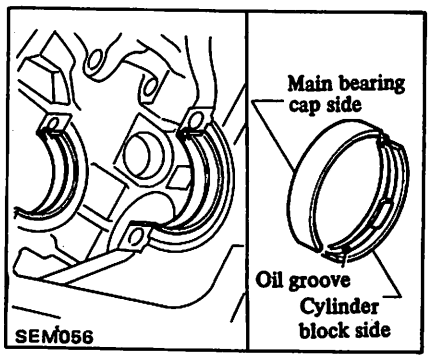

b. Only apply engine oil to inside of bearing.

(2) Apply engine oil to crankshaft journal and pin and install crankshaft.
(3) Install main bearing caps.
(4) Install rear oil seal assembly.

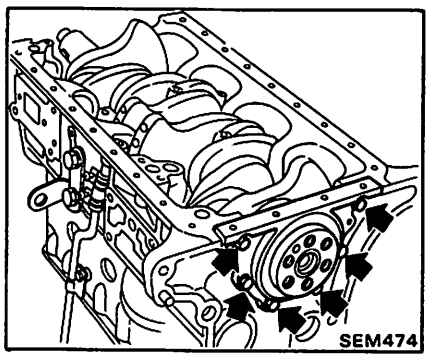

(a) Install main bearing cap so that "F" mark is at front side of vehicle.

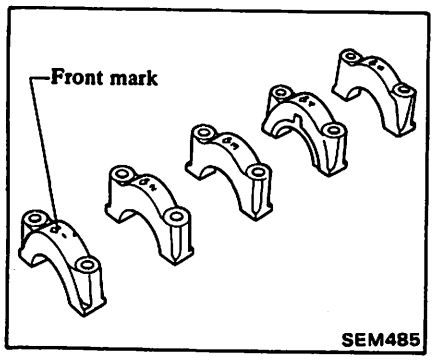

(b) Tighten bearing cap bolts gradually in stages, starting from two to three separate stages, from center bearing and moving outward in sequence.

Ⓣ: Main bearing cap bolt:
167 - 172 N·m
(17.0 - 17.5 kg-m,
123 - 127 ft-lb)

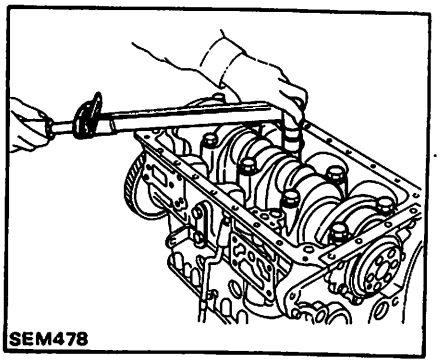

(5) Install crankshaft thrust washer at the 4th journal from front.

Install thrust washer so that oil groove can face crankshaft.

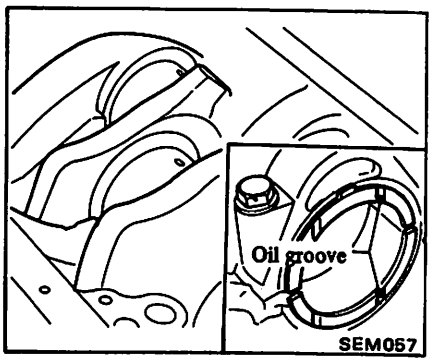

(6) Measure crankshaft end play.
If not within specification, replace with proper thrust washer.

Crankshaft end play:
Standard
0.06 - 0.14 mm
(0.0024 - 0.0055 in)
Limit
Less than 0.4 mm (0.016 in)
Thrust washer oversize:
0.2 mm (0.008 in) and
0.4 mm (0.016 in) oversize

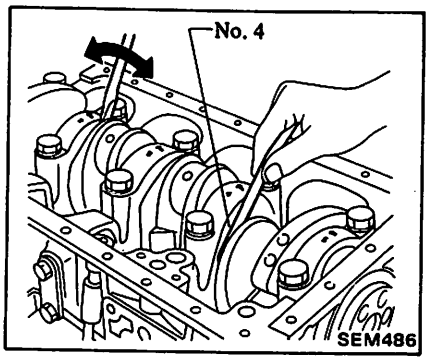

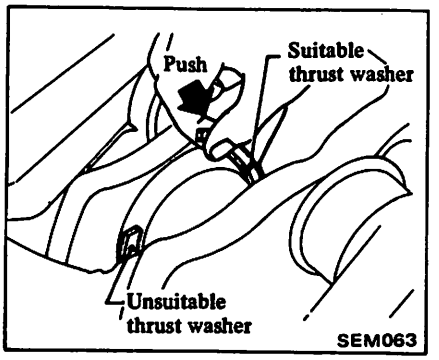

5. Install piston assembly with Tool.
(1) Install piston assembly by aligning matching mark on connecting rod big end.

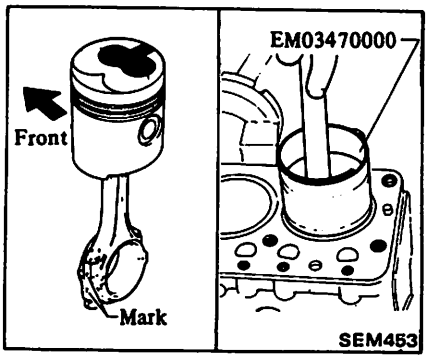

(2) Tighten connecting rod bearing cap nut.

Ⓣ: Connecting rod bearing cap:
67 - 71 N·m
(6.8 - 7.2 kg-m,
49 - 52 ft-lb)

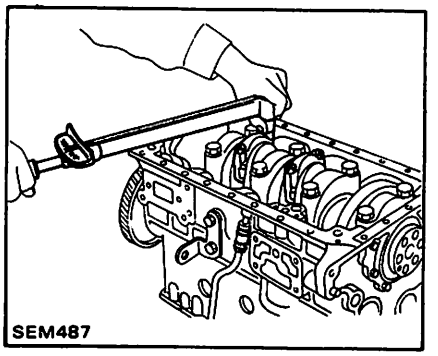

(3) Measure clearance between connecting rod big end and web of crankshaft.
If beyond the specified value, replace connecting rod.

Connecting rod thrust clearance:
0.1 - 0.2 mm
(0.004 - 0.008 in)

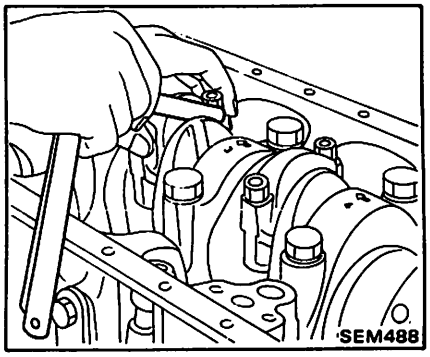

6. Install oil pump assembly.
7. Measure piston top clearance.
(1) Set piston to T.D.C.
(2) Measure clearance between top of piston and cylinder block with dial gauge. Measure clearance at front and rear of each piston.

Piston top clearance:
Standard
–0.27 - +0.08 mm
(–0.0106 - +0.0031 in)
Limit
–0.4 - +0.3 mm
(–0.016 - +0.012 in)

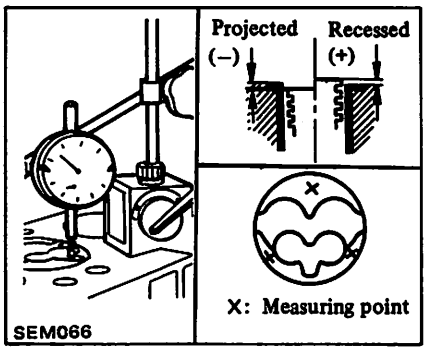

8. Install crankshaft gear.
(1) Install crankshaft gear through key by aligning crank gear and camshaft gear matching marks.

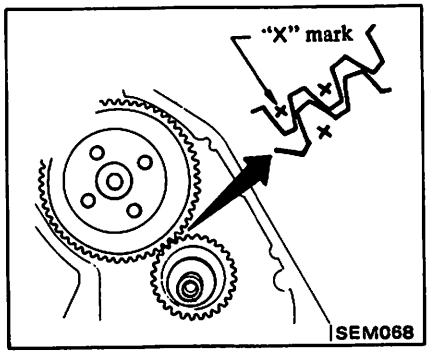

(2) Measure gear backlash. Refer to Inspection and Repair.
9. Install oil jet so that it can face each gear.

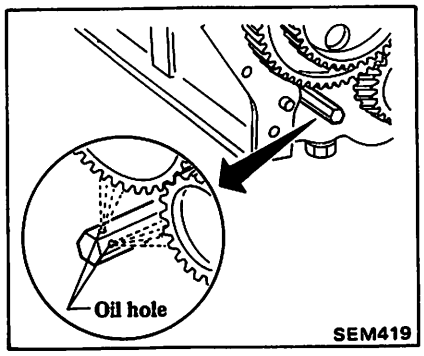

10. Install rear engine plate and flywheel.
11. Install Tool to prevent crankshaft from rotating.

Ⓣ: Flywheel bolt
147 - 167 N·m
(15 - 17 kg-m,
108 - 123 ft-lb)

12. Install oil pan with new gasket coated with liquid sealant.

INSTALLING CYLINDER HEAD

1. Install new cylinder head gasket.

Securely install rubber rings into water and oil holes.

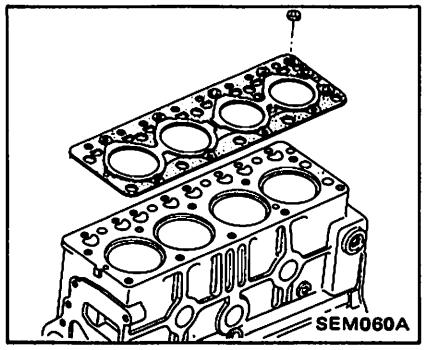

Be sure to install gasket with TOP mark facing upward.

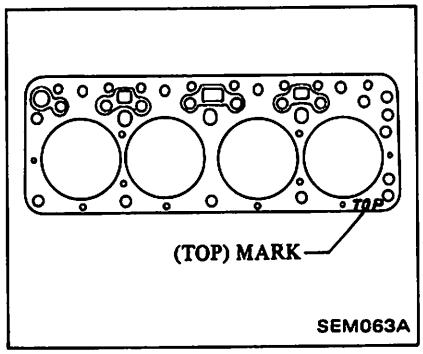

2. Install cylinder head by accommodating knock pin of cylinder block.
3. Tighten cylinder head bolts in the sequence shown below. Install cylinder head.

(1) Tighten main bolts to 59 - 78 N·m (6 - 8 kg-m, 43 - 58 ft-lb).
(2) Tighten sub bolts to 20 - 29 N·m (2 - 3 kg-m, 14 - 22 ft-lb).
(3) Tighten main bolts to 118 - 127 N·m (12 - 13 kg-m, 87 - 94 ft-lb).
(4) Tighten sub bolts to 44 - 54 N·m (4.5 - 5.5 kg-m, 33 - 40 ft-lb).

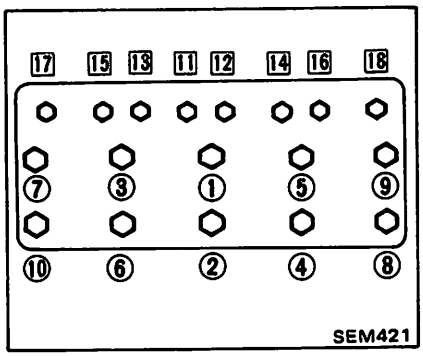

After installing engine in the vehicle, warm up engine and retighten cylinder head bolts.

4. Install push rod.

Turn push rod and make sure that it is within spherical area of valve lifter.

5. Install rocker shaft assembly.

a. Tighten in two or three stages outwardly from center bracket.
b. Fully loosen rocker arm screws.

Ⓣ: Rocker shaft bolt
20 - 25 N·m
(2.0 - 2.5 kg-m,
14 - 18 ft-lb)

INSTALLING FRONT PARTS

1. Install front cover with new gasket and new front oil seal.

Ⓣ : Front cover fixing bolt
M6
4 - 6 N·m
(0.4 - 0.6 kg-m,
2.9 - 4.3 ft-lb)
M8
10 - 13 N·m
(1.0 - 1.3 kg-m,
7 - 9 ft-lb)

2. Install crank pulley.

Ⓣ : Crank pulley
294 - 324 N·m
(30 - 33 kg-m,
217 - 239 ft-lb)

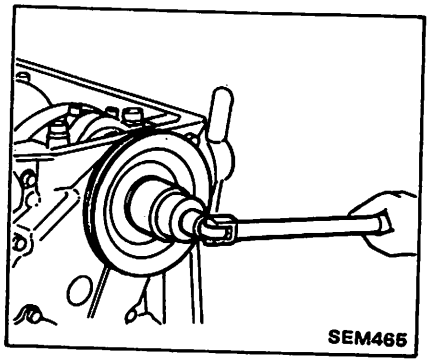

3. Install water pump with new gasket.
4. Install thermostat housing with new gasket.

INSTALLING SIDE PARTS

1. Install oil pump spindle by aligning grooves of camshaft, oil pump, drive gear and oil pump drive shaft.

Face oil hole in support toward cylinder block side and install support with new O-ring.

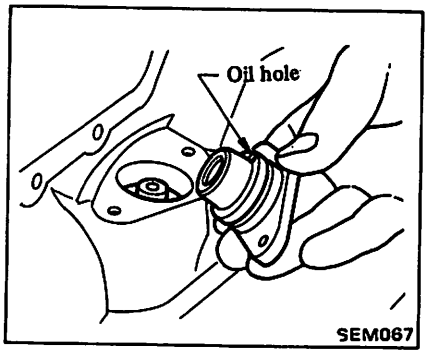

2. Connect oil cooler hose to cylinder head.
3. Install glow plug harness.
4. Align front cover and crank pulley mark for setting No. 1 piston at T.D.C.

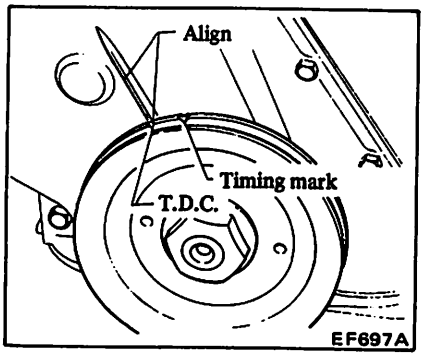

5. Install injection pump assembly. Refer to Section EF.
6. Injection nozzle and tube.
(1) Install new washer and injection nozzle.

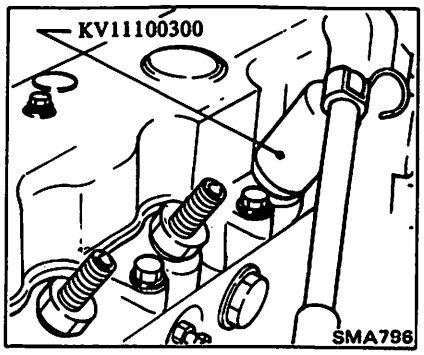

(2) Install spill tube.

Ⓣ : Spill tube fixing nut
39 - 49 N·m
(4 - 5 kg-m,
29 - 36 ft-lb)

(3) Install injection tube.

Ⓣ : Injection tube flare nut
29 - 34 N·m
(3.0 - 3.5 kg-m,
22 - 25 ft-lb)

7. Temporarily install oil cooler, oil filter bracket and oil pipe, and then gradually tighten them.
8. Vacuum tube assembly.
9. Install diesel pump controller.
10. Connect diesel pump controller connecting rod to injection pump lever.

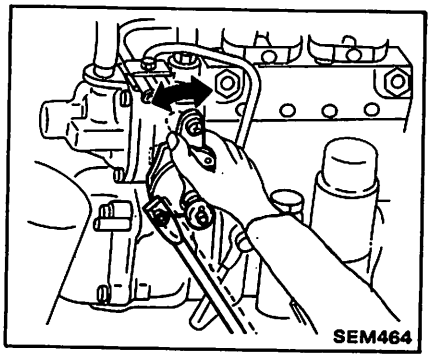

After installation, make sure there is play in pump lever.

11. Adjust valve clearance. Refer to Section MA.
12. Install rocker cover with new gasket.

Ⓣ : Rocker cover bolt
10 - 13 N·m
(1.0 - 1.3 kg-m,
7 - 9 ft-lb)

13. Dismount engine from work stand and remove engine attachment.
14. Install rear and left side parts.

- Breather assembly
- Intake and Exhaust manifold

Ⓣ : Intake and exhaust manifolds
15 - 18 N·m
(1.5 - 1.8 kg-m,
11 - 13 ft-lb)

- Alternator bracket

Ⓣ : Bracket bolt
26 - 36 N·m
(2.7 - 3.7 kg-m,
20 - 27 ft-lb)

- Alternator assembly and fan belt

Ⓣ : 11 - 14 N·m
(1.1 - 1.4 kg-m,
8 - 10 ft-lb)

- Engine mountings

Ⓣ : 53 - 71 N·m
(5.4 - 7.2 kg-m,
39 - 52 ft-lb)

- Starter motor
- Clutch cover assembly Refer to Section CL.
- Transmission assembly Refer to Section MT.

ENGINE TUNE-UP

After installing engine in vehicle, tune up engine.

Refer to Section MA.

- Fill engine oil and coolant to the specified levels.
- Bleed fuel system.
- Adjust drive belt deflection.
- Adjust injection timing.
- Adjust idle speed.
- Adjust valve clearance.

SERVICE DATA AND SPECIFICATIONS (S.D.S.)

GENERAL SPECIFICATIONS

Engine model	Z20	Z24	SD25	
			Non-California	California
Classification	Gasoline		Diesel	
Cylinder arrangement	4, in-line			
Displacement cm² (cu in)	1,952 (119.11)	2,389 (145.78)	2,488 (151.82)	
Bore x stroke mm (in)	85 x 86 (3.35 x 3.39)	89 x 96 (3.50 x 3.78)	89 x 100 (3.504 x 3.937)	
Valve arrangement	O.H.C.		O.H.V.	
Firing order	1-3-4-2			
Number of piston rings Compression	2			
Oil	1			
Number of main bearings	5			
Compression ratio	9.4	8.3	21.4	21.9

Valve timing

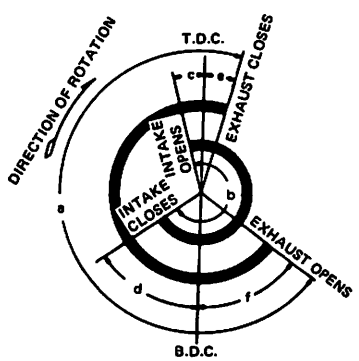

EM120

Unit: degree

	a	b	c	d	e	f
Z20, Z24	248	248	16	52	14	54
SD25	275	275	28	67	28	67

INSPECTION AND ADJUSTMENT

CYLINDER HEAD

Z20, Z24

Unit: mm (in)

	Standard	Limit
Head surface flatness	Less than 0.05 (0.0020)	0.1 (0.004)

SD25

Unit: mm (in)

	Standard	Limit
Longitudinal direction	Less than 0.10 (0.0039)	0.20 (0.0079)
Transverse direction	Less than 0.05 (0.0020)	

VALVE

Unit: mm (in)

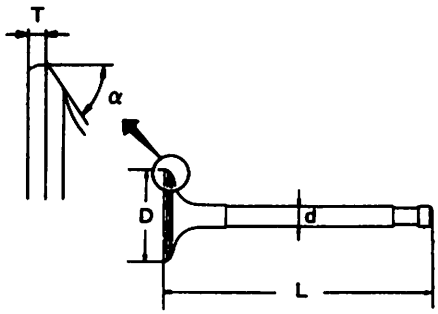

SEM188

	Z20 & Z24	SD25	
	Standard	Standard	Service
Valve head diameter "D" Intake	42 (1.65)	40 (1.57)	
Exhaust	38 (1.50)	34 (1.34)	
Valve length "L" Intake	124.1 - 124.4 (4.8858 - 4.8976)	117 (4.61)	
Exhaust	125.1 - 125.4 (4.9252 - 4.9370)		
Valve stem diameter "d" Intake	7.965 - 7.980 (0.3136 - 0.3142)	7.970 - 7.985 (0.3138 - 0.3144)	–
Exhaust	7.945 - 7.960 (0.3128 - 0.3134)	7.945 - 7.960 (0.3128 - 0.3134)	–
Valve seat angle "α"	45°30'	45° - 45°30'	
Valve margin "T" limit	0.50 (0.020)	1.5 (0.059)	
Valve stem and surface grinding limit	0.50 (0.020)	0.2 (0.008)	
Valve clearance (Hot)	0.30 (0.012)	0.35 (0.014)	

Valve spring

	Z20	Z24	SD25
Free length mm (in) Outer	49.77 (1.9594)		50.35 (1.9823)
Inner	44.10 (1.7362)		
Pressure height mm/N (mm/kg, in/lb) Outer	30/512.9 (30/52.3, 1.18/115.3)		31.1/657 (31.1/67, 1.224/148)
Inner	25/225 (25/26, 0.98/57)		
Assembly height mm/N (mm/kg, in/lb) Outer	40/225.6 (40/23.0, 1.57/50.7)		39.7/324 (39.7/33, 1.563/73)
Inner	35/107.9 (35/11.0, 1.38/24.3)		
Out of square mm (in) Outer	2.2 (0.087)		1.3 (0.051)
Inner	1.9 (0.075)		

Valve guide

Z20 & Z24

	Standard	Service
Valve guide Outer diameter	12.023 - 12.034 (0.4733 - 0.4738)	12.223 - 12.234 (0.4812 - 0.4817)
Valve guide Inner diameter (Finished size)	8.000 - 8.018 (0.3150 - 0.3157)	
Cylinder head valve guide hole diameter	11.985 - 11.996 (0.4718 - 0.4723)	12.185 - 12.196 (0.4797 - 0.4802)
Interference fit of valve guide	0.027 - 0.049 (0.0011 - 0.0019)	

	Standard	Limit
Stem to guide clearance Intake	0.020 - 0.053 (0.0008 - 0.0021)	0.1 (0.004)
Exhaust	0.040 - 0.073 (0.0016 - 0.0029)	
Stem end deflection	–	0.2 (0.008)

SD25

Unit: mm (in)

	Standard	Service
Valve guide outside diameter	12.033 - 12.044 (0.4737 - 0.4742)	–
Valve guide inner diameter (Finished size)	8.00 - 8.015 (0.3150 - 0.3156)	
Cylinder head valve guide hole diameter	12.00 - 12.011 (0.4724 - 0.4729)	–
Interference fit of valve guide	0.022 - 0.044 (0.0009 - 0.0017)	

		Standard	Max. tolerance
Stem to guide clearance	Intake	0.015 - 0.045 (0.0006 - 0.0018)	0.15 (0.0059)
	Exhaust	0.04 - 0.07 (0.0016 - 0.0028)	0.20 (0.0079)

Valve lifter

SD25

Unit: mm (in)

	Standard	Limit
Valve lifter outer diameter	12.666 - 12.684 (0.4987 - 0.4994)	–
Valve lifter hole (cylinder head inner diameter)	12.700 - 12.718 (0.5000 - 0.5007)	–
Clearance	0.016 - 0.052 (0.0006 - 0.0020)	0.10 (0.0039)

Push rod

SD25

Unit: mm (in)

Push rod bend	Less than 0.5 (0.020)

Valve seat

Unit: mm (in)

INTAKE

Z20

Standard

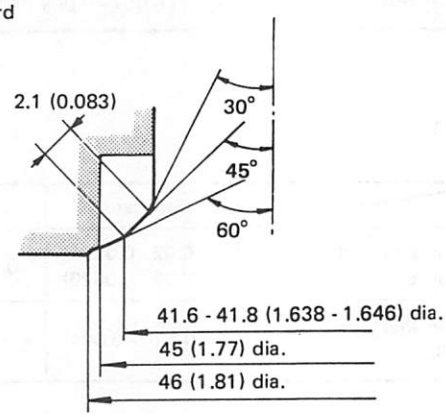

Z24

Standard

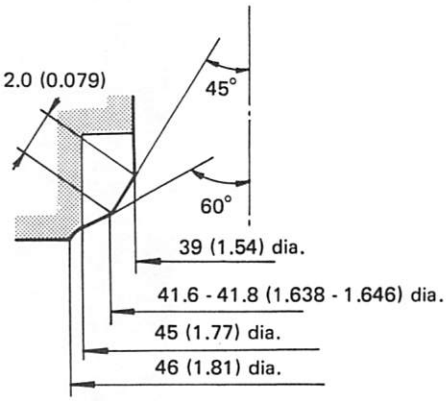

Z20

0.5 (0.020) oversize

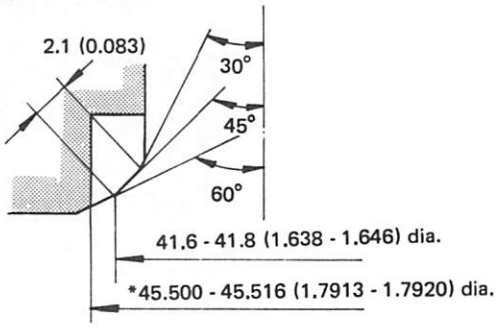

Z24

0.5 (0.020) oversize

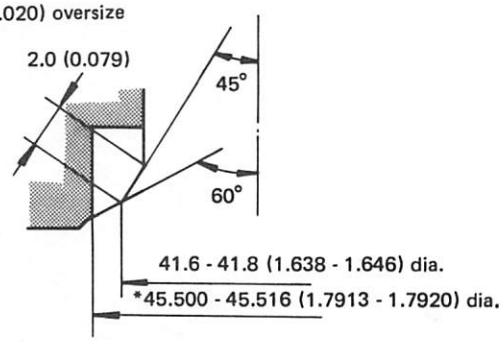

*Cylinder head machining data

SEM044A

Unit: mm (in)

EXHAUST

Z24 & Z20

Standard

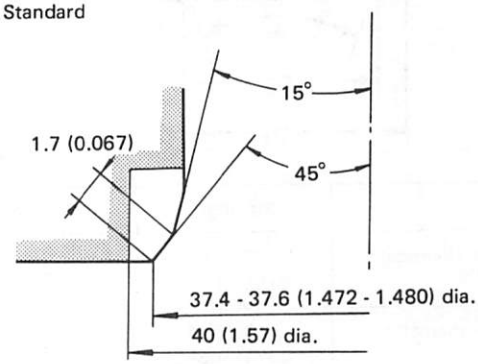

0.5 (0.020) oversize

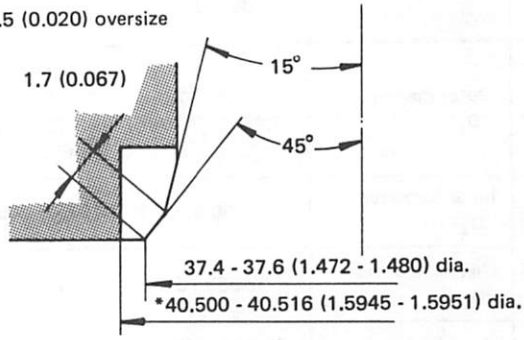

*Cylinder head machining data

SEM045A

SD25

Unit: mm (in)

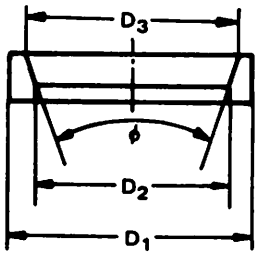

EM733

		Standard	Service
Intake	Outer diameter "D_1"	41.035 - 41.045 (1.6155 - 1.6159)	–
	Inner diameter "D_2"	34.9 - 35.1 (1.374 - 1.382)	–
	Diameter of seat "D_3"	38.95 - 39.05 (1.5335 - 1.5374)	–
	Valve seat face angle "ϕ"	89° - 90°	–
Exhaust	Outer diameter "D_1"	37.035 - 37.045 (1.4581 - 1.4585)	37.235 - 37.245 (1.4659 - 1.4663) / 37.435 - 37.445 (1.4738 - 1.4742)
	Inner diameter "D_2"	30.4 - 30.6 (1.197 - 1.205)	
	Diameter of seat "D_3"	32.950 - 33.050 (1.2972 - 1.3012)	
	Cylinder head valve seat diameter	36.995 - 37.010 (1.4565 - 1.4571)	–
	Valve seat face angle "ϕ"	89° - 90°	

Unit: mm (in)

	Standard	Limit
Cylinder head to valve distance		
Intake	0.275 - 0.675 (0.0108 - 0.0266)	1.25 (0.0492)
Exhaust	0.305 - 0.695 (0.0120 - 0.0274)	

ROCKER ARM AND ROCKER SHAFT

Z20 & Z24

Unit: mm (in)

	Standard
Rocker arm to shaft clearance	0.007 - 0.049 (0.0003 - 0.0019)

SD25

Unit: mm (in)

	Standard	Limit
Rocker arm to shaft clearance	0.02 - 0.05 (0.0008 - 0.0020)	0.15 (0.0059)
Rocker shaft bend (T.I.R.)	0 - 0.1 (0 - 0.004)	0.3 (0.012)

CAMSHAFT AND CAMSHAFT BEARING

Unit: mm (in)

	Z20 & Z24		SD25	
	Standard	Limit	Standard	Limit
Camshaft journal to bushing clearance [Oil clearance]	0.045 - 0.090 (0.0018 - 0.0035)	0.1 (0.004)	*1 0.024 - 0.102 (0.0009 - 0.0040)	0.15 (0.0059)
			*2 0.037 - 0.115 (0.0015 - 0.0045)	
			*3 0.024 - 0.102 (0.0009 - 0.0040)	
Camshaft journal diameter	32.935 - 32.955 (1.2967 - 1.2974)	–	*1 45.434 - 45.447 (1.7887 - 1.7892)	–
			*2 43.897 - 43.910 (1.7282 - 1.7287)	
			*3 41.218 - 41.231 (1.6228 - 1.6233)	
Camshaft bend	–	0.2 (0.008)	Less than 0.03 (0.0012)	0.06 (0.0024)
Camshaft end play	–	0.2 (0.008)	0.08 - 0.28 (0.0031 - 0.0110)	0.50 (0.0197)

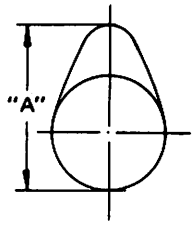

EM671

Camshaft height "A"	38.481 - 38.531 (1.5150 - 1.5170)	37.28 - 37.32 (1.4677 - 1.4693)
Wear limit of camshaft height	0.25 (0.0098)	0.50 (0.0197)

*1 Indicates front
*2 Indicates center
*3 Indicates rear

CYLINDER BLOCK

Cylinder block

Unit: mm (in)

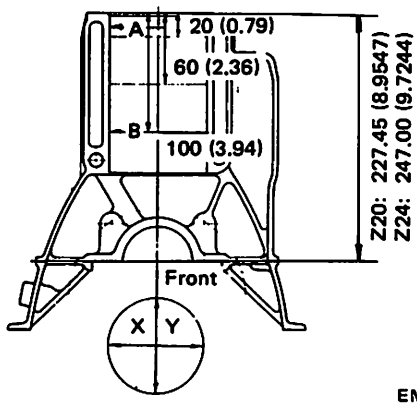

EM422

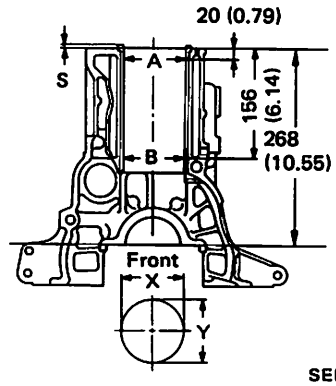

SEM727A

	Z20	Z24	Z20 & Z24	SD25	
	Standard		Limit	Standard	Limit
Surface flatness	–		0.1 (0.004)	Less than 0.10 (0.0039) (Shaft direction) Less than 0.02 (0.0008) (Right angle direction)	0.3 (0.012)
Cylinder bore Inner diameter Grade No. 1	85.000 - 85.010 (3.3465 - 3.3468)	89.000 - 89.010 (3.5039 - 3.5043)	–	89.000 - 89.010 (3.5039 - 3.5043)	–
Grade No. 2	85.010 - 85.020 (3.3468 - 3.3472)	89.010 - 89.020 (3.5043 - 3.5047)		89.010 - 89.025 (3.5043 - 3.5049)	
Grade No. 3	85.020 - 85.030 (3.3472 - 3.3476)	89.020 - 89.030 (3.5047 - 3.5051)		89.025 - 89.035 (3.5049 - 3.5053)	
Grade No. 4	85.030 - 85.040 (3.3476 - 3.3480)	89.030 - 89.040 (3.5051 - 3.5055)		–	
Grade No. 5	85.040 - 85.050 (3.3480 - 3.3484)	89.040 - 89.050 (3.5055 - 3.5059)		–	
Out-of-round (X-Y)	Less than 0.015 (0.0006)		–	Less than 0.02 (0.0008)	–
Taper (A-B)	Less than 0.015 (0.0006)		–	Less than 0.02 (0.0008)	–
Projection "S"	–		–	0.02 - 0.09 (0.0008 - 0.0035)	–
Division of each cylinder "S"	–		–	Less than 0.05 (0.0020)	–
Piston to cylinder clearance	0.025 - 0.045 (0.0010 - 0.0018)		–	0.08 - 0.105 (0.0031 - 0.0041)	
Interference fit cylinder liner to block	–		–	0.03 - 0.08 (0.0012 - 0.0031)	

CYLINDER LINER

SD25

Unit: mm (in)

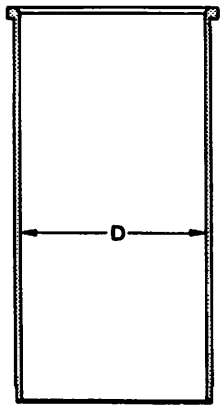

SEM427

Cylinder liner inner diameter "D" (service)	89.050 - 89.070 (3.5059 - 3.5067)

PISTON, PISTON RING AND PISTON PIN

Piston

Unit: mm (in)

Z engine

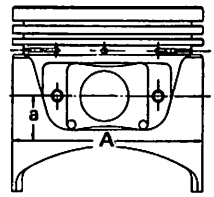

EM714

SD engine

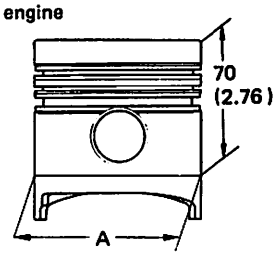

SEM067A

a: Z20: 15 (0.59)
Z24: 16.5 (0.650)

Piston skirt diameter "A"	Z20	Z24	SD25
Standard			
Grade No. 1	84.965 - 84.975 (3.3451 - 3.3455)	88.965 - 88.975 (3.5026 - 3.5029)	88.905 - 88.920 (3.5002 - 3.5008)
Grade No. 2	84.975 - 84.985 (3.3455 - 3.3459)	88.975 - 88.985 (3.5029 - 3.5033)	88.920 - 88.930 (3.5008 - 3.5012)
Grade No. 3	84.985 - 84.995 (3.3459 - 3.3463)	88.985 - 88.995 (3.5033 - 3.5037)	88.930 - 88.945 (3.5012 - 3.5018)*
Grade No. 4	84.995 - 85.005 (3.3463 - 3.3466)	88.995 - 89.005 (3.5037 - 3.5041)	–
Grade No. 5	85.005 - 85.015 (3.3466 - 3.3470)	89.005 - 89.015 (3.5041- 3.5045)	–
Service			
0.02 oversize	84.985 - 85.035 (3.3459 - 3.3478)	88.985 - 89.035 (3.5033 - 3.5053)	–
0.50 oversize	85.465 - 85.515 (3.3648 - 3.3667)	89.465 - 89.515 (3.5222 - 3.5242)	–
1.00 oversize	85.965 - 86.015 (3.3844 - 3.3864)	89.965 - 90.015 (3.5419 - 3.5439)	–

*Grade No. 3 is not provided as a service part.

Piston ring

Limit: mm (in)

		Z20 & Z24		SD25	
		Standard	Limit	Standard	Limit
Side clearance	Top	0.040 - 0.073 (0.0016 - 0.0029)	0.1 (0.004)	0.06 - 0.10 (0.0024 - 0.0039)	0.5 (0.020)
	2nd	0.030 - 0.063 (0.0012 - 0.0025)		0.04 - 0.08 (0.0016 - 0.0031)	0.3 (0.012)
	Oil	–	–	0.02 - 0.06 (0.0008 - 0.0024)	0.15 (0.0059)
Ring gap	Top	0.25 - 0.40 (0.0098 - 0.0157)	1.0 (0.039)	0.30 - 0.45 (0.0118 - 0.0177)	1.5 (0.059)
	2nd	0.15 - 0.30 (0.0059 - 0.0118)		0.20 - 0.35 (0.0079 - 0.0138)	
	Oil	0.30 - 0.90 (0.0118 - 0.0354)		0.15 - 0.30 (0.0059 - 0.0118)	

Piston pin

Unit: mm (in)

	Z20 & Z24	SD25
Piston pin outer diameter	20.993 - 20.998 (0.8265 - 0.8267)	25.993 - 26.000 (1.0233 - 1.0236)
Piston pin to piston clearance or interference fit	0.008 - 0.012 (0.0003 - 0.0005)	-0.007 - 0.010 (-0.0003 - 0.0004)
Piston pin to connecting rod clearance or interference fit	0.015 - 0.035 (0.0006 - 0.0014)	0.025 - 0.045 (0.0010 - 0.0018)

CONNECTING ROD

Unit: mm (in)

		Z20	Z24	SD25
Center distance		152.45 (6.0020)	165.00 (6.4961)	170.0 (6.6929)
Connecting rod bend or torsion [per 100 mm (3.94 in) length]	Standard	0.03 (0.0012)		0 - 0.05 (0 - 0.0020)
	Limit	0.05 (0.0020)		0.05 (0.0020)
Piston pin bore diameter		20.965 - 20.978 (0.8254 - 0.8259)		26.025 - 26.038 (1.0246 - 1.0251)
Big end play	Standard	0.2 - 0.3 (0.008 - 0.012)		0.1 - 0.2 (0.004 - 0.008)
	Limit	0.6 (0.024)		0.2 (0.008)

CRANKSHAFT

Unit: mm (in)

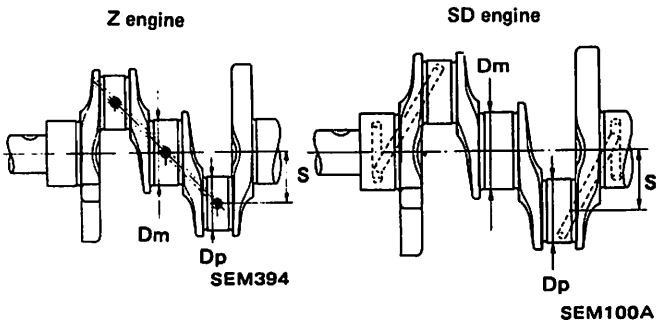

	Z20	Z24	SD25
Journal diameter "Dm"	54.942 - 54.955 (2.1631 - 2.1636)		70.907 - 70.920 (2.7916 - 2.7921)
Pin diameter "Dp"	49.961 - 49.974 (1.9670 - 1.9675)		52.913 - 52.926 (2.0832 - 2.0837)
Center distance "S"	43 (1.69)	48 (1.89)	50.0 (1.969)

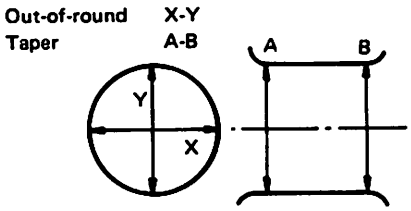

EM715

	Z20 & Z24	SD25
Taper of journal and pin (A–B)		
Standard	Less than 0.01 (0.0004)	0.01 (0.0004)
Limit	0.03 (0.0012)	0.02 (0.0008)
Out-of-round of journal and pin (X–Y)		
Standard	Less than 0.01 (0.0004)	0.01 (0.0004)
Limit	0.03 (0.0012)	0.02 (0.0008)
Crankshaft bend		
Standard	Less than 0.025 (0.0010)	0 - 0.03 (0 - 0.0012)
Limit	0.05 (0.0020)	0.10 (0.0039)
Crankshaft end play		
Standard	0.05 - 0.18 (0.0020 - 0.0071)	0.06 - 0.14 (0.0024 - 0.0055)
Limit	0.3 (0.012)	0.40 (0.0157)
Pilot bushing inserting distance	4.0 (0.157)	3.5 (0.138)

BEARING

Bearing clearance

Unit: mm (in)

	Z20 & Z24	SD25
Main bearing clearance		
Standard	0.020 - 0.062 (0.0008 - 0.0024)	0.035 - 0.093 (0.0014 - 0.0037)
Limit	0.12 (0.0047)	0.15 (0.0059)
Connecting rod bearing clearance		
Standard	0.012 - 0.054 (0.0005 - 0.0021)	0.035 - 0.087 (0.0014 - 0.0034)
Limit	0.12 (0.0047)	0.15 (0.0059)

Main bearing undersize

Unit: mm (in)

	Crank journal diameter	
	Z20 & Z24	SD25
Standard	54.942 - 54.955 (2.1631 - 2.1636)	70.907 - 70.920 (2.7916 - 2.7921)
Undersize		
0.25 (0.0098)[A]	54.692 - 54.705 (2.1532 - 2.1537)	70.657 - 70.670 (2.7818 - 2.7823)
0.50 (0.0197)[B]	54.442 - 54.445 (2.1434 - 2.1435)	70.407 - 70.420 (2.7719 - 2.7724)
0.75 (0.0295)[B]	54.192 - 54.205 (2.1335 - 2.1341)	70.157 - 70.170 (2.7621 - 2.7626)

A indicates service parts for Z20 and Z24 engines.
B indicates service parts for Z20 engine only.

Connecting rod bearing undersize

Unit: mm (in)

	Crank pin diameter	
	Z20 & Z24	SD25
Standard	49.961 - 49.974 (1.9670 - 1.9675)	52.913 - 52.926 (2.0832 - 2.0837)
Undersize		
0.06 (0.0024)[A]	49.901 - 49.914 (1.9646 - 1.9651)	–
0.12 (0.0047)[A]	49.841 - 49.854 (1.9622 - 1.9628)	–
0.25 (0.0098)[A]	49.711 - 49.724 (1.9571 - 1.9576)	52.663 - 52.676 (2.0733 - 2.0739)
0.50 (0.0197)[B]	49.461 - 49.474 (1.9473 - 1.9478)	52.413 - 52.426 (2.0635 - 2.0640)
0.75 (0.0295)[B]	49.211 - 49.224 (1.9374 - 1.9379)	52.163 - 52.176 (2.0537 - 2.0542)
1.00 (0.0394)	–	51.913 - 51.926 (2.0438 - 2.0443)

A indicates service parts for Z20 and Z24 engines.
B indicates service parts for Z20 engine.

MISCELLANEOUS COMPONENT

Unit: mm (in)

	Z20 & Z24	SD25
Gear train Back lash of each gear	–	0.07 - 0.20 (0.0028 - 0.0079)
Camshaft Runout (Total indicator reading)	Less than 0.10 (0.0039)	–
Flywheel Runout (Total indicator reading)	Less than 0.15 (0.0059)	Less than 0.15 (0.0059)

TIGHTENING TORQUE

Z20 & Z24

Unit		N·m	kg-m	ft-lb
Engine front side				
Front cover bolt				
	M8	10 - 16	1.0 - 1.6	7 - 12
	M6	4 - 10	0.4 - 1.0	2.9 - 7.2
Chain guide bolt		6 - 10	0.6 - 1.0	4.3 - 7.2
Chain tensioner bolt		6 - 10	0.6 - 1.0	4.3 - 7.2
Water pump bolt				
	M6	4 - 10	0.4 - 1.0	2.9 - 7.2
	M8	10 - 16	1.0 - 1.6	7 - 12
Crank pulley bolt		118 - 157	12 - 16	87 - 116
Engine right side				
Water inlet bolt		10 - 16	1.0 - 1.6	7 - 12
Water outlet bolt		10 - 16	1.0 - 1.6	7 - 12
Intake manifold bolt and nut		16 - 21	1.6 - 2.1	12 - 15
Alternator bracket bolt		39 - 59	4.0 - 6.0	29 - 43
Alternator to bracket bolt		36 - 50	3.7 - 5.1	27 - 37
Alternator to adjusting bar bolt		8 - 11	0.8 - 1.1	5.8 - 8.0
Engine mounting bracket bolt (Same for left side)		30 - 40	3.1 - 4.1	22 - 30
Carburetor nut		12 - 18	1.2 - 1.8	9 - 13

Unit	N·m	kg-m	ft-lb
Engine left side			
Distributor support bolt	4 - 8	0.4 - 0.8	2.9 - 5.8
Exhaust manifold bolt and nut	16 - 21	1.6 - 2.1	12 - 15
E.G.R. tube nut	34 - 44	3.5 - 4.5	25 - 33
E.A.I. tube nut	34 - 44	3.5 - 4.5	25 - 33
Air conditioner compressor bracket bolt	44 - 54	4.5 - 5.5	33 - 40
Engine top side			
Cylinder head bolt	Refer to page EM-17.		
Cylinder head to front cover bolt	4 - 8	0.4 - 0.8	2.9 - 5.8
Rocker shaft bracket bolt	15 - 25	1.5 - 2.5	11 - 18
Camshaft sprocket bolt	118 - 157	12 - 16	87 - 116
Rocker cover bolt	1 - 3	0.1 - 0.3	0.7 - 2.2
Spark plug	20 - 29	2.0 - 3.0	14 - 22
Rocker arm nut	16 - 22	1.6 - 2.2	12 - 16
Engine bottom side			
Main bearing cap bolt	44 - 54	4.5 - 5.5	33 - 40
Connecting rod big end nut	44 - 54	4.5 - 5.5	33 - 40
Oil strainer bolt	10 - 16	1.0 - 1.6	7 - 12
Oil pan bolt	5 - 7	0.5 - 0.7	3.6 - 5.1
Oil pan drain plug	20 - 29	2.0 - 3.0	14 - 22
Oil pump bolt	11 - 15	1.1 - 1.5	8 - 11
Gusset to cylinder block bolt	43 - 58	4.4 - 5.9	32 - 43
Engine rear side			
Flywheel bolt (M/T)	137 - 157	14.0 - 16.0	101 - 116
Drive plate bolt (A/T)	137 - 157	14.0 - 16.0	101 - 116

TIGHTENING TORQUE SD25

Engine outer parts

	N·m	kg-m	ft-lb
Water outlet bolt	10 - 13	1.0 - 1.3	7 - 9
Water pump bolt			
M8	10 - 13	1.0 - 1.3	7 - 9
M10	20 - 25	2.0 - 2.5	14 - 18
Manifold bolt and nut	15 - 18	1.5 - 1.8	11 - 13
Injection pump nut (In-line)	20 - 25	2.0 - 2.5	14 - 18
Injection nozzle to cylinder head	59 - 69	6.0 - 7.0	43 - 51
Oil cooler bolt	10 - 13	1.0 - 1.3	7 - 9
Oil cooler pipe nut	10 - 13	1.0 - 1.3	7 - 9
Timing gear cover bolt	10 - 13	1.0 - 1.3	7 - 9
Injection pump timer nut	59 - 69	6 - 7	43 - 51
Injection tube flare nut	29 - 34	3.0 - 3.5	22 - 25
Spill tube with cap nut	39 - 49	4 - 5	29 - 36
Oil filter bracket bolt	26 - 36	2.7 - 3.7	20 - 27
Alternator bracket bolt	26 - 36	2.7 - 3.7	20 - 27
Alternator to adjusting bar bolt	11 - 14	1.1 - 1.4	8 - 10
Diesel pump controller bolt	10 - 13	1.0 - 1.3	7 - 9
Diesel pump controller bracket bolt	45 - 61	4.6 - 6.2	33 - 45
Thermostat housing	10 - 13	1.0 - 1.3	7 - 9

Engine internal parts

	N·m	kg-m	ft-lb
Main bearing cap bolt	167 - 172	17.0 - 17.5	123 - 127
Crank pulley nut	294 - 324	30 - 33	217 - 239
Flywheel bolt	147 - 167	15 - 17	108 - 123
Front cover bolt			
M6	4 - 6	0.4 - 0.6	2.9 - 4.3
M8	10 - 13	1.0 - 1.3	7 - 9
Front end plate bolt	10 - 13	1.0 - 1.3	7 - 9
Camshaft gear bolt	44 - 49	4.5 - 5.0	33 - 36
Oil pump bolt	13 - 19	1.3 - 1.9	9 - 14
Oil pan bolt	7 - 10	0.7 - 1.0	5.1 - 7.2
Cylinder head bolt			
Sub	44 - 54	4.5 - 5.5	33 - 40
Main	118 - 127	12 - 13	87 - 94
Rocker shaft bolt	20 - 25	2.0 - 2.5	14 - 18
Rocker arm lock nut	20 - 25	2.0 - 2.5	14 - 18
Camshaft thrust plate bolt	4 - 6	0.4 - 0.6	2.9 - 4.3
Connecting rod big end nut	67 - 71	6.8 - 7.2	49 - 52
Rocker cover bolt	10 - 13	1.0 - 1.3	7 - 9
Oil jet (for piston)	29 - 39	3 - 4	22 - 29

SPECIAL SERVICE TOOLS

Tool number (Kent-Moore No.)	Tool name	Engine application	
		Z20 & Z24	SD25
ST0501S000 (–) ① ST05011000 (–) ② ST05012000 (–)	Engine stand assembly Engine stand Base 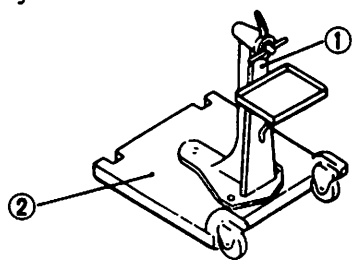	X	X
KV10105001 (–)	Engine attachment 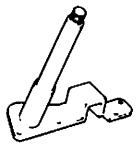	X	–
ST05300000 (–)	Engine attachment 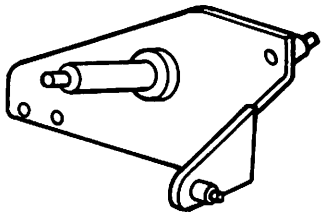	–	X
KV101041S0 (–) ① ST16511000 (–) ② ST16512001 (–) ③ ST16701001 (–)	Crankshaft main bearing cap puller Crankshaft main bearing puller Adapter Adapter 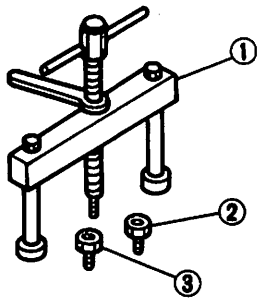	X	–
ST12070000 (J8062)	Valve lifter 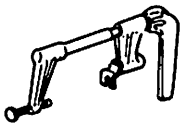	X	–
KV10107900 (–)	Valve lip seal puller 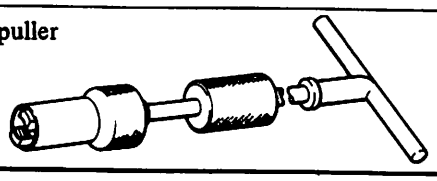	X	X

Tool number (Kent-Moore No.)	Tool name	Engine application	
		Z20 & Z24	SD25
KV101092S0 (–) ① KV10109210 (–) ② KV10109220 (–)	Valve spring compressor Compressor Adapter	X	X
ST13030001 (J26365-A)	Piston pin press stand	X	–
ST19320000 (J22700)	Oil filter wrench	X	X
KV10105800 (J25660-C)	Chain stopper	X	–
KV101039S0 (–) ① ST11081000 (J25618-3) ② ST11032000 (J25618-2) ③ ST11320000 (J25618-1)	Valve guide reamer set Reamer [12.2 mm (0.480 in)] dia. Reamer [8.0 mm (0.315 in)] dia. Valve guide drift	X	X
ST11650001 (–)	Valve seat cutter set	X	–
ST16610001 (J23907)	Pilot bushing puller	X	X
KV10105500 (–)	Crankshaft rear oil seal drift	X	–

Tool number (Kent-Moore No.)	Tool name	Engine application	
		Z20 & Z24	SD25
KV11100400 (–)	Head bolt socket	–	X
KV111023S0 (J33903)	Cylinder liner tool	–	X
KV11102320 (J33903-25)	Cylinder liner tool adapter		X
KV11101000 (–)	Valve oil seal drift	–	X
EM03470000 (J8037)	Piston ring compressor	X	X
KV11100300 (–)	Nozzle holder socket	–	X
ST16650000 (–) ① ST16650010 (–) ② ST16650020 (–) ③ ST16650030 (–) ④ ST16650040 (–)	Cam bush replacer Bar Adapter (Front) ④ ③ ② Adapter (Center) Adapter (Rear) ①	–	X
ST19530000 (J28831-A)	Injection pump timer puller	–	X

Tool number (Kent-Moore No.)	Tool name	Engine application	
		Z20 & Z24	SD25
KV101056S0 (–)	Engine stopper	–	X
① KV10105610 (–)	Plate bolt		
② KV10105630 (–)	Stopper		

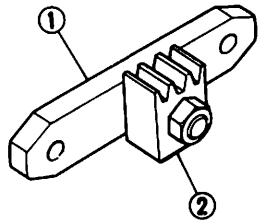

ENGINE LUBRICATION & COOLING SYSTEMS

SECTION LC

LC

CONTENTS

Z20 & Z24

ENGINE LUBRICATION SYSTEM ..... LC- 2
LUBRICATION CIRCUIT ..... LC- 2
OIL PUMP ..... LC- 3
OIL PRESSURE RELIEF VALVE ..... LC- 4
COOLING SYSTEM ..... LC- 5
COOLING CIRCUIT ..... LC- 5
WATER PUMP ..... LC- 6
THERMOSTAT ..... LC- 7
RADIATOR ..... LC- 8

SD25

ENGINE LUBRICATION SYSTEM ..... LC- 9
LUBRICATION CIRCUIT ..... LC- 9
OIL PUMP LC-10
OIL FILTER BRACKET LC-11
OIL COOLER (Main & sub) LC-13
OIL JETS LC-14
COOLING SYSTEM LC-15
COOLING CIRCUIT LC-15
WATER PUMP LC-16
THERMOSTAT LC-17
RADIATOR LC-18

Z20, Z24 & SD25

SERVICE DATA AND SPECIFICATIONS (S.D.S.) LC-19
ENGINE LUBRICATION SYSTEM LC-19
ENGINE COOLING SYSTEM LC-19

ENGINE LUBRICATION SYSTEM

LUBRICATION CIRCUIT

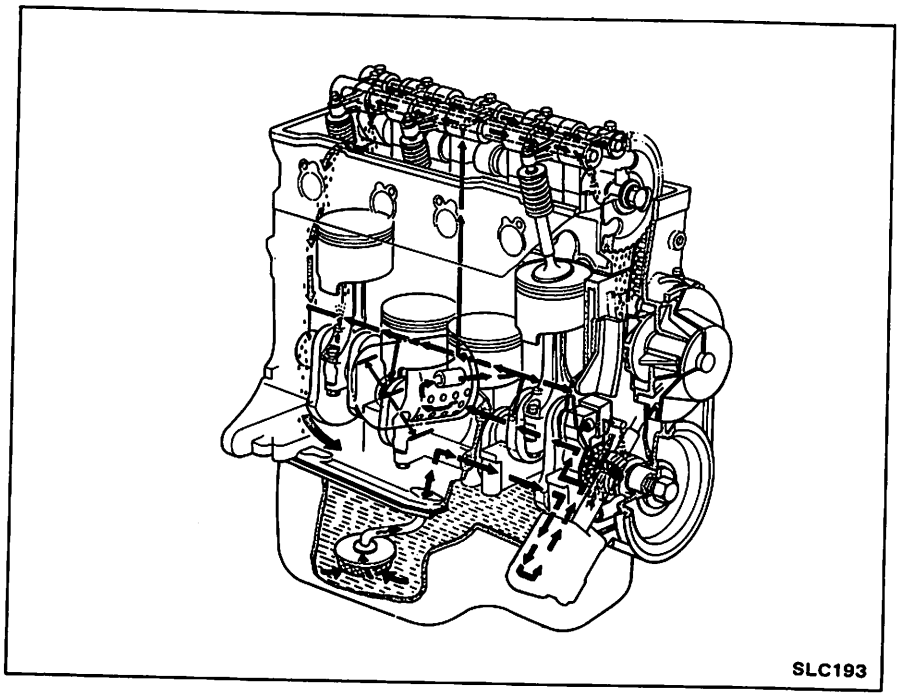

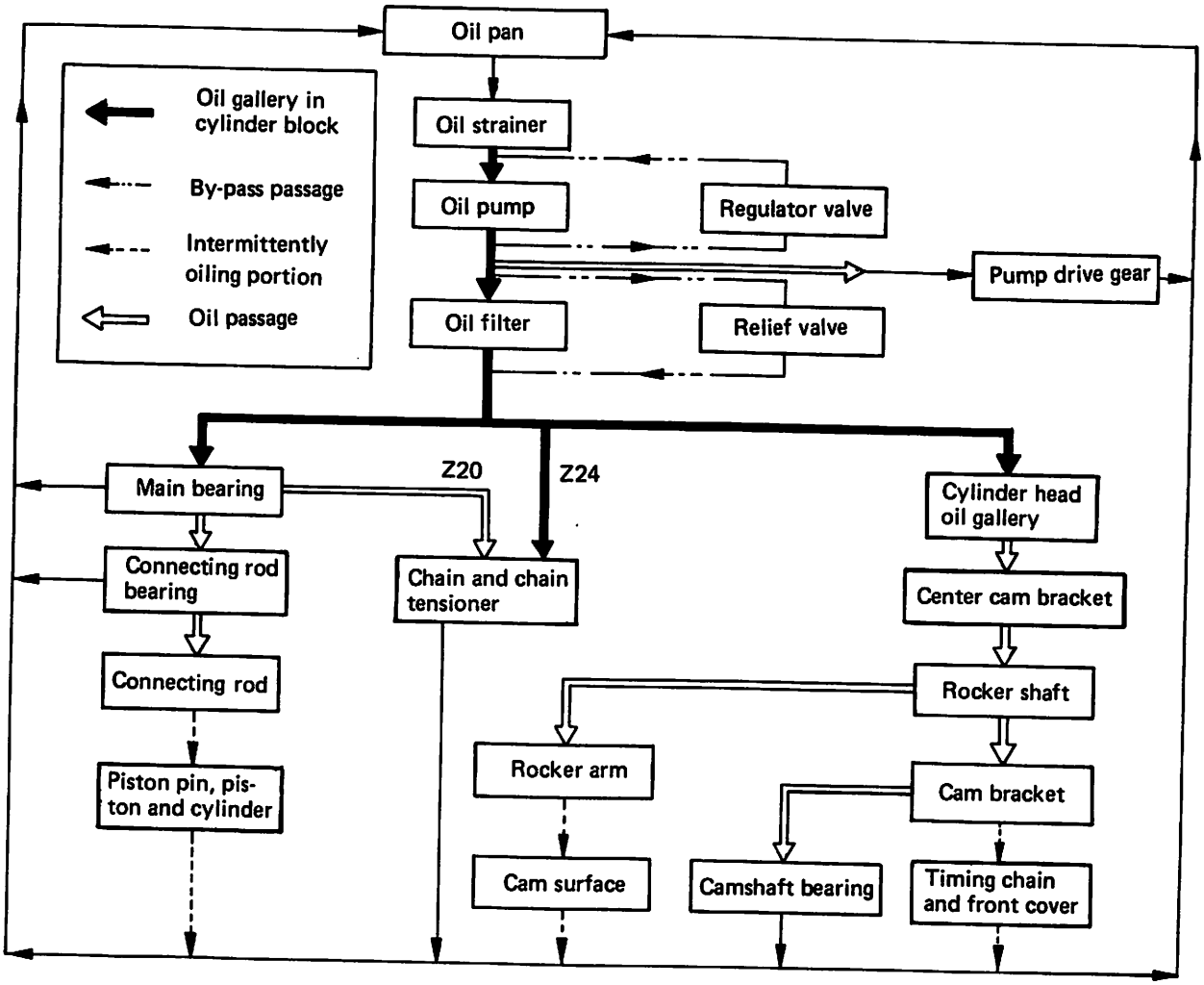

OIL PUMP

REMOVAL

1. Remove distributor cap.
2. Turn crankshaft so that No. 1 piston is at T.D.C. on its compression stroke by ascertaining the position of distributor head rotor and timing mark on crank pulley.

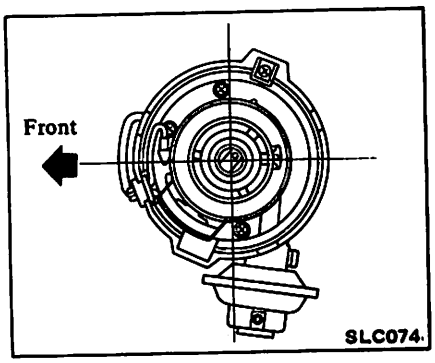

3. Remove oil pump body with drive spindle assembly.

INSPECTION

1. Inspect the following for wear or damage.
- Pump body and cover
- Pump rotors and rotor shaft

2. Using a feeler gauge, check the following clearances.

Wear limit:
Rotor tip clearance ①
Less than 0.12 mm (0.0047 in)
Outer rotor to body clearance ②
0.15 - 0.21 mm
(0.0059 - 0.0083 in)

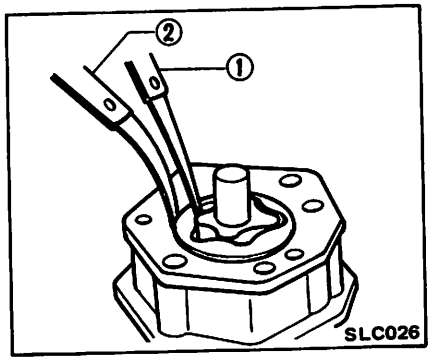

3. Using a feeler gauge and a straight edge, check the following gap.

Outer and inner rotor side clearance (With gasket) ③:
0.04 - 0.08 mm
(0.0016 - 0.0031 in)

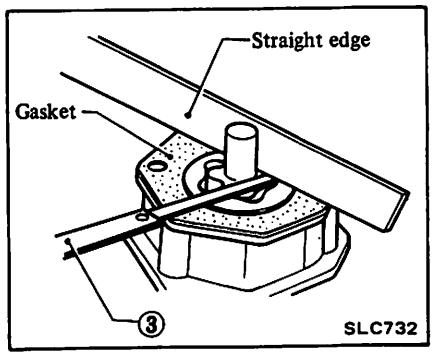

DISASSEMBLY AND ASSEMBLY

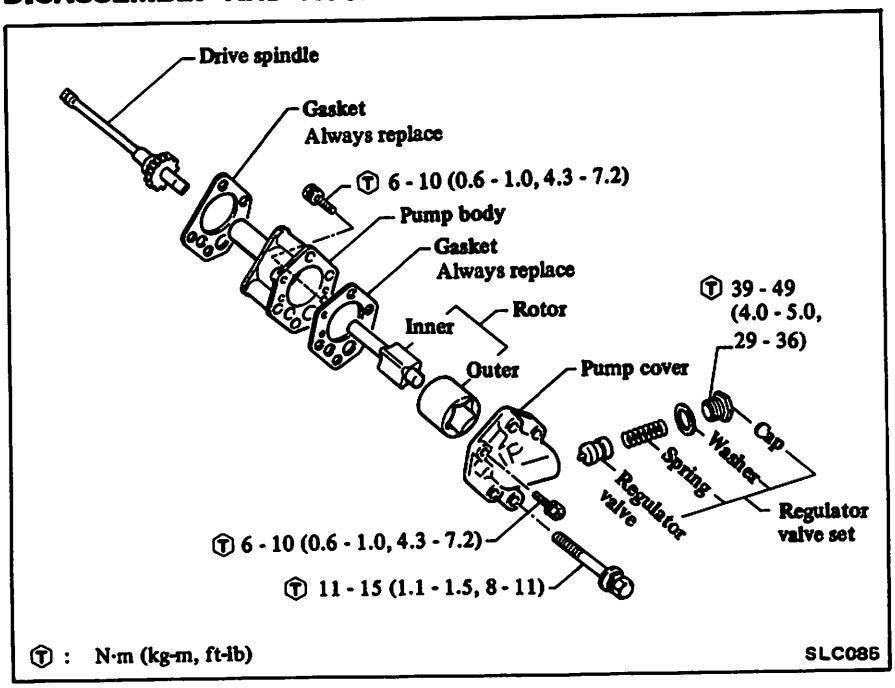

a. Always replace with a new gasket.
b. Set outer rotor with its larger chamfered portion facing oil pump body side.

Pump rotors and body are not serviced separately. If pump rotors or body are damaged or worn, replace pump rotor set or entire oil pump assembly.

4. Check oil pressure regulator valve sliding surface and valve spring.

If damaged, replace valve set or pump assembly.

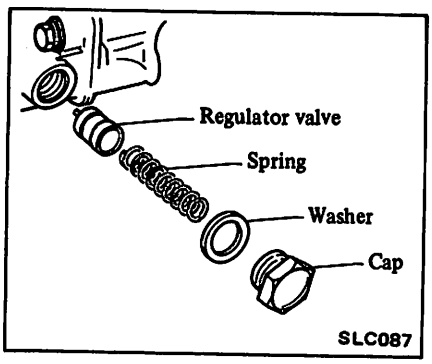

INSTALLATION

1. Make sure that distributor head rotor is in the same position as it was before removal of oil pump.

2. Fill pump housing with engine oil, then align punch mark of drive spindle with hole in oil pump.

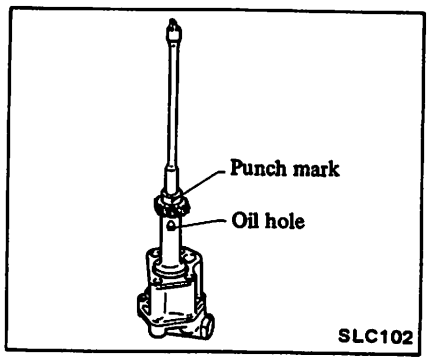

3. Using a new gasket, install oil pump and drive spindle assembly.
4. Make sure that the tip of the drive spindle fits distributor fitting hole securely.
5. Tighten bolts securing oil pump to front cover.

Ⓣ : Oil pump mounting bolts
11 - 15 N·m
(1.1 - 1.5 kg-m,
8 - 11 ft-lb)

6. Install distributor cap.

OIL PRESSURE RELIEF VALVE

INSPECTION

When removing oil filter, check the condition of the valve unit. Inspect for a cracked or broken valve. If replacement is necessary, remove valve by prying it out with a screwdriver. Install a new valve in place by tapping it.

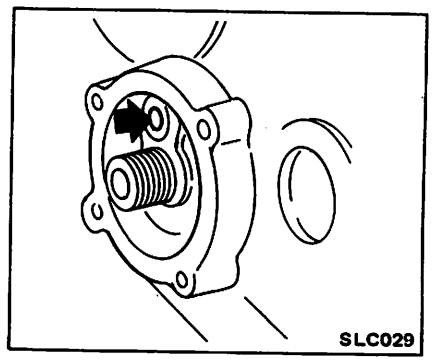

COOLING SYSTEM

COOLING CIRCUIT

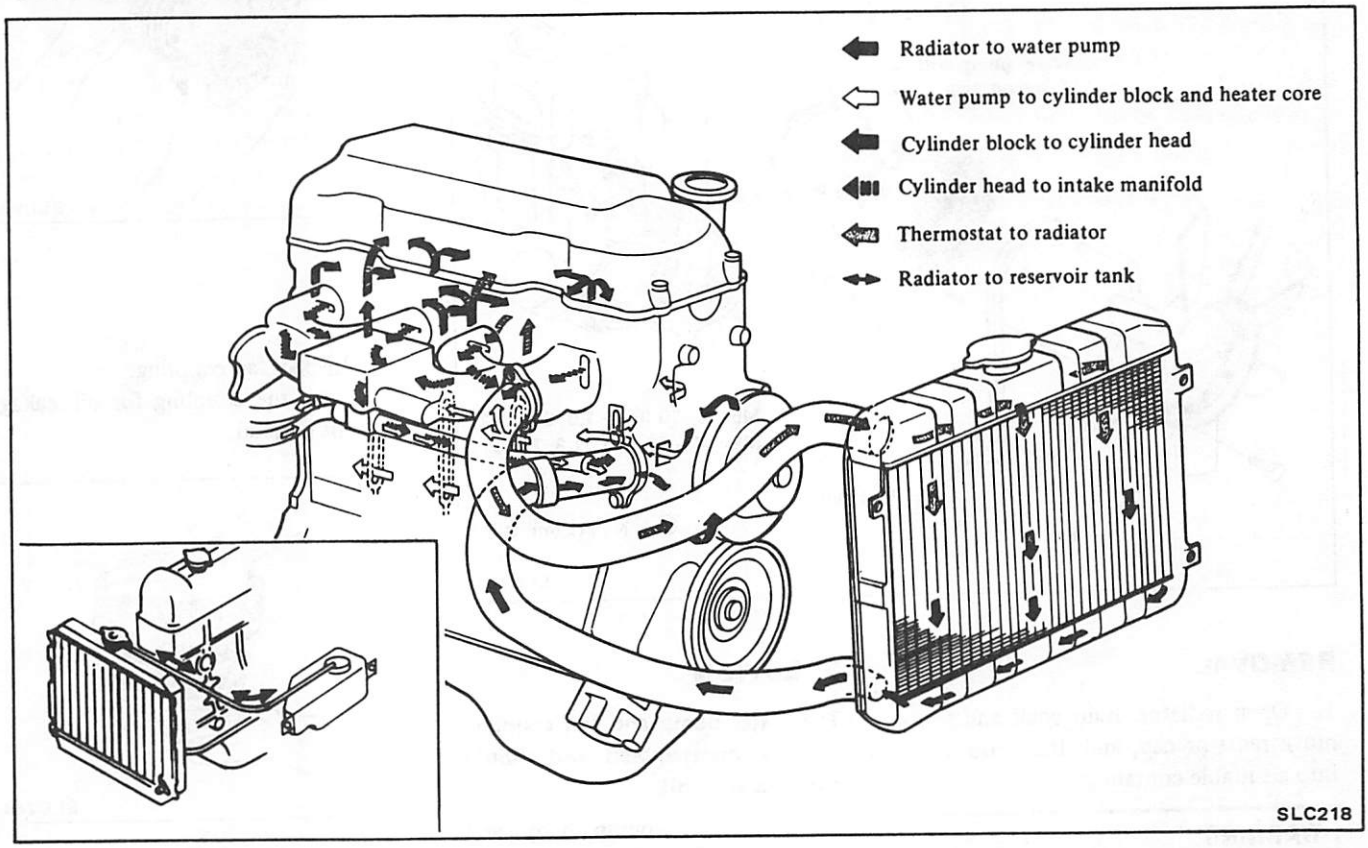

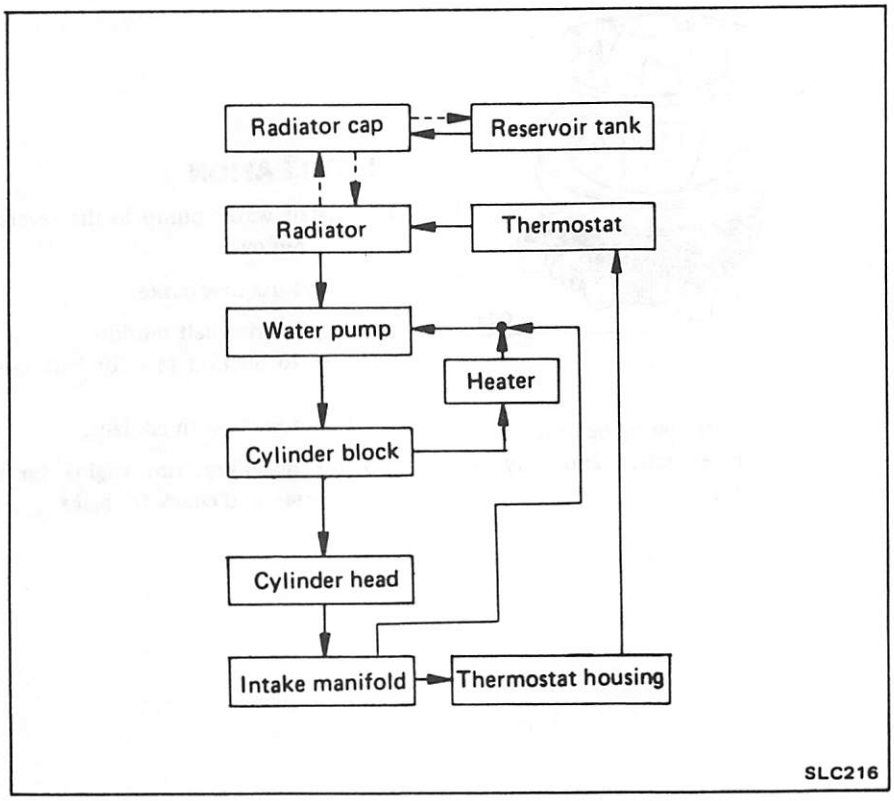

WARNING:
To avoid serious personal injury, never remove radiator cap quickly when engine is hot. Sudden release of cooling system pressure is very dangerous.
If it is necessary to remove radiator cap when radiator is hot, turn cap slowly counterclockwise to the first stop. After all pressure in the cooling system is released, turn cap passing the stop and remove it.

WATER PUMP

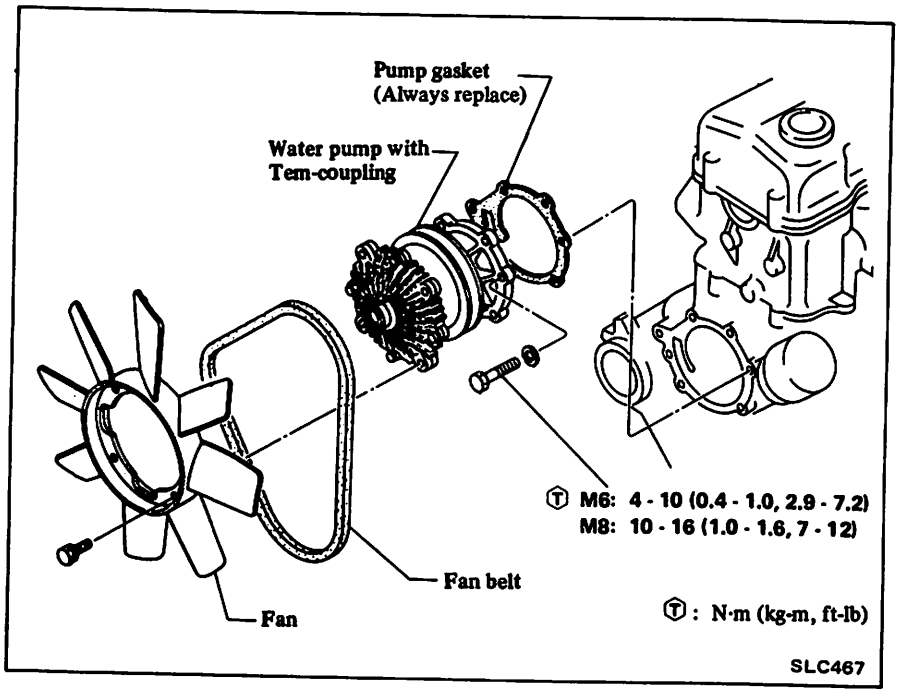

REMOVAL

1. Open radiator drain cock and remove radiator cap, and drain coolant into a suitable container.

WARNING:
To avoid the danger of being scalded, never attempt to drain the coolant when the engine is hot.

2. Remove upper radiator shroud.
3. Loosen fan belt.
(1) Loosen alternator securing bolts.
(2) Move the alternator toward the engine.
4. Remove power steering drive belt (If so equipped).
5. Remove fan.
6. Remove water pump with fan pulley, fan coupling and gasket.

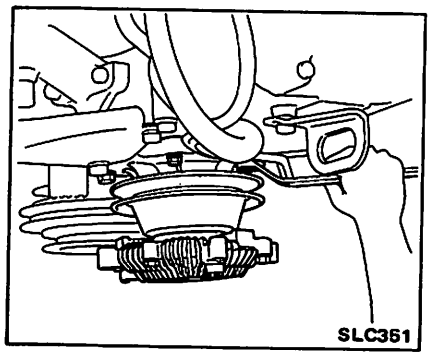

INSPECTION

The water pump and fan coupling cannot be disassembled and should be replaced as a unit.

1. Inspect water pump body and vane for rust or corrosion.

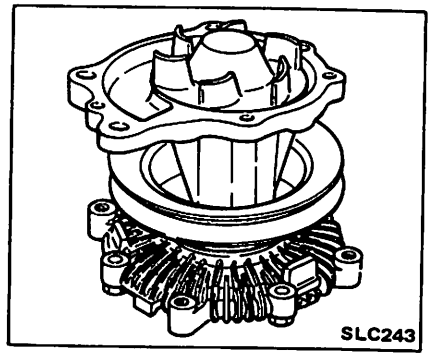

2. Inspect water pump bearing.
Check for excessive end play or rough operation.

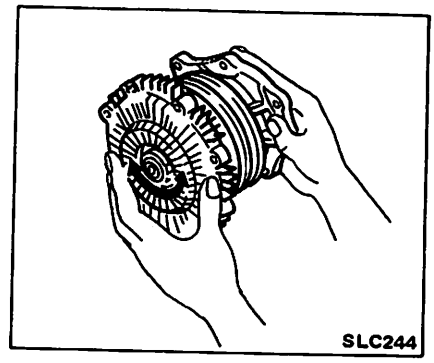

3. Inspect fan coupling.
Check the coupling for oil leakage or bent bimetal.

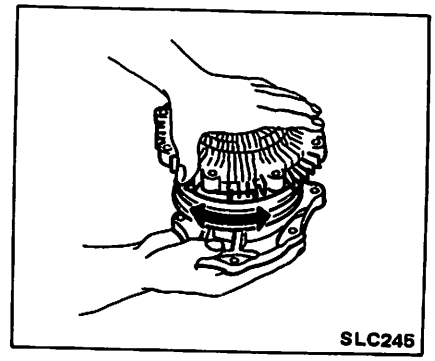

INSTALLATION

1. Install water pump in the reverse order of removal.

Always use new gasket.

2. Adjust drive belt tension.
Refer to Section MA for belt tension.
3. Fill radiator with coolant.

After installing, run engine for a few minutes, and check for leaks.

THERMOSTAT

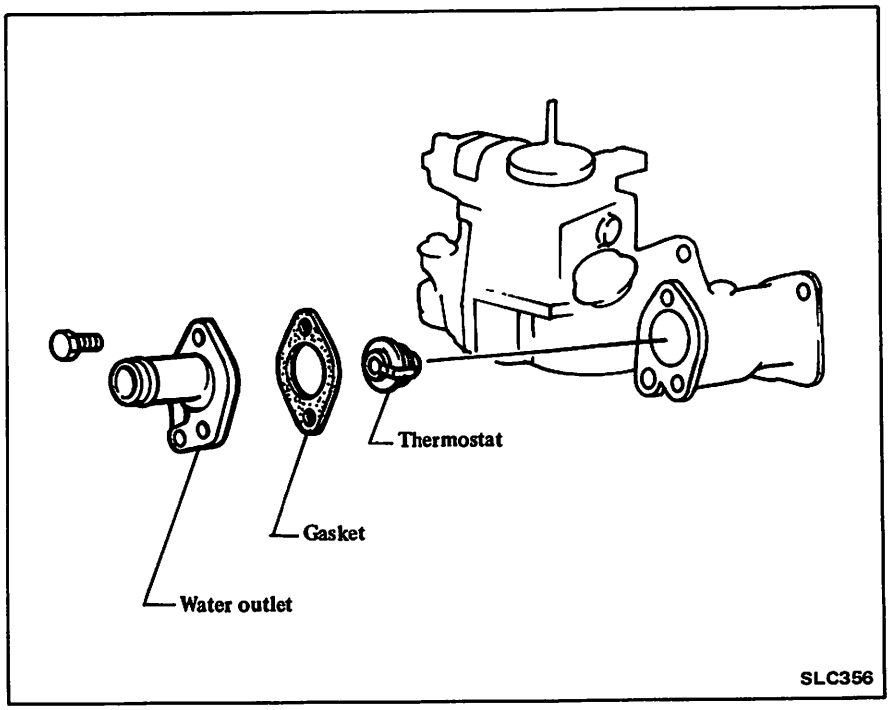

REMOVAL

1. Drain a small amount of coolant, and disconnect radiator upper hose at water outlet.

WARNING:
To avoid the danger of being scalded, never attempt to drain the coolant when the engine is hot.

2. Remove water outlet and then remove thermostat.

INSPECTION

Inspect thermostat for the following and replace if necessary.

1. Check valve seating condition at ordinary temperature. It should seat tightly.

2. Check valve opening temperature and maximum valve lift.

Valve opening temperature and maximum valve lift. Refer to S.D.S.

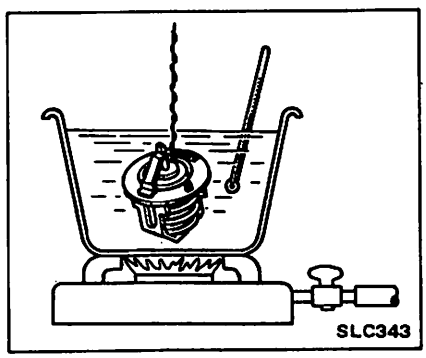

It is necessary to check a new thermostat before installing it in engine.

3. Check if valve closes at 5°C (9°F).

INSTALLATION

Install thermostat in the reverse order of removal.

Observe the following:

a. **Place thermostat's jiggle valve or air bleeder on upper side.**

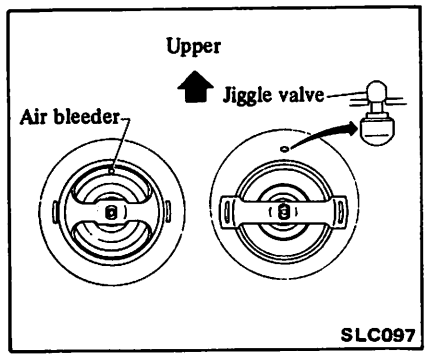

b. **Use new gasket.**
Run engine for a few minutes and check for leaks.

RADIATOR

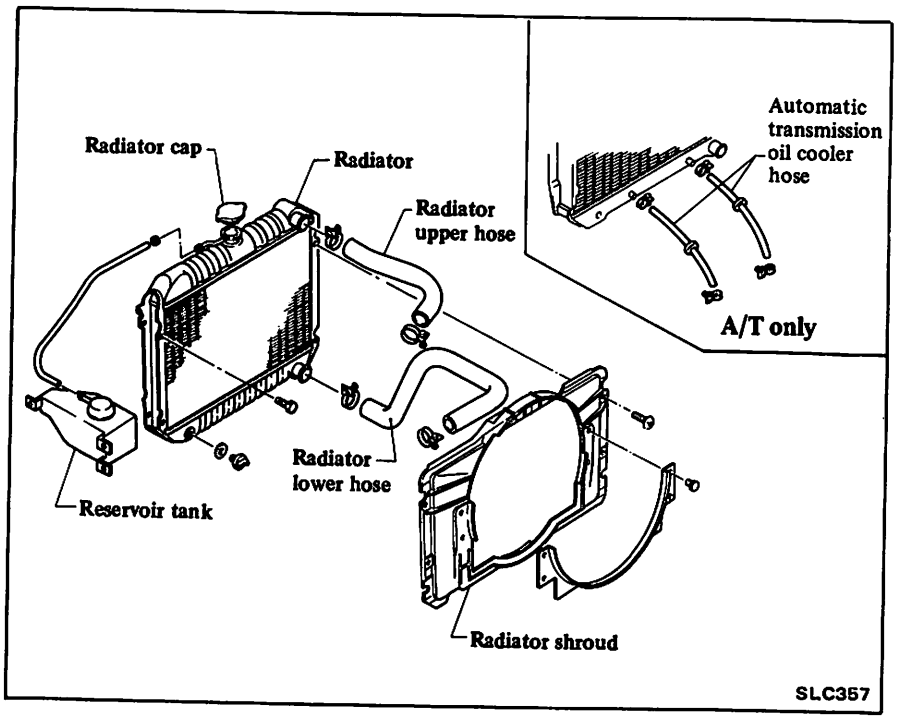

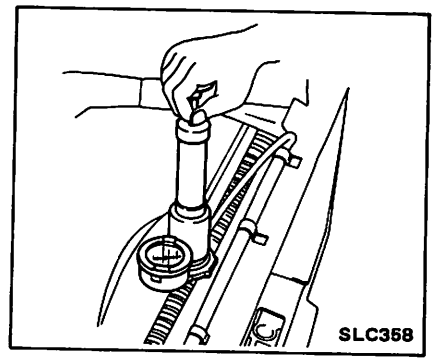

Leakage test pressure:
157 kPa (1.6 kg/cm², 23 psi)

WARNING:
Never remove the radiator cap when the engine is hot; serious burns could be caused by high pressure fluid escaping from the radiator.
Wrap a thick cloth around cap and carefully remove the cap by turning it a quarter turn to allow built-up pressure to escape and then turn the cap all the way off.

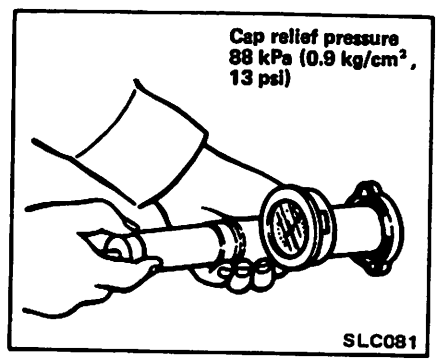

INSPECTION

Checking radiator cap

Using cap tester, check the radiator cap relief pressure.

If the pressure gauge drops rapidly and excessively, replace the radiator cap.

Checking cooling system for leaks

Attach pressure tester, pump tester to the specified pressure.

Check for drop in pressure.

If the pressure drops, check for leaks from hoses, radiator, or water pump.

If no external leaks are found, check heater core, block and head.

REMOVAL AND INSTALLATION

1. Open radiator drain cock and allow to drain into a suitable container.

WARNING:
To avoid the danger of being scalded, never attempt to drain the coolant when the engine is hot.

2. Remove radiator shroud attaching screws.
3. Disconnect radiator upper and lower hoses on engine side, and disconnect reservoir tank hose.
4. On a vehicle with automatic transmission, disconnect cooler inlet and outlet lines from radiator.
5. Remove radiator attaching bolts.
6. Install radiator in the reverse order of removal.
7. Fill cooling system with coolant to specified level.
   (Refer to section MA.)

After installing, run engine for a few minutes, and check for leaks.

ENGINE LUBRICATION SYSTEM

LUBRICATION CIRCUIT

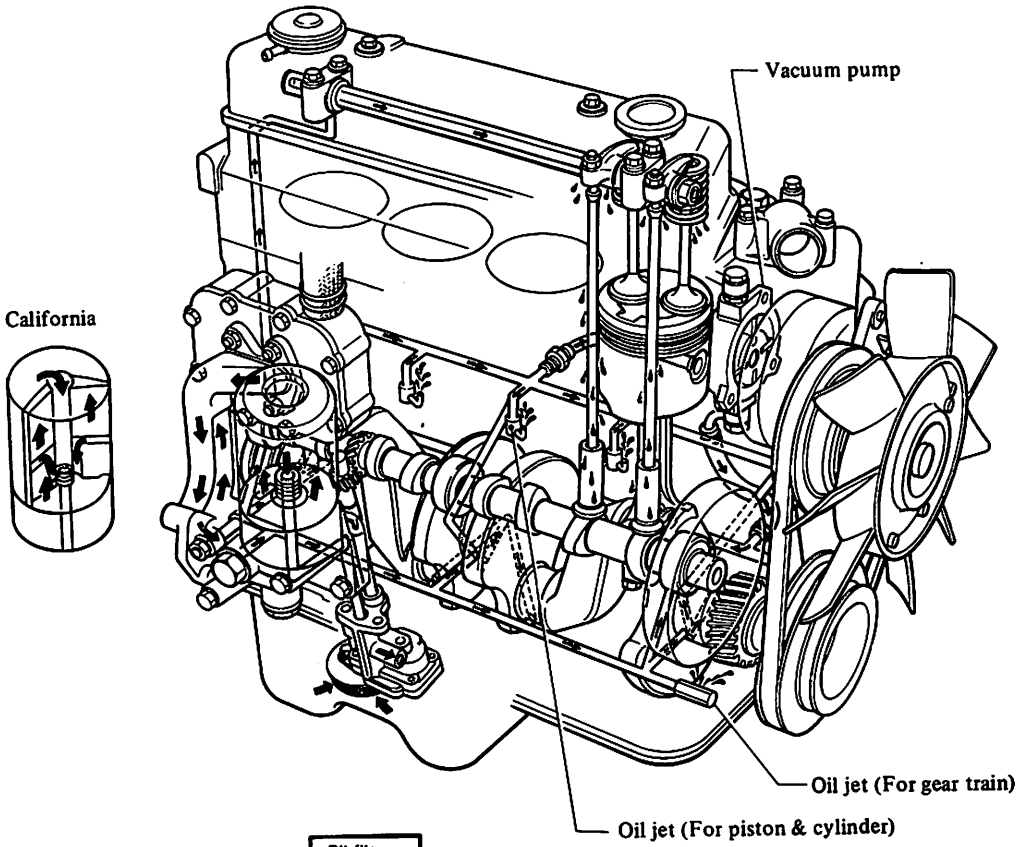

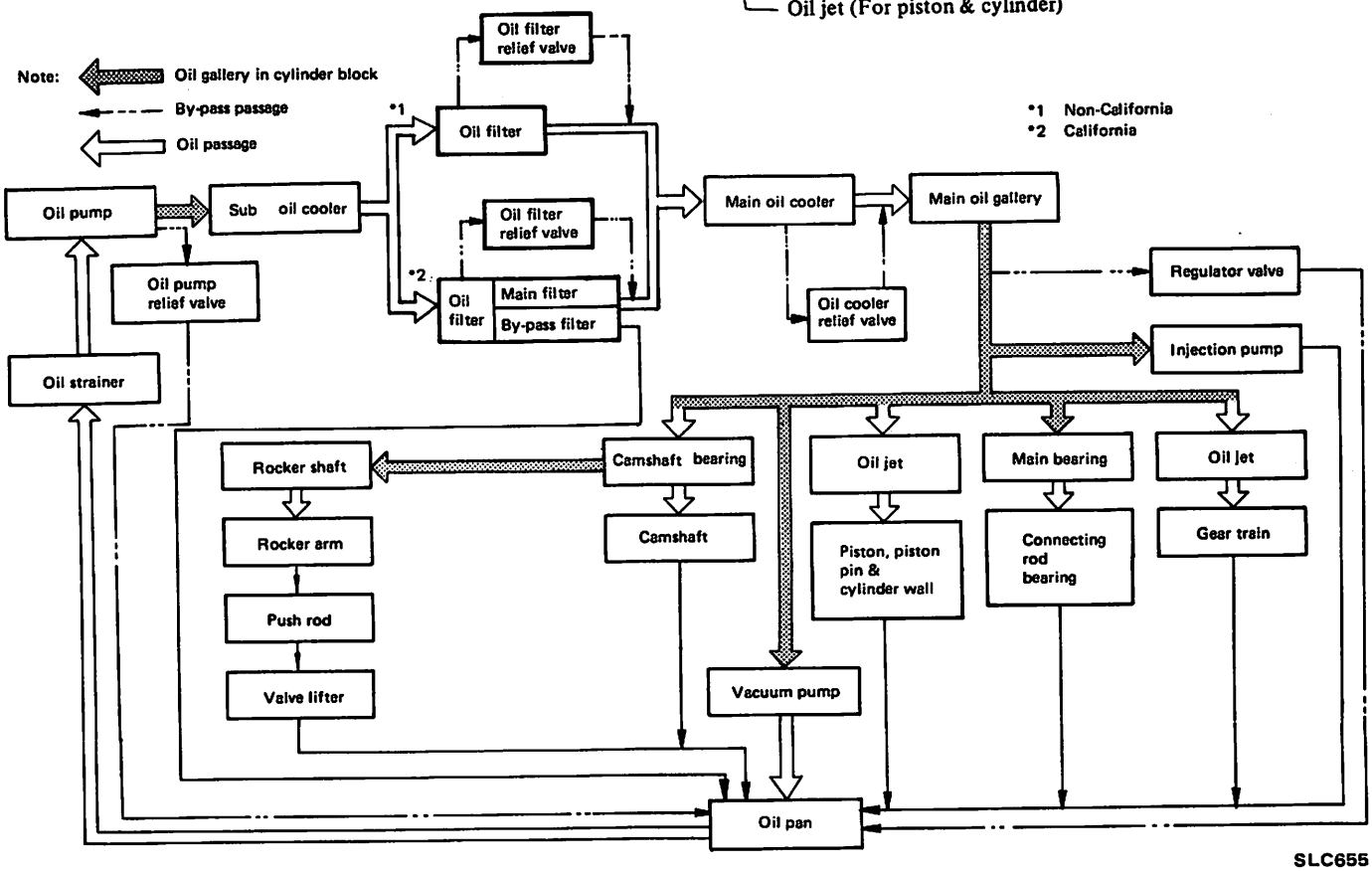

SLC655

OIL PUMP

REMOVAL

1. Drain engine oil and coolant.
2. Remove oil filter using Tool.
3. Remove injection pump rear bracket and oil pipe.

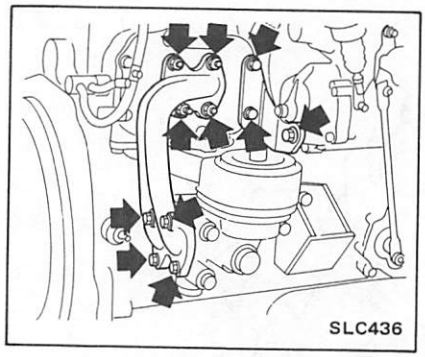

4. Remove main and sub oil cooler assembly.

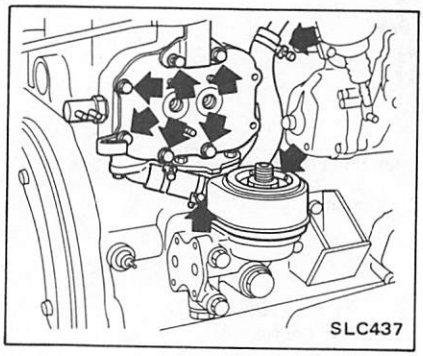

5. Remove support and oil pump drive spindle.

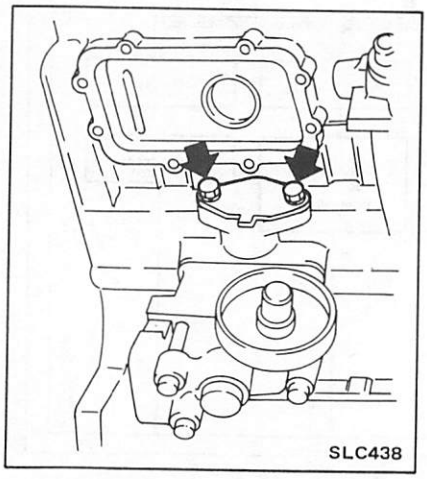

6. Remove engine undercover.
7. Remove front suspension crossmember.

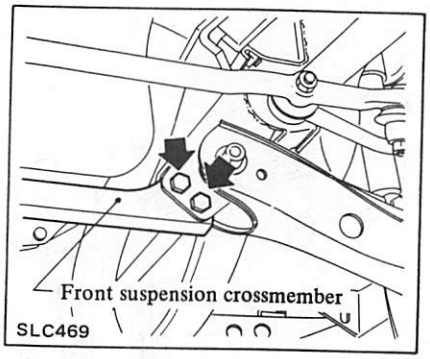

8. Remove oil pan bolts.
9. Remove oil pan with steering wheel rotated all the way to the left or right.
10. Remove oil pump assembly.

Do not drop oil pump assembly.

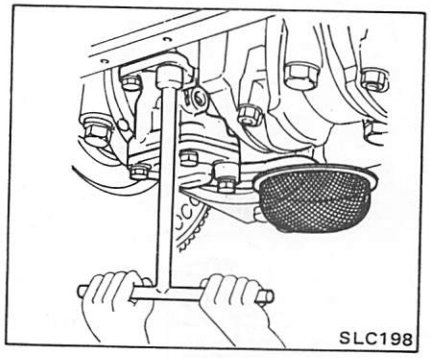

DISASSEMBLY AND ASSEMBLY

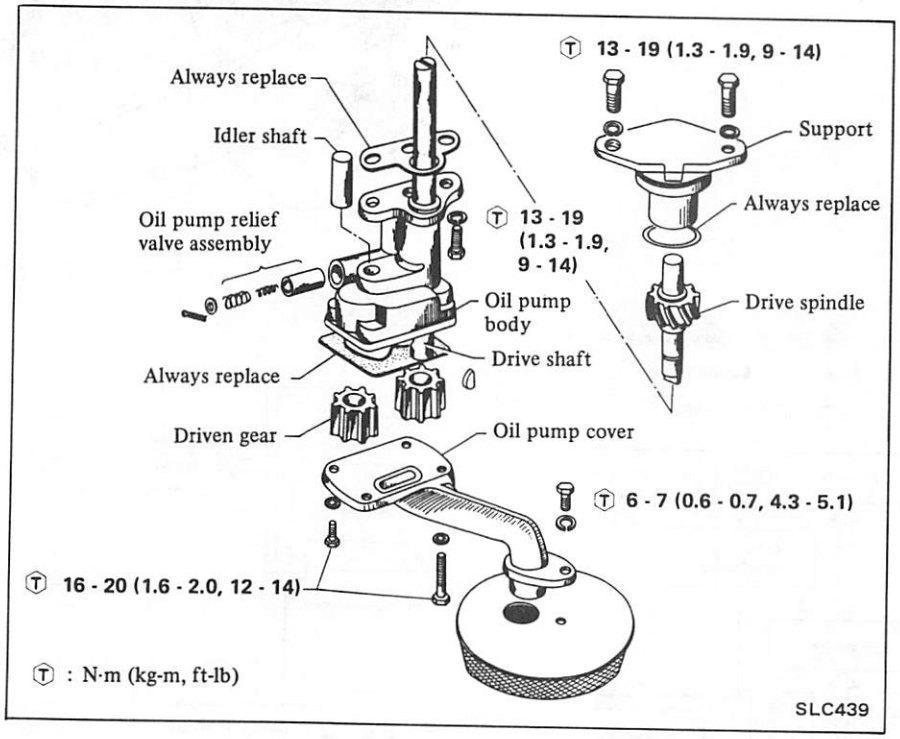

Disassembly

1. Remove oil pump cover with gasket.
2. Take out driven gear.
3. Take out drive gear.

Usually do not remove drive gear from drive shaft. If necessary, use a puller.

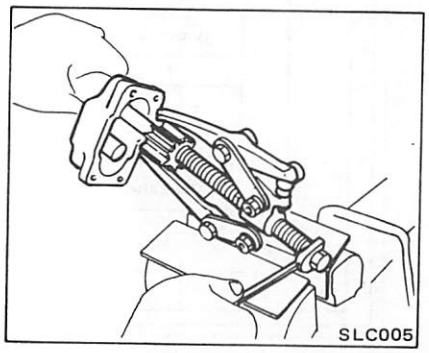

INSPECTION

1. Inspect pump body, cover, gears and drive shaft for wear and damage.
2. Check gear side clearance.

If clearance is not within specified range, replace gear case or drive shaft with gear.

Gear side clearance:
Less than 0.15 mm (0.0059 in)

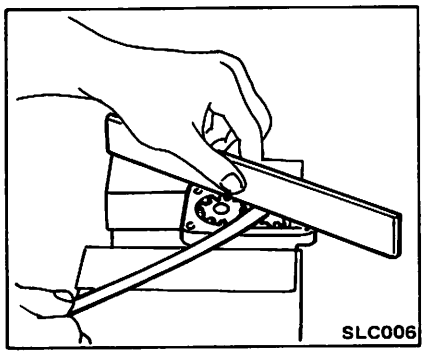

3. Check gear tooth clearance.

If clearance is not within specified range, replace gear.

Gear tooth clearance:
Less than 0.25 mm (0.0098 in)

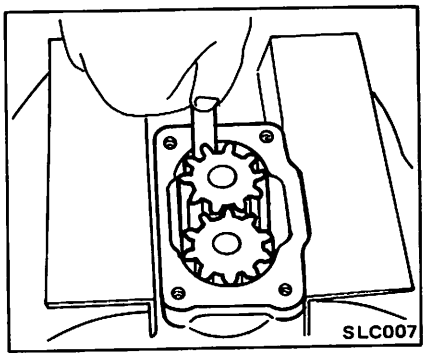

4. Check gear backlash.

If backlash is not within specified range, replace gear.

Gear backlash:
Less than 0.5 mm (0.020 in)

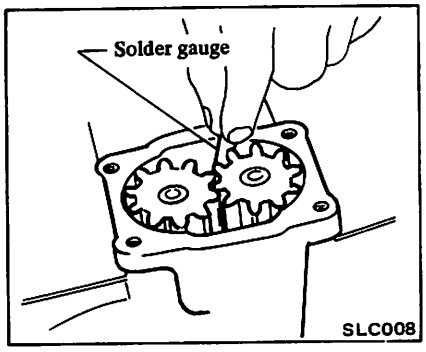

5. Check clearance between oil pump cover and idler shaft and drive shaft end.

Clearance between oil pump cover and idler shaft and drive shaft end:
0.50 mm (0.0197 in)

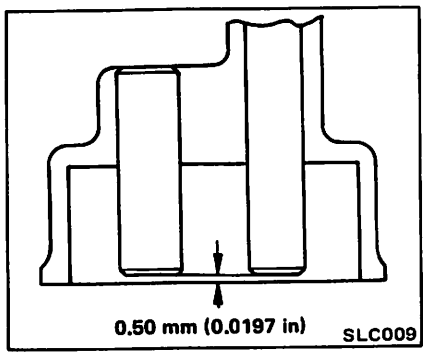

6. Check relief valve sliding surface and valve spring. If relief valve seat is scratched or its movement is not smooth, replace faulty parts.

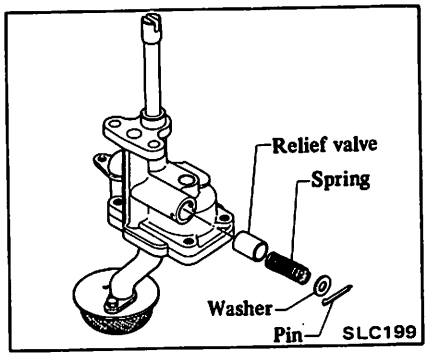

7. Check gear and pin portion of drive spindle. If they are worn, replace drive spindle.

Assembly

1. Install drive and driven gears.
2. Install oil pump cover with new gasket.

Ⓣ : Oil pump cover bolt
16 - 20 N·m
(1.6 - 2.0 kg-m,
12 - 14 ft-lb)

INSTALLATION

Install oil pump in the reverse order of removal. Observe the following:

1. When installing drive spindle, properly align drive spindle with camshaft oil pump driven gear and oil pump drive shaft groove.
2. Install support and new oil seal with oil hole on support facing cylinder block.

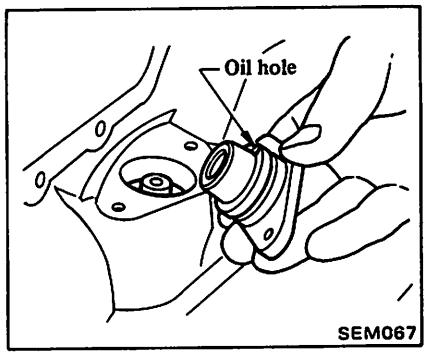

3. Use new gaskets.

Ⓣ : Oil pump fixing bolt
13 - 19 N·m
(1.3 - 1.9 kg-m,
9 - 14 ft-lb)

4. Be sure oil filter rubber gasket is not damaged. Replace with a new one if heavily damaged.
5. Refill engine oil.

Oil capacity:

Unit: liter (US qt, Imp qt)

	Non-California	California
With oil filter change	5.3 (5-5/8, 4-5/8)	5.6 (5-7/8, 4-7/8)
Without oil filter change	4.8 (5-1/8, 4-1/4)	

OIL FILTER BRACKET

REMOVAL

1. Remove oil filter.

2. Loosen stud bolt for sub oil cooler.

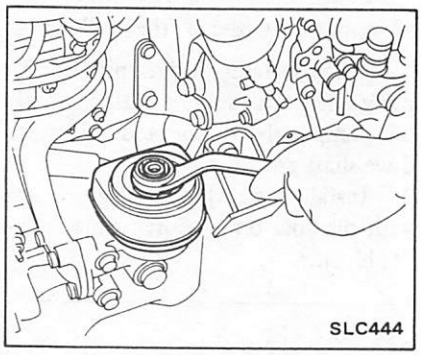

3. Remove oil pipe and oil filter bracket with sub oil cooler.

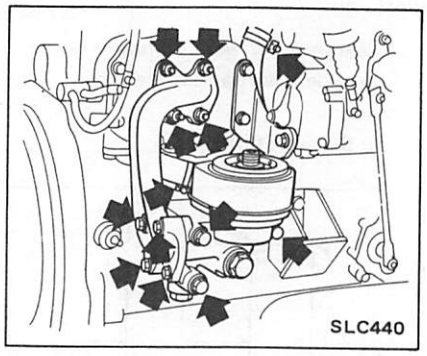

4. Remove sub oil cooler.

DISASSEMBLY AND ASSEMBLY

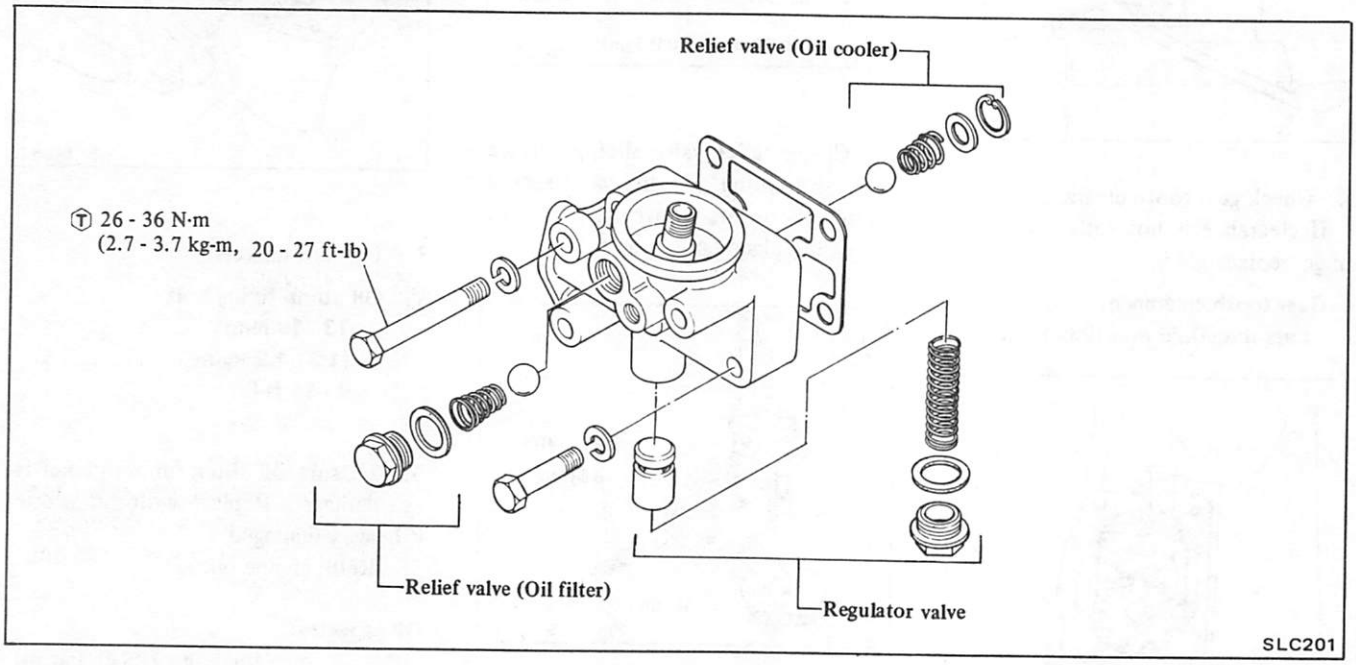

INSPECTION

1. Check relief valve sliding surface and valve spring. If relief valve seat is scratched or its movement is not smooth, replace faulty parts.
2. Check steel ball surface. If it is scratched, replace faulty parts.
3. Check to see if valve spring is weakened. If it is so, replace faulty parts.

INSTALLATION

Install oil filter bracket in the reverse order of removal. Observe the following:

1. Use new washer
2. Use new snap ring.
3. Be sure oil filter rubber gasket and sub oil cooler gasket are not damaged. Replace either or both with a new one if severely damaged.

OIL COOLER (Main & sub)

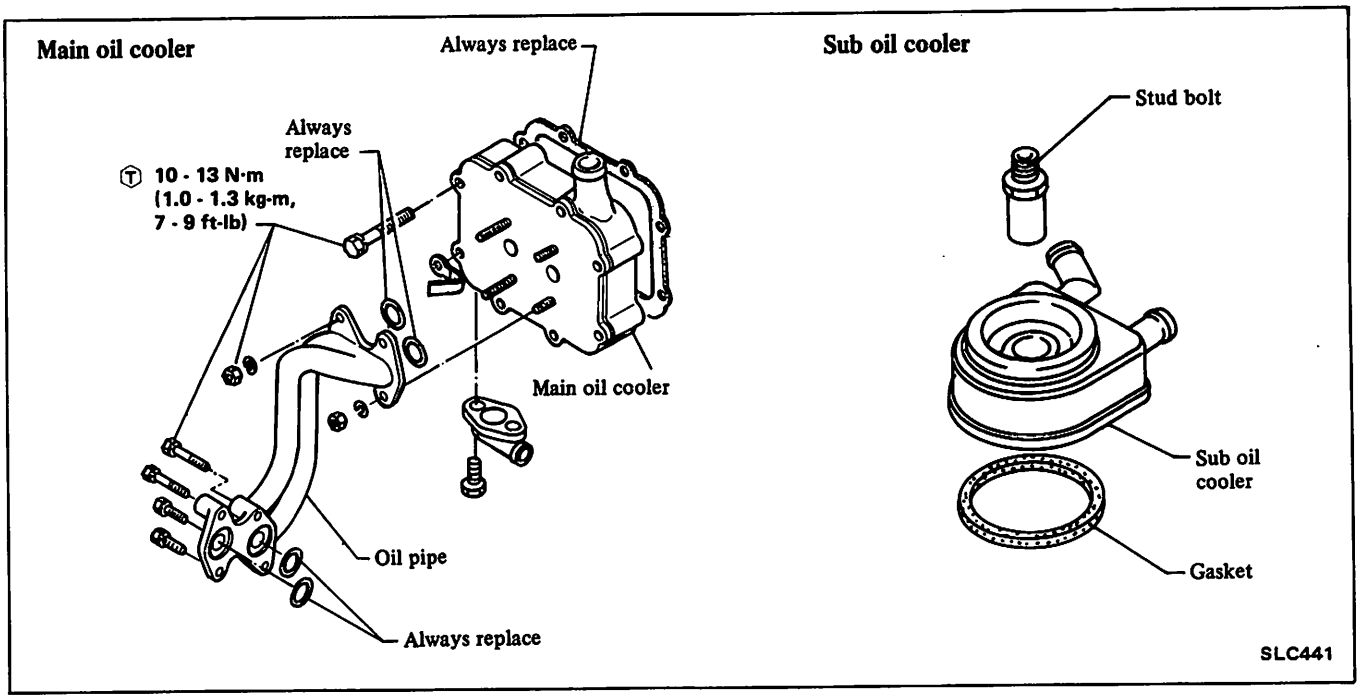

REMOVAL

1. Drain coolant until it is below oil cooler.
2. Remove oil filter, using Tool.
3. Remove oil pipe and injection pump rear bracket.

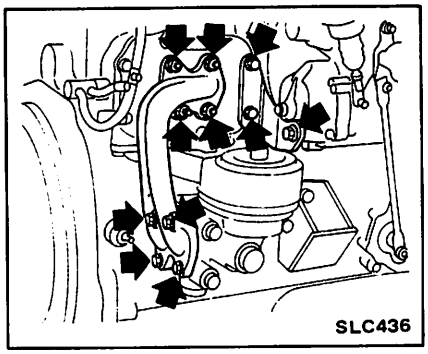

4. Remove main and sub oil cooler.

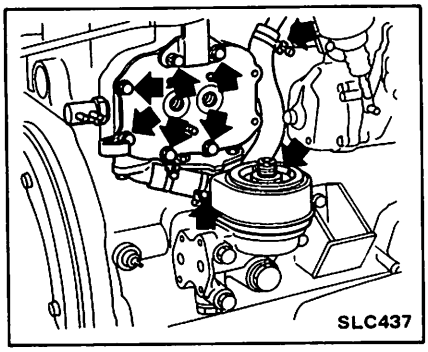

INSPECTION

1. Check oil cooler element and housing for cracks. If they are cracked, replace. Remove sludge from element and housing before inspection.
2. When engine oil mixes with engine coolant, check oil cooler element by blocking either oil inlet or outlet with a wooden plug, applying compressed air [pressure of 981 kPa (10 kg/cm^2, 142 psi)] to unblocked inlet or outlet, and immersing oil cooler in water. Bubbles should not appear.

CAUTION:
Air pressure should not exceed 1,471 kPa (15 kg/cm^2, 213 psi).

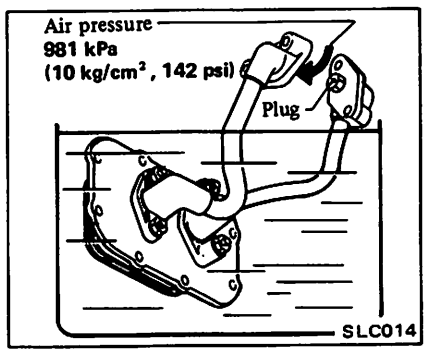

INSTALLATION

Install oil cooler in the reverse order of removal. Observe the following:

1. Use new O-ring
2. Use new gasket.
3. Be sure oil filter rubber gasket and sub oil cooler gasket are not damaged. Replace either or both with a new one if severely damaged.

OIL JETS

OIL JET FOR GEAR TRAIN

Removal

1. Drain coolant.
2. Remove radiator shroud and radiator with hoses.
3. Engage transmission gears and depress brake pedal.
4. Remove crank pulley nut and crank pulley.
5. Remove front cover.
6. Remove oil jet.

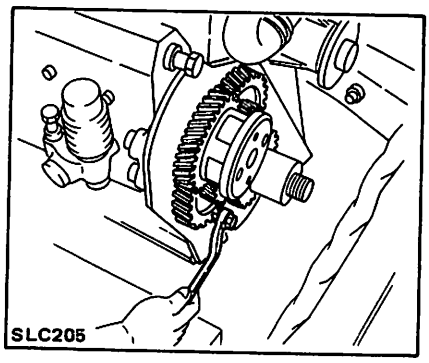

Inspection

Make sure that the holes are not clogged. Clean them with a wire if necessary.

Installation

Install oil jet in the reverse order of removal. Observe the following:

Oil jet has to be installed with oil hose facing crank gear and crankshaft.

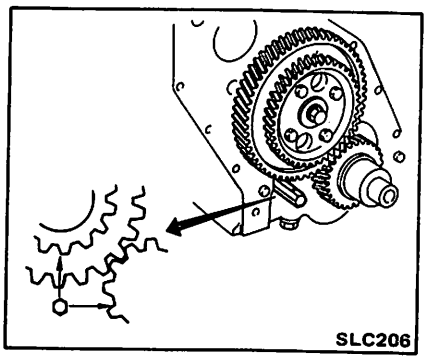

OIL JET FOR PISTON

Removal

1. Drain engine oil.
2. Remove engine undercover.
3. Remove front suspension cross-member.
4. Remove oil pan.
5. Remove oil jet bolts and then remove oil jet.

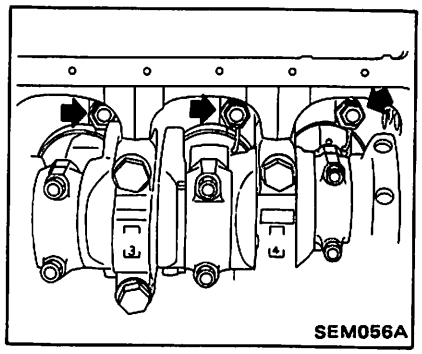

Inspection

1. Blow through outlet of oil jet and make sure that air comes out of inlet.
2. Push cut-off valve of oil jet bolt **with a clean resin or brass rod** and make sure that cut-off valve moves smoothly with proper repulsion.

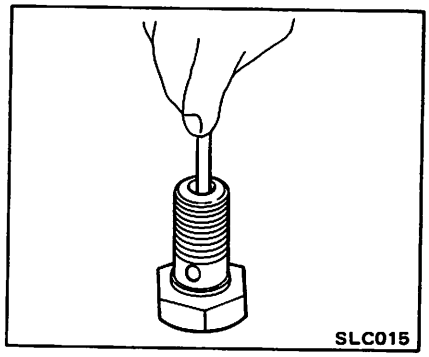

Installation

Install oil jet in the reverse order of removal. Observe the following:

When installing oil jet, align oil jet's boss with hole on cylinder block.

Ⓣ : Oil jet bolt
29 - 39 N·m
(3.0 - 4.0 kg-m,
22 - 29 ft-lb)

CAUTION:
Do not overtighten oil jet bolt as this may result in an extended oil jet bolt and a malfunctioning cut-off valve.

COOLING SYSTEM

COOLING CIRCUIT

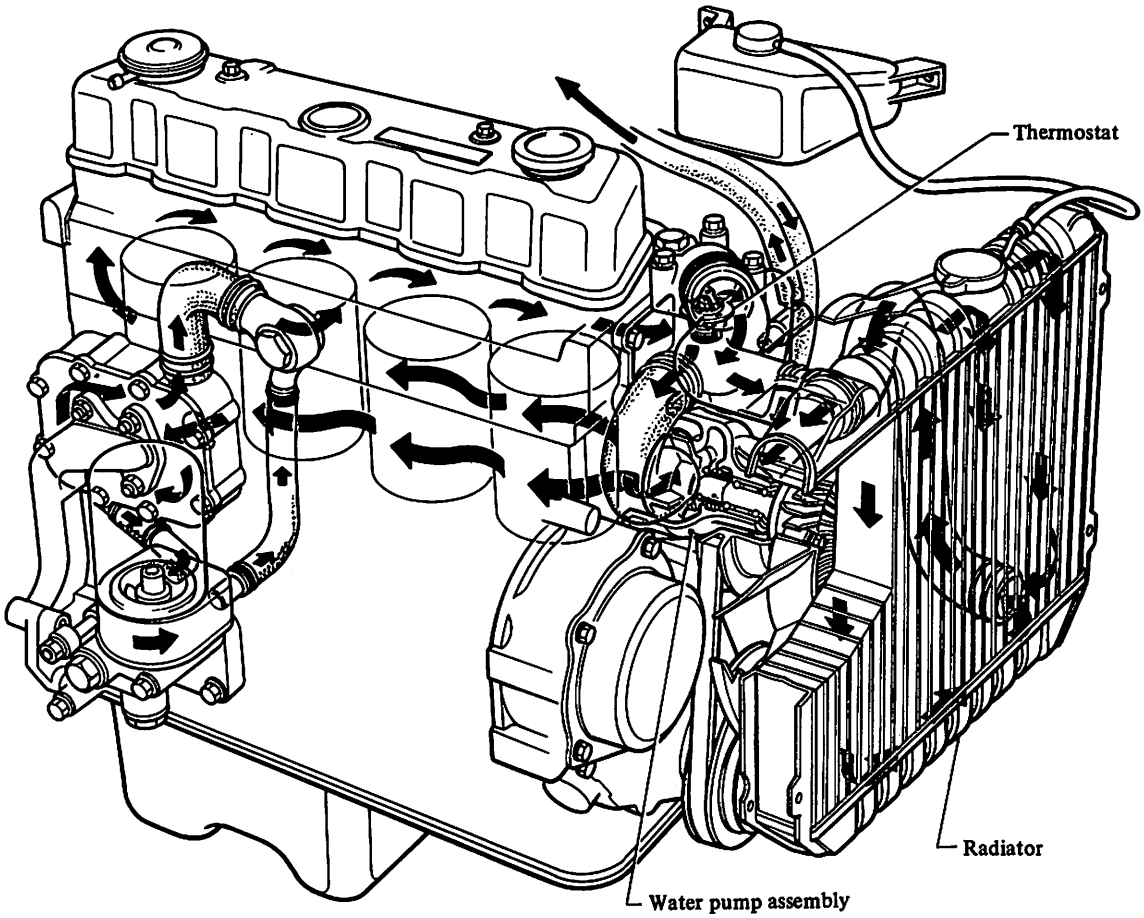

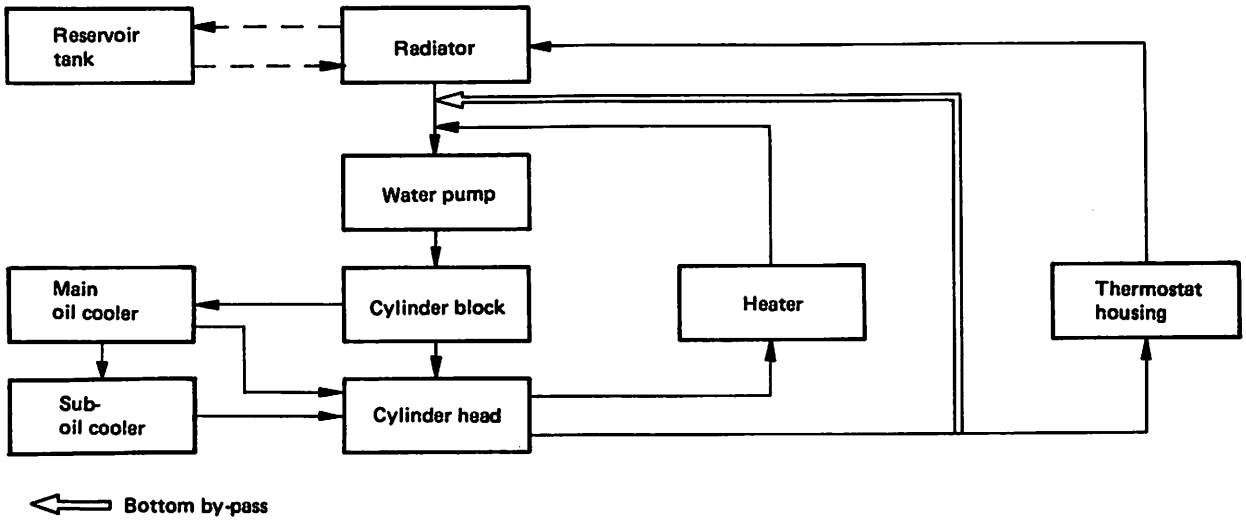

SLC442

WATER PUMP

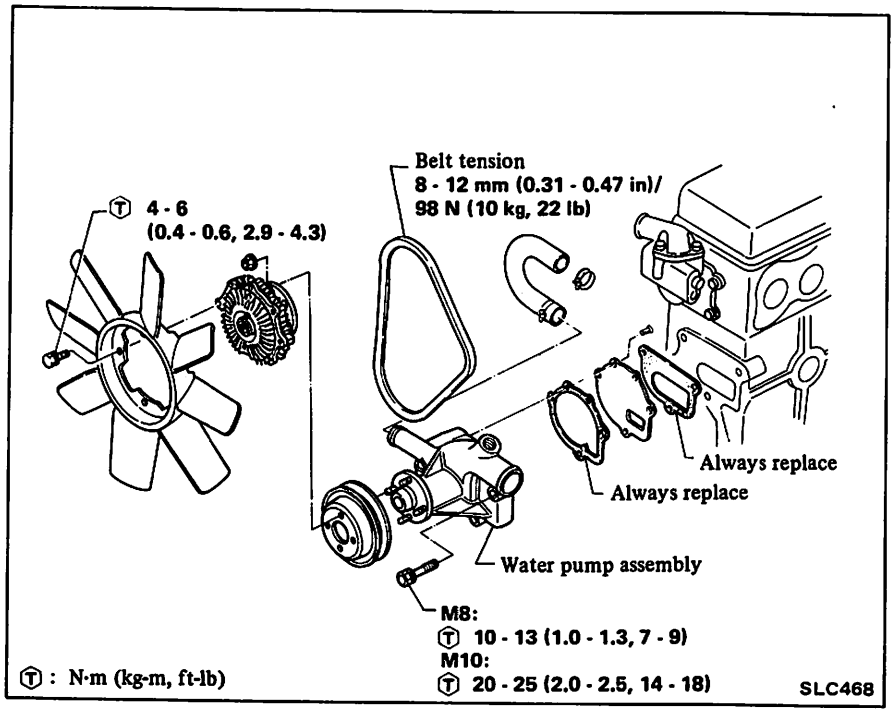

REMOVAL

1. Remove radiator drain cock and radiator cap, and drain coolant.

WARNING:
To avoid the danger of being scalded, never attempt to drain the coolant when engine is hot.

2. Remove radiator shroud.
3. Loosen fan pulley nuts.

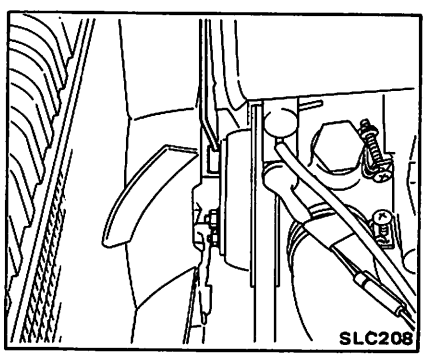

4. Loosen fan belt.
(1) Loosen alternator upper and lower securing bolts.
(2) Move the alternator toward the engine.
5. Remove fan pulley with Tem-coupling and fan.
6. Disconnect coolant hose on thermostat housing side.

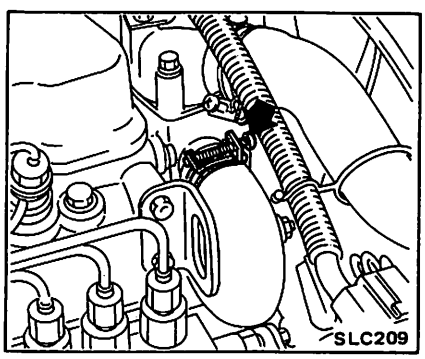

7. Remove water pump.

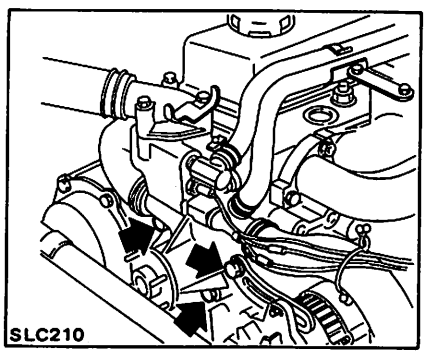

INSPECTION

The water pump and Tem-coupling cannot be disassembled and should be replaced as a unit.

1. Inspect water pump body and vane for rust or corrosion.
2. Inspect water pump bearing.
Check for excessive end play or rough operation.

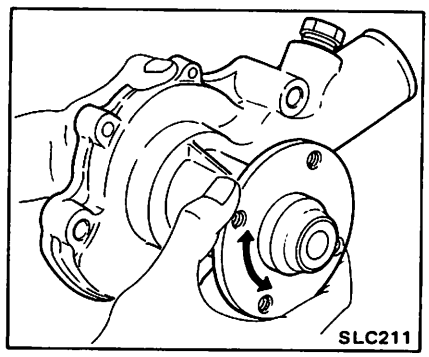

If excessive mechanical seal squeak occurs when engine is running, use suitable water pump seal lubricant to prevent squeak.

3. Check clearance between housing and vane.
If necessary, replace as a unit.

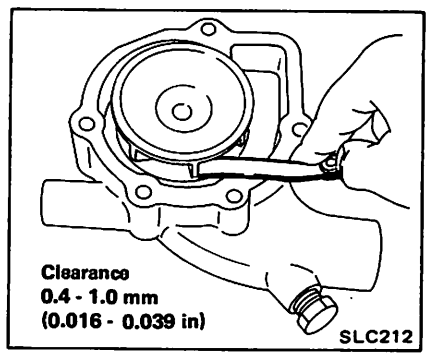

4. Inspect Tem-coupling.
Check coupling for oil leakage or bent bimetal.

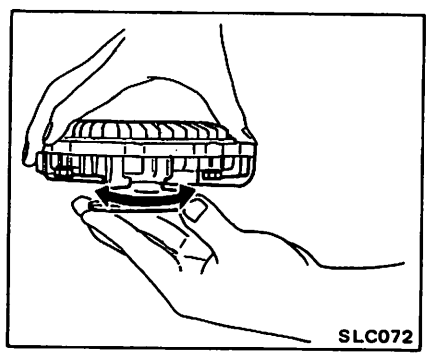

INSTALLATION

Install water pump in the reverse order of removal. Observe the following:

Use new gasket.

THERMOSTAT

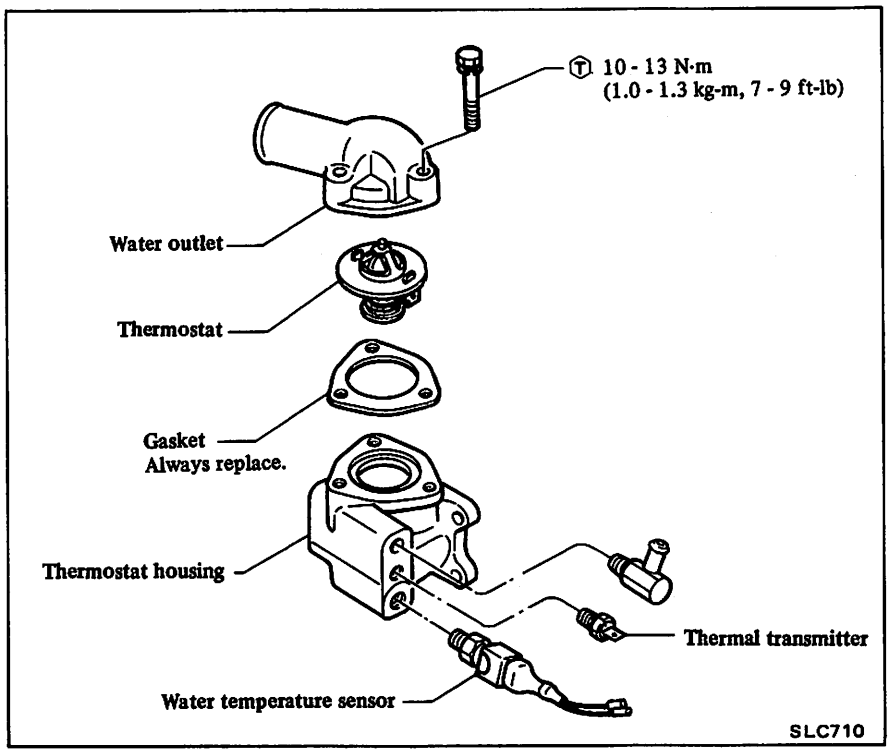

REMOVAL

1. Drain coolant and disconnect radiator upper hose at water outlet.

WARNING:
To avoid the danger of being scalded, never attempt to drain the coolant when the engine is hot.

2. Remove water outlet and then remove thermostat.

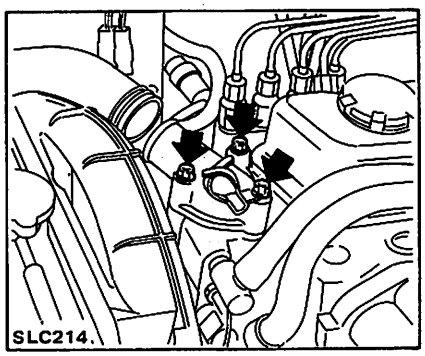

INSPECTION

Inspect thermostat. Replace if necessary.

1. Check valve seating condition at ordinary temperature. It should seat tightly.
2. Check valve opening temperature and maximum valve lift.

Valve opening temperature and maximum valve lift:
Refer to S.D.S.

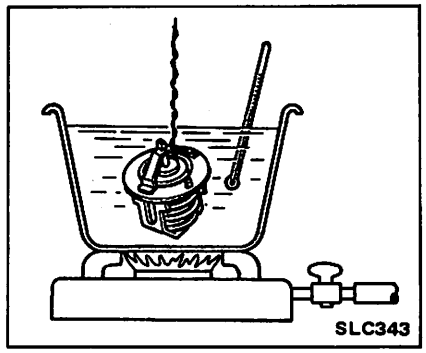

3. Check if valve closes at 5°C (9°F) below valve opening temperature.

It is necessary to check a new thermostat before installing it in engine.

INSTALLATION

Install thermostat in the reverse order of removal. Observe the following:

Use new gasket.

Run engine for a few minutes and check for leaks.

RADIATOR

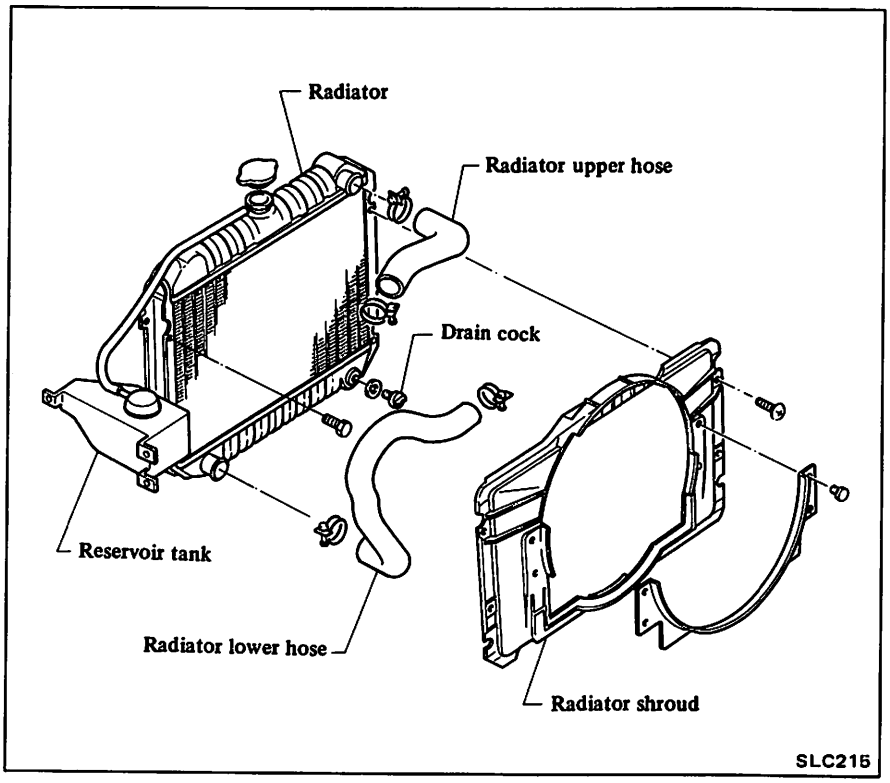

WARNING:
Never remove the radiator cap when the engine is hot. Serious burns can be caused by high pressure fluid escaping from the radiator. Wrap a thick cloth around cap and carefully remove the cap by turning it a quarter turn to allow built-up pressure to escape. Then turn the cap all the way and remove.

INSPECTION

Checking radiator cap

Using cap tester, check the radiator cap relief pressure.

If the pressure gauge drops rapidly and excessively, replace the radiator cap.

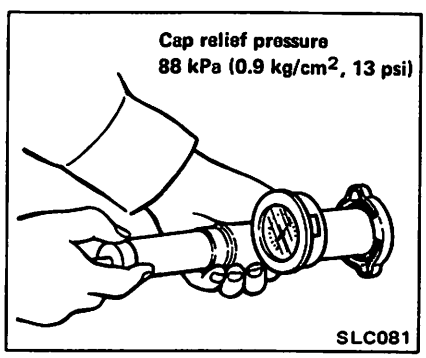

Checking cooling system for leaks

Attach pressure tester, pump tester to the specified pressure.

Check for drop in pressure.

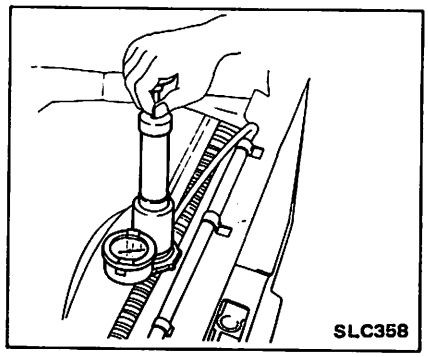

Leakage test pressure:
157 kPa (1.6 kg/cm^2, 23 psi)

If the pressure drops, check for leaks from hoses, radiator, or water pump.

If no external leaks are found, check heater core, block and head.

REMOVAL AND INSTALLATION

1. Remove battery.
2. Open radiator drain cock and allow to drain into a suitable container.

WARNING:
To avoid the danger of being scalded, never attempt to drain the coolant when the engine is hot.

3. Remove radiator shroud attaching screws and place radiator shroud close to engine.
(Radiator shroud can be removed after removing radiator.)
4. Disconnect radiator upper and lower hoses, and reservoir tank hose.
5. Remove radiator.
6. Install radiator in the reverse order of removal.
7. Fill radiator with coolant.

Refer to section MA for coolant capacity.

8. Run engine for a few minutes, and check for leaks.

SERVICE DATA AND SPECIFICATIONS (S.D.S.)

ENGINE LUBRICATION SYSTEM

GENERAL SPECIFICATIONS

	Z20 & Z24	SD25
Oil pump	Trochoid type	Gear type
Oil filter	Full flow and cartridge type	Cartridge
Oil cooler	–	Water cooled type

INSPECTION AND ADJUSTMENT

Oil pump

Z20 & Z24

Unit: mm (in)

	Standard	Wear limit
Rotor tip clearance	Less than 0.12 (0.0047)	0.20 (0.0079)
Outer rotor-to-body clearance	0.15 - 0.21 (0.0059 - 0.0083)	0.50 (0.197)
Rotor side clearance (rotor to bottom cover)	0.04 - 0.08 (0.0016 - 0.0031)	0.20 (0.0079)

SD25

Unit: mm (in)

	Standard	Wear limit
Gear side clearance (Gear to bottom cover)	0.025 - 0.100 (0.0010 - 0.0039)	0.15 (0.0059)
Gear tooth clearance (Gear tooth to body clearance)	Less than 0.12 (0.0047)	0.25 (0.0098)
Gear backlash	0.15 - 0.30 (0.0059 - 0.0118)	0.5 (0.020)
Clearance between oil pump cover, and idler shaft and drive shaft	0.50 (0.0197)	

TIGHTENING TORQUE

Unit	N·m	kg-m	ft-lb
Oil pump mounting bolt Z20 & Z24	11 - 15	1.1 - 1.5	8 - 11
SD25	13 - 19	1.3 - 1.9	9 - 14
Oil pump cover bolt Z20 & Z24	6 - 10	0.6 - 1.0	4.3 - 7.2
SD25	16 - 20	1.6 - 2.0	12 - 14
Regulator valve cap*1	39 - 49	4 - 5	29 - 36
Oil cooler securing bolt *2	10 - 13	1.0 - 1.3	7 - 9
Oil cooler pipe securing bolt or nut*2	10 - 13	1.0 - 1.3	7 - 9
Oil jet bolt (for piston) *2	29 - 39	3 - 4	22 - 29

*1 Indicates Z20 & Z24 engine
*2 Indicates SD25 engine

ENGINE COOLING SYSTEM

GENERAL SPECIFICATIONS

Cooling method	Water cooling force circulation	
Water pump type	Centrifugal	
Thermostat type	Wax-pellet	
Radiator type	Corrugated fin and tube.	
Tem-coupling Fan speed (at water pump speed 4,000 rpm) rpm/°C (°F)	Z20 & Z24	2,150/60 (140) Less than 1,650/ below 50 (122)
	SD25	3,700 - 4,000/ 84 - 94 (183 - 201)

INSPECTION AND ADJUSTMENT

Water pump (SD25)

Unit: mm (in)

Housing and Vane clearance	0.4 - 1.0 (0.016 - 0.039)

Thermostat

	Frigid type	Standard	*Tropical type
Valve opening temperature °C (°F)	88 (190)	82 (180)	76.5 (170)
Max. valve lift mm/°C (in/°F)	8/100 (0.31/212)	8/95 (0.31/203)	8/90 (0.31/194)

* Indicates Z20 & Z24

Radiator

Unit: kPa (kg/cm², psi)

Cap relief pressure	88 (0.9, 13)
Leakage test pressure	157 (1.6, 23)

TIGHTENING TORQUE

Unit			N·m	kg-m	ft-lb
Water pump	Z20 & Z24	M6	4 - 10	0.4 - 1.0	2.9 - 7.2
		M8	10 - 16	1.0 - 1.6	7 - 12
	SD25	M8	10 - 13	1.0 - 1.3	7 - 9
		M10	20 - 25	2.0 - 2.5	14 - 18
Thermostat housing bolt *			10 - 13	1.0 - 1.3	7 - 9
Water outlet bolt *			10 - 13	1.0 - 1.3	7 - 9

* Indicates SD25

ENGINE FUEL & EMISSION CONTROL SYSTEM

SECTION EF & EC

EF & EC

CONTENTS

Z20 & Z24 for U.S.A.

PRECAUTIONS ..... EF & EC- 3
ENGINE AND EMISSION CONTROL DIAGRAM ..... EF & EC- 4
ENGINE AND EMISSION CONTROL CHART ..... EF & EC- 5
CIRCUIT DIAGRAM ..... EF & EC- 6
WIRING DIAGRAM ..... EF & EC- 7
COMPONENT PARTS LOCATION ..... EF & EC- 8
DIAGNOSTIC PROCEDURE ..... EF & EC- 9
DIAGNOSTIC STEPS ..... EF & EC- 14
E.C.C. CONTROL CHART ..... EF & EC- 18
E.C.C. SYSTEM DESCRIPTION ..... EF & EC- 19
E.C.C. COMPONENT PARTS DESCRIPTION ..... EF & EC- 28
E.C.C. ELECTRICAL SYSTEM INSPECTION ..... EF & EC- 30
AUTOMATIC TEMPERATURE CONTROL (A.T.C.) AIR CLEANER ..... EF & EC- 38
ELECTRIC FUEL PUMP ..... EF & EC- 40
CARBURETOR ..... EF & EC- 41
CARBURETOR – Inspection and Adjustment ..... EF & EC- 47
ENGINE AND EMISSION CONTROL SYSTEM ..... EF & EC- 60

Z24 for Canada

ENGINE AND EMISSION CONTROL SYSTEM TABLE ..... EF & EC- 78
ENGINE AND EMISSION CONTROL DIAGRAM ..... EF & EC- 79
VACUUM DIAGRAM ..... EF & EC- 80
CIRCUIT DIAGRAM ..... EF & EC- 81
WIRING DIAGRAM ..... EF & EC- 82
DIAGNOSTIC PROCEDURE FOR PROBLEMS ..... EF & EC- 83
AUTOMATIC TEMPERATURE CONTROL (A.T.C.) AIR CLEANER ..... EF & EC- 90
IDLE COMPENSATOR ..... EF & EC- 92
ELECTRIC FUEL PUMP ..... EF & EC- 93
CARBURETOR ..... EF & EC- 96
CRANKCASE EMISSION CONTROL SYSTEM ..... EF & EC-110
EXHAUST EMISSION CONTROL SYSTEM ..... EF & EC-111
EVAPORATIVE EMISSION CONTROL SYSTEM ..... EF & EC-124

Contents (Cont'd)

SD25

INJECTION PUMP ASSEMBLY (DIESEL KIKI-Bosch in-line type) ..... EF & EC-127
EXHAUST EMISSION CONTROL SYSTEM ..... EF & EC-132
CRANKCASE EMISSION CONTROL SYSTEM ..... EF & EC-137

Z20, Z24 & SD25

SERVICE DATA AND SPECIFICATIONS (S.D.S.) ..... EF & EC-139
SPECIAL SERVICE TOOLS (SD25) ..... EF & EC-142

PRECAUTIONS

- Always use a 12 volt battery as power source.
- Do not attempt to disconnect battery cables while engine is running.

- Do not operate fuel pump when there is no fuel in lines.
- Do not reuse fuel hose clamps.
- Tighten fuel hose clamps sufficiently.

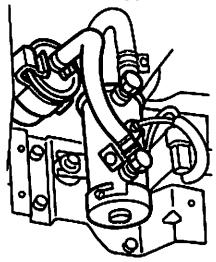

- When installing large capacity wireless equipment or a vehicle phone, be sure to observe the following as it may adversely affect electronic control systems depending on its installation location.

1) Keep the antenna as far as possible away from the electronic control units.
2) Also keep the antenna feeder line more than 20 cm (7.9 in) away from the harness of electronic controls.
   Do not let them run parallel for a long distance.
3) Adjust the antenna and feeder line so that the standing-wave ratio can be kept smaller.

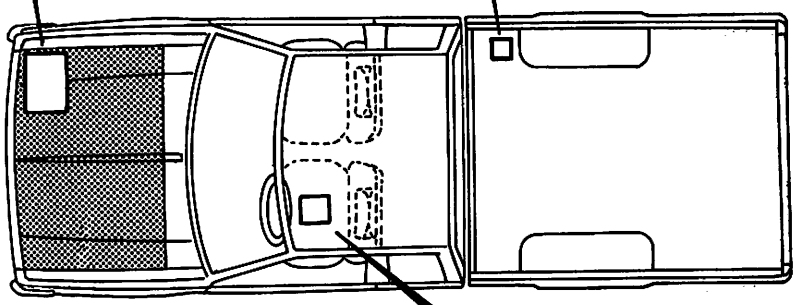

- Securely connect E.C.C. harness connectors.
  A poor connection can cause an extremely high (surge) voltage to develop in coil and condenser, thus resulting in damage to IC circuit.
- Keep E.C.C. harness at least 10 cm (3.9 in) away from adjacent harnesses, to prevent an E.C.C. system malfunction due to reception of external noise, degraded operation of IC circuit, etc.
- Keep E.C.C. parts and harnesses dry.
- Before removing parts, turn off ignition switch and then disconnect battery ground cable.

- Do not depress accelerator pedal when staring.
- Immediately after starting, do not rev up engine unnecessarily.
- Do not rev up engine just prior to shutdown.

- Do not disassemble E.C.C. control unit.

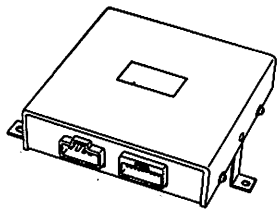

SEF530C

ENGINE AND EMISSION CONTROL DIAGRAM

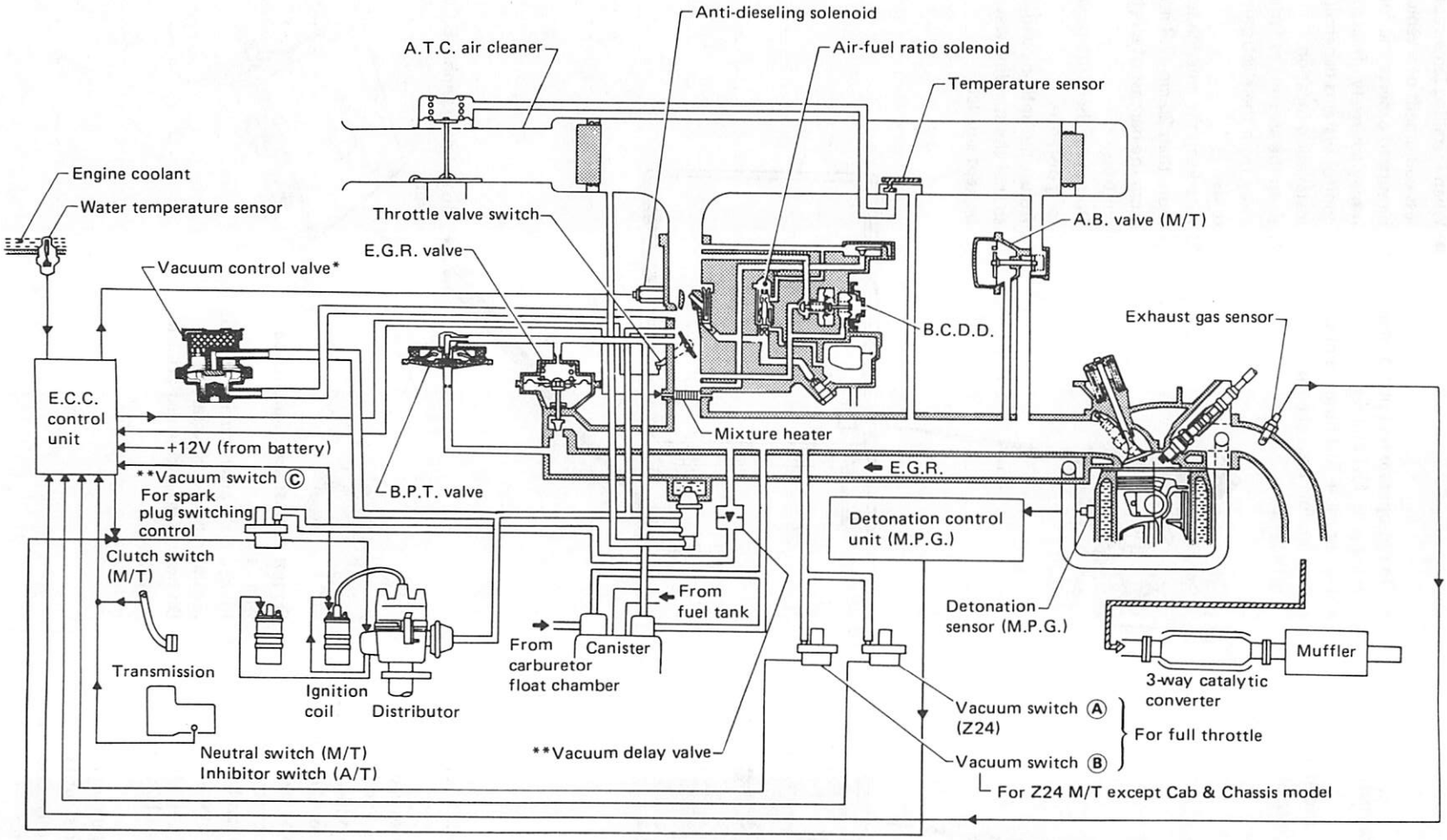

*Except for M.P.G. and camper model
**For Z24 M/T non-California except Cab & Chassis model

SEF913C

ENGINE AND EMISSION CONTROL CHART

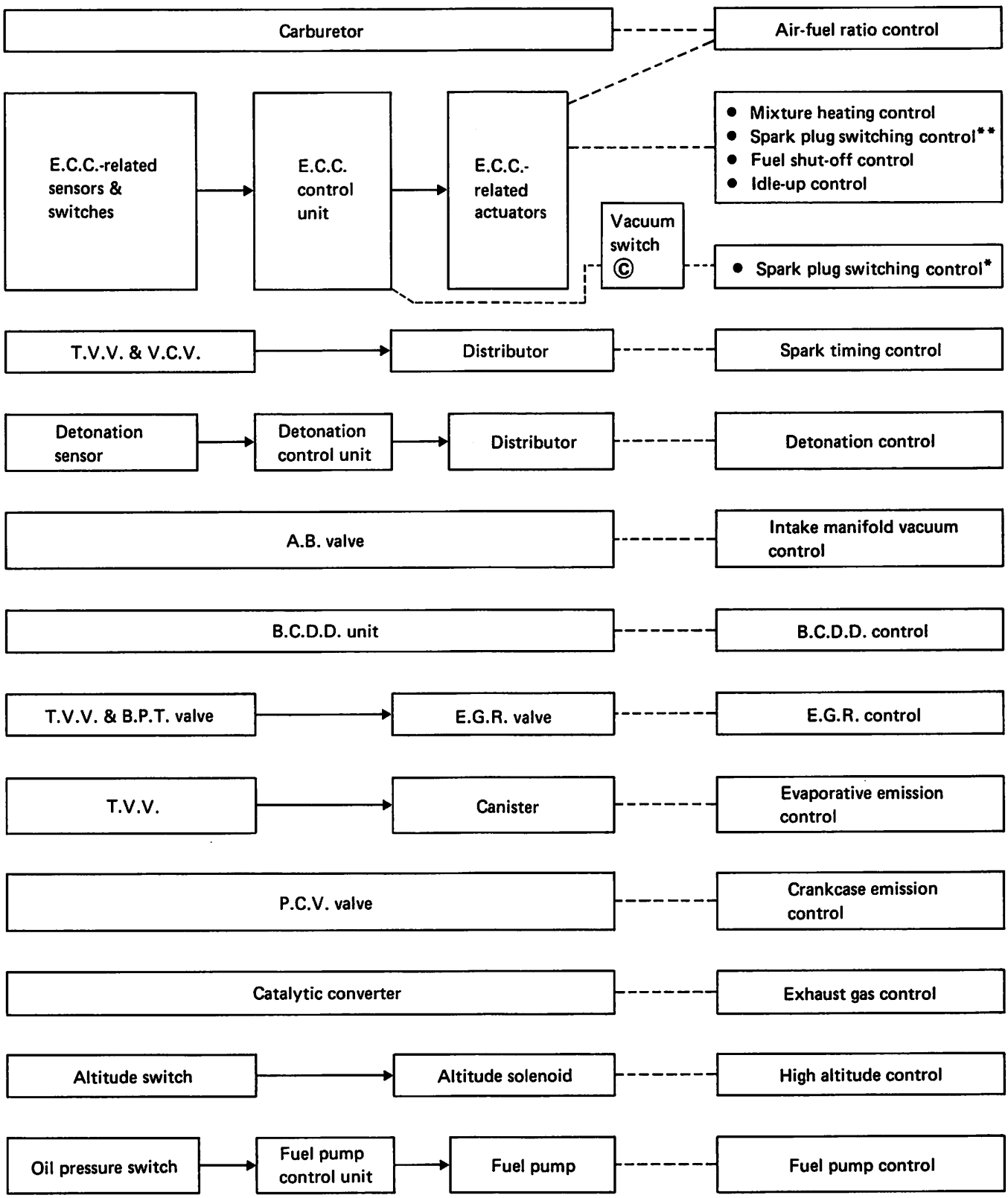

*For Z24 M/T non-California except Cab & Chassis model
**Except above

CIRCUIT DIAGRAM

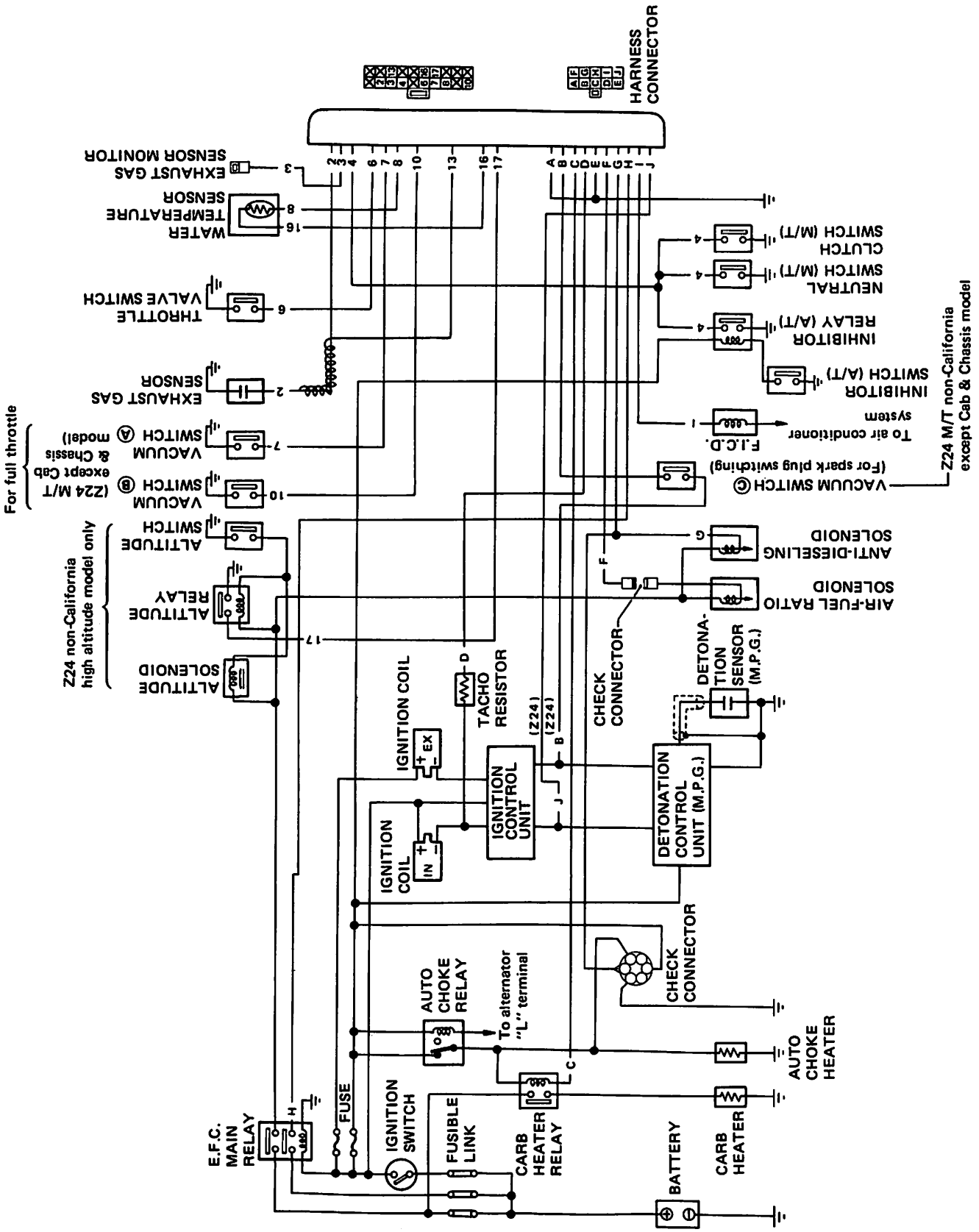

SEF914C

WIRING DIAGRAM

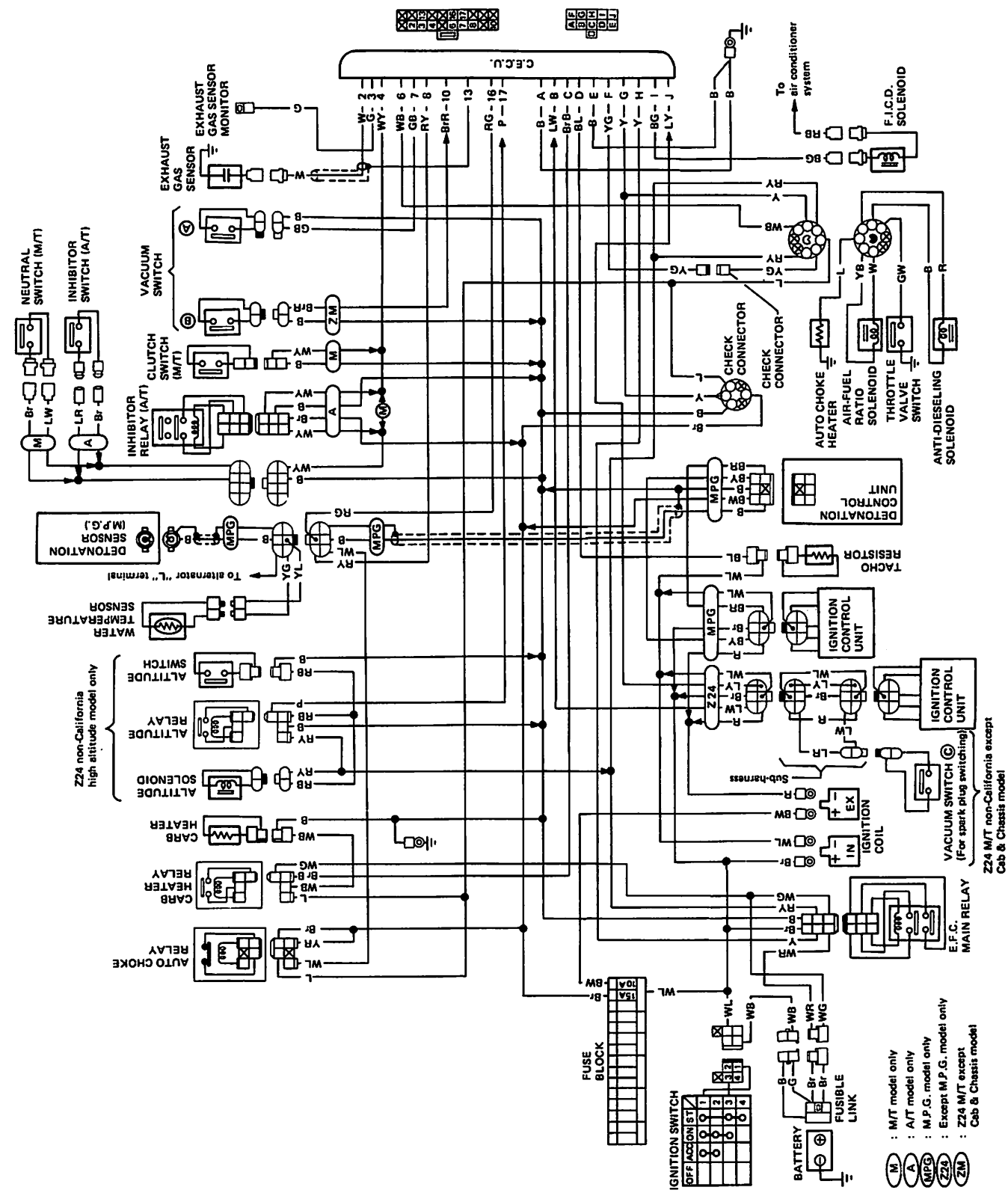

SEF915C

COMPONENT PARTS LOCATION

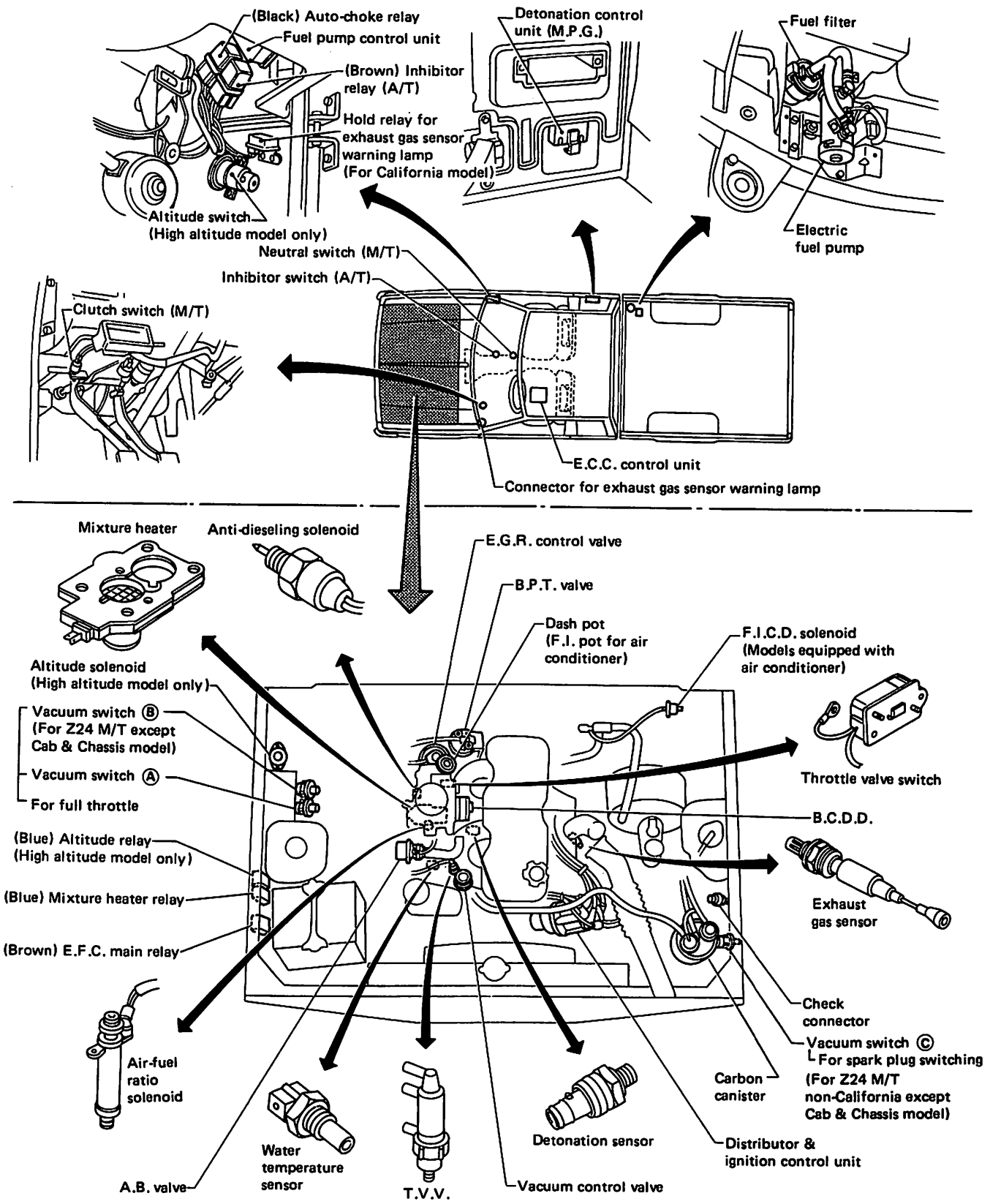

SEF916C

DIAGNOSTIC PROCEDURE

Intermittent Problems

CAUTION:
When connecting or disconnecting E.C.C. harness connector to or from any E.C.C. unit, ensure that the ignition switch is in the "OFF" position and that the negative battery terminal is disconnected. Removing and installing these connectors with the ignition switch left in the "ON" position will damage control unit.

DIAGNOSTIC CHARTS CANNOT BE USED TO DIAGNOSE INTERMITTENT FAILURES. This is because many intermittent problems are caused at electrical connections, and if intermittent problems are not corrected, unnecessary component replacement will be indicated and the problems may remain. Therefore, DIAGNOSIS OF INTERMITTENT PROBLEMS SHOULD START WITH A VISUAL AND PHYSICAL INSPECTION OF THE CONNECTORS involved in the circuit, especially control unit, water temperature sensor and exhaust gas sensor connectors.

DIAGNOSTIC PROCEDURE

Driveability

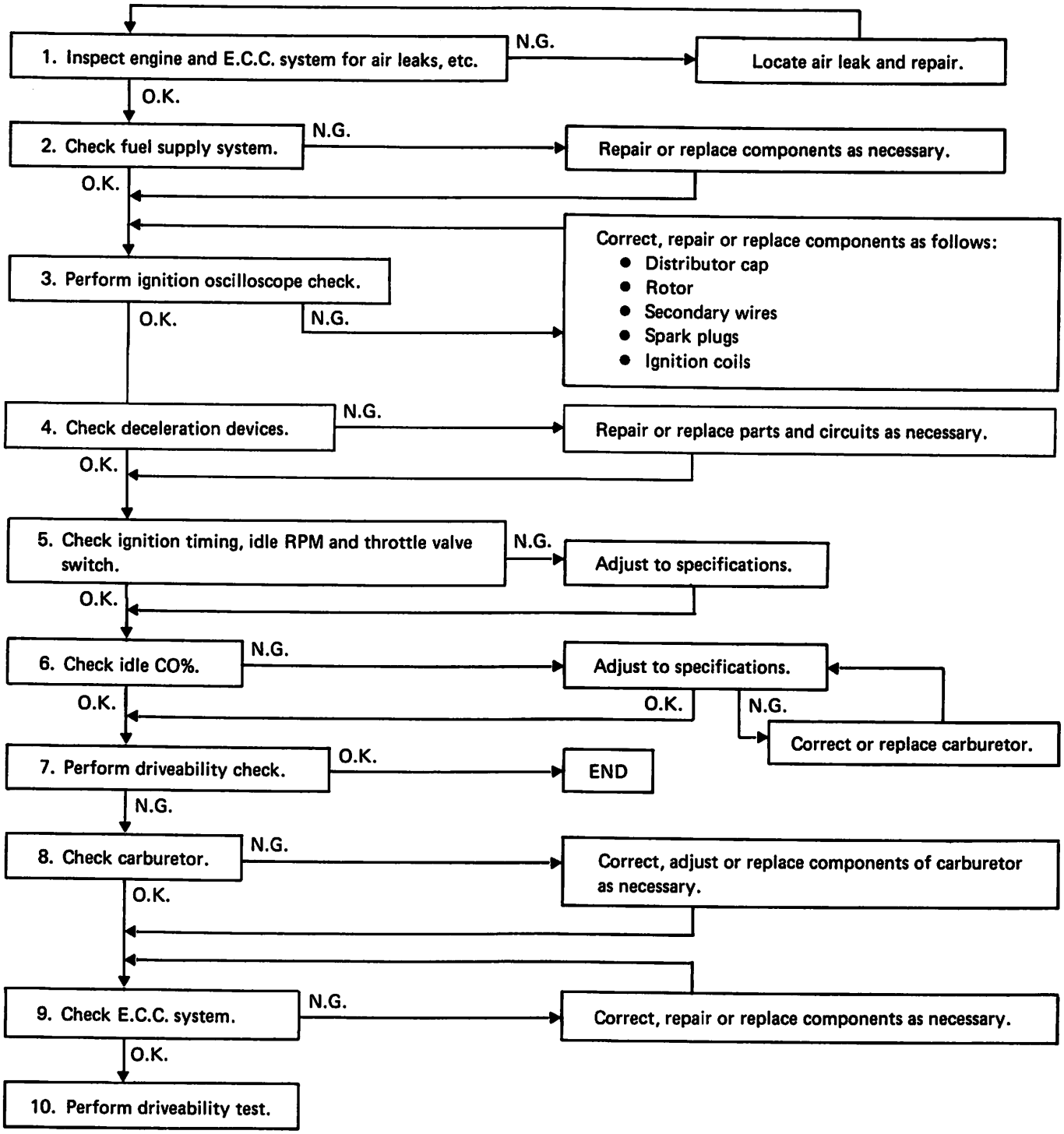

DIAGNOSTIC PROCEDURE

Improper Idling

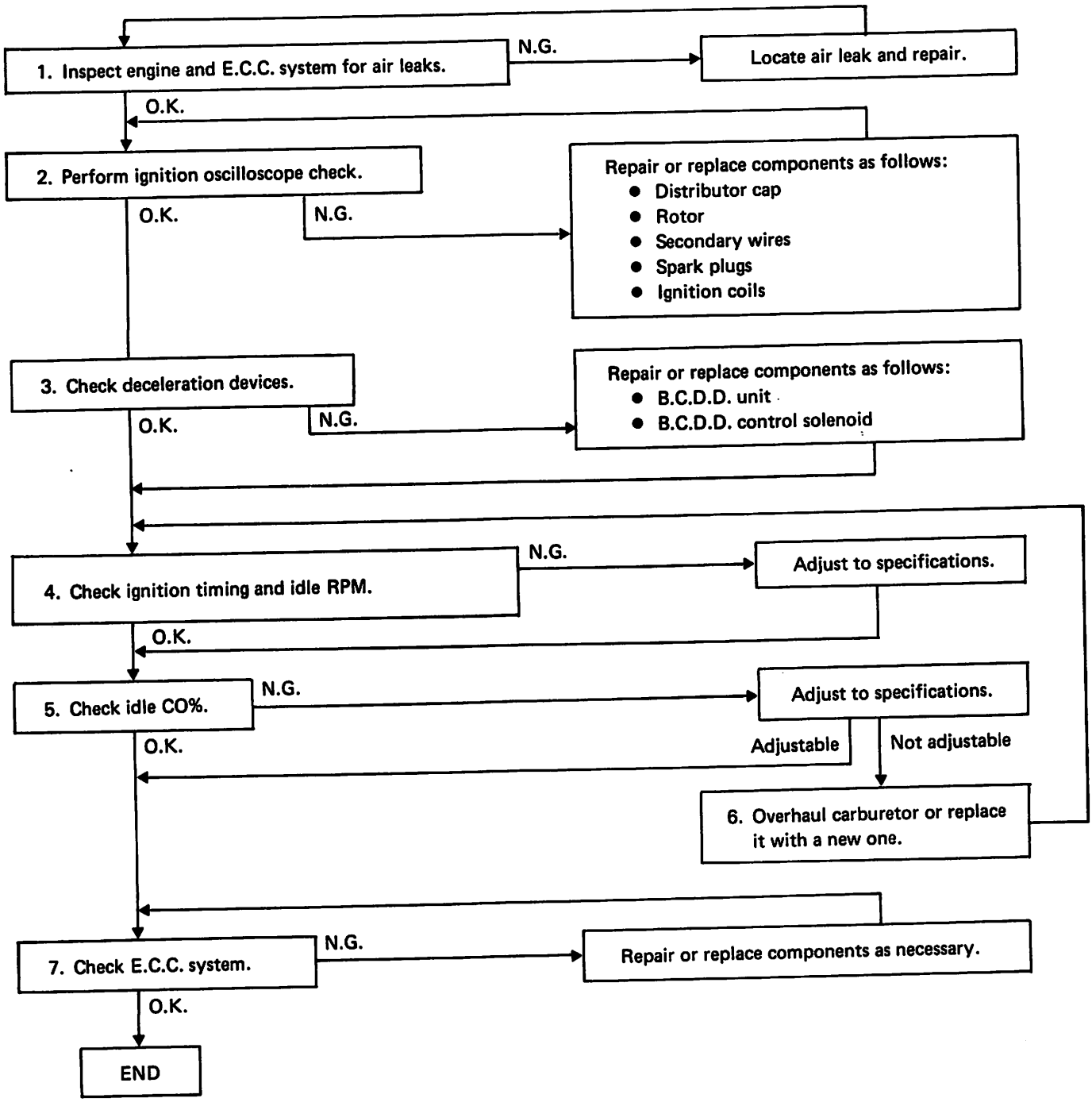

DIAGNOSTIC PROCEDURE

Engine Startability

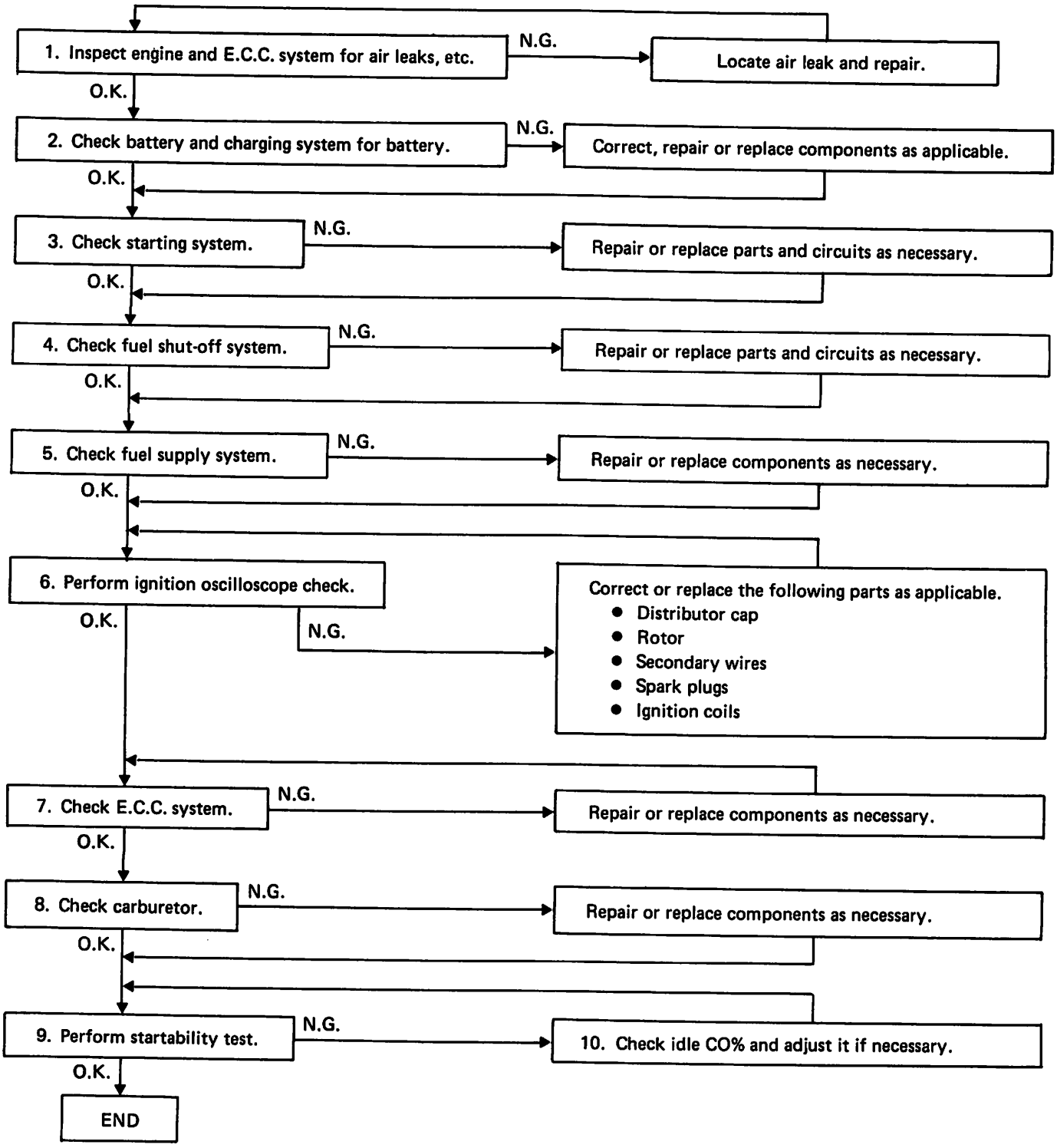

DIAGNOSTIC PROCEDURE

Engine Stall

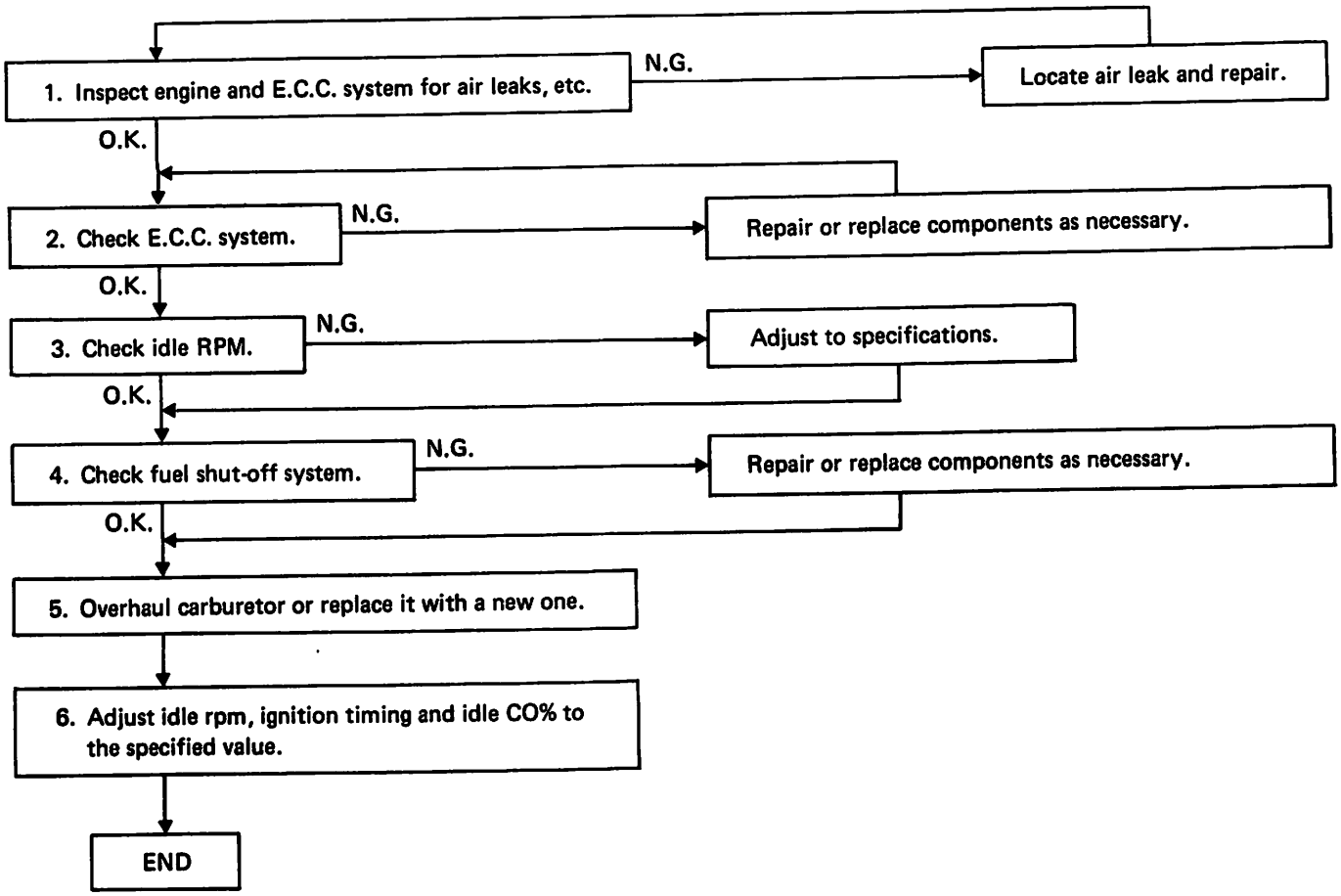

DIAGNOSTIC STEPS

Driveability

1. Inspect engine and E.C.C. system for leaks.
(1) Check clamps at all air intake components.
(2) Check vacuum hoses for leakage.
(3) Check air cleaner filter for clogging.
(4) Visually inspect for leaks at the following:
- Dipstick
- A.B. valve hose (M/T)
- Intake manifold gasket
- Valve rocker cover
- E.G.R. valve gasket
- Oil filler cap

(5) Check E.G.R. valve seat and operation.
(6) Check A.B. valve operation (M/T).
(7) Check A.T.C. air cleaner and idle compensator.

2. Check fuel supply system.
(1) Make sure proper fuel is used.
(2) Visually check fuel filter for clogging.
(3) Visually check fuel lines for leaks.
(4) With engine idling, visually check fuel level through sight window of float chamber.

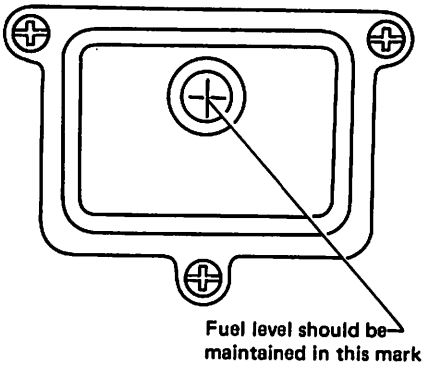

SEF461C

(5) Check electric fuel pump operation.

3. Perform ignition oscilloscope test.
(1) Warm engine to operating temperature.
(2) Check ignition system for unusually high or low firing voltage.
(3) If firing voltage is abnormal, determine cause and repair.

4. Check deceleration devices.
(1) Check fuel shut-off system.
a) Perform E.C.C. electrical system check for related components and circuits.
Refer to E.C.C. ELECTRICAL SYSTEM INSPECTION.
b) Check anti-dieseling solenoid.
Refer to CARBURETOR-Inspection and Adjustment.
(2) Check B.C.D.D. unit.
Refer to BOOST CONTROLLED DECELERATION DEVICE (B.C.D.D.).

5. Check ignition timing, idle rpm and throttle valve switch.
(1) Checking and adjusting ignition timing and idle rpm.

Checks and adjustments are made in the following conditions:
- **Headlamp switch: OFF**
- **Heater blower: OFF**
- **Air conditioning switch: OFF (if equipped)**
- **Steering: KEEP WHEELS STRAIGHT AHEAD (if equipped with power steering)**

a) Disconnect distributor vacuum hose from distributor vacuum controller, and plug hose with proper plug.
b) Run engine at about 2,000 rpm for about 2 minutes under no-load. Then, run engine at idle speed and ensure that engine speed is below 1,000 rpm.
c) Race engine two or three times under no-load. Then run engine at idle speed for one minute.
d) Check ignition timing with a timing light.

Z24:
3°±2° B.T.D.C.
(A/T: in "D" position)
M.P.G.:
5°±2° B.T.D.C.

Adjust as necessary.
e) Connect distributor vacuum hose.
f) Race engine two or three times under no-load and run engine at idle speed.
g) Check idle speed.

2WD	Cab & Chassis, M.P.G.	700±100 rpm
	Except Cab & Chassis	800±100 rpm
4WD		

DIAGNOSTIC STEPS

Driveability (Cont'd)

If necessary, adjust to the specified rpm by turning the idle speed adjusting screw.

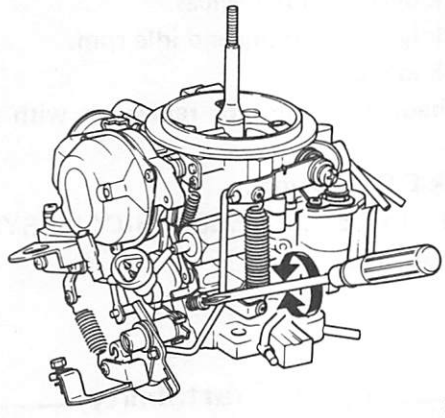

SMA259B

(2) Check throttle valve switch adjustment.
Refer to Throttle Valve Switch Test of E.C.C. ELECTRICAL SYSTEM INSPECTION.

6. Check idle CO%.

The checking or adjustment of idle CO% requires the use of a CO meter. It is essential that the meter be fully warmed up and calibrated before any adjustment is made.

(1) Verify that engine is at operating temperature.
(2) Disconnect vacuum hose from vacuum switch Ⓐ and plug hose with proper cap.

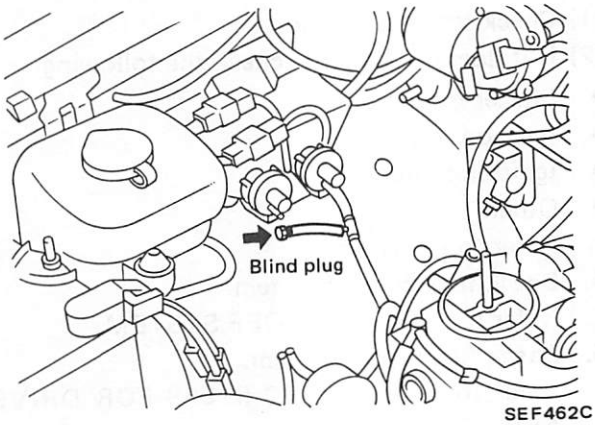

SEF462C

(3) Run engine at 2,000 rpm for 2 minutes under no-load to stabilize its condition.
(4) Race engine two or three times under no-load and run engine for one minute at idle speed.
(5) Reset idle speed to the specified speed.
(6) Check CO% as per Table, Column 1 and if necessary, adjust to the specified point as per Table, Column 2. The CO% adjustment is made by turning the idle mixture screw.
Refer to IDLE MIXTURE ADJUSTING PROCEDURE of CARBURETOR.

Check idle CO% Column 1	Adjust idle CO% Column 2
Less than 4%	$1.0^{+1.0}_{-0.7}$%

(7) Stop engine, and reconnect vacuum hose to vacuum switch.
(8) Check idle speed. Readjust to the specified speed.

7. Perform driveability test.

(1) Evaluate effectiveness of adjustments by driving vehicle.
(2) If unsatisfactory, proceed to step 8.

8. Check carburetor.

(1) With engine stopped, check each linkage and throttle valve for smooth operation. At the same time, make sure fuel is injected smoothly through the accelerating injection nozzle.
(2) Check choke valve opening.
a) Ensure that choke valve is fully open when engine is at operating temperature.
b) If not, turn off engine and check choke heater circuit.
c) If circuit is O.K., replace choke chamber assembly.
(3) Check interlock opening of primary and secondary throttle valves.
a) Remove carburetor from engine.

DIAGNOSTIC STEPS

Driveability (Cont'd)

b) Turn throttle arm until adjusting plate comes in contact with lock lever at point Ⓐ and check clearance "G".

Clearance "G":

Z24: 8.37±0.5 mm (0.3295±0.0197 in)
Z20: 7.88±0.5 mm (0.3102±0.0197 in)

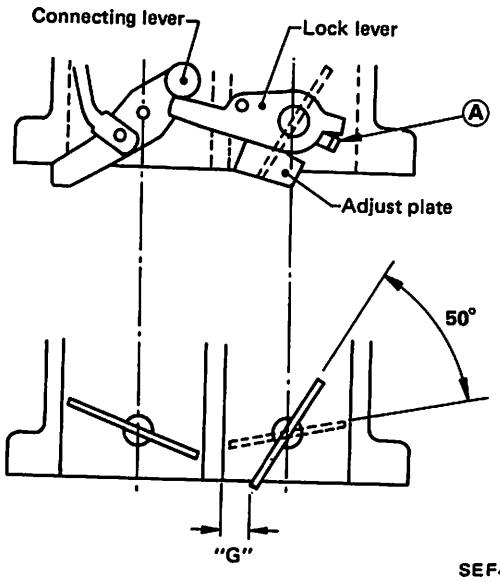

SEF463C

c) If out of specification, adjust by bending tongue of throttle arm.

(4) Clean jets, emulsion tubes and passages.

CAUTION:

a. Be sure to use a screwdriver of proper size.
b. Be careful not to scratch or nick jet.
c. To clean jet, use solvent and compressed air.

(5) Check idle CO%, following the procedure in step 6.

9. Check E.C.C. system.
Follow the procedure in Electrical System Inspection For E.C.C.
Refer to E.C.C. ELECTRICAL SYSTEM INSPECTION.

10. Perform driveability test.
Reevaluate vehicle performance.

Improper Idling

1. **Inspect engine and E.C.C. system for leaks.**
2. **Perform ignition oscilloscope test.**
3. **Check deceleration devices.**
4. **Check ignition timing and idle rpm.**
5. **Check idle CO%.**
6. **Overhaul carburetor or replace it with a new one.**
7. **Check E.C.C. system.**
   Refer to E.C.C. ELECTRICAL SYSTEM INSPECTION.

Engine Startability

1. **Inspect engine and E.C.C. system for leaks.**
   Refer to DIAGNOSTIC STEPS FOR DRIVEABILITY.
2. **Check battery and charging system for battery.**

(1) Check battery voltage.
(2) If poor battery voltage, check charging system for battery.

- Alternator
- Voltage regulator
- Others

Refer to EL section.

3. **Check starting system.**

(1) Check starter operation.
(2) If it does not operate, check the following:

- Starter motor
- Ignition relay
- Ignition switch
- Others

Refer to EL section.

4. **Check fuel shut-off system.**
   Refer to FUEL SHUT-OFF SYSTEM.
5. **Check fuel supply system.**
   Refer to DIAGNOSTIC STEPS FOR DRIVEABILITY.
6. **Perform ignition oscilloscope test.**
   Refer to DIAGNOSTIC STEPS FOR DRIVEABILITY.
7. **Check E.C.C. system.**
   Refer to E.C.C. ELECTRICAL SYSTEM INSPECTION.

DIAGNOSTIC STEPS

Engine Startability (Cont'd)

8. Check carburetor.

(1) With engine cold, visually check that choke valve is fully closed.

(2) In this condition, check vacuum break diaphragm operation using a vacuum handy pump.

Clearance "R":

R_1 [Below 5°C (41°F)]

Z24

2.25±0.15 mm (0.0886±0.0059 in)

M.P.G.

1.95±0.15 mm (0.0768±0.0059 in)

R_2 [Above 20°C (68°F)]

Z24

3.40±0.30 mm (0.1339±0.0118 in)

M.P.G.

3.42±0.30 mm (0.1346±0.0118 in)

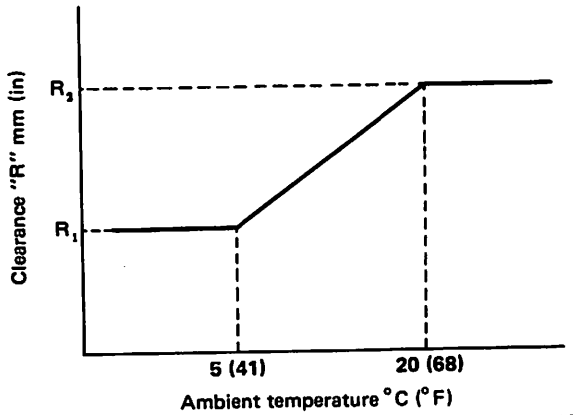

SEF464C

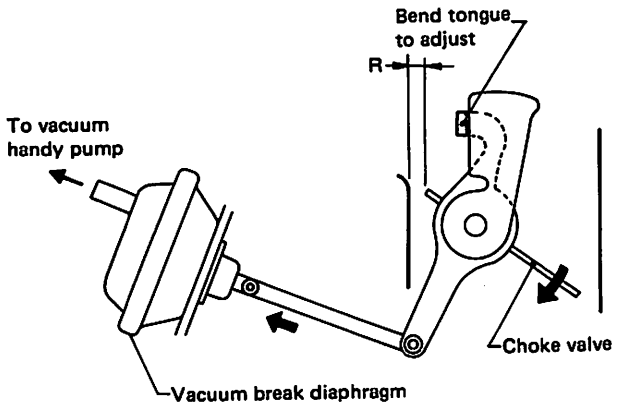

SEF465C

(3) If out of specification, adjust clearance by bending adjusting tongue.

9. Perform startability test.

(1) Start engine with the recommended starting procedure.

(2) If engine does not start, proceed to step 10.

10. Check and adjust idle CO%.

Check idle CO%. Follow the procedure from step 6, operations (1) through (8) in DIAGNOSTIC STEP FOR DRIVEABILITY.

Engine Stall

1. **Inspect engine and E.C.C. system for leaks.**
   Refer to DIAGNOSTIC STEPS FOR DRIVEABILITY.
2. **Check E.C.C. system.**
   Refer to E.C.C. ELECTRICAL SYSTEM INSPECTION.
3. **Check idle rpm.**
   Follow the procedure from step 5-(1), operations a) through g) in DIAGNOSTIC STEPS FOR DRIVEABILITY.
4. **Check fuel shut-off system.**
   Refer to FUEL SHUT-OFF SYSTEM.
5. **Overhaul carburetor or replace it with a new one.**
6. **Adjust idle rpm, ignition timing and idle CO% to the specified values.**
   Refer to DIAGNOSTIC STEPS FOR DRIVEABILITY.

E.C.C. CONTROL CHART

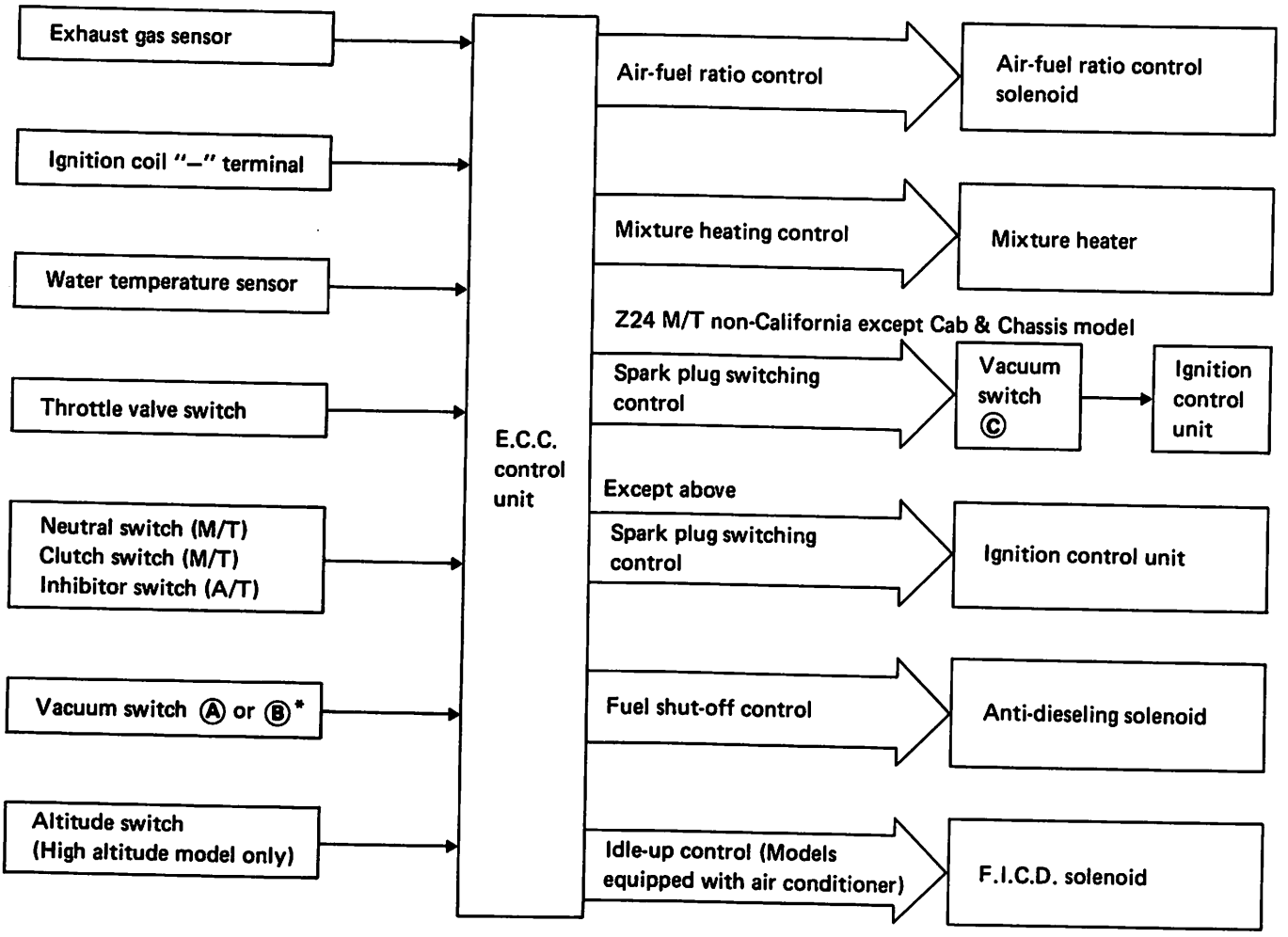

*Vacuum switch Ⓑ is applied for Z24 M/T except Cab & Chassis model.

E.C.C. SYSTEM DESCRIPTION

Air-fuel Ratio Control

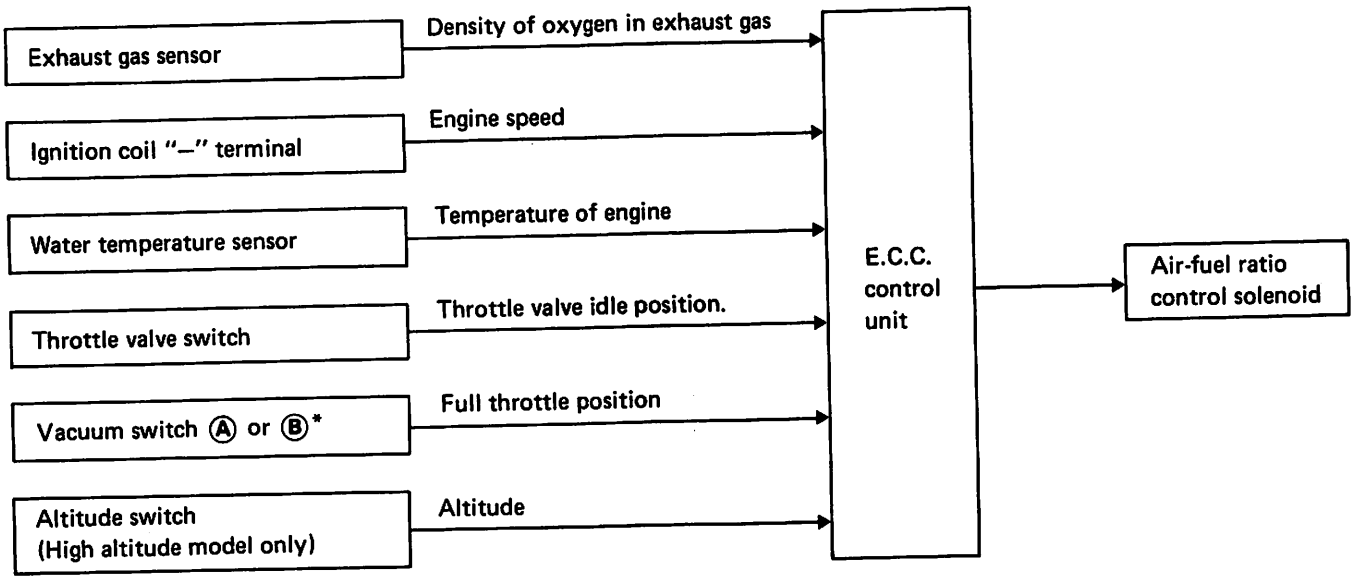

*Vacuum switch Ⓑ is applied for Z24 M/T except Cab & Chassis model.

There are two ways to control air-fuel ratio: closed loop control and open-loop control, which are switched back and forth depending on water temperature, engine speed, engine load, exhaust gas sensor signal, etc.

CLOSED-LOOP CONTROL
(Air-fuel ratio feedback control)

This system is designed to control the air-fuel ratio precisely to the stoichiometric point so that the three-way catalyst can minimize CO, HC and NOx emissions simultaneously. The system uses the exhaust gas sensor located in the exhaust manifold to give an indication of whether the air-fuel ratio is richer or leaner than the stoichiometric point. The sensor transmits a nonlinear voltage to the E.C.C. control unit. The control unit adjusts the feedback pulse width according to the sensor voltage so the mixture ratio will be within the narrow window of the three-way catalyst. During engine warm-up period, however, this system becomes open until the sensor reaches the operating temperature.

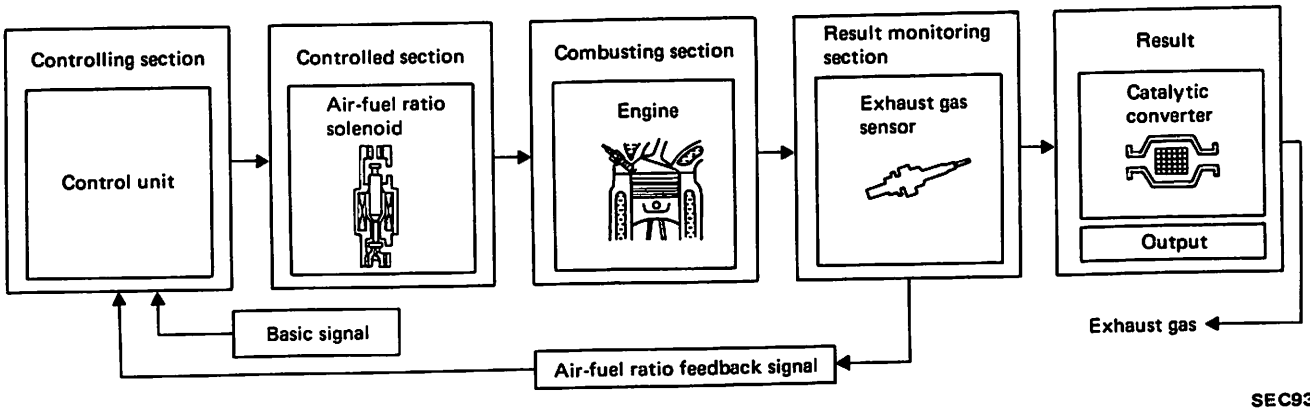

SEC935

E.C.C. SYSTEM DESCRIPTION

Air-fuel Ratio Control (Cont'd)

OPEN-LOOP CONTROL

For improved driveability, the air-fuel ratio solenoid is controlled by open-loop control when the engine is cold, when driving at high speeds or under heavy load and when the fuel shut-off system is in operation. With open-loop control, the mixture ratio is determined by the control unit to correspond to the engine rpm, engine load and engine warm-up conditions.

Open-loop control will activate under the following conditions:

a. When starting	Engine speed < 400 rpm
b. When engine is cold	Water temperature < 50°C (122°F)
c. When exhaust gas sensor is not activated	Exhaust gas sensor output voltage: Rich side ..... Below 600 mV Lean side ..... Above 200 mV
d. When driving under heavy load	Vacuum switch*: ON
e. During deceleration	Fuel shut-off switch is in operation
f. At idling	10 seconds after conditions below are completed: • Engine speed < 1,000 rpm • 70°C (158°F) ≦ Water temperature < 90°C (194°F) • Idle switch: OFF

*There are two vacuum switches for sending full throttle signal to E.C.C. control unit, except for A/T and Cab & Chassis models. E.C.C. control unit chooses one of these two, according to altitude and water temperature.

	Location	Water temperature °C (°F)	Vacuum switch		
			* Ⓐ		Ⓑ −20.0 kPa (−150 mmHg, −5.91 inHg)
			−10.7 kPa (−80 mmHg, −3.15 inHg)	−16.0 kPa (−120 mmHg, −4.72 inHg)	
High altitude model	High altitude	Any condition	○		–
	Low altitude	Above 50 (122)	○		–
		Below 50 (122)	–		○
Non-high altitude model	Any location	Above 50 (122)	○		–
		Below 50 (122)	–		○

For Z24 A/T and Cab & Chassis models, there is only one vacuum switch Ⓐ.
With the high altitude model, each clamp valve becomes leaner at high altitudes by a certain value.

E.C.C. SYSTEM DESCRIPTION

Air-fuel Ratio Control (Cont'd)

***Vacuum switch Ⓐ accommodation table**

Vacuum switch Ⓐ Operating pressure kPa (mmHg, inHg)	Non-California				California			
	2WD			4WD	2WD			4WD
	M/T		A/T		M/T		A/T	
	Except Cab & Chassis	Cab & Chassis			Except Cab & Chassis	Cab & Chassis		
−10.7 (−80, −3.15)		○			○	○		○
−16.0 (−120, −4.72)	○		○	○			○	

Spark Plug Switching Control
(Except high altitude model at high altitudes and M.P.G. model)

Spark plug switching control accommodation table

	Non-California				California			
	2WD			4WD	2WD			4WD
	M/T		A/T		M/T		A/T	
	Except Cab & Chassis	Cab & Chassis			Except Cab & Chassis	Cab & Chassis		
TYPE I	○			○				
TYPE II		○	○		○	○	○	○

Type I

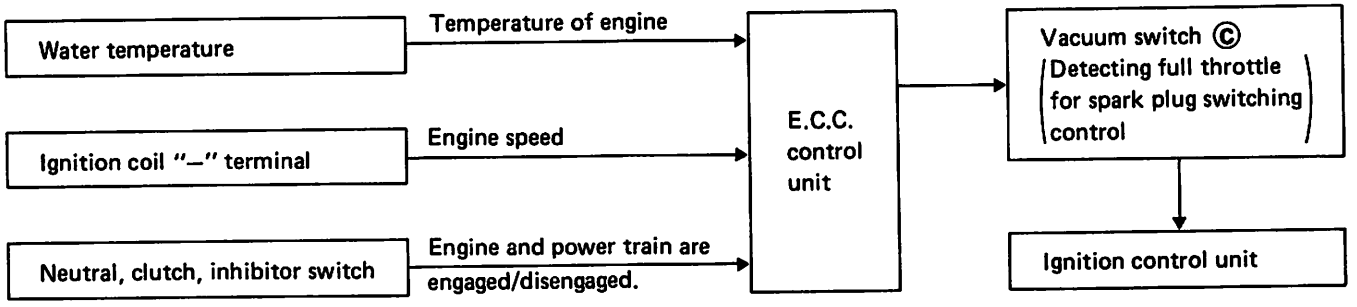

E.C.C. SYSTEM DESCRIPTION

Spark Plug Switching Control
(Except high altitude model at high altitudes and M.P.G. model) (Cont'd)

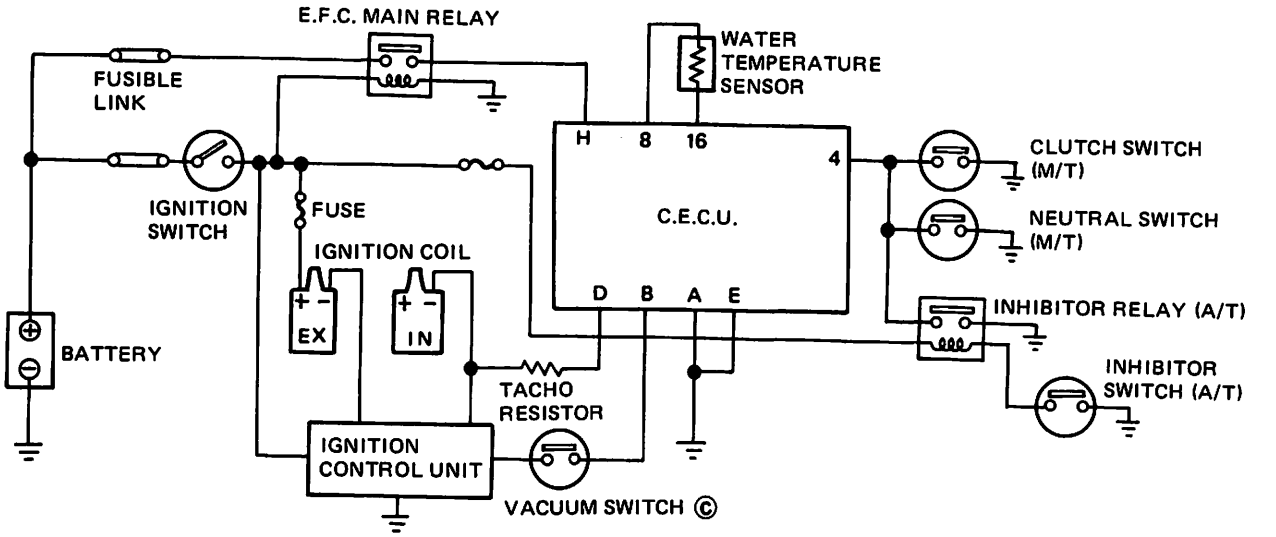

The spark plug switching control system is designed to change the ignition system from 2-plug ignition to 1-plug ignition during heavy load driving conditions in order to reduce engine noise.

Engine operation condition					Ignition control
Neutral / Clutch / Inhibitor switch*1	Vacuum switch Ⓐ *2	Vacuum switch Ⓒ *3	Water temperature	Engine speed	
ON	Any condition				2-spark plug system
OFF	OFF	Any condition			2-spark plug system
OFF	ON	OFF	Any condition		2-spark plug system
OFF	ON	ON	Below 70°C (158°F)	Below 2,400 rpm	2-spark plug system
OFF	ON	ON	Below 70°C (158°F)	Over 2,400 rpm	1-spark plug system
OFF	ON	ON	Over 70°C (158°F)	Any condition	1-spark plug system

*1 M/T ON: Gear is in Neutral or clutch is disengaged.
OFF: Gear is in other than Neutral and clutch is engaged.
A/T ON: Select position is "N" or "P".
OFF: Select position is other than "N" and "P".

*2 ON: Cranking or detecting full throttle for air fuel ratio control
[Intake manifold vacuum < 16.0 kPa (120 mmHg, 4.72 inHg)]
OFF: Idling or detecting light load for air fuel ratio control
[Intake manifold vacuum ≧ 16.0 kPa (120 mmHg, 4.72 inHg)]

*3 ON: Detecting full throttle for spark plug switching control
[Intake manifold vacuum < 10.7 kPa (80 mmHg, 3.15 inHg)]
OFF: Idling or detecting light load for spark plug switching control
[Intake manifold vacuum ≧ 10.7 kPa (80 mmHg, 3.15 inHg)]

E.C.C. SYSTEM DESCRIPTION

Spark Plug Switching Control
(Except high altitude model at high altitudes and M.P.G. model) (Cont'd)

TYPE II

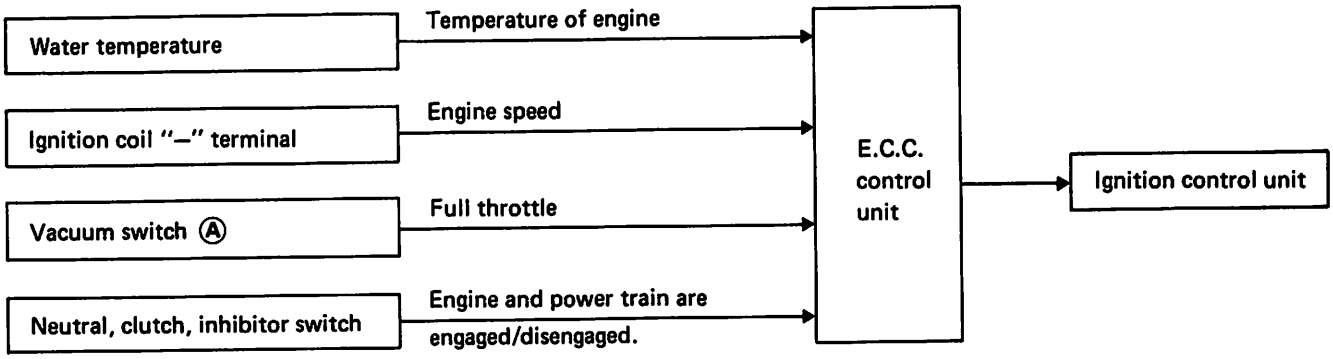

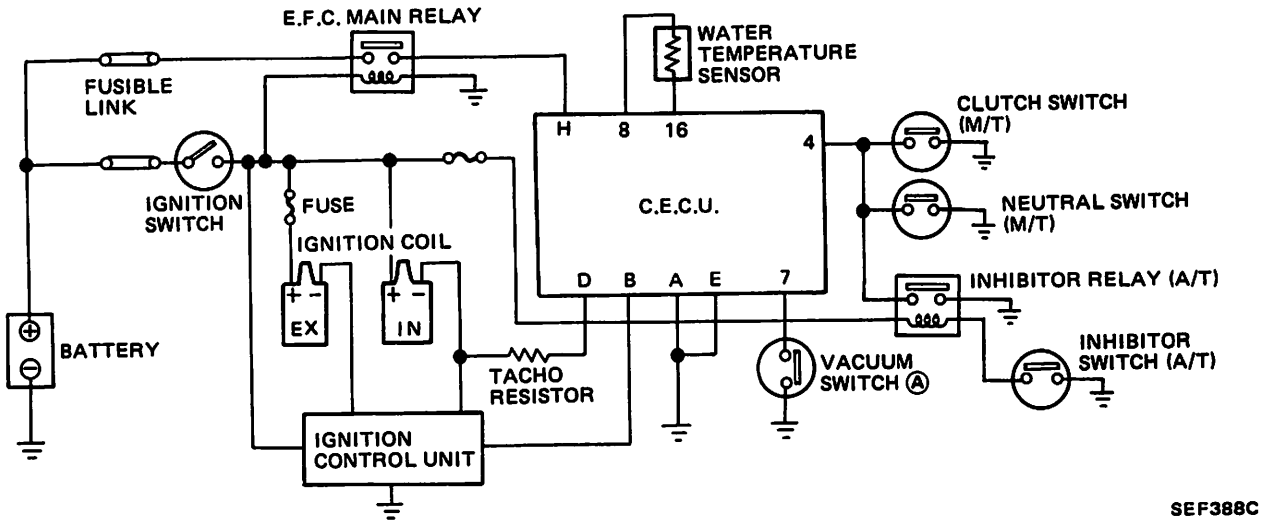

E.C.C. SYSTEM DESCRIPTION

Spark Plug Switching Control
(Except high altitude model at high altitudes and M.P.G. model) (Cont'd)

The spark plug switching control system is designed to change the ignition system from 2-plug ignition to 1-plug ignition during heavy load driving conditions in order to reduce engine noise.

Engine operating condition				Ignition control
Neutral Clutch Inhibitor switch*1	Vacuum switch*2	Water temperature	Engine speed	
ON	Any condition			2-spark plug system
OFF	OFF			
	ON	Below 70°C (158°F)	Below 2,400 rpm	
			Over 2,400 rpm	1-spark plug system
		Over 70°C (158°F)	Any condition	

*1 M/T ON: Gear is in Neutral or clutch is disengaged.
OFF: Gear is in other than Neutral and clutch is engaged.
A/T ON: Select position is "N" or "P".
OFF: Select position is other than "N" and "P".

*2 ON: Cranking or full throttle
[Intake manifold vacuum < 10.7 kPa (80 mmHg, 3.15 inHg) ..... M/T model
< 16.0 kPa (120 mmHg, 4.72 inHg) .... A/T model]

OFF: Idling or light load
[Intake manifold vacuum ≧ 10.7 kPa (80 mmHg, 3.15 inHg) ..... M/T model
< 16.0 kPa (120 mmHg, 4.72 inHg) .... A/T model]

E.C.C. SYSTEM DESCRIPTION

Fuel Shut-off System

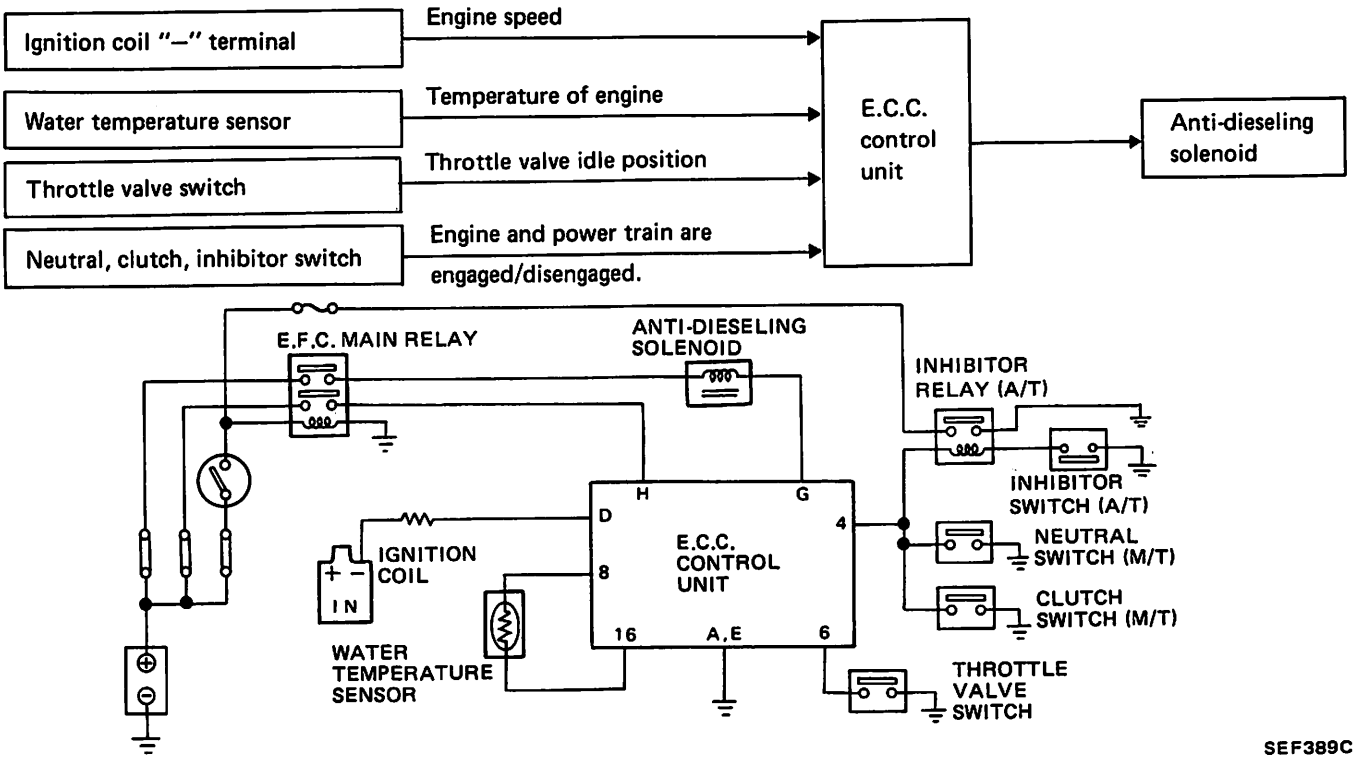

Fuel shut-off is accomplished during deceleration when the engine does not require fuel.
This system does not operate under cold engine conditions or no-load conditions to prevent engine from stalling. In addition, the recovery system from fuel shut-off is also operated when engine speed is below 1,500 rpm.

	Engine operating condition			Fuel shut-off system
Water temperature switch	Neutral / Clutch / Inhibitor switch*1	Throttle valve switch*2	Engine speed*3	
Below 50°C (122°F)	Any condition			Not actuated
	ON	Any condition		
	Any condition	ON		
			Below 1,500 rpm	
Over 50°C (122°F)	OFF	OFF	Over 1,800 rpm	Actuated

*1 M/T { ON: Gear is in Neutral or clutch is disengaged.
OFF: Gear is in other than Neutral and clutch is engaged.
A/T { ON: Select position is "N" or "P".
OFF: Select position is other than "N" and "P".

*2 { ON: Accelerating pedal is in other than fully released position.
OFF: Accelerating pedal in fully released position

*3

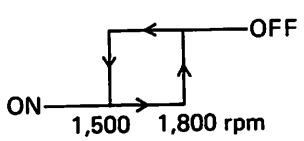

E.C.C. SYSTEM DESCRIPTION

Mixture Heating Control

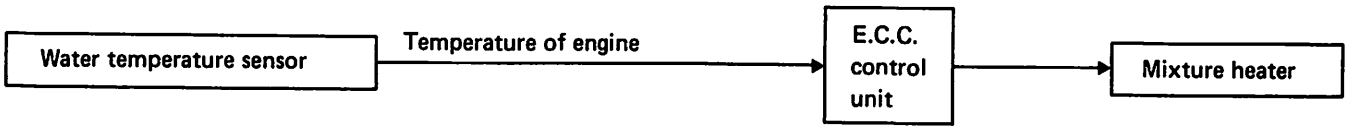

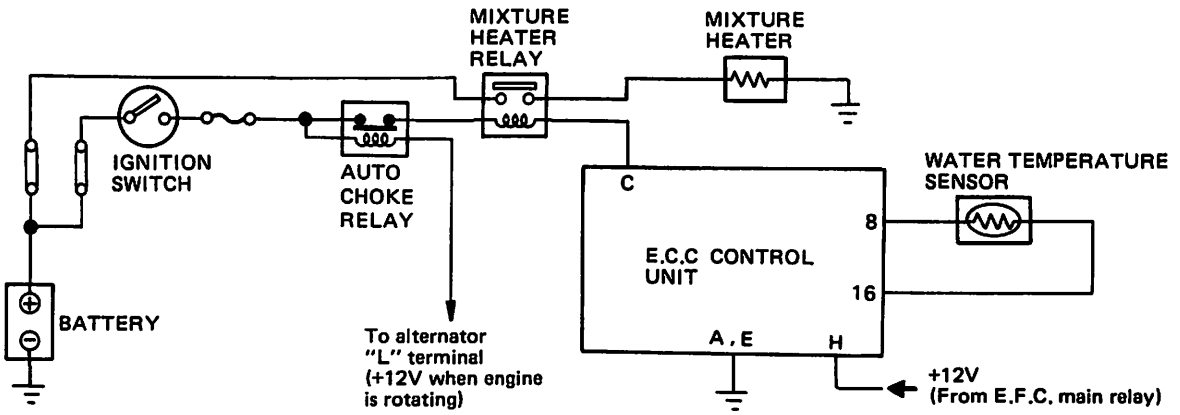

SEF387C

In order to improve driveability when engine is cold, a mixture heater, which is built into the primary port of carburetor insulator, heats the mixture.

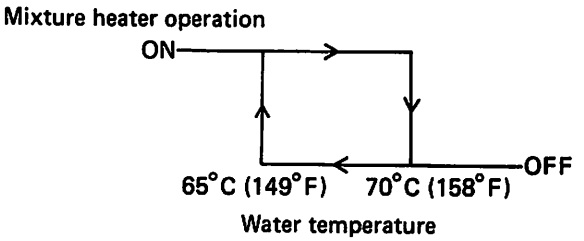

F.I.C.D. Control System
(Models equipped with air conditioner)

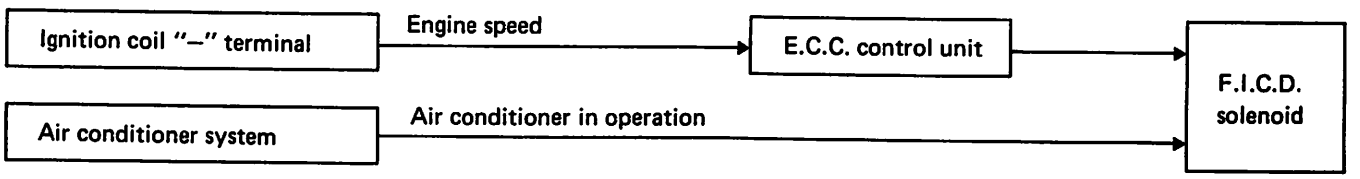

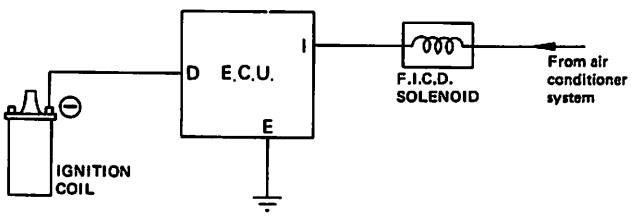

SEC226A

This system prevents poor battery charging, erratic idling and a reduced air conditioning capability when air conditioner is operating.

Engine speed*	Air conditioner switch	F.I.C.D. control system
Above 1,400 rpm	In any case	Not operated
Below 1,300 rpm	OFF	
	ON	Operated

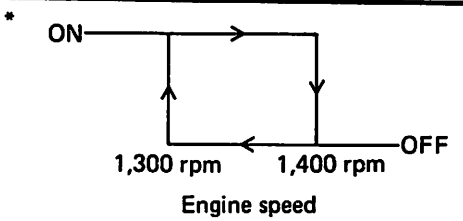

E.C.C. COMPONENT PARTS DESCRIPTION

E.C.C. Control Unit

The E.C.C. control unit consists of a micro-computer, connectors for signal input and output and power supply, and an exhaust gas sensor monitor lamp. The control unit controls the feedback pulse width and fuel shut-off operation, etc.

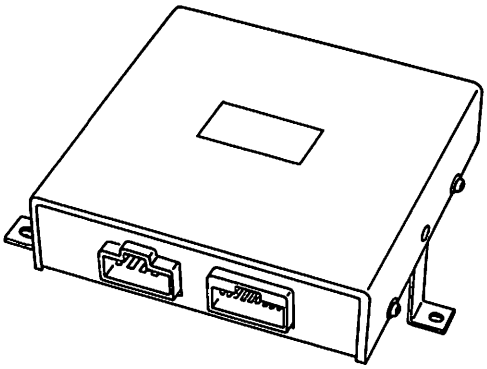

SEC185A

Air-fuel Ratio Control Solenoid

Air-fuel ratio control solenoid is operated repeatedly by the feedback signal from E.C.C. control unit regarding the exhaust gas sensor output voltage.

OFF:

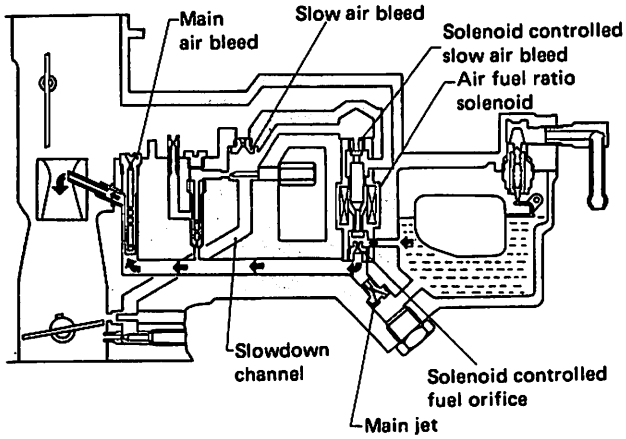

SEC936

ON:

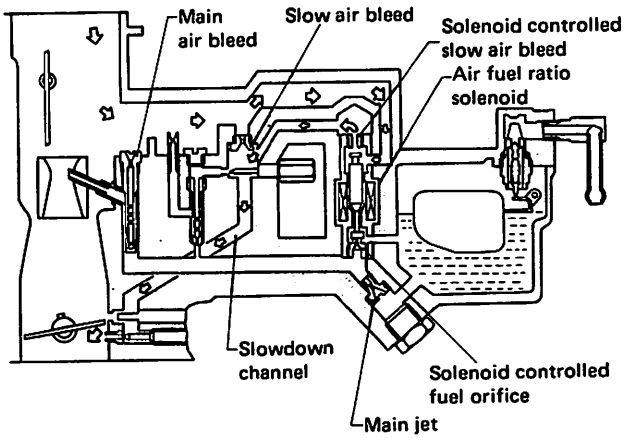

SEC937

Exhaust Gas Sensor

The exhaust gas sensor, which is built into the exhaust manifold, monitors the density of oxygen in the exhaust gas. It consists of a closed-end tube made of ceramic zirconia and other components. Porous platinum electrodes cover the tubes inner and outer surfaces. The closed-end of the tube is exposed to the exhaust gas in the exhaust manifold. The tubes outer surface contacts the exhaust gas while the inner surface contacts the air.

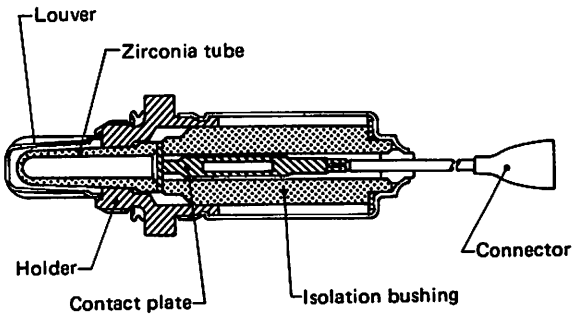

SEC336A

E.C.C. COMPONENT PARTS DESCRIPTION

Water Temperature Sensor

The water temperature sensor, built into the water jacket of the intake manifold, monitors change in water temperature and transmits a signal to the E.C.C. control unit.
The temperature sensing unit employs a thermistor which is very sensitive in the low temperature range.
The electrical resistance of the thermistor decreases in response to the temperature rise.

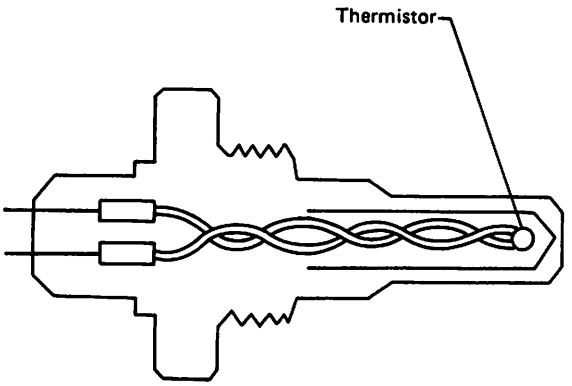

SEF620B

Throttle Valve Switch

The throttle valve switch is attached to the carburetor and actuates in response to accelerator pedal movement.
This switch has the idle contact.
The idle contact closes when the throttle valve is positioned at idle and opens when it is at any other position.

Inhibitor/Neutral Switch

The Inhibitor/neutral switch detects the transmission gear selector's position and transmits an electric signal to the control unit.

Clutch Switch

The clutch switch detects the clutch position (depressed or released) and transmits an electric signal to the control unit.

Vacuum Switch for Full Throttle

Vacuum switch detects the low intake manifold vacuum and transmits an electrical signal to the control unit.
When the intake manifold vacuum decreases around full throttle or under heavy load, the vacuum switch turns on.

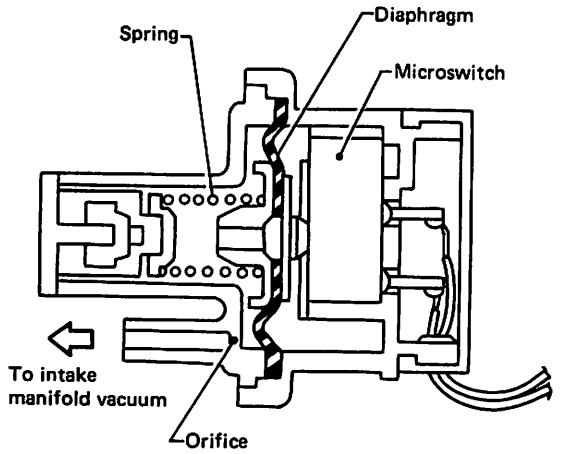

SEF516C

E.C.C. COMPONENT PARTS DESCRIPTION

Mixture Heater

The mixture heater uses a honeycomb P.T.C. heater design and is situated on the primary side of the carburetor insulator.

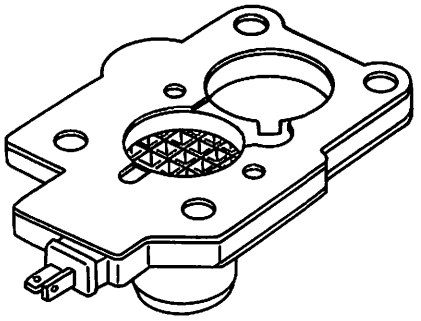

SEF517C

Anti-dieseling Solenoid

The anti-dieseling solenoid valve is attached to the carburetor with its needle valve facing the fuel passage of the primary slow system. When current flows through the anti-dieseling solenoid valve, the needle valve retracts, allowing the current to flow through the primary slow system. When current does not flow through this system, the fuel will be shut off:

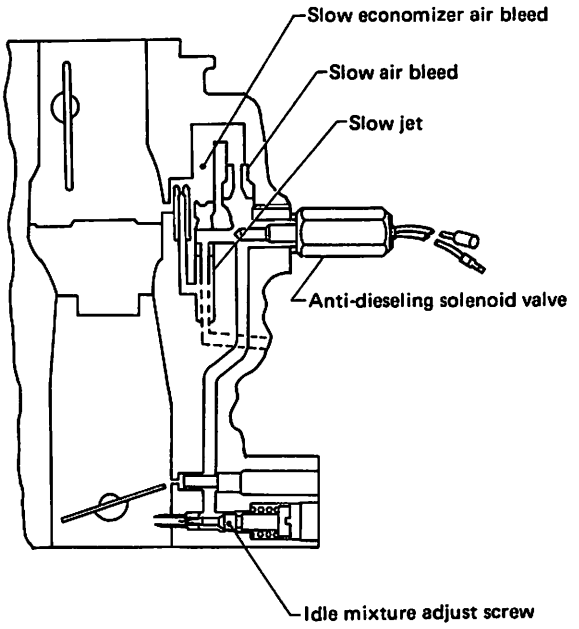

SEC715

E.C.C. ELECTRICAL SYSTEM INSPECTION

CAUTION:

a. Before disconnecting electrical connectors and E.C.C. harness connectors, ensure that ignition switch is in the "OFF" position.

b. Be extremely careful not to break or bend 10-pin or 20-pin connectors when disconnecting. Do not touch the circuit tester probe to any unnecessary pin on the 10-pin and 20-pin connectors. Doing so could cause damage to the circuit tester.

c. After inspection or replacement, securely connect E.C.C. harness connector with control unit, and then test it to make sure.

- Disconnect battery ground cable.
- Disconnect E.C.C. 10-pin and 20-pin harness connectors from control unit.

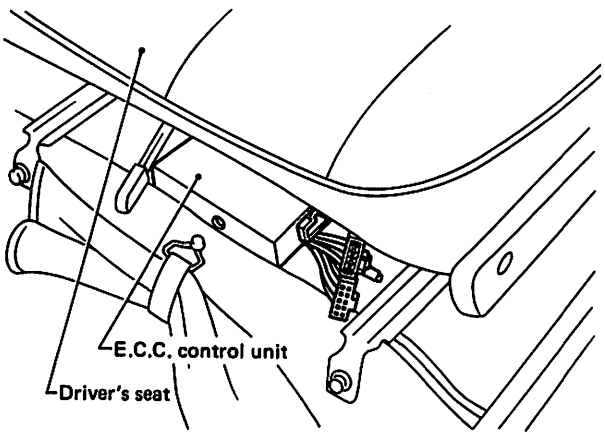

SEF466C

Neutral/Park Switch Test

Neutral/park switch test				
Tester	Leads to Pins (+)	Leads to Pins (–)	Notes	Should read
Ohm-meter	4	Body ground	"N" or "P"	0Ω
			Other position	∞Ω

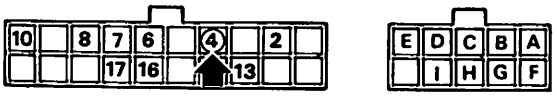

SEF510C

If test is O.K., neutral/park switch circuit is O.K.

Clutch Switch Test

- Before testing, shift the lever to any position except "N".

Clutch switch test				
Tester	Leads to Pins (+)	Leads to Pins (–)	Notes	Should read
Ohm-meter	4	Body ground	Depressed	0Ω
			Released	∞Ω

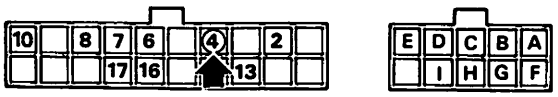

SEF511C

If test is O.K., clutch switch circuit is O.K.

E.C.C. ELECTRICAL SYSTEM INSPECTION

Throttle Valve Switch Test

- **Before testing, check that choke valve is fully open.**

Throttle valve switch test				
Tester	Leads to Pins (+)	Leads to Pins (–)	Notes	Should read
Ohm-meter	6	Body ground	Throttle released	∞Ω
			Throttle depressed	0Ω

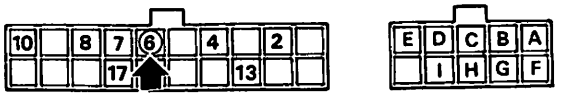

SEF512C

If test is O.K., throttle valve switch circuit is O.K. If test is not O.K., go to Throttle Valve Switch Adjustment.

THROTTLE VALVE SWITCH ADJUSTMENT

(1) Disconnect harness connector on carburetor.

(2) Connect proper wires between the anti-diesel-ing solenoid harness terminals. Also, connect proper wires between the air-fuel ratio control solenoid harness terminals.

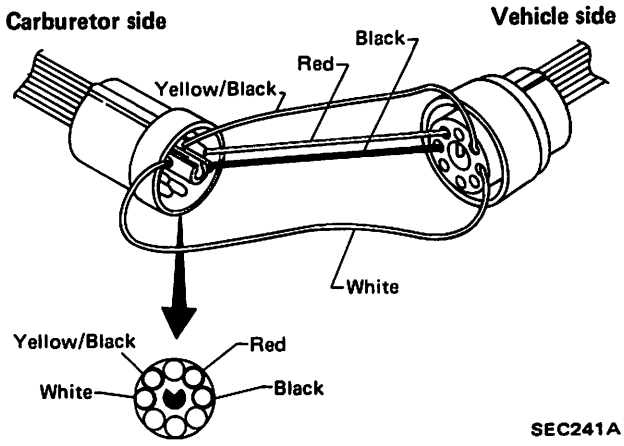

SEC241A

(3) Verify that continuity does not exist between the throttle valve switch harness terminal and ground.

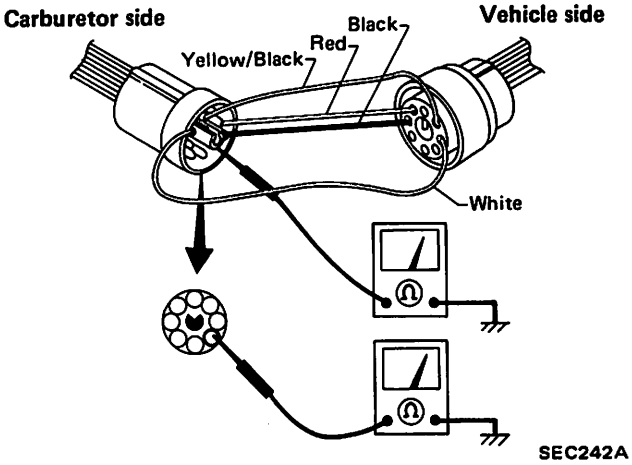

SEC242A

(4) Start engine and increase engine speed to about 2,000 rpm.

(5) At this time, verify that continuity exists between the throttle valve harness terminal and ground.

(6) Then, decrease engine speed gradually to 1,150 to 1,450 rpm, and at that point the circuit should break and cause the ohmmeter to indicate an open circuit. If incorrect, adjust as follows:

a) Hold engine speed at 1,350 rpm by manually opening the throttle.

Important: Do not use the idle speed screw.

b) Slowly rotate the adjusting screw counter-clockwise or clockwise until the ohmmeter indicates an open circuit.

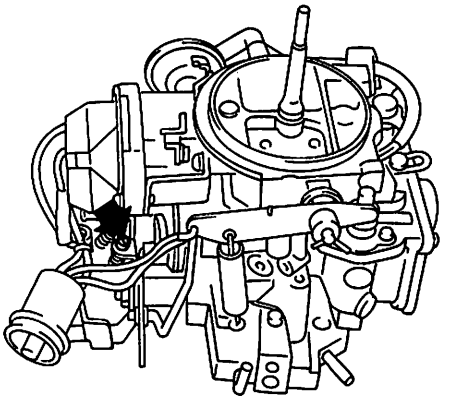

SEC956A

c) Recheck the adjustment.

d) Reset idle speed if necessary.

(7) Connect carburetor harness connector.

E.C.C. ELECTRICAL SYSTEM INSPECTION

Vacuum Switch Test

Disconnect vacuum hose from vacuum switch Ⓐ or Ⓑ for full throttle and connect a vacuum handy pump.

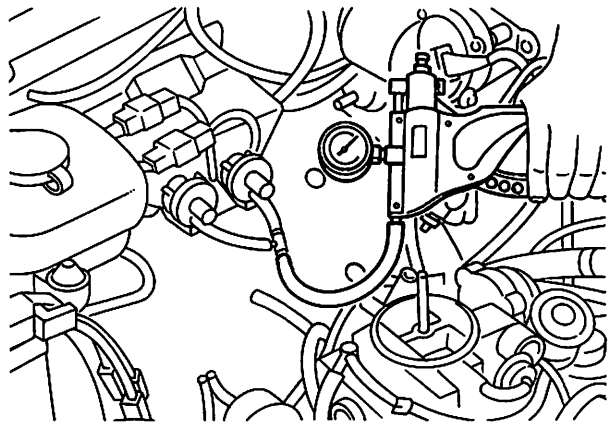

SEF467C

Vacuum switch test accommodation table

	Non-California				California			
	2WD			4WD	2WD			4WD
	M/T		A/T		M/T		A/T	
	Except Cab & Chassis	Cab & Chassis			Except Cab & Chassis	Cab & Chassis		
Test I	○		○	○			○	
Test II		○			○	○		○

Vacuum switch (for full throttle) test I

Tester	Leads to Pins (+)	Leads to Pins (–)	Notes	Should read
Ohm-meter	7	Body ground	Below 16.0 kPa (120 mmHg, 4.72 inHg)	0Ω
			Above 16.0 kPa (120 mmHg, 4.72 inHg)	∞Ω
	10		*Below 20.0 kPa (150 mmHg, 5.91 inHg)	0Ω
			*Above 20.0 kPa (150 mmHg, 5.91 inHg)	∞Ω

*For Z24 A/T, there is only one vacuum switch which operates at 16.0 kPa (120 mmHg, 4.72 inHg).

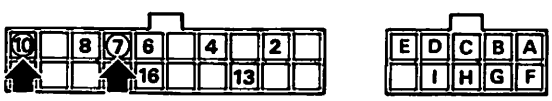

SEF468C

Vacuum switch (for full throttle) test II

Tester	Leads to Pins (+)	Leads to Pins (–)	Notes	Should read
Ohm-meter	7	Body ground	Below 10.7 kPa (80 mmHg, 3.15 inHg)	0Ω
			Above 10.7 kPa (80 mmHg, 3.15 inHg)	∞Ω
	10		*Below 20.0 kPa (150 mmHg, 5.91 inHg)	0Ω
			*Above 20.0 kPa (150 mmHg, 5.91 inHg)	∞Ω

For Z24 Cab & Chassis model, there is only one vacuum switch which operates at 10.7 kPa (80 mmHg, 3.15 inHg).

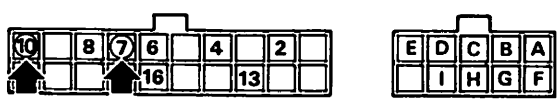

SEF468C

If test is O.K., vacuum switch circuit is O.K.

E.C.C. ELECTRICAL SYSTEM INSPECTION

Water Temperature Sensor Test

Water temperature sensor test				
Tester	Leads to Pins (+)	Leads to Pins (–)	Notes	Should read
Ohm-meter	8	16	20°C (68°F) or above	Below 2.9 kΩ
			Below 20°C (68°F)	2.1 kΩ or above

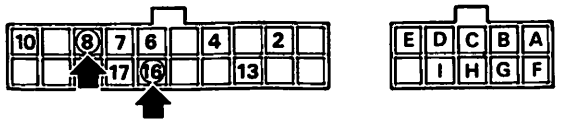

SEF513C

If test is O.K., water temperature sensor and circuit is O.K.
If test is not O.K., perform component check.

COMPONENT CHECK

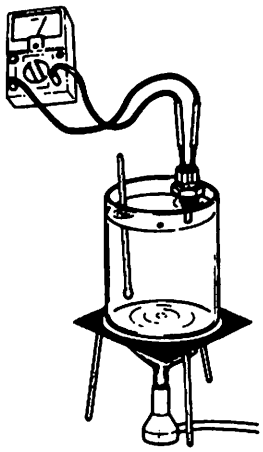

EF329A

Dip the sensor into water maintained at a temperature 20°C (68°F), 80°C (176°F), etc., and read its resistance.

CYLINDER HEAD SENSOR CHARACTERISTIC CURVE

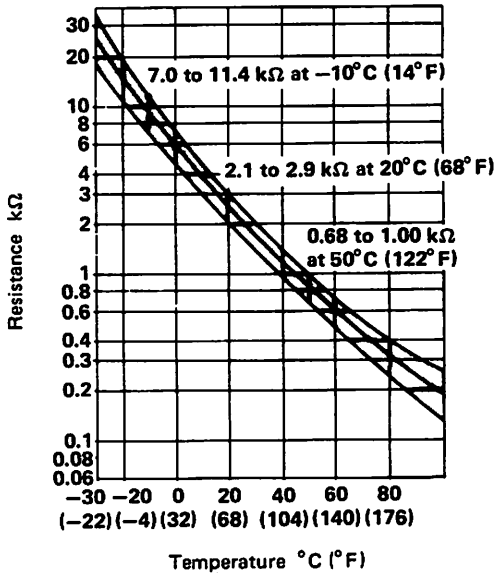

EF344A

If test matches curve, sensor is O.K.
Check harness.
If test does not match curve, replace sensor.

E.C.C. ELECTRICAL SYSTEM INSPECTION

Exhaust Gas Sensor Circuit Test

1. Disconnect exhaust gas sensor harness connector.
2. Connect terminal for exhaust gas sensor to ground with a jumper wire.

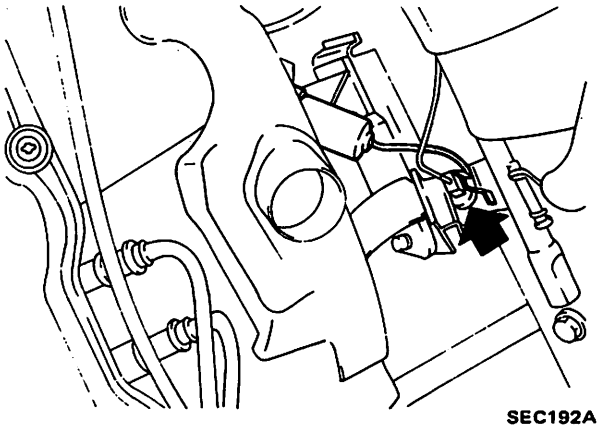

SEC192A

Exhaust gas sensor circuit test

Tester	Leads to Pins (+)	Leads to Pins (–)	Notes	Should read
Ohm-meter	2	Body ground		0Ω

SEF514C

If test is O.K., exhaust gas sensor circuit is O.K.

Altitude Switch Circuit Test

1. Disconnect altitude switch harness connector.
2. Connect suitable wire between two terminals of harness connector.
3. Connect battery ground cable and turn ignition switch "ON".

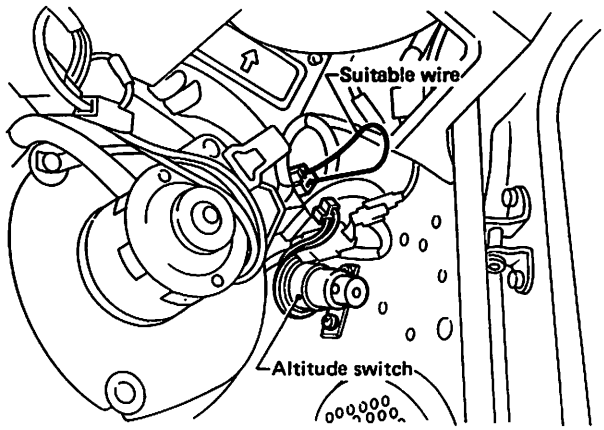

SEF469C

Altitude switch circuit test

Tester	Leads to Pins (+)	Leads to Pins (–)	Notes	Should read
Ohm-meter	17	Body ground	Wire connected	0Ω
			Wire disconnected	∞Ω

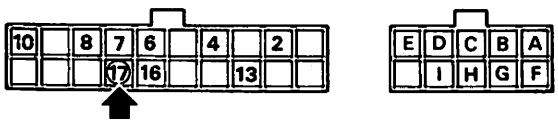

SEF470C

If test is O.K., altitude switch circuit is O.K.

E.C.C. ELECTRICAL SYSTEM INSPECTION

Control Unit Ground Circuit Test

Control unit ground circuit test				
Tester	Leads to Pins (+)	Leads to Pins (–)	Notes	Should read
Ohm-meter	A E	Body ground		0Ω

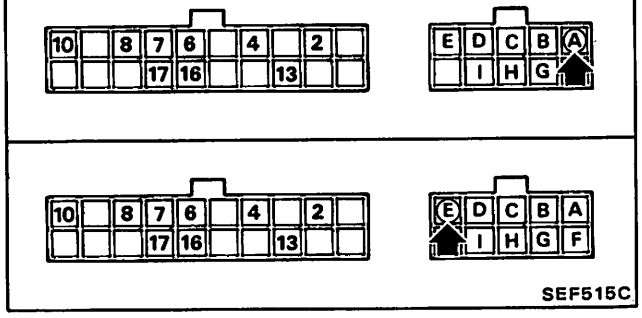

SEF515C

If tests are O.K., ground circuits are O.K.
If tests are not O.K., check harness.

Spark Plug Switching Control System Output Circuit Test (Z24)

Disconnect vacuum hose from vacuum switch Ⓒ for spark plug switching control and connect a vacuum handy pump.

- Z24 M/T non-California except Cab & Chassis model

Spark plug switching control system output circuit test				
Tester	Leads to Pins (+)	Leads to Pins (–)	Notes	Should read
Ohm-meter	B	Body ground	Below 10.7 kPa (80 mmHg, 3.15 inHg)	0Ω
			Above 10.7 kPa (80 mmHg, 3.15 inHg)	∞Ω

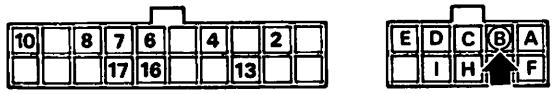

SEF918C

If test is not O.K., check harness, ignition control unit and vacuum switch.

- Except above

Spark plug switching control system output circuit test				
Tester	Leads to Pins (+)	Leads to Pins (–)	Notes	Should read
Volt-meter	B	Body ground	• Connect battery ground cable • Ignition "ON"	Pointer deflects

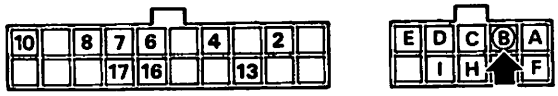

SEF471C

E.C.C. ELECTRICAL SYSTEM INSPECTION

Mixture Heater Circuit Test

Mixture heater circuit test

Tester	Leads to Pins (+)	Leads to Pins (–)	Notes	Should read
Volt-meter	C	Body ground	• Disconnect alternator "L" terminal • Connect battery ground cable • Ignition "ON"	Battery voltage

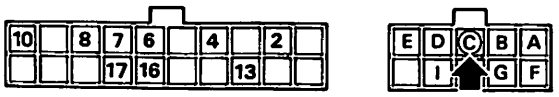

SEF472C

If test is not O.K., check harness, auto choke relay and mixture heater relay.

Air-fuel Ratio Control Solenoid Test

Air-fuel ratio control solenoid test

Tester	Leads to Pins (+)	Leads to Pins (–)	Notes	Should read
Volt-meter	F	Body ground	Ignition "ON"	Battery voltage

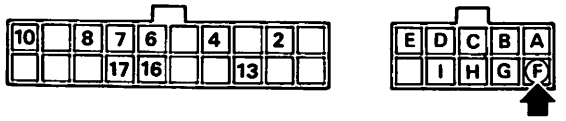

SEF526C

If test is O.K., air-fuel ratio control solenoid circuit is O.K.

Ignition Coil Trigger Input Test

Ignition coil trigger input test

Tester	Leads to Pins (+)	Leads to Pins (–)	Notes	Should read
Volt-meter	D	Body ground	• Connect battery ground cable • Ignition "START"	Pointer deflects

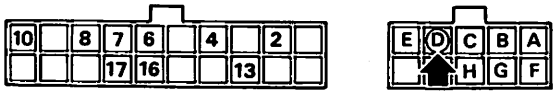

SEF525C

If test is O.K., trigger input to control unit is O.K.
If test is not O.K., check ignition coil and wire harness.

Anti-dieseling Solenoid Circuit Test

Fuel shut-off solenoid test

Tester	Leads to Pins (+)	Leads to Pins (–)	Notes	Should read
Volt-meter	G	Body ground	Ignition "ON"	Battery voltage

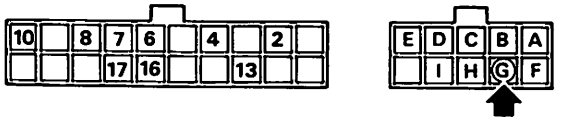

SEF527C

If test is O.K., anti-dieseling solenoid circuit is O.K.

E.C.C. ELECTRICAL SYSTEM INSPECTION

Battery Source Test

Battery source test				
Tester	Leads to Pins (+)	Leads to Pins (–)	Notes	Should read
Volt-meter	H	Body ground	Ignition "ON"	Battery voltage

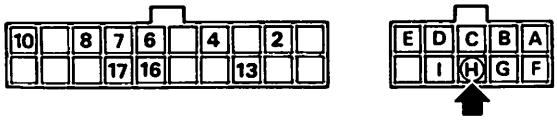

SEF528C

If test is O.K., battery source circuit is O.K.

F.I.C.D. Circuit Test

F.I.C.D. test				
Tester	Leads to Pins (+)	Leads to Pins (–)	Notes	Should read
Volt-meter	I	Body ground	• Ignition "ON" • Air conditioner switch "ON"	Battery voltage

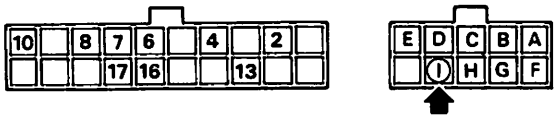

SEF529C

If test is O.K., F.I.C.D. circuit is O.K.

AUTOMATIC TEMPERATURE CONTROL (A.T.C.) AIR CLEANER

Z20 & Z24 for U.S.A.

Description

The automatic temperature control system maintains the temperature of air to be sucked in the carburetor within the constant range, thereby enabling lean setting for carburetor calibration. In addition to this, the automatic temperature control system is effective to improve warm-up characteristics of the engine and to prevent carburetor from icing.

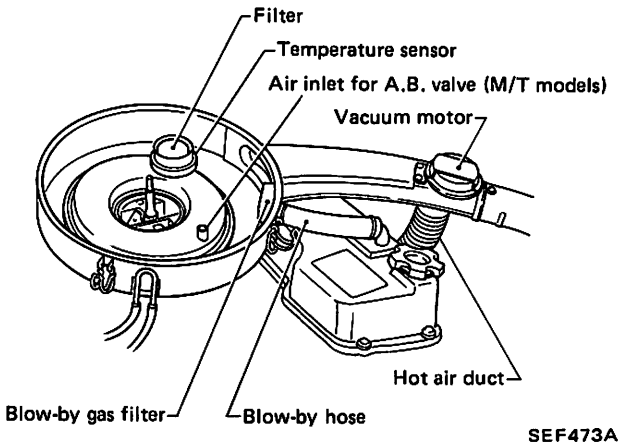

Operation

OPERATION

The automatic temperature control system of the air cleaner is controlled by the inlet air temperature and the load condition of the engine. The inlet air temperature is detected by the sensor, and the vacuum motor is actuated by the engine intake vacuum.

Temperature sensor		Vacuum motor		Inlet air
Ambient temperature around sensor °C (°F)	Operation	Intake manifold vacuum kPa (mmHg, inHg)	Operation	
Below 38 (100)	Close	Above 24.0 (180, 7.09)	Raise	Hot
		8.0 - 24.0 (60 - 180, 2.36 - 7.09)	Partially raise	Cold + Hot
		Below 8.0 (60, 2.36)	Down	Cold
Above 55 (131)	Open	Any value	Down	

The temperature sensor partially opens between 38°C and 53°C (100°F and 127°F) so that the intake manifold vacuum will be reduced. This causes the motor to activate, which in turn opens the cold air passage wide, for cold air to be taken in.

During cold engine

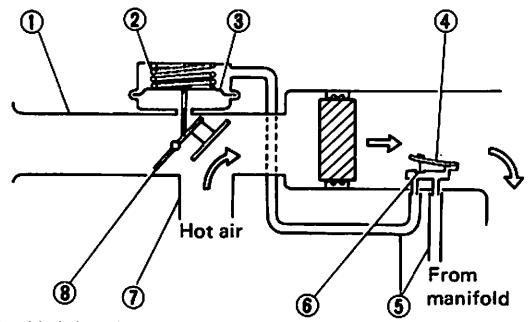

1 Air inlet pipe
2 Diaphragm spring
3 Diaphragm
4 Temperature sensor
5 Vacuum hose
6 Air bleed valve (Closed)
7 Hot air duct
8 Air control valve

SEF268

During hot engine

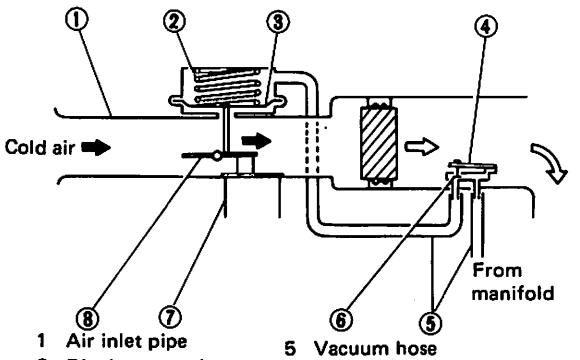

1 Air inlet pipe
2 Diaphragm spring
3 Diaphragm
4 Temperature sensor
5 Vacuum hose
6 Air bleed valve (Open)
7 Hot air duct
8 Air control valve

SEF269

Inspection

AIR CLEANER FILTER (Viscous paper type)

Viscous paper type air cleaner filter does not require any cleaning operation until it is replaced periodically. Brushing or blasting operation will cause clogging and result in enrichment of carburetor mixture, and should never be conducted.

AUTOMATIC TEMPERATURE CONTROL SYSTEM

- Engine stall or hesitation
- Increase in fuel consumption
- Lack of power

If these phenomena should occur, check A.T.C. system before carrying out inspection of carburetor.

1. Check hoses for cracks, distortion and improper position.
2. Check A.T.C. system for proper function, while engine is cold. Check air control valve position.

Air control valve is correct if it is in lower position.

3. Start engine and immediately check air control valve position. If it rises, it is correct.
4. Make sure that air control valve rises and lowers when engine speed is quickly increased and decreased.
5. Make sure that air control valve partially rises when engine warm-up advances.

If the above test reveals any problem in the operation of air control valve, carry out the following test:

VACUUM MOTOR

Disconnect vacuum motor inlet vacuum hose, and connect another hose to the inlet to apply vacuum to vacuum motor. Then, confirm that the air control valve moves.

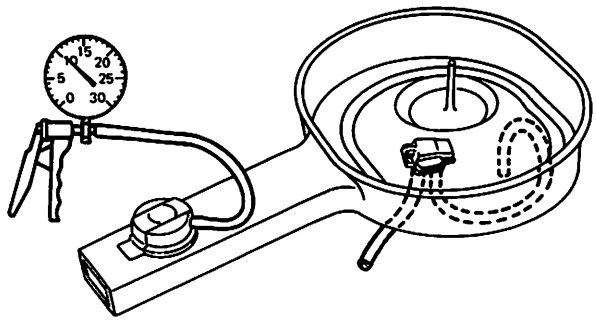

SEF933B

TEMPERATURE SENSOR

While engine is cold and idling, disconnect vacuum motor inlet vacuum hose and make sure that intake vacuum is present at end of vacuum hose. If vacuum is weak or is not present at all, check vacuum hoses for leakage. Replace temperature sensor if vacuum hoses are in good order.

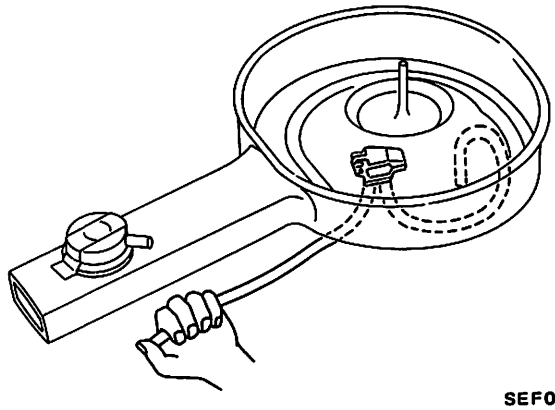

SEF099C

ELECTRIC FUEL PUMP

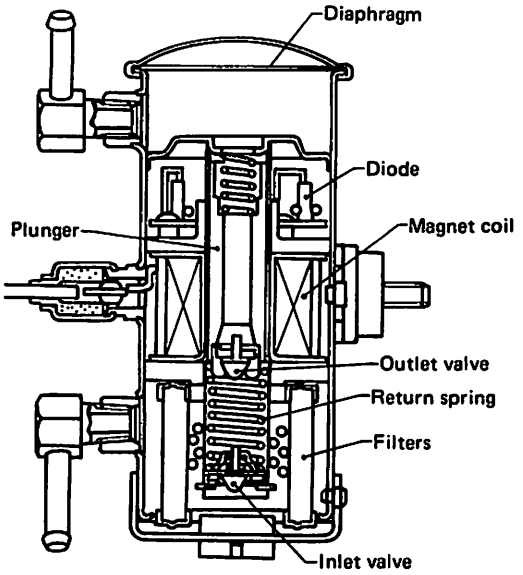

SEF357

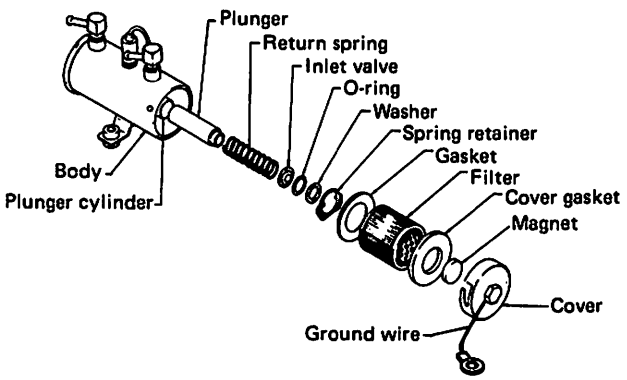

EF189A

The electric fuel pump is installed on the side frame, to the front of right-hand rear wheel.

OPERATING TEST

WARNING:

a. **Do not proceed with this test while engine is hot as the test allows fuel to be exposed to outside air.**
b. **Keep flammables away during the test.**
c. **For safety, the test must be completed in as short a time as possible.**

1. Disconnect fuel feed hose at carburetor side and plug the connector of the carburetor.
2. Place a suitable container at the opening of the fuel feed hose.

Put a rag under the container.

3. Turn ignition switch "ON" and check delivery capacity for more than 15 seconds.

INSPECTION OF FUEL PUMP FILTER

Be careful not to allow dirt to enter fuel pump during inspection.

Remove cover and check fuel filter.

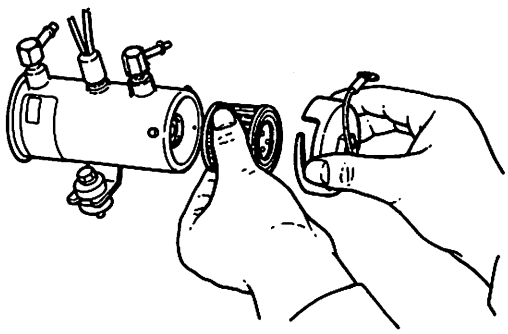

SMA405

CARBURETOR

Description

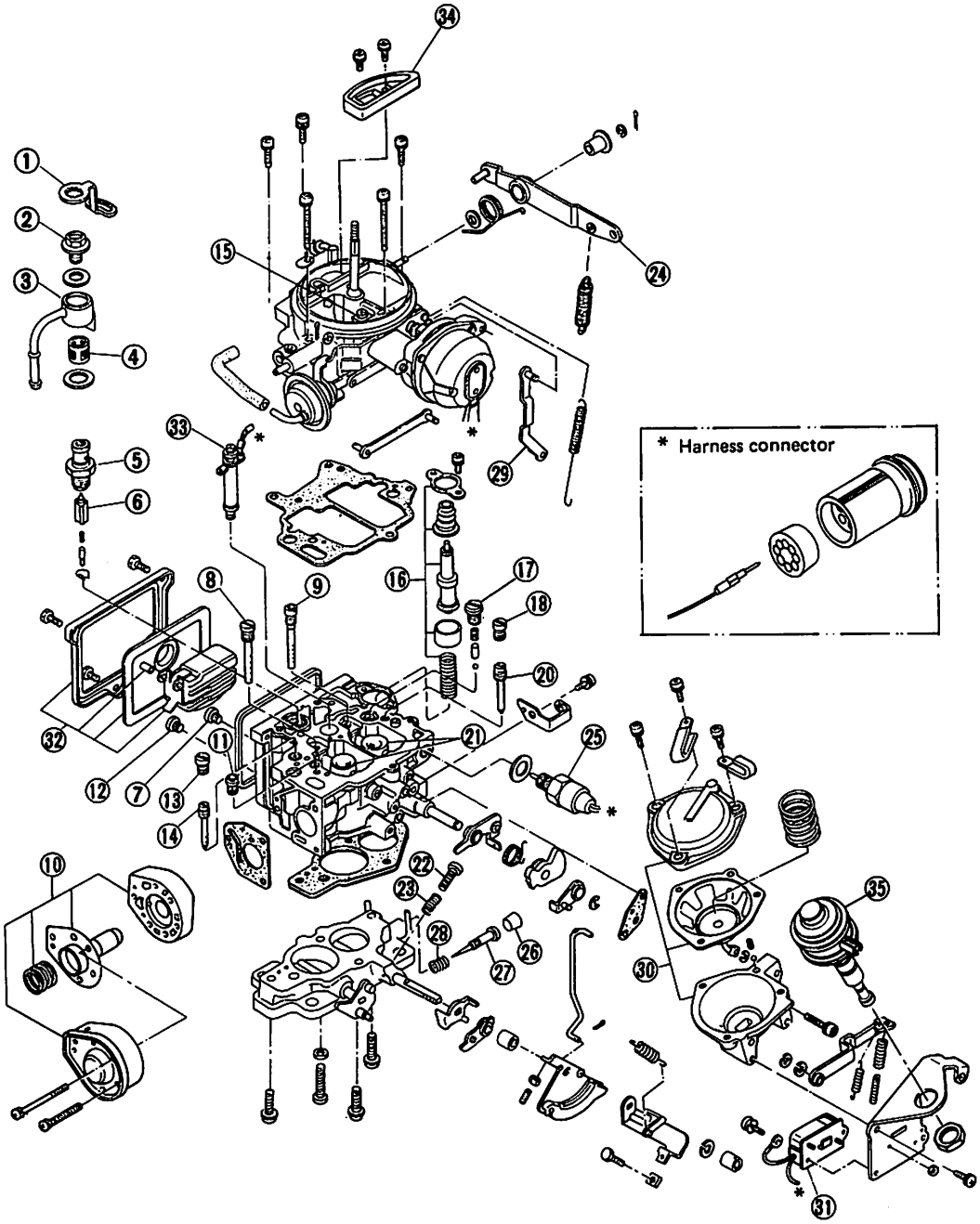

1 Lock plate
2 Filter set screw
3 Fuel nipple
4 Fuel filter
5 Needle valve body
6 Needle valve
7 Primary main jet
8 Secondary main air bleed
9 Primary main air bleed
10 B.C.D.D.
11 Secondary slow air bleed
12 Secondary main jet
13 Plug
14 Secondary slow jet
15 Idle compensator
16 Accelerating pump parts
17 Plug
18 Plug
20 Primary slow jet
21 Primary and secondary small venturi
22 Throttle adjusting screw
23 Throttle adjusting screw spring
24 Accelerating pump lever
25 Anti-dieseling solenoid valve
26 Blind plug
27 Idle adjusting screw
28 Idle adjusting screw spring
29 Choke connecting rod
30 Diaphragm chamber parts
31 Throttle valve switch
32 Float
33 Air-fuel ratio solenoid
34 Air vent cover
35 Dash pot

SEF724C

CARBURETOR

Description (Cont'd)

The carburetor is of downdraft two-barrel type designed to increase power and fuel economy, as well as to reduce exhaust gas emissions.
Primary side fuel metering is accomplished through the use of air-fuel ratio solenoid adding fuel to that of main fuel jet. The position of the solenoid, and thus the position of the air-fuel ratio solenoid, is controlled by the length of time current is supplied to the solenoid.

Secondary fuel metering is done by conventional metering methods.
A float system common to both primary and secondary systems, a secondary switch-over mechanism, an accelerating mechanism, etc. are also attached.
An anti-dieseling solenoid valve mechanism is also installed.

Structure and Operation

FLOAT SYSTEM

There is only one float chamber, while two carburetor systems, primary and secondary, are provided.
Fuel fed from the fuel pump flows through the filter and needle valve into the float chamber. A constant fuel level is maintained by the float and needle valve.

Because of the inner air vent type of the float chamber ventilation, the fuel consumption will not be influenced by some dirt accumulated in the air cleaner.
The needle valve includes special hard needle and will not wear for all its considerably long use. Besides, the insertion of a spring will prevent the flooding at rough road running.

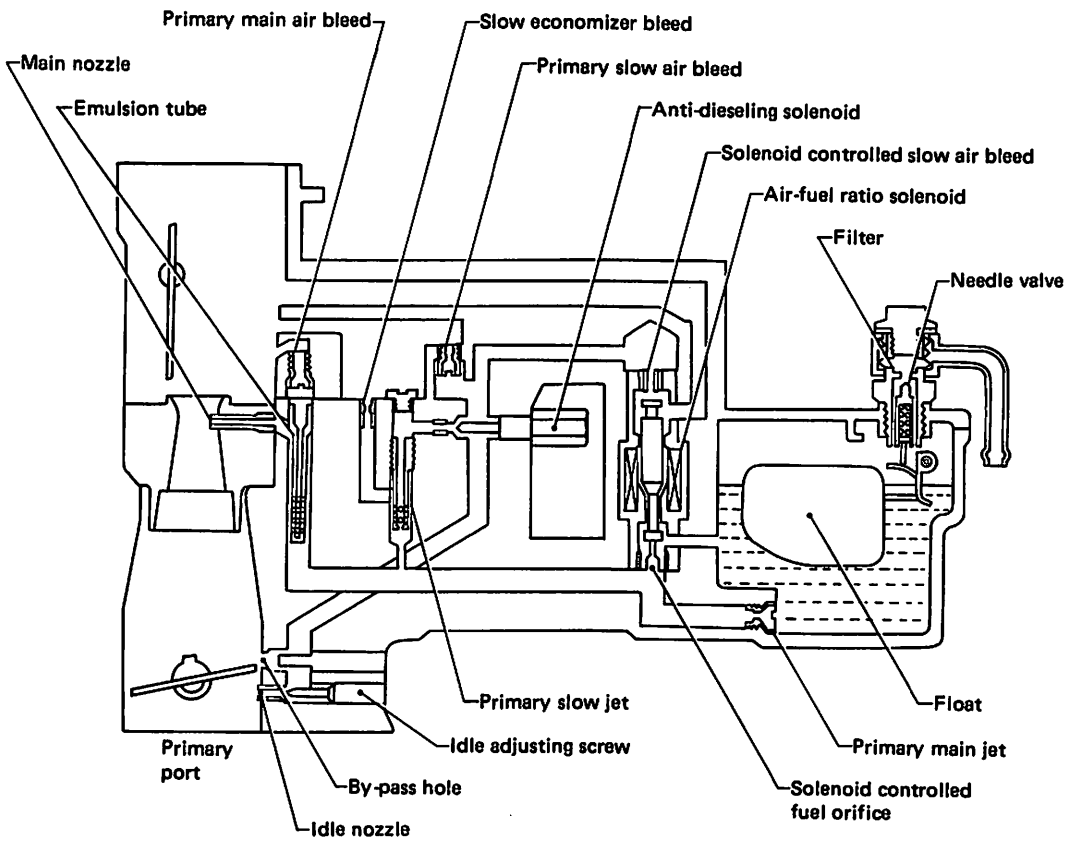

SEF475C

CARBURETOR

Structure and Operation (Cont'd)

PRIMARY SLOW SYSTEM

Fuel flows from the float system through the primary main line to the primary slow system. The fuel is picked up in the fuel well by the slow jet and passes up through the tube, where it joins with air in the idle down channel.

Air enters the down channel by two routes;

1) through the fixed slow air bleed (rich authority), and
2) through the air-fuel ratio solenoid controlled air breed.

The air/fuel mixture is ejected from the by-pass hole and idle nozzle.

PRIMARY MAIN SYSTEM

The primary main system utilizes the venturi principle to supply fuel through the primary bore.

Fuel flows from the float system to the fuel well by two routes;

1) through the fixed main jet, and
2) through the air-fuel ratio solenoid controlled jet, and is mixed with air coming from the fixed main air bleed.

The signal to the solenoid is controlled by the central electronic control unit.

The air/fuel mixture is ejected into the venturi through the main nozzle.

ACCELERATING SYSTEM

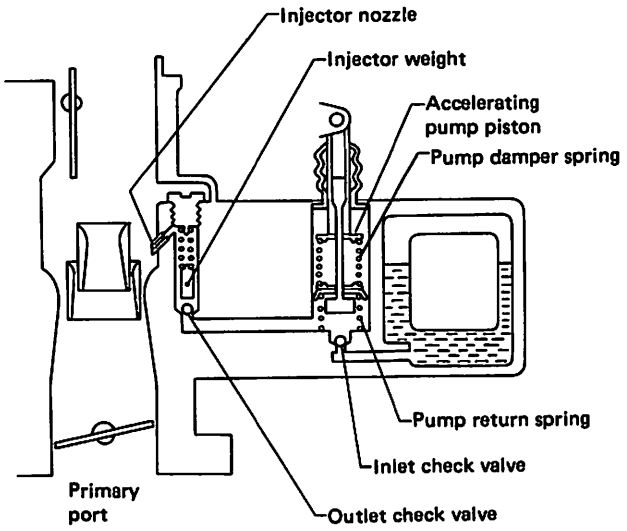

SEF476C

A mechanical accelerating pump synchronized with the throttle valve is used.

When throttle valve is closed, piston rod is pushed up with linkage, which pushes up piston through piston return spring.

When piston comes down, inlet check ball closes, outlet check ball opens, and fuel within the pump is blown out from the pump jet by compressed piston return spring. The fuel hits against side wall of small venturi, becoming minute drops and compensating transient spareness of fuel.

SECONDARY SLOW SYSTEM

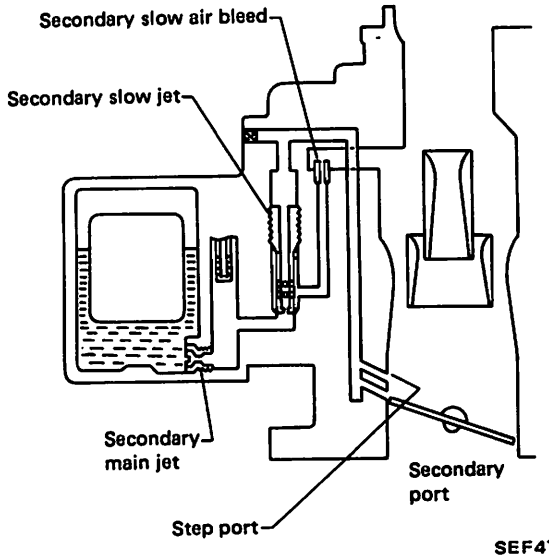

SEF477C

The construction of this system may correspond to the idling and slow system of the primary system.

This system aims at the proper filling up of the gap when fuel supply is transferred from the primary system to the secondary system. The step port is located near the secondary throttle valve edge in its fully closed state.

CARBURETOR

Structure and Operation (Cont'd)

SECONDARY MAIN SYSTEM

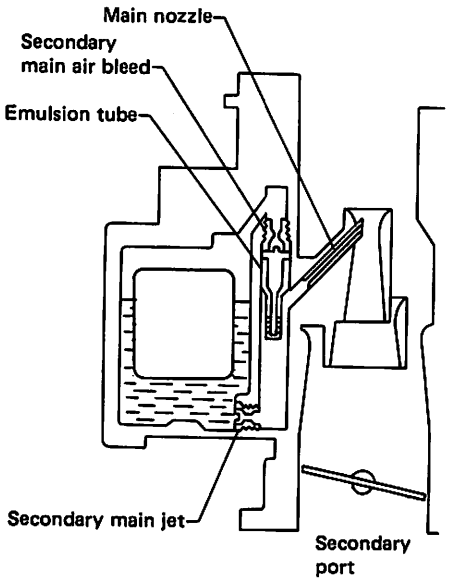

SEF478C

When the primary throttle valve is wide open and engine produces high power, the secondary throttle valve begins to open by the diaphragm.
Fuel-air mixture produced by the functions of the main jet, main air bleed and emulsion tube, in the same manner as in the primary system, is pulled out through the main nozzle into the venturi.
The structure is almost the same as the primary main system.

SECONDARY SWITCHOVER MECHANISM

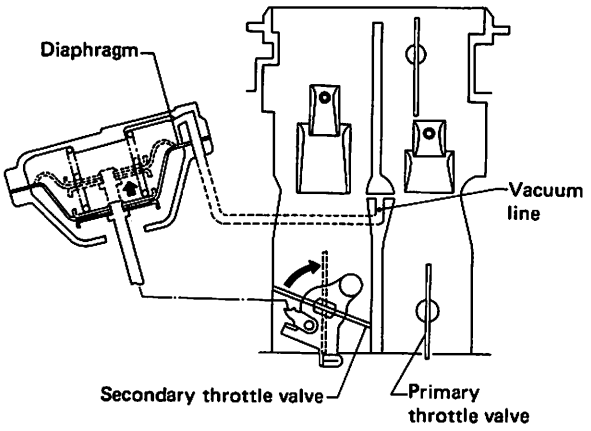

SEF263A

The secondary throttle valve is linked to the diaphragm which is actuated by the vacuum created in the venturi. A vacuum port is provided at each of the primary and secondary venturis, and the composite vacuum of these ports actuates the diaphragm.
As the linkage causes the secondary throttle valve to close until the primary throttle valve opening reaches approximately 50°, fuel consumption during normal operation is not excessive.
During high speed running, as the vacuum at the venturi is increased, the diaphragm is pulled against the diaphragm spring force, and then secondary throttle valve is opened.
The other side, during low speed running (as the primary throttle valve opening does not reach 50°), the secondary throttle valve is locked to close completely by the locking arm which is interlocked with primary throttle arm by linkage.
When the primary throttle valve opening reaches wider position than 50°, the secondary throttle valve is ready to open, because the locking arm revolves and leaves from the secondary throttle arm.

ANTI-DIESELING SYSTEM

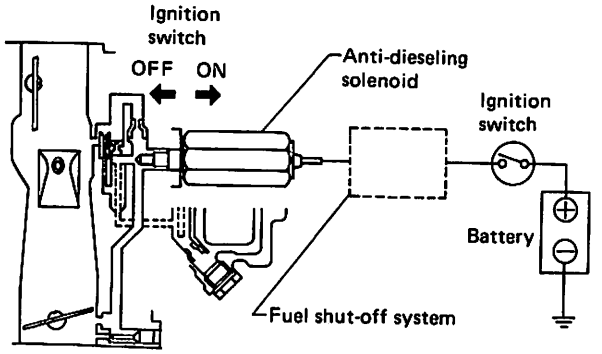

SEF229A

As the ignition switch turned off, the valve is brought into operation, shutting off the supply of fuel to the slow circuit.
Anti-dieseling solenoid is also used in fuel shut-off system.
Refer to Fuel Shut-off System in E.C.C. SYSTEM DESCRIPTION.

CARBURETOR

Structure and Operation (Cont'd)

ELECTRIC AUTOMATIC CHOKE

An electric heater warms a bimetal interconnected to the choke valve, and controls the position of choke valve and throttle valve in accordance with the time elapsed and the warm-up condition of the engine.
The construction and function of each part of this carburetor are as follows:

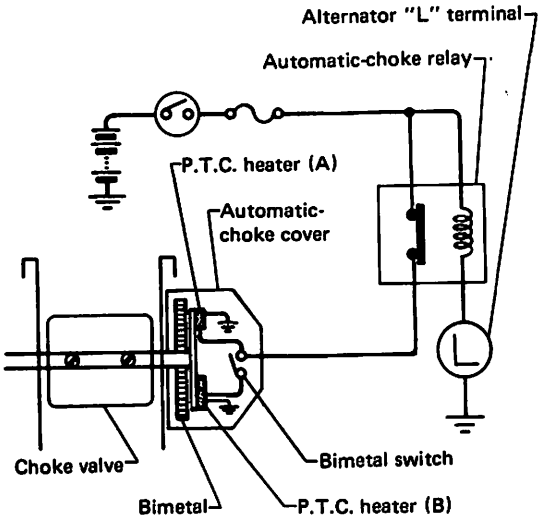

SEF726

1. Electric heater in thermostat cover.
   The double stage heating system is provided to obtain an optimum heating capacity. This system consists of first and second stage heater. The first stage heater (A) always operates to heat the bimetal during the time when electric current flows through the auto-choke circuit, and in addition to the first stage operation, the second stage heater (B) begins to operate when the bimetal temperature reaches to the level of about 15°C (59°F) so that the choke valve opens more early. This operation of the second stage heater is controlled by a thermo switch attached to the bimetal.
2. Bimetal
   Electric current flows through the heater as the engine starts, and warms the bimetal. The deflection of the bimetal is transmitted to the choke valve through the choke valve lever.
3. Fast idle cam
   The fast idle cam determines the opening of the throttle valve so that the proper amount of mixture corresponding to the opening of the choke valve will be obtained. The opening of the choke valve is dependent upon the warm-up condition of the engine.

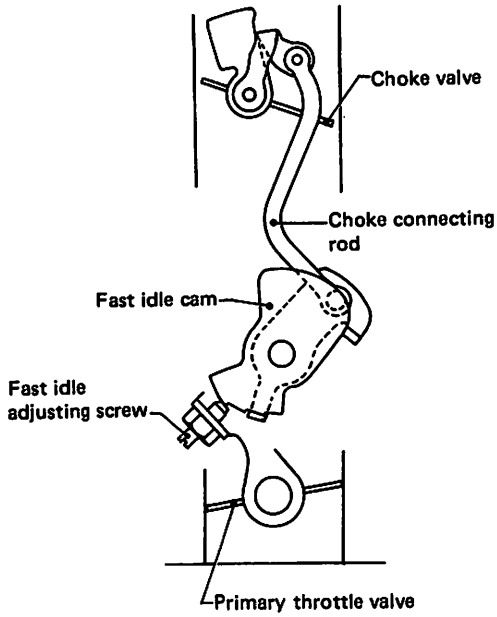

SEF479C

4. Choke unloader
   When accelerating the engine during the warm-up period, that is, before the choke valve opens sufficiently, this unloader forces the choke valve open a little so as to obtain an adequate air-fuel mixture.
5. Vacuum break diaphragm
   After the engine has been started by cranking, this diaphragm forces the choke valve open to the predetermined extent so as to provide the proper air-fuel ratio.

CARBURETOR

Structure and Operation (Cont'd)

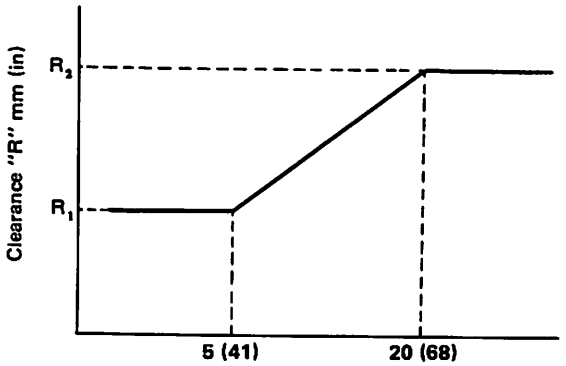

SEF464C

Higher ambient temperature

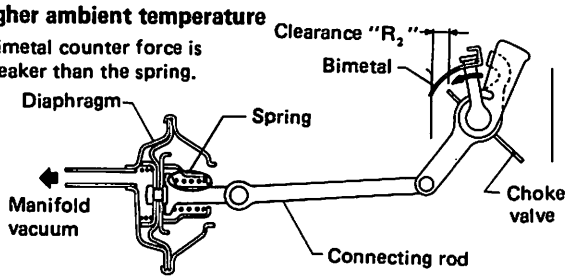

Lower ambient temperature

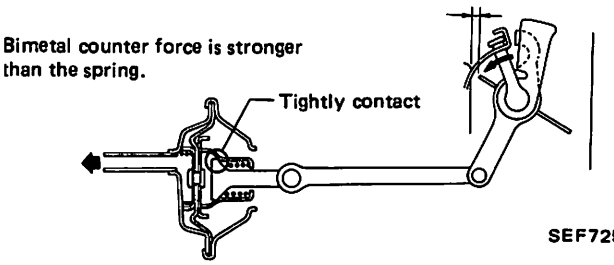

SEF725C

IDLE COMPENSATOR

The idle compensator is basically a thermostatic valve which functions to introduce the air directly from the air cleaner to the intake manifold to compensate for abnormal enrichment of mixture in high idle temperature.

The bimetal attached to the idle compensator detects the temperature of intake air, and opens or closes the valve.

Idle compensator is installed on carburetor.

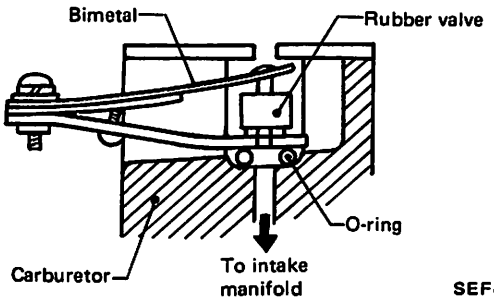

SEF450B

DASH POT SYSTEM

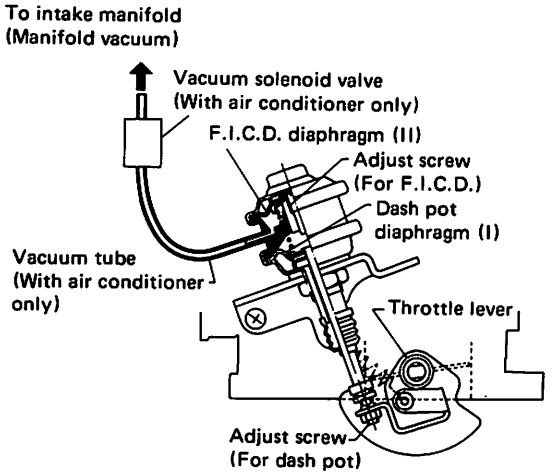

SEF208

For A/T, the dash pot is provided to prevent engine stall problem at rapid deceleration.

For M/T, it is designed to reduce HC emission during heavy coasting condition or manual gear shift resulting from sudden release of the accelerator pedal after it has been depressed slightly.

In such situations, a throttle lever strikes against the dash pot stem and makes the throttle valve close gradually.

The dash pot is a combination type which also serves as an F.I.C.D. actuator.

When the accelerator pedal is released during deceleration, the throttle valve lever taps on the dash pot stem.

With the air conditioning system in "OFF", diaphragm (I) gradually actuates as air leaks. This in turn causes the dash pot stem to retract, returning the engine to idling speed.

With the air conditioning system in "ON", vacuum is introduced, moving diaphragm (II) to the lower side. Engine speed gradually decreases as air leaks, and is held at a certain rpm (F.I.C.D. set revolution).

CARBURETOR — Inspection and Adjustment

Idle Speed and Mixture Ratio

The idle mixture adjusting screw which has been preset at the factory should be adjusted only in the event of a major carburetor overhaul, throttle body replacement or to lower exhaust emissions as directed by official inspections.
This screw should not be readjusted during routine maintenance.
Adjusting mixture using other than the method below may violate Federal, or other state and Provincial laws.

PREPARATION

1. Make sure that the following parts are in good order.
- Ignition system
- Engine oil and coolant levels
- Valve clearance
2. Connect engine tachometer and timing light in their proper positions.
3. Insure that these switches and units are in the following positions:

- Headlamp switch: OFF
- Heater blower: OFF
- Air conditioning switch: OFF (if equipped)
- Steering: KEEP WHEELS STRAIGHT AHEAD (if equipped with power steering)
4. Apply parking brake and block both front and rear wheels with chocks.
5. When measuring "CO" percentage, insert probe more than 40 cm (15.7 in) into tail pipe.

WARNING:

a. **Inspection should be carried out while shift lever is in "D" position on automatic transmission equipped models and in "Neutral" on manual transmission equipped models.**
b. **On automatic transmission equipped models, racing the engine should be carried out while shift lever is in "N" or "P" position and brake pedal should be depressed.**
c. **After adjustment has been made, shift the lever to "N" or "P" position.**

CARBURETOR — Inspection and Adjustment

Idle Speed and Mixture Ratio (Cont'd)

CHECKING AND ADJUSTING PROCEDURE

Start

Start engine and warm up engine until water temperature indicator points to the middle of gauge.

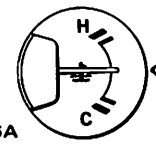

SMA566A

Turn off engine and open engine hood.

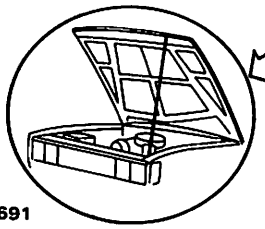
SMA691

Disconnect distributor vacuum hose from distributor vacuum controller and plug hose with proper cap.

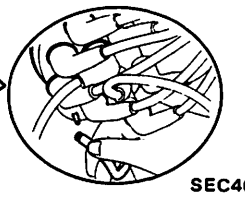
SEC462

- Run engine at about 2,000 rpm for about 2 minutes under no-load.
- Then run engine at idle speed and ensure that engine speed is below 1,000 rpm.

- Race engine two or three times under no-load.
- Then run engine for one minute at idle speed.

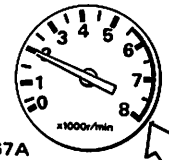

SMA567A

Check ignition timing with timing light.

Z24: 3±2°B.T.D.C.
Z20: 5±2°B.T.D.C.

O.K. → Connect distributor vacuum hose to distributor vacuum controller.

N.G. → Adjust ignition timing to the specified value by turning distributor after loosening distributor securing bolt.

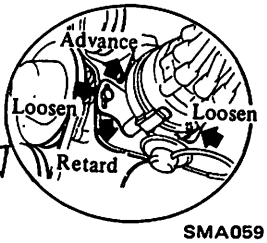

SMA059

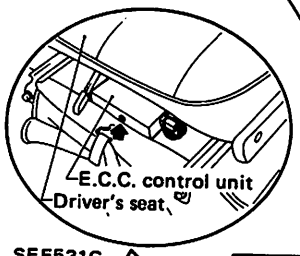

SEF531C

Connect distributor vacuum hose to distributor vacuum controller.

Run engine at about 2,000 rpm for about 2 minutes under no-load.

Start engine and warm up engine until water temperature indicator points to the middle of gauge.

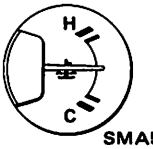

SMA566A

Make sure that inspection lamp on control unit goes on and off more than 4 times during 10 seconds.

N.G. → ⓑ (To page EF & EC-46)

O.K. →

Race engine two or three times under no-load and run engine for one minute at idle speed.

Check idle speed. (rpm)

		Z20	Z24	
			Cab & Chassis	Except Cab & Chassis
M/T	2WD	700±100	700±100	800±100
	4WD	–	–	800±100
A/T (in "D" position)		–	–	650±100

N.G. → Adjust idle speed by turning throttle adjusting screw.

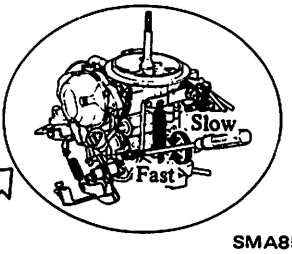

SMA853

O.K. → ⓐ

ⓒ

CARBURETOR — Inspection and Adjustment

Idle Speed and Mixture Ratio (Cont'd)

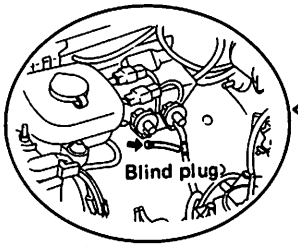

SEF462C

ⓐ

Disconnect vacuum hose from vacuum switch Ⓐ and plug hose with proper cap.

Race engine two or three times under no-load and run engine for one minute at idle speed.

Check idle "CO" with CO-meter.

Less than 4%

O.K. → Does engine run smoothly?

N.G. → Check the following.
- Vacuum hoses for proper connections.
- Air leaks at carburetor mounting and intake manifold.

N.G. → Correct or replace malfunctioning parts.

O.K. → Turn off engine and remove carburetor from car.

Drill a hole in aluminum seal-plug and remove the plug.

Adjust idle mixture ratio until specified idle CO% is obtained and install idle mixture seal plug. (Refer to IDLE MIXTURE ADJUSTING PROCEDURE.)

Adjust idle CO%:
$1.0^{+1.0}_{-0.7}$%

N.G. → Correct or replace carburetor.

O.K. → Does engine run smoothly?

NO → Check the following.

YES → Connect vacuum hose to vacuum switch.

Run engine at about 2,000 rpm for about 2 minutes under no-load.

Race engine two or three times under no-load and run engine for one minute at idle speed.

Check idle speed. (rpm)

		Z20	Z24	
			Cab & Chassis	Except Cab & Chassis
M/T	2WD	700±100	700±100	800±100
	4WD	–	–	800±100
A/T (in "D" position)		–	–	650±100

O.K. → END

N.G. → Adjust idle speed to the specified value by turning throttle adjusting screw.

CARBURETOR — Inspection and Adjustment

Idle Speed and Mixture Ratio (Cont'd)

ⓑ (From page EF & EC-44)

(To page EF & EC-44) ⓒ

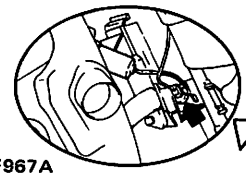

SEF967A

Check exhaust gas sensor harness:
1) Turn off engine and disconnect battery ground cable.
2) Disconnect E.C.C. 20-pin connector from control unit.
3) Disconnect exhaust gas sensor harness connector and connect the terminal for exhaust gas sensor to ground with a jumping wire.
4) Check for continuity between terminal No. 2 on E.C.C. 20-pin harness connector and ground metal on car body.

Continuity exists ..... O.K.
Continuity does not exist ..... N.G.

N.G. → Correct or replace harness and connect E.C.C. 20-pin connector, exhaust gas sensor harness and battery ground cable.

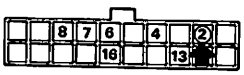

SEF968A

O.K. ↓

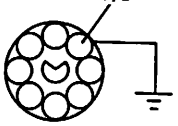

Main harness side

SEF969A

Check air-fuel ratio control solenoid harness:
1) Connect exhaust gas sensor harness connector and E.C.C. 20-pin harness connector.
2) Disconnect E.C.C. 10-pin harness connector.
3) Disconnect carburetor harness connector and connect the terminals for air-fuel ratio control solenoid to ground with a jumping wire.
4) Check for continuity between terminal "F" on E.C.C. 10-pin harness connector and ground metal on car body.

Continuity exists ..... O.K.
Continuity does not exist ..... N.G.

N.G. → Correct or replace harness and connect E.C.C. 10-pin harness connector, air-fuel ratio control solenoid harness connector and battery ground cable.

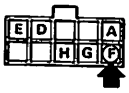

SEF970A

O.K. ↓

Check E.C.C. control unit:
1) Connect E.C.C. 10-pin harness connector, carburetor harness connector and battery ground cable.
2) Start engine and warm up engine until water temperature indicator points to the middle of gauge.
3) Keep engine speed between 1,200 and 1,500 rpm under no-load.
4) Disconnect exhaust gas sensor harness connector, apply a dry battery voltage (about 1.5V) to the harness connector within 1 minute*, and make sure that inspection lamp on the E.C.C. unit turns OFF.
5) Then cut dry battery voltage within 1 minute* and make sure that the inspection lamp on the E.C.C. unit turns ON.

* Be sure to do it within 1 minute as checking the lamp is impossible after that.

N.G. → Replace E.C.C. control unit. Connect exhaust gas sensor harness connector.

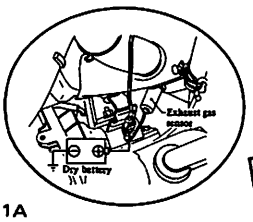

SEF971A

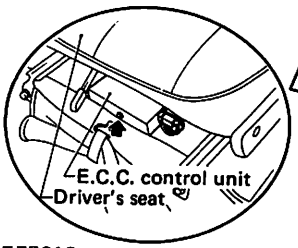

SEF531C

O.K. ↓

ⓔ

CARBURETOR — Inspection and Adjustment

Idle Speed and Mixture Ratio (Cont'd)

(To page EF & EC-44) ⓒ

ⓔ

Turn off engine and connect exhaust gas sensor harness connector.

Check air-fuel ratio control solenoid.
1) Turn the ignition switch "ON" without running engine.
2) Check air-fuel ratio control solenoid goes on and off. (Listen to the noise of air-fuel ratio control solenoid.)

O.K. → N.G. → Replace carburetor. → ⓒ

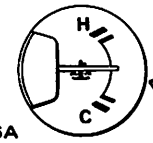

SMA566A

Start engine and warm up engine until water temperature indicator points to the middle of gauge.

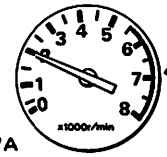

SMA567A

Run engine at about 2,000 rpm for about 2 minutes under no-load.

Race engine two or three times under no-load and run engine for one minute at idle speed.

Check idle speed. (rpm)

		Z20	Z24 Cab & Chassis	Z24 Except Cab & Chassis
M/T	2WD	700±100	700±100	800±100
	4WD	–	–	800±100
A/T (in "D" position)		–	–	650±100

N.G. → Adjust idle speed to the specified value by turning throttle adjusting screw. → Race engine two or three times under no-load and run engine for one minute at idle speed.

O.K. →

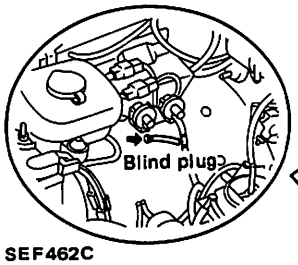

SEF462C

Disconnect vacuum hose from vacuum switch Ⓐ and plug hose with proper cap.

Race engine two or three times under no-load and run engine for one minute at idle speed.

Check idle "CO" with CO-meter.

Less than 4%.

O.K. → Does engine run smoothly?

YES → ⓕ

NO → Check the following.
- Vacuum hoses for proper connections.
- Air leaks at carburetor mounting and intake manifold.

O.K. → ⓖ

N.G. → Correct or replace malfunctioning parts. → Race engine two or three times under no-load and run engine for one minute at idle speed.

N.G. → Replace carburetor. → ⓒ

CARBURETOR — Inspection and Adjustment

Idle Speed and Mixture Ratio (Cont'd)

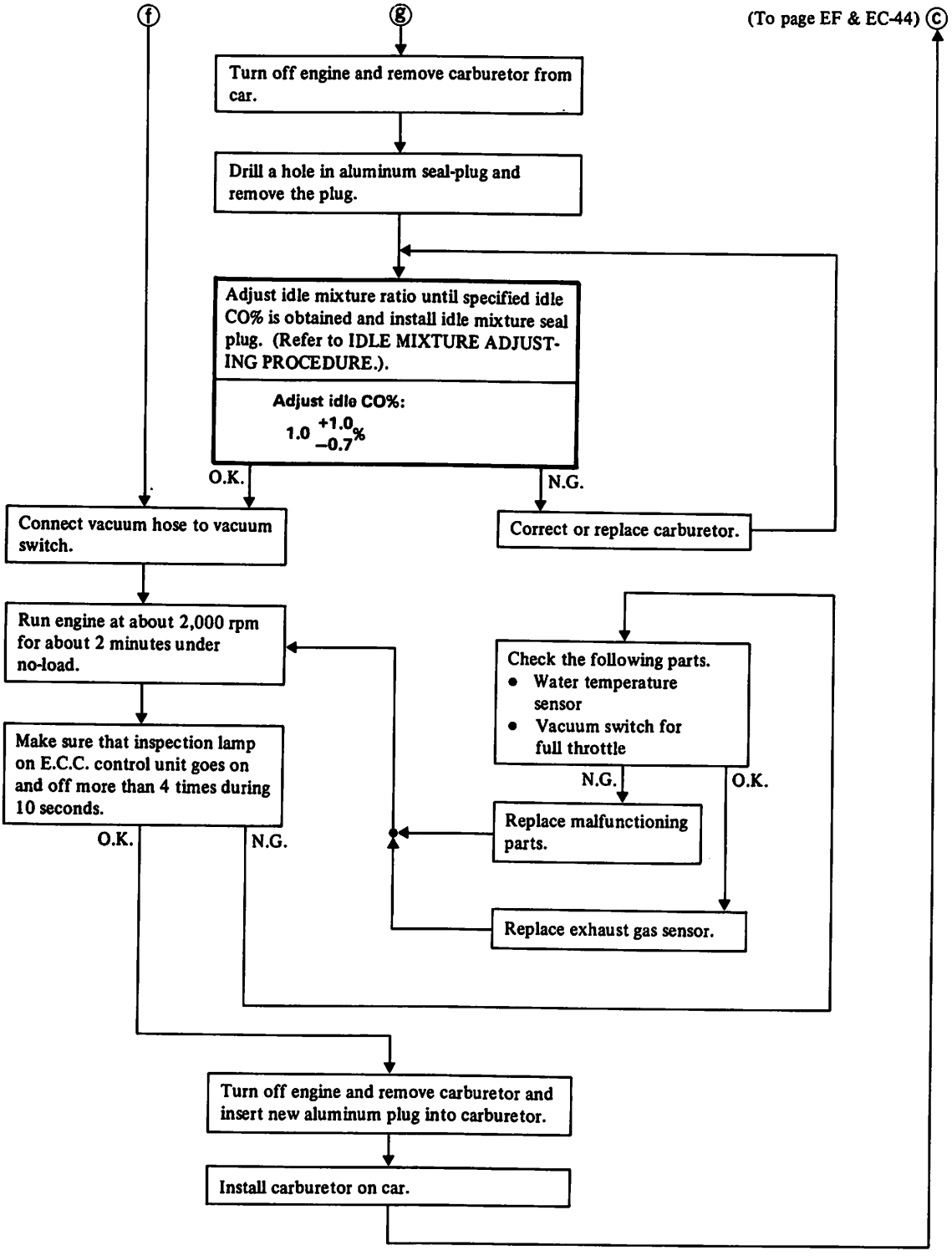

CARBURETOR — Inspection and Adjustment

Idle Mixture Adjusting Procedure

CAUTION:

a. **Removal of idle mixture seal plug should be performed only when idle mixture adjustment is necessary.**

b. **When installing carburetor, be sure to tighten to specified torque.**

1. Turn off engine and remove carburetor from engine.
2. After removing carburetor, drill a hole in seal plug and remove plug with proper Tool.

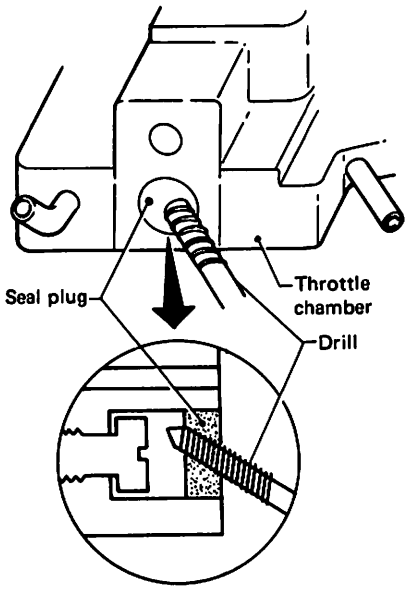

SEF730

After drilling, be sure to remove shavings with compressed air.

3. After performing step 2, mount carburetor on engine.
4. Start engine and warm it up sufficiently at about 2,000 rpm under no-load. Then, race engine two or three times under no-load.
5. Then, run engine at idle speed and adjust idle CO% by turning idle mixture adjusting screw.
6. If proper idle CO% is not obtained by adjustment, turn off engine and overhaul carburetor or replace it with a new one. Then adjust idle CO% by turning idle mixture adjusting screw.
7. After adjusting idle CO% by step 5 or 6, turn off engine if engine runs smoothly and replace seal plug with a new one. But, if it doesn't, adjust idle CO% by step 5.

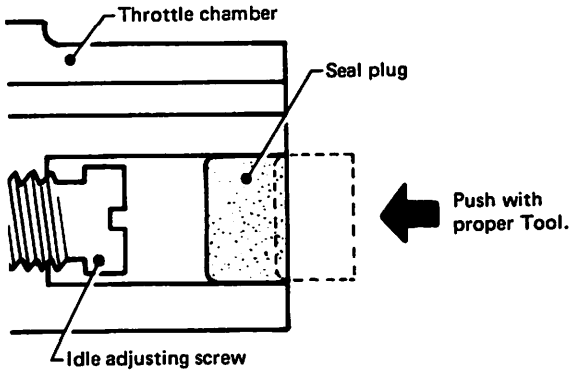

SEF731

8. Install carburetor on car.
   Start engine and warm it up sufficiently at about 2,000 rpm under no-load.

Fuel Level

1. Place car in a level area and with engine idling, check fuel level.

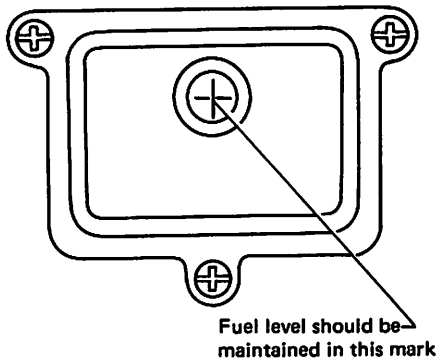

SEF461C

CARBURETOR — Inspection and Adjustment

Fuel Level (Cont'd)

2. Adjust fuel level.

1) Top float position "H": 7.2 mm (0.283 in)

If out of specification, adjust it by bending float seat.

2) Bottom float position "h": 1.3 - 1.7 mm (0.051 - 0.067 in)

If out of specification, adjust it by bending float stopper.

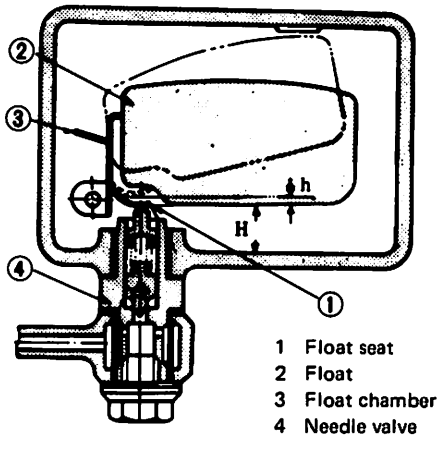

3. After adjustments, check fuel level.

Automatic Choke

AUTOMATIC CHOKE MECHANISM

1. Before starting engine, fully open throttle valve and ensure that choke valve closes properly.
2. Push choke valve with a finger, and check for smooth rotation.
3. Check wiring connection, and start engine.
4. After warming up the engine, ensure that choke valve is fully open.

AUTOMATIC CHOKE HEATER CIRCUIT

CAUTION:

Do not attach test leads of a circuit tester to those other than designated.

1. With engine not running, check for continuity between A and B as shown in Figure.
- If continuity exists, heater is functioning properly.
- If continuity does not exist, check for disconnected connector or open P.T.C. heater circuit.

2. With engine running at idle, check for presence of voltage across A and B as shown in Figure.
- If voltmeter reading is 12 volts (d-c), heater circuit is functioning properly.
- If voltmeter reading is zero, check for disconnected connector, open circuit, or faulty automatic choke relay.

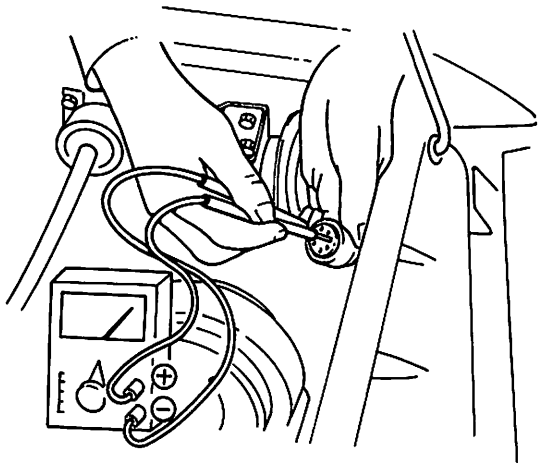

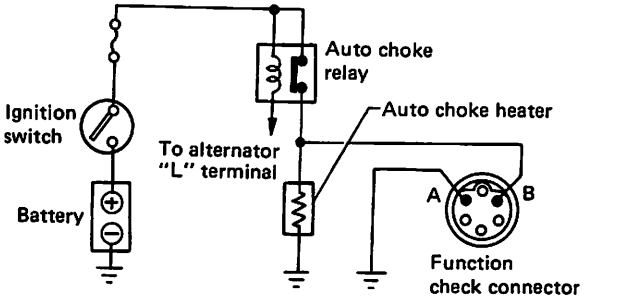

3. Replace faulty parts.

CARBURETOR — Inspection and Adjustment

Automatic Choke (Cont'd)

AUTOMATIC CHOKE HEATER

Measure resistance between choke heater connector and carburetor body.

Resistance: 3.7 - 8.9Ω

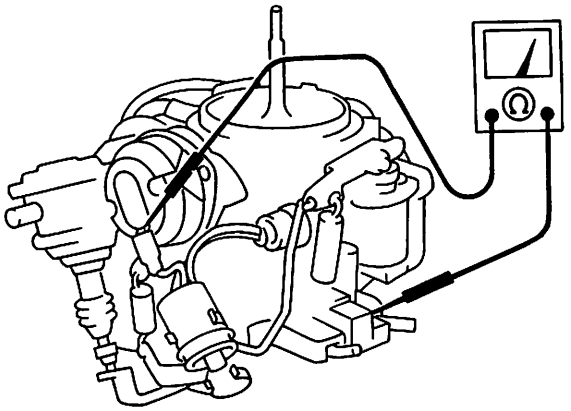

SEF482C

If out of specification, replace choke chamber assembly.

AUTOMATIC CHOKE RELAY

Automatic choke relay is located in the right side dash panel.

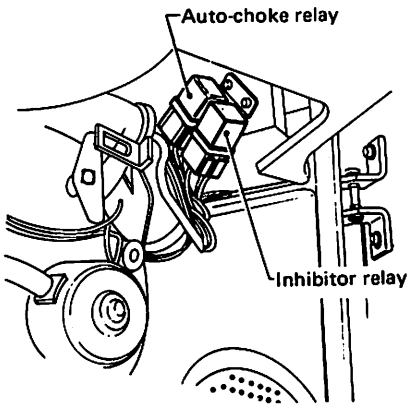

SEF608A

Remove the relay and check.

Fast Idle

1. Warm up engine. Set fast idle arm on 2nd step of fast idle cam.

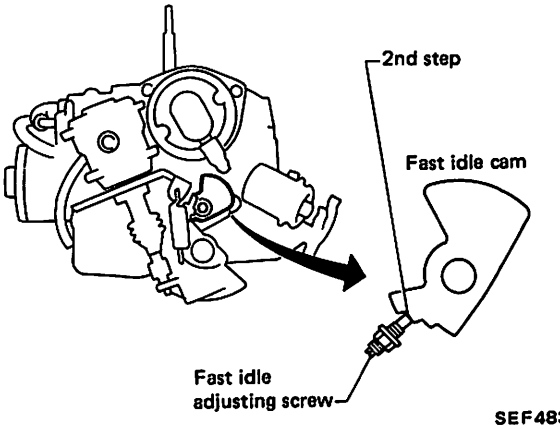

SEF483C

2. Check fast idle speed and if out of specification, adjust it by turning fast idle adjusting screw.

Fast idle speed (at 2nd cam step):

Z24 M/T
2,400±200 rpm
Z24 A/T
2,800±200 rpm
M.P.G.
2,800±200 rpm

Make sure that the engine is completely adjusted (Idle rpm, ignition timing, etc.) before checking or adjusting fast idle speed.

3. If necessary, remove carburetor and make fast idle adjustments as follows.

1) Place fast idle arm on 2nd step of fast idle cam, in the same manner as in step 1 above.

CARBURETOR — Inspection and Adjustment

Fast Idle (Cont'd)

2) Adjust clearance "A" between primary throttle valve and inner carburetor wall by turning fast idle adjusting screw.

Clearance "A":

Z24 M/T
0.78±0.07 mm (0.0307±0.0028 in)
Z24 A/T
0.94±0.07 mm (0.0370±0.0028 in)
M.P.G.
0.83±0.07 mm (0.0327±0.0028 in)

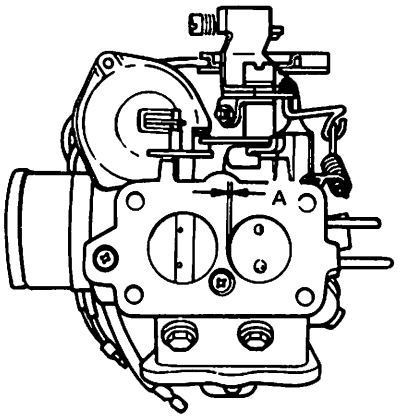

EF109A

If after adjustment and installation, the fast idle speed is out of specification, use clearance "A" values.

Vacuum Break

Disconnect vacuum hose and apply vacuum to vacuum breaker to full-stroke.

1) Lower ambient temperature [Below 5°C (41°F)]
   In this condition, check clearance "R_1" between choke valve and carburetor body with choke valve closed.

Clearance "R_1":

Z24 2.25±0.15 mm (0.0886±0.0059 in)
M.P.G. 1.95±0.15 mm (0.0768±0.0059 in)

If out of specification, adjust "R_1" by bending tongue.

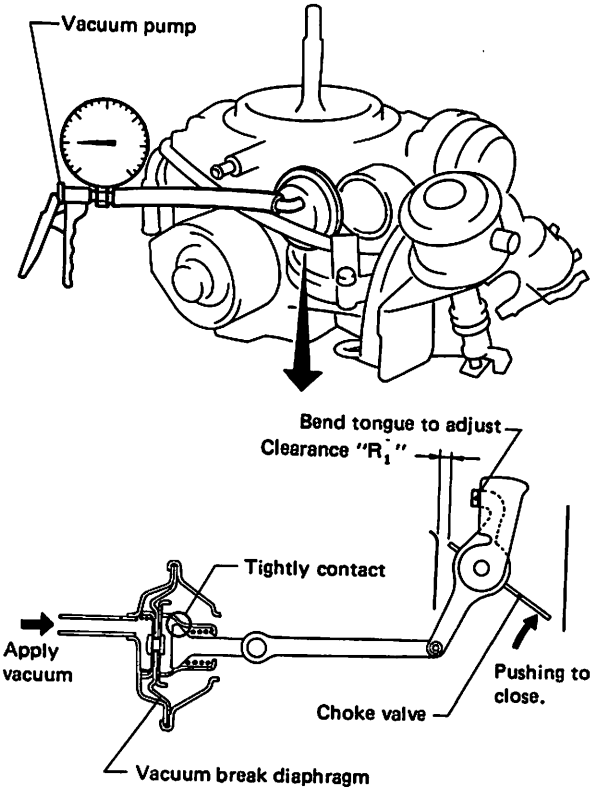

SEF726C

CARBURETOR — Inspection and Adjustment

Vacuum Break (Cont'd)

2) Higher ambient temperature [Above 20°C (68°F)]
In this condition, check clearance "R_2" between choke valve and carburetor body with connecting rod pushed.

Clearance "R_2":
Z24
3.40±0.30 mm (0.1339±0.0118 in)
M.P.G.
3.42±0.30 mm (0.1346±0.0118 in)

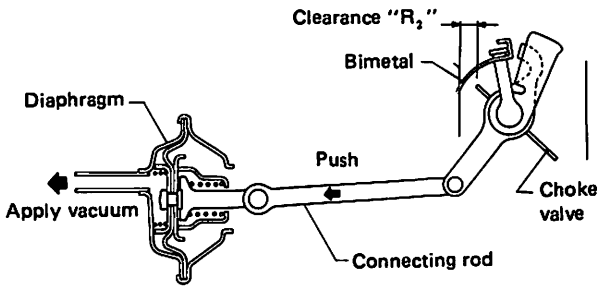

SEF731C

Choke Unloader

1. With engine in cold condition, close choke valve completely.
2. Turn throttle lever until primary throttle valve completely opens.
3. In this condition, check clearance "C" between choke valve and carburetor body.

   Clearance "C":
   2.45±0.4 mm (0.0965±0.0157 in)
4. If out of specifications, make adjustments by bending unloading tongue.

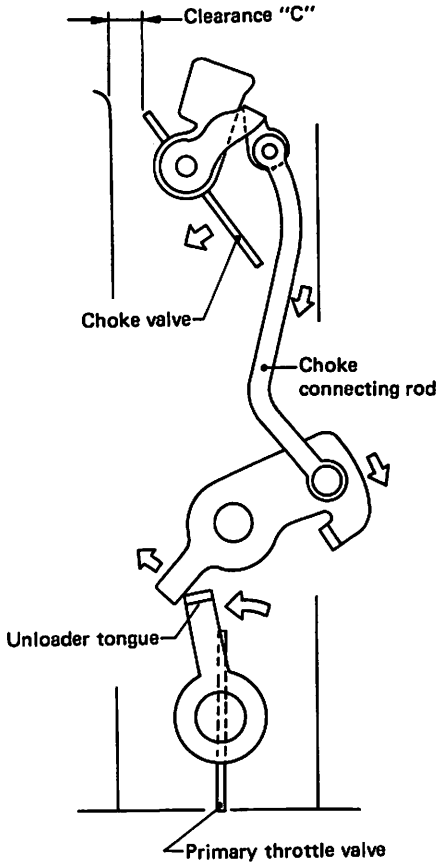

SEF485C

CARBURETOR — Inspection and Adjustment

Interlock Opening of Primary and Secondary Throttle Valves

When adjusting plate comes into contact with lock lever at point (A) by turning throttle lever, check clearance "G" between primary throttle valve and inner wall.

Clearance "G":

Z24

8.37±0.5 mm (0.3295±0.0197 in)

M.P.G.

7.88±0.5 mm (0.3102±0.0197 in)

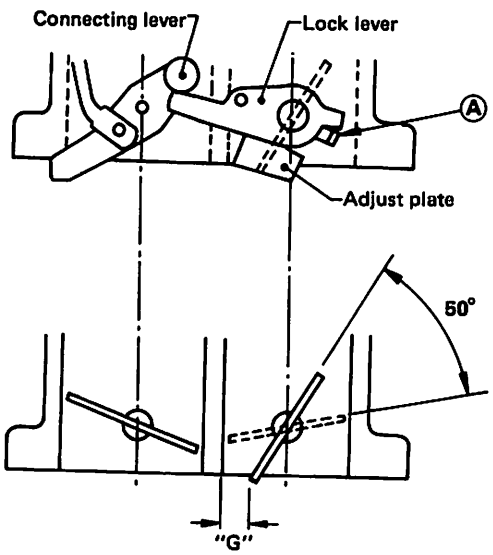

SEF463C

Accelerator Pump

1. With carburetor removed from engine, pour gasoline into fuel float chamber.
2. Fully loosen throttle adjusting screw.
3. Fully open choke valve.
4. Slowly turn throttle lever about 10 times, from fully closed position to fully open position, keeping throttle lever fully open at least 3 seconds per stroke.
5. Measure injection quantity of accelerating pump.

   Injection quantity:

   $0.7 \begin{smallmatrix}+0.15\\-0.10\end{smallmatrix}$ mℓ ($0.024 \begin{smallmatrix}+0.005\\-0.003\end{smallmatrix}$ US fl oz,

   $0.025 \begin{smallmatrix}+0.005\\-0.004\end{smallmatrix}$ Imp fl oz)/stroke

   If out of specification, adjust by bending accelerating pump connecting rod.

After installation, be sure to readjust throttle adjusting screw.

CARBURETOR — Inspection and Adjustment

Dash Pot

1. Turn throttle valve by hand, and read engine speed when dash pot just touches stopper lever.

   Dash pot touch speed:

M/T	1,800±200 rpm
A/T	1,500±200 rpm

2. If out of specifications, adjust it by turning dash pot adjusting screw.

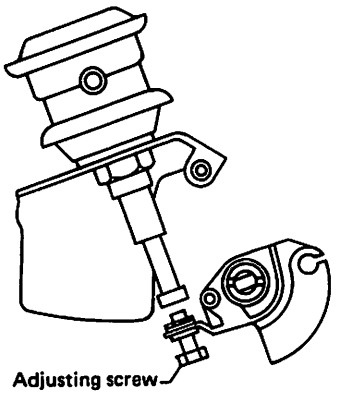

SEF535A

3. After adjusting, make sure that engine speed drops smoothly.

Refer to HA-31 for F.I.C.D. adjustment.

Anti-dieseling Solenoid Valve

If engine does not stop when the solenoid connector is disconnected, then the solenoid is stuck. Connect solenoid valve connector to battery. Check "click" sound from solenoid valve when battery is connected and disconnected.

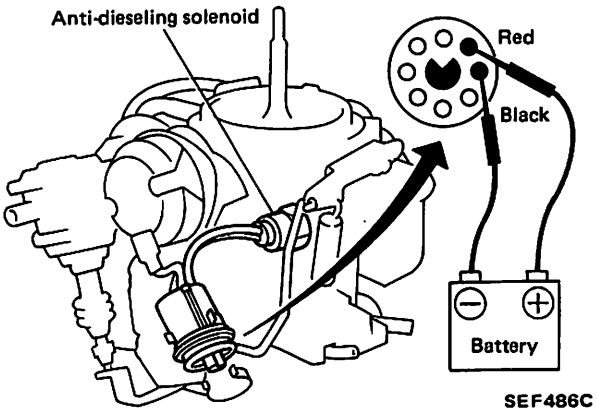

SEF486C

After replacement, start engine and check to be certain that fuel is not leaking, and that anti-dieseling solenoid is in good condition.

ENGINE AND EMISSION CONTROL SYSTEM

Spark Timing Control System
(Except M.P.G. and Camper models)

DESCRIPTION

The spark timing control system is designed to control the distributor vacuum advance under varying driving conditions so as to reduce HC and NOx emissions.

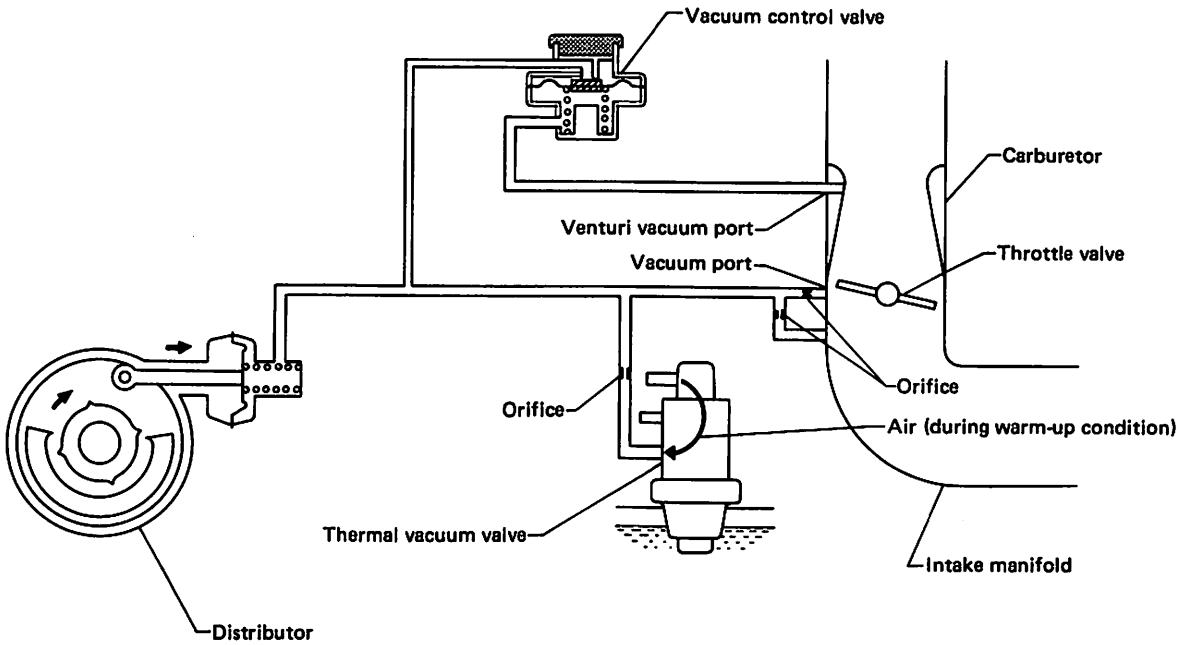

SEF487C

OPERATION

M.P.G. model & Z24 Cab & Chassis model

Water temperature °C (°F)		T.V.V. operation	Spark timing	
Z24 for non-California	M.P.G. model & Z24 for California		Normal driving	Heavy load and high-speed driving
Below 35 (95)	Below 15 (59)	Closed	Advanced	Slightly advanced
35 - 55 (95 - 131)	15 - 60 (59 - 140)	Open	Slightly advanced	
Above 55 (131)	Above 60 (140)	Closed	Advanced	

Z24 except Cab & Chassis model

Water temperature °C (°F)	T.V.V. operation	Spark timing	
		Normal driving	Heavy load and high-speed driving
Below 15 (59)	Closed	Advanced	Not advanced
15 - 50 (59 - 122)	Open	Not advanced	
Above 50 (122)	Closed	Advanced	

ENGINE AND EMISSION CONTROL SYSTEM

Fuel Pump Control System

This system controls the fuel pump operation under various engine operating conditions.

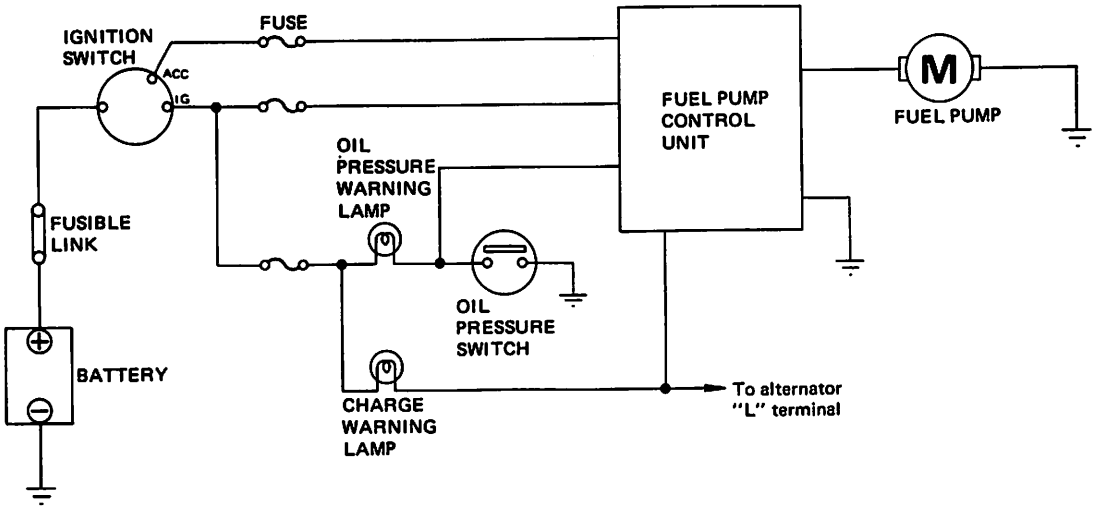

SEF972A

OPERATION

Ignition switch position	Engine	Alternator	Oil pressure	Fuel pump
OFF	Stopped	Not generating	No pressure	Not operating
ACC				
ON				
START	Cranking		Low pressure	Operating
		Generating		
		Not generating	Normal	
		Generating		
ON	Running	Failure		
		Generating	Failure	

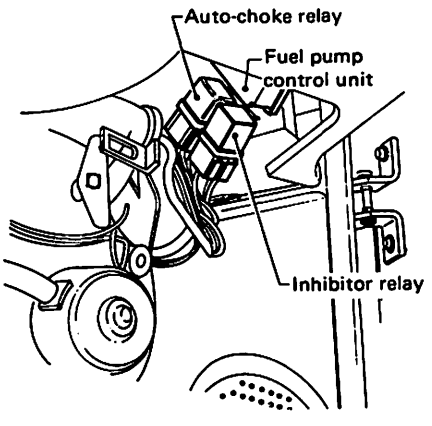

SEF055B

Fuel pump control unit

Fuel pump control unit is located in the R.H. dash side panel.

INSPECTION

Check fuel pump operation referring to the above table.

If fuel pump is malfunctioning, repair or replace harness and fuel pump control unit.

Thermal vacuum valve (T.V.V.)

This thermal vacuum valve is mounted on the front of the intake manifold. It detects engine coolant temperature by means of wax, and opens or closes the vacuum passage in the thermal vacuum valve.

When the valve opens, the vacuum signal line will allow external air to enter, thereby stopping the distributor vacuum from advancing.

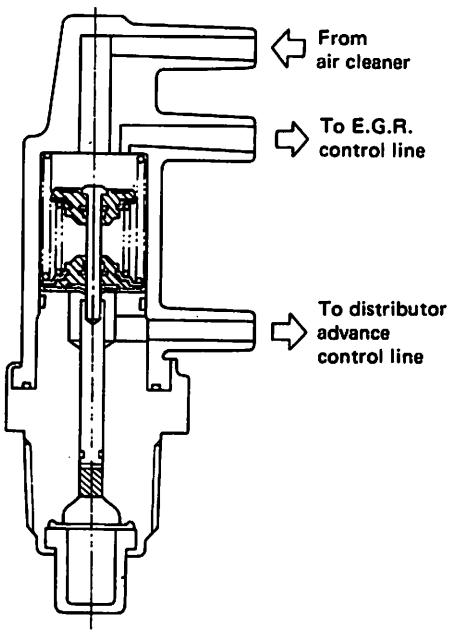

SEC021

Vacuum control valve (V.C.V.)

The vacuum control valve is installed in the distributor vacuum line. When the carburetor venturi vacuum exceeds the pre-set value, the air is bled to the distributor vacuum line and then, the spark timing retards slightly.

Normal driving

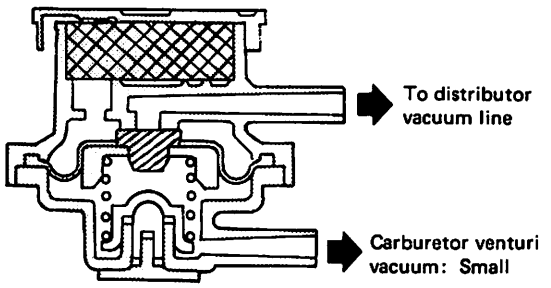

Heavy load and high speed driving

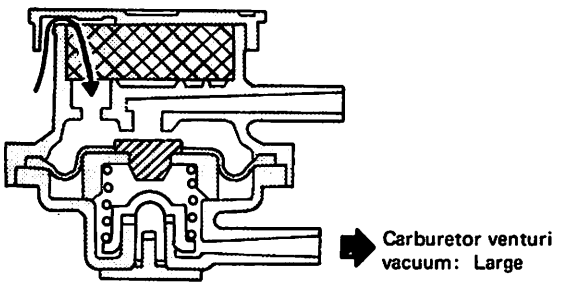

SEC273A

INSPECTION

Entire system

Check ignition timing while the engine is cold and hot by using timing light, referring to the table in OPERATION.

If malfunctioning, check vacuum hoses, distributor vacuum controller, thermal vacuum valve and vacuum control valve.

ENGINE AND EMISSION CONTROL SYSTEM

Spark Timing Control System (Cont'd)

Thermal vacuum valve

Inhale air from port of spark timing control system and check to be sure that thermal vacuum valve opens or closes in response to its temperature.

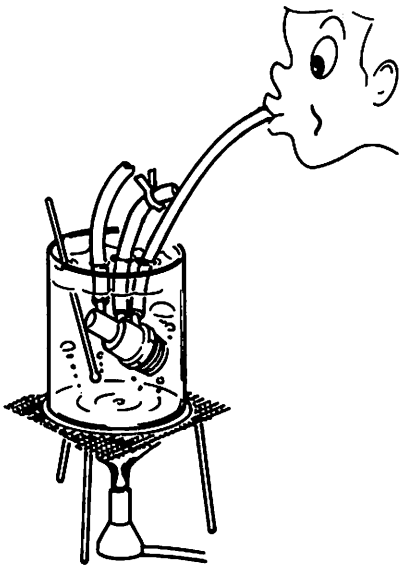

SEC396

CAUTION:
Do not allow water to enter the thermal vacuum valve.

Thermal vacuum valve operating temperature:

M.P.G. model & Z24 Cab & Chassis model

Unit: °C (°F)

	Open	Close
Z24 for non-California	35 - 55 (95 - 131)	Below 35 (95) Above 55 (131)
M.P.G. model & Z24 for California	15 - 60 (59 - 140)	Below 15 (59) Above 60 (140)

Z24 except Cab & Chassis model

Unit: °C (°F)

Open	Close
15 - 50 (59 - 122)	Below 15 (59) Above 50 (122)

Vacuum control valve

Apply vacuum to vacuum control valve, and ensure that distributor side of vacuum control valve opens or closes in response to the vacuum of carburetor side.

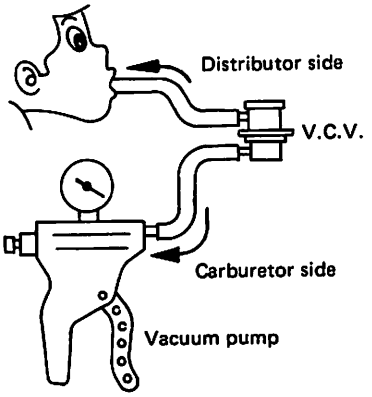

SEC274A

Carburetor side vacuum kPa (mmHg, inHg)	Distributor side
Below 6.7 (50, 1.97)	Close
Above 6.7 (50, 1.97)	Open

ENGINE AND EMISSION CONTROL SYSTEM

Detonation Control System (M.P.G. model)

The function of this system is to sense engine "knock" or detonation. If detonation occurs in the cylinders, its vibrations are transmitted from the cylinder block to the detonation sensor.

The knocking vibration that is transmitted from cylinder block pressurizes piezoelectricity element, which is transformed into a voltage pulsation and then output.

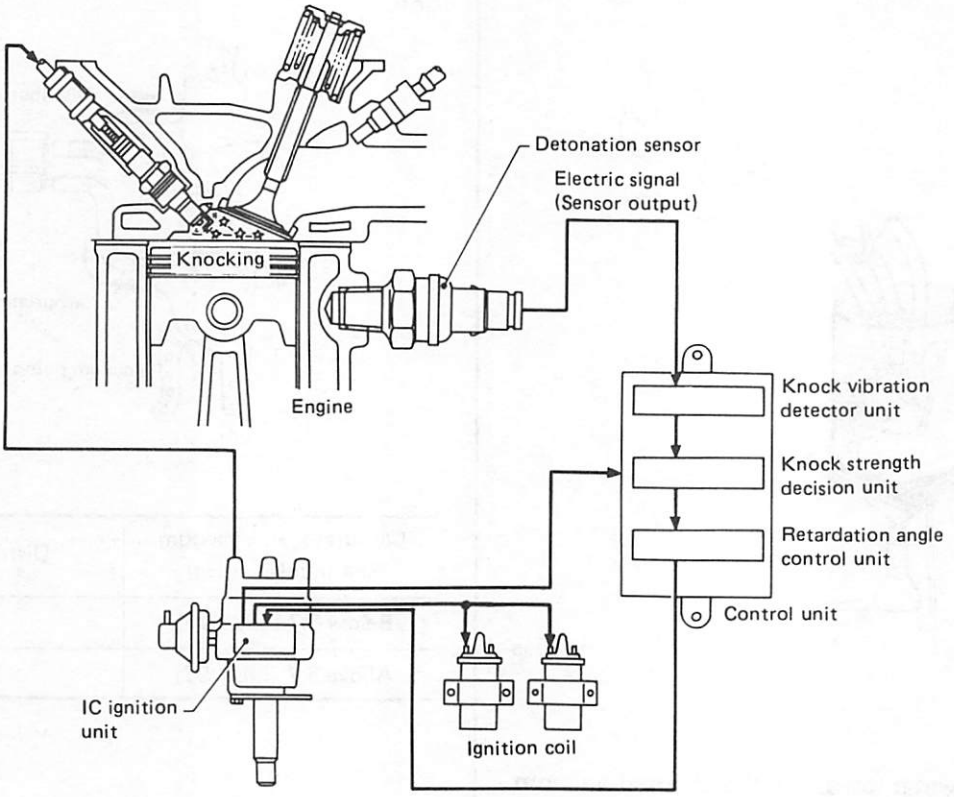

SEC206A

DETONATION SENSOR

The detonation sensor is attached to the cylinder block and senses engine knocking conditions. The sensor monitors the knocking from each combustion chamber and sends an electric signal to the control unit where it is changed to a knocking signal.

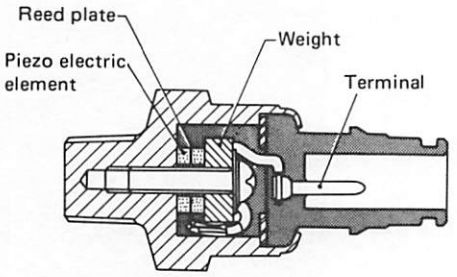

SEC207A

DETONATION CONTROL UNIT

The detonation control unit monitors a knocking signal from the detonation sensor and controls ignition timing to keep it at the optimum.

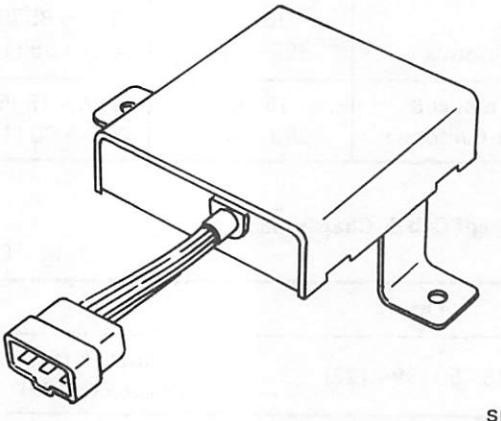

SEF827A

Detonation Control System (M.P.G. model) (Cont'd)

INSPECTION

1. Keep engine speed at about 2,200 rpm.
2. Check if ignition timing retards by about 10 degrees with timing light when detonation sensor harness connector is disconnected.

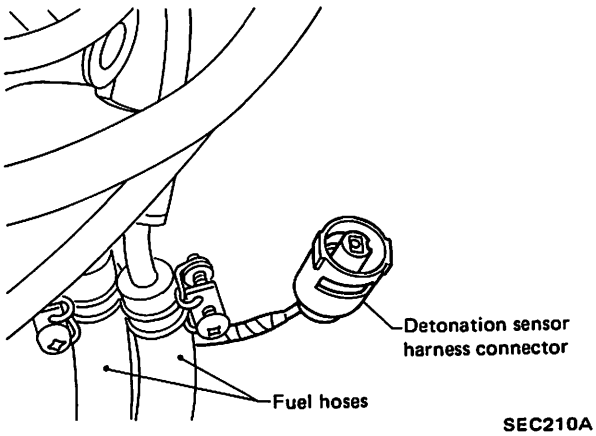

SEC210A

Harness connector	Ignition timing
Connected	Normal
Disconnected	Retarded by 10 degrees

3. If ignition timing does not retard, check distributor (IC ignition unit) and detonation control unit.
   1) Remove R.H. rear side finisher.
   2) Ignition signal check
   a. Keep engine speed at about 2,200 rpm and check voltage between terminal (4) and body earth.

   Voltage A: 0.4 - 0.7V

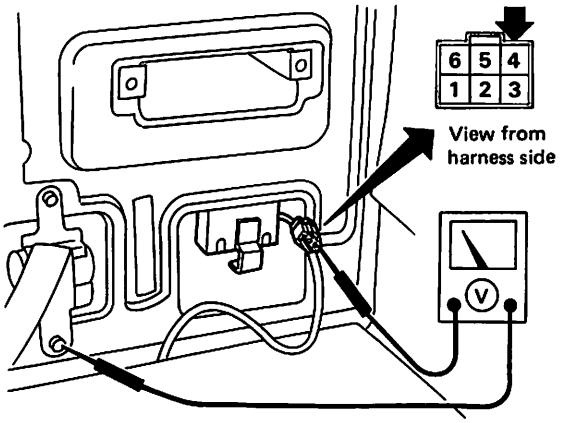

SEF488C

   b. If out of specification, check distributor (IC ignition unit) and harness.
   3) Output signal check
   a. Keep engine speed at about 2,200 rpm and check voltage between terminal (3) and body earth.

   Voltage B: 3.7 - 3.8V

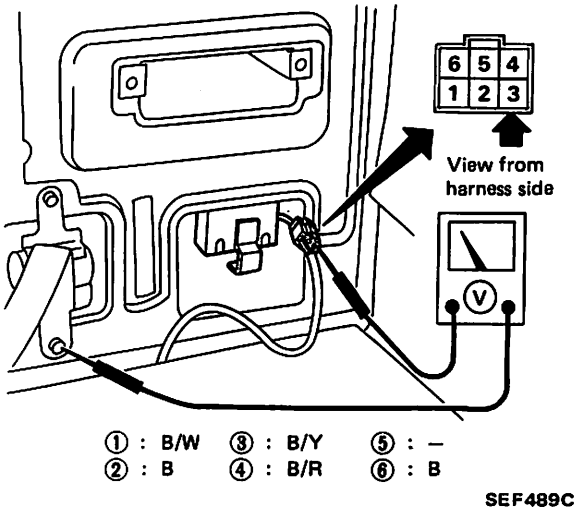

SEF489C

   b. If out of specification, replace detonation control unit.
4. If distributor (IC ignition unit) and detonation control unit are working properly, replace detonation sensor.

ENGINE AND EMISSION CONTROL SYSTEM

High Altitude Compensator System
(Z24 for non-California high altitude option)

DESCRIPTION

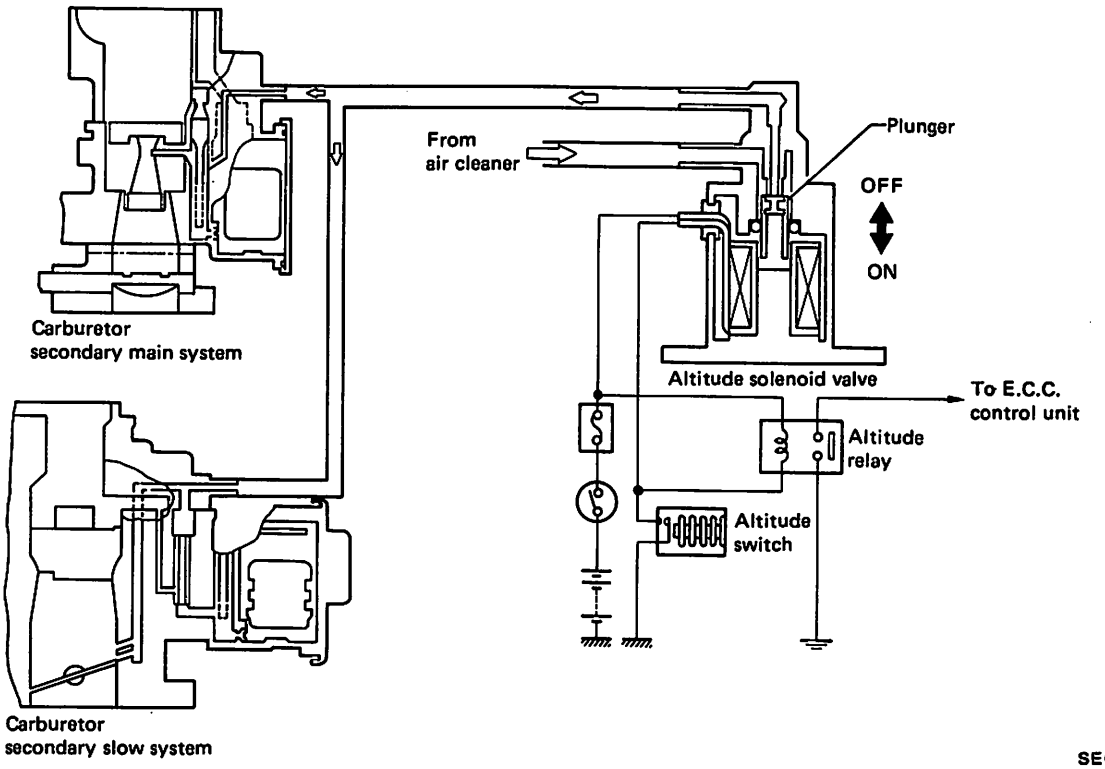

SEC488A

If vehicle operated at high altitudes, where the air is thinner, mixture ratio and intake manifold boost vary, and exhaust emission increases. In order to decrease exhaust emission, the altitude compensator system operates so that air-fuel ratio is corrected to that at sea level.

When atmospheric pressure decreases to a certain value, altitude switch turns "ON", applying battery voltage to altitude solenoid valve. When solenoid valve turns "ON", additional air is led into carburetor, making air-fuel ratio thinner.

Altitude switch

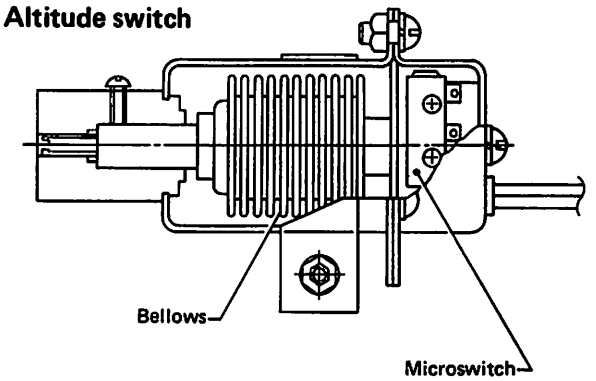

SEC489A

When atmospheric pressure decreases, the bellows in altitude switch extends and pushes microswitch to "ON".

Altitude	Atmospheric pressure	Altitude switch
Below 1,300 m (4,265 ft)	Above 86.6 kPa (650 mmHg, 25.59 inHg)	OFF
Above 1,300 m (4,265 ft)	Below 86.6 kPa (650 mmHg, 25.59 inHg)	ON

INSTALLATION

1. Install altitude switch to right-hand dash side and connect connector.

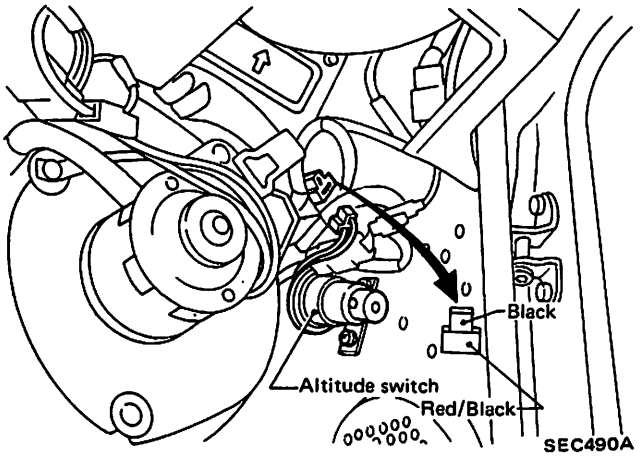

2. Check body harness arrangement for altitude solenoid valve.
(1) If type A, install altitude solenoid valve and connect connector, not using sub-harness.
(2) If type B, install altitude solenoid valve and connect connector, using sub-harness.

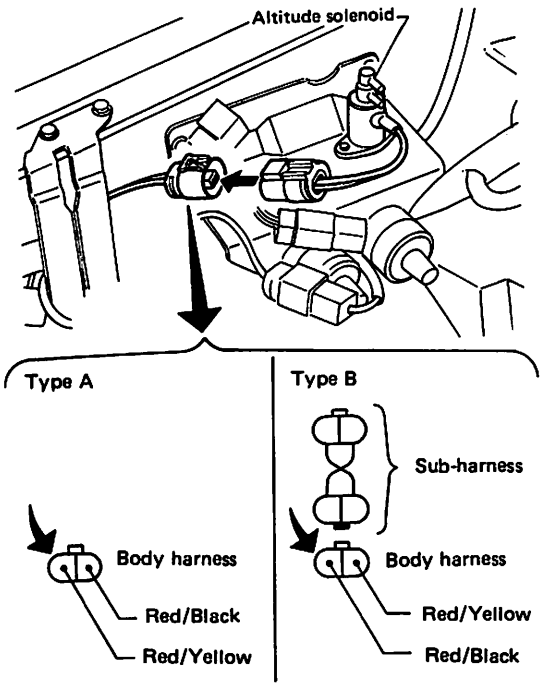

3. Install altitude relay.

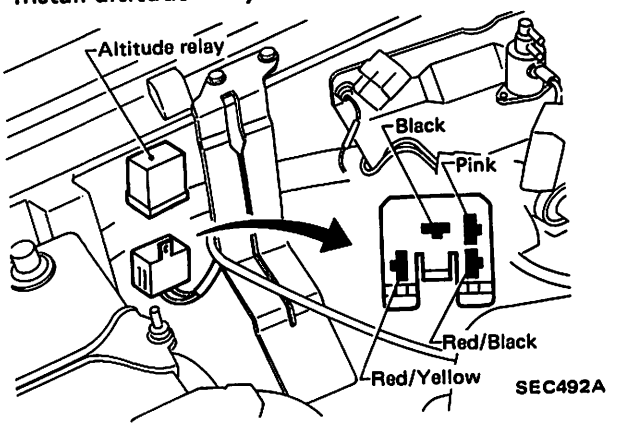

4. Remove rubber caps attached to altitude compensation pipes of carburetor.

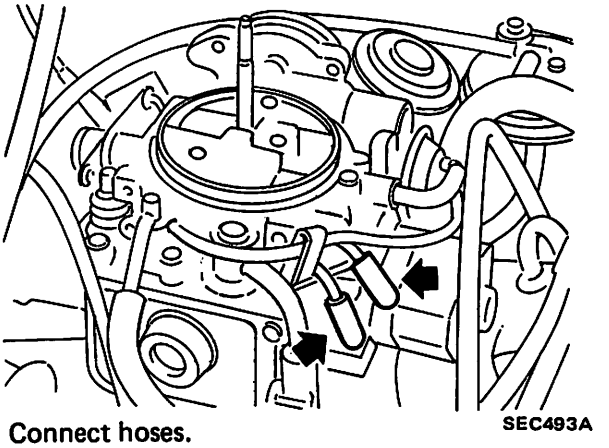

5. Connect hoses.

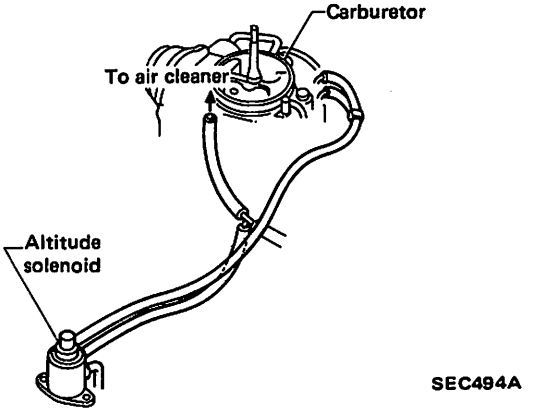

CAUTION:
Make sure that all hoses are inserted far enough into the connectors.

6. Start engine, and check air and vacuum lines for leaks, particularly around new connections. If O.K., warm up engine sufficiently.
7. Check idle speed and adjust it if necessary.

ENGINE AND EMISSION CONTROL SYSTEM

Boost Controlled Deceleration Device (B.C.D.D.)

This system is designed to reduce the engine's lubricating oil consumption when the intake manifold vacuum increases to an extremely high level during deceleration.

This system consists of two units as follows:

1. Boost Control Unit (Boost Control Valve and Diaphragm) as the manifold vacuum sensor.
2. By-pass Air Control Unit (By-pass Air Control Valve and Diaphragm) as actuator.

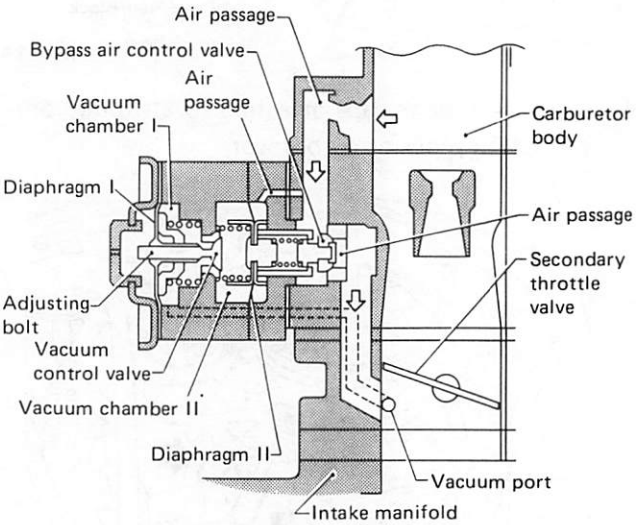

SEC873

OPERATION

Intake manifold vacuum kPa (mmHg, inHg)	B.C.D.D. system
Below 81.3±0.7 (610±5, 24.02±0.20)	Not actuated
Above 81.3±0.7 (610±5, 24.02±0.20)	Actuated

INSPECTION

1. Warm up engine to operating temperature.
2. Fully loosen dash pot adjusting screw.

After inspection and adjustment have been made, readjust dash pot touch speed.

3. Connect vacuum gauge to intake manifold.
4. Start engine and observe vacuum gauge while engine racing.
5. If B.C.D.D. is in good condition, vacuum gauge will indicate the following pressure.

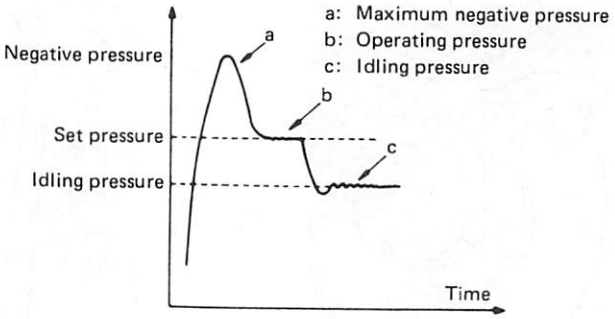

Characteristic curve of B.C.D.D.

EC502

6. If it does not react as described above, adjust operating pressure.

ADJUSTMENT OF B.C.D.D. OPERATING PRESSURE

1. Remove rubber cover.
2. Turn adjusting screw or nut slightly. Then, race engine and confirm that operating pressure is the specified value.

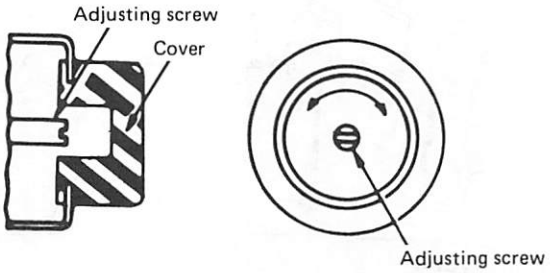

- Turn clockwise to reduce operating pressure.
- Turn counterclockwise to increase operating pressure.

ET037

Operating pressure:
–81.3±0.7 kPa
(–610±5 mmHg, –24.02±0.20 inHg)

A.B. Valve

DESCRIPTION

This valve is actuated by intake manifold vacuum to prevent backfire in the exhaust system at the initial period of deceleration.

At this period, the mixture in the intake manifold becomes too rich to ignite and burn in the combustion chamber and burns easily in the exhaust system with injected air in the exhaust manifold.

The A.B. valve provides air to the intake manifold to make the air-fuel mixture leaner and prevents backfire.

The correct function of this valve reduces hydrocarbon emission during deceleration.

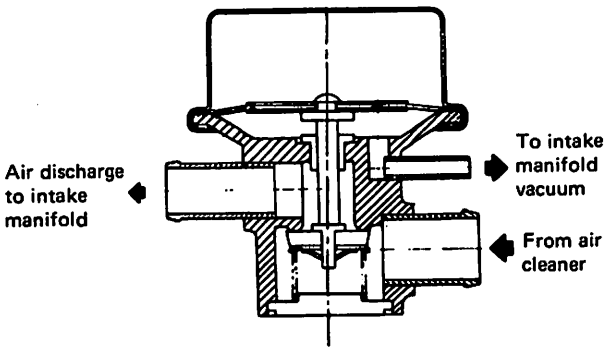

EC069

INSPECTION

1. Warm up engine thoroughly.
2. Remove air cleaner.
3. Disconnect hose from A.B. valve and place a finger near the outlet.
4. Run engine at about 3,000 rpm under no load, then quickly return it to idling. If you feel a pull or suction force on your finger, the A.B. valve is functioning normally. If no suction is felt, replace A.B. valve.

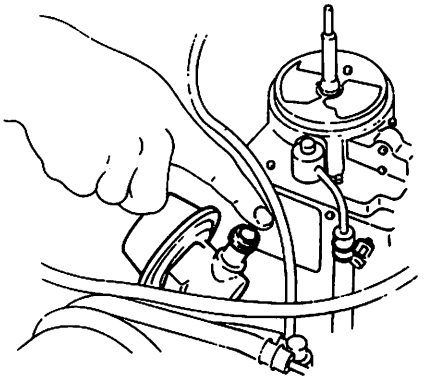

SEC104

ENGINE AND EMISSION CONTROL SYSTEM

Exhaust Gas Recirculation (E.G.R.) Control System

DESCRIPTION

The E.G.R. System has exhaust gases recirculate into the combustion chamber and lowers the combustion temperature so as to reduce NOx produced in combustion process.

An E.G.R. control valve measures the amount of exhaust gases recirculating from the exhaust manifold to the intake manifold by vacuum pressure in the carburetor.

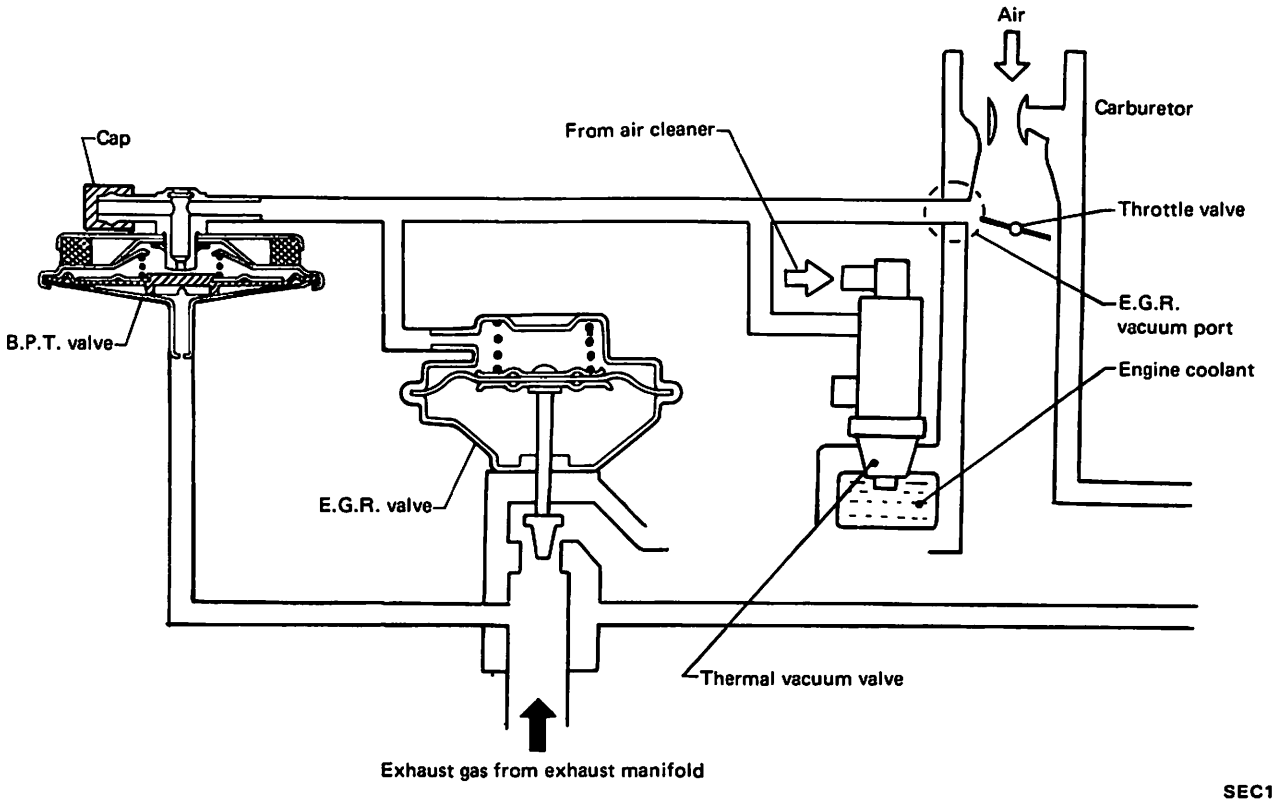

SEC181A

ENGINE AND EMISSION CONTROL SYSTEM

Exhaust Gas Recirculation (E.G.R.) Control System (Cont'd)

OPERATION

M.P.G. model & Z24 Cab & Chassis model

Water temperature °C (°F)		T.V.V. operation	B.P.T. valve		E.G.R. control system
Z24 for non-California	M.P.G. model & Z24 for California		Exhaust gas pressure kPa (mmH_2O, inH_2O)	Operation	
Below 55 (131)	Below 60 (140)	Open	Any condition		Not actuated
Above 55 (131)	Above 60 (140)	Closed	Below 0.206 - 0.265 (21 - 27, 0.83 - 1.06)	Open	Not actuated
			Above 0.206 - 0.265 (21 - 27, 0.83 - 1.06)	Closed	Actuated

Z24 except Cab & Chassis model

Water temperature °C (°F)	T.V.V. operation	B.P.T. valve		E.G.R. control system
		Exhaust gas pressure kPa (mmH_2O, inH_2O)	Operation	
Below 50 (122)	Open	Any condition		Not actuated
Above 50 (122)	Closed	Below 0.294 - 0.392 (30 - 40, 1.18 - 1.57)	Open	Not actuated
		Above 0.294 - 0.392 (30 - 40, 1.18 - 1.57)	Closed	Actuated

E.G.R. control valve

The E.G.R. control valve controls the quantity of exhaust gas to be led to the intake manifold. It does this through vertical movement of the taper valve connected to the diaphragm, to which vacuum is applied in response to the opening of the carburetor throttle valve.

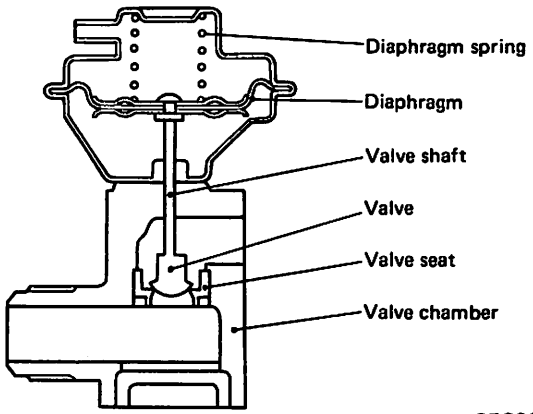

SEC019

Thermal vacuum valve

The thermal vacuum valve is mounted on the front of the intake manifold. It detects engine coolant temperature by means of wax, and opens or closes the vacuum passage in the thermal vacuum valve. When the valve is open, the vacuum signal line will allow external air to enter, thereby stopping E.G.R. control valve from operating.

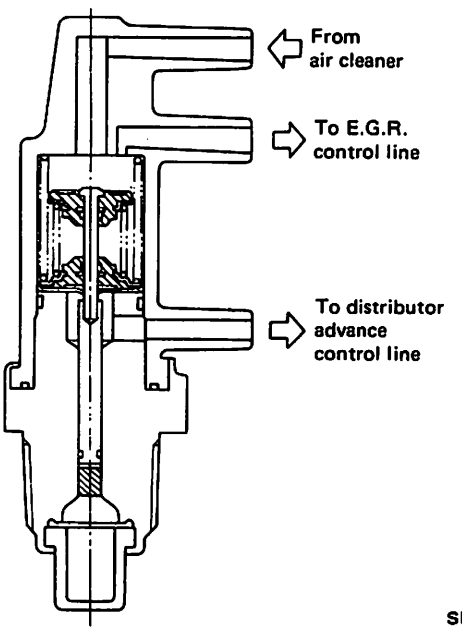

SEC021

B.P.T. valve

This B.P.T. valve monitors exhaust pressure to activate the diaphragm, controlling throttle chamber vacuum applied to the E.G.R. control valve. In other words, the amount of recirculated exhaust gas varies with the position of the E.G.R. valve regulated by the operating condition of the engine.

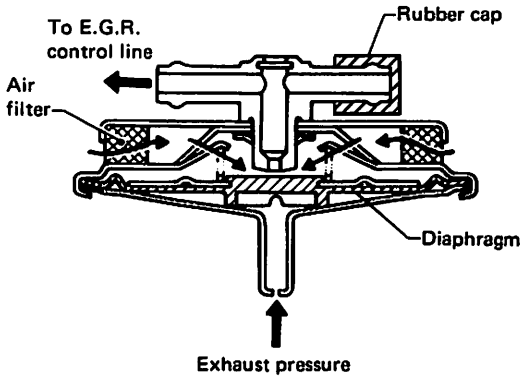

SEC208

INSPECTION

1. Make a thorough visual check of E.G.R. control system. If any hoses are cracked or broken, replace.
2. With engine running, inspect E.G.R. control valve and thermal vacuum valve for normal operation.
   Place your finger on diaphragm of E.G.R. control valve to ensure that the valve functions as shown in the table in OPERATION.

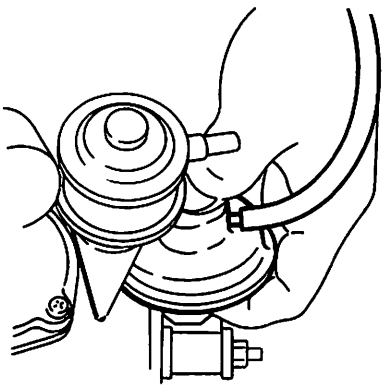

SEC383

E.G.R. control valve

Dismount E.G.R. control valve from engine.

1. Apply vacuum to E.G.R. control valve. If the valve moves to full position, it is normal.
   E.G.R. control valve will remain open for more than 30 seconds after vacuum has cut off.

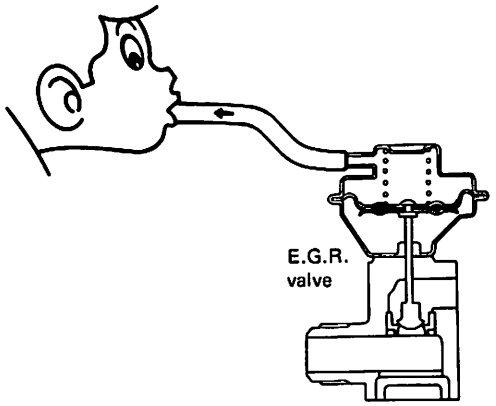

SEC078

Thermal vacuum valve

Dismount thermal vacuum valve from engine.

Before dismounting, drain engine coolant about one liter.

Apply vacuum to thermal vacuum valve and check to be sure that thermal vacuum valve opens or closes in response to engine coolant temperature as specified.

Refer to the table in OPERATION for T.V.V. operation.

CAUTION:

Do not allow water to get inside the thermal vacuum valve.

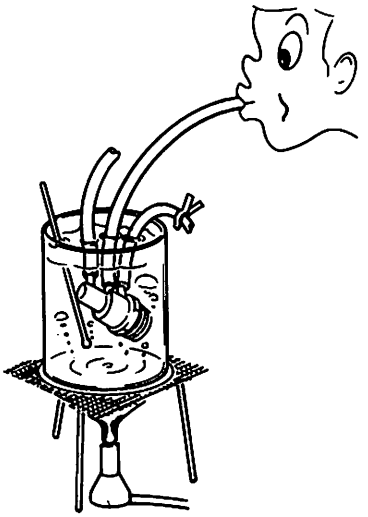

SEC395

B.P.T. valve

1. Disconnect two vacuum hoses on B.P.T. valve.
2. Plug one of two ports of B.P.T. valve.
   Apply a pressure above 0.490 kPa (50 mmH_2O, 1.97 inH_2O) to B.P.T. valve and orally suck back other port of B.P.T. valve as shown below to check for leakage. If a leak is noted, replace valve.

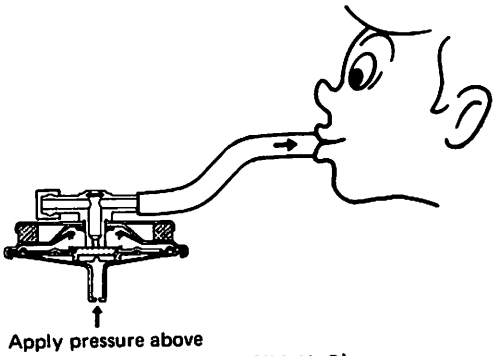

EC381A

ENGINE AND EMISSION CONTROL SYSTEM

Crankcase Emission Control System

This system is designed to return the blow-by gas to the intake manifold and to charge fresh air into the crankcase. The positive crankcase ventilation (P.C.V.) valve is provided.

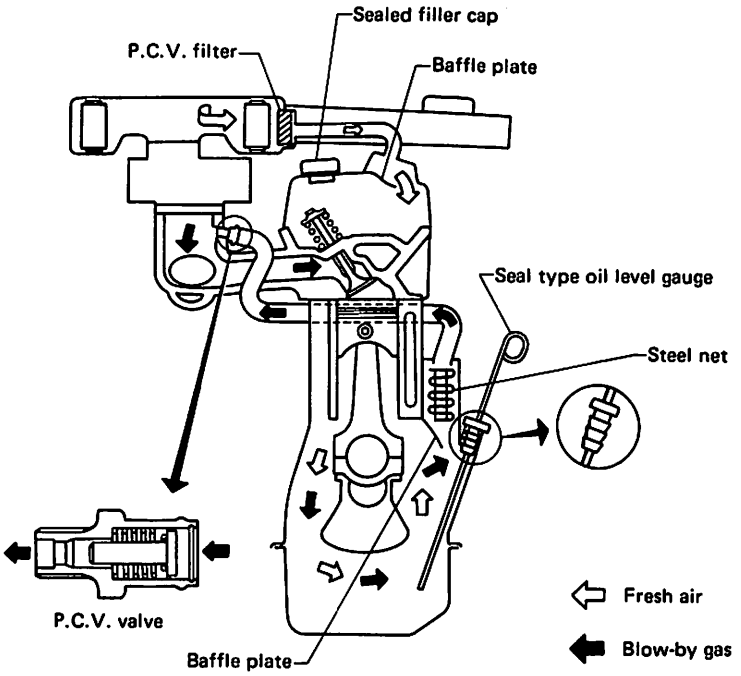

SMA851

INSPECTION

P.C.V. valve and filter

With engine running at idle, remove the ventilator hose from P.C.V. valve, if the valve is working, a hissing noise will be heard as air passes through the valve and a strong vacuum should be felt immediately when a finger is placed over valve inlet.

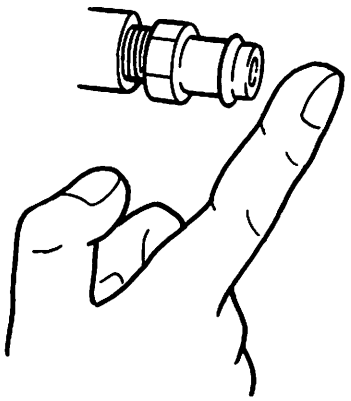

SMA048

Ventilation hose

1. Check hoses and hose connections for leaks.
2. Disconnect all hoses and clean with compressed air.
   If any hose cannot be free of obstructions, replace.

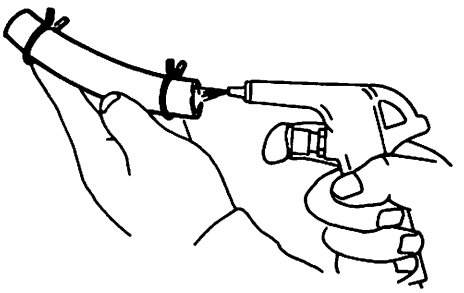

SMA403

ENGINE AND EMISSION CONTROL SYSTEM

Evaporative Emission Control System

OPERATION

The fuel vapor from the sealed fuel tank is led into the canister which contains activated carbon and the vapor is stored there when the engine is not running.

The canister retains the fuel vapor until the canister is purged by the air drawn through the purge line to the intake manifold when the engine is running. When the engine runs at idle, the purge control valve is closed.

Only a small amount of purge air flows into the intake manifold through the constant purge orifice. As the engine speed increases, and the throttle vacuum rises higher, the purge control valve opens and the vapor is sucked into the intake manifold through both the fixed orifice and the constant purge orifice.

In addition, the vapor in carburetor float chamber is led into the canister through the outer vent line because the vent switching valve is normally open.

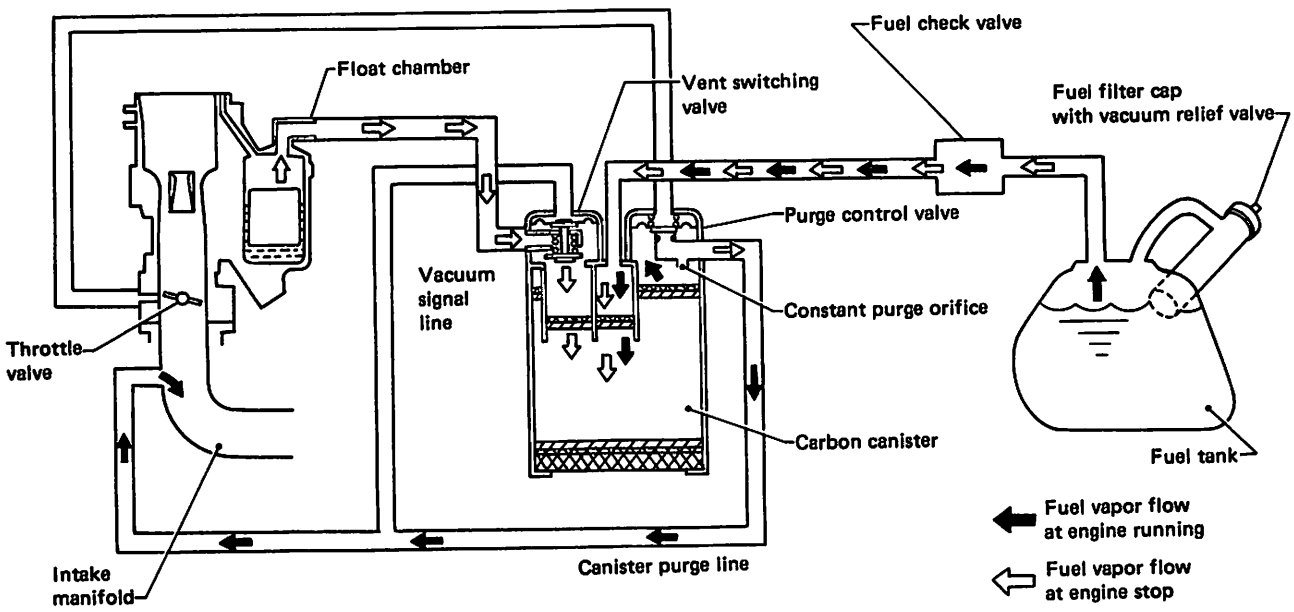

SEF490C

INSPECTION

Vapor vent line

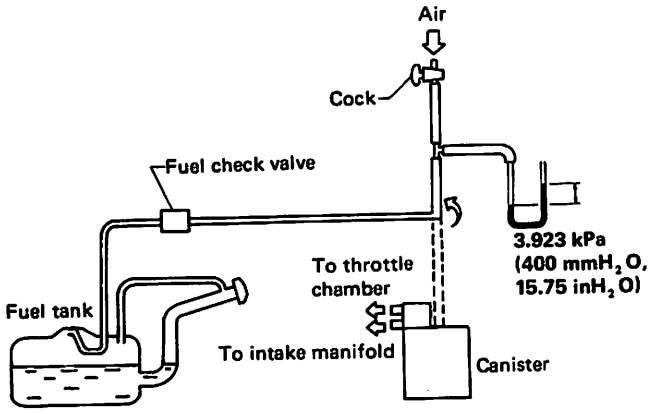

SEC423A

1. Check hoses and fuel tank filler cap.
2. Disconnect the vapor vent line connecting carbon canister to fuel tank.
3. Connect a 3-way connector, a manometer and a cock (or an equivalent 3-way charge cock) to the end of the vent line.
4. Supply fresh air into the vapor vent line through the cock little by little until pressure becomes 3.923 kPa (400 mmH_2O, 15.75 inH_2O).
5. Shut the cock completely and leave it unattended.
6. After 2.5 minutes, measure the height of the liquid in the manometer.

7. Variation in height should remain at 0.245 kPa (25 mmH_2O, 0.98 inH_2O).
8. When filler cap does not close completely, the height should drop to zero in a short time.

Carbon canister

Check carbon canister as follows:

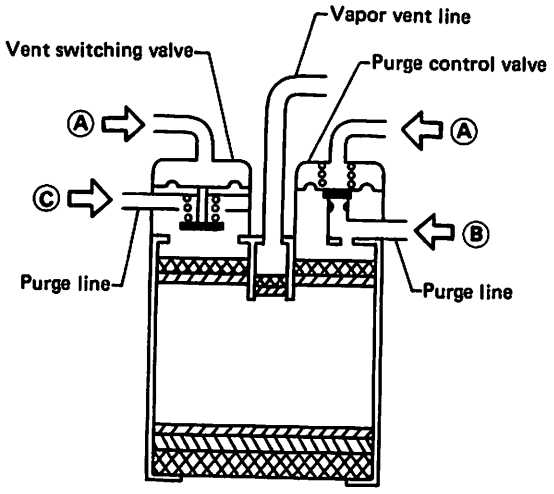

Ⓐ : Inhale air and ensure that there is no leakage.
Ⓑ : Inhale air and ensure that there is leakage.
Ⓒ
With engine running:
Inhale air and ensure that there is no leakage.
With engine off:
Inhale air and ensure that there is leakage.

SEF491C

If malfunctioning, replace canister.

Fuel check valve

1. Blow air through connector on fuel tank side. Considerable resistance should be felt and some air will be directed toward the engine.
2. Blow air through connector on engine side. Air flow should be smoothly directed toward fuel tank.
3. If fuel check valve does not function properly in steps 1 and 2 above, replace.

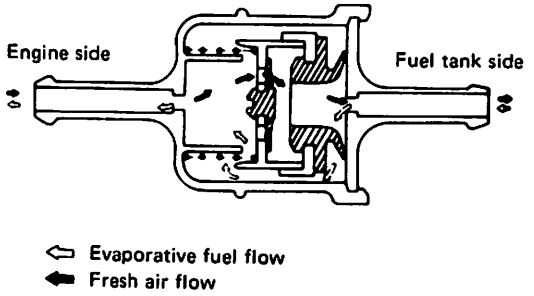

EC090A

Fuel tank vacuum relief valve

1. Wipe clean valve housing and have it in your mouth.
2. Inhale air. A slight resistance accompanied by valve indicates that valve is in good mechanical condition. Note also that, by further inhaling air, the resistance should be disappeared with valve clicks.
3. If valve is clogged, or if no resistance is felt, replace cap as an assembled unit.

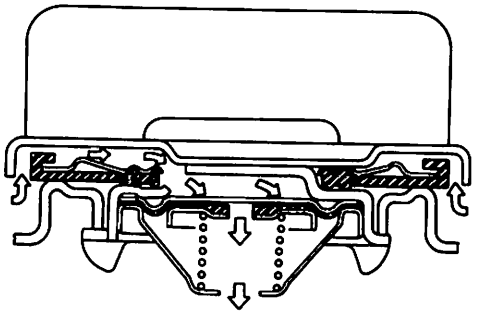

ET500

ENGINE AND EMISSION CONTROL SYSTEM

Catalytic Converter

The exhaust gas contains unburned, harmful gases. While the mixture ratio is maintained to the stoichiometric point by the mixture ratio feedback system, the three-way catalytic converter activates to oxidize and reduce harmful gases (HC, CO and NOx) into harmless gases (CO_2, H_2O and N_2). In this way, the catalytic converter cleans the exhaust gas and emits CO_2, H_2O and N_2 into the atmosphere.

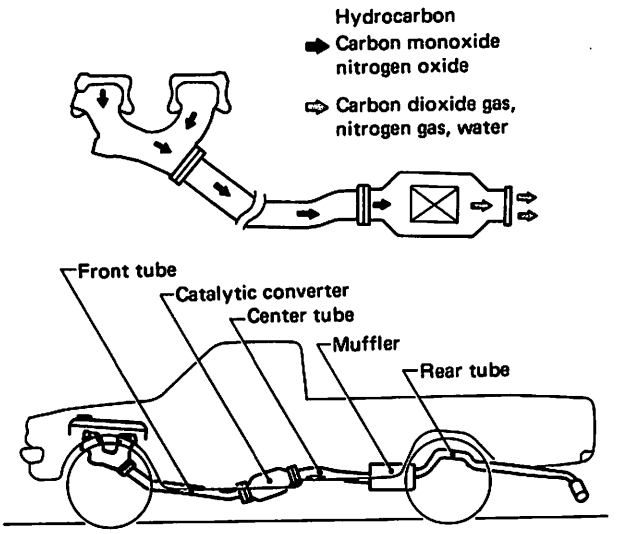

SEC213A

ENGINE AND EMISSION CONTROL SYSTEM TABLE

Crankcase emission control system		• P.C.V. valve
Exhaust emission control system	Air injection valve (A.I.V.) system	• Air injection valve • Air injection pipe • A.B. valve
	E.G.R. control system	• E.G.R. control valve • V.V.T. valve • Thermal vacuum valve (3-port wax type)
	Fuel shut-off system	• Anti-dieseling solenoid valve • Inhibitor switch (A/T) • Neutral switch (M/T) • Clutch switch (M/T) • Engine revolution unit
	Intake manifold vacuum control system	• B.C.D.D. unit
	Spark timing control system	• Thermal vacuum valve (3-port wax type) • Vacuum control valve (Except heavy duty models)
	Spark plug switching control system	• Vacuum switch • Inhibitor switch (A/T) • Neutral switch (M/T) • Clutch switch (M/T) • Ignition control unit • Ignition coil
	Catalyzer	• Oxidation catalytic converter
Evaporative emission control system		• Carbon canister • Thermal vacuum valve (3 port wax type)

ENGINE AND EMISSION CONTROL DIAGRAM

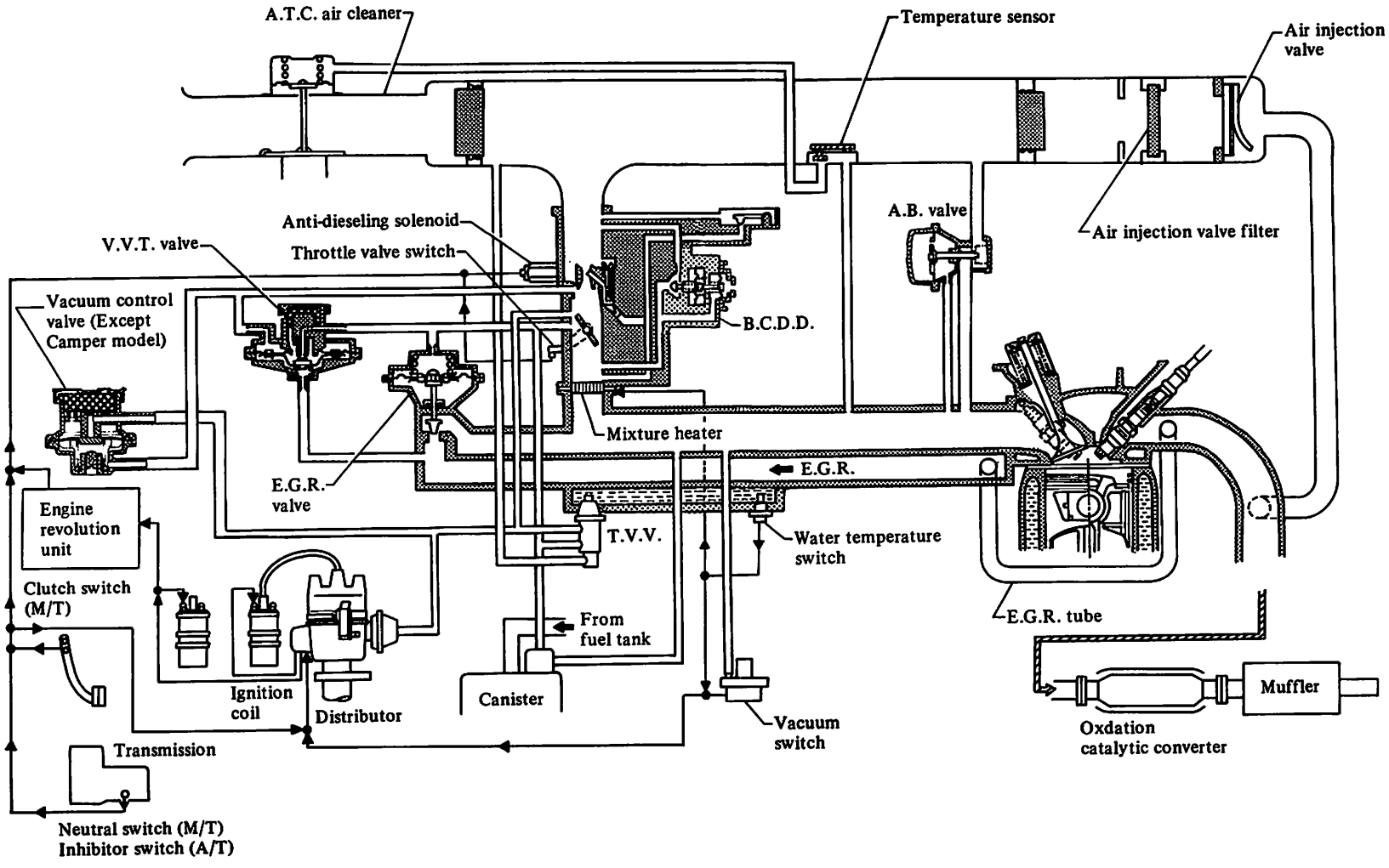

SEF492C

VACUUM DIAGRAM

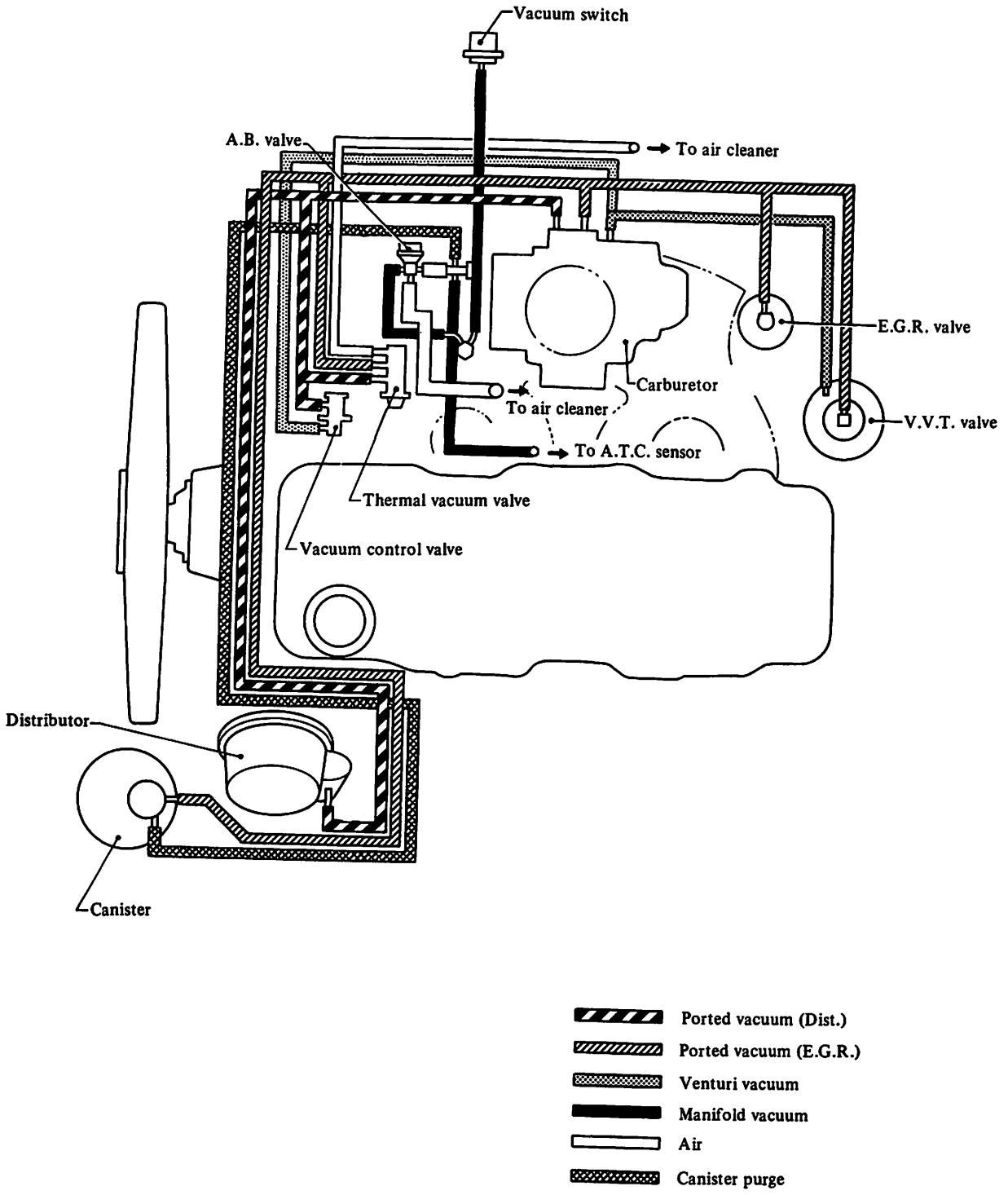

SEF493C

CIRCUIT DIAGRAM

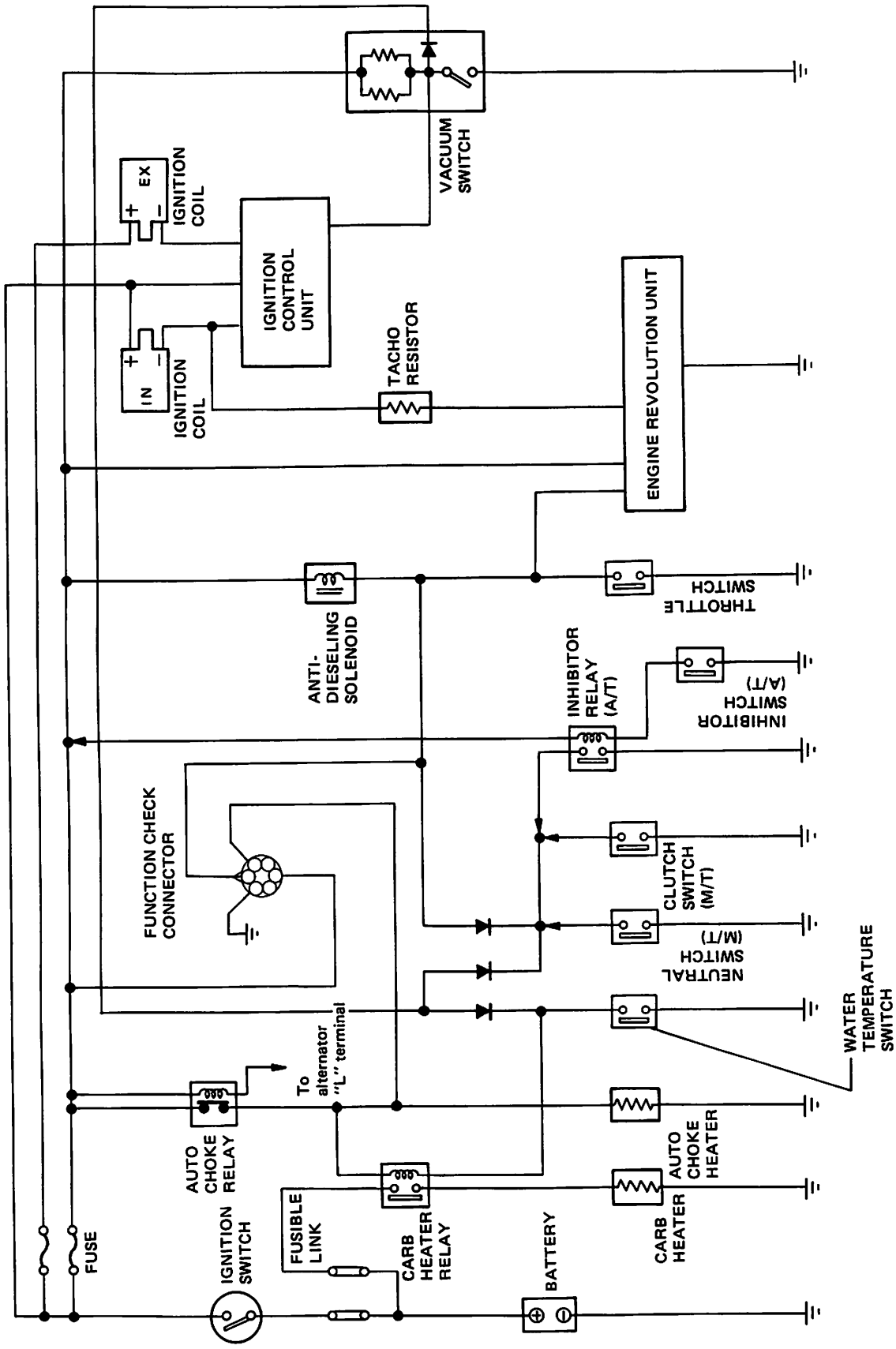

SEF919C

WIRING DIAGRAM

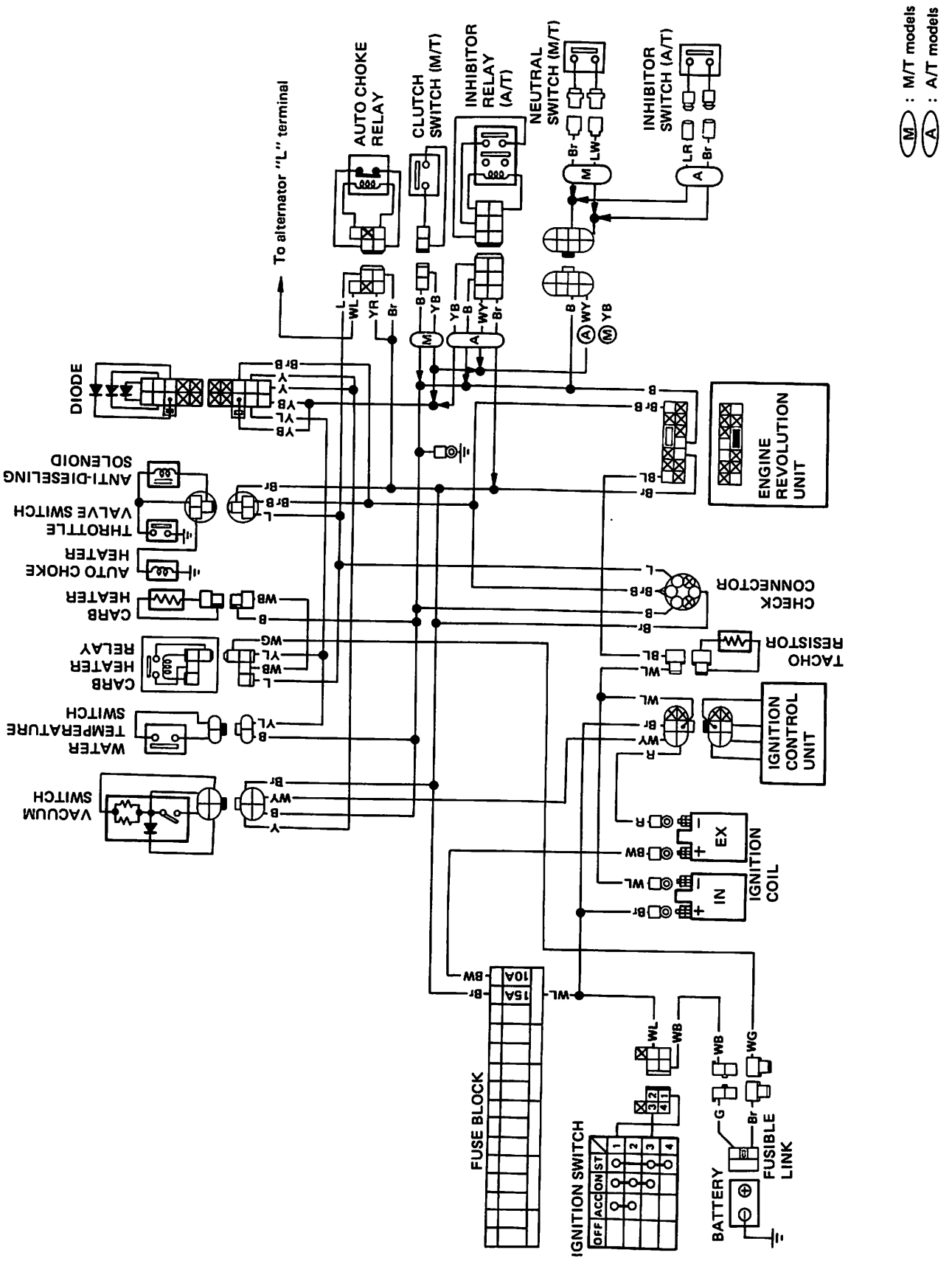

SEF920C

DIAGNOSTIC PROCEDURE FOR PROBLEMS

DRIVEABILITY

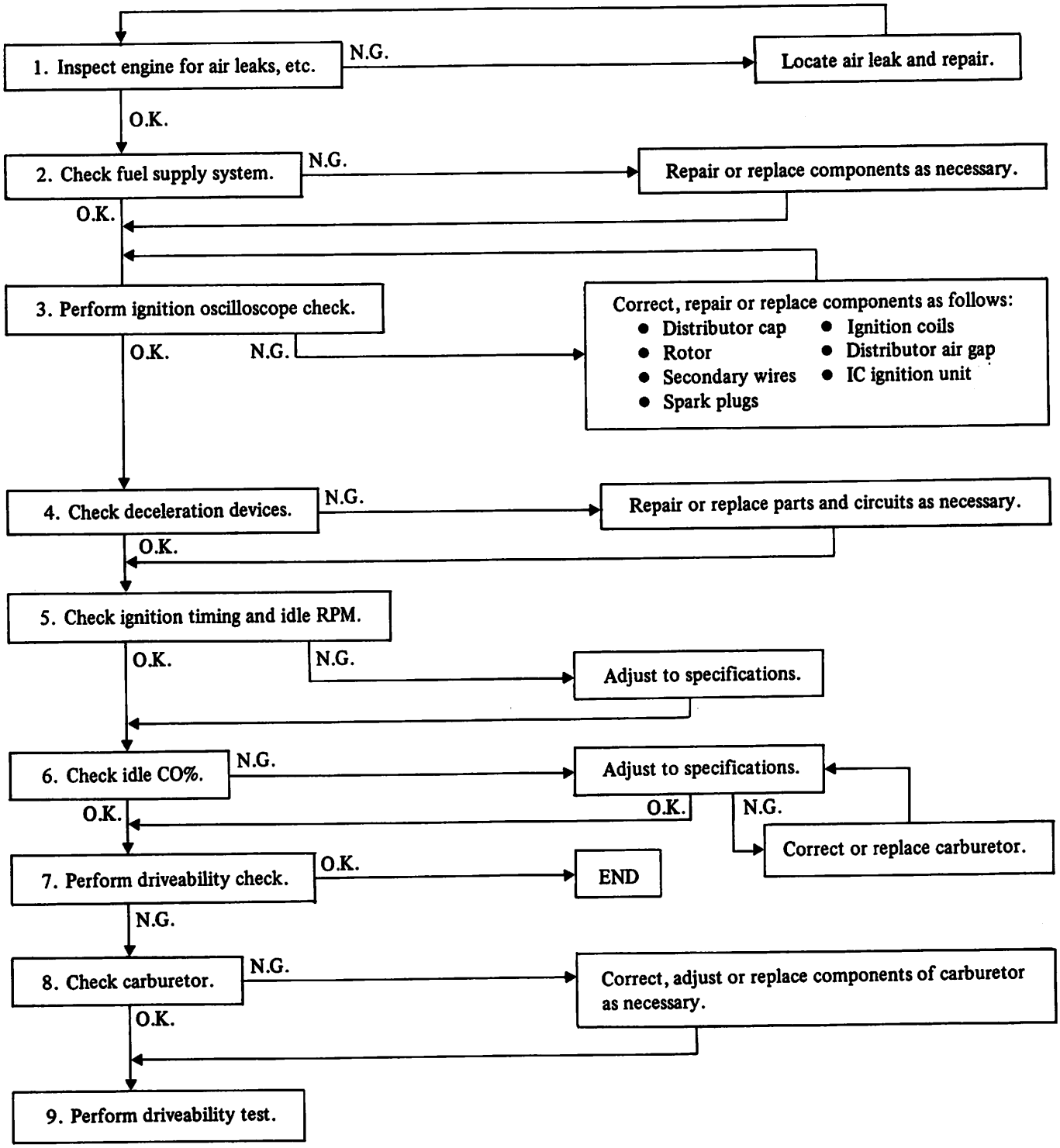

IMPROPER IDLING

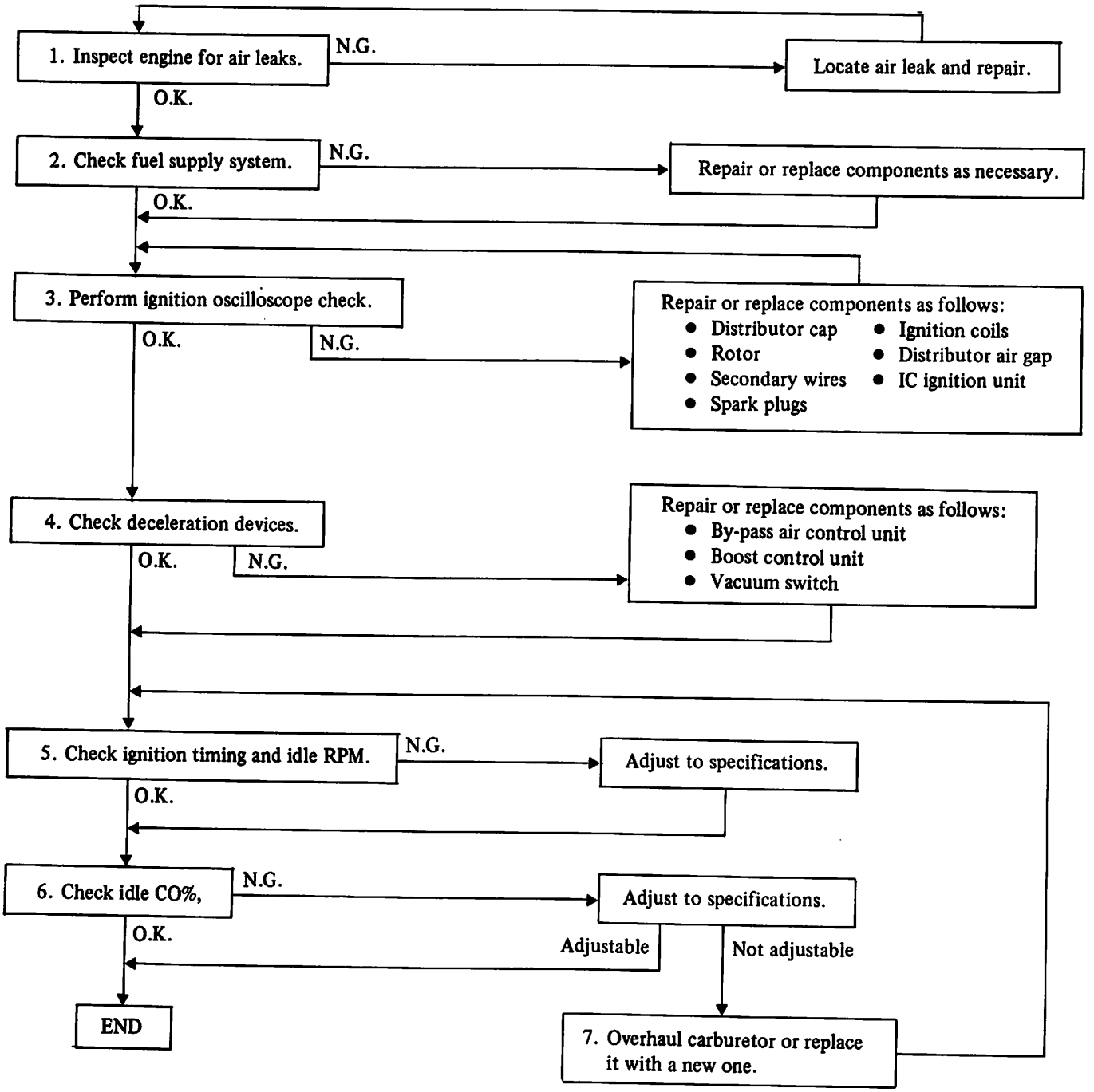

ENGINE STARTABILITY

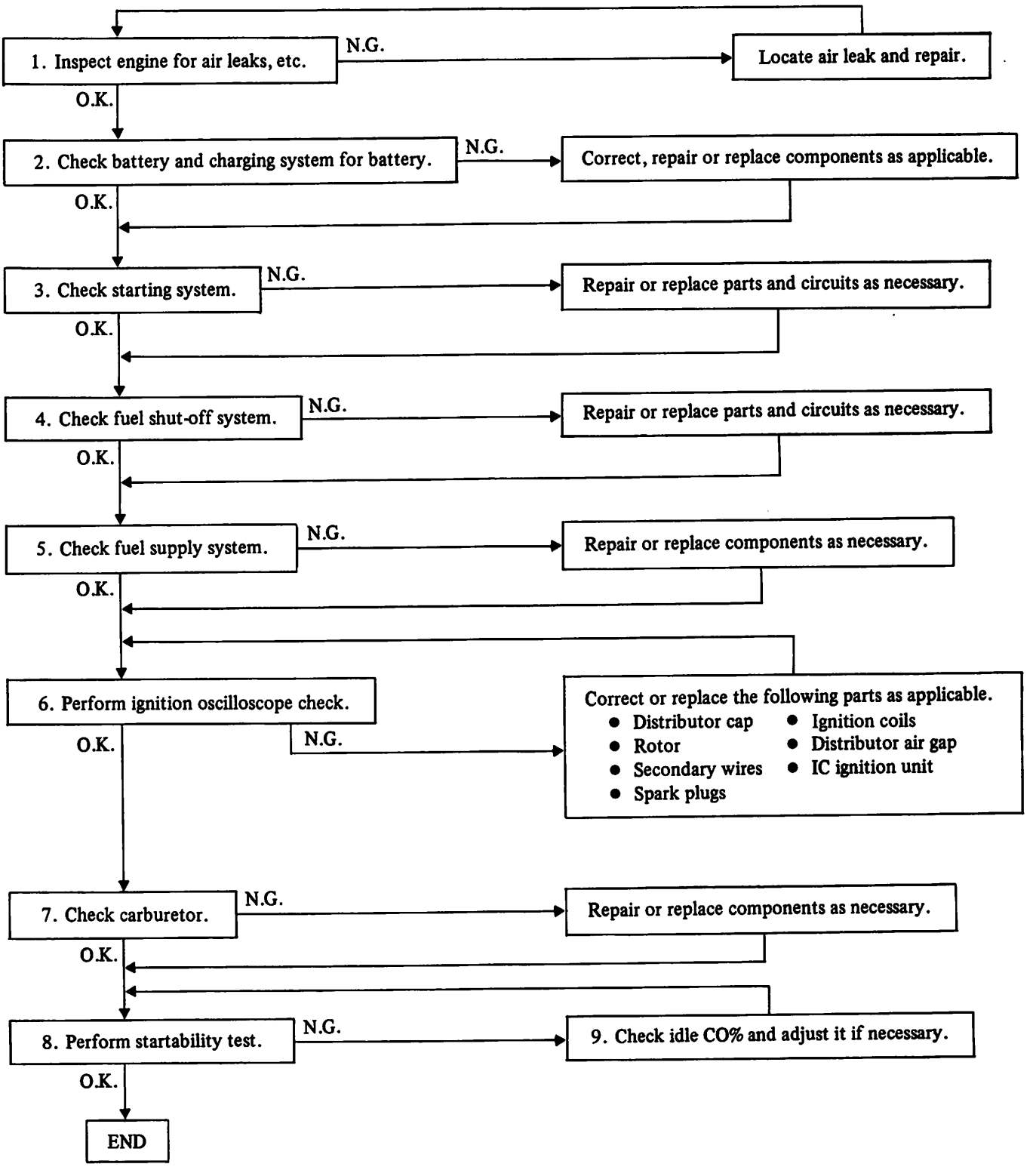

ENGINE STALL

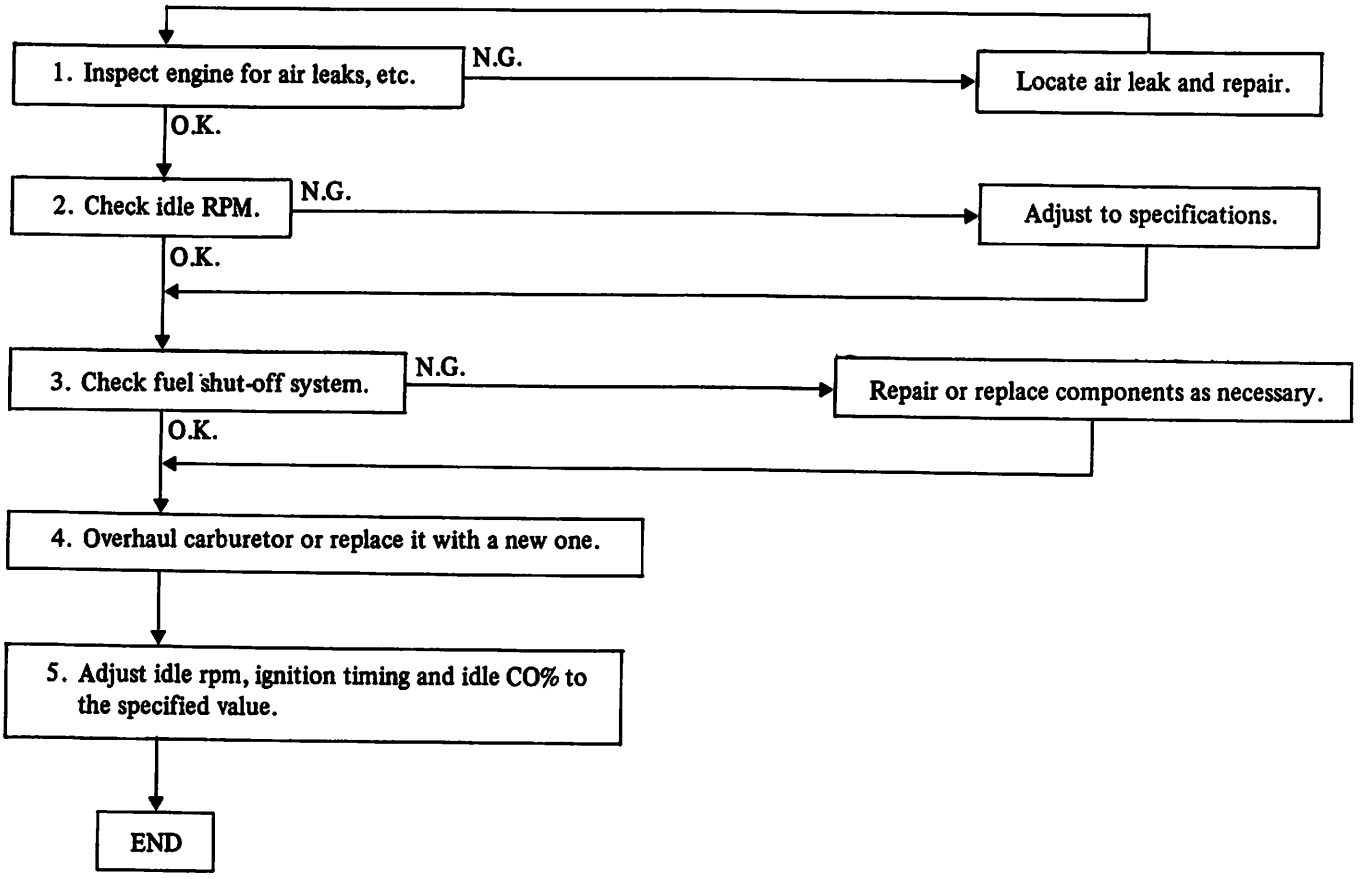

DIAGNOSTIC STEPS FOR DRIVEABILITY

1. Inspect engine for leaks.
(1) Check clamps at all air intake components.
(2) Check vacuum hoses for leakage.
(3) Check air cleaner filter for clogging.
(4) Visually inspect for leaks at the following:
- Dipstick
- A.B. valve hose
- Air injection hose
- Intake manifold gasket
- Valve rocker cover
- E.G.R. valve gasket
- Oil filler cap

(5) Check E.G.R. valve seat and operation.
(6) Check A.B. valve operation.
(7) Check A.T.C. air cleaner and idle compensator.
2. Check fuel supply system.
(1) Make sure proper fuel is used.
(2) Visually check fuel filter for clogging.
(3) Visually check fuel lines for leaks.
(4) With engine idling, visually check fuel level through sight window of float chamber.

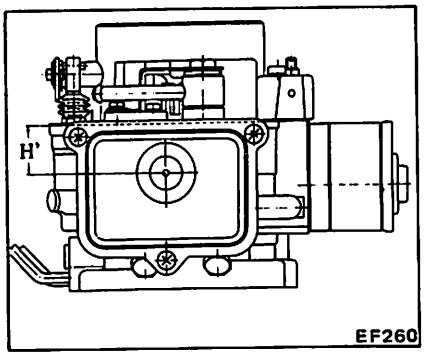

(5) Check electric fuel pump operation.

3. Perform ignition oscilloscope test.
(1) Warm engine to operating temperature.
(2) Check ignition system for unusually high or low firing voltage.
(3) If firing voltage is abnormal, determine cause and repair.

4. Check deceleration devices.
(1) Check fuel shut-off system. Refer to FUEL SHUT-OFF SYSTEM.
(2) Check intake manifold vacuum control system. Refer to INTAKE MANIFOLD VACUUM CONTROL SYSTEM.
5. Check ignition timing and idle rpm.

Checks and adjustments are made in the following conditions:
- **Headlamp switch: OFF**
- **Heater blower: OFF**
- **Air conditioning switch: OFF (if equipped)**
- **Steering: KEEP WHEELS STRAIGHT AHEAD (if equipped with power steering)**

(1) Disconnect air injection hoses and install proper caps on air injection pipes.
(2) Disconnect distributor vacuum hose from distributor vacuum controller, and plug hose with proper plug.
(3) Run engine at about 2,000 rpm for about 2 minutes under no-load. Then, run engine at idle speed and ensure that engine speed is below 1,000 rpm.
(4) Race engine two or three times under no-load. Then run engine at idle speed for one minute.
(5) Check ignition timing with a timing light.

3°±2° B.T.D.C.
(AT: in "D" position)

Adjust as necessary.
(6) Connect distributor vacuum hose.
(7) Race engine two or three times under no-load and run engine at idle speed.
(8) Check idle speed.

M/T:
650±100 rpm (2WD)
800±100 (4WD)
A/T:
650±100 rpm (in "D" position)

If necessary, adjust to the specified rpm by turning the idle speed adjusting screw.

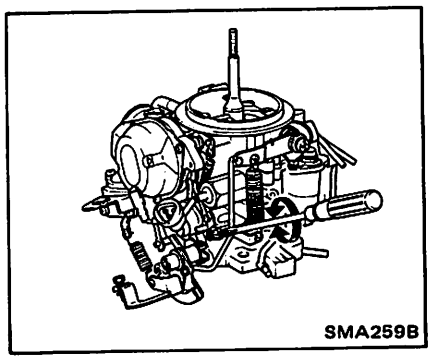

6. Check throttle valve switch.
- **Before testing check that choke valve is fully open.**

(1) Disconnect harness connector on carburetor.
(2) Connect proper wires between the anti-dieseling solenoid harness terminals. Also, connect proper wires between the air-fuel ratio control solenoid harness terminals.

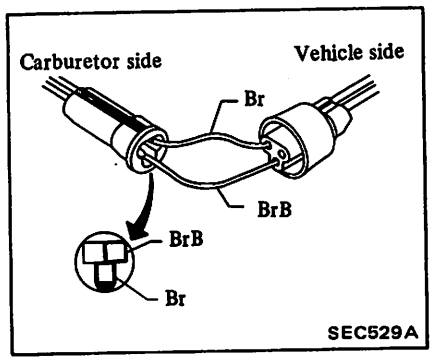

(3) Verify that continuity does not exist between the throttle valve switch harness terminal and ground.

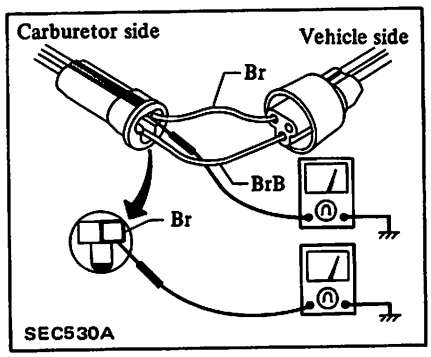

(4) Start engine and increase engine speed to about 2,000 rpm.
(5) At this time, verify that continuity exists between the throttle valve harness terminal and ground.
(6) Then, decrease engine speed gradually to 1,350±50 rpm, and at that point the circuit should break and cause the ohmmeter to indicate an open circuit. If incorrect, adjust as follows:
a) Hold engine speed at 1,350 rpm by manually opening the throttle.

Important: Do not use the idle speed screw.

b) Slowly rotate the adjusting screw counterclockwise or clockwise until the ohmmeter indicates an open circuit.

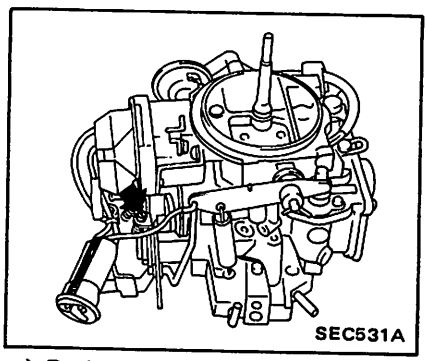

c) Recheck the adjustment.
d) Reset idle speed if necessary.
(7) Connect carburetor harness connector.

7. Check idle CO%.

The checking or adjustment of idle CO% requires the use of a CO meter. It is essential that the meter be fully warmed up and calibrated before any adjustment is made.

(1) Make sure that air injection hoses are disconnected.
(2) Verify that the engine is at operating temperature.
(3) Rev the engine to 2,000 to 3,000 rpm 2 or 3 times under no-load, finally, allow it to run at idle speed for one minute.
(4) Reset idle speed to the specified speed.
(5) Check CO% as per Column 1 and if necessary, adjust to the specified point as per Column 2. The CO% adjustment is made by turning the idle mixture screw.

	Check idle CO% Column 1	Adjust idle CO% Column 2
M/T	Less than 3.5%	1.5±1.0%
A/T	Less than 3.5% (in "D" position)	1.5±1.0% (in "D" position)

(6) Connect air injection hoses.
(7) Check idle speed. Readjust to the specified speed.
8. Perform driveability test.
(1) Evaluate effectiveness of adjustments by driving vehicle.
(2) If unsatisfactory, proceed to step 8.

9. Check carburetor.
(1) With engine stopped, check each linkage and throttle valve for smooth operation. At the same time, make sure fuel is injected smoothly through the accelerating injection nozzle.
(2) Check choke valve opening.
a) Ensure that choke valve is fully open when engine is at operating temperature.
b) If not, turn off engine and check choke heater circuit.
c) If circuit is O.K., replace choke chamber assembly.
(3) Check interlock opening of primary and secondary throttle valves.
a) Remove carburetor from engine.
b) Turn throttle arm until adjusting plate comes in contact with lock lever at point Ⓐ and check clearance "G".

Clearance "G":
7.87 - 8.87 mm
(0.3098 - 0.3492 in)

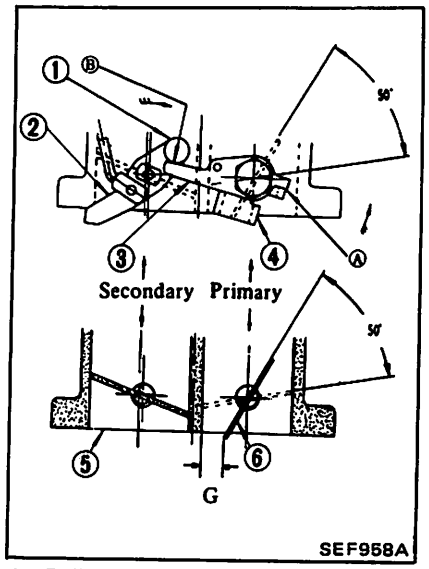

1 Roller
2 Connecting lever
3 Return plate
4 Adjust plate
5 Throttle chamber
6 Throttle valve

c) If out of specification, adjust by bending tongue of throttle arm.
(4) Clean jets, emulsion tubes and passages.
a) Remove choke chamber and verify that the numbers stamped on the jets are correct.
b) Remove jets and emulsion tubes carefully, and clean them. If necessary, clean passages.
c) Replace faulty jets and emulsion tubes.
d) Install in the reverse order of removal using a new packing.
e) Install carburetor to engine.
(5) Check idle CO%, following the procedure in step 6.
10. Perform driveability test. Re-evaluate vehicle performance.

DIAGNOSTIC STEPS FOR IMPROPER IDLING

1. Inspect engine for leaks. Refer to DIAGNOSTIC STEPS FOR DRIVEABILITY.
2. Check fuel supply system. Refer to DIAGNOSTIC STEPS FOR DRIVEABILITY.
3. Perform ignition oscilloscope test. Refer to DIAGNOSTIC STEPS FOR DRIVEABILITY.
4. Check deceleration devices. Refer to INTAKE MANIFOLD VACUUM CONTROL SYSTEM.

5. Check ignition timing and idle rpm. Refer to DIAGNOSTIC STEPS FOR DERIVEABILITY.
6. Check idle CO%. Refer to DIAGNOSTIC STEPS FOR DRIVEABILITY.
7. Overhaul carburetor or replace it with a new one.

DIAGNOSTIC STEPS FOR ENGINE STARTABILITY

1. Inspect engine for leaks. Refer to DIAGNOSTIC STEPS FOR DRIVEABILITY.
2. Check battery and charging system for battery.
(1) Check battery voltage.
(2) If poor battery voltage, check charging system for battery.
- Alternator
- Voltage regulator
- Others

Refer to EL section.
3. Check starting system.
(1) Check starter operation.
(2) If it does not operate, check the following:
- Starter
- Ignition relay
- Ignition switch
- Others

Refer to EL section.
4. Check fuel shut-off system. Refer to FUEL SHUT-OFF SYSTEM.
5. Check fuel supply system. Refer to DIAGNOSTIC STEPS FOR DRIVEABILITY.
6. Perform ignition oscilloscope check. Refer to DIAGNOSTIC STEPS FOR DRIVEABILITY.
7. Check carburetor.
(1) With engine cold, visually check that choke valve is fully closed.
(2) In this condition, check vacuum break diaphragm operation using a vacuum handy pump.

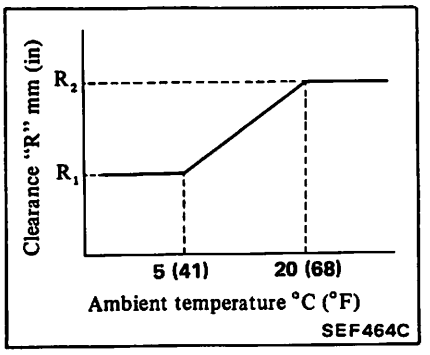

Clearance "R":
2WD
1.75 - 2.05 mm
(0.0689 - 0.0807 in)
[Below 5°C (41°F)]
2.32 - 2.92 mm
(0.0913 - 0.1150 in)
[Above 20°C (68°F)]
Camper & 4WD
1.85 - 2.15 mm
(0.0728 - 0.0846 in)
[Below 5°C (41°F)]
2.45 - 3.05 mm
(0.0965 - 0.1201 in)
[Above 20°C (68°F)]

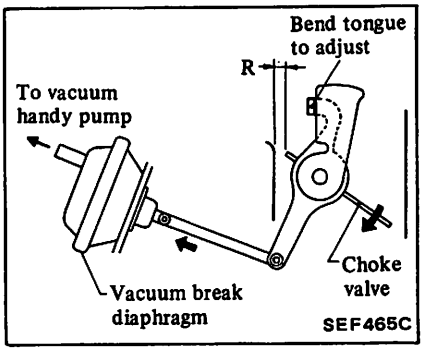

(3) If out of specification, adjust clearance by bending adjusting tongue.
8. Perform startability test.
(1) Start engine with the recommended starting procedure.
(2) If engine does not start, proceed to step 9.
9. Check and adjust idle CO%.
Check idle CO%. Refer to DIAGNOSTIC STEPS FOR DRIVEABILITY.

DIAGNOSTIC STEPS FOR ENGINE STALL

1. Inspect engine for leaks. Refer to DIAGNOSTIC STEPS FOR DRIVEABILITY.
2. Check idle rpm. Refer to DIAGNOSTIC STEPS FOR DRIVEABILITY.
3. Check fuel shut-off system. Refer to FUEL SHUT-OFF SYSTEM.
4. Overhaul carburetor or replace it with a new one.
5. Adjust idle rpm, ignition timing and idle CO% to the specified values. Refer to DIAGNOSTIC STEPS FOR DRIVEABILITY.

AUTOMATIC TEMPERATURE CONTROL (A.T.C.) AIR CLEANER

DESCRIPTION

The automatic temperature control system maintains the temperature of air to be sucked in the carburetor within the constant range, thereby enabling lean setting for carburetor calibration. In addition to this, the automatic temperature control system is effective to improve warm-up characteristics of the engine and to prevent carburetor from icing.

In addition, idle compensator, vacuum hose for B.C.D.D., some hoses for A.I.S., etc. are connected to the air cleaner. As for these devices, refer to Section EC or related parts of this section.

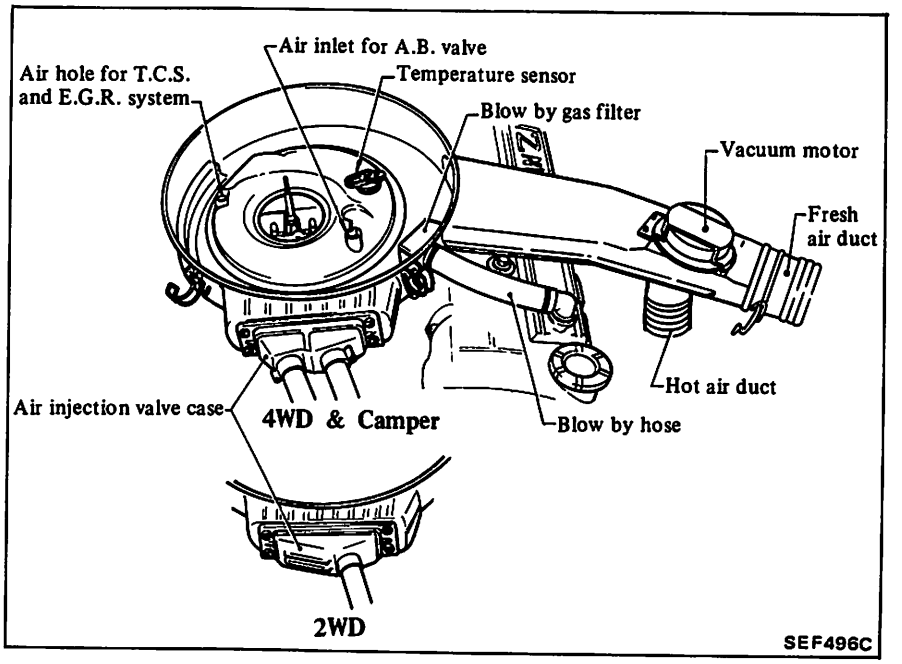

OPERATION

The automatic temperature control system of the air cleaner is controlled by the inlet air temperature and the load condition of the engine. The inlet air temperature is detected by the sensor, and the vacuum motor is actuated by the engine intake vacuum.

Temperature sensor		Vacuum motor		Inlet air
Ambient temperature around sensor °C (°F)	Operation	Intake manifold vacuum kPa (mmHg, inHg)	Operation	
Below 38 (100)	Close	Above 24.0 (180, 7.09)	Raise	Hot
		8.0 - 24.0 (60 - 180, 2.36 - 7.09)	Partially raise	Cold + Hot
		Below 8.0 (60, 2.36)	Down	Cold
Above 55 (131)	Open	Any value	Down	

The temperature sensor partially opens between 38°C and 53°C (100°F and 127°F) so that the intake manifold vacuum will be reduced. This causes the motor to activate, which in turn opens the cold air passage wide, for cold air to be taken in.

During cold engine

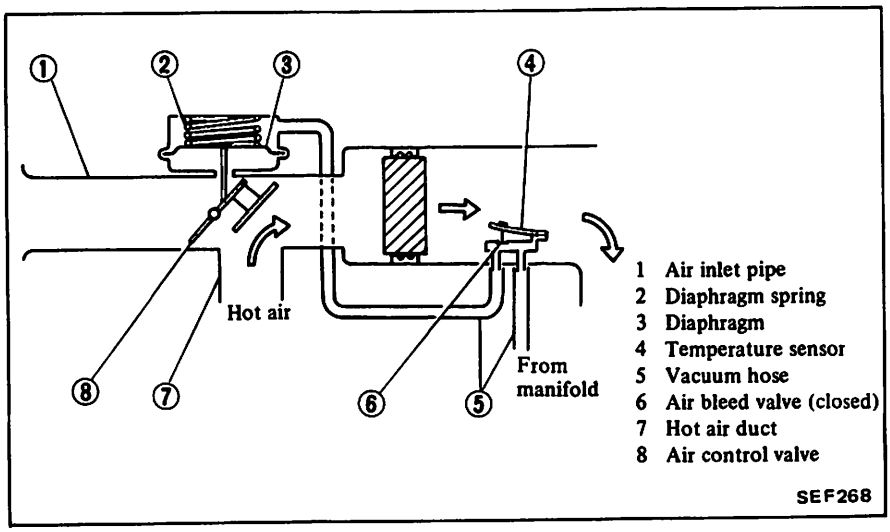

During hot engine

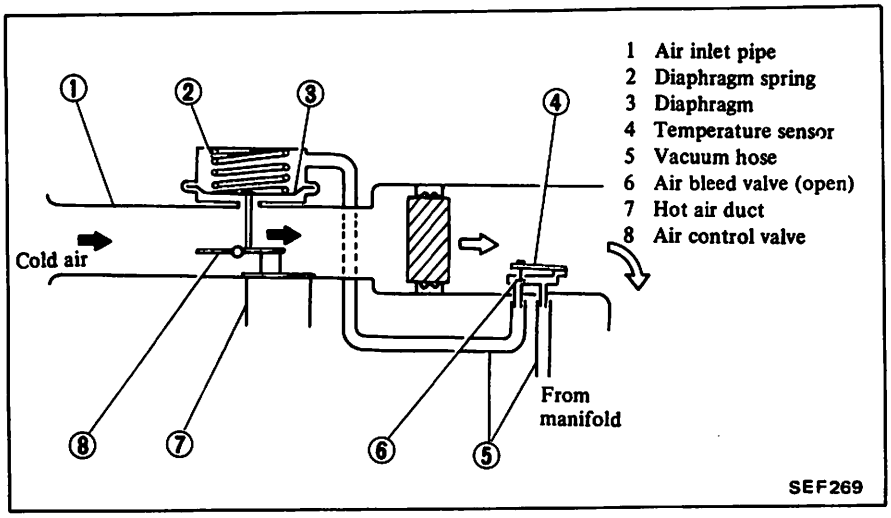

INSPECTION

AIR CLEANER FILTER

Viscous paper type air cleaner-filter does not require any cleaning operation until it is replaced periodically.

AUTOMATIC TEMPERATURE CONTROL SYSTEM

Engine failures resulting from a malfunctioning A.T.C. system are manifest during cold weather operation. Such failures include:

- Engine stall or hesitation
- Increase in fuel consumption
- Lack of power

If these phenomena should occur, check A.T.C. system as described in the following before carrying out inspection of carburetor.

1. Check that vacuum hoses are securely connected in correct position.
2. Check each hose for cracks or distortion.
3. Check A.T.C. system for proper function, as follows. Confirm that engine is cold before starting test:

With engine stopped, disconnect fresh air duct.

Place a mirror at the end of air cleaner inlet pipe as shown, and check to see if air control valve is open.

If not, check air control valve linkage for proper operation.

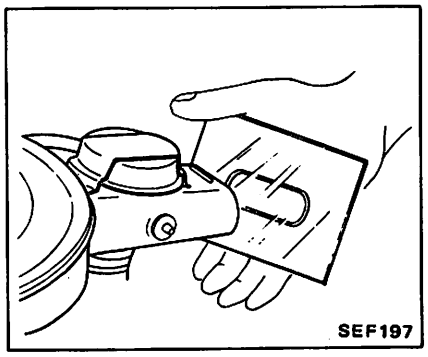

4. Disconnect vacuum motor inlet vacuum hose, and apply vacuum to vacuum motor. Then, confirm that the air control valve moves.
5. With hot air inlet in open position, pinch vacuum hose with fingers and cut off air from vacuum hose. In this condition, check that air control valve maintains the valve open for more than 30 seconds.

If not, replace vacuum motor.

6. Start engine and keep idling.

Immediately after engine starting, check to see if air control valve is closed.

If not, disconnect vacuum motor vacuum hose and make sure that intake vacuum is present at end of vacuum hose.

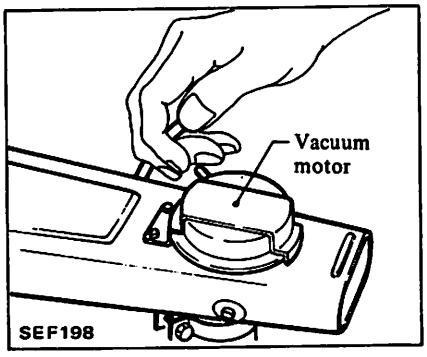

If vacuum is weak or is not present at all, check vacuum hoses for leakage. Replace temperature sensor if vacuum hoses are in good order.

7. Check that air control valve gradually opens to cold air inlet side as engine warms up.

IDLE COMPENSATOR

DESCRIPTION

The idle compensator is basically a thermostatic valve which functions to introduce the air directly from the air cleaner to the intake manifold to compensate for abnormal enrichment of mixture in high idle temperature.

The bimetal attached to the idle compensator detects the temperature of intake air, and opens or closes the valve.

Idle compensator is installed on carburetor and opens at approximately 53°C (127°F) of compensator temperature.

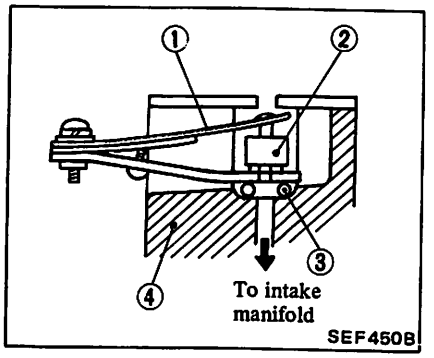

1 Bimetal
2 Rubber valve
3 O-ring
4 Carburetor

ELECTRIC FUEL PUMP

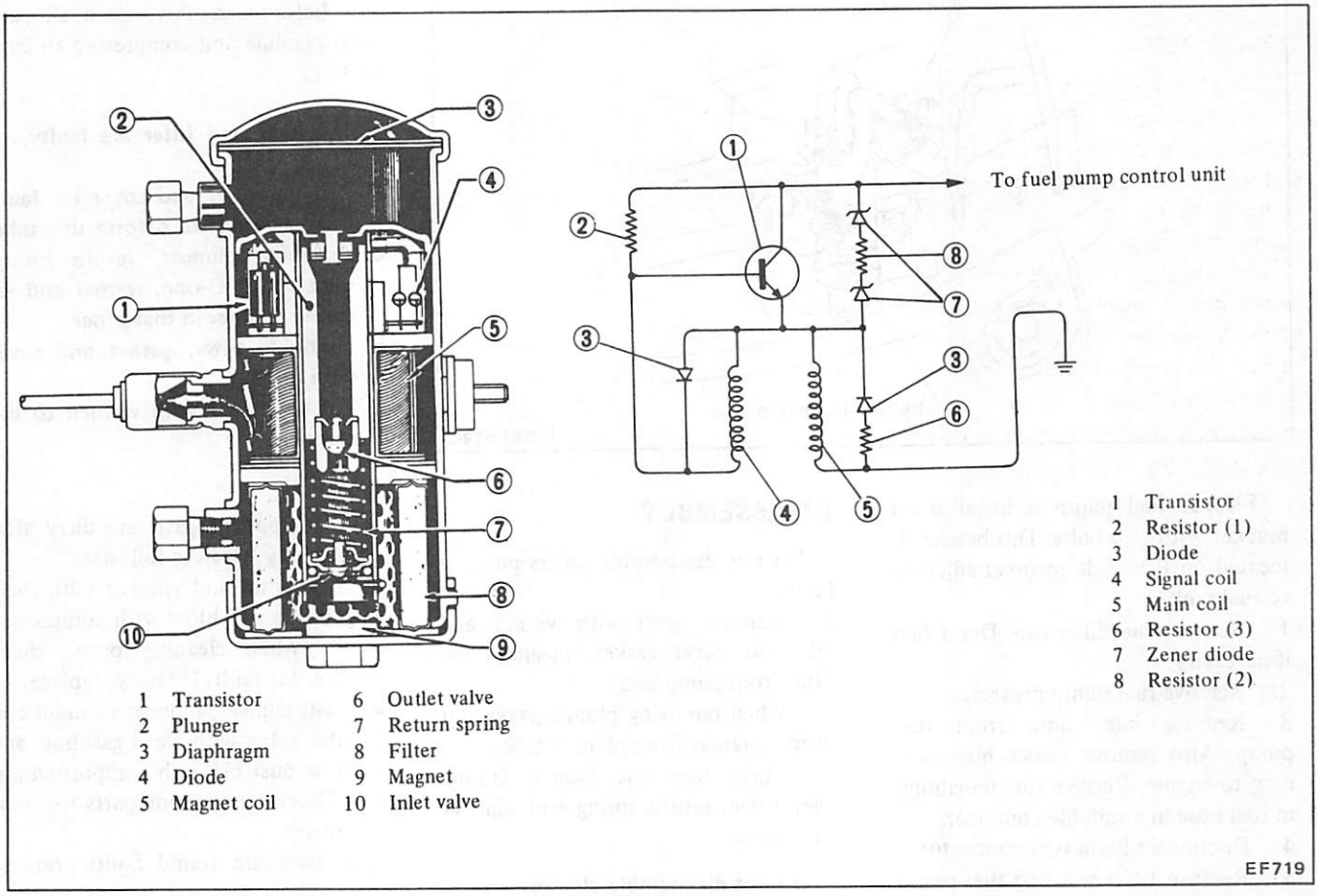

INSPECTION

1. Disconnect fuel hose at pump outlet.
2. Connect a suitable hose [approximately 6 mm (0.24 in) inner diameter] to pump outlet.

If diameter is too small, the following proper delivery capacity cannot be obtained even if pump functions properly.

3. With hose outlet in a higher position than pump, operate pump and check delivery capacity for more than 15 seconds.
4. The capacity should be 1,400 mℓ (47.3 US fl oz, 49.3 Imp fl oz) in one minute or less.

If no gasoline, or only a little flows from open end of pipe with pump operated, or if pump does not work, perform the following diagnosis.

a. Do not connect battery in reverse polarity which, if left for a long time, would damage transistor circuit and disable pump.

b. Do not let fall pump, as it may damage electronic components.

c. Do not apply overvoltage (max. 18V). Overvoltage starting by quick charge or overvoltage running would deteriorate or damage electronic components.

Fuel pressure (maximum):
18.6 - 23.5 kPa
(0.19 - 0.24 kg/cm^2,
2.7 - 3.4 psi)

REMOVAL AND INSTALLATION

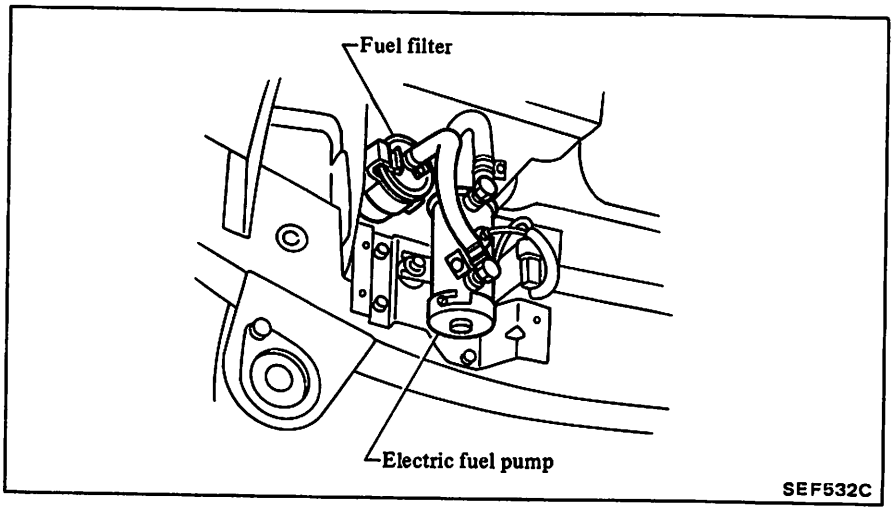

Electric fuel pump is installed on bracket with two bolts. This bracket is located on R.H. side member adjacent to fuel tank.

1. Remove fuel filler cap. Drain fuel if necessary.
2. Remove fuel pump protector.
3. Remove inlet hose from fuel pump. Also remove outlet hose running to engine. Receive fuel remaining in fuel hose in a suitable container.
4. Disconnect harness at connector.
5. Remove bolts securing fuel pump to bracket, and detach fuel pump.
6. Installation is the reverse order of removal.

DISASSEMBLY

Do not disassemble unless pump is faulty.

1. Remove cover with wrench and take out cover gasket, magnet, and filter from pump body.
2. When removing plunger, take out spring retainer from plunger tube.
3. Then, take out washer, O-ring, inlet valve, return spring and plunger from tube.

Do not disassemble electronic components. If necessary, replace with new ones.

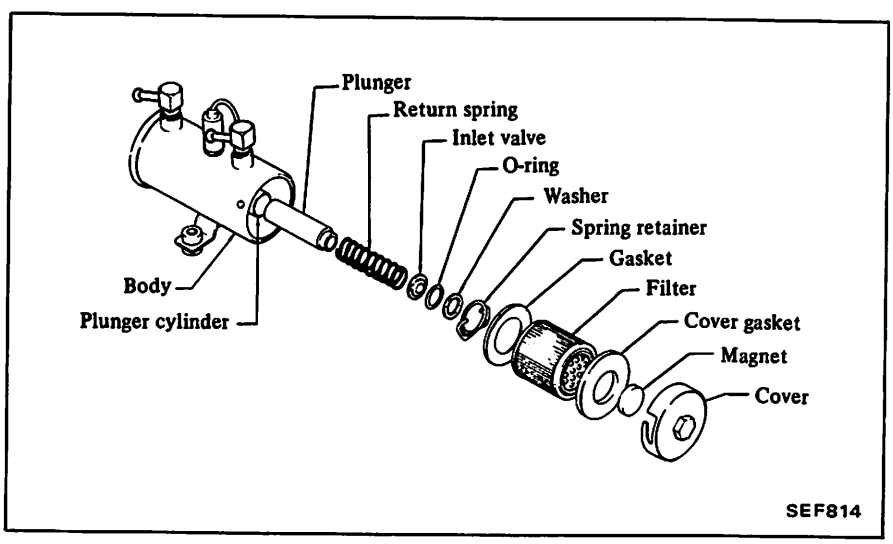

ASSEMBLY

1. Before assembly, clean all parts with gasoline and compressed air completely.

a. If gasket and filter are faulty, replace.
b. Clean magnet and cover for fault.
c. Take care not to deform thin tube.
d. Assemble plunger, return spring, inlet valve, O-ring, washer and set spring retainer in that order.
e. Assemble filter, gasket and cover with magnet.
f. Tighten cover with wrench to the stopper.

If component parts are dirty after disassembly, clean as follows:

- Wash filter and strainer with clean gasoline and blow with compressed air. When cleaning parts, check filter for fault. If faulty, replace.
- Wash plunger, plunger cylinder and inlet valve with clean gasoline, and blow dust off with compressed air.

2. Check component parts for wear or damage.

If they are found faulty, replace them.

3. Insert plunger assembly into plunger cylinder of body and apply electric current to it.

Move the assembly up and down.

If the assembly does not move, it shows that the electric unit is faulty, and it must be replaced.

FUEL PUMP CONTROL SYSTEM

This system controls the fuel pump operation under various engine operating conditions.

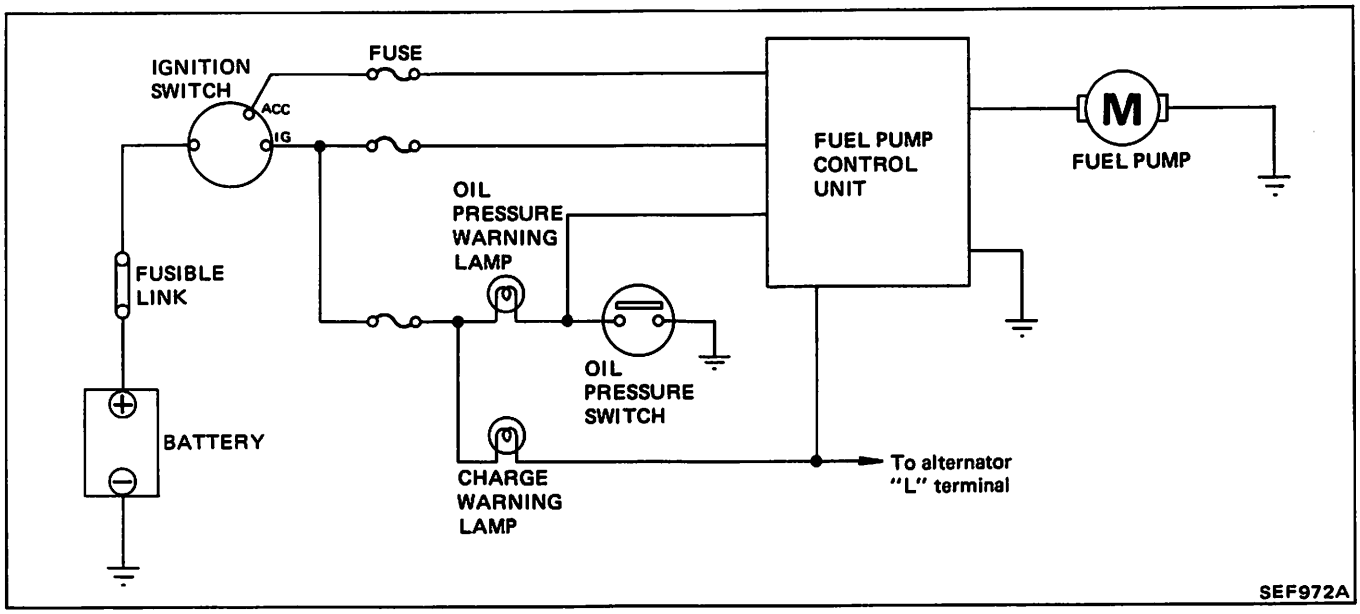

OPERATION

Ignition switch position	Engine	Alternator	Oil pressure	Fuel pump
OFF	Stopped	Not generating	No pressure	Not operating
ACC				
ON				
START	Cranking		Low pressure	Operating
		Generating		
		Not generating	Normal	
		Generating		
ON	Running	Failure		
		Generating	Failure	

Fuel pump control unit

Fuel pump control unit is located in the R.H. dash side panel.

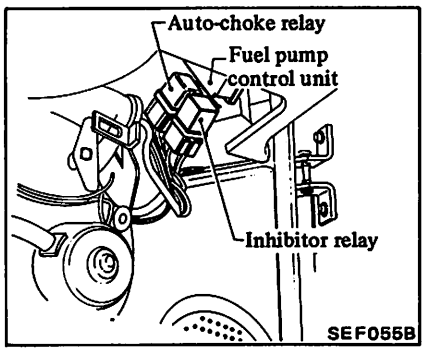

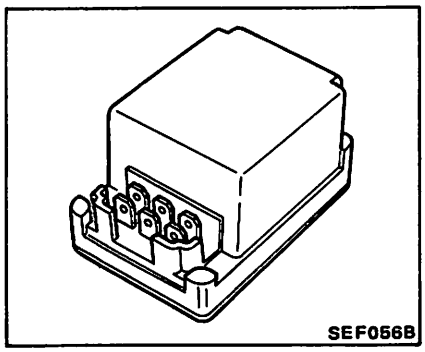

INSPECTION

Check fuel pump operation referring to the above table.

If fuel pump is malfunctioning, repair or replace harness and fuel pump control unit.

CARBURETOR

DESCRIPTION

The carburetors are of down-draft two-barrel types which produce the optimum air-fuel mixture under all operating conditions.

They present several distinct features of importance to the car owners.

A summary of the features is as follows:

1. A slow economizer to make a smooth connection with acceleration or deceleration during light load running.

It also assures stable low speed performance.

2. An idle limiter to reduce harmful exhaust emissions to a minimum.
3. An electric automatic choke to facilitate cold starting and to reduce exhaust emissions.
4. An anti-dieseling solenoid to eliminate dieseling (run-on).
5. A power valve, or vacuum actuated booster, to ensure smooth high-speed operation.

STRUCTURE AND OPERATION

These carburetors consist of a main system for normal running, a slow system for idling, and an accelerating and power mechanism.

Some emission control devices are added.

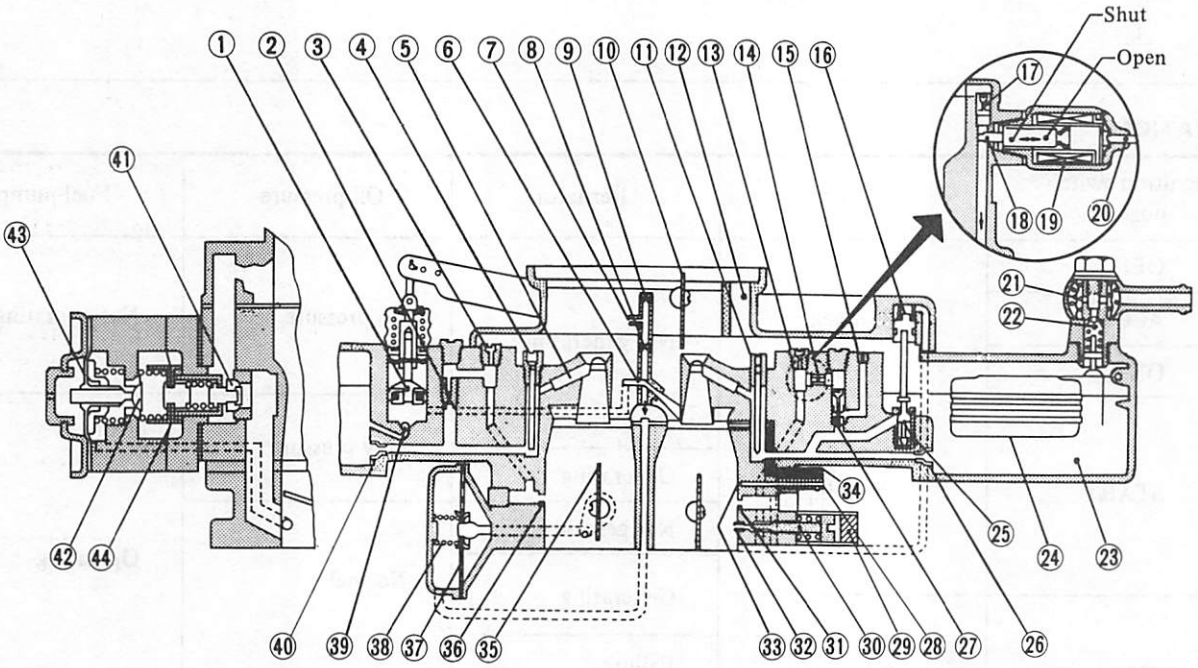

1 Accelerating pump piston
2 Step jet
3 Step air bleed
4 Secondary main air bleed
5 Secondary main nozzle
6 Accelerating pump nozzle
7 High-speed richer nozzle
8 High-speed richer jet
9 High-speed richer air bleed
10 Choke valve
11 Primary main air bleed
12 Air vent
13 Slow air bleed
14 Slow economizer
15 Slow economizer bleed
16 Vacuum piston
17 Slow air bleed
18 Plunger
19 Coil
20 Lead wire
21 Strainer
22 Needle valve
23 Float chamber
24 Float
25 Power jet
26 Primary main jet
27 Slow jet
28 Vacuum pipe
29 Idle mixture adjusting screw plug
30 Idle mixture adjusting screw
31 Slow port (By-pass port)
32 Idle nozzle
33 Vacuum port
34 Venturi vacuum outlet
35 Secondary throttle valve
36 Step port
37 Secondary diaphragm
38 Diaphragm spring
39 Check valve
40 Secondary main jet
41 Air control valve
42 Vacuum control valve
43 Diaphragm I
44 Diaphragm II

SEF727C

PRIMARY SYSTEM

Primary main system

Fuel flow as shown below through the main jet, mixing with air which comes in from the main air bleed and passes through the emulsion tube, and is pulled out into the venturi through the main nozzle.

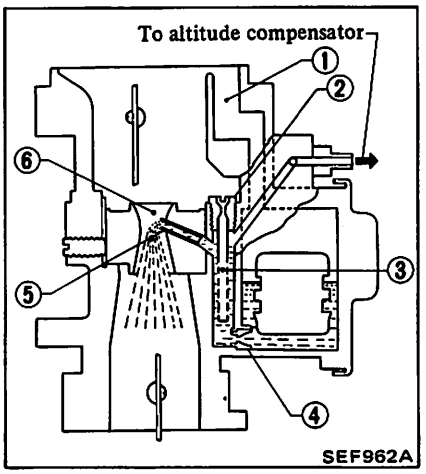

1 Air vent pipe
2 Main air bleed
3 Emulsion tube
4 Main jet
5 Main nozzle
6 Small venturi

Primary slow system

During low engine speed, as shown below, fuel flows through the slow jet, mixing with air coming from the slow economizer bleed, again mixing with air coming from the slow air bleed and then is pulled out into the engine through the idle nozzle and by-pass hole.

Slow economizer system obtains smooth deceleration at high speeds.

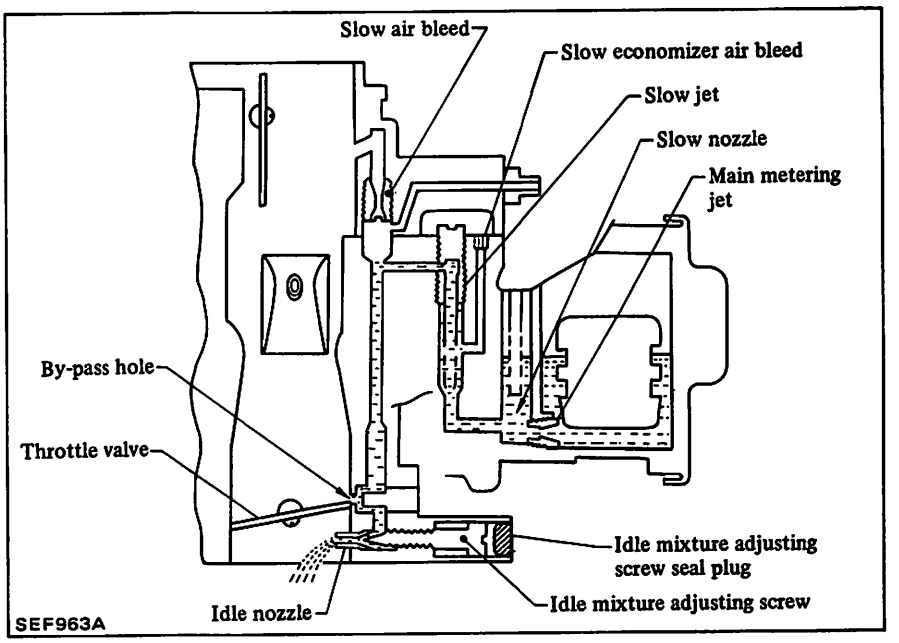

Accelerating mechanism

The carburetor is equipped with the piston type accelerating mechanism linked to the throttle valve. When the primary throttle valve is closed, the piston goes up, and fuel flows from the float chamber through the inlet valve into the space under the piston. When the throttle valve is opened, the piston goes down, opening the outlet valve, and fuel is forced out through the injector.

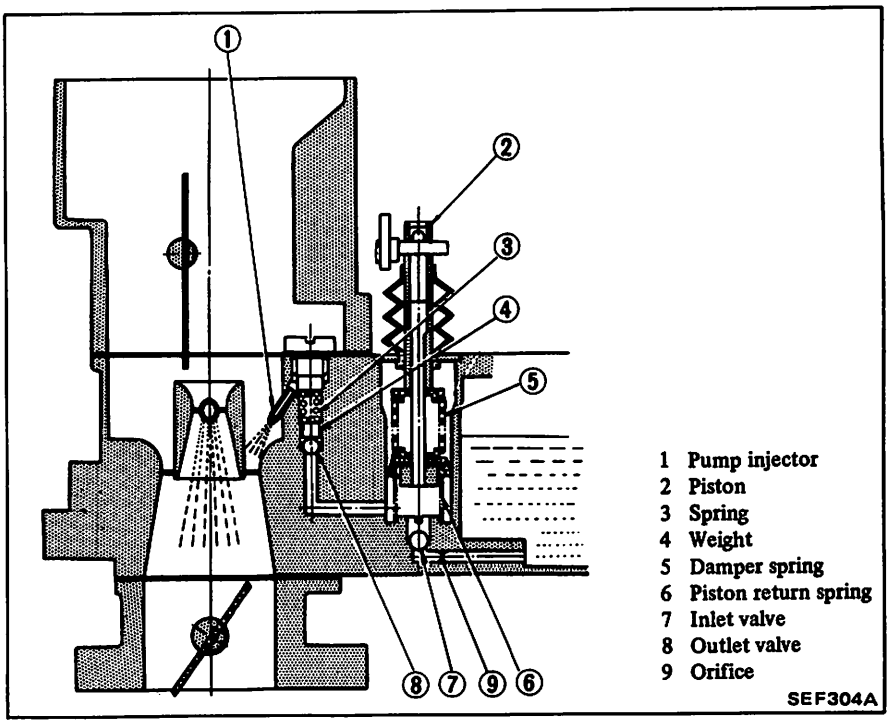

1 Pump injector
2 Piston
3 Spring
4 Weight
5 Damper spring
6 Piston return spring
7 Inlet valve
8 Outlet valve
9 Orifice

Power valve mechanism

The power valve mechanism supplies additional fuel to primary main system during heavy load driving.

When the throttle valve is slightly opened during light load running, high vacuum is created in the intake manifold. This vacuum pulls the vacuum piston upward against the spring, leaving the power valve closed. When the vacuum below the throttle valve is lowered during full load or accelerating running, the spring pushes the vacuum piston downward, opening the power valve to furnish fuel.

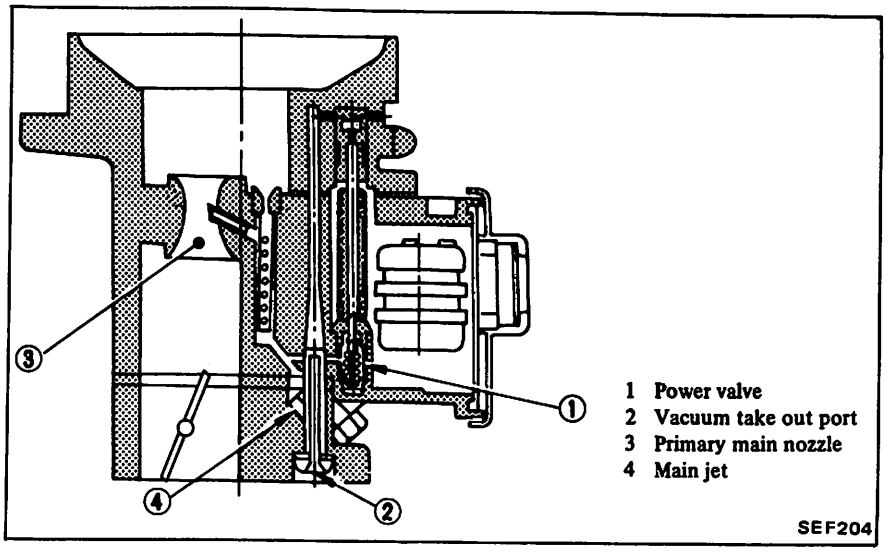

SECONDARY SYSTEM

Secondary main system

When the primary throttle valve is wide open and engine produces high power, the secondary throttle valve begins to open by the diaphragm.

Fuel-air mixture produced by the functions of the main jet, main air bleed and emulsion tube, in the same manner as in the primary system, is pulled out through the main nozzle into the venturi.

The structure is almost the same as the primary main system.

Secondary switchover mechanism

The secondary throttle valve is linked to the diaphragm which is actuated by the vacuum created in the venturi. A vacuum port is provided at each of the primary and secondary venturis, and the composite vacuum of these ports actuates the diaphragm.

As the linkage causes the secondary throttle valve to close until the primary throttle valve opening reaches approximately 50°, fuel consumption during normal operation is not excessive.

During high speed running, as the vacuum at the venturi is increased, the diaphragm is pulled against the diaphragm spring force, and then secondary throttle valve is opened.

The other side, during low speed running (as the primary throttle valve opening does not reach 50°), the secondary throttle valve is locked to close completely by the locking arm which is interlocked with primary throttle arm by linkage.

When the primary throttle valve opening reaches wider position than 50°, the secondary throttle valve is ready to open, because the locking arm revolves and leaves from the secondary throttle arm.

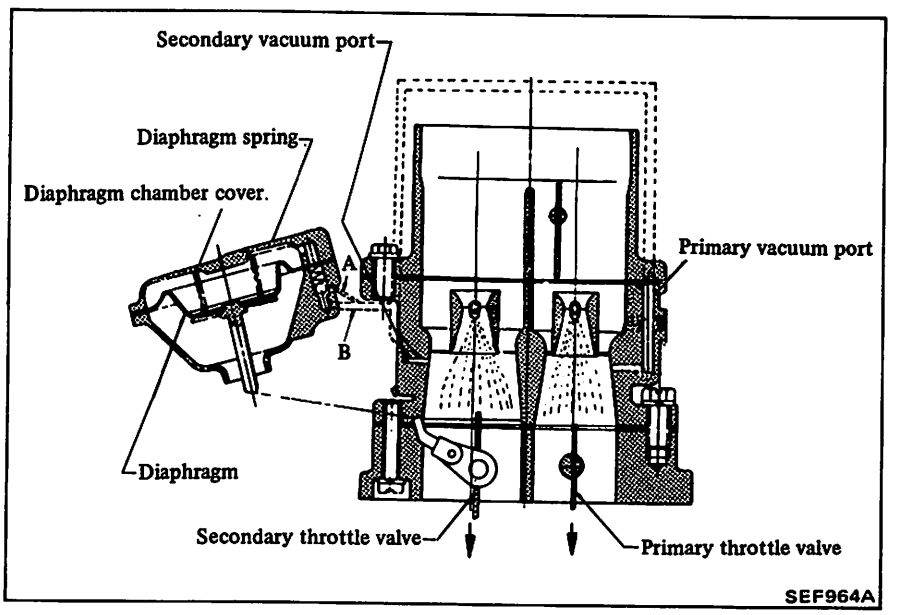

Secondary slow system (Step system)

The construction of this system may correspond to the idling and slow system of the primary system.

This system aims at the proper filling up of the gap when fuel supply is transferred from the primary system to the secondary system. The step port is located near the secondary throttle valve edge in its fully closed state.

High speed enricher

The high speed enricher improves high engine output performance during high speed driving.

This enricher operates only when driving at high speed. It consists of an enricher jet, high speed enricher air bleed, and enricher nozzle. When the velocity of suction air flowing through the carburetor secondary bore increases, additional fuel is drawn out of the enricher nozzle.

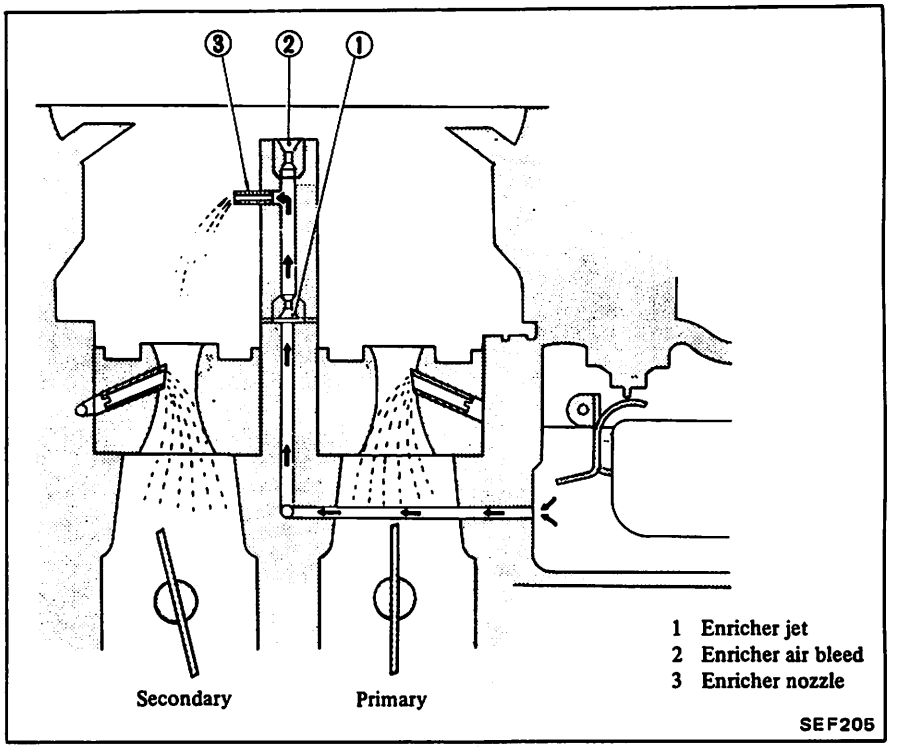

FLOAT SYSTEM

There is only one float chamber, while two carburetor systems, primary and secondary, are provided.

Fuel fed from the fuel pump flows through the filter and needle valve into the float chamber. A constant fuel level is maintained by the float and needle valve.

Because of the inner air vent type of the float chamber ventilation, the fuel consumption will not be influenced by some dirt accumulated in the air cleaner.

The needle valve includes special hard needle and will not wear for all its considerably long use. Besides, the insertion of a spring will prevent the flooding at rough road running.

ANTI-DIESELING SYSTEM

The carburetor is equipped with an anti-dieseling solenoid valve. As the ignition switch is turned off, the valve is brought into operation, shutting off the supply of fuel to the slow fuel passage.

The following figure shows a sectional view of this control.

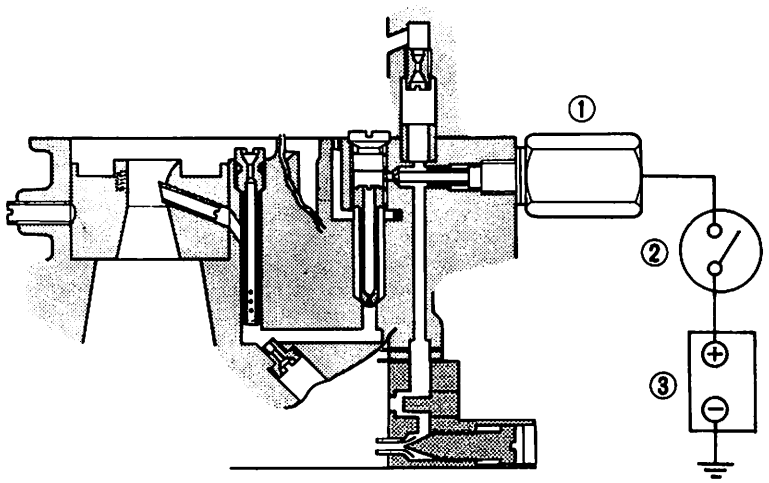

1 Anti-dieseling solenoid valve
2 Ignition switch
3 Battery

SEF826

ELECTRIC AUTOMATIC CHOKE

An electric heater warms a bimetal interconnected to the choke valve, and controls the position of choke valve and throttle valve in accordance with the time elapsed and the warm-up condition of the engine.

The construction and function of each part of this carburetor are as follows:

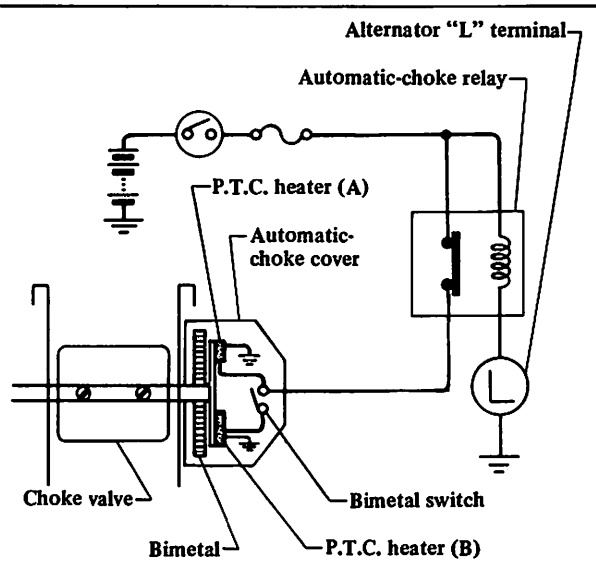

SEF726

1. Electric heater in thermostat cover.

The double stage heating system is provided to obtain an optimum heating capacity. This system consists of first and second stage heater. The first stage heater (A) always operates to heat the bimetal during the time when electric current flows through the auto-choke circuit, and in addition to the first stage operation, the second stage heater (B) begins to operate when the bimetal temperature reaches to the level of about 15°C (59°F) so that the choke valve opens more early. This operation of the second stage heater is controlled by a thermo switch attached to the bimetal.

2. Bimetal

Electric current flows through the heater as the engine starts, and warms the bimetal. The deflection of the bimetal is transmitted to the choke valve through the choke valve lever.

3. Fast idle cam

The fast idle cam determines the opening of the throttle valve so that the proper amount of mixture corresponding to the opening of the choke valve will be obtained. The opening of the choke valve is dependent upon the warm-up condition of the engine.

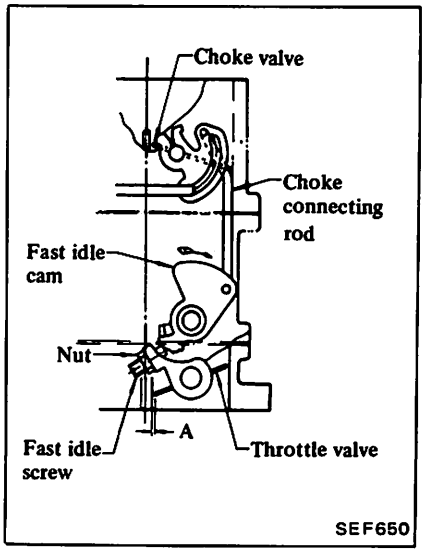

SEF650

4. Choke unloader

When accelerating the engine during the warm-up period, that is, before the choke valve opens sufficiently, this unloader forces the choke valve open a little so as to obtain an adequate air-fuel mixture.

5. Vacuum break diaphragm

After the engine has been started by cranking, this diaphragm forces the choke valve open to the predetermined extent so as to provide the proper air-fuel ratio.

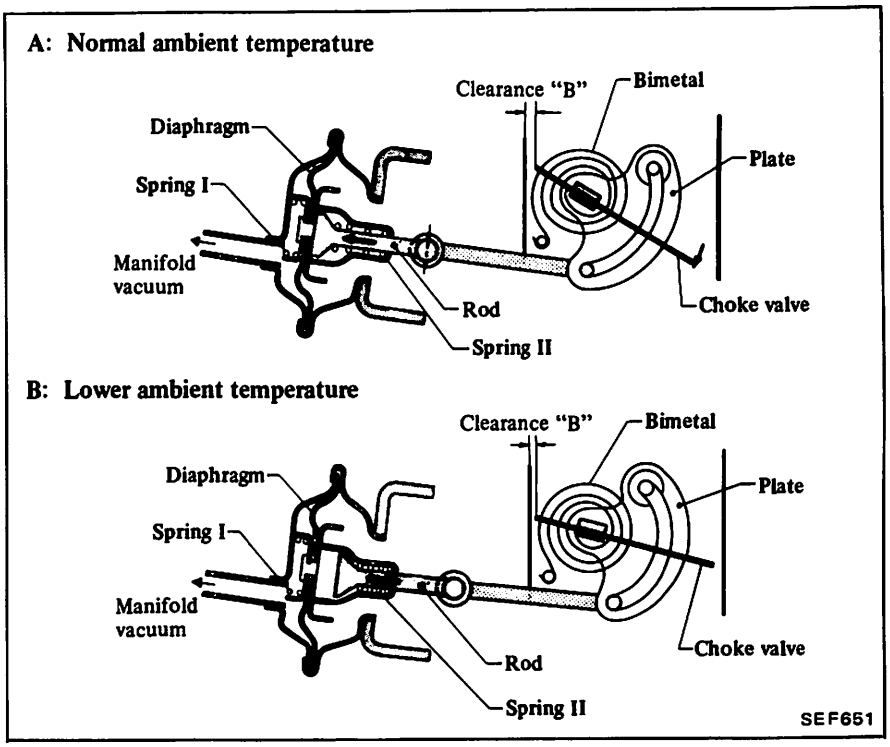

DASH POT SYSTEM

In automatic transmission models, it prevents engine stall resulting from quick application of the brake or from quick release of the accelerator pedal after it has been tread upon slightly.

The dash pot is a combination type which also serves as an F.I.C.D. actuator.

When the accelerator pedal is released during deceleration, the throttle valve lever taps on the dash pot stem.

With the air conditioning system in "OFF", diaphragm "I" gradually actuates as air leaks. This in turn causes the dash pot stem to retract, returning the engine to idling speed.

With the air conditioning system in "ON", vacuum is introduced, moving diaphragm "II" to the lower side. Engine speed gradually decreases as air leaks, and is held at a certain rpm (F.I.C.D. set revolution).

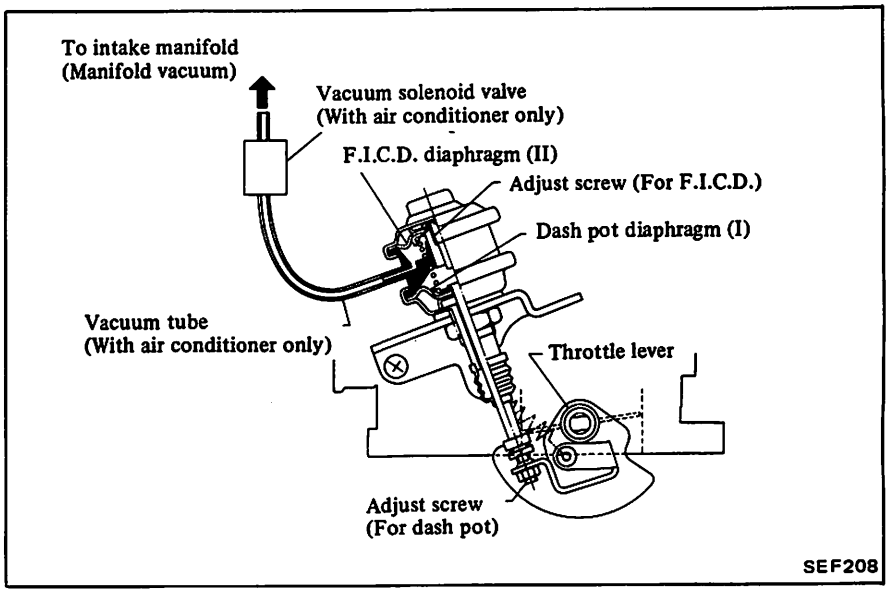

INSPECTION AND ADJUSTMENT

CARBURETOR IDLE-R.P.M. AND MIXTURE RATIO

The idle mixture adjusting screw which has been preset at the factory should be adjusted only in the event of a major carburetor overhaul, throttle body replacement or to lower exhaust emissions as directed by official inspections.

This screw should not be readjusted during routine maintenance.

Adjusting mixture using other than the method below may violate Federal, or other state and Provincial laws.

Preparation

1. Make sure that the following parts are in good order.
- Ignition system
- Engine oil and coolant levels
- Valve clearance

2. Connect engine tachometer and timing light in their proper positions.

3. Insure that these switches and units are in the following positions:
- Headlamp switch: OFF
- Heater blower: OFF
- Air conditioning switch: OFF (if equipped)
- Steering: KEEP WHEELS STRAIGHT AHEAD (if equipped with power steering)

4. Apply parking brake and block both front and rear wheels with chocks.

5. When measuring "CO" percentage, insert probe more than 40 cm (15.7 in) into tail pipe.

WARNING:

a. Inspection should be carried out while shift lever is in "D" position on automatic transmission equipped models and in "Neutral" on manual transmission equipped models.

b. On automatic transmission equipped models, racing the engine should be carried out while shift lever is in "N" or "P" position and brake pedal should be depressed.

c. After adjustment has been made, shift the lever to "N" or "P" position.

START

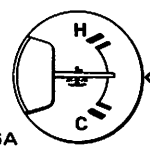

SMA566A

Start engine and warm up engine until water temperature indicator points to the middle of gauge.

- Turn off engine and open engine hood.
- Loosen bolts securing air cleaner to rocker cover and loosen air cleaner wing nut.

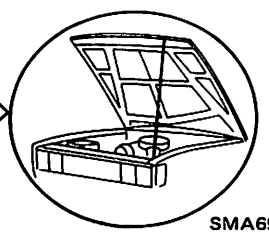

SMA691

Disconnect hoses from air induction pipes and install proper caps on air induction pipes.

Disconnect distributor vacuum hose from distributor vacuum controller and plug hose with proper plug.

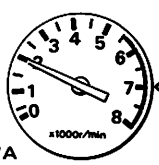

SMA567A

- Install air cleaner and start engine.
- Run engine at about 2,000 rpm for about 2 minutes under no-load.
- Then run engine at idle speed and ensure that engine speed is below 1,000 rpm.

Ⓐ

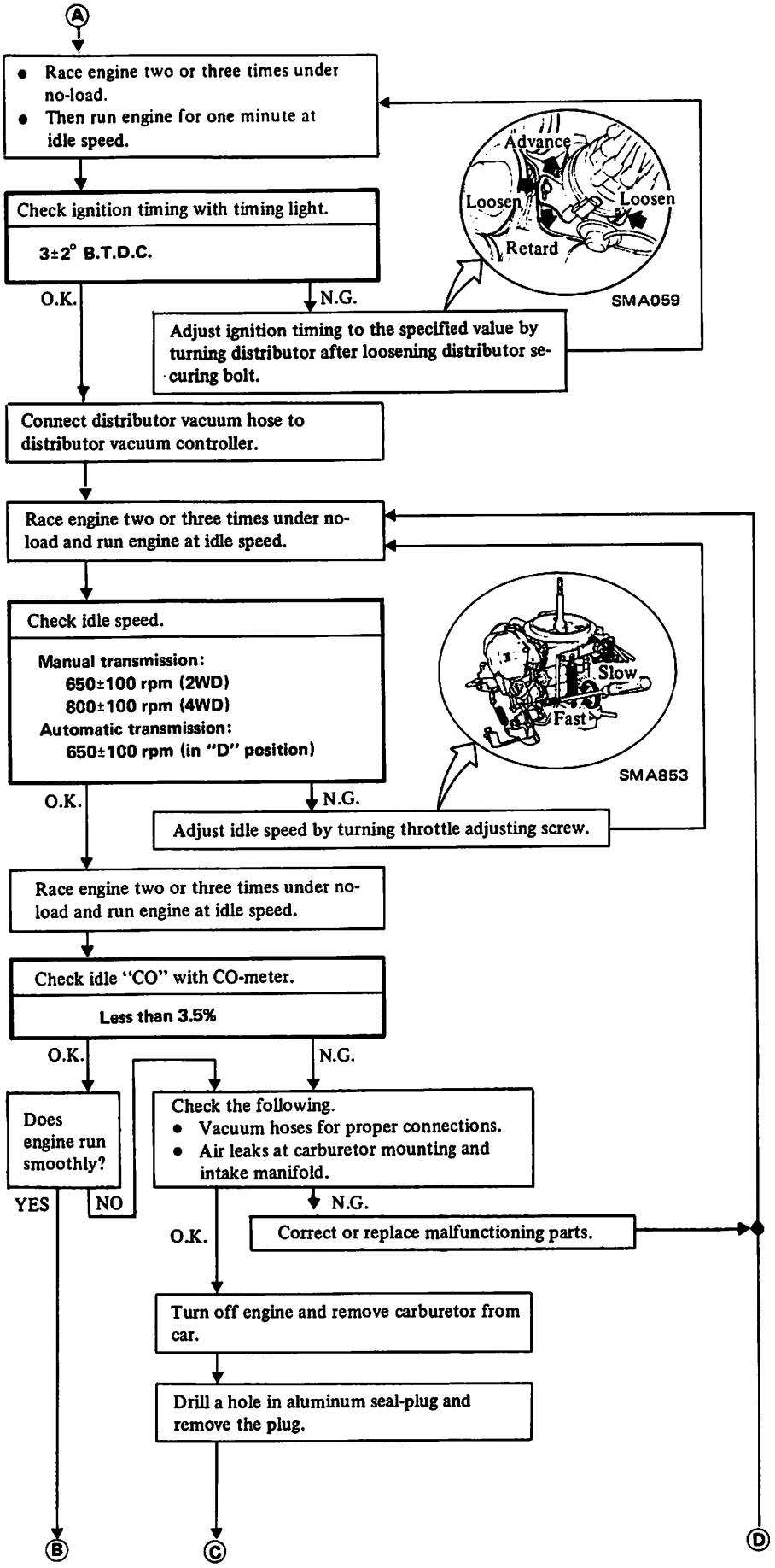
A
Race engine two or three times under no-load.
Then run engine for one minute at idle speed.
Check ignition timing with timing light.
3±2° B.T.D.C.
O.K.
N.G.
Advance
Loosen
Loosen
Retard
SMA059
Adjust ignition timing to the specified value by turning distributor after loosening distributor securing bolt.
Connect distributor vacuum hose to distributor vacuum controller.
Race engine two or three times under no-load and run engine at idle speed.
Check idle speed.
Manual transmission:
650±100 rpm (2WD)
800±100 rpm (4WD)
Automatic transmission:
650±100 rpm (in "D" position)
O.K.
N.G.
Slow
Fast
SMA853
Adjust idle speed by turning throttle adjusting screw.
Race engine two or three times under no-load and run engine at idle speed.
Check idle "CO" with CO-meter.
Less than 3.5%
O.K.
N.G.
Does engine run smoothly?
YES
NO
Check the following.
Vacuum hoses for proper connections.
Air leaks at carburetor mounting and intake manifold.
N.G.
O.K.
Correct or replace malfunctioning parts.
Turn off engine and remove carburetor from car.
Drill a hole in aluminum seal-plug and remove the plug.
B
C
D

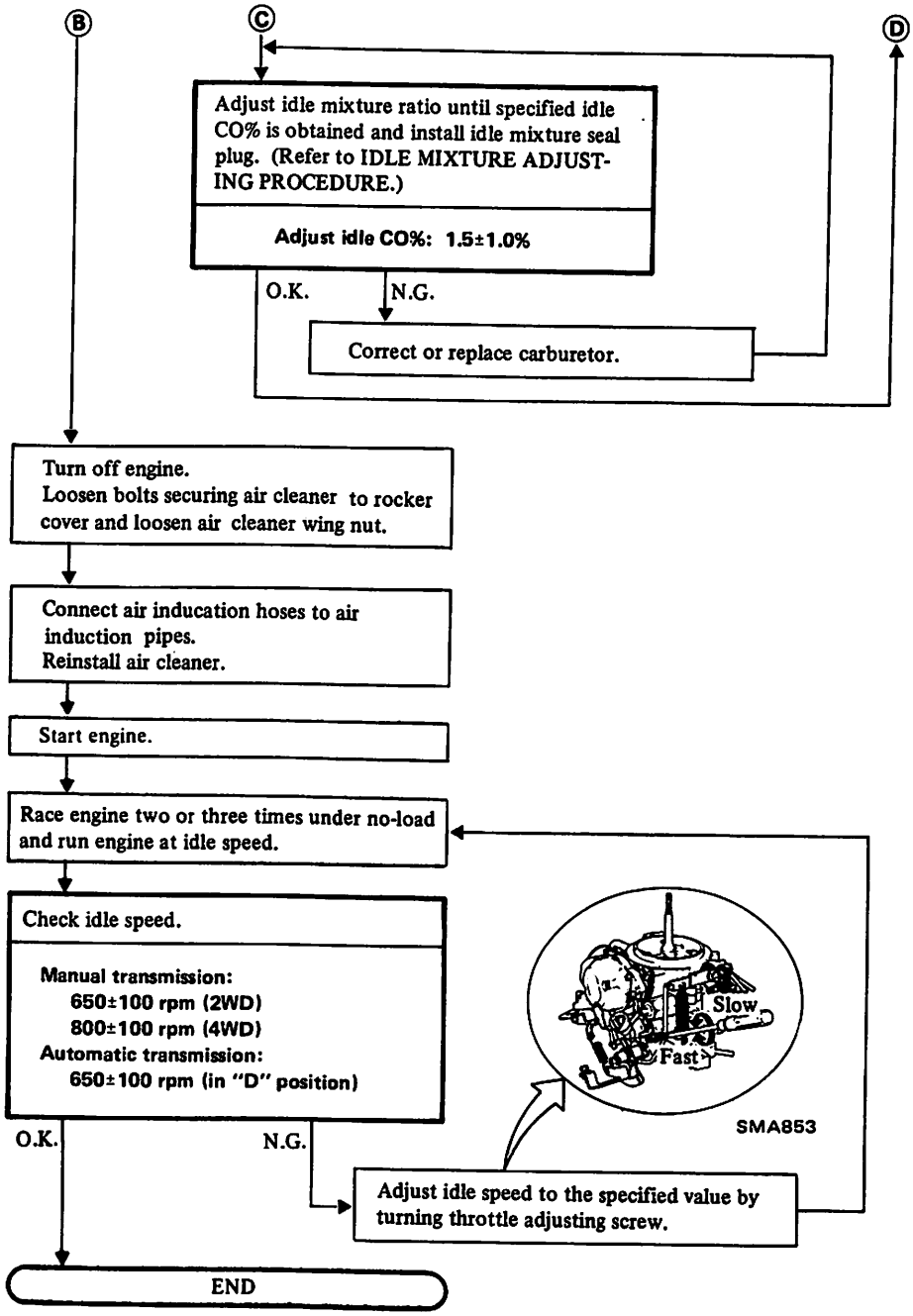
B
C
D
Adjust idle mixture ratio until specified idle CO% is obtained and install idle mixture seal plug. (Refer to IDLE MIXTURE ADJUSTING PROCEDURE.)
Adjust idle CO%: 1.5±1.0%
O.K.
N.G.
Correct or replace carburetor.
Turn off engine.
Loosen bolts securing air cleaner to rocker cover and loosen air cleaner wing nut.
Connect air inducation hoses to air induction pipes.
Reinstall air cleaner.
Start engine.
Race engine two or three times under no-load and run engine at idle speed.
Check idle speed.
Manual transmission:
650±100 rpm (2WD)
800±100 rpm (4WD)
Automatic transmission:
650±100 rpm (in "D" position)
Slow
Fast
SMA853
O.K.
N.G.
Adjust idle speed to the specified value by turning throttle adjusting screw.
END

IDLE MIXTURE ADJUSTING PROCEDURE

CAUTION:
a. Removal of idle mixture seal plug should be performed only when idle mixture adjustment is necessary.
b. When installing carburetor, be sure to tighten to specified torque.

1. Turn off engine and remove carburetor from engine.
2. After removing carburetor, drill a hole in seal plug and remove plug with proper Tool.

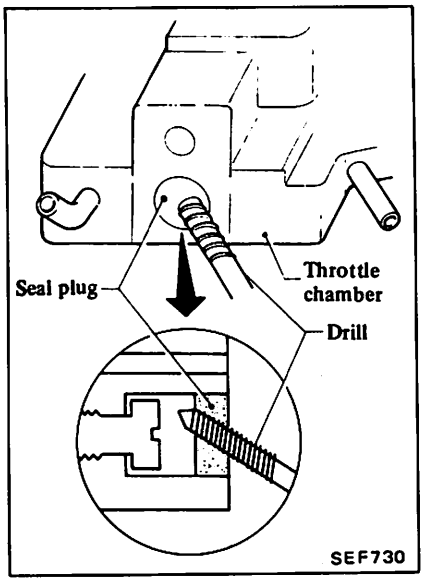

After drilling, be sure to remove shavings with compressed air.
3. After performing step 2, mount carburetor on engine.
4. Start engine and warm it up sufficiently at about 2,000 rpm under no-load. Then, race engine two or three times under no-load.
5. Then, run engine at idle speed and adjust idle CO% by turning idle mixture adjusting screw.
6. If proper idle CO% is not obtained by adjustment, turn off engine and overhaul carburetor or replace it with a new one. Then adjust idle CO% by turning idle mixture adjusting screw.
7. After adjusting idle CO% by step 5 or 6, turn off engine if engine runs smoothly and replace seal plug with a new one. But, if it doesn't, adjust idle CO% by step 5.

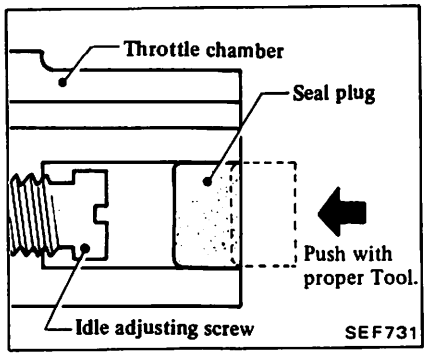

8. Install carburetor on car.

Start engine and warm it up sufficiently at about 2,000 rpm under no-load.

FUEL LEVEL

1. With engine idling, visually check fuel level through sight window of float chamber. Fuel level is correct if it is at the indicator point.

Fuel level indicator point is located 23 mm (0.91 in) below top of carburetor body (H' as shown in Figure below).

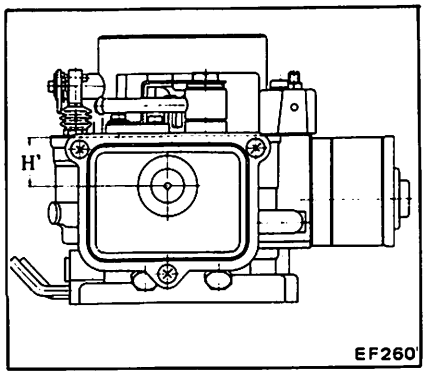

To adjust fuel level, proceed as follows:
2. Remove level gauge cover.
3. Turn down float chamber to allow float to come into contact with needle valve, and measure "H" shown below.

When "H" is approximately 7.2 mm (0.283 in), top float position is correct.

The top float position can be adjusted by bending float seat.

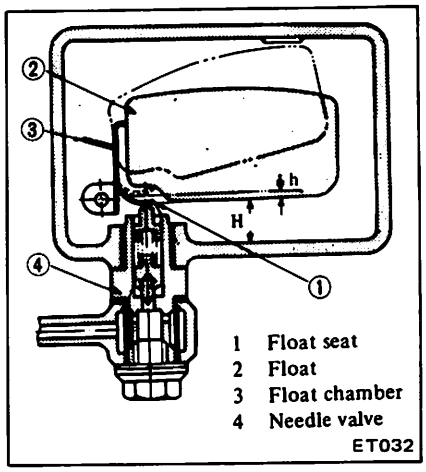

4. Adjust bottom float position so that clearance "h" between float seat and needle valve stem is 1.3 to 1.7 mm (0.051 to 0.067 in) when float is fully raised. Bend float stopper as required.
5. Install level gauge cover.
6. After adjustments in steps 3 and 4 above have been made, make sure that when fuel is delivered to the float chamber, the fuel level is maintained within the specified value H'.

AUTOMATIC CHOKE MECHANISM

1. Before starting engine, fully depress accelerator pedal to ensure that choke valve closes properly.
2. Push choke valve with a finger, and check for binding.
3. Check automatic choke heater source wiring for proper connection, then start engine.
4. After warming up the engine, see that choke valve is fully open.
5. If automatic choke heater source wiring is normal and choke valve does not operate after warm-up, replace choke chamber assembly.

AUTOMATIC CHOKE HEATER CIRCUIT

Checking heater circuit with function connector

CAUTION:
Do not attach test leads of a circuit tester to those other than designated.

1. With engine not running, check for continuity between A and B as shown in Figure.
- If continuity exists, heater is functioning properly.
- If continuity does not exist, check for disconnected connector or open P.T.C. heater circuit.

2. With engine running at idle, check for presence of voltage across A and B as shown in Figure.
- If voltmeter reading is 12 volts (d-c), heater circuit is functioning properly.
- If voltmeter reading is zero, check for disconnected connector, open circuit, or faulty automatic choke relay.

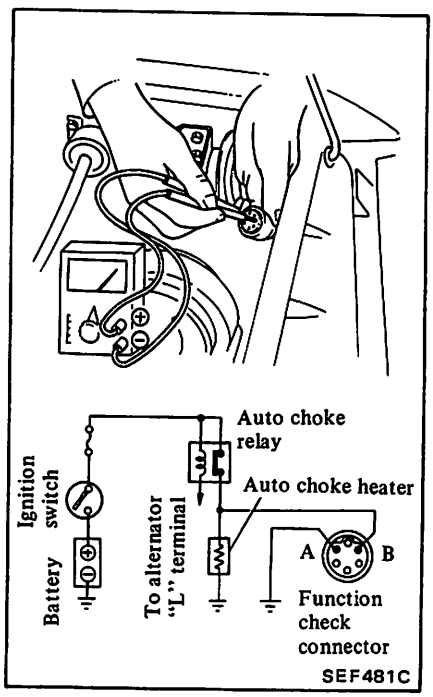

3. Replace faulty parts

AUTOMATIC CHOKE HEATER

1. Measure resistance of choke heater as shown in Figure below.

Resistance of choke heater:
3.7 - 8.9 ohms

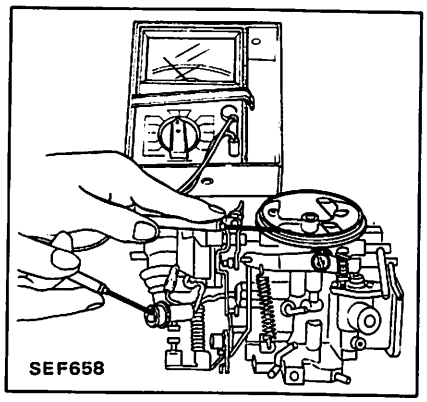

2. If measured value is not within the specification, replace choke chamber assembly.

AUTOMATIC CHOKE RELAY

1. Remove automatic choke relay. The relay is located in the right side dash panel.

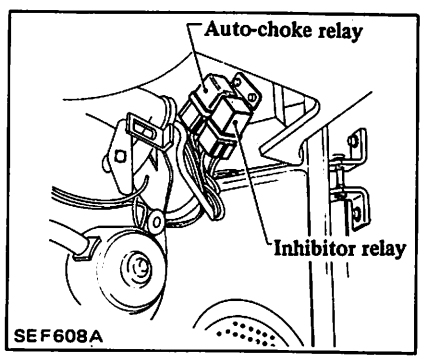

2. Check for continuity between ④ and ⑤. Continuity should exist.
Check for continuity between ① and ②. Continuity should exist.
Check for continuity between ① and ③. Continuity should not exist.
3. Apply a 12-volt d.c. across ④ and ⑤ to ensure that continuity exists between ① and ③ and that continuity does not between ① and ②. If test results do not satisfy the above, replace the automatic choke relay.

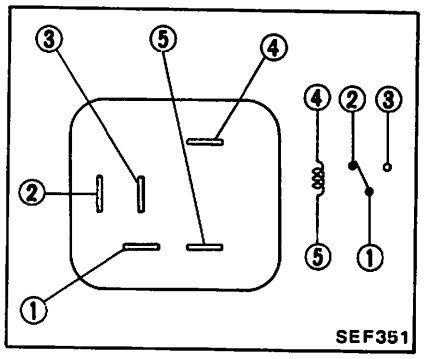

1 From "IG" position
2 To automatic choke heater
3 Useless
4 From alternator
5 From ignition switch

FAST IDLE

1. With carburetor assembly removed from engine, measure throttle valve clearance "A" with a wire gauge, placing the upper side of fast idling screw on the second step on the fast idling cam.

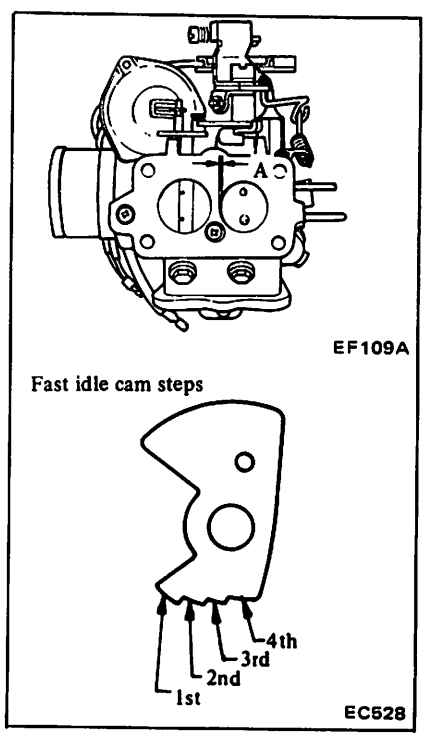

2. The clearance should be specified value in the following table. If not, adjust the clearance by turning fast idle screw.

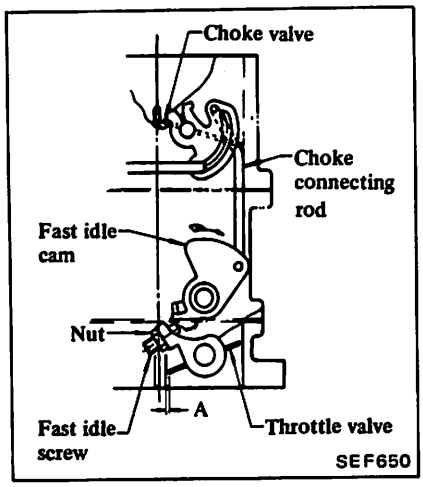

	Clearance "A" at 2nd step mm (in)
M/T	0.71 - 0.85 (0.0280 - 0.0335)
A/T	0.87 - 1.01 (0.0343 - 0.0398)

VACUUM BREAK

1. Close choke valve completely.
2. Hold choke valve by stretching a rubber band between vacuum break lever and stationary part of carburetor.
3. In this condition, check choke valve opening using a vacuum handy pump.

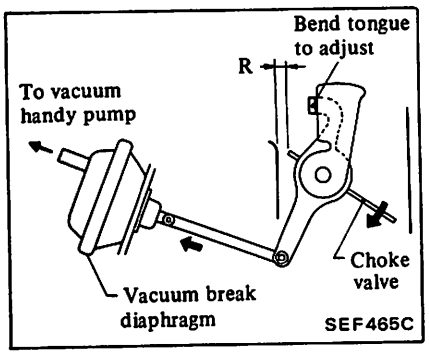

Choke valve to carburetor body clearance (Vacuum break) R:

Unit: mm (in)

	R2 [Above 20°C (68°F)]	R1 [Below 5°C (41°F)]
2WD	2.62±0.3 (0.1031±0.0118)	1.90±0.15 (0.0748±0.0059)
4WD & Camper	2.75±0.3 (0.1083±0.0118)	2.00±0.15 (0.0787±0.0059)

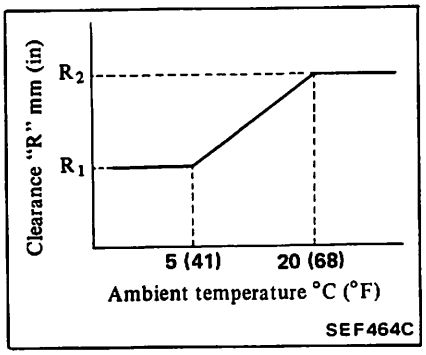

CHOKE UNLOADER

1. Close choke valve completely.
2. Hold choke valve by stretching a rubber band between vacuum break lever and stationary part of carburetor.
3. Pull throttle lever until full open.

Under this condition, adjust clearance between choke valve and carburetor body to the specification by bending unloader tongue.

Choke valve to carburetor body clearance (Choke unloader):
B = 2.05 - 2.85 mm (0.0807 - 0.1122 in)

Make sure that throttle valve opens when carburetor is mounted on the vehicle.

If throttle valve fails to open, unloader becomes inoperative, resulting in poor acceleration just after engine is started.

INTERLOCK OPENING OF PRIMARY AND SECONDARY THROTTLE VALVE

The figure below shows primary throttle valve opened 50°. When primary throttle valve is opened 50° the adjust plate integrated with throttle valve is in contact with return plate at Ⓐ.

When throttle valve is opened further, locking arm Ⓑ is detached from secondary throttle arm, permitting secondary system to start operation.

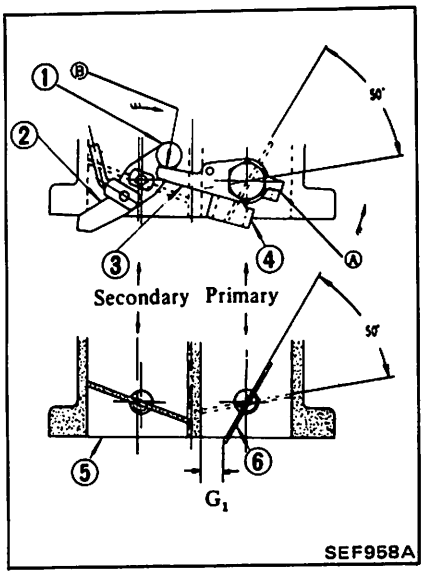

1	Roller	4	Adjust plate
2	Connecting lever	5	Throttle chamber
3	Return plate	6	Throttle valve

Clearance G1:
8.37±0.5 mm (0.3295±0.0197 in)

Adjustment is made by bending connecting link.

DASH POT

Check dash pot with air conditioning system (if so equipped) "OFF".

1. Idle speed of engine and mixture must be well tuned up and engine sufficiently warm.
2. Turn throttle valve by hand, and read engine speed when dash pot just touches stopper lever.
3. Adjust position of dash pot by adjusting screw until engine speed is in the specified range.

Specified engine speed:
A/T 1,500±200 rpm

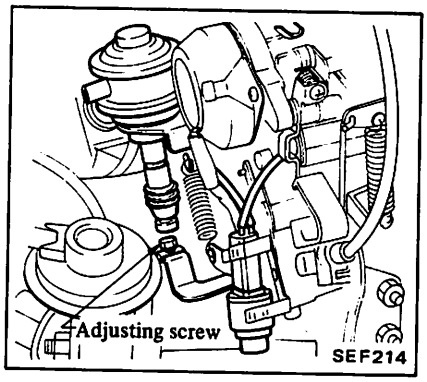

4. Make sure that engine speed drops smoothly from 2,000 to 1,000 rpm in about three seconds.

For adjustment of F.I.C.D. on air conditioner equipped models, refer to Section HA.

ACCELERATING PUMP

1. Visually inspect accelerating pump cover for any sign of fuel leaks.
2. If fuel leaks are found, check gasket, and replace if necessary.
3. Turn throttle valve by hand; make sure fuel is injected through injector nozzle.

To check for fuel injection, peep into nozzle from upper side while directing flashlight beam toward primary barrel.

Accelerating pump adjusting screw

Do not tamper with adjusting screw except when adjusting discharge amount of accelerating pump during overhaul, etc.

1. With carburetor removed from engine, pour gasoline into fuel float chamber.
2. Fully loosen throttle adjusting screw.
3. Fully open choke valve.
4. Slowly turn throttle lever about 10 times, from fully closed position to fully open position, keeping throttle lever fully open at least 3 seconds per stroke.
5. Measure injection quantity of accelerating pump.

Injection quantity:

$0.7^{+0.15}_{-0.10}$ mℓ

($0.024^{+0.005}_{-0.003}$ US fl oz,

$0.025^{+0.005}_{-0.004}$ Imp fl oz)/stroke

If out of specification, adjust by bending accelerating pump connecting rod.

Be sure to readjust throttle adjusting screw after installing carburetor.

ANTI-DIESELING SOLENOID VALVE

Check this valve if engine continues to turn over after ignition switch has been turned off or if engine does not continue to run at idle.

1. Disconnect anti-dieseling solenoid connector to see if engine stops. If it does not, replace anti-dieseling solenoid valve assembly.
2. Make sure 12-volt d-c power is applied at harness side when ignition switch is turned on. If it is not, check harness.

If harness is in good condition, replace solenoid valve as a unit.

Ⓣ : Anti-dieseling solenoid valve
18 - 34 N·m
(1.8 - 3.5 kg-m,
13 - 25 ft-lb)

After replacement, start engine and check to be sure that fuel is not leaking, and that anti-dieseling solenoid is in good condition.

MAJOR SERVICE OPERATION

The perfectly adjusted carburetor delivers the proper fuel and air ratios at all speeds for the particular engine for which it was designed. By completely disassembling which will allow cleaning of all parts and passages, the carburetor can be maintained its original condition and will continue to deliver the proper ratios.

To maintain accurate carburetion of passages and discharge holes, extreme care must be taken in cleaning.

CAUTION:
Use only carburetor solvent and compressed air to clean all passages and discharge holes. Never use wire or other pointed instrument to clean or carburetor calibration will be affected.

REMOVAL AND INSTALLATION

Remove carburetor from engine, taking sufficient care to the following:

CAUTION:
a. When disconnecting fuel lines, do not spill fuel from fuel pipe.
b. When removing carburetor, do not drop any nut or bolt into intake manifold.
c. Be careful not to bend or scratch any part.

1. Remove air cleaner.
2. Disconnect fuel lines and vacuum lines.
3. Disconnect lead wire connector for auto-choke heater, and anti-dieseling solenoid.
4. Disconnect accelerator wire from throttle lever.
5. Remove screws securing carburetor body to intake manifold.

Carburetor assembly can then be taken out.

6. Installation is in the reverse sequence of removal.

DISASSEMBLY AND ASSEMBLY

Following instructions should be observed.

Disassembly

1. Properly fitting wrenches and screwdrivers must be used on the nozzles and jets as well as on the screws and nuts, and care must be exercised not to damage any parts.
2. Clean the carburetor thoroughly before disassembly.

Assembly

To assemble, reverse the disassembly procedure, noting the following:

1. Thoroughly wash all the parts before assembling.
2. Inspect gaskets to see if they appear hard or brittle or if edges are torn or distorted.

If any of such undesirable conditions is noted, they must be replaced.
3. Install jet and air bleed having the same size number as that of original one.
4. After reassembling carburetor, check each rotating portion or sliding portion for smooth operation.

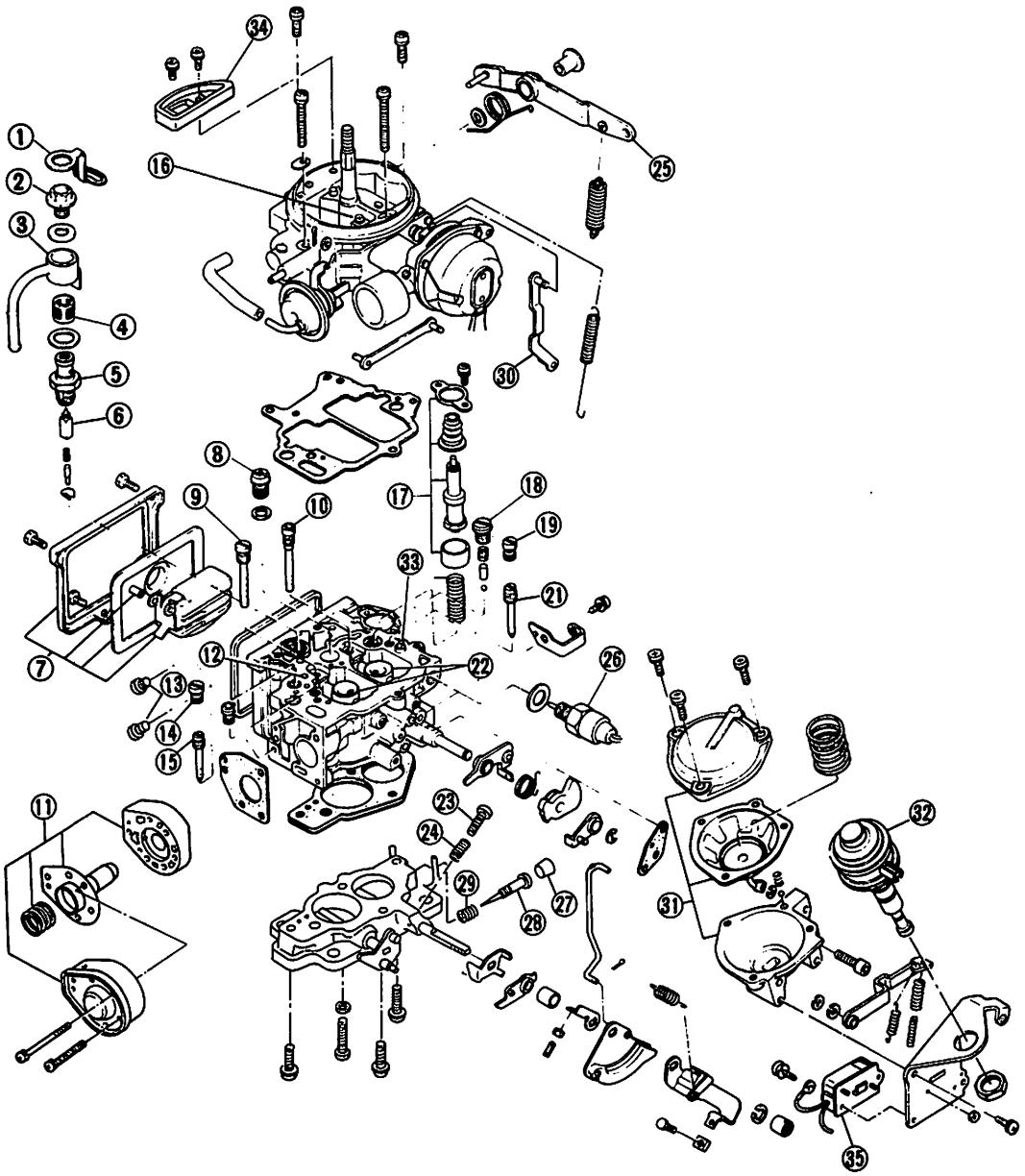

1 Lock plate
2 Filter set screw
3 Fuel nipple
4 Fuel filter
5 Needle valve body
6 Needle valve
7 Float
8 Power valve
9 Secondary main air bleed
10 Primary main air bleed
11 B.C.D.D.
12 Secondary slow air bleed
13 Secondary main jet
14 Plug
15 Secondary slow jet
16 Idle compensator
17 Accelerating pump parts
18 Plug for accelerating mechanism
19 Plug
21 Primary slow jet
22 Primary and secondary small venturi
23 Throttle adjusting screw
24 Throttle adjusting screw spring
25 Accelerating pump lever
26 Anti-dieseling solenoid valve
27 Blind plug
28 Idle adjusting screw
29 Idle adjusting screw spring
30 Choke connecting rod
31 Diaphragm chamber parts
32 Dash pot
33 Primary slow air bleed
34 Air vent cover
35 Throttle valve switch

SEF728C

CRANKCASE EMISSION CONTROL SYSTEM

DESCRIPTION

This system returns blow-by gas to both the intake manifold and carburetor air cleaner.

The positive crankcase ventilation (P.C.V.) valve is provided to conduct crankcase blow-by gas to the intake manifold.

During partial throttle operation of the engine, the intake manifold sucks the blow-by gas through the P.C.V. valve.

Normally, the capacity of the valve is sufficient to handle any blow-by and a small amount of ventilating air.

The ventilating air is then drawn through the tube connecting carburetor air cleaner to rocker cover, into the crankcase.

Under full-throttle condition, the manifold vacuum is insufficient to draw the blow-by flow through the valve, and its flow goes through the tube connection in the reverse direction.

On vehicles with an excessively high blow-by some of the flow will go through the tube connection to carburetor air cleaner under all conditions.

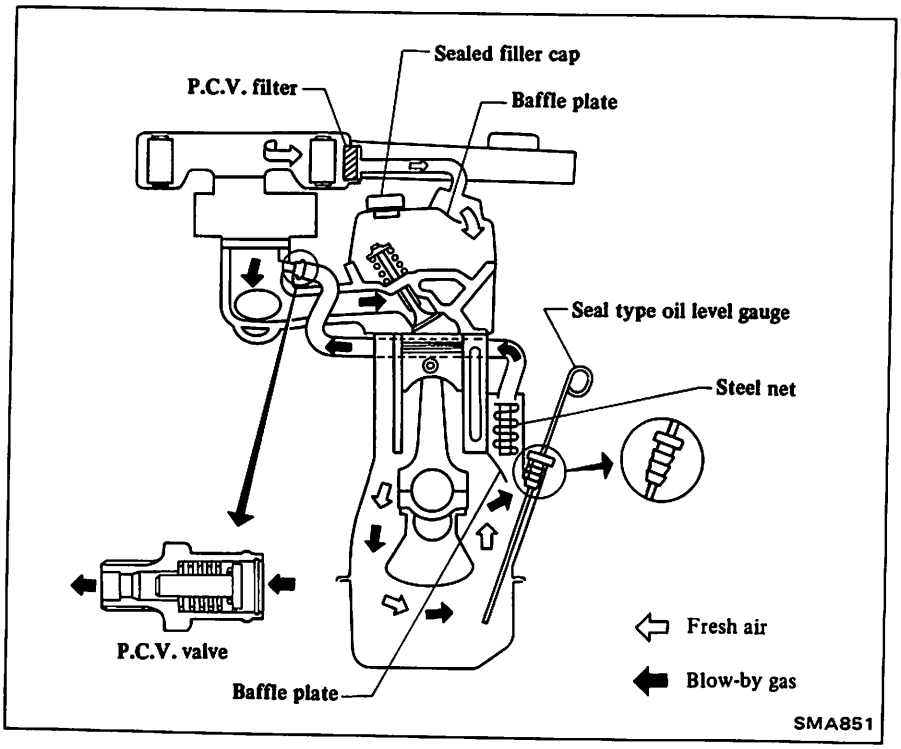

INSPECTION

P.C.V. VALVE AND FILTER

With engine running at idle, remove the ventilator hose from P.C.V. valve, if the valve is working, a hissing noise will be heard as air passes through the valve and a strong vacuum should be felt immediately when a finger is placed over valve inlet.

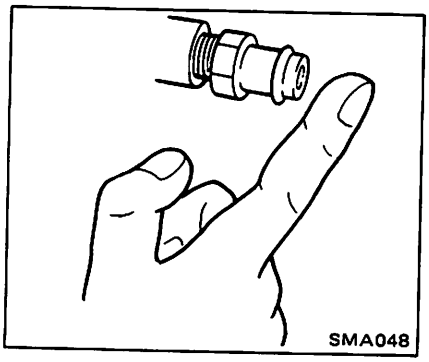

VENTILATION HOSE

1. Check hoses and hose connections for leaks.
2. Disconnect all hoses and clean with compressed air.

If any hose cannot be free of obstructions, replace.

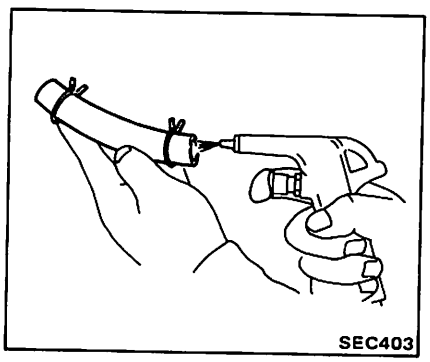

EXHAUST EMISSION CONTROL SYSTEM

AIR INJECTION SYSTEM

DESCRIPTION

The air injection system is designed to send secondary air to the exhaust manifold, utilizing a vacuum caused by exhaust pulsation in the exhaust manifold.

The exhaust pressure in the exhaust manifold usually pulsates in response to the opening and closing of the exhaust valve and it decreases below atmospheric pressure periodically.

If a secondary air intake pipe is opened to the atmosphere under vacuum conditions, secondary air can be drawn into the exhaust manifold in proportion to the vacuum.

Therefore, the air injection system reduced CO and HC emission in exhaust gases.

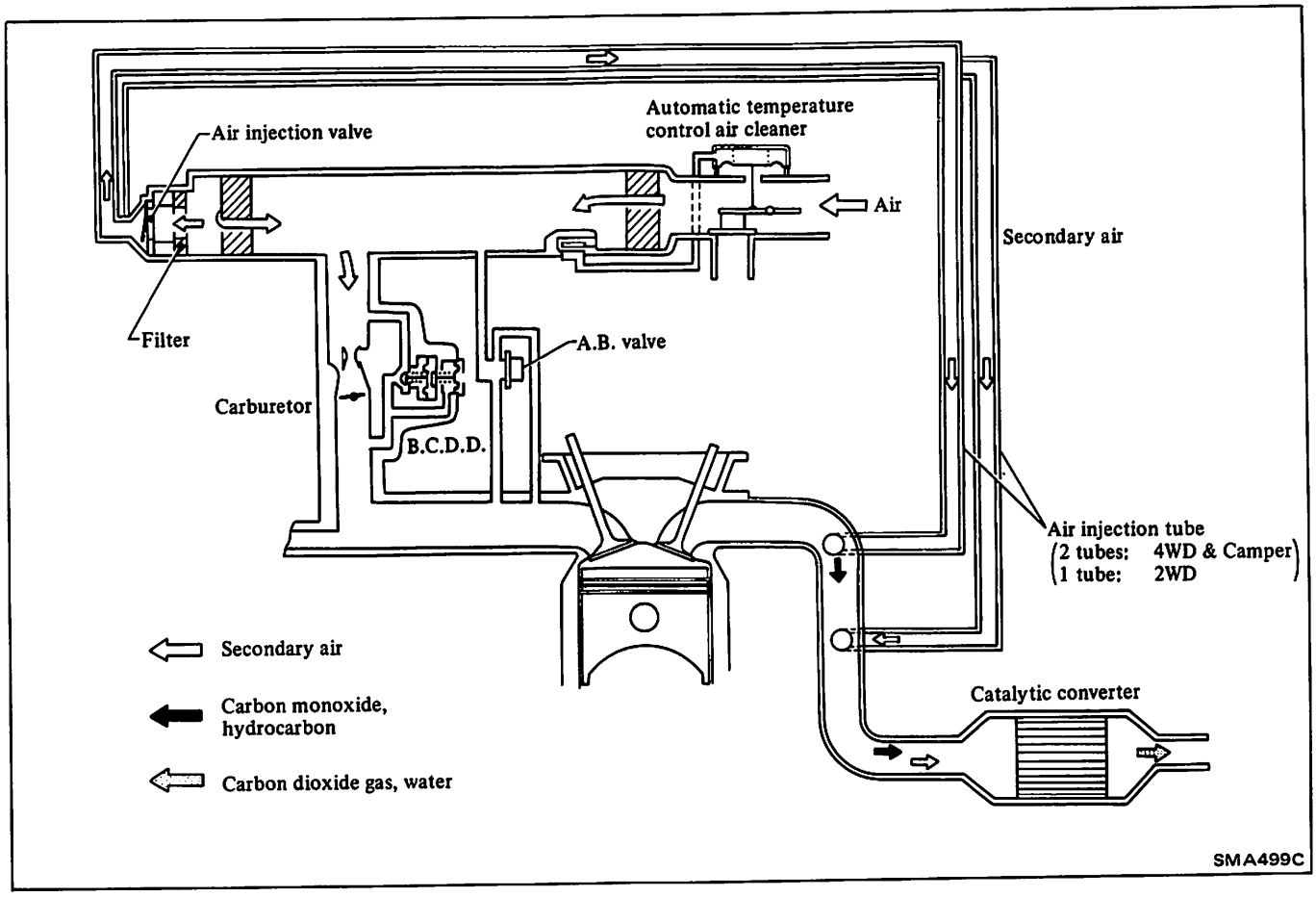

Air injection valve case

The air injection valve case consists of two reed valves, a rubber seal and a filter and is attached to the air cleaner. There are two types of air injection valve cases. 4WD and Camper models are equipped with two hose connectors, while 2WD standard model is equipped with one connector.

4WD and Camper

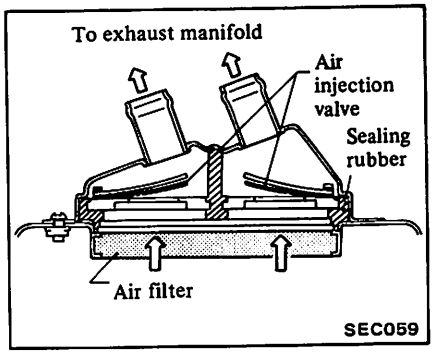

2WD

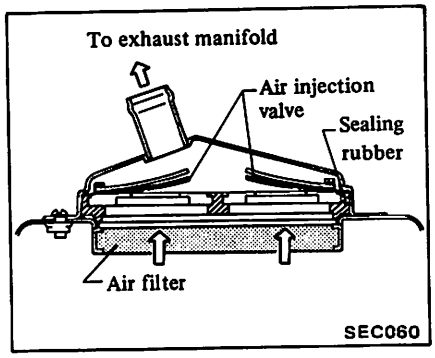

Air injection valve

Two reed valve type check valves are installed in the air cleaner. When the exhaust pressure is below atmospheric pressure (negative pressure), secondary air is sent to the exhaust manifold.

When the exhaust pressure is above atmospheric pressure, the reed valves prevent secondary air from being sent back to the air cleaner.

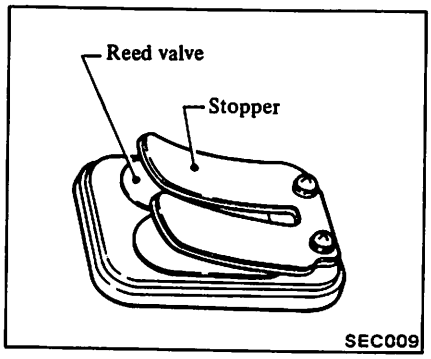

Air injection valve filter

The air injection valve filter is installed at the dust side of the air cleaner. It purifies secondary air to be sent to the exhaust manifold.

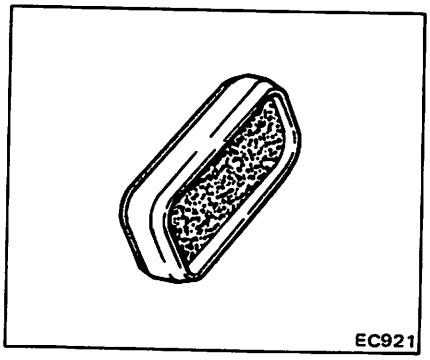

Air injection pipe

The secondary air fed from the air injection valve goes through the air injection pipe to the exhaust manifold.

4WD and Camper

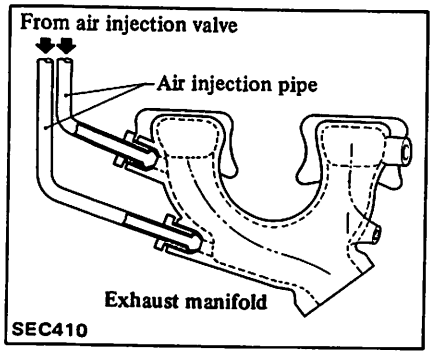

2WD

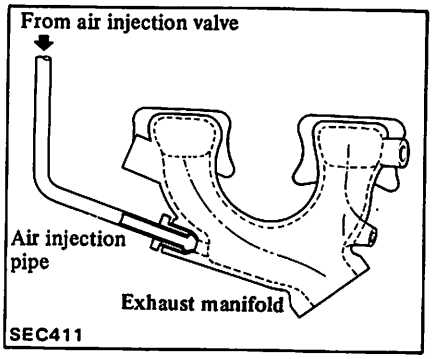

A.B. valve

This valve is actuated by intake manifold vacuum to prevent backfire in the exhaust system at the initial period of deceleration.

At this period, the mixture in the intake manifold becomes too rich to ignite and burn in the combustion chamber and burns easily in the exhaust system with injected air in the exhaust manifold.

The A.B. valve provides air to the intake manifold to make the air-fuel mixture leaner and prevents backfire.

The correct function of this valve reduces hydrocarbon emission during deceleration.

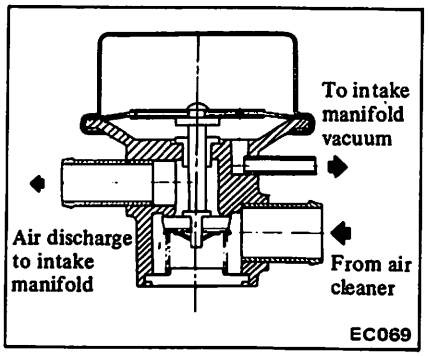

INSPECTION

Preliminary inspection

Check hose for looseness, flatting, damage or faulty connections, and each part for proper installation. If necessary, replace.

Air injection valve and filter

1. Disconnect air injection hose at air injection pipe side. Suck or blow hose to make sure that air flows only on the air injection pipe side.

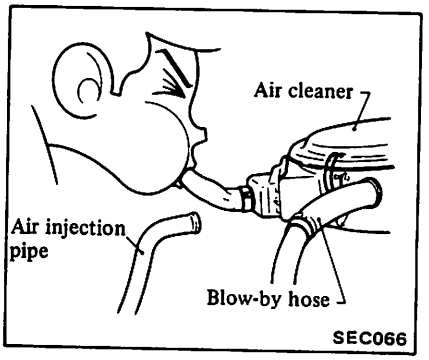

2. Check air injection valve for binding or damage. At the same time, check filter for damage or plugging. If necessary, replace. Filter should be replaced periodically in accordance with Maintenance Schedule.

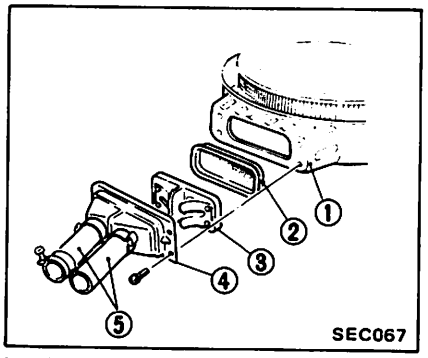

1 Air cleaner
2 Filter
3 Air injection valve
4 Air injection valve case
5 Rubber hose

A.B. valve

1. Warm up engine thoroughly.
2. Remove air cleaner.
3. Disconnect hose from A.B. valve and place a finger near the outlet.
4. Run engine at about 3,000 rpm under no load, then quickly return it to idling. If you feel a pull or suction force on your finger, the A.B. valve is functioning normally. If no suction is felt, replace A.B. valve.

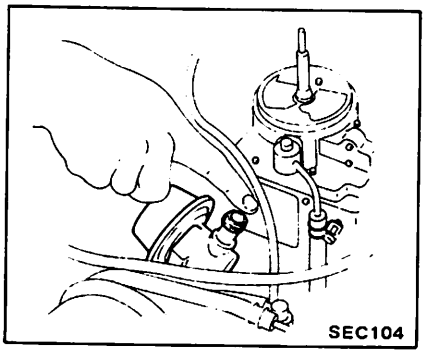

EXHAUST GAS RECIRCULATION (E.G.R.) CONTROL SYSTEM

In the exhaust gas recirculation system, a part of the exhaust gas is returned to the combustion chamber to lower the spark flame temperature during combustion. This results in a reduction of the nitrogen oxide (NOx) content in the exhaust gas.

When the E.G.R. control valve is open, some of the exhaust gas is led from the exhaust manifold to the E.G.R. chamber or the E.G.R. passage. The exhaust gas in then controlled in quantity by the E.G.R. valve, and is introduced into the intake manifold.

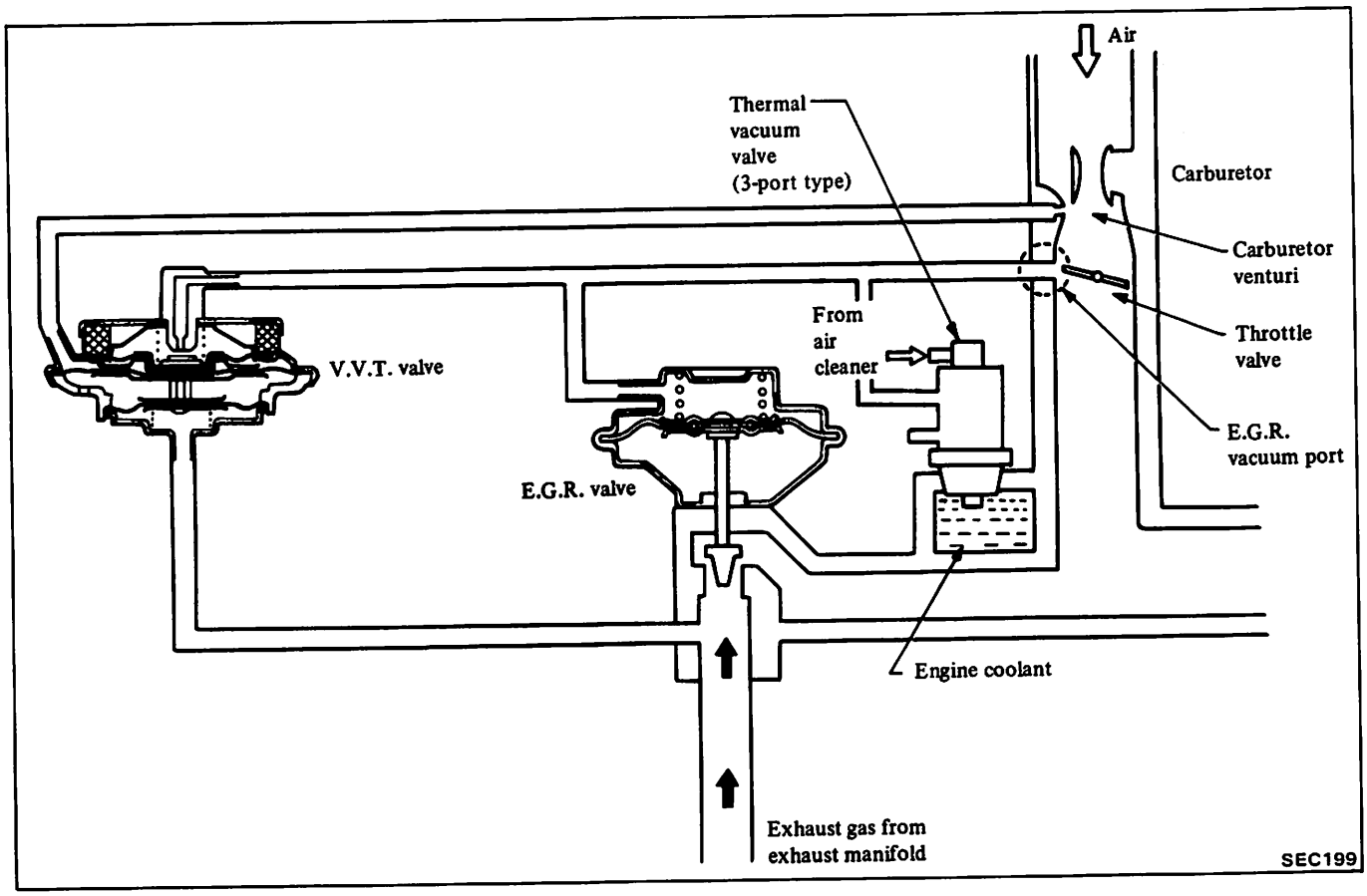

Water temperature °C (°F)	Thermal vacuum valve	V.V.T. valve			E.G.R. control system
		Venturi vacuum	Exhaust gas pressure	Operation	
Below 55 (131)	Open	Any condition			Not actuated
Above 55 (131)	Closed	High	Low	Closed	Actuated
			High		
		Low	Low	Open	Not actuated

With the engine at idle or at full throttle, the E.G.R. control valve closes to deactivate the E.G.R. system regardless of water temperature (operation of the thermal vacuum valve) and V.V.T. valve.

E.G.R. control valve

The E.G.R. control valve controls the quantity of exhaust gas to be led to the intake manifold through vertical movement of the valve connected to the diaphragm, to which vacuum is applied in response to the opening of the carburetor throttle valve.

When replacing the E.G.R. valve with a new one, verify that the type number on the new part is the same as that on the former one.

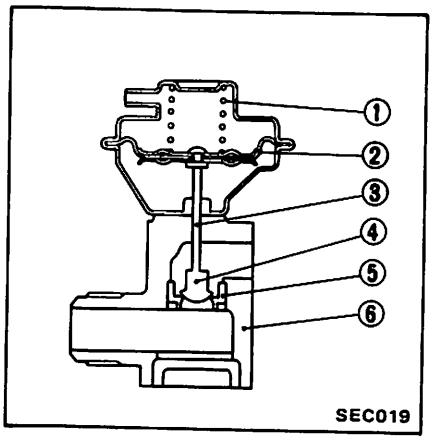

1 Diaphragm spring
2 Diaphragm
3 Valve shaft
4 Valve
5 Valve seat
6 Valve chamber

Thermal vacuum valve (3-port type)

The thermal vacuum valve, which is attached to the thermostat housing, monitors the temperature of the engine cooling water. The valve shaft is propelled by the thermal expansion force of wax which depends on the temperature. This action opens and closes the valve, which causes the E.G.R. control vacuum line to be exposed or closed to the atmosphere. When the valve opens, air from the carburetor vacuum signal line is introduced, and because the venturi vacuum transducer (V.V.T.) valve and E.G.R. valve diaphragm are exposed to the atmosphere the E.G.R. operation will not function.

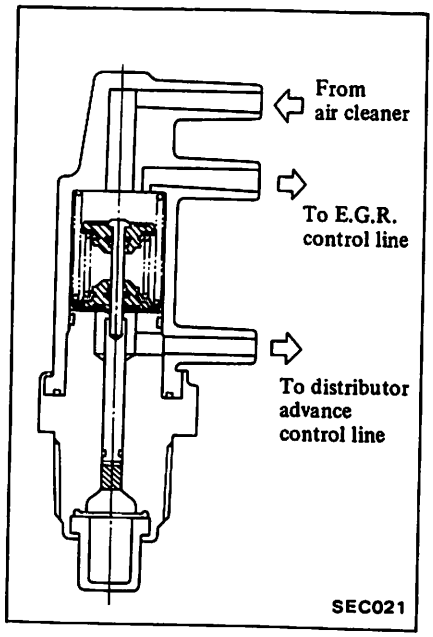

a. Be sure to apply sealer to threads of the valve prior to installing a new valve.

b. When installing a new thermal vacuum valve, be sure that color and shape are correct.

Venturi vacuum transducer (V.V.T.) valve

The V.V.T. valve monitors the pressure of the exhaust gas which actuates the diaphragm ⑥ and the venturi vacuum which in turn activate the diaphragm ④, ⑤. This valve controls the carburetor throttle vacuum in order to activate the E.G.R. control valve.

In other words, the amount of recirculated exhaust gas varies with the position of the E.G.R. valve regulated by the operating condition of the engine.

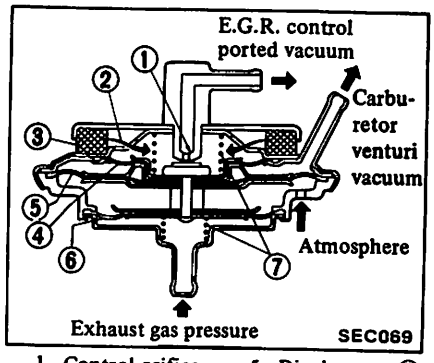

1 Control orifice
2 Air bleed
3 Air filter
4 Diaphragm
5 Diaphragm ②
6 Diaphragm ③
7 Spring

When replacing the V.V.T. valve with a new one, verify that the type number on the new part is the same as that on the former one.

INSPECTION

Entire system

1. Make a thorough visual check of E.G.R. control system. If necessary, wipe away oil to facilitate inspection. If any hoses are cracked or broken, replace.
2. With engine stopped, inspect E.G.R. control valve for any indication of binding or sticking by moving diaphragm of control valve upwards with a finger.
3. With engine running, inspect E.G.R. control valve and thermal vacuum valve for normal operation.

Place your finger on diaphragm of E.G.R. control valve to ensure that the valve functions as described below.

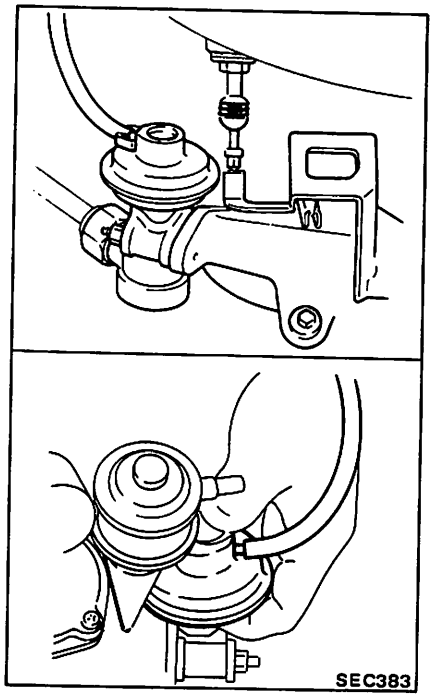

(1) When temperature of the engine coolant is low:

[Below 55°C (131°F)]

Make sure that E.G.R. control valve does not operate when engine speed is increased from idling to 2,000 to 2,500 rpm.

(2) When temperature of the engine coolant is high:

[Above 55°C (131°F)]

a) Make sure that E.G.R. control valve operates when engine speed is increased from idling to 2,000 to 2,500 rpm.

b) If E.G.R. control valve does not operate properly, check it as follows:

- Disconnect one end (E.G.R. control valve side) of vacuum hose which connects 3-way connecter to E.G.R. control valve.
- Increase engine speed from idle to 2,000 to 2,500 rpm.
- Make sure that thermal vacuum valve is closed, and that throttle vacuum is present at the end (E.G.R. control valve side) of vacuum hose.

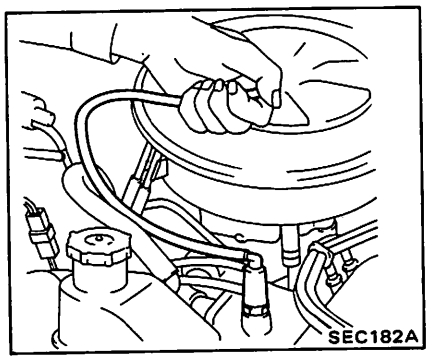

If vacuum pressure is either weak or nonexistent, replace thermal vacuum valve. If vacuum pressure is detected, replace E.G.R. valve.

If any difficulty is encountered in judging the condition of any component during above inspection, check the questionable component independently as follows:

E.G.R. control valve

Dismount E.G.R. control valve from engine.

1. Apply vacuum to E.G.R. control valve, referring to the following figure. If the valve moves to full position, it is normal.

E.G.R. control valve will remain open for more than 30 seconds after vacuum has cut off.

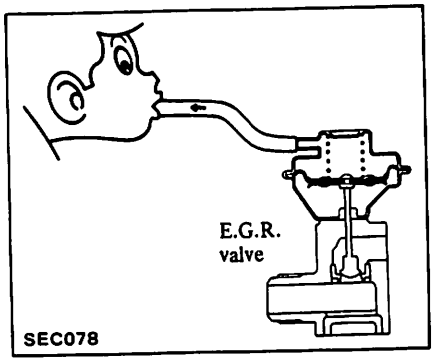

2. Visually check E.G.R. control valve for damage, wrinkle or deformation.

Thermal vacuum valve

Dismount thermal vacuum valve from engine.

Before dismounting, drain engine coolant about one liter.

Apply vacuum to thermal vacuum valve and check to be sure that thermal vacuum valve opens or closes in response to engine coolant temperature as specified.

Thermal vacuum valve should open or close at a temperature specified below, completing the vacuum passage.

Thermal vacuum valve operating temperature:

Operating temperature °C (°F)	
Open	Close
Below 55 (131)	Above 55 (131)

CAUTION:
Do not allow water to get inside the thermal vacuum valve.

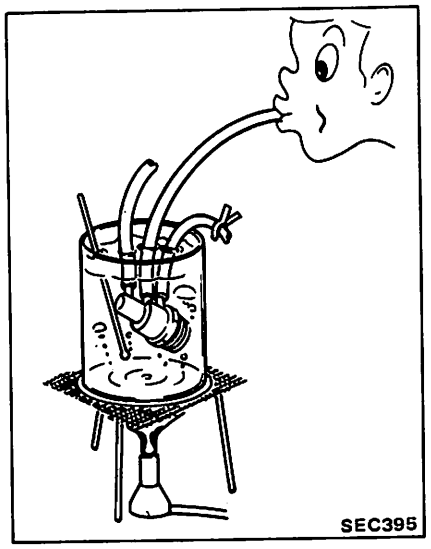

V.V.T. valve

1. Apply a pressure above 1.373 kPa (140 mmH_2O, 5.51 inH_2O) to V.V.T. valve and check it for leakage as shown below. If a leak is discovered, replace valve.

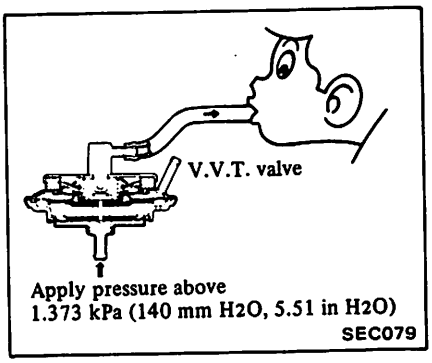

2. Apply vacuum pressure above 0.637 kPa (65 mmH_2O, 2.56 inH_2O) to V.V.T. valve and check it for leakage as shown below. If a leak is discovered, replace valve.

SPARK TIMING CONTROL SYSTEM

DESCRIPTION

The spark timing control system is designed to control the distributor vacuum advance under varying driving conditions so as to reduce HC and NOx emissions.

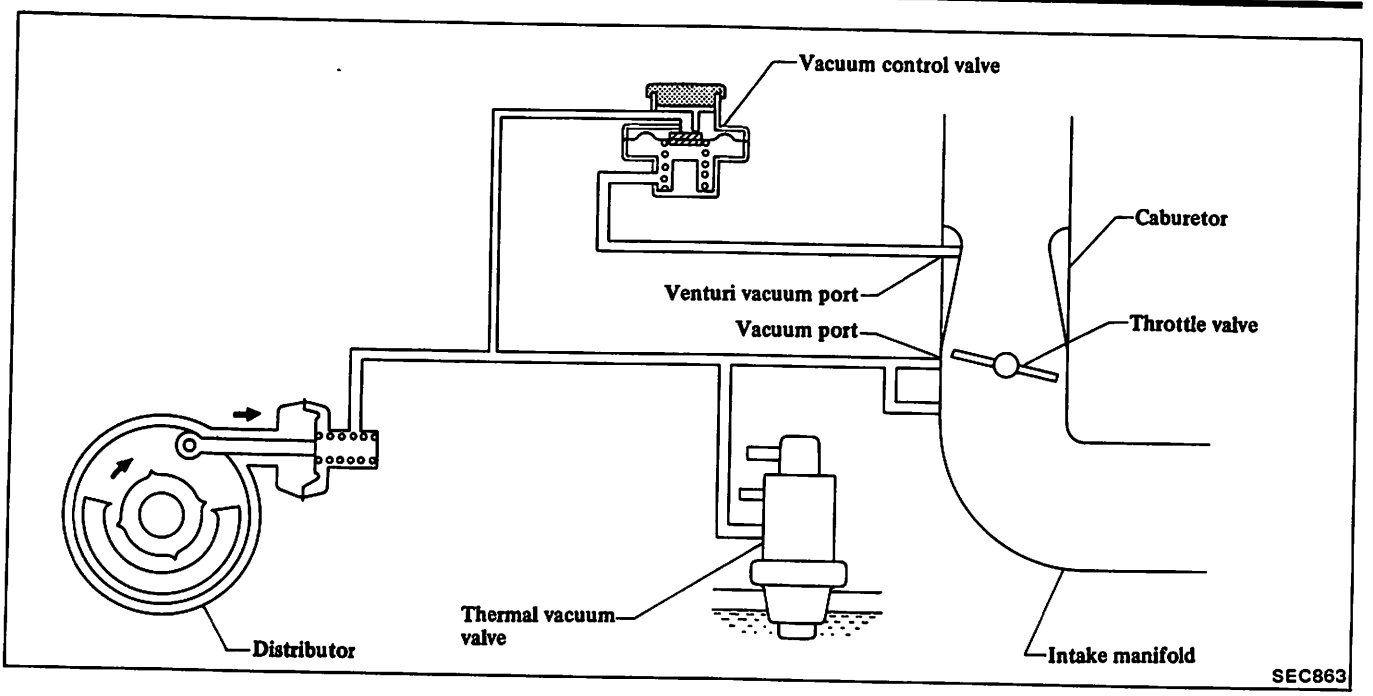

OPERATION

The operation of the system is as follows.

Water temperature °C (°F)	Thermal vacuum valve operation	Spark timing control system	
		Normal driving	Heavy load and high speed driving
Below 35 (95)	Closed	Actuated	Slightly actuated
35 - 55 (95 - 131)	Open	Not actuated	Not actuated
Above 55 (131)	Closed	Actuated	Slightly actuated

Vacuum control valve

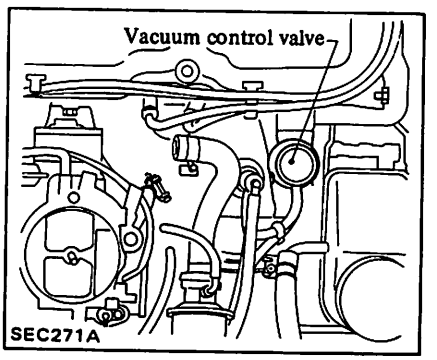

Thermal vacuum valve

The thermal vacuum valve designs are exactly the same as those used in the E.G.R. control system. This action opens and closes the valve, which causes the spark timing control vacuum line to be exposed or closed to the atmosphere.

The thermal valve opens and closes to either permit or obstruct external air passing to the distributor vacuum line. When the valve opens, the vacuum signal line will allow external air to enter, thereby stopping the distributor vacuum from advancing.

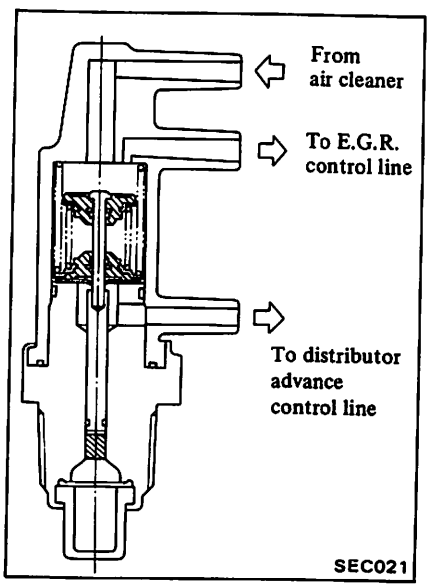

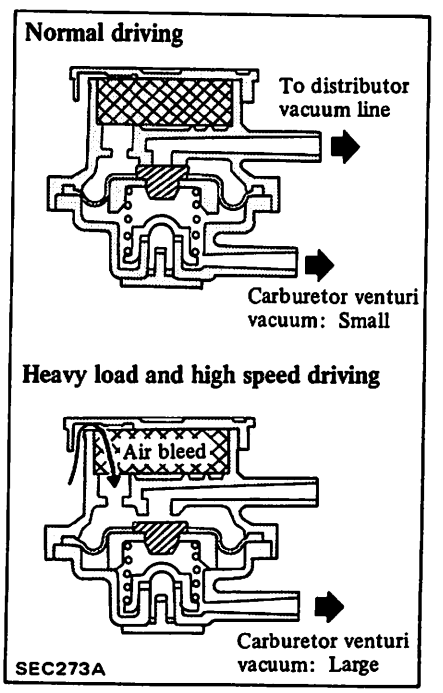

The vacuum control valve is installed in the distributor vacuum line. When the carburetor venturi vacuum exceeds the pre-set value, the air is bled to the distributor vacuum line and then, the spark timing retards slightly.

INSPECTION

Entire system

1. Ensure that vacuum hoses are properly connected to their connectors.
2. Make sure that distributor vacuum controller functions properly.
3. Set timing light.
4. Check thermal vacuum valve as follows.

(1) Using a timing light, check the spark timing while temperature gauge is in the C position.

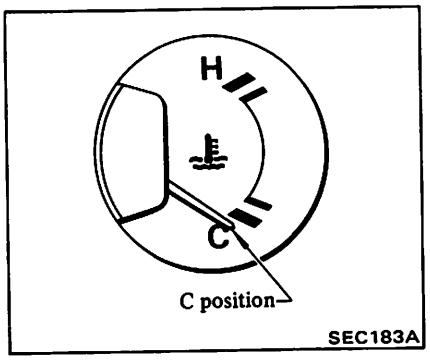

(2) Using a timing light, ensure that spark timing retards from the former condition when temperature gauge changes from the C-position to the middle position.

(3) Warm up the engine until coolant temperature gauge pointer moves to middle position of scale. Ensure that spark timing advances from its previous position.

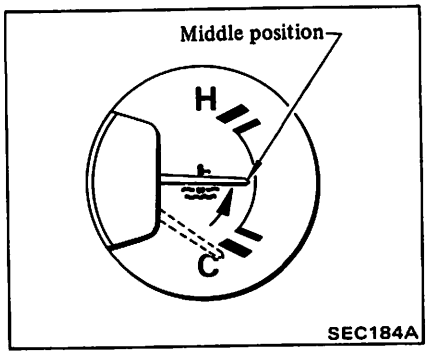

If spark timing does not change, replace thermal vacuum valve.

5. Check vacuum control valve as follows:

(1) Disconnect one end (vacuum control valve side) of venturi vacuum hose.

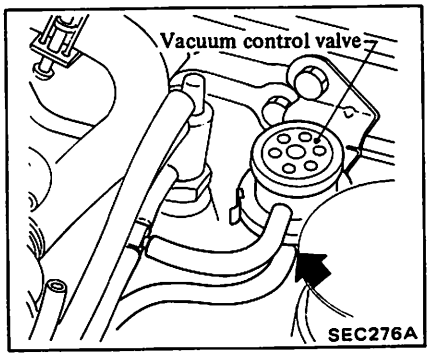

(2) Connect a proper vacuum hose and a variable vacuum source to the pipe as follows:

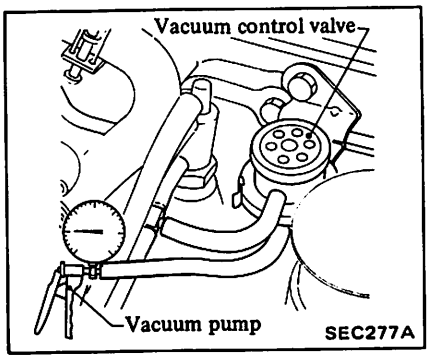

(3) When vacuum is applied, make sure that spark timing retards. If not, replace the valve.

Thermal vacuum valve

Remove thermal vacuum valve from engine. Inhale air from port of spark timing control system and check to be sure that thermal vacuum valve opens or closes in response to its temperature.

Thermal vacuum valve operating temperature:

Operating temperature °C (°F)	
Open	Close
35 - 55 (95 - 131)	Below 35 (95) Above 55 (131)

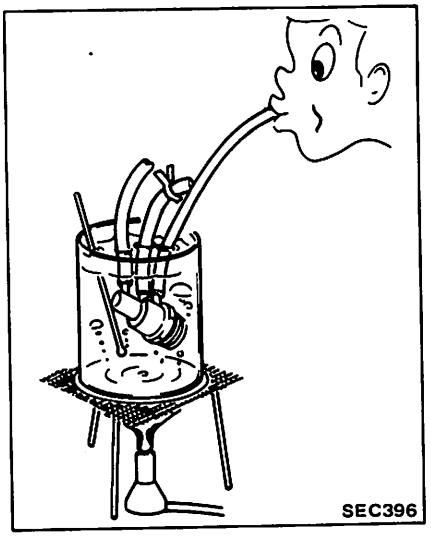

CAUTION:
Do not allow water to enter the thermal vacuum valve.

Vacuum control valve

1. Remove vacuum control valve from engine.
2. Apply vacuum to vacuum control valve, referring to the following figure, and ensure that distributor side of vacuum control valve opens or closes in response to the vacuum of carburetor side.

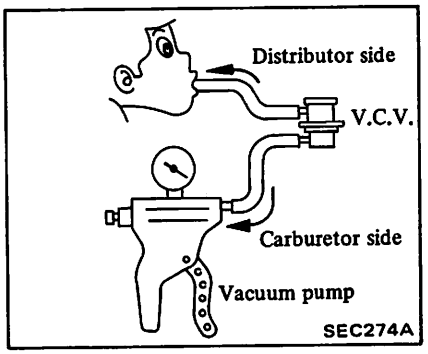

Carburetor side vacuum kPa (mmHg, inHg)	Distributor side
Below 13.3 (100, 3.94)	Close
Above 13.3 (100, 3.94)	Open

FUEL SHUT-OFF SYSTEM

DESCRIPTION

The fuel shut-off system is designed to reduce HC emission and to promote good fuel economy during deceleration.

OPERATION

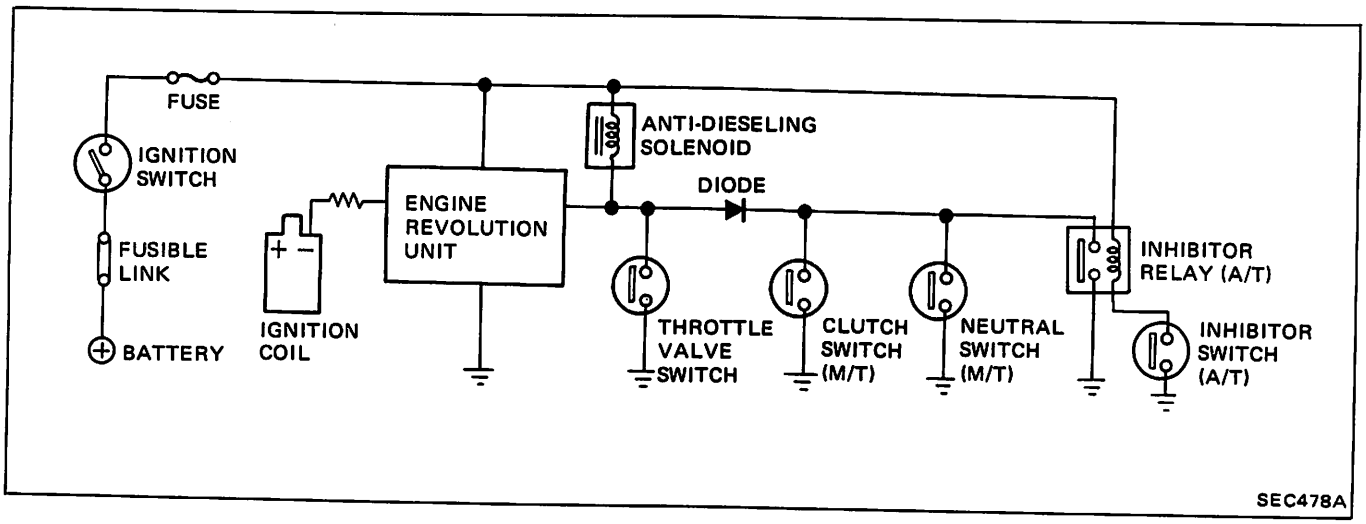

Engine operating condition			Fuel shut-off system
Neutral / Clutch / Inhibitor switch*1	Throttle valve switch*2	Engine speed*3	
ON			
Any condition	ON	Any condition	Not actuated
		Below 1,500 rpm	
OFF	OFF	Over 1,800 rpm	Actuated

*1 M/T ON: Gear is in Neutral or clutch is disengaged.
OFF: Gear is in other than Neutral and clutch is engaged.
A/T ON: Select position is "N" or "P".
OFF: Select position is other than "N" and "P".

*2 ON: Accelerating pedal is in other than fully released position.
OFF: Accelerating pedal is in fully released position.

*3

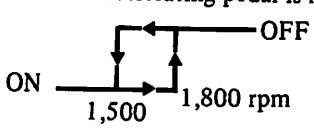

Engine revolution unit

The engine revolution unit is located under driver's seat and senses the engine speed. When engine speed is above specified value, this unit is activated, sending an electrical signal to the anti-dieseling solenoid valve, thereby inactivating the solenoid valve.

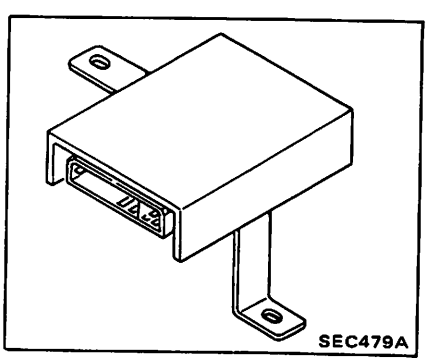

Throttle valve switch

The throttle valve switch is attached to the carburetor and actuates in response to the throttle valve movement.

Neutral switch

The neutral switch is located on the transmission case. When the gears are in Neutral, this switch activates, send-

ing an electrical signal to the anti-dieseling solenoid valve. Thus the anti-dieseling solenoid valve cannot operate.

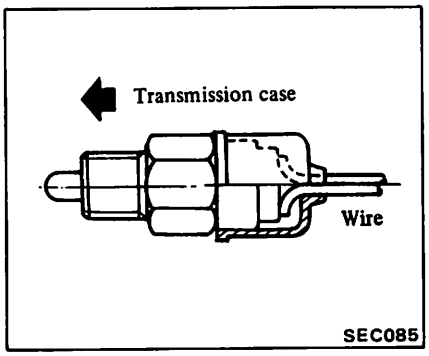

Clutch switch

The clutch switch is attached to the clutch pedal support. When the clutch is disengaged, this switch is activated, sending an electrical signal to the anti-dieseling solenoid valve. At this point, the anti-dieseling solenoid valve will not operate.

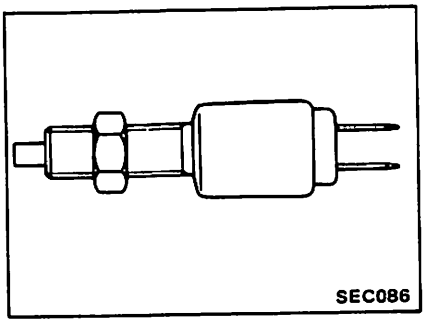

Inhibitor switch

The inhibitor switch is attached to the transmission. When the gears are in Neutral or the "P" position, this switch is activated, transmitting an electrical signal to the anti-dieseling solenoid valve, thereby inactivating the solenoid valve.

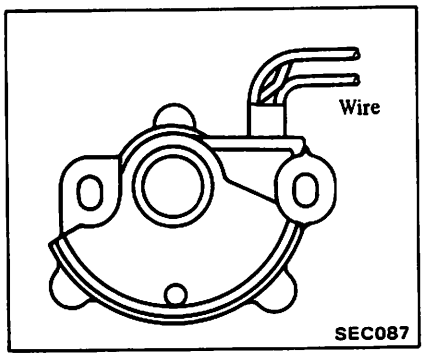

INSPECTION

Entire system

1. Make a thorough visual check of fuel shut-off system. If any switches are broken, replace.
2. With engine running between 2,500 and 3,000 rpm, inspect each switch for proper operation using a tester.

Operational modes of each switch should be as follows:

	Condition	
	Switch "ON"	Switch "OFF"
Engine revolution unit (Between #2 pin and body earth)	Below 1,500 rpm	Above 1,800 rpm
Throttle valve switch	Depressed	Fully released
Neutral switch	Gear position: Neutral position	Other positions
Clutch switch	Clutch disengaged	Clutch engaged
Inhibitor switch	Gear range "N" and "P" range	Other ranges

Throttle valve switch

1. Disconnect harness connector on carburetor.
2. Verify that choke valve is fully open.
3. Check the continuity between the terminal of the connector and carburetor body when accelerating pedal is depressed or released.

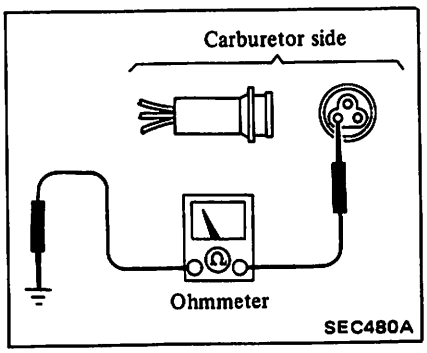

MIXTURE HEATING CONTROL SYSTEM

DESCRIPTION

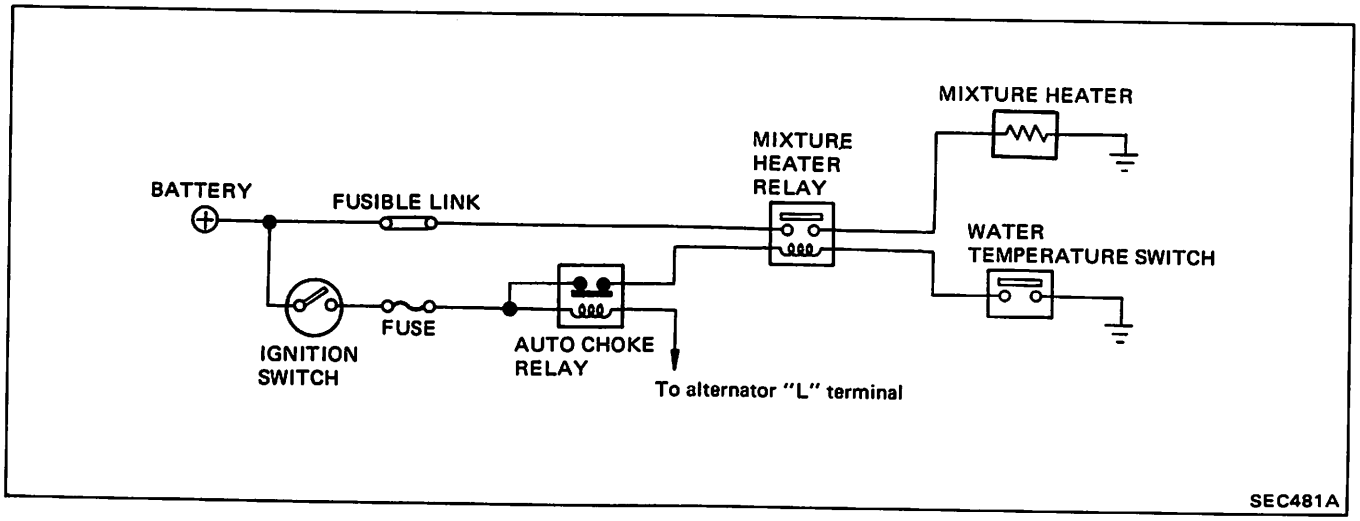

In order to reduce emissions and improve driveability during engine warm-up, the mixture heater is installed between carburetor and intake manifold.

OPERATION

Water temperature °C (°F)	Mixture heating system
Below 70 (158)	Activated
Above 70 (158)	Deactivated

Mixture heater

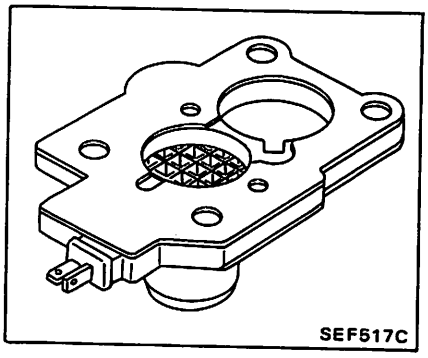

The mixture heater uses a honeycomb P.T.C. heater design and is situated on the primary side of the carburetor insulator.

Water temperature switch

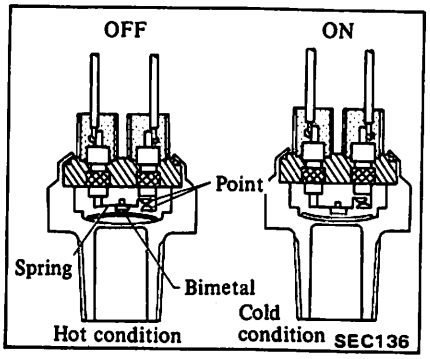

INSPECTION

1. Check continuity between terminals of mixture heater. If resistance is too large, replace carburetor insulator.
2. Entire system

(1) When ignition switch is turned "ON" while engine is "OFF", confirm the presence of battery voltage at mixture heater harness connector. If no battery voltage is present, check water temperature switch and mixture heater relay.

(2) Check continuity between terminals of water temperature switch at connector.

Water temperature °C (°F)	Water temperature switch operation
Below 70 (158)	ON
Above 70 (158)	OFF

(3) Check mixture heater relay.

If necessary, check wiring harness and automatic choke relay.

BOOST CONTROLLED DECELERATION DEVICE

DESCRIPTION

This system is designed to reduce the engine's lubricating oil consumption when the intake manifold vacuum increases to an extremely high level during deceleration.

This system consists of two units as follows:

1. Boost Control Unit (Boost Control Valve and Diaphragm) as the manifold vacuum sensor.
2. By-pass Air Control Unit (By-pass Air Control Valve and Diaphragm) as actuator.

OPERATION

The boost control unit senses the manifold vacuum. When the level of the manifold vacuum increases above the predetermined value, the boost control valve opens and transmits the manifold vacuum to the by-pass air control unit. The manifold vacuum then pulls the diaphragm-II and opens the by-pass air control valve thereby causing the air to be by-passed to the intake manifold. After completion of the air by-pass, the manifold vacuum is lowered. This results in closing of

the boost control valve and then closing of the air control valve. This system operates in a tightly controlled circuit so that the manifold vacuum can be kept very close to the predetermined value during the deceleration.

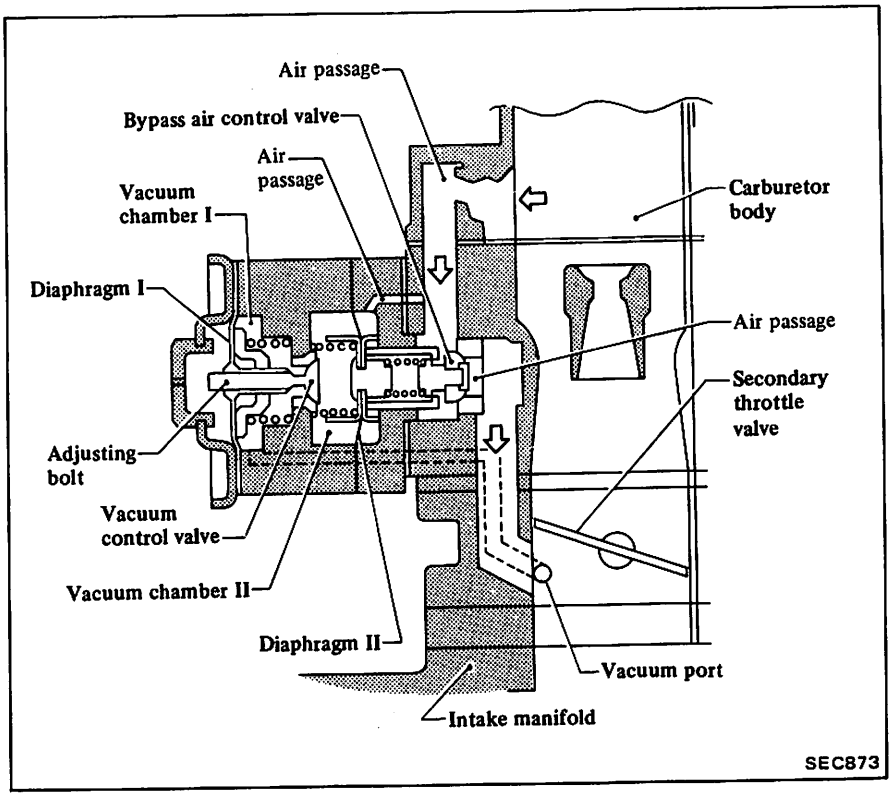

INSPECTION

Entire system

Generally, it is unnecessary to adjust the boost control valve. However, if it becomes necessary to adjust it, proceed as follows:

Prepare the following tools.

(1) A tachometer to measure the engine speed while idling.

(2) A vacuum gauge and connecting pipe.

1. Connect rubber hose between vacuum gauge and intake manifold.
2. Warm up the engine until it reaches its operating temperature.

Then adjust the engine to normal idle setting. (Refer to the item "Idle Adjustment".)

3. Run the engine under no load. Increase engine speed from idle to 2,000 rpm, then quickly close throttle valve.
4. At that time, the manifold vacuum pressure will change as follows:

1) It will abruptly rise up to –81.3 kPa (–610 mmHg, –24.02 inHg) or above.
2) It will decrease gradually to a certain level and stay there for a while. This is so called operating pressure.
3) In most cases, it will drop to idle pressure.

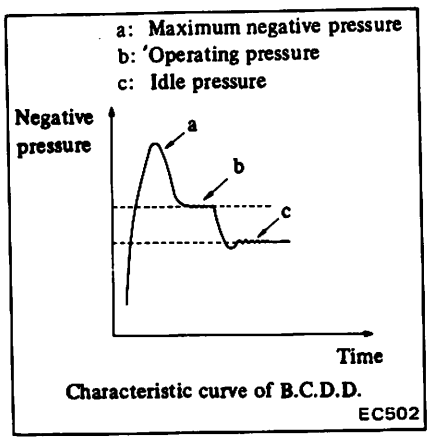

Characteristic curve of B.C.D.D.

5. Check that the by-pass air control valve operating pressure is within the specified range.

Operating pressure:
–81.3±0.7 kPa
(–610±5 mmHg,
–24.02±0.20 inHg)

6. If it is lower or higher than the specified level, turn the adjusting screw in the following direction until correct adjustment is made.

Adjusting screw:

Lower condition .... Counterclockwise
Higher condition .... Clockwise

7. Race the engine and recheck for adjustment. Readjust it if necessary.

If engine speed cannot be decreased to idling when checking B.C.D.D. operating pressure, proceed as follows.

8.
(1) Turn adjusting screw counterclockwise so that B.C.D.D. operating pressure is on high vacuum side, 3.3 kPa (25 mmHg, 0.98 inHg) away from the specified value.
Make sure that engine speed is decreased to idle when checking B.C.D.D. operating pressure.
(2) Turn adjusting screw 1/4 of a turn clockwise so that B.C.D.D. operating pressure drops by 3.3 kPa (25 mmHg, 0.98 inHg).
If B.C.D.D. operating pressure cannot be observed clearly even in step 8 (1), proceed as follows.

9.
(1) Turn adjusting screw counterclockwise so that B.C.D.D. operating pressure is on the high vacuum side, 6.7 kPa (50 mmHg, 1.97 inHg) away from the specified value.
Make sure that engine speed is decreased to idle when checking B.C.D.D. operating pressure.
(2) Turn the adjusting screw 1/2 of a turn clockwise.

10. If B.C.D.D. does not operate in step 8 (1) or step 9 (1), replace B.C.D.D. unit.

SPARK PLUG SWITCHING CONTROL SYSTEM

DESCRIPTION

The spark plug switching control system is designed to change the ignition system from 2-plug ignition to 1-plug ignition during heavy load driving conditions in order to reduce engine noise.

This system also functions to advance ignition timing by the specified value during 1-plug ignition.

OPERATION

This system is composed of ignition control unit, which is installed in distributor and has a switching function which allows it to change from 2-plug ignition to 1-plug ignition, and vacuum switch which senses the intake manifold vacuum. Neutral switch, clutch switch (M/T models) and inhibitor switch (A/T models) are also used as auxiliary control devices.

Engine operating condition			Ignition control
Neutral Clutch Inhibitor switch*1	Vacuum switch*2	Water temperature*3	
ON			2-spark plug system
Any condition	ON	Any condition	
		Below 70°C (158°F)	
OFF	OFF	Over 70°C (158°F)	1-spark plug system

*1 M/T { ON: Gear is in Neutral or clutch is disengaged.
OFF: Gear is in other than Neutral and clutch is engaged.
A/T { ON: Select position is "N" or "P".
OFF: Select position is other than "N" and "P".

*2 { ON: Idling or light load (Intake manifold vacuum≧10.7 kPa (80 mmHg, 3.15 inHg)
OFF: Cranking or full throttle (Intake manifold vacuum<10.7 kPa (80 mmHg, 3.15 inHg)

*3 The same switch as used in mixture heater system.

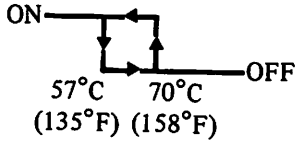

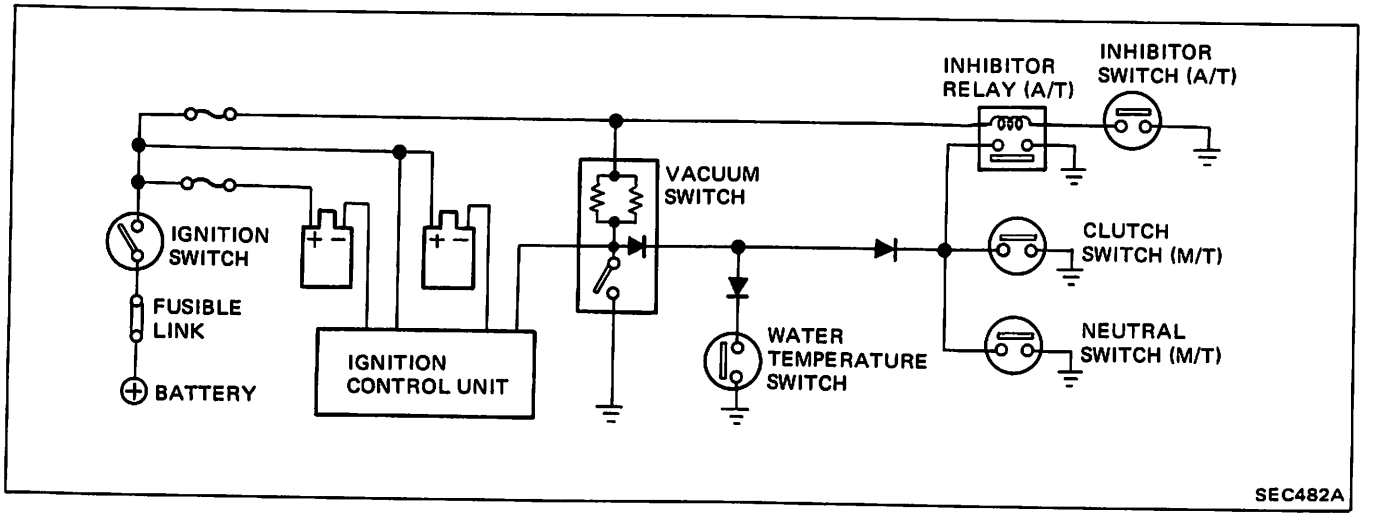

INSPECTION

Entire system

1. Disconnect inhibitor switch harness connector (A/T models) or clutch switch harness connector (M/T models).
2. Disconnect a vacuum hose of vacuum switch, and connect a proper vacuum hose and a variable vacuum source to vacuum switch.

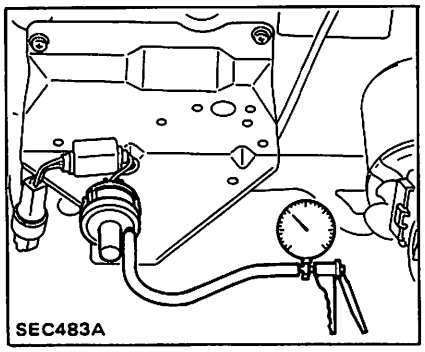

3. Set a timing light to the exhaust side of high tension cable.
4. Apply vacuum –20.0 kPa (–150 mmHg, –5.91 inHg) to vacuum switch and start engine.
5. Then, reduce the vacuum gradually and make sure that a timing light does not brighten and dim when a vacuum reaches to about –10.7 kPa (–80 mmHg, –3.15 inHg) or less.
If not, check each component and replace it if necessary.
6. Reset a timing light to the intake side of high tension cable. Apply vacuum –20.0 kPa (–150 mmHg, –5.91 inHg) to vacuum switch.
7. Then, reduce the vacuum gradually and make sure that a spark timing advances.
If not, replace IC unit in the distributor.

CATALYTIC CONVERTER

OXIDATION CATALYTIC CONVERTER

Description

The catalytic converter accelerates the chemical reaction of hydrocarbons (HC) and carbon monoxide (CO) in the exhaust gas, and changes them into harmless carbon dioxide (CO_2) and water (H_2O). This chemical reaction process requires the proper amount of air, which is induced by the air injection valve (Refer to the item "AIR INJECTION SYSTEM"). This air is called "secondary air".

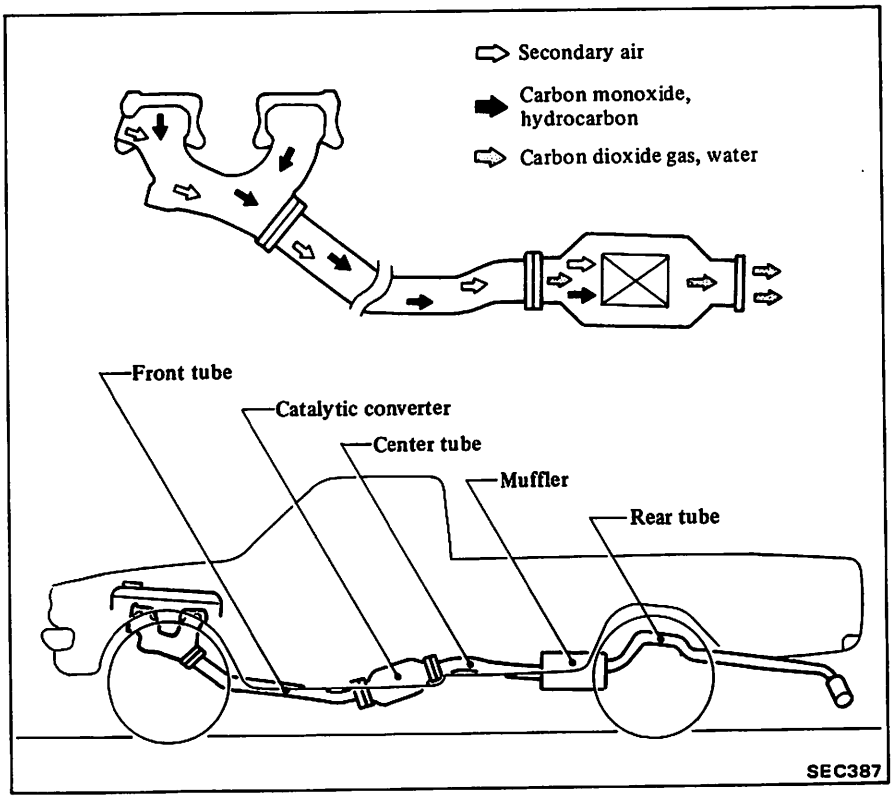

Operation

Exhaust gas emitted from the engine contains some harmful substances due to incomplete combustion in the combustion chamber. The air injection system is designed to reduce the content of such substances in the exhaust gas. In this system, the secondary air is led from the air induction valve and injected into the exhaust manifold. With this injection of the secondary air, hydrocarbons (HC) and carbon monoxide (CO) in the exhaust gas are gradually oxidized with oxygen (O_2) in the secondary air and converted into harmless carbon dioxide (CO_2) and water (H_2O).

The catalytic converter further cleans engine exhaust gas. Through catalytic action, it changes residual hydrocarbons and carbon monoxide contained in exhaust gas into carbon dioxide and water before exhaust gas is discharged to the atmosphere.

EVAPORATIVE EMISSION CONTROL SYSTEM

DESCRIPTION

The evaporative emission control system is used to reduce hydrocarbons emitted to the atmosphere from the fuel system. This reduction of hydrocarbons is accomplished by activated charcoals in the carbon canister.

This system is made up of the following:

1. Fuel tank with positive sealing filler cap.
2. Fuel check valve
3. Vapor vent line
4. Carbon canister
5. Vacuum signal line
6. Canister purge line

Removal and installation of above components are described in Section FE.

OPERATION

Fuel vapors from the sealed fuel tank are directed to the carbon canister which is filled with activated charcoals and stored there when the engine is not running.

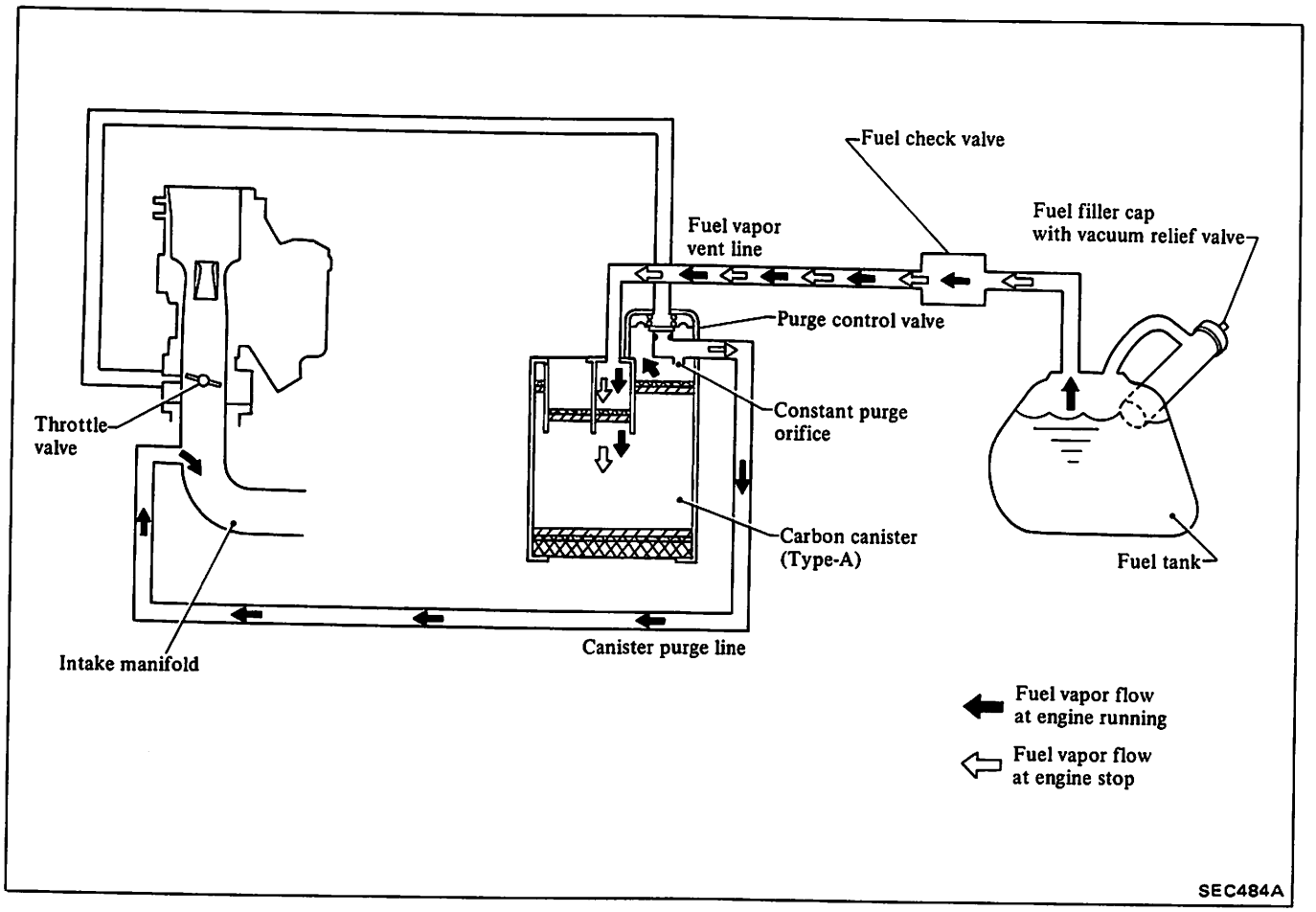

The canister retains the vapor until it is purged by the air drawn through the purge line towards the intake manifold while the engine is operating. When the engine runs at idle, the purge control valve is closed. Only a small amount of purge air flows into the intake manifold through the constant purge orifice. As the engine speed increases, and the ported vacuum rises higher, the purge control valve opens and the vapor is drawn into the intake manifold through both the fixed orifice and the constant purge orifice.

(1) Engine does not operate.

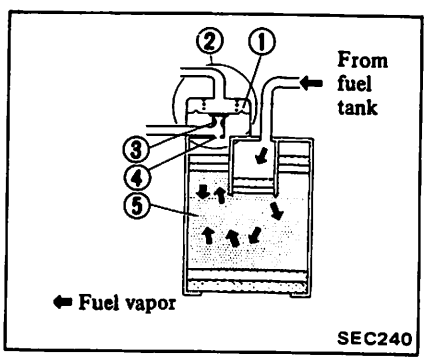

1 Diaphragm
2 Purge control valve
3 Fixed orifice
4 Constant fixed orifice
5 Activated carbon

(2) Engine operates at idle.

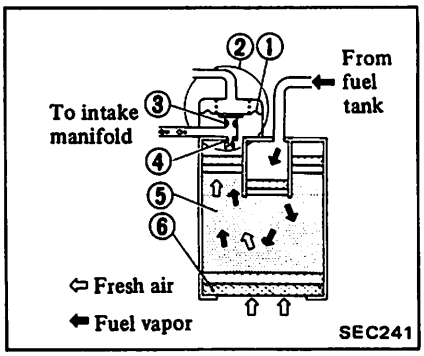

1 Diaphragm
2 Purge control valve
3 Fixed orifice
4 Constant fixed orifice
5 Activated carbon
6 Filter

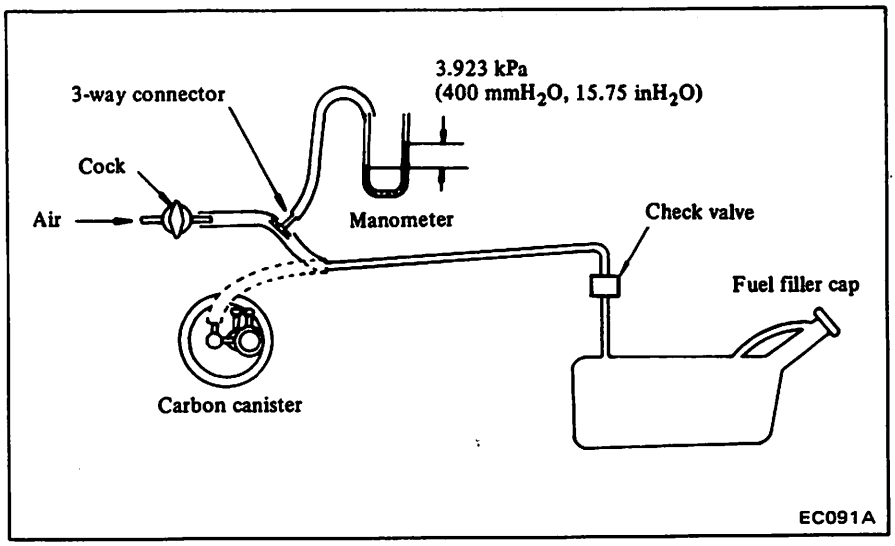

(3) Engine speed increases.

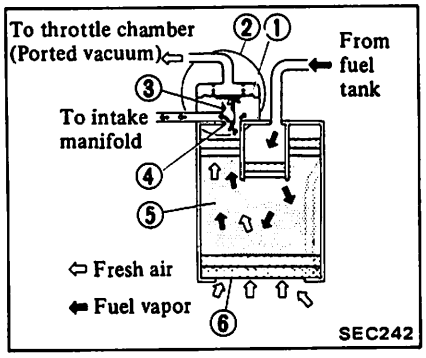

1 Diaphragm
2 Purge control valve
3 Fixed orifice
4 Constant fixed orifice
5 Activated carbon
6 Filter

5. Shut the cock completely and leave it unattended.
6. After 2.5 minutes, measure the height of the liquid in the manometer.
7. Variation in height should remain with 0.245 kPa (25 mmH_2O, 0.98 inH_2O).
8. When filler cap does not close completely, the height should drop to zero in a short time.
9. If the height does not drop to zero in a short time when filler cap is removed, it is the cause of a stuffy hose.

In case the vent line is stuffy, the breathing in fuel tank is not thoroughly made, thus causing insufficient delivery of fuel to engine or vapor lock. It must, therefore, be repaired or replaced.

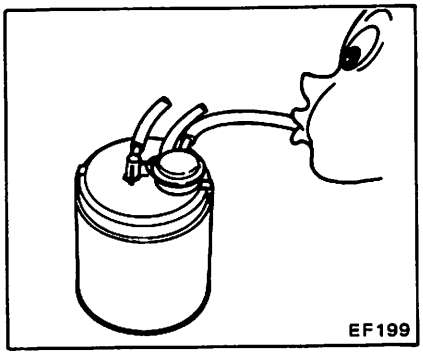

3. If there is a leak, remove top cover from purge control valve and check for dislocated or cracked diaphragm. If necessary, replace diaphragm kit (which is made up of a retainer, diaphragm and spring).

INSPECTION

FUEL TANK AND VAPOR VENT LINE

1. Check all hoses and fuel tank filler cap.
2. Disconnect the vapor vent line connecting carbon canister to fuel tank.
3. Connect a 3-way connector, a manometer and a cock (or an equivalent 3-way charge cock) to the end of the vent line.
4. Supply fresh air into the vapor vent line through the cock little by little until pressure becomes 3.923 kPa (400 mmH_2O, 15.75 inH_2O).

CARBON CANISTER PURGE CONTROL VALVE

Check for fuel vapor leakage, in the distributor vacuum line, at diaphragm of carbon canister purge control valve.

To check for leakage, proceed as follows:

1. Disconnect rubber hose, in the line, between T-connector and carbon canister at T-connector.
2. Inhale air into the opening of rubber hose running to vacuum hole in carbon canister and ensure that there is no leak.

CARBON CANISTER CONSTANT PURGE ORIFICE

Check the constant purge flow in the intake manifold vacuumline, at the constant purge orifice of the carbon canister.

To check the purge flow, proceed as follows:

1. Disconnect the rubber hose on the line between the steel pipe of the engine and the canister.
2. Force air into the opening of the rubber hose which runs to the carbon

canister and ensure that there are no leaks.

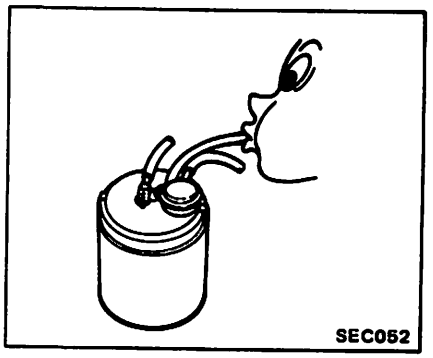

3. If there are no leaks, remove purge control valve and check the constant purge orifice for leaks. If necessary, clean the constant purge orifice.

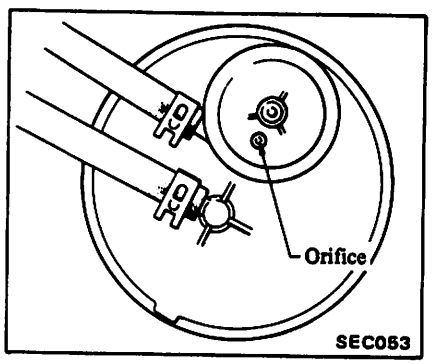

FUEL TANK VACUUM RELIEF VALVE

Remove fuel filler cap and see it functions properly.

1. Wipe clean valve housing and have it in your mouth.
2. Inhale air. A slight resistance accompanied by valve indicates that valve is in good mechanical condition. Note also that, by further inhaling air, the resistance should be disappeared as valve clicks.
3. If valve is clogged, or if no resistance is felt, replace cap as an assembled unit.

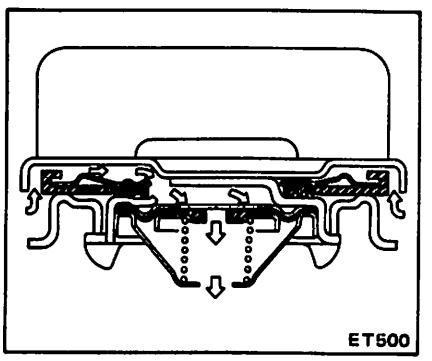

FUEL CHECK VALVE

1. Blow air through connector on fuel tank side.

A considerable resistance should be felt at the mouth and a portion of air flow be directed toward the engine.

2. Blow air through connector on engine side.

Air flow should be smoothly directed toward fuel tank.

3. If fuel check valve is suspected of not being properly functioning in steps 1 and 2 above, replace.

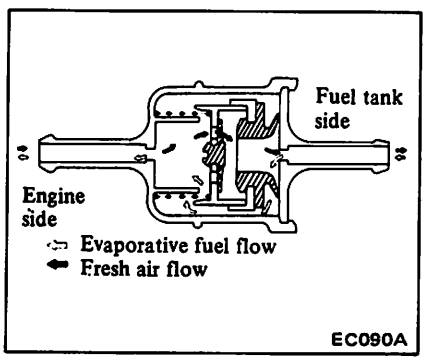

INJECTION PUMP ASSEMBLY (DIESEL KIKI-Bosch in-line type)

DESCRIPTION

CAUTION: Disassembling and assembling this in-line type pump may be done only in service shops authorized by the pump manufacturer.
In case of pump failure or damage, the pump must be replaced as an assembly, except for certain simple parts on the outside of the pump.

INJECTION PUMP

REMOVAL

1. Remove Tem-coupling with fan and radiator.
2. Remove injection tubes.

Cover the delivery holders of the injection pump and injection nozzle assembly with a plug to block the entry of dirt.

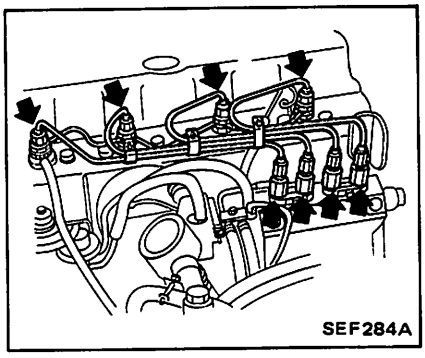

3. Disconnect governor hoses, fuel hoses, diesel pump controller connecting rod and oil feed pipe bolt.

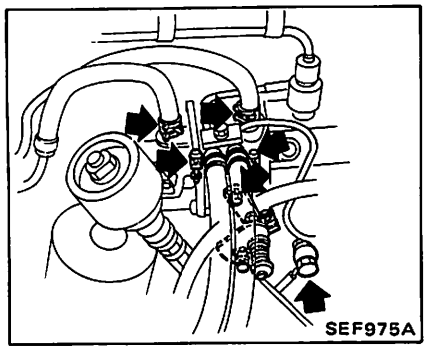

4. Remove oil filter.
5. Remove injection rear bracket.

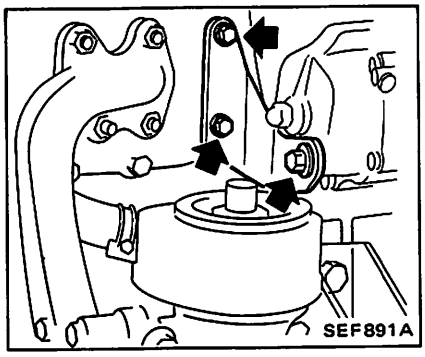

6. Remove timing gear cover.

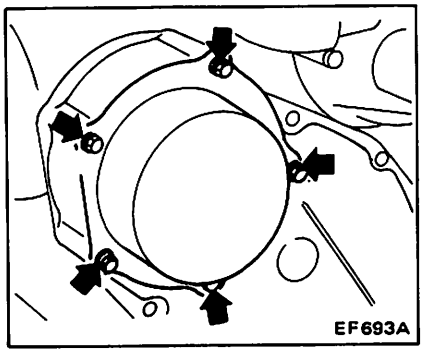

7. Remove timer round nut.

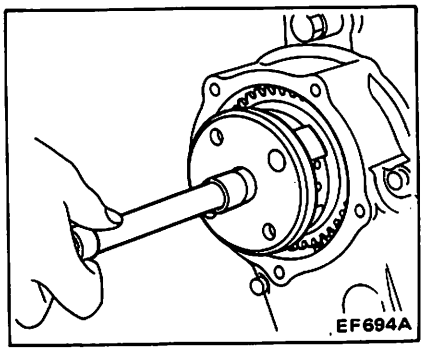

8. Remove timer assembly by threading in **Tool.**

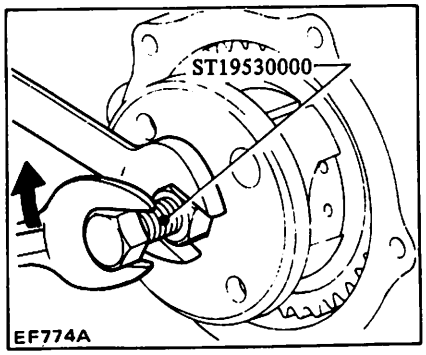

9. Remove injection pump assembly.

Remove injection pump inlet tube if necessary.

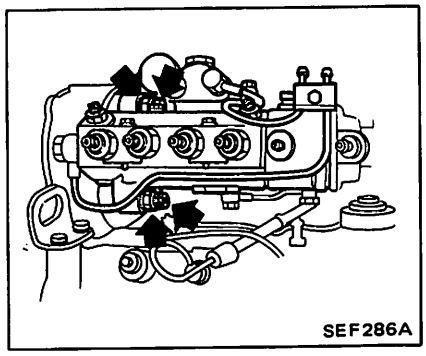

INSTALLATION

1. Align front cover and crank pulley mark for setting No. 1 piston at T.D.C.

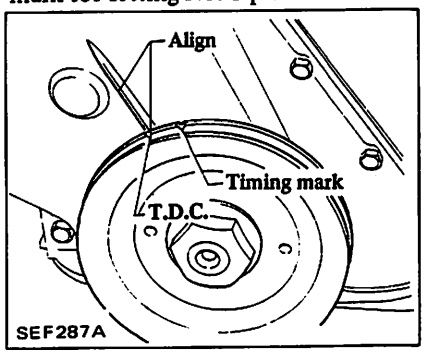

2. Injection pump
(1) Temporarily set injection pump.
(2) Mesh injection pump drive gear with idler gear **at "Y" mark** and then align gear to keyway of injection pump camshaft **while turning crank pulley.**

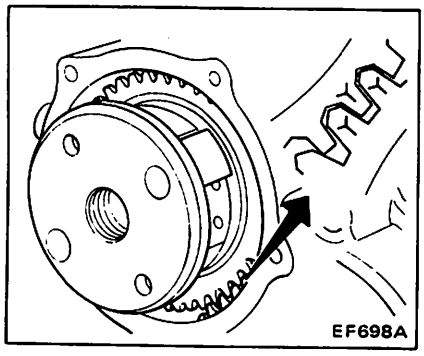

(3) Secure timer assembly with lock washer and round nut.

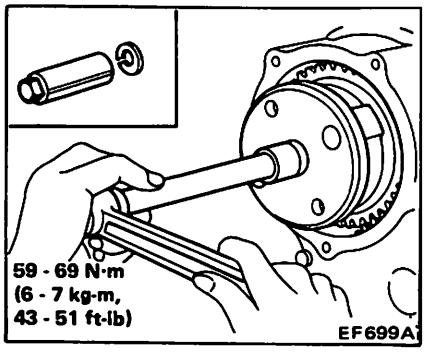

3. Set pump mark and front cover mark. Refer to Checking and Adjusting Injection Timing in section MA.

Ⓣ : Injection pump nut
20 - 25 N·m
(2.0 - 2.5 kg-m,
14 - 18 ft-lb)

4. Bleed air from fuel system. Refer to Section MA.
5. Install radiator and Tem-coupling with fan.

ALTITUDE COMPENSATOR (Only U.S.A. model)

REMOVAL AND INSTALLATION

1. Remove altitude compensator from bracket.

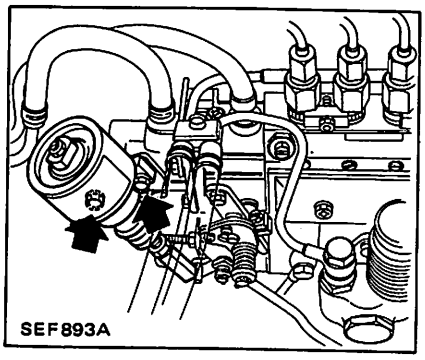

2. Disconnect vacuum hose and remove bracket from injection pump.

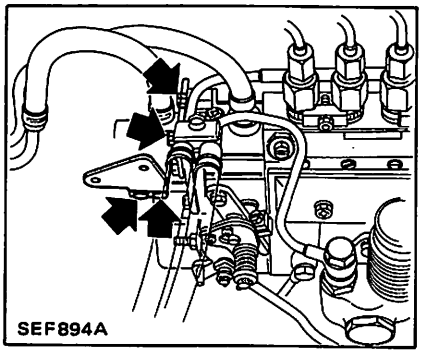

3. Install altitude compensator in the reverse order of removal.

INSPECTION

1. Check for loose connections.
2. Check for altitude compensator movement.

If it does not move, contact a service shop authorized by the pump manufacturer.

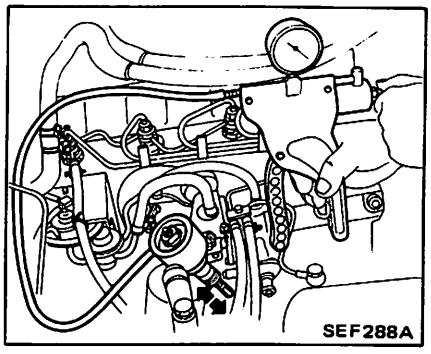

ADJUSTMENT

This adjustment should be performed with injection lever in free position.

1. Disconnect diesel pump controller rod.

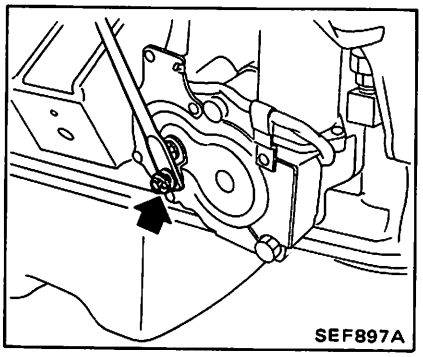

2. Loosen lock nut and cap nut of altitude compensator.

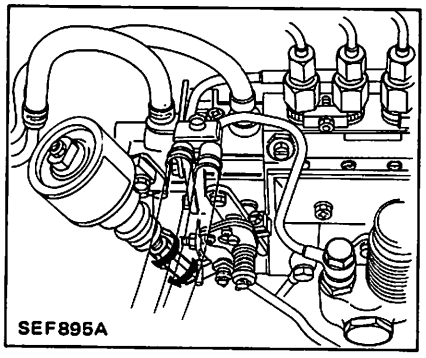

3. Turn cap nut touch with injection lever and temporary tighten lock nut.

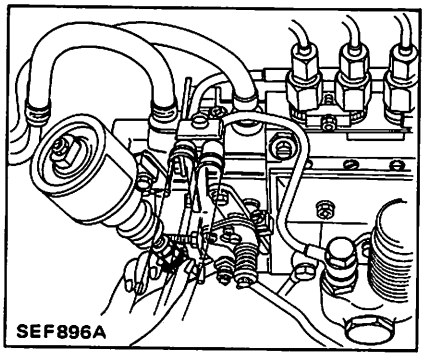

4. Determining position of cap nut
(1) Precise method
a. Using a barometer, measure atmospheric pressure in areas where vehicles are to be operated.
b. Determine how much the cap nut should be loosened by using the equation below.

$$R = 9.878 \times 10^{-3} \times (760 - P)$$

where
R: Amount of loosening of cap nut (No. of revolutions of cap nut)
P: Measured atmospheric pressure (mmHg)

Reference table

Atmospheric pressure P kPa (mmHg, inHg)	101.3 (760, 29.92)	100.0 (750, 29.53)	93.3 (700, 27.56)	86.6 (650, 25.59)	80.0 (600, 23.62)	73.3 (550, 21.65)	66.7 (500, 19.69)
Amount of loosening of cap nut (No. of R revolutions of cap nut)	0	0.1~0.3	0.4~0.8	0.9~1.3	1.4~1.8	1.9~2.3	2.4~2.6

(2) Expedient method

Determine how much the cap nut should be loosened, according to altitude above sea level.

Approximate altitude m (ft)	0 (0)	120 (394)	700 (2,297)	1,300 (4,265)	2,000 (6,562)	2,700 (8,859)	3,400 (11,155)
Amount of loosening of cap nut (No. of revolutions of cap nut)	0	0.1~0.3	0.4~0.8	0.9~1.3	1.4~1.8	1.9~2.3	2.4~2.6

5. Mark cap nut indicating the number of times cap nut should be rotated according to altitudes in which vehicles are to be operated.
6. Tighten lock nut.
7. Install diesel pump controller rod.

Ensure that bolt comes into contact with injection pump lever. If it does not, loosen the bolt and readjust.

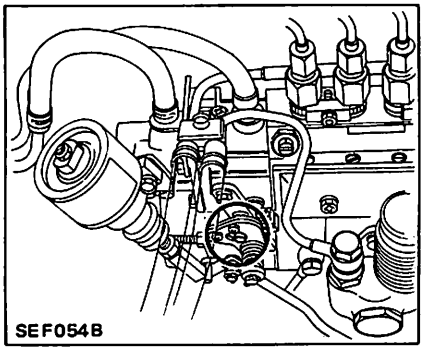
SEF054B

INJECTION NOZZLE ASSEMBLY

REMOVAL AND INSTALLATION

1. Remove injection tube assembly.

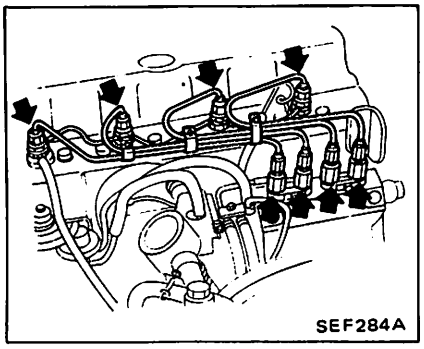
SEF284A

2. Remove spill tube assembly.

To prevent spill tube from breaking, remove it by gripping nozzle holder.

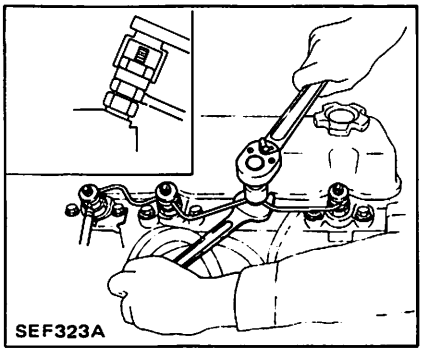
SEF323A

3. Remove injection nozzle assembly with Tool.

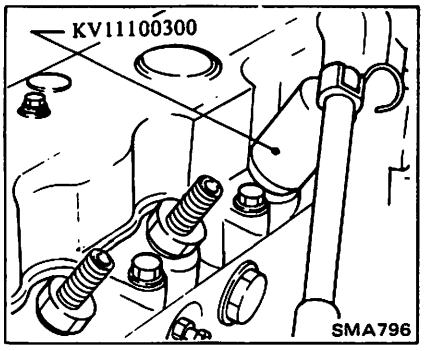

SMA796

4. Install injection nozzle in the reverse order of removal.

Ⓣ : Injection nozzle to engine
59 - 69 N·m
(6.0 - 7.0 kg-m,
43 - 51 ft-lb)

Ⓣ : Spill tube nut
39 - 49 N·m
(4.0 - 5.0 kg-m,
29 - 36 ft-lb)

Ⓣ : Injection tube flare nut
29 - 34 N·m
(3.0 - 3.5 kg-m,
22 - 25 ft-lb)

a. Nozzle gasket should always be replaced. Refer to Section MA.
b. To prevent spill tube from breaking later, spill tube nuts should be tightened gradually in sequence.
c. Bleed air from fuel system. Refer to Section MA.

DISASSEMBLY

1. Loosen nozzle nut while keeping nozzle top from turning.

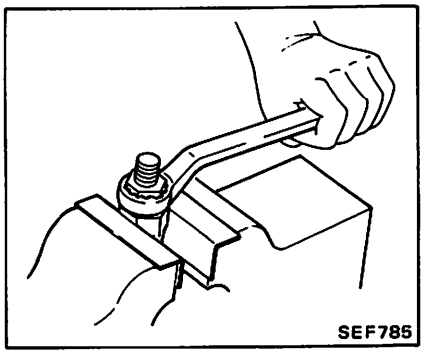
SEF785

2. Arrange all of disassembled parts in order shown below.

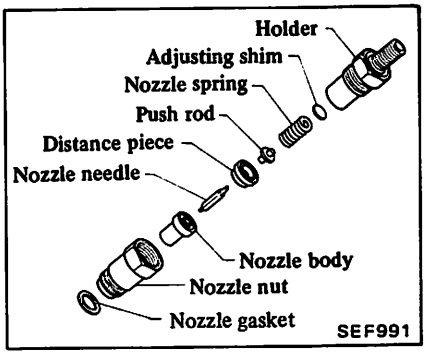

SEF991

INSPECTION

Thoroughly clean all disassembled parts with fresh kerosene or solvent.

- If nozzle needle is damaged or fused, replace nozzle assembly with a new one.
- If end of nozzle needle is seized or excessively discolored, replace nozzle assembly.
- Check nozzle body and distance piece for proper contact. If excessively worn or damaged, replace nozzle assembly or distance pieces.

- Check distance piece and nozzle holder for proper contact. If excessively worn or damaged, replace distance piece or nozzle holder.
- Check nozzle spring for excessive wear or damage. If excessively worn or damaged, replace it with a new spring.

CLEANING

1. Clean nozzle assembly using the Nozzle Cleaning Kit.

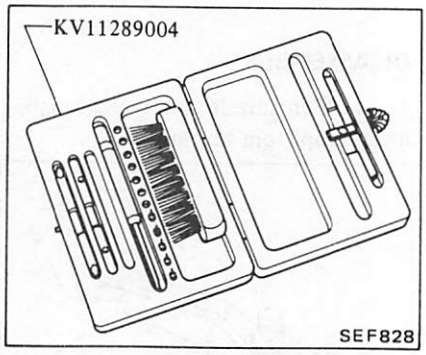

2. Portions which should be cleaned are indicated in figure below.

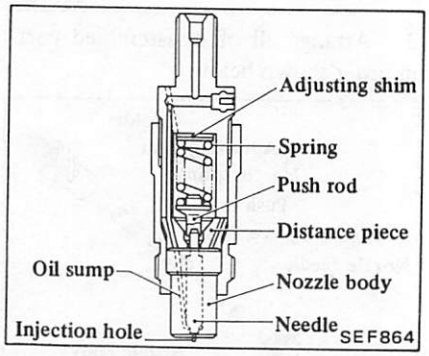

3. Remove any carbon from exterior of nozzle body (except wrapping angle portion) by using Tool.

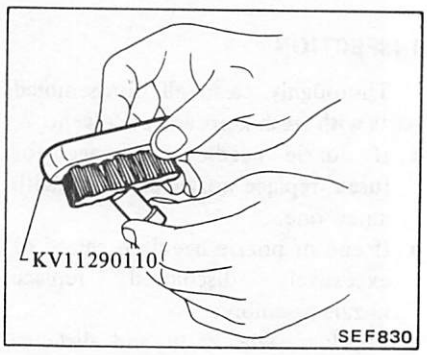

4. Clean oil sump of nozzle body using Tool.

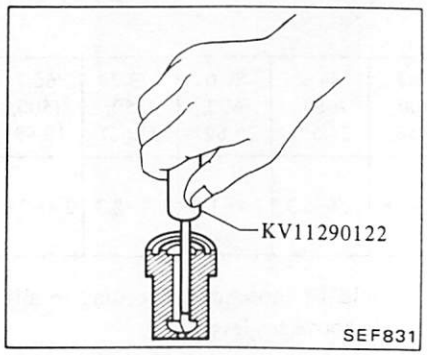

5. Clean nozzle seat by using Tool.

This job should be performed with extra precautions, since efficiency of nozzle depends greatly on a good nozzle seat.

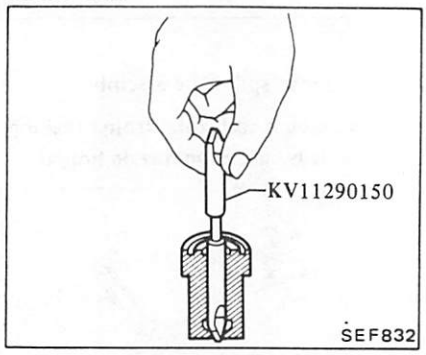

6. Clean spray hole of nozzle body by using Tool.

To prevent spray hole from canting, always clean it by starting with inner side and working towards outside.

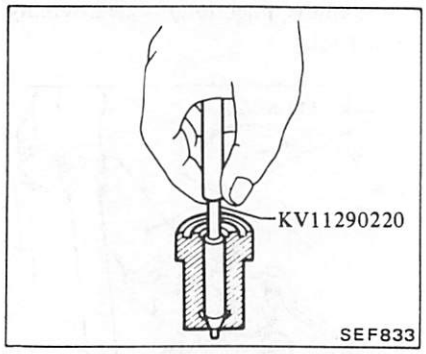

7. Decarbon nozzle needle tip by using Tool.

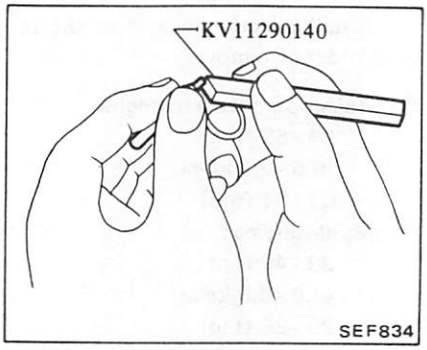

8. Check needle for proper position.
(1) Pull needle about halfway out from body and then release it.
(2) Needle should sink into body very smoothly from just its own weight.
(3) Repeat this test and rotate needle slightly each time.

If needle fails to sink smoothly from any position, replace both needle and body as a unit.

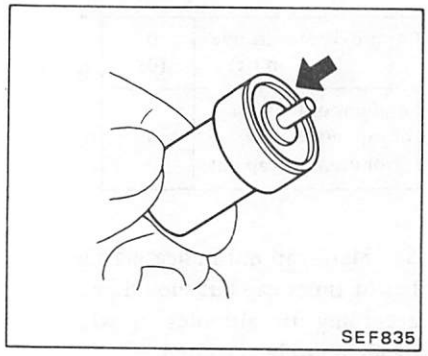

ASSEMBLY

Assemble in the reverse order of disassembly, observing the following.

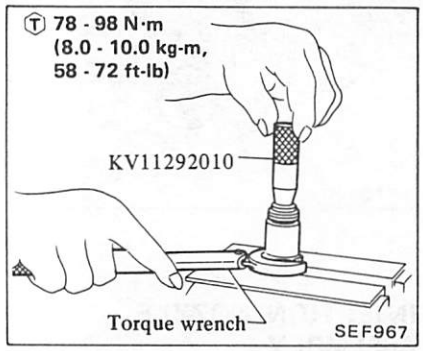

TEST AND ADJUSTMENT

WARNING:
When using nozzle tester, be careful not to allow fuel sprayed from nozzle to come into contact with your hand or body, and make sure that your eyes are properly protected with goggles.

Injection pressure test

1. Install nozzle to injection nozzle tester and bleed air from flare nut.

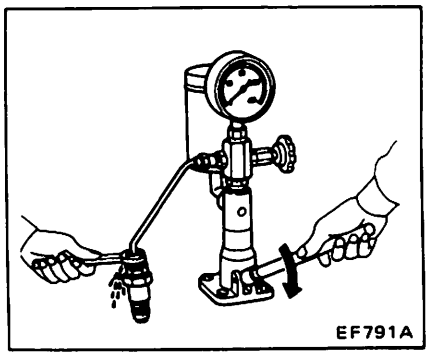

2. Pump the tester handle slowly (one time per second) and watch the pressure gauge.
3. Read the pressure gauge when the injection pressure just starts dropping.

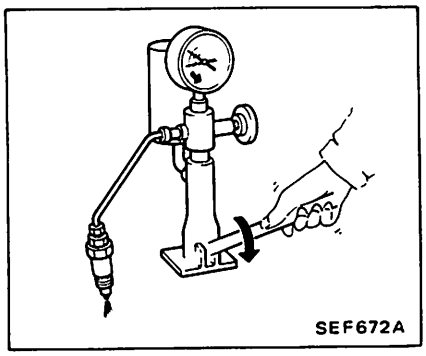

Initial injection pressure:
Used
9,807 - 10,297 kPa
(100 - 105 kg/cm², 1,422 - 1,493 psi)
New
10.297 - 11,082 kPa
(105 - 113 kg/cm², 1,493 - 1,607 psi)

New nozzle is required to always check initial injection pressure.

4. To adjust injection pressure, change adjusting shims.

a. **Increasing the thickness of adjusting shims increases initial injection pressure. Decreasing thickness reduces initial pressure.**
b. **A shim thickness of 0.04 mm (0.0016 in) corresponds approximately to a difference of 471 kPa (4.8 kg/cm², 68 psi) in initial injection pressure.**

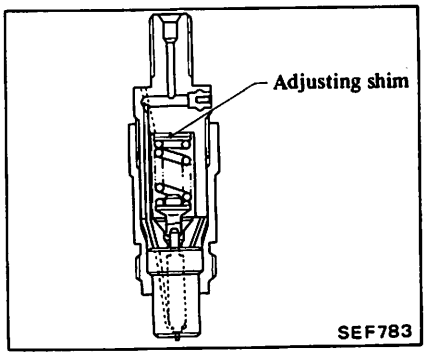

Leakage test

1. Maintain the pressure at about 981 to 1,961 kPa (10 to 20 kg/cm², 142 to 284 psi) below initial injection pressure.
2. Check that there is no dripping from the nozzle tip or around the body.

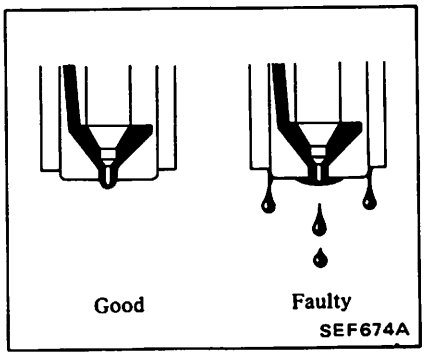

3. If there is leakage, clean, overhaul or replace it.

Spray pattern test

1. Pump the tester handle 4 to 6 times per second or more.
2. Check the spray pattern.

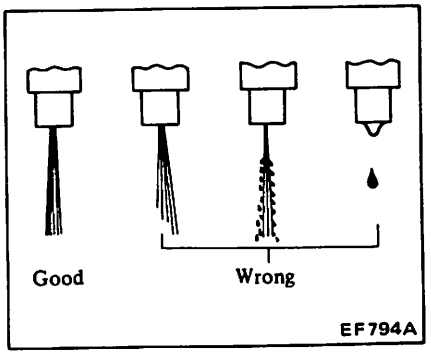

3. If the spray pattern is not correct, clean or replace it.

FUEL FILTER

CHANGING FUEL FILTER

Refer to Section MA for changing fuel filter.

Bleed air from fuel system after installing fuel filter.

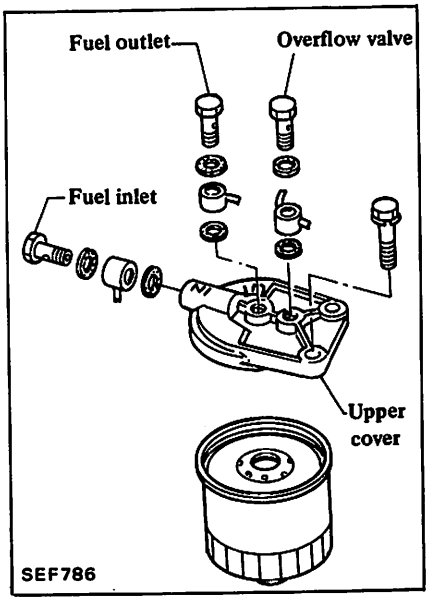

TEST

Overflow valve

Attach a pressure gauge to fuel filter discharge port, and check valve opening pressure by operating priming pump. If pressure is not within range of 108 to 147 kPa (1.1 to 1.5 kg/cm², 16 to 21 psi), replace overflow valve.

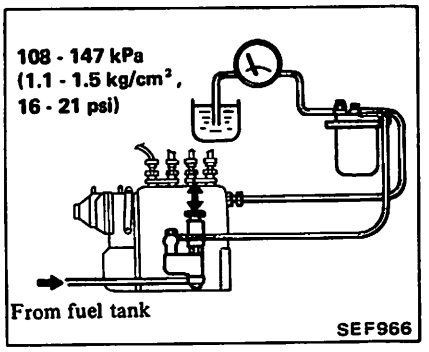

EXHAUST EMISSION CONTROL SYSTEM

DESCRIPTION

The exhaust emission control system is made up of the following.

Item		SD25
	Destination	California
	Transmission	M/T
E.G.R. System	• E.G.R. control valve	X
	• Thermal vacuum valve	X
	• Venturi Vacuum Transducer (V.V.T.) valve	X
	• Vacuum amplifier	X
	• Check valves	X

EXHAUST GAS RECIRCULATION (E.G.R.) CONTROL SYSTEM

DESCRIPTION

The E.G.R. system is designed to control the formation of NOx emission by recirculating the exhaust gas into the intake manifold passage through the control valve.

The E.G.R. system is composed of the E.G.R. control valve, thermal vacuum valve, V.V.T. valve, check valves and vacuum amplifier.

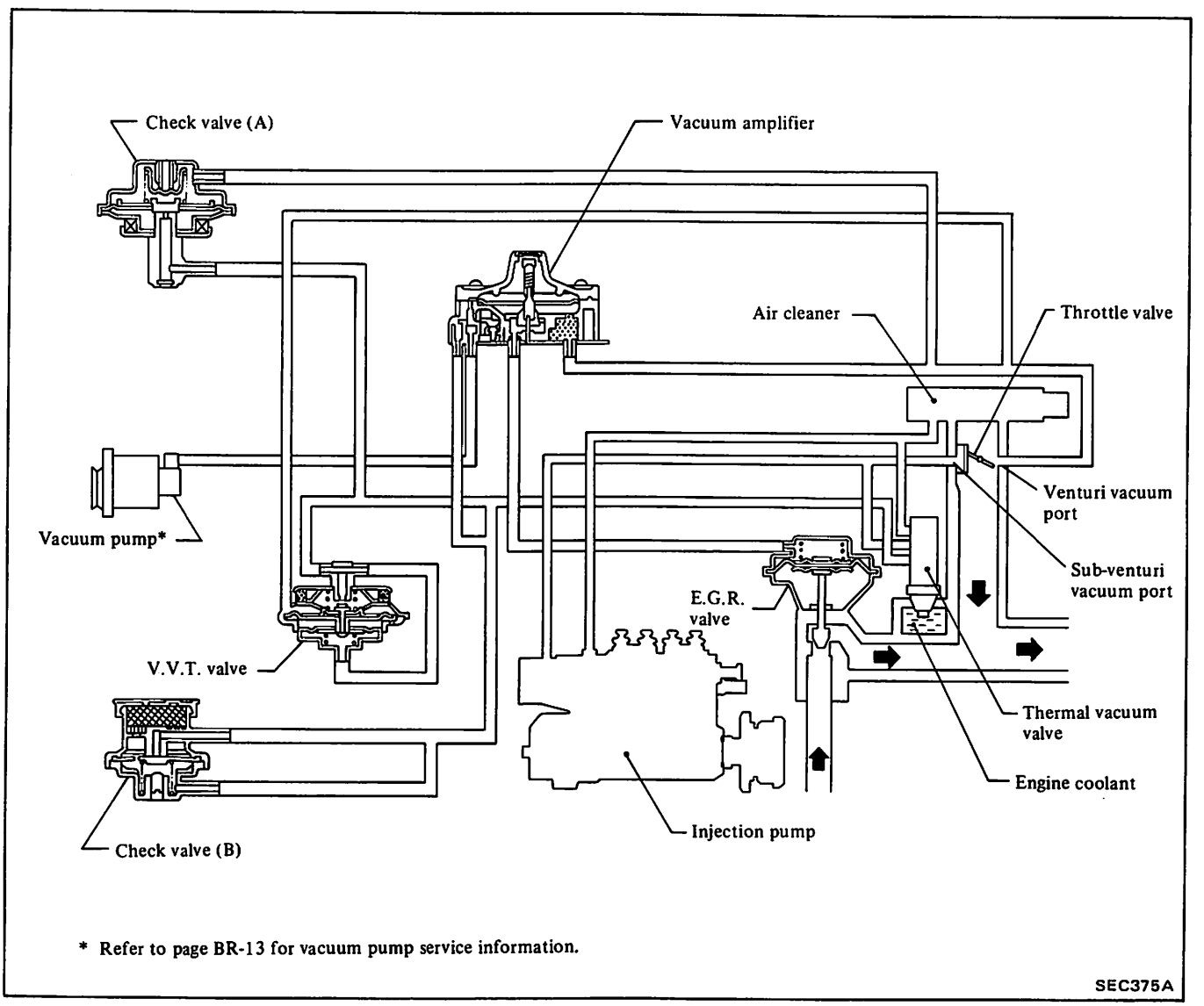

* Refer to page BR-13 for vacuum pump service information.

OPERATION

The flow-rate of the recirculating exhaust gas is controlled continuously by means of a vacuum amplifier, which functions in response to the engine load and engine speed. When the engine is under light load, the flow-rate increases; when it is under heavy load, the flow-rate decreases. When at high speed, the flow-rate decreases.

Water temperature	Thermal vacuum valve	V.V.T. Valve			E.G.R. Control System	Idle speed
		Venturi Ported vacuum	Sub-venturi vacuum	Operation		
Low	Ⓐ - Ⓑ : Open Ⓑ - Ⓒ : Closed	High	Low	Closed	Not actuated	High
		↑	High			
		Low	↑			
		↑	Low			
High	Ⓐ - Ⓑ : Closed Ⓑ - Ⓒ : Open	High	Low	Closed	Actuated	Normal
		↑	High			
		Low	↑	Open		
		↑	Low			

THERMAL VACUUM VALVE

The thermal vacuum valve, which is attached to the oil cooler housing, monitors the temperature of the engine cooling water. The valve shaft is propelled by the thermal expansion force of wax which depends on the temperature. This action opens and closes the valve, which causes the E.G.R. control vacuum line to be exposed or closed.

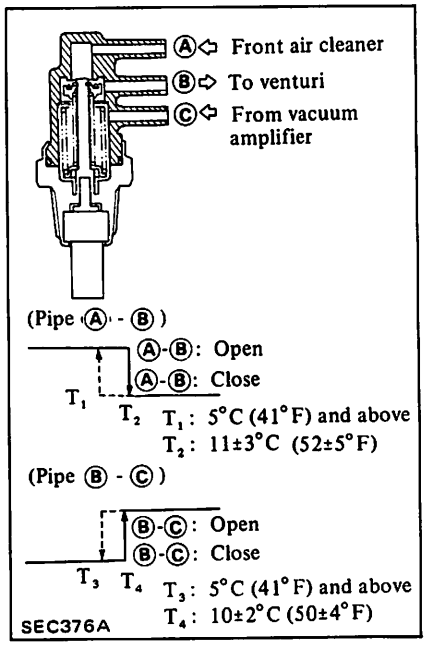

E.G.R. CONTROL VALVE

The E.G.R. control valve, which is connected to diaphragm, is designed to move vertically in order to control the amount of exhaust gas admitted to intake manifold.

The vacuum that activates diaphragm is created in response to a sub-venturi vacuum signal that is amplified by vacuum amplifier.

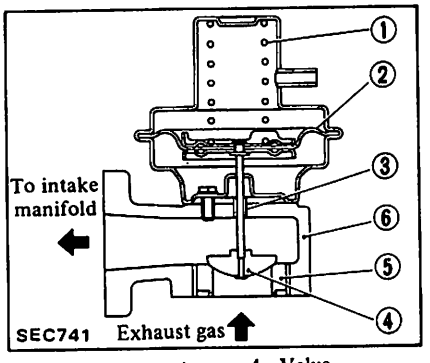

1 Diaphragm spring
2 Diaphragm
3 Valve shaft
4 Valve
5 Valve seat
6 Valve chamber

VENTURI VACUUM TRANSDUCER (V.V.T.) VALVE

The V.V.T. valve monitors the pressure of the sub-venturi vacuum which actuates the diaphragm ①, ③, and the venturi-ported vacuum which in turn activate the diaphragm ①, ②. This valve is actuated when the sub-venturi vacuum and venturi-ported vacuum are in equilibrium. It controls the vacuum signal that operates E.G.R. control valve.

In other words, the amount of recirculated exhaust gas varies with the position of the E.G.R. valve regulated by the operating condition of the engine.

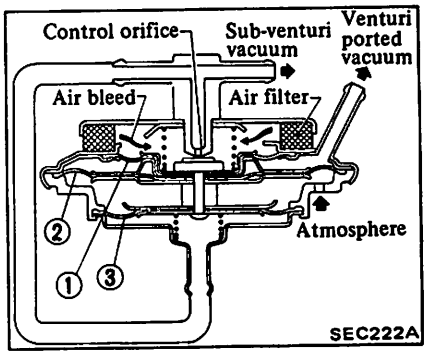

VACUUM AMPLIFIER

The vacuum amplifier, which receives a weak vacuum signal produced in sub-venturi, activates venturi diaphragm and vacuum regulator diaphragm. This in turn controls the output vacuum admitted to E.G.R. control valve.

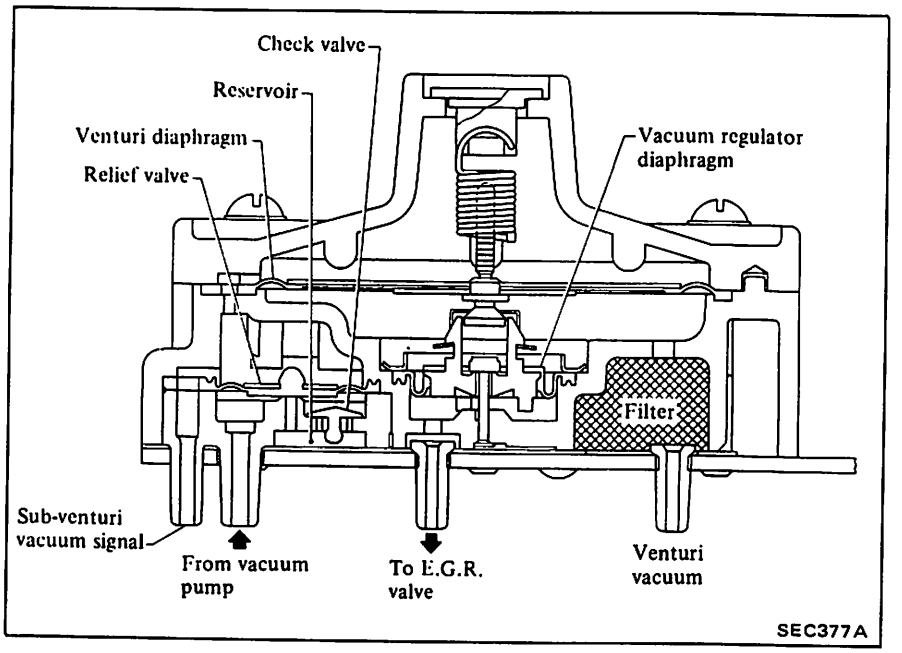

CHECK VALVE (A)

This valve prevents the vacuum acting on V.V.T. valve from increasing excessively and activates E.G.R. system properly.

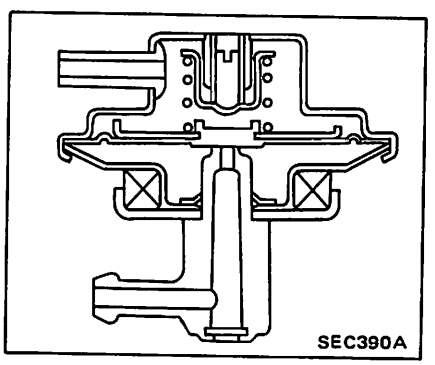

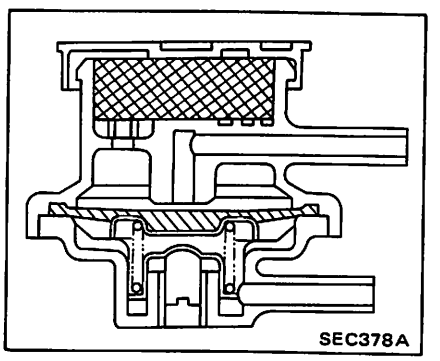

CHECK VALVE (B)

This valve prevents the vacuum acting on V.V.T. valve from increasing excessively and activates E.G.R. system properly under low engine load.

REMOVAL AND INSTALLATION

E.G.R. control valve and E.G.R. tube

1. Remove E.G.R. duct and E.G.R. pipe bolts at E.G.R. control valve side.
2. Disconnect vacuum hose. The E.G.R. control valve can then be taken out.

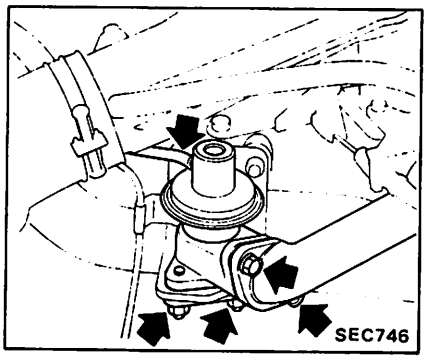

CAUTION:
Be careful not to damage packing of E.G.R. control valve.

3. Installation is in the reverse sequence of removal.

Ⓣ: E.G.R. pipe & E.G.R. duct to E.G.R. control valve bolt
25 - 35 N·m
(2.6 - 3.6 kg-m,
19 - 26 ft-lb)

Thermal vacuum valve

The thermal vacuum valve is made of plastic. Consequently care should be taken to avoid damaging it. This valve is located on the oil cooler housing.

1. Drain engine coolant until its level is lower than the cooler.
2. Disconnect vacuum hoses and unscrew the thermal vacuum valve. Then, the valve can be removed.
3. Installation is in the reverse sequence of removal.

Be sure to apply sealer to threads of the valve prior to installing a new valve.

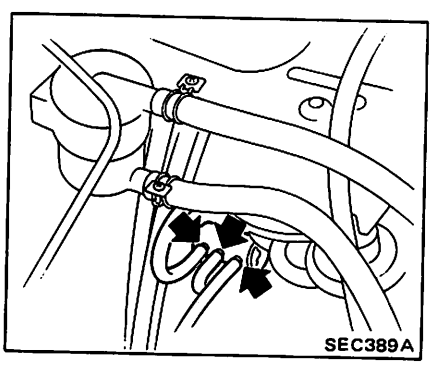

V.V.T. valve

1. Disconnect vacuum hoses on the V.V.T. valve.
2. Disconnect screws which secure V.V.T. valve to bracket.
3. The V.V.T. valve can then be removed.

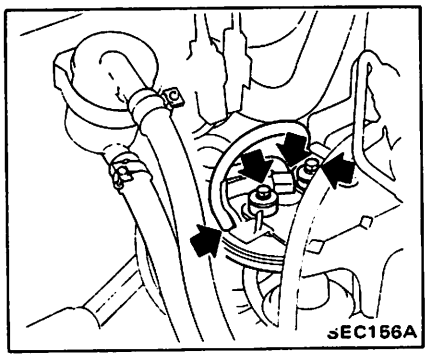

4. Installation is in the reverse sequence of removal.

When replacing the V.V.T. valve with a new one, verify that the type number on the new part is the same as that on the former one.

Ⓣ: V.V.T. valve mounting screw
3.4 - 5.4 N·m
(0.35 - 0.55 kg-m,
2.5 - 4.0 ft-lb)

Vacuum amplifier

1. Disconnect vacuum hoses on the amplifier.
2. Remove the amplifier assembly.

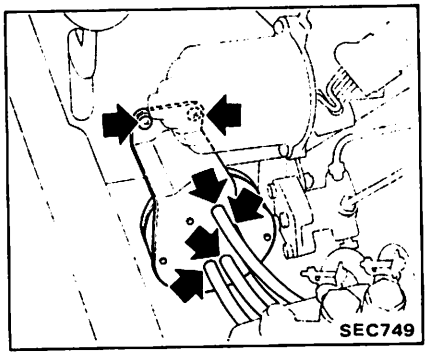

3. Installation is in the reverse sequence of removal.

CAUTION:
Ensure that vacuum hoses are connected to their proper positions on vacuum amplifier.

Check valve (A)

1. Disconnect vacuum hoses.
2. Remove check valve from bracket.

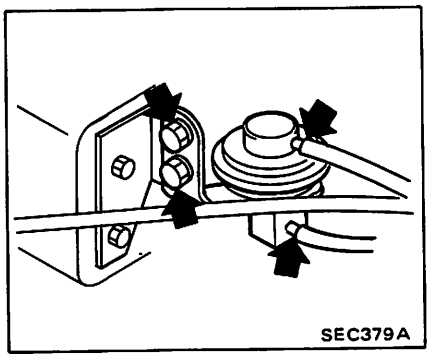

3. Installation is in the reverse sequence of removal.

Ⓣ : Check valve mounting screw
3.4 - 5.4 N·m
(0.35 - 0.55 kg-m,
2.5 - 4.0 ft-lb)

Check valve (B)

1. Disconnect vacuum hoses.
2. Remove check valve from vacuum amplifier bracket.

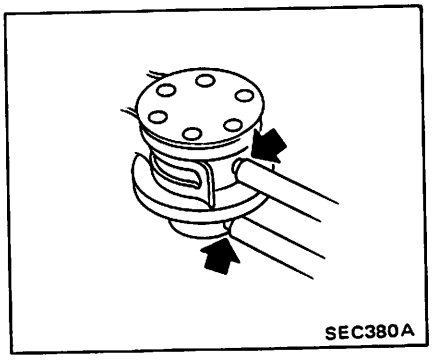

3. Installation is in the reverse sequence of removal.

INSPECTION

Entire system

1. Make a thorough visual check of E.G.R. control system. If necessary, wipe away oil to facilitate inspection. If any hoses are cracked or broken, replace.
2. With engine stopped, inspect E.G.R. control valve for any indication of binding or sticking by using vacuum gauge, and check control valve upwards and downwards.

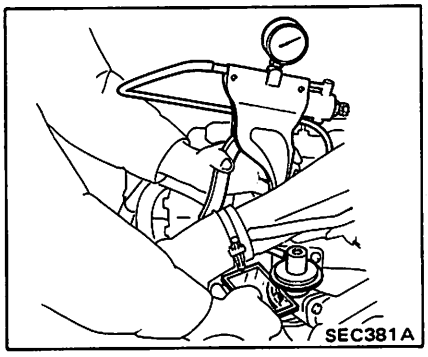

3. With engine running, inspect E.G.R. control valve and thermal vacuum valve for normal operation.

Place mirror under the diaphragm of E.G.R. control valve to ensure that the valve functions as described below.

(1) When temperature of the engine coolant is low: [Below 5°C (41°F)]

Make sure that E.G.R. control valve does not operate when engine speed is increased.

(2) When temperature of the engine coolant is high: [Above 14°C (57°F)]

1) Make sure that E.G.R. control valve operates when engine speed is increased.

2) If E.G.R. control valve does not operate properly, check it as follows:

- Disconnect one end (E.G.R. control valve side) of vacuum hose which connects to the vacuum amplifier.
- Make sure that sub-venturi vacuum is present at the end of the vacuum hose by using vacuum gauge.

If vacuum pressure is nonexistent, replace thermal vacuum valve.

If vacuum pressure is existent, replace vacuum amplifier.

If any difficulty is encountered in judging the condition of any component during above inspection, check the questionable component independently as follows:

E.G.R. control valve

Dismount E.G.R. control valve from engine.

1. Apply vacuum to E.G.R. control valve, referring to the following figure. If the valve moves to full position, it is normal.

E.G.R. control valve will remain open for more than 30 seconds after vacuum has cut off.

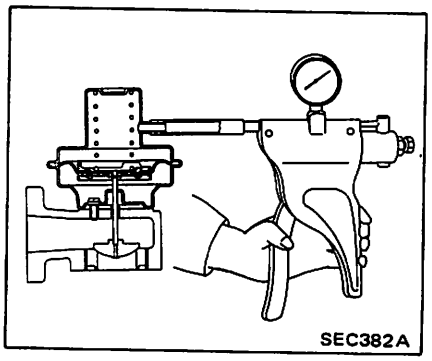

2. Visually check E.G.R. control valve for damage, wrinkle or deformation.
3. Clean the seating surface of E.G.R. control valve with brush and compressed air, and remove foreign matter from around the valve and port.

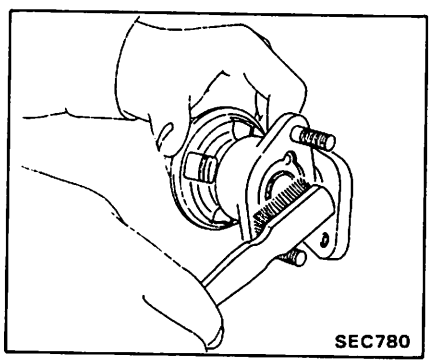

Thermal vacuum valve

Dismount thermal vacuum valve from engine.

Before dismounting drain engine coolant until its level is lower than oil cooler.

Apply vacuum to thermal vacuum valve and check to be sure that thermal vacuum valve opens or closes in response to engine coolant temperature as specified.

Thermal vacuum valve should open or close at the temperatures specified below, completing the vacuum passage.

Thermal vacuum valve operating temperature:

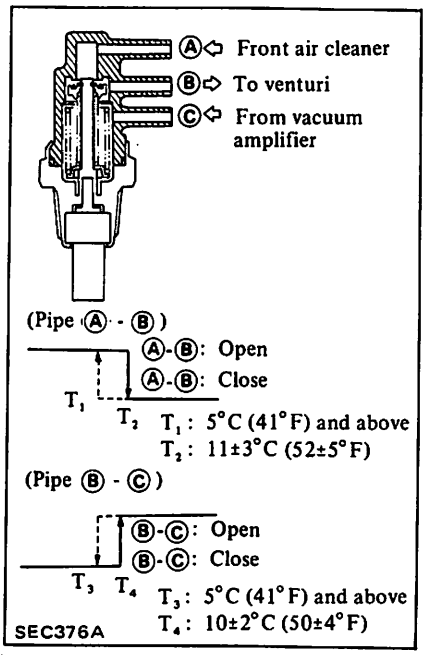

CAUTION:
Do not allow water to get inside the thermal vacuum valve.

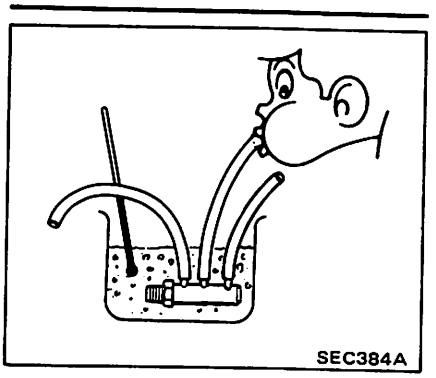

V.V.T. valve

1. Block one sub-venturi vacuum port and suck from the other. There is air leakage at first, but gradually it disappears. If a leak is detected, replace valve.

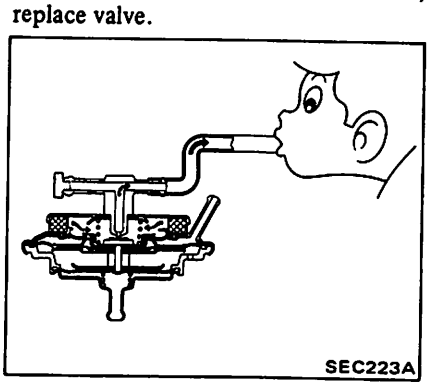

2. Apply vacuum pressure to V.V.T. valve and check it for leakage as shown below. If a leak is discovered, replace valve.

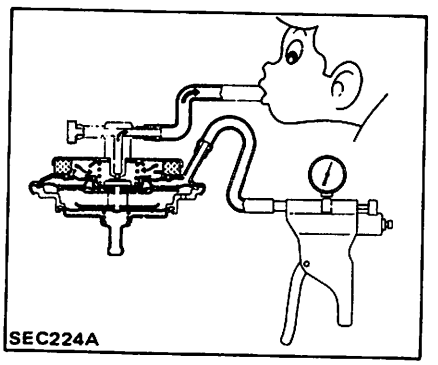

Vacuum amplifier

1. Disconnect lead hose that connects vacuum amplifier to E.G.R. valve and set T-connector and vacuum gauge. When idling, make sure that vacuum gauge reading is within 16.7 to 20.7 kPa (125 to 155 mmHg, 4.92 to 6.10 inHg). If E.G.R. vacuum is excessively outside specified range, replace vacuum amplifier.

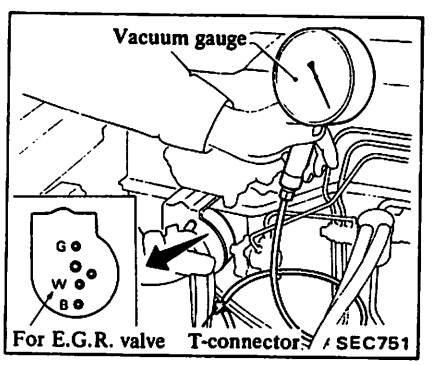

2. When engine speed is at about 2,000 rpm, make sure that vacuum gauge reading is within 34.99 to 40.32 kPa (262.5 to 302.5 mmHg, 10.335 to 11.909 inHg). If E.G.R. vacuum is excessively outside specified range, replace vacuum amplifier.

Check valve (A)

Orally suck in air through venturi-ported vacuum side of check valve to ensure that operating sound is emitted. If no sound is emitted, replace check valve.

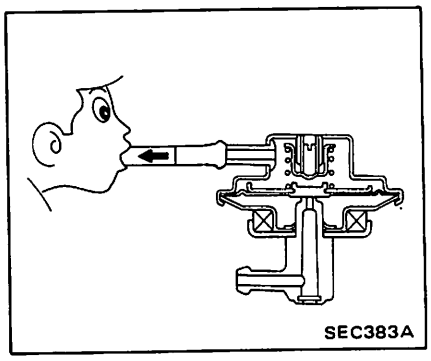

Check valve (B)

Orally suck in air through venturiported vacuum side of check valve to ensure that operating sound is emitted. If no sound is emitted, replace check valve.

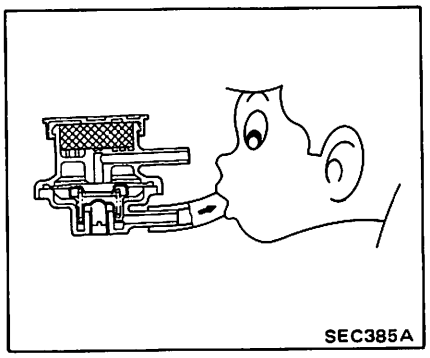

CRANKCASE EMISSION CONTROL SYSTEM

DESCRIPTION

The closed-type crankcase ventilation system is utilized as a crankcase emission control system.
The closed-type crankcase emission control system prevents blow-by gas from entering the atmosphere and keeps the internal crankcase pressure constant.
The blow-by gas is sucked from the valve rocker cover into the intake manifold through the control valve.

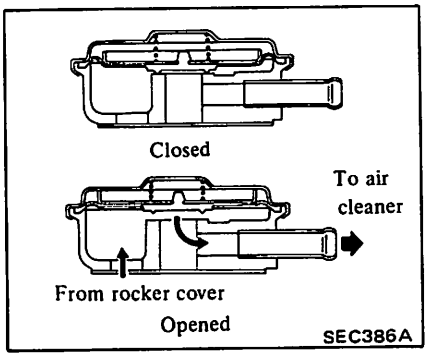

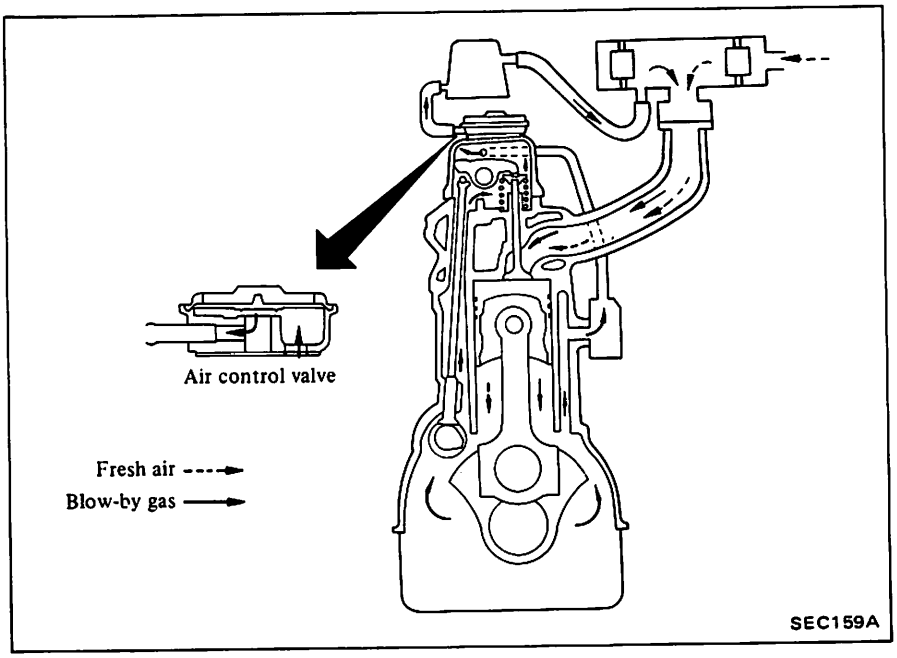

Non-California model

The control valve is normally closed. When the pressure in the crankcase increases, the valve opens and the blow-by gas in the crankcase flows to the intake manifold. In this way, the valve controls the pressure in the crankcase so that the predetermined pressure will not be exceeded.

California model

The control valve reduces its flow rate when the intake manifold vacuum rises (i.e. when the throttle valve is closed), so that the intake manifold will not take in an excessive amount of blow-by gas.

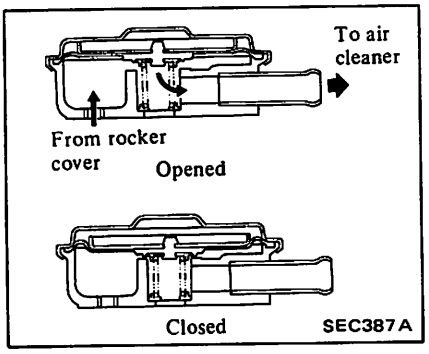

INSPECTION

AIR CONTROL VALVE

1. Remove rocker cover.
2. Remove air control valve from rocker cover.

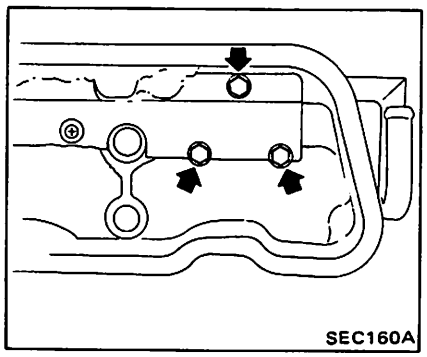

3.

Non-California model

After plugging the center hole with adhesive tape, check that air flows from inlet by orally sending air from outlet and that air does not flow sucking in air.

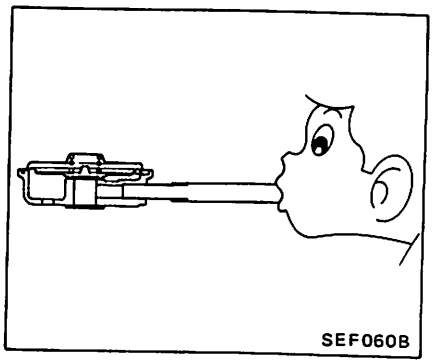

California model

After plugging the center hole with adhesive tape, check that air flows from inlet by orally sucking in air from outlet.
Close inlet and suck on outlet to make sure that diaphragm makes clicking sounds.

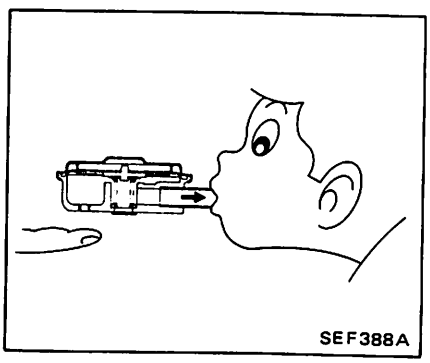

VENTILATION HOSE

1. Check hoses and hose connections for leaks.
2. Disconnect all hoses and clean with compressed air.

If any hose cannot be free of obstructions, replace.

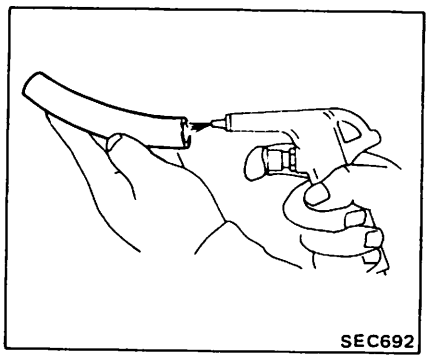

SERVICE DATA AND SPECIFICATIONS (S.D.S.)

Z20 & Z24

GENERAL SPECIFICATIONS

Carburetor

Destination	California		Non-California			Canada		
Engine	Z24		Z24		Z20	Z24		
Class	2WD & 4WD	Camper	2WD & 4WD	Camper	M.P.G.	2WD	Camper	4WD
Carburetor model	2WD M/T & 4WD: DFP384-5 2WD A/T: DFP384-6	DFP384-13	2WD M/T & 4WD: DFP384-7 2WD A/T: DFP384-8	DFP384-22	DFP342-11	M/T: DCR384-7 A/T: DCR384-8	DCR384-16	DCR384-26
Outer diameter mm (in) Primary	34 (1.34)				32 (1.26)	34 (1.34)		
Secondary	38 (1.50)				34 (1.34)	38 (1.50)		
Large venturi diameter mm (in) Primary	25 (0.98)				24.1 (0.949)	25 (0.98)		
Secondary	35 (1.38)				32 (1.26)	35 (1.38)		
Main jet Primary	#94				#96	#107	#110	#111
Secondary	#170	#165	#170	#165	#155	#170		
Main air bleed Primary	#75				#95	#75		
Secondary	#60				#60	#60		
Slow jet Primary	#50				#48	#50		
Secondary	#100	#60	#100	#60	#100	#100		
Slow air bleed Primary	#145				#145	#175		
Secondary	#0				#0/#60	#0		
Power jet	–					#50	#40	
Solenoid controlled fuel orifice	#100					–		
Solenoid controlled slow air bleed	#220					–		

INSPECTION AND ADJUSTMENT

A.T.C. air cleaner

	Unit: °C (°F)
Air control valve partially opens	38 - 55 (100 - 131)
Air control valve fully opens	Above 55 (131)

Electric fuel pump

Fuel pressure (maximum kPa (kg/cm², psi)	18.6 - 23.5 (0.19 - 0.24, 2.7 - 3.4)
Fuel pump capacity mℓ (US fl oz, Imp fl oz)/min	More than 1,400 (47.3, 49.3)

Carburetor

	M/T	A/T
Fuel level adjustment mm (in) Top float position "H"	7.2 (0.283)	
Bottom float position "h"	1.5±0.2 (0.059±0.008)	
Fast idle adjustment (at 2nd cam step) Fast idle speed rpm	Z24: 2,400±200 Z20: 2,800±200	2,800±200
Gap between throttle valve and carburetor body mm (in)	Z24: 0.78±0.07 (0.0307±0.0028) Z20: 0.83±0.07 (0.0327±0.0028)	0.94±0.07 (0.0370±0.0028)
Vacuum break adjustment Gap between choke valve and carburetor body "R" mm (in)	U.S.A. Z24: 2.25±0.15 (0.0886±0.0059) [Below 5°C (41°F)] 3.40±0.30 (0.1339±0.0118) [Above 20°C (68°F)] Z20: 1.95±0.15 (0.0768±0.0059) [Below 5°C (41°F)] 3.42±0.30 (0.1346±0.0118) [Above 20°C (68°F)] Canada 2WD standard: 1.90±0.15 (0.0748±0.0059) [Below 5°C (41°F)] 2.62±0.30 (0.1031±0.0118) [Above 20°C (68°F)] 4WD & Camper: 2.00±0.15 (0.0787±0.0059) [Below 5°C (41°F)] 2.75±0.30 (0.1083±0.0118) [Above 20°C (68°F)]	
Choke unloader adjustment mm (in) Gap between choke valve and carburetor body	2.45±0.4 (0.0965±0.0157)	
Interlock opening of primary and secondary throttle valves mm (in)	Z24: 8.37±0.5 (0.3295±0.0197) Z20: 7.88±0.5 (0.3102±0.0197)	
Dashpot adjustment (without loading) rpm	1,800±200 (Except Canada)	1,500±200

TIGHTENING TORQUE

Unit	N·m	kg-m	ft-lb
Anti-dieseling solenoid valve	18 - 34	1.8 - 3.5	13 - 25
B.C.D.D.	2 - 4	0.2 - 0.4	1.4 - 2.9
E.G.R. tube securing nut	34 - 44	3.5 - 4.5	25 - 33
E.A.I. tube securing nut	34 - 44	3.5 - 4.5	25 - 33
Thermal vacuum valve	Less than 22	Less than 2.2	Less than 16
V.V.T. valve mounting screw	3.7 - 5.0	0.38 - 0.51	2.7 - 3.7
B.P.T. valve mounting screw	3.7 - 5.0	0.38 - 0.51	2.7 - 3.7
Catalytic converter bolt	31 - 42	3.2 - 4.3	23 - 31
Detonation sensor	25 - 34	2.5 - 3.5	18 - 25
Exhaust gas sensor	39 - 49	4.0 - 5.0	29 - 36

SD25

INJECTION NOZZLE ASSEMBLY

Type	Closed, throttle type
Injection angle	0°
Initial injection pressure kPa (kg/cm², psi)	
New	10,297 - 11,082 (105 - 113, 1,493 - 1,607)
Used	9,807 - 10,297 (100 - 105, 1,422 - 1,493)

TIGHTENING TORQUE

	N·m	kg·m	ft·lb
Injection pump			
Injection pump to engine front plate	20 - 25	2.0 - 2.5	14 - 18
Injection nozzle assembly			
Nozzle holder to nozzle nut	78 - 98	8.0 - 10.0	58 - 72
Injection nozzle assembly to engine	59 - 69	6.0 - 7.0	43 - 51
Injection tube flare nut	29 - 34	3.0 - 3.5	22 - 25
Spill tube nut	39 - 49	4 - 5	29 - 36

SPECIAL SERVICE TOOLS (SD25)

Tool number (Kent-Moore No.)	Tool name
ST19530000 (J28831-A)	Injection pump timer puller 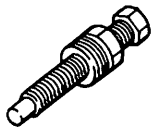
KV11100300 (–)	Nozzle holder socket 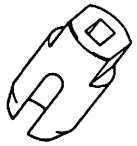
KV11289004 (J28826) ① KV11290012 (–) ② KV11290110 (–) ③ KV11290122 (–) ④ KV11290140 (–) ⑤ KV11290150 (–) ⑥ KV11290210 (–) ⑦ KV11290220 (–)	Nozzle cleaning kit Box Brush Nozzle oil sump scraper Nozzle needle tip cleaner Nozzle seat scraper Needle holder Nozzle hole cleaning needle 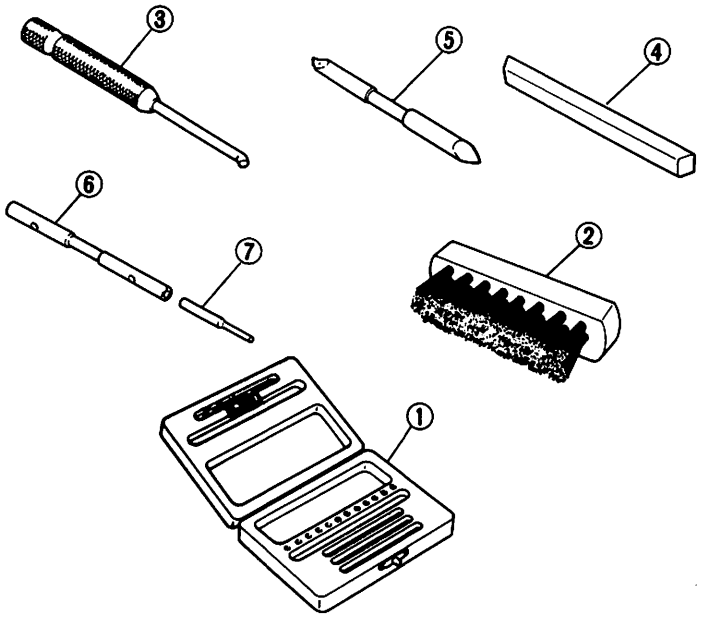
KV11292010 (–)	Nozzle centering device 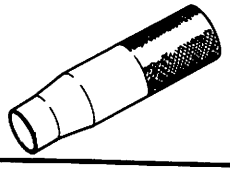

ENGINE REMOVAL & INSTALLATION

SECTION ER

CONTENTS

ENGINE REMOVAL AND INSTALLATION ER-2
CONSTRUCTION ER-2
REMOVAL ER-3
INSTALLATION ER-6
SERVICE DATA AND SPECIFICATIONS (S.D.S.) ER-7
TIGHTENING TORQUE ER-7

ENGINE REMOVAL AND INSTALLATION

CONSTRUCTION

Gasoline engine

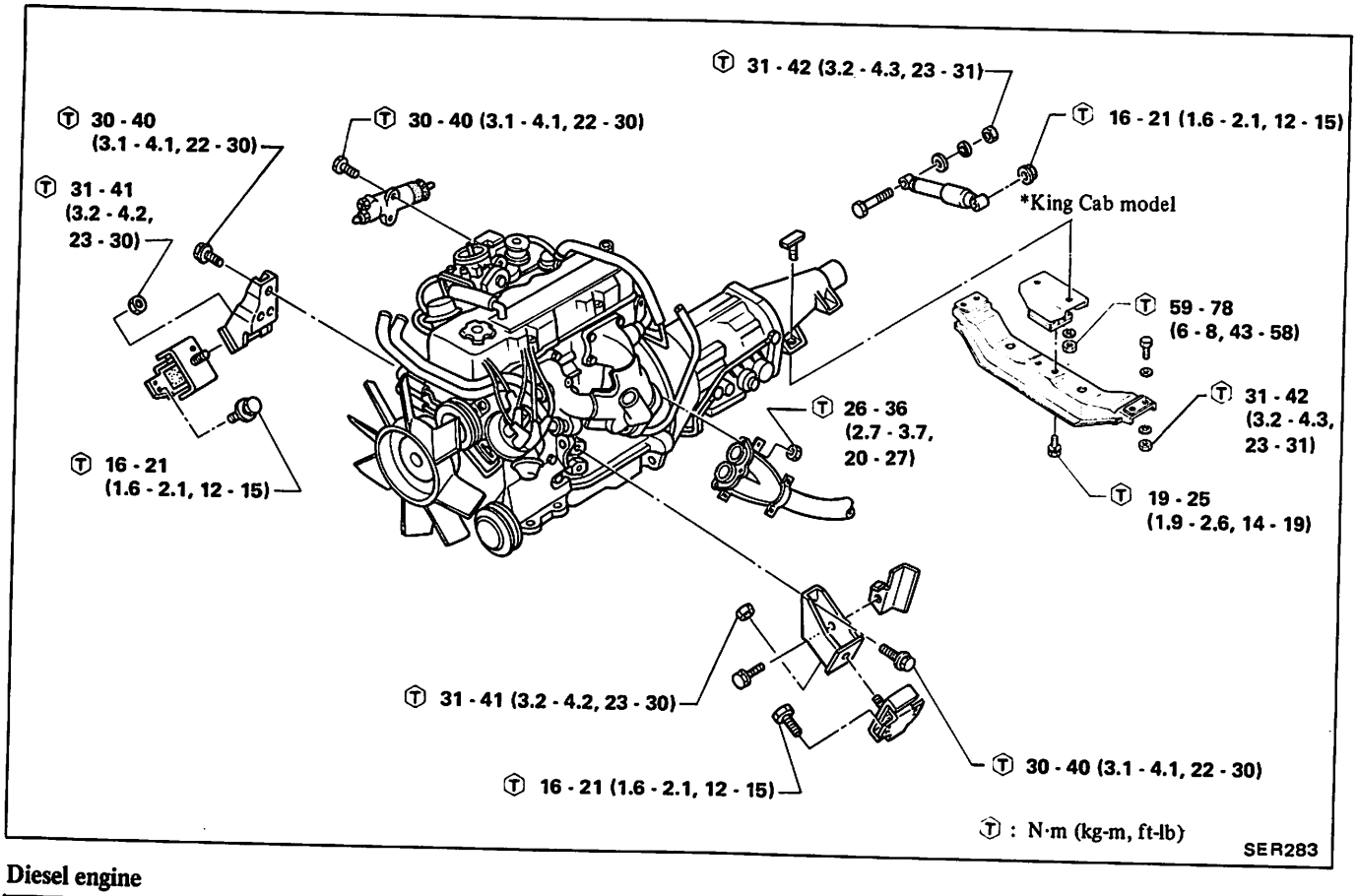

Diesel engine

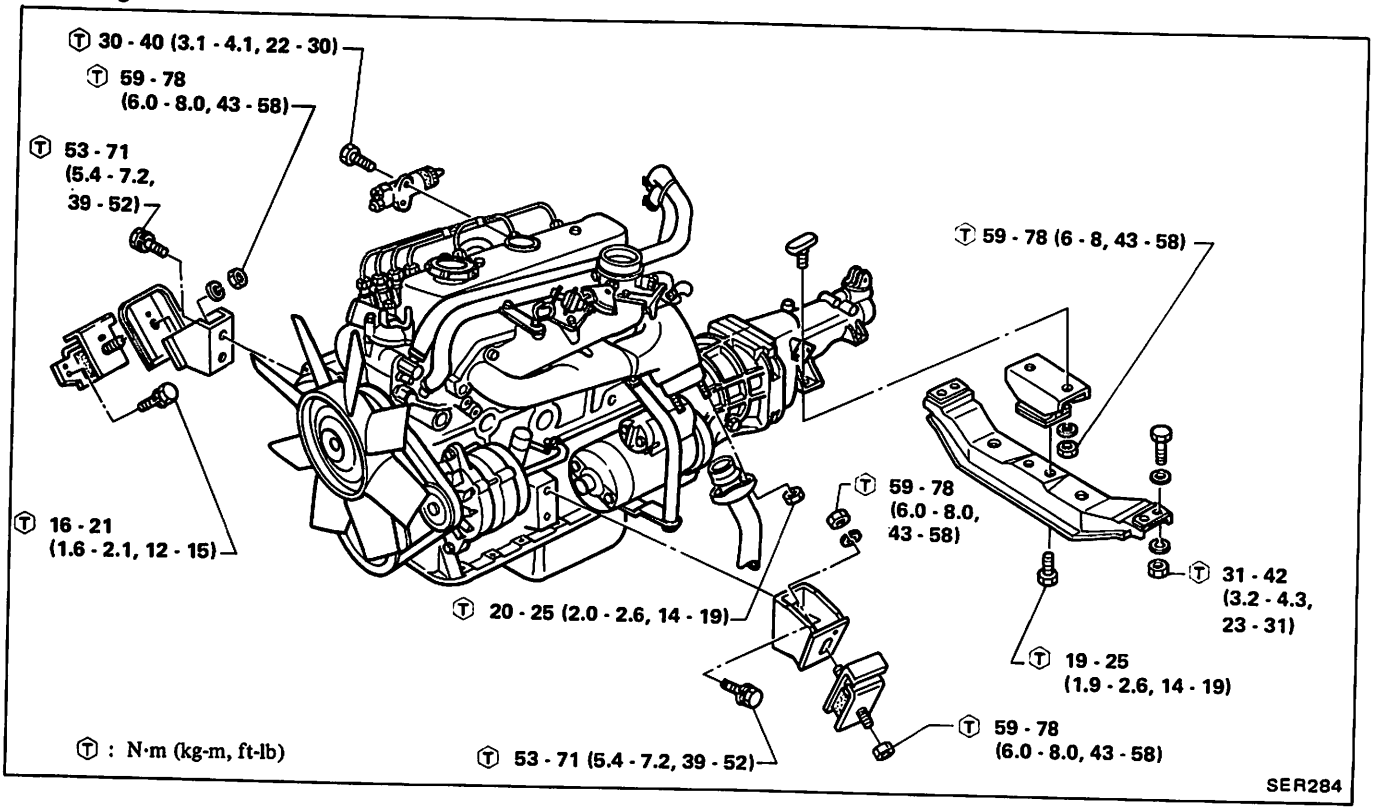

REMOVAL

It is much easier to remove engine and transmission as a single unit than to remove them separately. After removal, engine can be separated from transmission assembly.

WARNING:

a. Place wheel chocks in front of front wheels and in rear of rear wheels.

b. Be sure to hoist engine and jack up transmission in a safe manner.

c. You should not remove the engine until the exhaust system has completely cooled off.
Otherwise, you may burn yourself and/or fire may break out in fuel line.

Fender cover should be used to protect vehicle body.

1. Disconnect the negative battery cable.
2. Remove hood.

Mark the location of hood hinges on hood to facilitate correct reinstallation.

CAUTION:
Have an assistant help you so as to prevent damage to body.

3. Remove air cleaner.

Plug air horn of carburetor with clean rag to prevent entry of foreign matter.

4. Remove all wires and hoses.

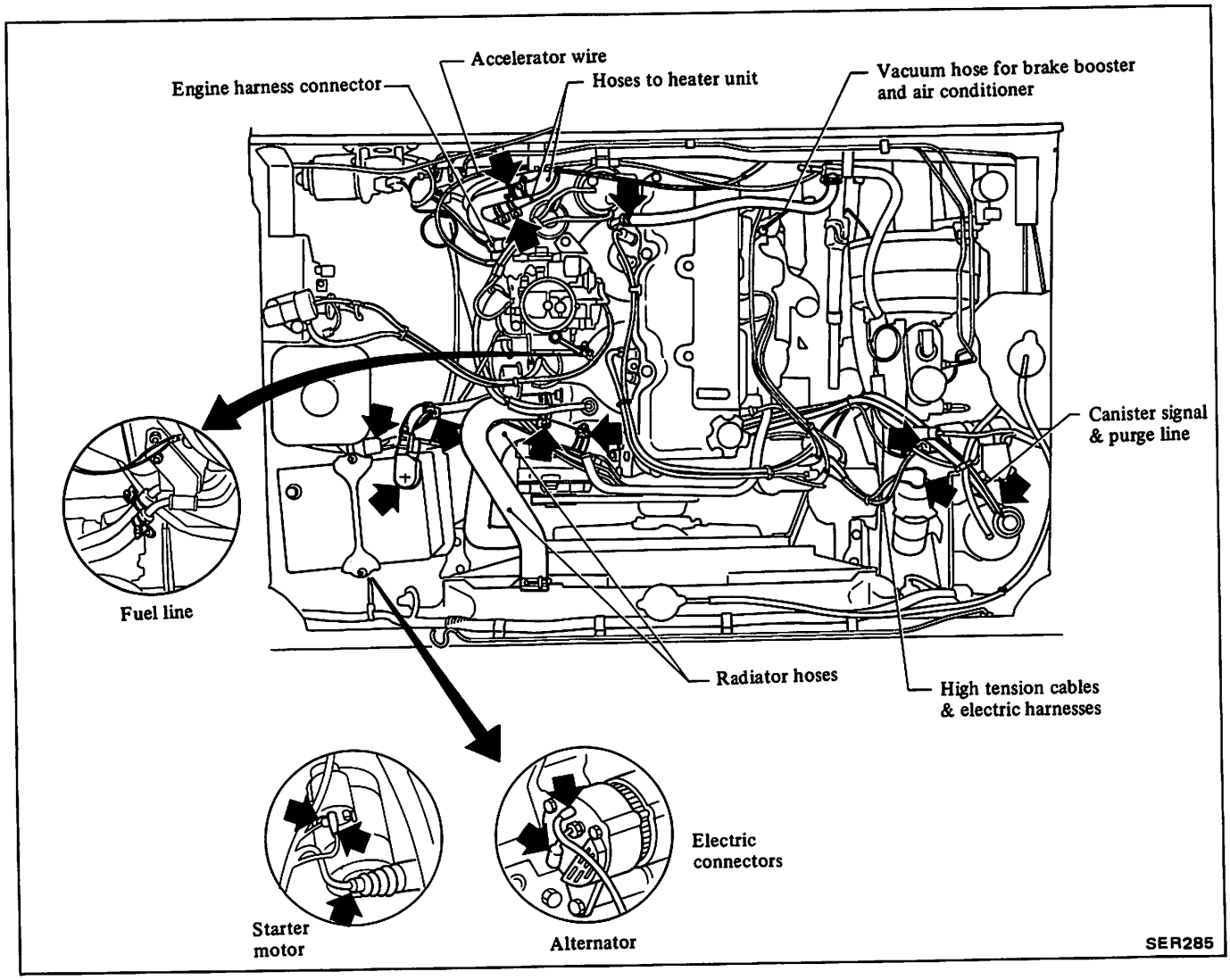

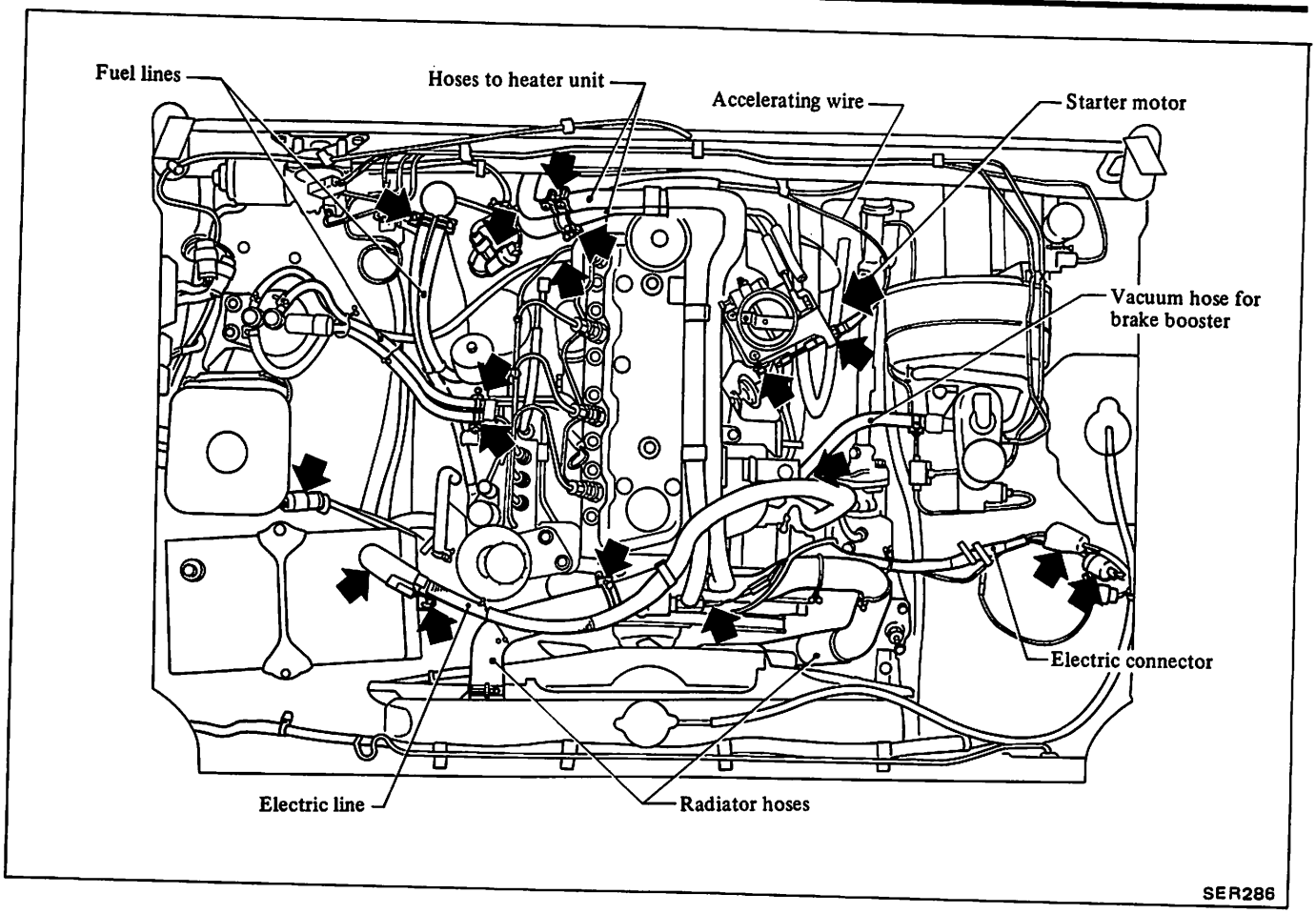

5. Remove undercover.
6. Remove radiator.
(1) Drain engine coolant
(2) Remove upper and lower radiator hoses.
(3) Remove oil cooler hoses (A/T models).

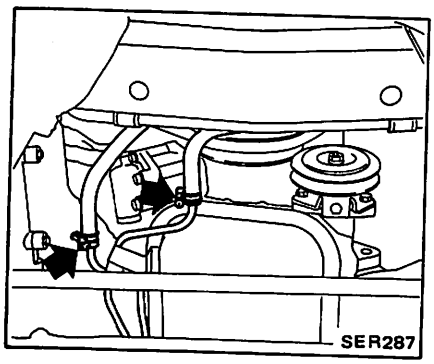

(4) Remove radiator and radiator shroud.

7. Remove air conditioner compressor (if equipped).

(1) Remove compressor drive belt.
(2) Remove compressor and place it as shown.

Never discharge gas from compressor while service/repair work is being performed.

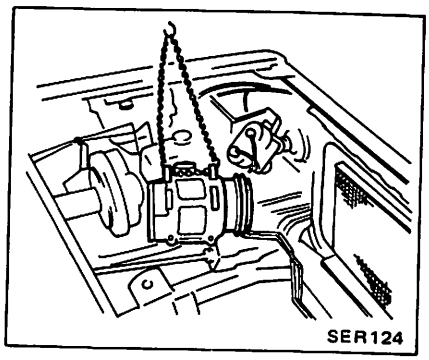

8. Remove power steering oil pump (if equipped).

Oil must not be drained from power steering oil circuit.

(1) Remove oil pump drive belt.
(2) Remove oil pump.

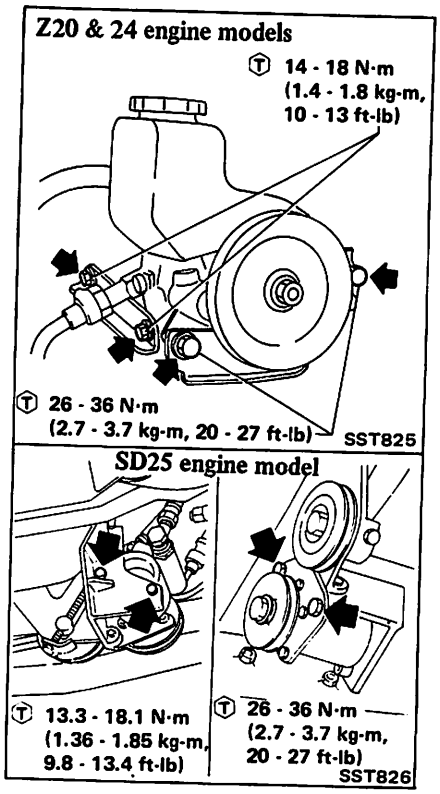

(3) Remove reservoir tank (SD25 engine).

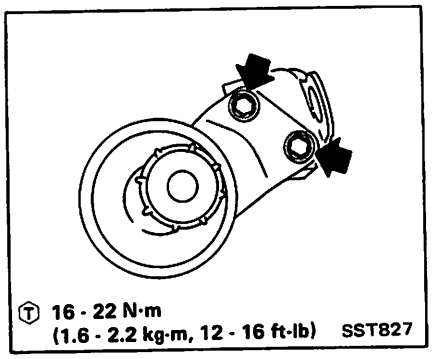

9. Remove transmission control linkage.

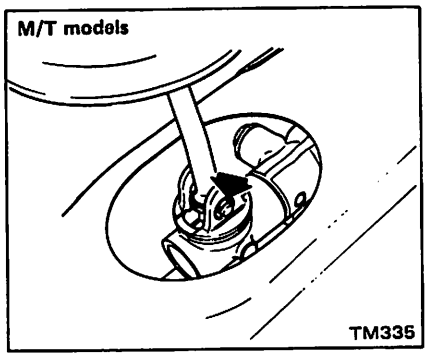

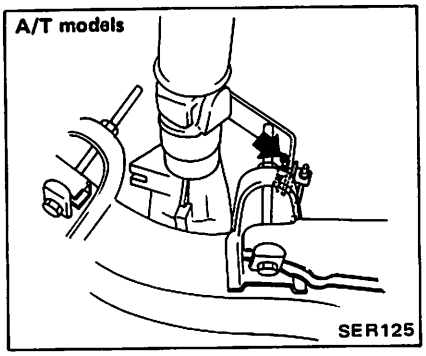

10. Disconnect speedometer cable and wires from switches located on transmission case.

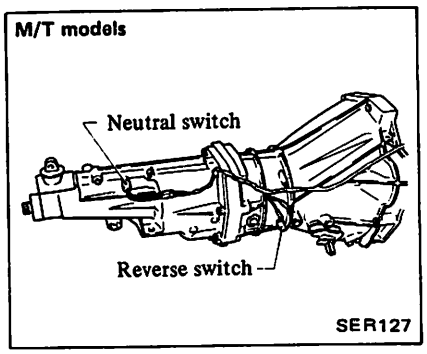

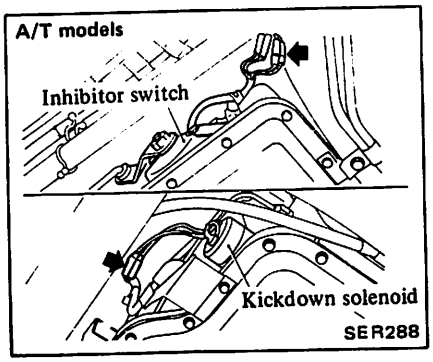

11. Remove clutch operating cylinder and exhaust tube.
12. Remove parking brake cable from brake lever side.
13. Remove propeller shaft.

Place marks on propeller shaft before removal to facilitate reinstallation.

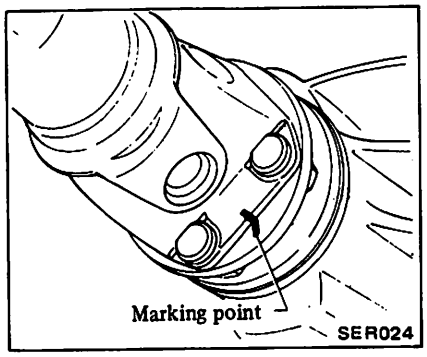

Plug open holes in rear extension housing as shown.

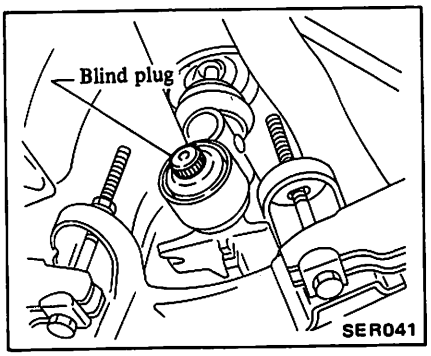

14. Remove front propeller shaft. (4WD)

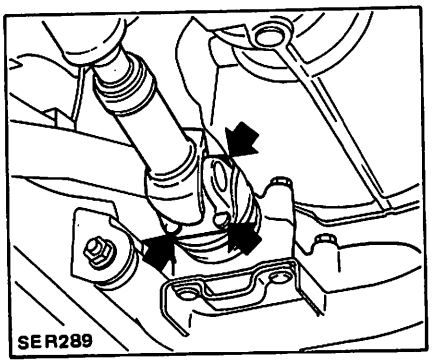

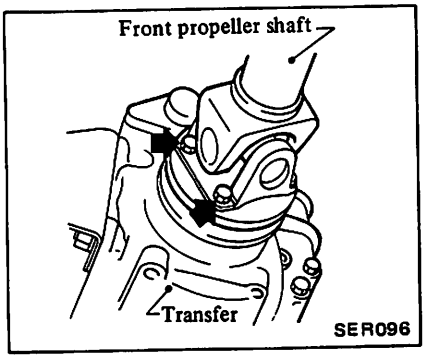

15. Attach suitable wires to engine slingers and raise engine using a hoist to take the weight off front and rear mount insulators.

WARNING:
Before raising engine, loosen wires two or three times to make sure it is safe to do so.

16. Suspend front differential carrier. (4WD)
(1) Remove front differential carrier front mounting bolt.

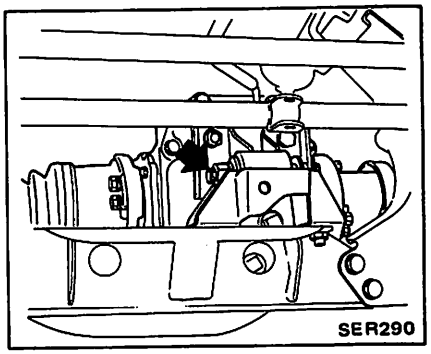

(2) Remove front differential carrier rear mounting bolts and member. Then lower front differential carrier slowly.

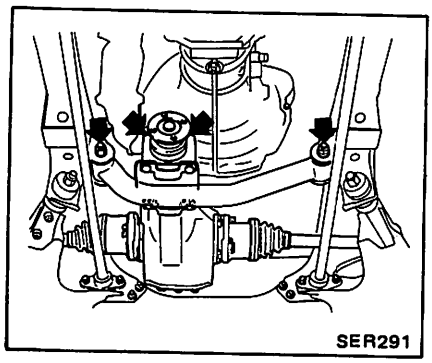

17. Remove bolts which attach rear engine mounting support to the body.

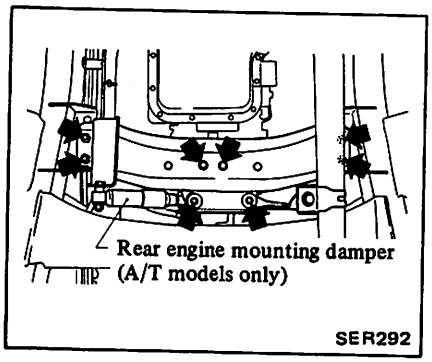

18. Remove front engine mounting bolts.

Gasoline engine

- Left side

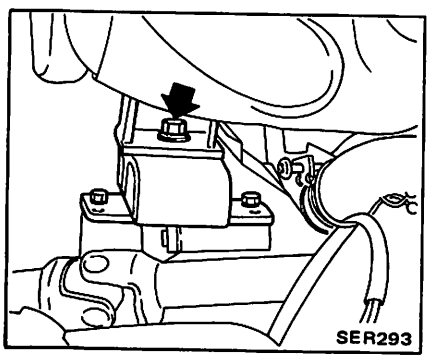

- Right side

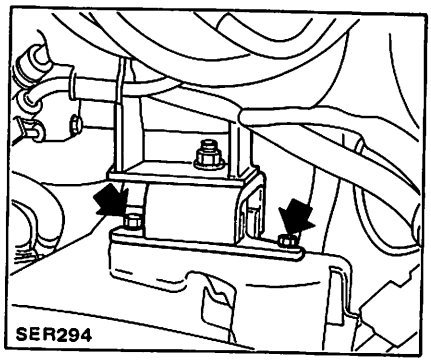

Diesel engine

- Left side

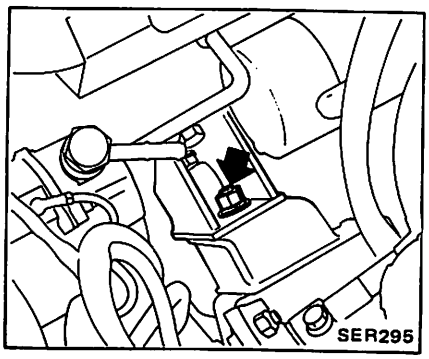

- Right side

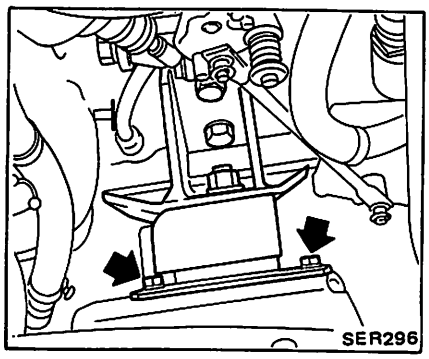

19. Turn steering wheel all the way to right or left and there should be a clearance between cross rod and oil pan (Diesel engine).

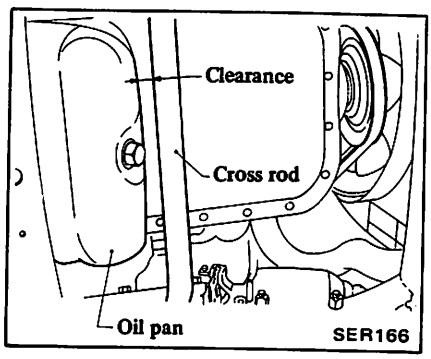

20. Raise engine with transmission and remove it from vehicle as a single unit.

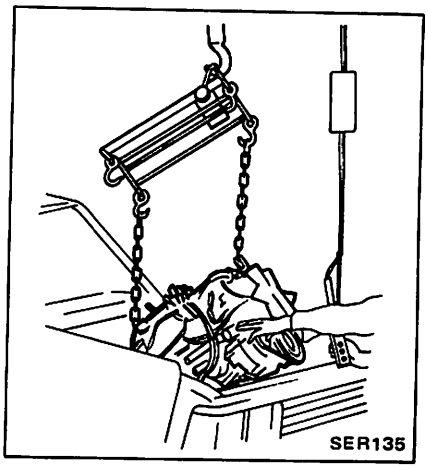

WARNING:
When raising engine, be especially careful not to bump it against adjacent parts.

21. Set engine with transmission on an engine stand.

INSTALLATION

Install in the reverse order of removal, observing the following:

When installing, be sure to check that electrical harnesses are correctly connected.

1. When installing, first secure rear engine support bracket to rear mounting insulator.
2. Adjust accelerator control system. Refer to Engine Control System (Section FE) for adjustment.
3. Install air conditioner compressor and power steering oil pump and adjust belts. Refer to Engine Maintenance (Section MA) for checking and adjusting drive belts.
4. Bleed air out of injection pump (SD25 engine).

Refer to Section MA for bleeding air.

5. When reinstalling the hood following engine installation, be sure that it is properly centered and that hood lock operates securely. Refer to Hood (Section BF) for adjustment.
6. Pour the correct amount of engine coolant.

SERVICE DATA AND SPECIFICATIONS (S.D.S.)

TIGHTENING TORQUE

Unit	N·m	kg-m	ft-lb
Fixing bolts and nuts			
Front mounting bracket to cylinder block			
Gasoline	30 - 40	3.1 - 4.1	22 - 30
Diesel	53 - 71	5.4 - 7.2	39 - 52
Front mounting insulator to bracket			
Gasoline	31 - 41	3.2 - 4.2	23 - 30
Diesel	59 - 78	6.0 - 8.0	43 - 58
Front mounting insulator to front support			
Gasoline	16 - 21	1.6 - 2.1	12 - 15
Diesel			
R.H.	16 - 21	1.6 - 2.1	12 - 15
L.H.	59 - 78	6.0 - 8.0	43 - 58
Rear mounting insulator to transmission	59 - 78	6 - 8	43 - 58
Rear mounting insulator to rear support	19 - 25	1.9 - 2.6	14 - 19
Rear support to frame	31 - 42	3.2 - 4.3	23 - 31
Rear mounting shock absorber	31 - 42	3.2 - 4.3	23 - 31
	16 - 21	1.6 - 2.1	12 - 15
Clutch operating cylinder to transmission	30 - 40	3.1 - 4.1	22 - 30
Exhaust front tube to exhaust manifold			
Gasoline	26 - 36	2.7 - 3.7	20 - 27
Diesel	20 - 25	2.0 - 2.6	14 - 19
Center bearing bracket to crossmember (2WD)	16 - 22	1.6 - 2.2	12 - 16
Propeller shaft to companion flange			
2WD	24 - 32	2.4 - 3.3	17 - 24
4WD 63H	34 - 44	3.5 - 4.5	25 - 33
80B	78 - 88	8.0 - 9.0	58 - 65
Differential mounting insulator to crossmember (4WD)	71 - 96	7.2 - 9.8	52 - 71
Front differential carrier to differential rear mounting member (4WD)	50 - 68	5.1 - 6.9	37 - 50
Differential rear mounting member to frame bracket (4WD)	71 - 96	7.2 - 9.8	52 - 71

ENGINE CONTROL, FUEL & EXHAUST SYSTEMS

SECTION FE

CONTENTS

ENGINE CONTROL SYSTEM ..... FE- 2
ACCELERATOR PEDAL AND WIRE ..... FE- 2
THROTTLE CONTROL WIRE (SD25 engine) ..... FE- 5
DASH POT ..... FE- 5
INJECTION PUMP CONTROL MECHANISM (SD25 engine) ..... FE- 6
INJECTION PUMP CONTROL UNIT (D.P.C. module) ..... FE- 7
FUEL SYSTEM ..... FE- 8
REMOVAL FE-10
INSPECTION FE-11
INSTALLATION FE-11
EXHAUST SYSTEM FE-12
REMOVAL FE-14
INSPECTION FE-14
INSTALLATION FE-14

ENGINE CONTROL SYSTEM

ACCELERATOR PEDAL AND WIRE

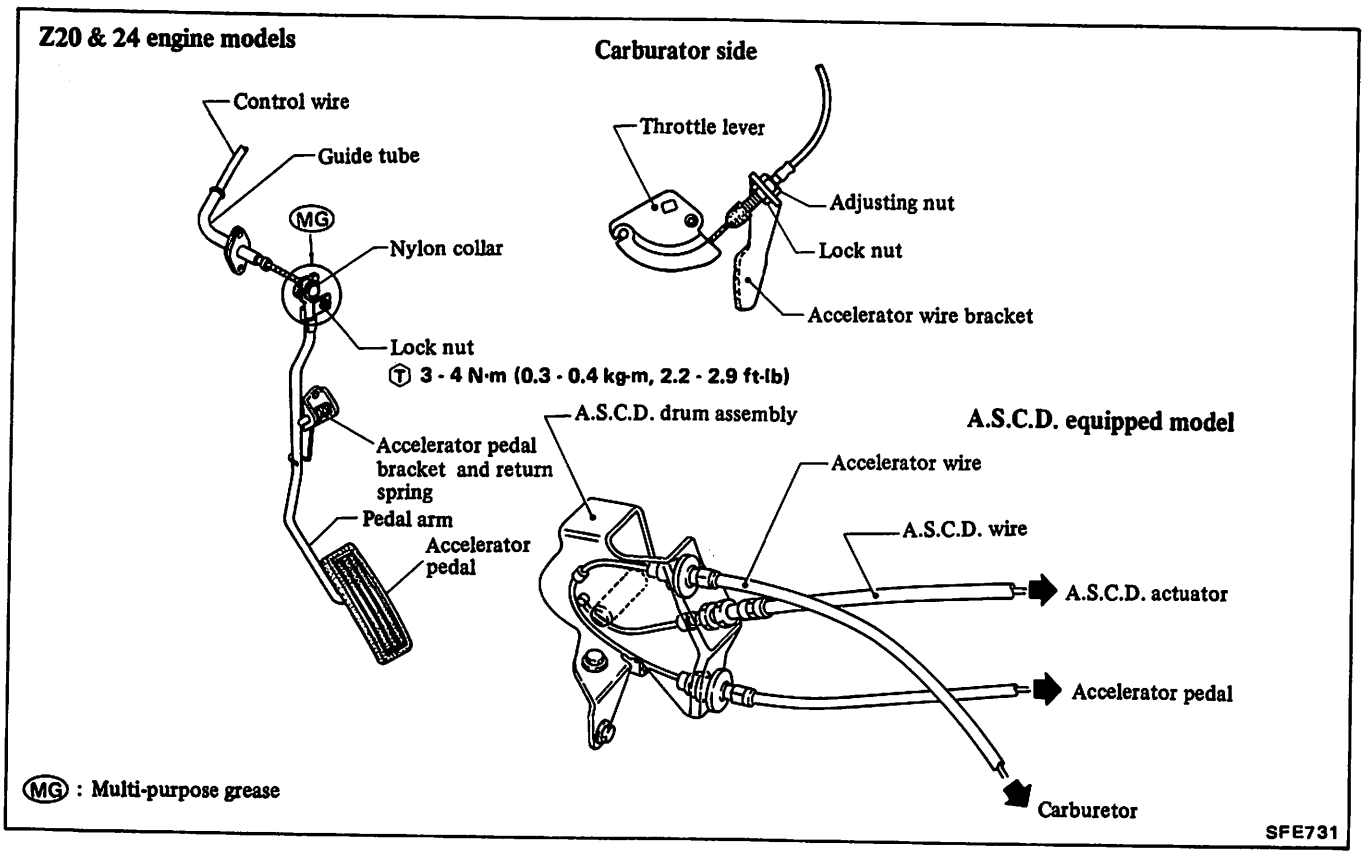

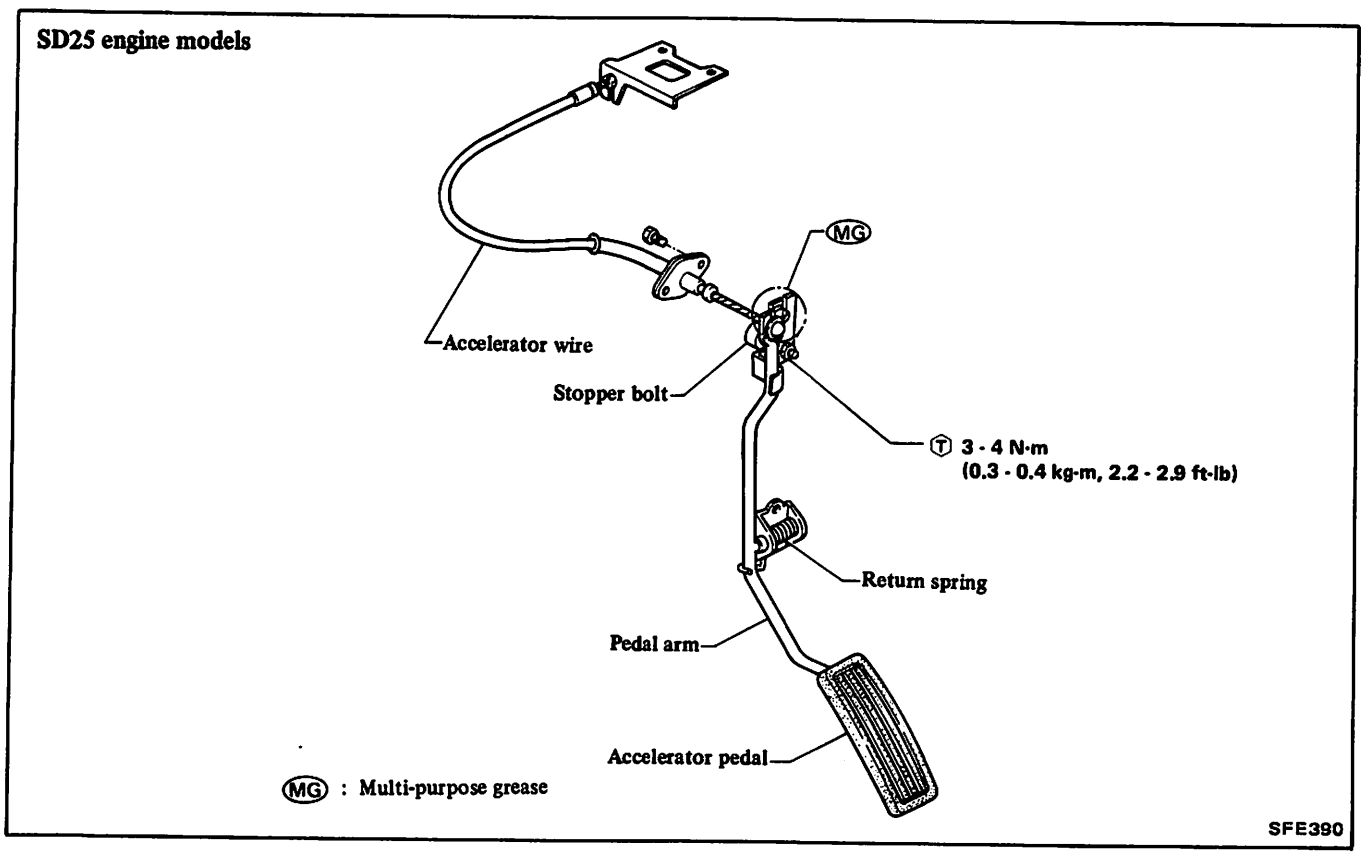

ADJUSTMENT

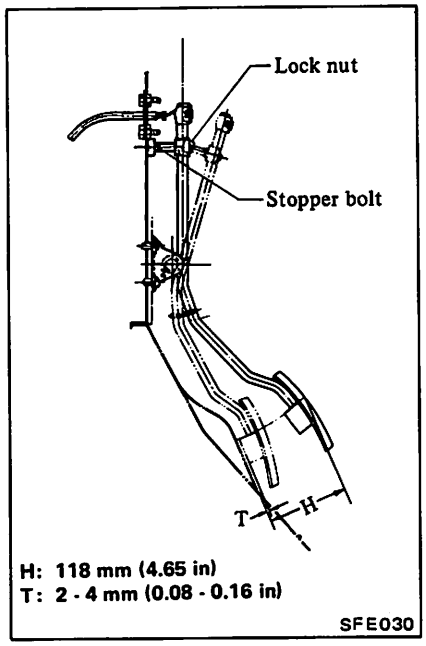

1. Adjust accelerator pedal height "H" with pedal stopper bolt. Then tighten lock nut.

Pedal height "H":
Z20 & 24 engine models
120 mm (4.72 in)
SD25 engine models
110 mm (4.33 in)

Ⓣ : Stopper lock nut
3 - 4 N·m
(0.3 - 0.4 kg-m,
2.2 - 2.9 ft-lb)

2. Adjust accelerator wire play.

Z20 & 24 engine models

(1) Release auto choke effect, since throttle lever is opened by fast idle cam until engine warms up.
- Keep choke valve fully open with fingers.
- Pull throttle lever up by hand, then automatic choke effect will be released.

(2) Set throttle valve to completely closed position and, with wire sufficiently slackened, tighten adjusting nut up to such an extent that throttle lever is about to move. Accelerator pedal play is zero at this time.

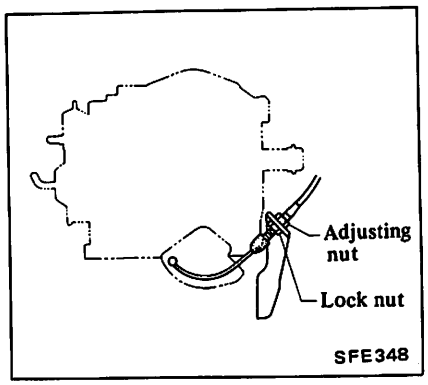

(3) Unscrew adjusting nut one to two turns so that accelerator wire play is 1.0 to 2.5 mm (0.039 to 0.098 in). Tighten lock nut.

SD25 engine models

(1) Set throttle valve to completely closed position, with wire sufficiently slackened.
(2) Tighten adjusting nut up to such an extent that throttle lever is about to move (play is zero at the time).
(3) Unscrew adjusting nut one to two turns so that accelerator wire play is 1.0 to 2.5 mm (0.039 to 0.098 in). Tighten lock nut.

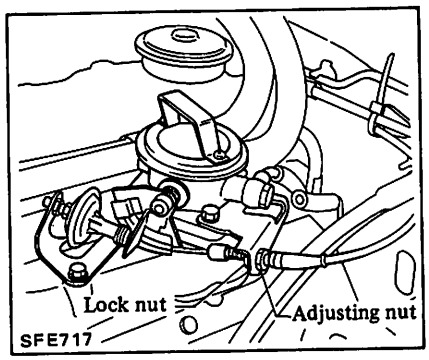

3. After completing the adjustment as previously explained, check the following:

(1) Make sure the accelerator system functions smoothly and quietly without disturbing any adjacent parts.
(2) Depress accelerator pedal down until throttle valve fully opens. Make sure that the clearance "T" between accelerator pedal reverse side and dash floor is 2 to 4 mm (0.08 to 0.16 in) without floor mat. Adjust pedal stopper bolt and lock nut if beyond limits.
(3) Check throttle lever if it returns to the original position as soon as accelerator pedal is released.
(4) Apply a small amount of recommended multi-purpose grease as shown in figure.

REMOVAL

Accelerator wire

1. Remove air cleaner assembly.
2. Disconnect accelerator wire from carburetor.

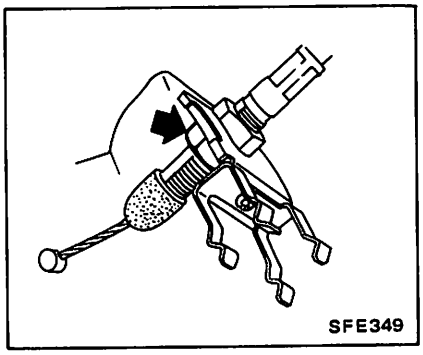

3. Disconnect wire at A.S.C.D. drum.
(A.S.C.D. equipped model)
4. Remove nylon collar by pushing it toward wire end and disconnect accelerator wire from accelerator pedal arm.

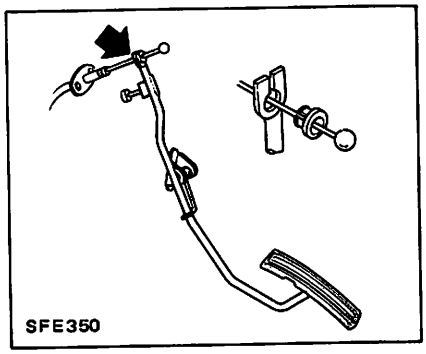

5. Remove accelerator wire outer case from body, and detach accelerator wire.

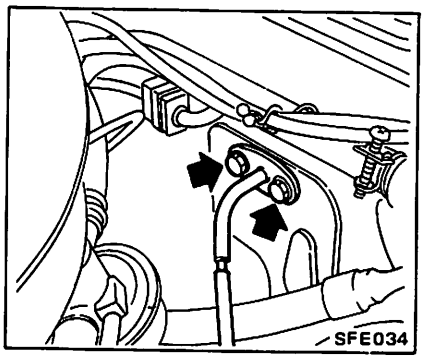

Accelerator pedal

1. Remove nylon collar by pushing it toward wire end and disconnect accelerator wire from accelerator pedal arm.
2. Remove pedal with bracket.

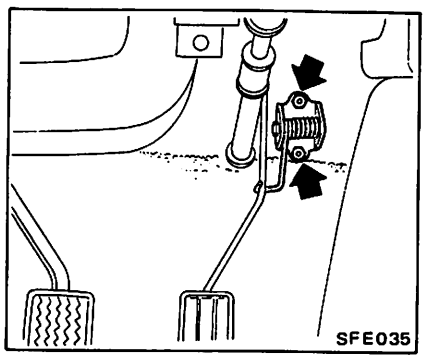

INSPECTION

1. Check accelerator pedal return spring for rust, fatigue or damage. Replace if necessary.
2. Check accelerator wire, cases and fastening locations for rust, damage or looseness. Repair or replace if necessary.

INSTALLATION

To install, reverse the order of removal.

a. **Apply recommended multi-purpose grease slightly to portion (MG) as shown on page FE-2.**
b. **Ensure that kickdown switch (for automatic transmission models) turns ON when accelerator pedal is fully depressed and throttle valve is fully opened. Also ensure that, at this point, switch's push rod moves properly.**

THROTTLE CONTROL WIRE (SD25 engine)

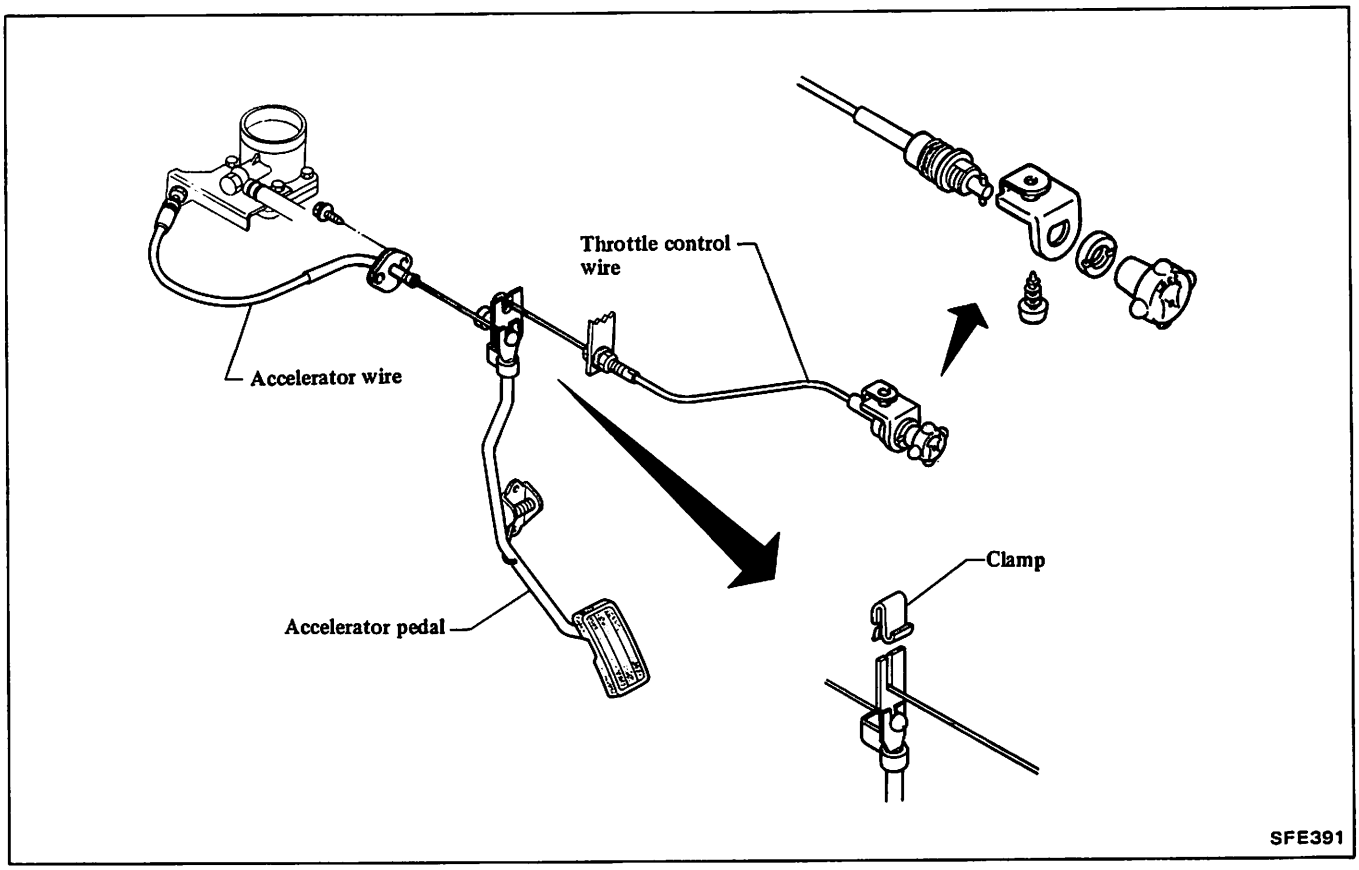

ADJUSTMENT

After adjusting accelerator wire length and accelerator pedal height, adjust throttle control wire length with adjusting nut at bracket so that accelerator pedal keeps its original position when pushing in throttle control knob completely.

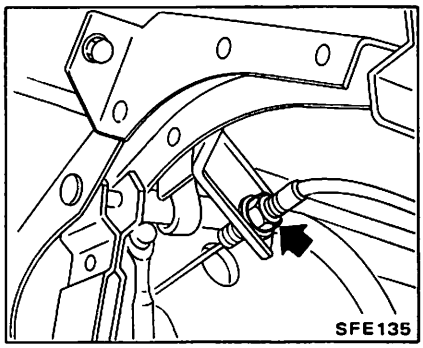

REMOVAL AND INSTALLATION

1. Disconnect throttle control wire from pedal arm by removing clamp.
2. Disconnect throttle control wire from throttle control wire bracket.
3. Pull out throttle control knob.
4. To install, reverse the order of removal.

DASH POT

On the diesel engine models, dash pot is used.

ADJUSTMENT

1. It is necessary that the idling speed and mixture be well tuned and engine sufficiently warm.
2. Keep the engine speed at 1,280 to 1,350 rpm by holding throttle lever with hand, adjust dash pot until its stem touches the venturi lever.
3. Make sure that the engine speed is smoothly reduced to the specified idling speed within a few seconds.
4. After adjustment is properly made, tighten lock nut securely.

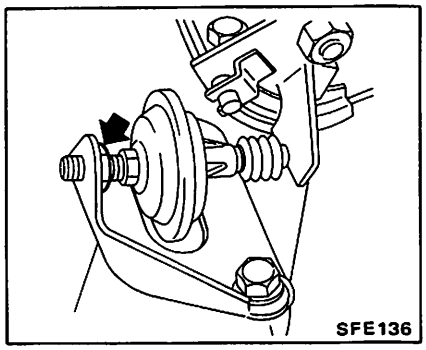

INJECTION PUMP CONTROL MECHANISM (SD25 engine)

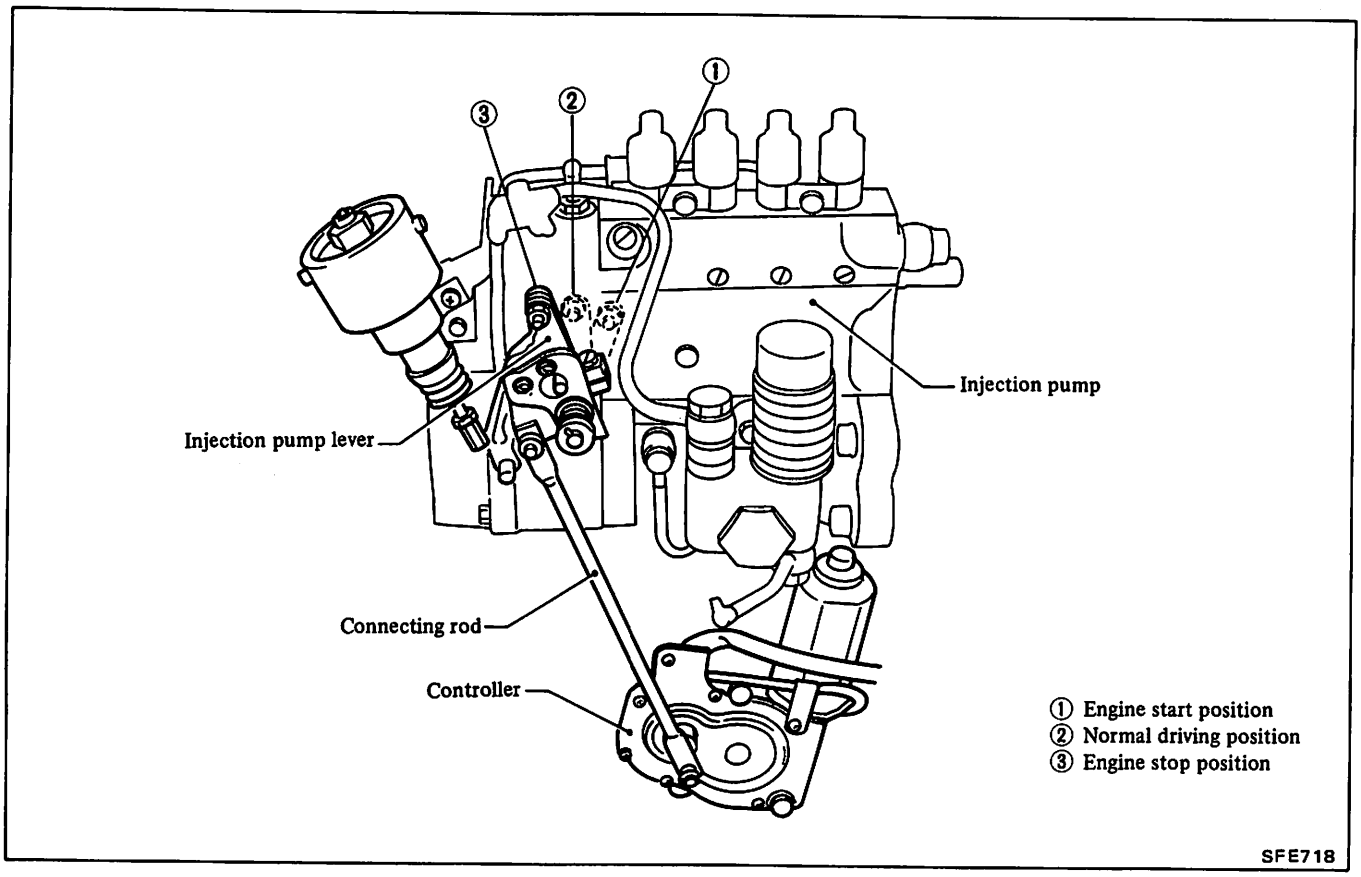

DESCRIPTION

The injection pump control system is controlled by the ignition key in order to start, operate or stop the fuel injection pump.

The injection pump control mechanism is controlled by the injection pump control unit (D.P.C. module), thereby controlling the amount of fuel injection by operating the injection pump lever.

When the ignition key is in the "START" position, the injection pump lever is set at position ①, thereby increasing the fuel causing the engine to start. After starting the engine (with the ignition key in the "ON" position), the injection pump lever moves to position ②. When the ignition key is in the "OFF" position, the injection pump lever moves to position ③, thereby cutting off the fuel injection causing the engine to stop.

Even though the engine cannot be stopped by operating the ignition key, it can be manually stopped in the following manner.

1. Turn the ignition key to "OFF".
2. Pull control lever Ⓐ in the direction that is away from the fuel injection pump. This slips the pin which connects the control lever with the fuel injection pump lever.
3. Move the fuel injection pump lever to the stop position by hand.

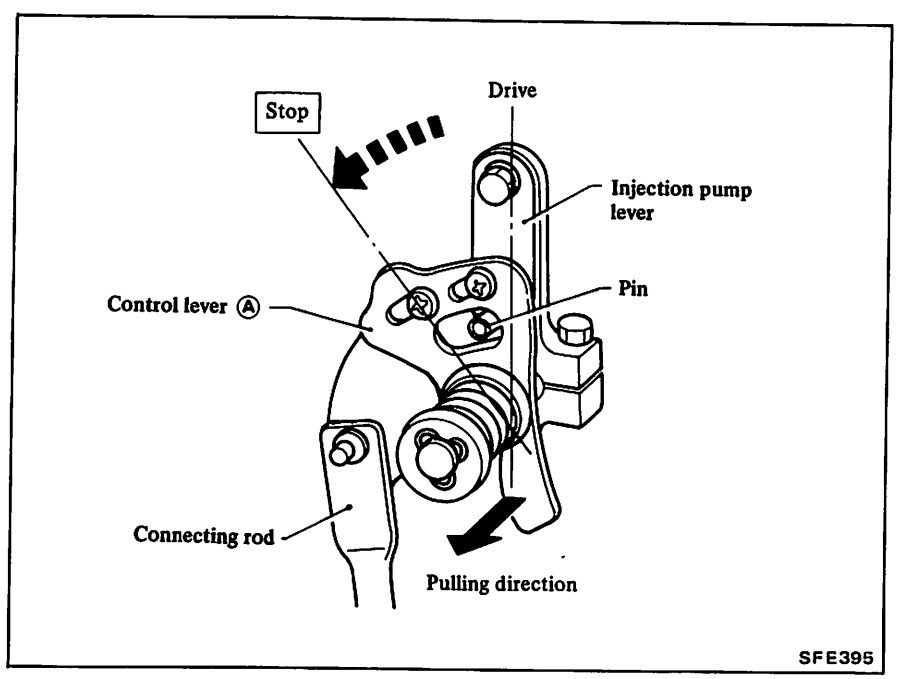

REMOVAL

1. Remove connecting rod.

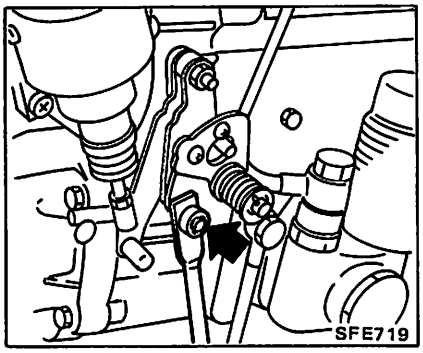

2. Remove controller.

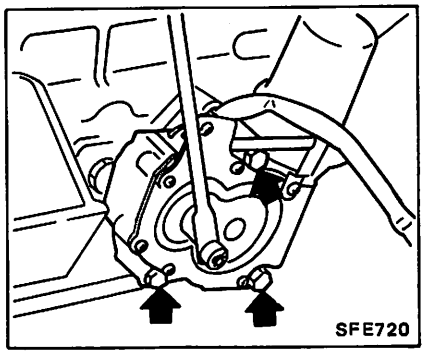

INSTALLATION

To install, reverse the order of removal.

Prior to assembling, ensure that controller and injection pump lever are positioned at STOP.

INSPECTION

Refer to Injection Pump Control System (Section EL).

TROUBLE-SHOOTING

Refer to Injection Pump Control System (Section EL).

INJECTION PUMP CONTROL UNIT (D.P.C. Module)

Refer to Injection Pump Control Unit (Section EL).

FUEL SYSTEM

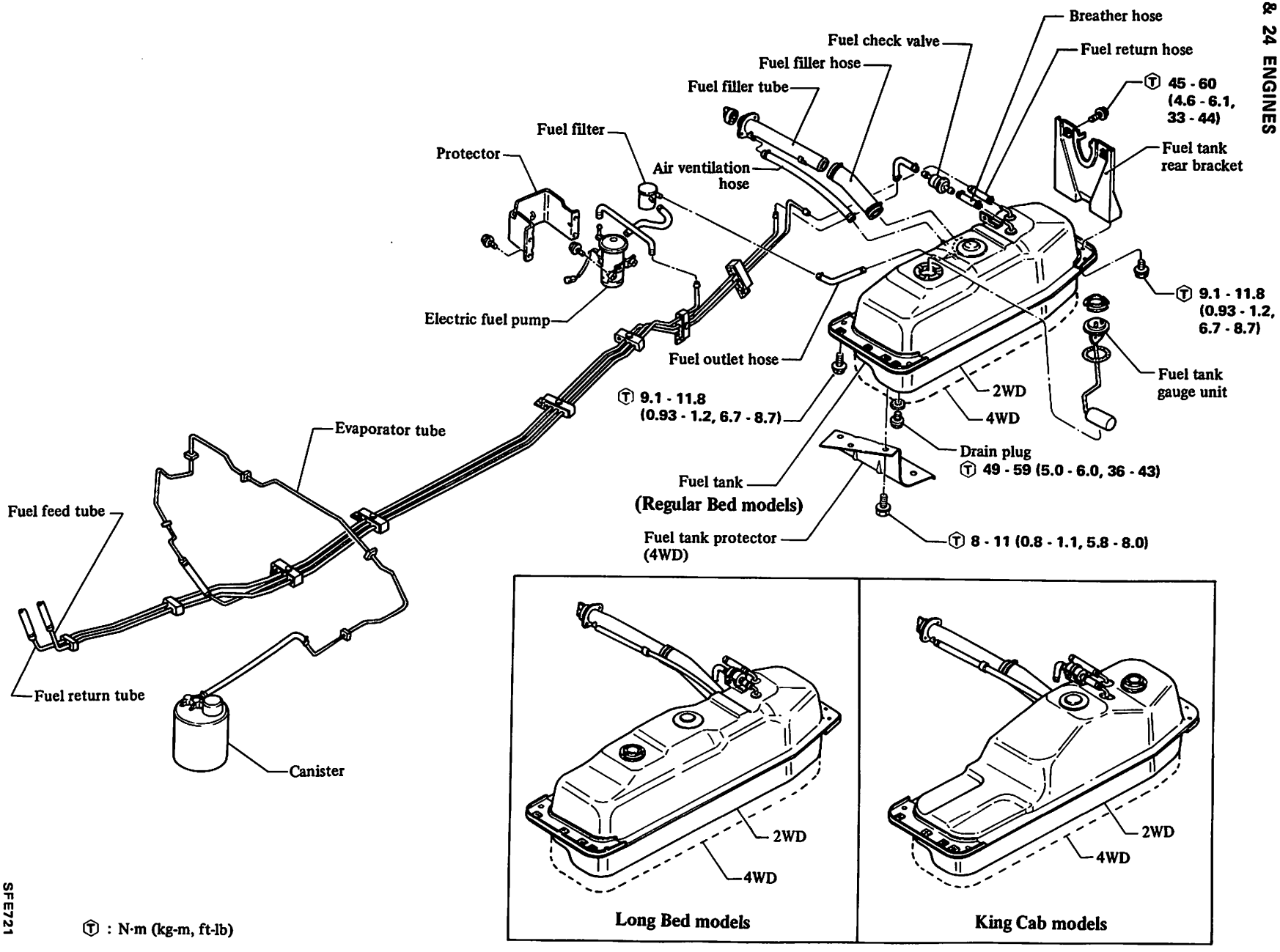

Ⓣ : N·m (kg-m, ft-lb)

SFE721

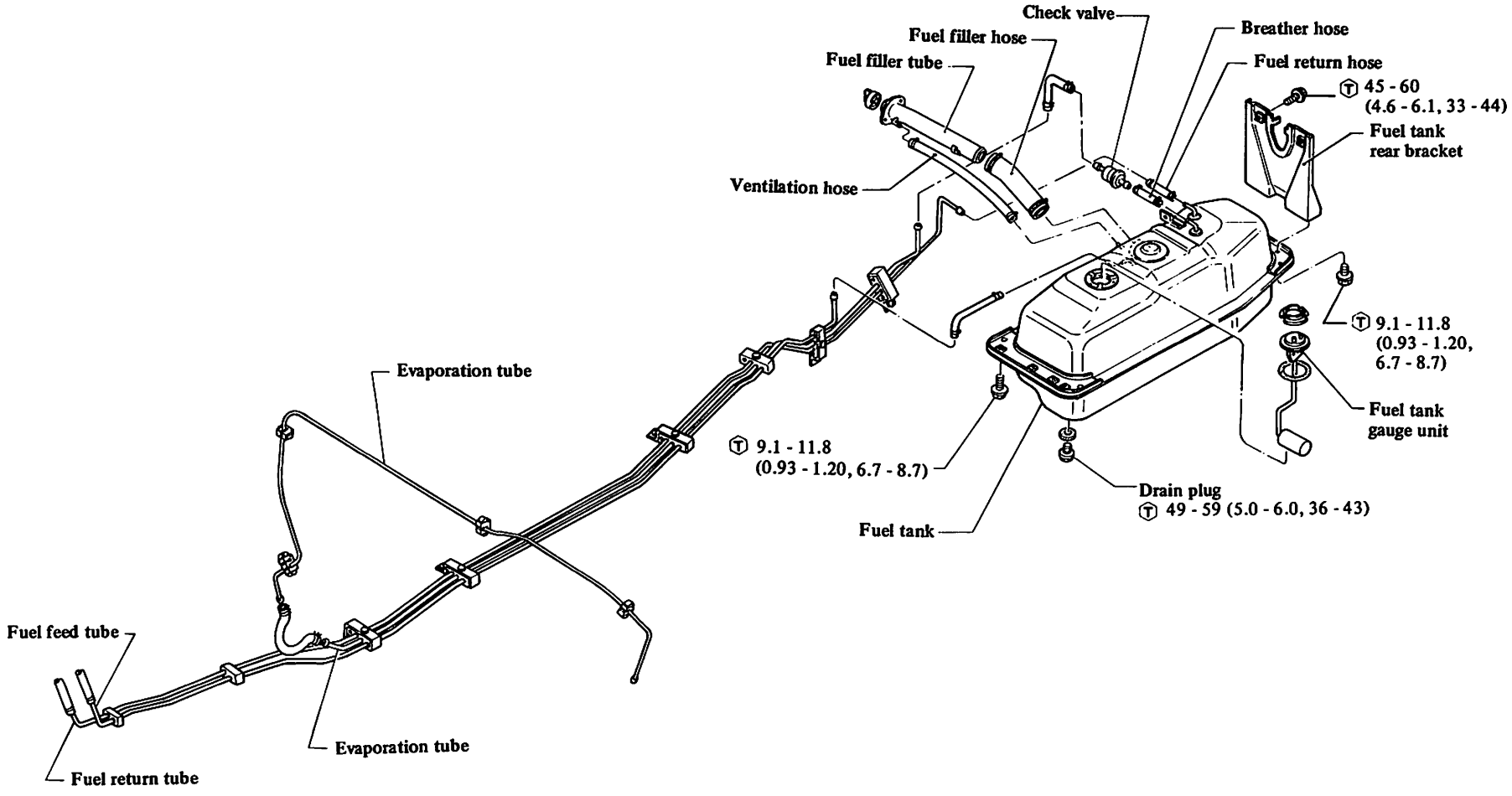

Ⓣ : N·m (kg-m, ft-lb)

SFE392

REMOVAL

WARNING:
When replacing fuel line parts, be sure to observe the following:
a. Put a "CAUTION: INFLAMMABLE" sign in workshop.
b. Be sure to have a CO_2 fire extinguisher in the workshop.
c. Be sure to disconnect battery ground cable before conducting operations.
d. Put drained fuel in an explosion-proof container and put on lid securely.

FUEL TANK

1. Disconnect battery ground cable.
2. Drain fuel from fuel tank.
3. Disconnect following parts.
- Fuel filler hose
- Air ventilation hose
- Fuel outlet hose
- Breather hose
- Fuel return hose
- Fuel tank gauge unit wire connector

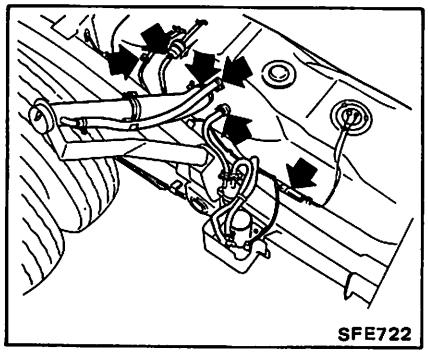

4. Remove fuel tank protector and fuel tank.

Plug hose and pipe opening to prevent entry of dust or dirt during removal.

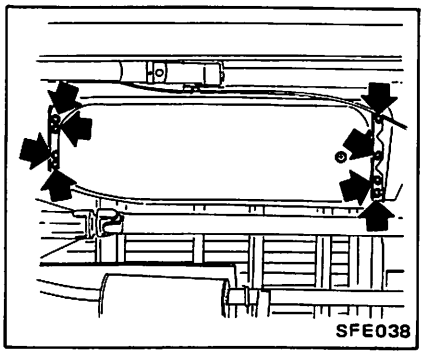

FUEL TANK GAUGE UNIT

1. Disconnect battery ground cable.
2. Disconnect wires from fuel tank gauge unit.
3. Remove fuel tank. Refer to Fuel Tank for removal.
4. Remove lock plate, turning it counterclockwise with a suitable drift and a hammer.

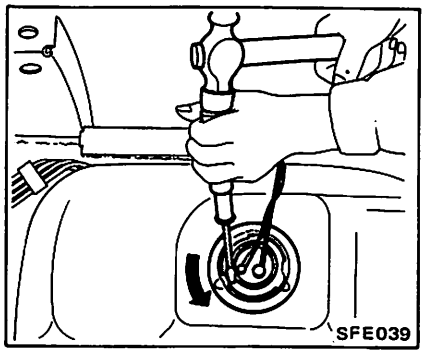

5. Remove fuel tank gauge unit from tank. **Plug tank unit opening to prevent entry of dust or dirt.**

FUEL FILTER TUBE AND HOSE

1. Disconnect battery ground cable.
2. Drain fuel from fuel tank.
3. Disconnect fuel filler hose and air ventilation hose from fuel tank.

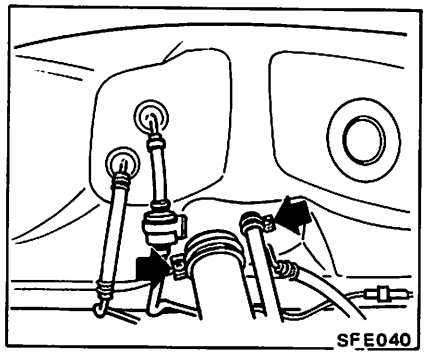

4. Remove fuel filler neck attaching bolts and remove fuel filler hose and tube.

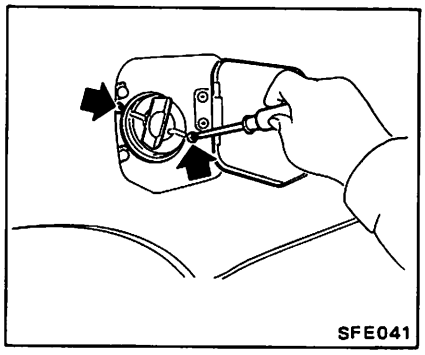

FUEL CHECK VALVE

1. Disconnect breather hoses from check valve.

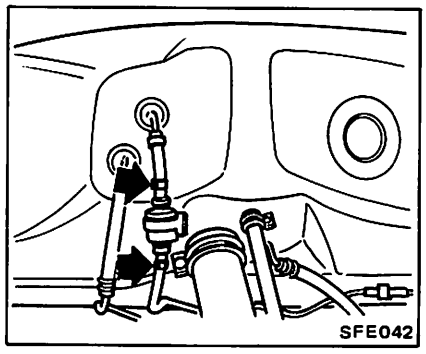

2. Pull check valve out of its holder.

FUEL TUBE

Fuel tubes are serviced as an assembly. However, do not disconnect any fuel line unless absolutely necessary.

1. Drain fuel from fuel tank.
2. Loosen fuel hose clamps and disconnect fuel tubes on each end.

Plug hose and tube openings to prevent entry of dust of dirt while removing.

3. Unfasten clips that hold tube on underbody. Do not remove brake tube from clip.
4. Remove tube from the vehicle.

FUEL FILTER

1. Drain fuel from fuel tank.
2. Disconnect fuel hoses from fuel filter by removing clamps.
3. Remove fuel filter.

INSPECTION

FUEL TANK

Check fuel tank for cracks or deformation. If necessary, replace.

FUEL TANK GAUGE UNIT

Refer to Fuel Tank Gauge Unit (Section EL) for inspection.

FUEL HOSE

Inspect all hoses for cracks, fatigue, sweating or deterioration. Replace any hose that is damaged.

FUEL TUBE

Replace any fuel tube that is cracked, rusted, collapsed or deformed.

FUEL CHECK VALVE

Refer to Fuel Check Valve (Sections EF & EC) for inspection.

FUEL FILTER

Refer to Fuel Filter (Section EF) for inspection.

INSTALLATION

To install, reverse the order of removal. Observe the following:

a. **Install hose clamps securely. Do not tighten excessively to avoid damaging hoses.**
b. **Fasten fuel tube clamps on underbody securely. Failure to follow this caution could result in damage to the surface of fuel tube.**
c. **Do not kink or twist hose and tube when they are routed.**
d. **Install filler hose after fuel tank has been mounted in place. Failure to follow this caution could result in leakage from around hose connections.**
e. **Always connect the filler hose with the arrow facing the fuel tank and up.**
f. **When installing fuel tank gauge unit, align the projection of tank gauge unit with the notch in fuel tank and tighten it securely. Be sure to install gauge unit with O-ring in place.**
g. **Run engine and check for leaks at connections.**

Ⓣ : Drain plug
49 - 59 N·m
(5.0 - 6.0 kg-m,
36 - 43 ft-lb)
Fuel tank securing bolt
9.1 - 11.8 N·m
(0.93 - 1.2 kg-m,
6.7 - 8.7 ft-lb)
Fuel tank protector securing bolt
8 - 11 N·m
(0.8 - 1.1 kg-m,
5.8 - 8.0 ft-lb)

EXHAUST SYSTEM

Z20 & 24 ENGINES

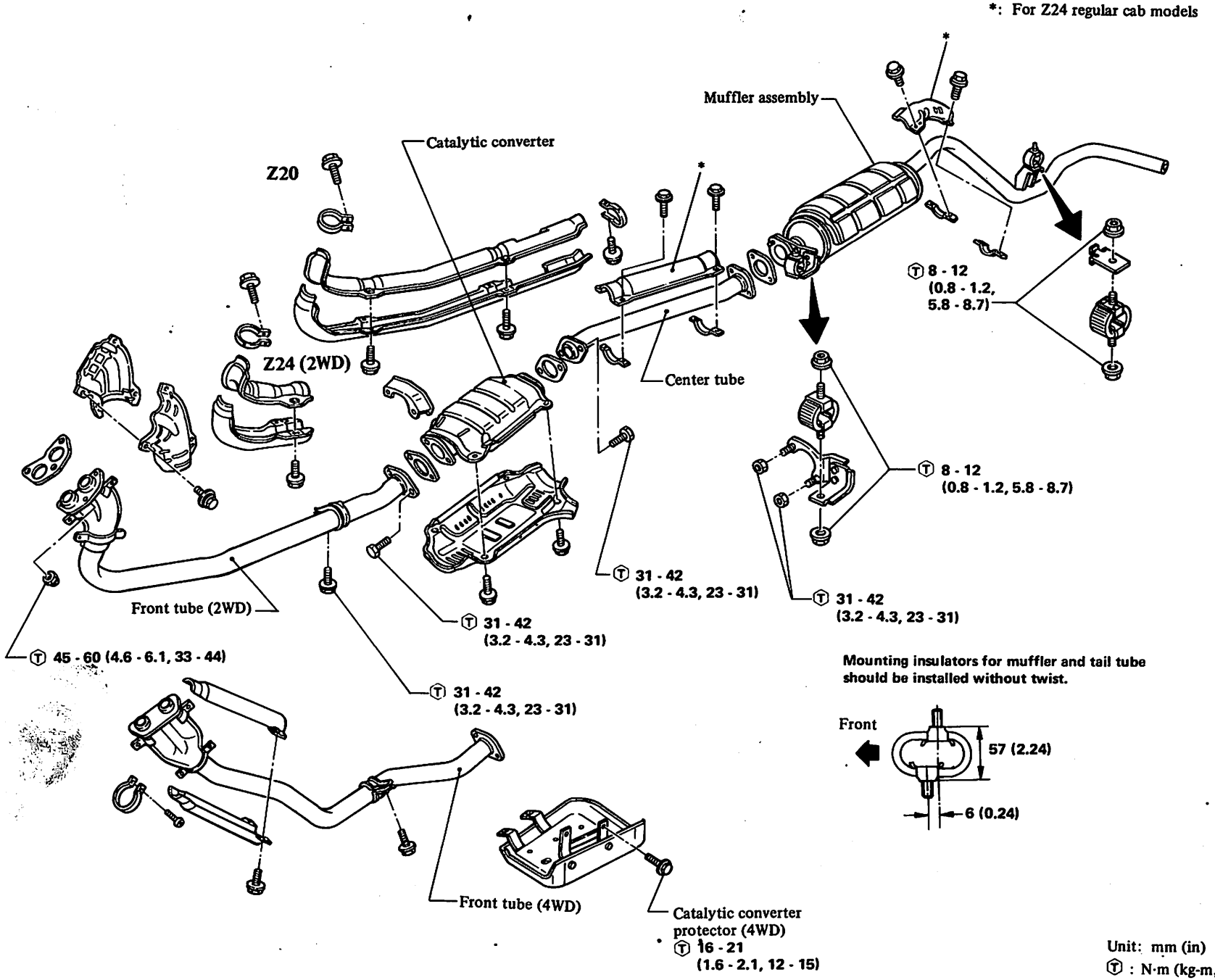

SFE723

SHIP	B.O.					
	1	0 99992-72086	DISP11	24.00	24.00	24.00

NO RETURN ON ELECTRICAL OR SPECIAL ORDERED ITEMS

THIS WARRANTY DOES NOT COVER PARTS OR ACCESSORIES THAT FAIL DUE TO ABUSE, MISUSE, NEGLECT, ALTERATION OR ACCIDENT OR WHICH HAVE BEEN IMPROPERLY LUBRICATED OR REPAIRED, OR USED IN APPLICATIONS FOR WHICH THEY WERE EITHER NOT DESIGNED OR NOT APPROVED BY THE COMPANY, OR ARE CLEANED, ADJUSTED OR REPLACED AS A PART OF NORMAL MAINTENANCE, OR SPARK PLUGS THAT ARE OIL FOULED, LEAD FOULED OR WHICH FAIL DUE TO THE USE OF LOW-GRADE FUEL, IMPROPER SELECTION OF HEAT RANGE OR MISAPPLICATION, OR FAILURES CAUSED BY NON-NISSAN PARTS OR NON-VOLVO PARTS.

NOTICE TO CONSUMER: PLEASE READ IMPORTANT INFORMATION ON BACK.

X _____

AUTHORIZED SIGNATURE

SUB-TOTAL	24.00
TAX	1.68
MISC	0.00
FREIGHT	0.00
PAY THIS AMOUNT	25.68

FORM ERA-3333

GPD-057865

CAPITOL

NISSAN **VOLVO**

1120 W. CAPITOL EXPWY. • SAN JOSE, CA 95136

(408) 978-4560

THANK YOU FOR PURCHASING YOUR PARTS FROM
CAPITOL NISSAN VOLVO. WE ARE NOW OPEN
LONGER HOURS TO BETTER SERVE YOU.
MONDAY THRU FRIDAY 8:00AM TO 5:30PM
SATURDAY 8:00AM TO 4:30PM

NOTICE: RETURN POLICY

No refund on transportation charges. Absolutely no returns after 30 days. A 20% handling charge will be made on all goods returned unless on account of being defective or error on our part. All returns must be accompanied by this receipt. See warranty and conditions on reverse. All parts must be returned in original container and in sellable condition.

CUSTOMER NO.	TAX EXEMPT NUMBER	CUST. P.O. NO.	SHIP VIA	PAY	SOLD BY	INVOICE DATE	INVOICE NO.
99				CASH	CRAIG CASINI	01/10/91	29666 NIR

BILL TO

CASH SALES PARTS

SHIP TO

QUANTITY		PART NUMBER / DESCRIPTION	BIN	LIST	NET	AMOUNT	[illegible]

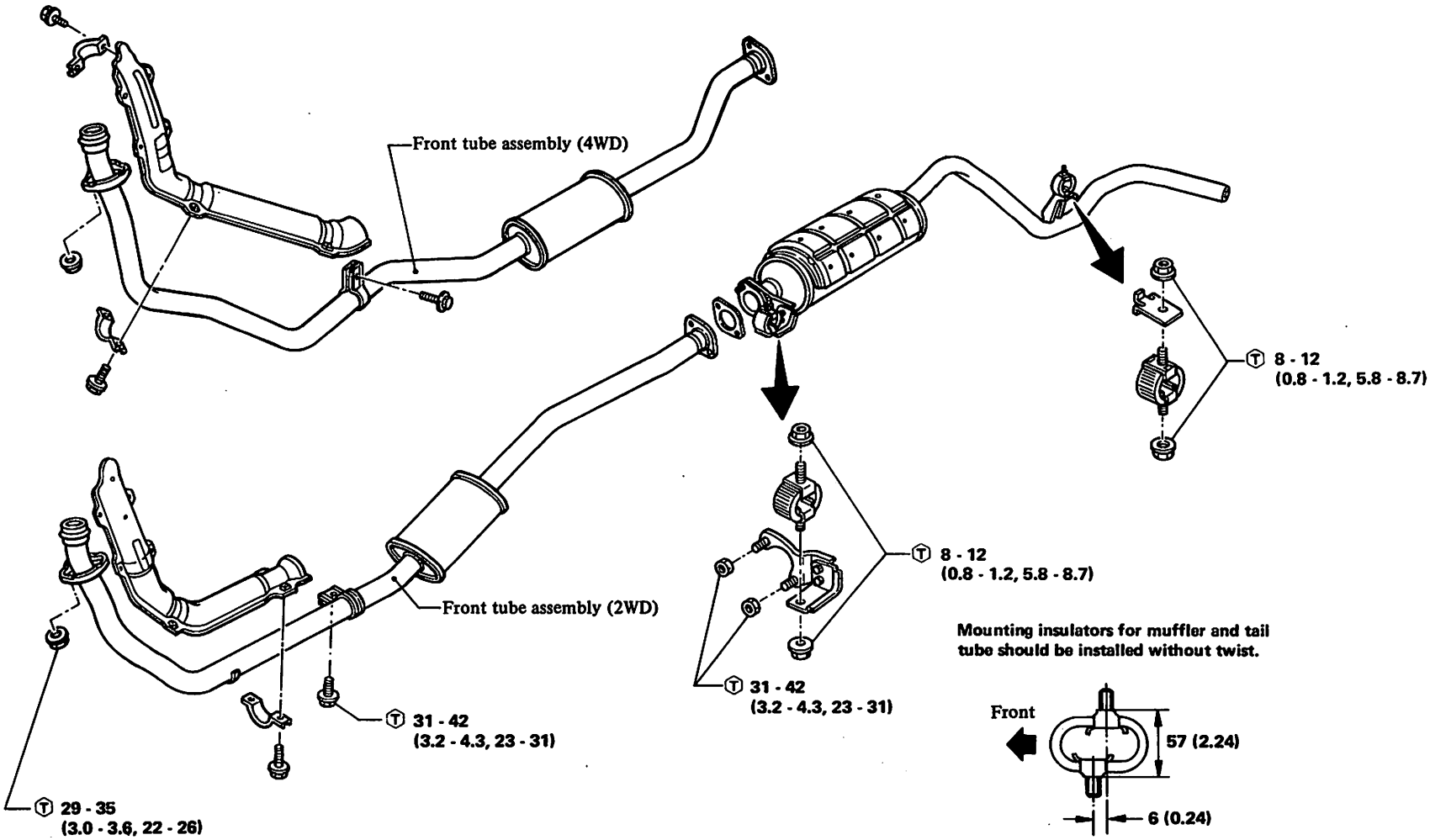

Unit: mm (in)
Ⓣ : N·m (kg-m, ft-lb)

SFE724

REMOVAL

Z20 & 24 ENGINES

Front tube

1. Remove three nuts attaching front exhaust tube to exhaust manifold.

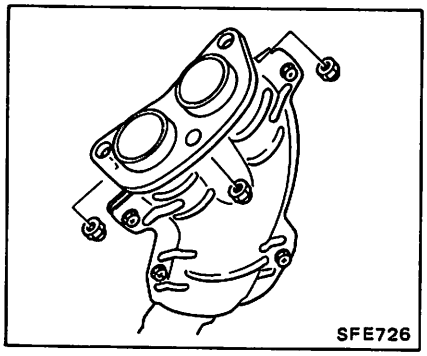

2. Remove catalytic converter lower shelter.

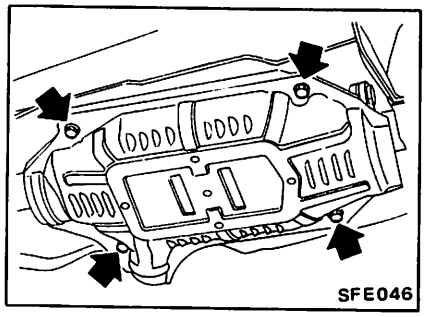

3. Remove bolts attaching front exhaust tube to catalytic converter and remove front tube mounting bolt. Front tube can then be taken out.

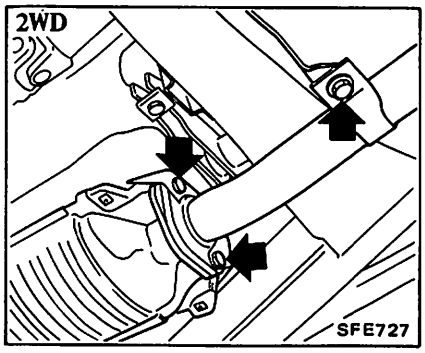

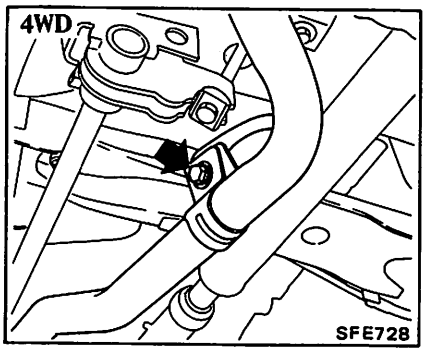

Catalytic converter

1. Remove catalytic converter lower shelter.
2. Remove 4 bolts attaching catalytic converter to exhaust tubes.

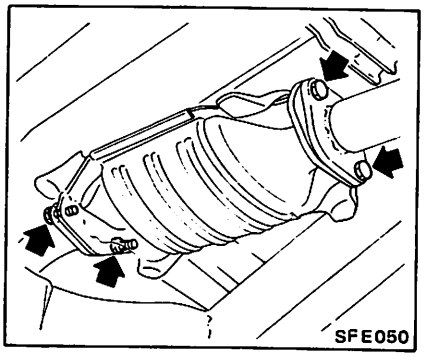

CAUTION:

a. Be careful not to damage catalytic converter when handling.

b. Never wet catalytic converter with water, oil, etc.

Center tube

1. Remove catalytic converter lower shelter and remove bolts attaching center tube to catalytic converter.
2. Remove nuts attaching center tube to muffler.

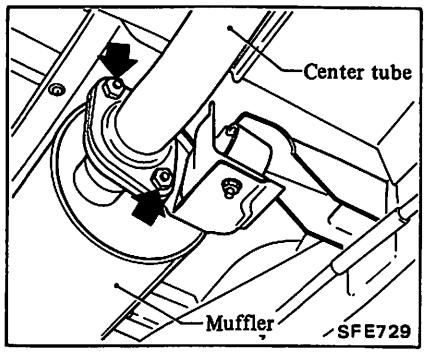

Muffler and tail tube

1. Remove tail tube mounting nut.

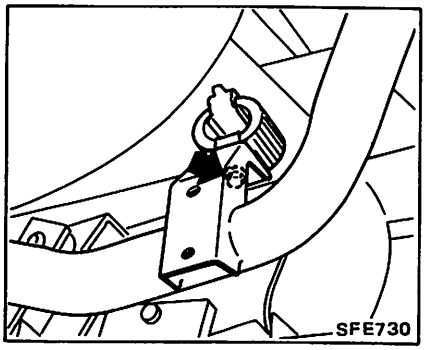

2. Remove nuts attaching muffler to center tube and remove muffler mounting bracket. Muffler and tail tube can then be taken out toward the front.

SD25 ENGINE

Front tube and pre-muffler

1. Remove nuts attaching front exhaust tube to exhaust manifold.
2. Remove nuts attaching front tube to tail tube.
3. Remove front tube mounting bolt. Front tube with pre-muffler can then be taken out.

Main muffler and tail tube

Refer to Muffler and tail tube for Z20 & 24 ENGINES.

INSPECTION

1. Check muffler and tubes for cracks, damage or corrosion.
Replace any part that is damaged beyond limits.
2. Replace bracket and mounting insulator that are cracked, fatigued, or sweated.

INSTALLATION

Install the exhaust system parts in reverse order of removal.

a. Keep a sufficient clearance between exhaust system components and underbody or adjacent parts.

b. After installation, check that mounting brackets and mounting rubbers are free from undue stress. If any of the above parts is not installed properly, excessive noises or vibrations may be transmitted to the vehicle body.

c. Check all tube connection for exhaust gas leaks, and entire system for unusual noises, with engine running.

CLUTCH

SECTION CL

CONTENTS

HYDRAULIC CLUTCH CONTROL CL-2
CLUTCH PEDAL CL-2
CLUTCH MASTER CYLINDER CL-2
OPERATING CYLINDER CL-4
CLUTCH DAMPER CL-5
CLUTCH LINE CL-6
BLEEDING CLUTCH SYSTEM CL-6
CLUTCH UNIT CL-7
CLUTCH DISC AND COVER CL-7
RELEASE BEARING CL-9
PILOT BUSHING CL-10
SERVICE DATA AND SPECIFICATIONS (S.D.S.) CL-10
GENERAL SPECIFICATIONS CL-10
INSPECTION AND ADJUSTMENT CL-11
TIGHTENING TORQUE CL-11
TROUBLE DIAGNOSES AND CORRECTIONS CL-12
SPECIAL SERVICE TOOLS CL-14

Refer to Section MA (Clutch) for:

- CHECKING CLUTCH PEDAL HEIGHT AND FREE PLAY

HYDRAULIC CLUTCH CONTROL

CLUTCH PEDAL

REMOVAL

1. Pry off snap pin and take out clevis pin.

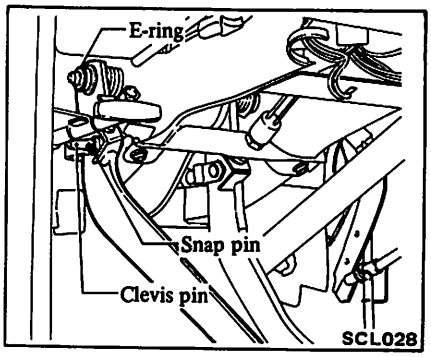

2. Remove clutch switch or stopper bolt.
3. Remove E-ring on fulcrum pin, then remove clutch pedal and return spring.

INSPECTION

Inspect the following parts: If abnormalities are found, repair or replace the affected parts.

1. Clutch pedal bushing ① at boss, fulcrum pin ② and E-ring ③ for wear, deformation or damage.

Bushing is press-fitted. If it shows sign of abnormality, replace pedal assembly.

2. Clevis pin ④ for wear or damage, and snap pin ⑤ for any deformation.
3. Pedal ⑥, pedal pad ⑦ and clutch switch for deformation or damage.
4. Return spring ⑧ for fatigue or damage.

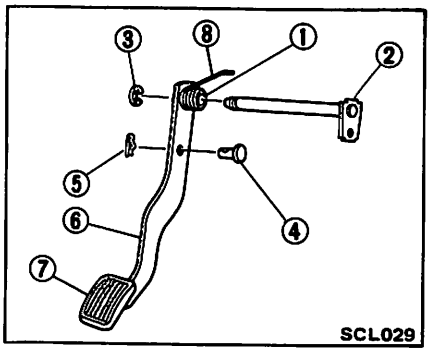

INSTALLATION

1. Install clutch pedal in reverse order of removal.

Observe following:

a. Apply grease to boss of clutch pedal, return spring and fulcrum pin.

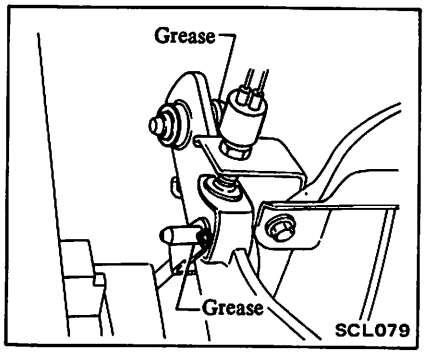

b. Firmly attach E-ring to fulcrum pin.

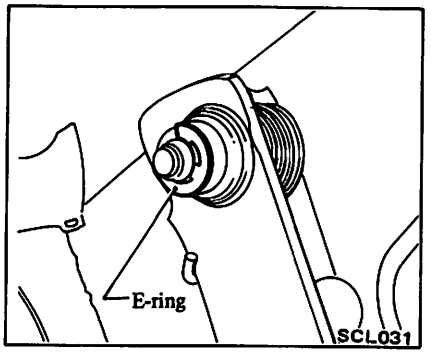

c. Install clevis pin on the right of fulcrum pin and attach snap pin securely.

d. Install return spring as shown below.

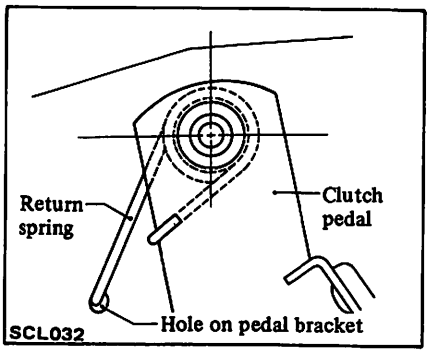

2. After assembly, adjust clutch pedal height and free play.

Refer to Clutch Pedal Height and Free Play (Section MA).

Ⓣ: Clutch switch lock nut (Gasoline engine model)
12 - 15 N·m (1.2 - 1.5 kg-m, 9 - 11 ft-lb)
Pedal stopper bolt lock nut (Diesel engine model)
16 - 22 N·m (1.6 - 2.2 kg-m, 12 - 16 ft-lb)

CLUTCH MASTER CYLINDER

REMOVAL

1. Remove snap pin from clevis pin.
2. Pull out clevis pin.
3. Disconnect clutch tube.
4. Remove master cylinder.

When disconnecting clutch tube, be sure to receive draining clutch fluid into a container. Use of rags is also suggested to keep adjacent parts and area clean.

CAUTION:
When disconnecting clutch tube, use suitable flare nut wrench.
Never use an open end wrench or adjustable wrench.

DISASSEMBLY

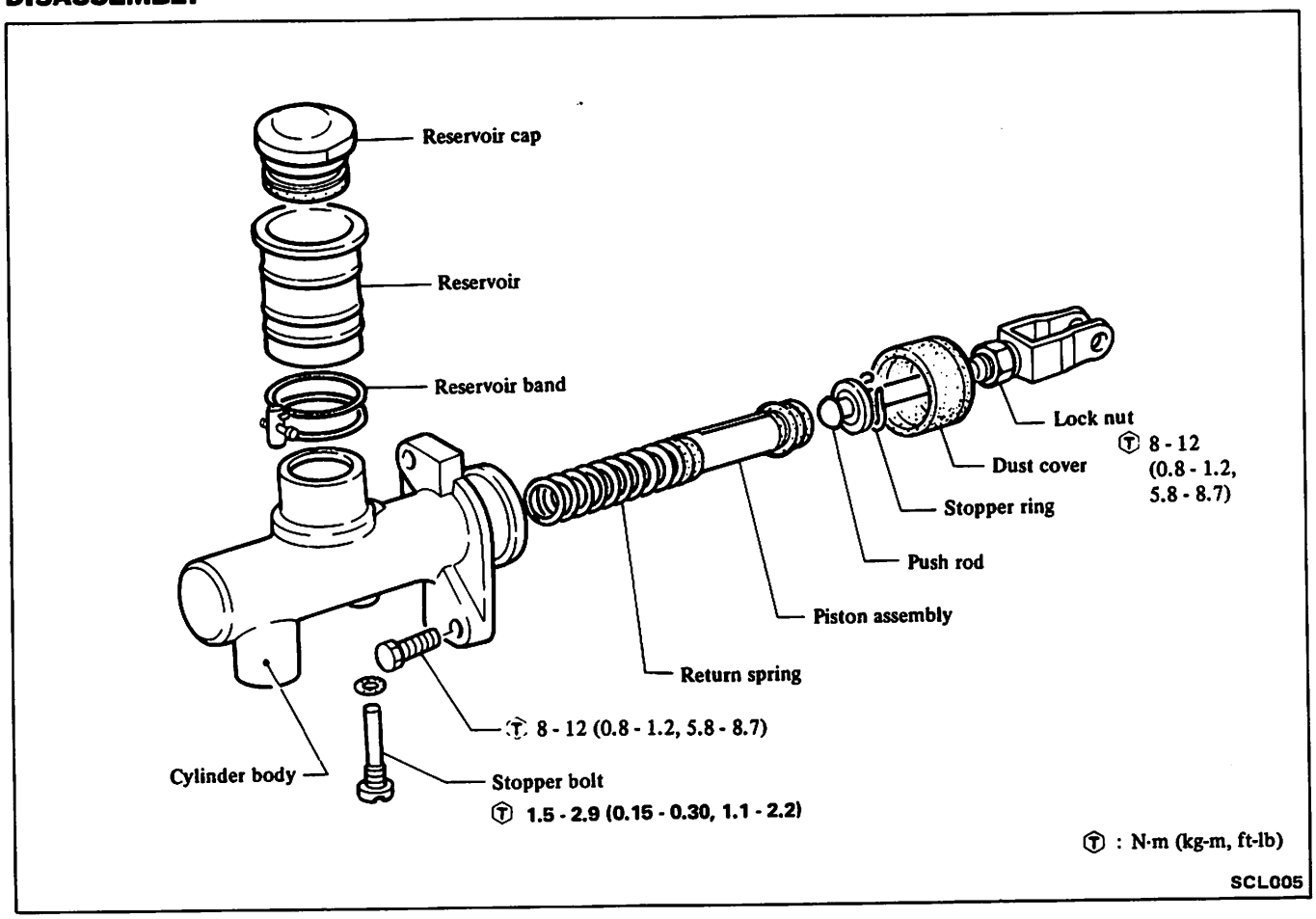

1. Remove dust cover and take off stopper ring.

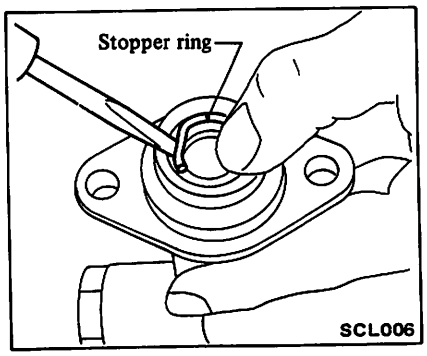

2. Then, the push rod and stopper can be taken out.
3. Loosen stopper bolt and take it out.
4. The piston, spring seat, and return spring can be taken out.

Discard piston cup and dust cover.

CAUTION:
Never detach reservoir. If it is removed for any reason, discard it and install new one.

INSPECTION

CAUTION:
To clean or wash all parts of master cylinder, clean brake fluid must be used. Never use mineral oils such as gasoline and kerosene. It will ruin the rubber parts of the hydraulic system.

1. Check cylinder bore and piston for score or rust and if found, replace.
2. Check cylinder bore and piston for wear. If the clearance between cylinder bore and piston exceeds specified value, replace piston assembly or master cylinder assembly.

Clearance between cylinder bore and piston:
Less than 0.15 mm (0.0059 in)

3. Check condition of piston cup and dust cover. Always replace them after disassembly.
4. Check all recesses, openings and internal passages to ensure that they are clean and free from foreign matter.

ASSEMBLY

1. Apply brake grease to cylinder body, sliding part and piston cup.

2. Install piston assembly to cylinder body.

Be careful not to damage piston cup.

3. Make sure that master cylinder operates normally.
4. Make sure that piston can move maximum stroke smoothly.

Ⓣ : **Stopper bolt**
1.5 - 2.9 N·m
(0.15 - 0.3 kg-m,
1.1 - 2.2 ft-lb)

INSTALLATION

Install clutch master cylinder in reverse order of removal. Observe following:

1. Bleed air out of hydraulic system. Refer to Bleeding Clutch System.
2. Adjust pedal height and pedal free play. Refer to Checking Clutch Pedal Height and Free Play (Section MA).

Ⓣ : **Master cylinder to dash panel securing nut**
8 - 12 N·m
(0.8 - 1.2 kg-m,
5.8 - 8.7 ft-lb)
Clutch tube flare nut
15 - 18 N·m
(1.5 - 1.8 kg-m,
11 - 13 ft-lb)
Push rod lock nut
8 - 12 N·m
(0.8 - 1.2 kg-m,
5.8 - 8.7 ft-lb)

CAUTION:
When connecting clutch tube, use Tool GG94310000.

When tightening flare nut, hold pipe by hand to prevent it from twisting.

OPERATING CYLINDER

REMOVAL

1. Loosen clutch tube flare nut at the bracket on side member.

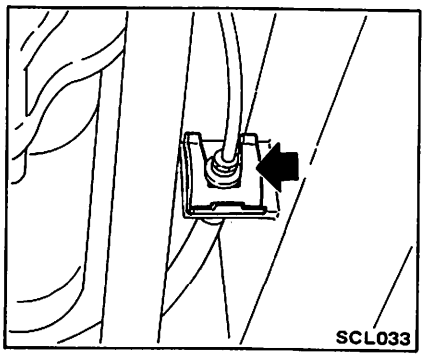

CAUTION:
When disconnecting clutch tube, use suitable flare nut wrench.
Never use an open end wrench or adjustable wrench.

2. Remove lock spring, then disengage hose from bracket.
3. Remove clutch hose from operating cylinder.
4. Remove operating cylinder.

DISASSEMBLY

1. Remove dust cover and push rod.
2. Remove piston and piston cup as an assembly.

Discard piston cup and dust cover.

3. Remove bleeder screw.

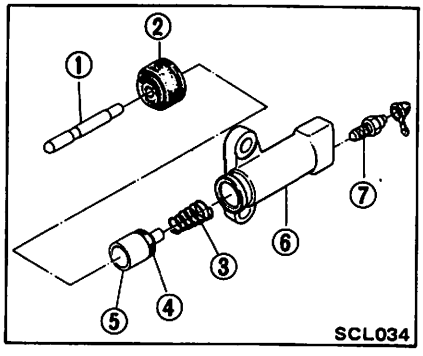

1 Push rod
2 Dust cover
3 Piston spring
4 Piston cup
5 Piston
6 Operating cylinder
7 Bleeder screw

INSPECTION

Visually inspect all disassembled parts and replace parts which are worn or damage.

CAUTION:
To clean or wash all parts of operating cylinder, clean brake fluid must be used.
Never use mineral oils such as gasoline and kerosene. It will ruin the rubber parts of the hydraulic system.

1. Check cylinder bore and piston for score or rust and, if found, replace.
2. Check cylinder bore and piston for wear. If clearance between cylinder bore and piston is more than the specified value, replace piston or operating cylinder assembly.

Clearance between cylinder bore and piston:
Less than 0.15 mm
(0.0059 in)

3. Check condition of piston cup and dust cover. Always replace them after disassembly.
4. Check bleeder hole to be sure that it is clean.

ASSEMBLY

Assemble operating cylinder in reverse order of disassembly. Observe following:

1. Prior to assembly, dip a new piston cup in clean brake fluid. To install piston cup on piston, pay particular attention to its direction.
2. Dip cylinder and piston in clean brake fluid before assembly.

INSTALLATION

Install operating cylinder in reverse order of removal. Observe following:

Bleed air thoroughly from clutch hydraulic system. Refer to Bleeding Clutch System.

a. **When operating cylinder is removed from, or installed on, clutch housing without disconnecting clutch hose from operating cylinder, loosen bleeder screw so that push rod moves lightly.**

b. Exercise care not to warp or twist clutch hose. Be sure to install clutch hose away from exhaust tube.
c. When tightening flare nut, hold pipe by hand to prevent it from twisting.

CAUTION:
When connecting clutch tube, use Tool GG94310000.

Ⓣ : Bleeder screw
6 - 10 N·m
(0.6 - 1.0 kg-m
4.3 - 7.2 ft-lb)
Operating cylinder to clutch housing securing bolts
30 - 40 N·m
(3.1 - 4.1 kg-m,
22 - 30 ft-lb)
Clutch hose to operating cylinder
17 - 21 N·m
(1.7 - 2.1 kg-m,
12 - 15 ft-lb)

CLUTCH DAMPER

REMOVAL

CAUTION:
When disconnecting clutch tube, use suitable flare nut wrench.
Never use an open end wrench or adjustable wrench.

1. Remove clutch tube from clutch damper.
2. Remove clutch damper.

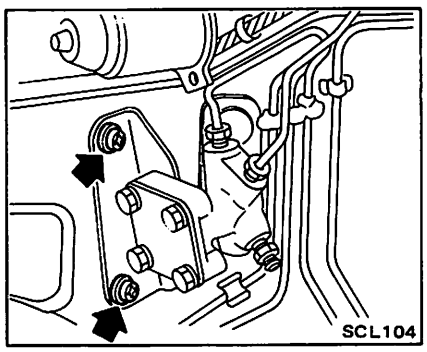

DISASSEMBLY

a. Always replace piston cup.
b. Do not let oil touch the damper rubber as it will ruin the rubber.

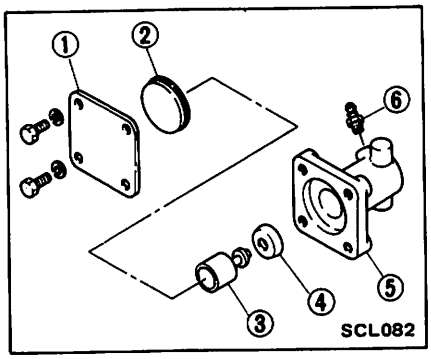

1 Damper cover
2 Damper rubber
3 Piston
4 Piston cup
5 Cylinder
6 Bleeder screw

INSPECTION

CAUTION:
To clean or wash all parts except for damper rubber, clean brake fluid must be used.
Never use mineral oils such as gasoline and kerosene. It will ruin the piston cup.

1. Check cylinder bore and piston for score or rust and, if found, replace.
2. Check cylinder bore and piston for wear. If clearance between cylinder bore and piston is more than the specified value, replace piston or clutch damper assembly.

Clearance between cylinder bore and piston:
Less than 0.15 mm (0.0059 in)

3. Check condition of piston cup. Always replace it after disassembly.
4. Check all recesses, openings and internal passages of cylinder to ensure that they are clean and free from foreign matter.
5. Check damper rubber for cracks, deformation and elasticity. If necessary, replace it.

Spring constant:
Diesel engine model
275 - 353 N/mm
(28 - 36 kg/mm,
1,568 - 2,016 lb/in)
Gasoline engine model
569 - 647 N/mm
(58 - 66 kg/mm,
3,248 - 3,696 lb/in)

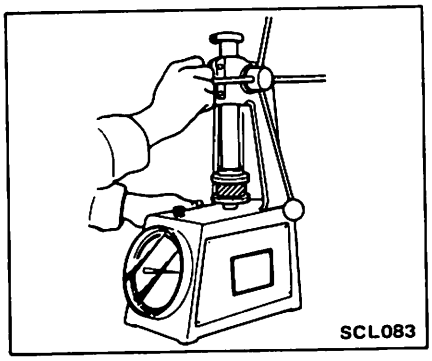

ASSEMBLY

Assemble clutch damper in reverse order of disassembly. Observe following:
1. Prior to assembly, dip a new piston cup, piston and cylinder in clean brake fluid.
2. When installing piston cup and damper rubber, pay particular attention to the direction in which they are installed.

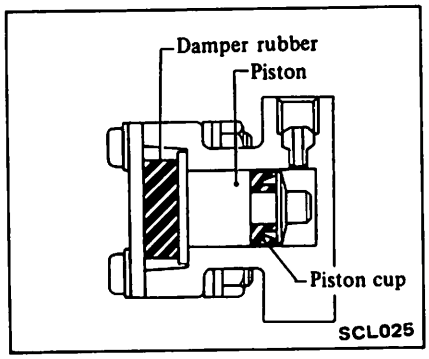

Ⓣ : Damper cover to cylinder bolt
3 - 6 N·m
(0.3 - 0.6 kg-m
2.2 - 4.3 ft-lb)
Bleeder screw
6 - 10 N·m
(0.6 - 1.0 kg-m,
4.3 - 7.2 ft-lb)

INSTALLATION

Install clutch damper in reverse order of removal. Observe following:
1. Bleed air thoroughly from clutch hydraulic system. Refer to Bleeding Clutch System.
2. Adjust pedal height and pedal free play. Refer to Checking Clutch Pedal Height and Free Play (Section MA).

Ⓣ : Clutch tube flare nut
15 - 18 N·m
(1.5 - 1.8 kg-m,
11 - 13 ft-lb)

CAUTION:
When connecting clutch tube, use Tool GG94310000.

When tightening flare nut, hold pipe with hand to prevent it from twisting.

CLUTCH LINE

INSPECTION

Check clutch lines (tube and hose) for evidence of cracks, deterioration or other damage. Replace if necessary.

If leakage occurs at or around joints, retighten and, if necessary, replace damaged parts.

REMOVAL

CAUTION:
When disconnecting clutch tube, use suitable flare nut wrench.
Never use an open end wrench or adjustable wrench.

1. Disconnect clutch tube from clutch hose at bracket on side member.
2. Remove lock spring, then disengage hose from bracket.
3. Remove clutch hose from operating cylinder.
4. Disconnect clutch tube from master cylinder and clutch damper.
5. Remove clamp fixing clutch tube to dash panel.

INSTALLATION

Wipe the opening ends of hydraulic line to remove any foreign matter before making connections.

1. Install clutch tube.

(1) Connect clutch tube to master cylinder and clutch damper with flare nut.

(2) Fix clutch tube to dash panel with clamp.

(3) Then tighten flare nut.

Ⓣ : Clutch tube to master cylinder
15 - 18 N·m
(1.5 - 1.8 kg-m,
11 - 13 ft-lb)

2. Install clutch hose on operating cylinder with a gasket in place.

Use new gasket.

Ⓣ : Clutch hose to operating cylinder
17 - 21 N·m
(1.7 - 2.1 kg-m,
12 - 15 ft-lb)

3. Engage opposite end of hose with bracket. Install lock spring fixing hose to bracket.

a. When tightening flare nut, hold pipe by hand to prevent it from twisting.
b. Exercise care not to warp or twist clutch hose.

4. Connect clutch tube to hose with flare nut and tighten it.

Ⓣ : Flare nut
15 - 18 N·m
(1.5 - 1.8 kg-m,
11 - 13 ft-lb)

5. Check distance between clutch line and adjacent parts (especially between hose and exhaust tube).
6. Bleed air out of hydraulic system.

Refer to Bleeding Clutch System for adjustment.

CAUTION:
When tightening flare nut, use Tool GG94310000.

BLEEDING CLUTCH SYSTEM

The hydraulic clutch system must be bled whenever clutch line has been disconnected or air has entered it.

1. Remove cap of reservoir and top up with recommended brake fluid.

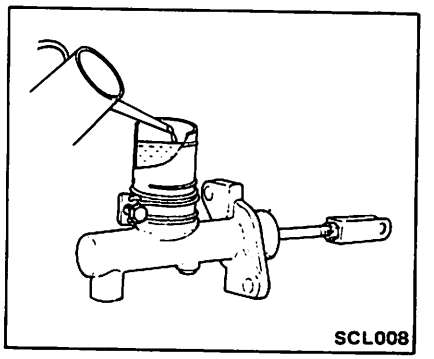

2. Thoroughly clean mud and dust from bleeder screw of operating cylinder and clutch damper so that outlet hole is free from any foreign material. Install bleeder hose (vinyl hose) on bleeder screw.

Place the other end of it in a container filled with brake fluid.

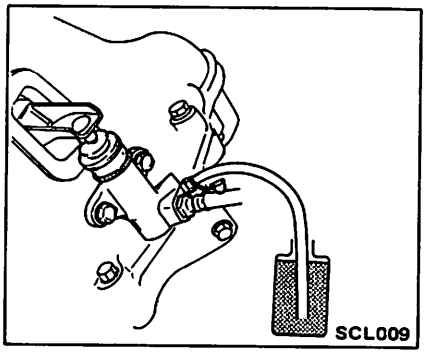

3. Have a co-worker depress clutch pedal two or three times. With clutch pedal depressed fully, loosen bleeder screw to bleed air out of clutch system.

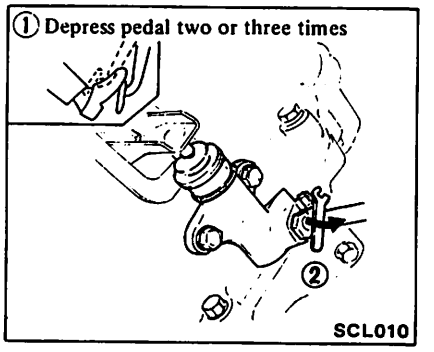

4. Close bleeder screw quickly as clutch pedal is on down stroke.
5. Allow clutch pedal to return slowly with bleeder screw closed.
6. Repeat steps 3 through 5 until no air bubble shows in the vinyl hose.

Ⓣ : **Bleeder screw**
6 - 10 N·m
(0.6 - 1.0 kg-m,
4.3 - 7.2 ft-lb)

7. Depress and release clutch pedal several times; then, check for external hydraulic leaks at connections.

a. **Brake fluid containing air is white and has visible air bubbles.**
b. **Brake fluid containing no air runs out of bleeder screw in a solid stream without air bubbles.**
c. **Pay close attention to clutch fluid level in reservoir during bleeding operation.**
d. **Add brake fluid to reservoir only up to the specified level. Do not overfill.**

CAUTION:
a. **Do not re-use brake fluid drained during bleeding operation.**
b. **Exercise care not to splash brake fluid on exterior finish as it will damage the paint.**
c. **When tightening flare nut, use Tool GG94310000.**

8. After bleeding operating cylinder, bleed clutch damper in the same manner as operating cylinder.

CLUTCH UNIT

CLUTCH DISC AND COVER

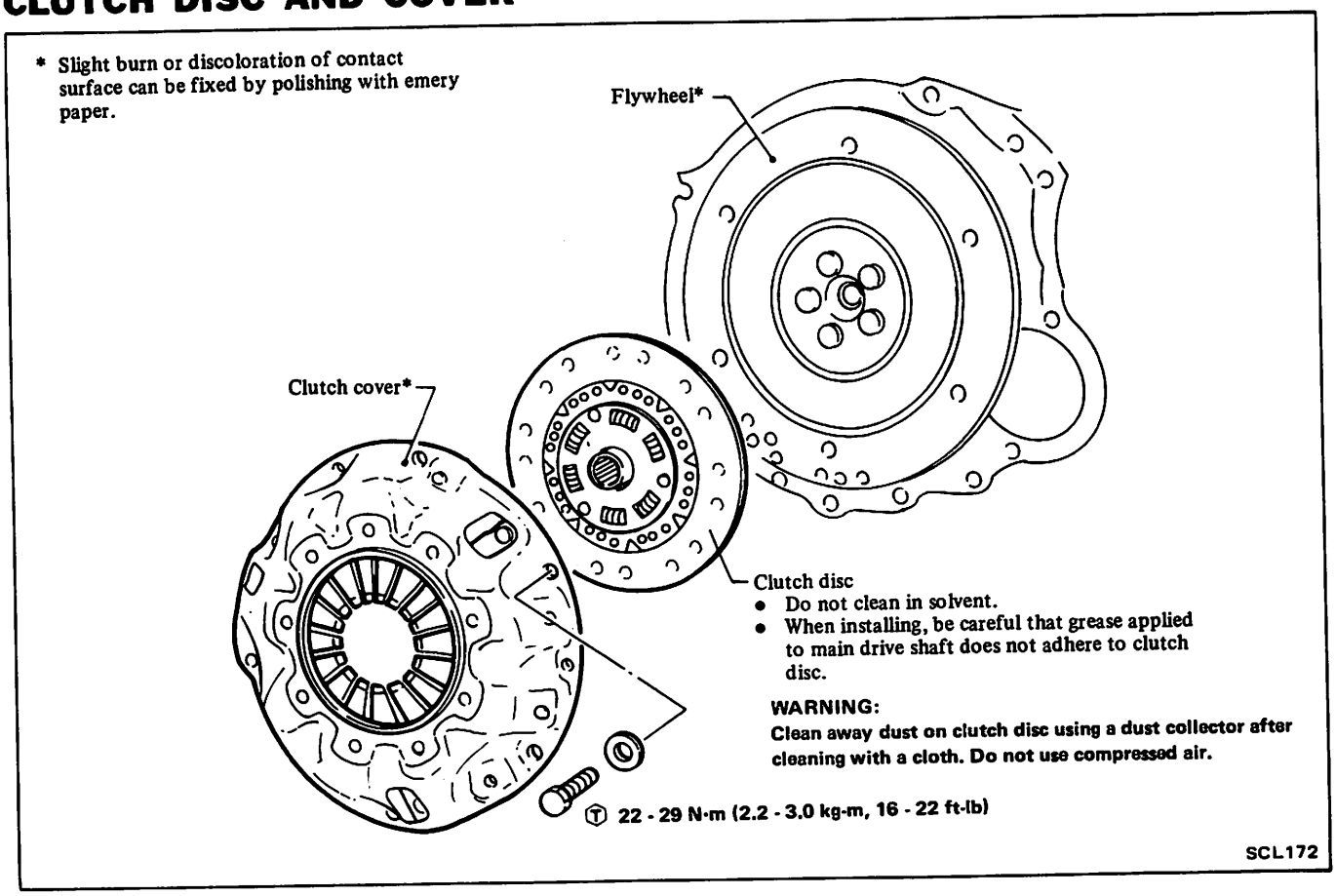

REMOVAL

1. Remove transmission from engine. Refer to Removal (Section MT).
2. Insert Tool KV30100100 into clutch disc hub.

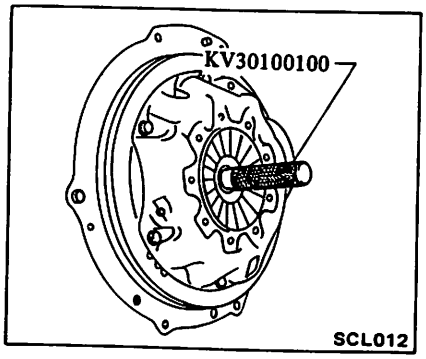

3. Loosen bolts attaching clutch cover to flywheel, one turn each at a time, until spring pressure is released. Be sure to turn them out in a crisscross fashion.

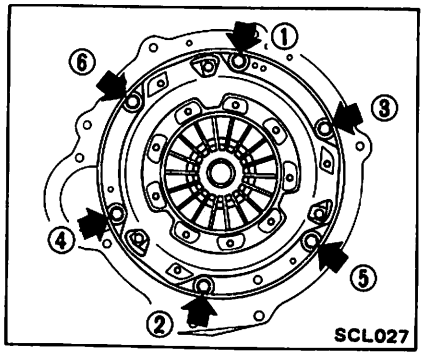

4. Remove clutch disc and cover assembly.

INSPECTION

Wash all disassembled parts except disc assembly in suitable cleaning solvent to remove dirt and grease before making inspection and adjustment.

Flywheel and pressure plate

Check friction surface of flywheel and pressure plate for scoring or roughness. Slight roughness may be smoothed by using fine emery cloth. If surface is deeply scored or grooved, the part should be replaced.

Clutch disc assembly

Inspect clutch disc for worn or oily facings, loose rivets and broken or loose torsional springs.

1. If facings are oily, disc should be replaced. In this case, inspect transmission front cover oil seal, pilot bushing, engine rear oil seals and other points for oil leakage.
2. The disc should also be replaced when facings are worn locally or worn down to the specified limit.

Wear limit of facing "A":
Less than 0.3 mm (0.012 in)

- Measure the rivet head.

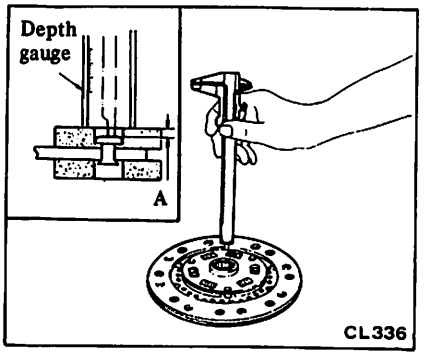

3. Check disc plate for runout whenever the old disc or a new one is installed.
4. If runout exceeds the specified value at outer circumference of facing, replace or repair disc.

Runout limit
(total indicator reading):
Less than 0.7 mm (0.028 in)
"R" (from hub center):
225TBL
108 mm (4.25 in)
240TBL
115 mm (4.53 in)

CAUTION:
When repairing disc plate, never hold it forcibly with pliers or bend it excessively; otherwise facing will be damaged.

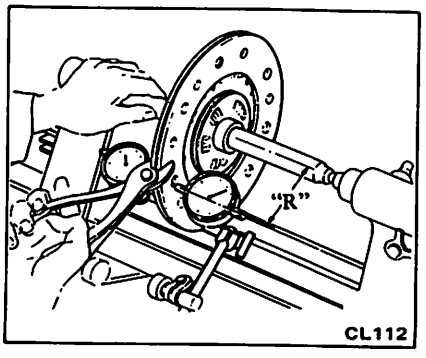

5. Check fit of disc hub on transmission main drive gear splines for smooth sliding. If splines are worn, clutch disc or main drive gear should be replaced; that is, backlash exceeds the specified value at outer edge of clutch disc.

Backlash:
240TBL
Less than 0.8 mm (0.031 in)
225TBL
Less than 0.7 mm (0.028 in)

Clutch cover assembly

1. Check end surface of diaphragm spring for wear. If excessive wear is found, replace clutch cover assembly.
2. Measure height of diaphragm springs as outlined below:

(1) Place Tool ST20050100 on Tool ST20050010 and then tighten clutch cover assembly on base plate by using Tool ST20050051.

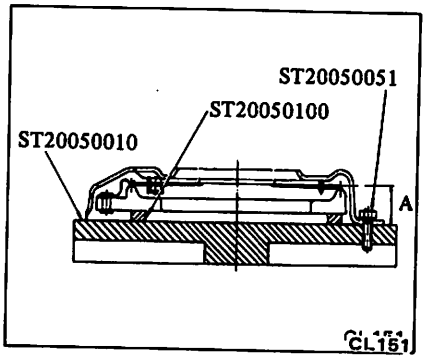

(2) Measure height "A" at several points with a vernier caliper depth gauge.

Diaphragm spring height"A":
C225S & D225K
33.0 - 35.0 mm
(1.299 - 1.378 in)
C240S
37.5 - 39.5 mm
(1.476 - 1.555 in)

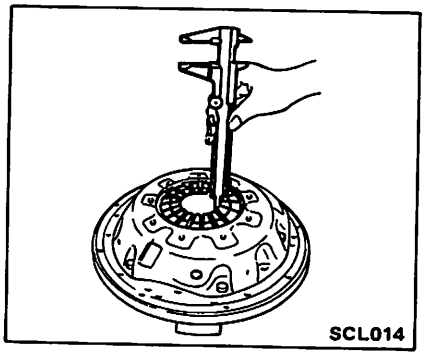

If height "A" of spring end is beyond specified value, adjust spring height with Tool ST20050240. If necessary, replace clutch cover assembly.

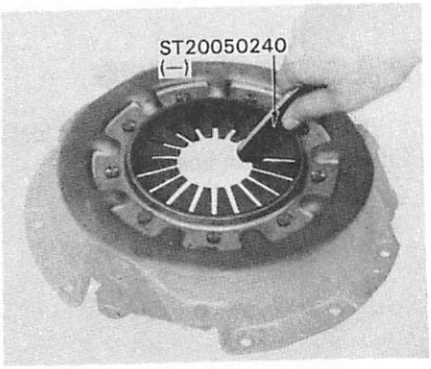

Also, unevenness of diaphragm spring toe height should be within the specified limit.

Unevenness of diaphragm spring toe height:
Less than 0.7 mm (0.028 in)

If unevenness of diaphragm spring toe height is beyond specified value, adjust spring height with Tool ST20050240.

3. Inspect thrust rings for wear or damage. As these parts are invisible from outside, shake cover assembly up and down to listen for chattering noise, or lightly hammer on rivets for a slightly cracked noise. Any of these noises indicates need of replacement as a complete assembly.

INSTALLATION

1. Apply a light coat of grease (including molybdenum disulphide) to transmission main drive gear splines. Slide clutch disc on main drive gear several times. Remove clutch disc and wipe off excess lubricant pushed off by disc hub.

Take special care to prevent grease or oil from getting on clutch facing.

2. Reinstall clutch disc and clutch cover assembly. Support clutch disc and cover assemblies with Tool KV30100100.

Be sure to keep disc facings, flywheel and pressure plate clean and dry.

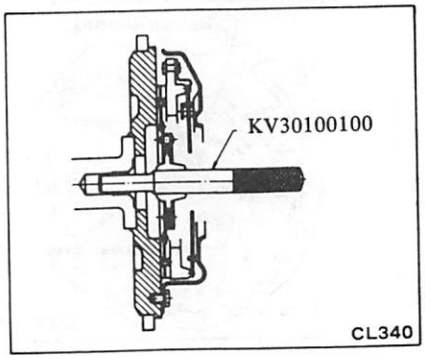

3. Install clutch cover assembly. Each bolt should be tightened one turn at a time in a crisscross fashion.

Ⓣ : Clutch cover bolt
22 - 29 N·m
(2.2 - 3.0 kg-m,
16 - 22 ft-lb)

4. Remove clutch aligning bar.
5. Reinstall transmission. Refer to Installation (Section MT).

RELEASE BEARING

REMOVAL

1. Remove transmission from engine. Refer to Removal (Section MT).
2. Disconnect holder spring from bearing sleeve.
3. Remove release bearing and sleeve as an assembly from transmission case front cover.
4. Take clutch release bearing out from bearing sleeve, using a universal puller and a suitable adapter.

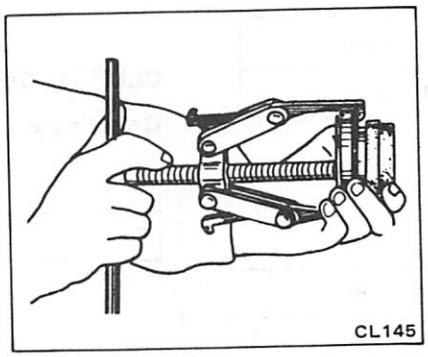

INSPECTION

Check for abnormal wear on contact surface of withdrawal lever, ball pin and bearing sleeve.

Hold bearing inner race and rotate outer race while applying pressure to it. If the bearing rotation is rough or noisy, replace bearing.

INSTALLATION

1. Assemble release bearing on sleeve, using a press.

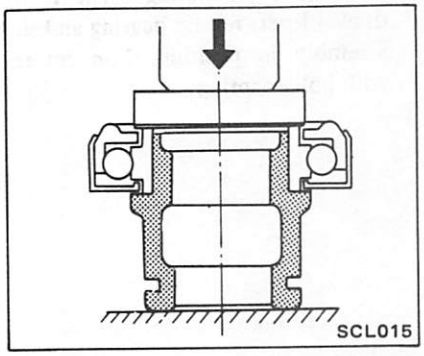

Do not depress outer race.

2. Before or during assembly, lubricate the following points with a light coat of lithium-based grease including molybdenum disulphide.
(1) Inner groove of release bearing sleeve.

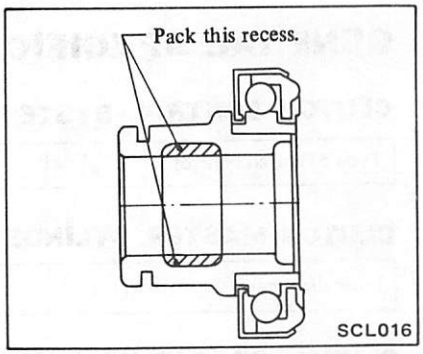

(2) Contact surfaces of withdrawal lever, lever ball pin and bearing sleeve.
(3) Bearing sleeve sliding surface of transmission case front cover.

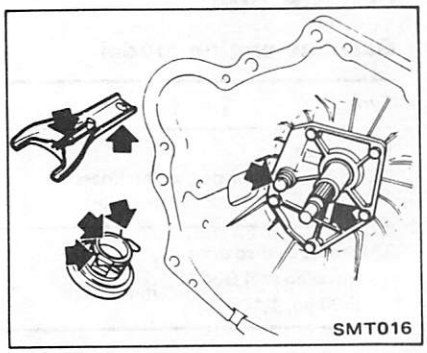

(4) Transmission main drive gear splines.

A small amount of grease should be coated to the above points. If too much lubricant is applied, it will run out on the friction plates when hot, resulting in damaged clutch disc facings.

3. After lubricating, install withdrawal lever, release bearing and sleeve assembly in position. Connect them with holder spring.

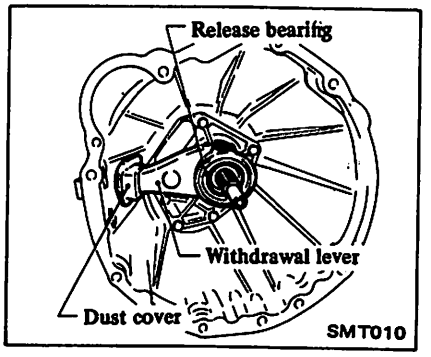

4. Reinstall transmission. Refer to Installation (Section MT).

PILOT BUSHING

Refer to Crankshaft (Section EM) for replacing pilot bushing.

SERVICE DATA AND SPECIFICATIONS (S.D.S.)

GENERAL SPECIFICATIONS

CLUTCH CONTROL SYSTEM

Type of clutch control	Hydraulic

CLUTCH MASTER CYLINDER

Inner diameter mm (in)	15.88 (5/8)

CLUTCH OPERATING CYLINDER

Type	Non-adjustable
Inner diameter mm (in)	19.05 (3/4)

CLUTCH DISC

Gasoline engine model

Type	240TBL
Facing size Outer dia. x Inner dia. x Thickness mm (in)	240 x 150 x 3.5 (9.45 x 5.91 x 0.138)
Thickness of disc assembly Installed at 4,904 N (500 kg, 1,103 lb) mm (in)	7.7 - 8.3 (0.303 - 0.327)

Diesel engine model

Type	225TBL
Facing size Outer dia. x Inner dia. x Thickness mm (in)	225 x 150 x 3.5 (8.86 x 5.91 x 0.138)
Thickness of disc assemlby Installed at 3,923 N (400 kg, 882 lb) mm (in)	7.5 - 8.1 (0.295 - 0.319)

CLUTCH COVER

Gasoline engine model

Type	C240S
Full load N (kg, lb)	3,923 (400, 882)

Diesel engine model

Type	C225S, D225K
Full load N (kg, lb)	3,923 (400, 882)

INSPECTION AND ADJUSTMENT

CLUTCH PEDAL

Unit: mm (in)

Pedal height "H"	179 - 189 (7.05 - 7.44)
Pedal free play "A"	1 - 1.5 (0.039 - 0.059)

CLUTCH MASTER CYLINDER

Clearance between cylinder bore and piston mm (in)	Less than 0.15 (0.0059)

CLUTCH DAMPER

Clearance between cylinder bore and piston mm (in)	Less than 0.15 (0.0059)
Spring constant of damper rubber N/mm (kg/mm, lb/in)	
Diesel engine	275 - 353 (28 - 36, 1,568 - 2,016)
Gasoline engine	569 - 647 (58 - 66, 3,248 - 3,696)

CLUTCH OPERATING CYLINDER

Clearance between cylinder bore and piston mm (in)	Less than 0.15 (0.0059)

CLUTCH DISC

Gasoline engine model

Unit: mm (In)

Model	240TBL
Wear limit of facing surface to rivet head	0.3 (0.012)
Runout limit	0.7 (0.028)
Distance of runout checking point (from the hub center)	115 (4.53)
Maximum backlash of spline (at outer edge of disc)	0.8 (0.031)

Diesel engine model

Unit: mm (in)

Model	225TBL
Wear limit of facing surface to rivet head	0.3 (0.012)
Runout limit	0.7 (0.028)
Distance of runout checking point (from the hub center)	108 (4.25)
Maximum backlash of spline (at outer edge of disc)	0.7 (0.028)

CLUTCH COVER

Gasoline engine model

Unit: mm (in)

Model	C240S
Diaphragm spring height	37.5 - 39.5 (1.476 - 1.555)
Unevenness of diaphragm spring toe height	Less than 0.7 (0.028)

Diesel engine model

Unit: mm (in)

Model	C225S, D225K
Diaphragm spring height	33.0 - 35.0 (1.299 - 1.378)
Unevenness of diaphragm spring toe height	Less than 0.7 (0.028)

PILOT BUSHING

Inserted distance of pilot bushing mm (in)	4.0 (0.157)

TIGHTENING TORQUE

Unit	N·m	kg-m	ft-lb
Clutch switch lock nut (Gasoline)	12 - 15	1.2 - 1.5	9 - 11
Pedal stopper bolt lock nut (Diesel)	16 - 22	1.6 - 2.2	12 - 16
Master cylinder push rod lock nut	8 - 12	0.8 - 1.2	5.8 - 8.7
Master cylinder stopper bolt	1.5 - 2.9	0.15 - 0.3	1.1 - 2.2
Master cylinder securing nut	8 - 12	0.8 - 1.2	5.8 - 8.7
Clutch tube flare nut	15 - 18	1.5 - 1.8	11 - 13
Bleeder screw	6 - 10	0.6 - 1.0	4.3 - 7.2
Operating cylinder securing bolt	30 - 40	3.1 - 4.1	22 - 30
Clutch hose to operating cylinder securing nut	17 - 21	1.7 - 2.1	12 - 15
Clutch cover securing bolt	22 - 29	2.2 - 3.0	16 - 22
Damper cover to cylinder bolt	3 - 6	0.3 - 0.6	2.2 - 4.3
Clutch damper to bracket bolt	3 - 6	0.3 - 0.6	2.2 - 4.3

TROUBLE DIAGNOSES AND CORRECTIONS

CLUTCH SLIP

Slipping of clutch may be noticeable when any of the following symptoms is encountered during operation.
(1) Vehicle will not respond to engine speed during acceleration.
(2) Insufficient vehicle speed.
(3) Lack of power during uphill driving.
(4) Increasing of fuel consumption.

Some of the above conditions may also be attributable to engine problem. First determine whether engine or clutch is causing the problem.

If slipping clutch is left unheeded, wear and/or overheating will occur on clutch facing to such an extent that it is no longer serviceable.

TO TEST FOR SLIPPING CLUTCH, proceed as follows:

Inspection

Insure that parking brake is engaged. Disengage clutch and shift transmission gears into TOP. Gradually increase engine speed while simultaneously engaging clutch. If engine stops while clutch is being engaged, clutch is functioning properly. If vehicle does not move and the engine does not stop, clutch is slipping.

Probable cause	Corrective action
• Clutch facing hardened or wet with oil	Repair or replace
• Clutch facing excessively worn	Replace (Replace if engine/ transmission oil seal is faulty)
• Diaphragm spring weak or damaged	Replace
• Flywheel or pressure plate warped	Repair or replace
• Particles in return port of master cylinder; Piston fails to return to its original position	Clean or replace faulty parts
• Clutch tube deformed or crushed	Replace
• Clutch damper weak or damaged	

CLUTCH DRAGS

Dragging clutch is particularly noticeable when shifting gears, especially into low gear.
TO TEST FOR DRAGGING CLUTCH, proceed to inspection.

Inspection

Disengage clutch and shift gears into Reverse. Shift gears into Neutral, gradually increasing engine speed. After a short intermission, shift gears into Reverse. If noise is heard while gears are being shifted, clutch is dragging.

Probable cause	Corrective action
• Clutch disc hub splines worn or rusted	Replace (or remove rust) and coat with grease
• Oil leakage at master cylinder, operating cylinder, damper, tube or hose	Replace faulty parts
• Air in hydraulic system	Bleed air
• Insufficient pedal stroke	Adjust
• Clutch disc runout or warped	Replace
• Diaphragm spring fatigued	Replace
• Piston cup deformed or damaged	Replace
• Lack of grease on pilot bushing	Coat with grease
• Clutch facing wet with oil	Replace (Replace if engine/transmission oil seal is faulty)

CLUTCH CHATTERS

Clutch chattering is usually noticeable when car is just rolled off with clutch partially engaged.

Probable cause	Corrective action
• Oil on clutch facing	Replace
• Diaphragm spring fatigued	Replace
• Clutch facing hardened	Replace
• Clutch facing warped	Repair or replace
• Pressure plate worn or warped	Replace
• Engine mounting loose or rubber deteriorated	Tighten or replace
• Clutch facing rivets loose	Replace

NOISY CLUTCH

Probable cause	Corrective action
• Release bearing/sleeve damaged or improperly lubricated	Replace
• Pilot bushing worn, jammed or damaged	Replace
• Clutch facing rivets loose	Replace
• Disc plate cracked	Replace
• Clutch disc torsion springs fatigued	Replace

RABBIT-HOPPING CLUTCH

When "rabbit-hopping" of clutch occurs, vehicle will not roll off smoothly from a standing start or clutch will be engaged before clutch pedal is fully depressed.

Probable cause	Corrective action
• Oil on clutch facing	Replace
• Clutch facing worn or rivets loose	Replace
• Flywheel/pressure plate warped or worn	Replace
• Mounting bolts on engine or power train loose	Tighten
• Diaphragm spring fatigued	Replace

SPECIAL SERVICE TOOLS

Tool number (Kent-Moore No.)	Tool name
KV30100100 (J26366)	Clutch aligning bar 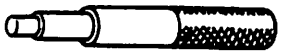
ST20050100 (–)	Distance piece 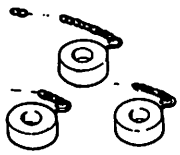
ST20050010 (–)	Base plate 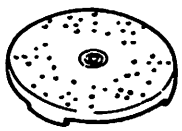
ST20050051 (–)	Set bolt
ST20050240 (–)	Diaphragm spring adjusting wrench
ST16610001 (J23907)	Pilot bushing puller 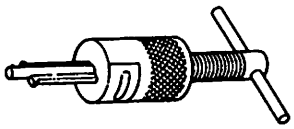
GG94310000 (–)	Flare nut torque wrench 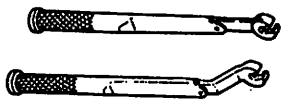

MANUAL TRANSMISSION

SECTION MT

CONTENTS

REMOVAL AND INSTALLATION ..... MT- 2
Removal ..... MT- 2
Installation ..... MT- 2
5-SPEED TRANSMISSION (Model: FS5W71B) ..... MT- 3
Rear extension ..... MT- 6
Transmission case ..... MT- 7
Forks and fork rods ..... MT- 8
Gears and shafts ..... MT- 9
Replacement of oil seals MT-14
Replacement of bearings MT-15
SERVICE DATA AND SPECIFICATIONS (S.D.S.) MT-17
General specifications MT-17
Inspection and adjustment MT-17
Tightening torque MT-18
TROUBLE DIAGNOSES AND CORRECTIONS MT-19
SPECIAL SERVICE TOOLS MT-23

REMOVAL AND INSTALLATION

REMOVAL

1. Disconnect battery ground cable.
2. Disconnect parking brake cable.
3. Jack up vehicle and support its weight on safety stands. Use a hydraulic hoist or open pit, if available.
   Make sure that safety is insured.
4. Remove primary propeller shaft. Refer to Propeller Shaft (Section PD) for removal (4WD).
5. Remove propeller shaft (2WD)/ front propeller shaft (4WD).
   Refer to Propeller Shaft (Section PD) for removal.
6. Remove front differential carrier and crossmember (4WD).

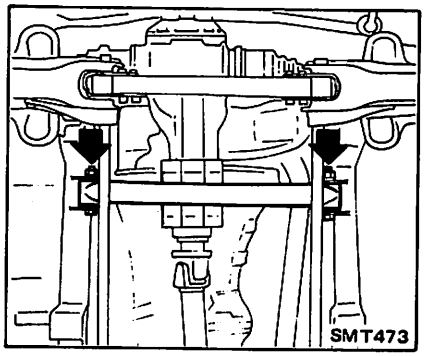

7. Disconnect front exhaust tube.

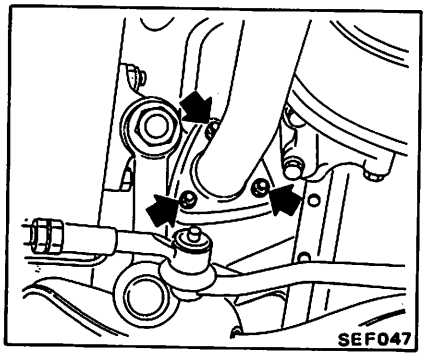

8. Disconnect wires from reverse (back-up) lamp, Neutral switches (if so equipped).
9. Disconnect speedometer cable (2WD).
10. Remove clutch operating cylinder.
11. Remove starter motor.
12. Support transmission with a transmission jack.
13.
(1) Remove console box. Refer to Console Box (Section BF) for removal.
(2) Place transmission control lever in neutral position and remove E-ring and control lever.

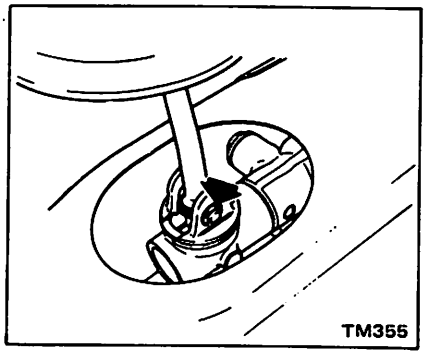

14. Loosen rear engine mount securing nuts ① and ② and remove crossmember.

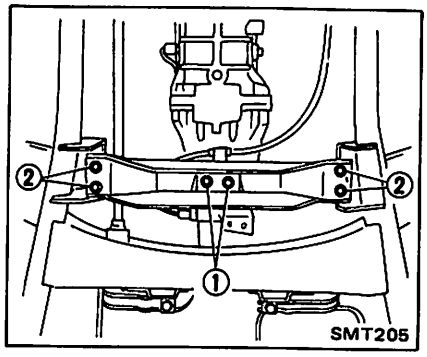

15. Remove bolts securing transmission to engine.
    Then support the engine and transmission with jacks, and slide transmission rearward away from engine and remove from the vehicle.

CAUTION:
Take care in dismounting transmission not to strike any adjacent parts and main drive gear.

INSTALLATION

Install the transmission in reverse order of removal, paying attention to the following points.

1. Before installing, clean mating surfaces of engine rear plate and transmission case.
2. Before installing, lightly apply grease to spline parts of clutch disc and main drive gear. And also apply grease to moving surfaces of control lever and striking rod.
3. Remove filler plug and fill transmission with recommended gear oil to the level of the plug hole.

   Oil capacity:
   2.1 liters
   (4-1/2 US pt, 3-3/4 Imp pt)

4. Apply sealant to threads of filler plug, and install filler plug to transmission case.

   Ⓣ : Filler plug
   25 - 34 N·m
   (2.5 - 3.5 kg-m,
   18 - 25 ft-lb)

5. Tighten bolts securing transmission to engine.

   Ⓣ : To engine
   39 - 49 N·m
   (4.0 - 5.0 kg-m, 29 - 36 ft-lb)
   To transmission
   29 - 39 N·m
   (3.0 - 4.0 kg-m, 22 - 29 ft-lb)

6. Lubricate oil seal lip and bushing on rear extension with gear oil for initial lubrication.

5-SPEED TRANSMISSION (Model : FS5W71B)

Case component

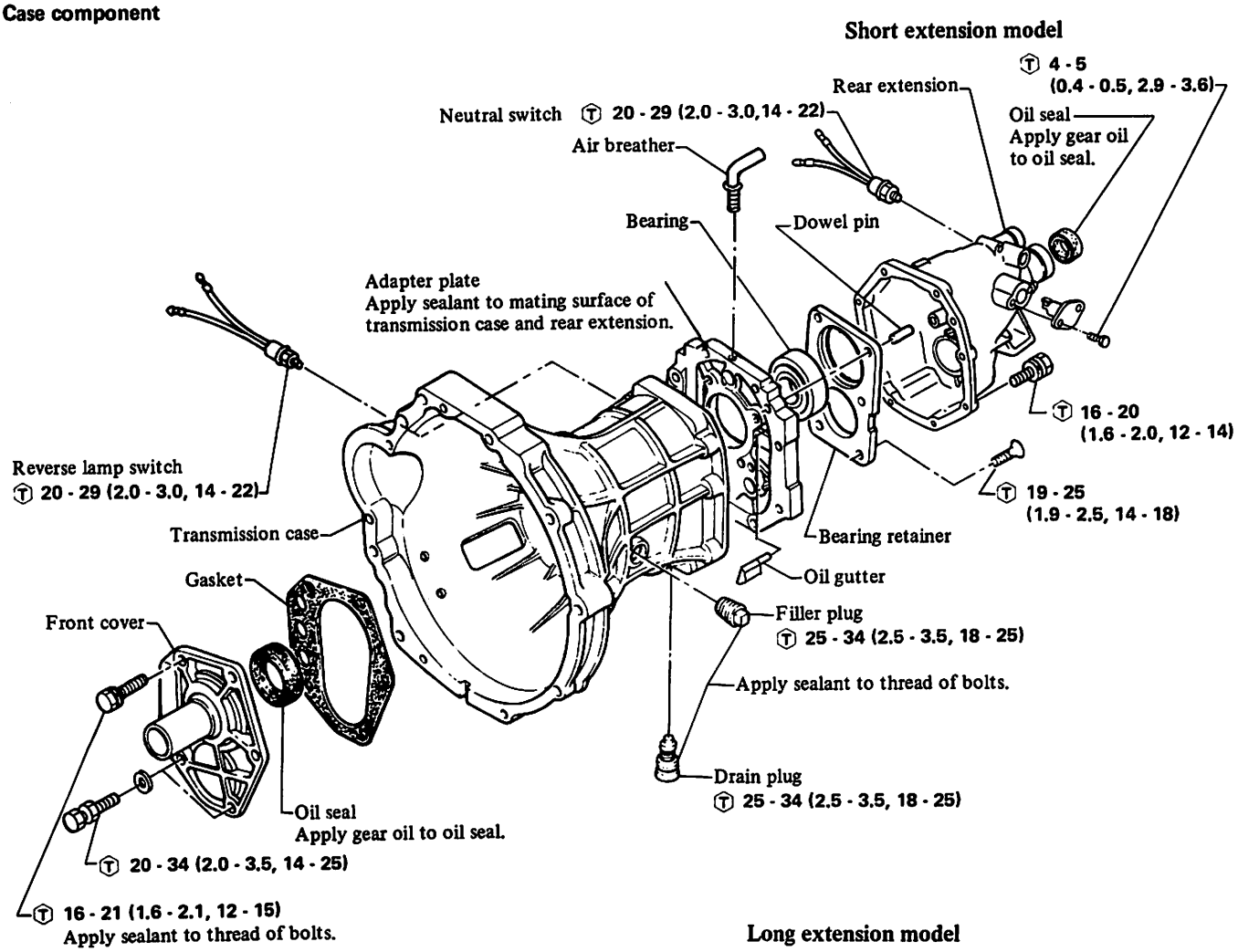

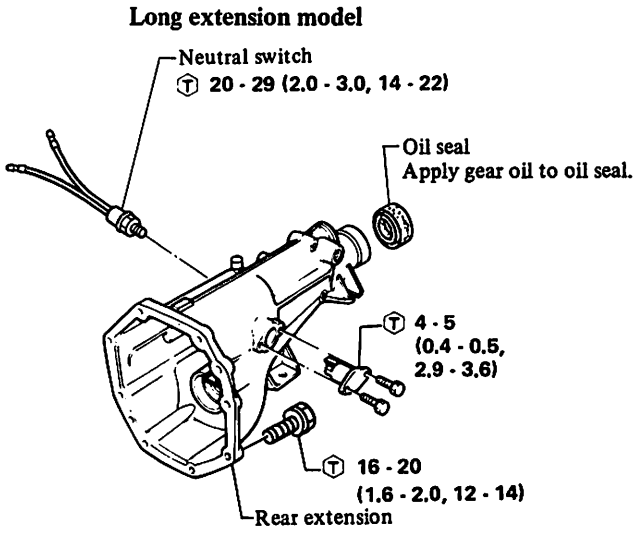

Ⓣ : N·m (kg-m, ft-lb)

SMT111A

Gear component

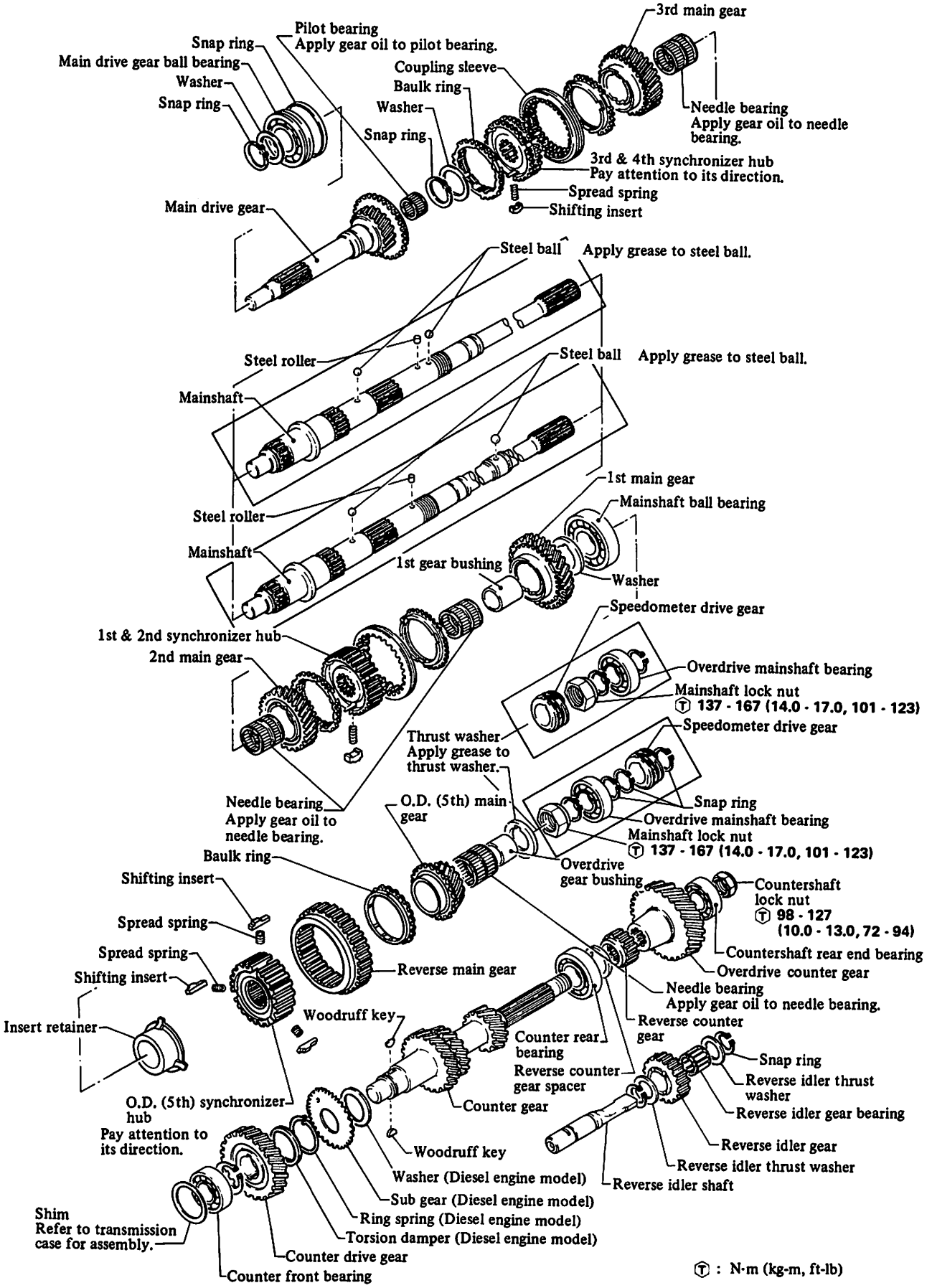

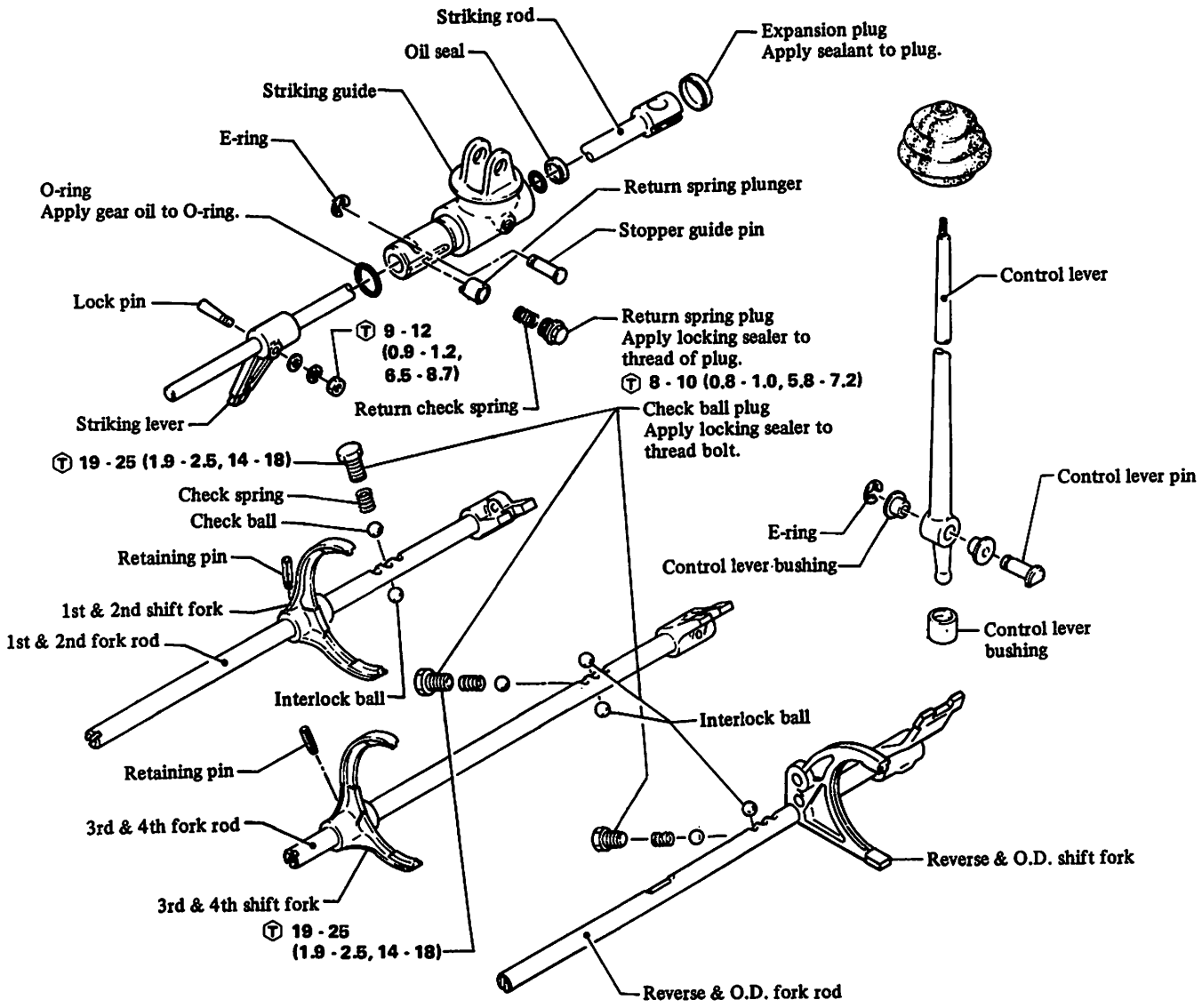

Ⓣ: N·m (kg-m, ft-lb)

SMT956

REAR EXTENSION

DISASSEMBLY

1. Wipe off dirt and grease.
2. Drain oil.
3. Remove Neutral switch (if so equipped).
4. Remove E-ring and stopper guide pin.

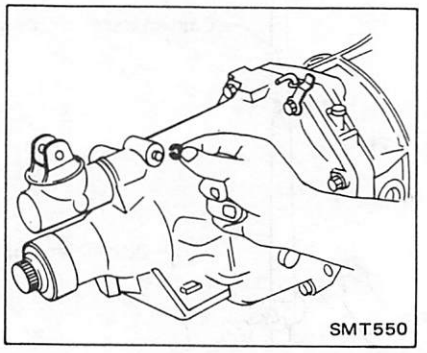

5. Remove return spring plug, return spring and plunger from rear extension.

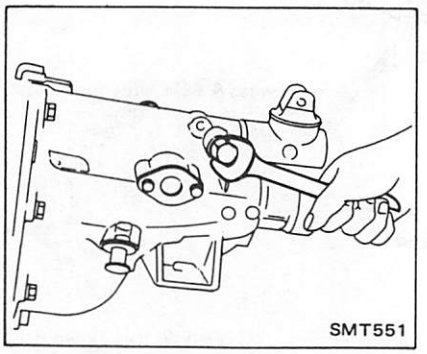

6. Separate rear extension from transmission case by tapping it.

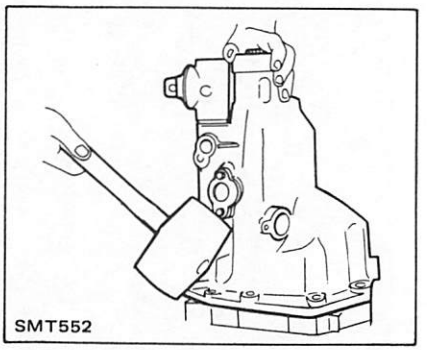

7. Turn striking guide clockwise, then remove rear extension by keeping striking rod at Neutral position with suitable bar.

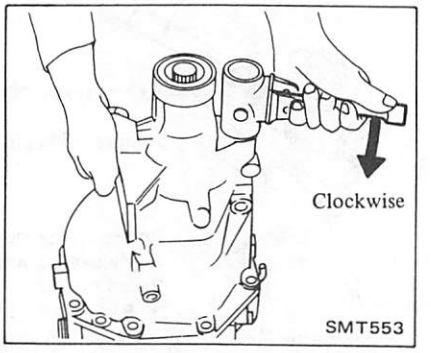

8. Remove lock pin and then remove striking rod.

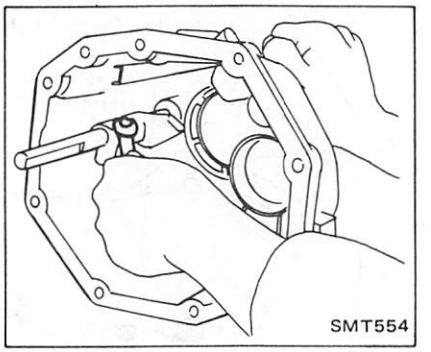

9. Remove Rev. check sleeve.

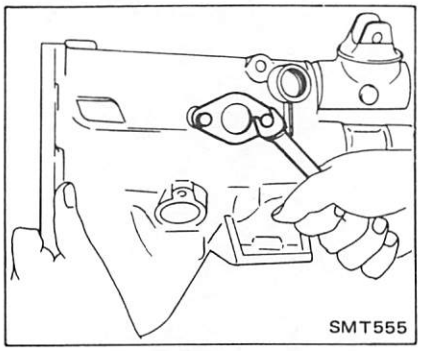

INSPECTION

1. Clean with solvent and check for cracks or cavities by means of dyeing test.
2. Check mating surface of rear extension for small nicks, projection or sealant.

If rear extension bushing is worn or cracked, replace it as an assembly of bushing and rear extension housing.

ASSEMBLY

1. Assemble lock pin and striking rod.

Ⓣ : 9 - 12 N·m (0.9 - 1.2 kg-m, 6.5 - 8.7 ft-lb)

2. Stand transmission case assembly on wooden plates of more than 20 mm (0.79 in) thick.
3. Clean mating surfaces of adapter plate and rear extension.
4. Apply sealant to mating surface of adapter plate.

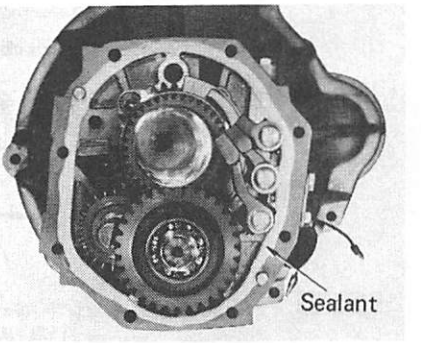

5. Install rear extension as follows:
(1) Set gears at Neutral.
(2) Turn striking guide clockwise.
(3) Set striking guide at Neutral.
(4) Align end of striking lever with cutout portion of fork rod.

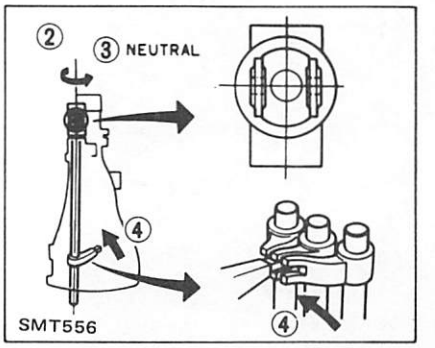

(5) Apply sealant to threads of through-bolts and tighten them to transmission case.

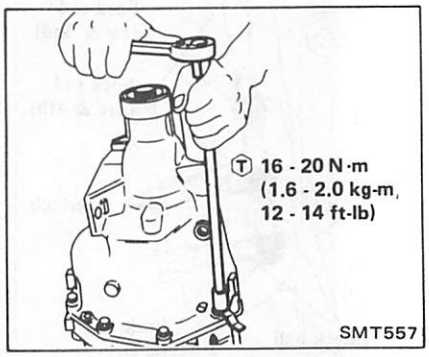

6. Install plunger, return spring, and return spring plug.

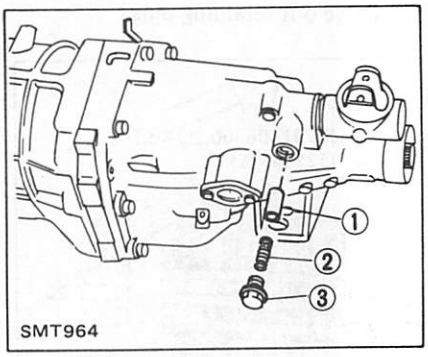

1 Plunger
2 Return spring
3 Return spring plug

7. Apply sealant to stopper guide pin, then install stopper guide pin and E-ring.
8. Install Rev. check sleeve.

Ⓣ : **4 - 5 N·m**
(0.4 - 0.5 kg-m,
2.9 - 3.6 ft-lb)

9. Install Neutral switch (if so equipped).
10. Make sure that gears operate smoothly.

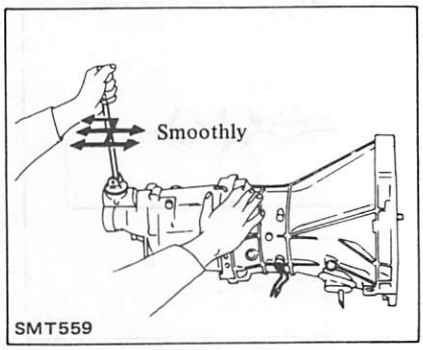

11. Install drain plug.

Ⓣ : **25 - 34 N·m**
(2.5 - 3.5 kg-m,
18 - 25 ft-lb)

TRANSMISSION CASE

DISASSEMBLY

1. Remove rear extension. Refer to Rear Extension for disassembly.
2. Remove dust cover, release bearing and withdrawal lever.

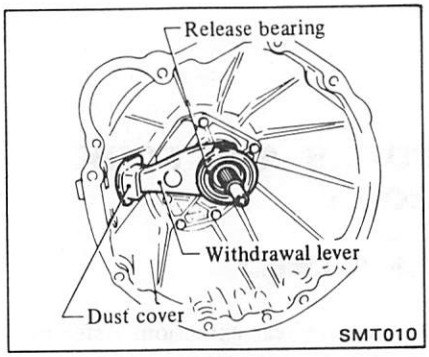

3. Remove front cover and gasket. Detach countershaft front bearing shim.
4. Remove main drive bearing snap ring.

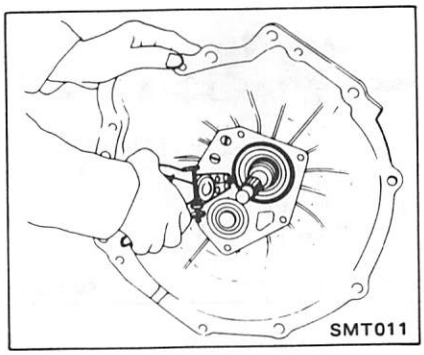

5. Separate transmission case from adapter plate.

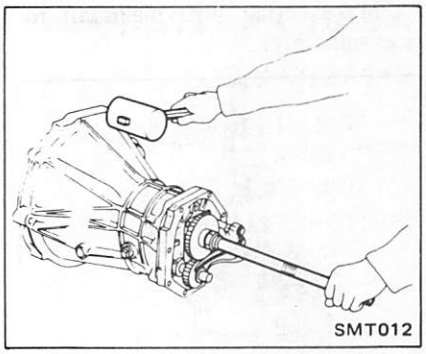

INSPECTION

1. Clean with solvent and check for cracks or pits by means of dyeing test.
2. Check mating surface of transmission case for small nicks, projection or sealant.

ASSEMBLY

1. Clean mating surfaces of adapter plate and transmission case.
2. Stand transmission case on wooden plates of more than 20 mm (0.79 in) thick.
3. Apply sealant to mating surface of transmission case.

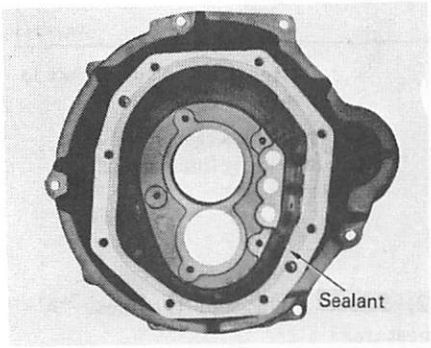

4. Slide gear assembly onto adapter plate by lightly tapping with a soft hammer.

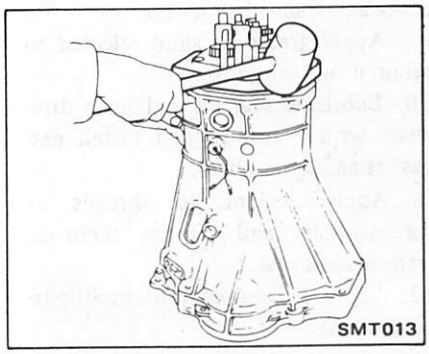

5. Make certain that mainshaft rotates smoothly.

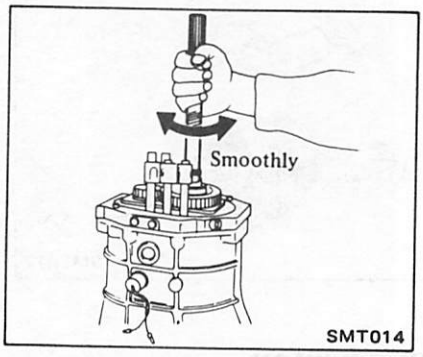

6. Fit main drive bearing snap ring.
7. Select countershaft front bearing shim as follows:
(1) Measure height "A".

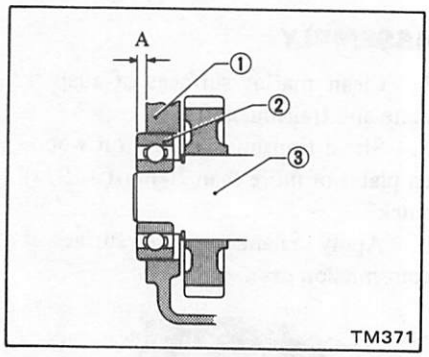

A : Distance from bearing surface to transmission case

1 Transmission case
2 Counter gear front bearing
3 Counter gear

(2) Select a shim of thickness "A" measured.

Counter gear front bearing shim:
Refer to S.D.S.

8. Clean mating surfaces of front cover and transmission case.
9. Apply grease to shim selected to retain it on front cover.
10. Lubricate seal lip and main drive shaft with gear oil, then install new gasket and front cover.
11. Apply sealant to threads of through-bolts and tighten them to transmission case.
12. Apply a light coat of multi-purpose grease.

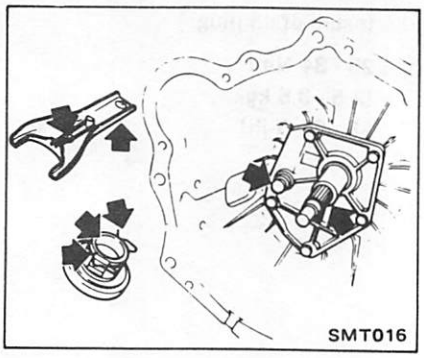

13. Install dust cover, release bearing and withdrawal lever.
14. Assemble Rear Extension. Refer to Rear Extension for assembly.

FORKS AND FORK RODS

DISASSEMBLY

1. Remove rear extension. Refer to Rear Extension for disassembly.
2. Remove transmission case. Refer to Transmission Case for disassembly.
3. Set up Tool on adapter plate.
4. Place above assembly in a vise.

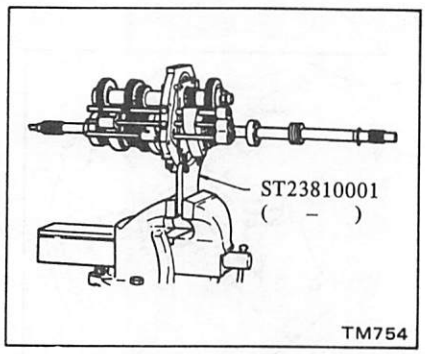

5. Remove check ball plugs and check springs.

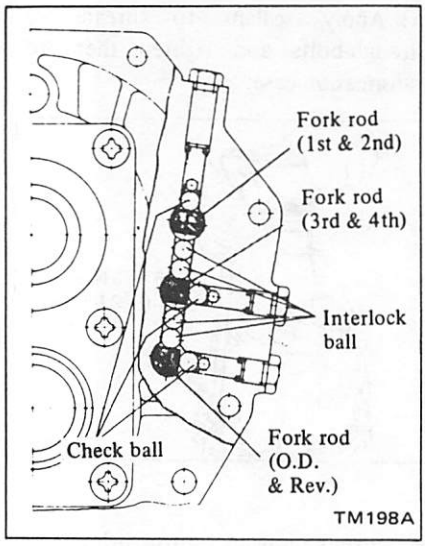

6. Drive out retaining pins.

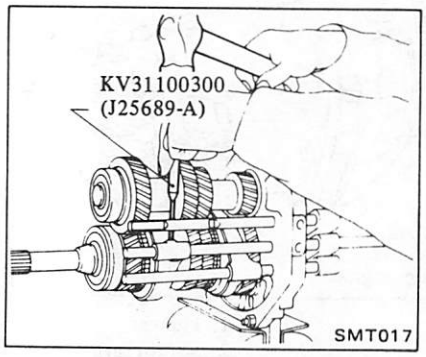

7. Drive out fork rods and remove interlock balls and check balls.

Be careful not to lose three (3) check balls and four (4) interlock balls.

INSPECTION

Clean with solvent and check for wear, scratches, projection, damage or other faulty conditions. Replace any part which is worn or damaged.

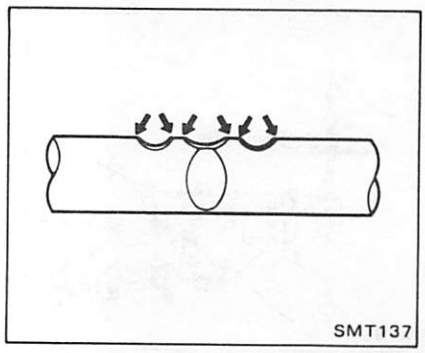

ASSEMBLY

1. Install 1st & 2nd, 3rd & 4th and O.D. & Rev. shift forks and 1st & 2nd fork rod, then secure with retaining pin.

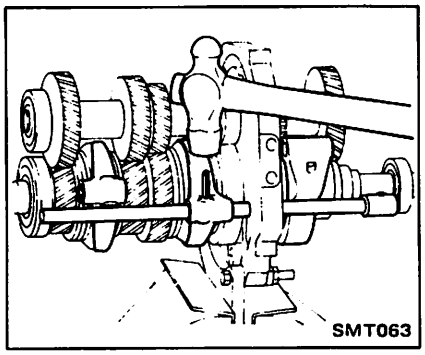

2. Install two (2) interlock balls.
3. Install 3rd & 4th fork rod, then secure with retaining pin.

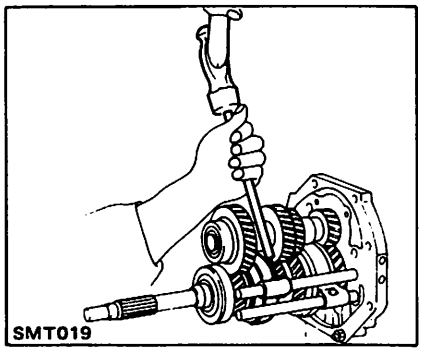

4. Install two (2) interlock balls.
5. Install O.D. & Rev. shift fork and fork rod, then secure with retaining pin.

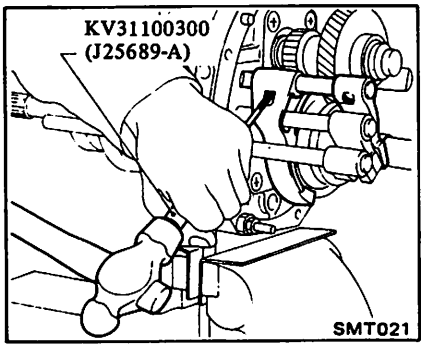

6. Install check balls and check springs.
7. Apply locking sealer to check ball plugs and install them.

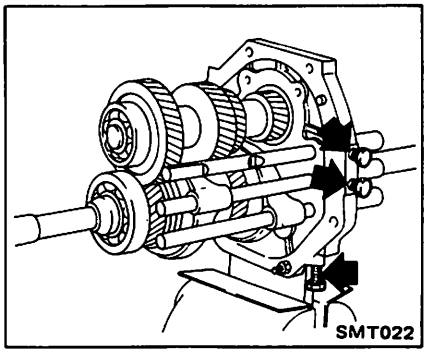

a. Check ball plug for 1st & 2nd fork rod is longer than that for Rev. shift fork rod and 3rd & 4th fork rod.
b. To insure that interlock plunger is installed properly, slide 3rd & 4th fork rod and operate the other fork rod. Make sure that the gear except 3rd or 4th gear does not mesh.

8. Apply gear oil to all sliding surfaces and check to see that shift rods operate correctly and gears are engaged smoothly.
9. Install transmission case. Refer to Transmission Case for assembly.
10. Install rear extension. Refer to Rear Extension for assembly.

GEARS AND SHAFTS

DISASSEMBLY

Main drive and counter drive gear

1. Remove rear extension. Refer to Rear Extension for disassembly.
2. Remove transmission case. Refer to Transmission Case for disassembly.
3. Remove forks and fork rods. Refer to Forks and Fork rods for disassembly.
4. **Measure gear end play.** Refer to Gears and Shafts for inspection.
5. Mesh 2nd and reverse gear, then draw out counter front bearing.

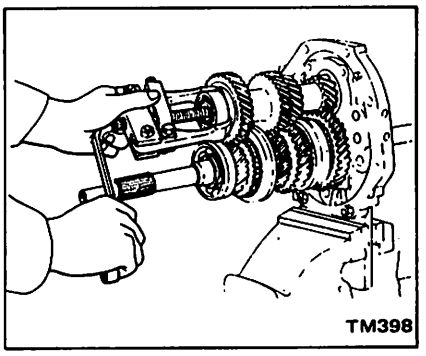

6. Remove counter drive gear snap ring.
7. Draw out counter drive gear with main drive gear.

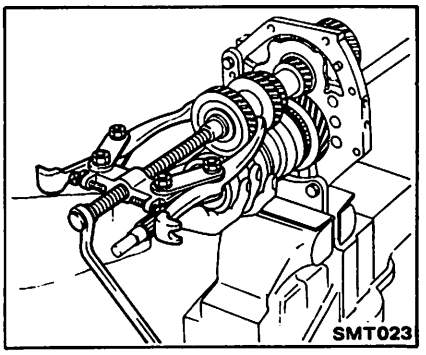

When drawing out main drive gear assembly, be careful not to drop pilot needle bearing and baulk ring.

3rd main gear

1. Remove snap ring and thrust washer.
2. Draw out 3rd & 4th synchronizer and 3rd gear.

O.D. gear and reverse gear

1. Mesh 2nd and reverse gears. Release staking on counter gear nut and mainshaft nut and loosen these nuts. Remove counter gear nut.

Removed nuts should be discarded and should not be reused.

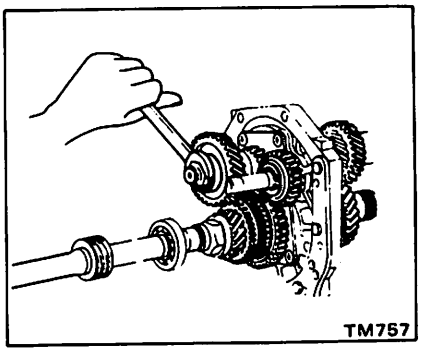

2. Drive out counter O.D. gear and bearing.

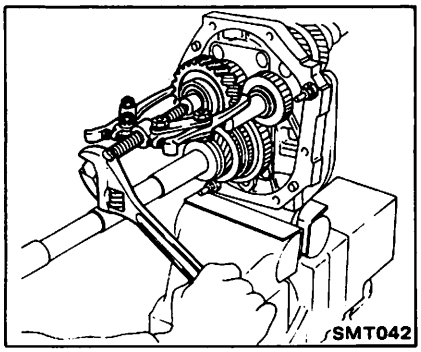

3. Remove reverse counter gear and spacer.

Remove snap ring from reverse idler shaft, and remove reverse idler gear.

4.
- Remove snap rings, steel ball, speedometer drive gear and bearing (long extension model).
- Remove snap rings and bearing (short extension model).

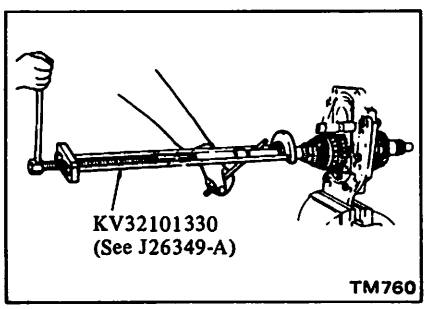

5.
- Remove mainshaft nut, thrust washer and steel roller (long extension model).
- Remove mainshaft nut, speedometer drive gear, thrust washer, steel ball and steel roller (short extension model).

6. Remove needle bearing, O.D. gear and baulk ring.

7. Remove O.D. gear bushing, insert retainer and O.D. synchronizer.

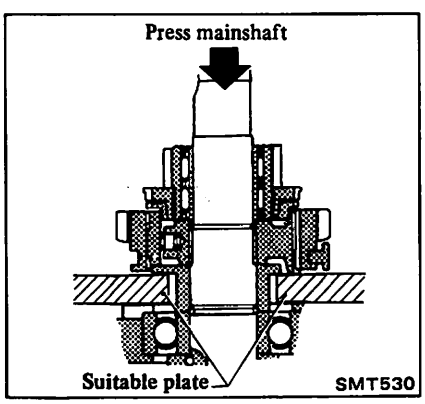

1st and 2nd main gear and counter gear

1. Draw out mainshaft assembly together with counter gear, by tapping rear end of mainshaft and counter gear.

Hold front of mainshaft assembly by hand, being careful not to drop counter gear.

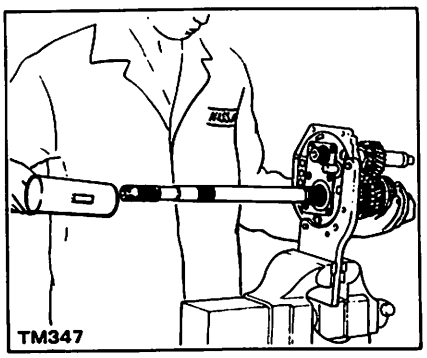

2. Remove thrust washer, steel ball, 1st gear and needle bearing.

Be careful not to lose steel ball retaining thrust washer.

3. Press out 1st gear mainshaft bushing together with 2nd gear and 1st & 2nd synchronizer.

When pressing out bushing, hold mainshaft by hand so as not to drop it.

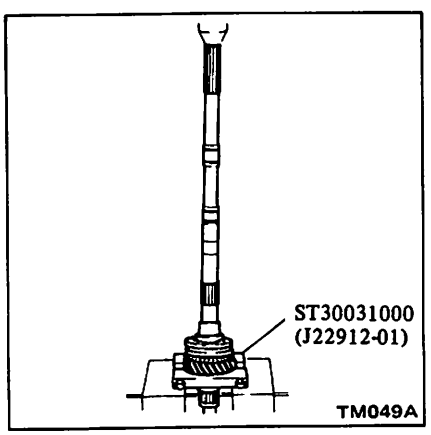

Synchronizer (1st & 2nd and 3rd & 4th)

Disassemble synchronizer.

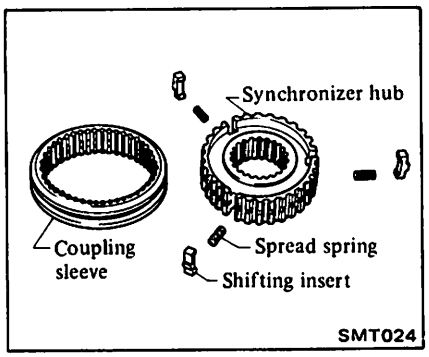

Synchronizer (O.D.)

Disassemble synchronizer.

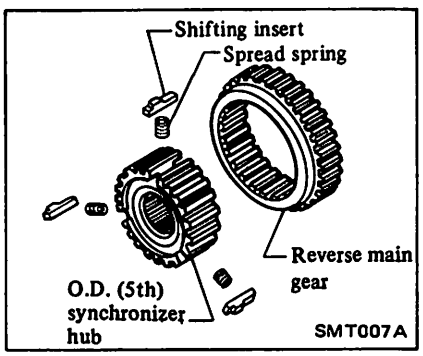

INSPECTION

Bearings

1. Thoroughly clean bearing and dry with compressed air.

CAUTION:
Do not allow the bearings to spin. Because it will damage the race and balls. Turn them slowly by hand.

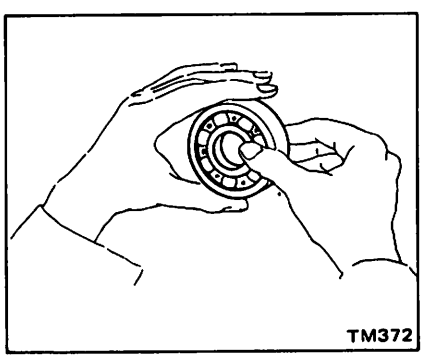

2. When race and ball surfaces are worn or rough, or when balls are out-of-round or rough, replace bearing with a new one.
3. Replace needle bearing if worn or damaged.

Gears and shafts

1. Check all gears for excessive wear, chips or cracks; replace as required.
2. Check shaft for bending, crack, wear, and worn spline; if necessary, replace.
3. **Measure gear end play:**

- It is necessary to measure end play before disassembling mainshaft and after reassembling mainshaft.
- Tighten mainshaft lock nut to specified limit and measure end play to insure that it is within specified limit.
- If end play is not within specified limit, disassemble and check parts for condition.
- Replace any part which is worn or damaged.

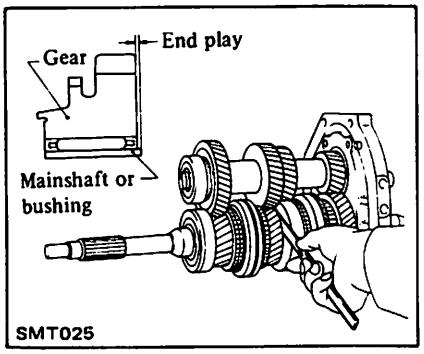

Standard end play:
1st gear
0.31 - 0.41 mm
(0.0122 - 0.0161 in)
2nd gear
0.11 - 0.21 mm
(0.0043 - 0.0083 in)
3rd gear
0.11 - 0.21 mm
(0.0043 - 0.0083 in)
O.D. (5th) gear
0.32 - 0.39 mm
(0.0126 - 0.0154 in)
Reverse idler gear
0.05 - 0.50 mm
(0.0020 - 0.0197 in)

Baulk ring

1. Replace baulk ring if found to be deformed, cracked or otherwise damaged excessively.

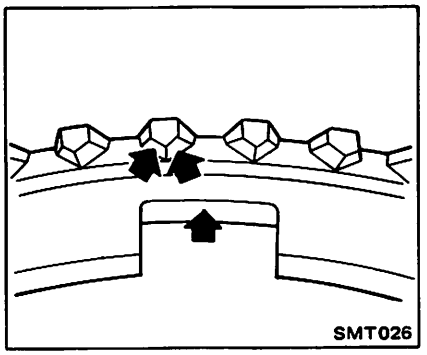

2. Place baulk ring in position on gear cone.

While holding baulk ring against gear as far as it will go, measure gap between baulk ring and outer gear.

If the clearance is smaller than wear limit, discard baulk ring.

Baulk ring to gear clearance:
Except O.D. (5th) gear
Standard
1.20 - 1.60 mm
(0.0472 - 0.0630 in)
Wear limit
Less than 0.8 mm (0.031 in)
O.D. (5th) gear
Standard
1.00 - 1.40 mm
(0.0394 - 0.0551 in)
Wear limit
Less than 0.5 mm (0.020 in)

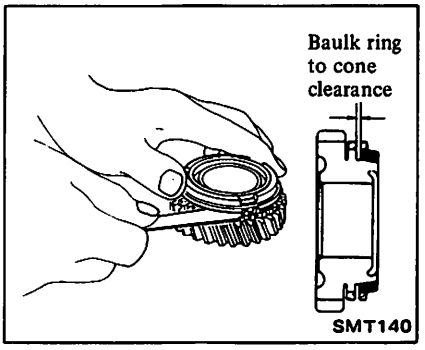

Shifting insert

Replace, if worn excessively, worn unevenly, deformed, or damaged.

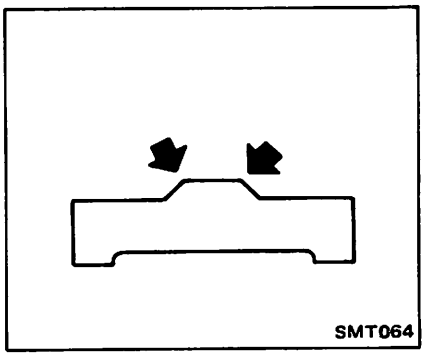

Oil seals

1. Replace oil seal if sealing lip is deformed or cracked. Also discard oil seal if spring is out of position. Refer to Replacement of Oil Seals.
2. Check the oil seal lip contacting with shaft; if necessary replace oil seal and shaft as a set.

ASSEMBLY

Adapter plate

1. Place new dowel pin, mainshaft bearing on adapter plate and tap them.

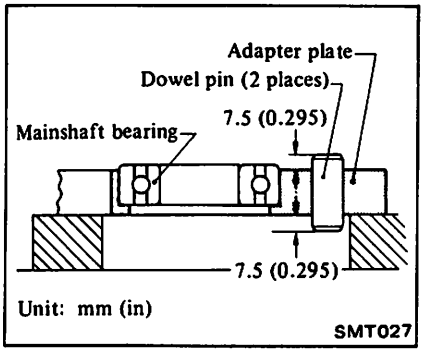

2. Install oil gutter on adapter plate and bend it on front side and expand on rear side.

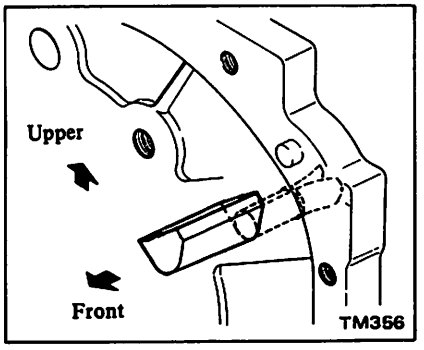

3. Insert reverse idler shaft.
4. Install bearing retainer.

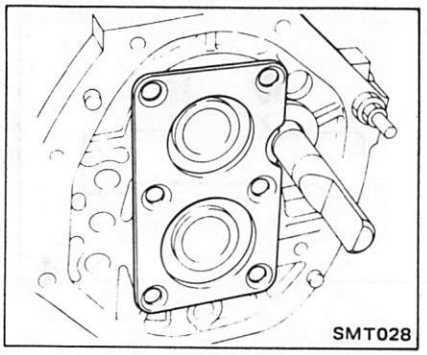

5. Tighten each screw, then stake it at two points.

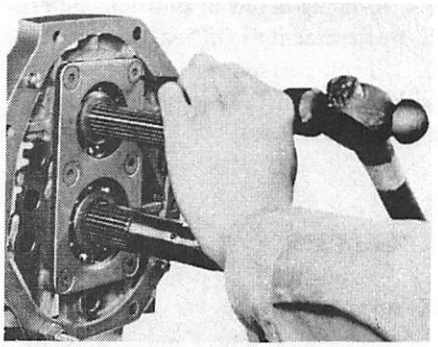

6. Install counter rear bearing with a soft hammer.

Synchronizer

1. Assemble coupling sleeve and hub.
2. Position spread springs and shifting inserts in three slots in synchronizer hub; put coupling sleeve (reverse main gear) on synchronizer hub.

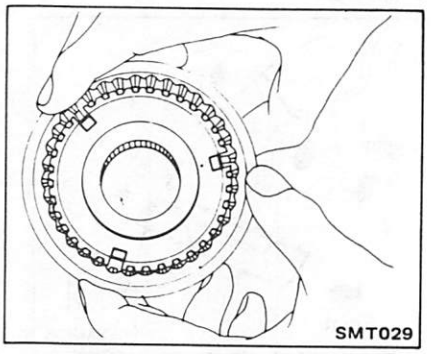

1st and 2nd main gear

1. Assemble 2nd gear needle bearing, 2nd gear, baulk ring, 1st & 2nd synchronizer assembly, 1st gear baulk ring, 1st gear bushing, needle bearing, 1st gear, steel ball, and thrust washer on mainshaft.

Before installing steel ball and thrust washer, apply grease to them.

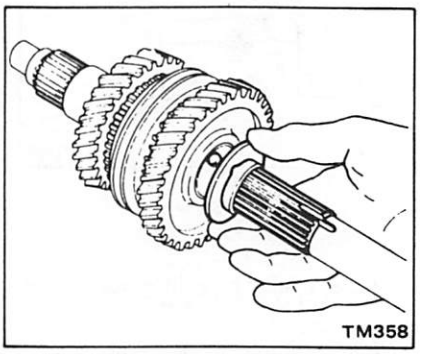

2. Set Tool KV31100401 and place adapter plate assembly on it.

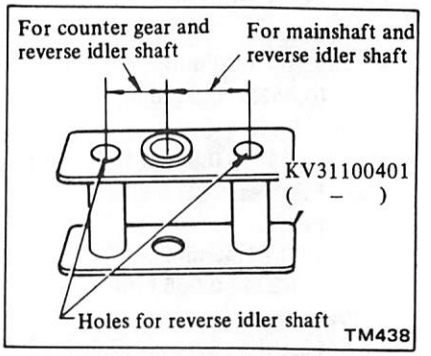

3. Press mainshaft assembly to adapter plate.

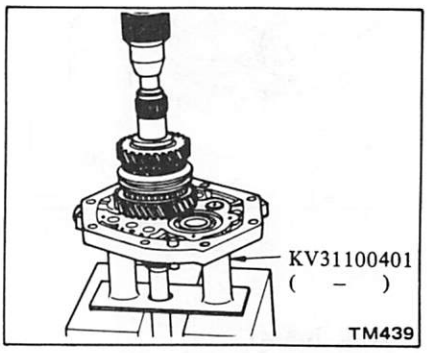

3rd main and counter gear

1. Tap new woodruff keys until they are seated securely.

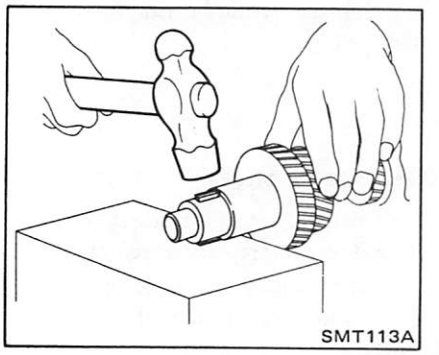

2. Press counter gear into adapter plate.

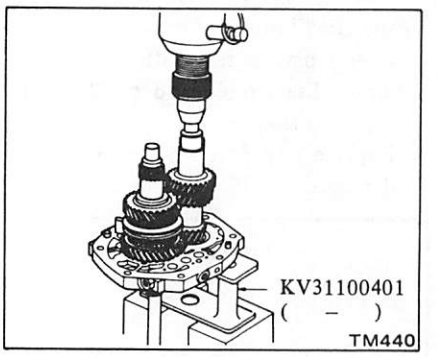

3. Position needle bearing, 3rd main gear, baulk ring and 3rd & 4th synchronizer assembly on the front of mainshaft.

Assemble 3rd-4th synchronizer hub, paying attention to its direction.

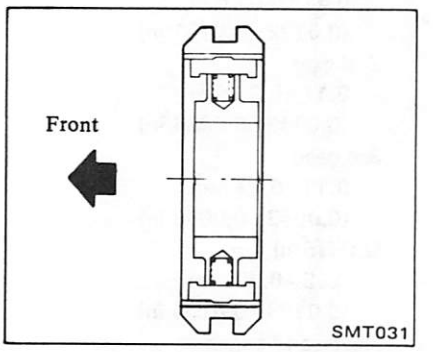

4. Install thrust washer on mainshaft and secure it with snap ring of proper thickness that will minimize clearance of groove in mainshaft.

Mainshaft front snap ring:
Refer to S.D.S.

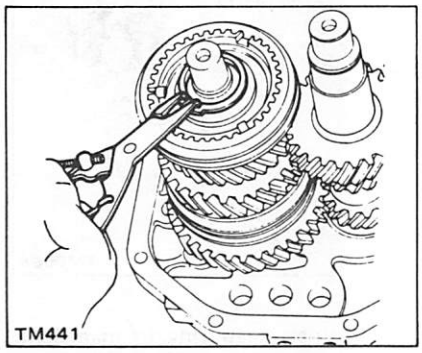

Main drive and counter drive gear

1. Install baulk ring on synchronizer.

Be sure to align grooves of baulk ring with inserts.

2. Apply gear oil to mainshaft pilot bearing and install it on mainshaft.

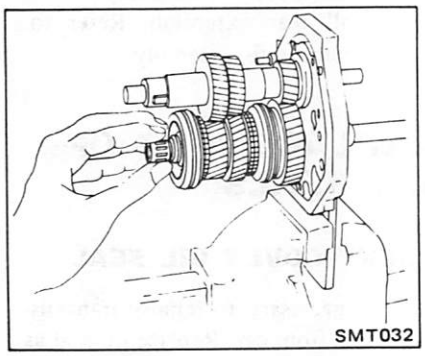

3. Install main drive gear with counter drive gear.

Assemble counter drive gear, paying attention to its direction.

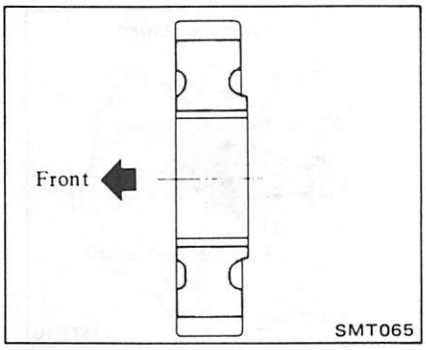

4. Press counter drive gear onto counter gear.

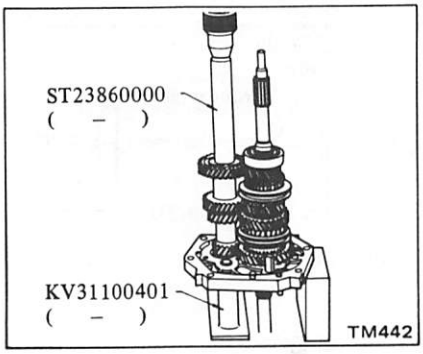

Main drive gear and counter drive gear should be handled as a matched set. When replacing main drive gear or counter drive gear, be sure to replace as a set of main drive gear and counter drive gear.

Counter drive gear snap ring:
Refer to S.D.S.

5. Secure counter drive gear with snap ring that will minimize clearance of groove in countershaft.

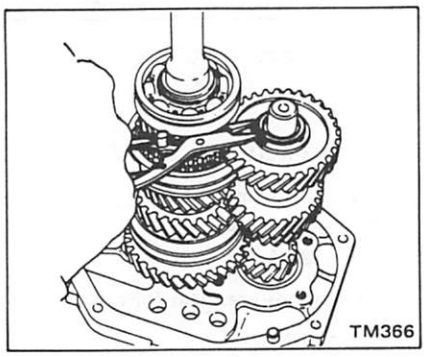

6. Press counter gear front bearing onto counter gear.

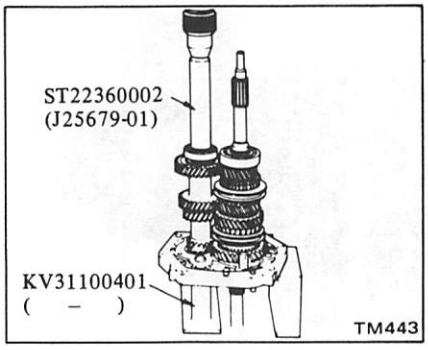

O.D. gear and reverse gear

1. After front side is assembled, assemble reverse counter spacer, snap ring, spacer, needle bearing, reverse idler gear, spacer and snap ring.

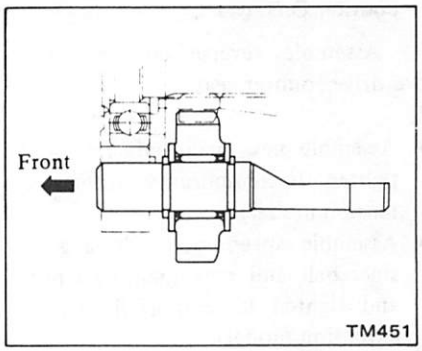

2. Assemble insert retainer and O.D. synchronizer.
3. Install O.D. gear bushing.

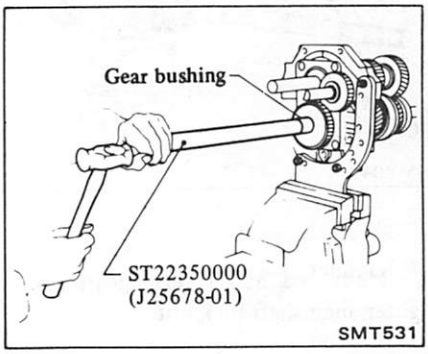

4. Apply gear oil to needle bearing, then install it in place.
5. Install O.D. gear assembly, steel roller and thrust washer. Before installing steel roller, apply grease to it.

a. Assemble O.D.-reverse synchronizer hub, paying attention to its direction.

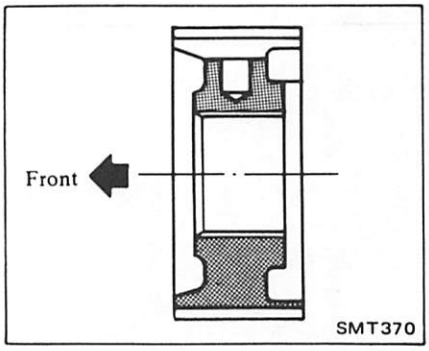

b. Main O.D. gear and counter O.D. gear should be handled as a matched set.
When replacing main O.D. gear and counter O.D. gear, be sure to replace as a set of main O.D. and counter O.D. gears.

6. Assemble reverse counter gear, overdrive counter gear.
7.
- Assemble new mainshaft nut, and tighten it temporarily (long extension model).
- Assemble speedometer drive gear, steel ball and new mainshaft nut, and tighten it temporarily (short extension model).

8. Install bearing.

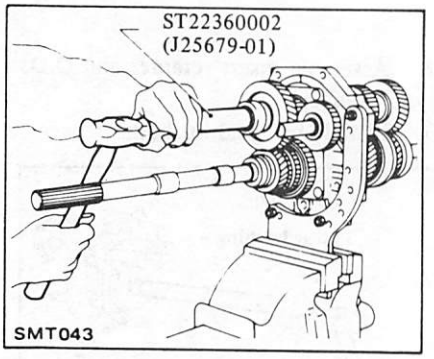

9. Mesh 2nd and reverse gears and tighten mainshaft lock nut.

- **With special tool**

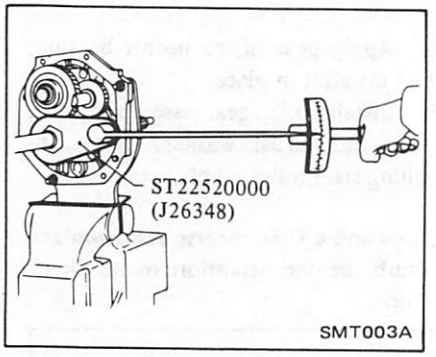

Using the following chart (Length of torque wrench VS. reading torque)

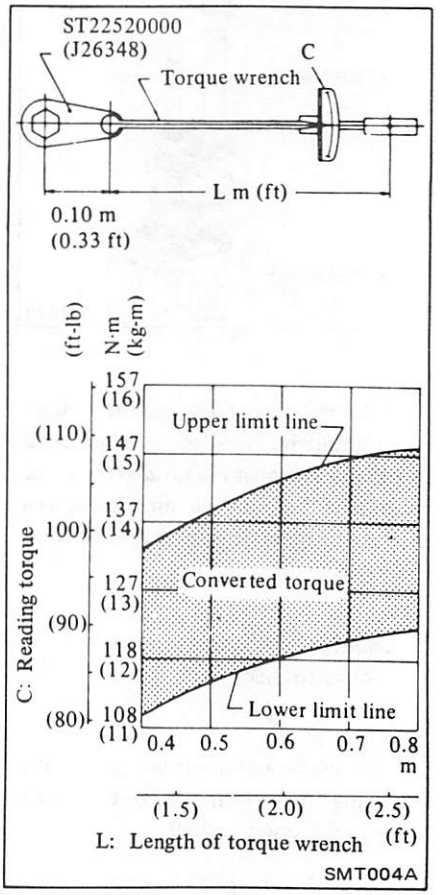

- **Without special tool**

Ⓣ: **137 - 167 N·m (14.0 - 17.0 kg-m, 101 - 123 ft-lb)**

10. Tighten counter gear lock nut.

Ⓣ: **98 - 127 N·m (10.0 - 13.0 kg-m, 72 - 94 ft-lb)**

11. Stake mainshaft lock nut and counter gear lock nut with a punch.

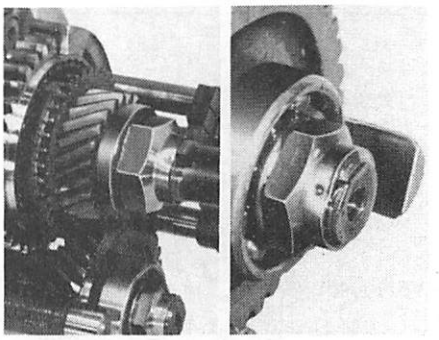

12. **Measure gear end play.** Refer to Gears and Shafts for inspection.
13. Fit snap ring, then assemble mainshaft rear bearing.

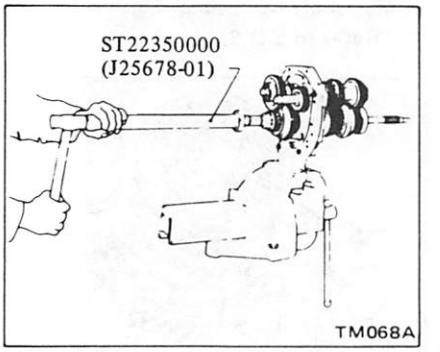

14. Fit thick snap ring to mainshaft rear bearing to eliminate end play.

Mainshaft rear bearing snap ring: Refer to S.D.S.

15. Assemble snap rings, steel ball and speedometer drive gear (long extension model).
16. Install forks and fork rods. Refer to Forks and Fork Rods for assembly.
17. Install transmission case. Refer to Transmission Case for assembly.
18. Install rear extension. Refer to Rear Extension for assembly.

REPLACEMENT OF OIL SEALS

FRONT COVER OIL SEAL

It is necessary to remove transmission unit from car. Replace oil seal as follows:

1. Remove transmission. Refer to Removal.
2. Wipe off dirt and grease.
3. Drain oil.
4. Remove dust cover, release bearing and withdrawal lever.

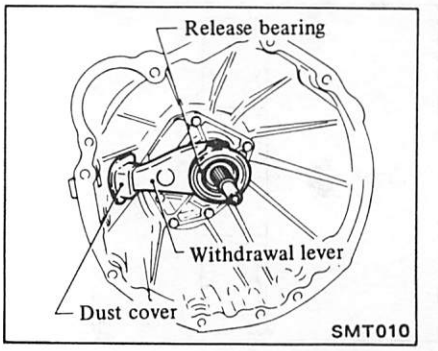

5. Remove front cover.
6. Remove oil seal.

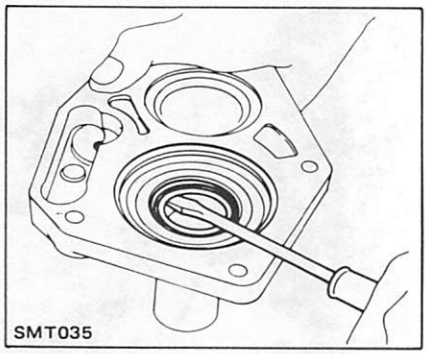

7. Apply coat of gear oil to oil seal surface, then drive new seal into place.

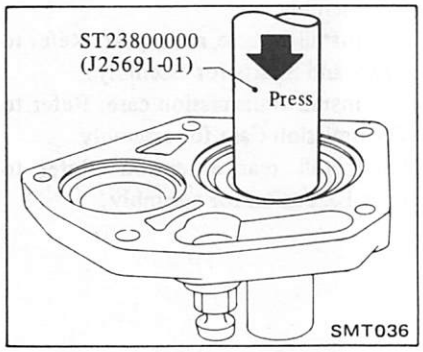

8. Lubricate seal lip and main drive shaft with gear oil.
9. Install front cover in reverse order of removal.

REAR EXTENSION OIL SEAL

Rear extension oil seal can be replaced without removing transmission. Replace oil seal as follows:

1. Remove propeller shaft. Refer to Propeller Shaft (Section PD) for removal.
2. Remove oil seal.

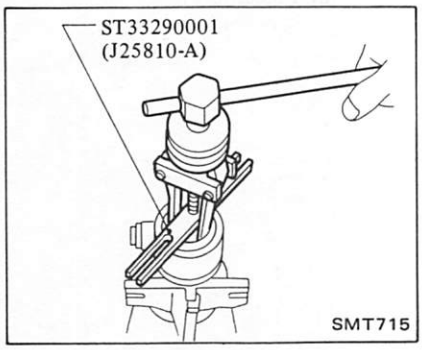

3. Apply coat of gear oil to oil seal surface, then drive new seal into place.

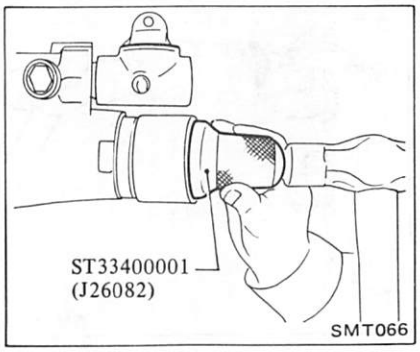

4. Install propeller shaft. Refer to Propeller Shaft (Section PD) for relation.

REPLACEMENT OF BEARINGS

MAIN DRIVE AND COUNTER FRONT

1. Remove main drive and counter drive gear. Refer to Gears and Shafts for disassembly.
2. Remove main drive gear snap ring and spacer.
3. Remove main drive bearing.

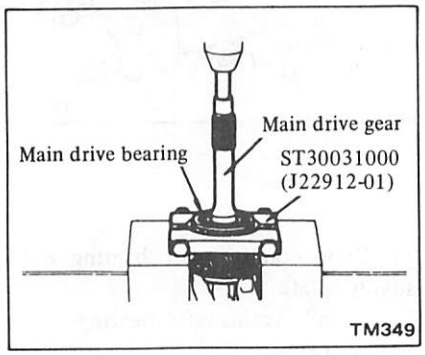

4. Press new main drive bearing.

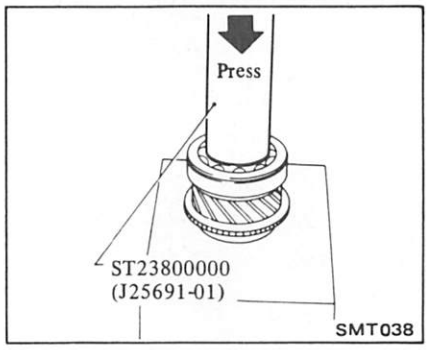

5. Place main drive bearing spacer on main drive bearing and secure main drive bearing with thicker snap ring that will eliminate end play.

Main drive gear snap ring:
Refer to S.D.S.

6. Mesh 2nd and reverse gear, then draw out counter front bearing.

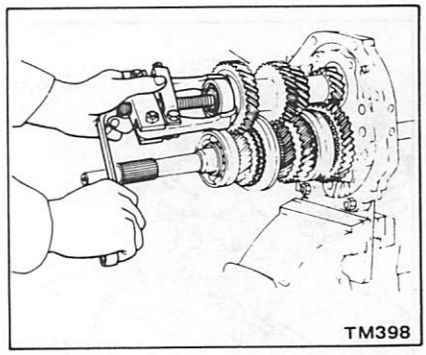

7. Press counter gear front bearing onto counter gear.

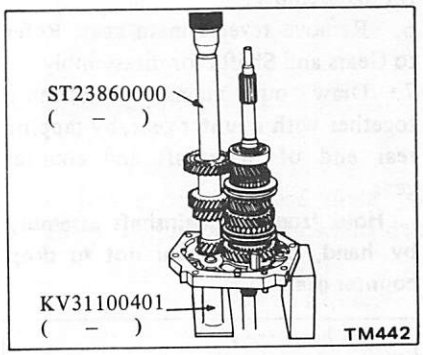

8. Install main drive and counter drive gear. Refer to Gears and Shafts for assembly.

MAINSHAFT AND COUNTER REAR

1. Remove rear extension. Refer to Rear Extension for disassembly.
2. Remove transmission case. Refer to Transmission Case for disassembly.
3. Set up Tool ST23810001 on adapter plate.
4. Place above assembly in a vise.

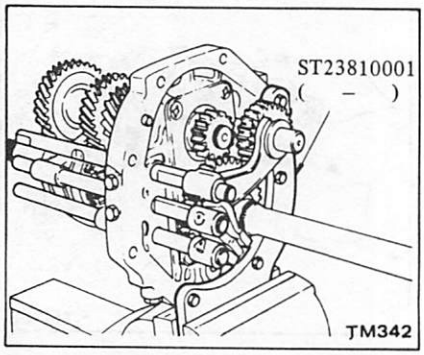

5. Remove main drive and counter drive gear. Refer to Gears and Shafts for disassembly.
6. Remove reverse main gear. Refer to Gears and Shafts for disassembly.
7. Draw out mainshaft assembly together with counter gear, by tapping rear end of mainshaft and counter gear.

Hold front of mainshaft assembly by hand, being careful not to drop counter gear.

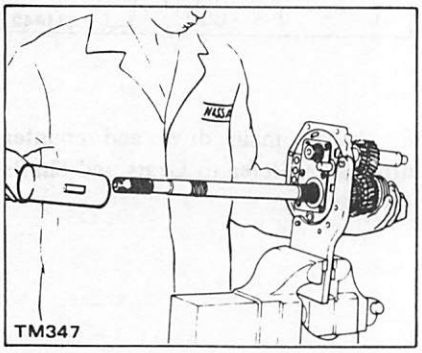

8. Remove bearing retainer.

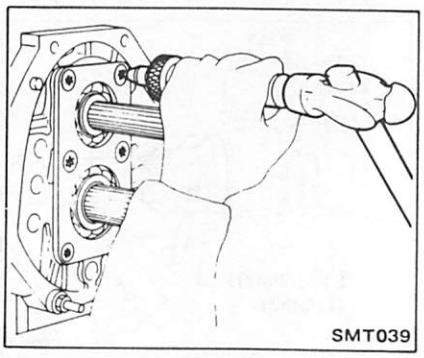

9. Replace mainshaft bearing by new one.
10. Press out countershaft rear bearing.

CAUTION:
When pressing out bearing, hold shaft by hand so as not to drop it.

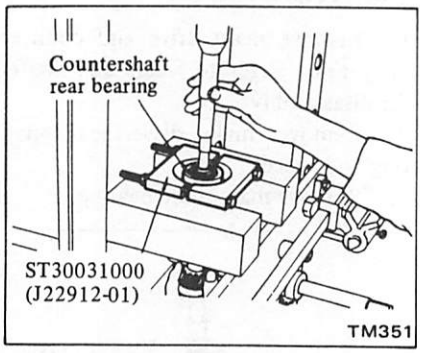

11. Press counter rear bearing onto adapter plate.
12. Install mainshaft bearing onto adapter plate.
13. Install bearing retainer and align bearing retainer with reverse idler shaft at the cut-out portion of the shaft.
14. Tighten and stake each screw at two points.

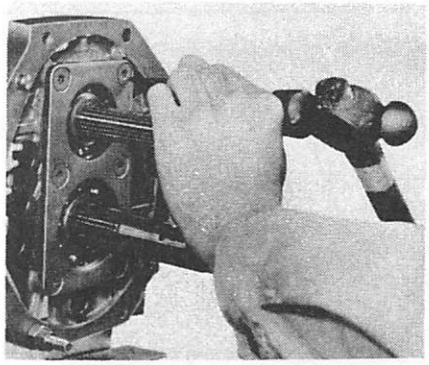

15. Install main drive and counter drive gear. Refer to Gears and Shafts for assembly.
16. Install reverse main gear. Refer to Gears and Shafts for assembly.
17. Install transmission case. Refer to Transmission Case for assembly.
18. Install rear extension. Refer to Rear Extension for assembly.

MAINSHAFT REAR AND COUNTER REAR END

Refer to Gears and Shafts for disassembly and assembly.

SERVICE DATA AND SPECIFICATIONS (S.D.S.)

GENERAL SPECIFICATIONS

Power train	2WD		4WD
Engine model	Z20, Z24	SD25	Z24
Transmission model	FS5W71B		
No. of speed	5		
Synchromesh type	Warner		
Shift type	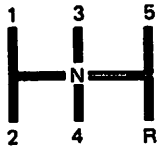		
Gear ratio			
1st	3.321	3.592	
2nd	1.902	2.057	
3rd	1.308	1.361	
4th	1.000	1.000	
5th	0.833	0.813	
Rev.	3.382	3.657	
Number of teeth			
Mainshaft			
Drive	22	21	
1st	33	33	
2nd	27	27	
3rd	26	25	
5th	26	24	
Rev.	36	36	
Countershaft			
Drive	31	32	
1st	14	14	
2nd	20	20	
3rd	28	28	
5th	44	45	
Rev.	15	15	
Rev. idler shaft	21	21	
Oil capacity ℓ (US pt, Imp pt)	2.1 (4-1/2, 3-3/4)		

INSPECTION AND ADJUSTMENT

GEAR END PLAY

Unit: mm (in)

1st main gear	0.31 - 0.41 (0.0122 - 0.0161)
2nd main gear	0.11 - 0.21 (0.0043 - 0.0083)
3rd main gear	0.11 - 0.21 (0.0043 - 0.0083)
5th main gear	0.32 - 0.39 (0.0126 - 0.0154)
Rev. idler gear	0.05 - 0.50 (0.0020 - 0.0197)

CLEARANCE BETWEEN BAULK RING AND GEAR

Unit: mm (in)

	Except O.D. (5th) gear	O.D. (5th) gear
Standard	1.20 - 1.60 (0.0472 - 0.0630)	1.00 - 1.40 (0.0394 - 0.0551)
Wear limit	0.8 (0.031)	0.5 (0.020)

AVAILABLE SNAP RING

Main drive gear bearing

Thickness mm (in)	Part number
1.73 (0.0681)	32204 78005
1.80 (0.0709)	32204 78000
1.87 (0.0736)	32204 78001
1.94 (0.0764)	32204 78002
2.01 (0.0791)	32204 78003
2.08 (0.0819)	32204 78004

Mainshaft front

Thickness mm (in)	Part number
1.4 (0.055)	32263 E9000
1.5 (0.059)	32263 E9001
1.6 (0.063)	32263 E9002

Mainshaft rear end bearing

Thickness mm (in)	Part number
1.1 (0.043)	32228 20100
1.2 (0.047)	32228 20101
1.3 (0.051)	32228 20102
1.4 (0.055)	32228 20103

Counter drive gear

Thickness mm (in)	Part number
1.4 (0.055)	32215 E9000
1.5 (0.059)	32215 E9001
1.6 (0.063)	32215 E9002

AVAILABLE SHIM

Counter front bearing

Unit: mm (in)

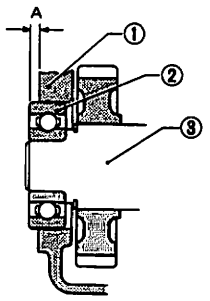

A: Distance from bearing surface to transmission case

1 Transmission case
2 Counter gear front bearing
3 Counter gear

TM371

"A"	Thickness of shim	Part number
4.52 - 4.71 (0.1780 - 0.1854)	Not necessary	
4.42 - 4.51 (0.1740 - 0.1776)	0.1 (0.004)	32218 V5000
4.32 - 4.41 (0.1701 - 0.1736)	0.2 (0.008)	32218 V5001
4.22 - 4.31 (0.1661 - 0.1697)	0.3 (0.012)	32218 V5002
4.12 - 4.21 (0.1622 - 0.1657)	0.4 (0.016)	32218 V5003
4.02 - 4.11 (0.1583 - 0.1618)	0.5 (0.020)	32218 V5004
3.92 - 4.01 (0.1543 - 0.1579)	0.6 (0.024)	32218 V5005

TIGHTENING TORQUE

Unit	N·m	kg-m	ft-lb
Transmission installation			
Clutch operating cylinder	30 - 40	3.1 - 4.1	22 - 30
Transmission to engine	39 - 49	4.0 - 5.0	29 - 36
Engine rear plate to transmission	29 - 39	3.0 - 4.0	22 - 29
Crossmember to side frame	31 - 42	3.2 - 4.3	23 - 31
Rear mounting insulator to crossmember	19 - 25	1.9 - 2.6	14 - 19
Rear mounting insulator to rear extension	59 - 78	6 - 8	43 - 58
Starter motor to transmission	29 - 39	3.0 - 4.0	22 - 29
Gear assembly			
Bearing retainer to adapter plate	19 - 25	1.9 - 2.5	14 - 18
Mainshaft lock nut	137 - 167	14.0 - 17.0	101 - 123
Countershaft lock nut	98 - 127	10.0 - 13.0	72 - 94
Rear extension to transmission case	16 - 20	1.6 - 2.0	12 - 14
Front cover to transmission case	16 - 21	1.6 - 2.1	12 - 15
Filler plug	25 - 34	2.5 - 3.5	18 - 25
Drain plug	25 - 34	2.5 - 3.5	18 - 25
Ball pin	20 - 34	2.0 - 3.5	14 - 25
Striking lever lock nut	9 - 12	0.9 - 1.2	6.5 - 8.7
Check ball plug	19 - 25	1.9 - 2.5	14 - 18
Speedometer sleeve installation	4 - 5	0.4 - 0.5	2.9 - 3.6
Back-up lamp switch	20 - 29	2.0 - 3.0	14 - 22
Return spring plug	8 - 10	0.8 - 1.0	5.8 - 7.2
Reverse check sleeve	4 - 5	0.4 - 0.5	2.9 - 3.6
Neutral switch	20 - 29	2.0 - 3.0	14 - 22

TROUBLE DIAGNOSES AND CORRECTIONS

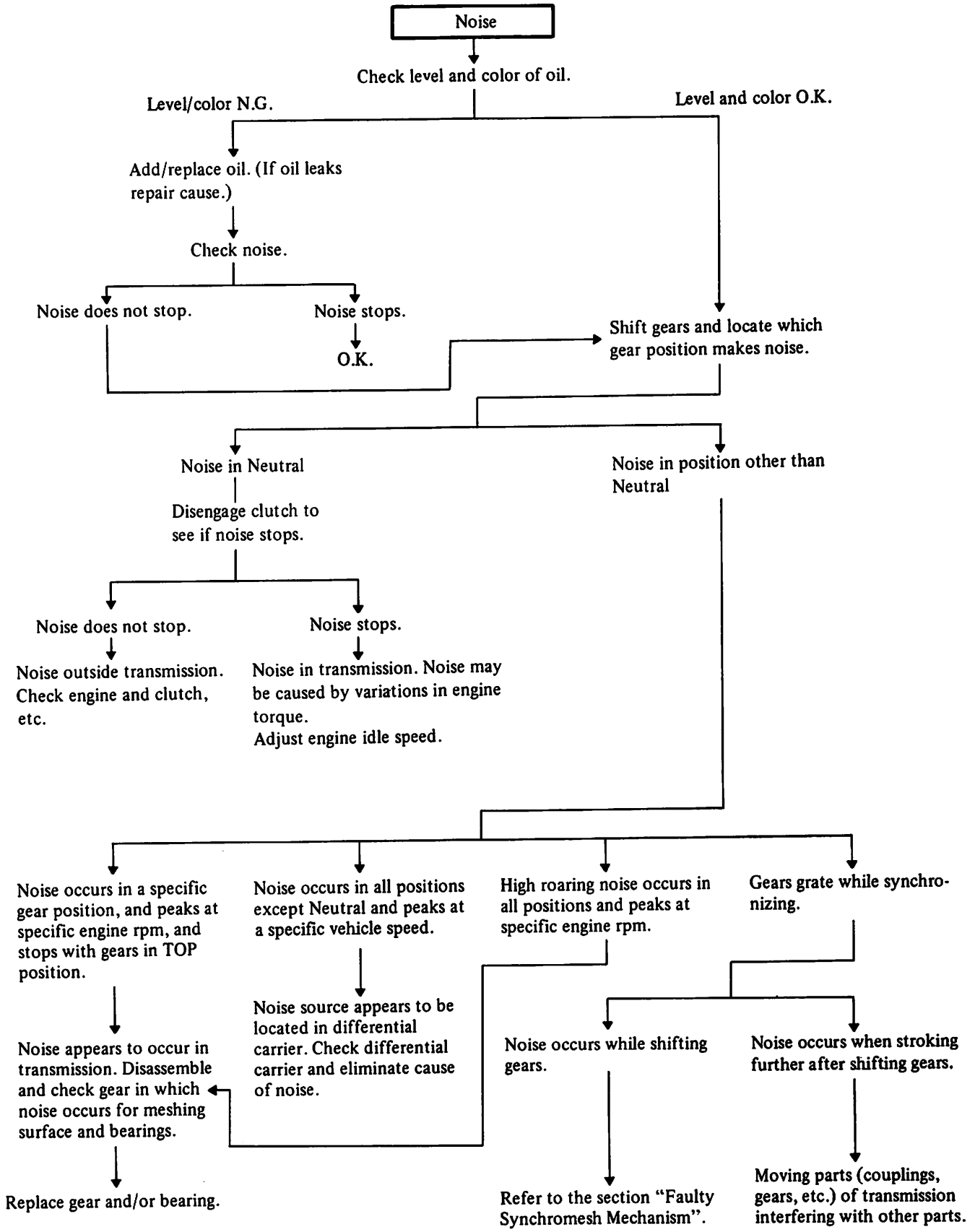

Gear jumping out of mesh

↓

Locate position where gears jump out of mesh.

↓

- Check for free play in control lever.
- Shifting is accomplished without problems. (Check interference of control lever with console, and check rubber boot of control lever for fatigue.)

N.G. → Replace.

O.K. → Check for fatigue, play, etc. on front and rear engine mounts.

N.G. → Adjust or replace.

O.K. → Problem may be inside transmission. Disassemble and check transmission.

↓

Check end play of "jump-out" gear.

End play excessive → Replace.

End play O.K. → Check for engaging, damage or wear on coupling sleeve, synchronizer hub, and clutch gear of main gear.

Damage or wear → Replace.

O.K. → Check for wear or damage on check ball and fatigue or breaks on check spring.

Damage or wear → Replace.

O.K. → Check for wear or deformation of fork rod ball groove.

Wear or deformation → Replace.

O.K. → Check for wear or play of "jump-out" synchronizer and mainshaft splines.

Wear or play → Replace.

No wear or play → Check for wear or damage on bearings of mainshaft and countershaft. Replace if worn.

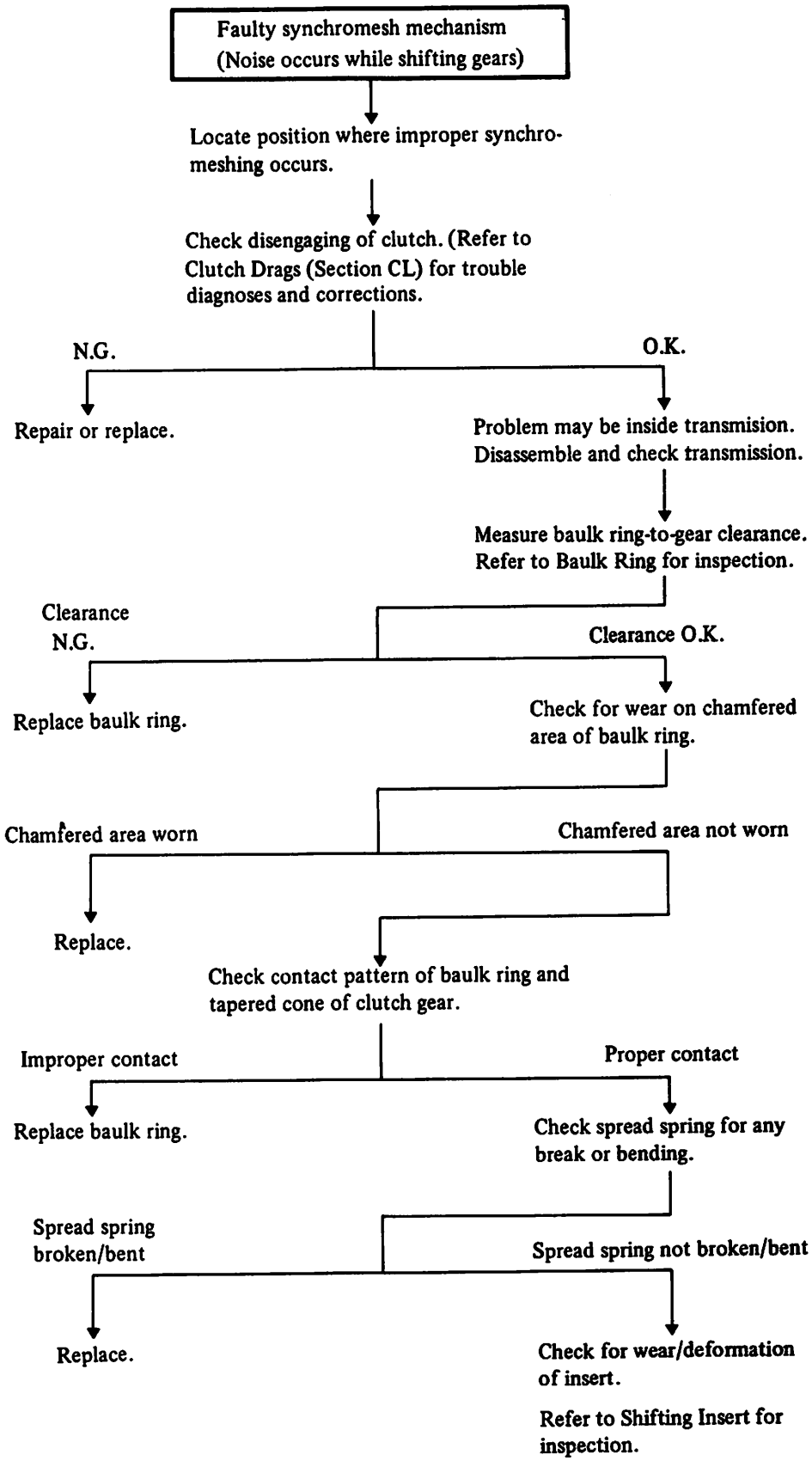
Faulty synchromesh mechanism
(Noise occurs while shifting gears)
Locate position where improper synchro-meshing occurs.
Check disengaging of clutch. (Refer to Clutch Drags (Section CL) for trouble diagnoses and corrections.
N.G.
O.K.
Repair or replace.
Problem may be inside transmision. Disassemble and check transmission.
Measure baulk ring-to-gear clearance. Refer to Baulk Ring for inspection.
Clearance N.G.
Clearance O.K.
Replace baulk ring.
Check for wear on chamfered area of baulk ring.
Chamfered area worn
Chamfered area not worn
Replace.
Check contact pattern of baulk ring and tapered cone of clutch gear.
Improper contact
Proper contact
Replace baulk ring.
Check spread spring for any break or bending.
Spread spring broken/bent
Spread spring not broken/bent
Replace.
Check for wear/deformation of insert.
Refer to Shifting Insert for inspection.

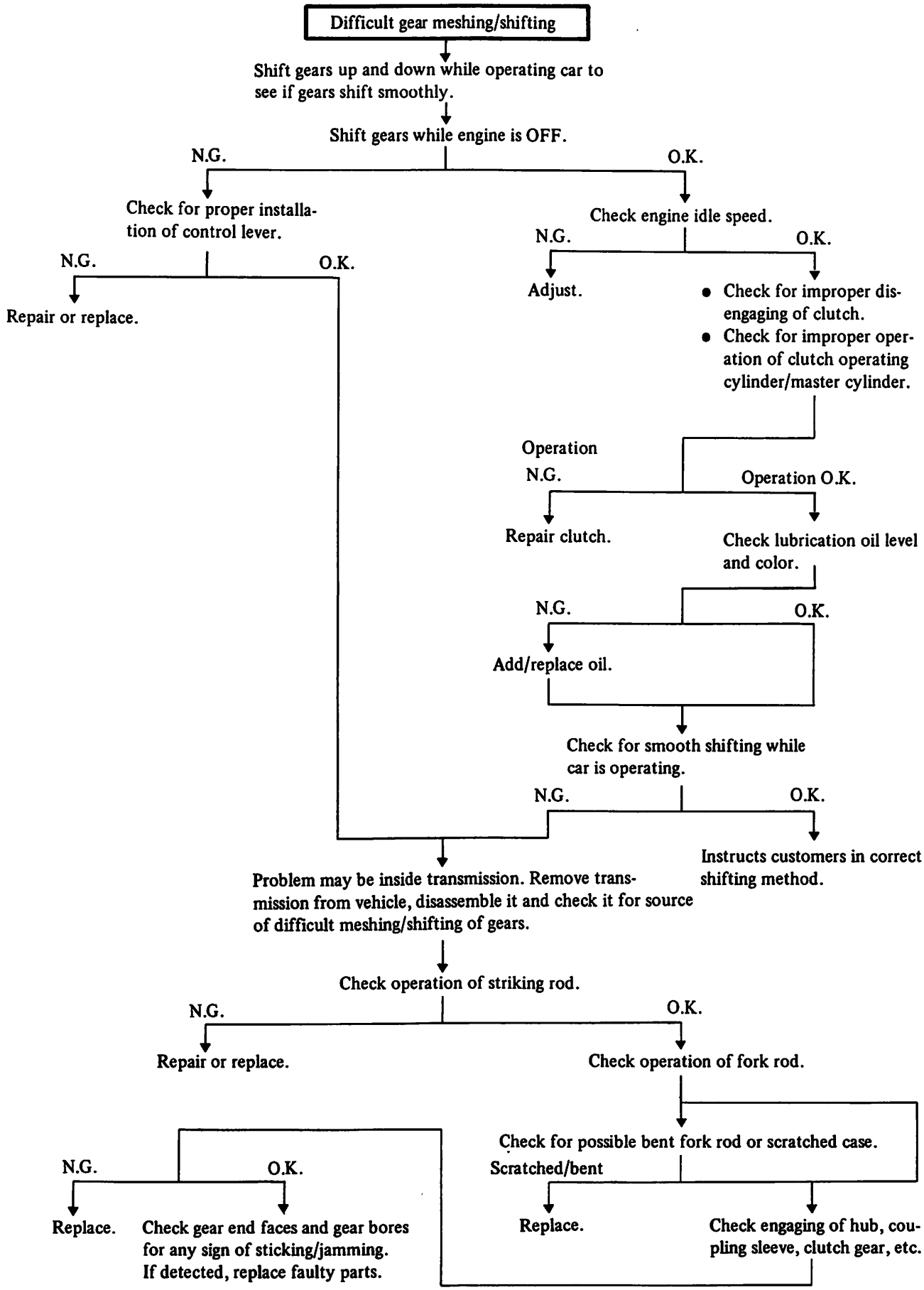
Difficult gear meshing/shifting
Shift gears up and down while operating car to see if gears shift smoothly.
Shift gears while engine is OFF.
N.G.
O.K.
Check for proper installation of control lever.
N.G.
O.K.
Repair or replace.
Check engine idle speed.
N.G.
O.K.
Adjust.
• Check for improper disengaging of clutch.
• Check for improper operation of clutch operating cylinder/master cylinder.
Operation N.G.
Operation O.K.
Repair clutch.
Check lubrication oil level and color.
N.G.
O.K.
Add/replace oil.
Check for smooth shifting while car is operating.
N.G.
O.K.
Instructs customers in correct shifting method.
Problem may be inside transmission. Remove transmission from vehicle, disassemble it and check it for source of difficult meshing/shifting of gears.
Check operation of striking rod.
N.G.
O.K.
Repair or replace.
Check operation of fork rod.
Check for possible bent fork rod or scratched case.
N.G.
O.K.
Scratched/bent
Replace.
Check gear end faces and gear bores for any sign of sticking/jamming. If detected, replace faulty parts.
Replace.
Check engaging of hub, coupling sleeve, clutch gear, etc.

SPECIAL SERVICE TOOLS

Tool number (Kent-Moore No.)	Tool name
ST23810001 (–)	Adapter setting plate 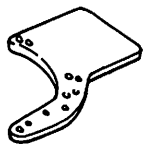
KV31100300 (J25689-A)	Fork rod pin punch
ST30031000 (J22912 -01)	Bearing puller 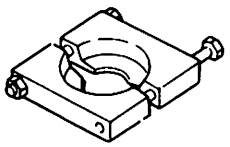
KV31100401 (–)	Transmission press stand 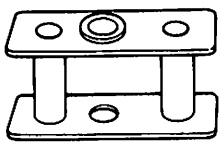
ST23860000 (–)	Counter gear drift 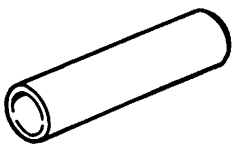
ST22360002 (J25679 -01)	Bearing drift 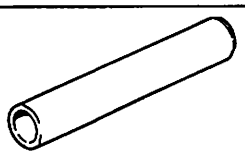
ST22520000 (J26348)	Wrench 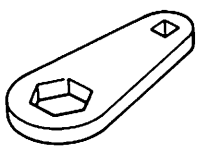
ST23800000 (J25691-01)	Transmission drift 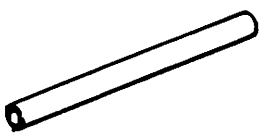
KV32101330 (See J26349-A)	Bearing puller 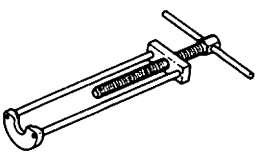
ST22350000 (J25678-01)	Mainshaft bearing drift 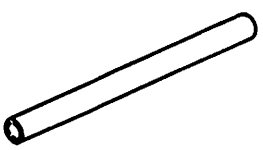

Tool number (Kent-Moore No.)	Tool name
ST33400001 (J26082)	Oil seal drift 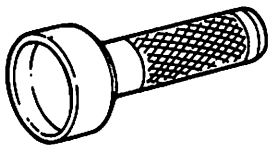
ST33290001 (J25810-A)	Bearing puller

AUTOMATIC TRANSMISSION

SECTION AT

CONTENTS

DESCRIPTION ..... AT- 2
HYDRAULIC CONTROL UNIT AND VALVES ..... AT- 3
HYDRAULIC CONTROL CIRCUIT ..... AT- 6
MINOR ADJUSTMENTS ..... AT- 7
REMOVAL AND INSTALLATION AT-10
TRANSMISSION ASSEMBLY AT-10
MAJOR OVERHAUL OPERATIONS AT-12
SERVICE NOTES FOR DISASSEMBLY AT-13
DISASSEMBLY AT-13
COMPONENT PARTS AT-16
FINAL ASSEMBLY AT-26
TROUBLE-SHOOTING AND DIAGNOSES AT-33
PRELIMINARY CHECKS (Prior to road testing) AT-33
DIAGNOSTIC ROAD TEST AT-34
PRESSURE TESTING AT-36
STALL TESTING AT-36
ROAD TEST SYMPTOM CHART AT-41
SERVICE DATA AND SPECIFICATIONS (S.D.S.) AT-44
SPECIAL SERVICE TOOLS AT-45

DESCRIPTION

The L3N71B transmission is a fully automatic unit consisting primarily of a 3 element hydraulic lock-up torque converter and two planetary gear sets. Two multiple-disc clutches, a multiple-disc brake, brake band, and one-way clutch provide the friction elements necessary to obtain the desired function of the two planetary gear-sets.

A hydraulic control system is used to operate the friction elements and automatic shift controls.

LOCK-UP TORQUE CONVERTER

The lock-up torque converter is attached to the crankshaft through a flexible drive plate and serves to directly couple the turbine runner and pump impeller through the lock-up piston which is controlled by the speed cut valve and lock-up control valve. Heat generated in the torque converter is dissipated by circulating the transmission fluid through an oil-to-water type cooler in the radiator lower tank.

The welded construction of the torque converter prohibits disassembly or service unless highly specialized equipment is available.

FLUID RECOMMENDATION

Use "DEXRON" type automatic transmission fluid only.

IDENTIFICATION NUMBER

Stamped position:

The plate is attached to the right hand side of transmission case.

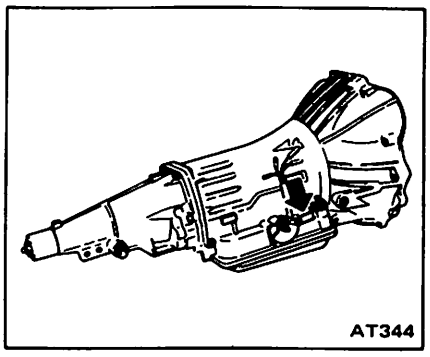

Identification of number arrangements:

JAPAN AUTOMATIC TRANSMISSION CO.,LTD
MODEL X0123
NO. 7601234

Number designation

7 6 0 1 2 3 4

- 0123 — Serial production number for the month
- 6 — Month of production [1: Jan., 2: Feb., ... X: Oct., Y: Nov., Z: Dec.]
- 7 — Last figure denoting the year (A.D.)

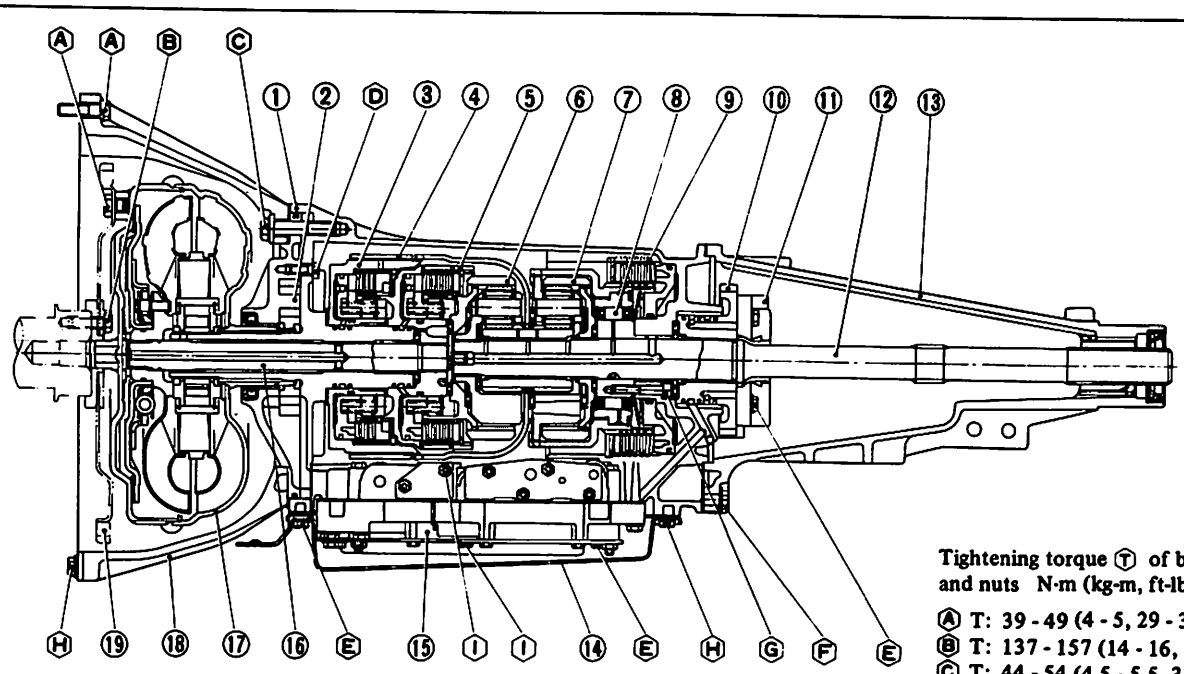

Tightening torque Ⓣ of bolts and nuts N·m (kg-m, ft-lb)

- Ⓐ T: 39 - 49 (4 - 5, 29 - 36)
- Ⓑ T: 137 - 157 (14 - 16, 101 - 116)
- Ⓒ T: 44 - 54 (4.5 - 5.5, 33 - 40)
- Ⓓ T: 6 - 8 (0.6 - 0.8, 4.3 - 5.8)
- Ⓔ T: 5 - 7 (0.5 - 0.7, 3.6 - 5.1)
- Ⓕ T: 20 - 25 (2.0 - 2.5, 14 - 18)
- Ⓖ T: 13 - 18 (1.3 - 1.8, 9 - 13)
- Ⓗ T: 5.4 - 7.4 (0.55 - 0.75, 4.0 - 5.4)
- Ⓘ T: 2.5 - 3.4 (0.25 - 0.35, 1.8 - 2.5)

1 Transmission case
2 Oil pump
3 High-reverse clutch (Front)
4 Band brake
5 Forward clutch (Rear)
6 Front planetary gear
7 Rear planetary gear
8 One-way clutch
9 Low & Reverse brake
10 Oil distributor
11 Governor
12 Output shaft
13 Rear extension
14 Oil pan
15 Control valve
16 Input shaft
17 Torque converter
18 Converter housing
19 Drive plate

SAT181

HYDRAULIC CONTROL UNIT AND VALVES

The hydraulic, or automatic control system is comprised of four (4) basic groups: the pressure supply system, the pressure regulating system, the flow control valves, and the friction elements.

PRESSURE SUPPLY SYSTEM

The pressure supply system consists of a gear type oil pump driven by the engine through the torque converter. The pump provides pressure for all hydraulic and lubrication needs.

PRESSURE REGULATOR VALVES

The pressure regulating valves control the output pressure of the oil pump.

Pressure regulator valve

The pressure regulator valve controls mainline pressure, based on throttle opening, for the operation of the band, clutches and brake.

Governor valve

The governor valve transmits regulated pressure, based on car speed, to the shift valves to control upshifts and downshifts.

Vacuum throttle valve

The vacuum throttle valve transmits regulated pressure, based on engine load (vacuum). This pressure controls the pressure regulator valve. Also this pressure is applied to one end of the shift valves in opposition to governor pressure, which acts on the other end of the shift valves, controlling upshift and downshift speeds.

FLOW CONTROL VALVES

Manual valve

The manual valve is moved manually by the car operator to select the different drive ranges.

1-2 Shift valve

The 1-2 shift valve automatically shifts the transmission from first to second or from second to first depending upon governor and throttle pressure along with accelerator position (solenoid downshift valve). See Hydraulic Control Circuits, "Drive 2".

2-3 Shift valve

The 2-3 shift valve automatically shifts the transmission from second to top gear or from top to second depending upon governor and throttle pressure, or accelerator position (solenoid downshift valve). See Hydraulic Control Circuits "Drive 3" Range.

Solenoid downshift valve

The solenoid downshift valve is activated electrically when the accelerator is "floored", causing a forced downshift from top to second, top to first, or second to first gear depending upon car speed (governor pressure).

Pressure modified valve

The pressure modifier valve assists the mainline pressure regulator valve in lowering mainline pressure during high speed light load conditions, such as steady speed cruise. Governor pressure, working against a spring, opens the valve which allows modified throttle pressure to work against the pressure regulator valve spring, lowering mainline pressure. Lower operating pressure under light load reduces oil temperature, and increases transmission life.

Throttle back-up valve

The throttle back-up valve assists the vacuum throttle valve to increase line pressure when the manual valve is shifted either to "2" or "1" range.

Second lock valve

The second lock valve is used to bypass the 1-2 shift valve to maintain the band apply pressure in "2" position. The valve is also used as an oil passage for the 1-2 shift valve band apply pressure in "D_2", "D_3" and "1_2" Range.

Speed cut valve

The speed cut valve controls opening and closing of line pressure passage to the high-reverse clutch (Front) in response to governor pressure which is generated in proportion to car speed.

Lock-up control valve

In response to line pressure controlled by the speed cut valve, the lock-up control valve drains oil from the front of the lock-up piston which is used in the lock-up torque converter. This causes the turbine runner to be directly coupled with the pump impeller through the lock-up position.

CLUTCHES, BAND SERVOS AND LOCK-UP PISTON

The servo pistons of the clutches, low reverse brake, band and lock-up piston are moved hydraulically to engage the clutches, brake, apply the band and connect torque converter directly. The clutch and brake pistons are released by spring tension, and band piston is released by spring tension and hydraulic pressure and lock-up piston is released by hydraulic pressure.

Control valve

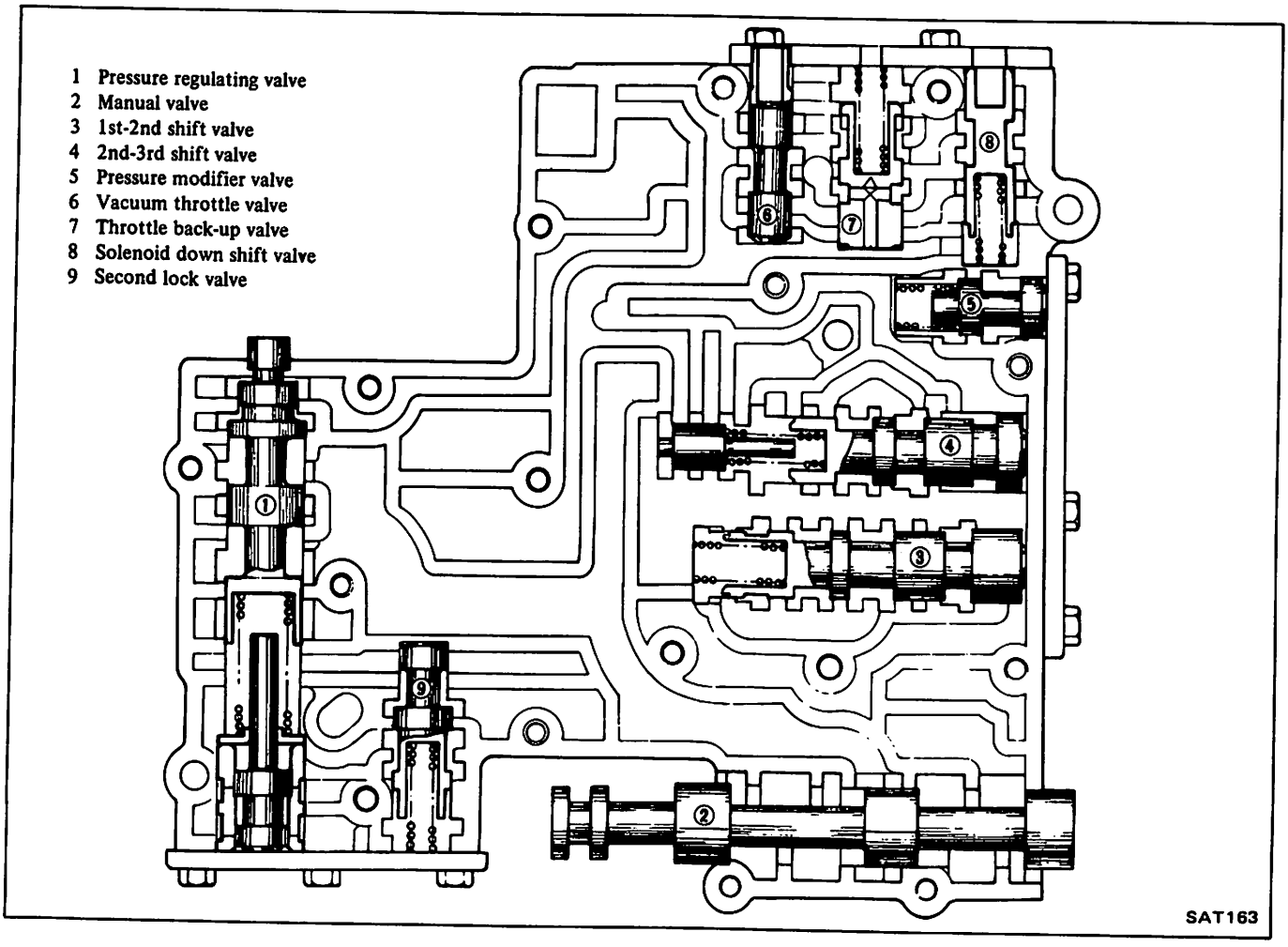

Speed cut valve and lock-up control valve (In oil pump cover)

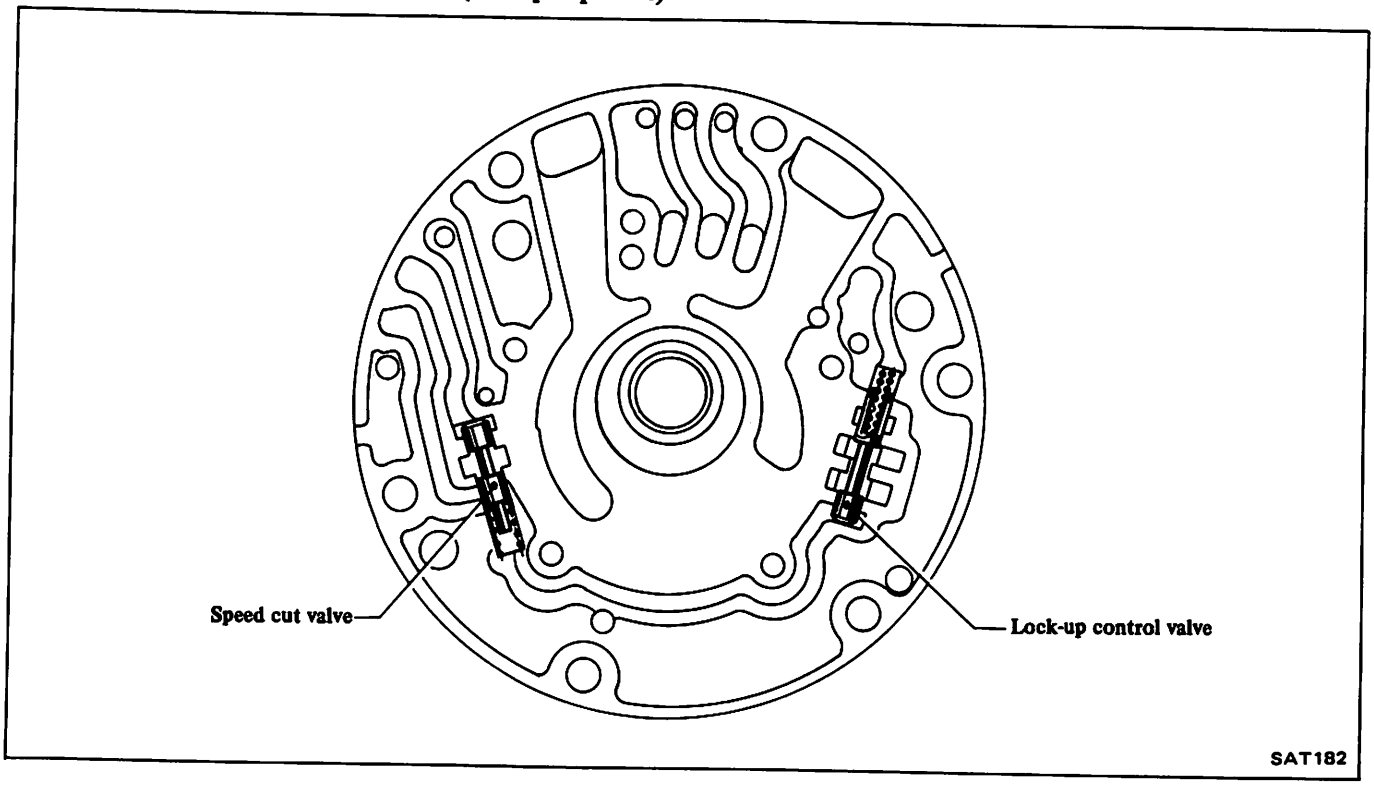

OIL CHANNEL IDENTIFICATION

The circuit numbers shown in each Hydraulic Control Circuit are classified as follows according to the function.

Pressure source of the line: 7

Operating line pressure for friction elements:
1, 2, 3, 4, 5, 6, 8, 9, 10, 11, 12.

Auxiliary line pressure: 13

Torque converter pressure: 14

Governor pressure: 15

Throttle system pressure:
16, 17, 18, 19.

Oil Channels in Oil Pump

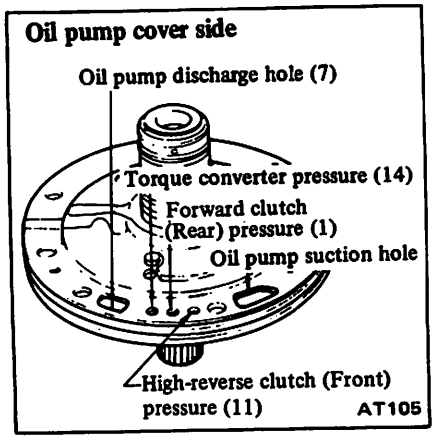

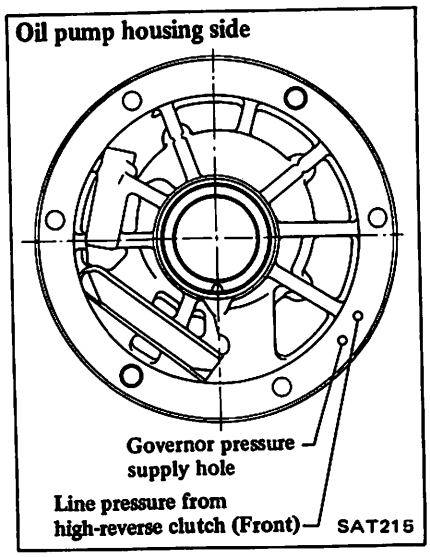

Oil channels in converter housing

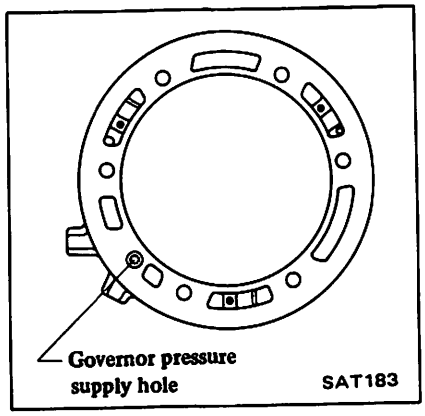

Oil Channels in Case Front Face

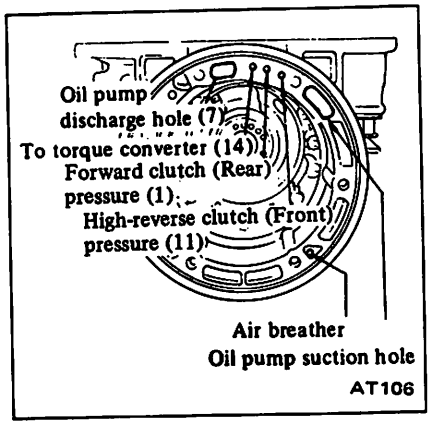

Oil Channels in Case Face

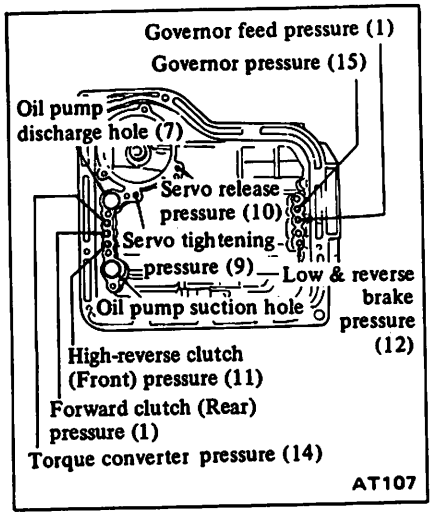

MECHANICAL OPERATION

In the L3N71B automatic transmission, each part operates as shown in the following table at each gear select position.

Range			Gear ratio	Clutch		Low & reverse brake	Lock-up	Band servo		One way clutch	Parking pawl
				High-reverse (Front)	Forward (Rear)			Operation	Release		
Park						on					on
Reverse			2.182	on		on			on		
Neutral											
Drive	D1	Low	2.458		on					on	
	D2	Second	1.458		on			on			
	D3	Top	1.000	on	on		on	(on)	on		
2		Second	1.458		on			on			
1	1_2	Second	1.458		on			on			
	1_1	Low	2.458		on	on					

The low & reverse brake is applied in "1_1" range to prevent free wheeling when coasting and allows engine braking.

HYDRAULIC CONTROL CIRCUIT

Oil Pressure Circuit Diagram – "N" range (Neutral)

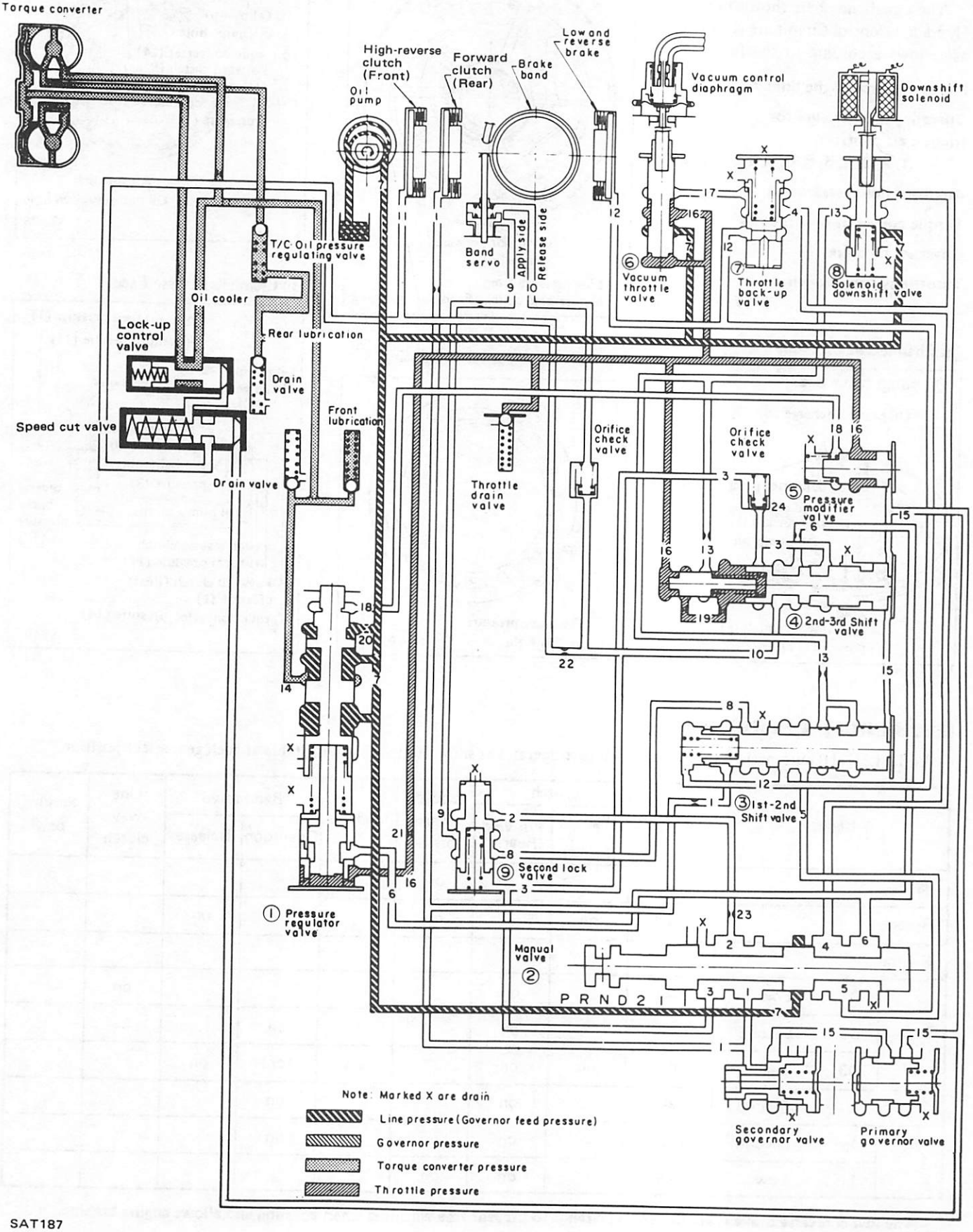

SAT187

MINOR ADJUSTMENTS

KICKDOWN SWITCH ADJUSTMENT

The kickdown switch is located at the upper post of the accelerator pedal, inside the car.

When the pedal is fully depressed, a click can be heard just before the pedal bottoms out. If the click is not heard, loosen the locknut and extend the switch until the pedal lever makes contact with the switch and the switch clicks.

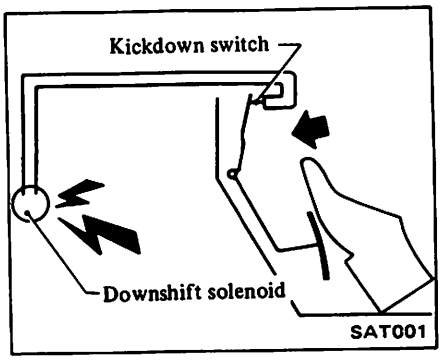

Do not allow the switch to make contact too soon. This would cause the transmission to downshift on part throttle.

DIAGNOSIS:

Switch can be heard clicking, and the transmission still does not kickdown: Check the continuity of the switch using a continuity tester. Also check for available current.

The car upshifts at approximately 65 and 110 km/h (40 and 68 MPH) only: The kickdown switch may be internally shorted. (When the switch is shorted, there is continuity through the switch in any position).

Wiring Diagram

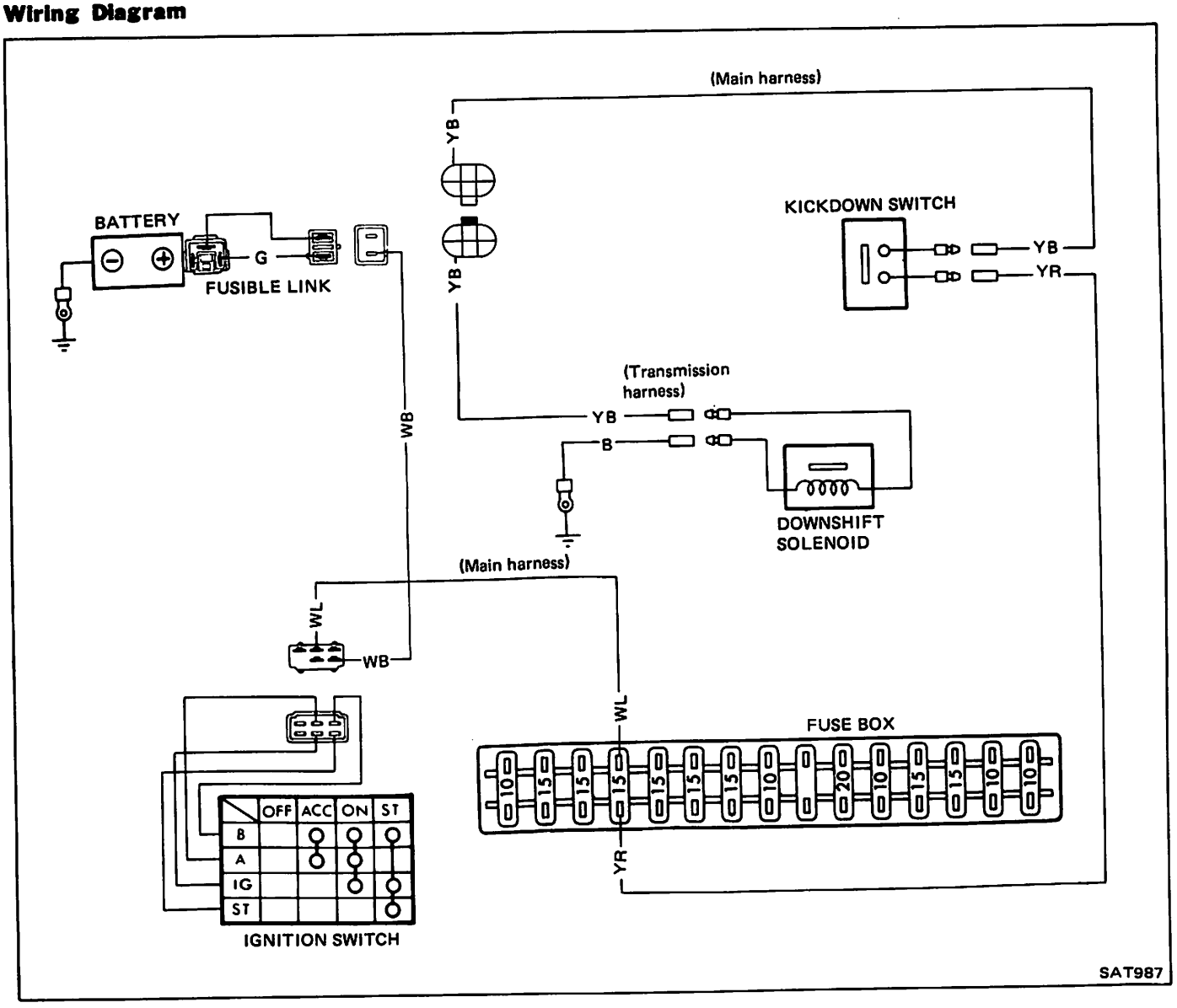

INHIBITOR SWITCH ADJUSTMENT

The inhibitor switch has two major functions. It allows the back-up lights to illuminate when the shift lever is placed in the reverse range. It also acts as a neutral safety switch allowing current to pass from the starter only when the lever is placed in the "P" or "N" range.

A continuity tester may be used to check the inhibitor switch for proper operation.

The blue and red (LR) and the black and red (BR) wires should have continuity when the lever is in the "P" and "N" positions.

Yellow and white (YW) wires and yellow and red (YR) should have continuity when the shift lever is moved to "R" range.

Wiring Diagram

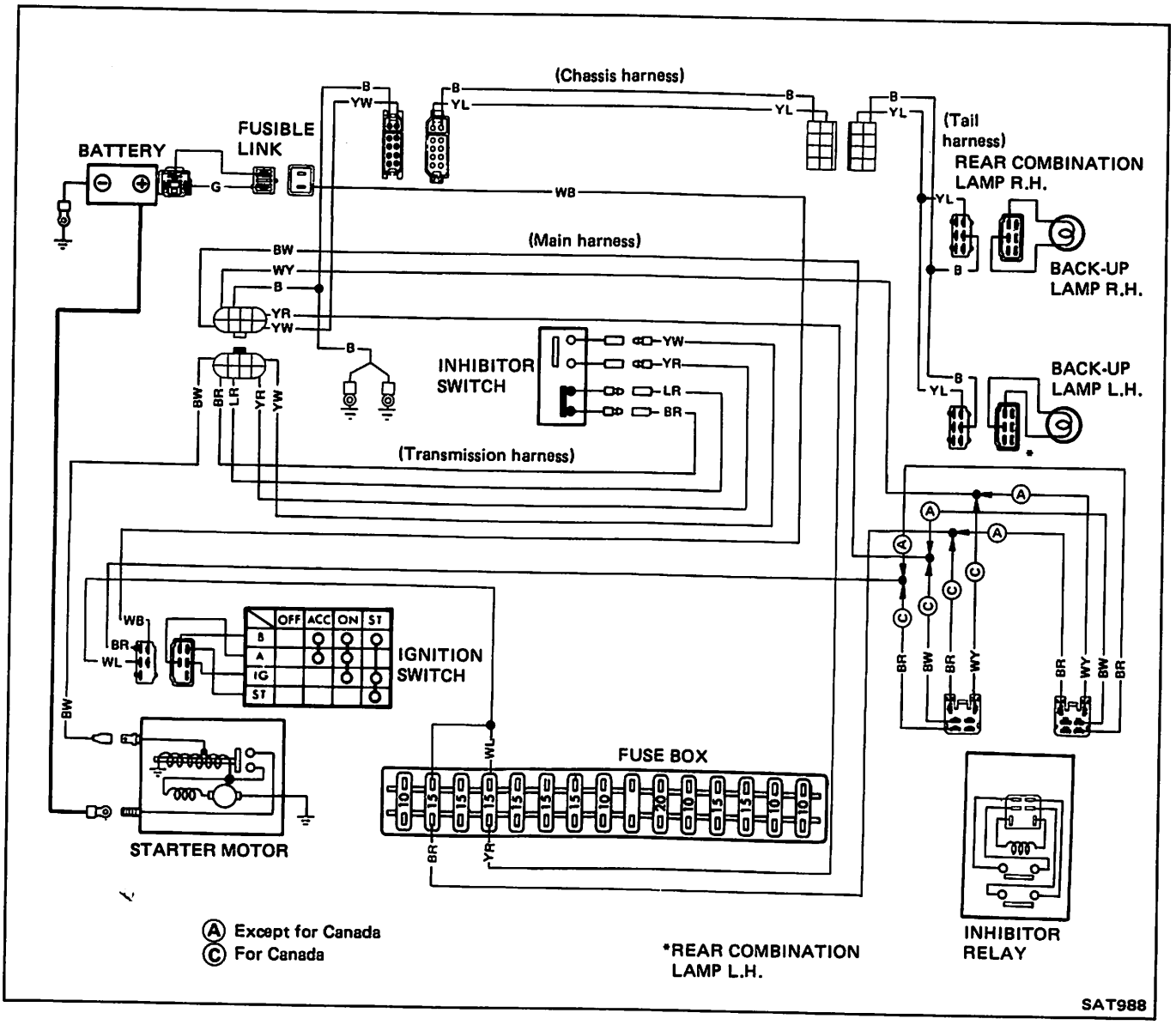

1. Place the manual valve in Neutral (vertical position).
2. Remove the screw as illustrated.

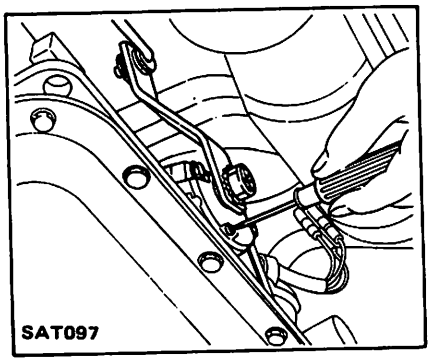

3. Loosen the attaching bolts.
4. Using an aligning pin [dia. 2 mm (0.08 in)], move the switch until the pin falls into the hole in the rotor.

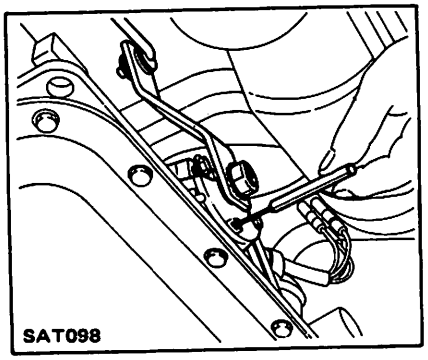

5. Tighten the attaching bolts.
6. Recheck for continuity. If faulty, replace the switch.

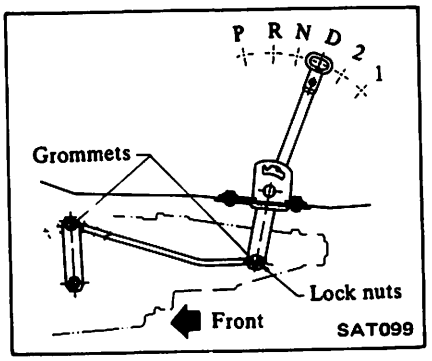

1. Place shift lever in "D" range.
2. Loosen locknuts and move shift lever until "D" is properly aligned and car is in "D" range.
3. Tighten locknut.

Recheck "P" and "Range 1" positions. As a safety measure, be sure you can feel full detent when shift lever is placed in "P". If you are unable to make an adjustment, grommets may be badly worn or damaged and should be replaced.

VACUUM DIAPHRAGM ROD ADJUSTMENT

The vacuum diaphragm and the length of its diaphragm rod help determine the shift patterns of the transmission. It is essential that the correct length rod be installed.

1. Disconnect vacuum hose at vacuum diaphragm and remove diaphragm from transmission case.
2. Using a depth gauge, measure depth "L". Be sure vacuum throttle valve is pushed into valve body as far as possible.
3. Check "L" depth with chart below and select proper length rod.

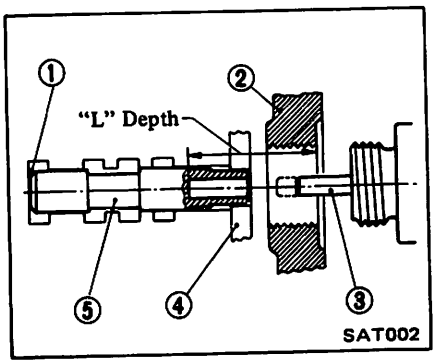

1 Note seated valve body
2 Transmission case wall
3 Diaphragm rod
4 Valve body side plate
5 Vacuum throttle valve

Vacuum diaphragm rod selection

Measured depth "L" mm (in)	Rod length mm (in)	Part number
Under 25.55 (1.0059)	29.0 (1.142)	31932 - X0103
25.65 - 26.05 (1.0098 - 1.0256)	29.5 (1.161)	31932 - X0104
26.15 - 26.55 (1.0295 - 1.0453)	30.0 (1.181)	31932 - X0100
26.65 - 27.05 (1.0492 - 1.0650)	30.5 (1.201)	31932 - X0102
Over 27.15 (1.0689)	31.0 (1.220)	31932 - X0101

MANUAL LINKAGE ADJUSTMENT

The adjustment of the manual linkage is an important adjustment of the automatic transmission. Move the shift lever from the "P" range to "Range 1". you should be able to feel the detents in each range.

If the detents cannot be felt or the pointer indicating the range is improperly aligned, the linkage needs adjustment.

BRAKE BAND ADJUSTMENT

Proper brake band adjustment results in smooth shifting between 1st & 2nd and 2nd & 3rd. Although the adjustment is very simple, it is important to use an accurate torque wrench.

1. Loosen locknut.
2. Torque band servo piston stem to 12 to 15 N·m (1.2 to 1.5 kg-m, 9 to 11 ft-lb).
3. Back off band servo piston stem two complete turns.

CAUTION:
Do not back off EXCESSIVELY on adjusting stem as anchor block may fall out of place.

4. Tighten locknut to approximately 20 N·m (2 kg-m, 14 ft-lb) while holding band servo piston stem stationary.

REMOVAL AND INSTALLATION

TRANSMISSION ASSEMBLY

When dismounting the automatic transmission from a car, pay attention to the following points:

1. Before dismounting the transmission, rigidly inspect it by using the "Trouble-shooting Chart", and dismount it only when it is necessary.
2. Dismount the transmission with utmost care; and when mounting, observing the tightening torque indicated on another table, do not exert excessive force.

REMOVAL

In dismounting the automatic transmission from a car, proceed as follows:

1. Disconnect battery ground cable from terminal.
2. Jack up car and support it on safety stands. We recommend a hydraulic hoist or open pit be utilized, if available.

   Observe all safety regulations.
3. Remove propeller shaft.

Plug up the opening in the rear extension to prevent oil from flowing out.

4. Disconnect front exhaust tube.
5. Disconnect selector range lever from manual shaft.
6. Disconnect wire connections at inhibitor switch.
7. Disconnect vacuum tube from vacuum diaphragm, and wire connections at downshift solenoid.
8. Disconnect speedometer cable from rear extension.
9. Disconnect oil charging pipe.
10. Disconnect oil cooler inlet and outlet tubes at transmission case.
11. Disconnect governor tube at converter housing and transmission case.
12. Support engine by locating a jack under oil pan with a woden block used between oil pan and jack. Support transmission by means of a transmission jack.

CAUTION:
Do not place the jack under the oil pan drain plug.

13. Remove gussets.

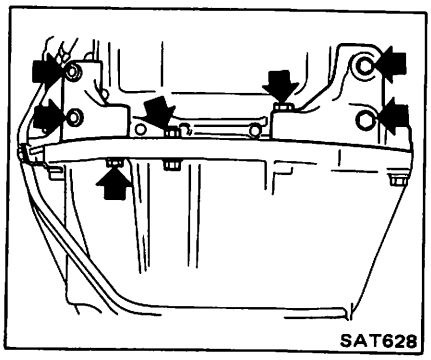
SAT628

14. Detach converter housing dust cover. Remove bolts securing torque converter to drive plate.

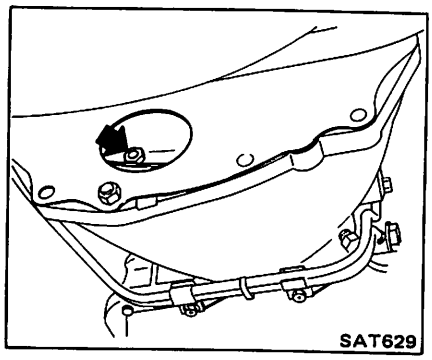
SAT629

Before removing torque converter, inscribe chalk marks on two parts so that they may be replaced in their original positions at assembly.

15. Remove rear engine mount securing bolts and crossmember mounting bolts.
16. Remove starter motor.
17. Remove bolts securing transmission to engine. After removing these bolts, support engine and transmission with jack, and lower the jack gradually until transmission can be removed and take out transmission under the car.

Plug up openings such as oil charging pipe, oil cooler tubes, etc.

CAUTION:
Take care when dismounting transmission not to strike any adjacent parts.

INSTALLATION

Installation of automatic transmission on car is in reverse order of removal. However, observe the following installation notes.

1. Drive plate runout

   Turn crankshaft one full turn and measure drive plate runout with indicating finger of a dial gauge rested against plate.

   Maximum allowable runout: 0.5 mm (0.020 in)

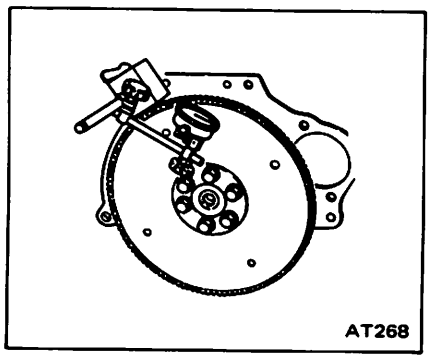
AT268

2. Installation of torque converter

   Line up notch in torque converter with that in oil pump. Be extremely careful not to put undue stress on parts when installing torque converter.

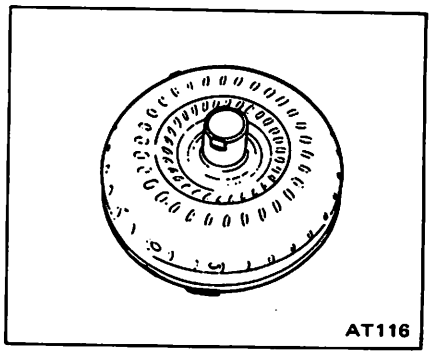
AT116

3. When connecting torque converter to transmission, measure distance "A" to be certain that they are correctly assembled.

Distance "A":
More than 35.0 mm (1.378 in)

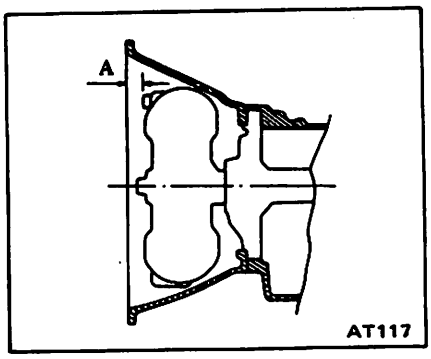

4. Bolt converter to drive plate.

Align chalk marks painted across both parts during disassembling processes.

5. After converter is installed, rotate crankshaft several turns and check to be sure that transmission rotates freely without binding.

6. Pour recommended automatic transmission fluid up to correct level through oil charge pipe.

7. Connect manual lever to shift rod. Operation should be carried out with manual and selector levers in "N".

8. Connect inhibitor switch wires.

a. Refer to pages AT-8 and 9 for Inhibitor Switch Adjustment.

b. Inspect and adjust switch as above whenever it has to be removed for service.

9. Check inhibitor switch for operation:

Starter should be brought into operation only when selector lever is in "P" and "N" positions (it should not be started when lever is in "D", "2", "1" and "R" positions).

Back-up lamp should also light when selector lever is placed in "R" position.

10. Check fluid level in transmission. For detailed procedure, see page AT-33.

11. Move selector lever through all positions to be sure that transmission operates correctly.

With hand brake applied, rotate engine at idling. Without disturbing the above setting, move selector lever through "N" to "D", to "2", to "1" and to "R". A slight shock should be felt by hand gripping selector each time transmission is shifted.

See page AT-34 for Checking Engine Idle.

12. Check to be sure that line pressure is correct. To do this, refer to page AT-36 for Line Pressure Test.

13. Perform stall test as described in page AT-36.

MAJOR OVERHAUL OPERATIONS

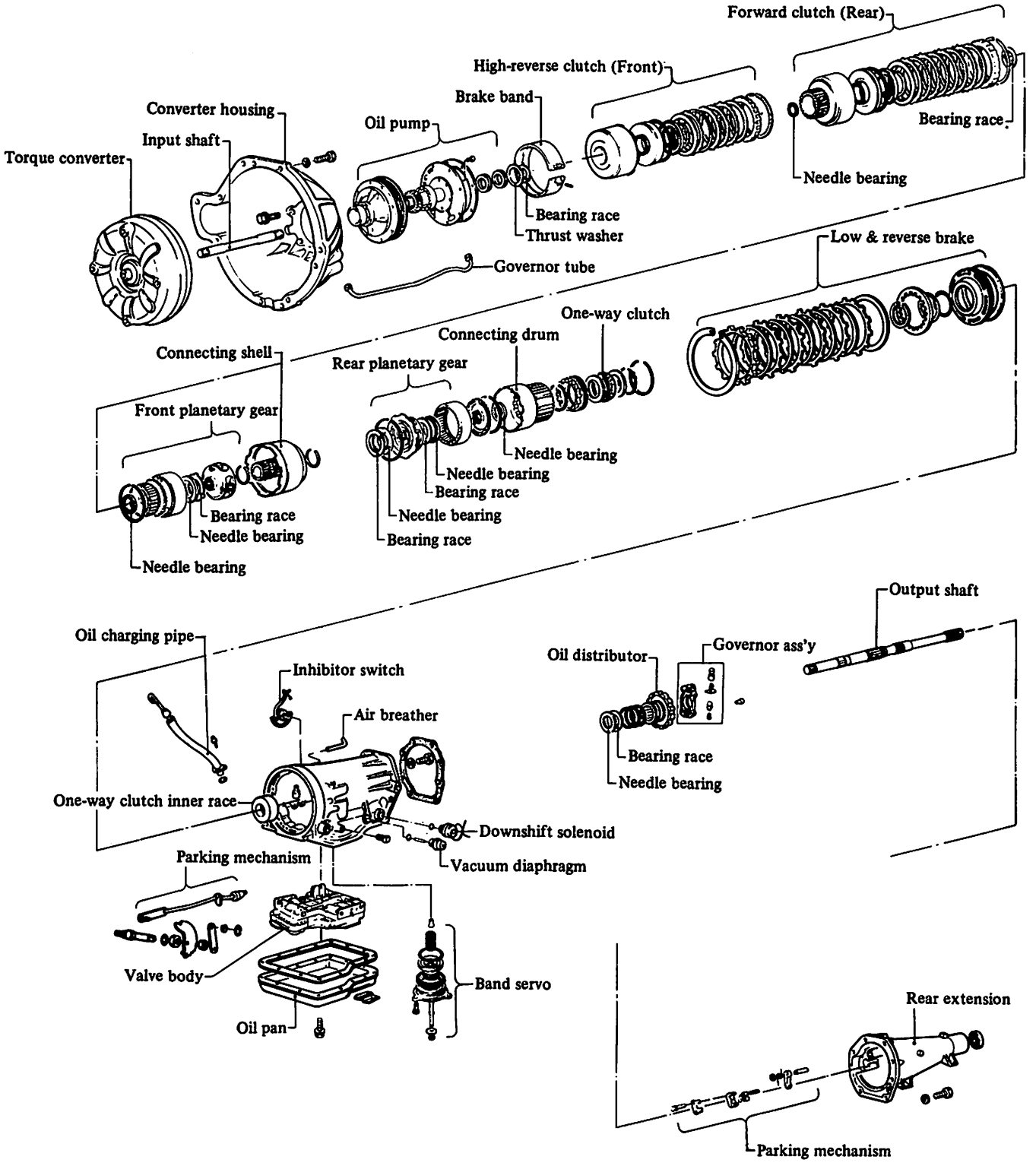

SAT630

SERVICE NOTES FOR DISASSEMBLY

Before proceeding with disassembly, thoroughly clean the outside of the transmission. It is important to prevent the internal parts of the transmission from becoming contaminated by dirt or other foreign matter.

Disassembly should be done in a clean work area.

Use a nylon cloth or paper towel for wiping parts clean. Common shop rags can leave lint that might interfere with the transmission's operation.

DISASSEMBLY

1. Remove torque converter, drain transmission fluid through end of rear extension, and place transmission on Tool.

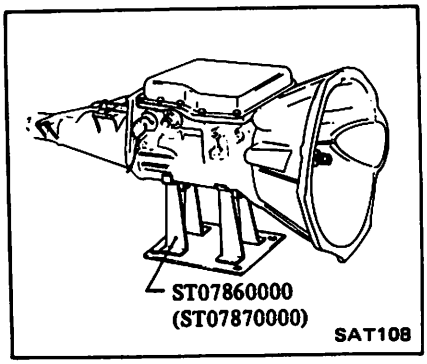

2. Separate governor tube connector from converter housing and then remove converter housing.

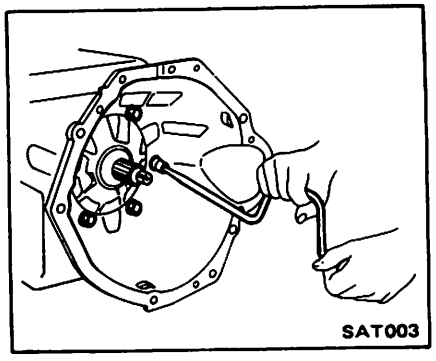

3. Unscrew and remove downshift solenoid and O-ring.

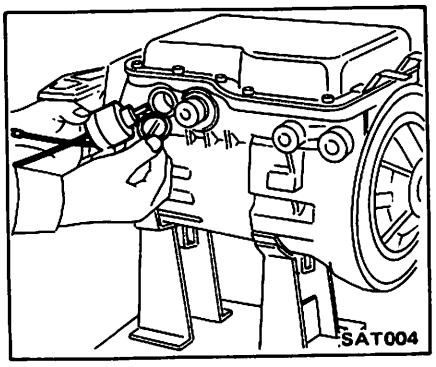

4. Unscrew and remove vacuum diaphragm, diaphragm rod and O-ring.

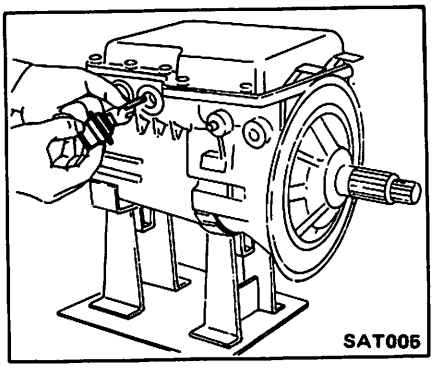

5. Remove speedometer lock plate retaining bolt. Remove speedometer pinion.

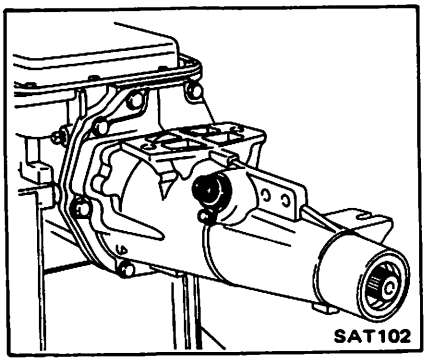

6. Remove oil pan and inspect its contents. An analysis of any foreign matter can indicate the types of problems to look for. If the fluid is very dark, smells burned, or contains foreign particles, the frictional material (clutches, band.) may need replacement. A tacky film that will not wipe clean indicates varnish build up which can cause valves, servo, and clutches to stick and may inhibit pump pressure.

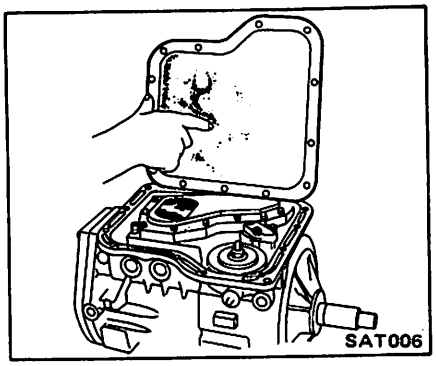

7. Remove control valve body.

Bolts of 3 different lengths are used. Care must be taken to identify individual bolt lengths and locations.

Remove manual valve from valve body as a precaution, to prevent valve from dropping out accidentally.

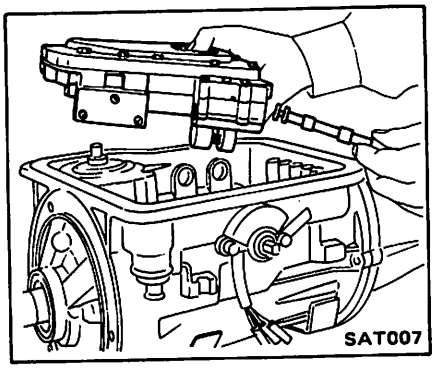

8. Loosen band servo piston stem locknut and tighten piston stem to prevent high-reverse clutch (Front) drum from dropping out when removing front pump.

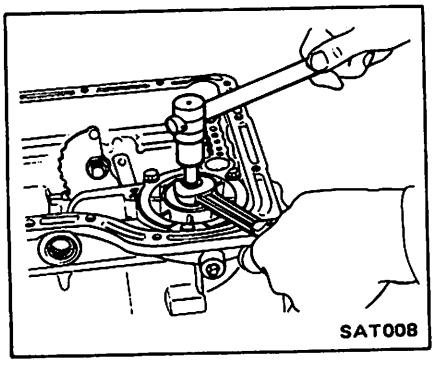

9. Remove input shaft from pump.

Attach Tool to pump and remove pump. Do not allow high-reverse

clutch (Front) to clutch to come out of position and drop onto floor.

Take care that shaft is not inserted backwards during reassembly.

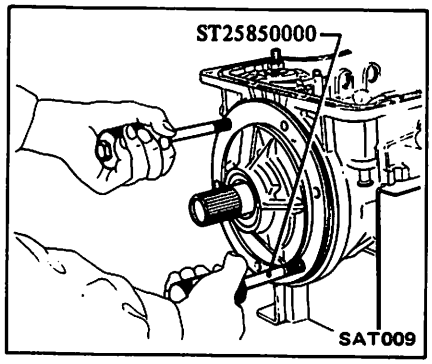

10. Remove high-reverse clutch (Front) thrust washer and bearing race.

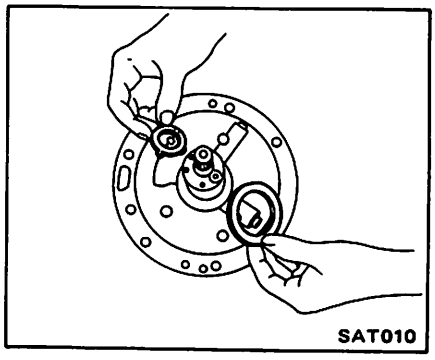

11. Back off band servo piston stem to release band.

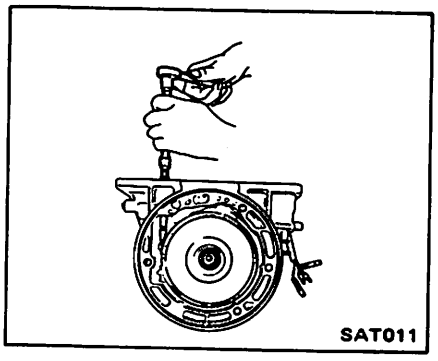

12. Remove brake band strut. Brake band, high-reverse clutch (Front) and forward clutch (Rear) assemblies may be removed together.

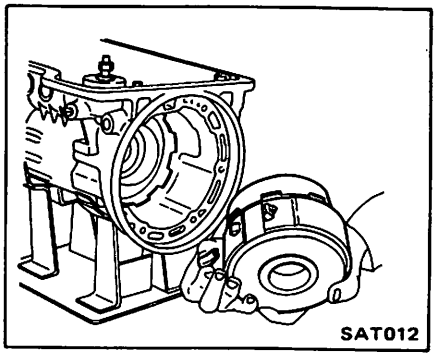

To prevent brake linings from cracking or peeling, do not stretch the flexible band unnecessarily. Before removing the brake band, always secure it with a clip as shown in the figure below.

Leave the clip in position after removing the brake band.

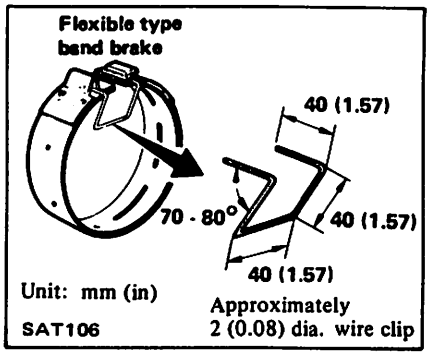

13. Remove pump thrust bearing and forward clutch (Rear) thrust washer.

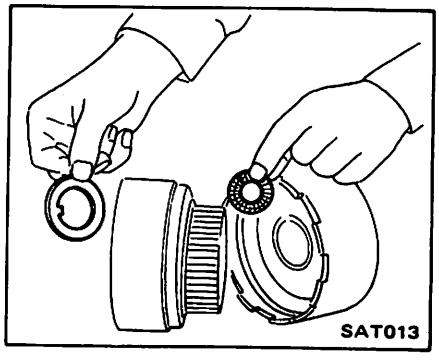

14. Remove forward clutch (Rear) hub, front planetary carrier and connecting shell, forward clutch (Rear) thrust bearing, front planetary carrier thrust washer and thrust bearing.

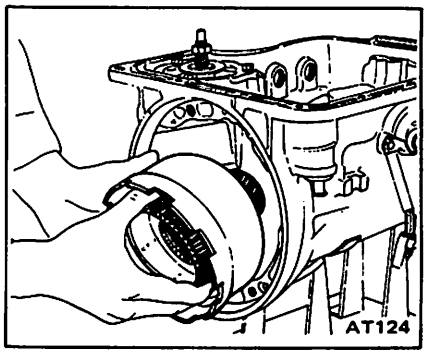

15. Back out, about half-way, band servo attaching bolts. Using an air gun, carefully apply pressure to loosen band servo. Remove band servo retaining bolts and pull band servo.

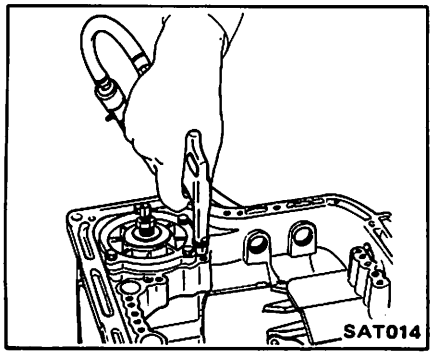

16. Remove rear planetary carrier snap ring and rear planetary carrier.

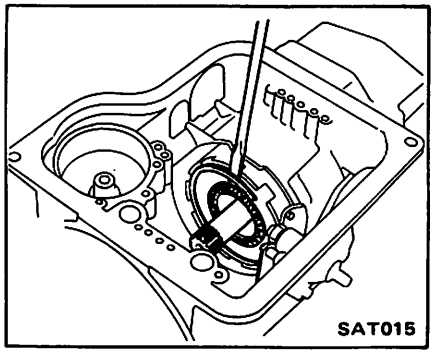

17. Remove output shaft snap ring.

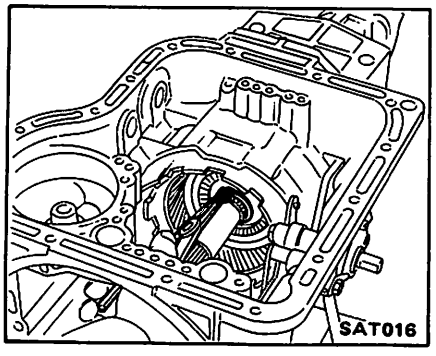

18. Remove rear connecting drum with internal (annulus) gear.

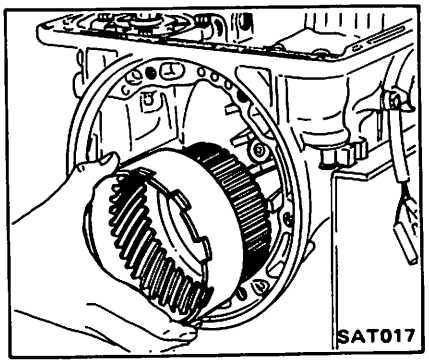

19. Pry off one end of snap ring with a screwdriver. Remove snap ring from low and reverse brake assembly while applying plier force in direction of arrow.

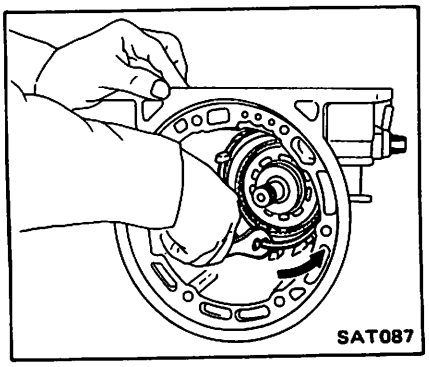

20. Tilt extension housing upward and remove low and reverse brake clutch assembly.

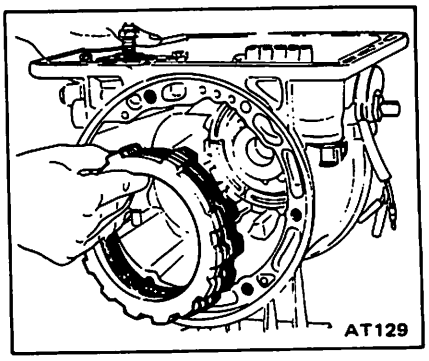

21. Remove rear extension.

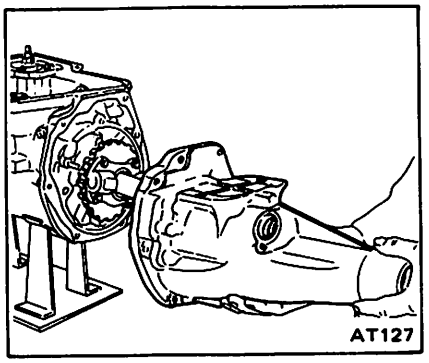

22. Be careful not to lose parking pawl, spring and retainer washer.

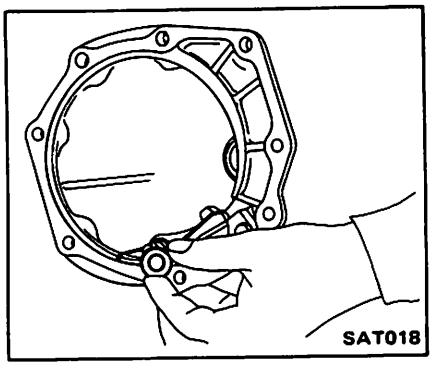

23. Remove output shaft with governor.

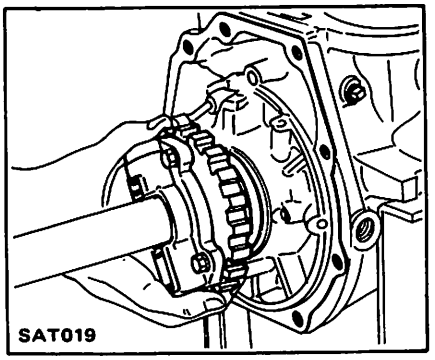

24. Remove governor thrust washer and needle bearing.

Remove one-way clutch inner race attaching hex-head slotted bolts using Tool.

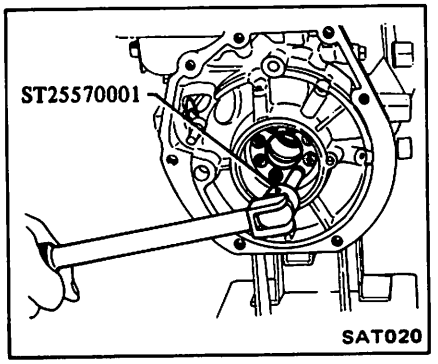

25. Remove one-way clutch inner race, return thrust washer, low and reverse return spring, and spring thrust ring.

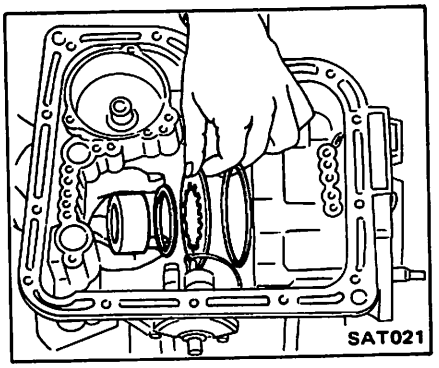

26. Using an air gun with a tapered rubber tip, carefully apply air pressure to remove low and reverse brake piston.

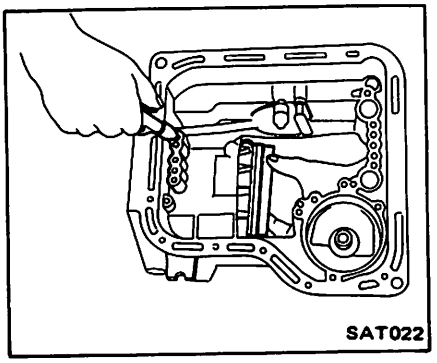

27. Pry off snap rings ① from both ends of parking brake lever ② and remove the lever. Back off manual shaft lock nut ③ and remove manual plate ④ and parking rod ⑤.

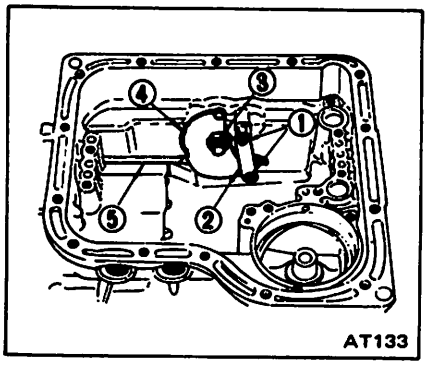

28. Remove inhibitor switch and manual shaft by loosening two securing bolts.

COMPONENT PARTS

The transmission consists of many small parts that are quite alike in construction yet machined to very close tolerances. When disassembling parts, be sure to place them in order in part rack so they can be put back in the unit in their proper positions. All parts should be carefully cleaned with a general purpose, non-flammable solvent before inspection or reassembly. Gaskets, seals, and similar parts should be replaced. It is also very important to perform functional tests whenever it is designated.

OIL PUMP

1. Remove front pump gasket and O-ring. Inspect pump body, pump shaft and ring groove areas for wear.

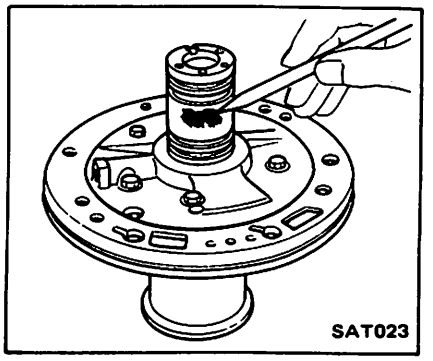

2. Remove pump cover from pump housing.

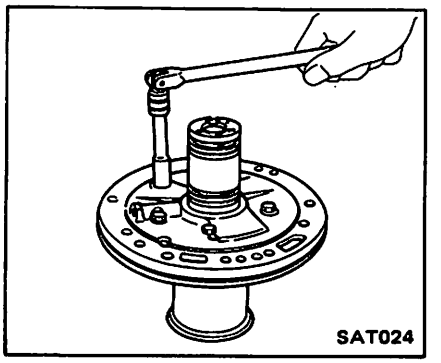

Valve spring chart

Valve spring	Wire dia. mm (in)	Outer coil dia. mm (in)	No. of active coil	Free length mm (in)	Installed	
					Length mm (in)	Load N (kg, lb)
Speed cut valve	0.70 (0.0276)	6.70 (0.2638)	9.5	24.0 (0.945)	14.2 (0.559)	11.57 (1.18, 2.60)
Lock-up control valve	0.65 (0.0256)	4.95 (0.1949)	12.8	23.5 (0.925)	16.5 (0.650)	12.36 (1.26, 2.78)

3. Remove speed cut valve and lock-up control valve.
4. Inspect gears, valves, springs and all internal surfaces for faults and visible wear.
5. Measure clearance between outer gear and crescent.

Standard clearance:
0.14 - 0.21 mm
(0.0055 - 0.0083 in)

Replace if the clearance exceeds **0.25 mm (0.0098 in).**

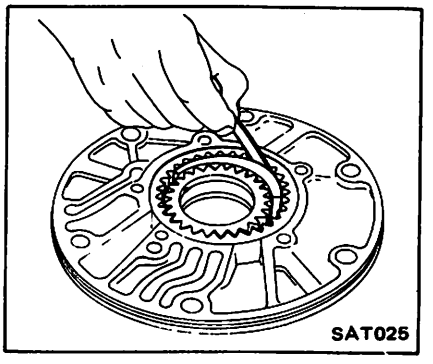

6. Measure clearance between outer gear and pump housing.

Standard clearance:
0.05 - 0.20 mm
(0.0020 - 0.0079 in)

Replace if the clearance exceeds **0.25 mm (0.0098 in).**

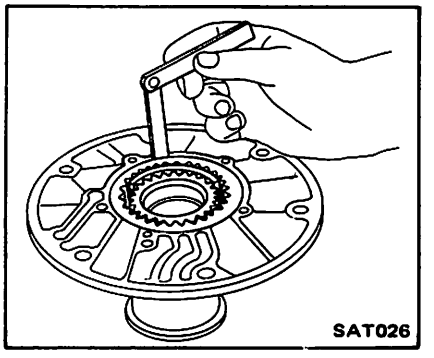

7. Using a feeler gauge and straight edge, measure clearance between gears and pump cover.

Standard clearance:
0.02 - 0.04 mm
(0.0008 - 0.0016 in)

Replace if the clearance exceeds **0.08 mm (0.0031 in).**

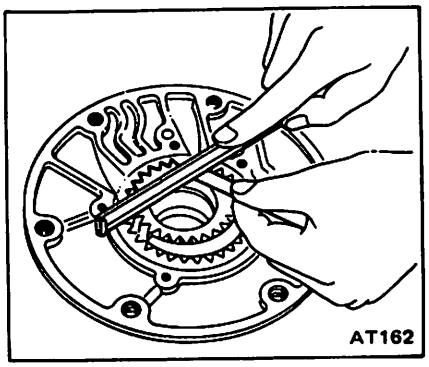

8. Measure clearance between seal ring and ring groove.

Standard clearance:
0.04 - 0.16 mm
(0.0016 - 0.0063 in)

Replace if the clearance exceeds **0.16 mm (0.0063 in).**

Of course, it is good practice to replace all seal rings during an overhaul.

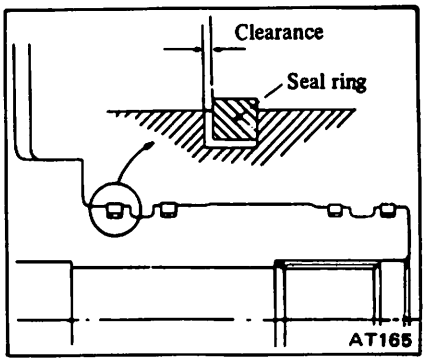

9. Install speed cut valve, lock-up control valve and springs into oil pump cover, then tap retaining pins.

10. Mount pump housing in Tool. Set up pump housing with inner and outer pump gears on it and install pump cover to pump housing. Temporarily assemble oil pump.

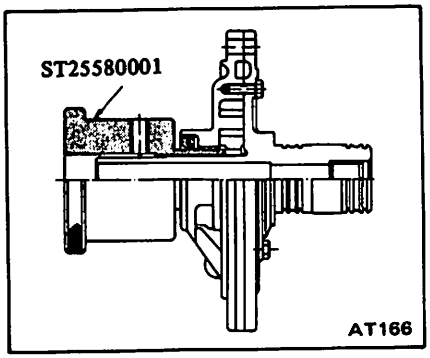

11. Set run-out of the cover to within specified total indicator reading.

Total indicator reading:
Less than 0.07 mm
(0.0028 in)

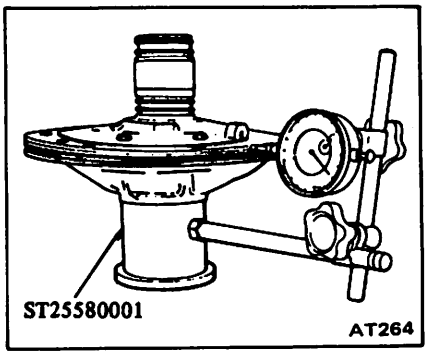

12. Tighten pump securing bolts to specified torque.

Ⓣ : Oil pump housing to oil pump cover
6 - 8 N·m
(0.6 - 0.8 kg-m,
4.3 - 5.8 ft-lb)

Recheck run-out. Replace O-ring and gasket.

HIGH-REVERSE CLUTCH (Front)

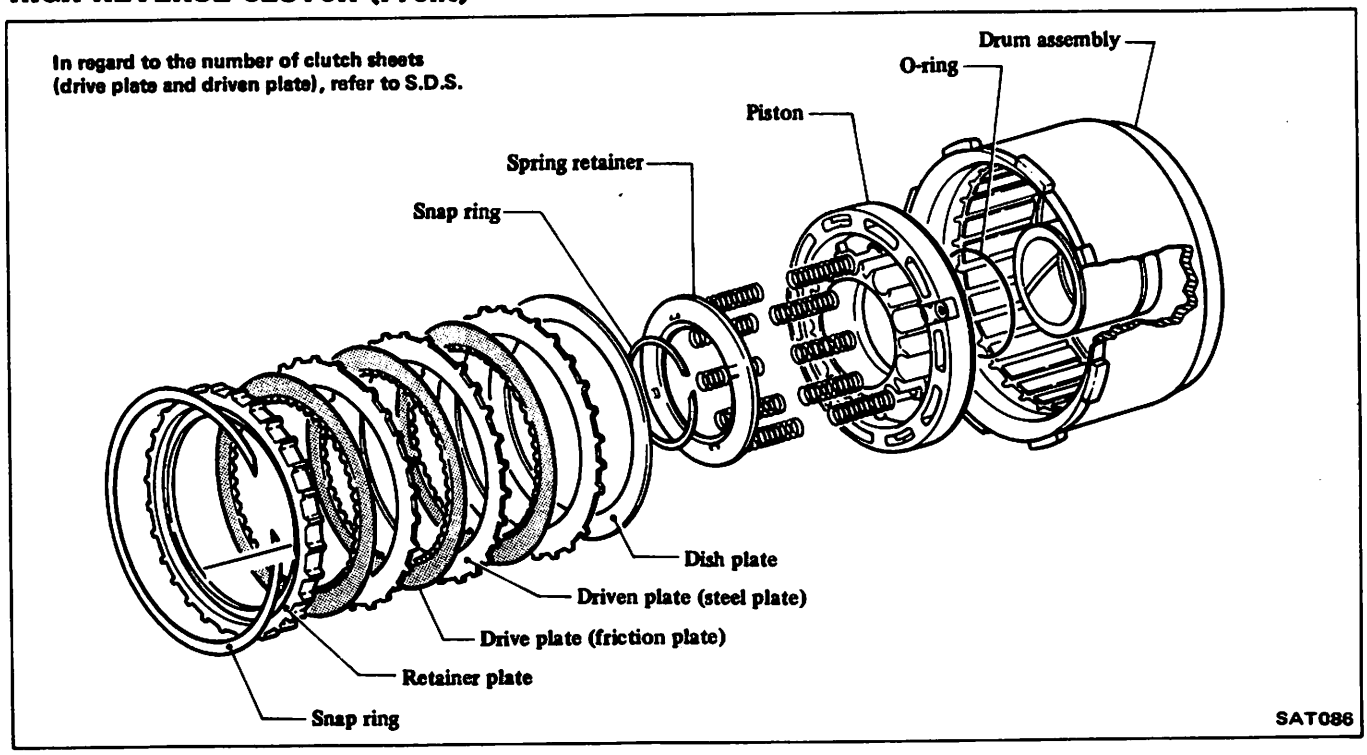

1. Using a screwdriver, remove large clutch retaining plate snap ring.

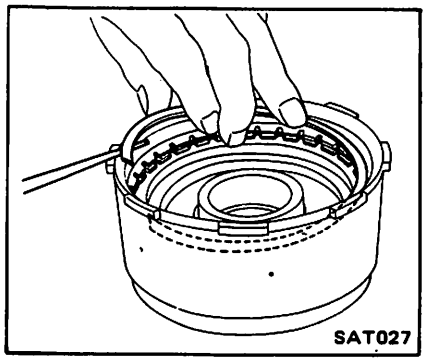

2. Remove clutch plate assembly.

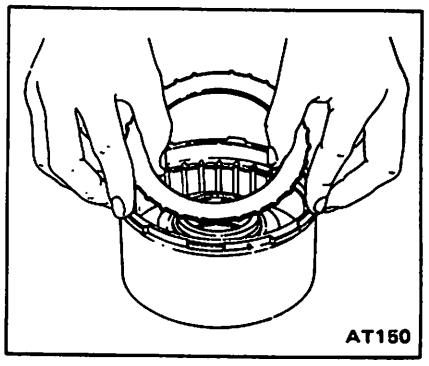

3. Compress clutch springs and remove snap ring from spring retainer.

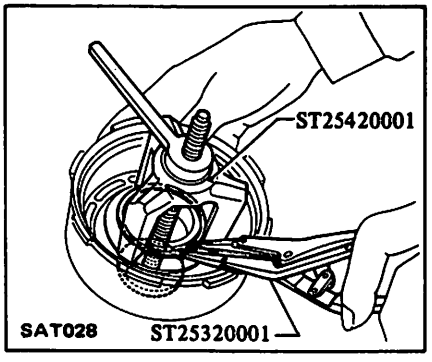

When Tool is to be used, cut toe-tips of three legs with a grinding wheel.

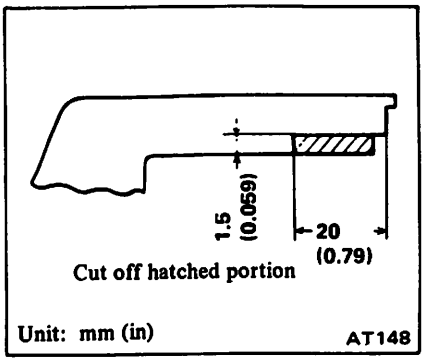

4. Remove spring retainer and springs.

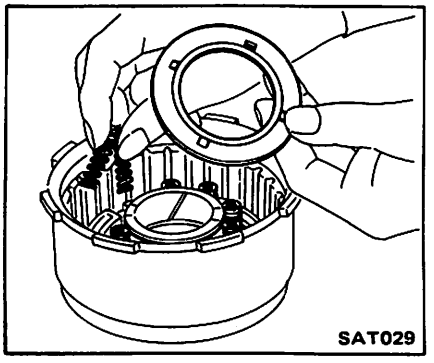

5. For easy removal of piston from drum, mount clutch on pump. Use an air gun with a tapered rubber tip to carefully apply air pressure to loosen piston from drum.

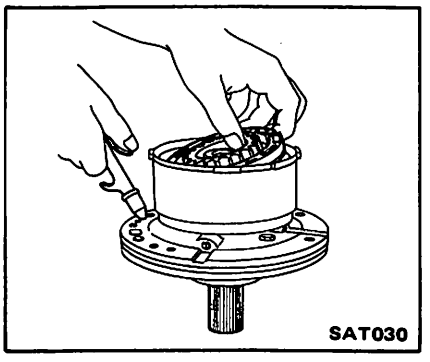

6. Check clutch drive plate facing for wear or damage. Drive plate thickness must not be less than **1.4 mm (0.055 in)**.

Standard drive plate thickness:
1.50 - 1.65 mm
(0.0591 - 0.0650 in)

7. Check for wear on snapring, weak or broken coil springs, and warped spring retainer.

8. Lubricate clutch drum hub and seals, and install inner seal and piston seal as illustrated. *Be careful not to stretch seals during installation.*

Never assemble clutch dry; always lubricate its components thoroughly.

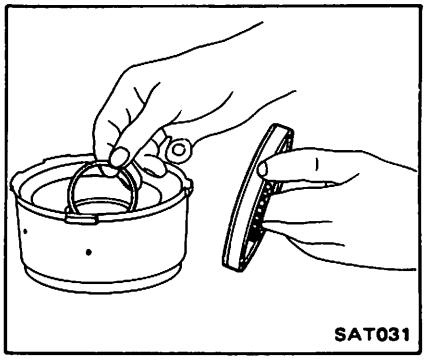

9. Assemble piston, being careful not to allow seal to kink or become damaged during installation. After installing, turn piston by hand to ensure that there is no binding.

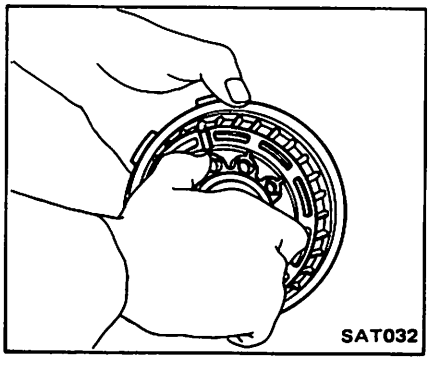

10. Reassemble spring and retainer. Reinstall snap ring. Be sure snap ring is properly seated.

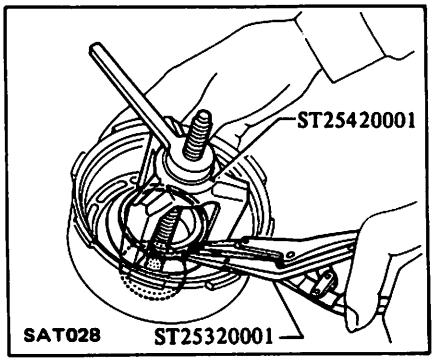

11. Install dish plate with dish facing outward.

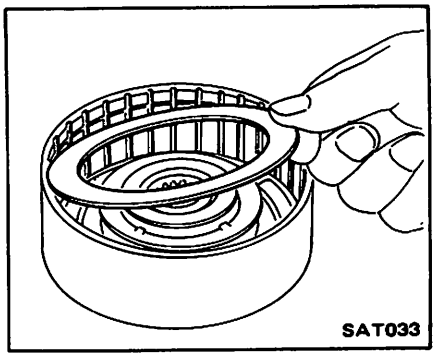

12. Now install driven plate (steel plate), then a drive plate (friction plate) and repeat in this order until correct number of plates has been installed (check Service Data and Specifications for proper quantity of plates). Now install retainer plate and snap ring.

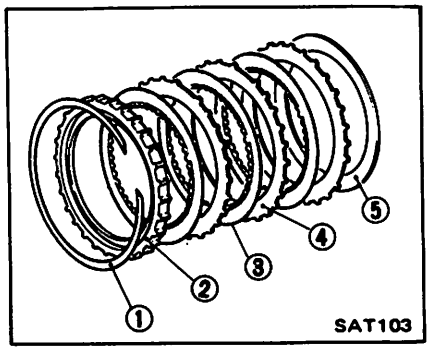

1 Snap ring
2 Retainer plate
3 Drive plate (Friction plate)
4 Driven plate (Steel plate)
5 Dish plate

13. Measure clearance between retainer plate and snap ring.

Specified clearance:
1.6 - 2.0 mm (0.063 - 0.079 in)

If necessary, try other retaining plates having different thicknesses until correct clearance is obtained.

Available retaining plate

Thickness mm (in)	Part number
5.0 (0.197)	31567-X2900
5.2 (0.205)	31567-X2901
5.4 (0.213)	31567-X2902
5.6 (0.220)	31567-X2903
5.8 (0.228)	31567-X2904
6.0 (0.236)	31567-X2905
6.2 (0.244)	31567-X2906

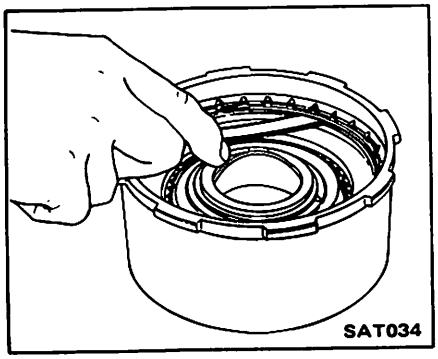

14. Testing high-reverse clutch (Front)

With high-reverse clutch (Front) assembled on oil pump cover, direct a jet of air into hole in clutch drum for definite clutch operation.

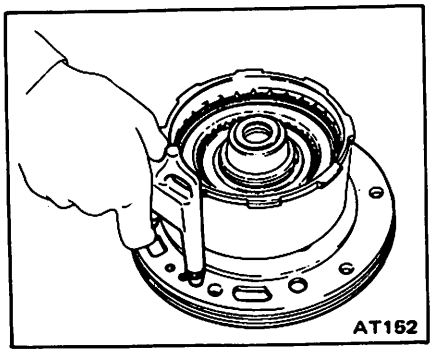

FORWARD CLUTCH (Rear)

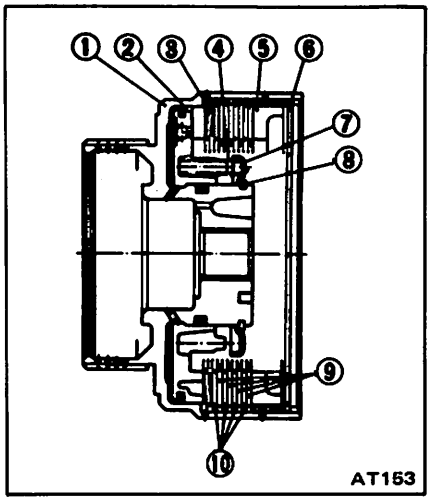

1 Forward clutch (Rear) drum
2 Piston
3 Dished plate
4 Coil spring
5 Retaining plate
6 Snap ring
7 Spring retainer
8 Snap ring
9 Drive plate
10 Driven plate

Service procedures for forward clutch (Rear) are essentially the same as those for high-reverse clutch (Front), with the following exception:

Specified clearance between retainer plate and snap ring:
0.8 - 1.6 mm
(0.031 - 0.063 in)

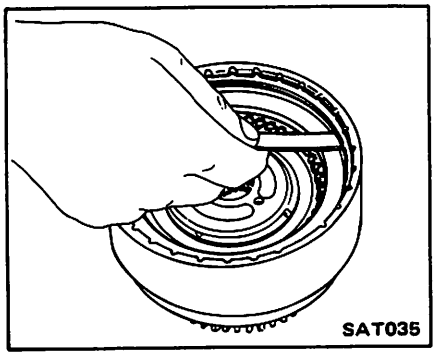

Test forward clutch (Rear)

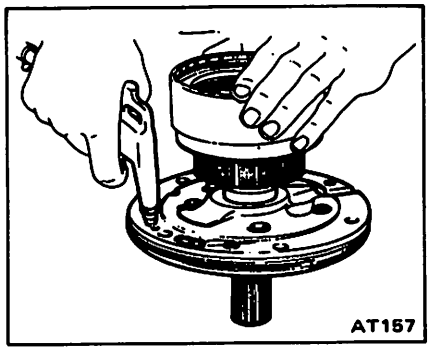

LOW & REVERSE BRAKE

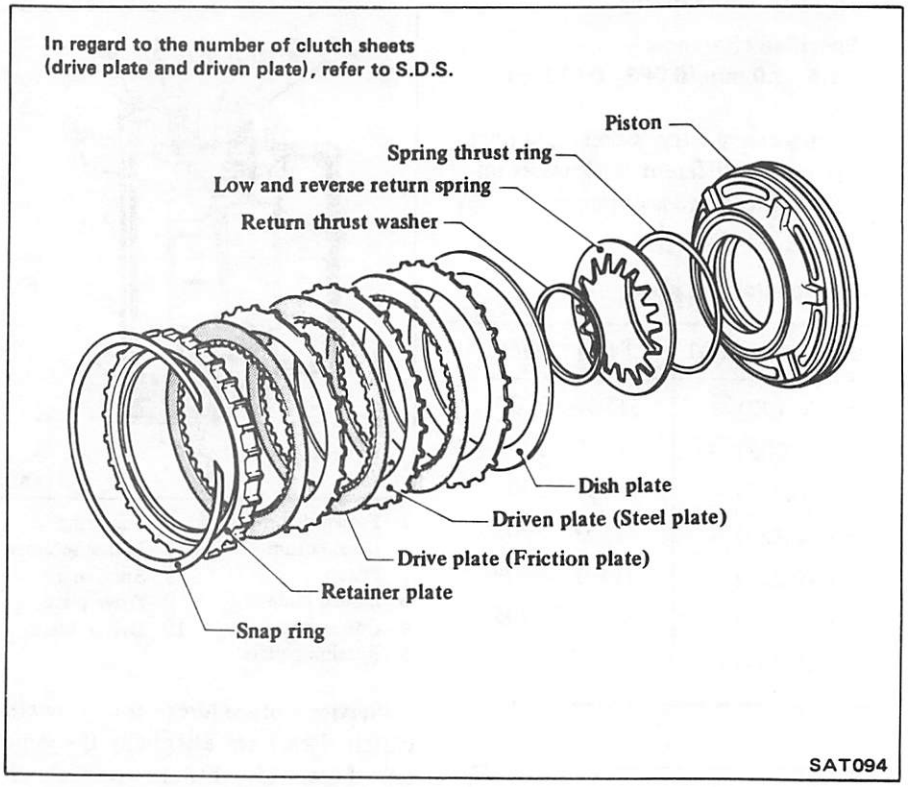

- Examine low and reverse brake for damaged clutch drive plate facing and worn snap ring.
- Check drive plate facing for wear or damage; if necessary, replace.

Drive plate thickness:
Standard
1.90 - 2.05 mm
(0.0748 - 0.0807 in)
Allowable limit
1.8 mm (0.071 in)

- Test piston return spring for weakness. Discard if it is too weak.

- Inspect band friction material for wear. If cracked, chipped or burnt spots are apparent, replace the band.

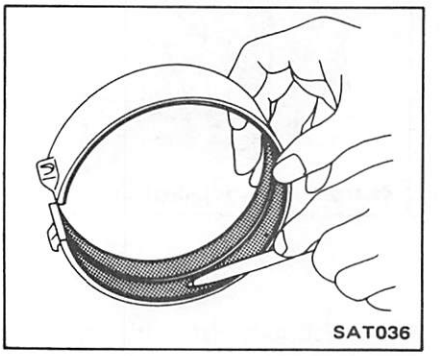

- Check band servo components for wear and scoring. Replace piston O-rings and all other components as necessary.

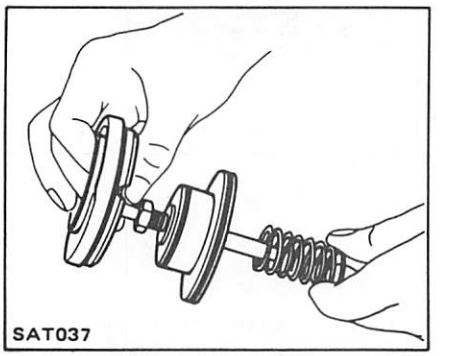

BRAKE BAND AND BAND SERVO

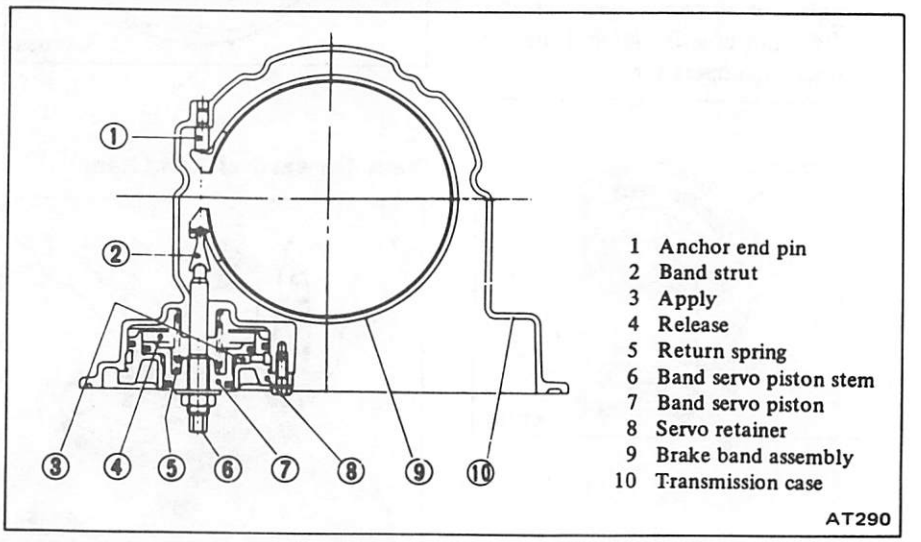

GOVERNOR

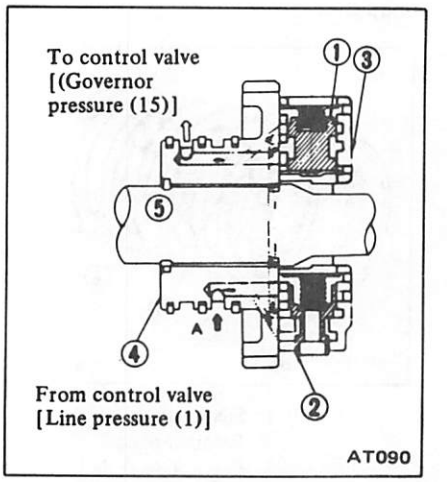

1 Primary governor
2 Secondary governor
3 Governor valve body
4 Oil distributor
5 Output shaft

- Disassemble governor and check valves for indication of burning or scratches. Inspect springs for weakness or burning. Replace parts as necessary and reassemble.

Do not interchange components of primary and secondary governor valves.

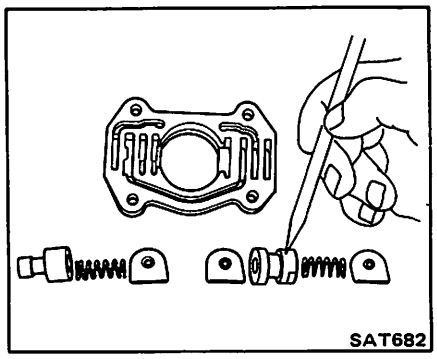

Governor valve spring chart

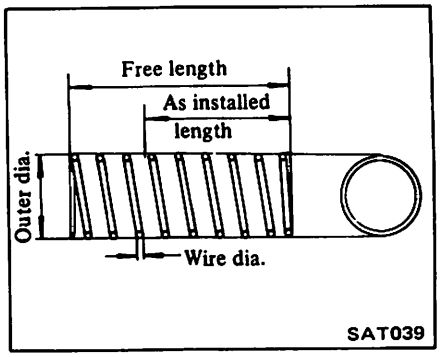

- Assemble governor on oil distributor.

Ⓣ : **Governor valve body to oil distributor**
5 - 7 N·m
(0.5 - 0.7 kg-m, 3.6 - 5.1 ft-lb)

Valve spring	Wire dia. mm (in)	Outer coil dia. mm (in)	No. of active coil	Free length mm (in)	Installed	
					Length mm (in)	Load N (kg, lb.)
Primary governor	0.45 (0.0177)	8.75 (0.3445)	5.0	21.8 (0.858)	7.5 (0.295)	2.109 (0.215, 0.474)
Secondary governor	0.70 (0.0276)	9.20 (0.3622)	5.5	25.2 (0.992)	10.5 (0.413)	10.788 (1.100, 2.426)

PLANETARY CARRIER

The planetary carrier cannot be divided into its individual components.

If any part of the component is faulty, replace the carrier as a unit.

- Check clearance between pinion washer and planetary carrier with a feeler.

Standard clearance:
0.20 - 0.70 mm
(0.0079 - 0.0276 in)

Replace if the clearance exceeds **0.80 mm (0.0315 in)**.

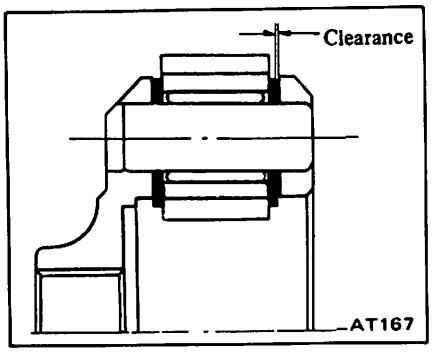

- Check planetary gear sets for damaged or worn gears. Gear sets that have been damaged by overheating will have a blue discoloration.

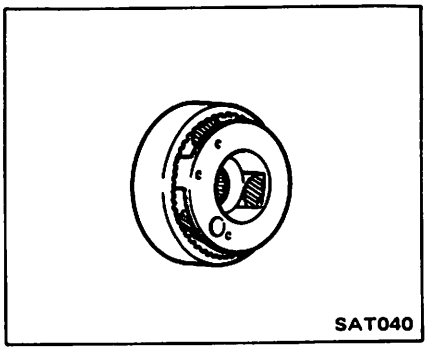

CONTROL VALVE BODY

The valve body contains many precision parts and requires extreme care when parts are removed and serviced. Place removed parts on a parts rack so they can be put back in the valve body in the same positions and sequences. Care will also prevent springs and small parts from becoming scattered or lost.

1. Remove oil strainer and its attaching screws, nuts and bolts.

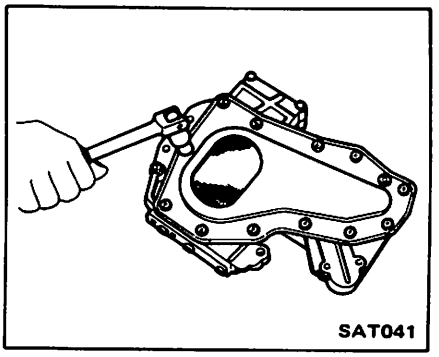

2. Disassemble valve body and its remaining attaching bolts and nuts to carefully separate lower body, separator plate and upper body.

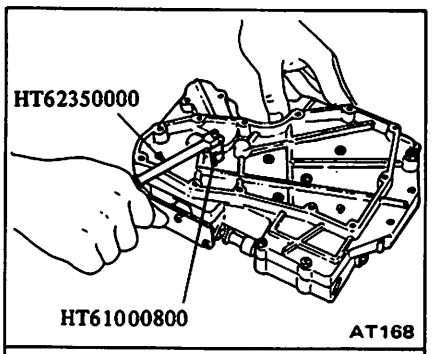

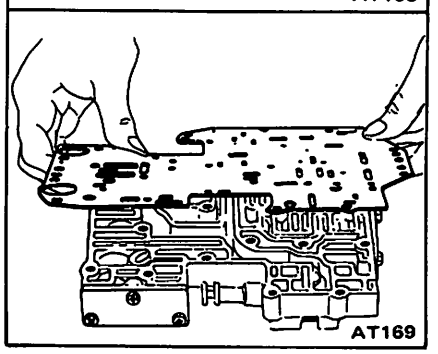

3. During valve body separation, do not scatter or lose orifice check valve, servo orifice check valve, and throttle relief check valve (ball) and related springs.

4. Remove side plate A, pressure regulator valve, spring, spring seat, sleeve, and plug, and second lock valve and spring. Place each loose part on a rack to retain correct sequence of assembly.

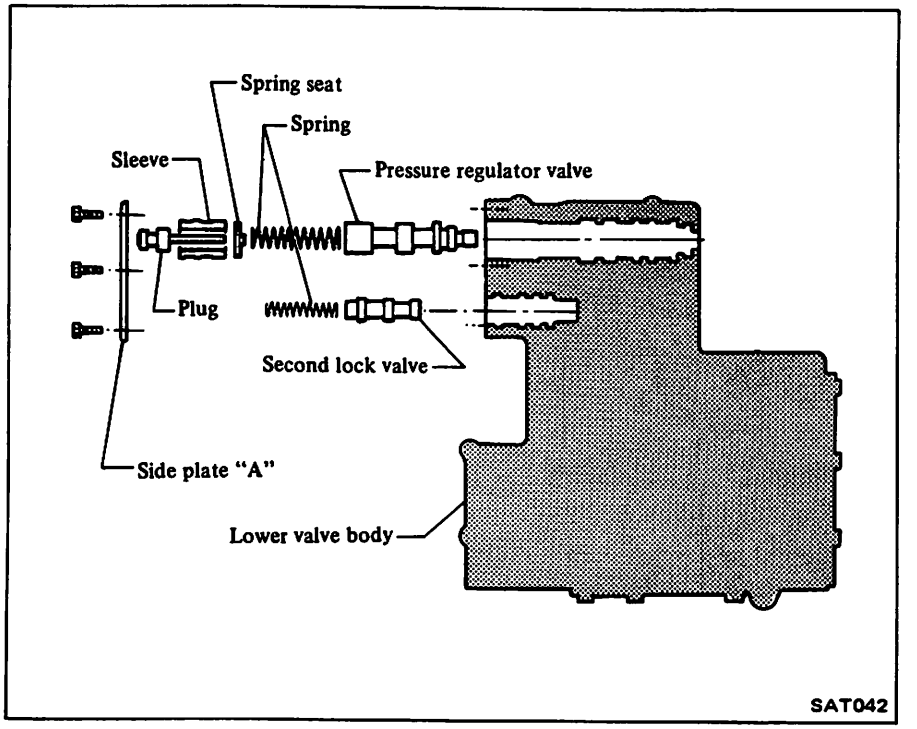

5. Remove side plate B, vacuum throttle valve, throttle back-up valve and spring, and the kickdown valve and spring. Place each loose part on a rack to retain sequence of assembly.

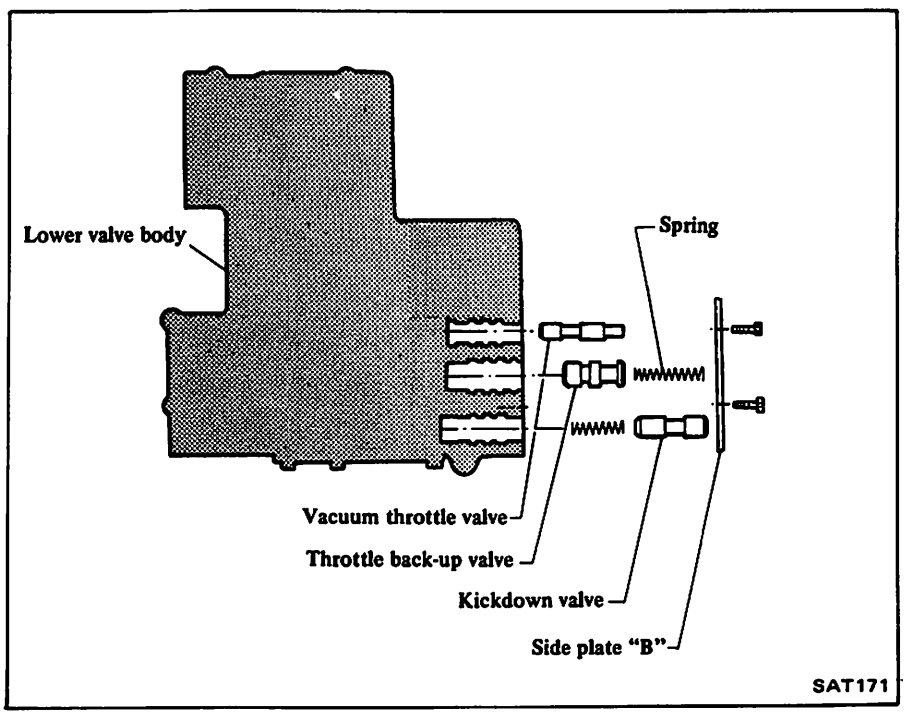

6. Remove side plate C, pressure modifier valve and spring, 2nd-3rd shift valve, spring and plug, and 1st-2nd shift valve and spring.

Place each loose part on a rack to retain sequence of assembly.

Manual valve was removed when valve body was removed from transmission. Include valve in subsequent inspection and service sequence.

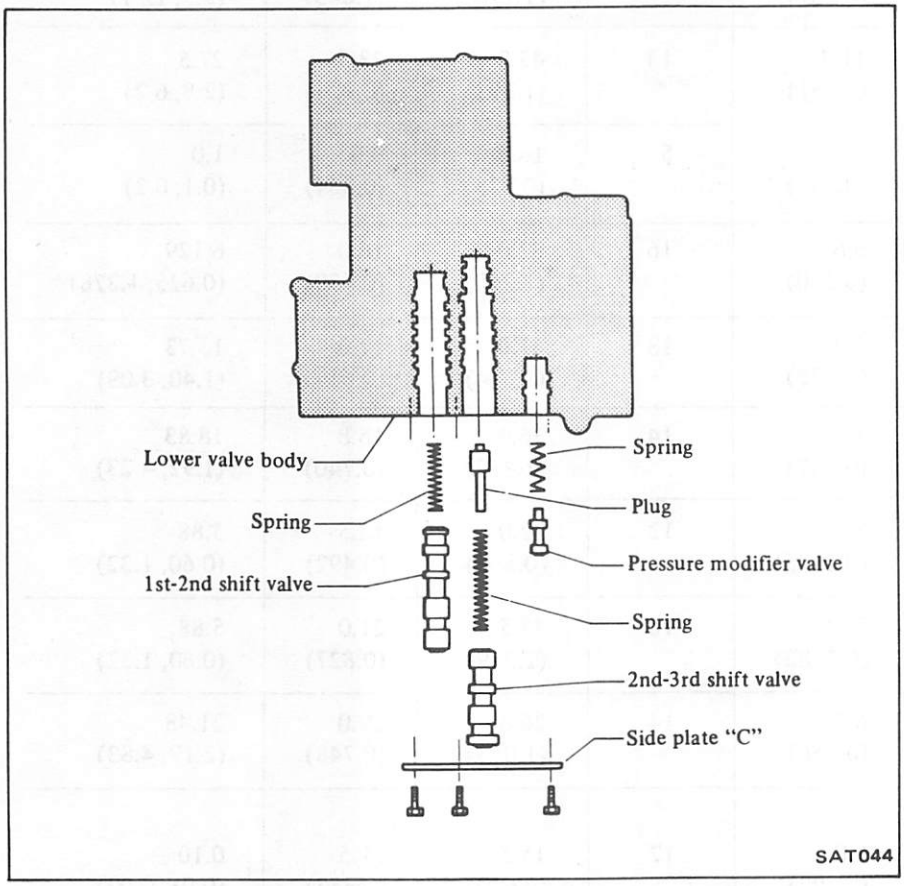

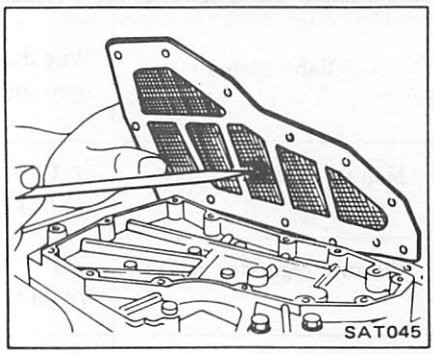

9. Check separator plate for scratches or damage. Replace if necessary. Scratches or score marks can cause oil to bypass correct oil passages and result in system malfunction.

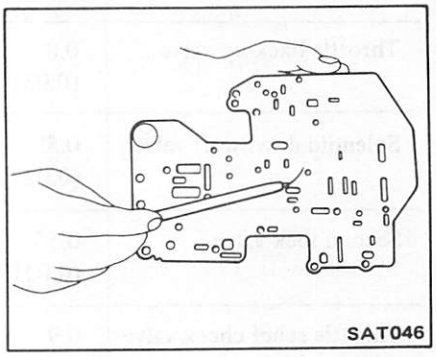

10. Check oil passages in upper and lower valve bodies for varnish deposits, scratches or other damage that would impair valve movement. Check threaded holes and related bolts and screws for stripped threads; replace as needed.

11. Test valve springs for weakened load condition. Refer to Valve Body Spring Chart for spring specifications.

Precaution for inspection

A newly manufactured valve body represents precision manufactured valves assembled with close tolerances into precision bores of the valve body. If inspection reveals excessive clearances, 0.03mm (0.0012 in) or more, between the valves and the valve body bores, replace the entire valve body rather than attempt rework.

If one or more valves are sticking from varnish deposits or burns resulting from deteriorated oil or overheating, you may be able to clean the valves and valve bodies. **Always use crocus cloth,** which is a very fine type of cutting material. **Never use emery cloth,** as it is too coarse and can scratch the valves or valve bores. Scratches can lead to future deposits of varnish or foreign matter.

During cleaning, do not remove the sharp edges of the valve. When edges are rounded or scratched, entry is provided for dirt or foreign matter to work into the sides of the valves and hinder valve movement.

The valves may be cleaned using alcohol or lacquer thinner. The valve bodies can be dip cleaned with a good carburetor cleaner or lacquer thinner. **Do not leave valve bodies submerged in carburetor cleaner longer than five minutes. Rinse parts thoroughly and dry.**

Lubricate all parts in clean automatic transmission fluid before reassembly.

7. Check valves for signs of burning. Replace if beyond clean-up.

8. Check oil strainer for general condition. Replace if necessary.

Valve body spring chart

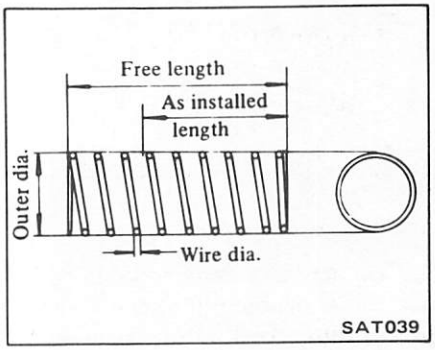

Valve spring	Wire dia. mm (in)	Outer coil dia. mm (in)	No. of active coil	Free length mm (in)	Installed	
					Length mm (in)	Load N (kg, lb)
Manual detent	1.3 (0.051)	7.3 (0.287)	15	32.4 (1.276)	26.5 (1.043)	53.9 (5.5, 12.1)
Pressure regulator valve	1.2 (0.047)	11.7 (0.461)	13	43.0 (1.693)	23.5 (0.925)	27.5 (2.8, 6.2)
Pressure modifier valve	0.4 (0.016)	8.4 (0.331)	5	18.5 (0.728)	9.0 (0.354)	1.0 (0.1, 0.2)
1st - 2nd shift valve	0.6 (0.024)	6.6 (0.260)	16	32.0 (1.260)	16.0 (0.630)	6.129 (0.625, 1.378)
2nd - 3rd shift valve	0.7 (0.028)	6.9 (0.272)	18	41.0 (1.614)	17.0 (0.669)	13.73 (1.40, 3.09)
Throttle back-up valve	0.8 (0.031)	7.3 (0.287)	14	36.0 (1.417)	18.8 (0.740)	18.83 (1.92, 4.23)
Solenoid downshift valve	0.55 (0.0217)	5.55 (0.2185)	12	22.0 (0.866)	12.5 (0.492)	5.88 (0.60, 1.32)
Second lock valve	0.55 (0.0217)	5.55 (0.2185)	16	33.5 (1.319)	21.0 (0.827)	5.88 (0.60, 1.32)
Throttle relief check valve	0.9 (0.035)	6.5 (0.256)	14	26.8 (1.055)	19.0 (0.748)	21.48 (2.19, 4.83)
Orifice check valve	0.23 (0.0091)	5.0 (0.197)	12	15.5 (0.610)	11.5 (0.453)	0.10 (0.01, 0.02)
Servo orifice check valve						

12. Assemble side plate A group of parts into lower valve body. Reinstall side plate and finger tighten screws.

Assemble side plate B group and side plate C group in same manner as A group.

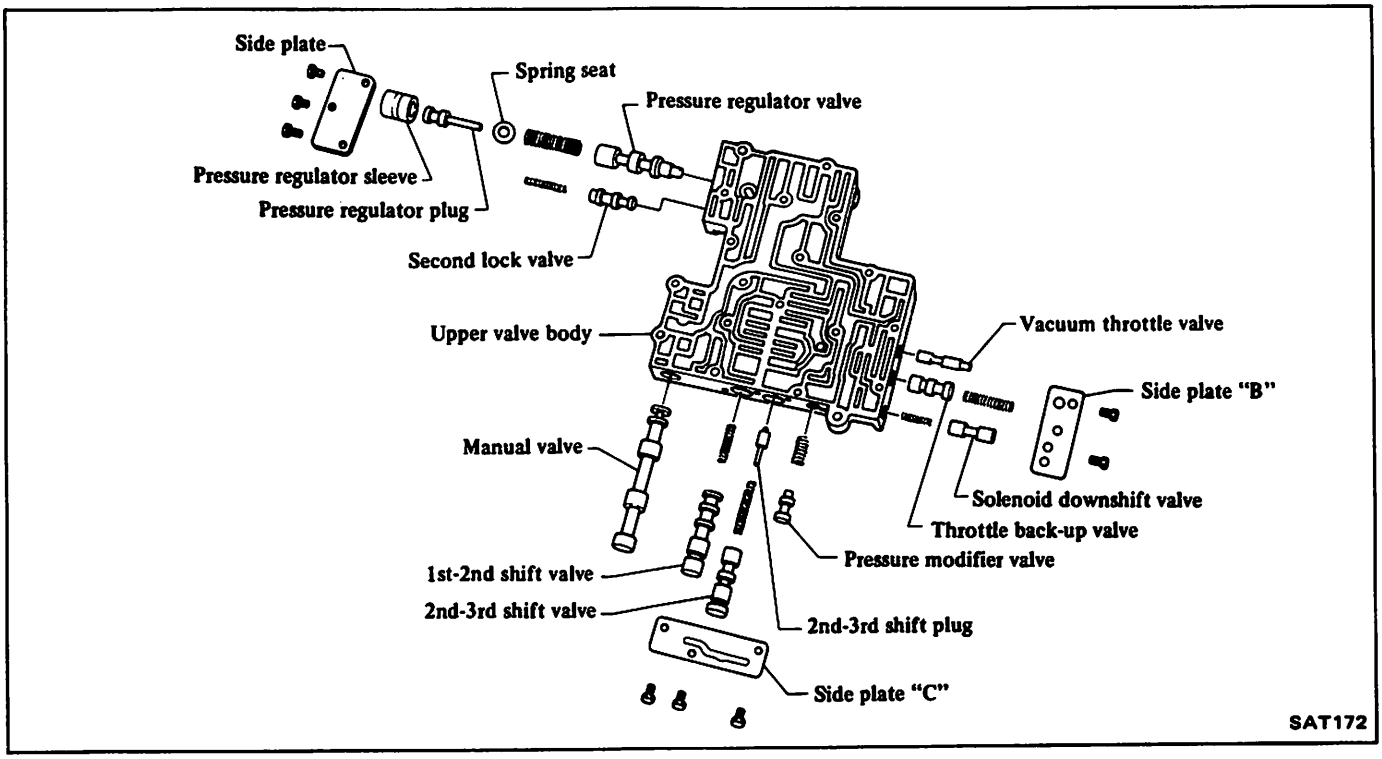

13. Tighten screws.

Ⓣ : **Side plate to valve body**
2.5 - 3.4 N·m
(0.25 - 0.35 kg-m,
1.8 - 2.5 ft-lb)

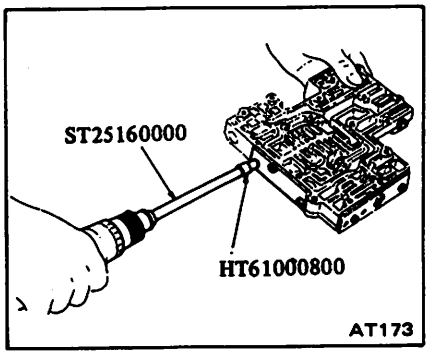

14. Install orifice check valve, valve spring, throttle relief valve spring and steel ball in valve body.

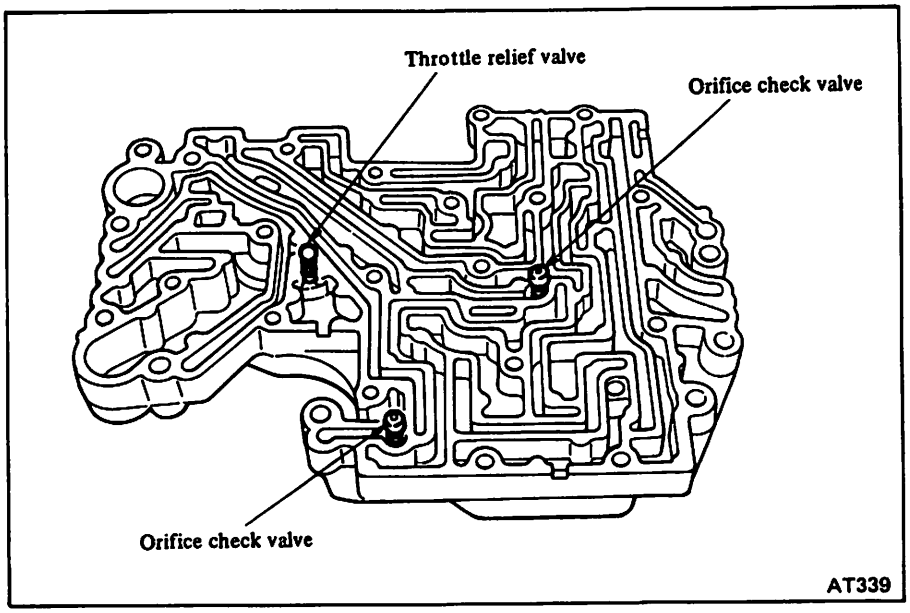

15. Install upper and lower valves.

Ⓣ : **Upper and lower valves:**
2.5 - 3.4 N·m
(0.25 - 0.35 kg-m,
1.8 - 2.5 ft-lb)
Reamer bolt:
5 - 7 N·m
(0.5 - 0.7 kg-m,
3.6 - 5.1 ft-lb)

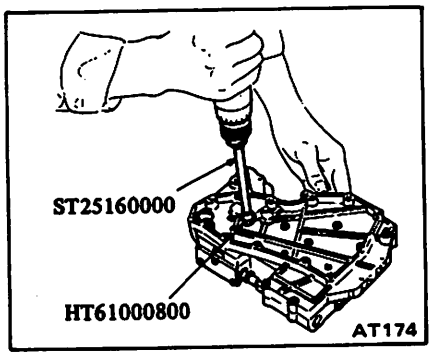

16. Install oil strainer.

Ⓣ : **Oil strainer to valve body**
3 - 4 N·m
(0.3 - 0.4 kg-m,
2.2 - 2.9 ft-lb)

The manual valve is inserted into the valve body when the latter is installed in the transmission.

FINAL ASSEMBLY

When installing/assembling needle bearing, bearing race, snap ring and O-ring (seal ring), use the following illustration as a guide to installation procedures and locations.

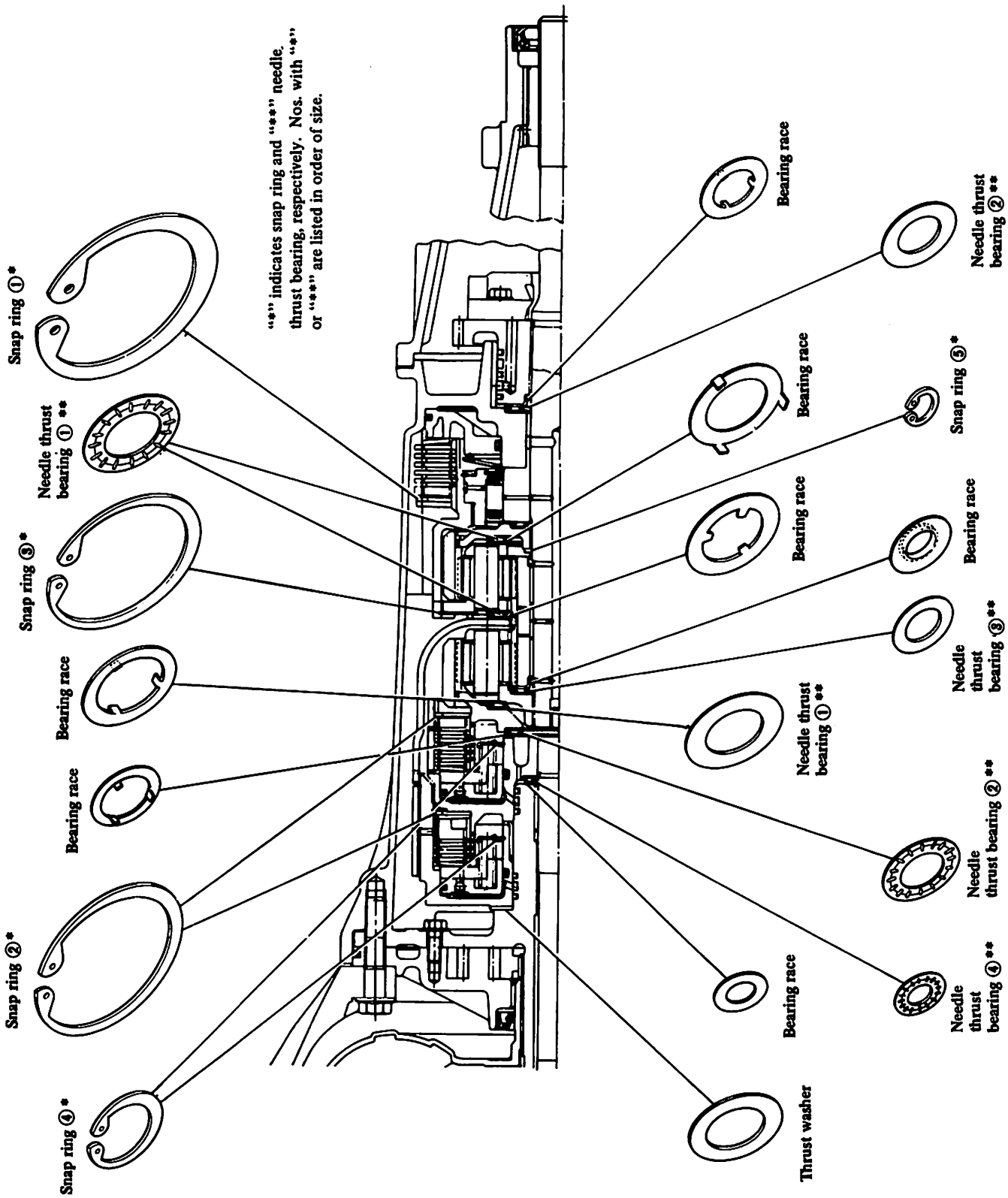

SAT089

1. Before proceeding with the final assembly of all components, it is important to verify that the case, housing and parts are clean and free from dust, dirt and foreign matter (use air gun). Have a tray available with clean transmission fluid for lubricating parts.

Petroleum jelly can be used to secure washers during installation. All new seals and rings should have been installed before beginning final assembly.

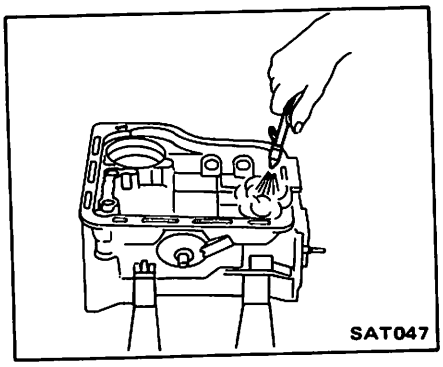

2. Lubricate and install low and reverse piston into the case.

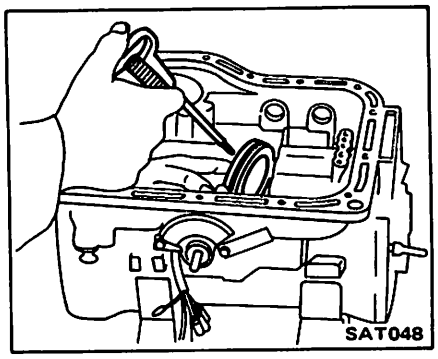

3. Install thrust ring, piston return spring, thrust washer and one-way clutch inner race.

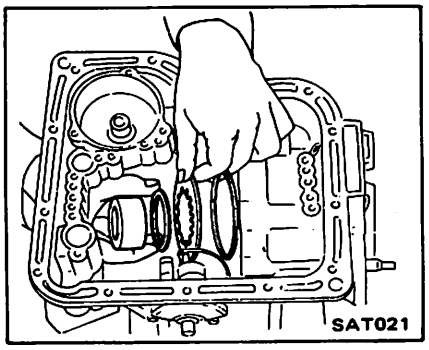

4. Align and start hex-head slotted bolts into inner race from rear of case.

WARNING:
Check that return spring is centered on race before tightening.

Tighten the bolts

Ⓣ : **One-way clutch inner race to transmission case**
13 - 18 N·m
(1.3 - 1.8 kg-m,
9 - 13 ft-lb)

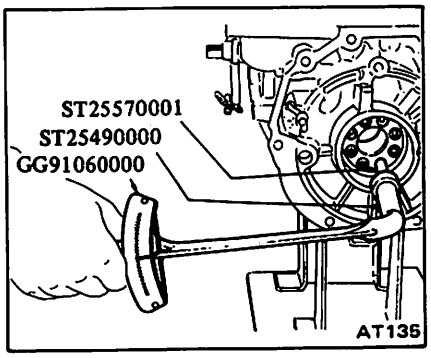

5. Install steel dished plate first, then steel and friction plates, and, finally, retaining plate and snap-ring.

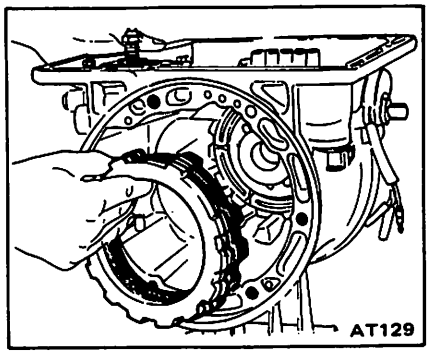

6. After low and reverse brake has been completely assembled, measure clearance between snapring and retainer plate. If measurement exceeds specifications it can be adjusted by replacing retainer plate with one of a different thickness.

Low and reverse brake clearance:
0.80 - 1.25 mm
(0.0315 - 0.0492 in)

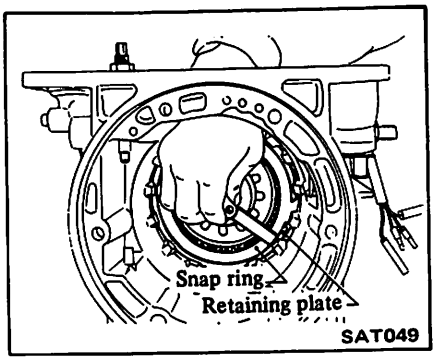

7. Using an air gun with a tapered rubber tip, check low and reverse brake operation.

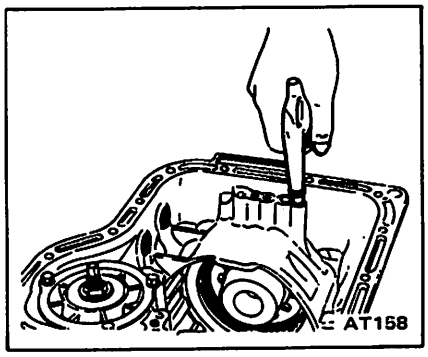

8. Install governor thrust washer and needle bearing.

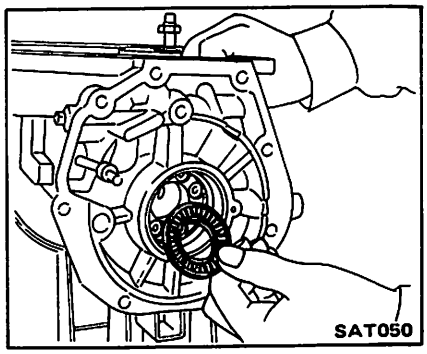

9. Slide governor distributor assembly on output shaft from front of shaft. Install shaft and governor distributor into case, using care not to damage distributor rings.

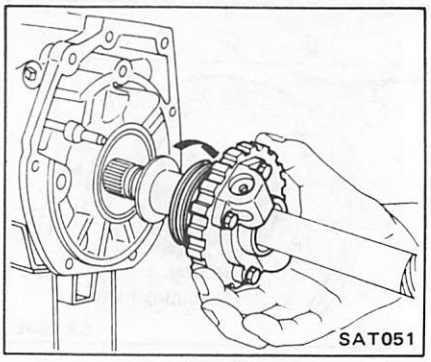

10. Install one-way sprag into one-way clutch outer race (attached to connecting drum).

Arrow on sprag must face front of transmission.

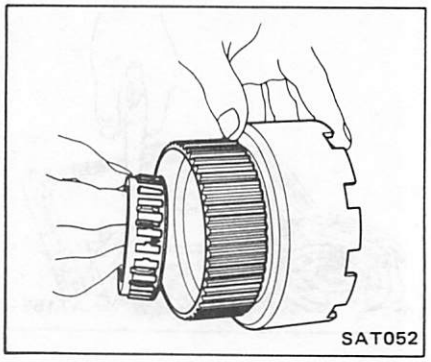

11. Install connecting drum with sprag by rotating drum clockwise using a slight pressure and wobbling to align plates with hub and sprag assembly. Connecting drum should now be free to rotate **clockwise only.** This check will verify that sprag is correctly installed and operative.

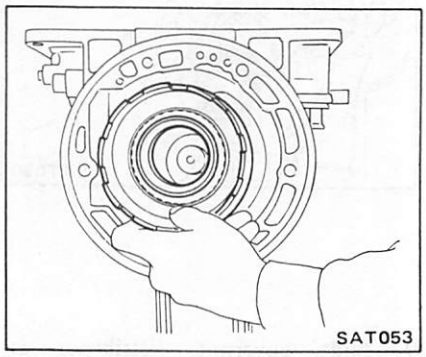

12. Install rear internal gear.

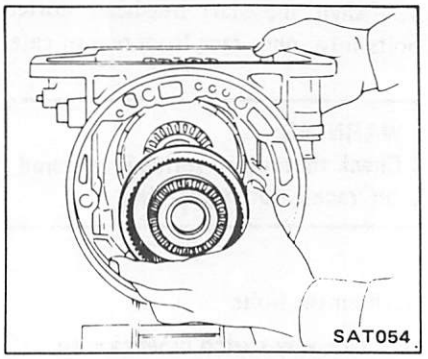

13. Install snap-ring on shaft.

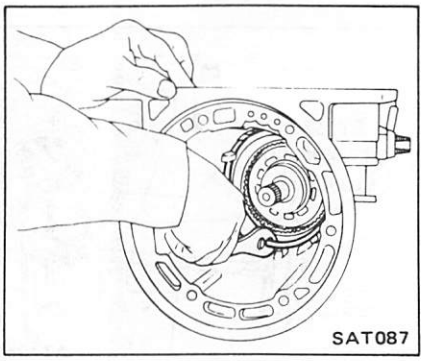

14. Secure thrust bearing and thrust washer with petroleum jelly and install rear planetary carrier.

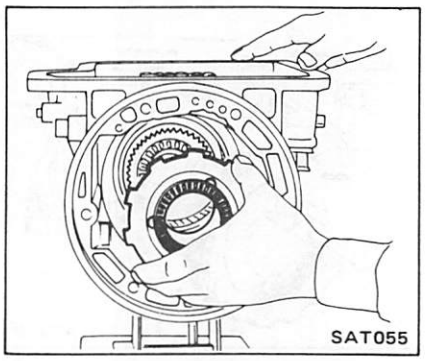

15. Install rear planetary carrier snap ring.

This snap ring is thinner than a clutch drum snap ring so be sure you are using correct size. If you have insufficient space to install snap ring into drum groove, pull connecting drum forward as far as possible. This will give you sufficient groove clearance to install drum snap ring.

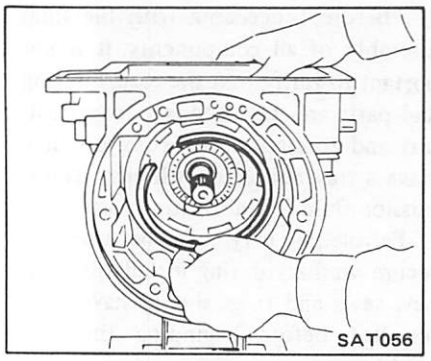

16. Adjust front end play as follows:

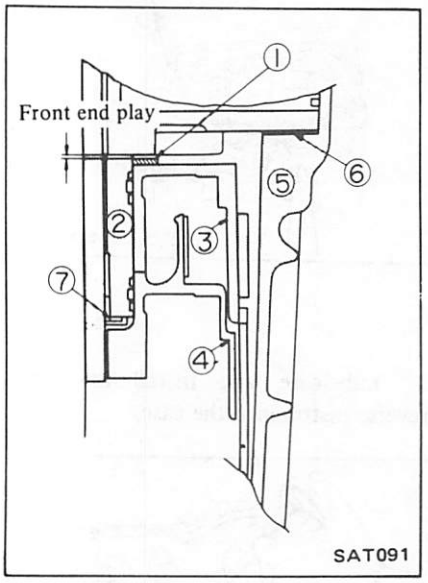

1	High-reverse clutch (Front) thrust washer	4	Forward clutch (Rear)
2	Oil pump cover	5	Transmission case
3	High-reverse clutch (Front)	6	Oil pump gasket
		7	Oil pump cover bearing race

(1) Assemble high-reverse clutch (Front) and forward clutch (Rear), front internal gear, front planetary carrier and connecting shell. Secure thrust bearings with petroleum jelly.

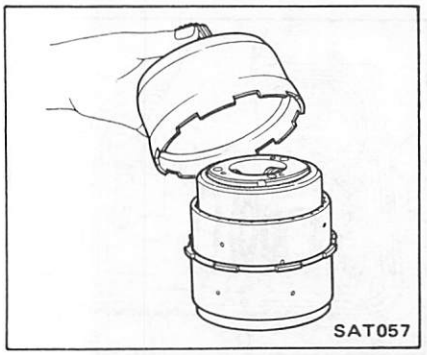

(2) Install assembly into transmission case. Check that parts are properly seated before proceeding with measurements.

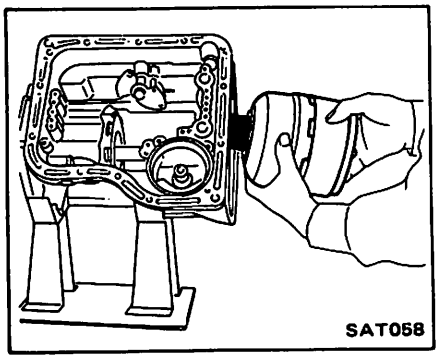

(3) Using a dial gauge or caliper with a seven inch base, measure from rear hub thrust bearing race to case (dimension A).

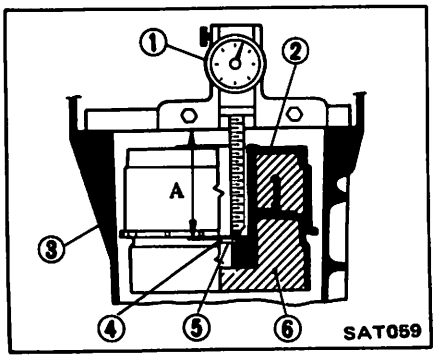

1 Dial gauge
2 High-reverse clutch (Front) drum
3 Transmission case
4 Bearing race
5 Thrust bearing
6 Forward clutch (Rear) drum

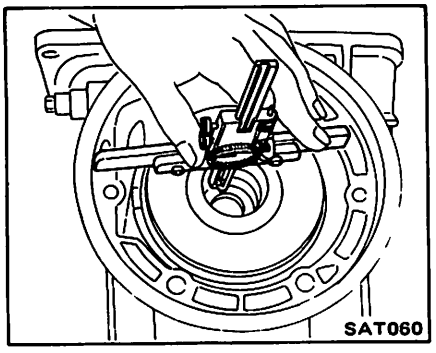

(4) Assemble high-reverse clutch (Front) and forward clutch (Rear) drum assemblies together and lay them flat on bench. Be sure rear hub thrust bearing is properly seated. Measure from face of clutch drum to top of thrust bearing race (dimension B).

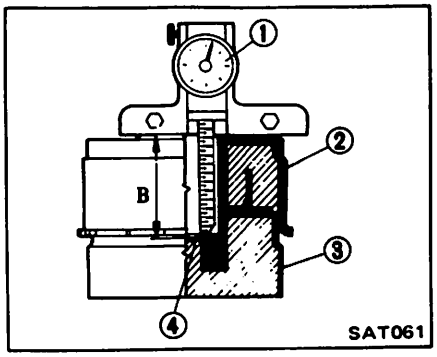

1 Depth gauge
2 High-reverse clutch (Front) drum
3 Forward clutch (Rear) drum
4 Thrust bearing

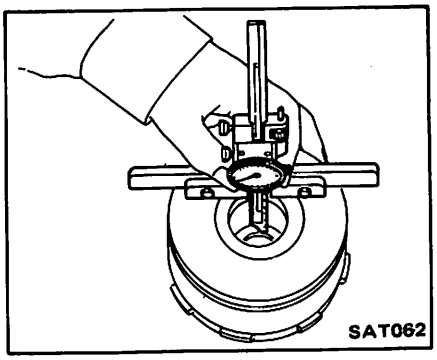

(5) Measure from top of oil pump shaft to gasket installed (dimension C).

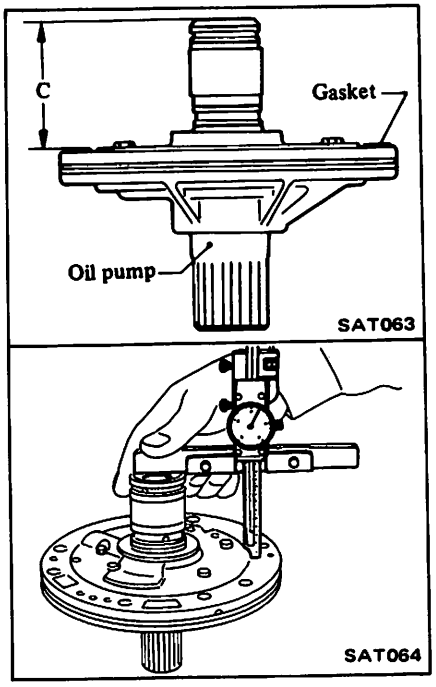

(6) Install thrust washer. Measure from top of oil pump shaft to thrust washer (dimension D).

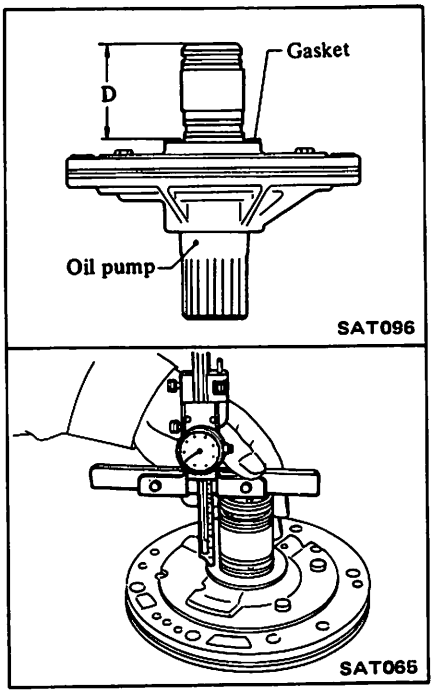

(7) Difference between dimension [A-0.1 mm (0.004 in)-B] and (C-D) is front end play and must be within specified value.

Specified front end play:
0.5 - 0.8 mm
(0.020 - 0.031 in)

Front end play can be adjusted with high-reverse clutch (Front) thrust washers of different thickness.

Available high-reverse clutch (Front) thrust washer

Thickness mm (in)	Part number
1.3 (0.051)	31528 X0107
1.5 (0.059)	31528 X0106
1.7 (0.067)	31528 X0105
1.9 (0.075)	31528 X0100
2.1 (0.083)	31528 X0101
2.3 (0.091)	31528 X0102
2.5 (0.098)	31528 X0103
2.7 (0.106)	31528 X0104

17. Adjust total end play as follows:
This adjustment is seldom required because this type of thrust bearing and

race will normally show very little wear. We also have a standard tolerance of 0.25 to 0.50 mm (0.0098 to 0.0197 in). However, we are presenting correct checking procedure.

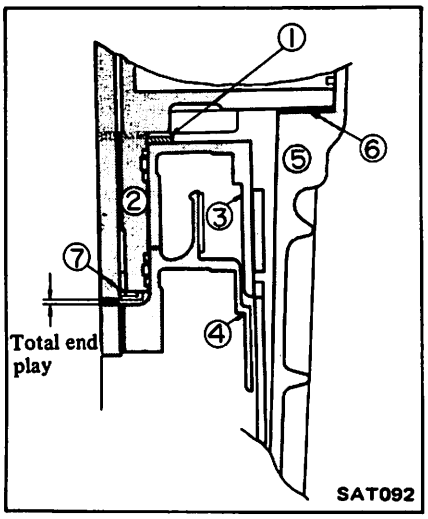

1 High-reverse clutch (Front) thrust washer
2 Oil pump cover
3 High-reverse clutch (Front)
4 Forward clutch (Rear)
5 Transmission case
6 Oil pump gasket
7 Oil pump cover bearing race

(1) Measure dimension A using instructions in steps (1), (2) and (3) under No. 16 above.
(2) Measure dimension C using instructions in step (5) under No. 16 above.
(3) Difference between dimension [A-0.1 mm (0.004 in)] and C is total end play and it must be within specified value.

Specified total end play:
0.25 - 0.50 mm
(0.0098 - 0.0197 in)

If difference between [A-0.2 mm (0.008 in)] and C is not within tolerance, select proper size oil pump cover bearing race.

Available oil pump cover bearing race

Thickness mm (in)	Part number
1.2 (0.047)	31556 X0100
1.4 (0.055)	31556 X0101
1.6 (0.063)	31556 X0102
1.8 (0.071)	31556 X0103
2.0 (0.079)	31556 X0104
2.2 (0.087)	31556 X0105

18. Install brake band, band strut, and band servo. Lubricate servo O-rings before installing. **Care should be taken to avoid damaging O-rings when reassembling.**

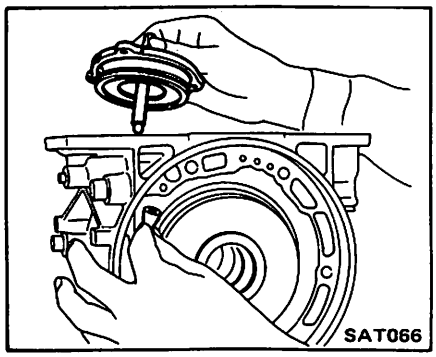

19. Install and torque the retainer bolts. Loosen piston stem.

Ⓣ : Servo piston retainer bolt
5 - 7 N·m
(0.5 - 0.7 kg-m,
3.6 - 5.1 ft-lb)

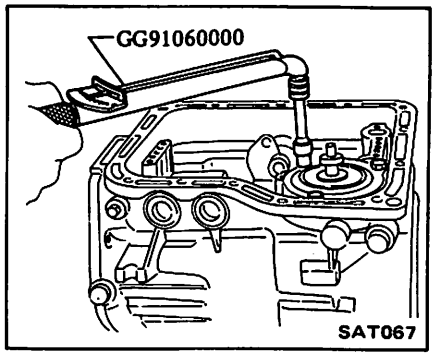

20. Finger tighten brake band servo piston stem enough to prevent brake band and strut from falling out. **Do not adjust brake band** at this time.

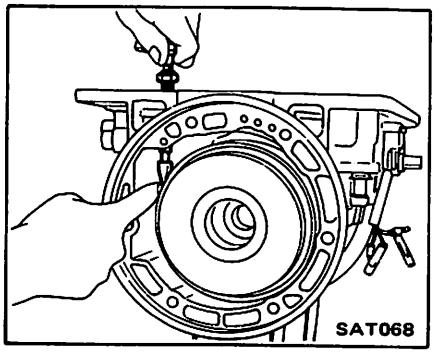

21. Mount oil pump gasket on oil pump with petroleum jelly. Align pump to transmission case and install.

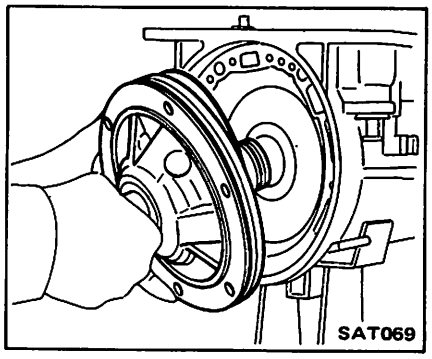

22. Adjust band. Make sure that brake band strut is correctly installed. Torque piston stem to specified value. Back off two full turns and secure with lock nut.

Ⓣ : Piston stem
12 - 15 N·m
(1.2 - 1.5 kg-m,
9 - 11 ft-lb)
Piston stem lock nut
15 - 39 N·m
(1.5 - 4.0 kg-m,
11 - 29 ft-lb)

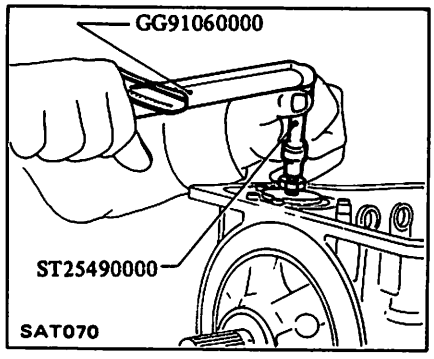

23. Before proceeding with installation of valve body assembly, perform a final air check of all assembled components. This will ensure that you have not overlooked tightening of any bolts or damaged any seals during assembly.

Air check point

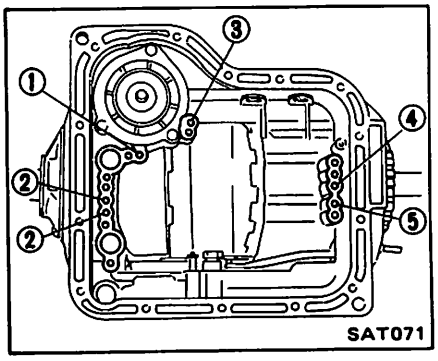

1 Band servo apply (9)
2 Forward clutch (Rear) (1)
High-reverse clutch (Front) (11)
3 Band servo release (10)
4 Governor feed (1)
5 Low & reverse brake (12)

24. Using an air gun with a tapered rubber tip, perform air checks.

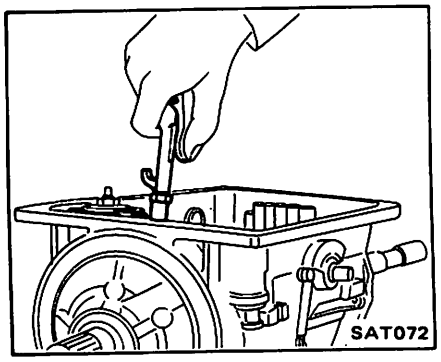

25. Check that parking pawl, pin, spring and washer are assembled correctly.

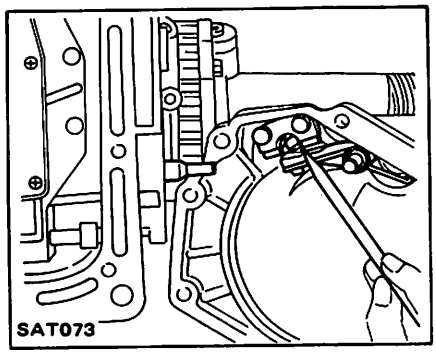

26. Install rear extension.

Ⓣ : Rear extension to transmission case
20 - 25 N·m
(2.0 - 2.5 kg-m,
14 - 18 ft-lb)

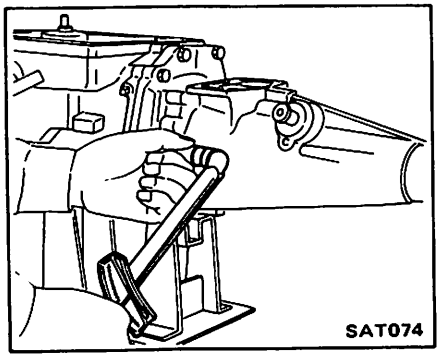

27. Install control valve body. Be sure manual valve is in alignment with selector pin.

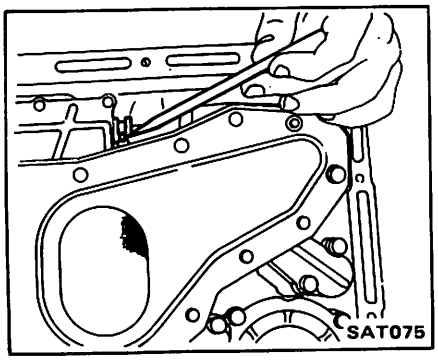

28. Tighten control valve body attaching bolts.

Ⓣ : 5.4 - 7.4 N·m
(0.55 - 0.75 kg-m,
4.0 - 5.4 ft-lb)

Control valve body attaching bolts vary in length. Care must be taken to ensure that each bolt is returned to correct hole.

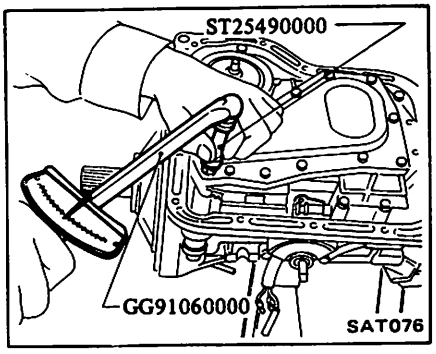

29. Check pump to transmission alignment and install converter housing.

Apply sealant to portions shown in the figure.

Ⓣ : Transmission case to converter housing
44 - 54 N·m
(4.5 - 5.5 kg-m,
33 - 40 ft-lb)

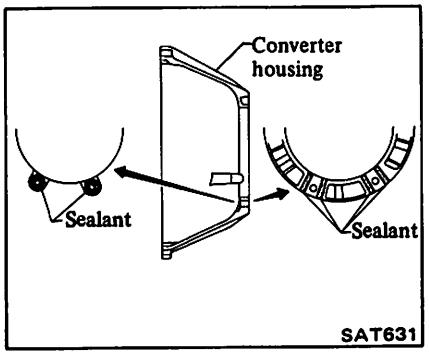

30. Before installing vacuum diaphragm valve, measure depth of hole in which it is inserted. This measurement determines correct rod length to ensure proper performance.

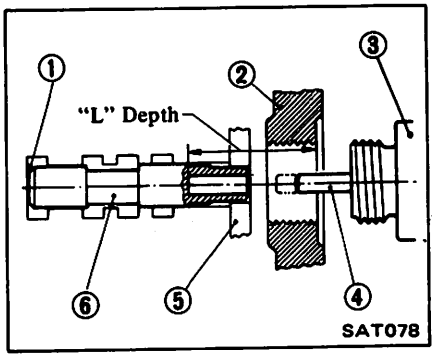

1 Note seated valve body
2 Transmission case wall
3 Vacuum diaphragm
4 Diaphragm rod
5 Valve body side plate
6 Vacuum throttle valve

Vacuum diaphragm rod selection

Measured depth "L" mm (in)	Rod length mm (in)	Part number
Under 25.55 (1.0059)	29.0 (1.142)	31932 X0103
25.65 - 26.05 (1.0098 - 1.0256)	29.5 (1.161)	31932 X0104
26.15 - 26.55 (1.0295 - 1.0453)	30.0 (1.181)	31932 X0100
26.65 - 27.05 (1.0492 - 1.0650)	30.5 (1.201)	31932 X0102
Over 27.15 (1.0689)	31.0 (1.220)	31932 X0101

31. Install vacuum diaphragm.

Ensure that vacuum diaphragm rod does not interfere with control valve side plate.

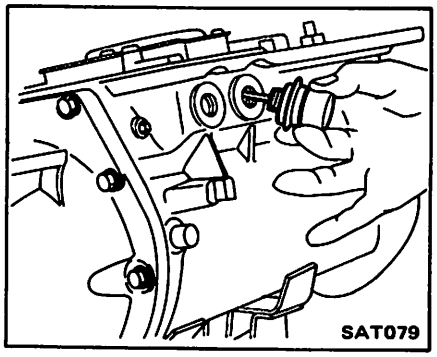

32. Before installing down shift solenoid, check to verify that it is operating properly. Use a hot lead and ground to check solenoid.

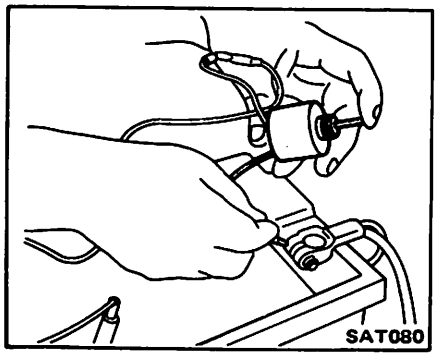

33. Install down shift solenoid.

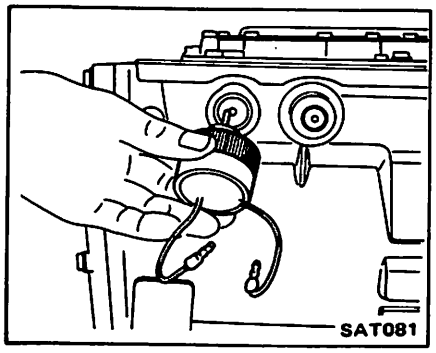

34. Install inhibitor switch. Check for proper operation in each range using a circuit tester. Refer to Minor Adjustment.

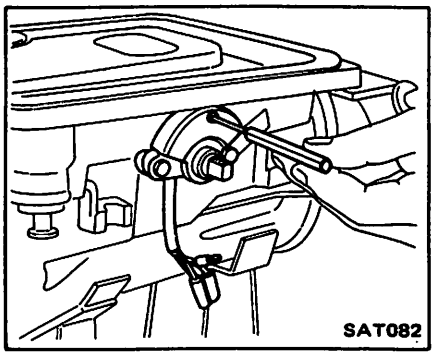

35. Before installing oil pan, check alignment and operation of control lever and parking pawl engagement. Blow mechanism with air to clean. Make final check to be sure all bolts are installed in valve body.

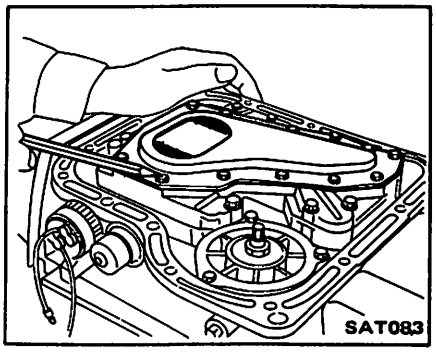

36. Install oil pan with new gasket.

Ⓣ : Oil pan to transmission case
5 - 7 N·m
(0.5 - 0.7 kg-m,
3.6 - 5.1 ft-lb)

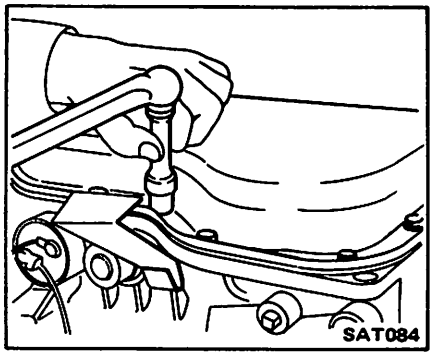

37. Carefully inspect torque converter for damage. Check converter hub for grooves caused by hardened seals. Also check bushing contact area.

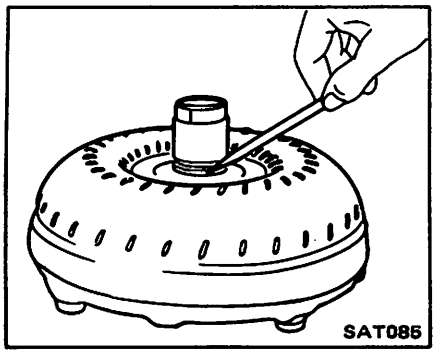

38. Lubricate oil pump lip seal and converter neck before installing converter.

Install converter, being sure that converter is properly meshed with oil pump drive gear.

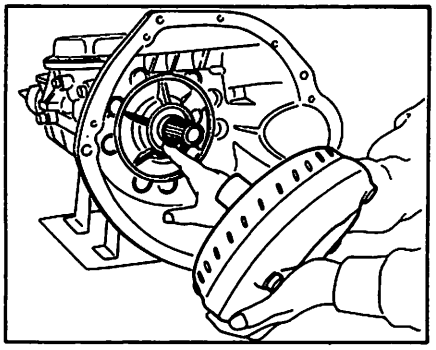

TROUBLE-SHOOTING AND DIAGNOSES

PRELIMINARY CHECKS (Prior to road testing)

Verify customer complaint

The customer should supply as much information as possible, including any unusual characteristics that accompany the complaint.

Fluid level

To properly check fluid level:

1) Place car on a level surface.
2) Put wheel chocks in place and apply parking brake securely.
3) Warm up engine on fast idle.
4) Return engine to curb idling speed.
5) Slowly move the gear selector through the entire shift pattern, and return it to park.
6) Remove the dipstick, clean it, and replace it fully in the filler tube.
7) Quickly remove it again and read the level.

The "L" mark on the dipstick indicates the transmission is approximately 0.4 liter (7/8 US pt, 3/4 Imp pt) low. Add only clean Dexron transmission fluid (or equivalent).

Fluid leakage

To detect a fluid leak:

1) Raise car.
2) Clean area suspected of leaking.
3) Start engine, apply foot brake, place gear selector in drive, and wait a few minutes.
4) Stop engine.
5) Check for fresh leakage.

If the transmission breather is suspected:

1) Raise car.
2) Clean the area around the breather.
3) Run the car at highway speeds.
4) Check the breather for fresh leakage.

To aid in locating leaks, use the following list of seals and gaskets.

1) Converter housing
- Rubber O-ring of oil pump housing.
- Oil pump housing oil seal (transmission front seal).
- Crankshaft oil seal.
- Bolts of converter housing to case.

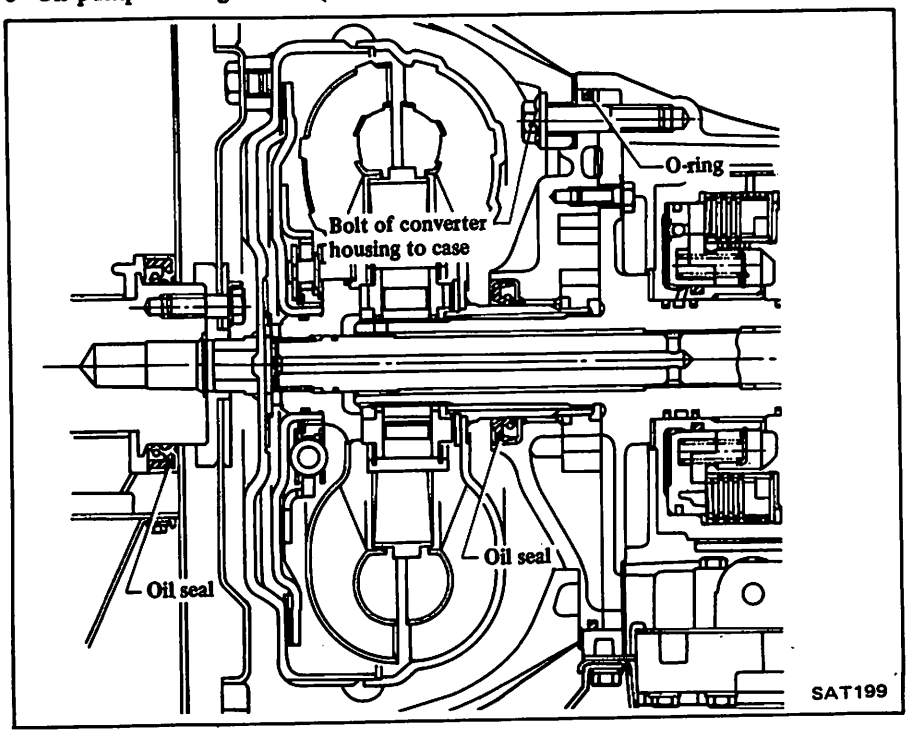

2) Transmission and rear extension.
- Junction of transmission and rear extension.
- Oil cooler tube connectors.
- Oil pressure inspection ports.
- Governor tube connectors.
- Vacuum diaphragm and downshift solenoid.
- Speedometer pinion sleeve.
- Rear extension oil seal.

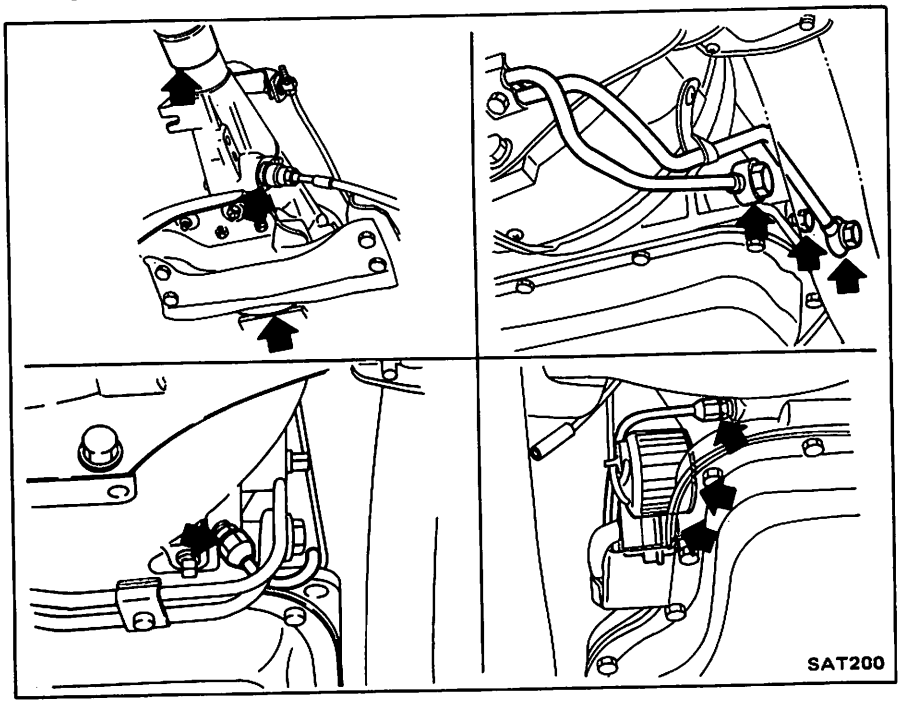

Fluid condition

Transmission fluid color and texture can aid greatly in transmission trouble-shooting. When checking fluid level, examine the transmission fluid and note its color, texture, and odor. Some common forms of contamination are listed below:

1) Dark or Black Fluid:
   With a burned odor
   – Worn friction material.
   Without an odor
   – Slight engine coolant leak (in radiator).
2) Milky Pink Fluid: Water Contamination
   – Coolant leak.
   – Road water entering through filler tube or breather.
3) Varnished Fluid, light to dark brown and tacky: Oxidation
   – Over or Underfilling.
   – Overheating.

Engine idle

Check and adjust idle to specifications.

Refer to MA section.

Engine oil and coolant levels

Prior to road testing, check engine oil and coolant levels, and fill as necessary.

Shift linkage

Start in park position, depress detent button and slowly move the gear selector through all ranges. The detent "clicks" should correspond with the range indicator.

DIAGNOSTIC ROAD TEST

Prior to road testing, perform the preliminary inspections outlined earlier. If the car is not equipped with a tachometer, install a portable tachometer in the car. And also install a suitable vacuum gauge and pressure gauge. If the customer has a specific complaint, select road conditions similar to those described. (e.g. steep hills, freeways, etc.)

Follow the test sequence as outlined in this section and mark the results on the Symptom Chart on page AT-40. It may be necessary to repeat sections of the test under different throttle conditions. (e.g. light, medium or full throttle.) After completing the road test, compare the test results to the Trouble-shooting Chart on page AT-37.

ROAD TESTING

1. Park Range

Place the gear selector in "P" range and start the engine. Stop the engine and repeat the procedure in all other ranges and neutral. In park, the car should be locked in position, unable to roll or move. Mark all results on the Symptom Chart.

2. Reverse

Manually shift the gear selector from "P" to "R", and note shift quality. Drive the car in reverse long enough to detect slippage or other abnormalities. Note results.

3. Neutral

Manually shift the gear selector from "P" to "N" and note quality. In neutral no clutches or bands are applied, and there should be no movement. Note results.

4. Drive Range

Manually shift the gear selector to range "D", and note shift quality. Drive the car through all automatic shifts and in all gear ranges. Note shift quality and timing [km/h (MPH)], and check whether torque converter is locked up or not at specified speed. Refer to Confirming lock-up state of torque converter. Check for slippage, noise, or other abnormal conditions. If necessary, drive the test sequence under different throttle opening (e.g. light, medium or full throttle).

Lock-up zone

Refer to shift schedule on page AT-35.

5. Range "2"

Manually shift the gear selector to range "2". Check for slippage, hesitation or abnormal condition. The transmission should remain in 2nd gear regardless of car speed or engine revolutions. Note results.

6. Range "1"

Manually shift the gear selector to range "1". Note shift quality. It should, however, downshift immediately to 2nd gear and downshift again to 1st gear as road speed decreases. Accelerate and decelerate in 1st gear to determine engine braking Note results.

The transmission should not shift into 1st gear from "D" range if the car road speed is above approximately 65 km/h (40 MPH).

7. Record line pressure and governor pressure at each range and at each throttle vacuum in accordance with the pressure testing described below.

CONFIRMING LOCK-UP STATE OF TORQUE CONVERTER

Because the shock is very low and is not noticeable when the torque converter is locked up, it is difficult to confirm whether the torque converter is locked up or not. So please check the engine rpm with tachometer while the car is driving to confirm it. If the torque converter is locked up the engine rpm is decreased 200 to 400 rpm at the same time.

Car speed and line pressure when shifting gears

Intake manifold vacuum –kPa (–mmHg, –inHg)	Gearshift	Car speed km/h (MPH)	Propeller shaft revolutions rpm	Line pressure kPa (kg/cm², psi)
0 (0, 0) (Kickdown)	$D_1 \rightarrow D_2$	52 - 60 (32 - 37)	1,790 - 2,040	530 - 647 (5.4 - 6.6, 77 - 94)
	$D_2 \rightarrow D_3$	93 - 100 (58 - 62)	3,170 - 3,420	
	$D_3 \rightarrow D_2$	84 - 91 (52 - 57)	2,880 - 3,130	
	$D_2 \rightarrow D_1$	39 - 46 (24 - 29)	1,330 - 1,580	
13.3 (100, 3.94)	$D_1 \rightarrow D_2$	20 - 27 (12 - 17)	680 - 930	432 - 530 (4.4 - 5.4, 63 - 77)
	$D_2 \rightarrow D_3$	54 - 62 (34 - 39)	1,860 - 2,110	
	$D_3 \rightarrow D_2$	28 - 35 (17 - 22)	960 - 1,190	
	$D_2 \rightarrow D_1$	10 - 18 (6 - 11)	350 - 600	
0 (0,0) (Full throttle)	$1_2 \rightarrow 1_1$	40 - 47 (25 - 29)	1,350 - 1,600	569 - 696 (5.8 - 7.1, 82 - 101)
40.0 (300, 11.81)	$1_2 \rightarrow 1_1$	40 - 47 (25 - 29)	1,350 - 1,600	569 - 696 (5.8 - 7.1, 82 - 101)

Shift schedule

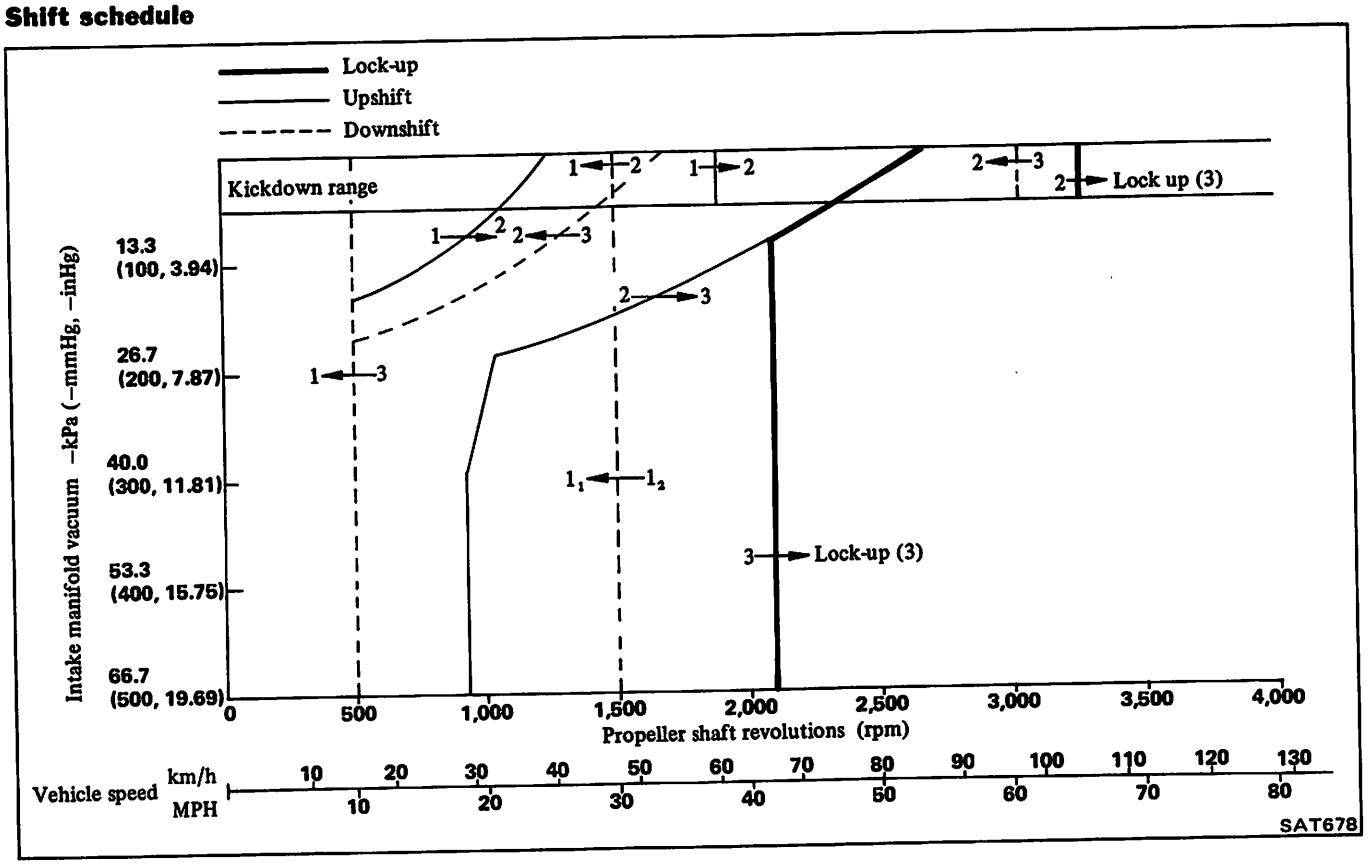

PRESSURE TESTING

The L3N71B transmission is provided with two pressure test ports.

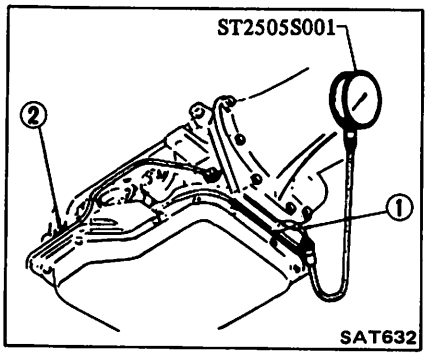

1 Test port for D, 2 and 1 ranges
2 Test port for R range

Key points of pressure testing are:

a) **Pressure at idle: Look for a steady rise in pressure as car speed increases under light load.**
b) **Pressure drop between shift points should not exceed 98 kPa (1.0 kg/cm², 14 psi). Excessive pressure drop may indicate an internal leak at a servo or clutch seal.**

Cut-back point

The cut-back point indicates a point where line pressure changes from high to low value as output shaft rotation is gradually increased from "stall" point. The car speed and output shaft rotation at that cut-back point are as indicated in chart below.

Intake manifold vacuum –kPa (–mmHg, –inHg)	Car speed km/h (MPH)	Propeller shaft revolutions rpm
0 (0, 0)	35 - 42 (22 - 26)	1,190 - 1,440
13.3 (100, 3.94)	18 - 25 (11 - 16)	600 - 850

LINE PRESSURE

1. Install pressure gauge to line pressure port. (When shift lever is in "D", "2" or "1" range, install pressure gauge to port ① and when in "R" range, install pressure gauge to port ③ shown above.) Locate the gauge so it can be seen by driver. Measure line pressure at idling and at stall test.
2. Road test car and note pressure under different throttle conditions.

At idling

Range	Line pressure kPa (kg/cm², psi)
R	412 - 549 (4.2 - 5.6, 60 - 80)
D	314 - 373 (3.2 - 3.8, 46 - 54)
2	588 - 1,147 (6.0 - 11.7, 85 - 166)
1	314 - 373 (3.2 - 3.8, 46 - 54)

At stall test

Range	Line pressure kPa (kg/cm², psi)
R	1,402 - 1,589 (14.3 - 16.2, 203 - 230)
D	971 - 1,089 (9.9 - 11.1, 141 - 158)
2	1,000 - 1,147 (10.2 - 11.7, 145 - 166)
1	971 - 1,089 (9.9 - 11.1, 141 - 158)

STALL TESTING

The stall test is an effective method of testing clutch and band holding ability, torque converter one-way clutch operation, and engine performance. A stall test should only be performed as a last resort because of the high fluid temperature it generates and the excessive load it places on the engine and transmission.

CAUTION:

a. **Transmission and engine fluid levels should always be checked and fluid added as needed.**
b. **Run engine at 1,200 rpm to attain proper warm-up.**
c. **During test, never hold throttle wide-open for more than 5 seconds.**
d. **Do Not test more than two gear ranges without driving car to cool off engine and transmission.**

STALL TEST PROCEDURE

1. Install a tachometer where it can be seen by driver during test.
2. Set hand brake and block wheels.
3. Start engine and place shift lever in "D" range.
4. Apply foot brake and accelerate to wide-open throttle. Do **not** hold throttle open longer than five seconds.
5. Quickly note the engine stall speed and immediately release throttle.

Stall revolution:
2,000 - 2,300 rpm

6. Place shift lever in "R" range and repeat above test (same as in "D" range).

If stall test indicates proper stall revolution in "D" range, no further testing is necessary.

STALL TEST ANALYSIS

1. Satisfactory results in "D" range indicates forward clutch (Rear), one-way clutch of transmission, and sprag clutch of torque converter, are functioning properly.
2. **Stall revolution in "D" range, 1st gear, is above specified revolution:**
The forward clutch (Rear) is faulty.
3. **Stall revolution in "R" range is above specified revolution (for "D" range);**
Low and Reverse Brakes are faulty.
4. **Stall revolution in "D" range, 1st gear is below specified revolution:**
Converter sprag clutch is faulty (slipping), or engine is not performing properly.

If converter sprag clutch is frozen, car will have poor high speed performance. If converter sprag clutch is slipping, car will be sluggish up to 50 or 60 km/h (30 or 40 MPH).

TROUBLE-SHOOTING CHART

Numbers are arranged in order of probability. Perform inspections starting with number one and working up. Circled numbers indicate that the transmission must be removed from the car.

	ON CAR												OFF CAR								
	Oil level	Range select linkage	Inhibitor switch and wiring	Vacuum diaphragm and piping	Kickdown solenoid, switch and wiring	Engine idling rpm	Line pressure	Manual valve	Governor	Band servo	Transmission air check	Oil quality	Ignition switch and starter motor	Engine adjustment, brake inspection	Forward clutch (Rear)	High-reverse clutch (Front)	Band brake	Low and reverse brake	Oil pump	Oil passage leak	Transmission one-way clutch	High-reverse clutch (Front) check ball	Park linkage
Engine does not start in "N", "P" ranges.	.	2	3	.	.	.	.	.	.	.	.	.	1	.	.	.	.	.	.	.	.	.	.
Engine starts in range other than "N" and "P".	.	1	2	.	.	.	.	.	.	.	.	.	.	.	.	.	.	.	.	.	.	.	.
Transmission noise in "P" and "N" ranges.	1	.	.	.	.	.	2	.	.	.	.	.	.	.	.	.	.	.	⑧	.	.	.	.
Car moves when changing into "P" range or parking gear does not disengage when shifted out of "P" range	.	1	.	.	.	.	.	.	.	.	.	.	.	.	.	.	.	.	.	.	.	.	②
Car runs in "N" range.	.	1	.	.	.	.	.	3	.	.	.	2	.	.	④	.	.	.	.	.	.	.	.
Car will not run in "R" range (but runs in "D", "2" and "1" ranges.) Clutch slips. Very poor acceleration.	1	2	.	.	.	.	3	5	.	.	6	4	.	.	⑨	⑧	.	⑦	.	⑩	.	⑪	.
Car braked when shifting into "R" range.	.	.	.	.	.	.	.	.	.	3	2	1	.	.	④	.	⑤	.	.	.	.	.	⑥
Sharp shock in shifting from "N" to "D" range.	.	.	.	2	.	1	3	4	.	.	.	.	.	.	⑤	.	.	.	.	.	.	.	.
Car will not run in "D" range (but runs in "2", "1" and "R" ranges).	.	1	.	.	.	.	2	3	.	.	.	.	.	.	.	.	.	.	.	.	④	.	.
Car will not run in "D", "1", "2" ranges (but runs in "R" range). Clutch slips. Very poor acceleration.	1	2	.	.	.	.	4	5	.	.	6	3	.	7	⑧	⑩	.	.	.	⑨	.	.	.
Clutches or brakes slip somewhat in starting.	1	2	.	6	.	.	3	5	.	.	7	4	.	.	.	.	.	.	⑧	⑨	.	.	.
Excessive creep.	.	.	.	.	.	1	.	.	.	.	.	.	.	.	.	.	.	.	.	.	.	.	.
No creep at all.	1	2	.	.	.	3	.	5	.	.	.	4	.	.	⑧	⑨	.	.	⑥	⑦	.	.	.
Failure to change gear from "1st" to "2nd".	.	1	.	2	3	.	.	5	6	8	7	4	.	.	.	.	⑨	.	.	⑩	.	.	.
Failure to change gear from "2nd" to "3rd".	.	1	.	2	3	.	.	5	6	8	7	4	.	.	.	⑨	.	.	.	⑩	.	⑪	.
Too high a gear change point from "1st" to "2nd", from "2nd" to "3rd".	.	.	.	1	2	.	3	5	6	.	.	4	.	.	.	.	.	.	.	⑦	.	.	.
Gear change directly from "1st" to "3rd" occurs.	.	.	.	.	.	.	.	2	4	.	3	1	.	.	.	.	⑤	.	.	⑥	.	.	.
	ON CAR												OFF CAR								

Numbers are arranged in order of probability. Perform inspections starting with number one and working up. Circled numbers indicate that the transmission must be removed from the car.

	ON CAR									OFF CAR					
	Oil level	Range select linkage	Vacuum diaphragm and piping	Kickdown solenoid, switch and wiring	Line pressure	Engine stall rpm	Manual valve	Governor	Band servo	Transmission air check	Oil quality	Engine adjustment, brake inspection	Forward clutch (Rear)	High-reverse clutch (Front)	Band brake	Low and reverse brake	Oil pump	Oil passage leak	Transmission one-way clutch	High-reverse clutch (Front) check ball
Too sharp a shock in change from "1st" to "2nd".	.	.	1	.	.	2	4	.	5	.	3	.	.	.	⑥	.	.	.	.	.
Too sharp a shock in change from "2nd" to "3rd".	.	.	1	.	2	.	3	.	5	4	.	.	.	⑥	.	.	.	.	.	.
Almost no shock or clutches slipping in change from "1st" to "2nd".	1	2	3	.	4	.	6	.	8	7	5	.	.	.	⑨	.	.	⑩	.	.
Almost no shock or slipping in change from "2nd" to "3rd". Engine races extremely fast.	1	2	3	.	4	.	6	.	8	7	5	.	.	⑨	.	.	.	⑩	.	⑪
Car braked by gear change from "1st" to "2nd".	.	.	.	.	.	.	2	.	.	.	1	.	.	④	.	③	.	.	⑤	.
Car braked by gear change from "2nd" to "3rd".	.	.	.	.	.	.	3	.	2	.	1	.	.	.	④	.	.	.	.	.
Maximum speed not attained. Acceleration poor.	1	2	.	.	4	5	7	.	6	.	3	8	⑪	⑫	⑨	⑩	⑬	.	.	.
Failure to change gear from "3rd" to "2nd".	.	.	1	.	.	.	3	4	6	5	2	.	.	⑦	⑧	.	.	⑨	.	.
Failure to change gear from "2nd" to "1st" or from "3rd" to "1st".	.	.	1	.	.	.	3	4	6	5	2	.	.	.	⑦	.	.	.	⑧	.
Gear change shock felt during deceleration by releasing accelerator pedal.	.	1	2	3	4	.	5	6	.	.	.	.	.	.	.	.	.	⑦	.	.
Too high a change point from "3rd" to "2nd", from "2nd" to "1st".	.	1	2	3	4	.	5	6	.	.	.	.	.	.	.	.	.	⑦	.	.
Kickdown does not operate when depressing pedal in "3rd" within kickdown car speed.	.	.	2	1	.	.	4	5	.	.	3	.	.	.	⑥	.	.	⑦	.	.
Kickdown operates or engine overruns when depressing pedal in "3rd" beyond kickdown car speed limit.	.	1	2	.	3	.	5	6	.	7	4	.	.	⑧	.	.	.	⑨	.	.
Races extremely fast or slips in changing from "3rd" to "2nd" when depressing pedal.	.	.	1	.	2	.	4	.	6	5	3	.	.	⑦	⑧	.	.	⑨	.	⑩
	ON CAR									OFF CAR					

Numbers are arranged in order of probability. Perform inspections starting with number one and working up. Circled numbers indicate that the transmission must be removed from the car.

	ON CAR									OFF CAR							
	Oil level	Range select linkage	Vacuum diaphragm and piping	Engine idling rpm	Line pressure	Engine stall rpm	Rear lubrication	Manual valve	Governor	Band servo	Transmission air check	Oil quality	Forward clutch (Rear)	High-reverse clutch (Front)	Band brake	Low and reverse brake	Oil pump	Oil passage leak	Torque converter, one-way clutch	Transmission one-way clutch	Park linkage	Planetary gear
Car will not run in any range.	1	2	.	.	3	.	.	5	.	.	6	4	.	.	.	.	⑦	⑧	.	.	⑨	.
Transmission noise in "D", "2", "1" and "R" ranges.	1	.	.	.	2	.	.	.	.	.	.	.	③	.	.	.	④	.	.	⑤	.	⑥
Failure to change from "3rd" to "2nd" when changing lever into "2" range.	.	1	.	.	2	.	.	4	.	5	.	3	.	.	⑥	.	.	⑦	.	.	.	.
Gear change from "2nd" to "1st" or from "2nd' ' to "3rd" in "2" range.	.	1	.	.	2	.	.	3	.	.	.	.	.	.	.	.	.	.	.	.	.	.
No shock at change from "1" to "2" range or engine races extremely fast.	1	2	3	4	.	5	.	7	.	.	8	6	.	.	⑨	.	⑩	.	.	.	.	.
Failure to change from "3rd" to "2nd" when shifting lever into "1" range.	.	1	.	.	2	.	.	4	5	7	6	3	.	⑧	⑨	.	.	⑩	.	.	.	.
Engine brake does not operate in "1" range.	.	1	.	.	2	.	.	4	.	.	5	3	.	.	.	⑥	.	⑦	.	.	.	.
Gear change from "1st" to "2nd" or from "2nd" to "3rd" in "1" range.	.	1	.	.	.	.	.	2	.	.	.	.	.	.	.	.	.	③	.	.	.	.
Does not change from "2nd" to "1st" in "1" range.	1	2	.	.	.	.	.	4	5	6	7	3	.	.	.	⑧	.	⑨	.	.	.	.
Large shock changing from "2nd' ' to "1st" in "1" range.	.	.	1	.	.	2	.	4	.	.	.	3	.	.	.	⑤	.	.	.	.	.	.
Transmission overheats.*	1	.	.	.	3	4	2	6	.	8	7	5	.	⑨	⑩	⑪	⑫	⑬	⑭	.	.	⑮
Oil shoots out during operation. White smoke emitted from exhaust pipe during operation.	1	.	3	.	5	6	2	7	.	.	8	4	.	⑨	⑩	⑪	⑫	⑬	⑭	.	.	⑮
Offensive smell at oil charging pipe.	1	.	.	.	.	.	.	.	.	.	.	2	③	④	⑤	⑥	⑦	⑧	⑨	.	.	⑩
	ON CAR												OFF CAR									

*: Refer to Page AT-59.

Exclusively for L3N71B

Numbers are arranged in order of probability. Perform inspections starting with number one and working up. Circled numbers indicate that the transmission must be removed from the car.

	ON CAR			OFF CAR					
	Governor tube	Governor	Line pressure	O-ring in input shaft	Torque converter	Speed cut valve	Lock-up control valve	Lock-up orifice in oil pump cover	Oil pump
Torque converter is not locked up	1	2	3	④	⑨	⑥	⑦	⑧	⑤
Lock-up piston slip			1	②	⑤			③	④
Lock-up point is extremely high or low	1	2				③	④		
Engine is stopped at R.D.2 and 1 ranges					②		①		
Transmission overheats			1	②	⑤			③	④

ROAD TEST SYMPTOM CHART

		SHIFT QUALITY									
		ROUGH	SHIFT TIMING [Mark km/h (MPH)]	NO SHIFT	SHIFT SLIPPAGE	CAR WON'T MOVE	CRUISE SLIPPAGE	POOR POWER/ACCELERATION	NOISY	OK	COMMENTS
PARK RANGE	ENG. START										
	HOLDING										
"R" RANGE	Man. shift P-R										
	REVERSE										
"N" RANGE	Man. shift R-N										
	ENG. START										
	N										
"D" RANGE	Man. shift N-D										
	1st										
	Auto shift 1-2										
	2nd										
	Auto shift 2-3										
	3rd										
	Decel. 3-2										
	Kickdown 3-2										
	Decel. 2-1										
	Kickdown 2-1										
"2" RANGE	Man. shift D-2										
	2nd										
"1" RANGE	Man. shift 2-1										
	Man. shift D-1										
	Acceleration										
	"1" Engine Braking										

TROUBLE-SHOOTING GUIDE FOR L3N71B AUTOMATIC TRANSMISSION

Order	Test item	Procedure
Checking	1. Oil level gauge	Check gauge for oil level and leakage before and after each test.
	2. Downshift solenoid	Check for sound of operating solenoid when depressing accelerator pedal fully with ignition key "ON".
	3. Manual linkage	Check by shifting into "P", "R", "N", "D", "2" and "1" ranges with selector lever.
	4. Inhibitor switch	Check whether starter operates in "N" and "P" ranges only and whether reverse lamp operates in "R" range only.
	5. Engine idling rpm.	Check whether idling rpm meet standard.
	6. Vacuum pressure of vacuum pipe.	Check whether vacuum pressure is more than 60.0 kPa (450 mmHg, 17.72 inHg) in idling and whether it decreases with increasing rpm.
	7. Operation in each range.	Check whether transmission engages positively by shifting "N" → "D", "N" → "2", "N" → "1" and "N" → "R" range while idling with brake applied.
	8. Creep of car.	Check whether there is any creep in "D", "2", "1" and "R" ranges.
Stall test	1. Oil pressure before testing.	Measure line pressures in "D", "2", "1" and "R" range while idling.
	2. Stall test.	Measure engine rpm and line pressure in "D", "2", "1" and "R" ranges during full throttle operation. **Temperature of torque converter oil used in test should be from 60 to 100°C (140 to 212°F) i.e., sufficiently warmed up but not overheated.** **CAUTION:** **To cool oil between each stall test for "D", "2", "1" and "R" ranges, idle engine, i.e., rpm at about 1,200 rpm for more than 1 minute in "P" range. Measurement time must not be more than 5 seconds.**
	3. Oil pressure after testing	Same as item 1.
Road test	1. Slow acceleration, 1st → 2nd 2nd → 3rd	Check car speeds and engine rpm in shifting up 1st → 2nd range and 2nd → 3rd range and when torque converter is locked up while running with lever in "D" range and engine vacuum pressure of about 13.3 kPa (100 mmHg, 3.94 inHg).
	2. Quick acceleration, 1st → 2nd 2nd → 3rd	Same as item 1 above except with engine vacuum pressure of 0 kPa (0 mmHg, 0 inHg) (i.e., in position just before kickdown).
	3. Kick-down operation, 3rd → 2nd or 2nd → 1st	Check whether the kickdown operates and measure the time delays while running at 30, 40, 50, 60, 70 km/h (19, 25, 31, 37, 43 MPH) in "D_3" range.

Order	Test item	Procedure
	4. Shift down, $D_3 \rightarrow D_2 \rightarrow D_1$	Check car speeds and engine rpm in shifting down from 3rd → 2nd → 1st (sequentially) while coasting with accelerater pedal released in "D_3" range and engine vacuum pressure of about 60.0 kPa (450 mmHg, 17.72 inHg).
	5. Shift down, $D_3 \rightarrow 1_2 \rightarrow 1_1$	Check for shifting down $D_3 \rightarrow 1_2$ and engine braking, and further for shifting down $1_2 \rightarrow 1_1$ and engine braking after shifting the lever into "1" range with the accelerator pedal released and the engine vacuum pressure of 0 kPa (0 mmHg, 0 inHg) while driving at about 50 km/h (30 MPH) in "D_3" range.
	6. Shift down, $D_3 \rightarrow 2$	Check for quick shifting down $D_3 \rightarrow 2$ and engine braking, after shifting the lever into "2" range while driving at about 50 km/h (30 MPH) in "D_3" range. Also, check for locking of the transmission in 2nd gear ratio regardless of car speed.
	7. Shift up, $1_1 \rightarrow 1_2$	Check for failure of the transmission to shift up during acceleration, when starting in "1" range.
	8. Shift up or down when starting in "2" range.	Check the transmission for not shifting up or down during acceleration or deceleration, when starting in "2" range.
	9. Parking.	Confirm that car will not move on grade when shifting to "P" range.
Others	Abnormal shock, oil leakage.	Enter into record conditions observed during these tests such as gear noise, abnormal clutch noise and acceleration performance.

SERVICE DATA AND SPECIFICATIONS (S.D.S.)

General specifications

Automatic transmission model		L3N71B
Stall torque ratio		2.0 : 1
Transmission gear ratio	1st	2.842
	2nd	1.542
	Top	1.000
	Reverse	2.400
Oil		Automatic transmission fluid "Dexron" type
Oil capacity		6.1 liters (6-1/2 US qt, 5-3/8 Imp qt)

Specifications and adjustment

Automatic transmission assembly Model code number		X6365	
Torque converter assembly Stamped mark on the T/C		GHA	
High-reverse clutch (Front)	Number of drive plates	3	
	Number of driven plates	5	
	Clearance mm (in)	1.6 - 2.0 (0.063 - 0.079)	
	Thickness of retaining plate	Thickness mm (in)	Part number
		5.0 (0.197)	31567-X2900
		5.2 (0.205)	31567-X2901
		5.4 (0.213)	31567-X2902
		5.6 (0.220)	31567-X2903
		5.8 (0.228)	31567-X2904
		6.0 (0.236)	31567-X2905
		6.2 (0.244)	31567-X2906

Forward clutch (Rear)	Number of drive plates	6	
	Number of driven plates	6	
	Clearance mm (in)	0.8 - 1.6 (0.031 - 0.063)	
	Thickness of retaining plate mm (in)	4.80 (0.1890)	
Low & reverse brake	Number of drive plates	5	
	Number of driven plates	5	
	Clearance mm (in)	0.80 - 1.25 (0.0315 - 0.0492)	
	Thickness of retaining plate	Thickness mm (in)	Part number
		7.8 (0.307)	31667-X0500
		8.0 (0.315)	31667-X0501
		8.2 (0.323)	31667-X0502
		8.4 (0.331)	31667-X0503
		8.6 (0.339)	31667-X0504
		8.8 (0.346)	31667-X0505
Brake band Piston size mm (in)	Big dia.	64 (2.52)	
	Small dia.	36 (1.42)	
Control valve assembly Stamped mark on strainer		LRM	
Governor assembly Stamped mark on governor body		33	

Stall revolution

Stall revolution rpm	2,000 - 2,300

Tightening torque

Unit	N·m	kg·m	ft·lb
Drive plate to crankshaft	137 - 157	14.0 - 16.0	101 - 116
Drive plate to torque converter	39 - 49	4.0 - 5.0	29 - 36
Gussets to transmission and engine	25 - 35	2.6 - 3.6	19 - 26
Converter housing to engine	39 - 49	4.0 - 5.0	29 - 36
Transmission case to converter housing	44 - 54	4.5 - 5.5	33 - 40
Transmission case to rear extension	20 - 25	2.0 - 2.5	14 - 18
Oil pan to transmission case	5 - 7	0.5 - 0.7	3.6 - 5.1
Servo piston retainer to transmission case	5 - 7	0.5 - 0.7	3.6 - 5.1
Piston stem (when adjusting band brake)	*12 - 15	*1.2 - 1.5	*9 - 11
Piston stem lock nut	15 - 39	1.5 - 4.0	11 - 29
One-way clutch inner race to transmission case	13 - 18	1.3 - 1.8	9 - 13
Control valve body to transmission case	5.4 - 7.4	0.55 - 0.75	4.0 - 5.4
Lower valve body to upper valve body	2.5 - 3.4	0.25 - 0.35	1.8 - 2.5
Side plate to control valve body	2.5 - 3.4	0.25 - 0.35	1.8 - 2.5
Nut for control valve reamer bolt	5 - 7	0.5 - 0.7	3.6 - 5.1
Oil strainer to valve body	3 - 4	0.3 - 0.4	2.2 - 2.9
Governor valve body to oil distributor	5 - 7	0.5 - 0.7	3.6 - 5.1
Oil pump housing to oil pump cover	6 - 8	0.6 - 0.8	4.3 - 5.8
Inhibitor switch to transmission case	5 - 7	0.5 - 0.7	3.6 - 5.1
Manual shaft lock nut	29 - 39	3.0 - 4.0	22 - 29
Oil cooler pipe to transmission case	29 - 49	3.0 - 5.0	22 - 36
Test plug (oil pressure inspection hole)	14 - 21	1.4 - 2.1	10 - 15
Support actuator (parking rod inserting position) to rear extension	8 - 11	0.8 - 1.1	5.8 - 8.0

* Turn back two turns after tightening.

SPECIAL SERVICE TOOLS

Tool number (Kent-Moore No.)	Tool name
ST07870000 (–) ST07860000 (–)	Transmission case stand 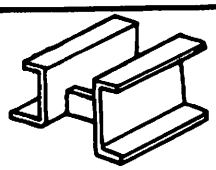
ST25850000 (J25721-A)	Sliding hammer 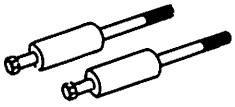
GG91060000 (–) GG93010000 (J25703)	Torque wrench 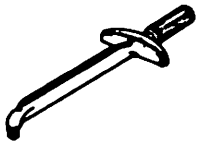

Tool number (Kent-Moore No.)	Tool name
ST25420001 (J26063-A) ST25420000 (J26063-A)	Clutch spring compressor
ST25570001 (J23659-1) ST25570000 (J23659-1)	Hex-head extension
ST25490000 (–) ST25512001 (–)	Socket extension
HT62350000 (–)	Spinner handle
ST25160000 (–)	Torque driver
ST25580001 (–)	Oil pump assembling gauge
HT61000800 (–)	Hexagon wrench
ST2505S001 (–)	Oil pressure gauge set

TRANSFER

SECTION TF

CONTENTS

REMOVAL AND INSTALLATION . . . . . TF- 2
REMOVAL . . . . . TF- 2
INSTALLATION . . . . . TF- 2
TRANSFER (Model : T100L) . . . . . TF- 3
FORKS AND FORK RODS . . . . . TF- 4
GEARS AND SHAFTS . . . . . TF- 8
TRANSFER CASE FRONT COVER, TRANSFER FRONT CASE AND TRANSFER REAR CASE (Replacement of oil seals and bearings) TF-11
SERVICE DATA AND SPECIFICATIONS (S.D.S.) TF-13
GENERAL SPECIFICATIONS TF-13
INSPECTION AND ADJUSTMENT TF-13
TIGHTENING TORQUE TF-13
TROUBLE DIAGNOSES AND CORRECTIONS TF-14
SPECIAL SERVICE TOOLS TF-17

REMOVAL AND INSTALLATION

REMOVAL

1. Disconnect battery ground cable.
2. Jack up vehicle and support its weight on safety stands. Use a hydraulic hoist or open pit, if available.
   Make sure that safety is insured.
3. Remove transfer protector.

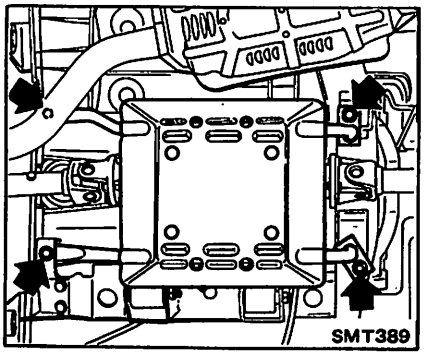

4. Remove pre-propeller shaft securing nuts.
5. Remove front and rear propeller shafts. Refer to Propeller Shaft (Section PD) for removal.
6. Disconnect wire for 4-wheel drive switch.
7. Disconnect speedometer cable.
8. Remove exhaust tube assembly. Refer to Exhaust System (Section FE) for removal.
9. Support transfer with transmission jack.
10. Loosen transfer insulator securing bolt temporarily.

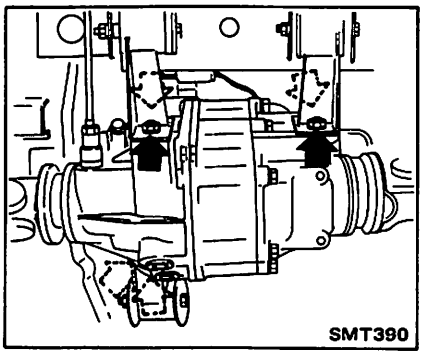

11. Remove transfer control lever rubber boot from floor.

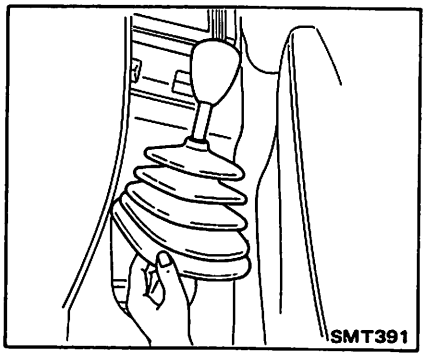

12. Remove transfer unit with pre-propeller shaft from vehicle.

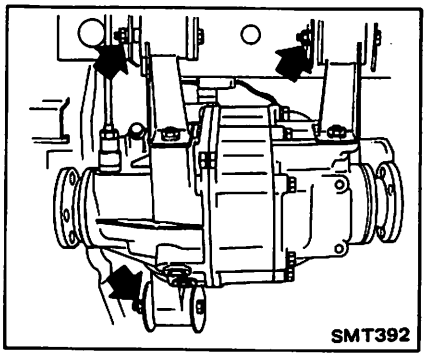

13. Remove insulators from transfer.

INSTALLATION

Install transfer in reverse order of removal, paying attention to the following points.

1. Remove filler plug and fill transfer with recommended gear oil to level of plug hole.

   Oil capacity:
   1.4 ℓ (3 US pt. 2-1/2 Imp pt)

2. Apply sealant to threads of filler plug, and install filler plug to transfer case.

   Ⓣ : Filler plug
   20 - 39 N·m
   (2.0 - 4.0 kg-m,
   14 - 29 ft-lb)

TRANSFER (Model : T100L)

Case components

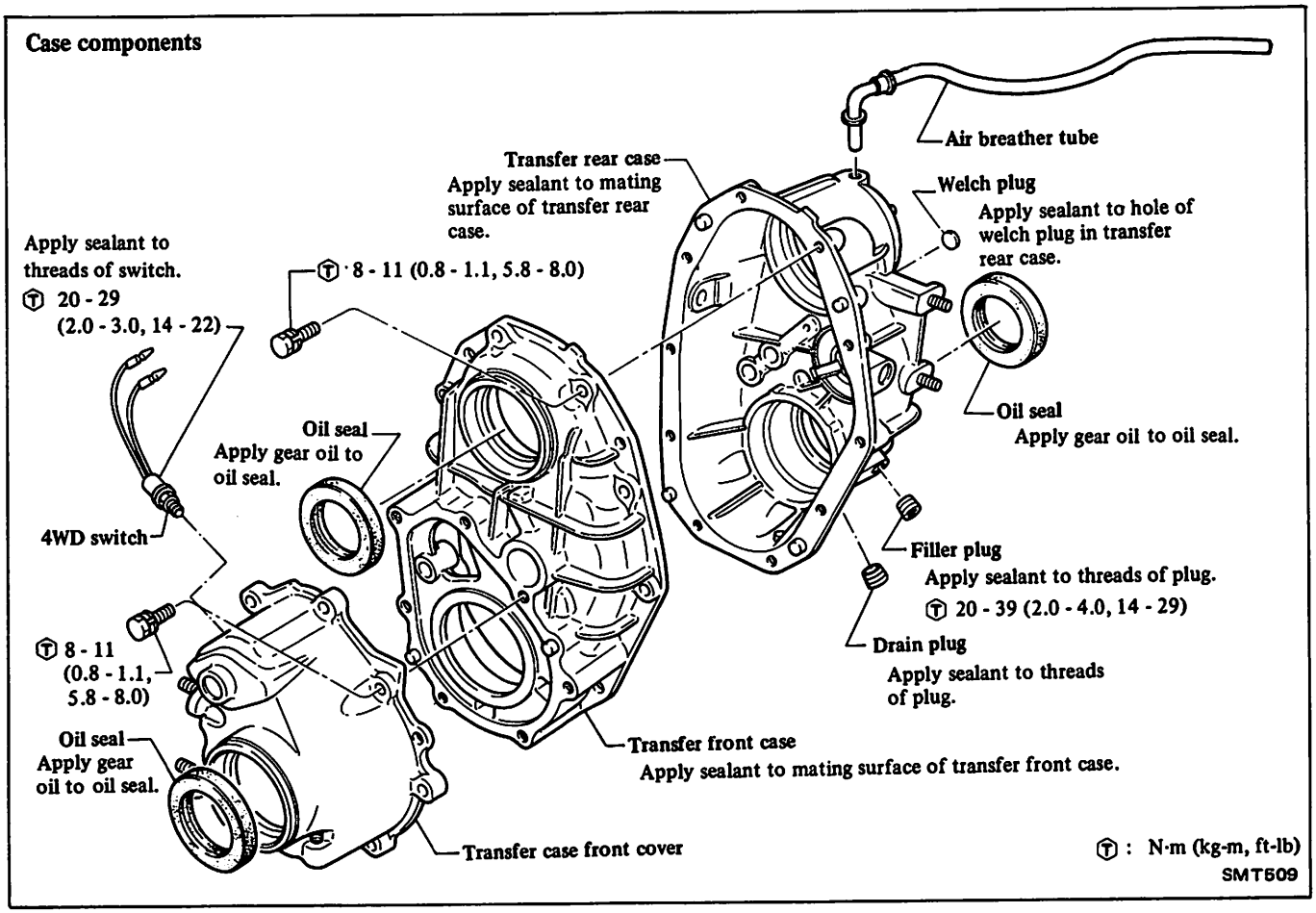

Shift control components

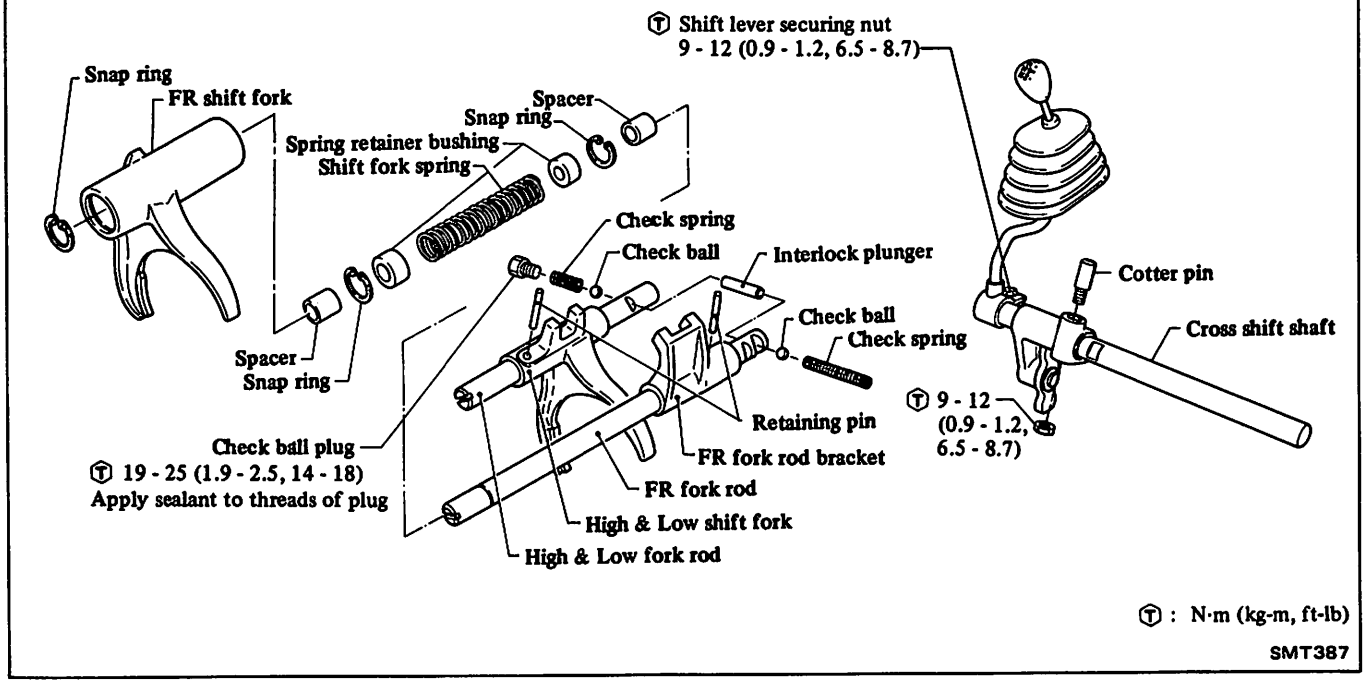

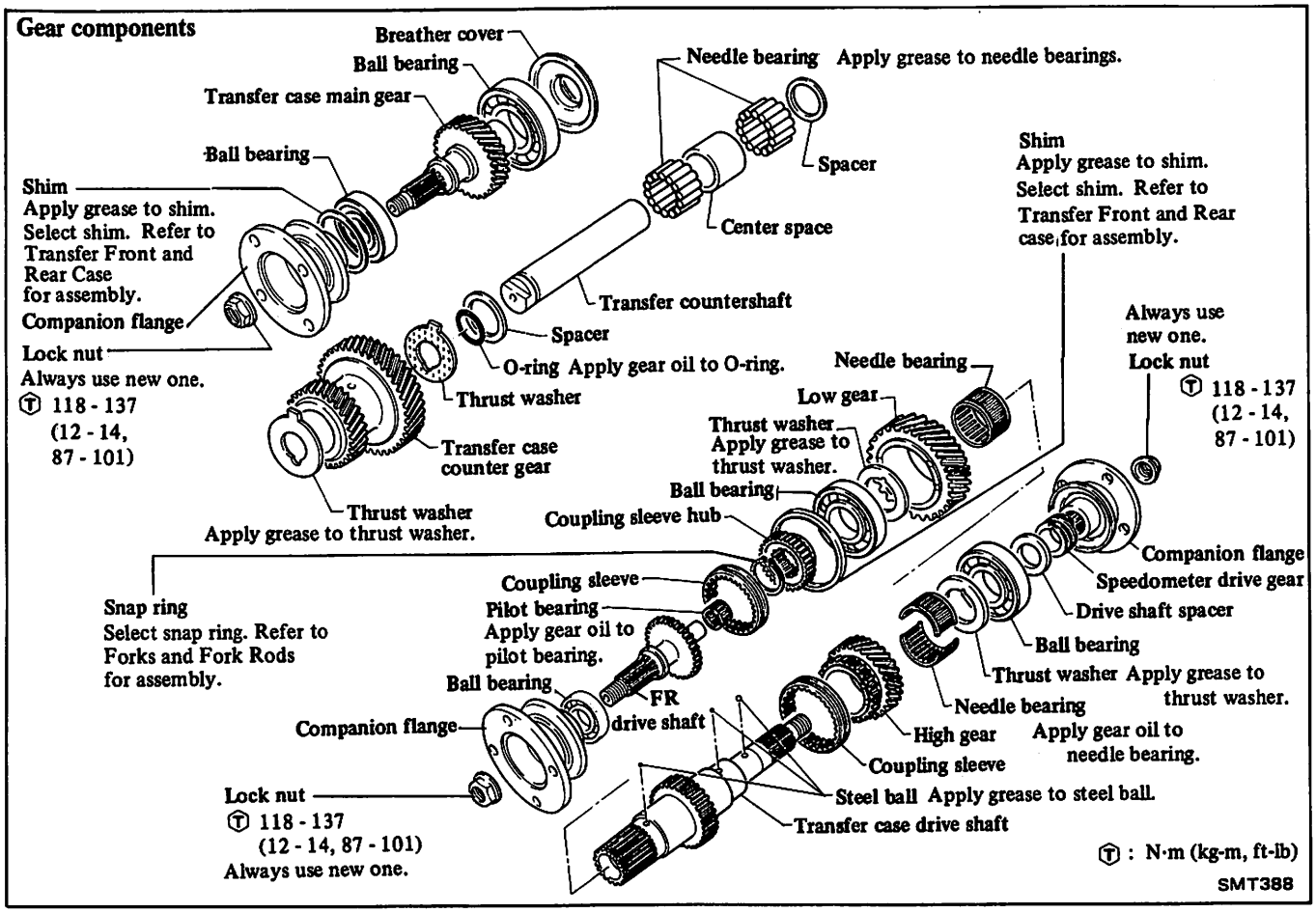

FORKS AND FORK RODS

DISASSEMBLY

1. Wipe off dirt and grease.
2. Drain oil.
3. Shift control lever to 4L and 2H positions, then remove companion flange lock nuts.

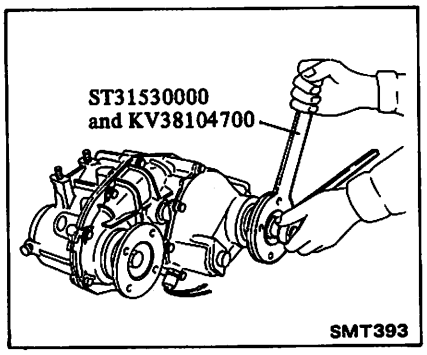

4. Remove three companion flanges.
5. Remove 4WD switch.

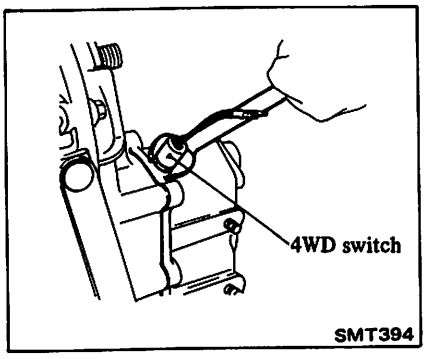

6. Remove transfer case front cover by tapping it with soft faced hammer.

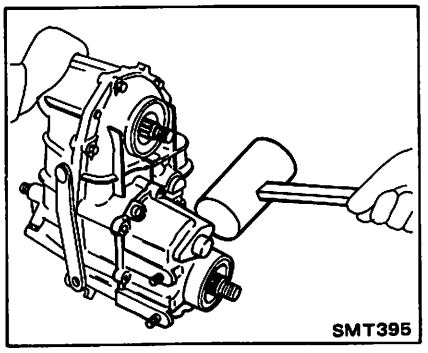

7. Remove FR drive shaft and needle bearing.

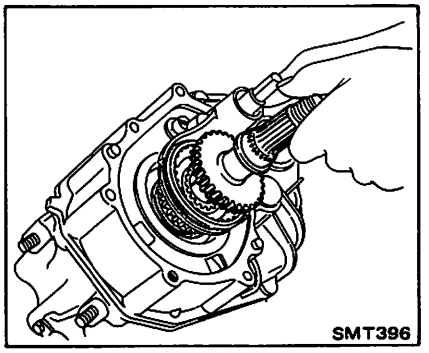

8. Remove snap ring retaining FR shift fork, then remove FR shift fork assembly and spacer together with coupling sleeve.

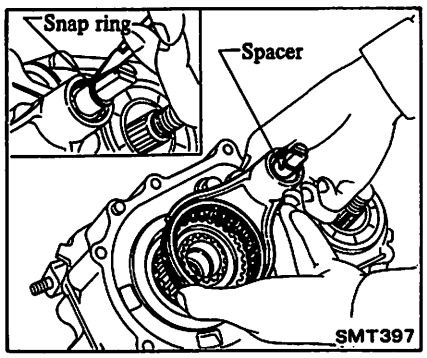

9. Remove snap ring retaining coupling sleeve hub.

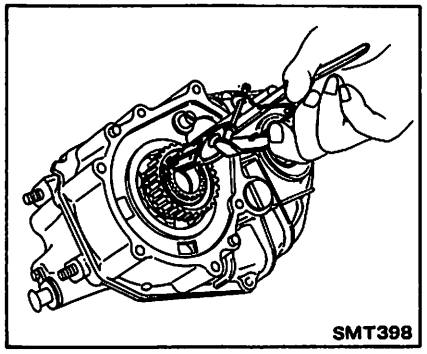

10. Remove coupling sleeve hub.

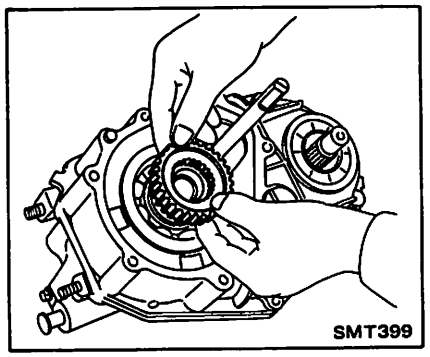

11. Remove transfer front case securing bolts.

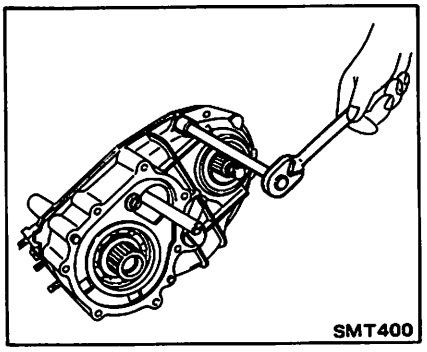

12. Remove transfer front case by tapping it with soft faced hammer.

Do not pry transfer front or rear cases with screwdriver.

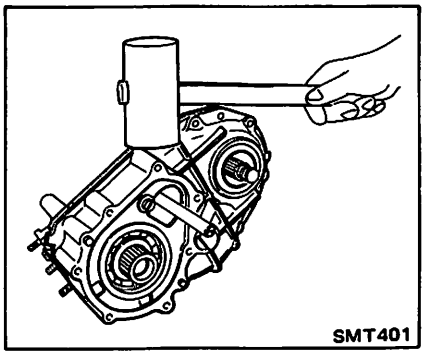

13. Remove cotter pin nut, then remove cotter pin by tapping it with hammer.

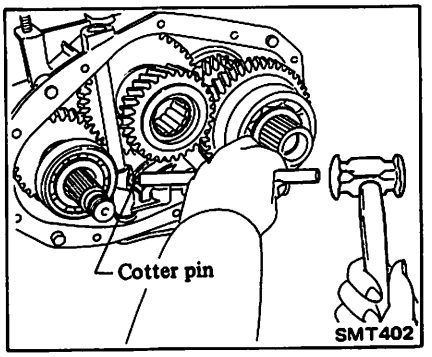

14. Remove cross shift shaft.

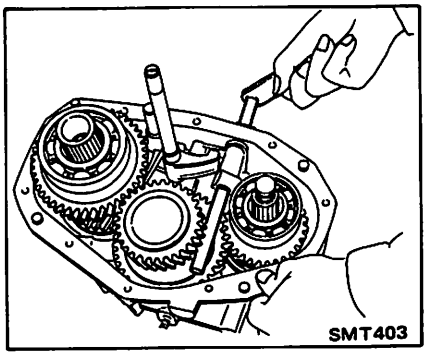

15. Remove shift lever with differential lever.

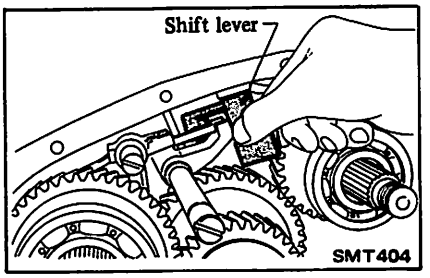

16. Remove check ball plug, check spring and check ball.

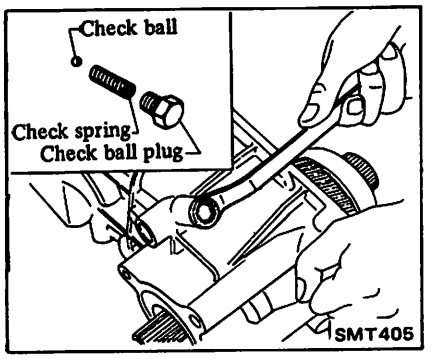

17. Drive out High & Low shift fork retaining pin.

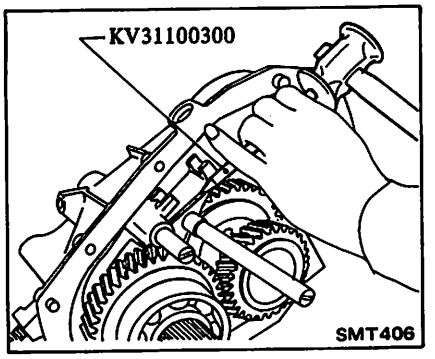

18. Tap rear end of transfer case drive shaft assembly, then remove it with High & Low shift fork and counter gear assembly. Transfer case main gear assembly can be pulled out.

When removing counter gear assembly, be careful not to drop needle bearings.

Remove transfer case front shim.

Be careful not to lose shim.

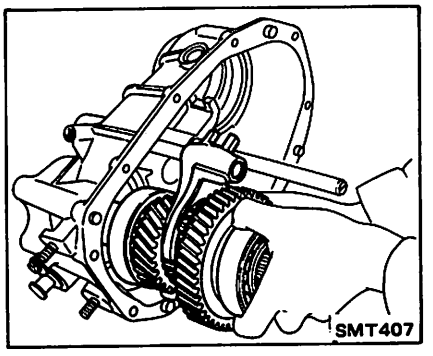

19. Remove High & Low and FR fork rods, interlock plunger, steel ball and check spring.
20. Place FR fork rod in a vise, then drive out retaining pin.

FR fork rod bracket can be removed.

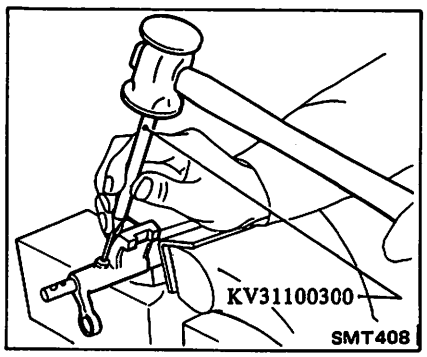

21. Insert M8 bolt into FR shift fork and tighten nut to eliminate shift fork spring tension.

Remove snap ring with snap ring plier.

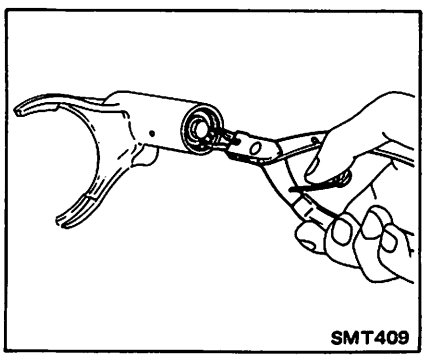

22. Remove spring retainer bushings and shift fork spring. Separate spring retainer bushing and shift fork spring.

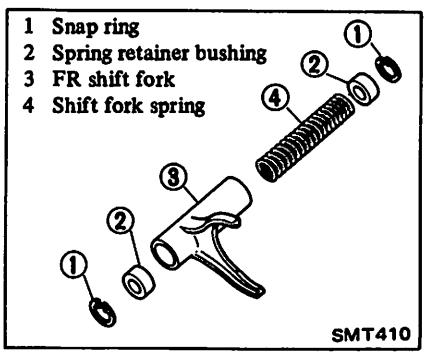

INSPECTION

Clean with solvent and check for wear, scratches, projection, damage or other faulty conditions. Replace any part which is worn or damaged.

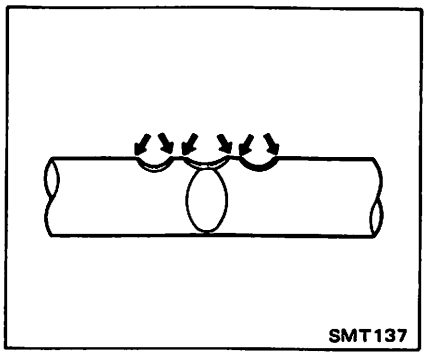

ASSEMBLY

1. Install breather cover, then install transfer main gear assembly by tapping it.
2. Drive out FR shift fork welch plug. This step is necessary for installing FR shift fork.

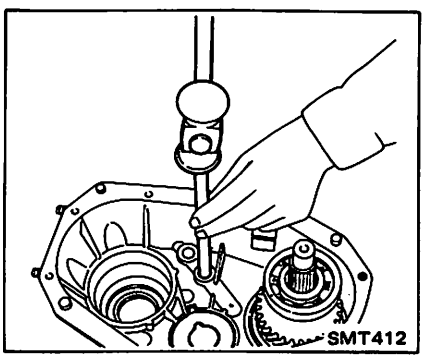

3. Install check spring and steel ball into hole of transfer rear case.
4. Using Tool, retain steel ball.

Be careful not to lose check ball and check spring as the spring force may force them out.

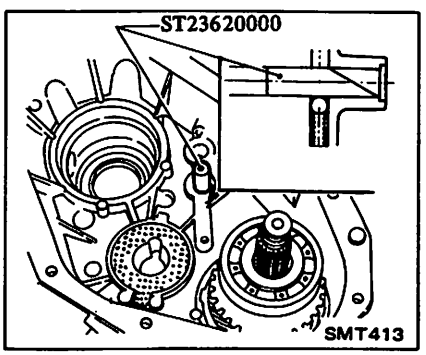

5. Install High & Low shift fork into coupling sleeve.
6. Place FR fork rod in a vise, then install retaining pin.

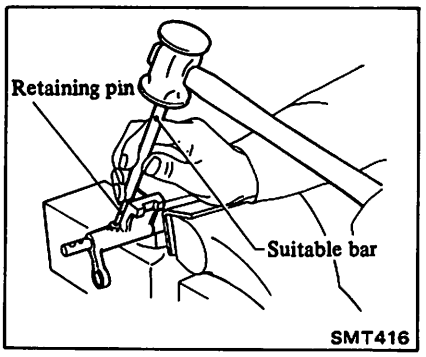

7. Install FR fork rod pushing Tool ST23620000 out of position. Install interlock pin.

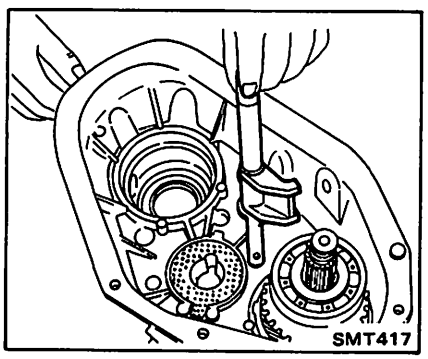

8. Secure FR fork rod bracket to FR fork rod with retaining pin.
9. Assemble snap ring, spring retainer bushings and shift fork spring to FR shift fork. Insert M8 bolt into spring retainer bushing and tighten nut to eliminate spring tension.

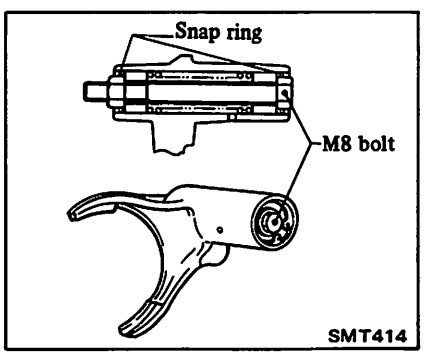

10. Install the other snap ring. Remove bolt and nut.
11. Install new O-ring to countershaft, then install it to transfer rear case.

When installing O-ring, be sure to apply gear oil to it.

12. Install counter gear assembly.

Make sure that counter gear thrust washer is already installed.

13. While raising counter gear assembly slightly, install transfer case drive shaft assembly and engage each gear.

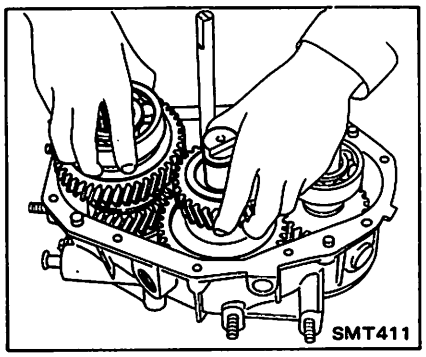

14. Install companion flange at rear side of drive shaft, and tighten finger tight.
15. Tap front end of drive shaft assembly and install it into transfer rear case.

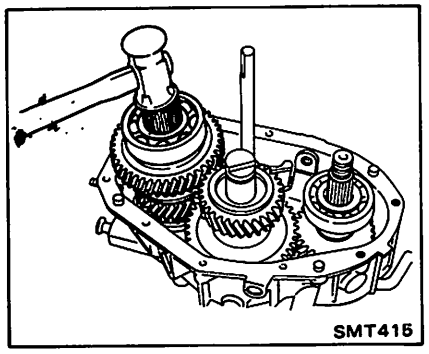

16. Install High & Low fork rod, then secure with retaining pin.

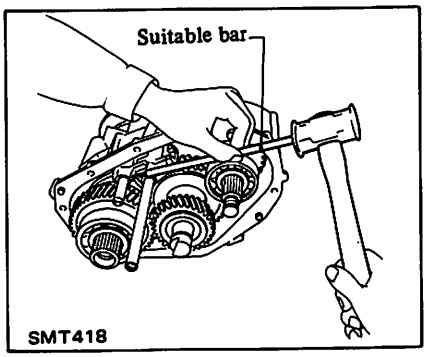

17. Apply sealant to hole of welch plug in transfer rear case and install welch plug in it.

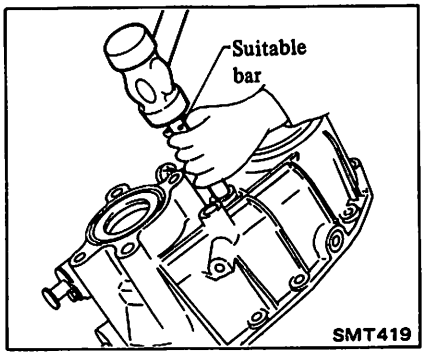

18. Install check ball and check spring.
19. Apply sealant to threads of plug, then tighten it.

Ⓣ : 19 - 25 N·m (1.9 - 2.5 kg-m, 14 - 18 ft-lb)

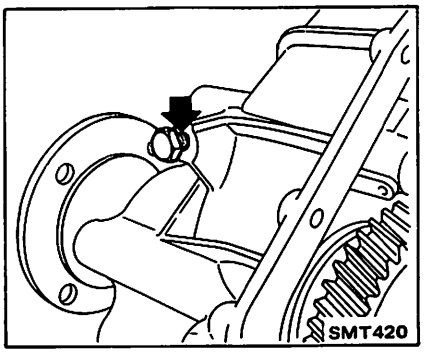

20. Select snap ring so that end play is within specified limit.

Coupling sleeve hub end play:
0 - 0.20 mm (0 - 0.0079 in)
Coupling sleeve hub snap ring:
Refer to S.D.S.

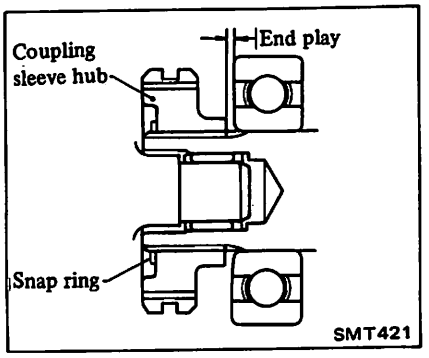

21. Install coupling sleeve hub, then secure with snap ring.

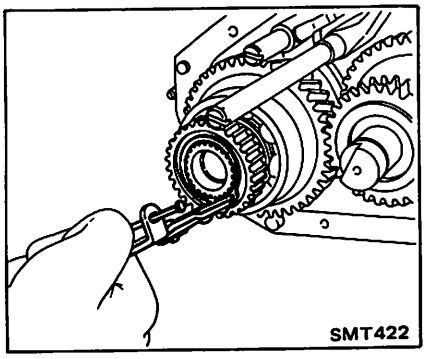

22. Install shift lever with differential lever.
23. Install cross shift shaft.

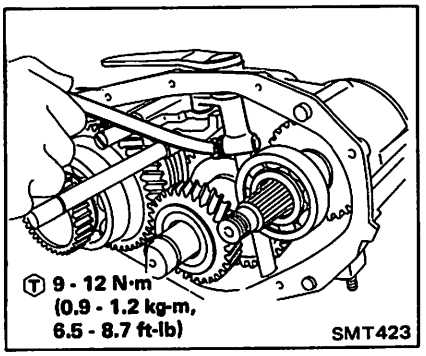

24. Apply grease to thrust washer, main gear front and transfer case front shims selected, then attach them to transfer front case.

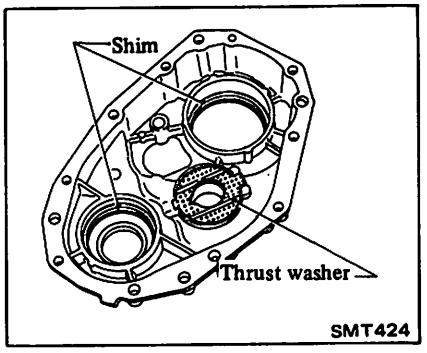

25. Clean mating surface of transfer front case.
26. Apply sealant to mating surface of transfer front case.

Apply sealant continuously.

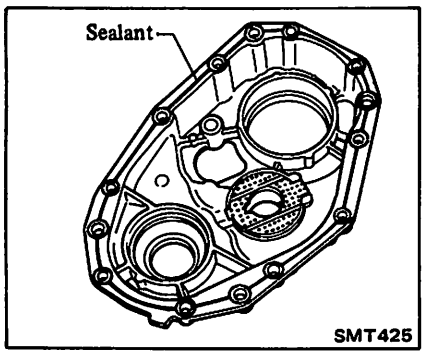

27. Install transfer front case by tapping it with soft faced hammer.

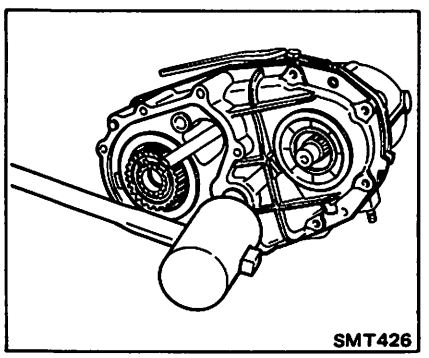

Ⓣ : Transfer front case securing bolt
8 - 11 N·m
(0.8 - 1.1 kg-m,
5.8 - 8.0 ft-lb)

28. Install spacer, FR shift fork assembly with coupling sleeve and spacer, then secure with snap ring.

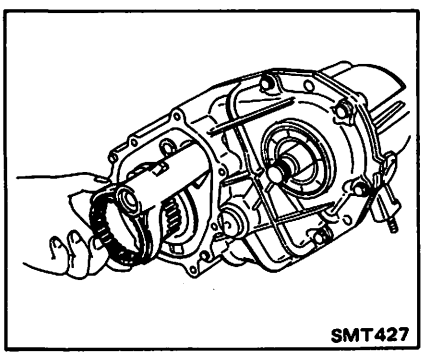

29. Apply gear oil to pilot bearing, then install it in place.

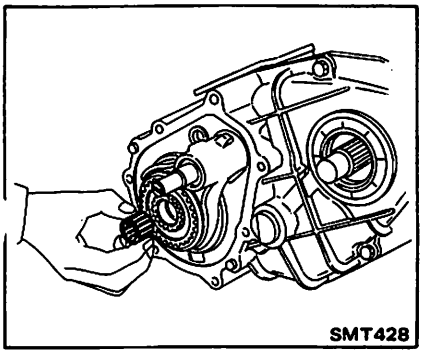

30. Install FR drive shaft to transfer case drive shaft.
31. Clean mating surface of transfer front case, then apply sealant to mating surface of it.

Apply sealant continuously.

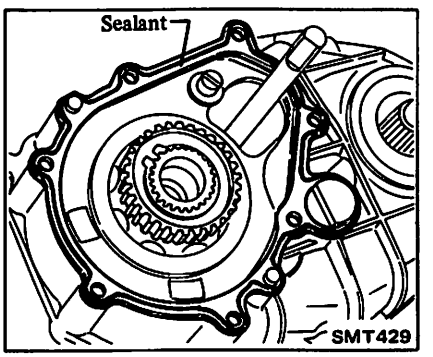

32. Install transfer case front cover.

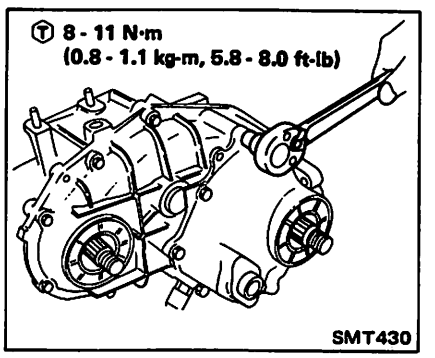

33. Install companion flanges.

Lock nuts are self-lock type so always use new lock nut.

Ⓣ : 118 - 137 N·m
(12 - 14 kg-m,
87 - 101 ft-lb)

34. Install 4WD switch.

Ⓣ : 20 - 29 N·m
(2.0 - 3.0 kg-m,
14 - 22 ft-lb)

GEARS AND SHAFTS

DISASSEMBLY

Counter gear and transfer case main gear

1. Remove transfer case drive shaft assembly, counter gear assembly, forks and fork rods.

Refer to Forks and Fork Rods for disassembly.

2. Remove transfer main gear and breather cover from transfer rear case.
3. Remove transfer main gear front bearing.

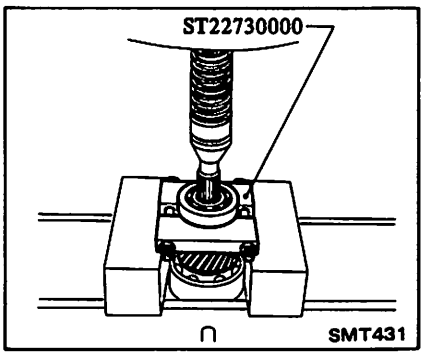

4. Remove transfer main gear rear bearing.

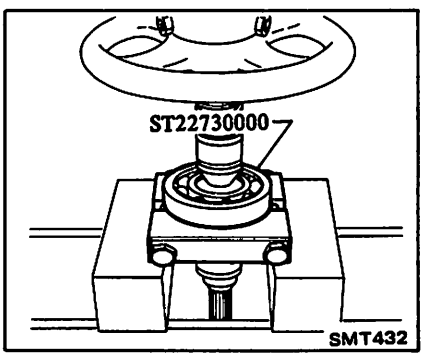

5. Remove needle bearings, center spacer and spacer from counter gear.

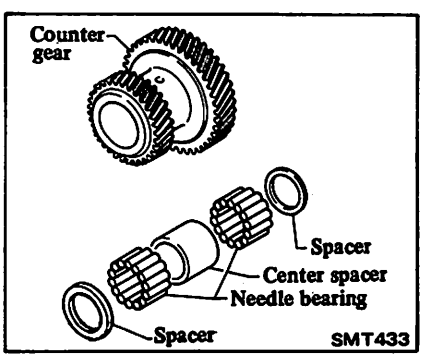

Low gear

1. Press out drive shaft front ball bearing.

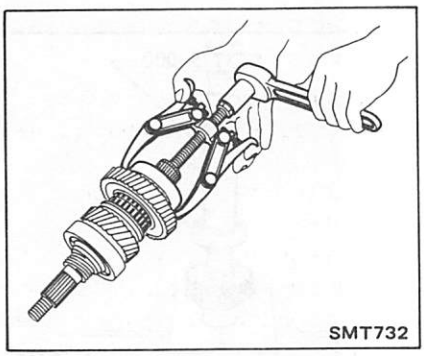

2. Remove thrust washer and steel ball.

Be careful not to lose steel ball retaining thrust washer.

3. Remove Low gear and needle bearings.

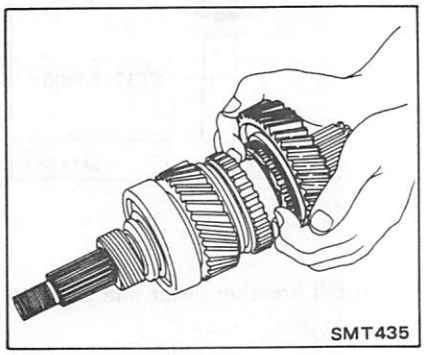

High gear

1. Remove speedometer worm gear.

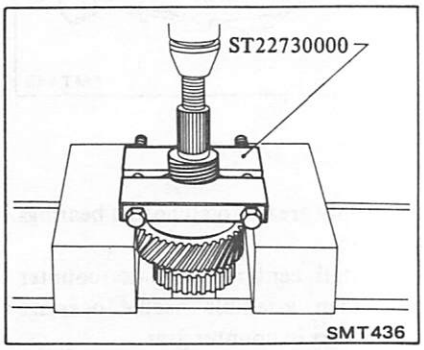

2. Remove spacer and steel ball.

Be careful not to lose steel ball retaining spacer.

3. Press out drive shaft rear ball bearing with suitable plate or puller.

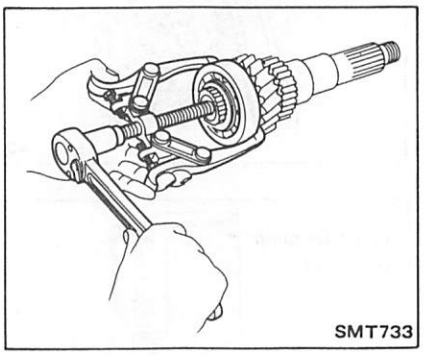

4. Remove thrust washer and steel ball.

Be careful not to lose steel ball retaining thrust washer.

5. Remove High gear, needle bearings and coupling sleeve.

INSPECTION

Gear and shafts

Check all gears for excessive wear, chips or cracks; replace as required.

Measure gear end play:

- It is necessary to measure end play before disassembling transfer case drive shaft and after reassembling transfer case drive shaft.
- If end play is not within specified limit, disassemble and check parts for condition.
- Replace any part which is worn or damaged.

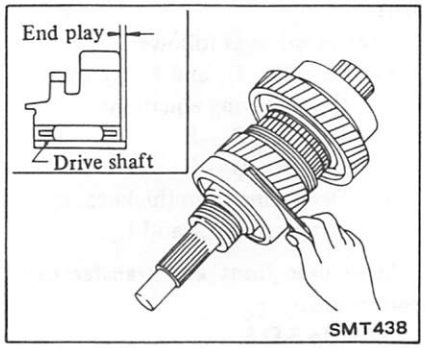

Standard end play:

High gear
0.10 - 0.20 mm
(0.0039 - 0.0079 in)

Low gear
0.10 - 0.20 mm
(0.0039 - 0.0079 in)

Coupling sleeve hub
0 - 0.20 mm
(0 - 0.0079 in)

Bearings

Refer to Transfer Front Cover for inspection.

ASSEMBLY

High gear

1. Apply gear oil to needle bearings and install needle bearings and High gear onto transfer case drive shaft.
2. Apply grease to steel ball and thrust washer, then attach them to High gear.
3. Press drive shaft rear ball bearing.

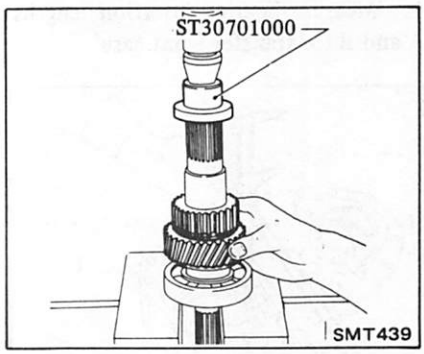

When pressing it, be sure to hold High gear by hand so as not to drop thrust washer.

4. Install drive shaft spacer. Apply grease to steel ball, then install steel ball and speedometer worm gear.

Low gear

5. Apply gear oil to needle bearing and install needle bearings, coupling sleeve and Low gear.
6. Apply grease to steel ball and thrust washer, then attach them to Low gear.

7. Press drive shaft front ball bearing.

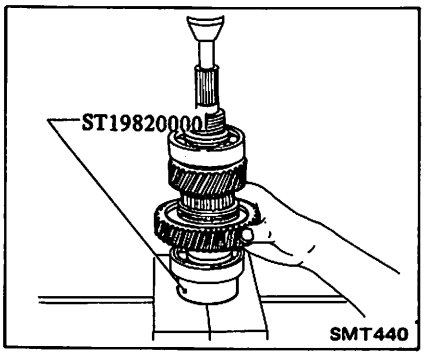

When pressing it, be sure to hold Low gear by hand so as not to drop thrust washer.

Selection of shims

If thrust washer, each ball bearing, drive shaft, transfer front & rear cases or transfer case main gear is replaced, it is necessary to select each shim.

1. Measure bearing insertion lengths A and B for transfer front case.

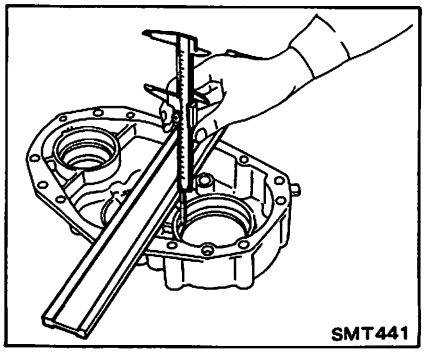

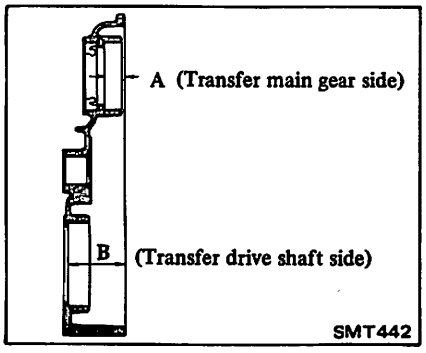

2. Measure bearing insertion lengths C and D for transfer rear case.

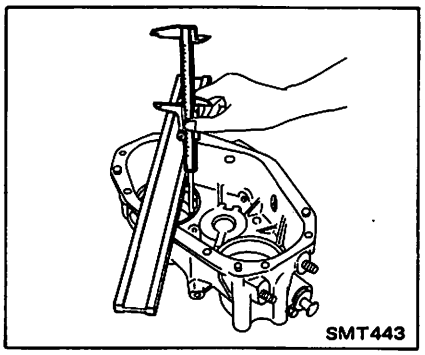

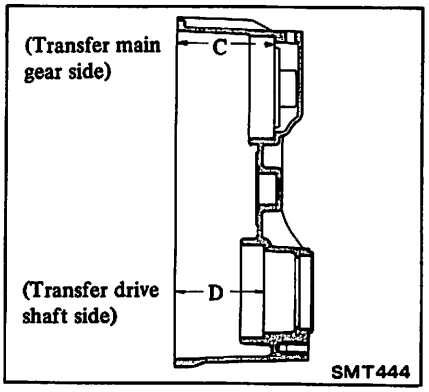

When measuring C, be sure to install breather cover in its position.

3. Measure distance E between ball bearing outer races of transfer main gear.

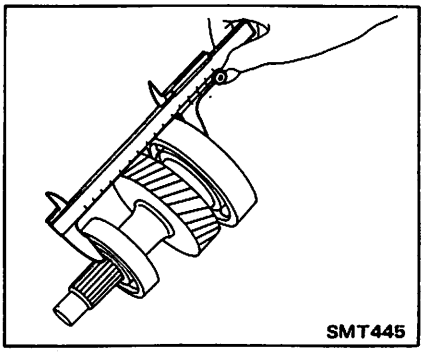

4. Measure distance F between ball bearing outer races of transfer drive shaft.
5. Select shims as follows:
   5-1 Calculate L_1 and L_2 by using the following equations:
   $L_1 = A + C - E$
   $L_2 = B + D - F$
   5-2 Determine shim thickness by using values L_1 and L_2.

Main gear front and transfer case front shims.

Refer to S.D.S.

Transfer case main gear and counter gear

1. Press transfer case main gear front bearing.

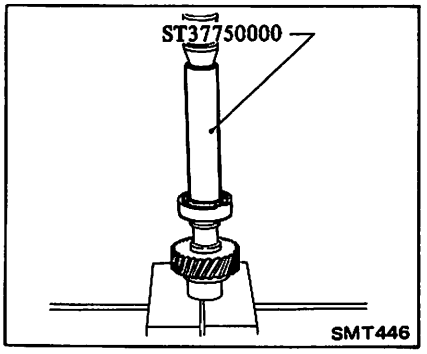

2. Press transfer case main gear rear bearing.

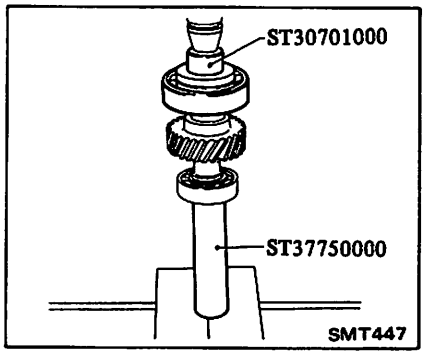

3. Install breather cover and transfer case main gear.

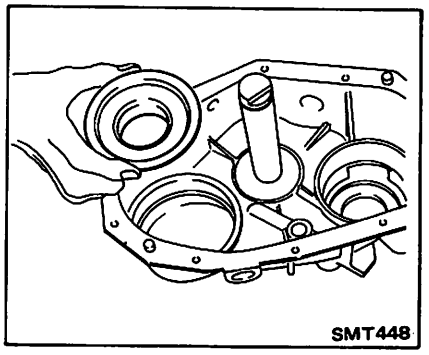

4. Apply grease to all needle bearings and spacers.
5. Install center spacer to counter gear, then assemble needle bearings and spacers in counter gear.

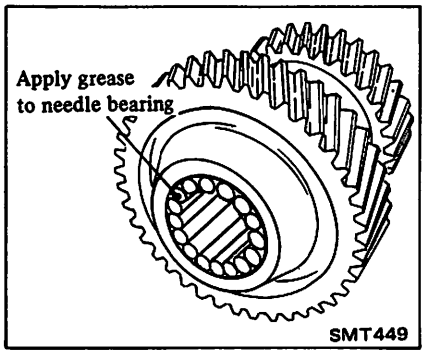

a. **Use 28 needle bearing (14 on each side).**
b. **After attaching needle bearings in place, apply grease thickly so that bearing does not come off.**

6. Install transfer case drive shaft assembly, forks and fork rods.
Refer to Forks and Fork Rods for assembly.

TRANSFER CASE FRONT COVER, TRANSFER FRONT CASE AND TRANSFER REAR CASE (Replacement of oil seals and bearings)

Disassembly and assembly procedures for above cases are the same as those of gears and shafts. Refer to Gears and Shafts for disassembly and assembly.

Described below are replacement procedures for oil seal, bearing and cases after disassembling cases.

For replacement of main gear front, rear bearing, drive shaft front and rear bearing, refer to Disassembly and Assembly of Gears and Shafts.

TRANSFER FRONT COVER

Disassembly

1. Remove oil seal.

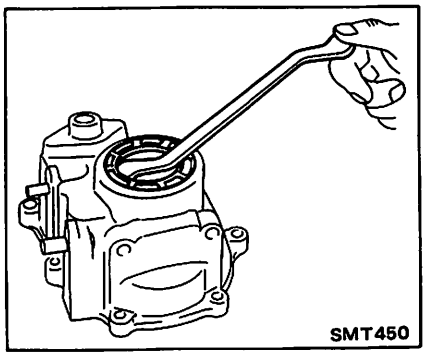

2. Remove snap ring.

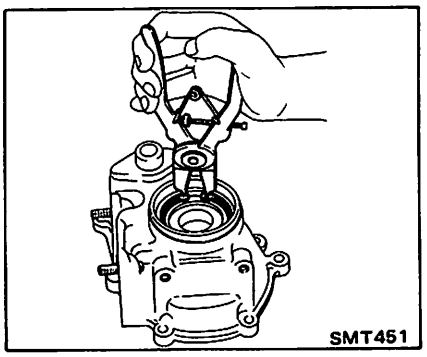

3. Remove bearing.

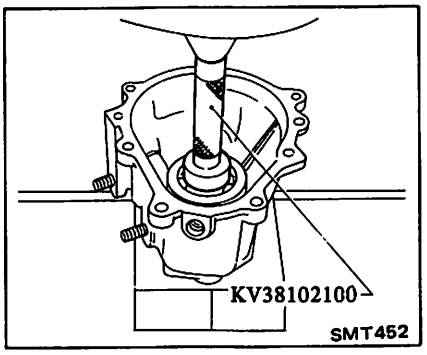

Inspection

Oil seals

1. Replace oil seal if sealing lip is deformed or cracked. Also discard oil seal if spring is out of position.
2. Check the oil seal lip contacting with shaft; if necessary replace oil seal and shaft as a set.

Bearings

1. Thoroughly clean bearing and dry with compressed air.

CAUTION:
Do not allow the bearings to spin. Because it will damage the race and balls. Turn them slowly by hand.

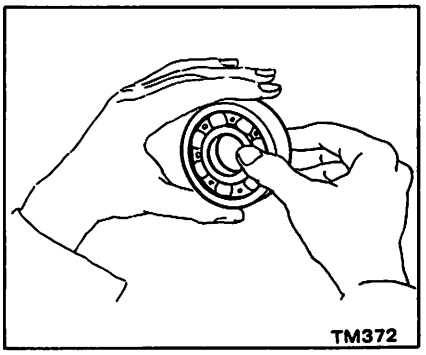

2. When race and ball surfaces are worn or rough, or when balls are out-of-round or rough, replace bearing with a new one.
3. Replace needle bearing if worn or damaged.

Transfer case front cover

1. Clean with solvent and check for cracks or pits by means of dyeing test.
2. Check mating surface of transmission case for small nicks, projection or sealant.

Assembly

1. Press bearing.

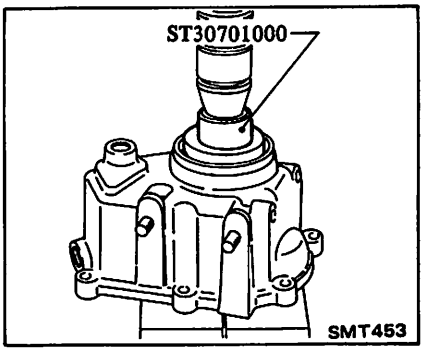

2. Install snap ring with snap ring pliers.
3. Apply coat of gear to oil seal surface, then drive new seal into place.

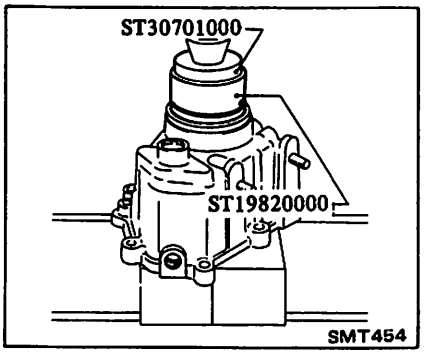

4. Lubricate seal lip with gear oil.

TRANSFER FRONT AND REAR CASE

Disassembly

1. Remove oil seal.

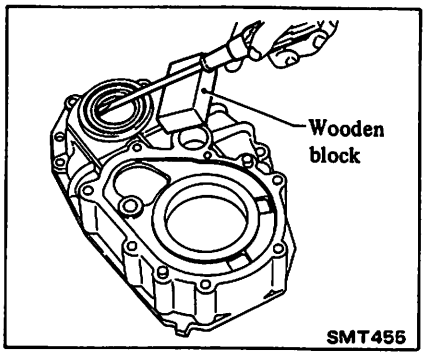

Inspection

Refer to Transfer Front Cover for inspection.

Assembly

1. Apply coat of gear to oil seal surface, then drive new seal into place.

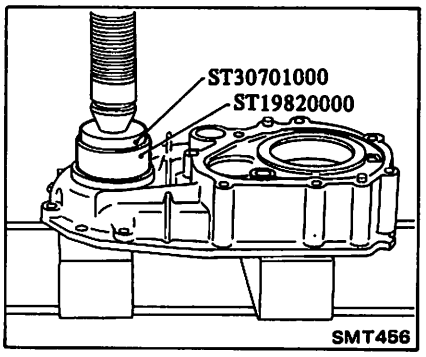

2. Lubricate seal lip with gear oil.

SERVICE DATA AND SPECIFICATIONS (S.D.S.)

GENERAL SPECIFICATIONS

Transfer model			T100L
Shift type			2H 4H N 4L
Gear ratio	High		1.000
	Low		2.074
Combined gear ratio with transmission	High	1st	3.592
		2nd	2.057
		3rd	1.361
		4th	1.000
		5th	0.813
		Rev.	3.657
	Low	1st	7.450
		2nd	4.266
		3rd	2.823
		4th	2.074
		5th	1.686
		Rev.	7.585
Number of teeth	Main gear		29
	Counter gear	High	41
		Low	30
	Transfer case	High	28
		Low	44
Speedometer gear ratio			19/6*
Oil capacity ℓ (US pt, Imp pt)			1.4 (3, 2-1/2)

*: For a final gear ratio of 4.375

INSPECTION AND ADJUSTMENT

GEAR END PLAY

Unit: mm (in)

High gear	0.10 - 0.20 (0.0039 - 0.0079)
Low gear	0.10 - 0.20 (0.0039 - 0.0079)
Coupling sleeve hub	0 - 0.20 (0 - 0.0079)

AVAILABLE SNAP RING

Coupling sleeve hub

Thickness mm (in)	Part number
1.3 (0.051)	33145 C6903
1.4 (0.055)	33145 C6904
1.5 (0.059)	33145 C6900
1.6 (0.063)	33145 C6901
1.7 (0.067)	33145 C6902

AVAILABLE SHIM

Main gear front

Unit: mm (in)

"L_1"	Thichness of shim	Part Number
0.06 - 0.15 (0.0024 - 0.0059)	–	–
0.16 - 0.25 (0.0063 - 0.0098)	0.10 (0.0039)	33112 C6900
0.26 - 0.35 (0.0102 - 0.0138)	0.20 (0.0079)	33112 C6901
0.36 - 0.45 (0.0142 - 0.0177)	0.30 (0.0118)	33112 C6902
0.46 - 0.55 (0.0181 - 0.0217)	0.40 (0.0157)	33112 C6903

Transfer case front

Unit: mm (in)

"L_2"	Thickness of shim	Part Number
0 - 0.13 (0 - 0.0051)	–	–
0.14 - 0.23 (0.0055 - 0.0091)	0.10 (0.0039)	33147 C6900
0.24 - 0.33 (0.0094 - 0.0130)	0.20 (0.0079)	33147 C6901
0.34 - 0.43 (0.0134 - 0.0169)	0.30 (0.0118)	33147 C6902
0.44 - 0.53 (0.0173 - 0.0209)	0.40 (0.0157)	33147 C6903
0.54 - 0.63 (0.0213 - 0.0248)	0.50 (0.0197)	33147 C6904

TIGHTENING TORQUE

Unit	N·m	kg-m	ft-lb
Transfer installation			
Insulator to transfer	27 - 35	2.8 - 3.6	20 - 26
Insulator to body	27 - 35	2.8 - 3.6	20 - 26
Transfer protector	27 - 35	2.8 - 3.6	20 - 26
Transfer unit			
Check ball plug	19 - 25	1.9 - 2.5	14 - 18
Cotter pin	9 - 12	0.9 - 1.2	6.5 - 8.7
Transfer front case	8 - 11	0.8 - 1.1	5.8 - 8.0
Transfer case front cover	8 - 11	0.8 - 1.1	5.8 - 8.0
4WD switch	20 - 29	2.0 - 3.0	14 - 22
Companion flange	118 - 137	12 - 14	87 - 101
Drain plug	20 - 39	2.0 - 4.0	14 - 29
Filler plug	20 - 39	2.0 - 4.0	14 - 29
Speedometer sleeve	3 - 4	0.3 - 0.4	2.2 - 2.9

TROUBLE DIAGNOSES AND CORRECTIONS

Noise

Check level and color of oil.

Level/color N.G.

Add/replace oil. (If oil leaks repair cause.)

Check noise.

Noise does not stop.

Noise stops.

O.K.

Level and color O.K.

After shifting transmission control lever to 4th position, shift gears and locate which gear position makes noise.

Noise in Neutral (When vehicle is stopped.)

Disengage clutch to see if noise stops.

Noise does not stop.

Noise outside transmission. Check engine and clutch, etc.

Noise stops.

Noise in transmission. Noise may be caused by variations in engine torque.
Adjust engine idle speed.

Noise in position other than Neutral

Position	Noise
2H	No
4H	Occurs
4L	Occurs

Noise peaks at a specific vehicle speed.

Noise appears to occur in front differential carrier or front axle. Check front differential carrier and/or front axle and eliminate cause of noise.

Position	Noise
2H	Occurs
4H	Occurs
4L	Occurs

Noise peaks at specific vehicle speed.

Noise appears to occur in rear differential carrier and rear axle. Check rear differential carrier and rear axle and eliminate cause of noise.

Position	Noise
2H	Occurs
4H	Occurs
4L	No

Noise peaks at specific engine rpm.

Noise appears to occur in transmission. Disassemble and check counter gear and Low gear in which noise occurs for meshing surface and bearings.

Replace counter gear and Low gear and/or bearing.

Position	Noise
2H	No
4H	No
4L	Occurs

Noise peaks at specific engine rpm.

Noise appears to occur in transmission. Disassemble and check counter gear and High gear in which noise occurs for meshing surface and bearings.

Replace counter gear and High gear and/or bearing.

Gear jumping out of mesh

↓

Locate position where gears jump out of mesh.

↓

- Check for free play in control lever.
- Shifting is accomplished without problems. (Check interference of control lever with console.)

N.G. → Adjust or replace.

O.K. → Check for fatigue, play, etc. on transfer mounts.

N.G. → Adjust or replace.

O.K. → Problem may be inside transfer. Disassemble and check transfer.

↓

Check end play of "jump-out" gear.

End play excessive → Adjust or replace.

End play O.K. → Check for engaging, damage or wear on coupling sleeve, FR drive shaft, hub, transfer case drive shaft and clutch gear of Low and High gears.

Damage or wear → Replace.

O.K. → Check for wear or damage on check ball and fatigue or breaks on check spring.

Damage or wear → Replace.

O.K. → Check for wear or deformation of fork rod ball groove.

Wear or deformation → Replace.

O.K. → Check for wear or play of "jump-out" FR drive shaft, drive shaft and coupling sleeve splines.

Wear or play → Replace.

No wear or play → Check for wear or damage on bearings of main gear and drive shaft. Replace if worn.

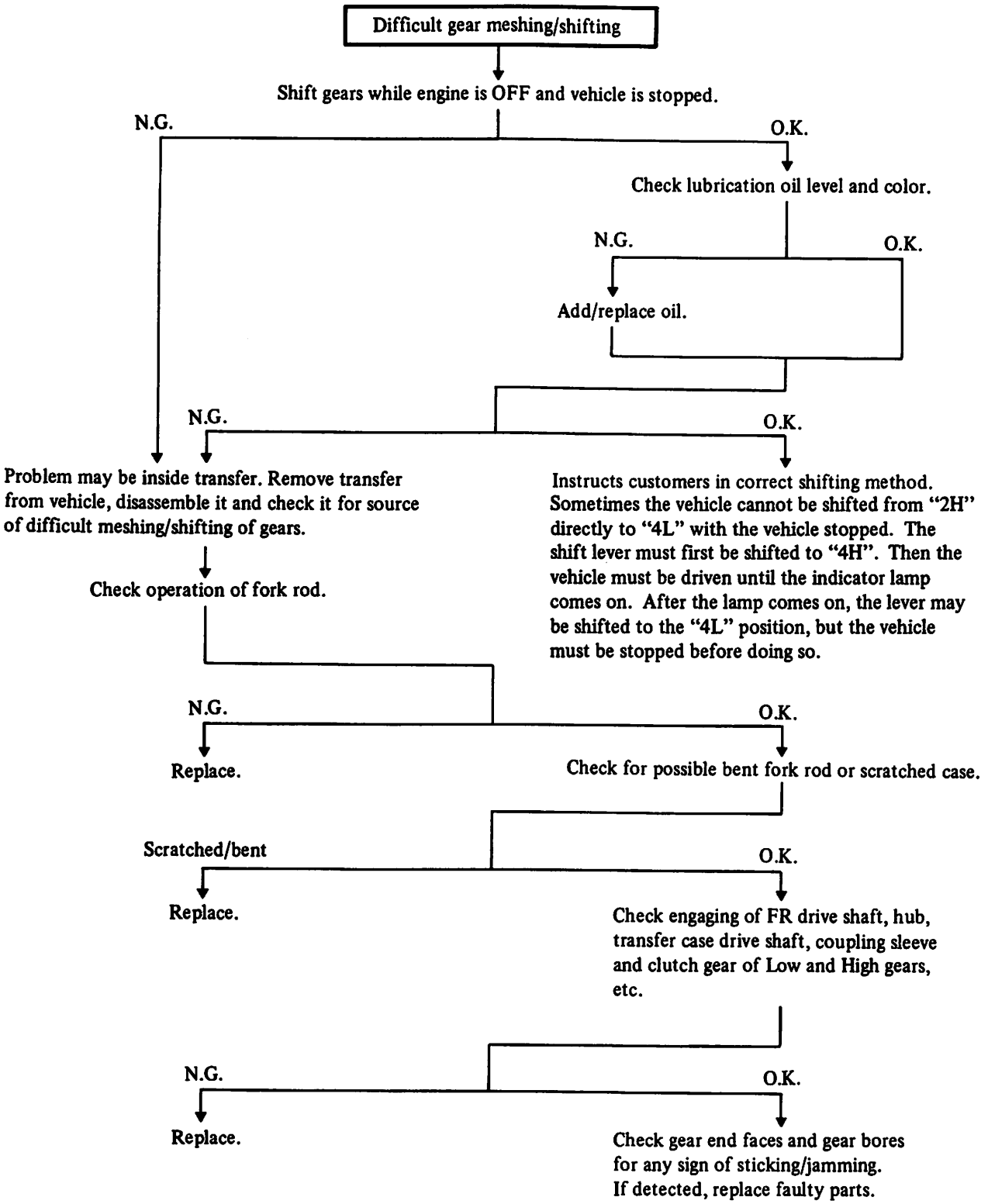
Difficult gear meshing/shifting
Shift gears while engine is OFF and vehicle is stopped.
N.G.
O.K.
Check lubrication oil level and color.
N.G.
O.K.
Add/replace oil.
N.G.
O.K.
Problem may be inside transfer. Remove transfer from vehicle, disassemble it and check it for source of difficult meshing/shifting of gears.
Instructs customers in correct shifting method. Sometimes the vehicle cannot be shifted from "2H" directly to "4L" with the vehicle stopped. The shift lever must first be shifted to "4H". Then the vehicle must be driven until the indicator lamp comes on. After the lamp comes on, the lever may be shifted to the "4L" position, but the vehicle must be stopped before doing so.
Check operation of fork rod.
N.G.
O.K.
Replace.
Check for possible bent fork rod or scratched case.
Scratched/bent
O.K.
Replace.
Check engaging of FR drive shaft, hub, transfer case drive shaft, coupling sleeve and clutch gear of Low and High gears, etc.
N.G.
O.K.
Replace.
Check gear end faces and gear bores for any sign of sticking/jamming. If detected, replace faulty parts.

SPECIAL SERVICE TOOLS

Tool number (Kent-Moore No.)	Tool name
ST31530000 (J25774)	Companion flange wrench
KV38104700 (–)	Companion flange
KV31100300 (–)	Fork rod pin punch
ST23620000 (J25690-01)	Fork rod guide
ST22730000 (J25681)	Bearing puller
ST30701000 (J25742-2)	Bearing drift
ST19820000 (–)	Bearing drift
ST37750000 (J25862)	Bearing drift
KV38102100 (J25803)	Oil seal drift

PROPELLER SHAFT & DIFFERENTIAL CARRIER

SECTION PD

CONTENTS

PROPELLER SHAFT ..... PD- 2
GENERAL INSPECTION ..... PD- 4
PROPELLER SHAFT VIBRATION ..... PD- 4
REMOVAL AND INSTALLATION ..... PD- 4
PRIMARY PROPELLER SHAFT ..... PD- 4
FRONT AND REAR PROPELLER SHAFT ..... PD- 5
INSPECTION ..... PD- 5
PROPELLER SHAFT RUNOUT ..... PD- 5
FLANGE YOKE AND SLEEVE YOKE ... PD- 5
JOURNAL AXIAL PLAY ..... PD- 5
REPAIR ..... PD- 5
CENTER BEARING (3S63H) ..... PD- 5
JOURNAL ..... PD- 6
FRONT FINAL DRIVE —Model : R180— ..... PD- 8
FRONT DIFFERENTIAL CARRIER MOUNTING ..... PD- 9
PREPARATION FOR DISASSEMBLY ..... PD- 9
REMOVAL ..... PD- 9
PRE-DISASSEMBLY INSPECTION PD-11
TOOTH CONTACT PD-12
TOOTH PATTERN INTERPRETATION PD-13
DISASSEMBLY PD-14
PARTS INSPECTION PD-18
DIFFERENTIAL CASE ASSEMBLY PD-19
PRELOAD/PINION HEIGHT ADJUSTMENT PD-20
PINION ASSEMBLY PD-23
SIDE BEARING SHIM DETERMINATION .. PD-25
FINAL VERIFICATION PD-29
FRONT OIL SEAL REPLACEMENT PD-31
SIDE OIL SEAL REPLACEMENT PD-32
REAR FINAL DRIVE —Model : H190-ML, H190A— PD-33
PREPARATION FOR DISASSEMBLY PD-34
REMOVAL PD-34
PRE-DISASSEMBLY INSPECTION PD-34
TOOTH CONTACT PD-35
TOOTH PATTERN INTERPRETATION PD-36
DISASSEMBLY PD-37
PARTS INSPECTION PD-40
ASSEMBLY PD-40
DIFFERENTIAL CASE PD-40
PRELOAD/PINION HEIGHT ADJUSTMENT PD-41
PINION ASSEMBLY PD-44
SIDE BEARING SHIM DETERMINATION .. PD-45
FINAL VERIFICATION PD-48
FRONT OIL SEAL REPLACEMENT PD-50
REMOVAL PD-50
ASSEMBLY PD-51
REAR FINAL DRIVE —Model : C200— PD-53
PREPARATION FOR DISASSEMBLY PD-54
REMOVAL PD-54
PRE-DISASSEMBLY INSPECTION PD-54
TOOTH CONTACT PD-55
TOOTH PATTERN INTERPRETATION PD-56
DISASSEMBLY PD-57
PARTS INSPECTION PD-61
ASSEMBLY PD-62
DIFFERENTIAL CASE PD-62
PRELOAD/PINION HEIGHT ADJUSTMENT PD-63
PINION ASSEMBLY PD-64
SIDE BEARING SHIM DETERMINATION .. PD-66
FINAL VERIFICATION PD-69
FRONT OIL SEAL REPLACEMENT PD-70
REMOVAL PD-70
ASSEMBLY PD-72
SERVICE DATA AND SPECIFICATIONS (S.D.S.) PD-74
PROPELLER SHAFT PD-74
GENERAL SPECIFICATIONS PD-74
SERVICE DATA PD-74
TIGHTENING TORQUE PD-75
DIFFERENTIAL CARRIER PD-75
GENERAL SPECIFICATIONS PD-75
SERVICE DATA PD-76
TIGHTENING TORQUE PD-78
TROUBLE DIAGNOSES AND CORRECTIONS PD-79
PROPELLER SHAFT PD-79
DIFFERENTIAL CARRIER PD-79
SPECIAL SERVICE TOOLS PD-81

PROPELLER SHAFT

– Model 3S63H – (2WD)

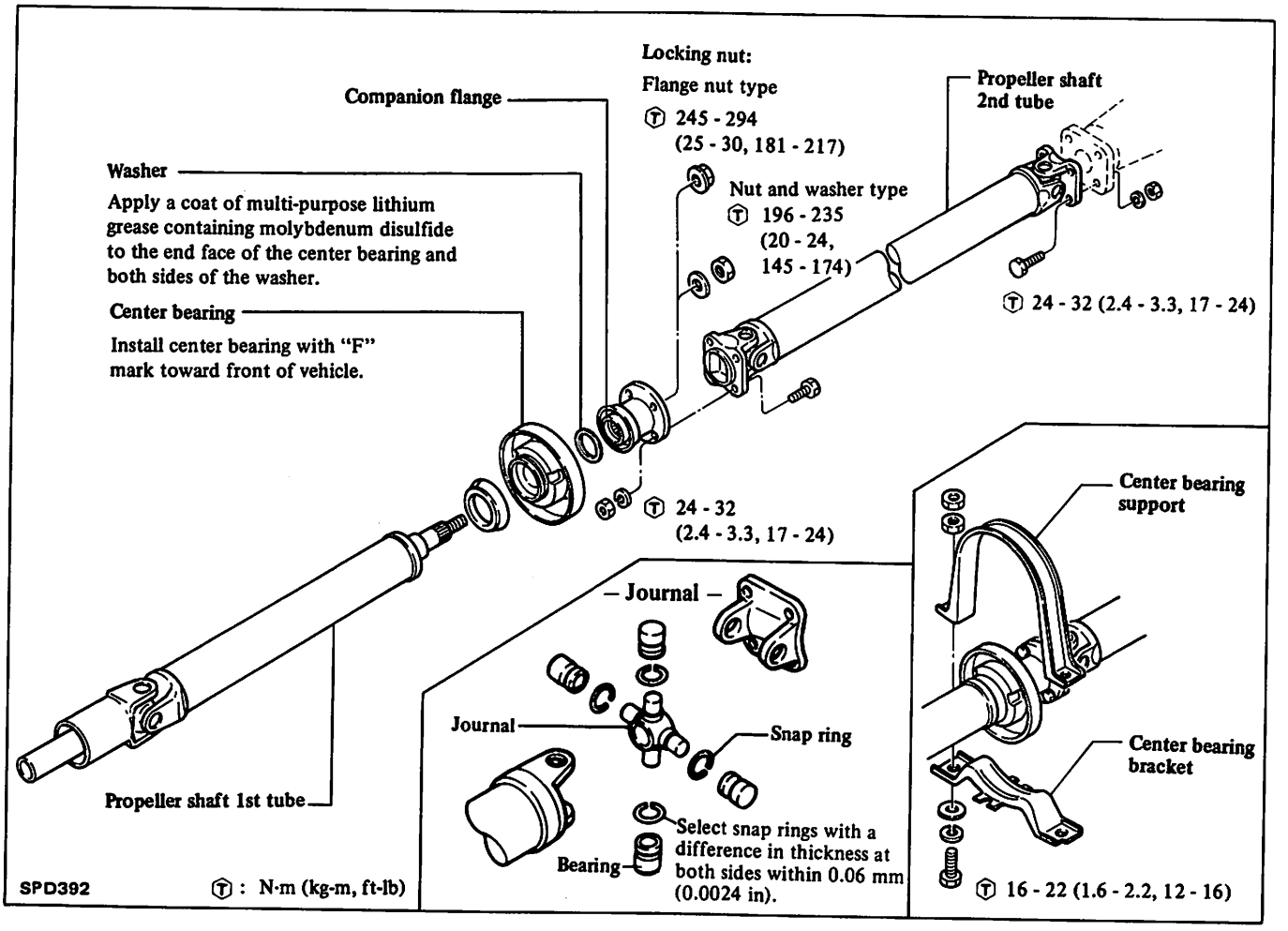

Front propeller shaft (4WD)

– Model 2F63H –

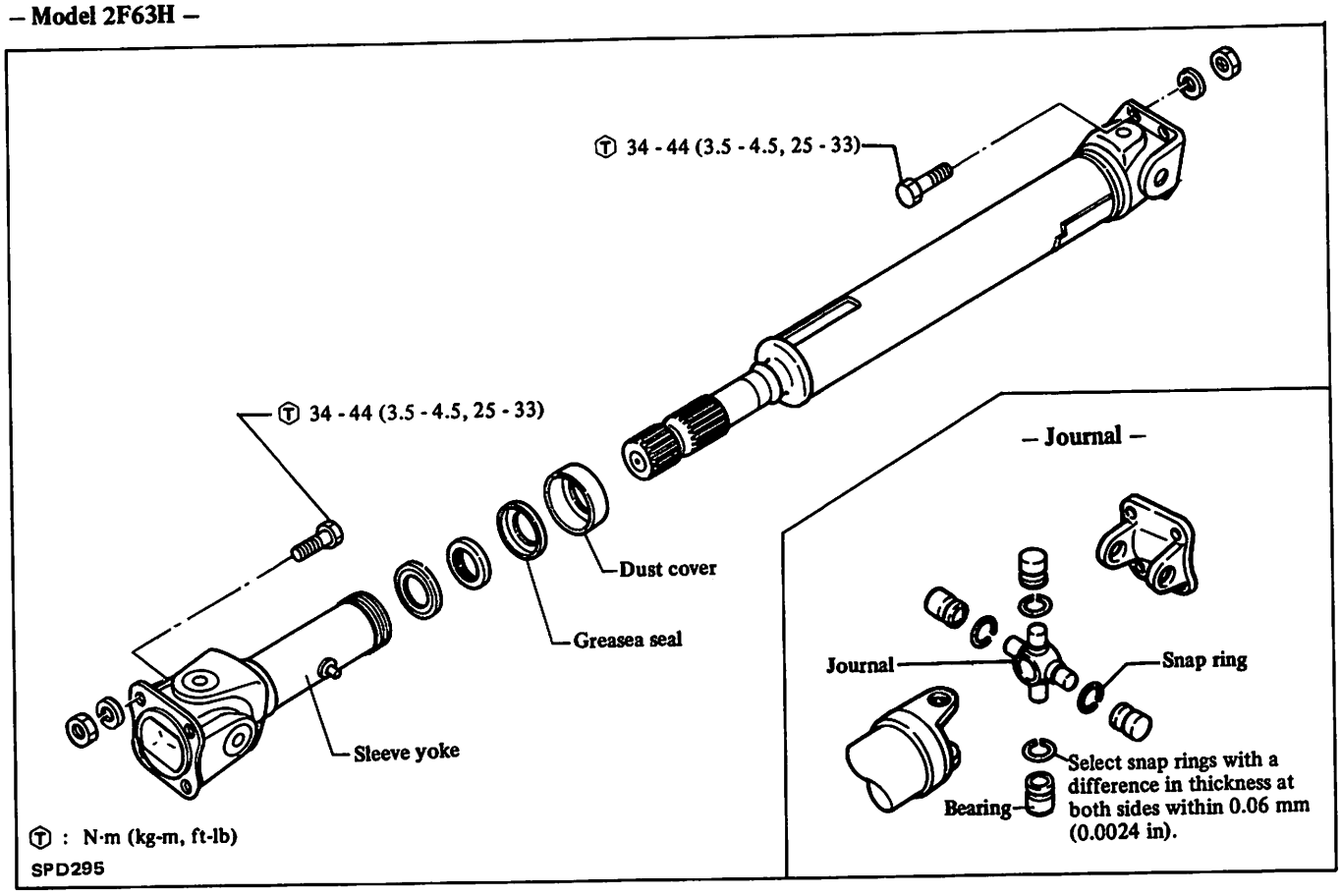

Primary propeller shaft (4WD)

– Model 2S80B –

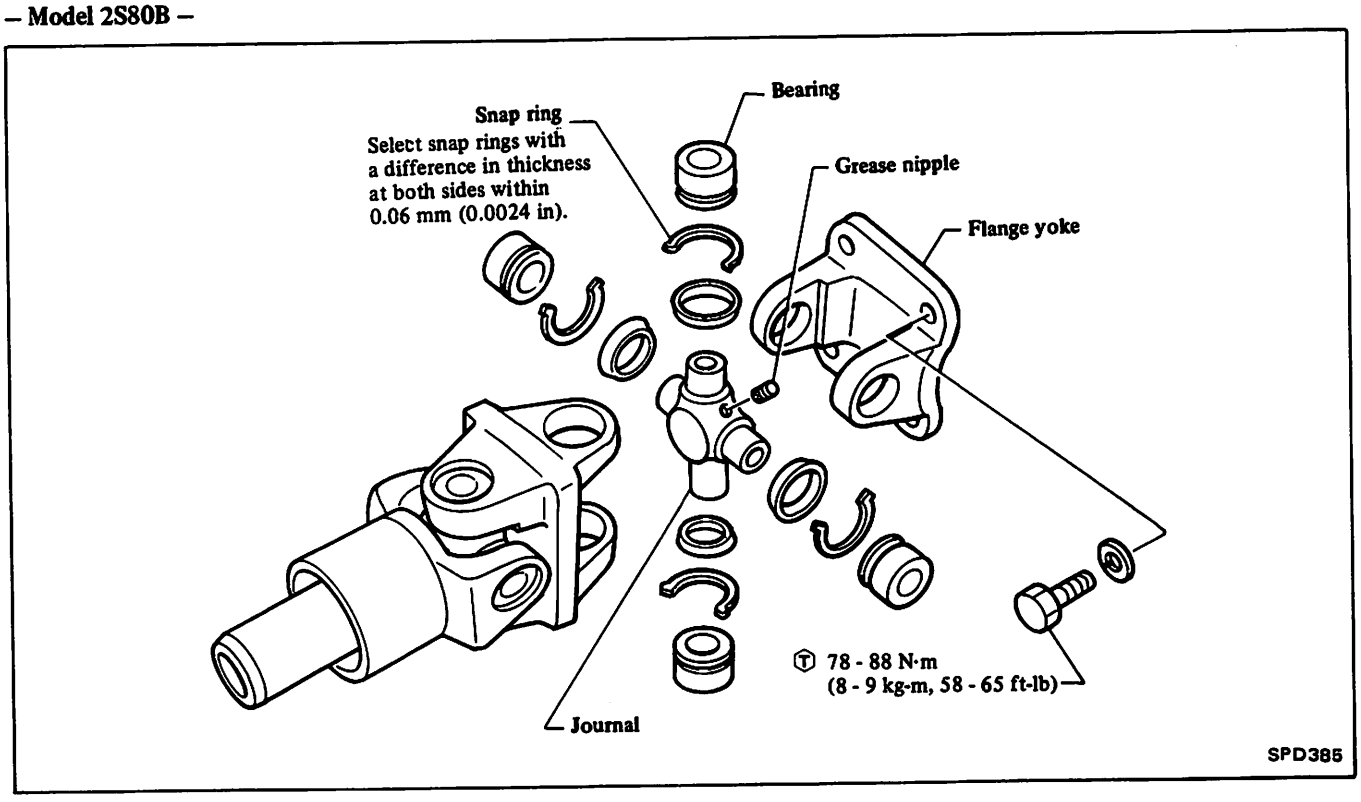

Rear propeller shaft (4WD)

– Model 2F80B –

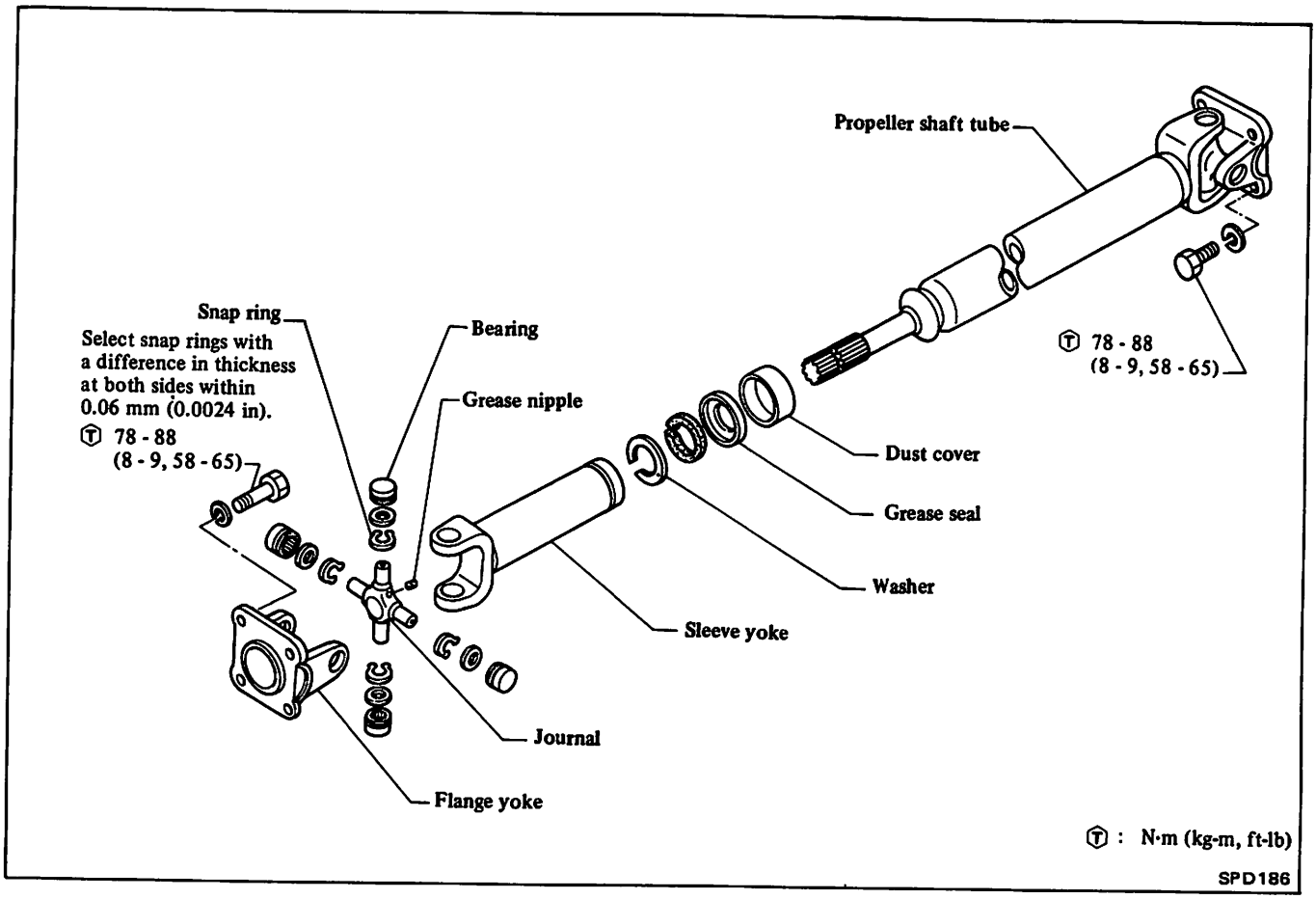

GENERAL INSPECTION

- Inspect propeller shaft tube surface for dents or cracks.
  If damaged, replace propeller shaft assembly.
- If journal is damaged or worn, replace journal.
- If center bearing is noisy or damaged, replace center bearing.

PROPELLER SHAFT VIBRATION

To check and correct an unbalanced propeller shaft, proceed as follows:

1. Remove undercoating and other foreign material which could upset shaft balance, and check shaft vibration by road test.
2. If shaft vibration is noted during road test, disconnect propeller shaft at differential carrier companion flange, rotate companion flange **180 degrees** and reconnect propeller shaft.

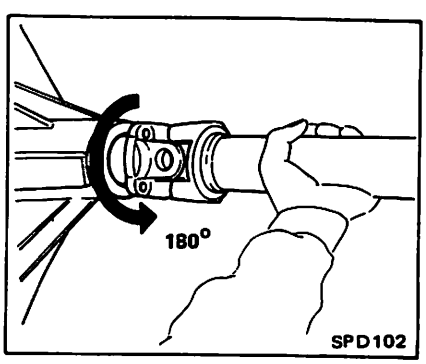

3. Again check shaft vibration. If vibration still persists, replace propeller shaft assembly.

REMOVAL AND INSTALLATION

PRIMARY PROPELLER SHAFT

1. Separate propeller shaft from transfer assembly.
2. Remove transfer assembly.
   Refer to Section TF (T100L).
3. Draw out primary propeller shaft from transmission.
4. Installation is in reverse order of removal.

FRONT AND REAR PROPELLER SHAFT

1. Put match marks on flanges and separate propeller shaft from transfer and differential carrier.

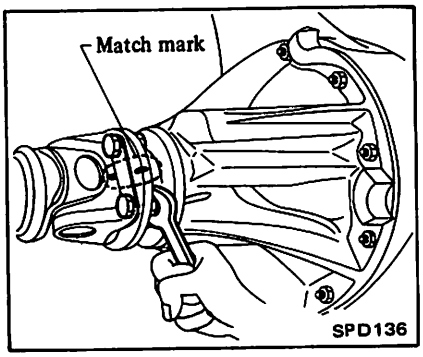

2. Remove center bearing bracket.
3. To install, reverse the foregoing procedure using reference marks in removal.

INSPECTION

PROPELLER SHAFT RUNOUT

Inspect propeller shaft runout. If runout exceeds specifications, replace propeller shaft assembly.

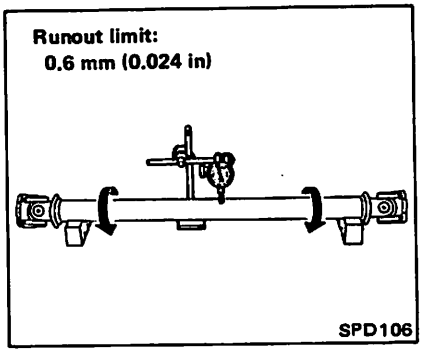

FLANGE YOKE AND SLEEVE YOKE

If flange yoke and sleeve yoke are damaged or worn, replace propeller shaft assembly.

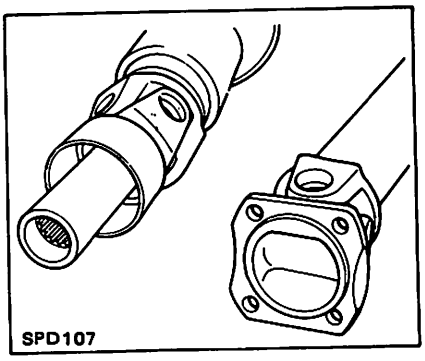

JOURNAL AXIAL PLAY

Inspect journal for axial play, if play exceeds specifications, repair journal.

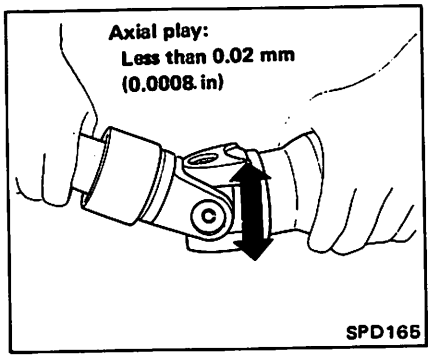

REPAIR

CENTER BEARING (3S63H)

1. Put match marks on flange, and separate 2nd tube from 1st tube.

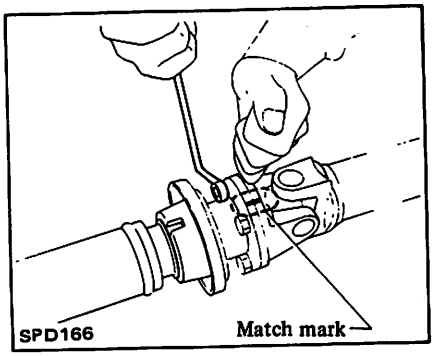

2. Put match marks on the flange and shaft.

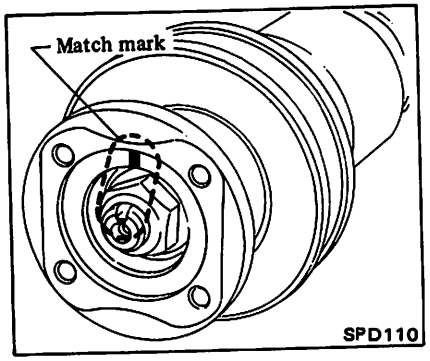

3. Remove lock nut with Tool.

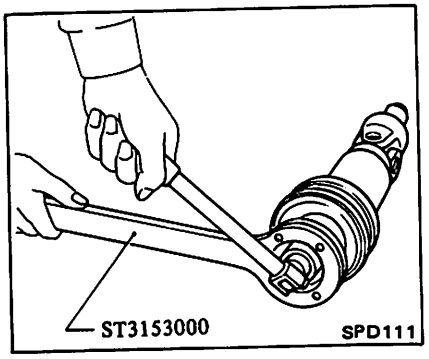

4. Remove companion flange with puller.

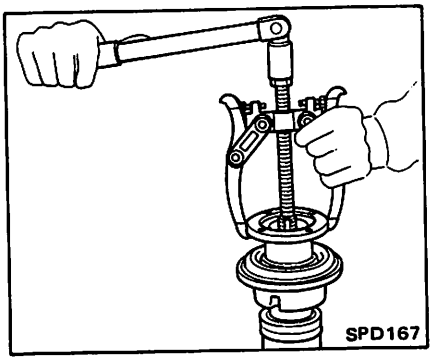

5. Remove center bearing with Tool and press.

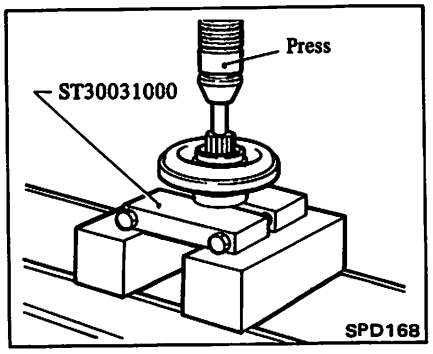

Care should be taken when setting Tool in press to make sure that parting line of Tool is right angle to support fixture of press. This is to prevent Tool from bending.

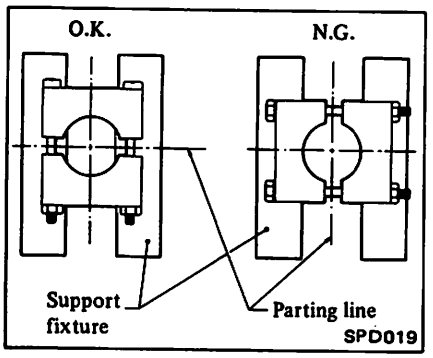

6. Install new center bearing. Be sure to install center bearing with **"F" mark toward front of vehicle.**

Apply a coat of multi-purpose lithium grease containing molybdenum disulfide to the end face of the center bearing and both sides of the washer.

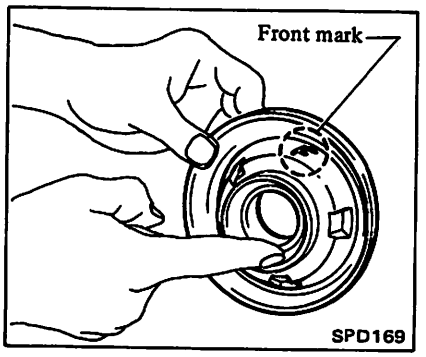

7. Insert the washer into the end of the center bearing. Align the mark on the companion flange and install the companion flange.

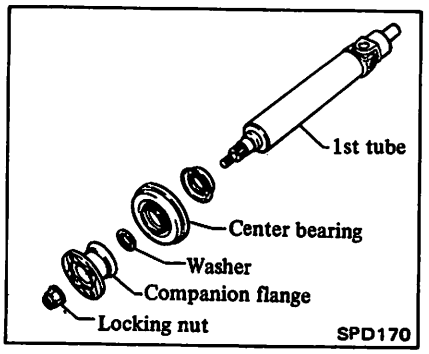

8. Tighten locking nut using Tool.

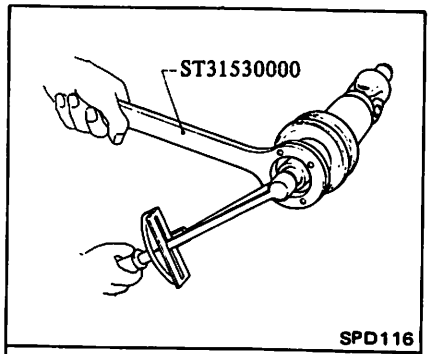

Ⓣ : Center bearing locking nut

Flange nut type	Nut and washer type
245 - 294 N·m (25 - 30 kg-m, 181 - 217 ft-lb)	196 - 235 N·m (20 - 24 kg-m, 145 - 174 ft-lb)

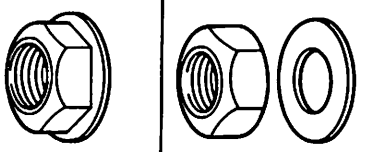

9. Stake the nut.

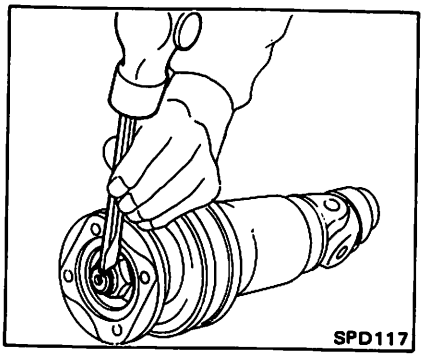

10. Align the mark and connect 1st and 2nd shafts.

JOURNAL

Disassembly

1. Put match marks on shaft and flange or yoke.

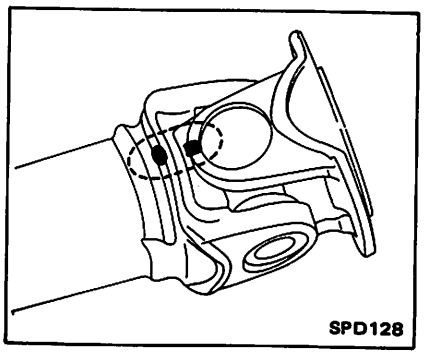

2. Remove snap ring.

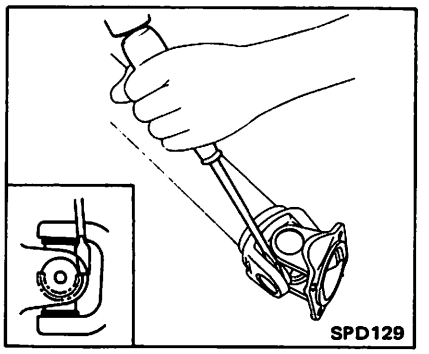

3. Remove pushed out spider bearing by lightly tapping yoke with a hammer, taking care not to damage journal and yoke hole.

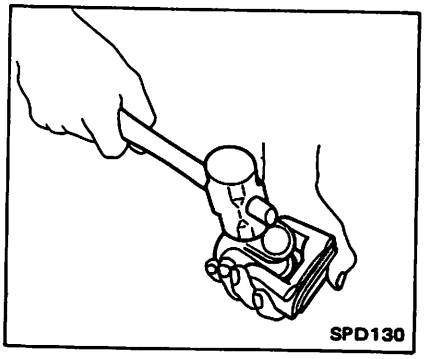

4. Remove bearing at opposite side in above operation.

Put marks on disassembled parts so that they can be reinstalled in their original positions from which they were removed.

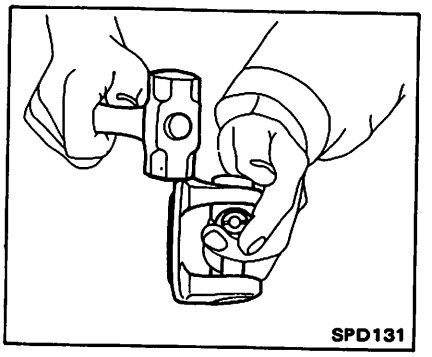

Inspection

Inspect disassembled parts, and repair or replace any faulty part.

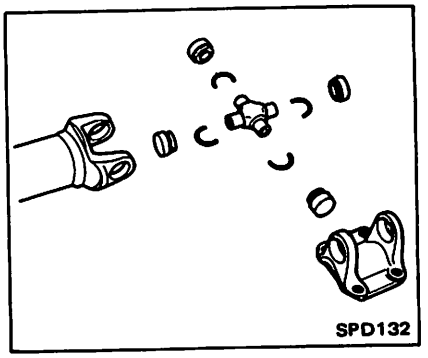

Assembly

To assemble, reverse the foregoing procedure using reference marks in disassembly.

1. Assemble spider bearing. Apply recommended multi-purpose grease on bearing inner surface.

When assembling, be careful that needle bearing does not fall down.

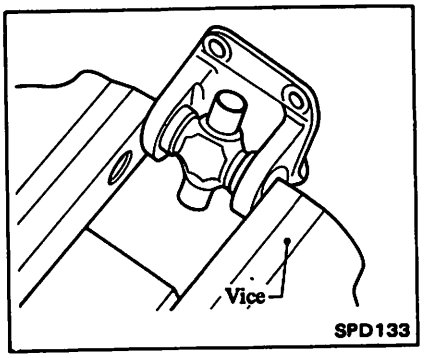

2. Select snap ring that will provide specified play in axial direction of journal, and install them (Refer to S.D.S.).

Select snap rings with a difference in thickness at both sides within 0.06 mm (0.0024 in).

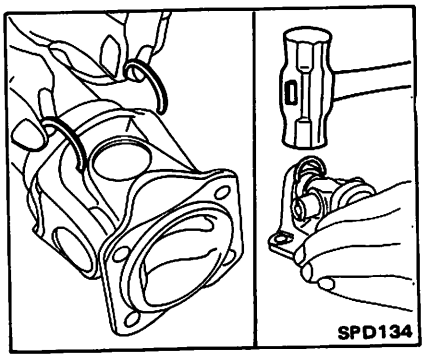

3. Adjust thrust clearance between bearing and snap ring to zero by tapping yoke.

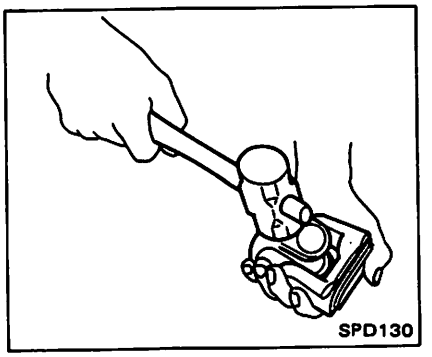

4. Check to see that journal moves smoothly and check for axial play.

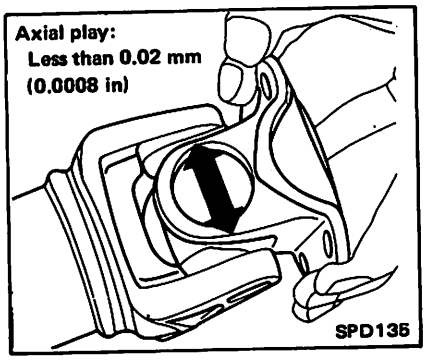

FRONT FINAL DRIVE
—Model: R180—

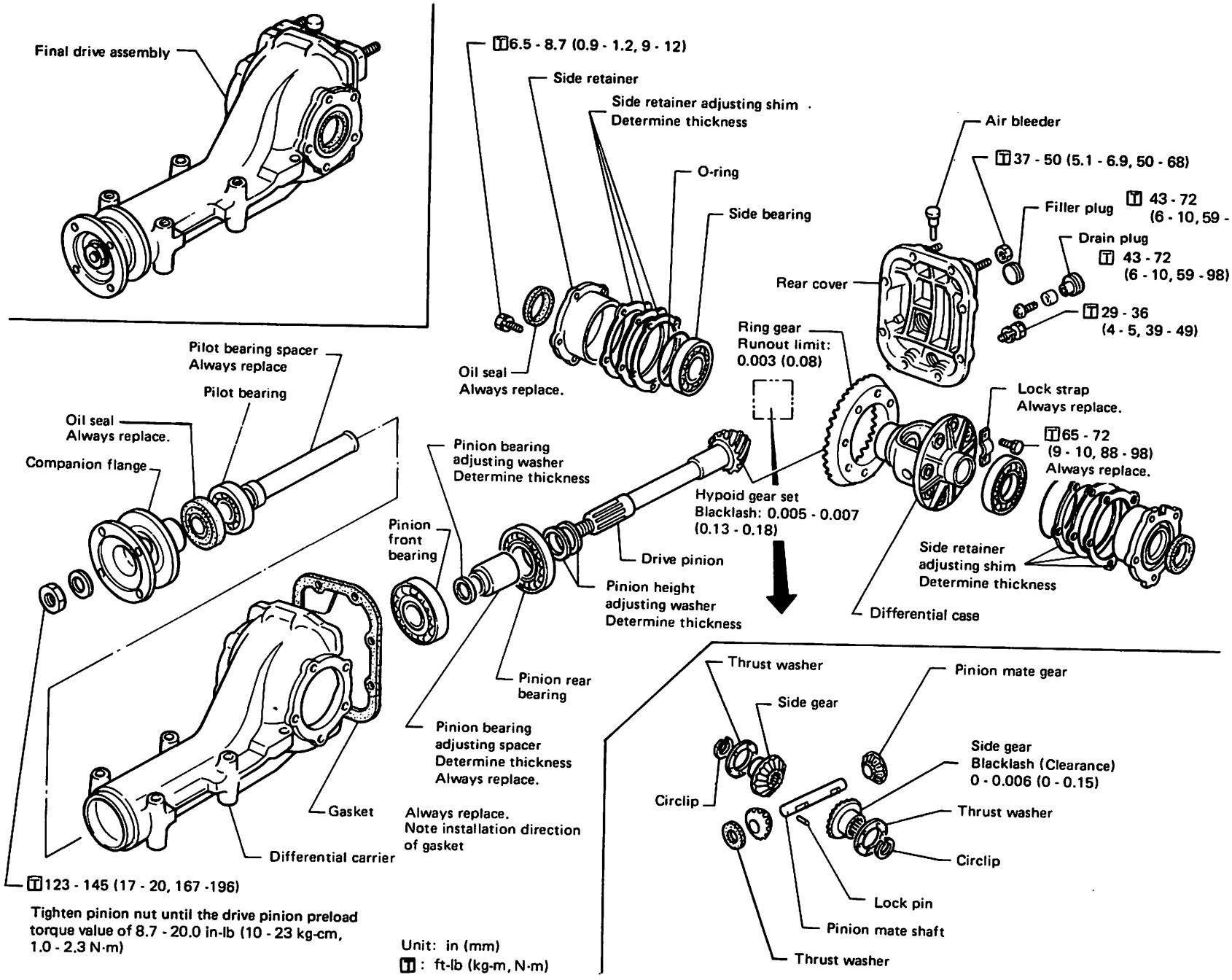

Front Differential Carrier Mounting

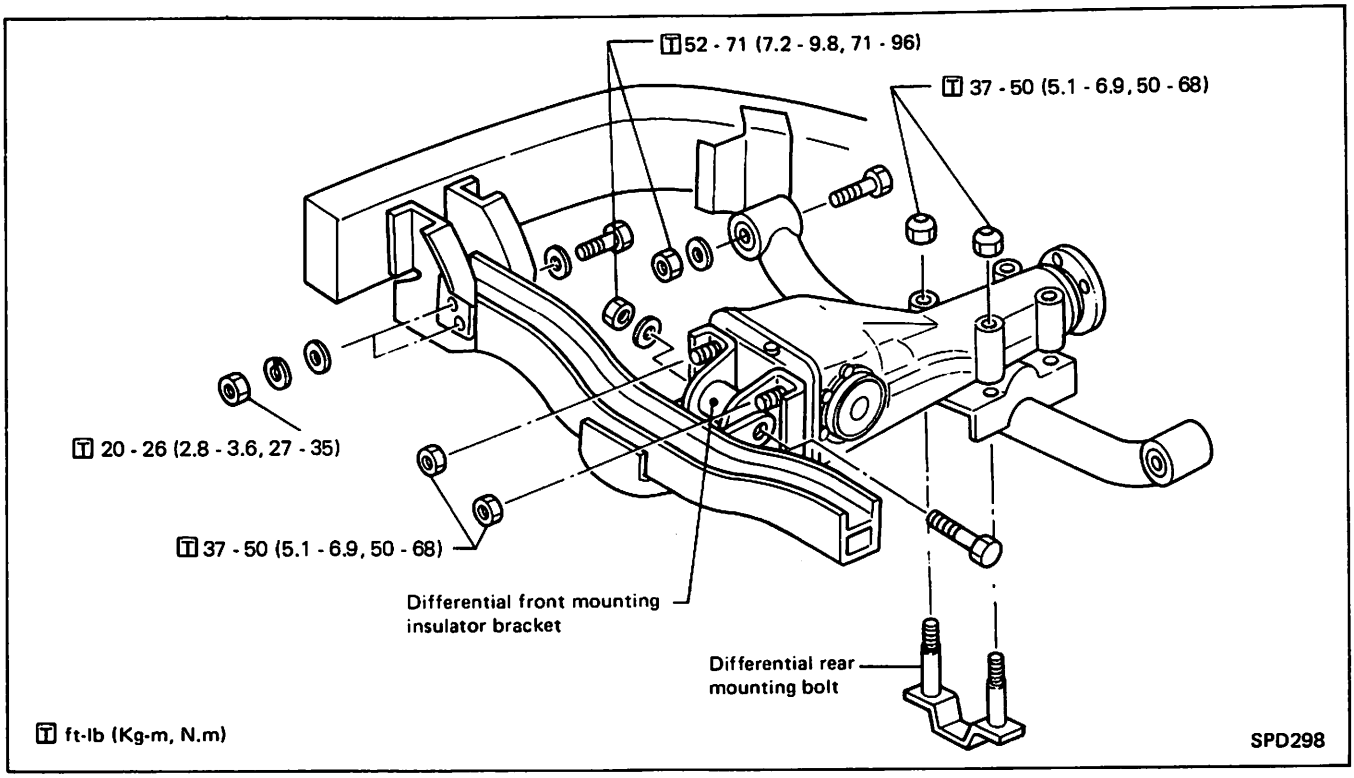

Preparation for Disassembly — Removal

1. Jack up front of vehicle and support it by placing safety stands. Refer to Section GI of your Service Manual.

2. Remove drain plug and drain gear oil.

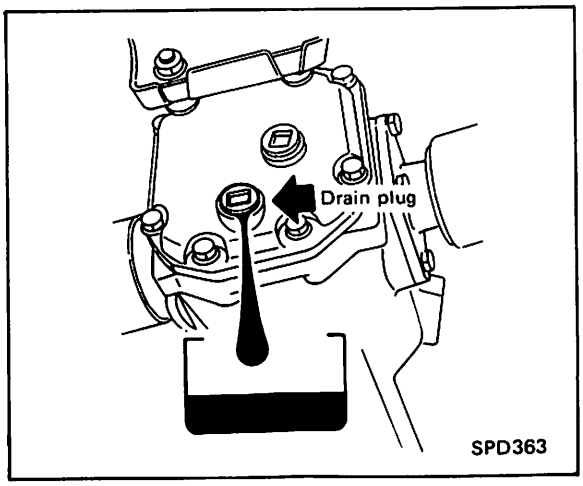

3. Disconnect front propeller shaft. Refer to Propeller Shaft for removal.

4. Remove bolts fixing drive shaft to side flange.

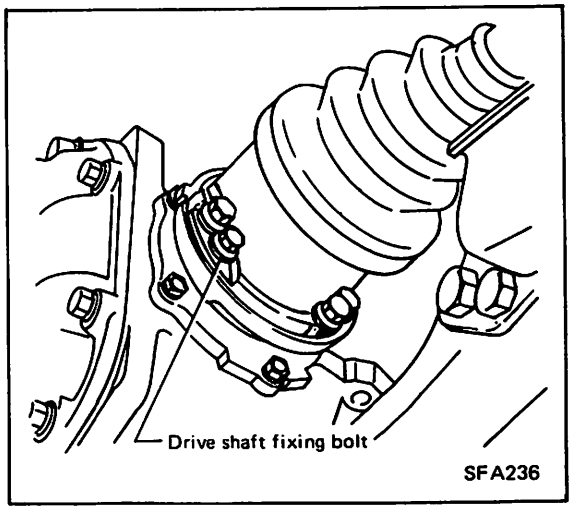

NOTE:
Do not remove boots.

Preparation for Disassembly — Removal (Con't)

5. Disconnect fixing bolts that hold differential carrier onto crossmember.

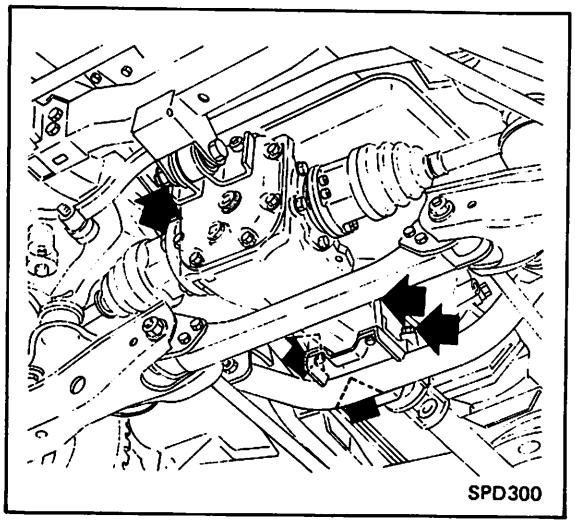

6. Remove differential carrier as assembly.

7. Remove side flanges by carefully prying them from the housing as shown.

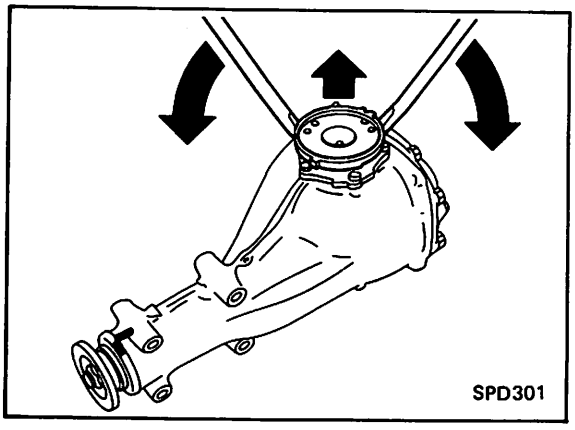

8. Mount differential carrier on Tools J-26023 and J25604-01.

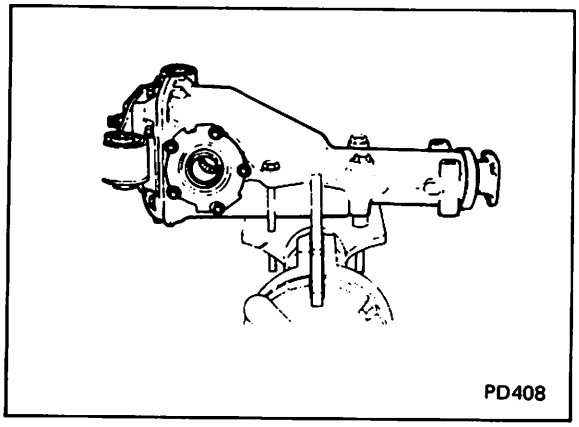

9. Remove rear cover.

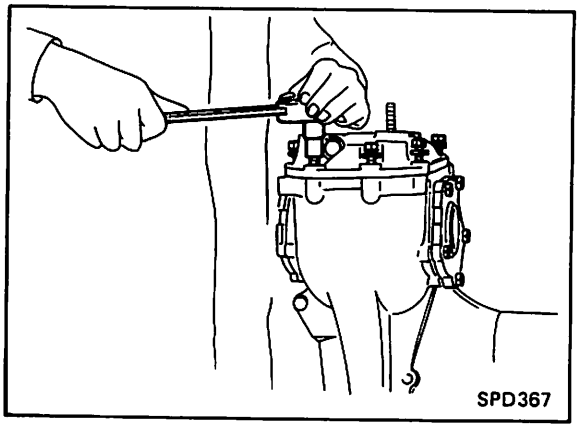

Pre-Disassembly Inspection

1. Check total preload with Tool J-25765A. If it is not within specifications, adjust it.

   NOTE:
   When checking preload, turn drive pinion in both directions several times to set bearing rollers.

   Total preload:
   8.7-20.0 in-lb (10-23 kg-cm, 1.0-2.3 N.m)

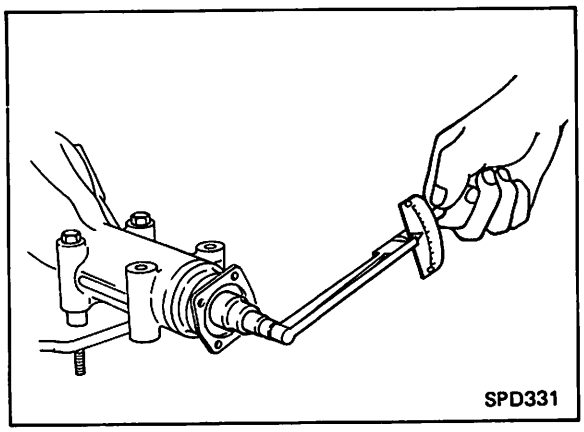
SPD331

2. Check backlash of ring gear with a dial indicator at several points. If it is not within specification, adjust it.

   Backlash:
   0.005-0.007 in (0.13-0.18 mm)

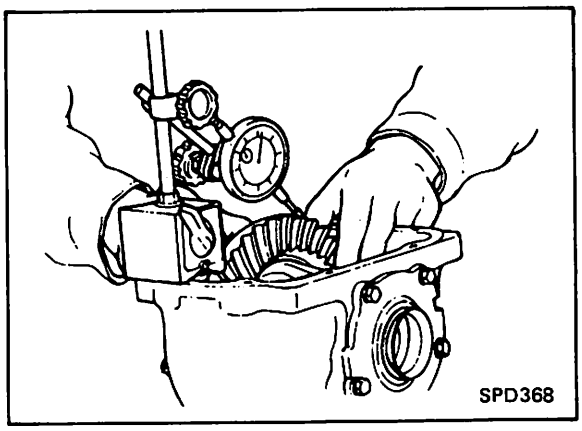
SPD368

3. Check runout of ring gear with a dial indicator.
   Runout limit:
   0.003 in (0.08 mm)

   NOTE:
   When backlash varies excessively in different places, the variance may have resulted from foreign matter caught between ring gear and differential case.

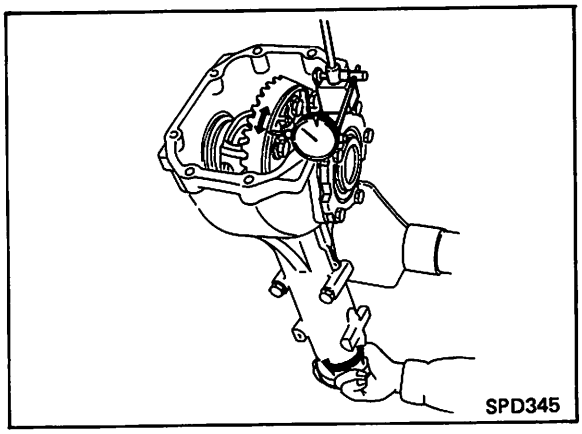
SPD345

If the runout is over specifications even after removal of the foreign matter, the hypoid gear set or differential case should be repeated.

If the backlash varies greatly even when the runout of the ring gear is within specified range, the hypoid gear set or differential case should be replaced.

4. Check backlash of side gear. Using a thickness gauge, measure clearance between side gear and differential case.

   If it is not within specification, adjust it by selecting side gear thrust washer.
   Side gear clearance:
   0.006 in (0.15 mm) or less

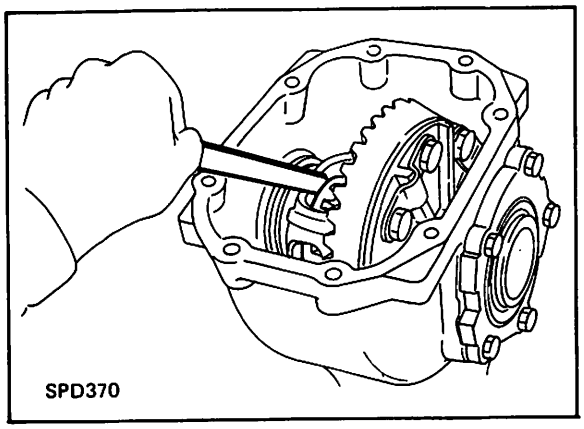
SPD370

5. Check tooth contact, referring to **Tooth Contact.**

Tooth Contact

Gear tooth contact pattern check is necessary to verify correct relationship between ring gear and drive pinion.

Hypoid gear sets which are not positioned properly may be noisy, or have short life or both. With a pattern check, the most desirable contact for low noise level and long life can be assured.

Check

1. Thoroughly clean ring gear and drive pinion teeth.
2. Sparingly apply a mixture of powdered ferric oxide and oil or equivalent to 3 or 4 teeth of ring gear **drive side.**

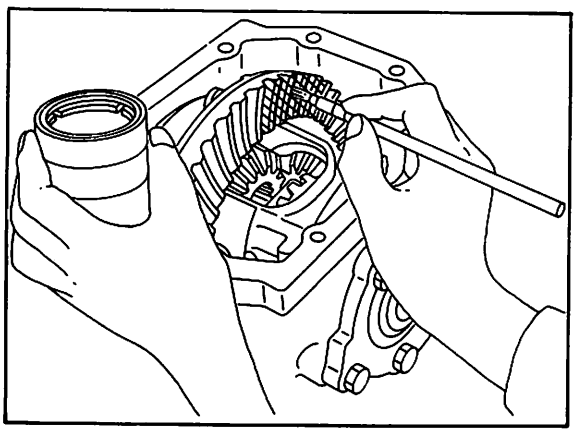

SPD357

3. Hold companion flange steady by hand and rotate the ring gear in both directions.

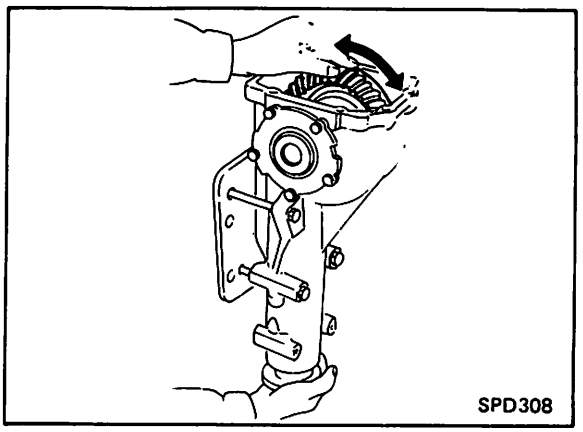

SPD308

4. Compare contact marks left on the ring gear to those found in the following chart.

Tooth Pattern Interpretation

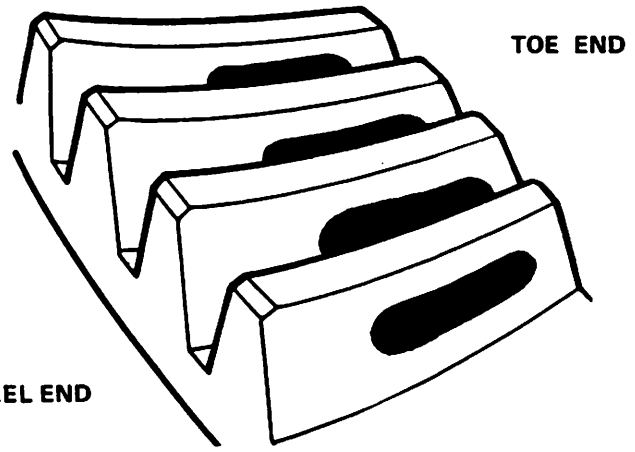

Perfect tooth pattern.

NOTE: A change in pinion height will also cause a change in backlash, so both will usually have to be adjusted.

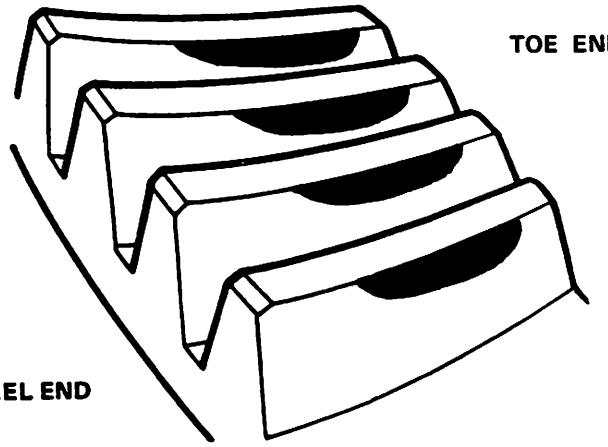

The pinion is too low. You will have to add to the shim(s) under the pinion.

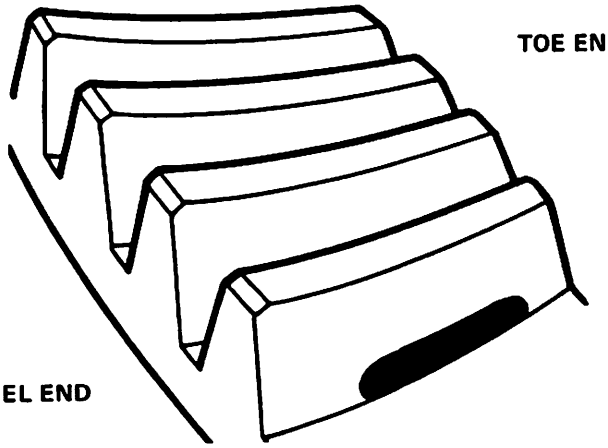

The pinion is too high. The shim(s) under the pinion will have to be decreased.

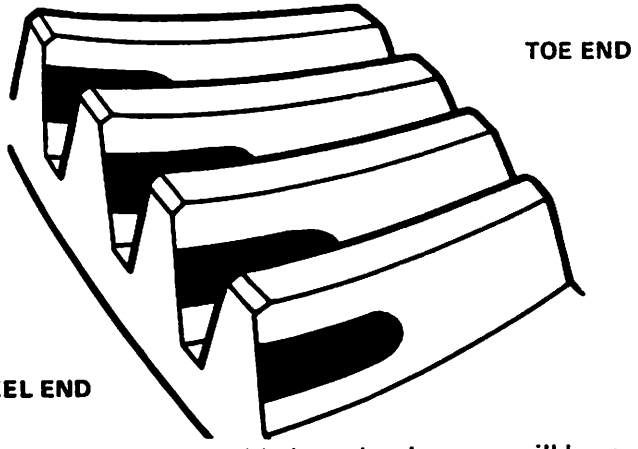

There is too much backlash — the ring gear will have to be moved closer to the pinion.

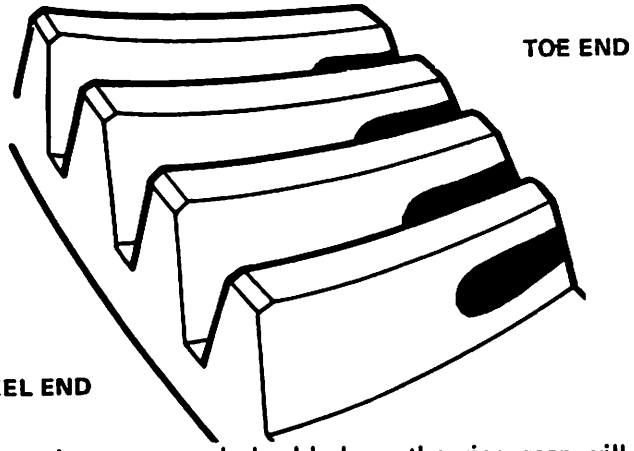

There is not enough backlash — the ring gear will have to be moved away from the pinion.

Disassembly

1. Mark one of the side bearing retainers to keep them from becoming mixed up during the overhaul.

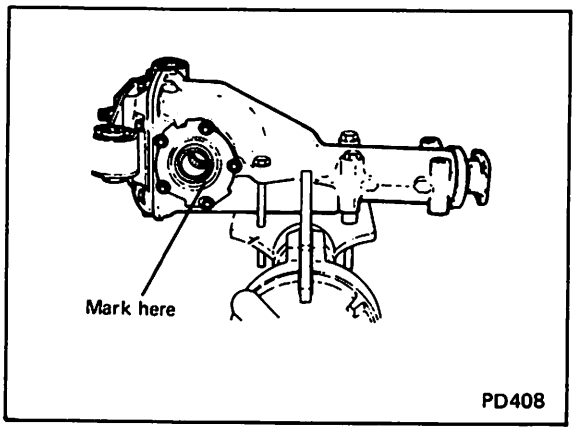

2. Remove the side bearing retainer bolts using a 12mm socket.

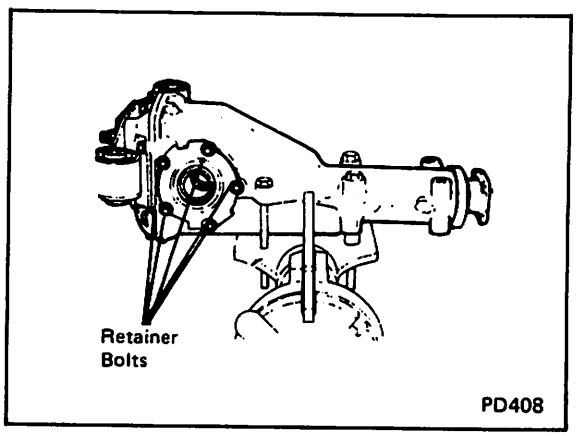

3. Remove the side bearing retainers. Usually they will slide out easily. Use Tool J-25810 if necessary.

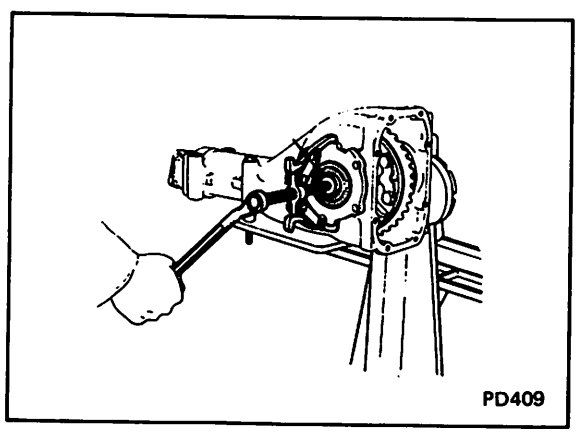

4. Turn the ring gear assembly until the open side of the case is facing you, and remove the case from the housing.

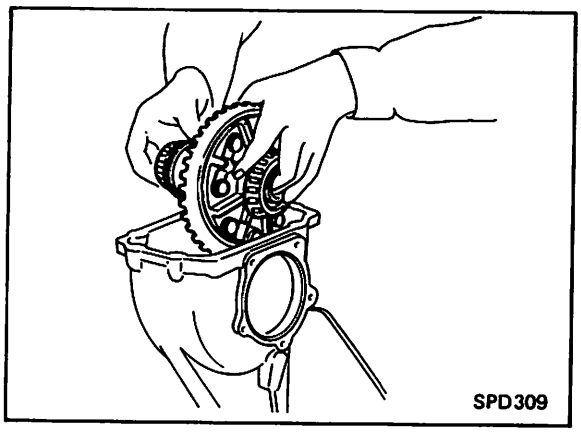

5. Attach the flange wrench J-25774 to the flange to prevent its turning, and remove the pinion shaft nut using a 27mm socket and breaker bar.

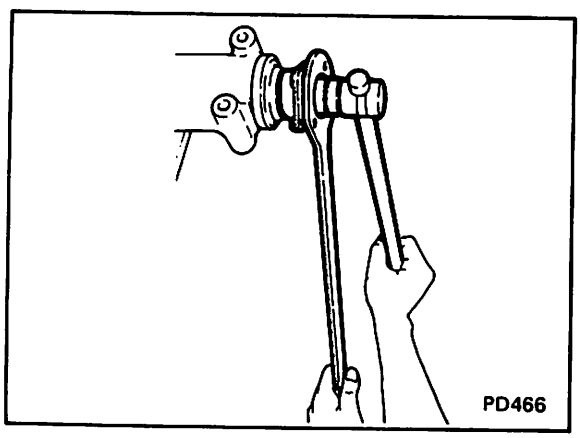

6. Remove the companion flange using Tool J-22888.

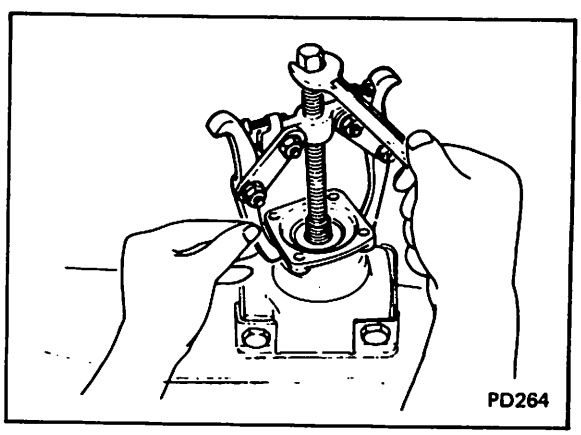

Disassembly (Con't)

7. Drive the pinion through the housing using a brass drift and a heavy hammer. Keep the pinion head from being damaged.

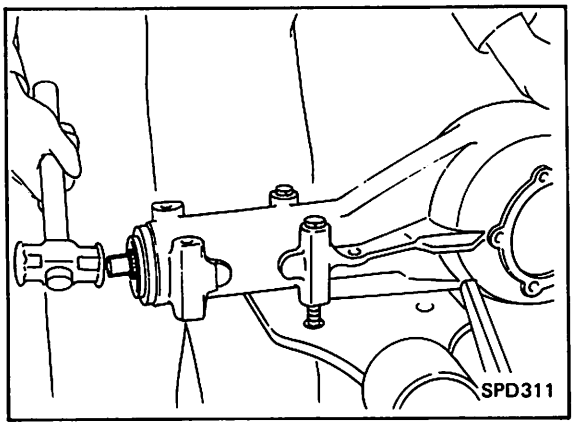

8. Slide the pilot bearing drift Tool J-25749-A into the open end of the housing, through the pinion bearings and sleeve. You will probably have to lift the sleeve with your finger before the drift will slide through.

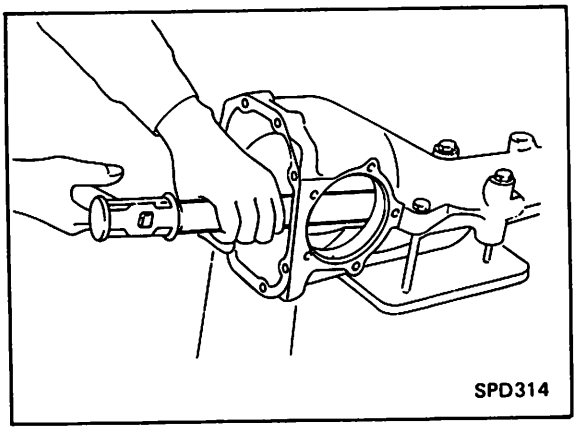

9. Using the drift and a heavy hammer, drive the drift on through the housing. This will remove the front pinion bearing spacer, pilot bearing and oil seal.

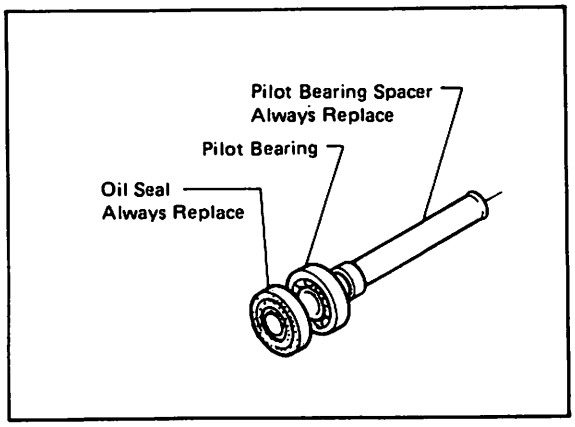

10. Remove both bearing races, using the same pilot bearing drift Tool J-25749. This completes the disassembly of the housing.

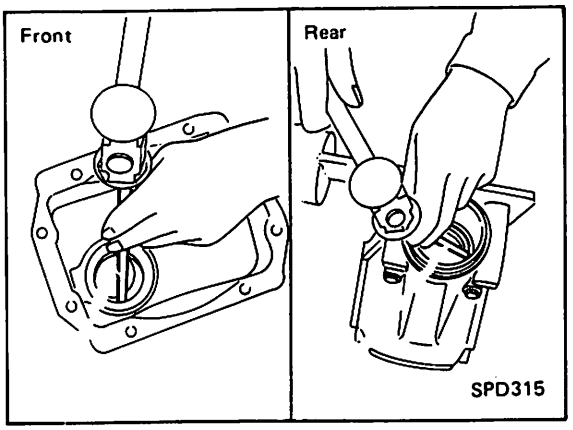

11. Remove the pinion bearing adjusting washer and spacer from the pinion shaft. Save the washer and spacer.

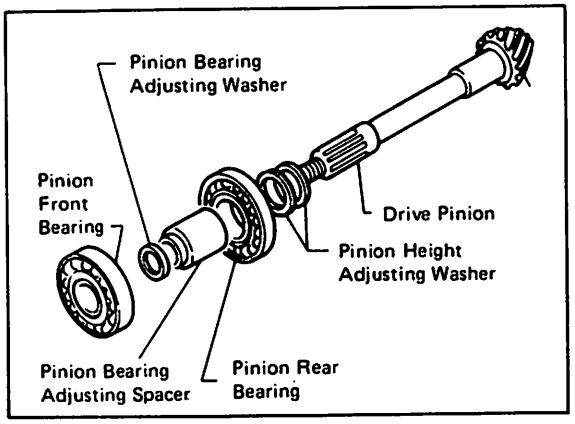

12. Remove the rear pinion bearing using a press and Tool J-22912-01. Be certain the parting line of the Tool is at a right angle to the support fixture of the press (A). This will prevent bending of the tool (B). Save the pinion height washer for re-use.

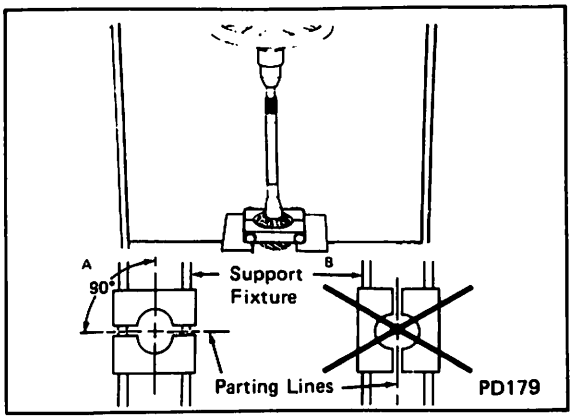

Disassembly (Con't)

13. Attach the side bearing puller and pilot (Tools J-22888 and J-8107-02) to the side bearing, and remove both side bearings. Keep the bearings and races together.
NOTE:
Be certain the puller catches the groove at the edge of the bearing inner race.

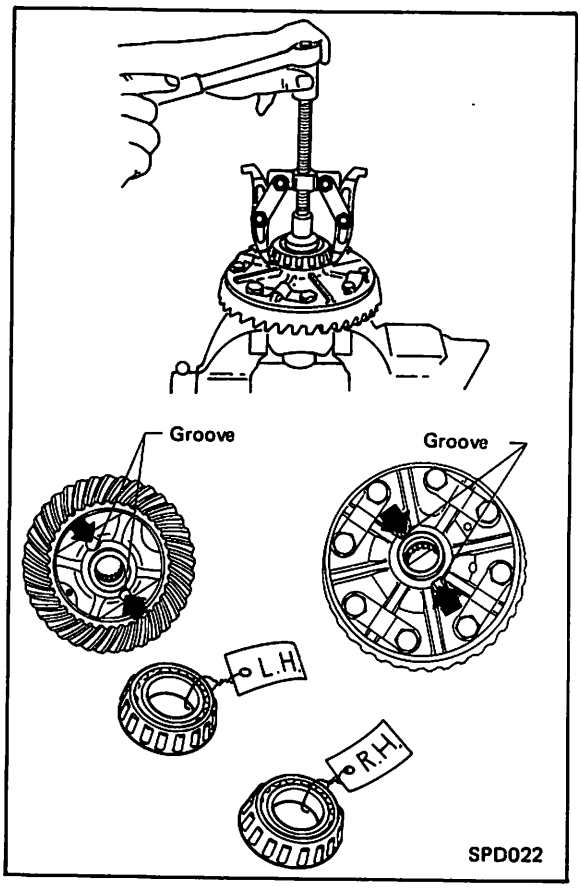

14. Flatten the lock tabs and remove the ring gear bolts in a criss-cross fashion, using a 17mm socket.

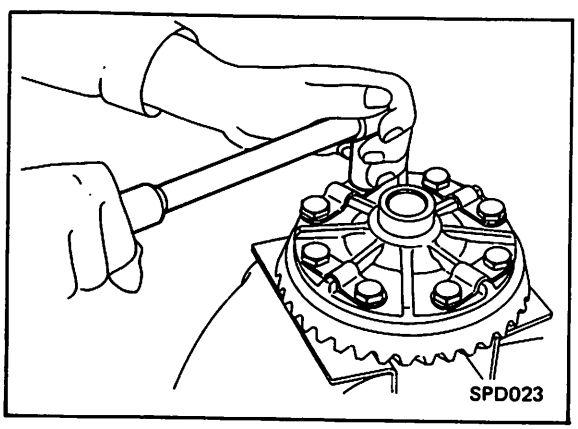

15. Tap the ring gear off the gear case using a plastic hammer. Tap evenly all around to keep the gear from binding.

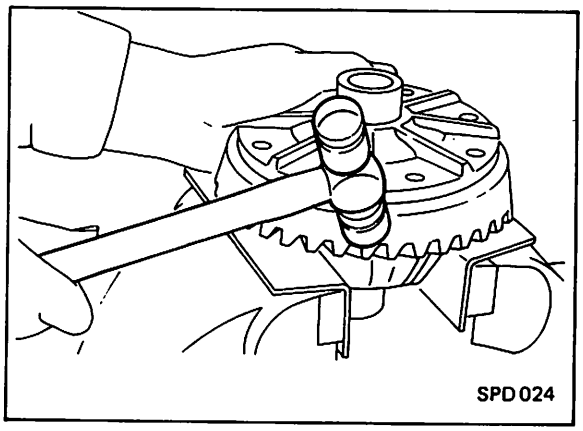

16. Double check the side gear to gear case clearance previously measured during inspection. The clearance must be 0.006 in (0.15 mm) or less. If not, the side gear thrust washers will have to be changed during re-assembly.

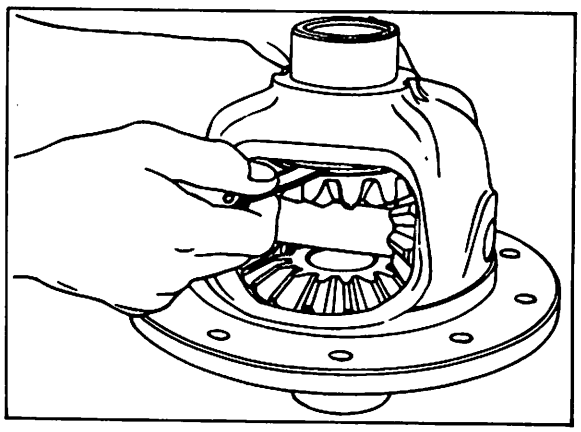

17. Using a long drift, drive the lock pin out of the gear case.

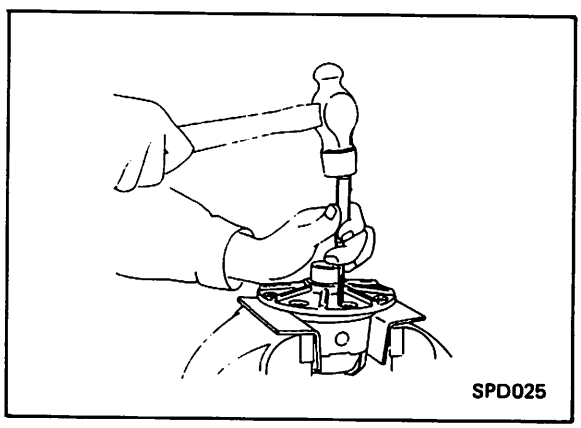

Disassembly (Con't)

18. Draw out pinion mate shaft, then rotate pinion mate gears out of the case and remove side gears and thrust washers.

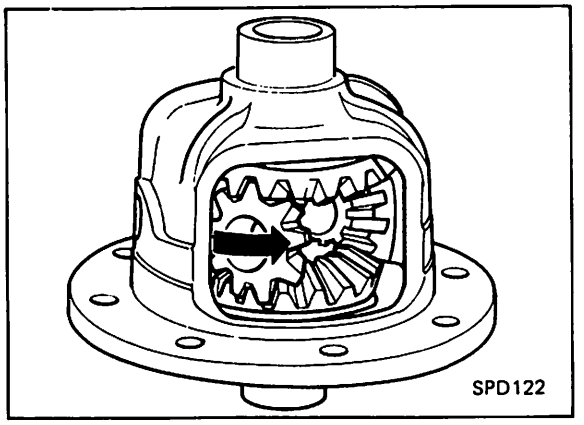

NOTE:
Put marks on gears and thrust washers so that they can be reinstalled in their original positions.

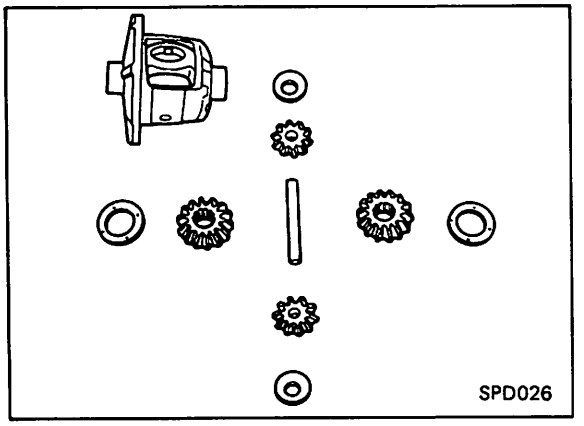

19. Remove the side bearing races, using Tool J-25810-A.

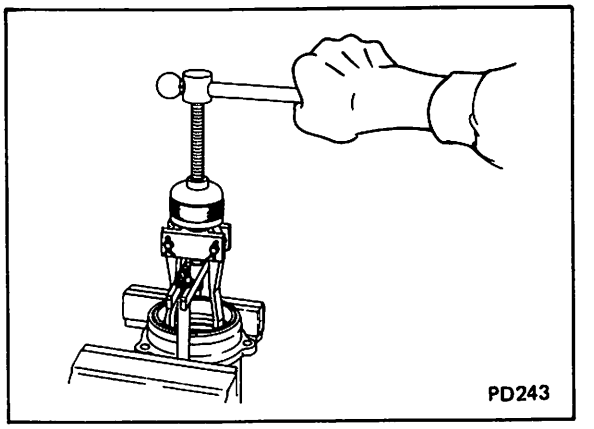

NOTE:
Remove the races each time this differential is overhauled. They will be measured during this procedure.

Parts Inspection

Disassembled parts should be cleaned thoroughly, then examined for wear or damage. Always repair or replace any damaged parts.

1. Check all gear teeth for scoring, cracking or chipping.

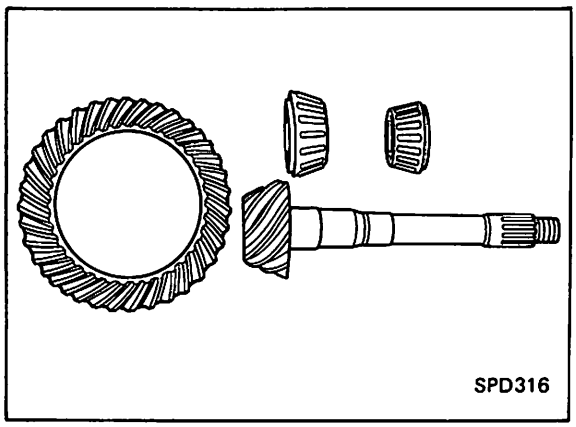

NOTE:
The ring gear and pinion shaft will always be replaced as a set.

2. Inspect bearing races and rollers for scoring, cracking, chipping or signs of excessive wear.

1 Front pilot bearing	**4 Roller**
2 Pinion front bearing	**5 Inner race**
3 Pinion rear bearing	**6 Outer race**

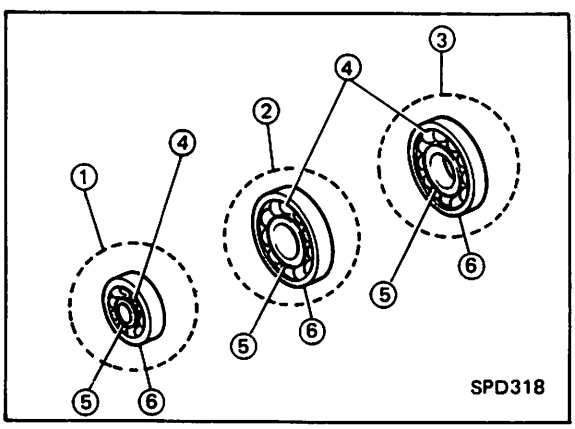

NOTE:
Pinion bearings should be replaced whenever pinion shaft/ring gear set are changed.

3. Check pinion mate shaft, pinion mate gear, side gear and thrust washers on differential case for scores and signs of wear, and replace as required.

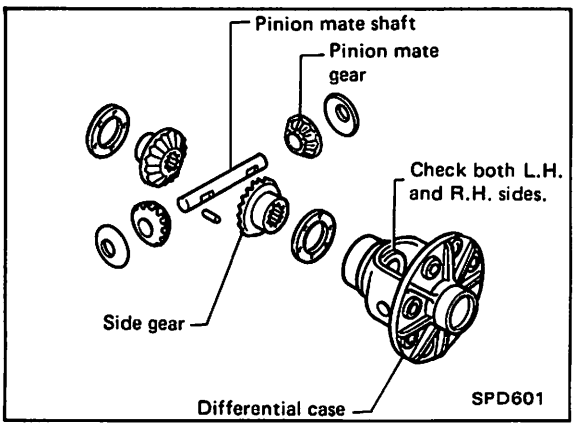

4. Inspect thrust washer faces. Small faults can be corrected with sandpaper.

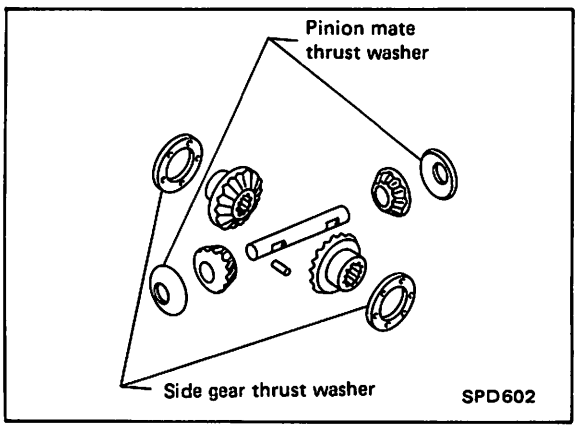

NOTE:
The following parts must be replaced each time they are removed:
1. **Gasket**
2. **Oil seals**
3. **Lock straps**

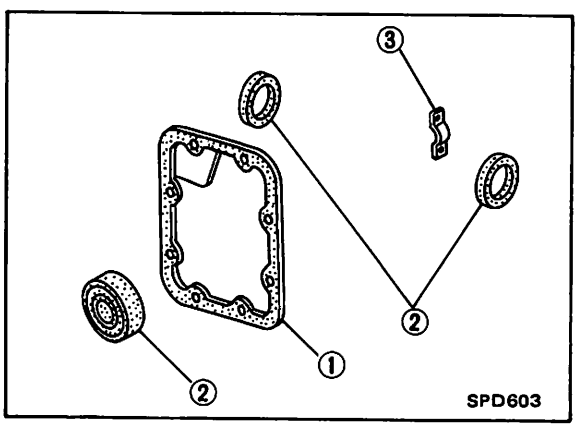

Differential Case Assembly

Assembly should be done in the reverse order of disassembly, while making any necessary inspections and adjustments.

CAUTION:

a. **Arrange shims and washers to install them correctly.**
b. **Thoroughly clean the surfaces on which shims, washers, bearings and bearing caps are installed.**
c. **Apply gear oil when installing bearings.**
d. **Pack recommended multi-purpose grease into cavity between lips when fitting oil seal.**

1. Install pinion mate gears, side gears and thrust washers into differential case.

2. Fit pinion mate shaft.

3. Adjust clearance between rear face of side gear and thrust washer by selecting side gear thrust washer.
   Clearance:
   0-0.006 in (0-0.15 mm)

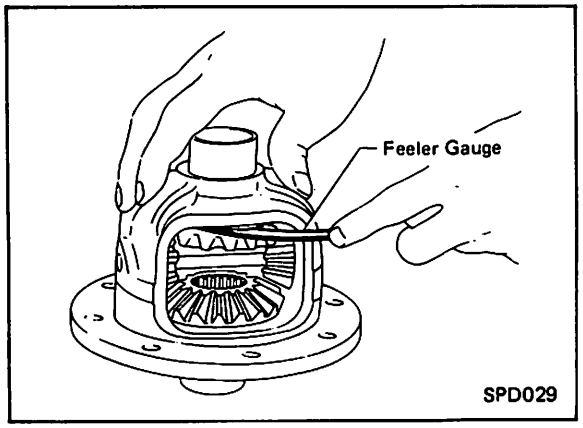

4. Install pinion mate shaft lock pin using a punch.

   NOTE:
   Make sure lock pin is flush with case.

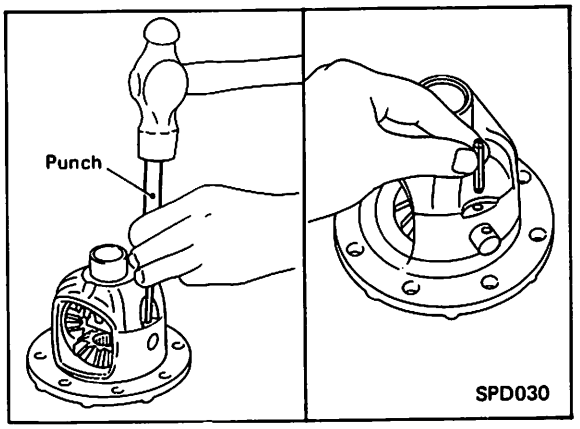

5. Apply oil to gear tooth surfaces and thrust surfaces and check to see they turn properly.

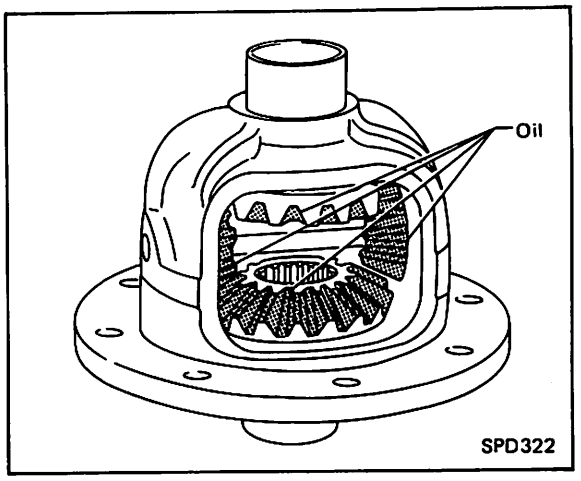

6. Place ring gear on differential case and install **new** lock straps and bolts.

   NOTE:
   Tighten bolts in a criss-cross fashion, lightly tapping bolt head with a hammer.

   Then bend up lock straps to lock the bolts in place.
   Torque:
   65 - 72 ft-lb (9 - 10 kg-m, 88 - 98 N·m)

Differential Case Assembly (Con't)

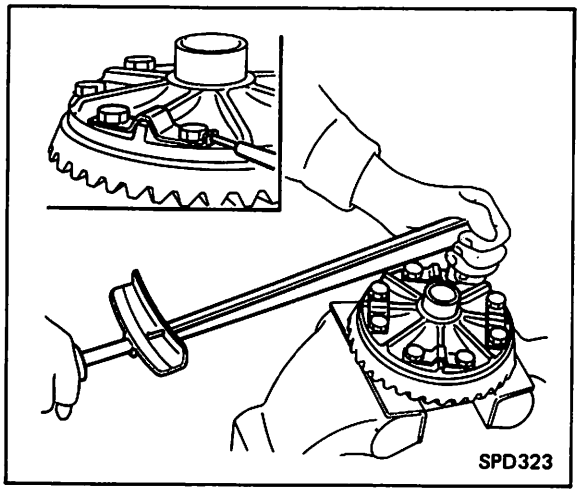

7. Press-fit front and rear bearing outer races using Tools J-25742-01, J-25742-2 (front) and J-25742-5 (rear).

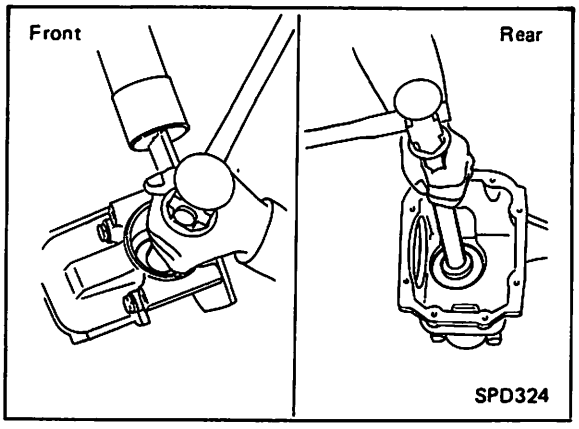

NOTE:
Be certain the bearing races are seated squarely in their respective bores.

Preload/Pinion Height Adjustment

1. Install bearing pilot into the gauge plate and slide over the long bolt.

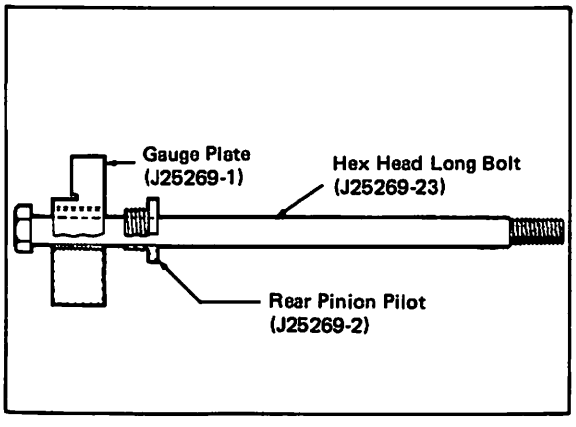

2. Install the rear pinion bearing in the differential case. Slide the long bolt and gauge plate through the bearing.

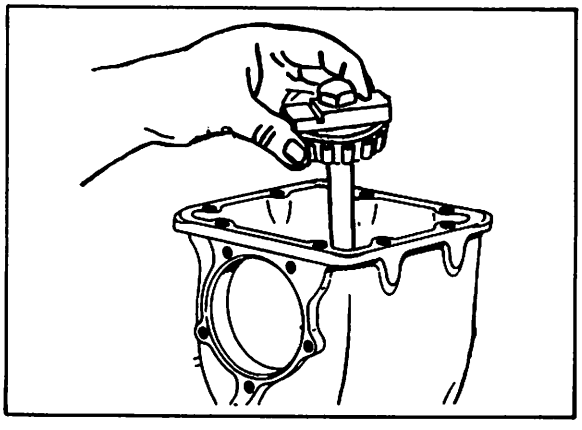

Preload/Pinion Height Adjustment (Con't)

3. Stand the front bearing pilot support onto the bench, then assemble the parts and tools as follows:

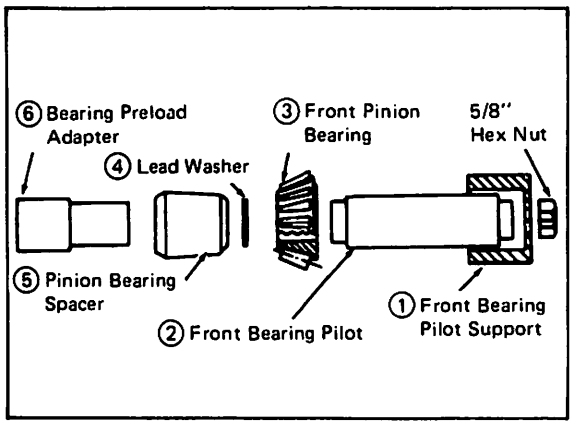

NOTE:
If a lead washer is not available, use a piece of thick roll solder (7) to obtain preload washer size.

4. Holding these parts together, slide the assembly over the long bolt into the differential housing. Install the support nut. Finger tighten the nut and ensure that all parts turn freely and are properly aligned.

5. Tighten nut carefully to obtain the correct preload.
   Preload:
   7.8-14.8 in-lb (9-17 kg-cm, 0.9-1.7 N.m)

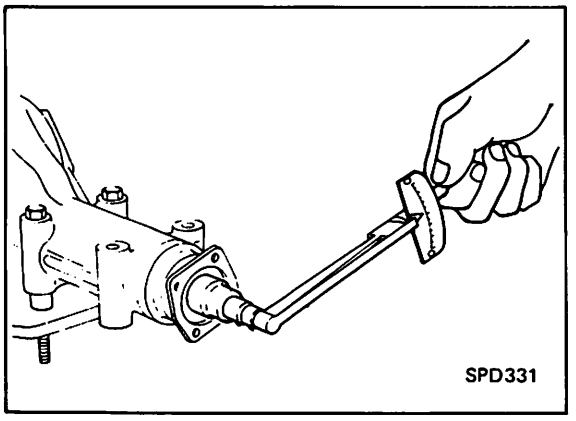

NOTE:
This concludes the preload adjustment for now. DO NOT DISASSEMBLE THE SPECIAL TOOLS AT THIS TIME. (The measurement of the lead washer, if used, will be taken after the pinion height adjustment.)

6. Install two discs with arbor assembly. Ensure that the arbor turns freely.

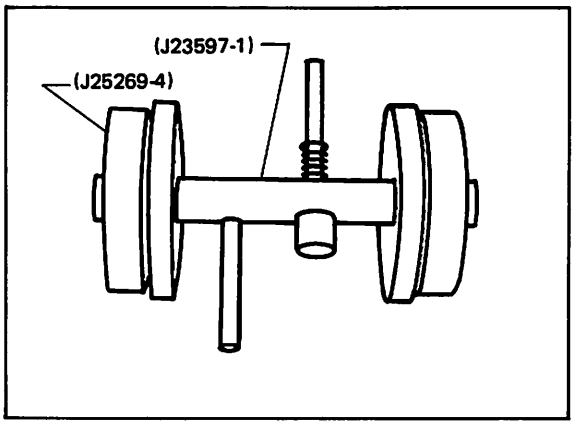

7. Lift the spring loaded plunger and place it on the face of the gauge plate (use the correct gauge plate step).

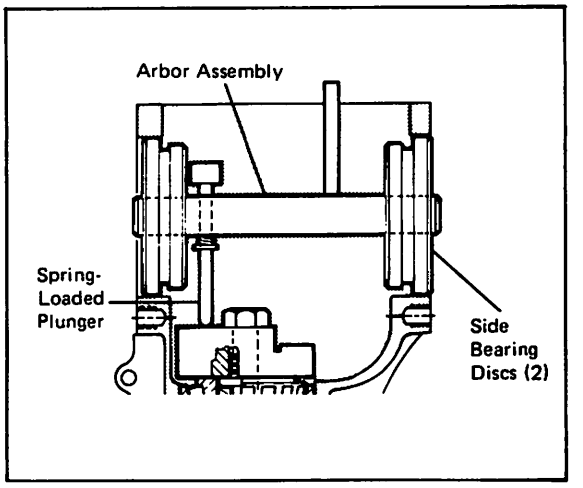

8. Install the dial indicator and tighten the hold down clamp.

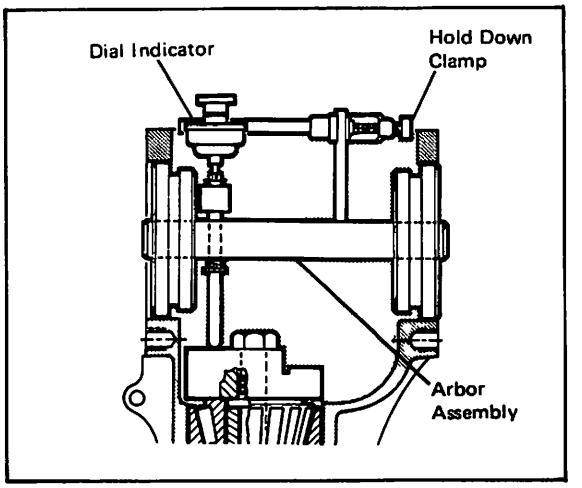

Preload/Pinion Height Adjustment (Con't)

9. To zero the dial indicator, rotate the arbor and plunger back and forth and note highest deflection, (the point where the needle changes direction). Now set the dial indicator at zero.

   NOTE:
   Use the chart below and the steps that follow the chart to determine correct pinion shim size.

A.	3.00 mm*	Standard Measure
B.	_____	Dial Indicator Reading
C.	_____	Add A + B = C
D.	_____	Pinion Marking
E.	_____	Pinion Shim Size (Add or subtract D from C)

*Standard R180 measure

10. Rotate gauge plate until the plunger falls off of the gauge plate and read the dial indicator. Repeat to ensure accuracy (Factor B).

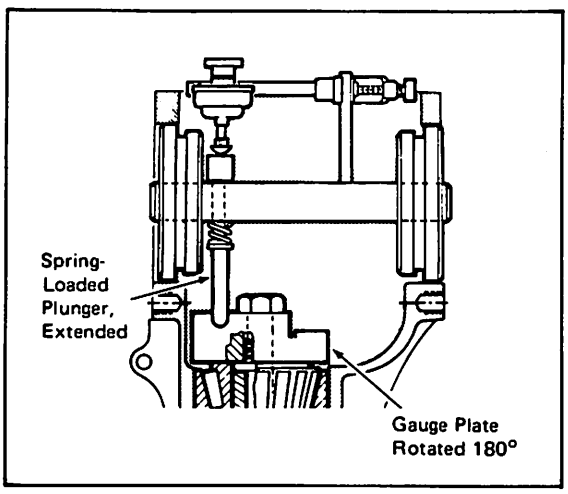

Be sure to use the metric dial indicator on the 0.01 mm dial, not the inch dial indicator.

11. Check the pinion head for the variation marking (Factor D). If the marking is a plus (+) **subtract** line D from line C. If it is a minus (–) **add** lines C and D.

    NOTE:
    If the pinion is unmarked or marked zero, then line C is your pinion shim size. Otherwise line E is the correct pinion shim size.

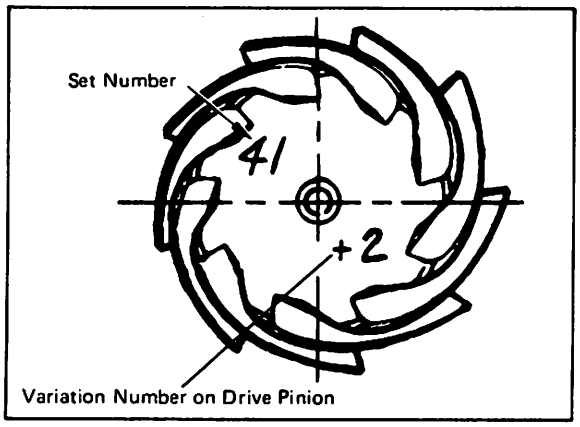

12. Select the proper sized shim. As a precaution measure the shim to verify its dimensions.

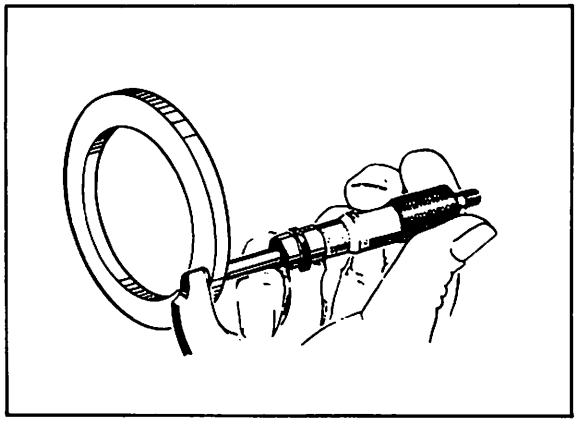

13. To determine pinion bearing preload, disassemble the pinion height/bearing preload tool and measure the thickness of the lead washer. This is the correct size preload washer required. Discard the used lead washer.

    NOTE:
    As a precaution, measure the preload washer to verify its dimensions.

Pinion Assembly

1. Place pinion shim on the pinion shaft, bevel side toward the gear. (Some shims are not beveled). Using the press stand, press the bearing on the shaft.

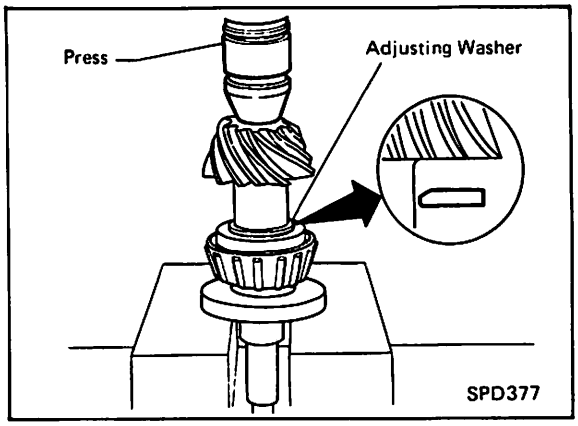

2. Install the spacer and preload shim on the shaft, and place the shaft in the housing. Make sure the bearing turns freely on its race.

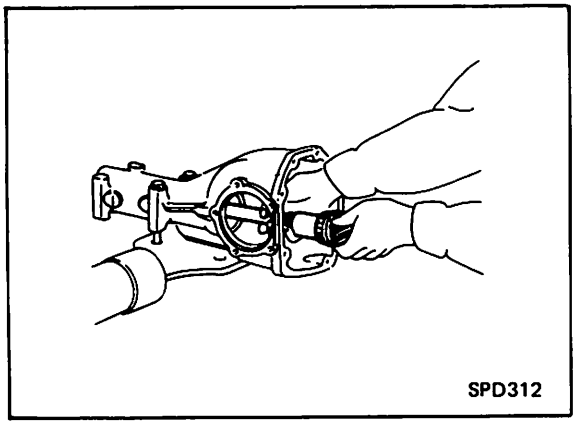

3. Slide the front pinion bearing on the shaft from the other end. Tap it down the shaft using Tool J-25863.

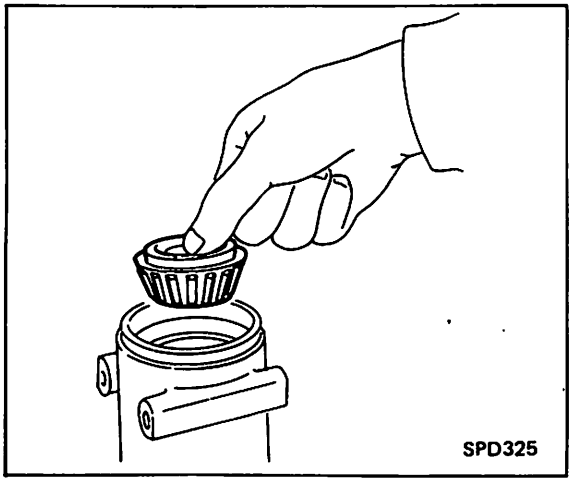

4. Install the spacer on the pinion shaft (either way is OK), and slide the pilot bearing on the shaft, tapping it with the Tool J-25863.

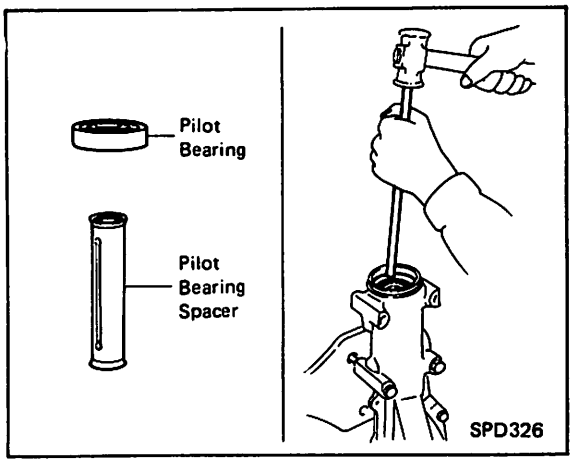

5. Install a new oil seal, using special Tool J-25405. Grease the seal with differential lubricant.

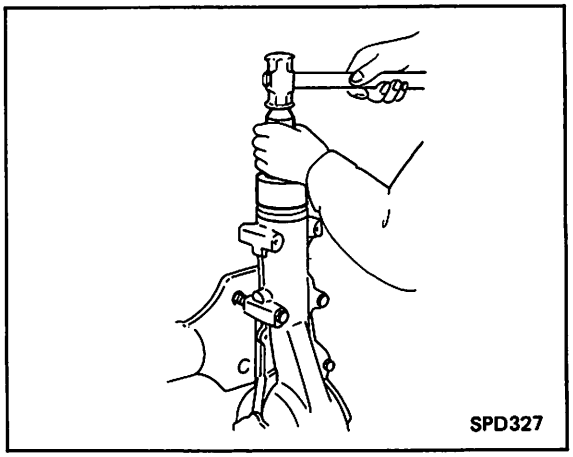

Pinion Assembly (Con't)

6. Hold companion flange with Tool and temporarily tighten pinion nut, until there is no axial play.

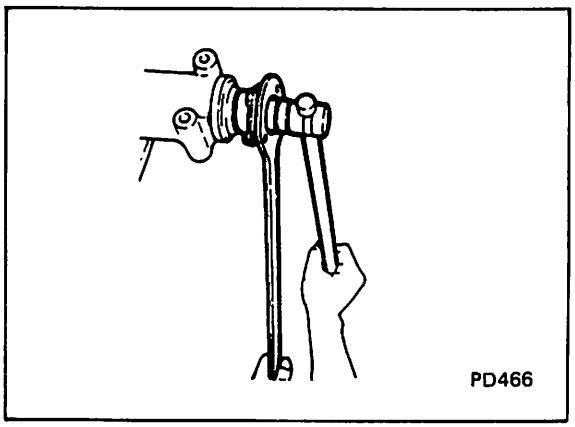

NOTE:
a. If drive pinion lock nut is worn, replace it.
b. Ascertain that threaded portion of drive pinion and pinion nut are free from oil or grease.

7. Tighten pinion nut by degrees to the specified preload while checking the preload with Tools.

NOTE:
When checking preload, turn drive pinion in both directions several times.

Preload:
7.8-14.8 in-lb (9-17 kg-cm, 0.9-1.7 N.m)

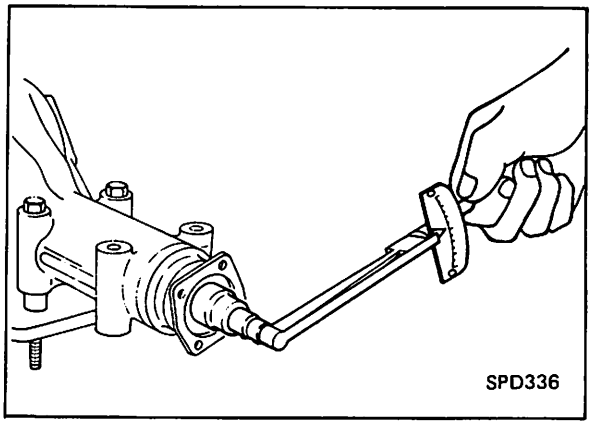

8. Torque drive pinion nut 123 - 145 ft-lb (17 - 20 kg-m, 167 - 196 N·m).

NOTE:
This procedure will have to be repeated if:
a. Maximum preload is achieved before the minimum pinion nut torque is reached.
b. Minimum preload is not achieved before maximum pinion nut torque is reached.

Side Bearing Shim Determination

Side bearing shim size is determined by a set of factors. Use the chart below to list these factors. The location of these factors is found on the various differential components as shown below.

FACTOR LOCATIONS

FACTOR CHART	
LETTERS	HUNDREDTHS OF A MILLIMETER
A — Left housing	
B — Right housing	
C — Gear case	
D — Gear case	
E — Left side bearing	
F — Right side bearing	
G1 — Left side bearing 180 retainer	
G2 — Right side bearing 180 retainer	
H — Ring gear: (+) or (−)	

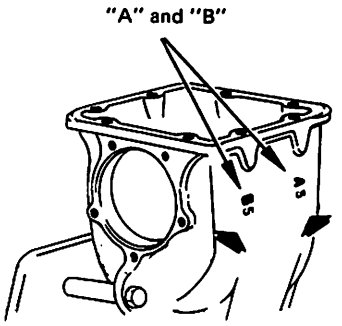

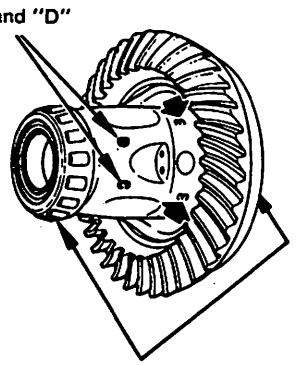

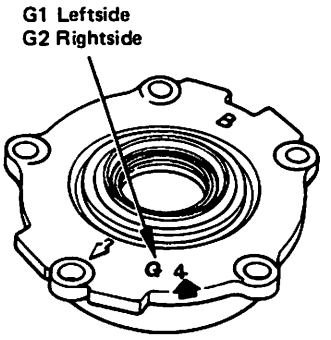

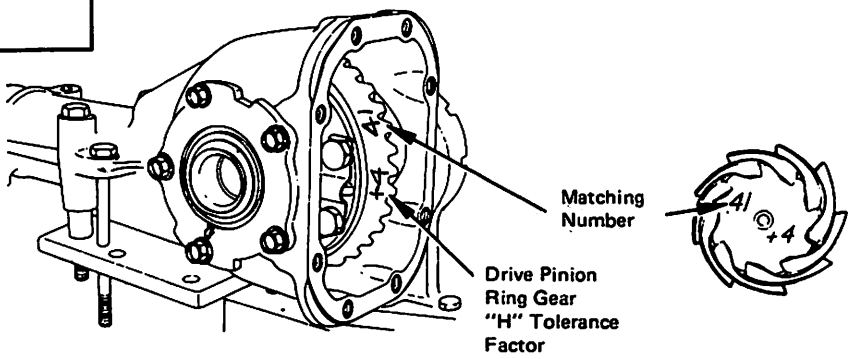

Side Bearing Shim Determination (Con't)

Using the factor chart to record your findings, proceed with the following steps to determine shim size.

1. Locate the numbers stamped on the carrier housing next to the letters "A" and "B" as shown. Record them as factors "A" and "B" on the chart.

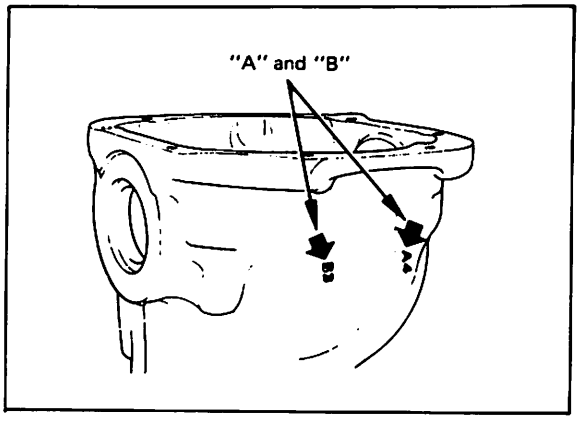

2. Locate the numbers stamped next to the letters "C" and "D" on the gear case. Record them as factors "C" and "D".
3. Measure how far under the standard thickness each side bearing is. Record these as factors "E" and "F".

NOTE:
Side bearing standard thickness is 20.00 mm (0.7874 in).

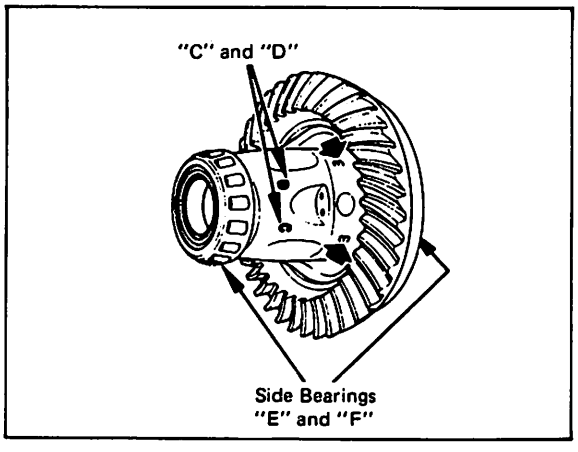

NOTE:
To measure side bearing thickness, the following tools are required.

① J25407-1 Gauge Block
② J25407-2 Base Plate
③ J25407-3 Weight Block
④ J8001-M Dial Set

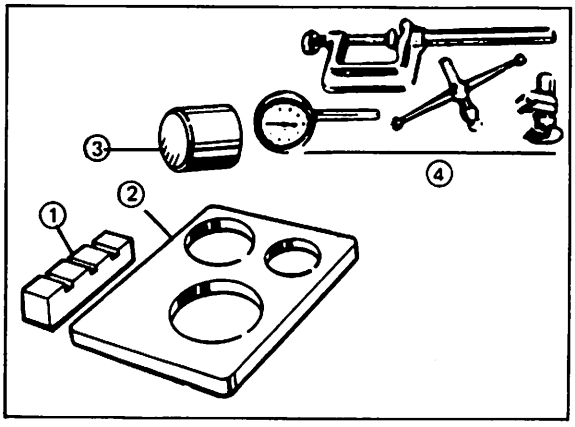

4. Mount the dial indicator on the base plate, place the 5 pound weight on the base plate and put the 20mm gauge block on top. Zero the dial indicator on the gauge block, as shown.

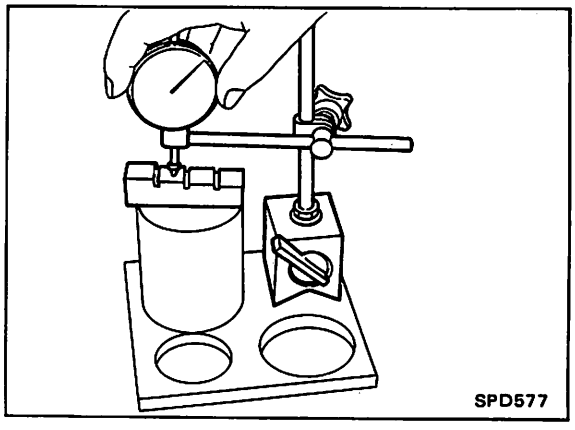

5. Carefully slide the gauge block out from under the dial indicator. Lift the weight block, and slide the bearing and race to be measured under the weight.

NOTE:
Make sure that the base plate has a recess in it and that the bearing will turn freely when positioned over the recess as shown.

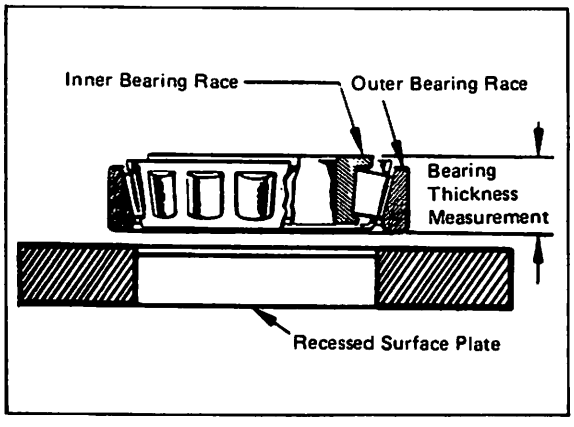

Side Bearing Shim Determination (Con't)

6. Turn the weight a few times to ensure that bearing is properly seated. Watch the gauge while you do this. If the needle fluctuates erratically then the bearing is either dirty or defective and should be cleaned or replaced. If the reading is not erratic, note how far the indicator dropped. This will normally be 0.10 - 0.30 mm (0.004 - 0.012 in).

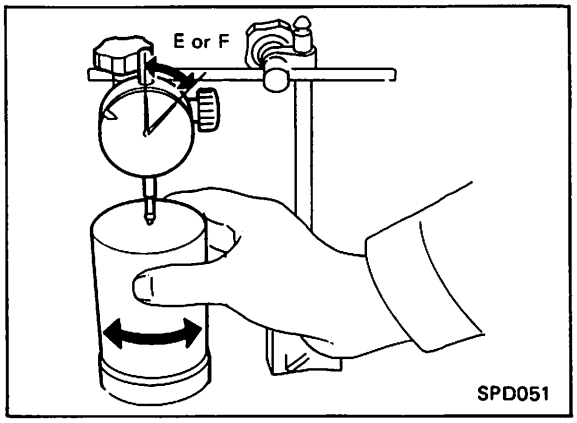

NOTE:
To avoid any confusion while calculating side bearing shims, it is absolutely necessary to stay with the metric system. If you measure anything in inches, the results MUST be converted to the metric system.

7. Measure both bearings in the same way and mark the left side bearing measurement as factor "E" and the right as factor "F" on the list.

8. Mark down the side retainer markings found on each of the retainer as shown.

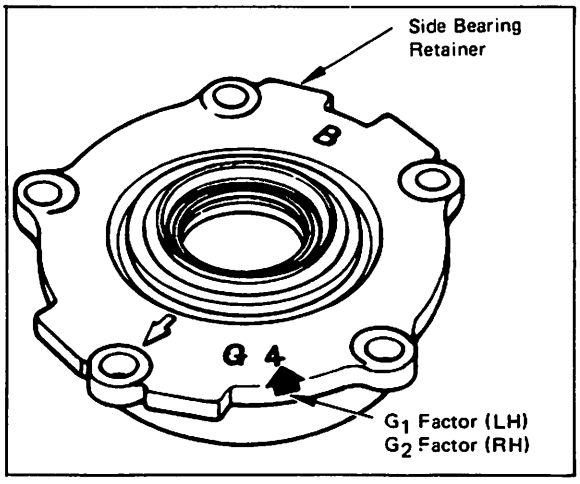

9. Finally, look on the ring gear for markings. If you find a plus (+) or minus (−) sign followed by a number, this will be factor "H".

NOTE:
If the ring gear is unmarked, or zero use 0 as factor "H".

10. Determine the shim size by using the formula shown below. Substitute each factor letter with its corresponding letter in the formula.

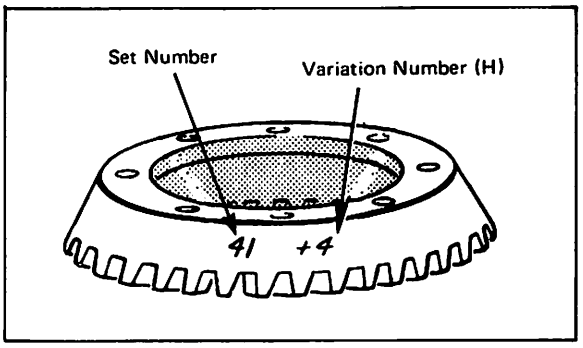

NOTE:
Please note that the formula for left and right side bearings are not the same.

Left side (T1): A + C − G1 − D − E + H + .76
Right side (T2): B + G2 + D − F − H + .76

NOTE:
The calculations above can be double-checked by using a side bearing shim calculator.

11. Select the correct size shim for each bearing. Measure the shim to ensure accuracy.

12. Press on the side bearings, using drift J-25805. Be sure to protect the lower bearing as shown by using the puller adapter J-8107-2.

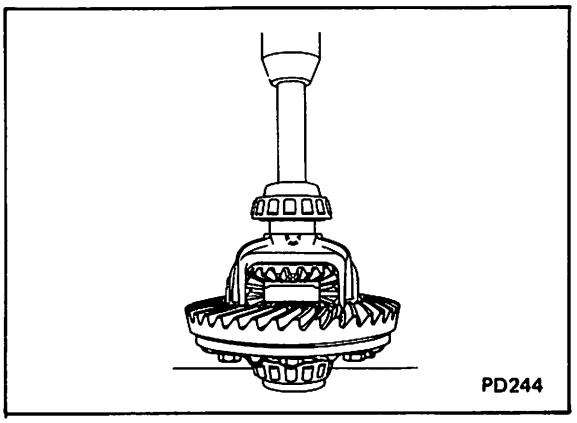

Side Bearing Shim Determination (Con't)

13. Install the bearing races, using Tools J-25805-01 and J-26090.

NOTE:
This will be much easier if you soak the retainer in very hot water for a few minutes to make it expand. The race will drop right in when correctly lined up.

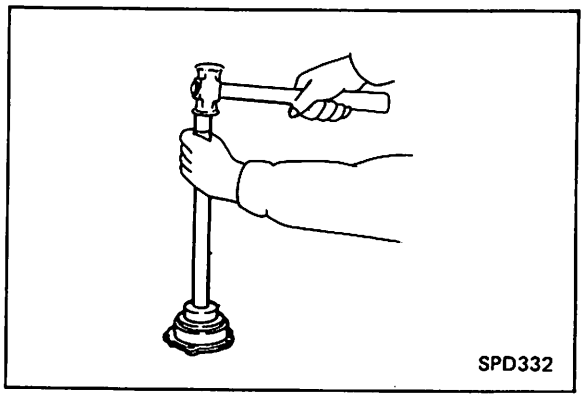

14. Install the correct side bearing adjusting shim(s) then O-rings on each retainer.

15. Place the ring gear carrier assembly in the housing, then install the side bearing retainers in their proper places.

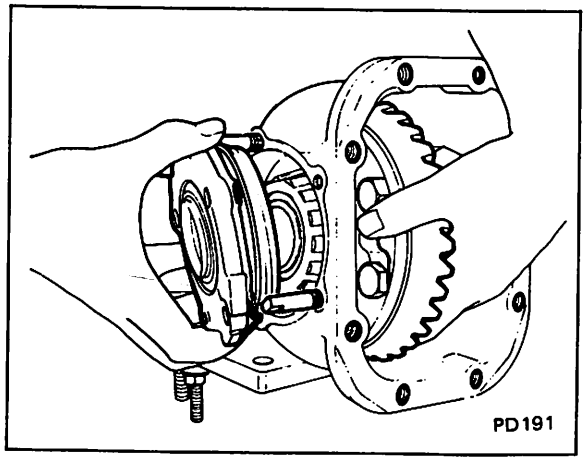

16. Install new oil seals in the retainers using drift J-25809 and a hammer.

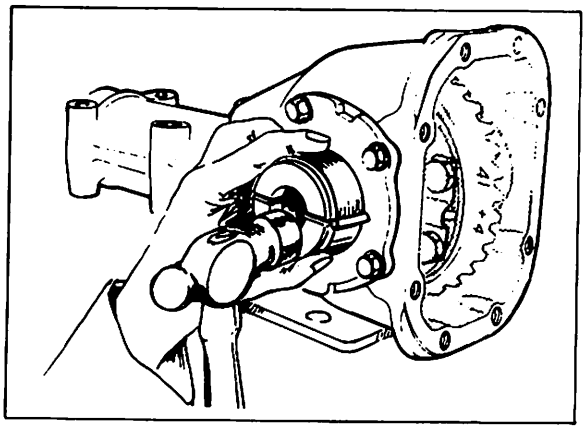

17. Install each side flange by sliding them onto the splines of the gear case.

Final Verification

1. Check backlash of ring gear with a dial indicator.
   Backlash:
   0.005-0.007 in (0.13-0.18 mm)

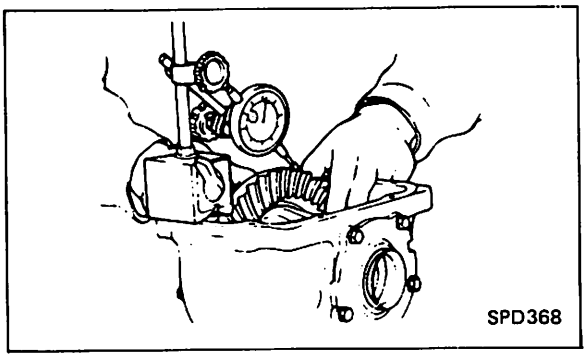
SPD368

— **If backlash is too small,** decrease thickness of right shim and increase thickness of left shim by the same amount.

— **If backlash is too great,** reverse the above procedure.

NOTE:
Never change the total amount of shims as it will change the bearing preload.

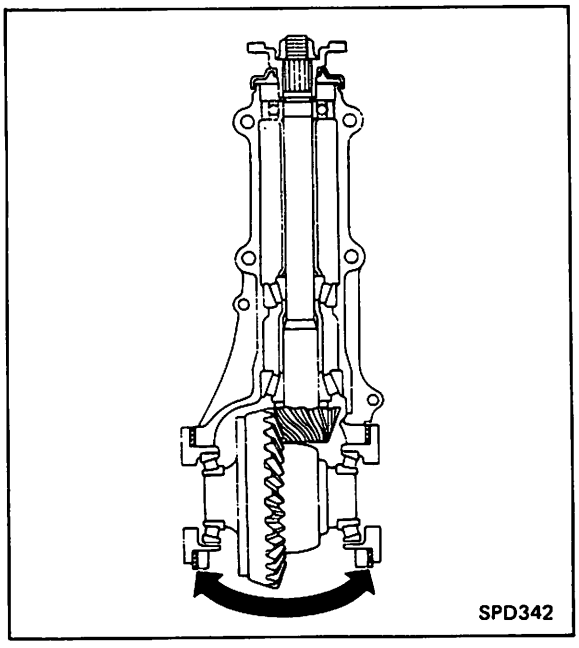
SPD342

2. Check total preload with Tool J-25765-A.
   Total preload:
   8.7-20.0 in-lb (10-23 kg-cm, 1.0-2.3 N.m)

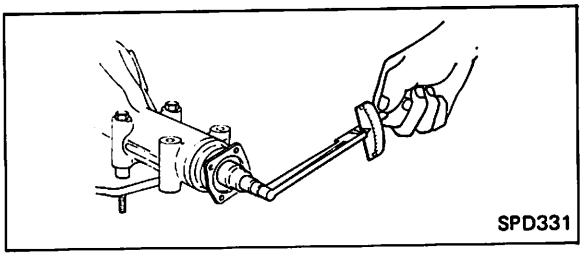
SPD331

— **If preload is too great,** add the same amount of shim to each side.

— **If preload is too small,** remove the same amount of shim from each side.

NOTE:
Never add or remove different amount of shims to or from each side, or ring gear backlash will be changed.

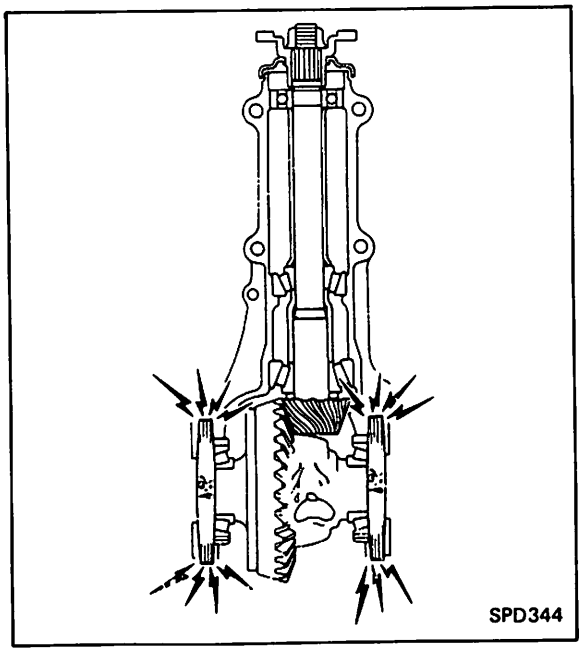
SPD344

NOTE:
Check ring gear-to-drive pinion backlash because increase or decrease in thickness of shims will cause change of ring gear-to-pinion backlash.
Backlash:
0.005-0.007 in (0.13-0.18 mm)

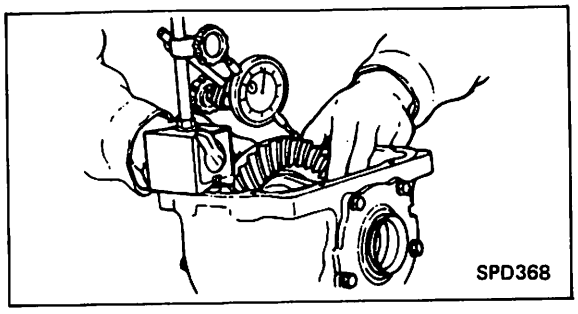
SPD368

Final Verification (Con't)

3. Check runout of ring gear with a dial indicator.

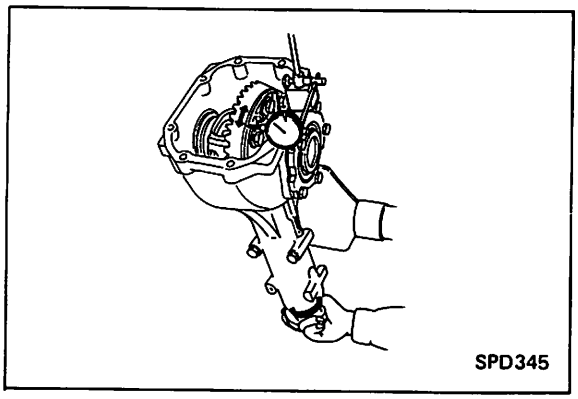

— **If backlash varies excessively in different places,** the variance may have resulted from foreign matter caught between the ring gear and the differential case.

— **If the runout is over specifications** even after removal of the foreign matter, the hypoid gear set or differential case should be replaced.

— **If the backlash varies greatly even when the runout of the ring gear is within a specified range,** the hypoid gear set or differential case should be replaced.

4. **Tooth contact check and adjustment:**

Finally, check for tooth contact pattern.

Refer to **Tooth Contact.**

Usually the pattern will be correct if you have calculated the shims correctly and the backlash is correct.

However, in extremely rare cases you will have to use trail-and-error processes until you get a good tooth contact pattern.

The tooth pattern is the best indication of how well a differential has been set up.

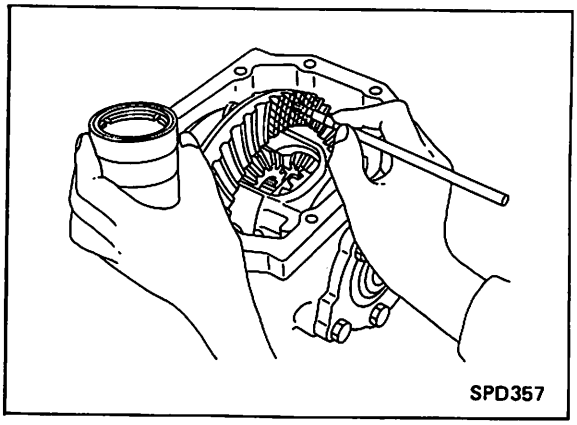

5. Install rear cover.

NOTE:
Gasket should be replaced by new one each time the differential carrier is remove.
Torque:
29 - 36 ft-lb (4 - 5 kg-m, 39 - 49 N·m)

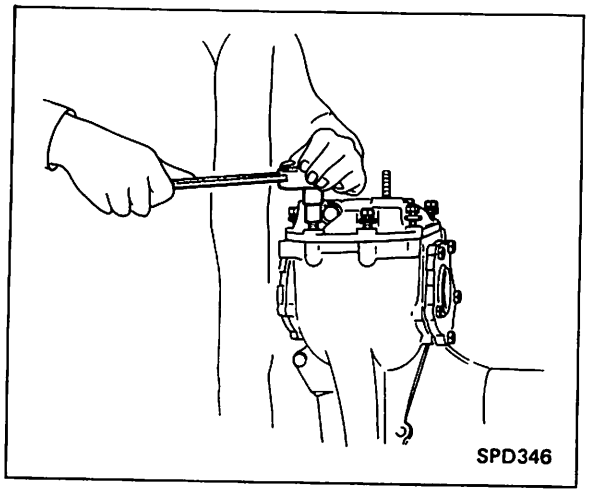

6. Install side flange.

7. Install differential carrier in vehicle and tighten nuts to the specified value.

8. Install drive shaft and front propeller shaft.

9. Then fill with gear oil, referring to Recommended Lubricants (see Section MA of your Service Manual).
Gear oil capacity:
2-1/8 US pts (1.0 liters, 1-3/4 Imp pt)

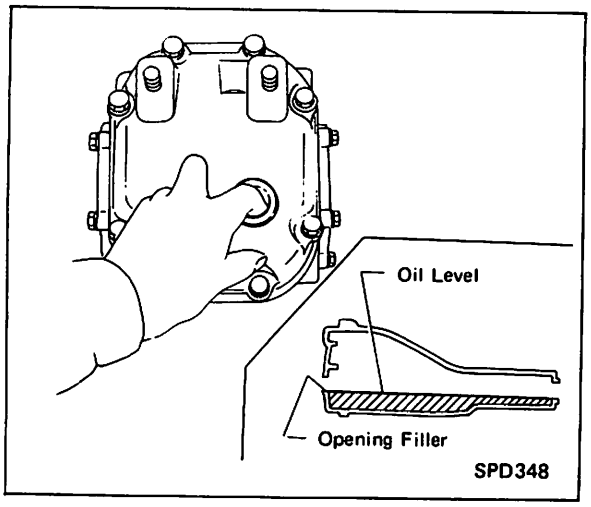

Front Oil Seal Replacement

The following is the procedure for replacement of the front oil seal with the differential installed on the vehicle.

1. Drain gear oil.
2. Block the rear wheels. Raise the vehicle with a garage jack and position the safety stands.
3. Detach propeller shaft from companion flange of carrier (see Section PD of your Service Manual).
4. Remove the drive pinion nut using flange wrench J-25774 and a 27mm socket.
5. Extract the companion flange using Tool J-22888.
6. Remove oil seal.

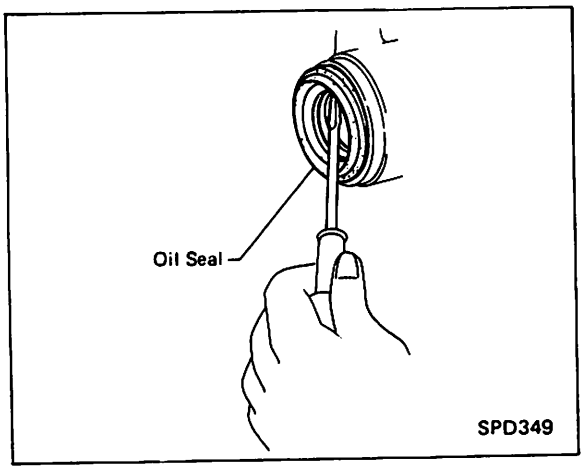

7. Apply grease to the cavity between the oil seal lips of the replacement seal.

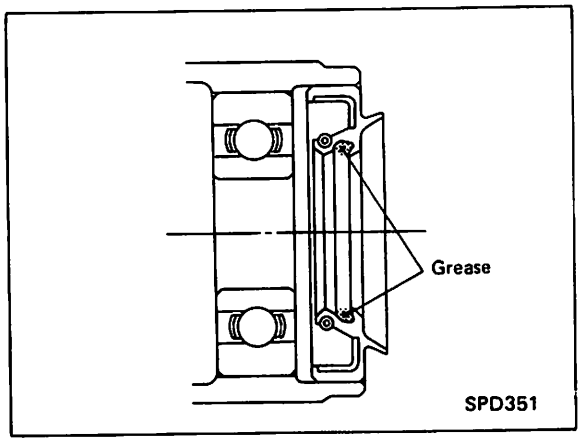

8. Install the new seal using Tool J-25405.

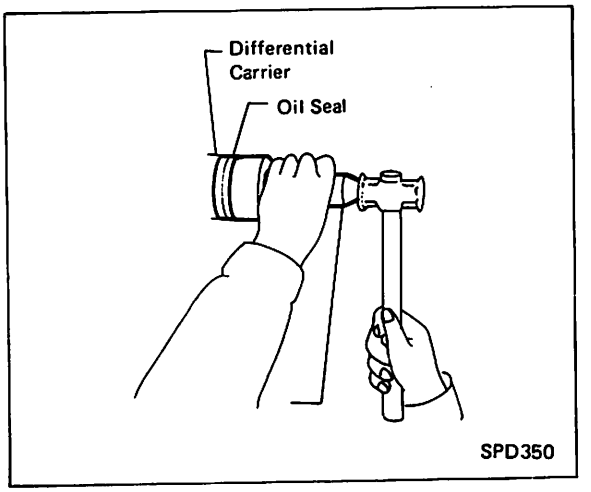

9. Fit companion flange the drive pinion, install the nut.
   Torque:
   123 - 145 ft-lb (17 - 20 kg-m, 167 - 196 N·m)
10. Re-install the propeller shaft in the reverse order of removal. Check all torques.
11. Fill the carrier with the specified amount of gear oil.

Side Oil Seal Replacement

The following is the procedure for replacement of side oil seal with differential gear carrier assembly installed on the vehicle.

1. Remove side flange.

2. Remove seal using Tool J-25810A.

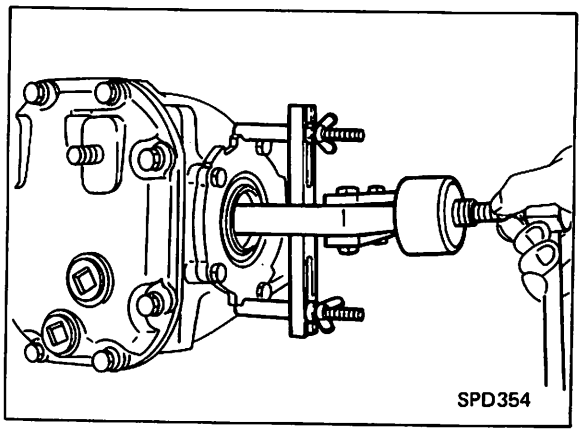

3. Install new oil seal in the retainer, tapping it with a soft hammer on opposite sides until it seats squarely.

4. Apply grease to cavity between oil seal lips.

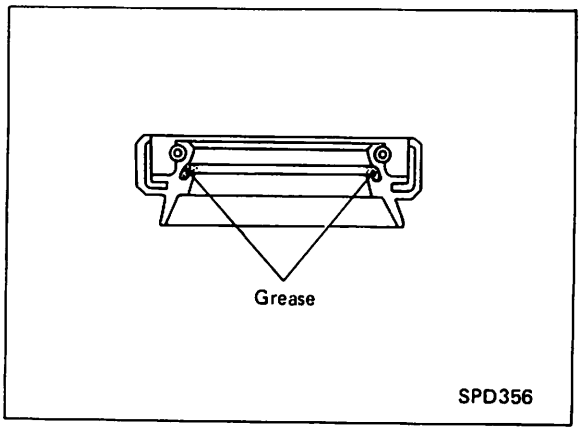

5. Install the side flanges by sliding them onto the gear case splines.

REAR FINAL DRIVE
— Model: H190-ML, H190-A —

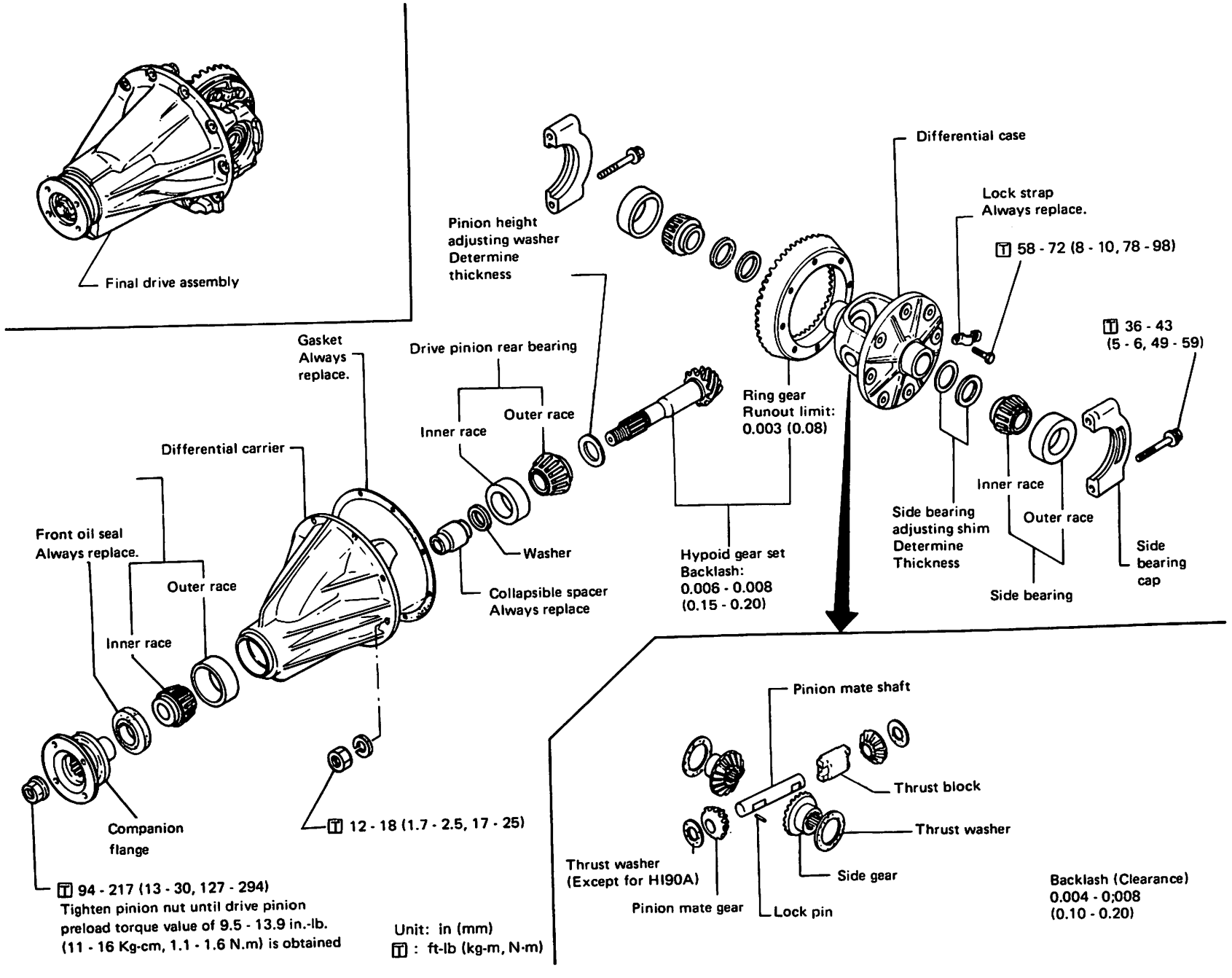

Preparation for Disassembly — Removal

1. Jack up rear end of the vehicle and support it by placing safety stands under rear axle case (Refer to Section GI of your Service Manual).

2. Remove drain plug and drain gear oil.

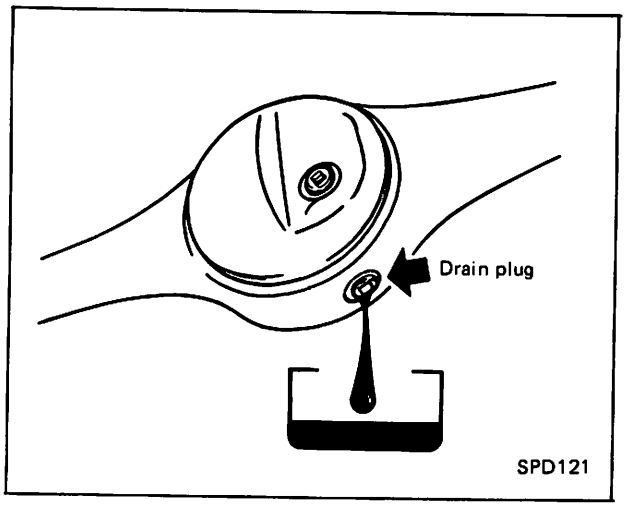

3. Remove the propeller shaft and rear axle shafts (Refer to Section RA of your Service Manual). Plug the rear end of the transmission rear extension housing.

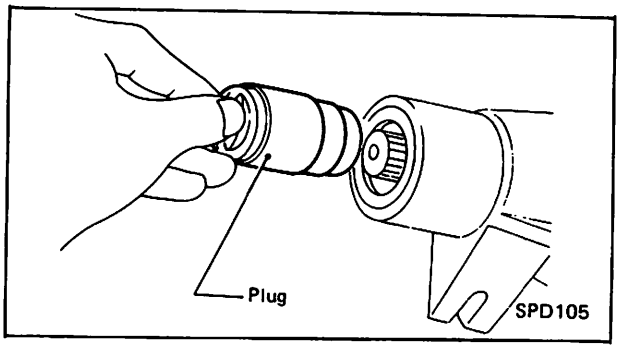

4. Loosen off nuts securing differential carrier to rear axle case, and take out differential carrier.

5. Mount differential carrier using Tool, J-25602-01.

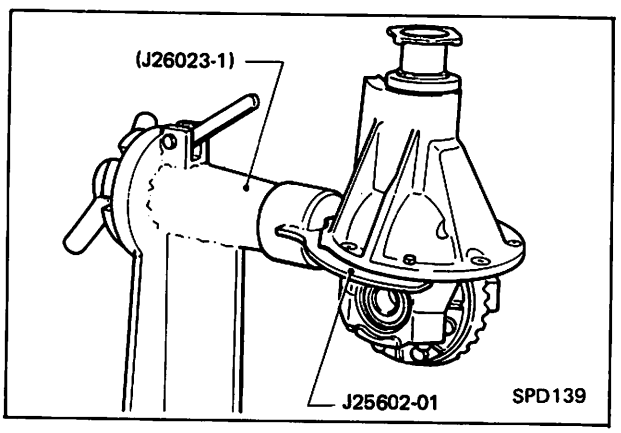

Pre-Disassembly Inspection

1. Check ring gear backlash with a dial indicator at several points. If it is not within specification, adjust it.
   Backlash:
   0.006-0.008 in (0.15-0.20 mm)

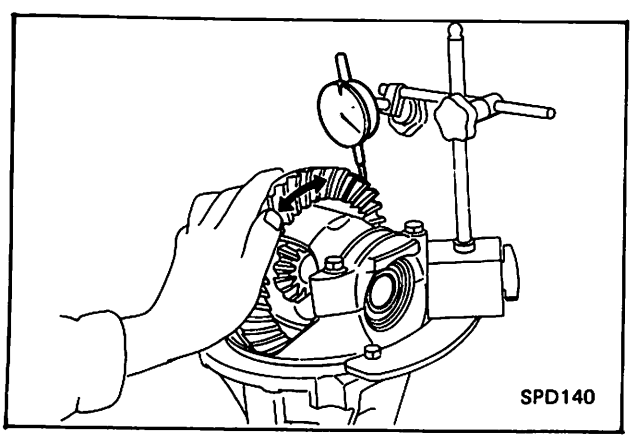

2. Check ring gear runout with a dial indicator. If it is over specification, hypoid gear set or differential case should be replaced.

NOTE:
When backlash varies excessively in different places, the variance may have resulted from foreign matter caught between ring gear and differential case.
Runout limit:
0.003 in (0.08 mm)

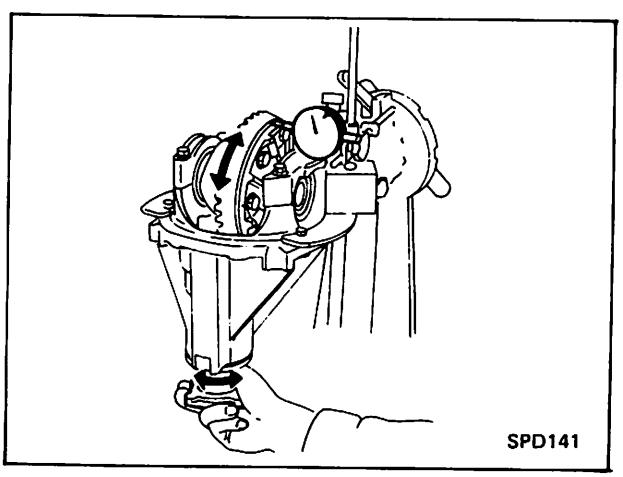

Pre-Disassembly Inspection (Con't)

3. Check side gear backlash. Using a thickness gauge, measure clearance between side gear and differential case.
   Backlash:
   0.004-0.008 in (0.10-0.20 mm)

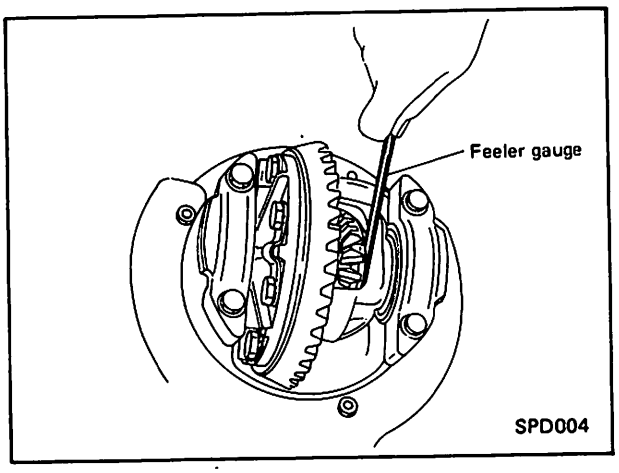

If it is not within specification, adjust it by selecting side gear thrust washer.

4. Check tooth contact, referring to **TOOTH CONTACT.**

Tooth Contact

Gear tooth contact pattern check is necessary to verify correct relationship between ring gear and drive pinion.

Hypoid gear sets which are not positioned properly may be noisy, or have short life or both. With a pattern check, the most desirable contact for low noise level and long life can be assured.

Check

1. Thoroughly clean ring gear and drive pinion teeth.
2. Sparingly apply a mixture of powdered ferric oxide and oil or equivalent to 3 or 4 teeth of ring gear drive side.

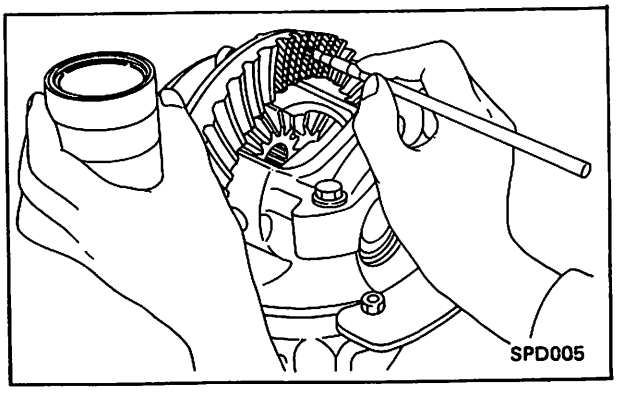

3. Hold companion flange steady by hand and rotate the ring gear in both directions.

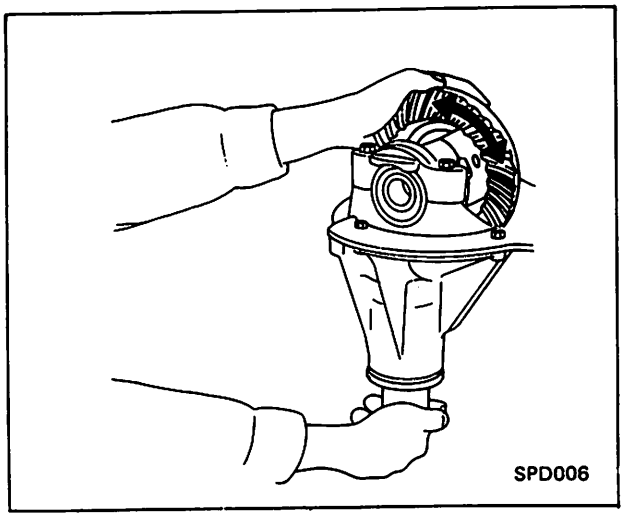

4. Compare contact marks left on the ring gear to those found in the following illustration.

Tooth Pattern Interpretation

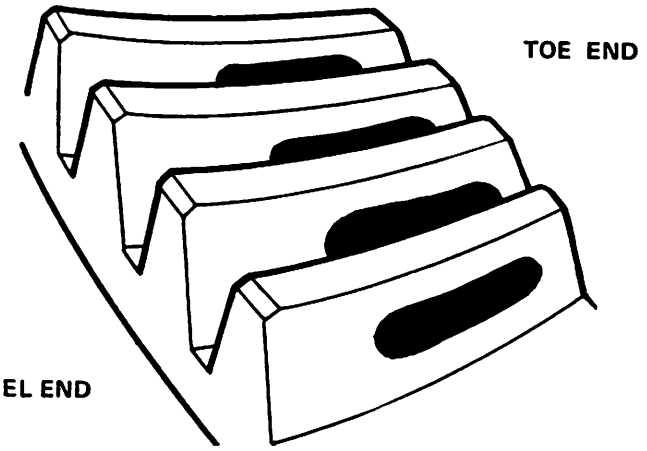

Perfect tooth pattern.

NOTE: A change in pinion height will also cause a change in backlash, so both will usually have to be adjusted.

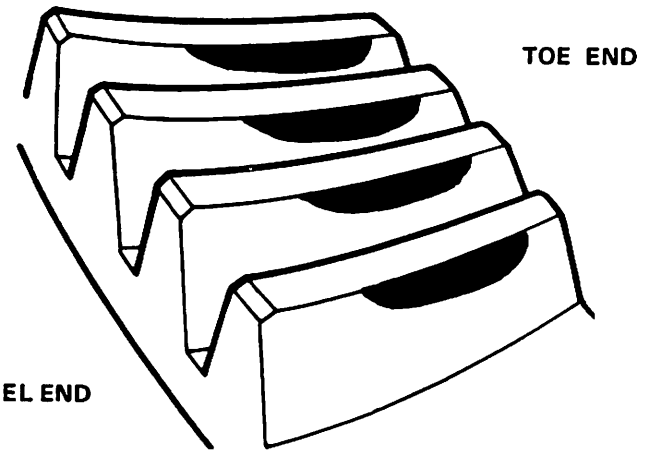

The pinion is too low. You will have to add to the shim(s) under the pinion.

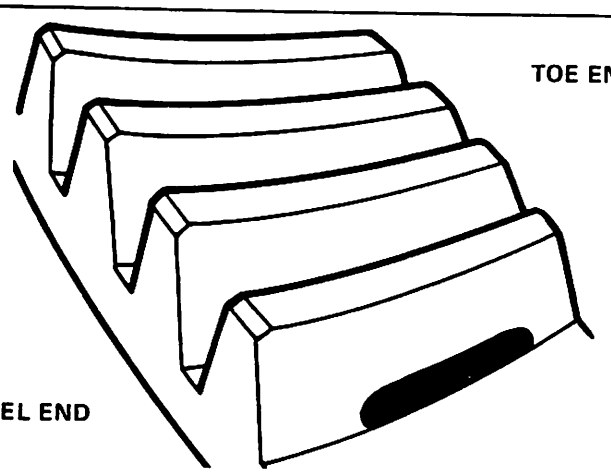

The pinion is too high. The shim(s) under the pinion will have to be decreased.

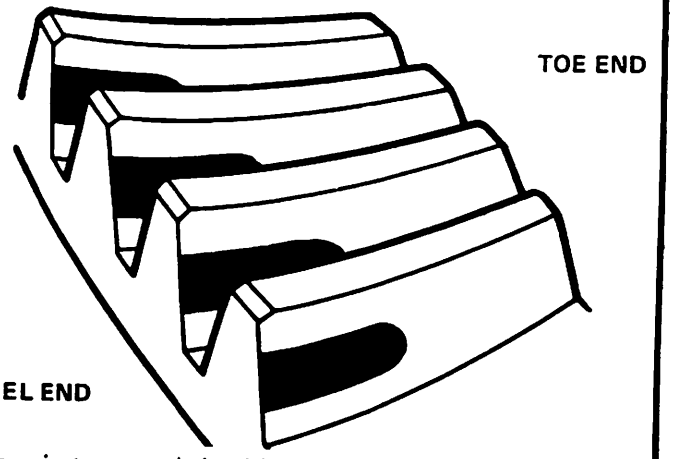

There is too much backlash — the ring gear will have to be moved closer to the pinion.

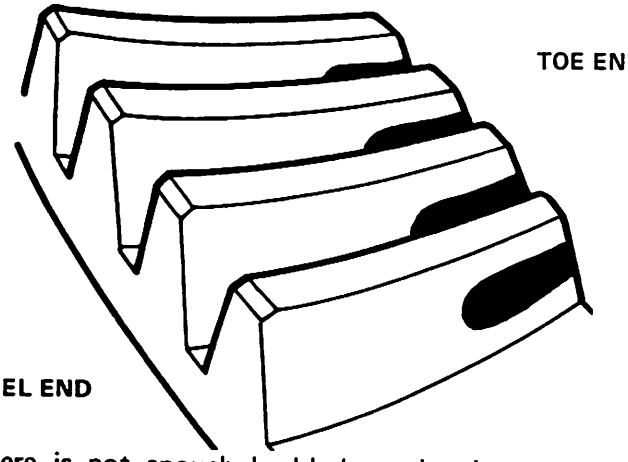

There is not enough backlash — the ring gear will have to be moved away from the pinion.

Disassembly

1. Mark the side bearing cap and case on one side to ensure proper assembly.

   NOTE:
   Bearing caps are line-bored and must be assembled in their original position.

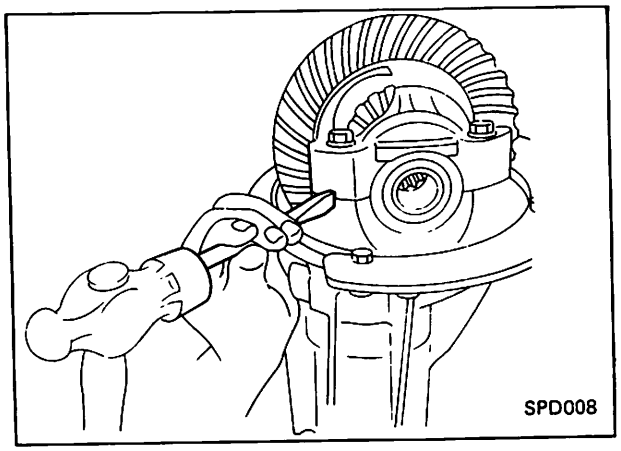

2. Remove side bearing caps using a 14mm socket.

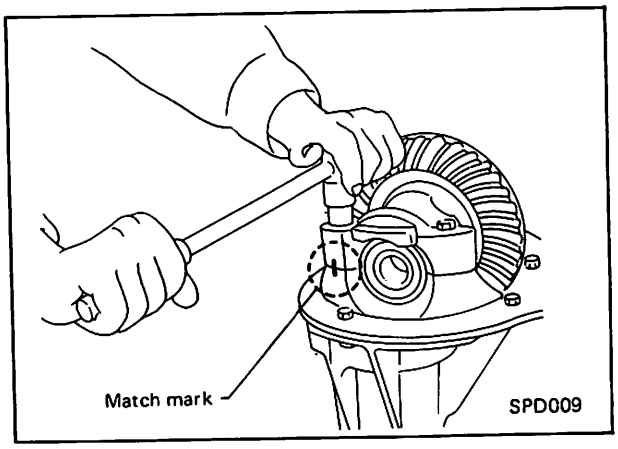

3. Using a pry bar, remove the ring gear assembly from the differential housing. Keep the bearing races with the corresponding bearings.

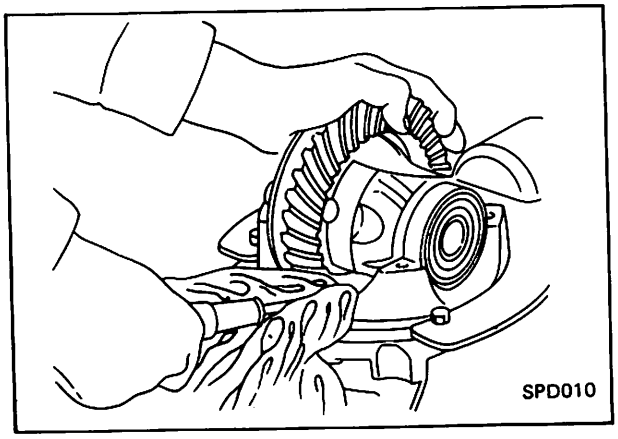

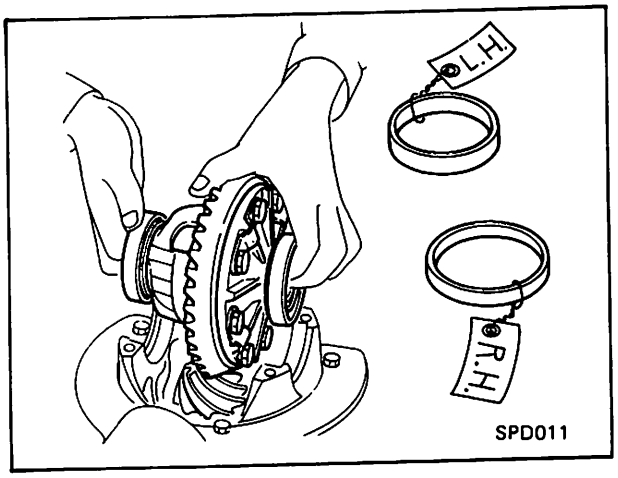

4. Attach the flange wrench J-25774 to the flange to prevent its turning, and remove the pinion shaft nut using a 27mm socket and breaker bar.

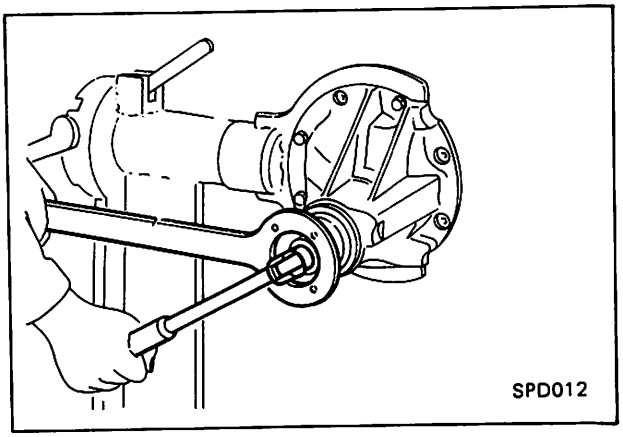

5. Drive the pinion through the housing using a brass drift and a heavy hammer. Be careful not to damage the pinion shaft threads. Pull the companion flange out by hand.

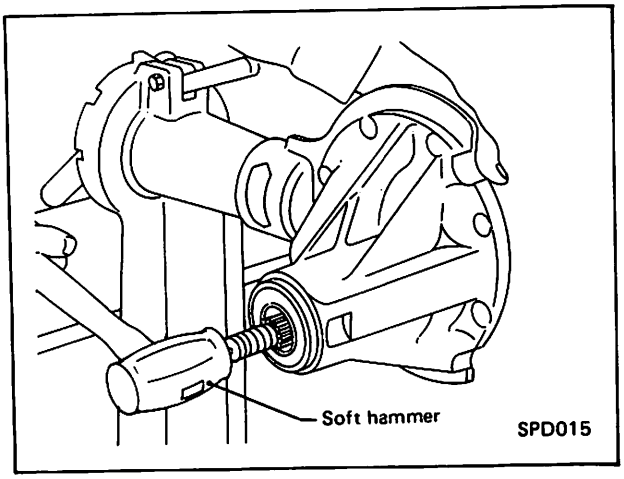

Disassembly (Con't)

6. Remove the oil seal by prying up with a large screwdriver as shown.

NOTE:
Do this carefully to avoid scratching the housing bore with the screwdriver. Cover the end of the screwdriver with a rag as shown.

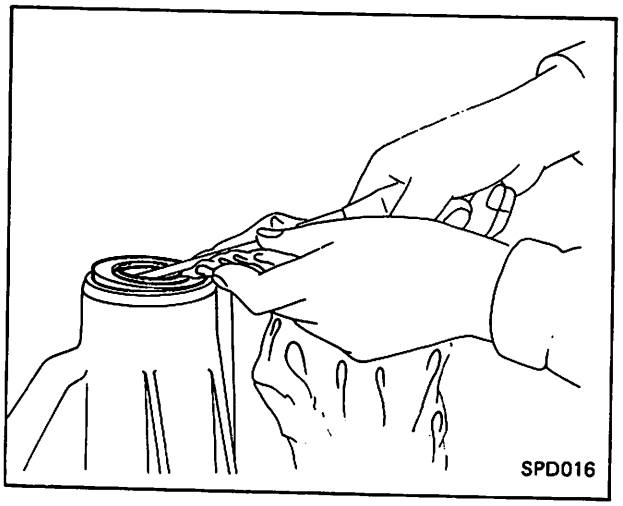

7. Remove the pinion bearing races using a brass drift.

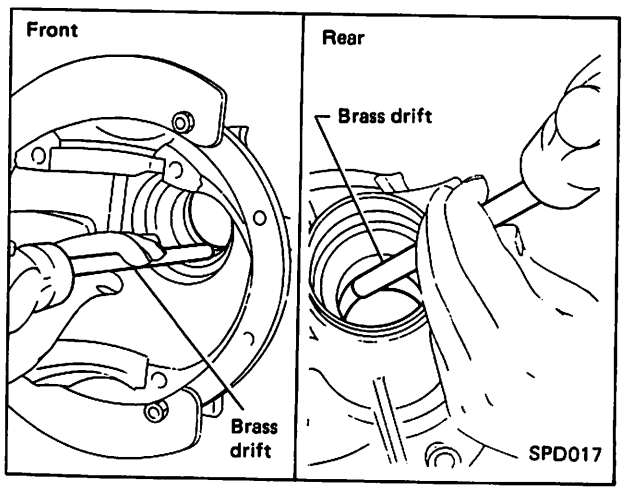

8. Remove the preload shim and spacer from the pinion shaft. Sometimes the shim will be found sticking to the front pinion bearing. Save the shim and spacer.

9. Remove the rear pinion bearing using a press and Tool J-22912-01. Be certain the parting line of the tool is at a right angle to the support fixture of the press (A). This will prevent bending of the tool (B). Save the pinion height washer for re-use.

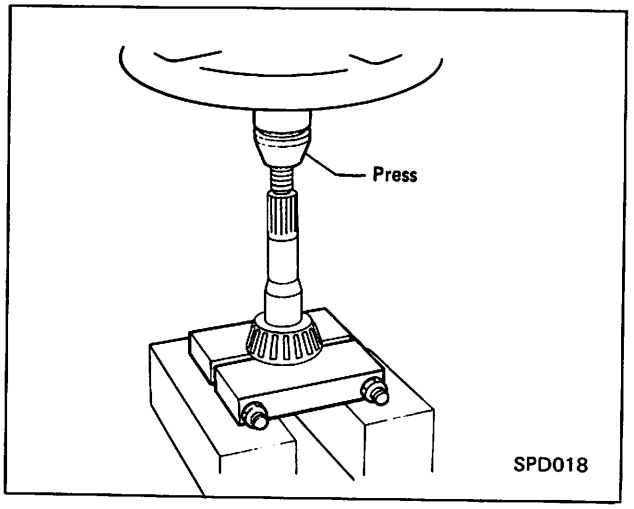

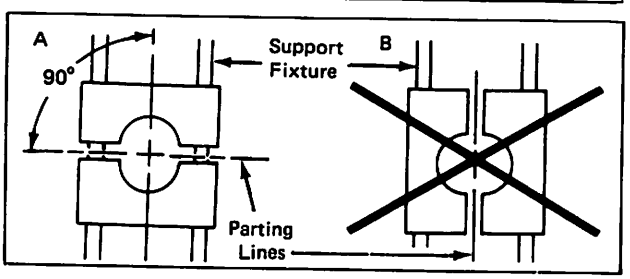

10. Attach side bearing puller Tools J-22888 and J-8107-02 to the side bearing and remove both bearings.

NOTE:
Be certain the puller catches the groove at the edge of the bearing inner race. Keep the left and right side bearings and races together.

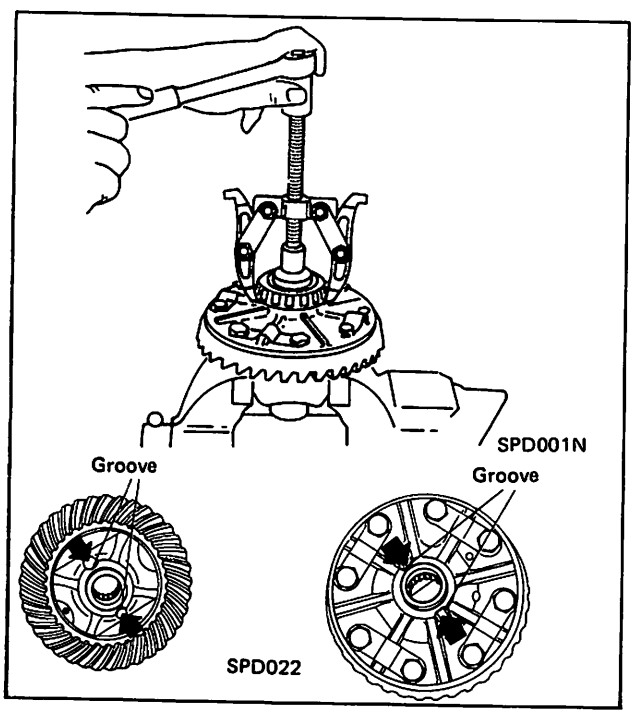

Disassembly (Con't)

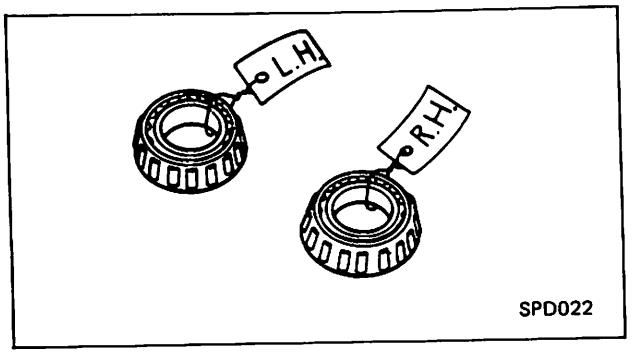

11. Flatten the lock tabs and remove the ring gear bolts in a criss-cross fashion using a 17mm socket.

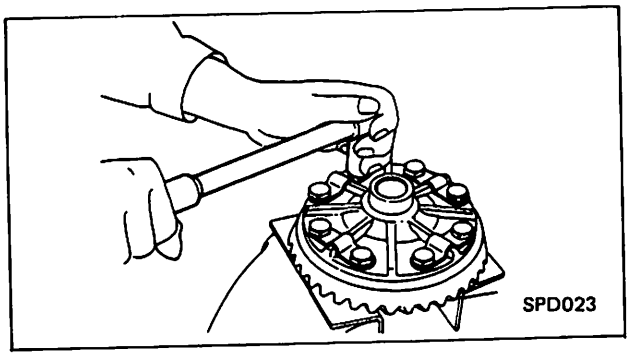

12. Tap the ring gear off the gear carrier using a plastic hammer. Tap evenly all around to keep the gear from binding.

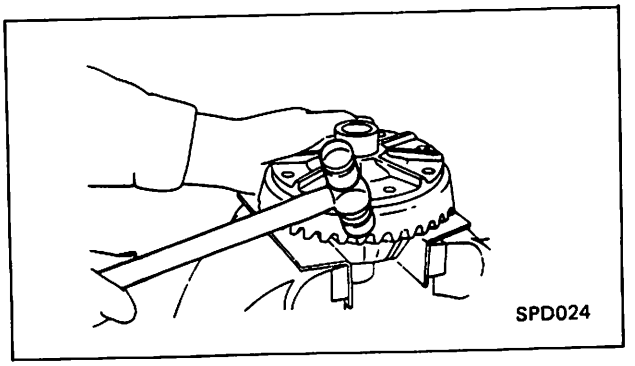

13. Double-check the side gear case clearance (previously measured during inspection). The clearance must be 0-0.006 in (0-0.15 mm). If not, the side gear thrust washers will have to be changed during re-assembly.

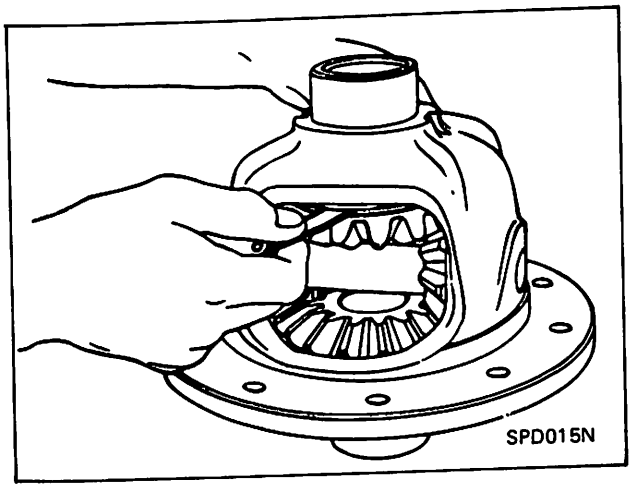

14. Using a long drift, drive the lock pin out of the gear carrier.

15. Draw out the pinion mate shaft, then rotate the pinion mate gears out of the case. Remove the side gears and thrust washers.

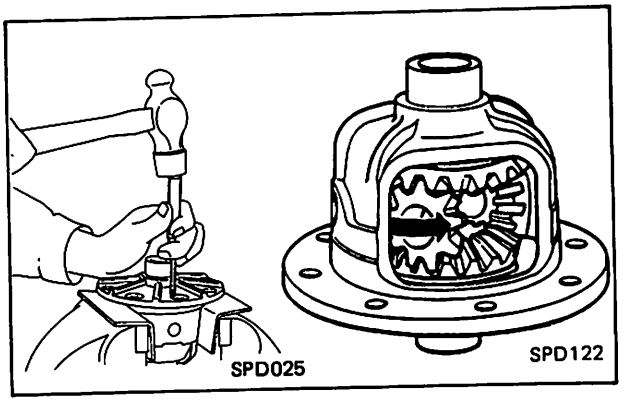

NOTE:
Put marks on the gears and thrust washers so that they can be reinstalled in their original positions.

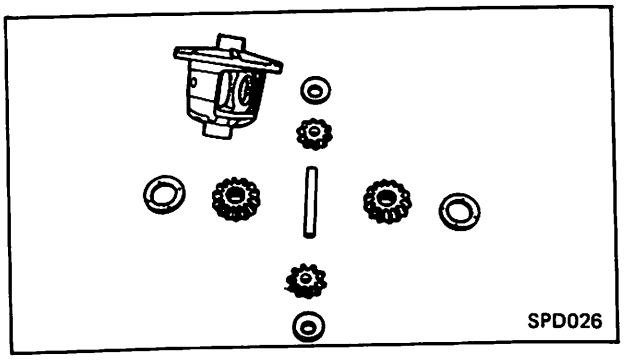

Parts Inspection

Disassembled parts should be cleaned thoroughly, then examined for wear or damage. Repair or replace any damaged or worn parts.

1. Check all gear teeth (A) for scoring, cracking or chipping.

   NOTE:
   The ring gear and pinion shaft will always be replaced as a set.

2. Inspect pinion bearing races and rollers (B) for scoring, cracking, chipping or signs of excessive wear.

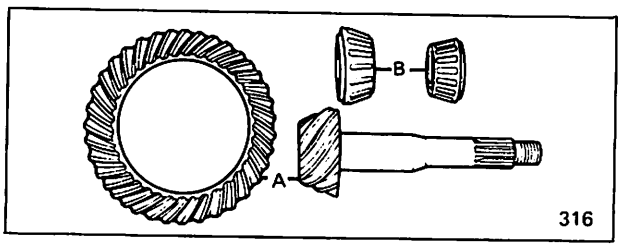

NOTE:
Pinion bearings should be replaced whenever pinion shaft ring gear sets are changed.

3. Inspect:
   a. Pinion mate shaft — for signs of wear or component distortion.
   b. Side and pinion mate gears — for scoring, chipped or worn teeth.
   c. Thrust block — for scoring or damage.

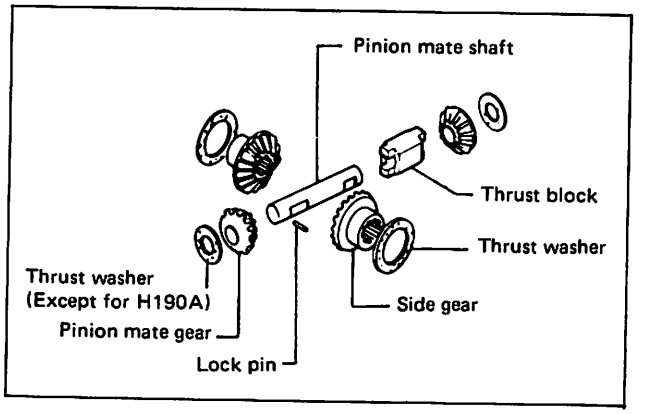

4. Inspect thrust washer faces. Small faults can be corrected with sandpaper.

   NOTE:
   The following parts should be replaced by new ones each time they are removed.

   ① Gasket
   ② Front oil seal
   ③ Collapsible spacer
   ④ Lock strap

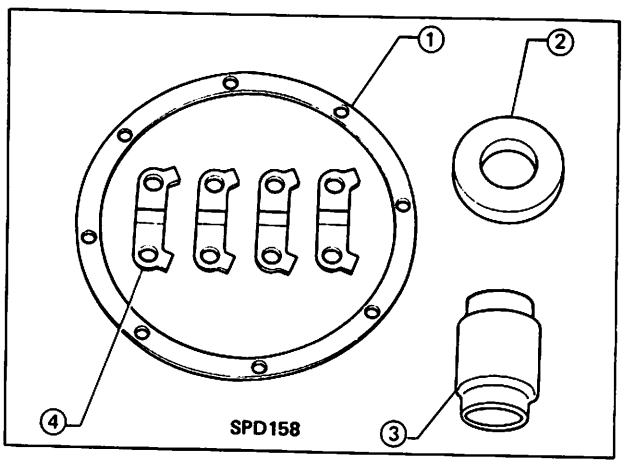

Assembly

Assembly should be done in the reverse order of disassembly, while making any necessary inspections and adjustments.

PRECAUTION:

a. **Arrange shims and washers to install them correctly.**
b. **Thoroughly clean the surfaces on which shims, washers, bearings and bearing caps are installed.**
c. **Apply gear oil when installing bearings.**
d. **Pack recommended multi-purpose grease into cavity between lips when fitting oil seal.**

DIFFERENTIAL CASE

1. Install pinion mate gears, side gears and thrust washers into differential case.
2. Fit pinion mate shaft and thrust block.
3. Adjust clearance between rear face of side gear and thrust washer by selecting side gear thrust washer (Refer to S.D.S.).

   Side gear clearance:
   0.004-0.008 in (0.10-0.20 mm)

Assembly (Con't)

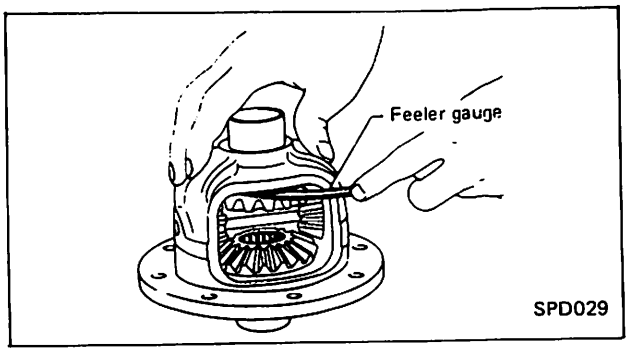

4. Install pinion mate shaft lock pin using a punch.

NOTE:
Make sure lock pin is flush with case.

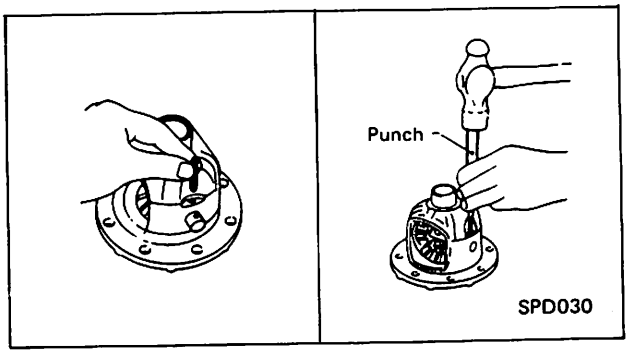

5. Install the ring gear, bolts and locking tabs. Torque 58 - 72 ft-lb (8 - 10 kg-m, 78 - 98 N·m). Tap the bolt heads with a hammer, then re-torque. Tighten bolts in a criss-cross fashion.

NOTE:
Do not assemble side bearings at this point.

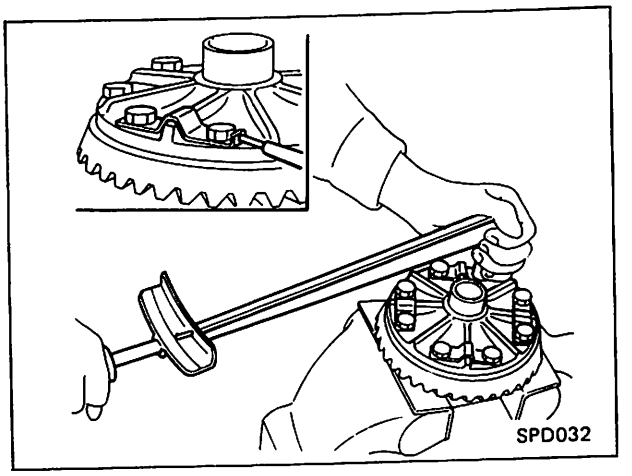

6. Using Tools J-25742-01 and J-25742-03, install pinion bearing inner and outer races. Be certain the races are seated squarely in their bores.

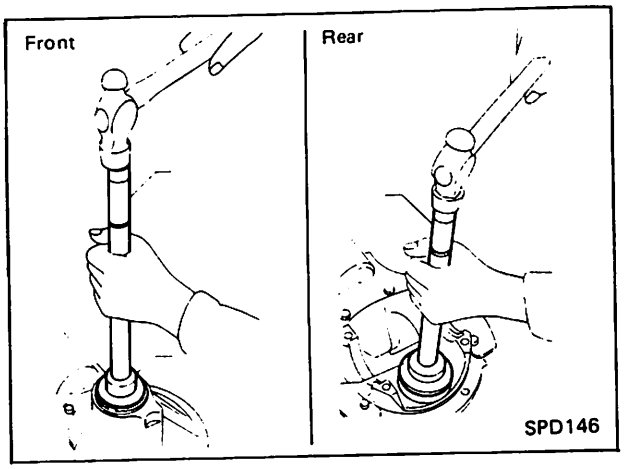

Preload/Pinion Height Adjustment

1. Install bearing pilot into the gauge plate and slide over the long bolt. Use special tools as shown below:

J25269-30 (H190-ML) ..... ①
J25269-20 (H190-A) ..... ①
J25269-23 ..... ②

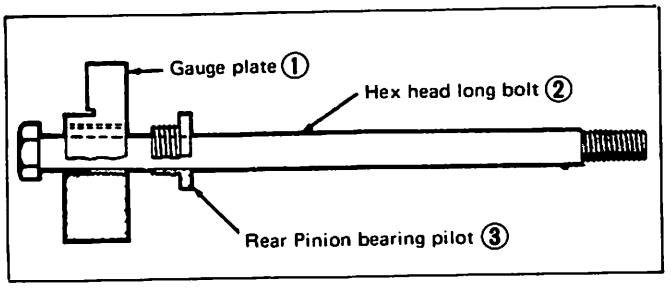

J25269-02 (H190-ML) ..... ③
J25269-12 (H190-A) ..... ③

2. Install the rear pinion bearing in the differential housing. Slide the long bolt and gauge plate through the bearing.

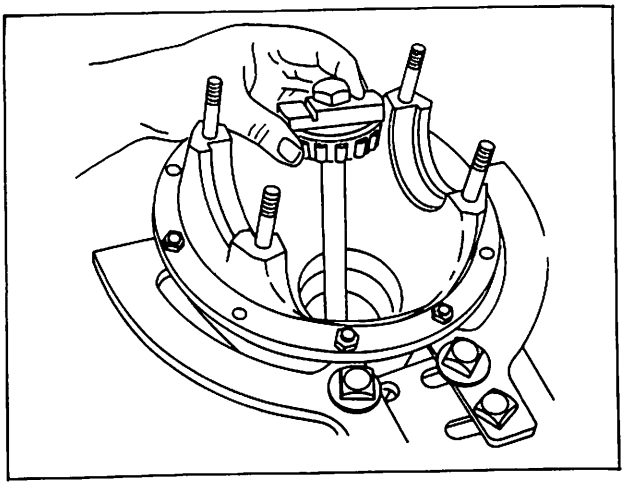

Preload/Pinion Height Adjustment (Con't)

3. Holding these parts together, slide the assembly over the long bolt into the differential housing. Install the front bearing pilot support and support nut. Finger tighten the nut and insure that all parts turn freely and are properly aligned.

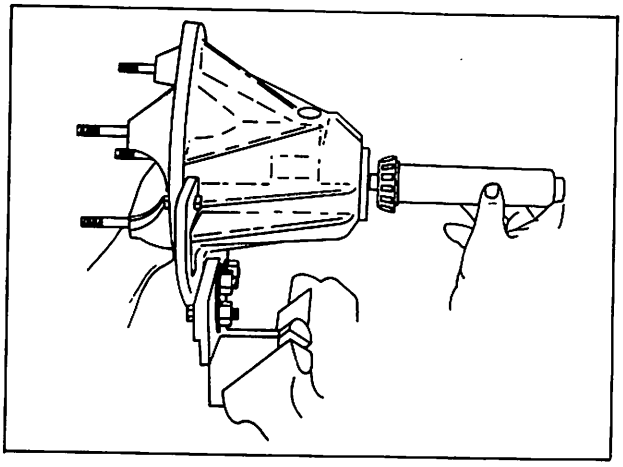

4. Tighten nut carefully to the correct preload of 8.7-11.3 in-lbs (10-13 kg-cm, 1.0-1.3 N.m).

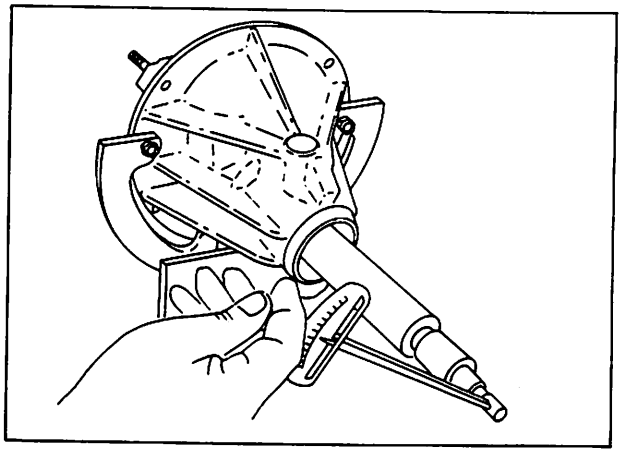

5. Install two discs with arbor assembly. Ensure that the arbor turns freely.

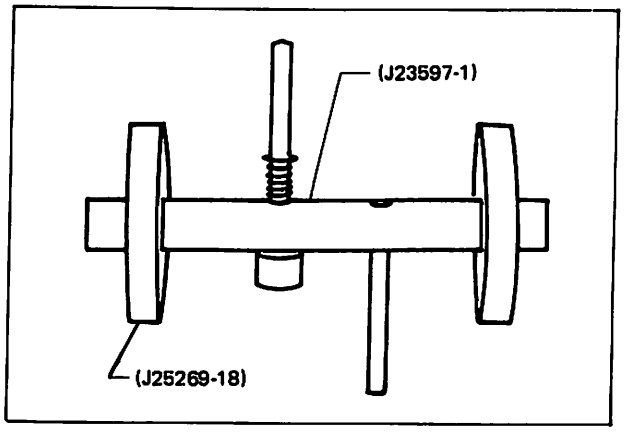

6. Lift the spring loaded plunger and place it on the face of the gauge plate (use the correct gauge plate step).

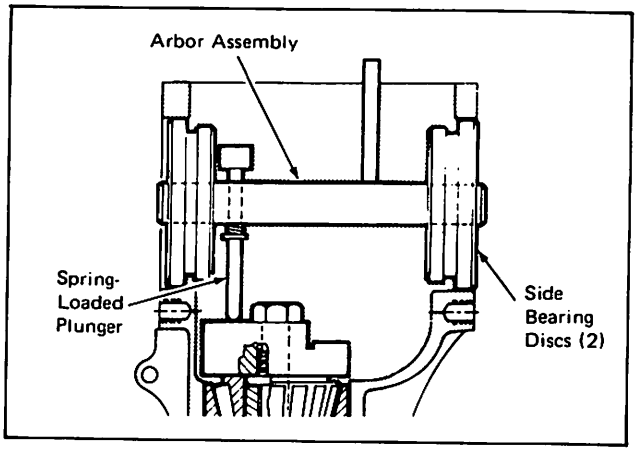

7. Install the dial indicator and tighten the hold down clamp.

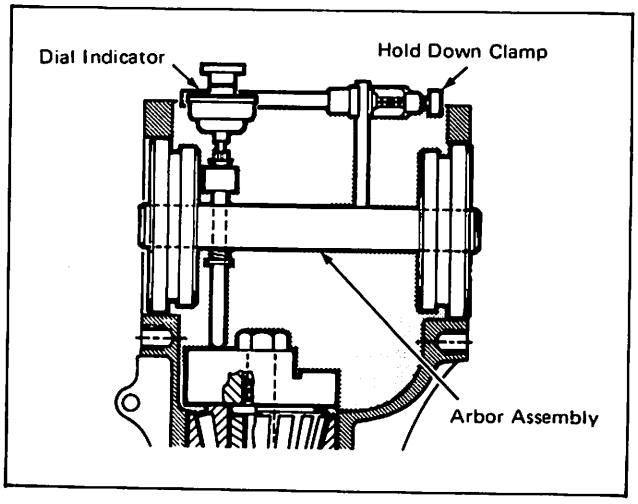

8. To zero the dial indicator, rotate the arbor and plunger back and forth and note highest deflection, (the point where the needle changes direction). Now set the dial indicator at zero.

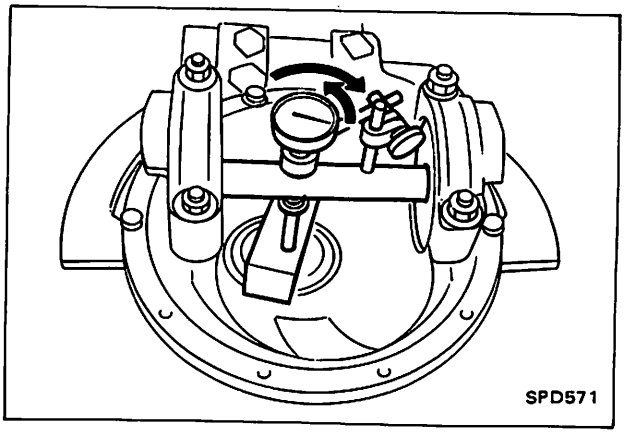

Preload/Pinion Height Adjustment (Con't)

NOTE:
Use the chart below and the steps that follow the chart to determine correct pinion shim size.

A.	mm*	Standard Measure
B.	_____	Dial Indicator Reading
C.	_____	Add A+B=C
D.	_____	Pinion Marking
E.	_____	Pinion Shim Size (add or subtract D from C)

*Standard measures: H190-ML — 2.00 mm
H190-A — 2.50 mm

9. Fill in the correct standard measure.

10. Rotate gauge plate until the plunger falls off of the gauge plate and read the dial indicator. Repeat to ensure accuracy.

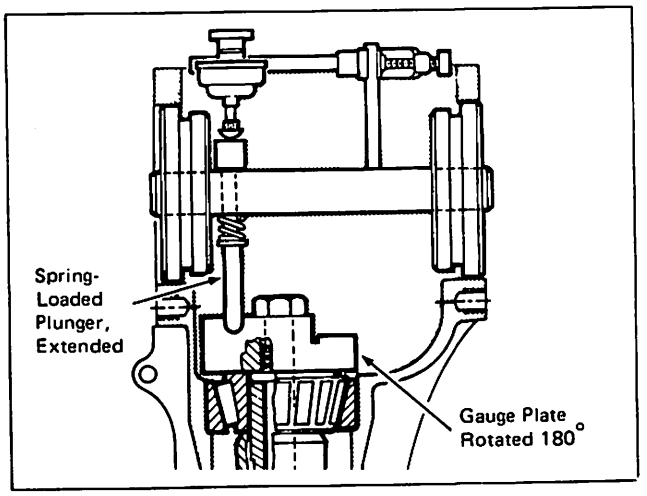

Be sure to use the metric dial indicator on the 0.01 mm dial, not the inch dial indicator.

11. Check the pinion head for the variation marking (Factor D). If the marking is a plus (+) **subtract** line D from line C. If it is a minus (–) **add** lines C and D.

NOTE:
If the pinion is unmarked or marked zero, then line C is your pinion shim size. Otherwise line E is the correct pinion size.

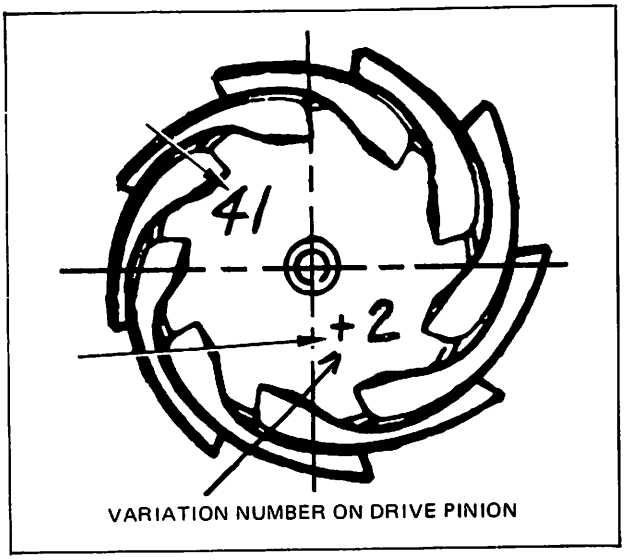

VARIATION NUMBER ON DRIVE PINION

12. Select the proper shim. As a precaution measure the shim to verify its dimensions.

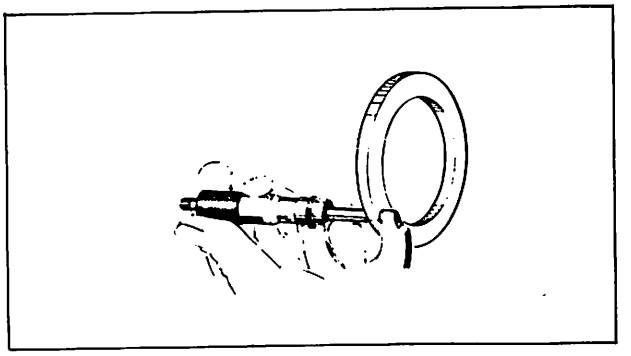

Pinion Assembly

1. Place a pinion shim of the correct size on the pinion shaft, bevel side toward the gear. Using the press stand, press the bearing on the shaft.

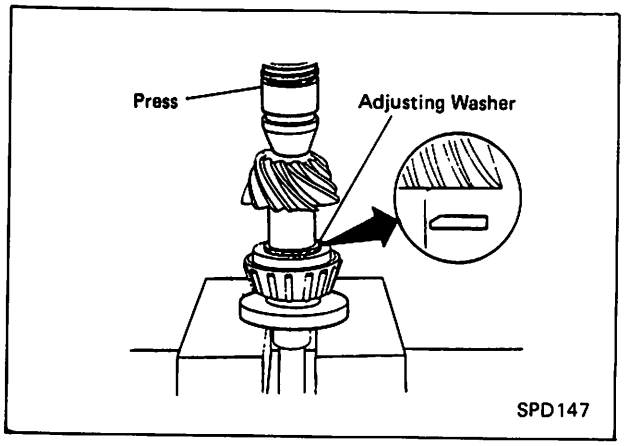

2. Place a **washer** and a **new** collapsible spacer on drive pinion and **lubricate** rear bearing with gear oil, and insert it in gear carrier.

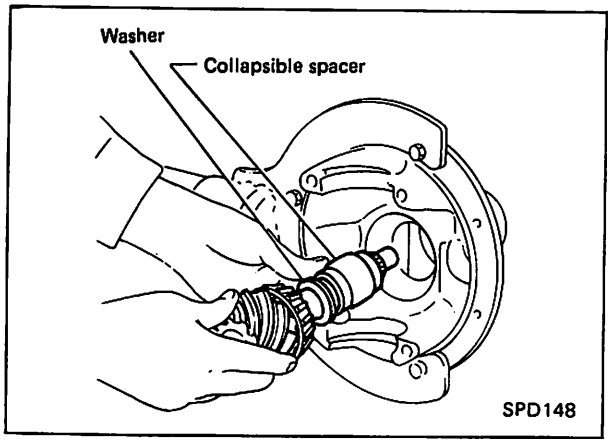

3. **Lubricate** front bearing with gear oil and place it in gear carrier.

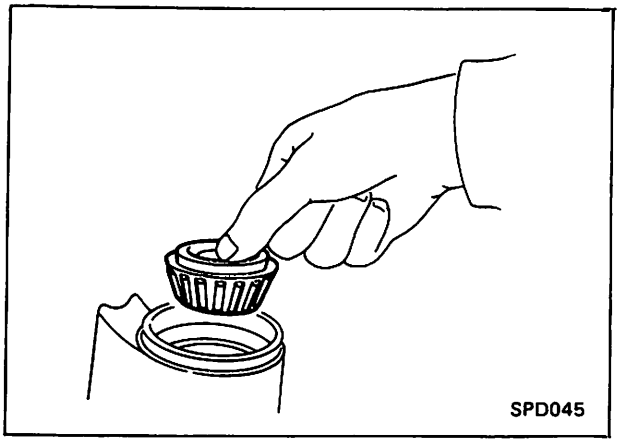

4. Using Tool J-25405, carefully fit a **new** oil seal into carrier.

NOTE:
Make sure oil seal is flush with end of carrier and apply multi-purpose grease into cavity between lips.

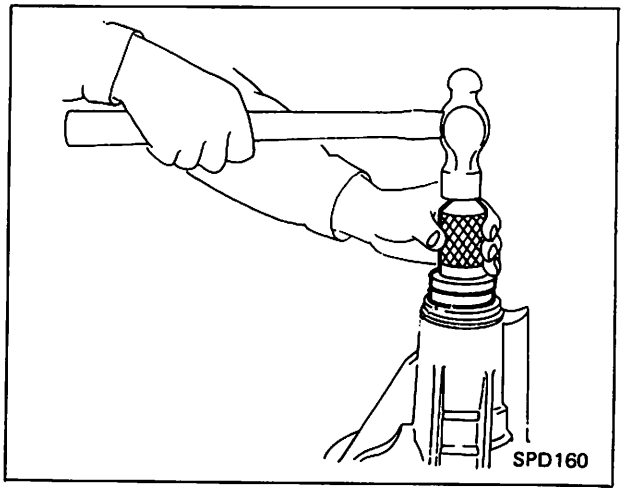

5. Install companion flange and hold it firmly. Insert drive pinion into companion flange by tapping its head with a soft hammer.

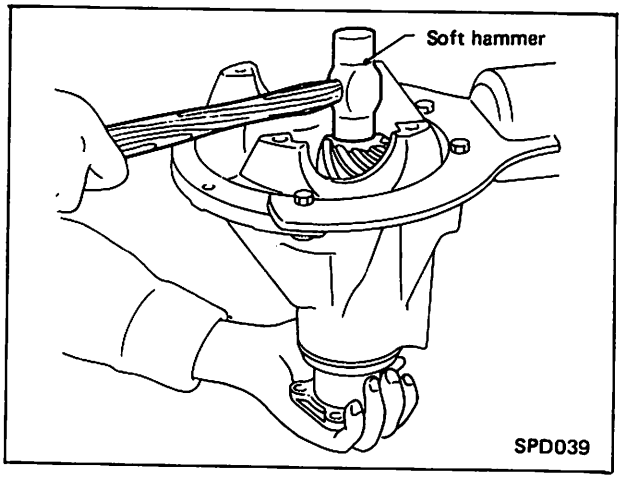

Pinion Assembly (Con't)

6. Hold companion flange with Tool and temporarily tighten pinion nut, until there is no axial play.

   NOTE:
   Be certain that threaded portion of drive pinion and pinion nut are free from oil or grease.

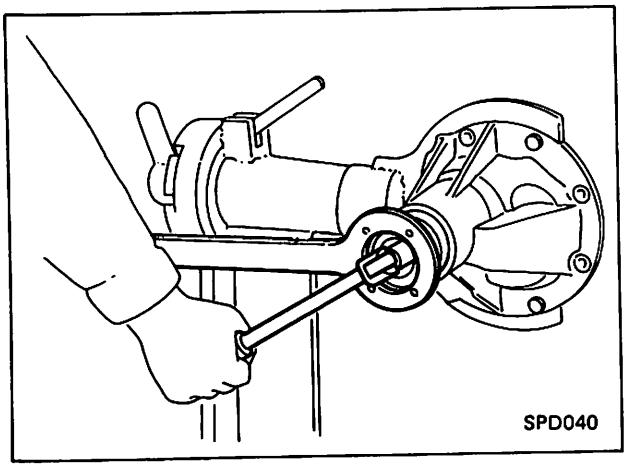

7. Tighten pinion nut by degrees to the specified preload while checking the preload with Tools.

   NOTE:
   When checking preload, turn drive pinion in both directions several times set bearing rollers.
   Preload:
   9.5-13.9 in-lb (11-16 kg-cm, 1.1-1.6 N.m)

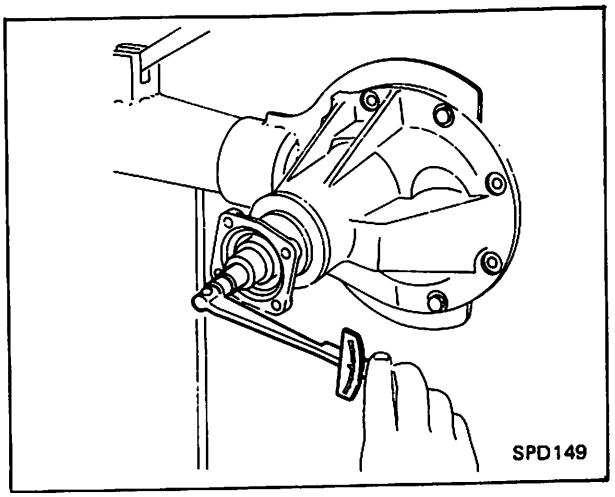

8. Torque drive pinion nut:
   94 - 217 ft-lb (13 - 30 kg-m, 127 - 294 N·m)

   NOTE:
   This procedure will have to be repeated if:
   a. Maximum preload is achieved before the minimum pinion nut torque is reached.
   b. Minimum preload is not achieved before maximum pinion nut torque is reached.

CAUTION:
The preload is achieved by using the permanent set of collapsible spacer. So if an over-preload results from excessive turning of the pinion nut, the spacer should be replaced by new one.

Side Bearing Shim Determination

Side bearing shim size is determined by a set of factors. Use the chart below to list these factors. The location of these factors is found on the various differential components as shown below.

FACTOR LOCATIONS

FACTOR CHART

LETTERS	HUNDREDTHS OF A MILLIMETER
A — Left housing	
B — Right housing	
C — Gear case	
D — Gear case	
E — Left side bearing	
F — Right side bearing	
H — (+) or (−): ring gear	

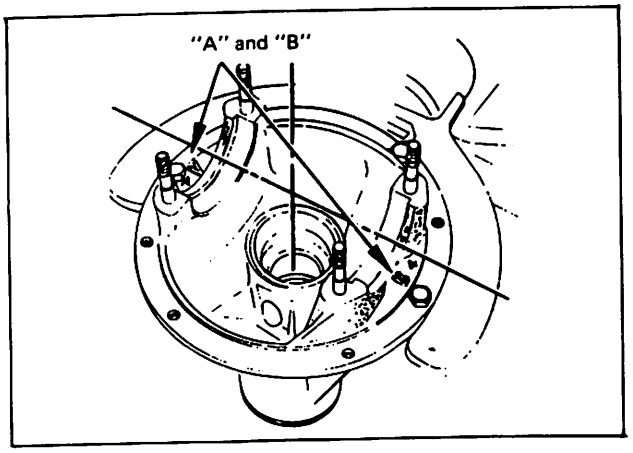

Side Bearing Shim Determination (Con't)

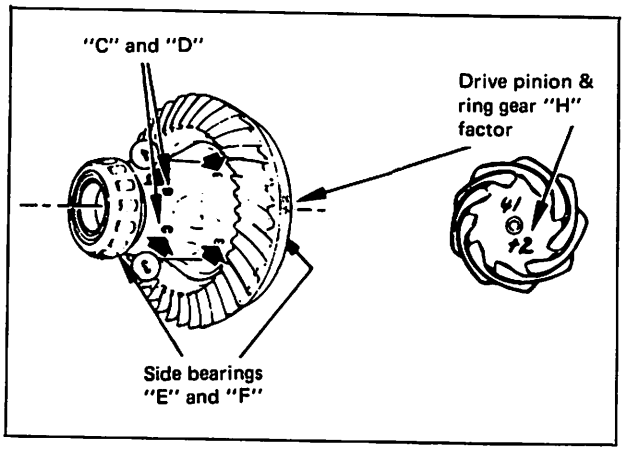

Using the factor chart to record your findings, proceed with the following steps to determine shim size.

1. Locate the numbers stamped next to the letters "A" and "B" on the carrier housing and record them as Factors "A" and "B" on the chart.

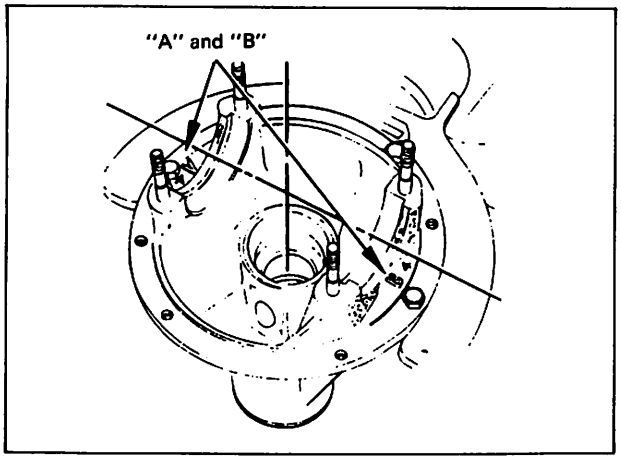

2. Locate the numbers stamped next to the letters "C" and "D" on the gear carrier. Record them as Factors "C" and "D" on the chart.

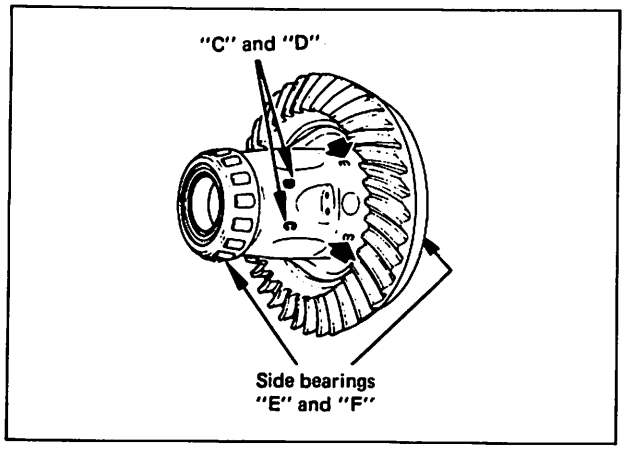

3. Measure how far under standard thickness each side bearing is, then record them as Factors "E" (left bearing) and "F" (right bearing). Use the illustration above as a guide for left and right bearings.

NOTE:
Side bearing standard thickness is 20.00 mm.

To measure side bearing thickness, the following tools are required.

1. **J-25407-1: Step gauge block**
2. **J-25407-2: Base plate**
3. **J-25407-3: Weight block**
4. **J-8001-M: Dial indicator set**

4. Mount the dial indicator on the base plate. Place the 5 pound weight on the plate and put the 20 mm gauge block on top. Zero the dial indicator.

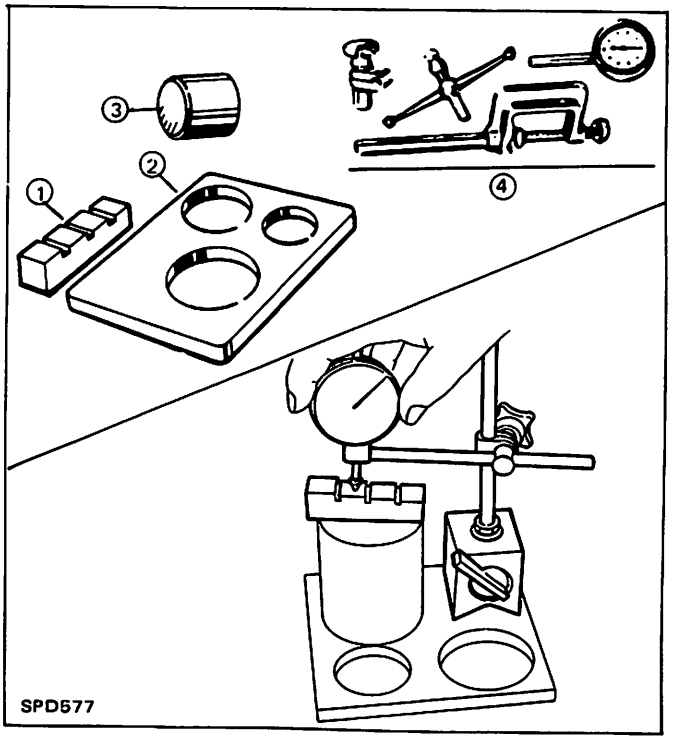

Side Bearing Shim Determination (Con't)

5. Slide the gauge block out from under the dial indicator, then lift the weight block and slip the bearing and race under the weight.

NOTE:
For each side bearing; place the bearing over the base plate recess as shown. Be certain it turns freely.

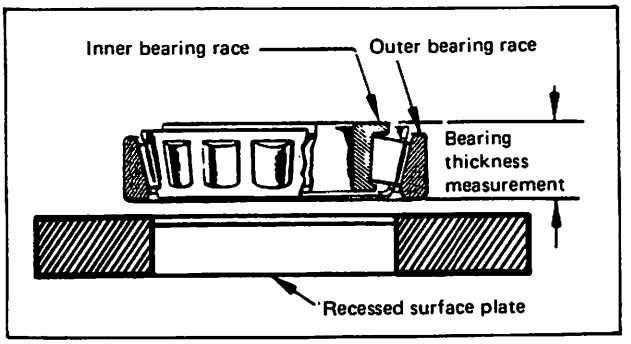

6. Turn the weight to seal the bearing. Read the dial indicator's drop from zero. Write down the findings for each bearing on the list:
   Factor E = left side bearing
   Factor E = right side bearing

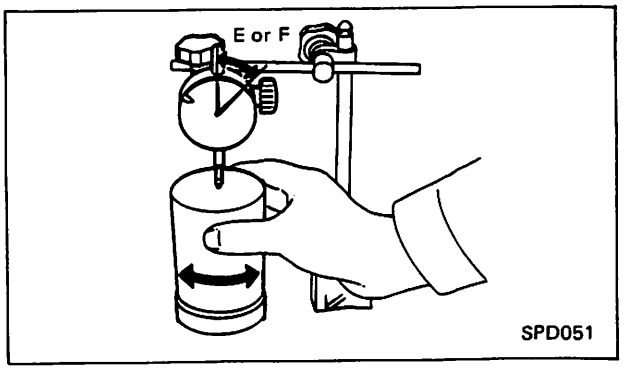

7. Factor "H" on the list is the number marked on the ring gear.

NOTE:
If no variations number is found, substitute 0 on the list.

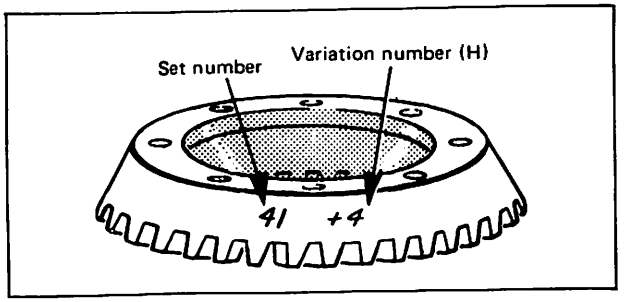

8. Calculate the side bearing shim thickness using the formula below:

(T1) Left: A – C + D + E – H + .18 mm
(T2) Right: B – D + F + H + .15 mm

NOTE:
Substitute findings from the guide list for their appropriate letter in this formula.

9. Select the proper shims. Measure each shim to ensure accuracy.

NOTE:
If the exact thickness of washer is not available, use one that measures close to the calculated valve. For example:

IF UNAVAILABLE —	USE
T = 0.30 mm (calculated size)	T = 0.38 mm (closest available size)

10. Install the shims behind each bearing and using Tools J-25805-01 and J-8107-2, press on the bearings.

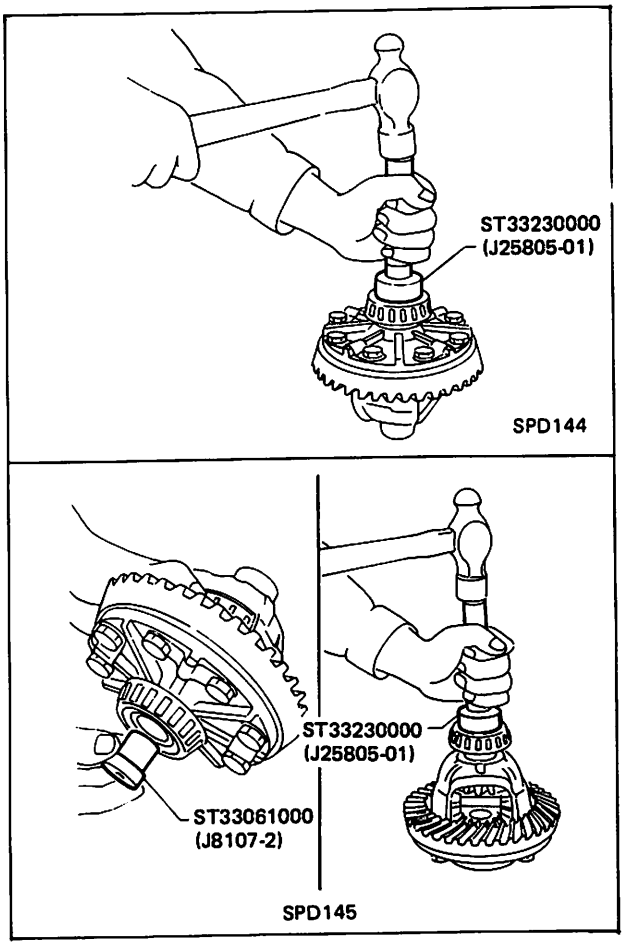

Side Bearing Shim Determination (Con't)

11. Mount the ring gear assembly in the case, then install the side bearing caps. Tap them lightly with a plastic hammer to seat them.

    NOTE:
    Be certain to use the alignment marks made during disassembly for proper cap/case assembly.

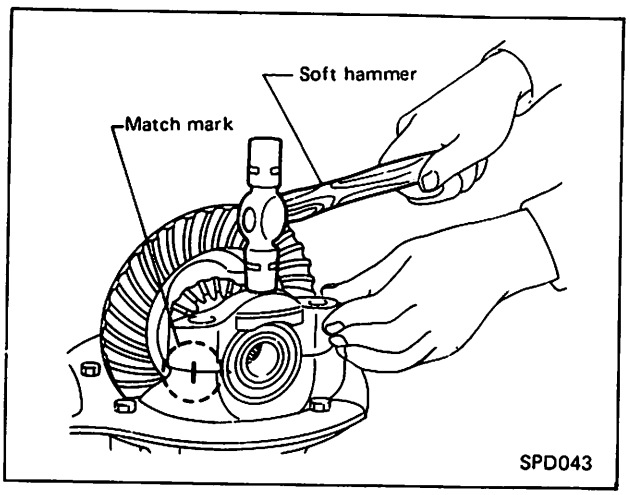

12. Install the cap fasteners and torque to 36 - 43 ft-lb (5 - 6 kg-m, 49 - 59 N·m).

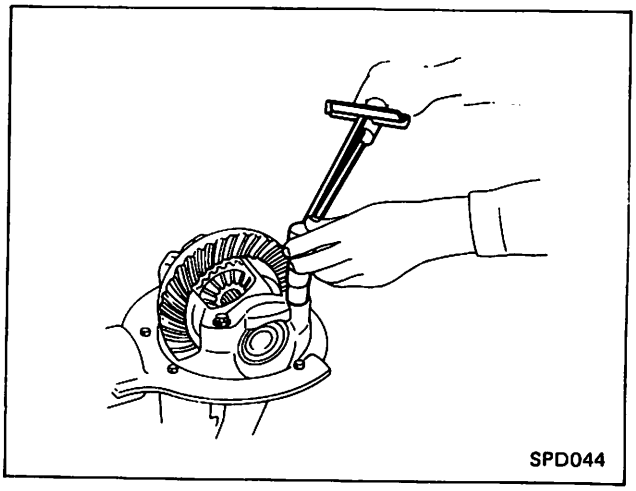

Final Verification

1. Check ring gear backlash with a dial indicator.
   Backlash:
   0.006-0.008 in (0.15-0.20 mm)

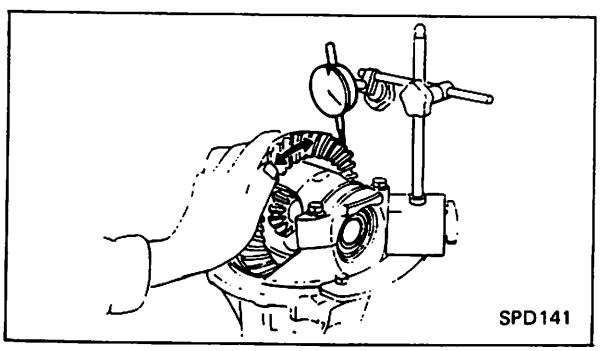

— **If backlash is too small,** decrease thickness of left shim and increase thickness of right shim by the same amount.

— **If backlash is too great,** reverse the above procedure.

NOTE:
Never add or remove from the total amount of shims or bearing preload will be changed.

2. Check total preload with Tool J-25765A.

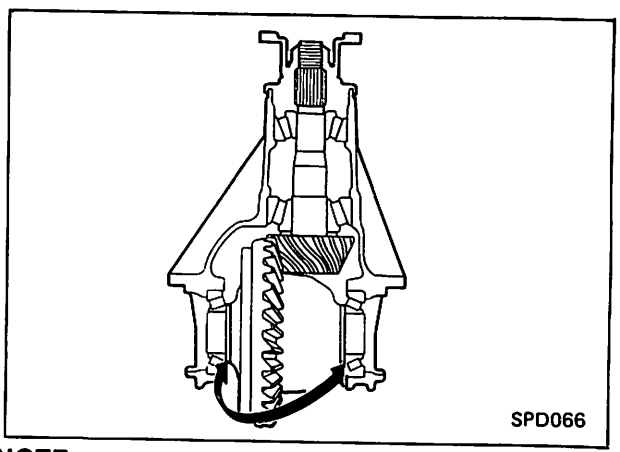

NOTE:
When checking preload, turn drive pinion in both directions several times to set bearing rollers.
Preload:
10-19 in-lb (12-22 kg-cm, 1.2-2.2 N.m)

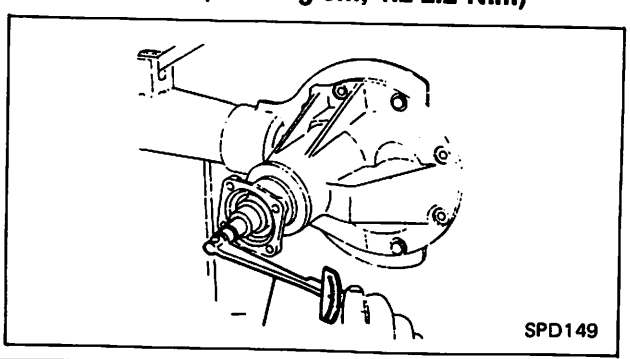

Final Verification

— **If preload is too great,** remove the same amount of shims to each side.
— **If preload is too small,** add the same amount of shims to each side.

NOTE:
Never add or remove different amount of shims to each side or ring gear backlash will be changed.

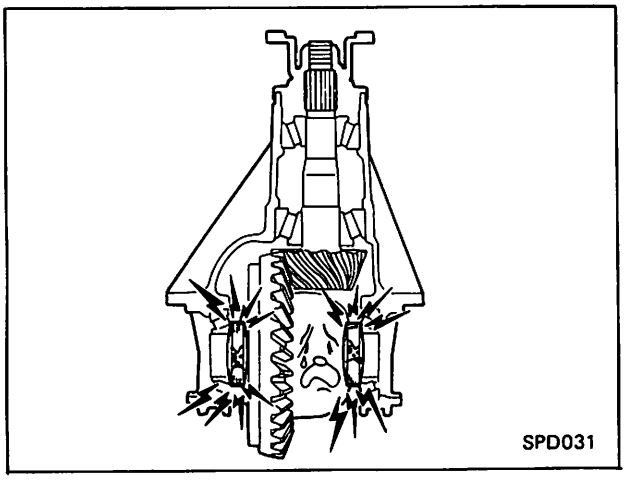

3. Check ring gear runout with a dial indicator.
   Runout:
   0.003 in (0.08 mm)

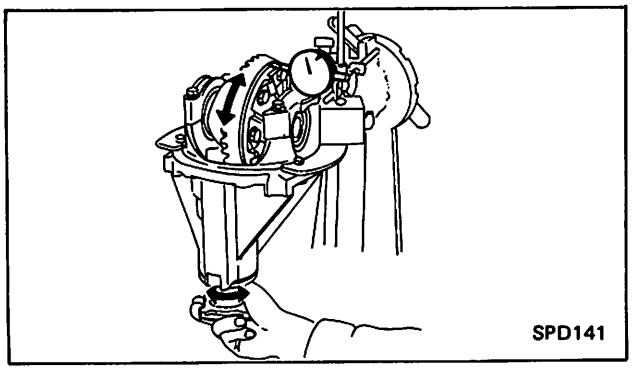

— **If backlash varies excessively in different places,** the variance may have resulted from foreign matter caught between the ring gear and the differential case.

— **If the backlash varies greatly when the runout of the ring gear is within a specified range,** the hypoid gear set or differential case should be replaced.

4. Finally, check for tooth contact pattern.

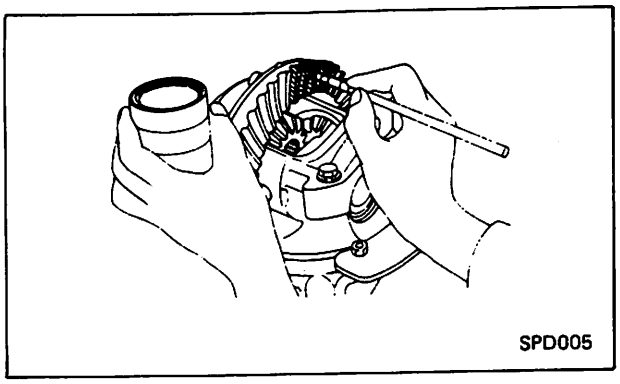

Refer to **TOOTH CONTACT.**

Usually the pattern will be correct if you have calculated the shims correctly and the backlash is correct.

However, in extremely rare cases you will have to use trial-and-error processes until you get a good tooth contact pattern.

The tooth pattern is the best indication of how well a differential has been set up.

5. Install the differential carrier in the vehicle.

   Gasket should be replaced by new one each time the differential carrier is removed.

   Then fill with gear oil, referring to Recommended Lubricants (Section MA of your Service Manual).

   Gear oil capacity:
   U.S.A. models
   2-5/8 US pt (1.25 liters, 2-1/4 Imp pt)
   Canada models
   3-1/8 US pt (1.5 liters, 2-5/8 Imp pt)

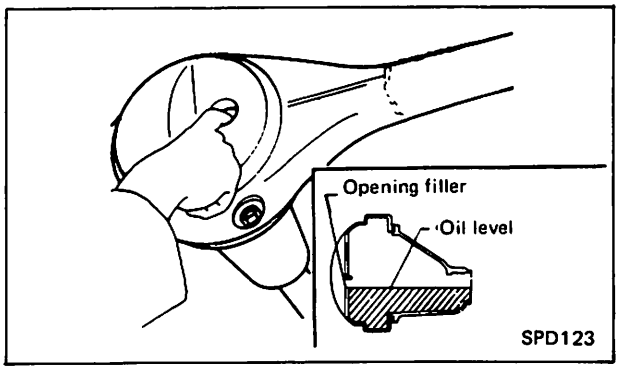

Front Oil Seal Replacement — Removal

The following is the procedure for replacement of the front oil seal.

1. Jack up rear of vehicle and support it by placing safety stands under rear axle case, referring to Section GI of your Service Manual.

2. Remove drain plug and drain gear oil.

3. Remove the propeller shaft (refer to Section PD of your Service Manual), then remove the rear axle shafts (refer to Section RA of your Service Manual).

   NOTE:
   Plug the rear end of the transmission rear extension housing as shown.

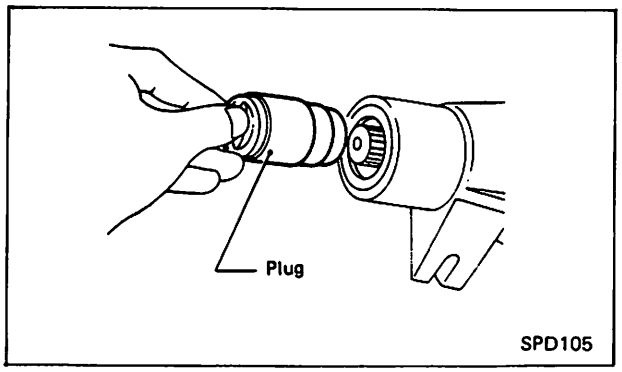

4. Loosen nuts securing differential carrier to rear axle case, and take out differential carrier.

5. Mount differential carrier on Tool J-25602-1.

   NOTE:
   Bearing caps are line-board during manufacture and should be put back in their original place.

   Put match marks on one side of side bearing cap with paint or punch to ensure that it is replaced in proper position during reassembly.

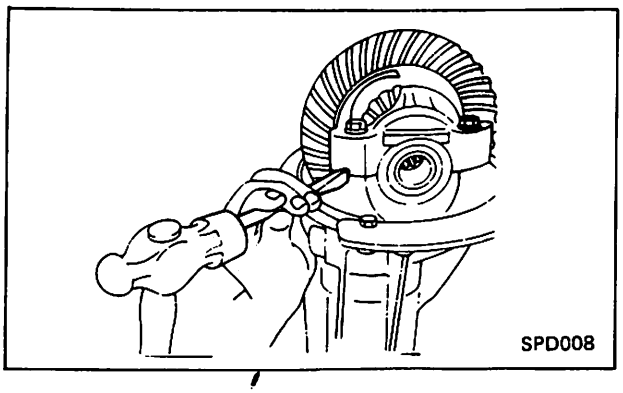

6. Remove the side bearing caps.

7. Using a pry bar, remove differential case assembly.

   NOTE:
   Keep the bearing races with their corresponding races.

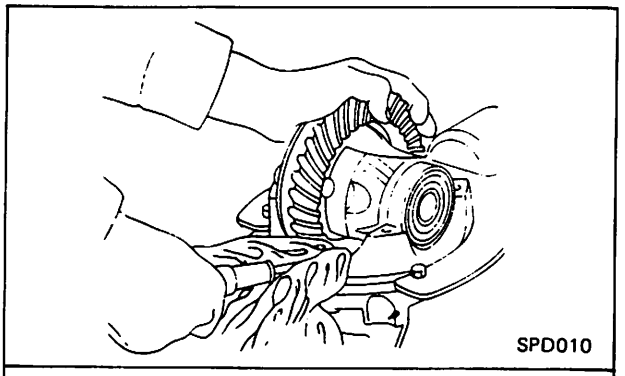

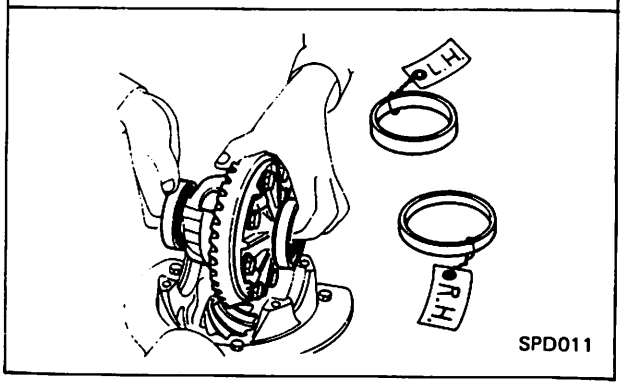

8. Remove drive pinion nut with Tool J-25774A.

9. Remove companion flange with puller.

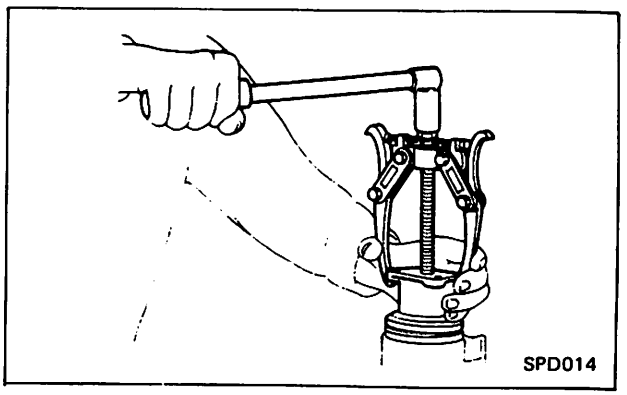

Front Oil Seal Replacement — Removal (Con't)

10. Remove drive pinion with soft hammer.

    CAUTION:
    Reinstall companion flange not on the pinion shaft to prevent damage to the shaft threads.

11. Remove collapsible spacer and washer from drive pinion.

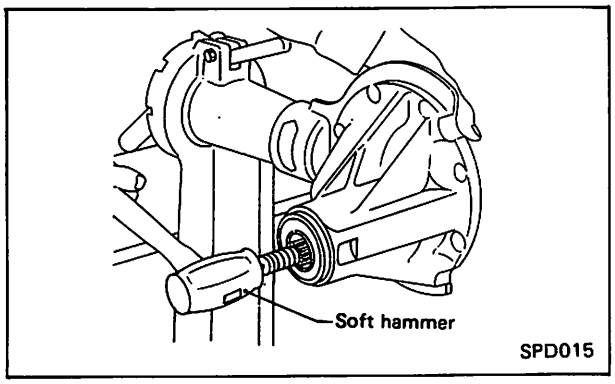

12. Remove oil seal by prying up with a large screwdriver, and remove front pinion bearing inner race.

    NOTE:
    Do this carefully, so as not to scratch seal bore with screwdriver. Cover end of screwdriver with a rag.

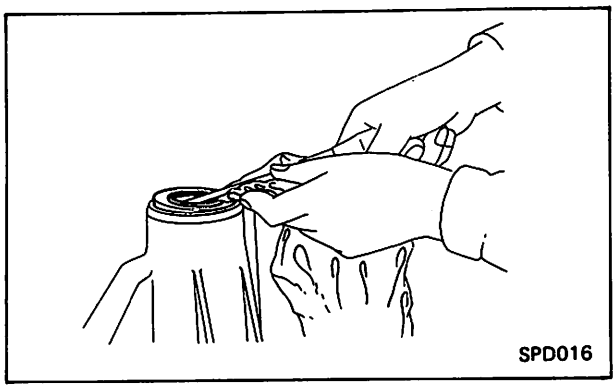

Front Oil Seal Replacement — Assembly

ASSEMBLY

1. Install the new seal using Tool J-25405.

    NOTE:
    Be certain the oil seal is flush with the end of the housing. Apply a multi-purpose grease into the cavity between the oil seal lips.

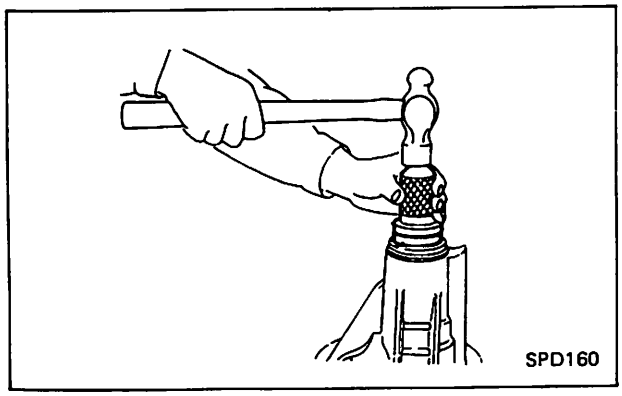

2. Place a washer and a new collapsible spacer on drive pinion and lubricate rear bearing with gear oil, and insert it in the gear carrier.

    NOTE:
    Always use a new collapsible spacer to ensure correct preload.

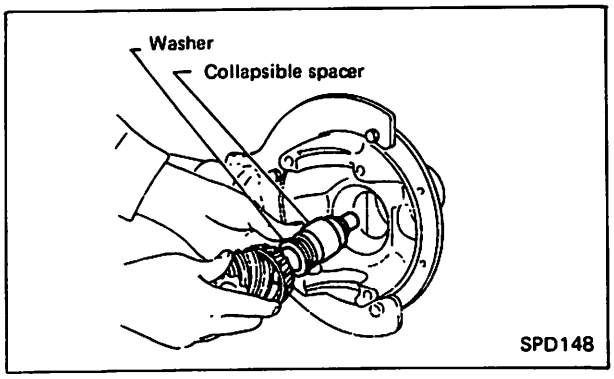

3. Install companion flange and hold it firmly. Insert drive pinion into companion flange by tapping its head with a soft hammer.

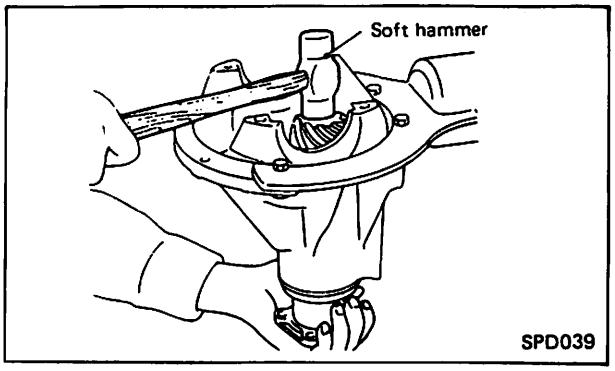

4. Hold companion flange with Tool J-25774 and temporarily tighten pinion nut, until there is no axial play.

Front Oil Seal Replacement — Assembly (Con't)

NOTE:
Be certain that threaded portion of drive pinion and pinion nut are free from oil or grease.

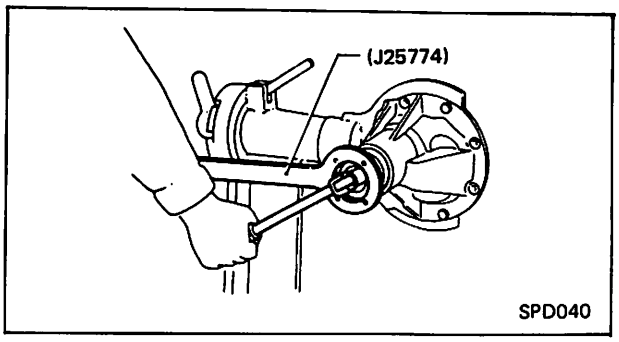

5. Tighten pinion nut by degrees to the specified preload of 9.5-13.9 in-lb (11-16 kg-cm, 1.1-1.6 N.m) using Tool J-25765A.

NOTE:
When checking preload, turn drive pinion in both directions several times to set bearing rollers.

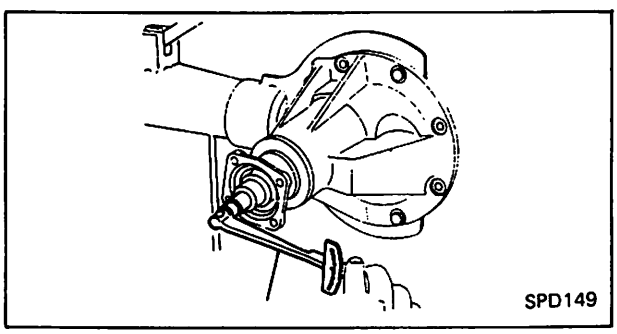

CAUTION:
The preload is achieved by using the permanent set of collapsible spacer. So here, if an over-preload results from excessive turning of the pinion nut, the spacer should be replaced by new one.

6. Install differential case assembly and side bearing outer races into differential carrier, and install side bearing cap.

NOTE:
Tap on the cap with a soft hammer to settle it in the carrier. Be certain to use the alignment marks made during disassembly for proper cap/housing assembly.

7. Install the differential on the vehicle. Use a new gasket each time the differential housing is removed.

8. Fill the carrier with the specified amount of gear oil.

REAR FINAL DRIVE
— Model: C200 —

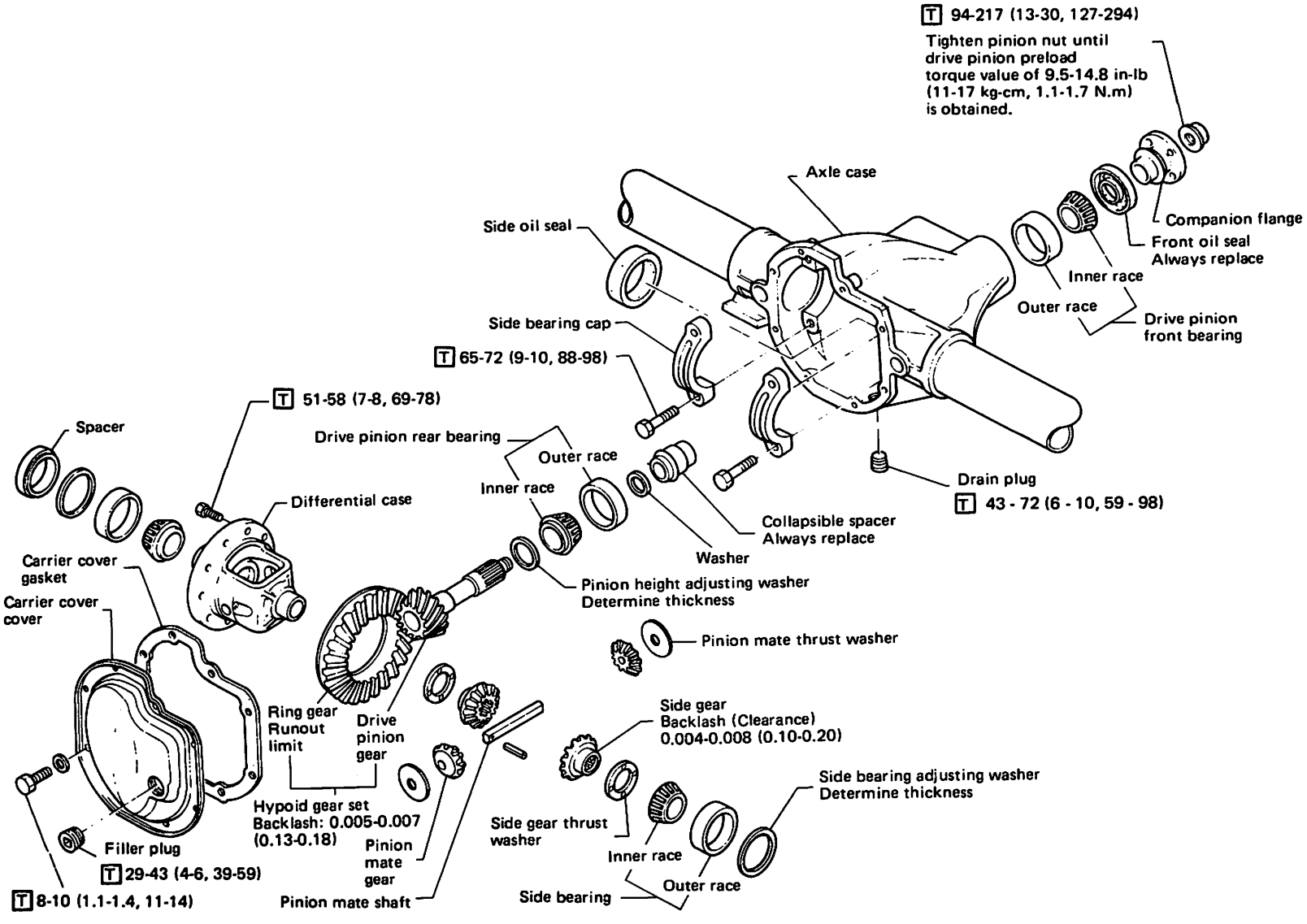

T: ft-lb (kg-m, N·m)
Unit: in (mm)

Preparation for Disassembly-Removal

1. Remove the rear axle assembly. Refer to RA Section of your Service Manual.
2. Remove the drain plug and drain the gear oil.

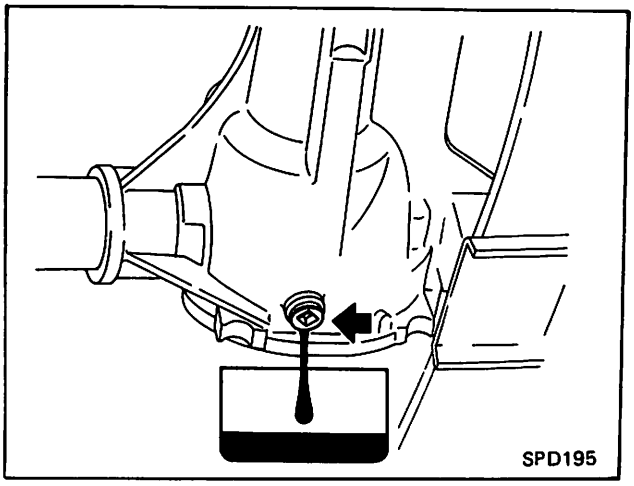

3. Remove the propeller shaft and rear axle shafts. Refer to RA Section of your Service Manual.
4. Remove rear cover and rear cover gasket.

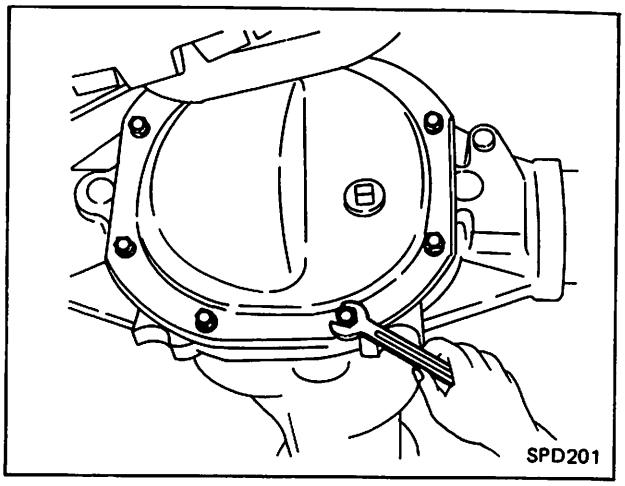

Pre-Disassembly Inspection

1. Check ring gear backlash with a dial indicator at several points. If it is not within specification, adjust it.
   Ring Gear backlash:
   0.005-0.007 in (0.13-0.18 mm)

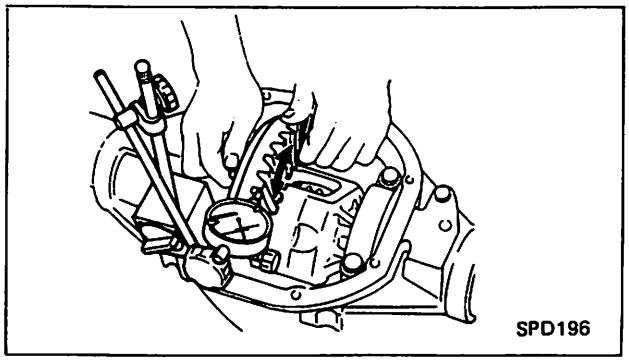

2. Check ring gear runout with a dial indicator. If it is over specification, hypoid gear set or differential case should be replaced.
   NOTE:
   When backlash varies excessively in different places, the variances may have resulted from foreign matter caught between ring gear and differential case.

   Runout:
   0.002 in (0.05 mm)

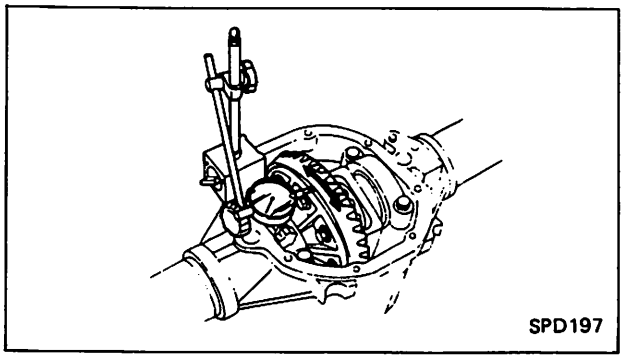

3. Check side gear backlash. Using a thickness gauge, measure clearance between side gear and differential case.
   If it is not within specification, adjust it.
   Side Gear backlash:
   0.004-0.008 in (0.10-0.20 mm)

   Clearance:
   0.004-0.008 in (0.10-0.20 mm)

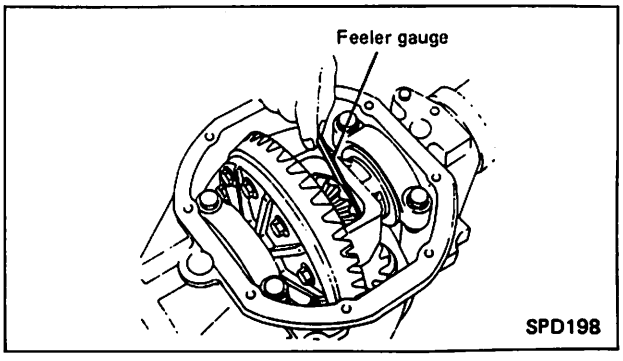

Tooth Contact

NOTE:
Gear tooth contact pattern check is necessary to verify correct relationship between ring gear and drive pinion.

Hypoid gear sets which are not positioned properly may be noisy, or have short life or both.

1. Check the gear tooth contact pattern.
   a. Thoroughly clean ring gear and drive pinion teeth.
   b. Sparingly apply a mixture of powdered ferric oxide and oil or equivalent to 3 or 4 teeth of ring gear drive side.

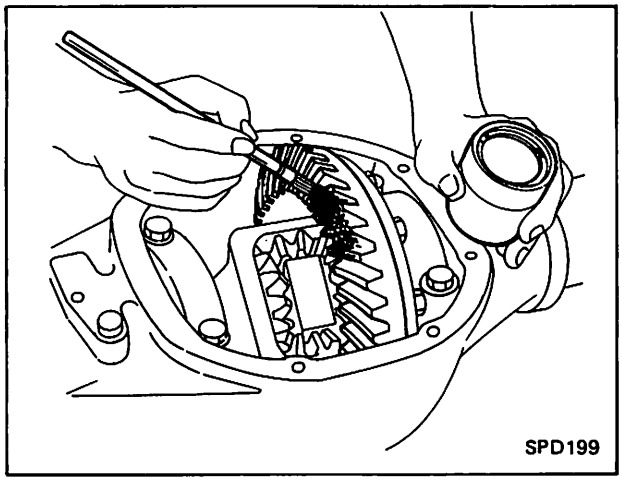

   c. Hold companion flange steady by hand and rotate the ring gear in both directions.

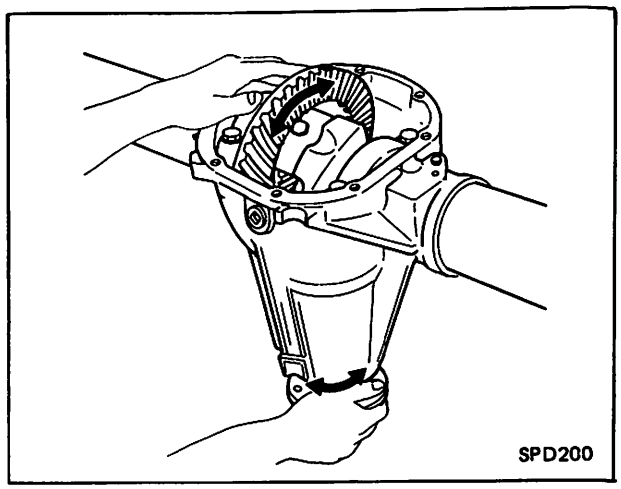

2. Compare contact marks left on the ring gear to those found in the following chart.

Tooth Pattern Interpretation

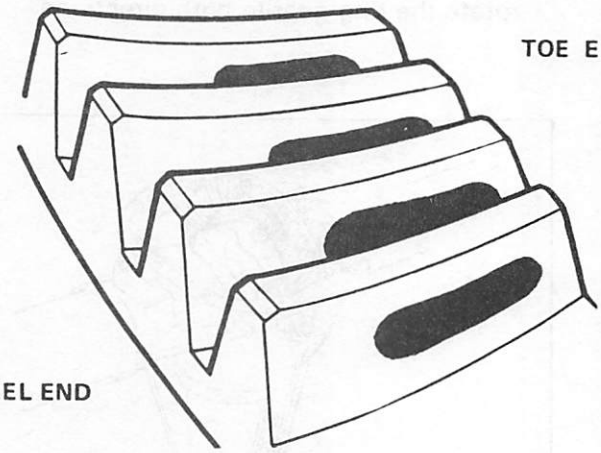

Perfect tooth pattern.

NOTE: A change in pinion height will also cause a change in backlash, so both will usually have to be adjusted.

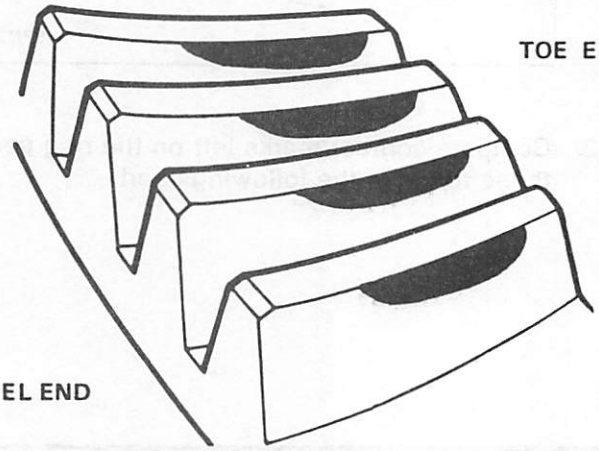

The pinion is too low. You will have to add to the shim(s) under the pinion.

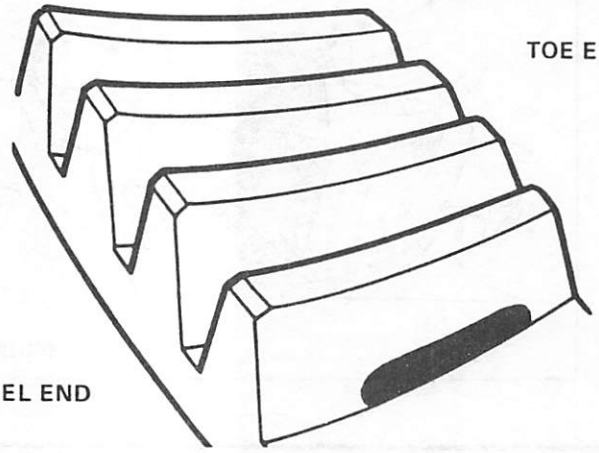

The pinion is too high. The shim(s) under the pinion will have to be decreased.

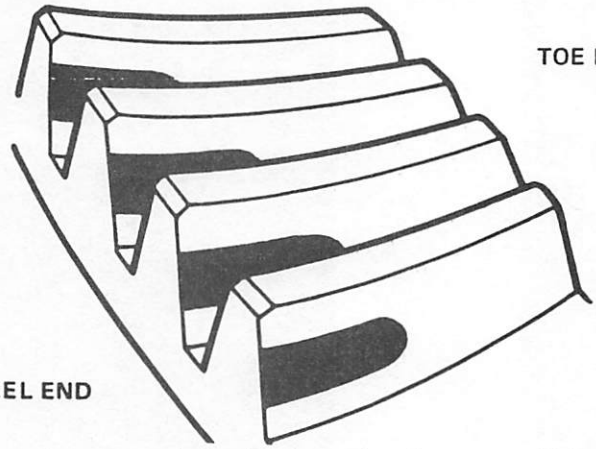

There is too much backlash — the ring gear will have to be moved closer to the pinion.

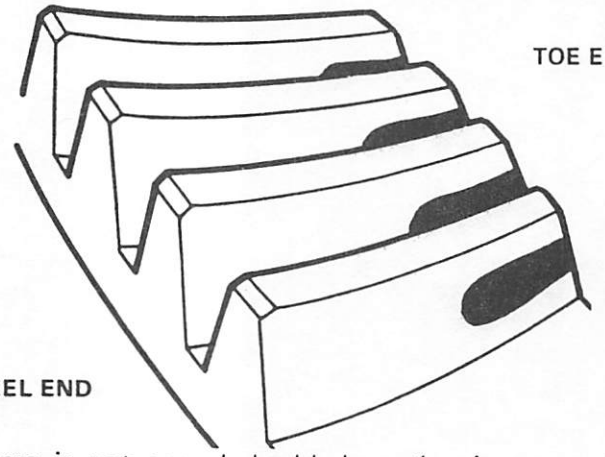

There is not enough backlash — the ring gear will have to be moved away from the pinion.

Disassembly

1. Remove rear cover and rear cover gasket.

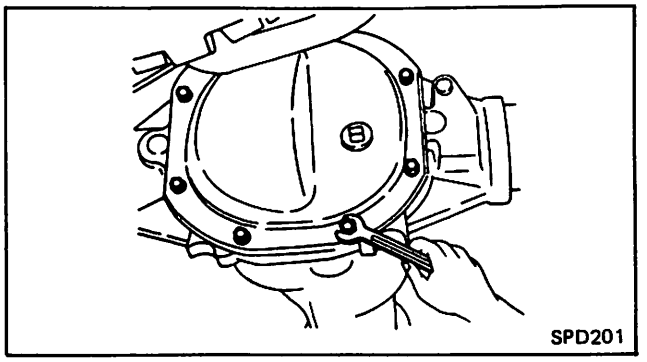

2. Remove side bearing caps.
   NOTE:
   Bearing caps are line-board during manufacture and should be put back in their original places. Mark the caps and case for ease of assembly.

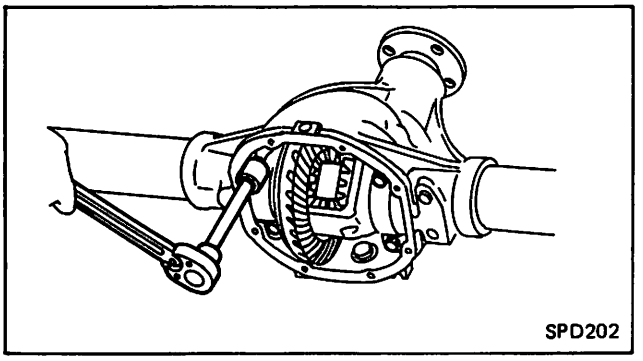

3. Using a pry bar, remove differential case assembly.
   NOTE:
   Be careful to keep the side bearing outer races together with inner race — do not mix them up.

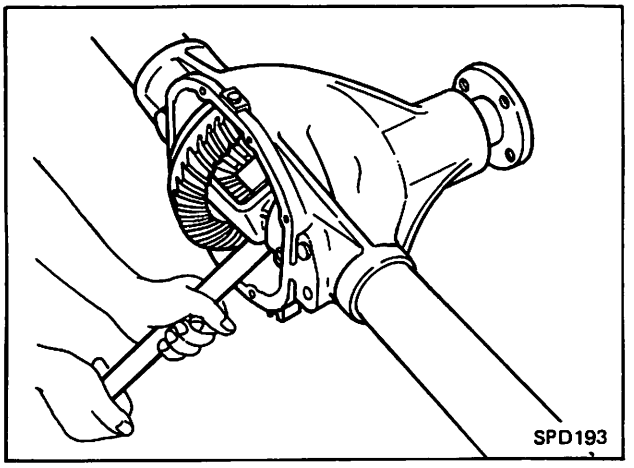

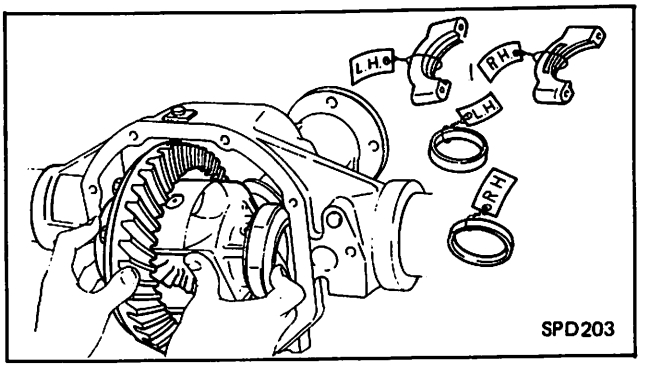

4. Remove drive pinion nut with Tool. J-25774A.

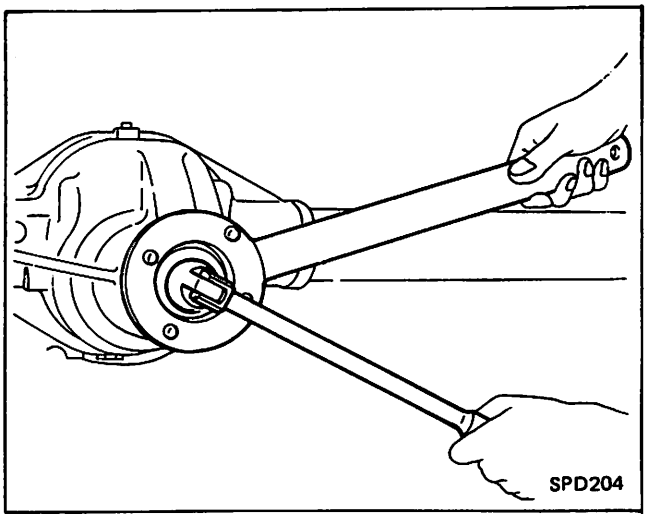

5. Remove companion flange with puller. J-22888.

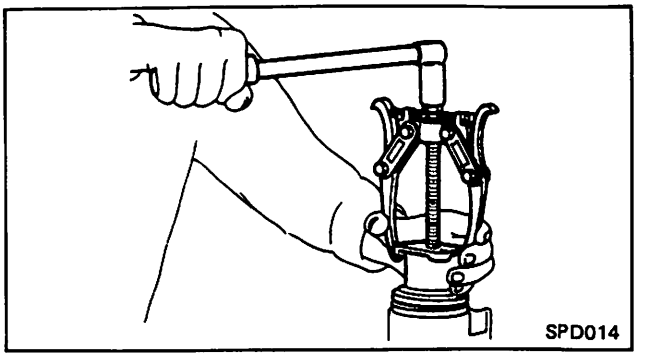

Disassembly (Con't)

6. Remove drive pinion with soft hammer.

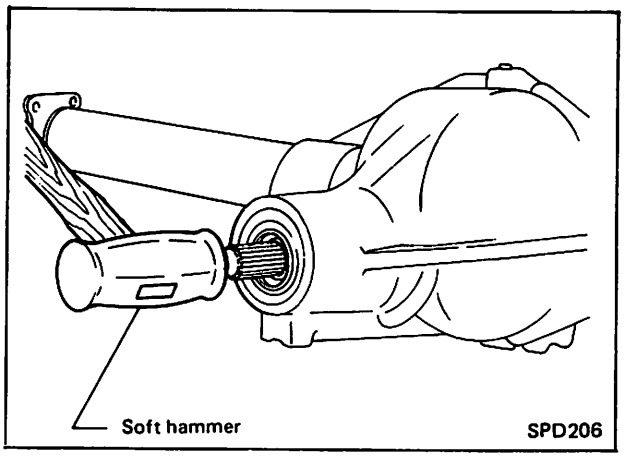

7. Remove oil seal by prying up with a large screwdriver, and remove front pinion bearing inner race.
NOTE:
Do this carefully, so as not to scratch seal bore with screwdriver. Cover end of screwdriver with a rag.

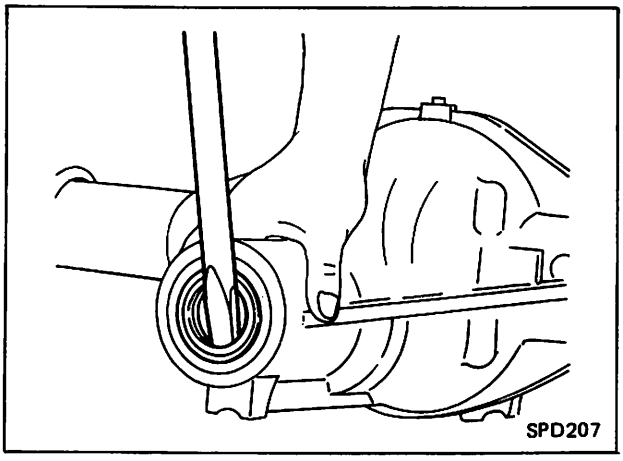

NOTE:
Do not reuse oil seal once removed. Always install new one.

8. Remove pinion bearing outer race using a brass drift.

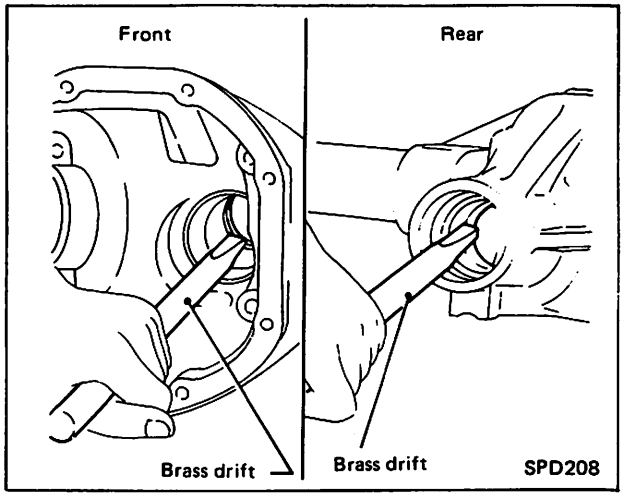

9. Remove collapsible spacer and washer from drive pinion.
10. Pull out rear bearing inner race with a press and Tool J-22912-01.
NOTE:
Care should be taken when setting Tool in press to make sure that parting line of Tool is a right angle to support fixture of press. This is to prevent banding Tool.

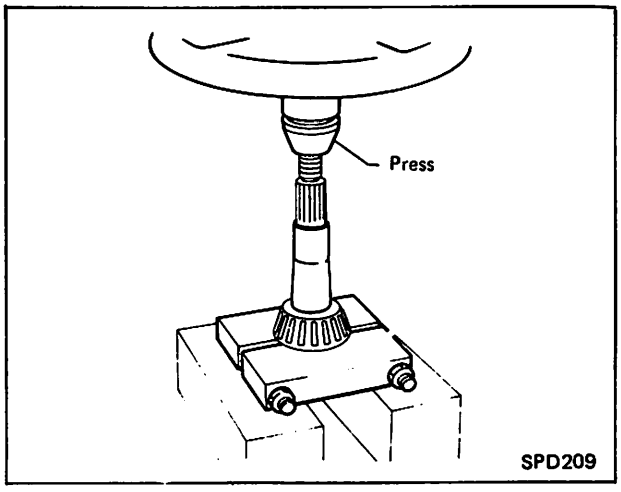

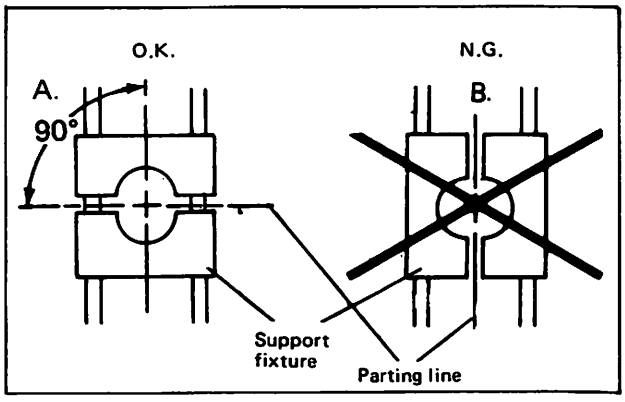

Disassembly (Con't)

11. Remove the side bearing inner race using Tools J-22888 and J-25797-02.
    NOTE:
    Be certain to engage the puller paws with the groove, not the bearing. The rollers should move freely.

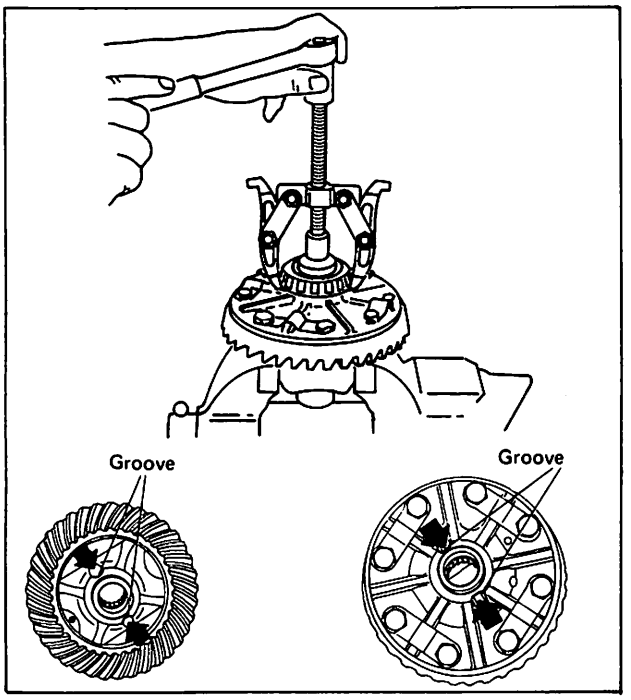

NOTE:
Keep left and right hand components together.

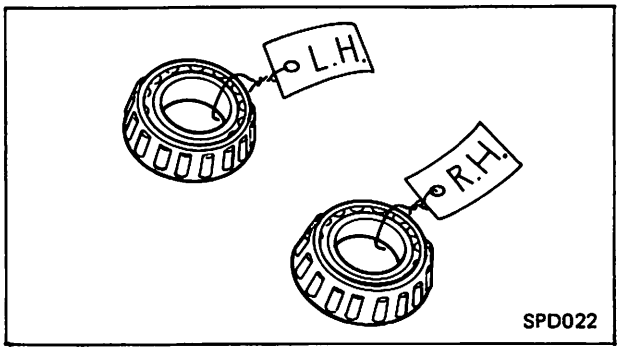

12. Remove ring gear by loosening ring gear bolts in a criss-cross fashion.

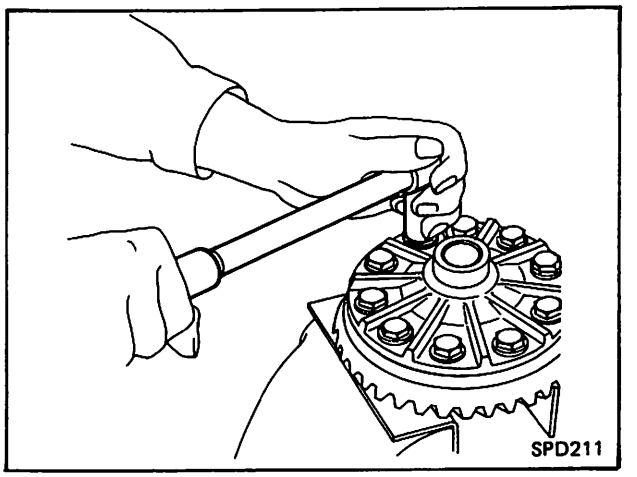

13. Tap ring gear off gear case using a soft hammer.
    NOTE:
    Tap evenly all around to keep ring gear from binding.

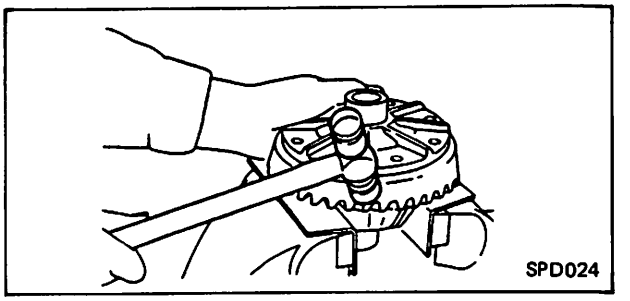

14. Before disassembling the gear carrier measure the side gear clearance. If the measurement is out of specification, the side gear thrust washers will have to be replaced.
    Side Gear Clearance:
    0.004-0.008 in (0.10-0.20 mm)

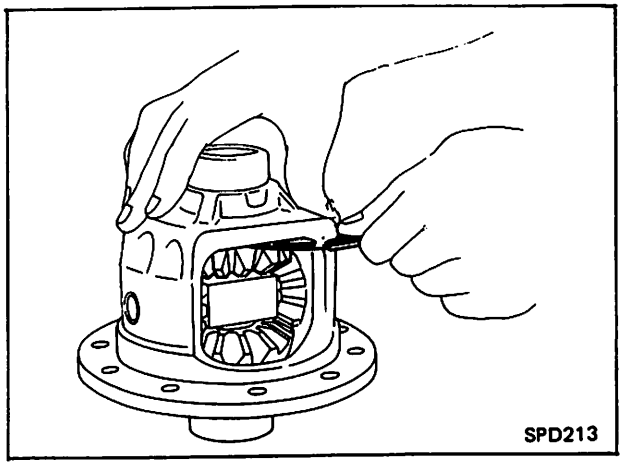

Disassembly (Con't)

15. Drive out pinion mate shaft lock pin, with Tool J-25689-A from ring gear side.

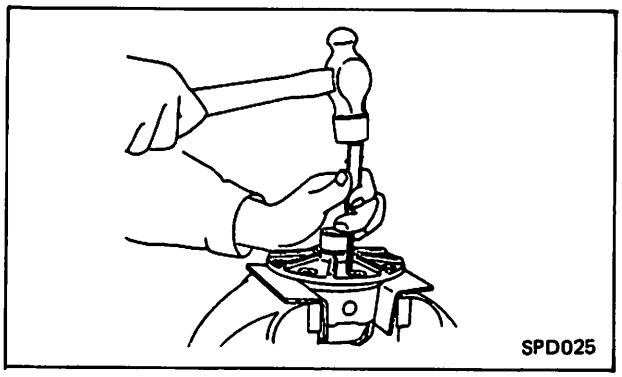

16. Draw out pinion mate shaft, and rotate pinion mate gears out of the case and remove side gears and thrust washers.

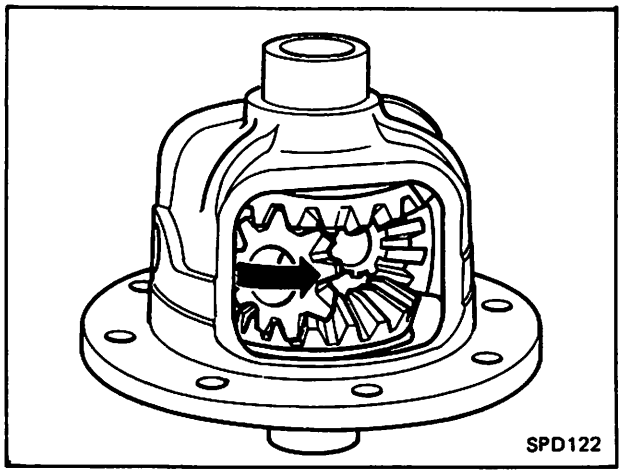

NOTE:
Put marks on gears and thrust washers so that they can be reinstalled in their original positions.

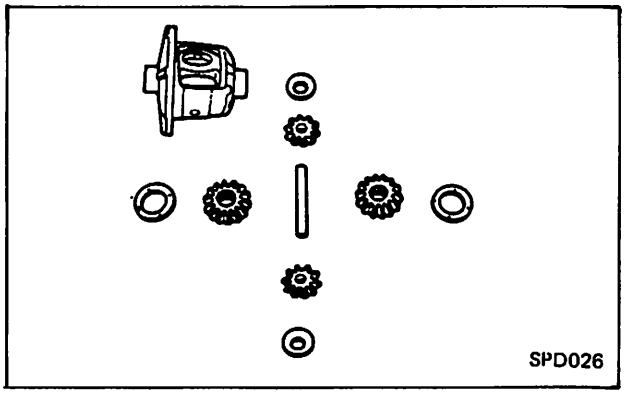

Parts Inspection

Disassembled parts should be cleaned thoroughly, then examined for wear or damage. Repair or replace any damaged parts.

1. Check all gear teeth for scoring, cracking or chipping.

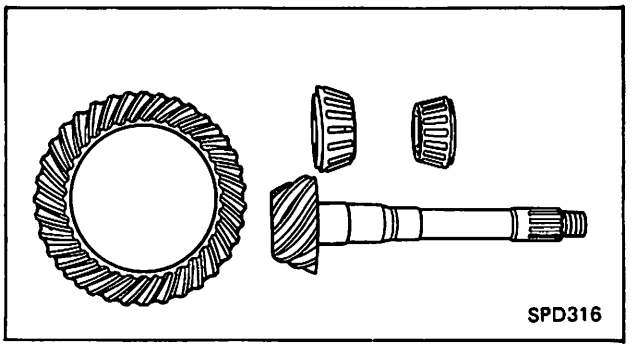

NOTE:
The ring gear and pinion shaft will always be replaced as a set.

2. Inspect bearing races and rollers for scoring, cracking, chipping or signs of excessive wear.
3. Check pinion mate shaft, pinion mate gear, side gear and thrust washers on differential case for scores and signs of wear.

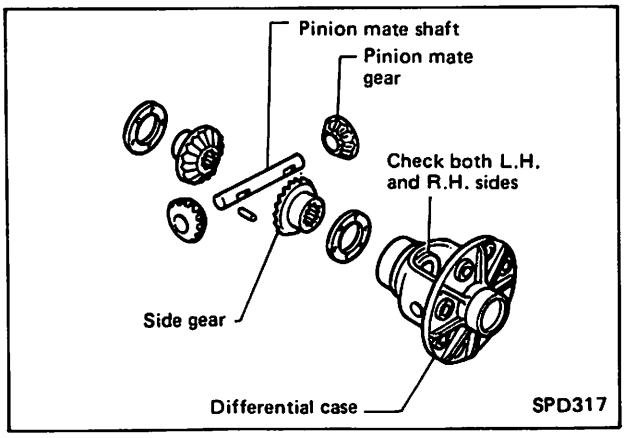

4. Inspect thrust washer faces. Small faults can be corrected with sandpaper.

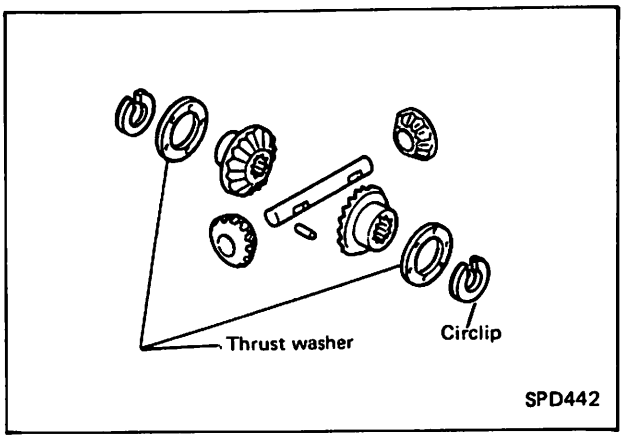

5. The following parts should be replaced by new ones each time they are removed.
   ① Gasket
   ② Front oil seal
   ⑤ Collapsible spacer
   ④ Side oil seal

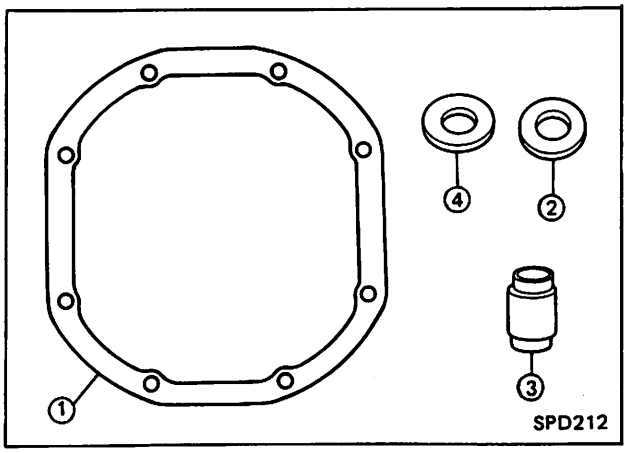

Assembly

Assembly should be done in the reverse order of disassembly, while marking any necessary inspections and adjustments.

PRECAUTION:

a. **Arrange washers to install them correctly.**
b. **Thoroughly clean the surfaces on which spacer, washers, bearings and bearing caps are installed.**
c. **Apply gear oil when installing bearings.**
d. **Pack recommended multi-purpose grease into cavity between lips when fitting oil seal.**

DIFFERENTIAL CASE

1. Install pinion mate gears, side gears, thrust washers and thrust block into differential case.
   NOTE:
   Be sure round seat of thrust block faces spacer side.
2. Fit pinion mate shaft.
3. Adjust clearance between rear face of side gear and thrust washer by selecting side gear thrust washer.

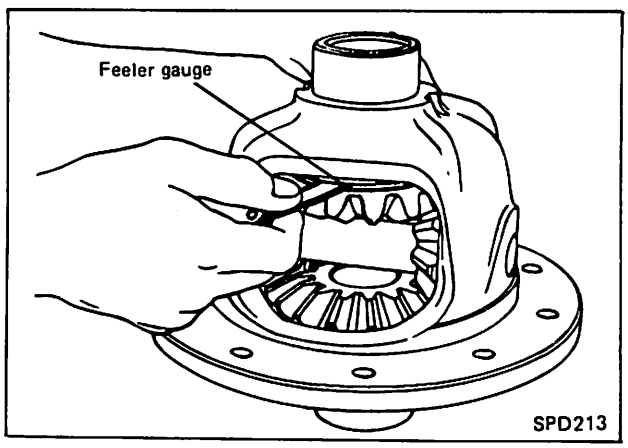

4. Install pinion mate shaft lock pin using a punch.
   NOTE:
   Make sure lock pin is flush with case.

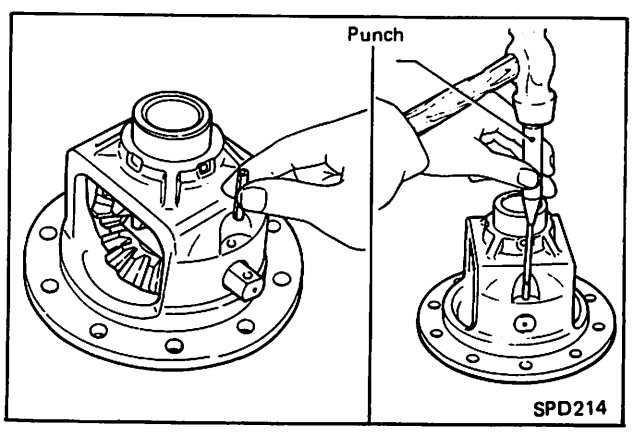

5. Place ring gear on differential case and install locking tabs and bolts.
   NOTE:
   Tighten bolt in a criss-cross fashion, lightly tapping bolt head with a hammer.

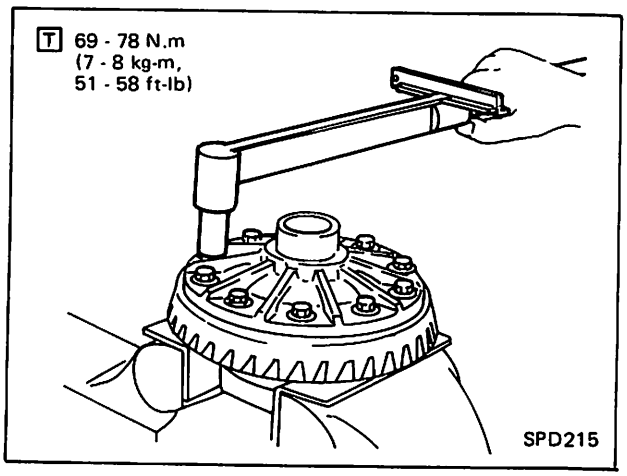

6. Press-fit the bearing outer races using Tools J-25742-03 (front) and J-25742-05 (rear).

   NOTE:
   Be certain the bearing races are seated squarely in their bores.

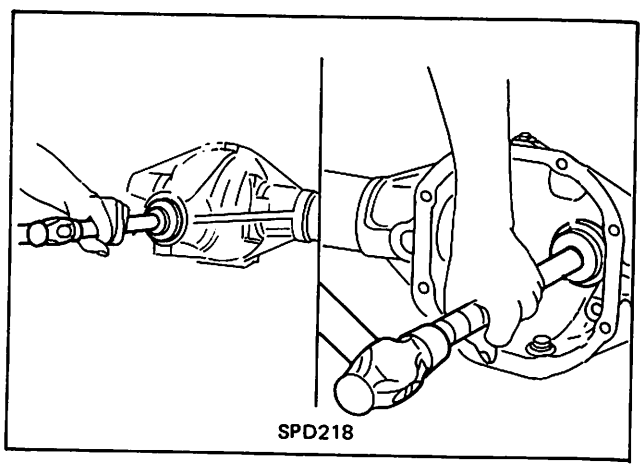

Preload/Pinion Height Adjustment

1. Fit rear bearing inner race on dummy shaft and install them on carrier.
2. Assembly (as shown) the pinion and these special tools.
   J-25269-23 Bolt and washer assembly.
   J-33920 Pinion height block.
   J-25269-26 Bearing pre-load adaptor.
   J-25269-2 Rear pinion bearing pilot.

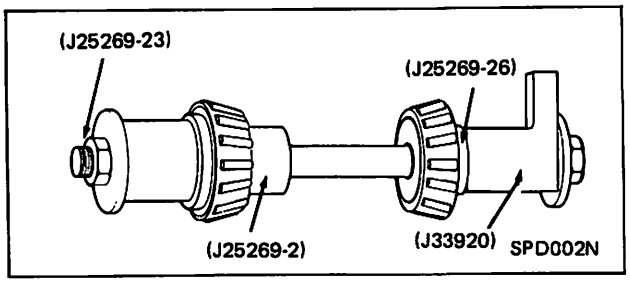

3. Install the special tool in the housing. Torque the companion flanged nut 5-9 in-lbs.

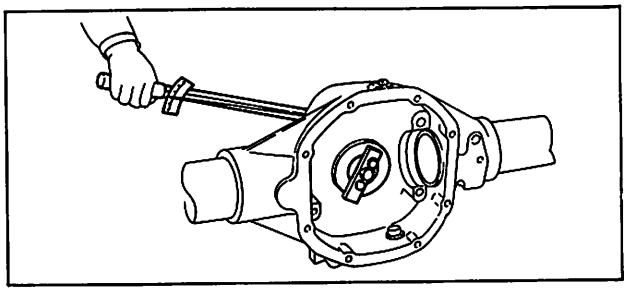

Proceed to pinion height adjustment.

4. Using the following components, complete the arbor assembly as shown:
   J-23597-1 Arbor
   J-25269-18 Gauge block
   J-25269-4 (2)
   J-25269-18 (1)

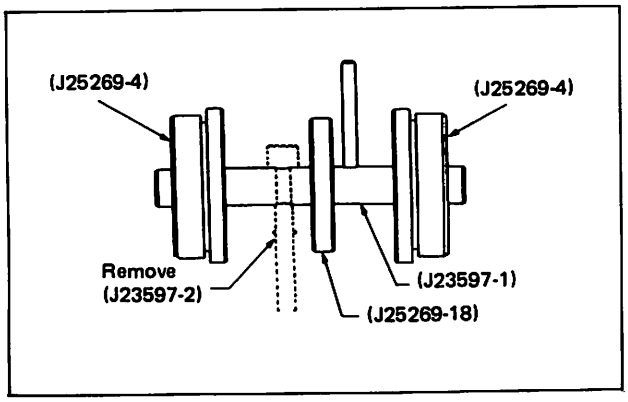

5. Place the arbor assembly into the differential housing and secure it using the side bearing caps. Torque the cap fasteners 65 - 72 ft-lb (9 - 10 kg-m, 88 - 98 N-m).

6. Place a feeler gauge between the pinion height block and arbor gauge, and write down the measurement.
   NOTE:
   Use only metric measurements in this procedure.

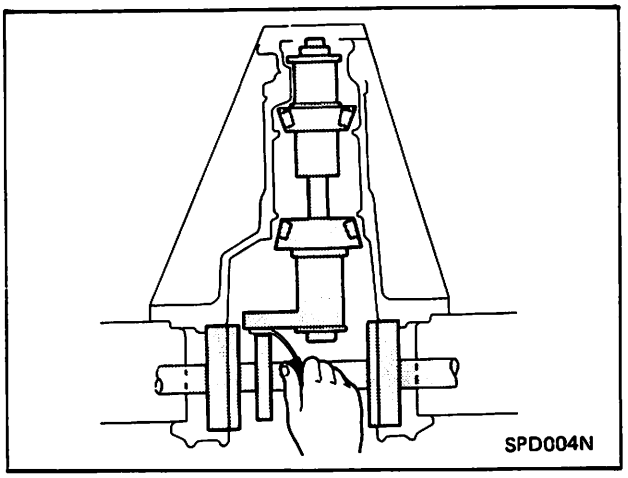

NOTE:
Use the chart below and the steps that follow the chart to determine correct pinion shim size.

A.	**2.74mm**	**Standard measure**
B.	**+ . mm**	**Feeler gauge reading**
C.	_____	**Add A+B=C**
D.	_____	**Pinion marking**
E.	_____	**Pinion shim (add or subtract D from C)**

7a. Put the reading from step 6 on line B.

7b. Add lines A + B and put the answers on line C.

7c. Write down the pinion variation marking on line D.

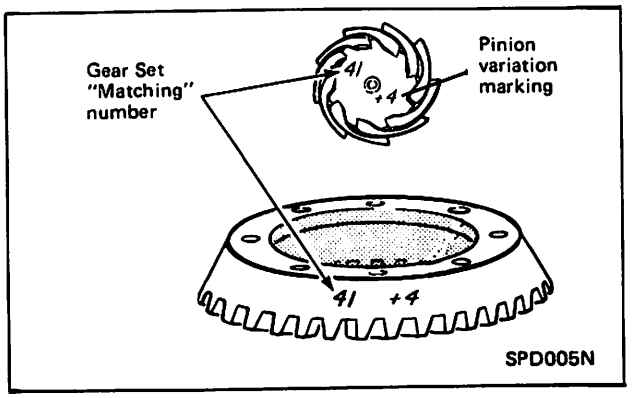

Preload/Pinion Height Adjustment (Con't)

NOTE:
The pinion variation marking and the gear set matching numbers are found on the pinion and ring gear as shown.

7d. If the variation marking is a plus (+), **subtract** line D from line C. If the marking is a minus (–), **add** lines C and D. The result is your pinion shim size.

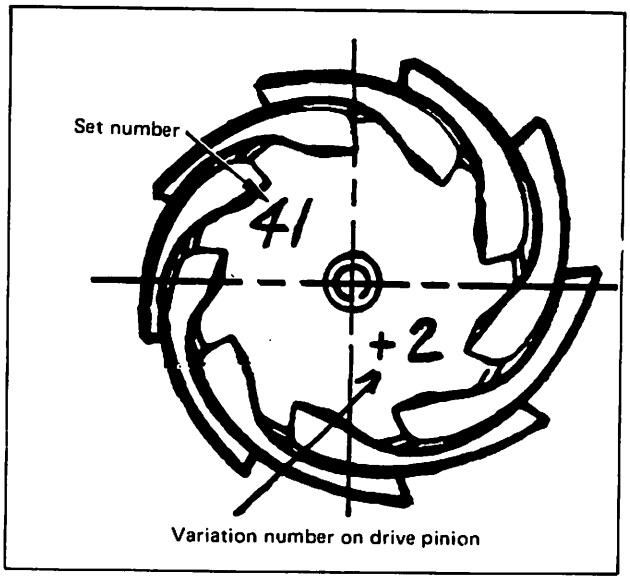

NOTE:
If the pinion is unmarked or zero, then line C is your pinion shim size.

8. Select the proper shim. As a precaution, measure the shim to verify its dimensions.

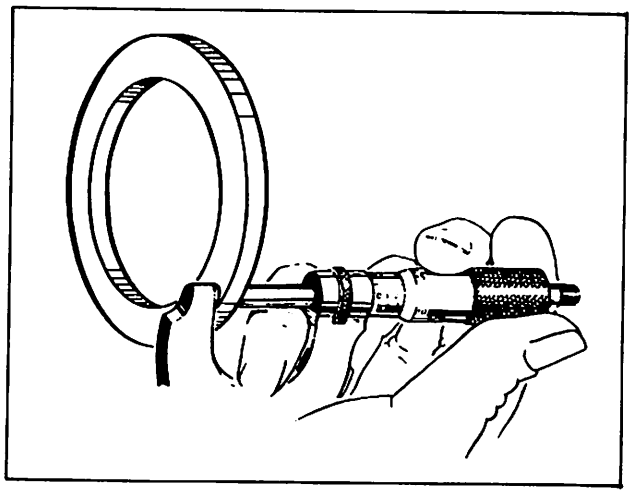

Pinion Assembly

1. Install the shim onto the pinion, level side down. Press the pinion bearing onto the shaft using Tool J-26010-01.

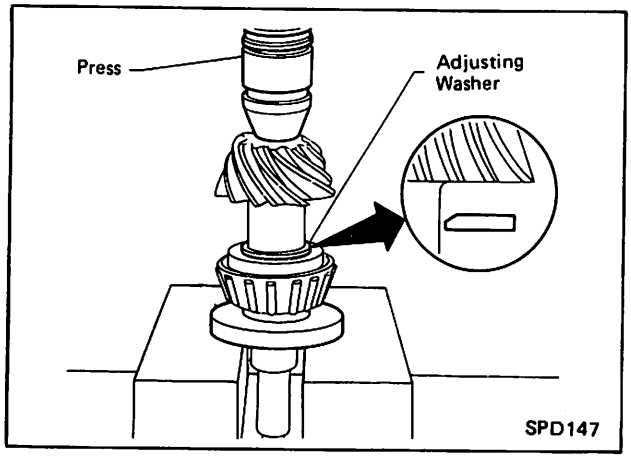

2. Lubricate the front bearing with gear oil and place it on top its race.

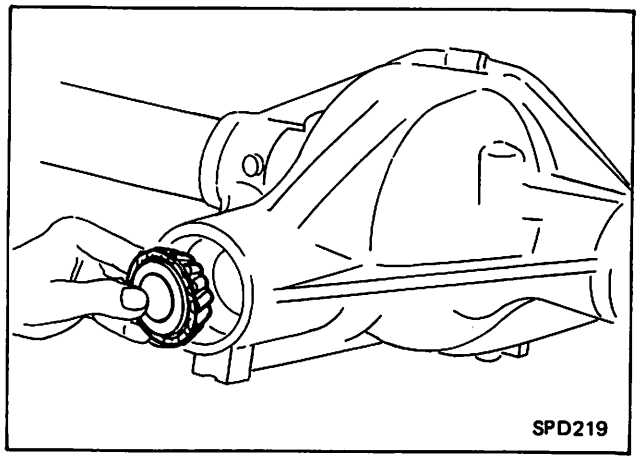

Pinion Assembly (Con't)

3. Lubricate the pinion shaft seal up with gear oil and install it onto the case using Tool J-25273.

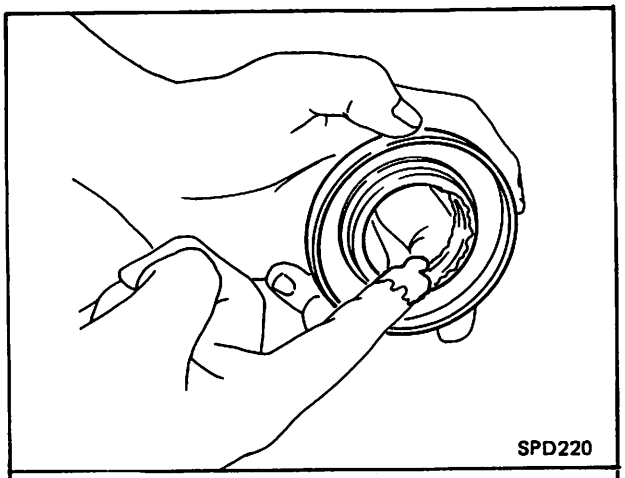

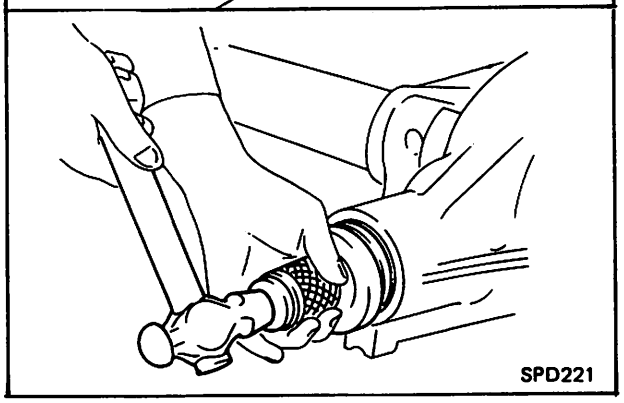

4. Install the washer and then a new spacer onto the pinion. Lubricate the rear bearing with gear oil and insert the pinion shaft assembly into the case.

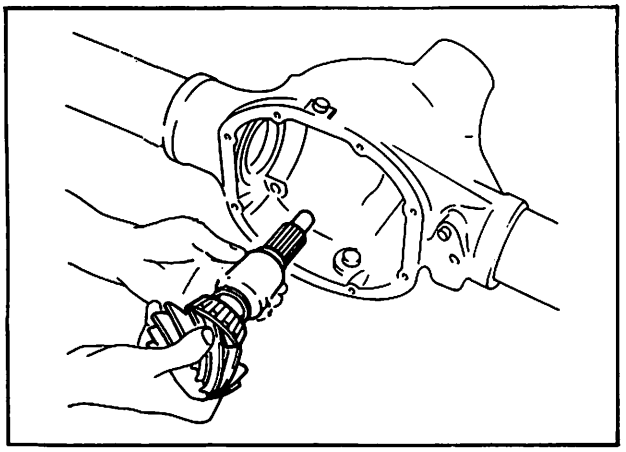

5. Install the companion flange and hold it firmly. Using a hammer and a brass drift drive the pinion into the flange.

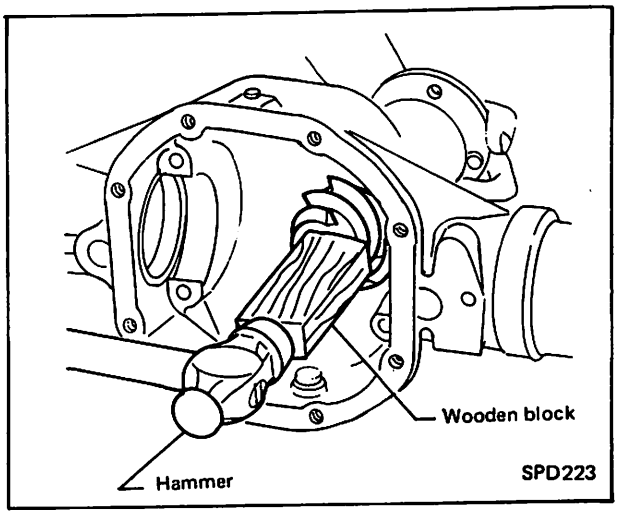

6. Hold the companion flange with Tool J-25774-A and a 1/2" breaker bar, then tighten the pinion nut until there is no axial play. There should be **no** oil or grease on pinion and pinion nut threads at this point.

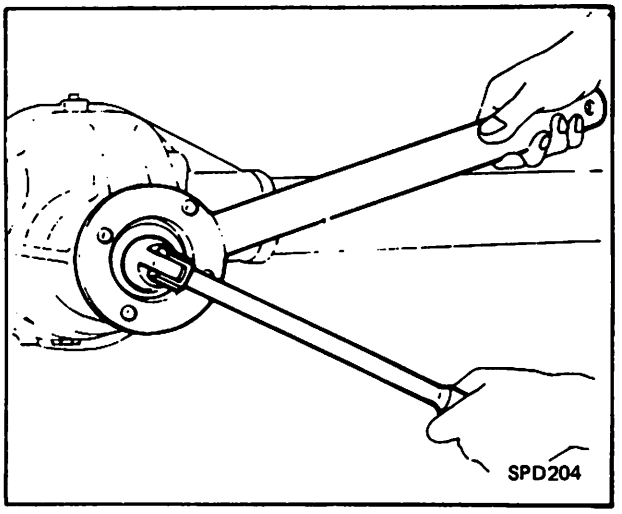

NOTE:
Be certain not to exceed the recommended pre-load or damage to the spacer will result and the pinion assembly procedure must be started over.

Pinion Assembly (Con't)

7. Tighten the pinion nut by very small degrees until the specified pre-load is achieved. When checking the pre-load, turn the drive pinion in both directions several times to set the bearing rollers.
   Preload:
   9.5-14.8 in-lb (11-17 kg-cm, 1.1-1.7 N.m)

8. Torque the driver pinion nut to 94 - 217 ft-lb (13 - 30 kg-m, 127 - 294 N·m).

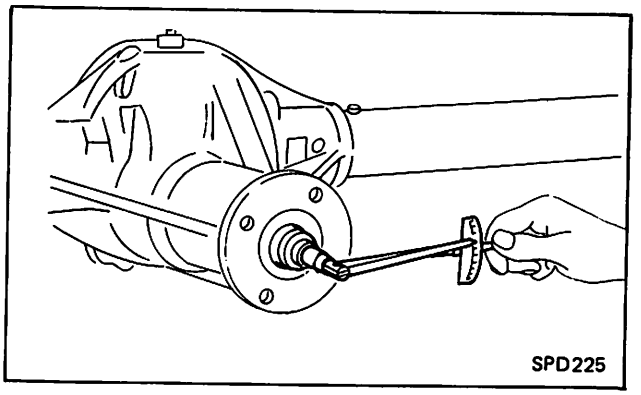

NOTE:
This procedure will have to be repeated if:
a. Maximum preload is achieved before the minimum pinion nut torque is reached.
b. Minimum preload is not achieved before maximum pinion nut torque is reached.

Side Bearing Shim Determination

Side bearing shim size is determined by a set of factors. Use the chart below to list these factors.

The location of these factors is found on the various differential components as shown below.

FACTOR LOCATIONS

FACTOR CHART

LETTERS	HUNDREDTHS OF A MILLIMETER
A — Left housing	
B — Right housing	
C — Gear case	
D — Gear case	
E — Left side bearing	
F — Right side bearing	
G — Space measurement	
H — (+) or (−): ring gear	

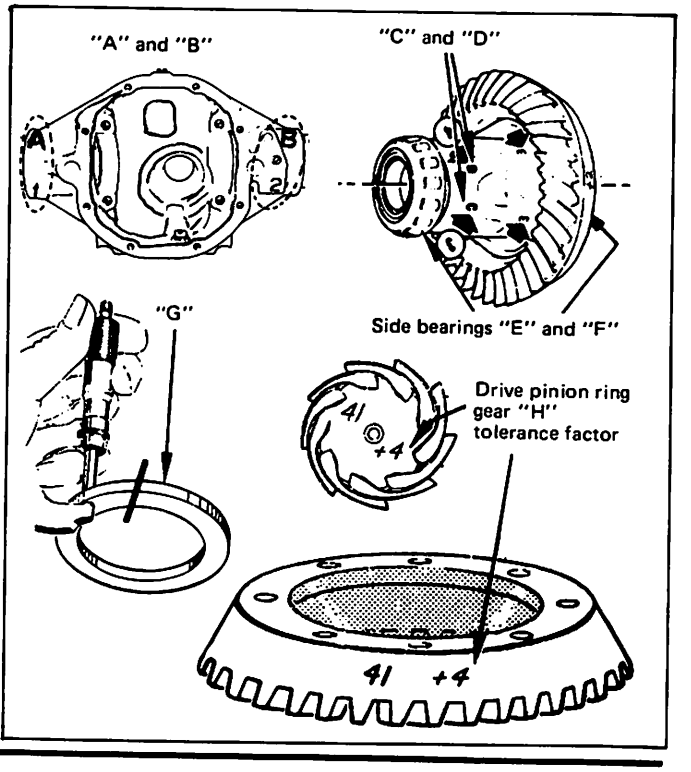

Side Bearing Shim Determination (Con't)

Using the factor chart to record your findings, proceed with the following steps to determine shim size.

1. Locate the numbers stamped next to the letters "A" and "B" on the carrier housing, and record them as Factors "A" and "B" on the chart.

   NOTE:
   Use the metric system only for this procedure. Any measurements taken in inches should be converted to the metric system.

2. Locate the numbers stamped next to the letters "C" and "D" on the gear carrier, and record them as Factors "C" and "D" on the chart.

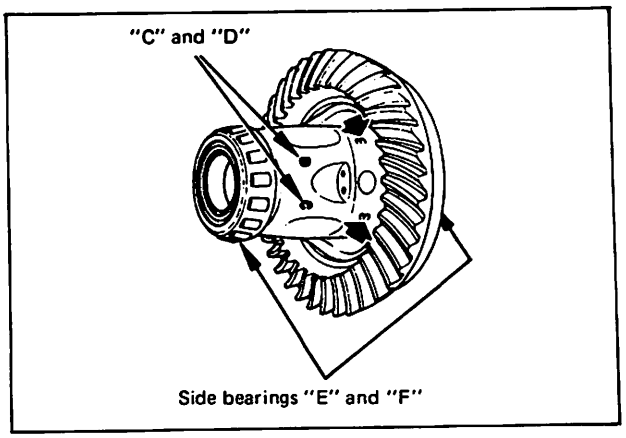

3. Measure the left (Factor E) and right (Factor F) side bearing as follows:

   Tools:

   Side Bearing Measuring Set (J-25407-01)

   ① Gauge Block (J-25407-1)
   ② Base Plate (J-25407-2)
   ③ Weight Block (J-25407-3)
   ④ Metric Dial Indicator Set (J-8001-M)

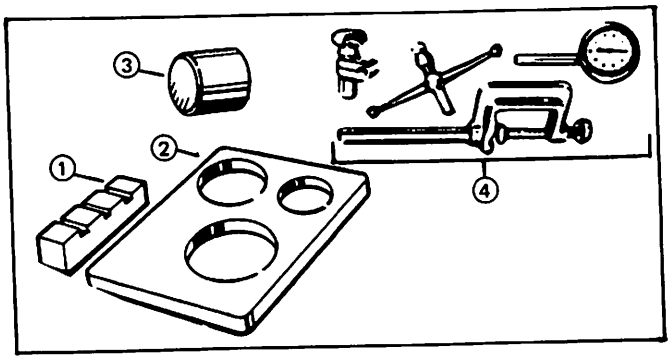

4. Mount the dial indicator on the base plate.

5. Place the 5 pound weight on the base plate and put the 21mm gauge block on top, then zero the dial indicator.

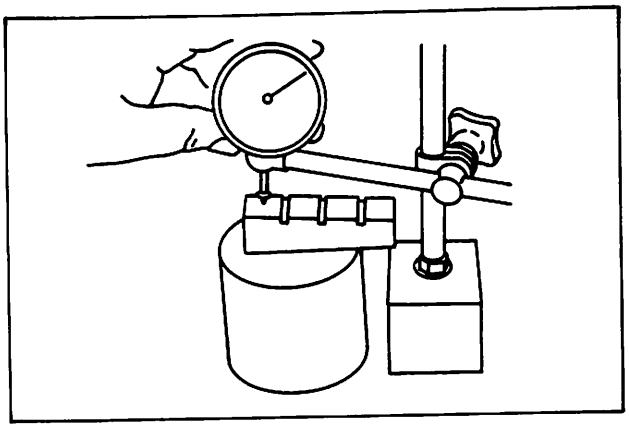

6. Slide the gauge block out from under the dial indicator, then lift the weight block and slip the bearing and race under the weight.

   NOTE:
   For each side bearing; place the bearing over the base plate recess as shown. Be certain it turns freely.

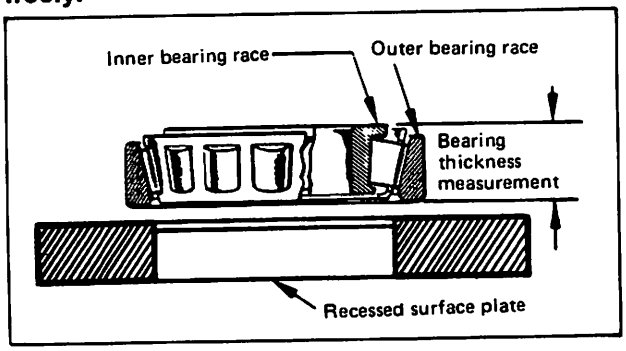

7. Turn the weight to seat the bearing. Read the dial indicator's drop from zero. Write down the findings for each bearing on the list:

   E = left side bearing
   F = right side bearing

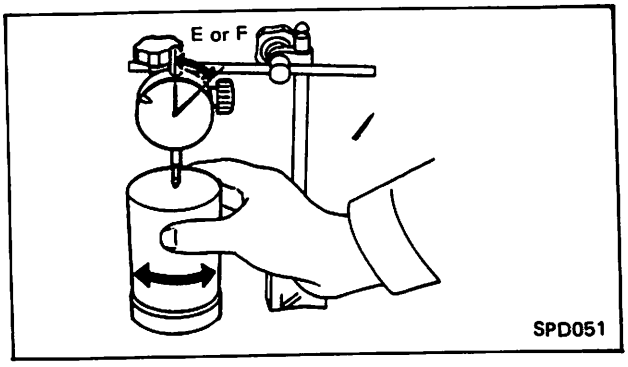

Side Bearing Shim Determination (Con't)

8. Using a micrometer, measure the thick left carrier spacer. Subtract this measurement from 8.10mm (standard thickness) to determine Factor G on the list.

   For example:

   Standard 8.10mm
   Measured 8.08 mm
   .02mm = Factor G

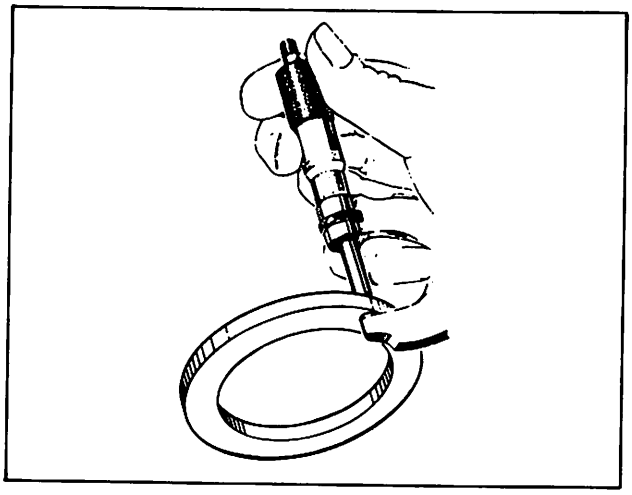

9. Factor "H" on the list is the variation number on the ring gear.

   NOTE:
   If no variation number is found, substitute 0 on the list.

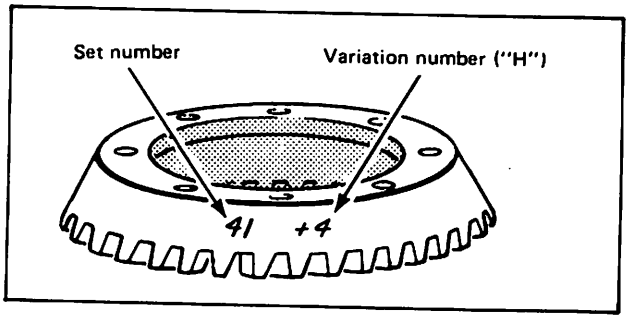

10. Calculate the side bearing shim thickness using the formula below:

    (T1) Left: A − C + D + E − H + 2.05

    (T2) Right: B − D + F + G + H + 1.95

    NOTE:
    Substitute findings from the guide list for their appropriate letter in this formula.

11. Select the proper shim. Measure each shim to ensure accuracy.

    NOTE:
    If you cannot find the desired thickness of washer, use washer so that thickness is the closest to the calculated value.

    Example:

    Calculated value..... T = 3.22mm
    Use washer..... T = 3.21mm

12. Press on the bearings, using a press and the tools shown below.

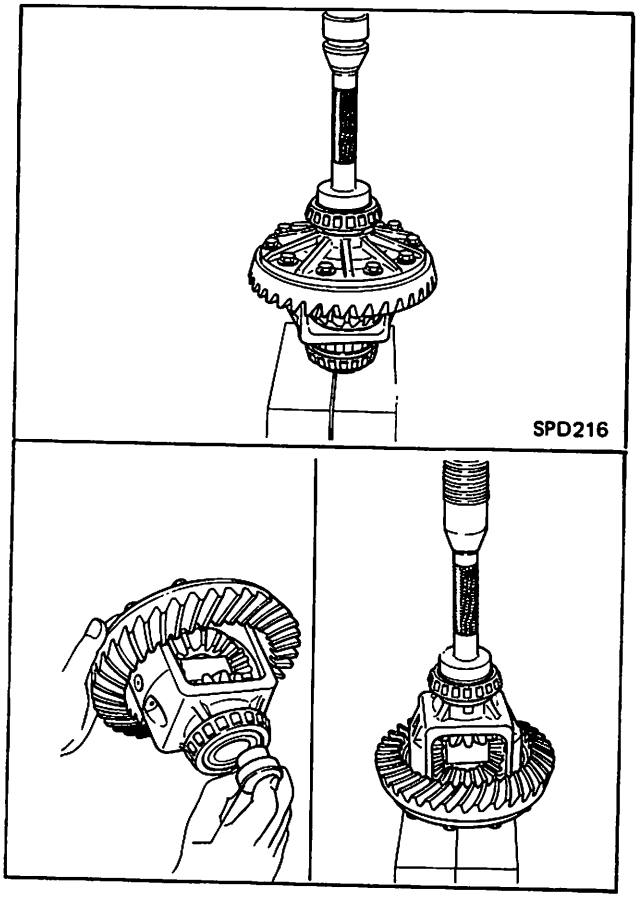

13. Set the correct sized shims into the housing, then install the case assembly into the housing. If necessary, tap lightly with a plastic mallet to seat the assembly.

14. Using Tool J-25267, drive the large spacer into position.

    NOTE:
    The large spacer was measured for Factor G in the calculation table.

Side Bearing Shim Determination (Con't)

15. With the assembly in place, install the side bearing caps, tapping them into place if necessary.

NOTE:
Be certain to use the alignment marks made during disassembly for proper cap/housing assembly.

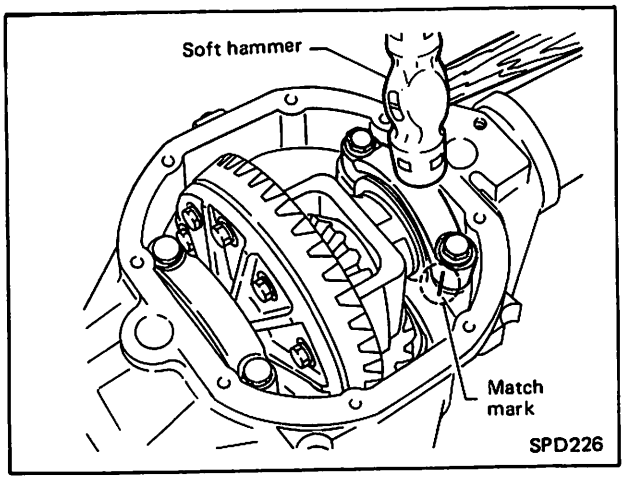

16. Torque the cap fasteners 65 - 72 ft-lb (9 - 10 kg-m, 88 - 98 N·m).

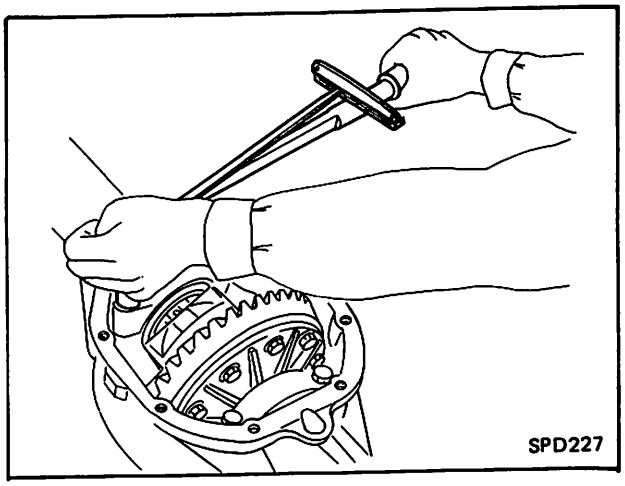

Final Verification

1. Check ring gear backlash with a dial indicator.
   Backlash:
   0.005-0.007 in (0.13-0.18mm)

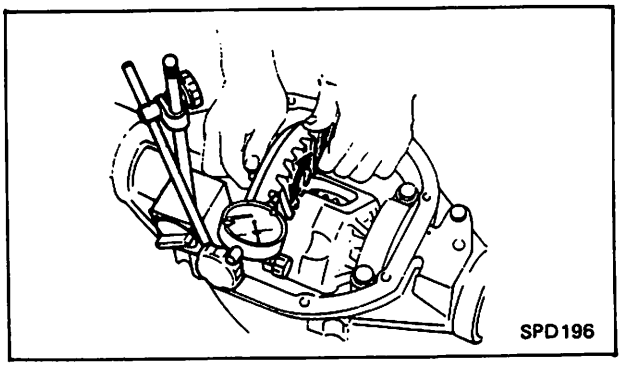

If backlash is too small, decrease thickness of left side bearing adjustment washer and increase thickness of right side bearing adjustment washer by the same amount.

If backlash is too great, reverse the above procedure.

NOTE:
Never add or remove from the total amount of side bearing adjustment washer or gearing preload will be changed.

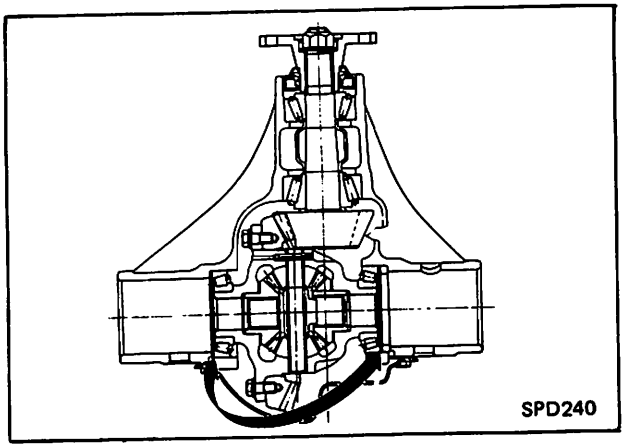

2. Check ring gear runout with a dial indicator.
   Runout:
   0.002 in (0.05mm)

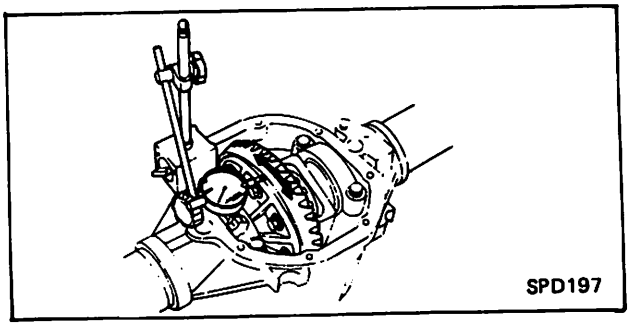

Final Verification (Con't)

If backlash varies excessively in different places, the variance may have resulted from foreign matter caught between the ring gear and the differential case.

If the backlash varies greatly when the runout of the ring gear is within a specified range, the hypoid gear set or differential case should be replaced.

3. Finally, check for tooth contact pattern.

   Refer to **Tooth Contact.**

   Usually the pattern will be correct if you have calculated the washers correctly and the backlash is correct.

   However, in extremely rare cases you will have to use trial-and-error processes until you get a good tooth contact pattern.

   The tooth pattern is the best indication of how well a differential has been set up.

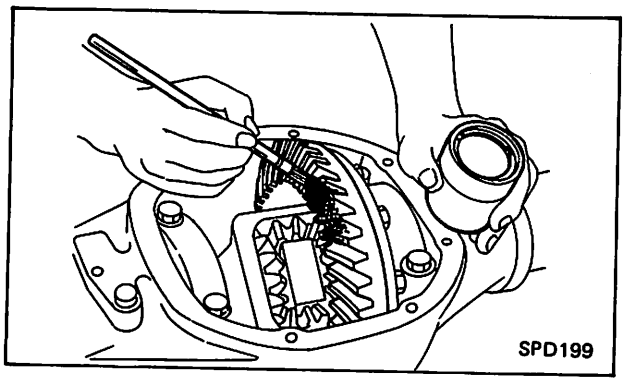

4. Install the differential carrier in the vehicle.

   Gasket should be replaced by new one each time the differential carrier is removed.

   Then fill with gear oil.

ASSEMBLY NOTES:

a. **Gear oil capacity —**
   2¾ U.S. pt (1.3 liters, 2¼ Imp pt)
b. **Drain plug torque**
   43 - 72 ft-lb (6 - 10 kg-m, 59 - 98 N·m)
c. **Filler plug torque**
   29 - 43 ft-lb (4 - 6 kg-m, 39 - 59 N·m)

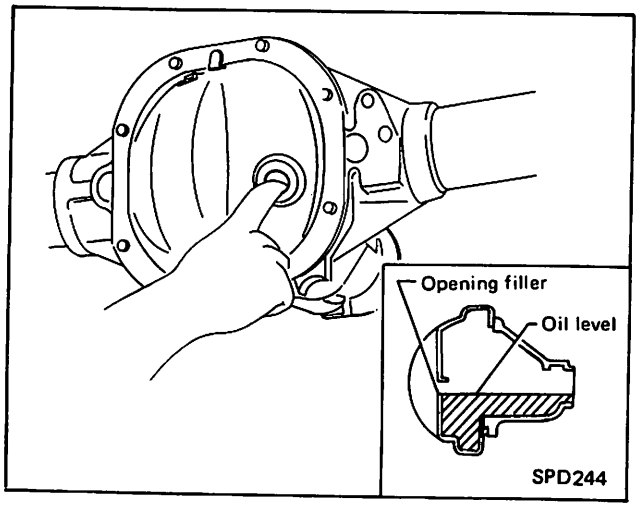

Front Oil Seal Replacement — Removal

The following is the procedure for replacement of the front oil seal.

1. Remove the rear axle assembly. Refer to section RA of your Service Manual.
2. Remove the drain plug and drain the gear oil.
3. Remove the rear axle shafts. Refer to section RA of your Service Manual.
4. Remove rear cover and rear cover gasket.
5. Remove side bearing caps.

NOTE:
Bearing caps are line-board during manufacture and should be put back in their original places. Put match marks on one side of the side bearing cap with paint or a punch to ensure correct assembly.

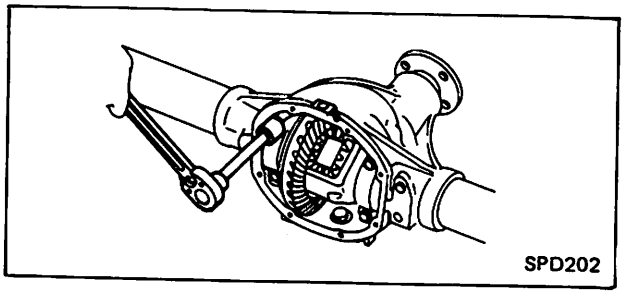

Front Oil Seal Replacement — Removal (Con't)

6. Using a pry bar, remove differential case assembly.

NOTE:
Be careful to keep the side bearing outer races together with inner race — do not mix them up.

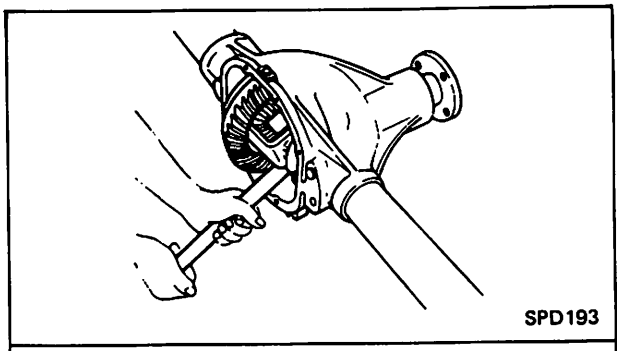
SPD193

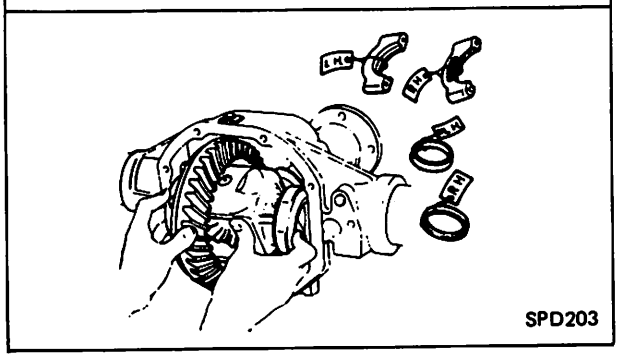
SPD203

7. Remove drive pinion nut.

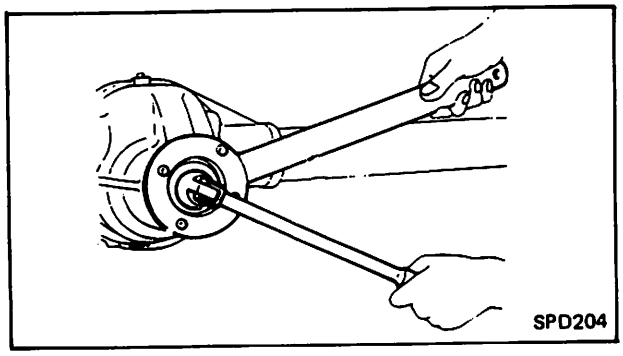
SPD204

8. Remove companion flange with puller.

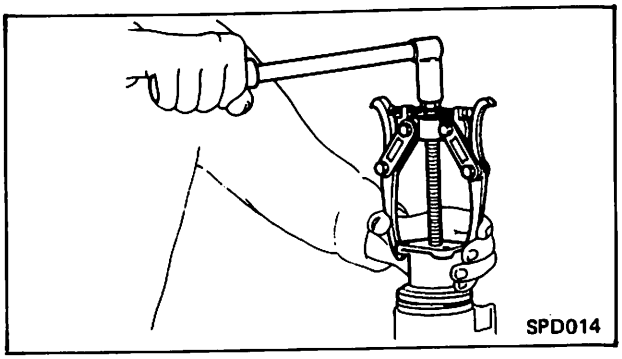
SPD014

9. Remove drive pinion with soft hammer.

CAUTION:
Reinstall companion flange nut on the pinion shaft to prevent damage to the shaft threads.

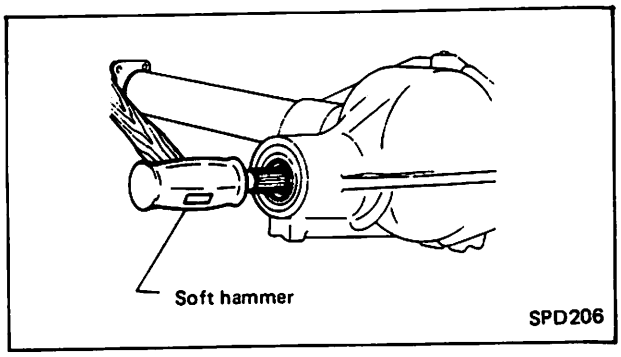

SPD206

10. Remove oil seal by prying up with a large screw driver, and remove front pinion bearing inner race.

NOTE:
Do this carefully, so as not to scratch seal bore with screwdriver. Cover end of screwdriver with a rag.

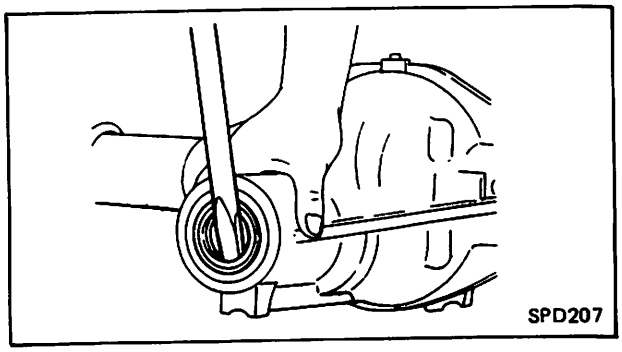
SPD207

Front Oil Seal Replacement — Assembly

ASSEMBLY

1. Using Tool, J-25273 carefully fit a new oil seal into carrier.

NOTE:
Make sure oil seal is flush with end of carrier and apply multi-purpose grease into cavity between lips.

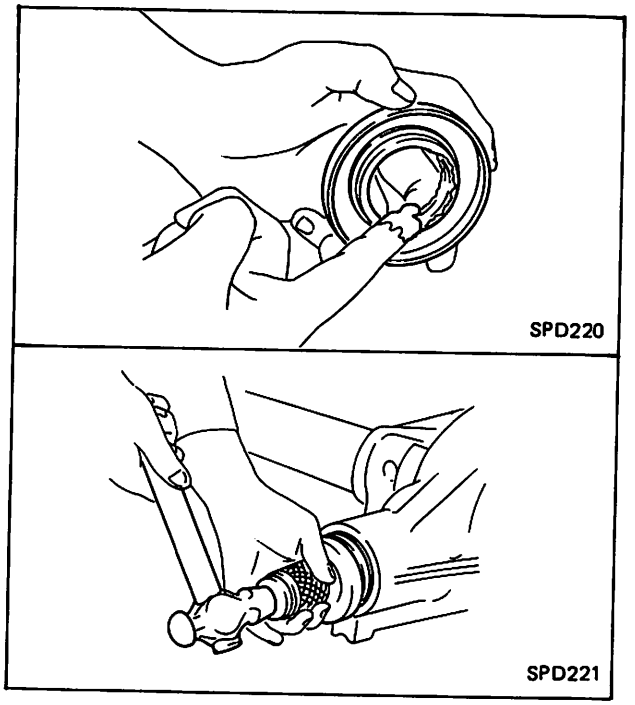

2. Place a washer and a new collapsible spacer on drive pinion and lubricate rear bearing with gear oil, and insert it in gear carrier.

NOTE:
Always use a new collapsible spacer to ensure correct preload.

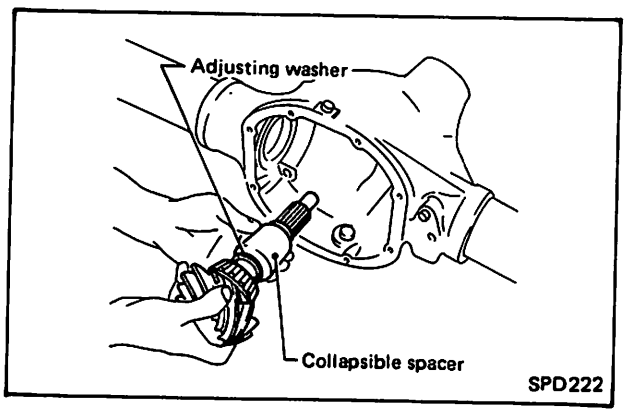

3. Install companion flange and hold it firmly. Insert drive pinion into companion flange by tapping its head with a soft hammer.

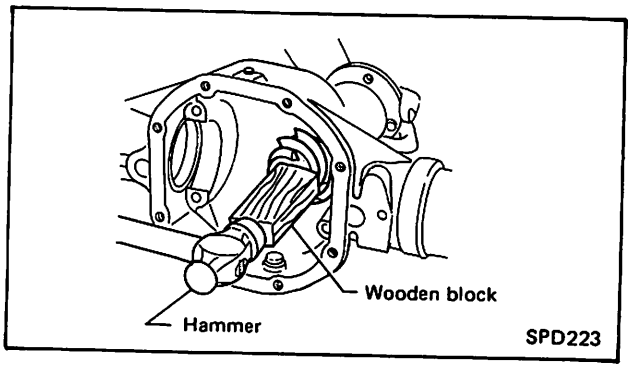

4. Hold companion flange with tool J-25774-A and temporarily tighten pinion nut, until there is no axial play.

NOTE:
Be certain that threaded portion of drive pinion and pinion nut are free from oil or grease.

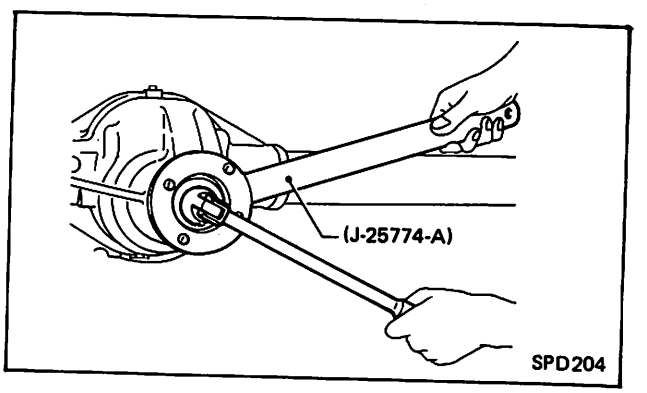

5. Tighten the pinion nut by degrees to the specified preload of 9.5 - 14.8 in-lb (11 - 17 kg-cm, 1.1 - 1.7 N·m) using tool J-25765A.

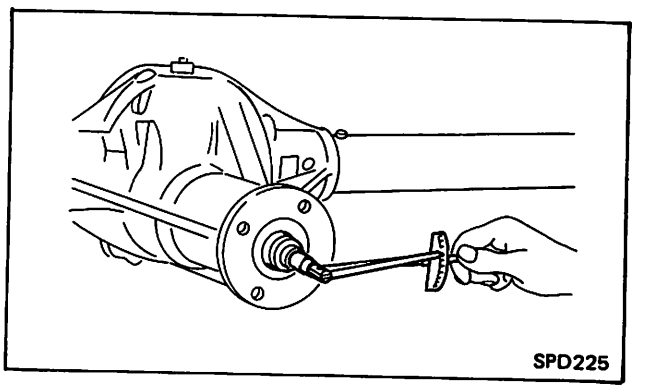

Front Oil Seal Replacement — Assembly (Con't)

6. Set the side bearing shims into the housing, then install the gear case assembly into the housing. If necessary, top lightly with a plastic mallet to seal the assembly.

7. Using tool J-25267, drive the large spacer into position.

8. Install the bearing caps and torque the fasteners 65 - 72 ft-lb (9 - 10 kg-m, 88 - 98 N·m).

   NOTE:
   Tap on the cap with a soft hammer to settle it in the carrier. Be certain to use the alignment marks made during disassembly for proper cap/housing assembly.

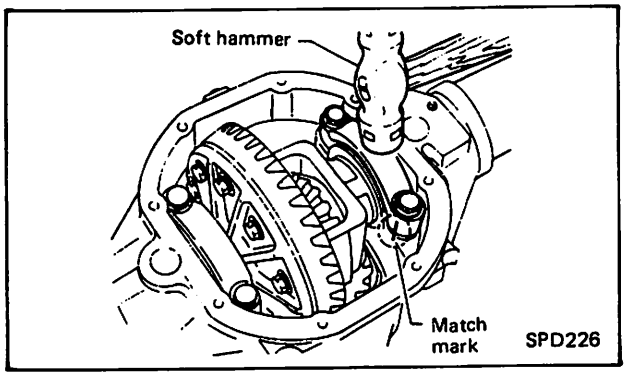

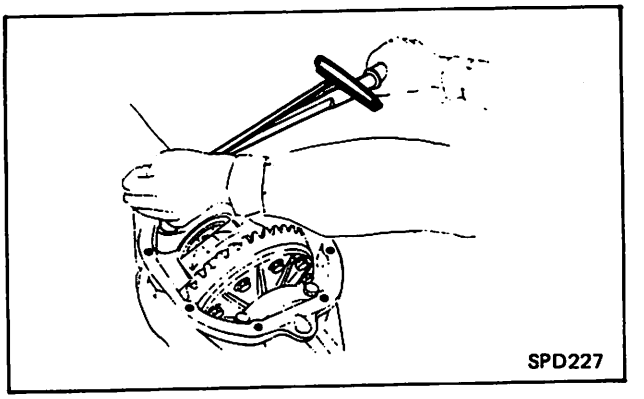

9. Install the cover onto the housing, being certain to use a **new** gasket.

10. Fill the carrier with the specified amount of gear oil.

SERVICE DATA AND SPECIFICATIONS (S.D.S.)

PROPELLER SHAFT

GENERAL SPECIFICATIONS

Applied model	2WD							4WD			
	M/T					A/T		Primary	Front	Rear	
	Z20, Z24, SD25				Z24	Z24					
	Standard wheelbase		Long wheelbase		Double rear tires	Standard wheel-base	Long wheel-base	Standard and Long wheelbase		Standard wheel-base	Long wheel-base
	Separate seat	Bench seat	Separate seat	Bench seat							
Model	3S63H							2S80B	2F63H	2F80B	
Number of joints	3							2			
Coupling method with transmission	Sleeve							Sleeve type	Flange type		
Distance between yokes mm (in)	63 (2.48)							80 (3.15)	63 (2.48)	80 (3.15)	
Type of journal bearing	Solid type (Disassembly type)										
Shaft length (Spider to spider) 1st mm (in)	515 (20.28)	650 (25.59)	515 (20.28)	650 (25.59)	515 (20.28)	485 (19.09)	485 (19.09)	265 (10.43)	615 (24.21)	760 (29.92)	1,000 (39.37)
2nd mm (in)	745 (29.33)		983 (38.70)		965 (37.99)	745 (29.33)	983 (38.70)				
Shaft outer diameter 1st mm (in)	63.5 (2.500)							65 (2.56)	50.8 (2.000)	75 (2.95)	
2nd mm (in)									30.0 (1.181)		

SERVICE DATA

Unit: mm (in)

Propeller shaft runout limit	0.6 (0.024)
Journal axial play	Less than 0.02 (0.0008)

Snap ring (63H)

Unit: mm (in)

Thickness	Color	Part No.
2.00 (0.0787)	White	37146-14600
2.02 (0.0795)	Yellow	37147-14600
2.04 (0.0803)	Red	37148-14600
2.06 (0.0811)	Green	37149-14600
2.08 (0.0819)	Blue	37150-14600
2.10 (0.0827)	Light brown	37151-14600
2.12 (0.0835)	No paint	37152-14600

Snap ring (80B)

Unit: mm (in)

Tickness	Color	Part number
1.49 (0.0587)	White	39646 - 21001
1.52 (0.0598)	Yellow	39647 - 21001
1.55 (0.0610)	Red	39648 - 21001
1.58 (0.0622)	Green	39649 - 21001
1.61 (0.0634)	Blue	39646 - 21002
1.64 (0.0646)	Light brown	39647 - 21002
1.67 (0.0657)	Black	39648 - 21002

TIGHTENING TORQUE

	N·m	kg·m	ft·lb
Propeller shaft to differential carrier			
2WD	24 - 32	2.4 - 3.3	17 - 24
4WD (both sides)			
63H	34 - 44	3.5 - 4.5	25 - 33
80B	78 - 88	8.0 - 9.0	58 - 65
Propeller shaft to transfer			
63H	34 - 44	3.5 - 4.5	25 - 33
80B	78 - 88	8.0 - 9.0	58 - 65
Propeller shaft 1st tube to 2nd tube	24 - 32	2.4 - 3.3	17 - 24
Center bearing locking nut			
Flange nut type	245 - 294	25 - 30	181 - 217
Nut and washer type	196 - 235	20 - 24	145 - 174
Center bearing bracket to frame	16 - 22	1.6 - 2.2	12 - 16

DIFFERENTIAL CARRIER

GENERAL SPECIFICATIONS

Applied model	2WD						4WD	
			Z24 engine				Z24 engine	
	Z20 engine	SD25 engine	M/T		A/T	Double tire	Front	Rear
			Standard	Heavy duty				
Model	H190-ML	H190A				C200	R180	C200
Type	Rigid axle suspension (Banjo type)					Cast center	*1	Cast center
Drive pinion preload adjusted by	Collapsible spacer						Solid spacer and washer	Collapsible spacer
Ring gear pitch diameter mm (in)	190 (7.48)					200 (7.87)	180 (7.09)	200 (7.87)
Gear ratio	3.364	3.889	3.700	4.375	3.889	4.375	4.111	4.111
Number of teeth (Ring gear/Drive pinion)	37/11	35/9	37/10	35/8	35/9	35/8	37/9	37/9
Oil capacity liter (US pt, Imp pt)	U.S.A. models 1.25 (2-5/8, 2-1/4) Canada models 1.5 (3-1/8, 2-5/8)					1.3 (2-3/4, 2-1/4)	1.0 (2-1/8, 1-3/4)	1.3 (2-3/4, 2-1/4)

*1: Independent suspension

SERVICE DATA

Model		R180	H190-ML and H190A	C200
Drive pinion preload (With front oil seal) N·m (kg-cm, in-lb)		0.9 - 1.7 (9 - 17, 7.8 - 14.8)	1.1 - 1.6 (11 - 16, 9.5 - 13.9)	1.1 - 1.7 (11 - 17, 9.5 - 14.8)
Side bearing adjusting method		Shim		
Backlash	Drive pinion to ring gear mm (in)	0.13 - 0.18 (0.0051 - 0.0071)	0.15 - 0.20 (0.0059 - 0.0079)	0.13 - 0.18 (0.0051 - 0.0071)
	Side gear to pinion mate gear (Clearance between side gear to differential case) mm (in)	0 - 0.15 (0 - 0.0059)	0.10 - 0.20 (0.0039 - 0.0079)	0.10 - 0.20 (0.0039 - 0.0079)
Ring gear runout limit mm (in)		0.08 (0.0031)		0.05 (0.0020)
Total preload N·m (kg-cm, in-lb)		1.0 - 2.3 (10 - 23, 8.7 - 20.0)	1.2 - 2.2 (12 - 22, 10 - 19)	1.2 - 2.3 (12 - 23, 10 - 20)

Side gear thrust washer

R180

Thickness mm (in)	Part No.
0.78 (0.0307)	38424-W2000
0.83 (0.0327)	38424-W2001
0.88 (0.0346)	38424-W2002

H190-ML and H190A

Thickness mm (in)	Part No.
0.775 (0.0305)	38424-E3000
0.825 (0.0325)	38424-E3001
0.875 (0.0344)	38424-E3002
0.925 (0.0364)	38424-E3003

C200

Thickness mm (in)	Part No.
0.775 (0.0305)	38424-N3100
0.825 (0.0325)	38424-N3101
0.875 (0.0344)	38424-N3102

Side bearing adjusting shim

H190-ML and H190A

Thickness mm (in)	Part No.
0.05 (0.0020)	38161-27160
0.07 (0.0028)	38454-61200
0.12 (0.0039)	38455-61200
0.25 (0.0079)	38154-27160
0.50 (0.0197)	38457-61200

C200

Thickness mm (in)	Part number
2.00 (0.0787)	38453 - N3100
2.05 (0.0807)	38453 - N3101
2.10 (0.0827)	38453 - N3102
2.15 (0.0846)	38453 - N3103
2.20 (0.0866)	38453 - N3104
2.25 (0.0886)	38453 - N3105
2.30 (0.0906)	38453 - N3106
2.35 (0.0925)	38453 - N3107
2.40 (0.0945)	38453 - N3108
2.45 (0.0965)	38453 - N3109
2.50 (0.0984)	38953 - N3110
2.55 (0.1004)	38453 - N3111
2.60 (0.1024)	38453 - N3112

Side retainer adjusting shim

R180

Thickness mm (in)	Part No.
0.20 (0.0079)	38453-21100
0.25 (0.0098)	38453-21101
0.30 (0.0118)	38453-21102
0.40 (0.0157)	38453-21103
0.50 (0.0197)	38453-21104

Pinion height adjusting washer

R180

Thickness mm (in)	Part No.
3.09 (0.1217)	38154-P6017
3.12 (0.1228)	38154-P6018
3.15 (0.1240)	38154-P6019
3.18 (0.1252)	38154-P6020
3.21 (0.1264)	38154-P6021
3.24 (0.1276)	38154-P6022
3.27 (0.1287)	38154-P6023
3.30 (0.1299)	38154-P6024
3.33 (0.1311)	38154-P6025
3.36 (0.1323)	38154-P6026
3.39 (0.1335)	38154-P6027
3.42 (0.1346)	38154-P6028
3.45 (0.1358)	38154-P6029
3.48 (0.1370)	38154-P6030
3.51 (0.1382)	38154-P6031
3.54 (0.1394)	38154-P6032
3.57 (0.1406)	38154-P6033
3.60 (0.1417)	38154-P6034
3.63 (0.1429)	38154-P6035
3.66 (0.1441)	38154-P6036

C200

Thickness mm (in)	Part No.
3.09 (0.1217)	38154-P6017
3.12 (0.1228)	38154-P6018
3.15 (0.1240)	38154-P6019
3.18 (0.1252)	38154-P6020
3.21 (0.1264)	38154-P6021
3.24 (0.1276)	38154-P6022
3.27 (0.1287)	38154-P6023
3.30 (0.1299)	38154-P6024
3.33 (0.1311)	38154-P6025
3.36 (0.1323)	38154-P6026
3.39 (0.1335)	38154-P6027
3.42 (0.1346)	38154-P6028
3.45 (0.1358)	38154-P6029
3.48 (0.1370)	38154-P6030
3.51 (0.1382)	38154-P6031
3.54 (0.1394)	38154-P6032
3.57 (0.1406)	38154-P6033
3.60 (0.1417)	38154-P6034
3.63 (0.1429)	38154-P6035
3.66 (0.1441)	38154-P6036

H190-ML and H190A

Thickness mm (in)	Part No.
2.58 (0.1016)	38154-P6000
2.61 (0.1028)	38154-P6001
2.64 (0.1039)	38154-P6002
2.67 (0.1051)	38154-P6003
2.70 (0.1063)	38154-P6004
2.73 (0.1075)	38154-P6005
2.76 (0.1087)	38154-P6006
2.79 (0.1098)	38154-P6007
2.82 (0.1110)	38154-P6008
2.85 (0.1122)	38154-P6009
2.88 (0.1134)	38154-P6010
2.91 (0.1146)	38154-P6011
2.94 (0.1157)	38154-P6012
2.97 (0.1169)	38154-P6013
3.00 (0.1181)	38154-P6014
3.03 (0.1193)	38154-P6015
3.06 (0.1205)	38154-P6016
3.09 (0.1217)	38154-P6017
3.12 (0.1228)	38154-P6018
3.15 (0.1240)	38154-P6019
3.18 (0.1252)	38154-P6020

Pinion bearing adjusting washer

R180

Thickness mm (in)	Part No.
2.31 (0.0909)	38141-09400
2.33 (0.0917)	38140-09400
2.35 (0.0925)	38139-09400
2.37 (0.0933)	38138-09400
2.39 (0.0941)	38137-09400
2.41 (0.0949)	38136-09400
2.43 (0.0957)	38135-09400
2.45 (0.0965)	38134-09400
2.47 (0.0972)	38133-09400
2.49 (0.0980)	38132-09400
2.51 (0.0988)	38131-09400
2.53 (0.0996)	38130-09400
2.55 (0.1004)	38129-09400
2.57 (0.1012)	38128-09400
2.59 (0.1020)	38127-09400

Pinion bearing spacer

R180

Length mm (in)	Part No.
52.20 (2.0551)	38130-78500
52.40 (2.0630)	38131-78500
52.60 (2.0709)	38132-78500
52.80 (2.0787)	38133-78500
53.00 (2.0866)	38134-78500
53.20 (2.0945)	38135-78500

C200

	N·m	kg-m	ft-lb
Drive pinion nut	127 - 294	13 - 30	94 - 217
Ring gear bolt	69 - 78	7 - 8	51 - 58
Side bearing cap bolt	88 - 98	9 - 10	65 - 72
Filler plug	39 - 59	4 - 6	29 - 43
Drain plug	59 - 98	6 - 10	43 - 72
Differential carrier rear cover bolt	11 - 14	1.1 - 1.4	8 - 10

TIGHTENING TORQUE

R180

Unit	N·m	kg-m	ft-lb
Drive pinion nut	167 - 196	17 - 20	123 - 145
Ring gear bolt	88 - 98	9 - 10	65 - 72
Companion flange to propeller shaft bolt	34 - 44	3.5 - 4.5	25 - 33
Drain and filler plugs	39 - 59	4 - 6	29 - 43
Side retainer bolt	9 - 12	0.9 - 1.2	6.5 - 8.7
Rear cover bolt	39 - 49	4 - 5	29 - 36
Differential carrier front mounting Carrier to bracket	50 - 68	5.1 - 6.9	37 - 50
Crossmember to bracket	71 - 96	7.2 - 9.8	52 - 71
Differential carrier rear mounting	50 - 68	5.1 - 6.9	37 - 50
Drive shaft to side flange bolts	27 - 37	2.8 - 3.8	20 - 27

H190-ML and H190A

Unit	N·m	kg-m	ft-lb
Drive pinion nut	127 - 294	13 - 30	94 - 217
Ring gear bolt	78 - 98	8 - 10	58 - 72
Side bearing cap bolt	49 - 59	5 - 6	36 - 43
Drain and filler plugs	59 - 98	6 - 10	43 - 72
Companion flange to propeller shaft	24 - 32	2.4 - 3.3	17 - 24
Differential carrier to rear axle case	17 - 25	1.7 - 2.5	12 - 18

TROUBLE DIAGNOSES AND CORRECTIONS

PROPELLER SHAFT

Condition	Probable cause	Corrective action
Vibration during at medium or high speed.	Worn or damaged journal bearing.	Replace journal assembly.
	Unbalance due to bent or dented propeller shaft.	Replace propeller shaft assembly.
	Loose propeller shaft installation.	Retighten.
	Worn transmission rear extension bushing.	Replace.
	Damaged center bearing. (3S63H)	Replace.
	Undercoating or mud on the shaft causing unbalance.	Clean up shaft.
	Balance weights missing.	Replace propeller shaft assembly
Knocking sound during starting or noise during coasting on propeller shaft.	Worn or damaged journal.	Replace journal assembly.
	Worn sleeve yoke and mainshaft spline.	Replace propeller shaft assembly.
	Loose propeller shaft installation.	Retighten.
	Loose joint installation.	Replace journal assembly or adjust snap ring.
	Damaged center bearing or insulator. (3S63H)	Replace center bearing.
	Loose or missing bolts at center bearing bracket to body. (3S63H)	Replace or tighten bolts.
Scraping noise.	Dust cover on sleeve yoke rubbing on transmission rear extension.	Straighten out dust cover to remove interference.
Whine or whistle.	Damaged center bearing. (3S63H)	Replace center bearing.

DIFFERENTIAL CARRIER

When a differential carrier is suspected of being noisy, it is advisable to make a thorough test to determine whether the noise originates in the tires, road surface, exhaust, universal joint, propeller shaft, wheel bearings, engine, transmission, or differential carrier. Noise which originates in other places cannot be corrected by adjustment or replacement of parts in differential carrier.

Condition	Probable cause	Corrective action
Noise on drive, coast and float.	Shortage of oil.	Supply gear oil. Rebuild gear carrier if necessary.
	Incorrect tooth contact between ring gear and drive pinion.	Adjust tooth contact or replace the hypoid gear set.
	Incorrect backlash between ring gear and drive pinion.	Adjust backlash or replace the hypoid gear set if necessary.
	Seized up or damaged ring gear and drive pinion.	Replace the hypoid gear set.

Condition	Probable cause	Corrective action
Noise on drive, coast and float.	Seized up, damaged or broken drive pinion bearing.	Replace the pinion bearing and faulty parts.
	Seized up, damaged or broken side bearing.	Replace the side bearing and faulty parts.
	Loose clamp bolts or nuts holding ring gear, bearing cap, etc.	Clamp them to specified torque, and replace faulty parts.
Noise on turn.	Seized up, damaged or broken side gear and pinion mate gear.	Replace faulty parts.
	Seized up, damaged or broken side gear and pinion mate gear thrust washers.	Replace faulty parts.
	Pinion mate gears too tight on their shaft.	Replace faulty parts.
Knocking sound during starting or gear shifting.	Excessive backlash.	
	Incorrect backlash ring gear-to-drive pinion or side gear-to-pinion mate gear.	Adjust backlash.
	Worn gears or case.	Replace worn parts.
	Worn rear axle shaft and side gear spline.	Replace worn parts.
	Pinion bearing under preload.	Adjust preload.
	Loose drive pinion nut.	Replace or tighten bolt.
	Loose bolts and nuts, such as ring gear bolts.	Replace faulty parts or tighten bolts.
Seizure or breakage.	Shortage of oil or use of unsuitable oil.	Replace faulty parts and use recommended gear oil.
	Excessively small backlash.	Adjust backlash and replace as required.
	Incorrect adjustment of bearings or gears	Replace faulty parts.
	Severe service due to an excessive loading, improper use of clutch	Replace faulty parts.
	Loose bolts and nuts, such as ring gear bolts.	Replace faulty parts or tighten bolts.
Oil leakage.	Worn-out, damaged or improperly driven front oil seal, or bruised, dented or abnormally worn slide face of companion flange.	Replace damaged oil seal. Repair flange with sandpaper or replace if necessary.
	Damaged gasket.	Replace.
	Loose filler or drain plug.	Tighten.
	Clogged or damaged breather.	Repair or replace.

SPECIAL SERVICE TOOLS

Tool number (Kent-Moore No.)	Tool name	Unit application			
		R180	H190-ML	H190A	C200
ST0501S000 (–) ① ST05011000 (–) ② ST05012000 (–)	Engine stand Engine stand Base	X	X	X	X
ST06310000 (J25602-01)	Diff. attachment	–	X	X	–
KV38100800 (–) Equivalent tool (J25604-01)	Diff. attachment	X	–	–	–
ST30611000 (J25742-1)	Drive pinion bearing outer race drift bar	X	X	X	X
ST30613000 (J25742-3)	Drive pinion front bearing outer race drift	–	X	X	X
ST30621000 (–)	Drive pinion rear bearing outer race drift	X	X	X	X
ST30701000 (J25742-2)	Drift	X	–	–	–
ST3090S000 (–) ① ST30031000 (J22912-01) ② ST30901000 (–)	Drive pinion rear bearing inner race puller set Puller Base	X	X	X	X

Tool number (Kent-Moore No.)	Tool name	Unit application			
		R180	H190-ML	H190A	C200
ST3127S000 (See J25765-A) ① GG91030000 (See J25765-A) ② HT62900000 (–) ③ HT62940000 (–)	Preload gauge Torque wrench Socket adapter (1/2") Socket adapter (3/8")	X	X	X	X
ST31530000 (J25774-A)	Drive pinion flange wrench	X	X	X	–
KV38104700 (–)	Drive pinion flange wrench	–	–	–	X
ST3306S001 (–) ① ST33051001 (–) ② ST33061000 (J8107-2)	Diff. side bearing puller set Puller Adapter	X	X	X	X
ST33230000 (J25805-01)	Diff. side bearing drift	X	X	X	X
KV31100300 (J25689-A)	Solid punch	X	X	X	X
KV381025S0 (–) ① ST30720000 (–) ② KV38102510 (–)	Oil seal fitting tool Drift bar Drift	X	X	X	X

Tool number (Kent-Moore No.)	Tool name	Unit application			
		R180	H190-ML	H190A	C200
ST33710000 (–)	Diff. side retainer attachment 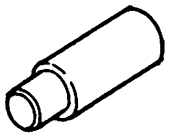	X	–	–	–
ST33290001 (J25810-A)	Side bearing outer race puller	X	–	–	–
ST30650001 (J25749-A)	Pilot bearing drift 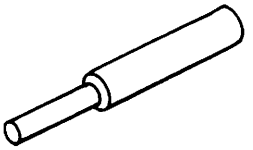	X	–	–	–
ST33720000 (J25817)	Diff. side retainer guide 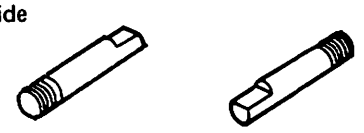	X	–	–	–
ST33270000 (–)	Side oil seal drift 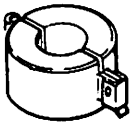	X	–	–	–
KV40102600 (–)	Torque wrench 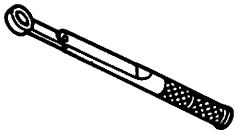	X	–	–	–
KV38100600 (J25267)	Side bearing spacer drift 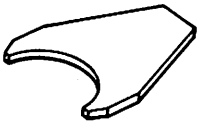	–	–	–	X
(J8001-M)	Metric dial indicator set (J8001-6 dial indicator only) 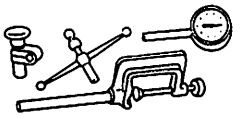	X	X	X	X
(J25269-B)	Pinion height & preload gauge set ① J25269-23 bolt & nut ② J23597-1 arbor (Long plunger) Use with J23597-1 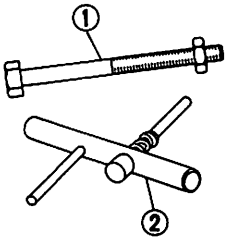	X	X	X	X

Tool number (Kent-Moore No.)	Tool name	Unit application			
		R180	H190-ML	H190A	C200
(J25269-1)	Gauge plate	X	–	–	–
(J25269-30)	Gauge plate	–	X	–	–
(J25269-20)	Gauge plate	–	–	X	–
KV38103910 (J33920)	Gauge plate	–	–	–	X
(J25269-2)	Rear pinion bearing pilot	X	X	X	X
(J25269-3)	Front pinion bearing pilot	X	X	X	X
(J25269-4)	Side bearing discs (2 Req'd)	X	–	–	X
(J25269-18)	Side bearing discs (2 Req'd)	–	X	X	–
(J25269-18)	Side bearing disc (1 Req'd)	–	–	–	X
(J25269-24)	Lead preload washers (Pkg. of 5)	X	–	–	–

Tool number (Kent-Moore No.)	Tool name	Unit application			
		R180	H190-ML	H190A	C200
(J25269-26)	Bearing preload adapter 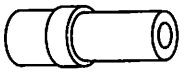	–	X	X	X
(J25269-27)	Bearing preload adapter 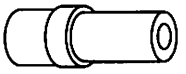	X	–	–	–
(J25269-29)	Front bearing pilot support 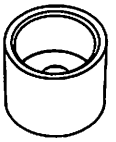	X	X	X	X
99995-00038 (J25407-01)	Side bearing measuring set consists of: ① J25407-1 4-step gauge block ② J25407-2 base plate ③ J25407-3 weight block 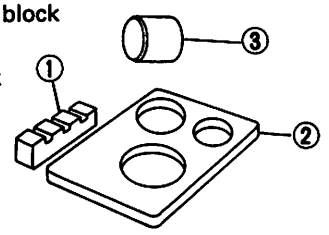	X	X	X	X
(J26099-A)	Differential shim organizer 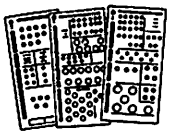	X	X	X	X

FRONT AXLE & FRONT SUSPENSION

SECTION FA

CONTENTS

FRONT AXLE AND FRONT SUSPENSION SYSTEM (2WD) ..... FA- 2
FRONT AXLE (2WD) ..... FA- 3
FRONT SUSPENSION (2WD) ..... FA- 6
Shock absorber ..... FA- 7
Torsion bar spring ..... FA- 7
Tension rod and stabilizer bar ..... FA- 8
Upper link and ball joint ..... FA- 9
Lower link and ball joint FA-10
FRONT AXLE AND FRONT SUSPENSION SYSTEM (4WD) FA-13
FRONT AXLE (4WD) FA-14
Manual-lock free-running hub FA-14
Auto-lock free-running hub FA-15
Drive shaft FA-16
Wheel hub and knuckle FA-19
FRONT SUSPENSION (4WD) FA-22
Shock absorber FA-23
Torsion bar spring FA-23
Stabilizer bar FA-24
Upper link and ball joint FA-24
Lower link and ball joint FA-24
SERVICE DATA AND SPECIFICATIONS (S.D.S.) FA-25
General specifications FA-25
Inspection and adjustment FA-25
Tightening torque FA-27
TROUBLE DIAGNOSES AND CORRECTIONS FA-28
SPECIAL SERVICE TOOLS FA-31

FRONT AXLE AND FRONT SUSPENSION SYSTEM (2WD)

Ⓣ: N·m (kg-m, ft-lb)

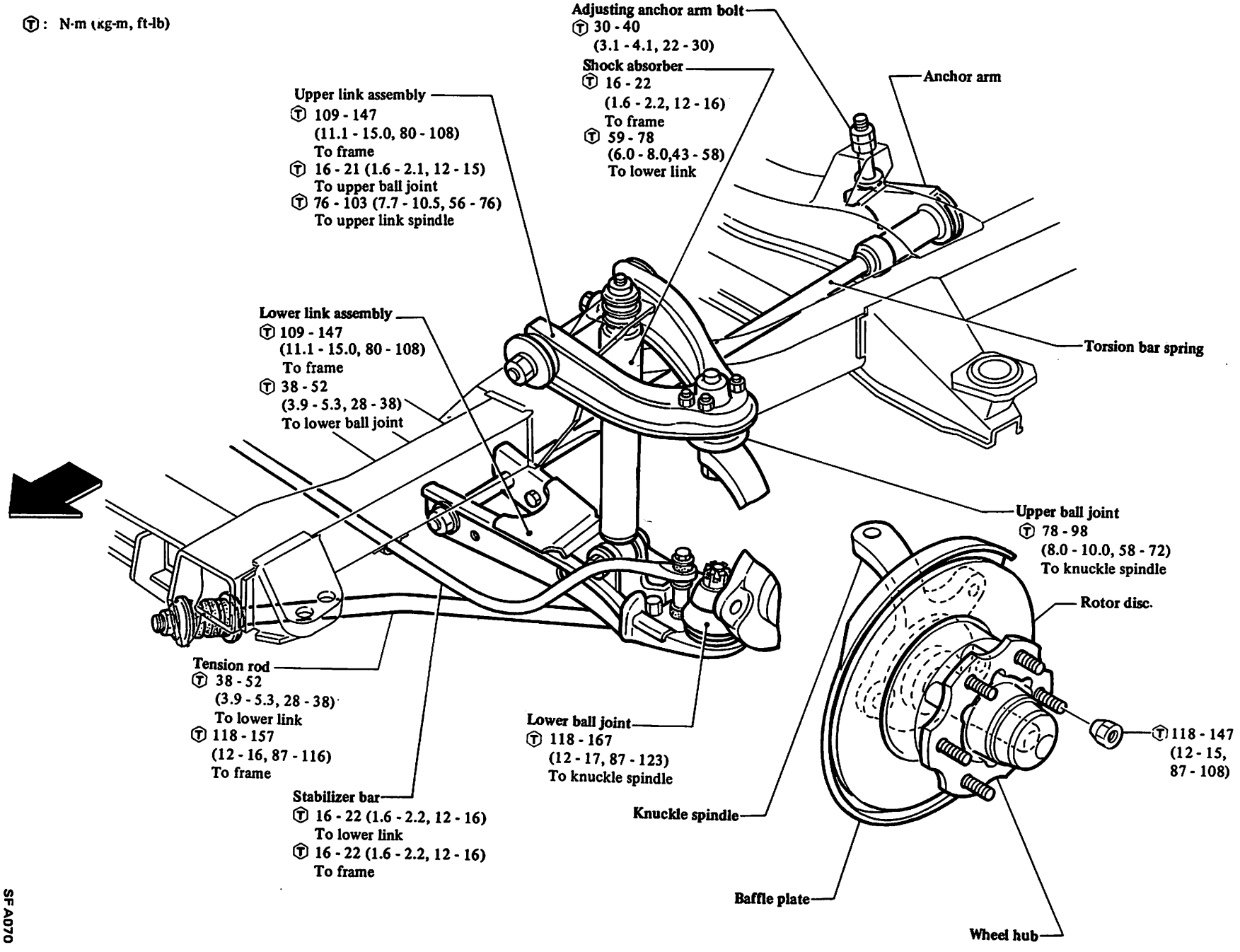

SF A070

FRONT AXLE (2WD)

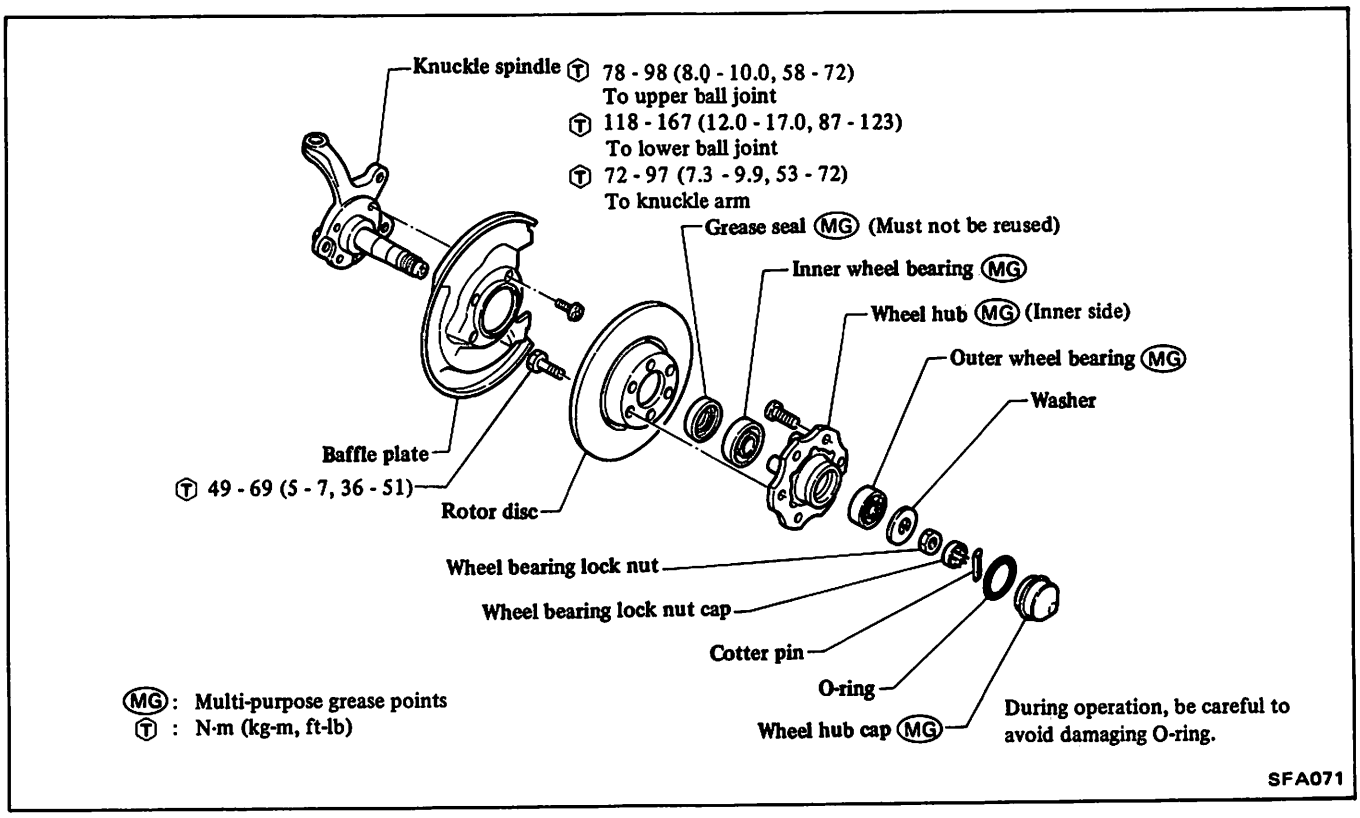

REMOVAL

1. Block rear wheels with chocks and raise front of vehicle, and then **support it with safety stands. Refer to Section GI for lifting points and towing.**
2. Remove wheel and tire assembly.
3. Remove brake caliper assembly.
   Refer to Service Brake (Section BR) for removal.

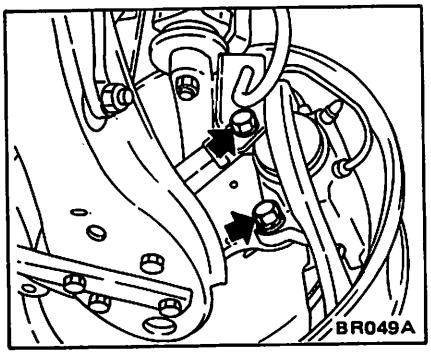

4. Remove wheel hub and wheel bearing.
   (1) Work off hub cap.

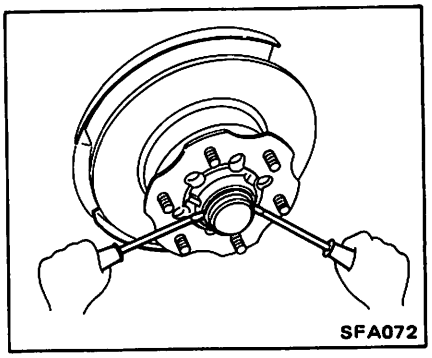

(2) Pry off cotter pin; take out adjusting cap and wheel bearing nut.

Cotter pin must not be reused.

(3) Remove wheel hub with rotor disc.

CAUTION:
Be careful not to drop wheel bearing.

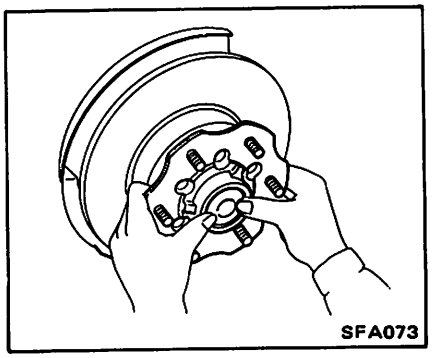

(4) Separate outside wheel bearing inner race and washer.
(5) Separate brake disc to hub.

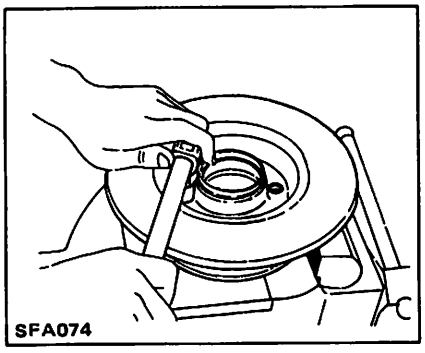

(6) Remove inside wheel bearing outer race, grease seal and outside wheel bearing outer race.

CAUTION:
Be careful not to drop wheel bearing. Grease seal must not be reused.

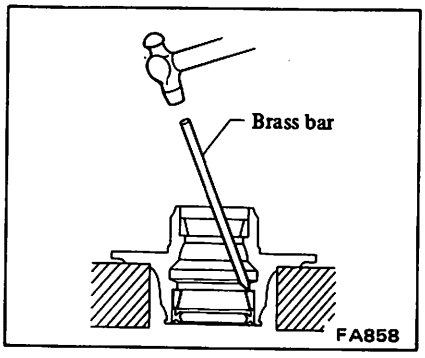

5. Remove knuckle spindle.
(1) Remove knuckle arm.

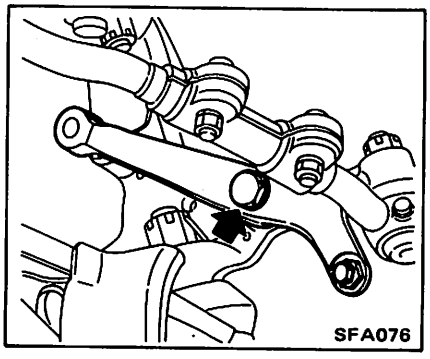

(2) Remove baffle plate.

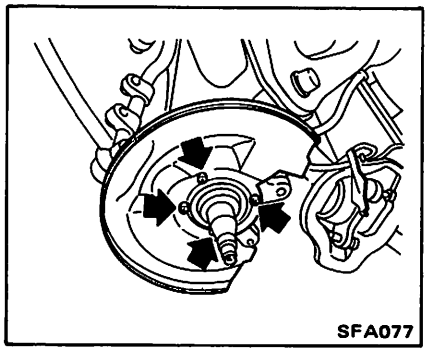

(3) Loosen (**not remove**) upper and lower ball joint tightening nut.

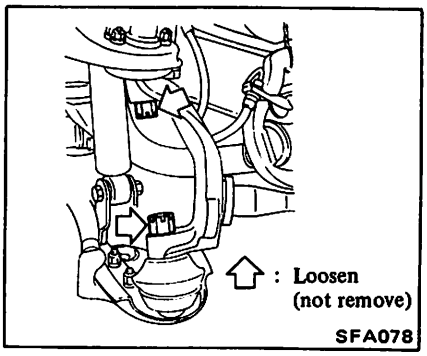

(4) Separate upper and lower ball joint to knuckle spindle using **Tool**.

CAUTION:
During above operation, never remove ball joint nut which is loosened in step (3).

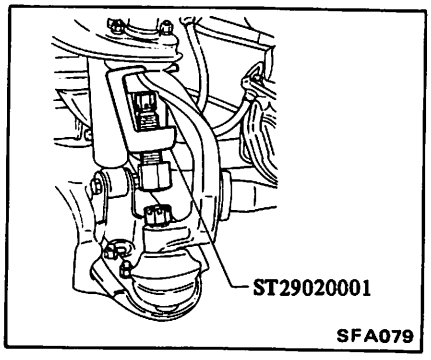

(5) Jack up lower link and then remove ball joint tightening nut.

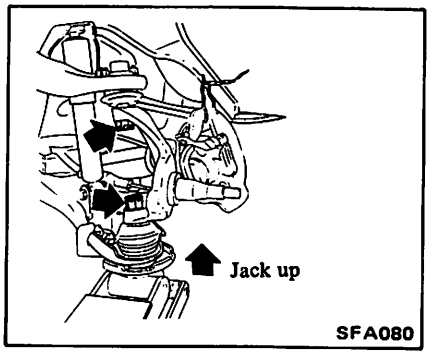

(6) Separate knuckle spindle from upper and lower links.

INSPECTION

Thoroughly clean bearing and dry with compressed air.

Wheel bearing

When race, cage and roller surfaces make noise or are cracked, pitted, worn, rough, or out-of-round, replace bearing assembly.

Wheel hub

Check wheel hub for cracks by means of a magnetic exploration or dyeing test, replace if necessary.

Knuckle spindle

Also check wheel hub, replace if cracks or damage is found.

Grease seal

If grease leakage is detected during removal, replace grease seal.

Replace grease seal at every disassembly even if it appears good.

INSTALLATION

Install front axle in the reverse order of removal, noting the following:

1. Install knuckle spindle.
(1) Install knuckle spindle to upper and lower ball joints with jacking up lower link.

CAUTION:
Make sure that oil or grease does not come into contact with tapered areas of ball joint and knuckle spindle and threads of ball joint.

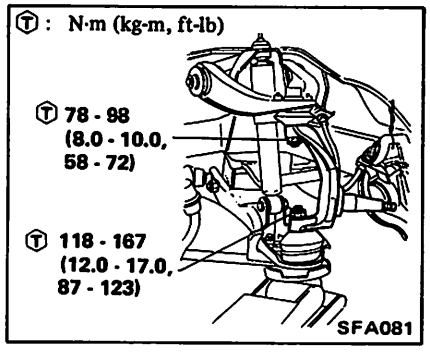

(2) Install knuckle arm.

Ⓣ: 72 - 97 N·m (7.3 - 9.9 kg-m, 53 - 72 ft-lb)

(3) Install baffle plate.

2. Install front wheel hub and wheel bearings.

(1) Install bearing outer race using **Tool.**

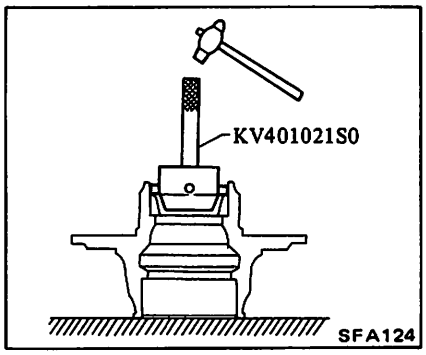

(2) Pack hub and hub cap with recommended multi-purpose grease. Coat O-ring with recommended multi-purpose grease.

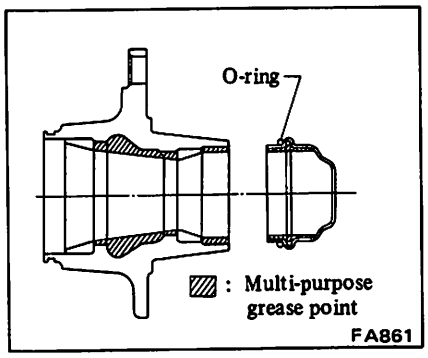

(3) Coat each bearing **with recommended multi-purpose grease.**

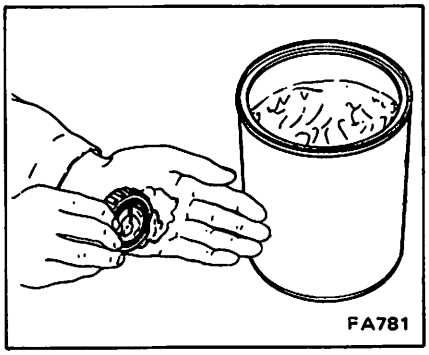

(4) Place inner bearing in hub and install a new grease seal, **coating sealing lips with recommended multi-purpose grease.**

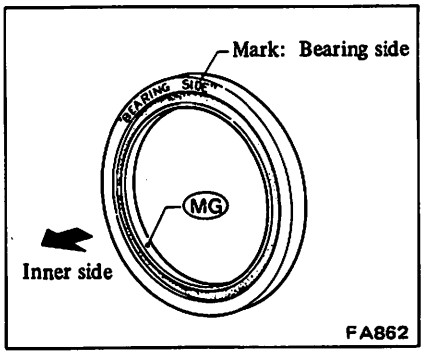

(5) Fix brake rotor disc to hub.

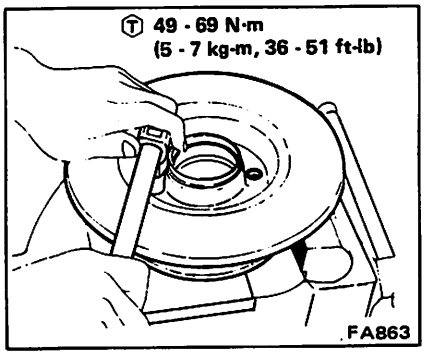

(6) Sparingly apply recommended multi-purpose grease to each part.

- **Threaded portion of spindle.**
- **Bearing washer to bearing contacting face.**

(7) Put hub assembly on spindle and then install washer and wheel bearing nut.

3. Adjust wheel bearing nut.

Refer to Section MA for adjustment.

4. Install hub cap with O-ring into hub.
5. Install brake caliper assembly. **Refer to Service Brake (Section BR) for installation.**
6. Install wheel and tire.

FRONT SUSPENSION (2WD)

Always adjust wheel alignment after removal and installation of suspension parts.

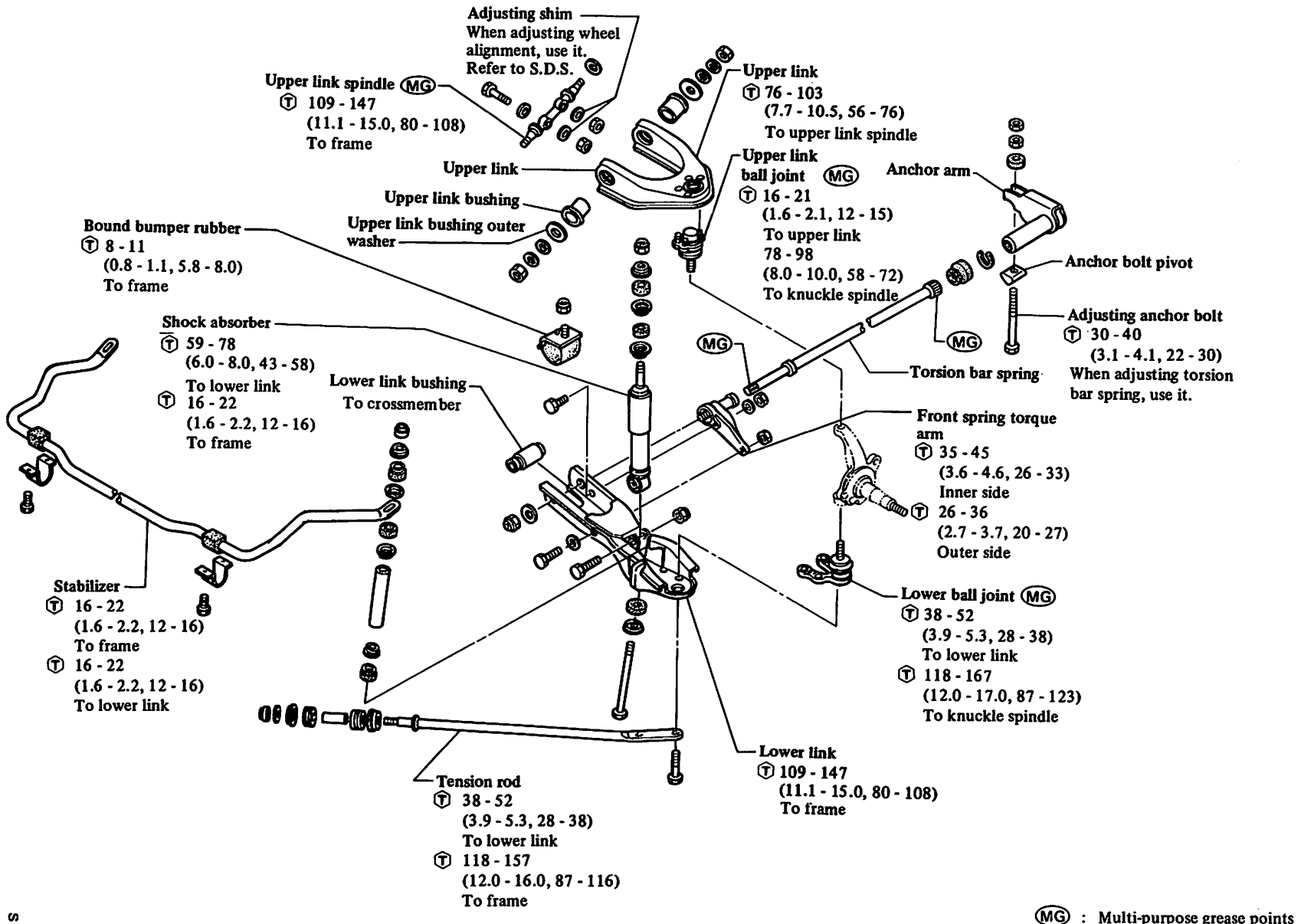

(MG) : Multi-purpose grease points
(T) : N·m (kg-m, ft-lb)

SFA075

SHOCK ABSORBER

REMOVAL AND INSTALLATION

1. Turn steering wheel to either side.
2. Disconnect upper and lower side fixing nut.

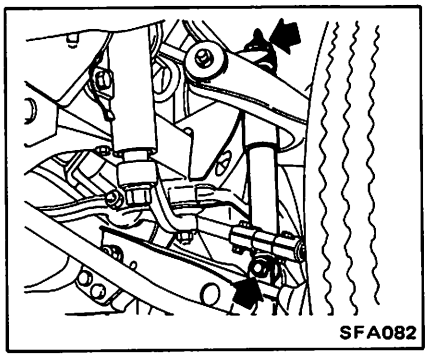

3. Remove shock absorber assembly.
4. Install shock absorber in the reverse order of removal.

Do not allow oil or grease to come into contact with rubber parts.

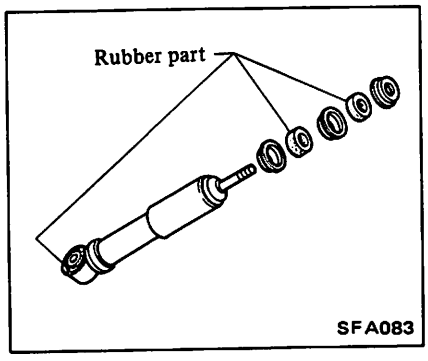

INSPECTION

- Test shock absorber and compare **with specification given in S.D.S. Replace if necessary.**
- Check for oil leakage and cracks. Replace if necessary.
- Check piston rod for smooth operation. Replace if necessary.
- Check all rubber parts for wear, cracks, damage or deformation. Replace if necessary.

TORSION BAR SPRING

REMOVAL

1. Block rear wheels with chocks and raise front of vehicle, and then support it with safety stands. **Refer to Section GI for lifting points and towing.**
2. Remove torsion bar spring anchor bolt.

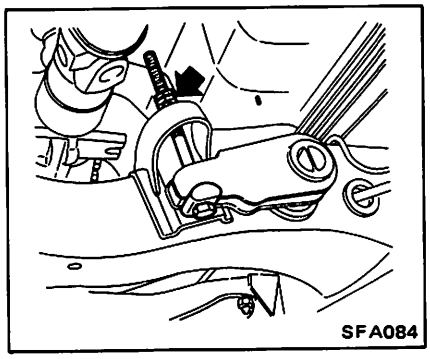

3. Remove dust cover and then detach snap ring from anchor arm.

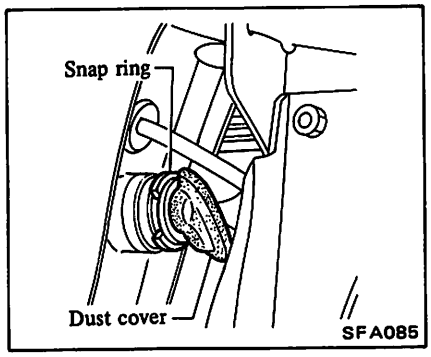

4. Pull out anchor arm rearward.

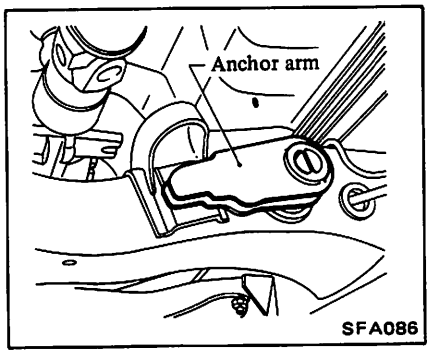

5. Withdraw torsion bar spring rearward.
6. Remove torsion bar spring torque arm.

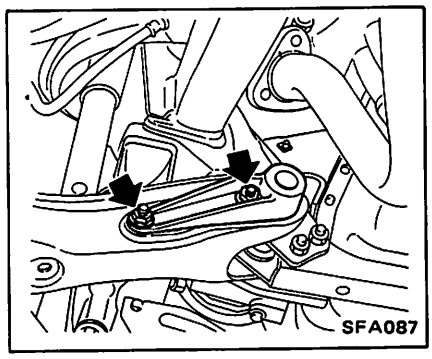

INSPECTION

- Check torsion bar spring for wear, twist, bend and other damage. Replace if necessary.
- Check serrations of each part for cracks, wear, twist and other damage. Replace if necessary.

INSTALLATION AND ADJUSTMENT

1. Install torque arm to lower link.

Ⓣ : Outer side
26 - 36 N·m
(2.7 - 3.7 kg-m,
20 - 27 ft-lb)
Inner side
35 - 45 N·m
(3.6 - 4.6 kg-m,
26 - 33 ft-lb)

2. Set snap ring and dust cover to torsion bar.

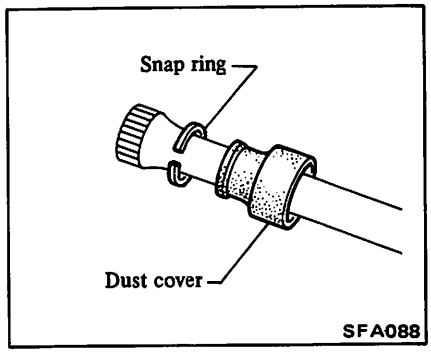

3. Coat grease on the serration of torsion bar spring and then install it to torque arm.

Be sure to install right and left torsion bar springs correctly.

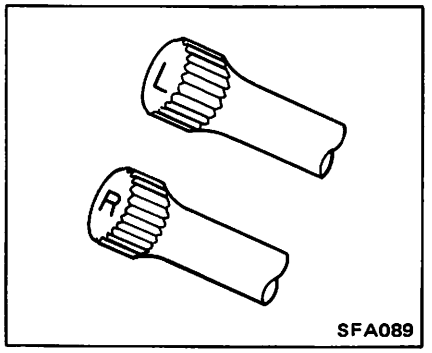

4. Place lower link in the position where bound buffer clearance is 0.

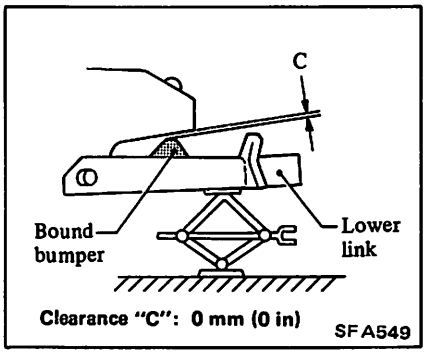

5. Install anchor arm as shown below.

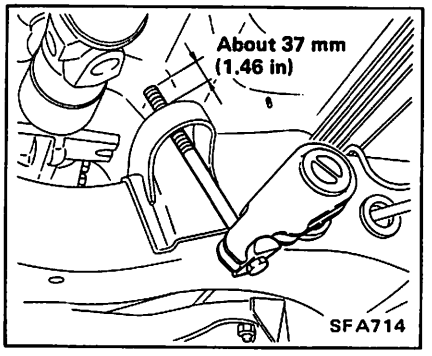

6. Temporarily tighten anchor arm bolt so that dimension between anchor arm bolt adjust seat and bolt upper end is as shown below.

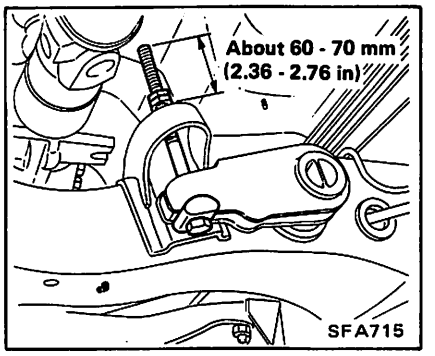

7. Install snap ring to anchor arm.

Turn snap ring and make sure that it is completely in groove.

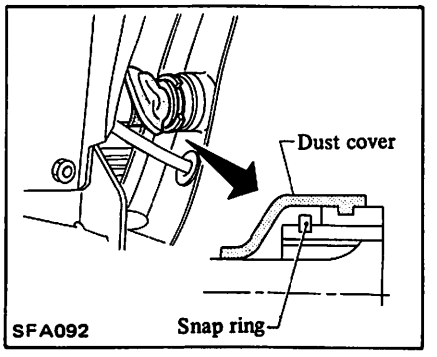

8. Install dust cover.
9. Adjust anchor arm position (vehicle posture).

(1) Lower vehicle.
(2) Turn anchor bolt adjusting nut to obtain the specified "H" dimension.

"H" dimension (when vehicle is unladen): H = A – B
128 - 132 mm (5.04 - 5.20 in)

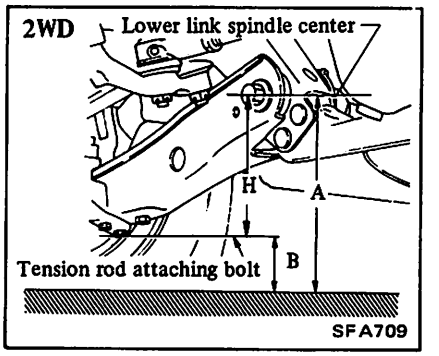

TENSION ROD AND STABILIZER BAR

REMOVAL AND INSTALLATION

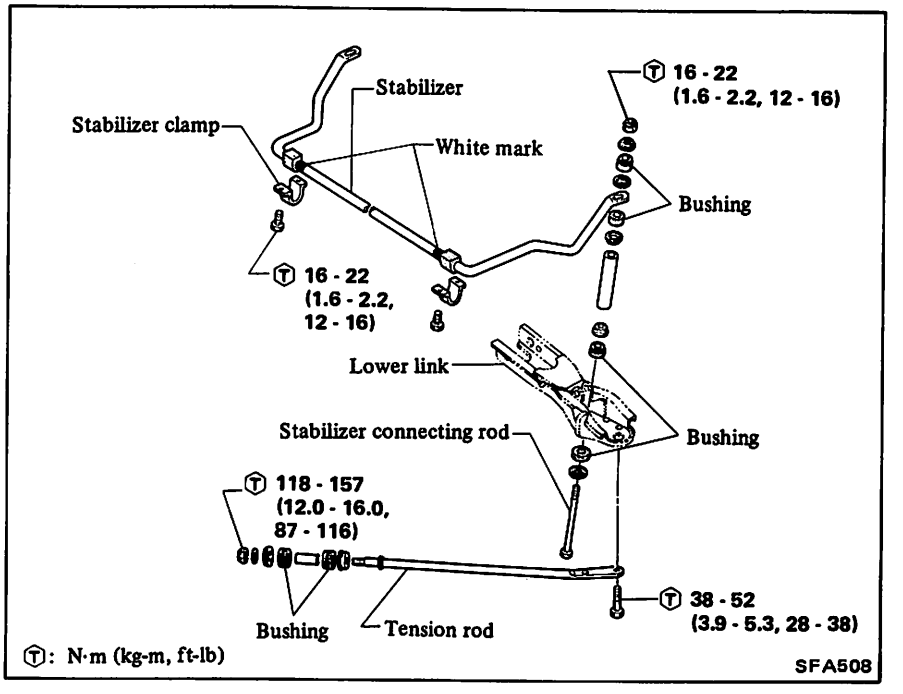

Remove and install as follows:

- Remove under cover.
- Set loaden of vehicle.

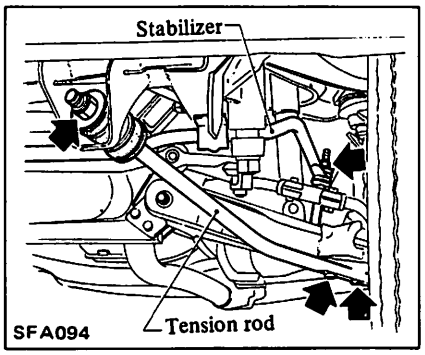

- If correctly installed; White mark painted on stabilizer bushing seat can be seen from both sides of vehicle.

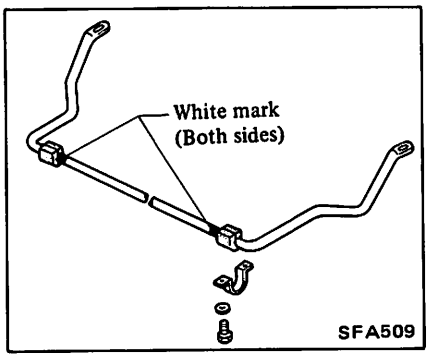

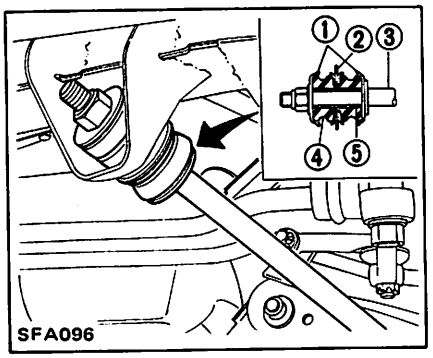

1 Thrust washer
2 Frame
3 Tension rod
4 Bushing
5 Collar

INSPECTION

1. Check tension rod for bend and thread for damage.

   Repair or replace if necessary.

2. Check stabilizer for twist and deformation.

   Replace if necessary.

3. Check each rubber bushing for cracks, wear, and deterioration. Replace if necessary.

UPPER LINK AND BALL JOINT

REMOVAL

1. Block rear wheels with chocks and raise front of vehicle, and then **support it with safety stands.**

   Refer to Section GI for lifting points and towing.

2. Remove wheel and tire assembly.
3. Jack up lower link and then remove ball joint tightening nut.
4. Separate upper ball joint to knuckle spindle using **Tool.**

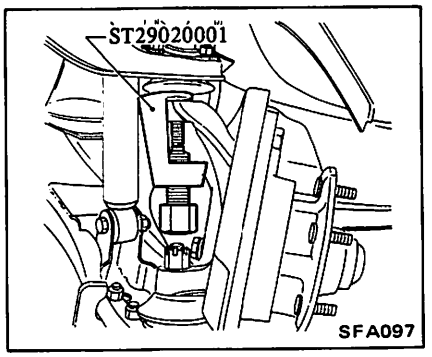

5. Separate upper link ball joint from knuckle spindle.

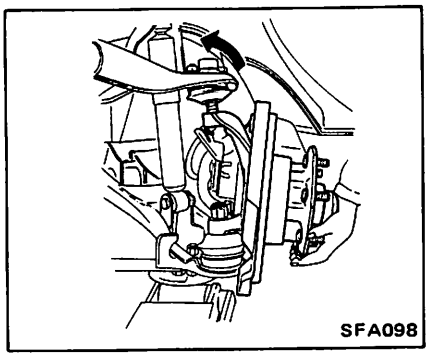

6. Remove upper link spindle.

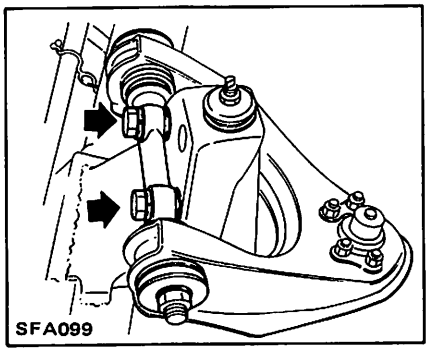

7. Separate ball joint to upper link.

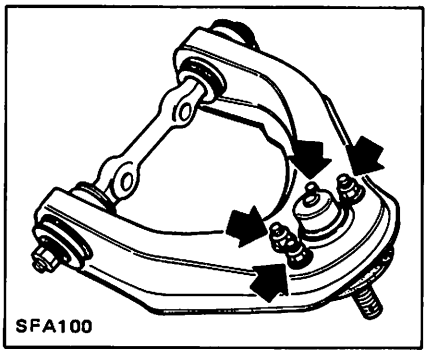

8. Press upper link bushings **in both sides of upper link.**

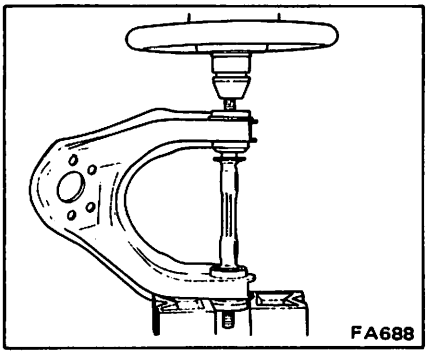

INSPECTION

Upper link ball joint

Ball joint is assembled at the factory and cannot be disassembled.

1. Check ball joint for play. If ball stud is worn and play in axial direction is excessive or joint is hard to swing, replace as a complete unit.

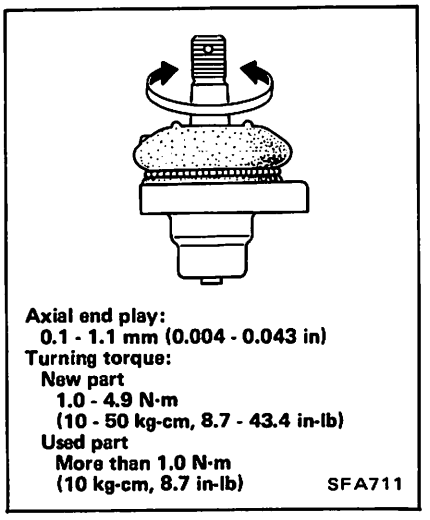

2. Check conditional dust cover. If found to be cracked excessively, replace dust cover.
3. Lubricate ball joint with recommended multi-purpose grease, if necessary.

To lubricate, remove plug and install grease nipple in its place.

Pump grease slowly until old grease is completely forced out. After greasing, reinstall plug.

When a high-pressure grease gun is used, operate the grease gun carefully so that grease is injected slowly and new grease does not come out from the clamp portion.

Upper link spindle and rubber bushing

Check upper link spindle and rubber bushing for damage. Replace if necessary.

Upper link

Check upper link for deformation or cracks. Replace if necessary.

INSTALLATION

1. Apply soapsuds to rubber bushing.
2. Press upper link bushing.

Press bushing so that flange of bushing securely contacts end surface of upper link collar.

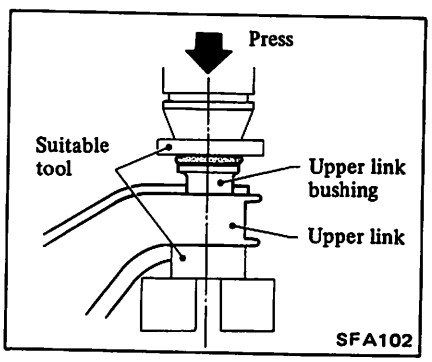

3. Insert upper link spindle and inner washers.

Install inner washers with rounded edges facing inward.

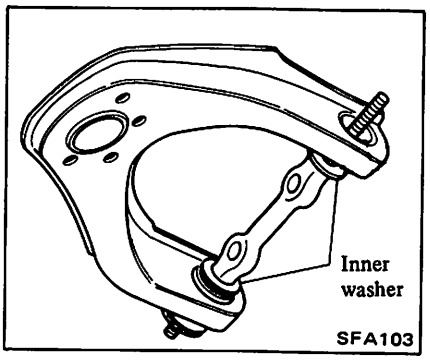

4. Press other bushing.

Press bushing so that flange of bushing securely contacts end surface of upper link collar.

5. Temporarily tighten nuts.

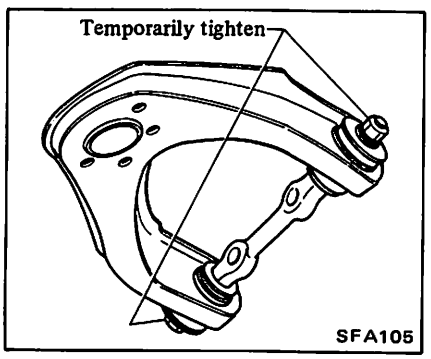

6. Install upper ball joint.

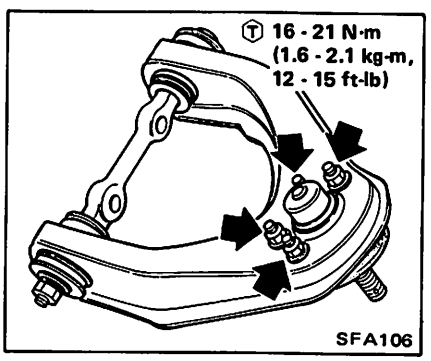

7. Install upper link assembly to frame.

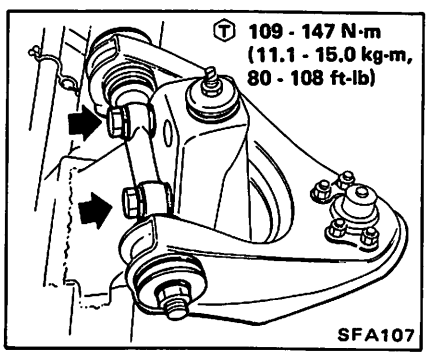

8. Tighten upper link spindle with camber adjusting shims.
9. After fitting, check dimensions "A" and "B" **shown in illustration.**

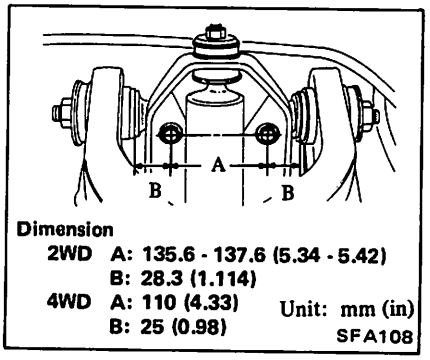

10. Install upper ball joint to knuckle spindle.

CAUTION:
Make sure that oil or grease does not come into contact with tapered areas of ball joint and knuckle spindle and threads of ball joint..

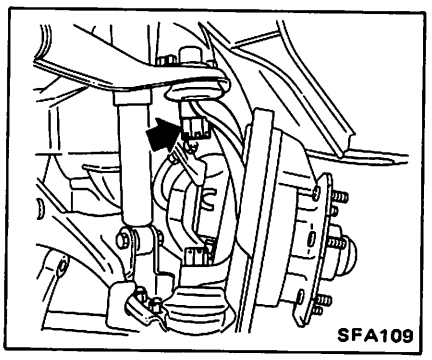

11. After installing, adjust wheel alignment. **Refer to Section MA for adjustment.**

LOWER LINK AND BALL JOINT

REMOVAL

1. Block rear wheels with chocks and raise front of vehicle and then **support it with safety stands.**

Refer to Section GI for lifting points and towing.

2. Remove wheel and tire assembly

3. Remove torsion bar spring.

Refer to Torsion Bar Spring for removal.

4. Remove shock absorber lower end from lower link.
5. Remove lower link ball joint using **Tool.**

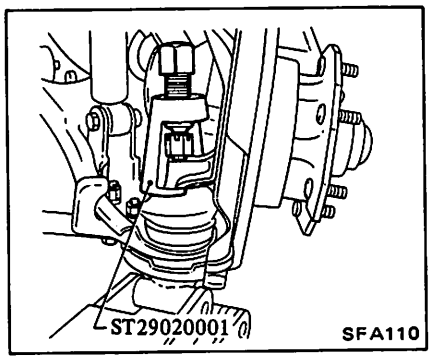

6. Disconnect stabilizer connecting rod and tension rod from lower link.

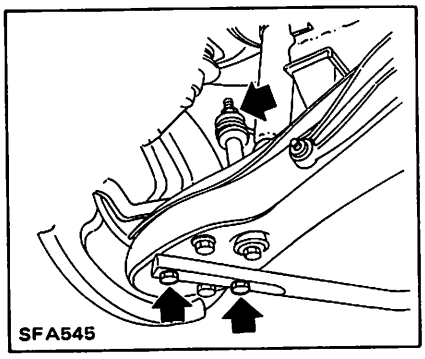

7. Remove torque arm from lower link.
8. Remove lower link from frame.

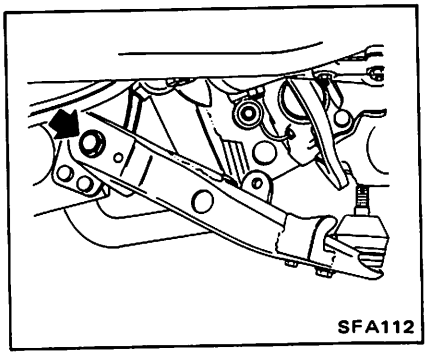

9. Separate lower link ball joint to lower link.

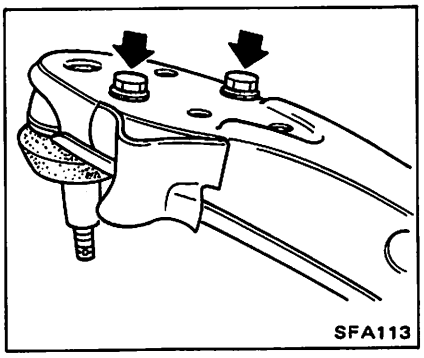

10. Remove lower link spindle bushing from frame.

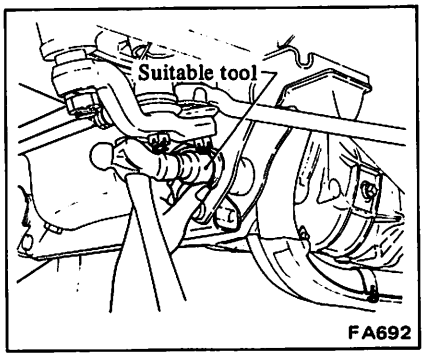

INSPECTION

Lower ball joint

1. Ball joint is assembled at factory and cannot be disassembled.
Check starting torque. If exceeded, replace ball joint.

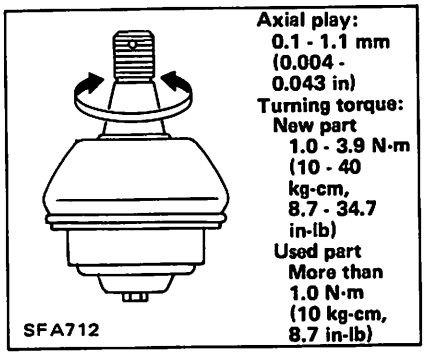

2. Check condition of dust cover.
If found to be cracked excessively, replace dust cover.
3. Lubricate ball joint with recommended multi-purpose grease, if necessary.

To lubricate, remove plug and install grease nipple in its place.
Pump grease slowly until old grease is completely forced out. After greasing, reinstall plug.
When a high-pressure grease gun is used, operate grease gun carefully so that grease is injected slowly and new grease does not come out from the clamp portion.

Lower link and lower link spindle

Check lower link and lower link spindle for deformation or cracks. Replace if necessary.

Lower link rubber bushing

Check lower link rubber bushing for damage or distortion. Replace if necessary.

Torque arm

Check torque arm for deformation or cracks. Replace if necessary.

INSTALLATION

1. Install lower link ball joint.

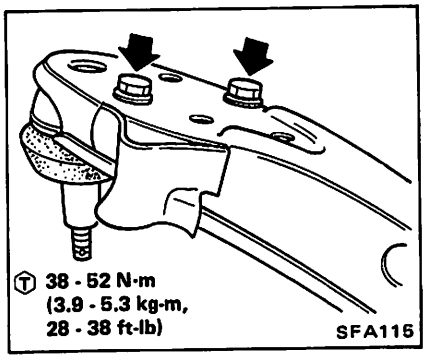

2. Install lower link spindle bushing to frame using suitable Tool.
3. Set torque arm to torsion bar.

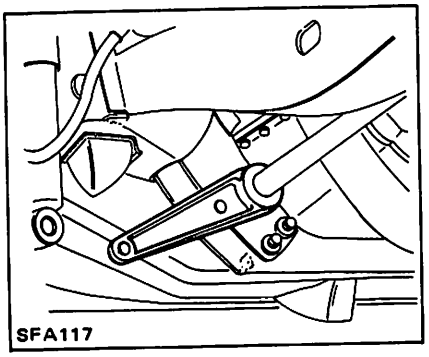

4. Install lower link.

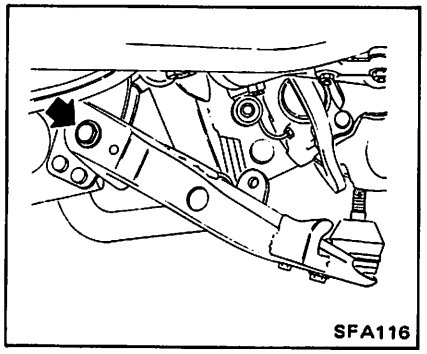

5. Install torque arm to lower link.

Ⓣ : **Inner side**
35 - 45 N·m
(3.6 - 4.6 kg-m,
26 - 33 ft-lb)
Outer side
26 - 36 N·m
(2.7 - 3.7 kg-m,
20 - 27 ft-lb)

6. Jack up lower link.
7. Install lower ball joint to knuckle spindle.

Ⓣ : **118 - 167 N·m**
(12.0 - 17.0 kg-m,
87 - 123 ft-lb)

CAUTION:
Make sure that oil or grease does not come into contact with tapered areas of ball joint and knuckle spindle and threads of ball joint.

8. Install shock absorber lower end to lower link.

Ⓣ : **59 - 78 N·m**
(6.0 - 8.0 kg-m,
43 - 58 ft-lb)

9. Install tension rod and stabilizer connecting rod to lower link.

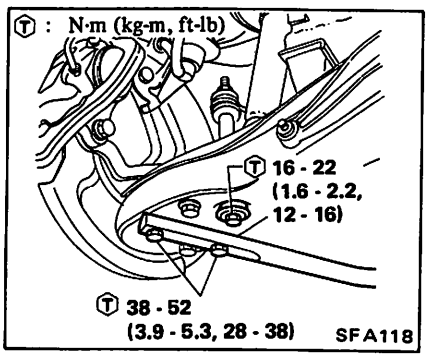

10. Lower vehicle.
11. Turn anchor bolt adjusting nut to obtain the specified "H" dimension.

"H" dimension (When vehicle is unladen): H = A – B
128 - 132 mm (5.04 - 5.20 in)

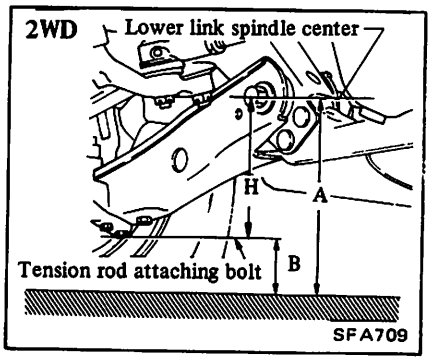

12. After installing, adjust wheel alignment.

Refer to Section MA for adjustment.

FRONT AXLE AND FRONT SUSPENSION SYSTEM (4WD)

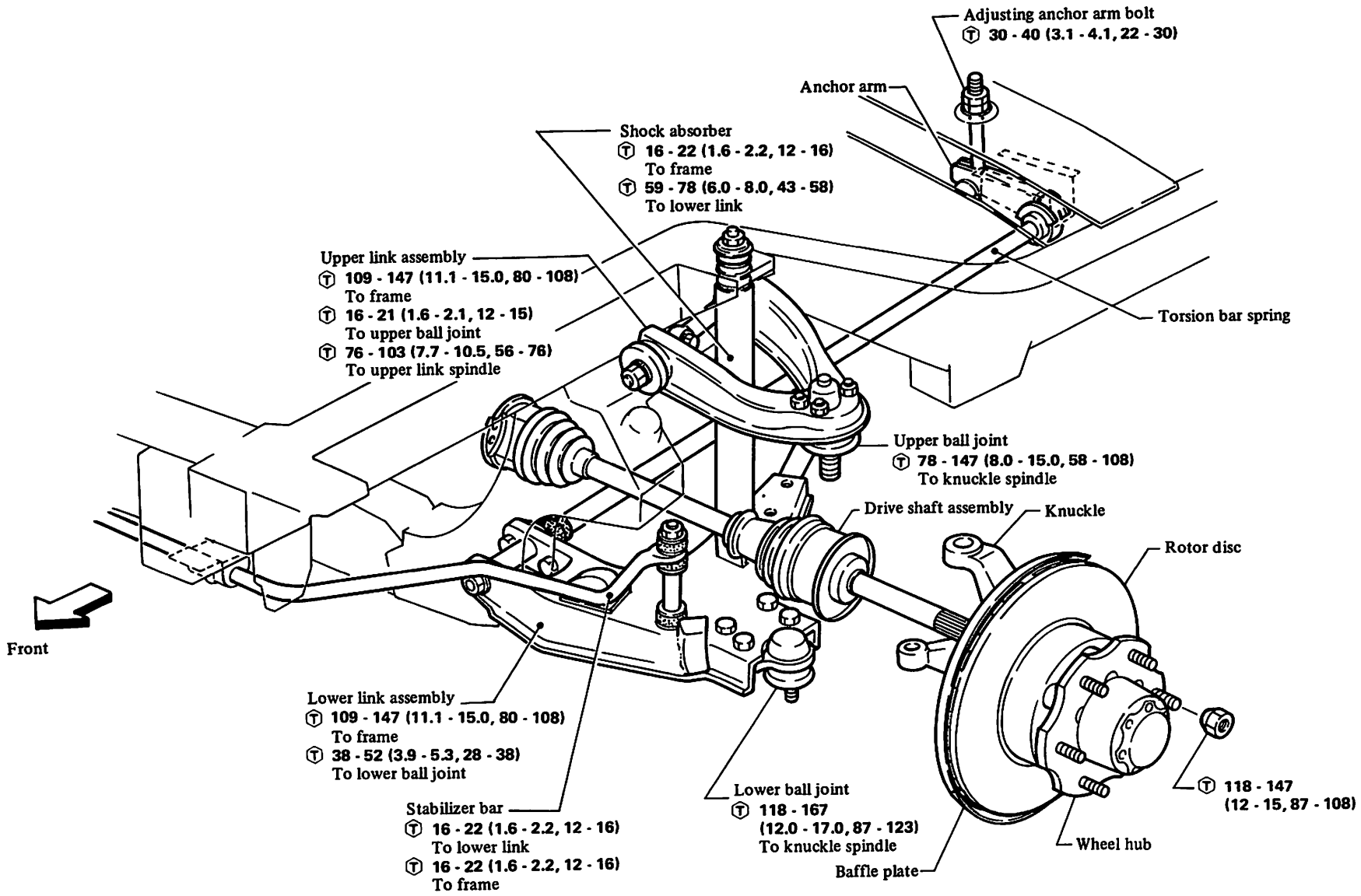

Ⓣ : N·m (kg-m, ft-lb)

SFA705

FRONT AXLE (4WD)

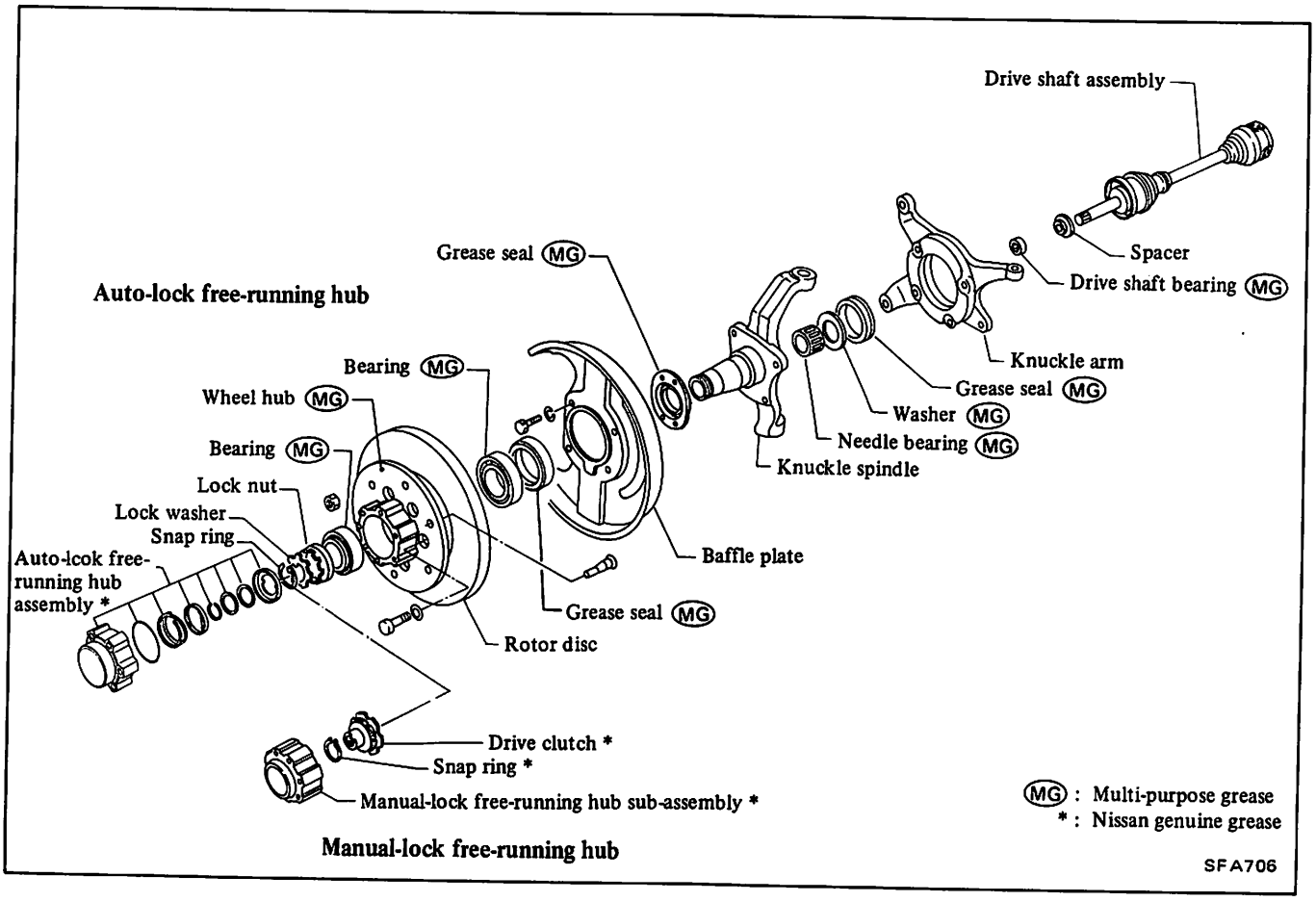

MANUAL-LOCK FREE-RUNNING HUB

REMOVAL AND INSTALLATION

1. Block rear wheels and raise up front of vehicle.
2. Support under axle case.
3. Remove wheel cap and wheel.
4. Remove fixing bolts using torx wrench.

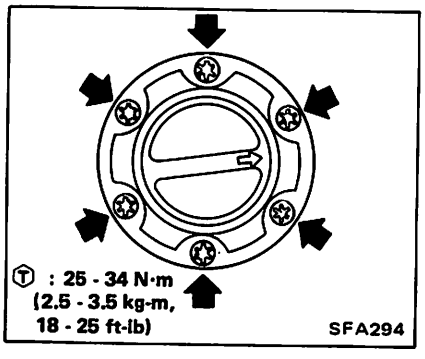

5. Draw out free-running hub.
6. Remove snap ring and then draw out drive clutch.

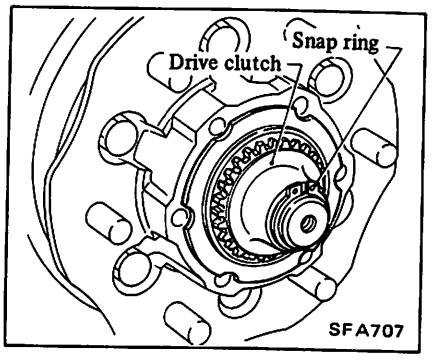

7. Remove snap ring and lock washer. Then remove wheel bearing lock nut using Tool KV40104300.

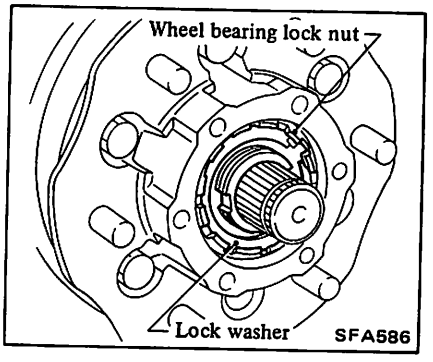

8. Install in reverse order of removal noting the following points.
- After removing free-running hub, use NISSAN GENUINE GREASE or equivalent grease.
- Adjust wheel bearing preload and axial play.
  Refer to section MA.

AUTO-LOCK FREE-RUNNING HUB

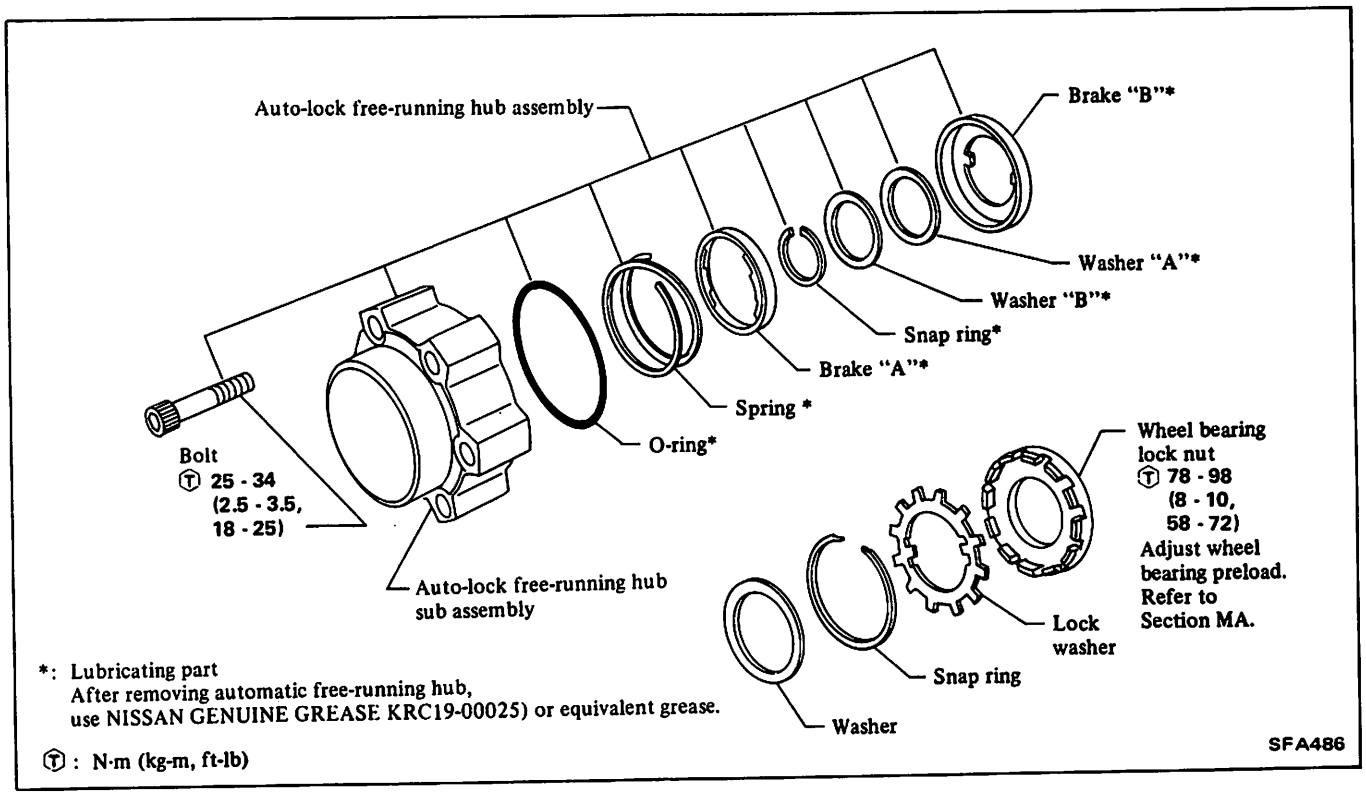

REMOVAL AND INSTALLATION

1. Block rear wheels and raise up front of vehicle.
2. Support under axle case.
3. Remove wheel cap and wheel.
4. Remove fixing bolts, using torx wrench.

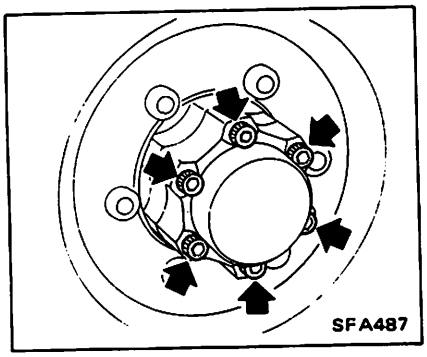

5. Draw out automatic free-running hub (with O-ring spring and brake A).
6. Remove washers and then remove snap ring.

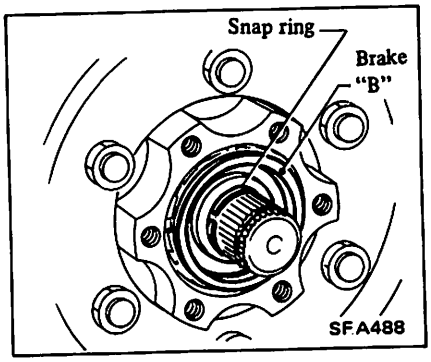

7. Remove snap ring (large), lock washer and wheel bearing lock nut, using Tool KV40104300.

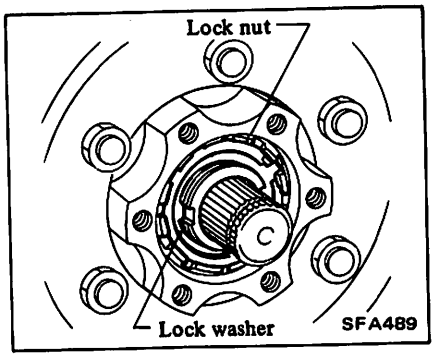

8. Install in reverse order of removal noting the following points.

- After removing auto-lock free-running hub, use NISSAN GENUINE GREASE or equivalent grease.
- Adjust wheel bearing preload and axial play.
  Refer to section MA.

INSPECTION

Thoroughly clean parts and dry with compressed air.

Brake "A" and "B"

Measure the thickness of brake "A" and "B" set.
If thickness is less than the specified limit, replace brake "A" and "B" set.

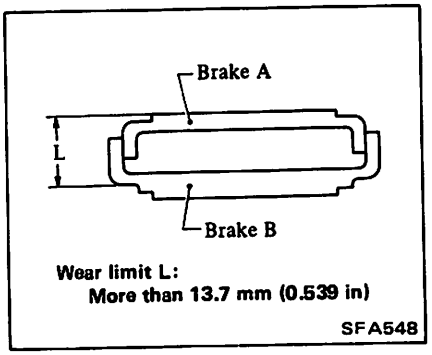

DRIVE SHAFT

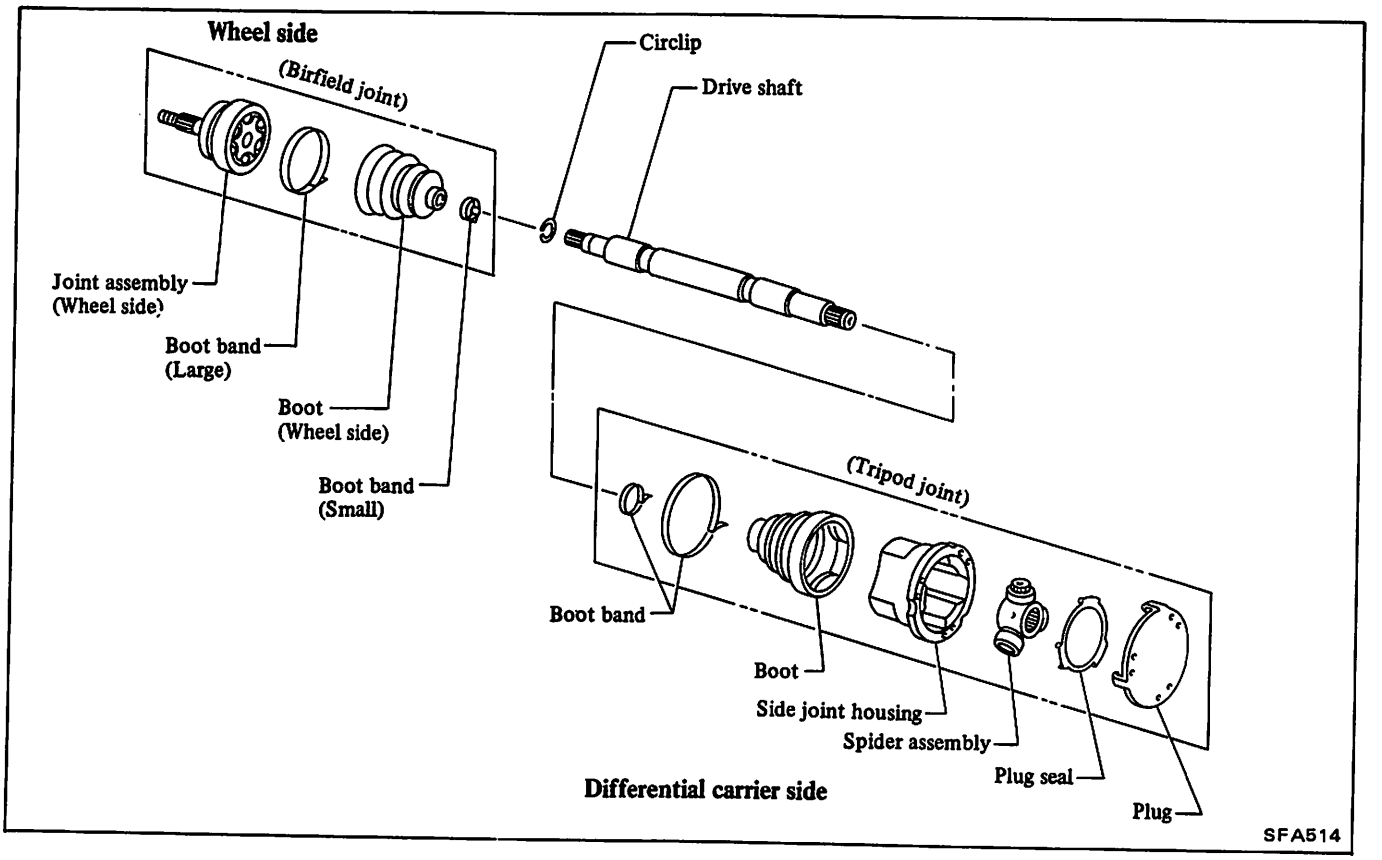

REMOVAL

1. Remove free-running hub assembly.
2. Remove drive clutch after removing snap ring.

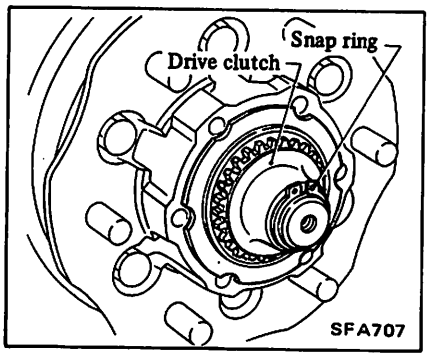

3. Remove bolts of lower ball joint.

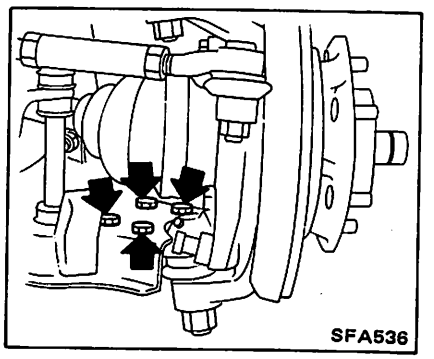

4. Remove shock absorber lower bolt.

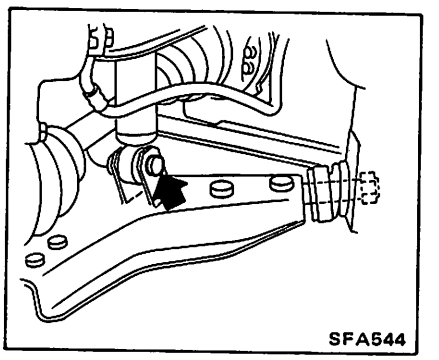

5. Remove bolts fixing drive shaft to differential carrier.

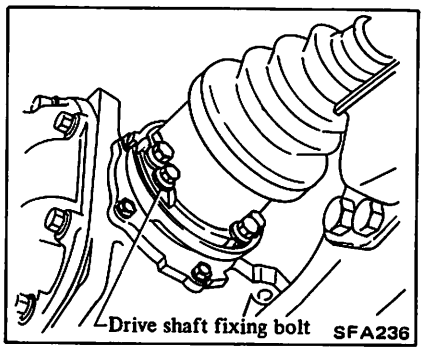

6. Remove drive shaft, drawing its outer end out of front wheel.

Turn steering to the left (right), when removing left (right) drive shaft.

DISASSEMBLY

CAUTION:

a. The joint on the wheel side employs a non-disassembling design. It should not be disassembled except as designated in this Service Manual.

b. The spider assembly on the differential carrier side is also a non-disassembling type, consisting of a tripod, rollers, needle bearing and washer.

Differential carrier side

1. Place "soft" jaws over steel jaws of bench vise, and place drive shaft securely in vise.
2. Remove plug, and then remove plug seal.

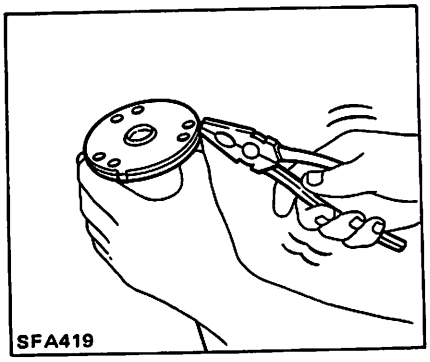

3. Remove boot bands.

Do not reuse boot bands once they have been removed.

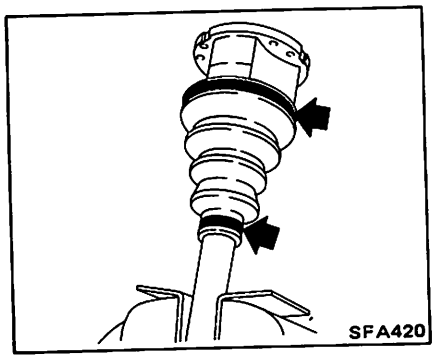

4. Move boot and slide joint housing toward wheel side, and put matching marks.

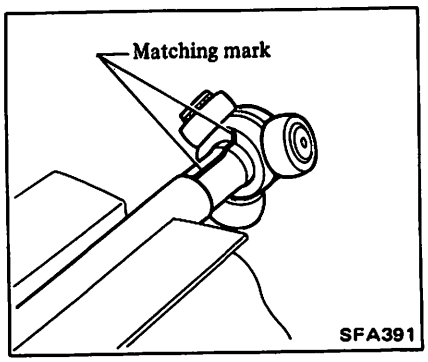

5. Detach spider assembly, using press.

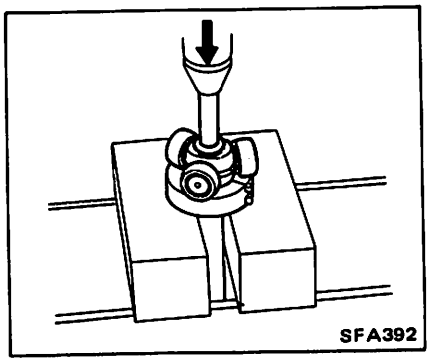

6. Remove boot and boot bands.

Wheel side

1. Remove differential carrier side component parts.

Refer to Differential Carrier Side for disassembly.

2. Remove boot bands.

Do not reuse boot bands once they have been removed.

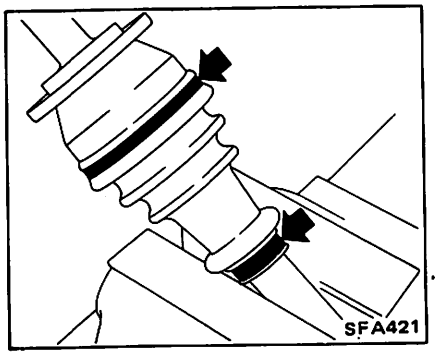

3. Put matching marks on drive shaft and joint assembly.
4. Separate joint assembly by lightly tapping it.

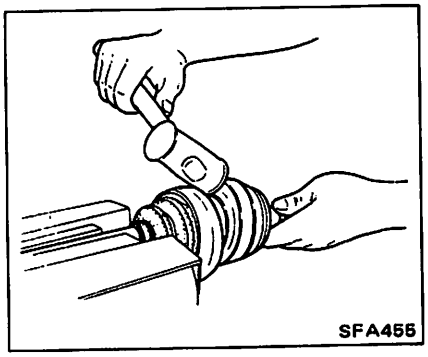

Do not disassemble joint assembly.
Do not reuse circlip once it has been separated.

5. Draw out boot.

INSPECTION

Thoroughly clean all parts in cleaning solvent, and dry with compressed air. Check parts for evidence of deformation or other damage.

Drive shaft

Replace drive shaft if it is twisted or cracked.

Joint assembly (Wheel side)

Replace joint assembly if it is deformed or damaged.

Spider assembly (Differential carrier side)

1. Replace spider assembly if needle bearing and washer are damaged.
2. Check to see if serrated portions are deformed; also check serrated portions on the drive shaft side. If necessary, replace.
3. Check to see if roller surfaces are scratched, worn or damaged; also check slide joint housing for damages. If necessary, replace.

Boot

Replace fatigued, cracked, or worn boot.

ASSEMBLY

- **After drive shaft has been assembled, ensure that it moves smoothly over its entire range without binding.**
- **Use NISSAN GENUINE GREASE or equivalent after every overhaul.**

Tripod joint:

Be careful when applying grease to differential carrier side and wheel side as different types are used for each.

Wheel side

1. Install boot and new small boot band to drive shaft.

- **Be careful not to damage boot on the edge of drive shaft.**

2. Set joint assembly onto drive shaft (with new circlip) by lightly tapping it.

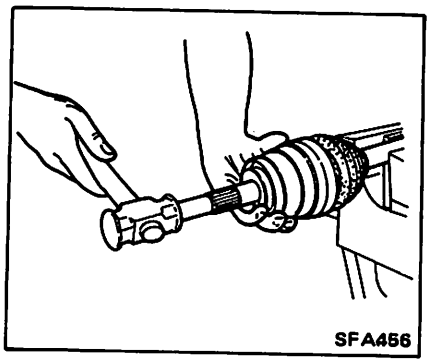

- **Do not reuse circlip once it has been separated.**
- **Install joint assembly securely, ensuring marks are properly aligned.**
- **If there is not mark, position both spider assemblies (one on the wheel side and the other on the differential carrier side) so that their phases are nearly zero.**

3. Pack drive shaft with specified amount of grease.

Specified amount:
Approx. 100 g (3.53 oz)

4. Install new larger diameter boot band.

In securing band, be careful not to scratch boot.

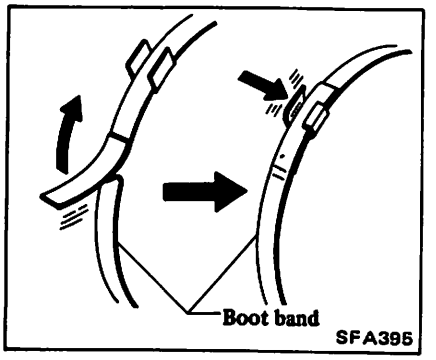

5. Set boot so that it does not swell and deform when its length is "L".

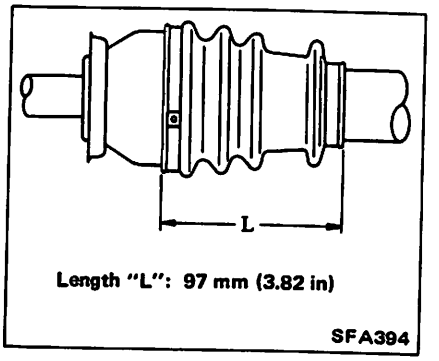

6. Install new smaller diameter boot band.

Differential carrier side

1. Install boot, new boot bands and slide joint housing onto drive shaft.

Be careful not to damage boot on the edge of drive shaft.

2. Place drive shaft in a vise, using soft cushioning pads.
3. Install spider assembly securely, ensuring marks are properly aligned.

- **If there is not mark, position both spider assemblies (one on the wheel side and the other on the differential carrier side) so that their phases are nearly zero.**
- **Press-fit with spider assembly serration chamfer facing shaft.**

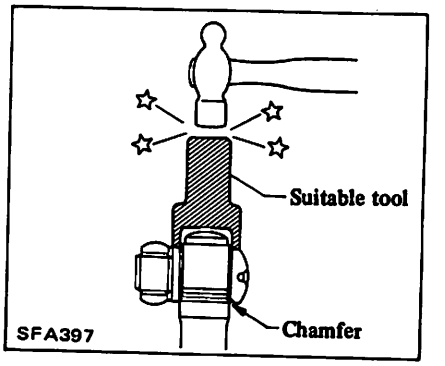

4. Caulk serrations of drive shaft equally at three places.

- **Avoid areas that were caulked previously.**
- **Ensure that each caulking is effected on two serrations and is more than 1 mm (0.04 in) in gap.**

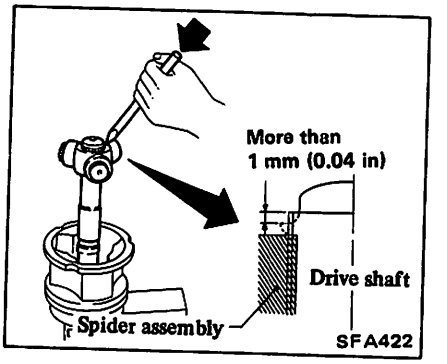

5. Pack with grease.

Specified amount of grease:
Approx. 160 g (5.64 oz)

6. Install new large diameter boot band.

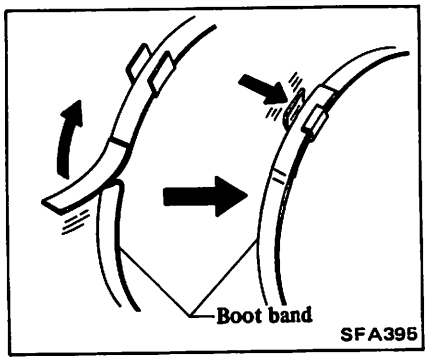

7. Install plug seal and plug, then caulk plug at three places using dummy bolts.

Apply a coat of grease to plug seal when installing.

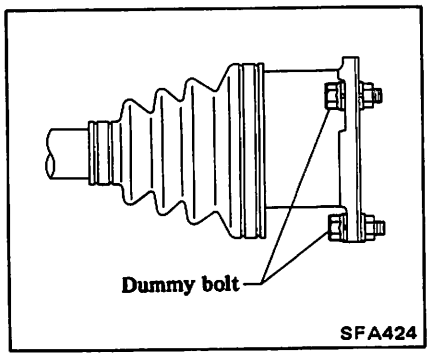

8. Set boot so that it does not swell or deform when its length is "L".

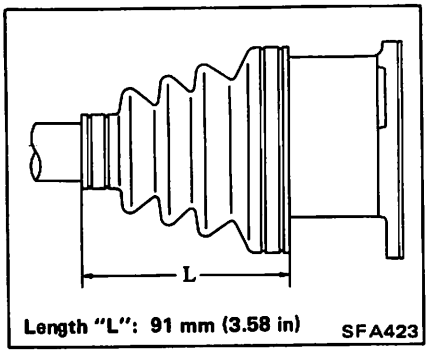

9. Install new smaller diameter boot band.

INSTALLATION

Install drive shaft assembly in the reverse order of removal noting the following point.

- Apply recommended multi-purpose grease.

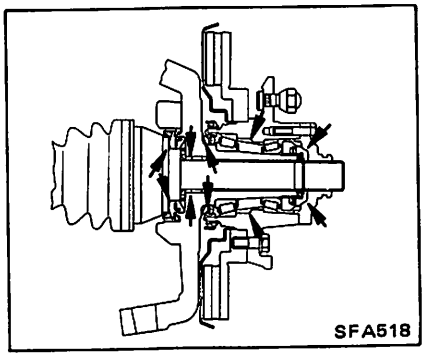

- When inserting drive shaft assembly with wheel bearing support, be sure spacer is inserted in place.
- Adjust drive shaft axial end play by installing proper thickness of snap ring to the drive shaft end. Refer to S.D.S.

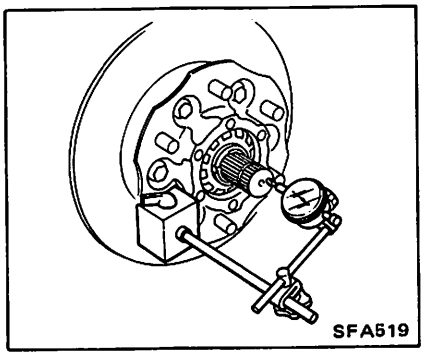

Ⓣ : Drive shaft to differential carrier
27 - 37 N·m
(2.8 - 3.8 kg-m,
20 - 27 ft-lb)

Free-running hub
25 - 34 N·m
(2.5 - 3.5 kg-m,
18 - 25 ft-lb)

Stabilizer bar to frame
16 - 22 N·m
(1.6 - 2.2 kg-m,
12 - 16 ft-lb)

Stabilizer bar to lower link
16 - 22 N·m
(1.6 - 2.2 kg-m,
12 - 16 ft-lb)

Wheel nut
118 - 147 N·m
(12 - 15 kg-m,
87 - 108 ft-lb)

WHEEL HUB AND KNUCKLE

REMOVAL

1. Block rear wheels with chocks and raise front of vehicle, then **support it with safety stands. Refer to Section GI for lifting points and towing.**
2. Remove wheel and tire assembly.
3. Dismount brake caliper assembly.
4. Remove free-running hub assembly.
5. Remove drive clutch. Refer to manual-lock free-running hub.
6. Remove wheel hub and knuckle in the following manner.

(1) Remove tie rod using Tool.

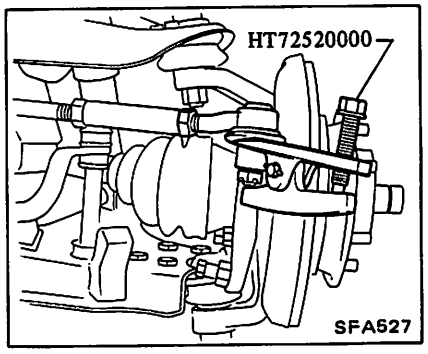

(2) Remove bolt securing knuckle arm to knuckle.

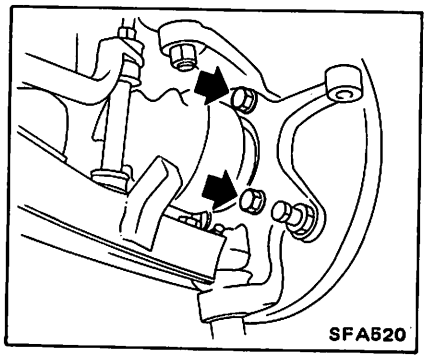

(3) Support lower link with jack and then remove nuts fixing upper and lower ball joint to the links.

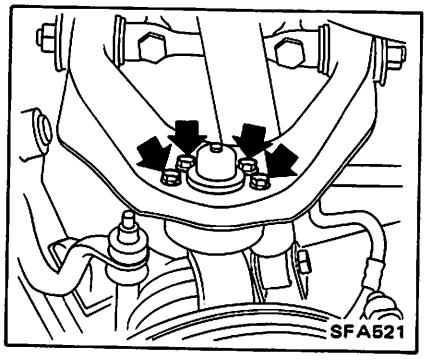

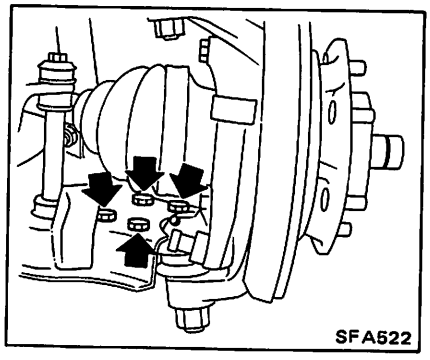

(4) Separate upper and lower ball joints from knuckle spindle using Tool (HT72520000).

DISASSEMBLY

1. Remove snap ring then remove lock washer with a screw driver.

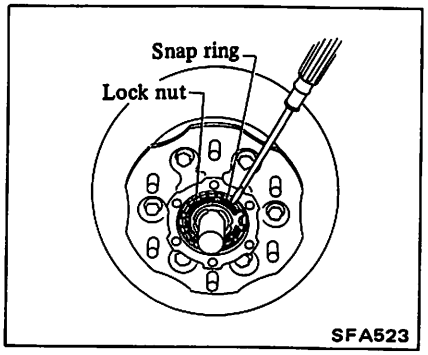

2. Remove front wheel lock nut, using Tool.

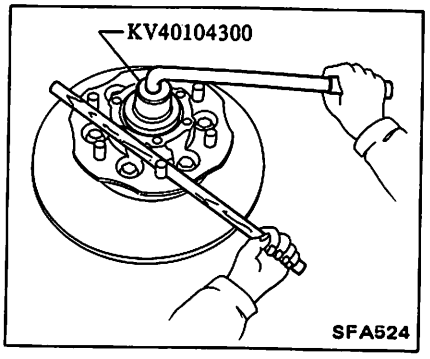

3. Separate hub with rotor disc from knuckle.
4. Separate wheel hub from rotor disc.
5. Remove inside grease seal from back plate.

Always replace inside grease seal.

6. Remove inside-wheel bearing by driving bearing outer race with brass bar.

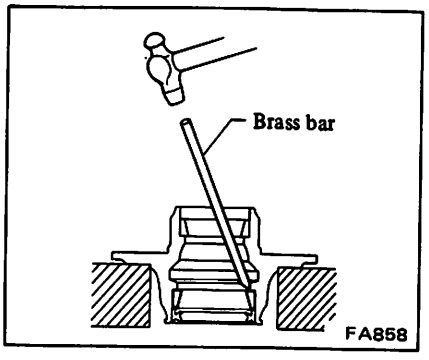

INSPECTION

Thoroughly clean bearing and dry with compressed air.

Wheel bearing

When race, cage and roller surfaces make noise or are cracked, pitted, worn, rough, or out-of-round, replace bearing assembly.

Wheel hub

Check wheel hub for cracks by means of a magnetic exploration or dyeing test, replace if necessary.

Knuckle spindle and knuckle arm

Also check knuckle spindle and knuckle arm, replace if cracks or damage is found.

Grease seal

If grease leakage is detected during removal, replace grease seal.

Replace grease seal at every disassembly even if it appears good.

ASSEMBLY

Assemble wheel hub and knuckle spindle in the reverse order of disassembly, noting the following.

- Install grease seal into knuckle spindle.

Pack seal lip with recommended multi-purpose grease.

- Install grease seal into baffle plate.

Pack seal lip with recommended multi-purpose grease.

- Pack cavity of wheel hub with recommended multi-purpose grease.

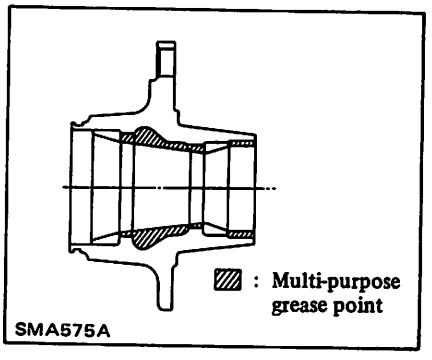

- Coat each bearing **with recommended multi-purpose grease.**

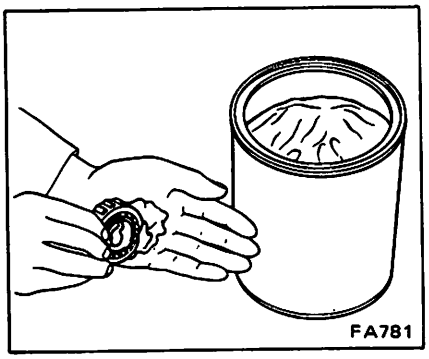

- Install bearing outer races into each side of wheel hub using suitable drift or brass bar.

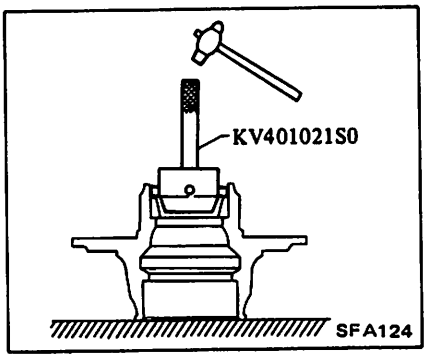

- Install upper and lower ball joints into knuckle spindle.
- Install inside grease seal into knuckle arm with suitable drift.

a. **Apply recommended multi-purpose grease to side surface of inner wheel bearing.**

b. **Pack seal lip with recommended multi-purpose grease.**

c. **Be sure that grease seal is facing in proper direction.**

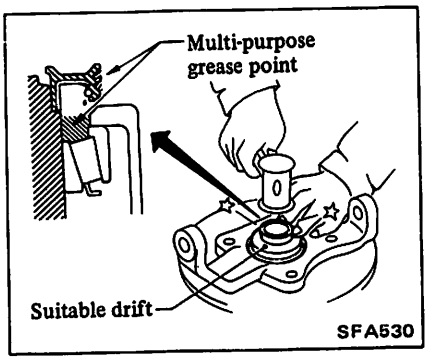

- Tighten bearing lock nut. Refer to section MA.

CAUTION:
Make sure that oil or grease does not come into contact with tapered areas and threads of ball joint.

INSTALLATION

Install wheel hub, knuckle arm and knuckle spindle assembly in the reverse order of removal, noting the following.

- After installing drive shaft, adjust drive shaft axial end play. Refer to Drive Shaft.

Ⓣ : Upper ball joint to upper link
16 - 21 N·m
(1.6 - 2.1 kg-m,
12 - 15 ft-lb)

Lower ball joint to lower link
38 - 52 N·m
(3.9 - 5.3 kg-m,
28 - 38 ft-lb)

Knuckle arm to knuckle spindle
72 - 97 N·m
(7.3 - 9.9 kg-m,
53 - 72 ft-lb)

Brake caliper to knuckle arm
72 - 97 N·m
(7.3 - 9.9 kg-m,
53 - 72 ft-lb)

Drive shaft to differential carrier
27 - 37 N·m
(2.8 - 3.8 kg-m,
20 - 27 ft-lb)

Free-running hub
25 - 34 N·m
(2.5 - 3.5 kg-m,
18 - 25 ft-lb)

Stabilizer bar to frame
16 - 22 N·m
(1.6 - 2.2 kg-m,
12 - 16 ft-lb)

Stabilizer bar to lower link
16 - 22 N·m
(1.6 - 2.2 kg-m,
12 - 16 ft-lb)

Wheel nut
118 - 147 N·m
(12 - 15 kg-m,
87 - 108 ft-lb)

FRONT SUSPENSION (4WD)

Always adjust wheel alignment after removal and installation of suspension parts.

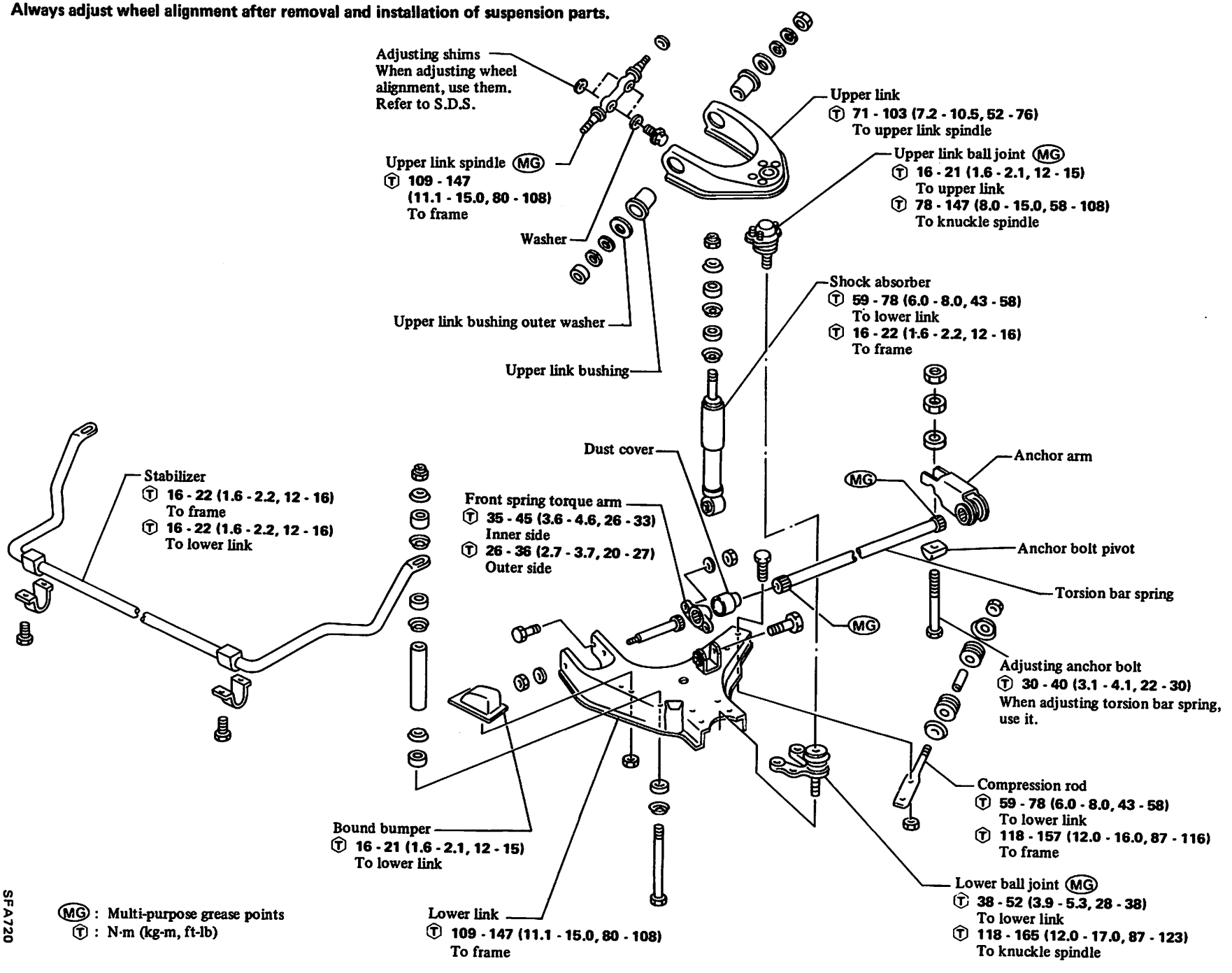

SHOCK ABSORBER

Refer to Front Suspension (2WD) for shock absorber.

TORSION BAR SPRING

REMOVAL

1. Block rear wheels with chocks and raise front of vehicle, and then support it with safety stands. **Refer to Section GI for lifting points and towing.**
2. Remove torsion bar spring anchor bolt.

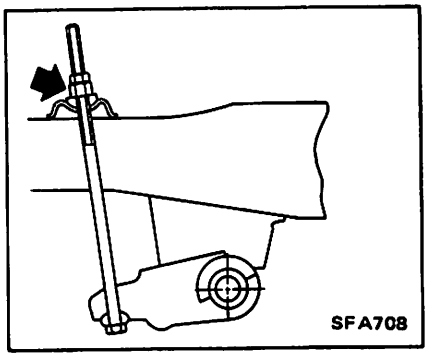

3. Pull out anchor arm rearward.
4. Withdraw torsion bar spring rearward.
5. Remove torsion bar spring torque arm.

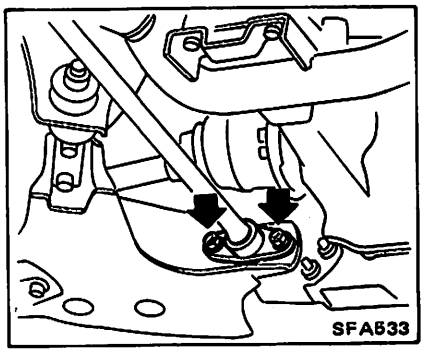

INSPECTION

- Check torsion bar spring for wear, twist, bend and other damage. Replace if necessary.
- Check serrations of each part for cracks, wear, twist and other damage. Replace if necessary.

INSTALLATION AND ADJUSTMENT

1. Install torque arm to lower link.

Ⓣ : Outer side
89 - 118 N·m
(9.1 - 12.0 kg-m,
66 - 87 ft-lb)
Inner side
89 - 118 N·m
(9.1 - 12.0 kg-m,
66 - 87 ft-lb)

2. Coat grease on the serration of torsion bar spring and then install it to torque arm.

Be sure to install right and left torsion bar springs correctly.

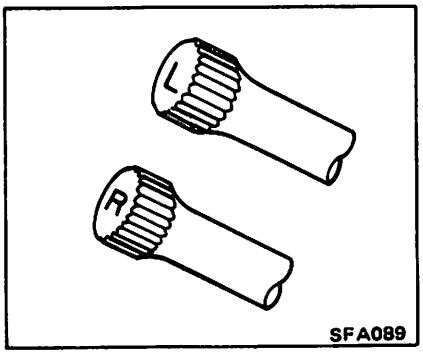

3. Place lower link in the position where bound buffer clearance is 0.

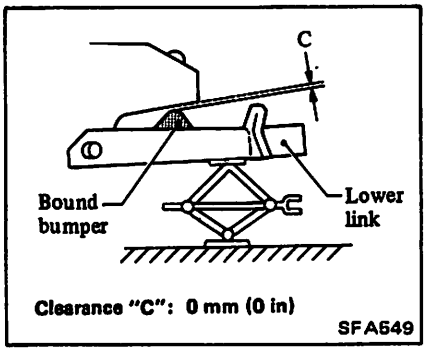

4. Install anchor arm so that dimension "G" between lower end of anchor arm and lower end of anchor arm bracket is as shown below.

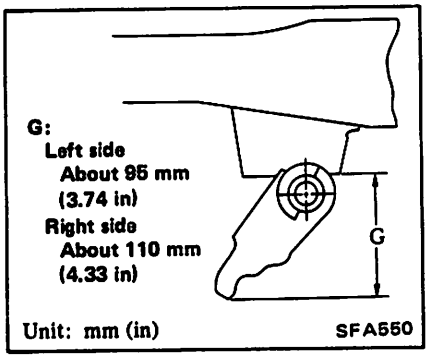

5. Temporarily tighten anchor arm bolt so that dimension between anchor arm bolt adjust seat and bolt upper end is as shown below.

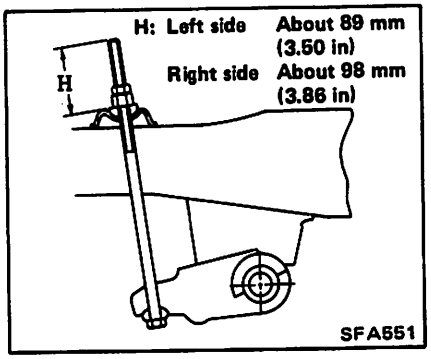

6. Adjust anchor arm position (vehicle posture).
(1) Lower vehicle.
(2) Turn anchor bolt adjusting nut to obtain the specified "H" dimension. (Distance between lower link spindle center and the bottom of steering stopper bracket.)

"H" dimension (When vehicle is unladen): H = A – B
53 - 57 mm (2.09 - 2.24 in)

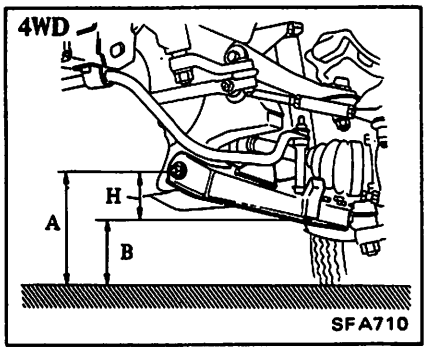

STABILIZER BAR

Refer to Front Suspension (2WD) for stabilizer bar.

UPPER LINK AND BALL JOINT

Refer to Front Suspension (2WD) for upper link and ball joint.

LOWER LINK AND BALL JOINT

REMOVAL

1. Remove torsion bar after marking.
2. Remove shock absorber lower end.
3. Remove stabilizer.
4. Remove bolts of lower ball joint after jacking up lower link.

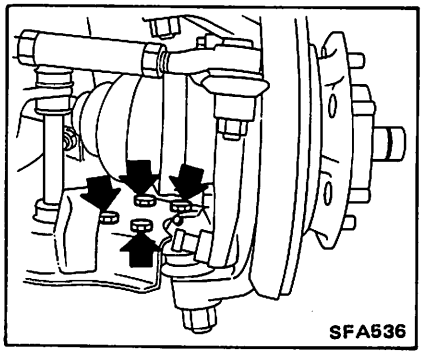

5. Remove rear lower link bolts and nut.

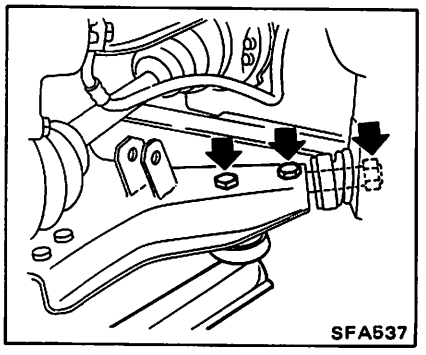

6. Remove front lower link bolts.

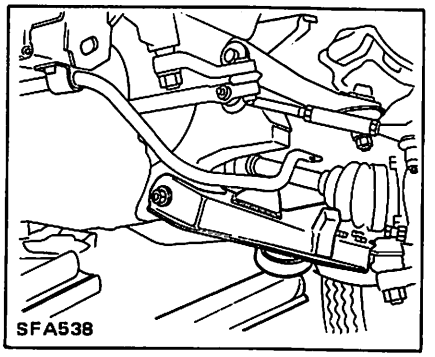

7. Remove lower link spindle bushing from frame.

INSPECTION

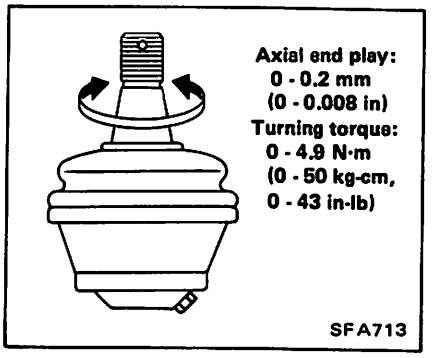

Refer to Front Suspension (2WD) for lower link and ball joint.

INSTALLATION

1. Install lower link spindle bushing to frame using suitable Tool.
2. Install lower link to frame.
3. Install torque arm to lower link.

Ⓣ : **Inner side**
89 - 118 N·m
(9.1 - 12.0 kg-m,
66 - 87 ft-lb)
Outer side
89 - 118 N·m
(9.1 - 12.0 kg-m,
66 - 87 ft-lb)

4. Jack up lower link.
5. Install lower ball joint to knuckle spindle.

Ⓣ : **118 - 167 N·m**
(12.0 - 17.0 kg-m,
87 - 123 ft-lb)

CAUTION:
Make sure that oil or grease does not come into contact with tapered areas of ball joint and knuckle spindle and threads of ball joint.

6. Install shock absorber lower end to lower link.

Ⓣ : **59 - 78 N·m**
(6.0 - 8.0 kg-m,
43 - 58 ft-lb)

7. Install stabilizer connecting rod to lower link.

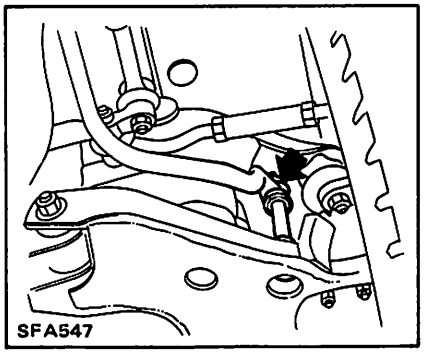

8. Install torsion bar spring. Refer to torsion bar spring (4WD)

SERVICE DATA AND SPECIFICATIONS (S.D.S.)

GENERAL SPECIFICATIONS

TORSION BAR SPRING

Spring diameter x Length mm (in)	
2WD	24 x 822.5 (0.94 x 32.38)
4WD	22 x 982 (0.87 x 38.66)

SHOCK ABSORBER

Applied model		2WD	4WD
Shock absorber type		Twin tube	
Stroke	mm (in)	106 (4.17)	110 (4.33)
Damping force [At 0.3 m (1.0 ft) sec.] Expansion	N (kg, lb)	490 (50, 110)	1,824 (186, 410)
Compression	N (kg, lb)	196 (20, 44)	912 (93, 205)

STABILIZER BAR

Diameter	mm (in)	21 (0.83)

TENSION ROD

Applied model		2WD
Diameter	mm (in)	22 (0.87)

DRIVE SHAFT

	Wheel side	Differential carrier side
Type	Birfield	Tripod
Model	BF90	TS82

INSPECTION AND ADJUSTMENT

WHEEL ALIGNMENT (Unladen * 1)

Applied model		2WD	4WD
Camber	degree	0° - 1°	0°10' - 1°10'
Caster	degree	50' - 1°50'	55' - 1°55'
Kingpin inclination	degree	8°30' - 9°30'	7°30' - 8°30'
Toe-in	mm (in) degree		
Radial tire		2 - 4 (0.08 - 0.16) 22' - 42' *2	1 - 3 (0.04 - 0.12) 10' - 30' *2
Bias tire		5 - 7 (0.20 - 0.28) 54' - 77' *2	—
Front wheel turning angle (full turn)	degree		
Inside		34° - 36°	31° - 33°
Outside		31° - 33°	29° - 31°
Front wheel toe-out turn	degree		
Inside		20°	20°
Outside		18°	

*1 Tankful of fuel, radiator coolant and engine oil full.
Spare tire, jack, hand tools, mats in designed position.
*2 Total-toe-in

VEHICLE POSTURE (Unladen)

"H" dimension: H = A – B mm (in)	
King Cab	
2WD	128 - 132 (5.04 - 5.20)
4WD	53 - 57 (2.09 - 2.24)
Regular Cab	
2WD	128 - 132 (5.04 - 5.20)
4WD	53 - 57 (2.09 - 2.24)

2WD

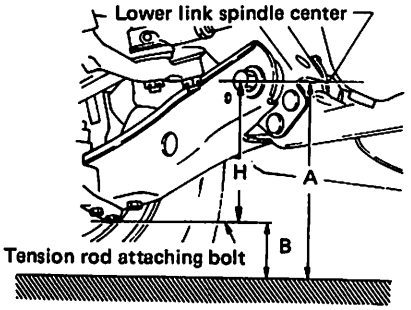

SFA709

4WD

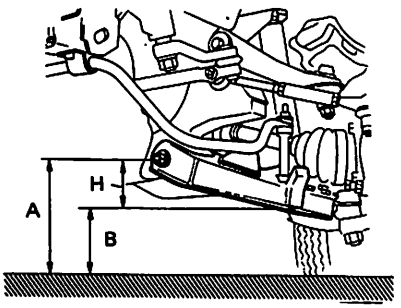

SFA710

WHEEL BEARING (2WD)

Wheel bearing axial play mm (in)	Less than 0.08 (0.0031)
Wheel bearing nut	
Tightening torque N·m (kg-m, ft-lb)	34 - 39 (3.5 - 4.0, 25 - 29)
Return angle degree	45°
Wheel bearing starting torque	
At wheel hub bolt	
With new grease seal N (kg, lb)	Less than 28.4 (2.9, 6.4)
With used grease seal N (kg, lb)	Less than 9.8 (1.0, 2.2)

WHEEL BEARING (4WD)

Wheel bearing lock nut	
Tightening torque N·m (kg-m, ft-lb)	78 - 98 (8 - 10, 58 - 72)
Retightening torque after loosening wheel bearing lock nut N·m (kg-m, ft-lb)	0 (0, 0)
Axial end play mm (in)	0 (0)
Starting force at wheel hub bolt N (kg, lb)	A
Turning angle degrees	15° - 30°
Starting force at wheel hub bolt N (kg, lb)	B
Wheel bearing preload at wheel hub bolt N (kg, lb) B–A	7.06 - 20.99 (0.72 - 2.14, 1.59 - 4.72)

DRIVE SHAFT

Drive shaft axial end play mm (in)	0.1 - 0.3 (0.004 - 0.012)

Drive shaft end snap ring

Thickness mm (in)	Part No.
1.1 (0.043)	39253-50W11
1.3 (0.051)	39253-50W12
1.5 (0.059)	39253-50W13
1.7 (0.067)	39253-50W14
1.9 (0.075)	39253-50W15
2.1 (0.083)	39253-50W16

UPPER BALL JOINT

Axial end play mm (in)	0.1 - 1.1 (0.004 - 0.043)
Turning torque N·m (kg-cm, in-lb)	
New part	1.0 - 4.9 (10 - 50, 8.7 - 43.4)
Used part	More than 1.0 (10, 8.7)

LOWER BALL JOINT

Stud axial end play mm (in)	
2WD	0.1 - 1.1 (0.004 - 0.043)
4WD	0 - 0.2 (0 - 0.008)
Turning torque N·m (kg-cm, in-lb)	
2WD New part	1.0 - 3.9 (10 - 40, 8.7 - 34.7)
Used part	More than 1.0 (10, 8.7)
4WD	0 - 4.9 (0 - 50, 0 - 43)

TIGHTENING TORQUE

Unit	N·m	kg-m	ft-lb
Wheel hub			
Wheel hub nut	118 - 147	12 - 15	87 - 108
Wheel hub-to-disc brake rotor			
2WD	49 - 69	5 - 7	36 - 51
4WD	49 - 69	5 - 7	36 - 51
Wheel bearing lock nut			
2WD	34 - 39	3.5 - 4.0	25 - 29
4WD	78 - 98	8 - 10	58 - 72
Knuckle arm and knuckle spindle			
Knuckle arm-to-side rod	54 - 98	5.5 - 10.0	40 - 72
Knuckle arm-to-knuckle spindle	72 - 97	7.3 - 9.9	53 - 72
Knuckle spindle-to-caliper	72 - 97	7.3 - 9.9	53 - 72
Ball joint			
Upper ball joint-to-knuckle spindle			
2WD	78 - 98	8.0 - 10.0	58 - 72
4WD	78 - 147	8.0 - 15.0	58 - 108
Upper ball joint-to-upper link	16 - 21	1.6 - 2.1	12 - 15
Lower ball joint-to-knuckle spindle	118 - 167	12.0 - 17.0	87 - 123
Lower ball joint-to-lower link	38 - 52	3.9 - 5.3	28 - 38
Shock absorber			
Shock absorber upper end to frame	16 - 22	1.6 - 2.2	12 - 16
Shock absrober lower end-to-lower link	59 - 78	6.0 - 8.0	43 - 58
Torsion bar spring			
Anchor adjusting bolt lock nut	30 - 40	3.1 - 4.1	22 - 30
Torque arm-to-lower link			
Inside			
2WD	35 - 45	3.6 - 4.6	26 - 33
4WD	89 - 118	9.1 - 12.0	66 - 87
Outside			
2WD	26 - 36	2.7 - 3.7	20 - 27
4WD	89 - 118	9.1 - 12.0	66 - 87
Bound bumper			
Bound bumper-to-frame			
2WD	8 - 11	0.8 - 1.1	5.8 - 8.0
Bound bumper-to-lower link			
4WD	16 - 21	1.6 - 2.1	12 - 15

Unit	N·m	kg-m	ft-lb
Upper link			
Upper link spindle-to-upper link	76 - 103	7.7 - 10.5	56 - 76
Upper link spindle-to-frame	109 - 147	11.1 - 15.0	80 - 108
Lower link			
Lower link-to-frame	109 - 147	11.1 - 15.0	80 - 108
Tension rod			
Tension rod-to-lower link	38 - 52	3.9 - 5.3	28 - 38
Tension rod-to-frame	118 - 157	12.0 - 16.0	87 - 116
Stabilizer bar			
Stabilizer bar-to-frame	16 - 22	1.6 - 2.2	12 - 16
Stabilizer bar-to-lower link	16 - 22	1.6 - 2.2	12 - 16
Steering stopper bolt			
Steering stopper bolt lock nut			
2WD	26 - 36	2.7 - 3.7	20 - 27
4WD	76 - 98	7.8 - 10	56 - 72
Compression rod 4WD			
Compression rod-to-lower link	59 - 78	6.0 - 8.0	43 - 58
Compression rod-to-body	118 - 157	12.0 - 16.0	87 - 116
Drive shaft 4WD			
Drive shaft-to-differential carrier	27 - 37	2.8 - 3.8	20 - 27
Free-running hub 4WD			
Free running hub-to-wheel hub	25 - 34	2.5 - 3.5	18 - 25

TROUBLE DIAGNOSES AND CORRECTIONS

Condition	Probable cause	Corrective action
Vibration, shock and shimmy of steering wheel. **Vibration:** Loose connection and wear of the each part of linkage cause vibration of front wheels and, steering wheel vibration. This is very noticeable when travelling on rough road. **Shock:** When the vehicle is travelling on bumpy roads, the play of the steering linkage is transmitted to the steering wheel. This is especially noticeable when travelling on rough road. **Shimmy:** Abnormal vibration of the front suspension system, the whole steering linkage and road wheel, which occurs at specific speeds.	Improper tire pressure.	Adjust.
	Imbalance and deformation of road wheel.	Correct the imbalance or replace.
	Unevenly worn tire or insufficient tightening of wheel nuts.	Replace or tighten.
	Improperly adjusted or worn front wheel bearing.	Adjust or tighten.
	Damaged wheel alignment.	Adjust.
	Worn upper and lower link bushings.	Replace.
	Insufficiently tightened steering gear housing.	Retighten.
	Wear of steering linkage.	Replace damaged parts.
	Worn suspension ball joint.	Replace.
	Excessive backlash due to improper adjustment of the steering gear box.	Adjust correctly.
	Damaged idler arm.	Replace.
	Worn column bearing, weakened column bearing spring, or loose clamp.	Replace or retighten.
	Malfunction of shock absorber or loose installation bolts.	Replace or retighten.
	Worn or incorrectly adjusted wheel bearing.	Replace or adjust.
	Imbalance of vehicle level.	Adjust.
Vehicle pulls to right or left. When driving with hands off the steering wheel on a flat road, the vehicle gently swerves to right or left. **A damaged rear suspension may also be the cause of this problem and, therefore, see also Section RA.**	Improper tire pressure or insufficient tightening of wheel nuts.	Adjust or tighten.
	Difference in wear and tear of right and left tire treads.	Replace tires.
	Incorrect adjustment or abrasion of front wheel bearing.	Adjust or replace.
	Collapsed or twisted front spring.	Replace.
	Incorrect wheel alignment.	Adjust.
	Brake binding.	Check and correct.
	Worn rubber bushings for upper and lower link, and tension rod.	Replace.
	Deformed steering linkage and upper and lower links and tension rod.	Replace.
	Imbalance of vehicle level.	Adjust.

Condition	Probable cause	Corrective action
Instability of vehicle.	Improper tire pressure.	Adjust.
	Worn rubber bushings for upper and lower links, and tension rod.	Replace.
	Incorrect wheel alignment.	Adjust.
	Worn or deformed steering linkage and upper and lower links.	Replace.
	Incorrect adjustment of steering gear. (Backlash and worm bearing preload)	Adjust.
	Deformed or unbalanced road wheel.	Correct or replace.
	Imbalance of vehicle level.	Adjust.
Stiff steering wheel. (Checking up procedure) Jack up front wheels, detach the steering gear arm and operate the steering wheel, and; If it is light, check steering linkage, and suspension parts. If it is heavy, check steering gear, steering linkage and steering column parts.	Improper tire pressure.	Adjust.
	Insufficient lubricants or mixing impurities in steering gear box or excessively worn steering linkage.	Replenish grease or replace the part.
	Stiff or damaged suspension ball joint, or lack of grease.	Replace.
	Worn or damaged steering gear.	Replace.
	Incorrectly adjusted steering gear.	Adjust.
	Deformed steering linkage.	Replace.
	Incorrect wheel alignment.	Adjust.
	Interference of steering column with turn signal switch.	Replace.
Excessive steering wheel play.	Incorrectly adjusted steering gear housing.	Adjust backlash.
	Worn steering linkage.	Replace.
	Improperly fitted gear housing.	Retighten.
	Incorrectly adjusted wheel bearing.	Adjust.
	Worn upper and lower links, and tension rod bushings.	Replace.
Noises.	Improper tire pressure.	Adjust.
	Insufficient lubricating oil and grease for suspension ball joint and steering linkage, or their breakage.	Replenish lubricating oil and grease, or replace.
	Loose steering gear bolts, linkage and suspension parts.	Retighten.
	Damaged shock absorber.	Replace.
	Damaged wheel bearing.	Replace.
	Worn steering linkage and steering gear.	Replace.
	Worn upper and lower links, and tension rod bushings.	Replace.
	Broken tension rod bar spring.	Replace.

Condition	Probable cause	Corrective action
	Loose stabilizer fixing bolts and nuts.	Retighten.
	Loose shock absorber fixing.	Retighten.
	Worn or damaged drive shaft joints.	Replace.
	Insufficient lubricant for wheel bearing, drive shaft joints or shaft sliding portions (Damaged grease seal or drive shaft boots).	Replenish lubricant, or replace grease seal or drive shaft boots.
Grating tire noise.	Improper tire pressure.	Adjust.
	Incorrect wheel alignment.	Adjust.
	Deformed knuckle and suspension linkage.	Replace.
Jumping of disc wheel.	Improper tire pressure.	Adjust.
	Imbalanced road wheels.	Adjust.
	Damaged shock absorber.	Replace.
	Damaged tire.	Replace.
	Deformed wheel rim.	Replace.
Excessively or partially worn tire.	Improper tire pressure.	Adjust.
	Incorrect wheel alignment.	Adjust.
	Damaged wheel bearing.	Replace.
	Brake drag.	Check and correct.
	Tire not rotated.	Rotate tires at recommended intervals.
	Rought and improper driving manner.	Drive more gently.

SPECIAL SERVICE TOOLS

Tool number (Kent-Moore No.)	Tool name	2WD	4WD
ST29020001 (J24319-01)	Gear arm puller	X	X
KV401021S0 (–) ① ST35325000 (–) ② KV40102110 (–) ③ KV40102120 (–) ④ KV40102130 (–) ⑤ KV40102140 (–) ⑥ KV40102150 (–)	Bearing outer race drift Drift bar Drift (A) Drift (B) Screw (A) Screw (B) Screw (C)	X	–
KV40102600 (–)	Torque wrench	–	X
KV40104300 (–)	Lock nut wrench socket	–	X
KV40101000 (J25604-01)	Rear axle stand	–	X
ST36230000 (J25840-A)	Sliding hammer	–	X
HT72520000 (J25730-A)	Ball joint remover	X	X

REAR AXLE & REAR SUSPENSION

SECTION RA

CONTENTS

REAR AXLE ..... RA- 2
Rear axle assembly ..... RA- 3
Rear axle shaft and wheel bearing (Single-tire) ..... RA- 3
Rear axle shaft and wheel bearing (Double-tire) ..... RA- 5
REAR SUSPENSION ..... RA- 7
Rear shock absorber ..... RA- 9
Leaf spring ..... RA- 9
SERVICE DATA AND SPECIFICATIONS (S.D.S.) RA-10
General specifications RA-10
Inspection and adjustment RA-11
Tightening torque RA-11
TROUBLE DIAGNOSES AND CORRECTIONS RA-12
SPECIAL SERVICE TOOLS RA-13

REAR AXLE

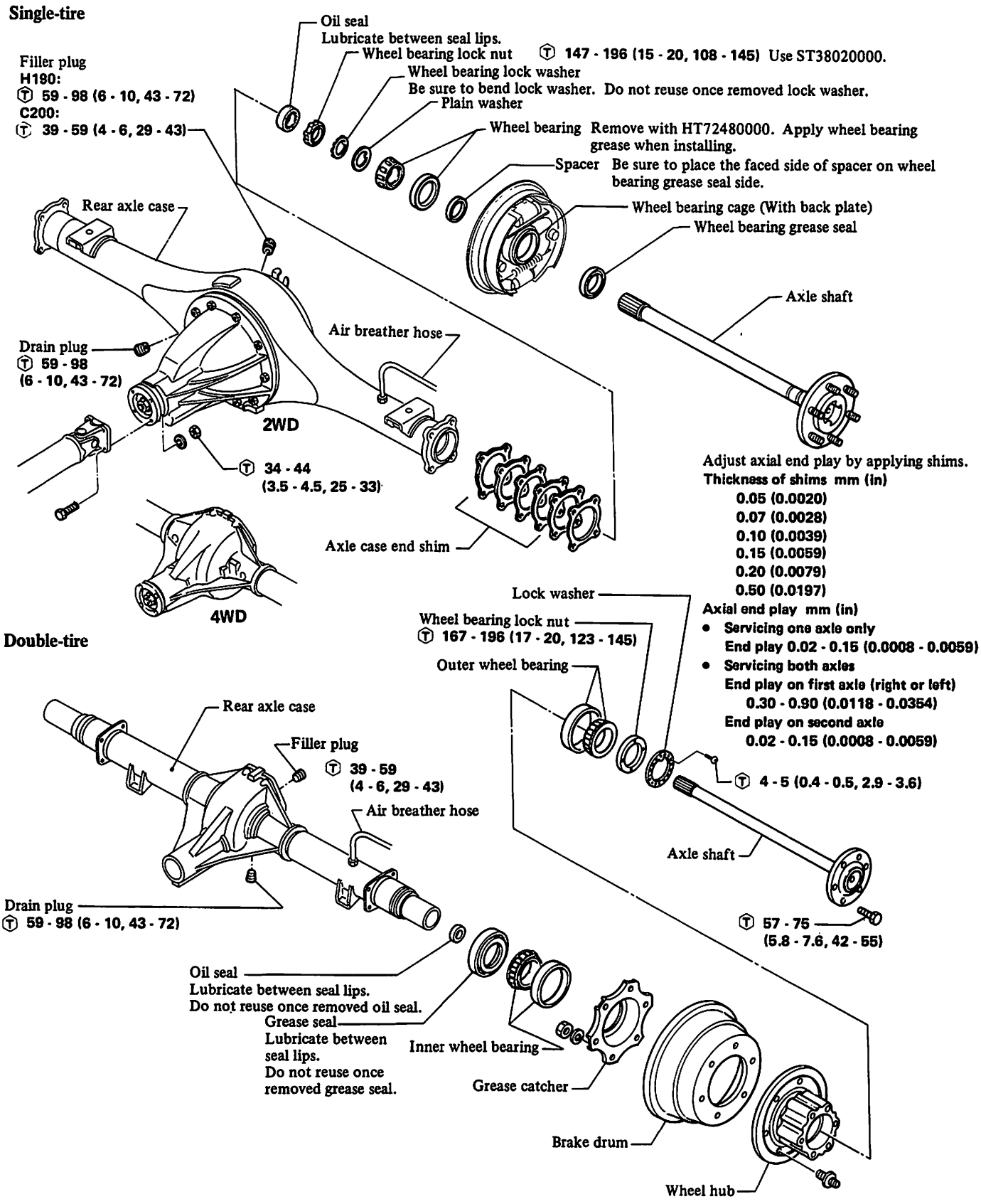

Ⓣ : N·m (kg-m, ft-lb)

SRA472

REAR AXLE ASSEMBLY

REMOVAL

1. Block front wheels. Support under differential carrier with garage jack. Place stands. Remove rear wheels.

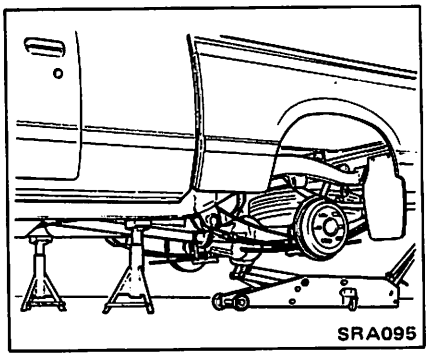

2. Remove propeller shaft.

Mark relationship between propeller shaft flange and companion flange.

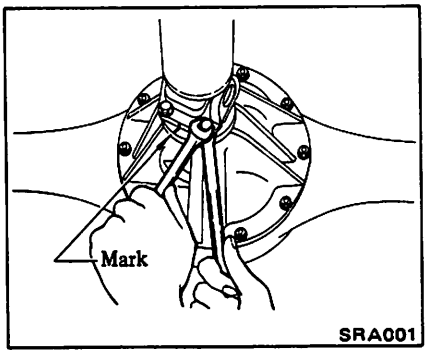

3. Disconnect parking brake cable.

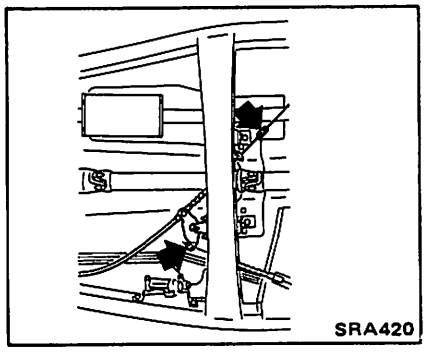

4. Disconnect brake hydraulic line.

CAUTION:
When removing or installing brake tubes, use Tool GG94310000.

5. Disconnect shock absorber lower end on each side.

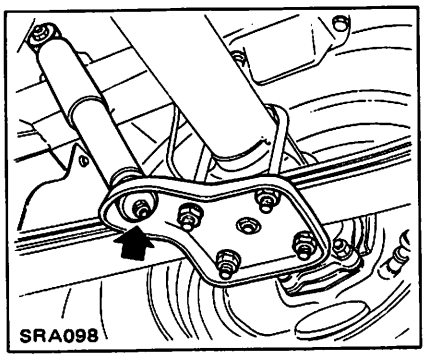

6. Remove U-bolts.

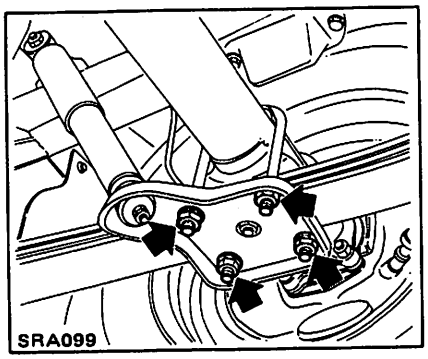

7. Pass axle case through space above spring, and take it out.

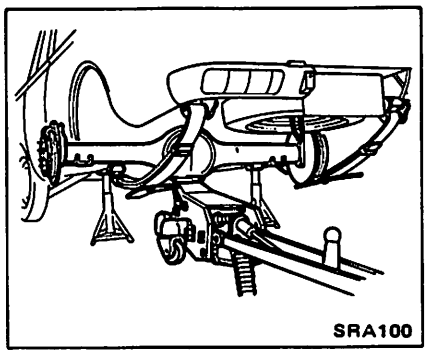

8. Refer to Rear Axle Shaft and Wheel Bearing for disassembly.

INSPECTION

Check axle case for yield, deformation or cracks and replace if necessary.

INSTALLATION

Ⓣ: Rear spring clip bolt (U-bolt)
88 - 98 N·m
(9.0 - 10.0 kg-m,
65 - 72 ft-lb)
Shock absorber lower end
2WD
16 - 22 N·m
(1.6 - 2.2 kg-m,
12 - 16 ft-lb)
4WD
30 - 40 N·m
(3.1 - 4.1 kg-m,
22 - 30 ft-lb)
Brake tube flare nut
15 - 18 N·m
(1.5 - 1.8 kg-m,
11 - 13 ft-lb)
Propeller shaft to companion flange
34 - 44 N·m
(3.5 - 4.5 kg-m,
25 - 33 ft-lb)

REAR AXLE SHAFT AND WHEEL BEARING (Single-tire)

REMOVAL

1. Block front wheels. Support under differential carrier with garage jack. Place stands. Remove rear wheel and drum.

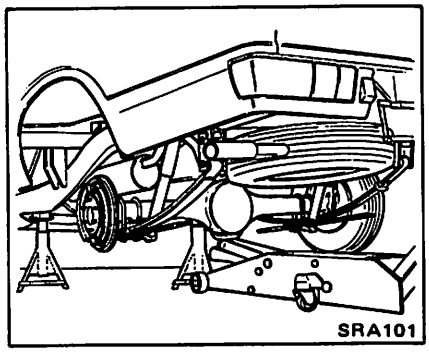

2. Disconnect parking brake cable and brake hydraulic line.

3. Remove nuts fixing brake back plate.

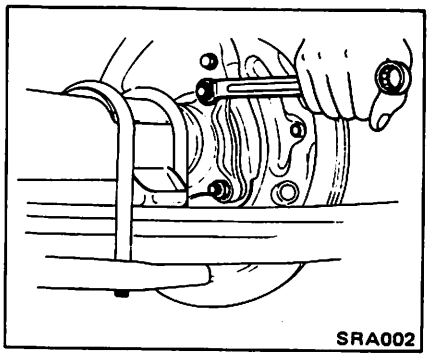

4. Pull out axle shaft assembly together with rear brake.

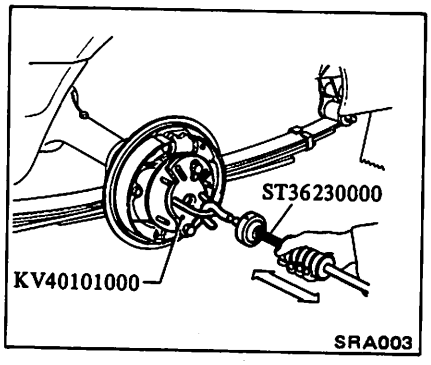

5. Remove oil seal.

Do not reuse once removed oil seal. Always install new one.

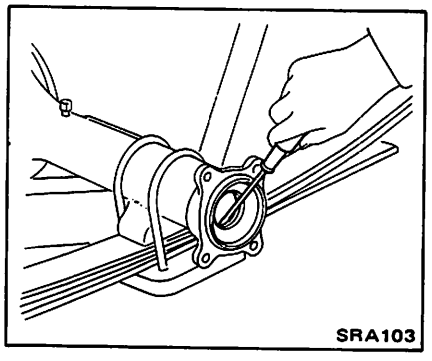

6. Unbend lock washer with a screwdriver.

Do not reuse once removed lock washer. Always install new one.

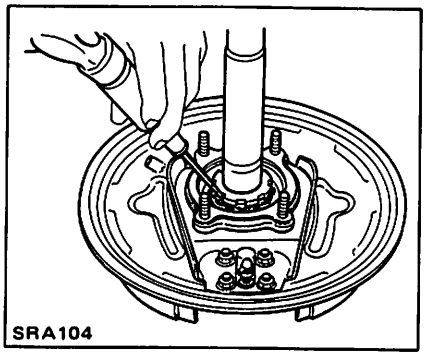

7. Position axle shaft in vise with KV40101000.

Remove bearing lock nut, using tool.

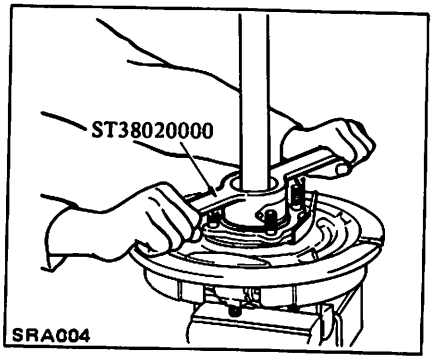

8. Withdraw wheel bearing together with bearing cage and back plate.

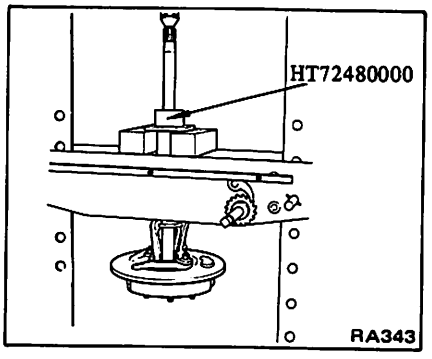

9. Remove oil seal in bearing cage with suitable bar if necessary.

Do not reuse once removed oil seal. Always install new one.

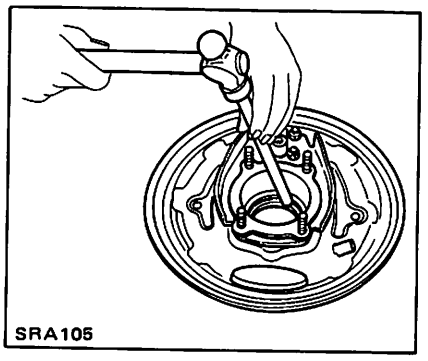

10. To remove wheel bearing outer race, use a brass drift.

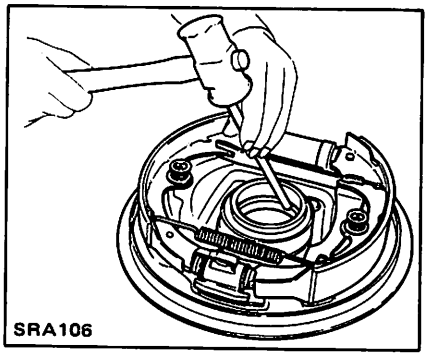

INSPECTION

Inspect the following parts and replace as required.

1. Check axle shaft for straightness, cracks, damage, wear or distortion.
2. Check bearing for wear or damage and axial end play.

INSTALLATION

a. Install a new oil seal in bearing cage. Lubricate cavity between seal lips after fitting seal.

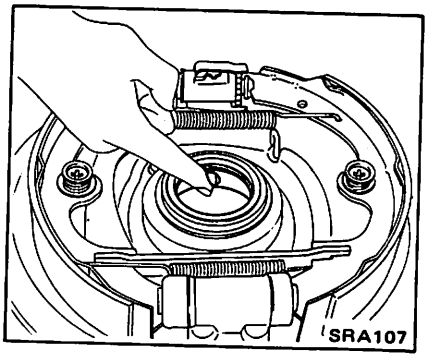

b. Install wheel bearing outer race, using a brass drift.

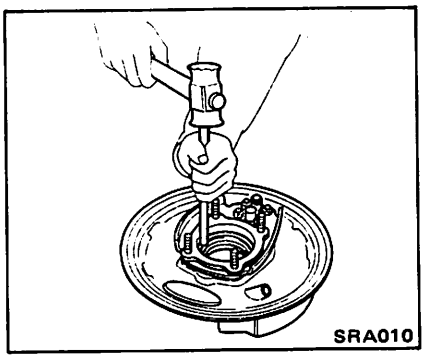

c. Be sure to install spacer before installing wheel bearing inner race. Be carefull to place the faced side of spacer on wheel bearing grease seal side.
d. Install wheel bearing inner race, using a brass drift.

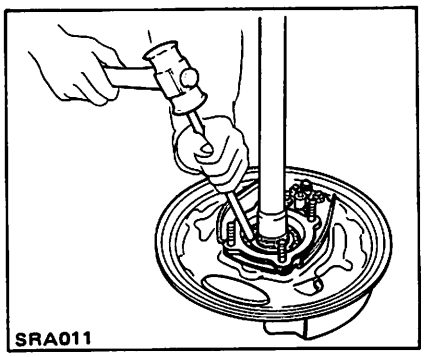

e. Be careful to place the faced side of nut on washer side.
f. Fit washer lip in nut groove correctly by tightening nut.
g. Use a new bearing lock washer. Be sure to bend it up.

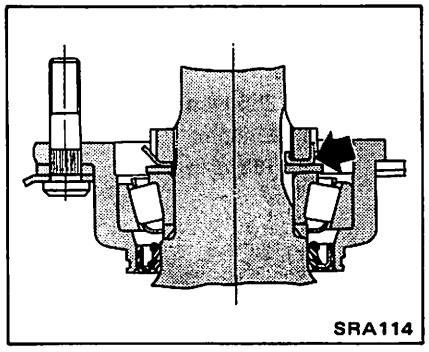

h. Apply wheel bearing grease to wheel bearing and recess of axle case end.

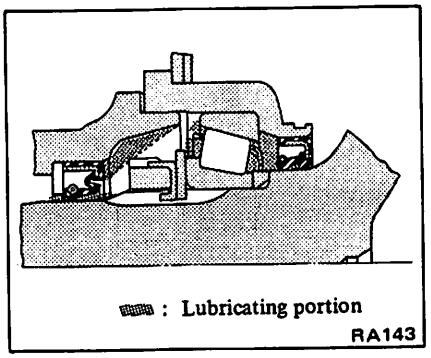

i. Apply gear oil to the spline and apply a coat of wheel bearing grease to seal surface before installing axle shaft.
j. When installing axle shaft, adjust axial end play by applying case end shims.

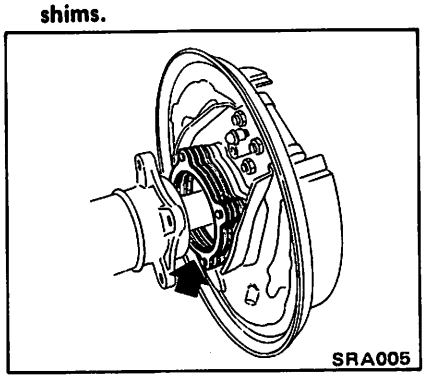

Rear axle case end shim:
Refer to S.D.S.

Axial end play:
Servicing one axle only
End play
0.02 - 0.15 mm
(0.0008 - 0.0059 in)
Servicing both axles
End play on first axle
(right or left)
0.30 - 0.90 mm
(0.0118 - 0.0354 in)
End play on second axle
0.02 - 0.15 mm
(0.0008 - 0.0059 in)

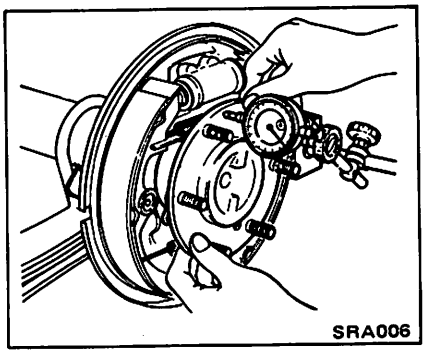

k. When installing axle shaft, use Tool as a guide.

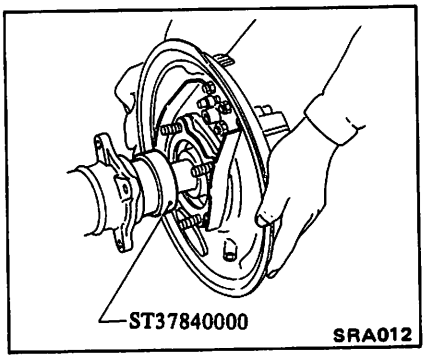

Ⓣ: Wheel bearing lock nut
147 - 196 N·m
(15 - 20 kg-m,
108 - 145 ft-lb)
Back plate fixing nut
53 - 63 N·m
(5.4 - 6.4 kg-m,
39 - 46 ft-lb)
Brake tube flare nut
15 - 18 N·m
(1.5 - 1.8 kg-m,
11 - 13 ft-lb)
Wheel nut
118 - 147 N·m
(12 - 15 kg-m,
87 - 108 ft-lb)

REAR AXLE SHAFT AND WHEEL BEARING (Double-tire)

REMOVAL

- Slowly slide axle shaft, exercising care not to damage oil seal lip.
- Loosen screws and detach lock washer from rear wheel bearing nut.

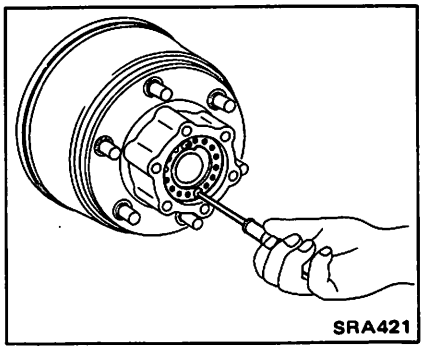

- Remove rear wheel bearing nut.

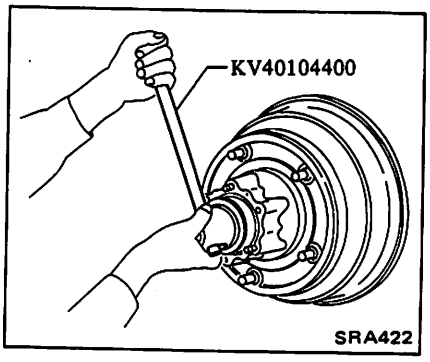

- Remove inside wheel bearing outer race, grease seal and outside wheel bearing outer race.

CAUTION:
Be careful not to drop wheel bearing.
Grease seal must not be reused.

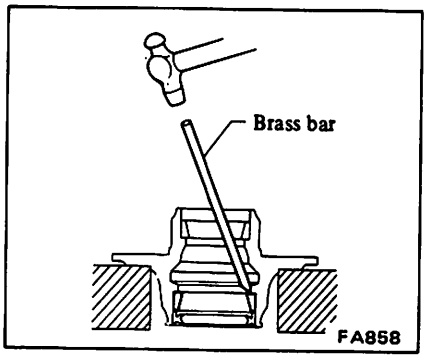

INSTALLATION

- Apply gear oil to splines at the inner end of axle shaft. Apply a coat of multi-purpose grease on the seal contact surface.
- Slowly slide axle shaft into axle housing, exercising care not to damage oil seal lip.
- Install bearing outer race using a suitable tool.

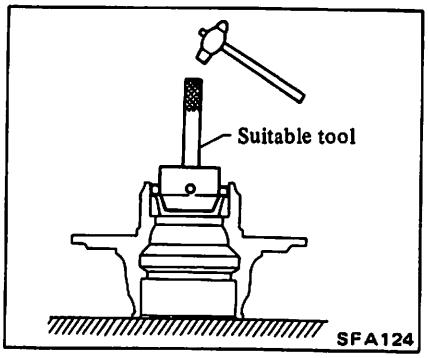

- Pack hub with recommended multi-purpose grease.
  Coat O-ring with recommended multi-purpose grease.

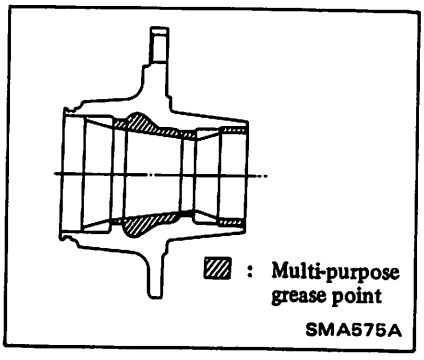

- Coat each bearing with recommended multi-purpose grease.

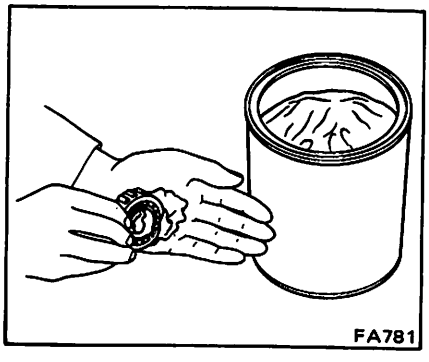

- Place inner bearing in hub and install a new grease seal, coating sealing lips with recommended multi-purpose grease.

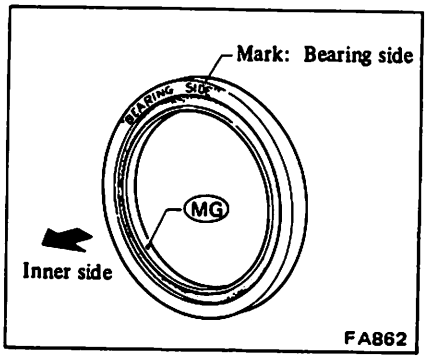

- When installing axle shaft, adjust axial end play.

  Axial end play:
  Less than
  0.08 mm (0.0031 in)

- Adjust wheel bearing preload.
  Refer to S.D.S. for adjustment.

Ⓣ : Wheel bearing lock nut
167 - 196 N·m
(17 - 20 kg-m,
123 - 145 ft-lb)
Back plate fixing nut
84 - 108 N·m
(8.6 - 11.0 kg-m,
62 - 80 ft-lb)
Brake tube flare nut
15 - 18 N·m
(1.5 - 1.8 kg-m,
11 - 13 ft-lb)
Wheel nut
216 - 255 N·m
(22 - 26 kg-m,
159 - 188 ft-lb)

REAR SUSPENSION

2WD models

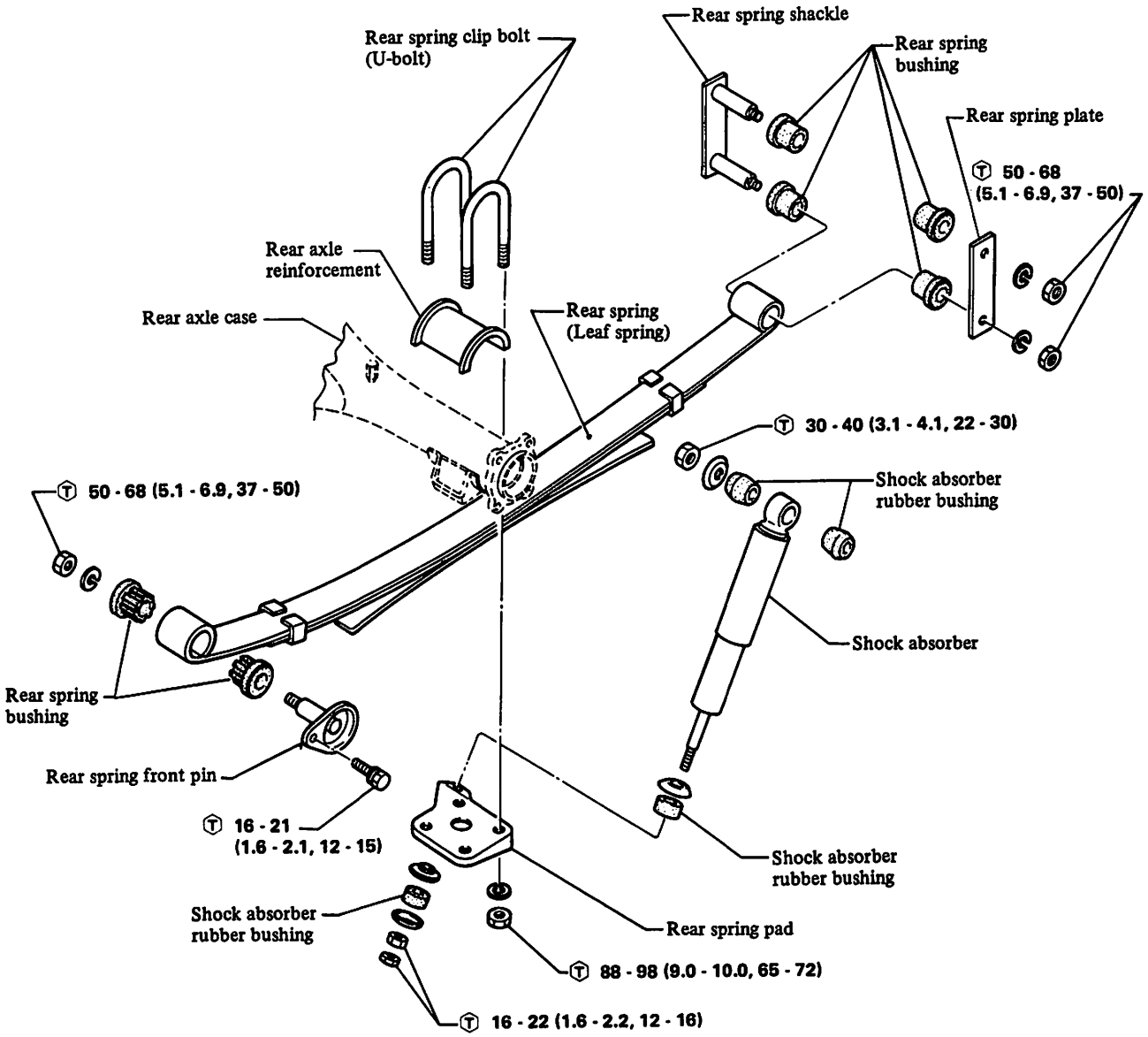

Ⓣ : N·m (kg-m, ft-lb)

Vehicle weight must be on rear wheels when tightening front pin, shackle and shock absorber in order to clamp rubber bushings in neutral or unloaded position.

SRA423

4WD models

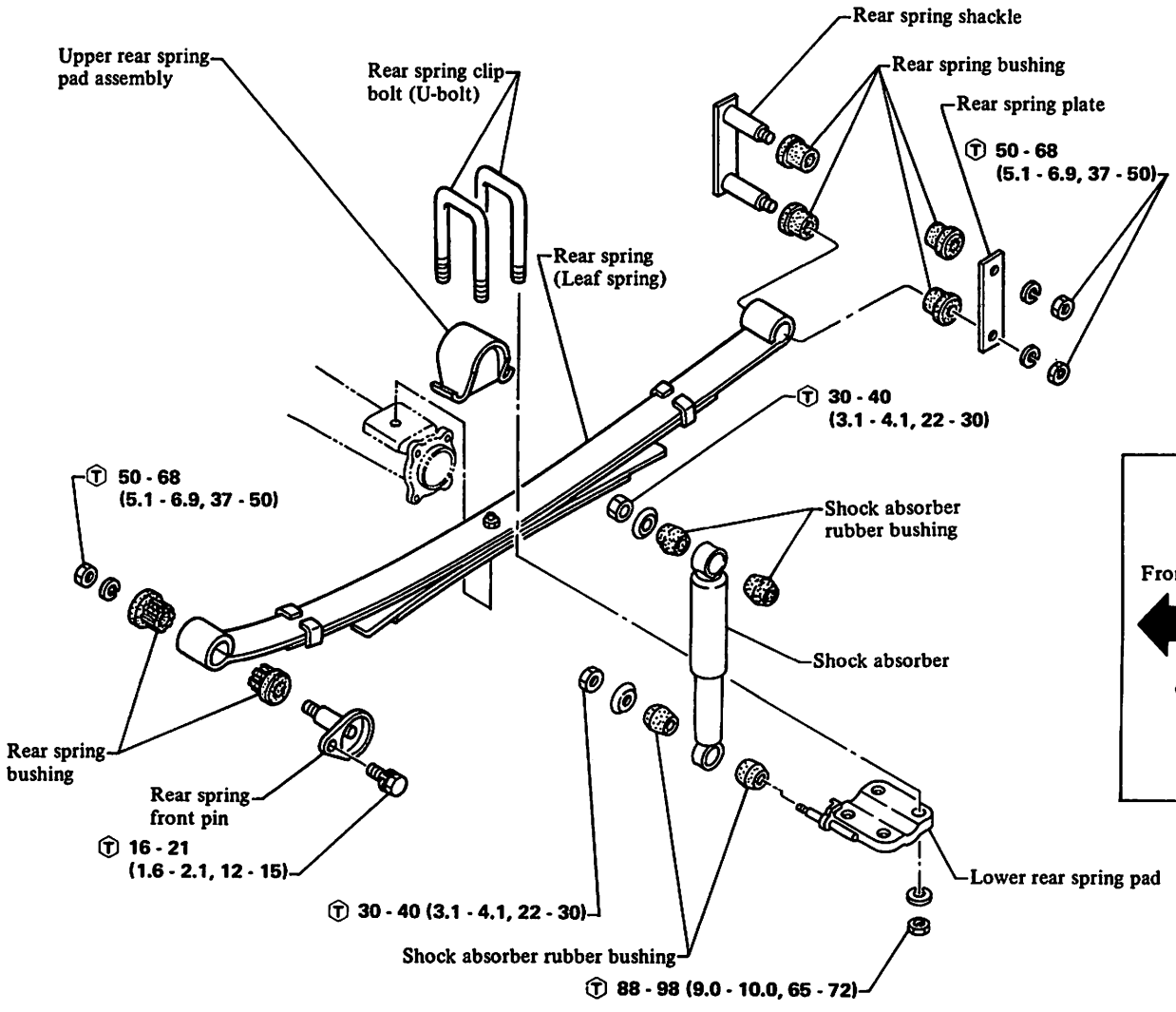

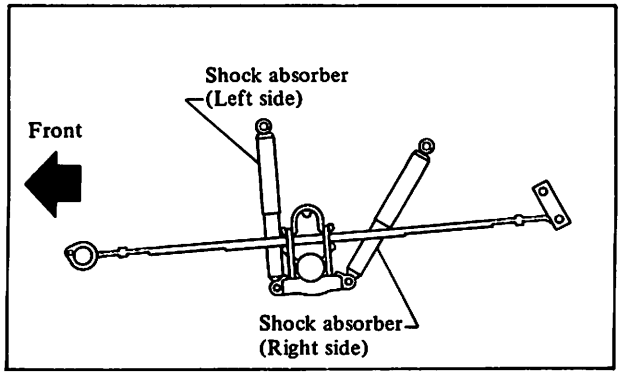

Vehicle weight must be on rear wheels when tightening front pin, shackle and shock absorber in order to clamp rubber bushings in neutral or unloaded position.

Ⓣ : N·m (kg-m, ft-lb)

SRA545

REAR SHOCK ABSORBER

REMOVAL AND INSTALLATION

1. Remove shock absorber by disconnecting upper and lower end.

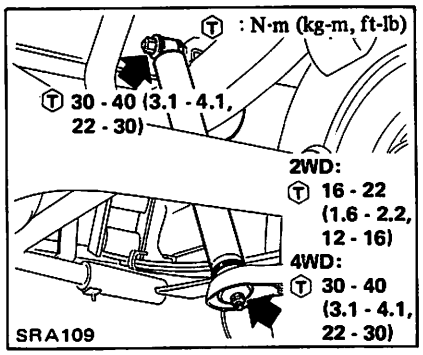

2. Install shock absorber, observing the following note.

Vehicle weight must be on rear wheels when tightening shock absorber upper and lower ends in order to clamp rubber bushings in neutral or unloaded position.

INSPECTION

1. Test shock absorber and compare with specifications given in S.D.S. Replace if necessary.
2. Check for oil leakage and cracks. Also, check shaft for bending.
3. Inspect rubber bushings for damage, cracks and deformation. Replace parts if necessary.

LEAF SPRING

REMOVAL

1. Block front wheels. Support under differential carrier with garage jack. Place stands.

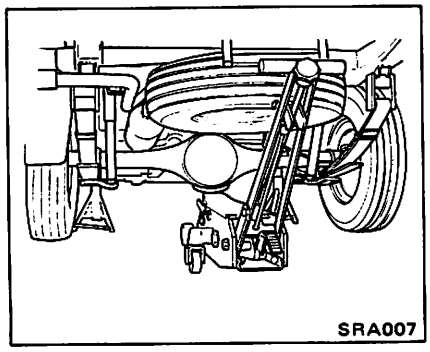

2. Disconnect shock absorber lower end, and remove U-bolts.

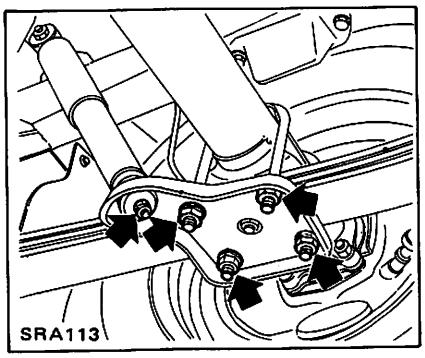

3. Remove one or two parking brake rear cable clamps on the side of leaf spring to be removed. (4WD)

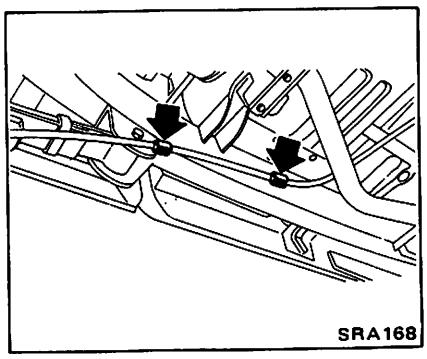

4. Raise (2WD)/Lower (4WD) jack positioned under differential carrier.

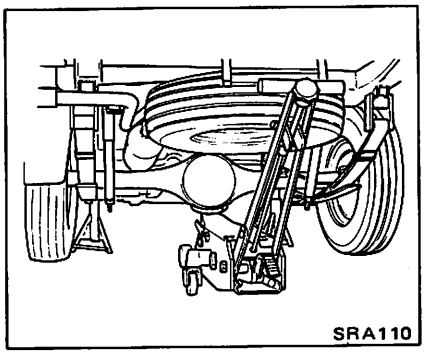

5. Disconnect rear spring shackle and front pin.

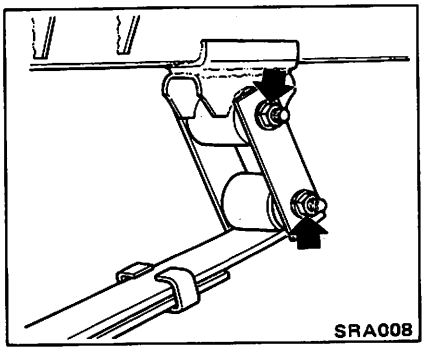

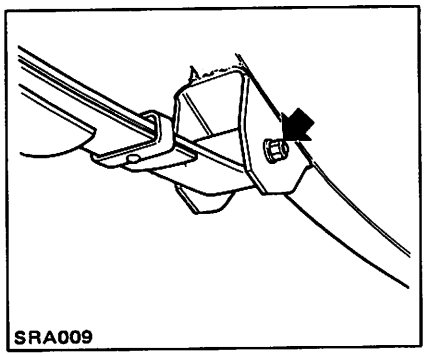

6. Remove rubber bushing if necessary.

INSPECTION

Clean all rust and dirt from spring leaves, using a wire brush if necessary.
1. Examine spring leaves for fractures or cracks.
2. Check front bracket and pin, shackle, U-bolts and spring seat for wear, cracks, straightness or damaged threads. If damaged parts are found, replace with new ones.
3. Inspect all rubber parts for wear, damage, separation or deformation. Replace them if necessary.

INSTALLATION

Vehicle weight must be on rear wheels when tightening front pin, shackle and shock absorber in order to clamp rubber bushings in neutral or unloaded position.

Ⓣ: Spring front pin nut
50 - 68 N·m
(5.1 - 6.9 kg-m,
37 - 50 ft-lb)
Spring front pin bolt to frame
16 - 21 N·m
(1.6 - 2.1 kg-m,
12 - 15 ft-lb)
Spring shackle nut
50 - 68 N·m
(5.1 - 6.9 kg-m,
37 - 50 ft-lb)
U-bolt nut
88 - 98 N·m
(9.0 - 10.0 kg-m,
65 - 72 ft-lb)
Wheel nut
118 - 147 N·m
(12 - 15 kg-m,
87 - 108 ft-lb)

SERVICE DATA AND SPECIFICATIONS (S.D.S.)

GENERAL SPECIFICATIONS

	Model	2WD					4WD
		Standard Models				Heavy duty models	
		U.S.A.		CANADA			
		Standard	Optional	Standard	Optional		
Suspension type		Semi-elliptic leaf spring					
Leaf spring	Length x width x thickness-number of leaves mm (in)	1,200 x 60 x 7–2 13–1 (47.24 x 2.36 x 0.28–2 0.51–1)	1,200 x 60 x 7–1 8–1 12–2 (47.24 x 2.36 x 0.28–1 0.31–1 0.47–2)		1,200 x 60 x 7– 13–, (47.24 x 2.36 x 0.28–2 0.51–1)	1,200 x 60 x 8–2 14–2 (47.24 x 2.36 x 0.31–2 0.55–2)	1,200 x 60 x 7–1 8–1 12–1 (47.24 x 2.36 x 0.28–1 0.31–1 0.47–1)
	Free camber "S" mm (in)	161.0 (6.34)	132.0 (5.20)		161.0 (6.34)	114.5 (4.51)	93.6 (3.685)
	Laden camber mm/N (mm/kg, in/lb)	–7/4,413 (–7/450, –0.28/992)	5/4,609 (5/470, 0.20/1,036)		–7/4,413 (–7/450, –0.28/992)	–7.5/6,816 (–7.5/695, –0.295/1,532)	–31/4,541 (–31/463, –1.22/1,021)
	Spring constant N/mm (kg/mm, lb/in)	19.12 - 54.43 (1.95 - 5.55, 109.2 - 310.8)	24.22 - 77.48 (2.47 - 7.9, 138.3 - 442.4)		19.12 - 54.43 (1.95 - 5.55, 109.2 - 310.8)	29.13 - 113.76 (2.97 - 11.6, 166.3 - 649.6)	24.22 - 77.48 (2.47 - 7.9, 138.3 - 442.4)
Shock absorber	Maximum length "L" mm (in)	475 (18.70)	475 (18.70)		475 (18.70)	475 (18.70)	548 (21.57)
	Stroke mm (in)	190 (7.48)	190 (7.48)		190 (7.48)	190 (7.48)	220 (8.66)
	Damping force [0.3 m/sec. (1.0 ft/sec.)] N (kg, lb)						
	Expansion	637 (65, 143)	785 (80, 176)		637 (65, 143)	785 (80, 176)	785 (80, 176)
	Compression	235 (24, 53)	294 (30, 66)		235 (24, 53)	294 (30, 66)	392 (40, 88)

SRA111

2WD

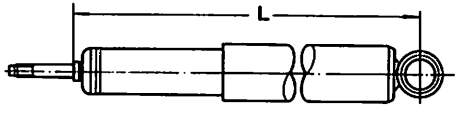

SRA112

4WD

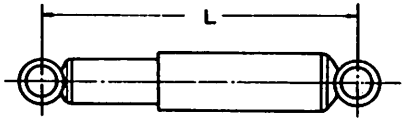

RA260

INSPECTION AND ADJUSTMENT

REAR AXLE

Single-tire

Unit: mm (in)

Total end play	0.02 - 0.15 (0.0008 - 0.0059)	
	Thickness	Part No.
Rear axle case end shim	0.05 (0.0020)	43086 P0110
	0.07 (0.0028)	43087 P0110
	0.10 (0.0039)	43088 P0110
	0.15 (0.0059)	43086 B9500
	0.20 (0.0079)	43089 P0110
	0.50 (0.0197)	43090 P0110

Double-tire

Wheel bearing axial play mm (in)	Less than 0.08 (0.0031)
Wheel bearing nut Tightening torque N·m (kg-m, ft-lb)	167 - 196 (17 - 20, 123 - 145)
Wheel bearing starting torque With new grease seal N·m (kg-cm, in-lb)	2.1 - 3.4 (21 - 35, 18 - 30)
With used grease seal N·m (kg-cm, in-lb)	1.2 - 2.5 (12 - 26, 10 - 23)
At wheel hub bolt With new grease seal N (kg, lb)	24.5 - 40.2 (2.5 - 4.1, 5.5 - 9.0)
With used grease seal N (kg, lb)	13.7 - 30.4 (1.4 - 3.1, 3.1 - 6.8)

TIGHTENING TORQUE

Unit	N·m	kg-m	ft-lb
Shock absorber upper end nut	30 - 40	3.1 - 4.1	22 - 30
Shock absorber lower end nut			
2WD	16 - 22	1.6 - 2.2	12 - 16
4WD	30 - 40	3.1 - 4.1	22 - 30
Rear spring clip bolt	88 - 98	9.0 - 10.0	65 - 72
Rear spring front pin nut	50 - 68	5.1 - 6.9	37 - 50
Spring front pin bolt to frame	16 - 21	1.6 - 2.1	12 - 15
Rear spring shackle	50 - 68	5.1 - 6.9	37 - 50
Bumper rubber fixing bolt	16 - 22	1.6 - 2.2	12 - 16
Drain plug			
Single-tire	59 - 98	6 - 10	43 - 72
Double-tire	59 - 98	6 - 10	43 - 72
Filler plug			
Single-tire H190	59 - 98	6 - 10	43 - 72
C200	39 - 59	4 - 6	29 - 43
Double-tire	39 - 59	4 - 6	29 - 43
Back plate fixing bolt			
Single-tire	53 - 63	5.4 - 6.4	39 - 46
Double-tire	84 - 108	8.6 - 11.0	62 - 80
Wheel bearing lock nut			
Single-tire	147 - 196	15 - 20	108 - 145
Double-tire	167 - 196	17 - 20	123 - 145
Wheel cylinder air breather	7 - 9	0.7 - 0.9	5.1 - 6.5
Differential gear carrier to axle case nut	17 - 24	1.7 - 2.4	12 - 17
Wheel nut			
Aluminum wheel	78 - 98	8.0 - 10.0	58 - 72
Single-tire	118 - 147	12 - 15	87 - 108
Double-tire	226 - 275	23 - 28	166 - 203
Axle shaft to wheel hub (Double-tire)	57 - 75	5.8 - 7.6	42 - 55
Brake tube flare nut	15 - 18	1.5 - 1.8	11 - 13
Propeller shaft to companion flange	34 - 44	3.5 - 4.5	25 - 33

TROUBLE DIAGNOSES AND CORRECTIONS

When rear axle and suspension is suspected of being noisy it is advisable to make a thorough test to determine whether the noise originates in the tires, road surface, exhaust, propeller shaft, engine, transmission, wheel bearings or suspension.

Noise which originates in other places can not be corrected by adjustment or replacement of parts in the rear axle and rear suspension.

In case of oil leak, first check if there is any damage or restriction in breather.

Condition	Probable cause	Corrective action
Noise	Loose wheel nuts.	Tighten the wheel nuts.
	Loose one or more securing bolts.	Tighten the bolts to the specified torque.
	Lack of lubricating oil or grease.	Lubricate as required.
	Damaged shock absorber.	Replace the shock absorber.
	Incorrect adjustment of rear axle shaft end play.	Adjust the rear axle shaft end play.
	Damaged or worn wheel bearing.	Replace wheel bearing.
	Worn spline portion of rear axle shaft.	Replace if necessary.
	Broken leaf spring.	Replace leaf spring.
	Loose journal, connections and so on.	Tighten to the given torque.
	Wheel and tire unbalance.	Balance wheel and tire.
	Damaged rubber parts such as leaf spring bushing and shock absorber mounting bushing.	Replace the required parts.
	Damaged propeller shaft journal.	Correct or replace.
Instability in driving	Loose wheel nuts.	Tighten to the given torque.
	Worn shock absorber.	Replace damaged shock absorber.
	Worn or broken leaf spring.	Replace leaf spring.
Oil leakage	Damaged or restricted air breather.	Clean or replace air breather.
	Damaged oil seal in rear axle case or differential carrier.	Replace the damaged oil seal.
	Oil leakage from between the differential carrier and axle case.	Tighten to the specified torque, or replace gasket.

SPECIAL SERVICE TOOLS

Tool number (Kent-Moore No.)	Tool name
GG94310000 (–)	Flare nut torque wrench 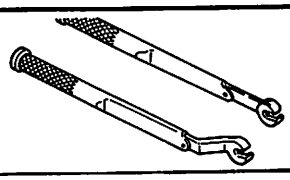
KV40101000 (J 25604-01)	Rear axle stand 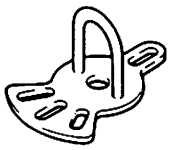
ST36230000 (J 25840-A)	Sliding hammer 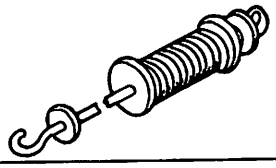
ST38020000 (–)	Bearing lock nut wrench 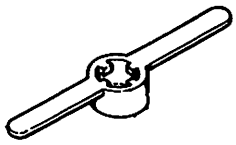
HT72480000 (J 25852-B)	Rear axle shaft bearing puller 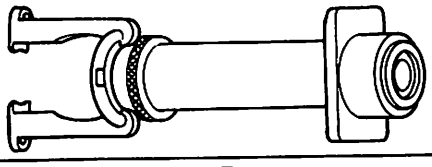
ST37840000 (–)	Rear axle shaft guide 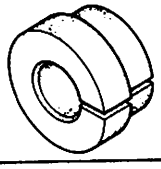
KV40104400 (–)	Rear axle bearing lock nut wrench (Double-tire) 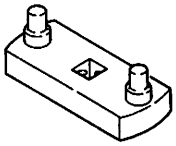

BRAKE SYSTEM

SECTION BR

CONTENTS

SERVICE BRAKE ..... BR- 2
Brake pedal ..... BR- 2
Master cylinder ..... BR- 3
Brake hydraulic line ..... BR- 4
Bleeding hydraulic system ..... BR- 4
Nissan load sensing valve (N.L.S.V.) ..... BR- 4
Front disc brake – CL 28VA – ..... BR- 5
Front disc rotor ..... BR- 8
Rear brake ..... BR- 8
Brake booster BR-10
Vacuum pump (SD 25 engine) BR-13
PARKING BRAKE BR-15
Parking brake BR-15
SERVICE DATA AND SPECIFICATIONS (S.D.S.) BR-16
General specifications BR-16
Inspection and adjustment BR-16
Tightening torque BR-18
TROUBLE DIAGNOSES AND CORRECTIONS BR-18
SPECIAL SERVICE TOOL BR-21

SERVICE BRAKE

BRAKE PEDAL

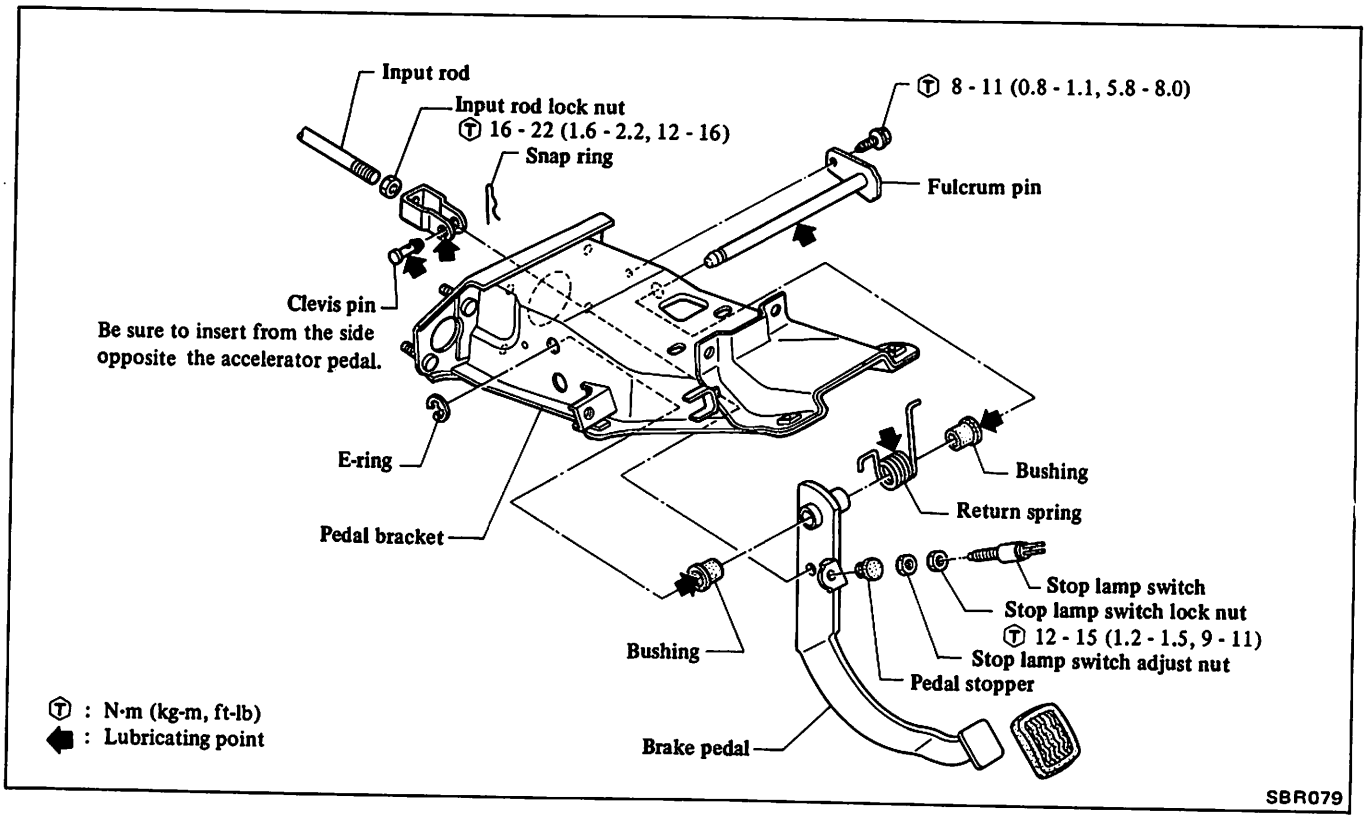

REMOVAL

1. Disconnect clevis.

When removing clevis pin, be careful not to damage clip of the clevis pin.

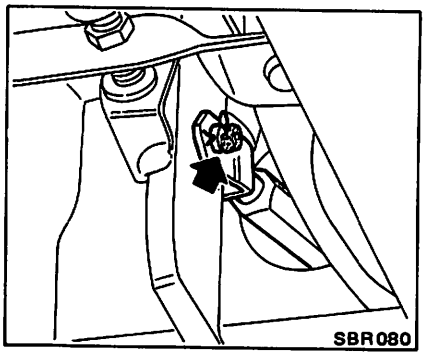

2. Remove fulcrum pin and pedal.

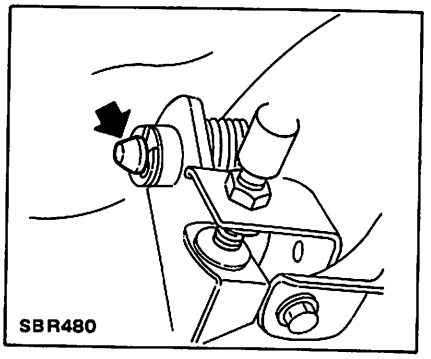

INSPECTION

Check brake pedal for the following items, servicing as necessary.

1. Check brake pedal for bend.
2. Check return spring for fatigue.
3. Check clevis for deformation and cracks at welded part.

INSTALLATION

1. Apply a coating of recommended multi-purpose grease to sliding portion and return coil spring.
2. Adjust brake pedal after installation is completed. Refer to Section MA for adjustment.

Ⓣ: Fulcrum pin fixing bolt
8 - 11 N·m
(0.8 - 1.1 kg-m,
5.8 - 8.0 ft-lb)
Input rod lock nut
16 - 22 N·m
(1.6 - 2.2 kg-m,
12 - 16 ft-lb)

MASTER CYLINDER

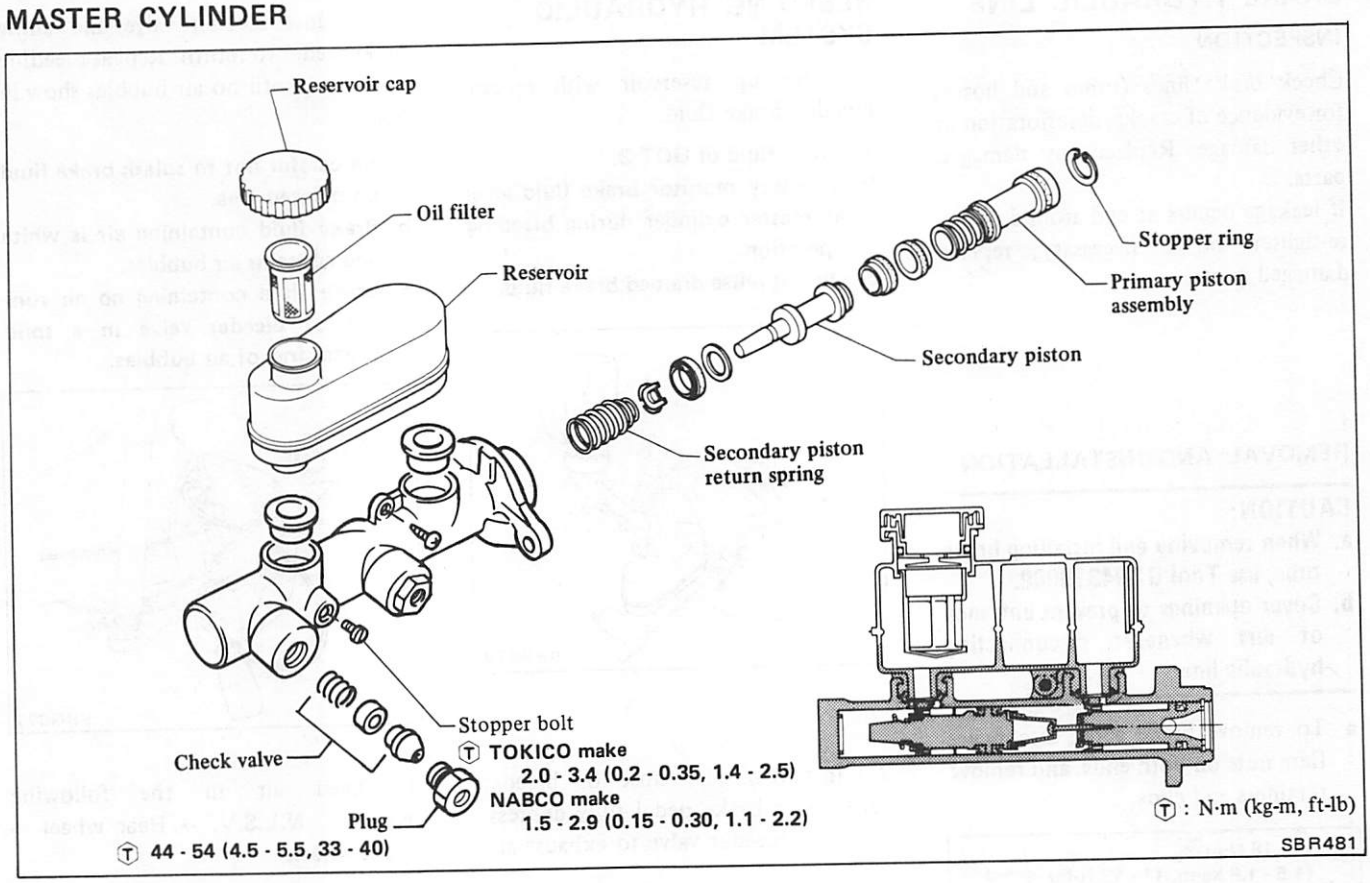

DISASSEMBLY

There is no interchangeability of repair kits or component parts between TOKICO and NABCO makes.

When replacing the repair kit or component parts, ascertain the brand of the brake master cylinder body. Be sure to use parts of the same make as the former ones.

1. Pry off stopper ring. Primary piston assembly can then be taken out.

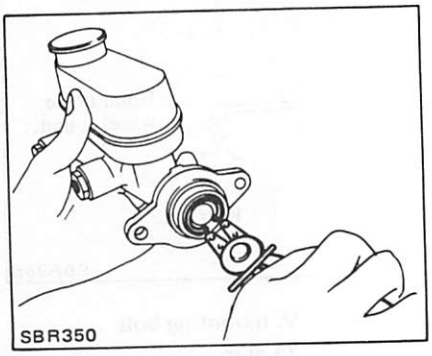

2. Remove stopper screw. Secondary piston assemblies can be taken out.

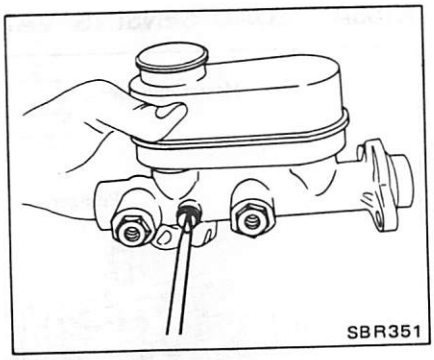

3. Remove reservoir if necessary.
4. Disassemble piston assembly.

Do not disassemble primary piston assembly.

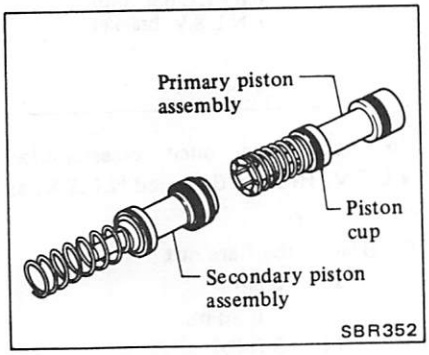

5. Remove piston cups and discard them.
6. Unscrew plugs for disassembling check valves.

INSPECTION

1. Clean all parts in brake fluid.
2. Check the parts for wear or damage.
3. Check piston-to-cylinder clearance.

ASSEMBLY

a. **Replace gaskets and packing with new ones.**
b. **Apply brake fluid or rubber grease to sliding contact surface of parts to facilitate assembly of master cylinder.**

Ⓣ : **Check valve plug**
44 - 54 N·m
(4.5 - 5.5 kg-m,
33 - 40 ft-lb)

c. **Use extremely care that each check valve is installed properly on primary and secondary sides.**

BRAKE HYDRAULIC LINE

INSPECTION

Check brake lines (tubes and hoses) for evidence of cracks, deterioration or other damage. Replace any damaged parts.
If leakage occurs at end around joints, re-tighten or, if necessary, replace damaged parts.

REMOVAL AND INSTALLATION

CAUTION:
a. When removing and installing brake tube, use Tool GG94310000.
b. Cover openings to prevent entrance of dirt whenever disconnecting hydraulic line.

- To remove brake tube, disconnect flare nuts on both ends, and remove retainers and clips.

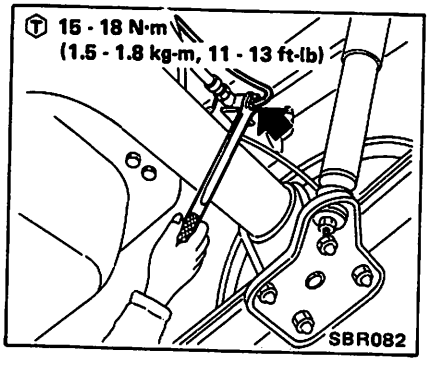

- To remove brake hose, first remove flare nut securing brake tube to hose, then withdraw lock spring. Next disconnect the other side. Do not twist brake hose.

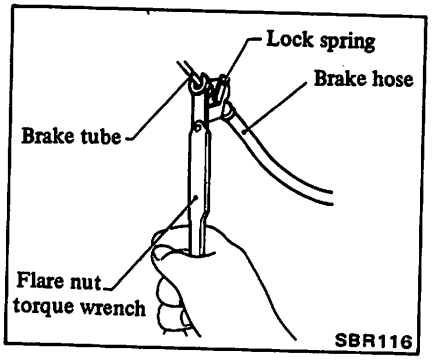

- After installation is completed, bleed brake system. Refer to Bleeding Hydraulic System.

BLEEDING HYDRAULIC SYSTEM

1. Top up reservoir with recommended brake fluid.

a. Brake fluid of DOT 3.
b. Carefully monitor brake fluid level at master cylinder during bleeding operation.
c. Do not reuse drained brake fluid.

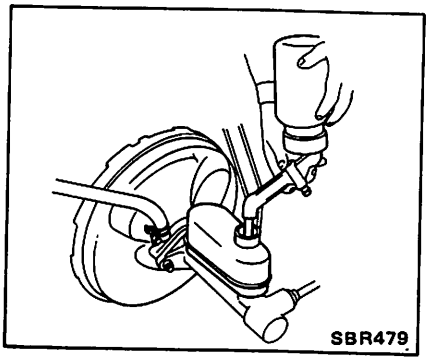

2. Install bleeder hose on bleeder valve. With brake pedal fully depressed, open bleeder valve to exhaust air.

Then close bleeder valve and allow brake pedal to return. Repeat bleeding operation until no air bubbles show in hose.

a. Be careful not to splash brake fluid on painted area.
b. Brake fluid containing air is white and contains air bubbles.
c. Brake fluid containing no air runs out of bleeder valve in a solid stream free of air bubbles.

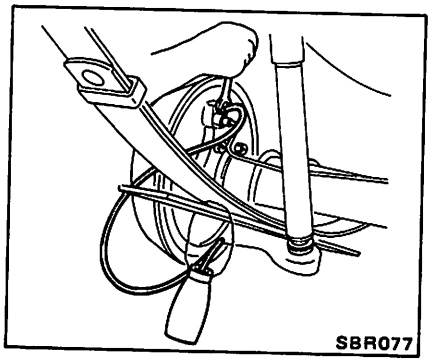

3. Bleed air in the following sequence. **N.L.S.V. → Rear wheel → Front wheel.**

NISSAN LOAD SENSING VALVE (N.L.S.V.)

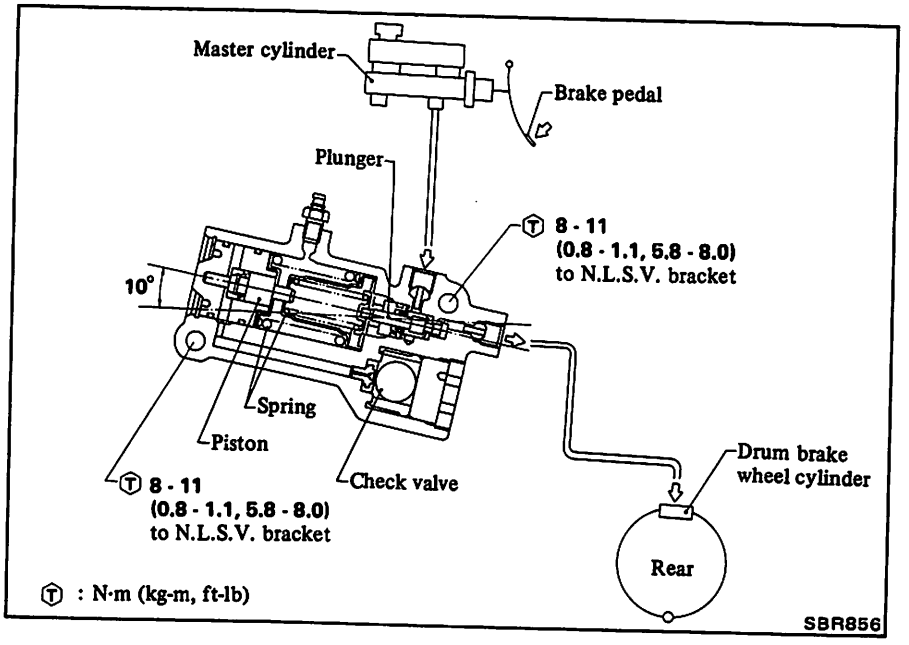

Do not reuse once disassembled N.L.S.V. Replace damaged N.L.S.V. as an assembly.

Ⓣ : Brake tube flare nut
15 - 18 N·m
(1.5 - 1.8 kg-m,
11 - 13 ft-lb)

N.L.S.V. mounting bolt
8 - 11 N·m
(0.8 - 1.1 kg-m,
5.8 - 8.0 ft-lb)

FRONT DISC BRAKE –CL28VA–

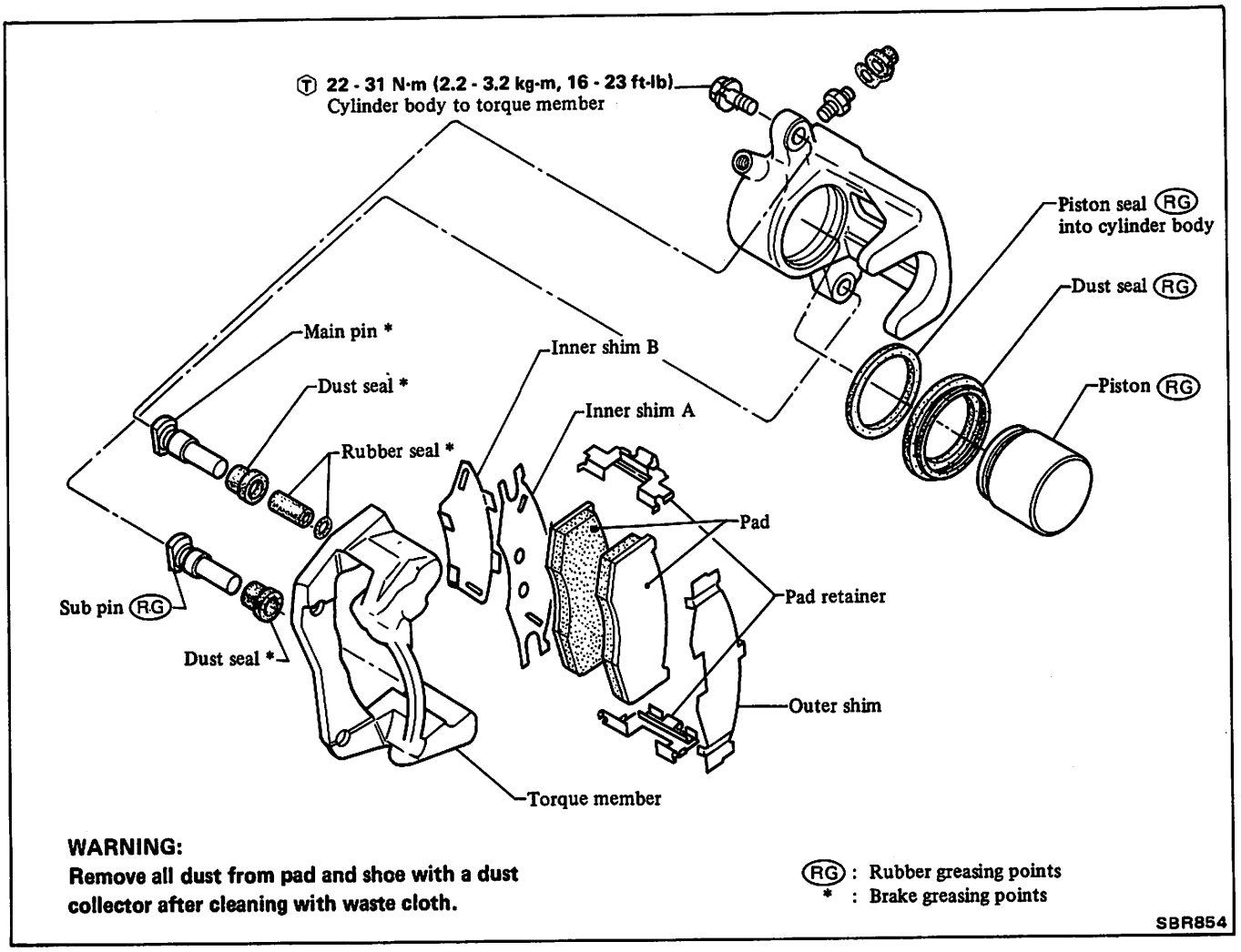

PAD REPLACEMENT

Removal

1. Jack up front of car and **support it on the safety stands.**

   Refer to Section GI for lifting points and towing.

2. Remove lower pin bolt (Sub pin).

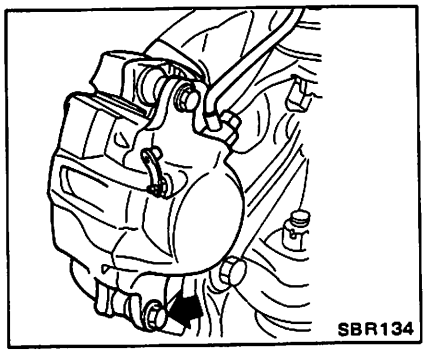

3. Open cylinder body upward. Remove pad retainer, inner and outer shims and pads.

CAUTION:
After removing pads, do not depress brake pedal, or piston will jump out.

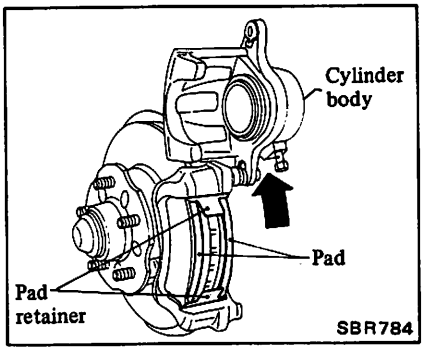

Installation

1. Coat the following points **with recommended brake grease.**

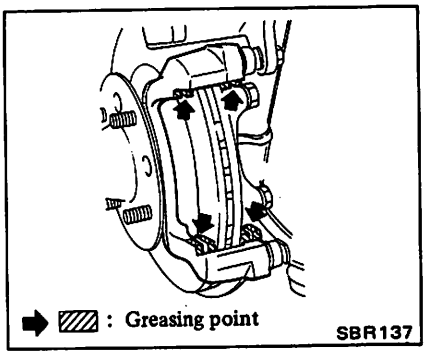

2. Install inner pad. **Pull cylinder body to outer side.**

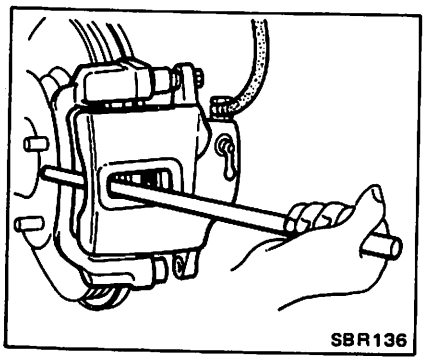

3. Install outer pad and pad retainer.

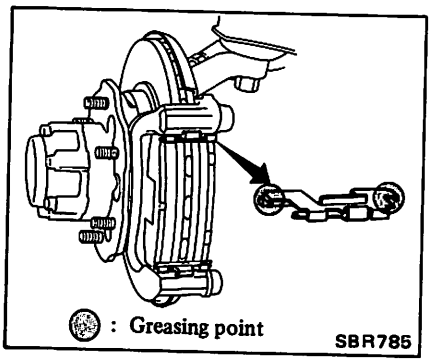

4. Fix cylinder body.

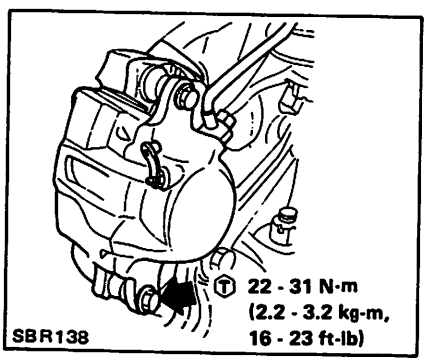

REMOVAL AND INSTALLATION

1. Disconnect brake hose.

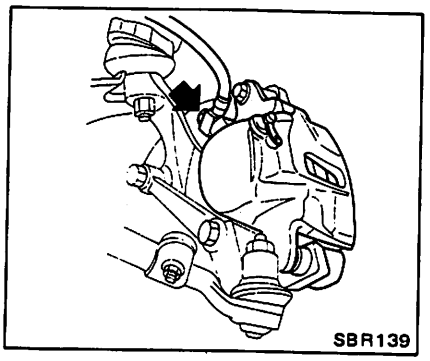

2. Remove caliper assembly.

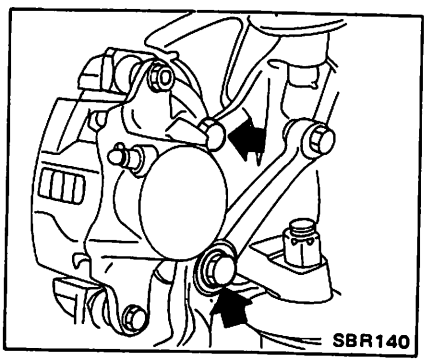

3. Install caliper assembly in the reverse order of removal.

DISASSEMBLY

1. Remove main and sub pins. Separate cylinder body and torque member.

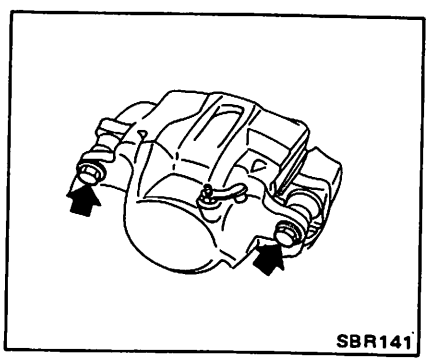

2. Remove dust cover.

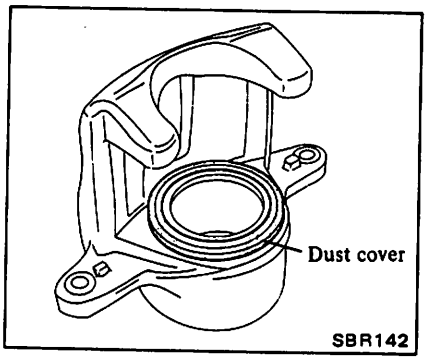

3. Force out piston by feeding compressed air gradually.

WARNING:
Gradually increase air pressure so that piston does not pop out.

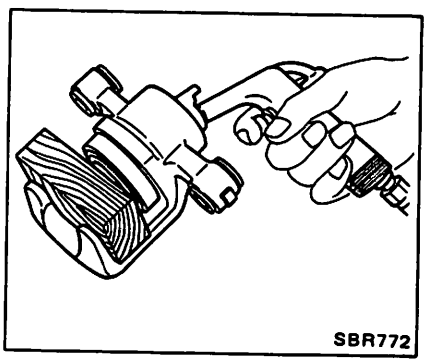

4. Remove piston seal.

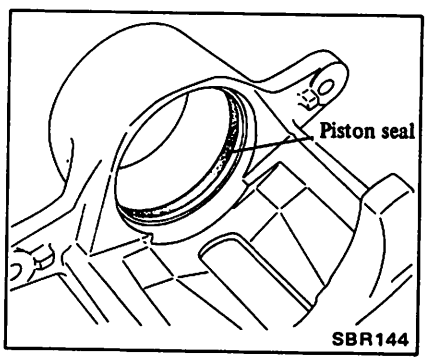

5. Draw out pads and pad retainers from torque member.

6. After installing, operate air bleed, if necessary. **Refer to Bleeding Hydraulic System.**

INSPECTION

Clean all parts and check as follows:

CAUTION:
Use brake fluid to clean. Never use mineral oil.

Cylinder body

1. Check inside surface of cylinder for score, rust, wear, damage or presence of foreign substances. If any surface damage is detected, replace cylinder body.
2. Minor damage from rust of foreign substances may be eliminated by polishing surface with a fine emery cloth. If damage is major, cylinder assembly must be replaced.

Torque member

Check for wear, cracks or other damage. Replace if any damage is detected.

Piston

Check piston for score, rust, wear, damage or presence of foreign substances. Replace if any damage is detected.

CAUTION:
Piston sliding surface is plated. Do not polish with emery paper even if rust or foreign matter is sticked on sliding surface.

Piston seal and dust seal

Replace piston seal and dust seal at each disassembly.

Main pin, sub pin and rubber bushing

Check for wear, cracks or other damage. Replace if any fault is detected.

ASSEMBLY

1. Install piston seal.

Apply rubber grease or brake fluid to seal grooves and seals.

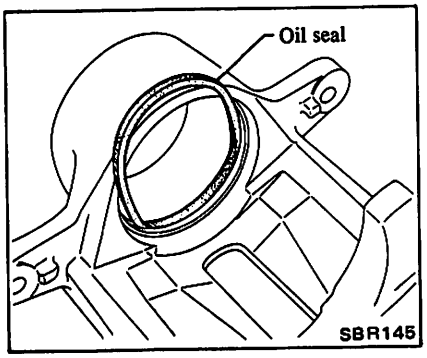

2. Apply rubber grease or brake fluid to sliding portions and inside of dust seal.

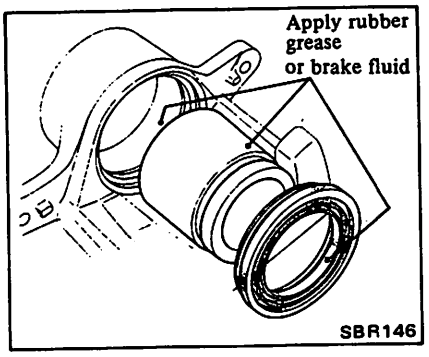

3. With dust seal fitted to piston, **insert dust seal into groove on cylinder body and install piston.**

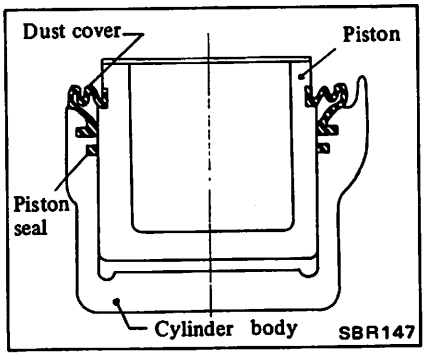

4. Apply a coat of recommended brake grease to main pin rubber bushing and to sub pin.

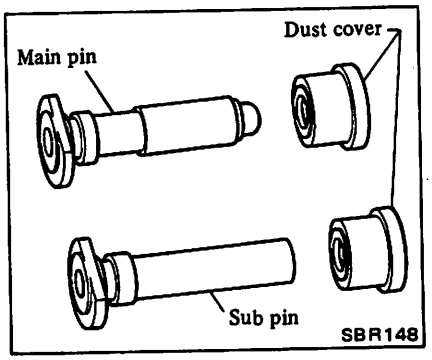

5. Install pads and tighten pin bolts.

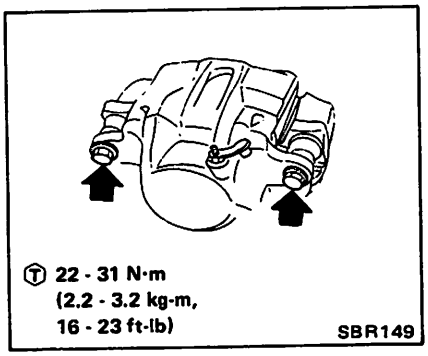

FRONT DISC ROTOR

REMOVAL AND INSTALLATION

Refer to Section FA.

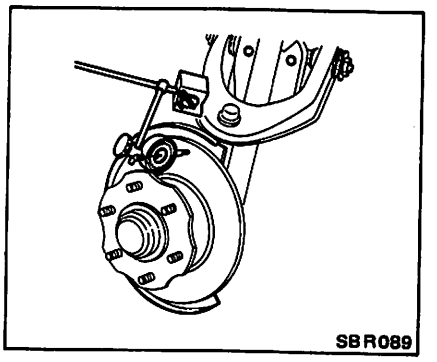

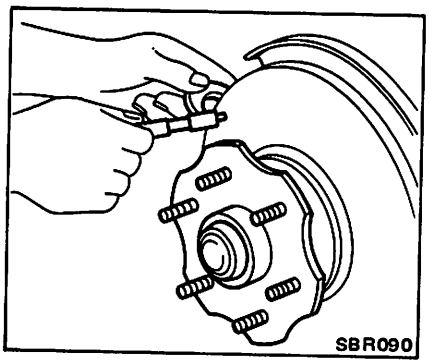

INSPECTION

Check the following items and, if necessary, replace.

1. Sliding surface.
   If there are cracks or considerable chips, replace.
2. Runout.
   Rotor repair limit:
   Maximum runout
   (Total indicator reading at center of rotor pad contact surface)
   0.07 mm (0.0028 in)
3. parallelism.
   Rotor repair limit:
   Maximum parallelism
   (Circumferential direction)
   0.02 mm (0.0008 in)

Standard thickness:
22.0 mm (0.866 in)
Rotor repair limit:
Minimum thickness
20.0 mm (0.787 in)

REAR BRAKE

DS25B and DS22

Anti-rattle pin
Ⓣ 5.3 - 7.3 (0.54 - 0.74, 3.9 - 5.4)
Back plate
Extension link
Pin
Bleeder cap
Bleeder screw Ⓣ 7 - 9 (0.7 - 0.9, 5.1 - 6.5)
Wheel cylinder housing
Piston
Piston head
Dust cover
Apply rubber grease to dust cover (Both sides)
Web washer
Anti-rattle spring
Retainer
Shoe guide plate
Return spring
Adjuster cable
Cable guide
Anchor pin bracket
Ⓣ 50 - 68 (5.1 - 6.9, 37 - 50)
Ⓣ 84 - 108
(8.6 - 11.0, 62 - 80)
Spring
Toggle lever
Shoe
Minimum lining thickness
1.5 mm (0.059 in)
Spring seat
Return spring
Adjusting lever
Return spring
Adjuster
Front of vehicle

Lining and drum wear limit:
Refer to S.D.S.

Ⓣ : N·m (kg-m, ft-lb)
◆ : Lubricating point (Brake grease)

SBR694

SHOE REPLACEMENT

1. Remove wheel and drum. If drum is hard to remove, screw bolt to drive drum out.

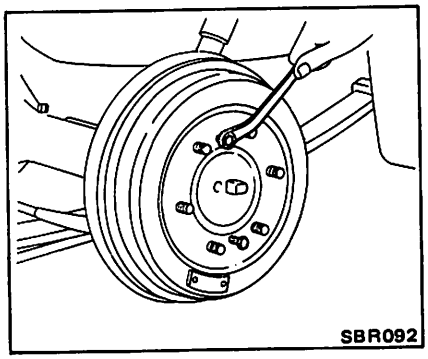

2. Remove anti-rattle spring and pin.

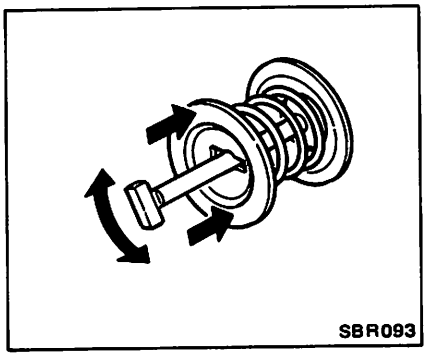

Remove return spring (lower side) open brake shoe outward, remove two return springs (upper side), and then remove extension link.

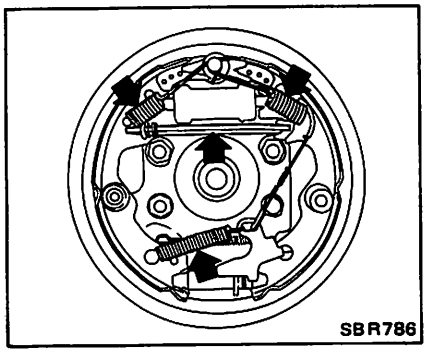

4. Remove shoe assemblies.

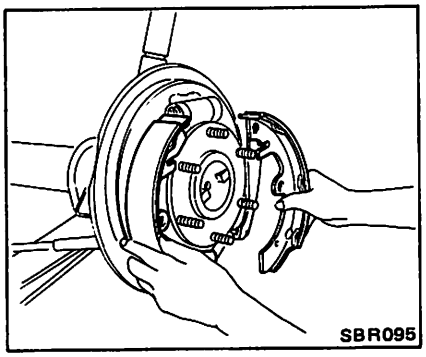

5. Separate secondary shoe from toggle lever by removing pin.

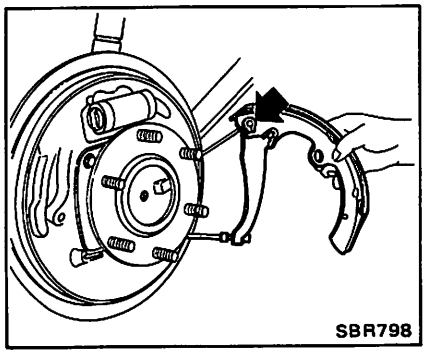

6. Apply brake grease to the following points.
- Brake shoe installing grooves of adjuster and wheel cylinder.
- Extension link installing grooves.
- Lower surface of spring seat.
- Contact surfaces between brake disc and brake shoe assembly (six places).

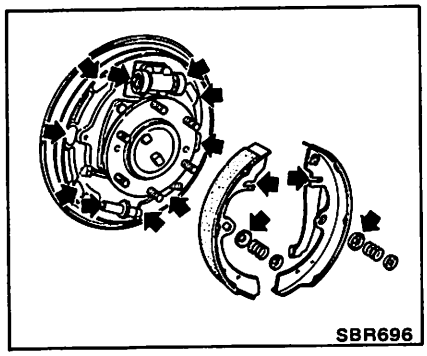

7. After installation is completed, adjust shoe-to-drum clearance. Measure the brake drum inside diameter and diameter of the brake shoes. Turn the adjuster so that the difference between the diameters is the correct shoe clearance.

Shoe clearance:
0.4 - 0.6 mm
(0.016 - 0.024 in)

8. Adjust shoe-to-drum clearance by operating parking brake several times.

WHEEL CYLINDER

Removal

1. Remove anti-rattle pin.
2. Disconnect brake tube.
3. Then remove wheel cylinder.

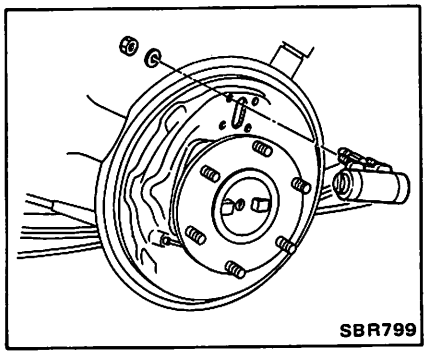

Disassembly

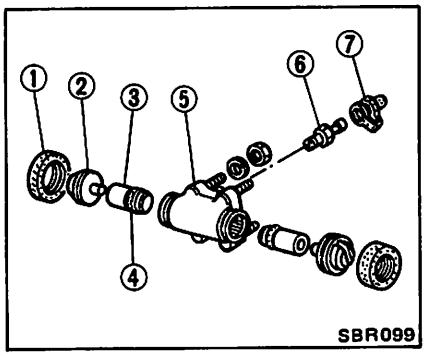

1 Dust cover
2 Piston head
3 Piston
4 Piston cup
5 Wheel cylinder housing
6 Bleeder screw
7 Bleeder cap

Inspection

1. Replace any cylinder to piston which is scratched, scored or worn on its sliding contact surface.
2. Replace piston cup which is worn or damaged.
3. Replace if contacting face of cylinder and shoe is worn locally or in step.
4. Replace damaged dust cover, fatigued piston spring or damaged threaded parts.
5. Replace tube connector which is worn on its threaded portion.

Assembly

a. Apply a coating of brake fluid to piston cup at assembly.
b. The brake wheel cylinder is available in both NABCO make and TOKICO make. There is no interchangeability of repair kits or component parts between NABCO and TOKICO makes.
When replacing the repair kit or component parts, ascertain the brand of the brake wheel cylinder body. Be sure to use parts of the same make as the former ones.

Installation

Ⓣ : Wheel cylinder fixing bolt
5.3 - 7.3 N·m
(0.54 - 0.74 kg-m,
3.9 - 5.4 ft-lb)

BRAKE DRUM

Inspection

1. Check inner diameter of brake drum to make sure it is properly round and tapered. If it is not, repair or replace brake drum.

- Single-tire model

Standard diameter:
254.0 mm (10.00 in)
Maximum inner diameter:
255.5 mm (10.06 in)
Out-of-roundness (ellipticity):
Less than 0.03 mm (0.0012 in)
Radial run-out
(total indicator reading):
Less than 0.05 mm (0.0020 in)
Taper [measured at a point 45 mm (1.77 in) from inlet] :
Less than 0.04 mm (0.0016 in)

- Double-tire model

Standard diameter:
220 mm (8.66 in)
Maximum inner diameter:
221.5 mm (8.72 in)
Out-of-roundness (ellipticity)
Less than 0.03 mm (0.0012 in)
Radial run-out
(total indicator reading):
Less than 0.05 mm (0.0020 in)
Taper [measured at a point 60 mm (2.36 in) from inlet].
Less than 0.04 mm (0.0016 in)

2. Contact surface with which linings come into contact should be finished to such an extent that it is ground by a No. 120 to 150 sandpaper.
3. Using a drum racer, finish brake drum by machining if it shows any sign of score marks, partial or stepped wear on its contact surface.

After brake drum is completely reconditioned or replaced, check drum and shoes for proper contact pattern.

BRAKE BOOSTER

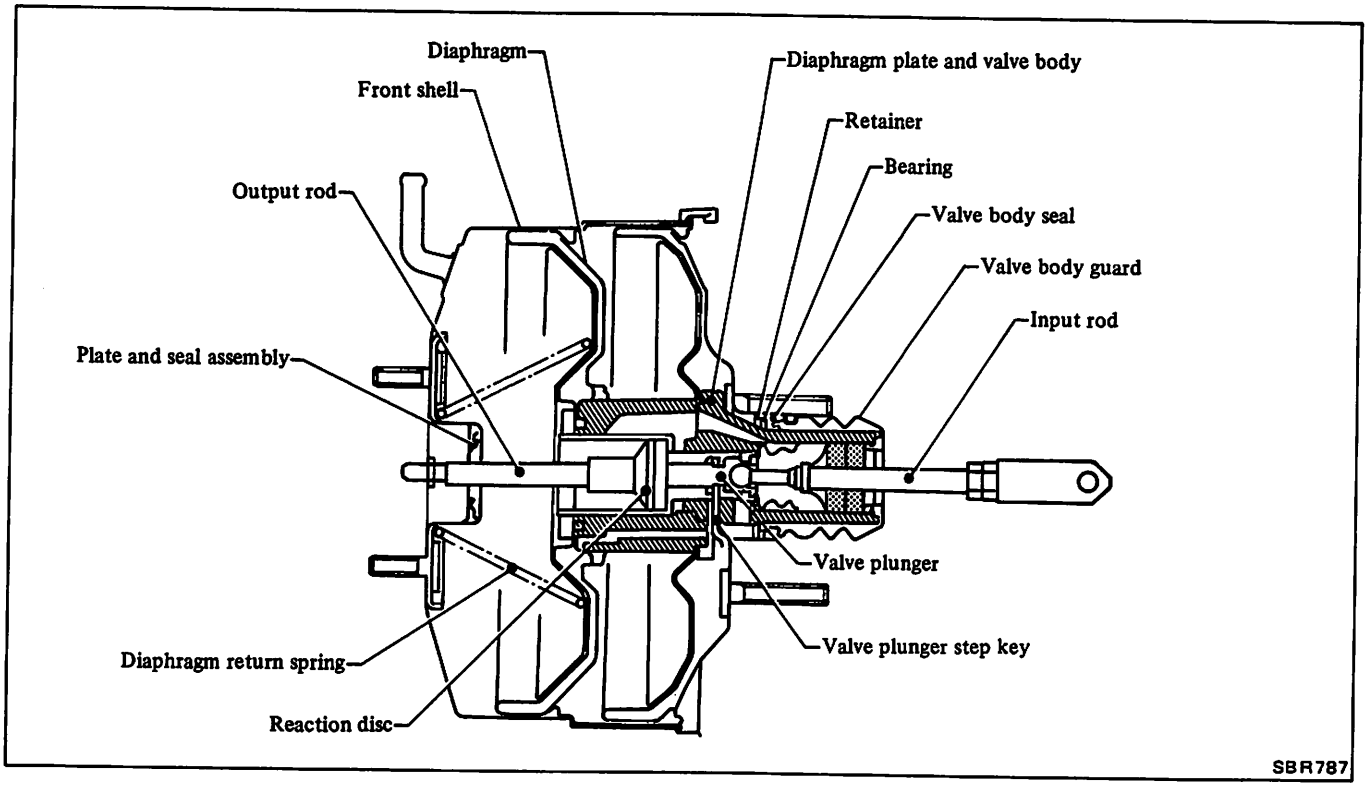

INSPECTION

Airtight test (No load)

1. Connect a vacuum gauge between check valve and brake booster.

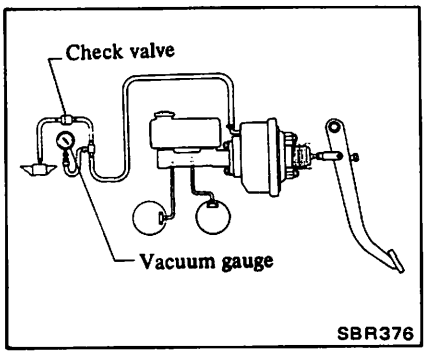

2. Start engine and increase engine speed. Stop engine when vacuum is 66.7 kPa (500 mmHg, 19.69 inHg).

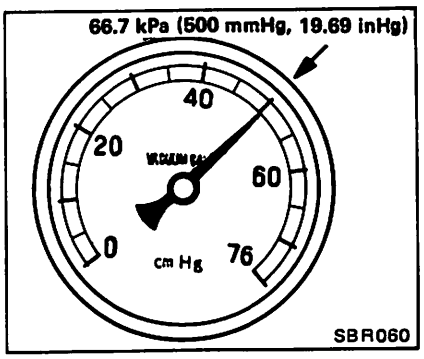

3. If vacuum pressure drops more than the specified value, correct the cause in accordance with the following chart.

Maximum vacuum leakage (15 seconds after engine is stopped):
3.3 kPa (25 mmHg, 0.98 inHg)

Probable cause	Corrective action
1. Air leakage at check valve.	Replace check valve.
2. Air leakage at output rod seal.	Replace brake booster as an assembly.
3. Air leakage between valve body and seal.	
4. Air leakage at valve plunger seat.	
5. Damaged piping or joints.	Repair or replace.

Airtight test (Under load)

With brake pedal fully depressed, perform an airtight test following the same procedures as used in airtight test under no load.

Maximum vacuum leakage (15 seconds after engine is stopped):
3.3 kPa (25 mmHg, 0.98 inHg)

Probable cause	Corrective action
1. Air leakage at check valve.	Replace check valve.
2. Damaged diaphragm.	Replace brake booster as an assembly.
3. Reaction disc dropped off (Brake booster).	
4. Air leakage at poppet assembly seat and valve body.	

Check valve

1. Remove check valve.

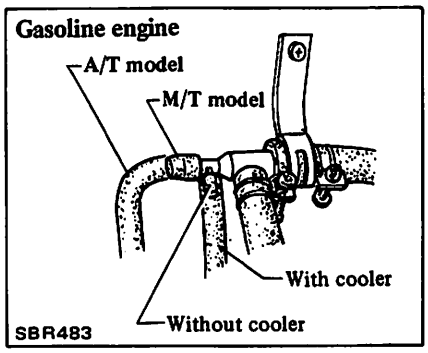

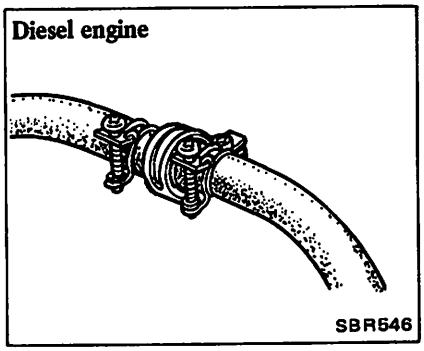

2. Apply a vacuum pressure of 26.7 kPa (200 mmHg, 7.87 inHg) to port of check valve on brake booster side.

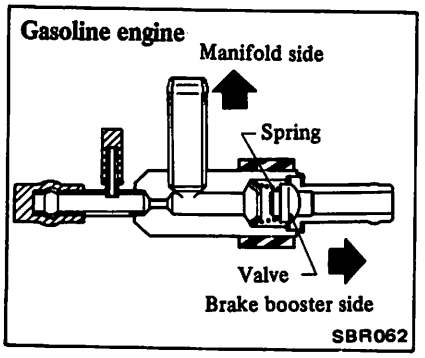

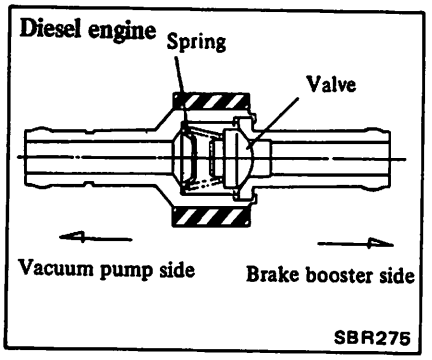

3. If vacuum pressure drops below the specified value in 15 seconds, replace check valve with a new one.

Maximum vacuum leakage of check valve:
1.3 kPa
(10 mmHg, 0.39 inHg)

4. When pressure is applied to the brake booster side of check valve and valve does not open, replace check valve with a new one.

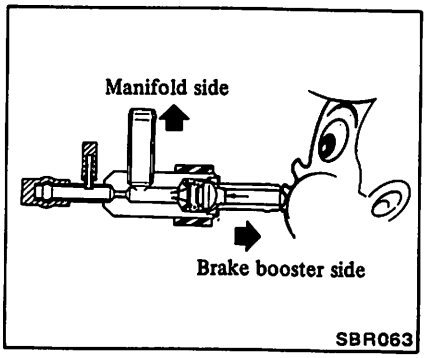

Operating test

1. Connect an oil pressure gauge to brake line, at connection on master cylinder.
2. Install a pedal force gauge on brake pedal.
3. Start engine, and increase engine speed until a vacuum pressure of 66.7 kPa (500 mmHg, 19.69 inHg) is registered on vacuum pressure gauge. With a steady vacuum pressure of 66.7 kPa (500 mmHg, 19.69 inHg), measure oil pressure with respect to each pedal operating force.

Relationship between oil pressure and pedal operating force is shown in S.D.S. Also check brake line for evidence of fluid leakage.

Determine whether source of problem is in brake booster or check valve. Before you reach a final conclusion, always inspect check valve first.

REMOVAL

To remove brake booster, detach the following points.

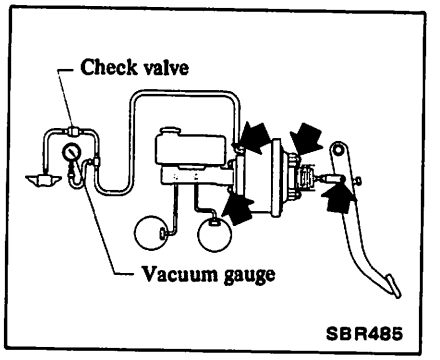

ADJUSTMENT

Adjust pedal free height with brake booster input rod. Then tighten lock nut.

Be sure that tip of input rod stays inside.

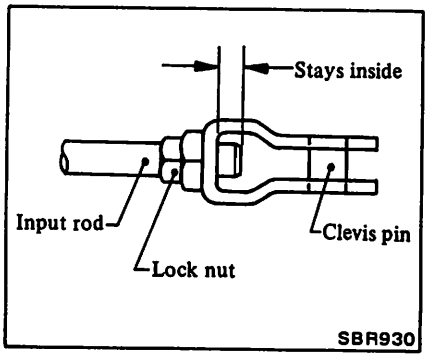

VACUUM PUMP (SD25 engine)

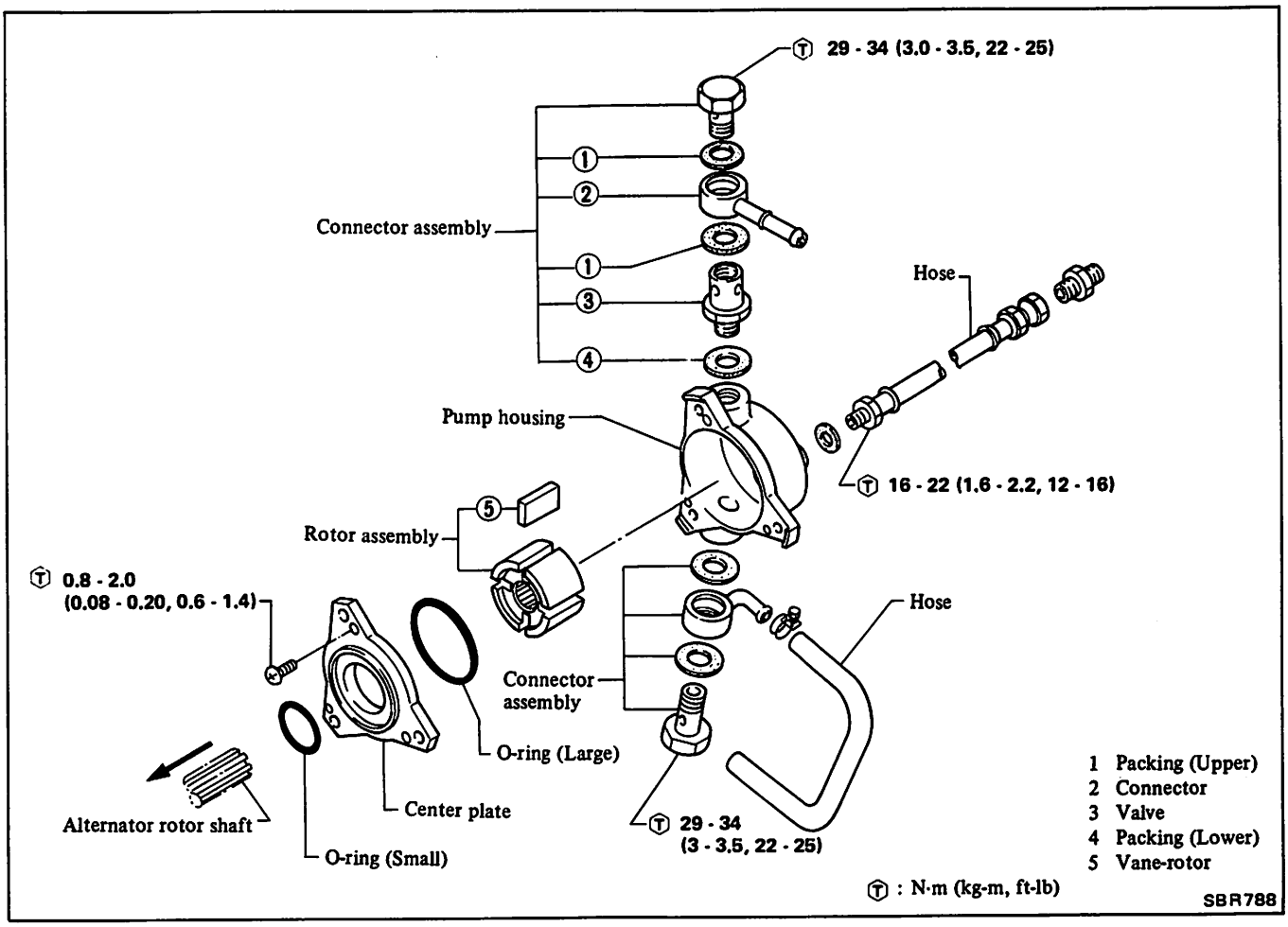

REMOVAL AND INSTALLATION

1. Drain oil from vacuum pump.

Manually rotate fan belt clockwise to discharge any oil which may have accumulated in vacuum pump.

2. Remove vacuum pump assembly from alternator.

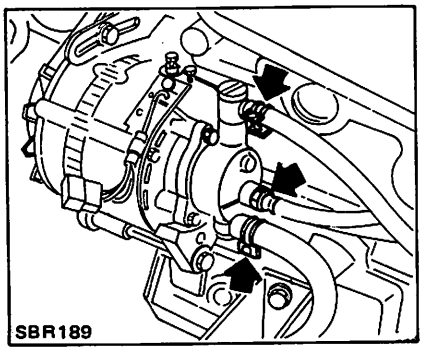

3. Separate center plate and vacuum pump housing.

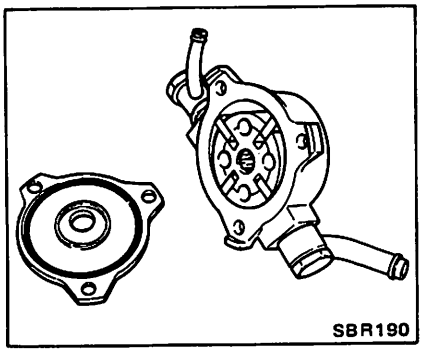

4. Disassemble rotor, vane and vacuum pump housing.

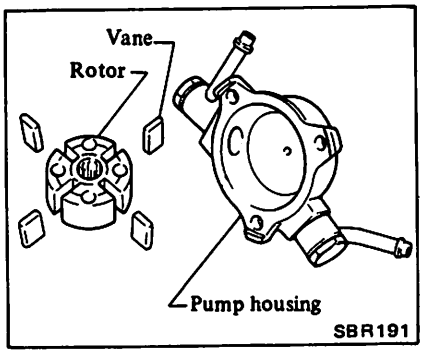

5. Disconnect valve assembly.

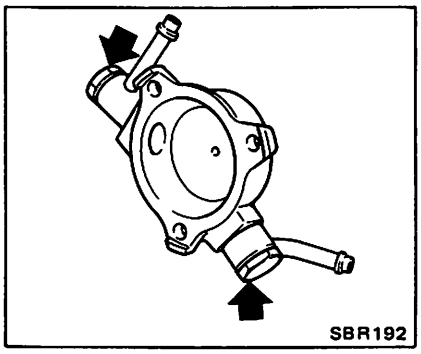

6. Install vacuum pump in the reverse order of removal.
- When inserting vane, take care that the vane does not get on the vane guide of the center plate.
- Install vane so that its round surface faces the pump housing.

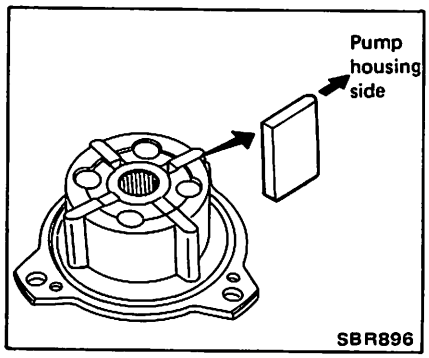

- After installing vacuum pump assembly on alternator, pour 5 mℓ (0.2 US fl oz, 0.2 Imp fl oz) of engine oil into vacuum pump assembly. Then make sure that the pulley of the alternator can be smoothly rotated by hand.

INSPECTION

Clean all parts and check them as follows:

- Check for wear or scratches on mating surfaces of rotor and vacuum pump housing and of rotor and center plate. If any wear or scratches are noted, replace those parts.
- Check for wear or scratches on vanes. If necessary, replace.

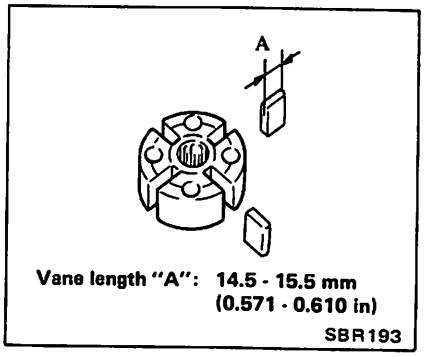

Vane length "A": 14.5 - 15.5 mm (0.571 - 0.610 in)

- Check inner wall of vacuum pump housing for wear. If necessary, replace.

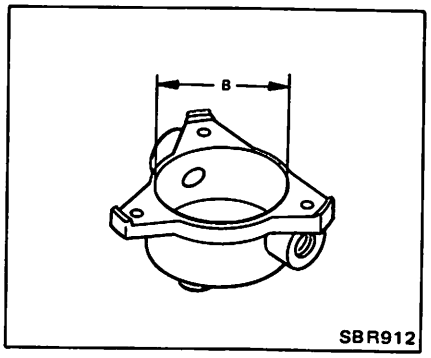

Vacuum pump housing inner diameter "B":
60.0 - 60.1 mm
(2.362 - 2.366 in)

- Check rotor shaft opening and serrates end of rotor shaft for wear. If necessary, replace.
- Check valve locations and copper washers for bending or deformity.
- Check valve operation. Check if the valve operates smoothly when pushed lightly with a screwdriver or other instrument. Replace if necessary.

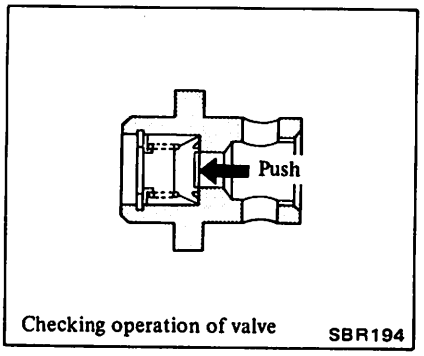

Checking operation of valve

Check air leakage by providing 98 to 490 kPa (1 to 5 kg/cm^2, 14 to 71 psi) air pressure.
Replace if necessary.

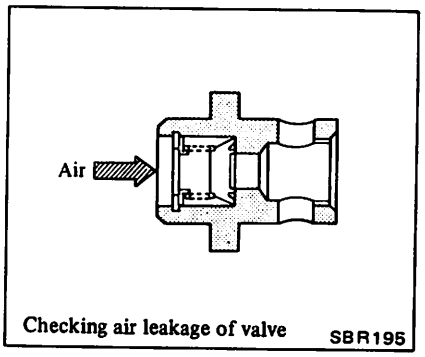

Checking air leakage of valve

PARKING BRAKE

PARKING BRAKE

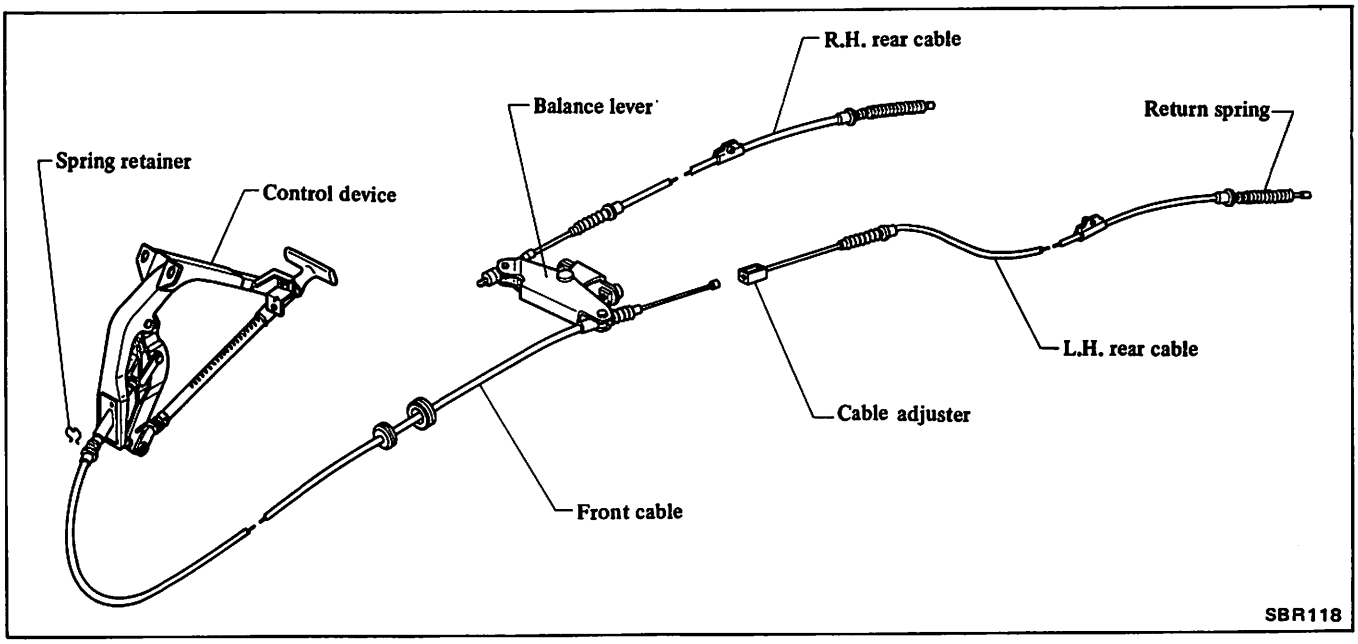

REMOVAL

Control stem

Disconnect harness connector. Disconnect parking brake cable from control lever. Remove bolts and screw securing control bracket. Remove spring retainer in engine compartment. Then remove control stem assembly.

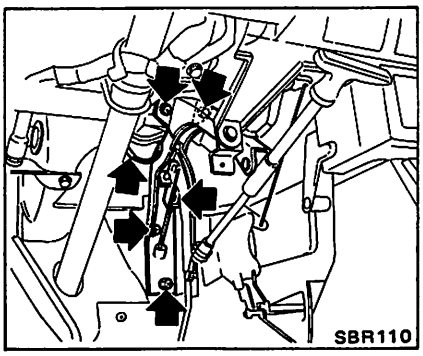

SERVICE DATA AND SPECIFICATIONS (S.D.S.)

GENERAL SPECIFICATIONS

Item \ Model	Single-tire 2WD	Single-tire 4WD	Double-tire 2WD
Type			
Front	Disc-CL28VA		
Rear	Drum-DS25B		Drum-DS22
Pad or lining dimension Width x thickness x length Front mm (in)	43 x 11 x 129.0 (1.69 x 0.43 x 5.08)		
Rear mm (in)	45 x 3.9 x 265.9 (1.77 x 0.154 x 10.47)		60.0 x 4.6 x 230.3 (2.362 x 0.181 x 9.07)
Rotor outer diameter or drum inner diameter Front mm (in)	250 (9.84)	267 (10.51)	250 (9.84)
Rear mm (in)	254 (10.00)	254 (10.00)	220 (8.66)
Caliper or wheel cylinder inner diamter Front mm (in)	60.6 (2.386)		
Rear mm (in)	17.46 (11/16)	15.88 (5/8)	17.46 (11/16)
Master cylinder inner diameter mm (in)	23.81 (15/16)		
Brake booster Type	Master-Vac (M80T)		
Diaphragm diameter mm (in)	Primary 205 (8.07) Secondary 201 (7.91)		
Load sensing valve Reducing ratio	0.1		

INSPECTION AND ADJUSTMENT

BRAKE PEDAL

Unit: mm (in)

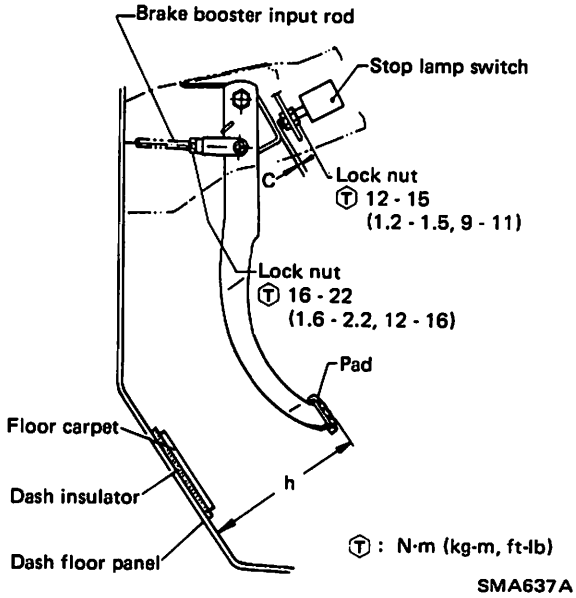

SMA637A

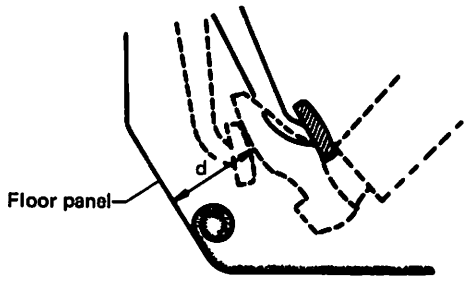

SMA654A

Clearance "C"	0.3 - 1.0 (0.012 - 0.039)
Depressed height "d"	More than 85 (3.35)
Pedal height "h"	176 - 186 (6.93 - 7.32)

PARKING BRAKE

Pulling force	N (kg, lb)	196 (20, 44)
Number of notches		13 - 16

BRAKE BOOSTER

Maximum vacuum leakage (15 seconds after engine is stopped) kPa (mmHg, inHg)	3.3 (25, 0.98)

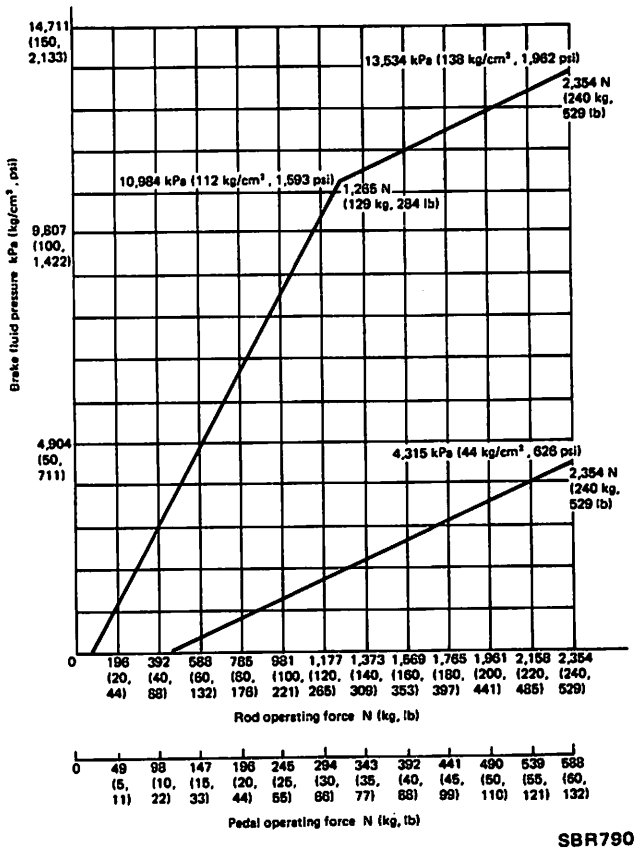

SBR790

CHECK VALVE

Maximum vacuum leakage [15 seconds after 26.7 kPa (200 mmHg, 7.87 inHg) pressure is applied] kPa (mmHg, inHg)	1.3 (10, 0.39)

VACUUM PUMP

Unit: mm (in)

Housing inner diameter	60.0 - 60.1 (2.362 - 2.366)
Vane height	14.5 - 15.5 (0.571 - 0.610)

FRONT DISC BRAKE

Unit: mm (in)

Pad wear limit	Minimum thickness	2.0 (0.079)
Rotor repair limit	Maximum runout	0.07 (0.0028)
	Maximum parallelism	0.02 (0.0008)
	Standard thickness	22.0 (0.866)
	Minimum thickness	20.0 (0.787)

REAR BRAKE

Unit: mm (in)

	Single-tire (DS25B)	Double tire (DS22)
Lining wear limit (Minimum thickness)	1.5 (0.059)	1.5 (0.059)
Drum wear limit		
Standard inner diameter	254.0 (10.00)	220.0 (8.66)
Maximum inner diameter	255.5 (10.06)	221.5 (8.72)
Radial runout	Less than 0.05 (0.0020)	Less than 0.05 (0.0020)
Out-of-roundness	Less than 0.03 (0.0012)	Less than 0.03 (0.0012)
Taper	Less than 0.04 (0.0016) [Measured at point 45 mm (1.77 in) from inlet]	Less than 0.04 (0.0016) [Measured at point 60 mm (2.36 in) from inlet]
Shoe-to-drum clearance	0.4 - 0.6 (0.016 - 0.024)	0.4 - 0.6 (0.016 - 0.024)

TIGHTENING TORQUE

Unit	N·m	kg-m	ft-lb
Brake tube flare nut	15 - 18	1.5 - 1.8	11 - 13
Brake hose connector	17 - 20	1.7 - 2.0	12 - 14
Wheel cylinder air bleeder	7 - 9	0.7 - 0.9	5.1 - 6.5
Stop lamp switch lock nut	12 - 15	1.2 - 1.5	9 - 11
Fulcrum pin fixing bolt	8 - 11	0.8 - 1.1	5.8 - 8.0
Input rod lock nut	16 - 22	1.6 - 2.2	12 - 16
Brake booster-to-brake booster spacer	8 - 11	0.8 - 1.1	5.8 - 8.0
Master cylinder-to-brake booster	8 - 11	0.8 - 1.1	5.8 - 8.0
Stopper bolt in master cylinder			
TOKICO make	2.0 - 3.4	0.2 - 0.35	1.4 - 2.5
NABCO make	1.5 - 2.9	0.15 - 0.30	1.1 - 2.2
Master cylinder check valve plug	44 - 54	4.5 - 5.5	33 - 40
N.L.S.V. mounting bolt	8 - 11	0.8 - 1.1	5.8 - 8.0
Front disc caliper fixing bolt	72 - 97	7.3 - 9.9	53 - 72
Torque member-to-cylinder body	22 - 31	2.2 - 3.2	16 - 23
Front disc rotor fixing bolt	49 - 69	5.0 - 7.0	36 - 51
3-way connector fixing bolt	3.2 - 4.2	0.33 - 0.43	2.4 - 3.1
Rear drum brake back plate	84 - 108	8.6 - 11.0	62 - 80
Rear wheel cylinder fixing bolt	5.3 - 7.3	0.54 - 0.74	3.9 - 5.4
Rear drum anchor pin bracket fixing bolt	50 - 68	5.1 - 6.9	37 - 50
Wheel nut			
Single-tire	118 - 147	12 - 15	87 - 108
Double-tire	226 - 275	23 - 28	166 - 203
Aluminum wheel	78 - 98	8 - 10	58 - 72

Unit	N·m	kg-m	ft-lb
Vacuum pump			
Connector fixing bolt	29 - 34	3.0 - 3.5	22 - 25
Center plate to pump housing	0.8 - 2.0	0.08 - 0.20	0.6 - 1.4
Hose to pump housing	16 - 22	1.6 - 2.2	12 - 16

TROUBLE DIAGNOSES AND CORRECTIONS

Condition	Probable cause	Corrective action
Excessive pedal travel	Low brake fluid level or empty master cylinder reservoir.	Fill and bleed as necessary. Test for source of leakage by examining all lines, connections and wheel cylinder.
	Leakage in master cylinder.	Overhaul master cylinder.
	Deteriorated check valve.	Replace check valve and bleed system.
	Air in system.	Bleed system.
	Improper brake adjustment.	Adjust shoe-to-drum clearance.
	Excessive lateral play on disc caused by loose or worn wheel bearings or steering parts.	Replace or adjust damaged parts.

Condition	Probable cause	Corrective action
Spongy pedal	Low fluid level in master cylinder.	Top with fluid and inspect for leakage.
	Air in system.	Correct as necessary.
	Improper brake adjustment.	Adjust shoe-to-drum clearance.
	Reservoir filler cap vent hole clogged.	Clean and bleed system.
	Swollen hose due to deterioration or use of improper hose.	Replace hose and bleed system.
	Distorted brake shoes, or excessively worn or cracked brake drum.	Replace damaged parts.
	Soft or swollen caliper seals.	Drain hydraulic system, flush with alcohol and replace all seals.
	Use of a brake fluid with too low boiling point.	Replace with specified brake fluid and bleed system.
Poor braking effect	Fluid leakage in brake lines.	Check master cylinder, piping and wheel cylinder for leaks, and repair.
	Low brake fluid level or empty master cylinder reservoir.	Fill and bleed as necessary.
	Air in brake lines.	Bleed system.
	Excessive shoe-to-drum clearance.	Adjust.
	Grease, oil, mud or water on linings or pads.	Clean brake mechanism and check for cause of problem. Replace linings or pads.
	Deterioration of linings or pads.	Replace.
	Local fit of linings or pads.	Shave or replace.
	Linings or pads excessively worn.	Replace.
	Master cylinder or wheel cylinders in poor condition.	Repair or replace.
	Frozen or seized caliper pistons on disc brakes.	Disassemble caliper and free up as required.
	Binding mechanical linkage at brake pedal and shoes.	Free up as required.
Unbalanced brakes	Improper tire inflation.	Inflate to correct pressure.
	Improper adjustment of shoe-to-drum clearance.	Readjust.
	Grease, oil, mud or water on linings or pads.	Clean brake mechanism and check for cause of problem. Replace linings or pads.
	Mud in brake drum.	Clean.
	Deterioration of linings or pads.	Replace.
	Excessive wear of linings or pads.	Replace.
	Wheel cylinder in poor condition.	Repair or replace.
	Poor sliding condition of brake shoe.	Adjust.
	Looseness of cylinder body or back plate securing bolts/nuts.	Fasten or replace.

Condition	Probable cause	Corrective action
(Unbalanced brakes)	Scored or out-of-round drums.	Recondition or replace brake drum as required. Check for improper lining contact with drum and grind lining if necessary.
	Sticking wheel cylinder cups.	Recondition or replace cylinder.
	Deformation of back plate.	Replace.
	Incorrect adjustment of wheel bearings.	Adjust or replace.
	Incorrect adjustment of wheel alignment.	Adjust.
	Looseness of leaf spring securing U-bolts.	Tighten or replace.
Brakes fade	Brake fluid has too low boiling point.	Drain and fill system with approved fluid.
	Use of improper linings or brake linings are contaminated.	Replace linings.
	Brake drums are out-of-round.	Repair or replace as necessary.
	Hydraulic connections, master cylinder and wheel cylinders are corroded or damaged.	Repair as necessary.
	Bleed screw is open.	Close screw and bleed system.
Brakes drag	Pedal linkage is binding or output rod adjustment is too long.	Lubricate linkage, check pedal return spring for condition and adjust output rod as necessary.
	Master cylinder compensator part is obstructed.	Blow out foreign matter with compressed air.
	Seized master cylinder piston.	Disassemble master cylinder and replace piston. Bleed system.
	Poor shoe condition.	Clean and repair.
	Poor wheel cylinder condition.	Repair or replace.
	Deformation of piston cups.	Replace.
	Poor condition of caliper because of damaged piston seals.	Replace piston seal.
	Excessive runout of rotor.	Turn rotor on lathe or replace.
	Parking brake will not return.	Check and repair.
	Clogged master cylinder return port.	Clean.
	Clogged brake lines.	Check and clean.
	Incorrect adjustment of wheel bearings.	Adjust or repair.
	Improper shoe-to-drum clearance.	Adjust.
	Weak shoe return springs.	Replace.
	No free travel in brake shoe return.	Adjust pedal height.
Brake chatters	Groove or out-of-round brake drum or rotor.	Grind or replace as required.
	Loose or bent support plate.	Tighten support plate bolts to specified torque, or replace plate.
	Distorted brake shoes or pads.	Replace as necessary.
	Grease or brake fluid on linings.	Replace linings.

Condition	Probable cause	Corrective action
Brake squeals	Dirty or scored brake drums.	Blow out assembly with compressed air or refinish drum.
	Distorted brake shoes or bent support plate.	Replace damaged unit.
	Weak or broken brake shoe retaining spring or return spring.	Replace if damaged.
	Glazed or contaminated brake lining.	Cam ground lining to eliminate glaze. If it doesn't, replace linings.
Pedal pulsates	Out-of-round or off-center drum.	Turn drum or replace as necessary.
	On disc brakes, lateral runout of brake rotor is excessive.	Check with dial indicator, turning disc by hand. If runout exceeds specifications, repair or replace disc.
	Excessive variation in thickness of brake rotor surfaces.	Measure around disc face with micrometer. Replace disc as required.
Rear lock (Under light brake pedal force)	Improper tire pressures.	Check and adjust.
	Excessive wear of tires.	Check and replace.
	Damaged N.L.S.V.	Replace.
Rear lock (Under heavy brake pedal force)	Improper tire pressures.	Check and adjust.
	Excessive wear of tires.	Check and replace.
	Poor front braking effect.	
	• Grease, oil, mud or water on linings or pads.	Clean or replace.
	• Excessive wear of linings or pads.	Replace.
	• Local fit of linings or pads.	Shave or replace.
	• Master cylinder or wheel cylinder in poor condition.	Repair or replace.

SPECIAL SERVICE TOOL

Tool number (Kent-Moore No.)	Tool name
GG94310000 (–)	Flare nut torque wrench 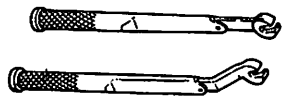

STEERING SYSTEM

SECTION ST

CONTENTS

STEERING SYSTEM ..... ST- 2
STEERING WHEEL AND COLUMN ... ST- 3
Steering wheel ..... ST- 3
Steering lock ..... ST- 3
Steering column (Non-tilt type) ..... ST- 4
Steering column (Tilt type) ..... ST- 7
MANUAL STEERING GEAR (Model: VB56S) ST-10
POWER STEERING SYSTEM (Model: PB48S) ST-14
Description ST-14
Power steering system ST-15
Power steering gear ST-18
Power steering oil pump (Z24 engine model) ST-23
Power steering oil pump (SD25 engine model) ST-25
STEERING LINKAGE ST-26
SERVICE DATA AND SPECIFICATIONS (S.D.S.) ST-28
General specifications ST-28
Inspection and adjustment ST-28
Tightening torque ST-30
TROUBLE DIAGNOSES AND CORRECTIONS ST-31
SPECIAL SERVICE TOOLS ST-33

STEERING SYSTEM

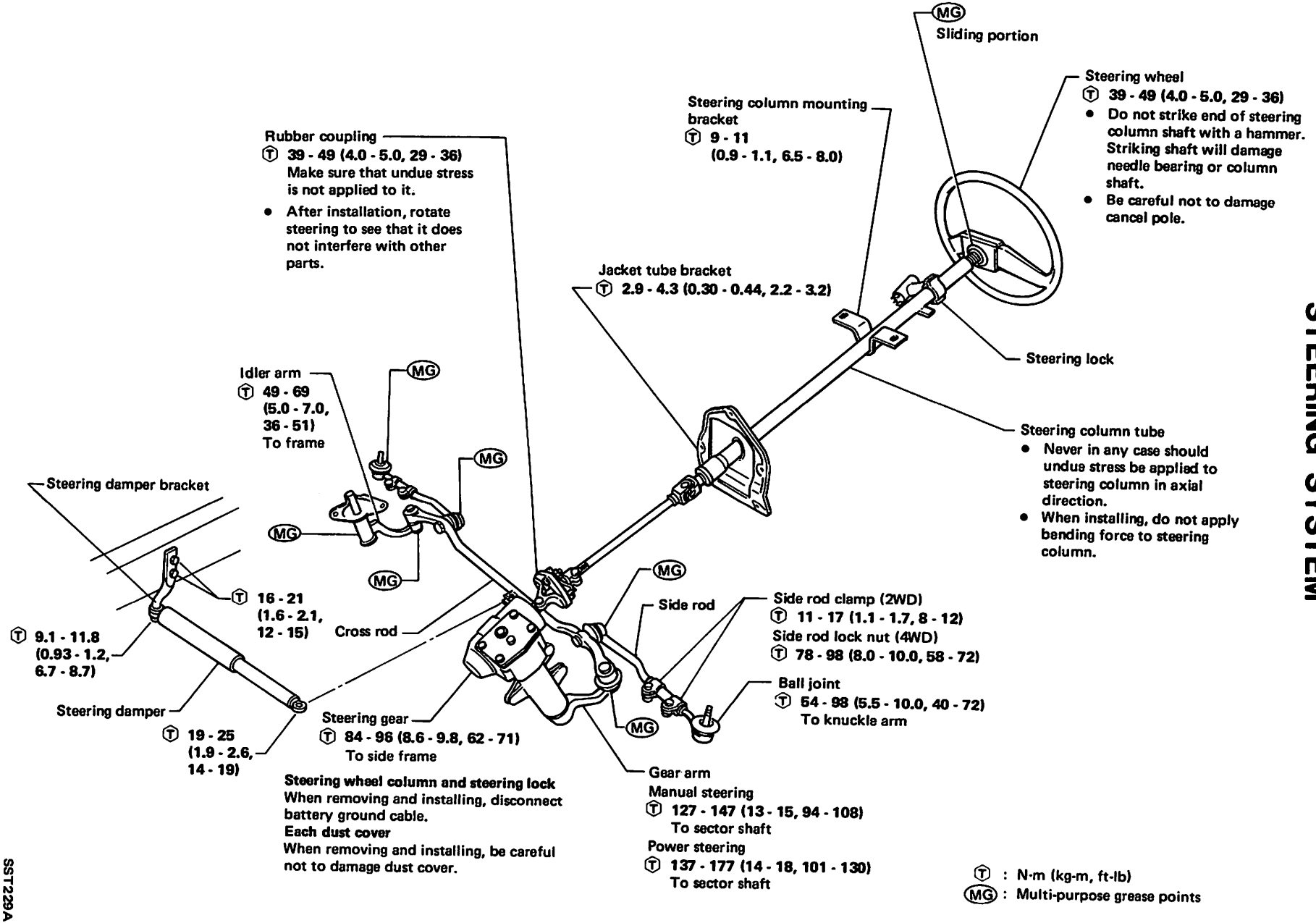

STEERING WHEEL AND COLUMN

STEERING WHEEL

REMOVAL

1. Disconnect battery ground cable.
2. Remove horn pad and steering wheel nut.

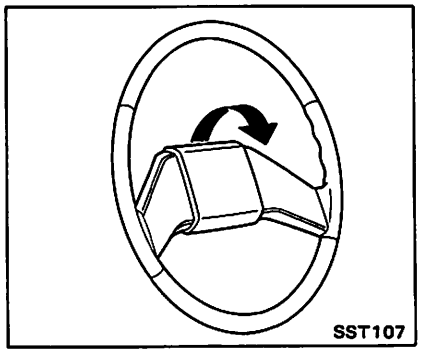

3. Remove steering wheel using **Tool.**

CAUTION:
Do not strike end of steering column shaft with a hammer. Striking shaft will damage bearing or column shaft.

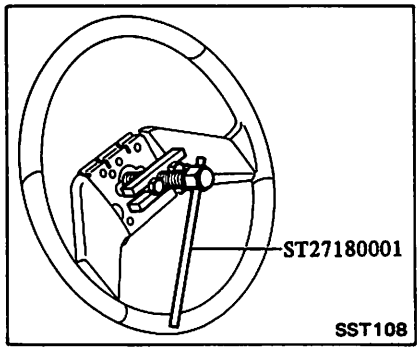

INSTALLATION

Install steering wheel in the reverse order of removal. Observe the following instructions.

1. Apply grease to sliding portions.

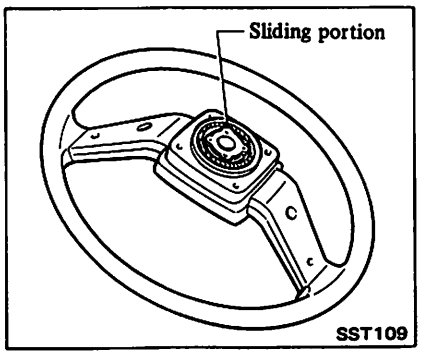

2. Install steering wheel **on column shaft in a straight-ahead position.**

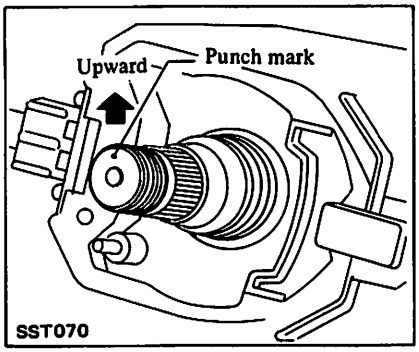

3. Tighten steering wheel nut.

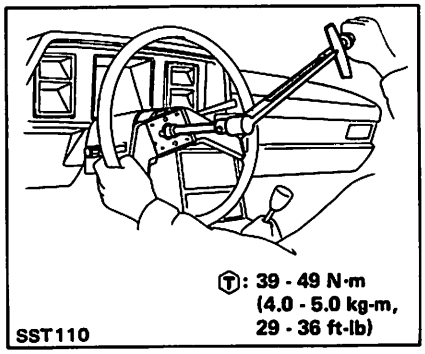

4. After installing steering wheel, turn it clockwise and counterclockwise, checking for catch or drag. Also check horn operation.

STEERING LOCK

REMOVAL

Before removing steering lock, disconnect battery ground cable.

1. Remove steering column shell cover.

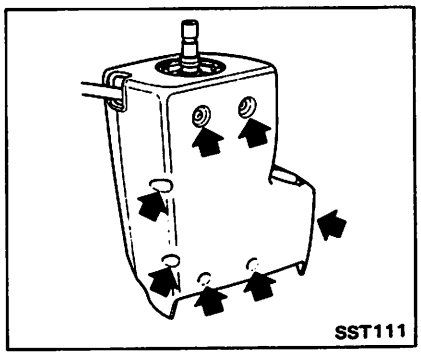

2. Break self-shear type screws with a drill or other appropriate tool.
3. Remove screws and disconnect steering lock.

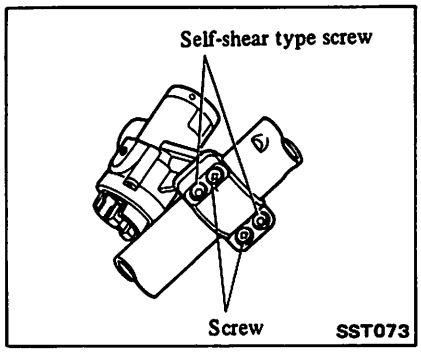

INSTALLATION

1. Align steering lock hole in steering column tube with mating portion of steering lock.
2. Install screws and self-shear type screws and then cut off self-shear type screw heads.

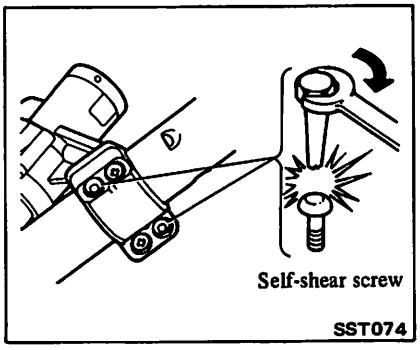

STEERING COLUMN (Non-tilt type)

Type NA

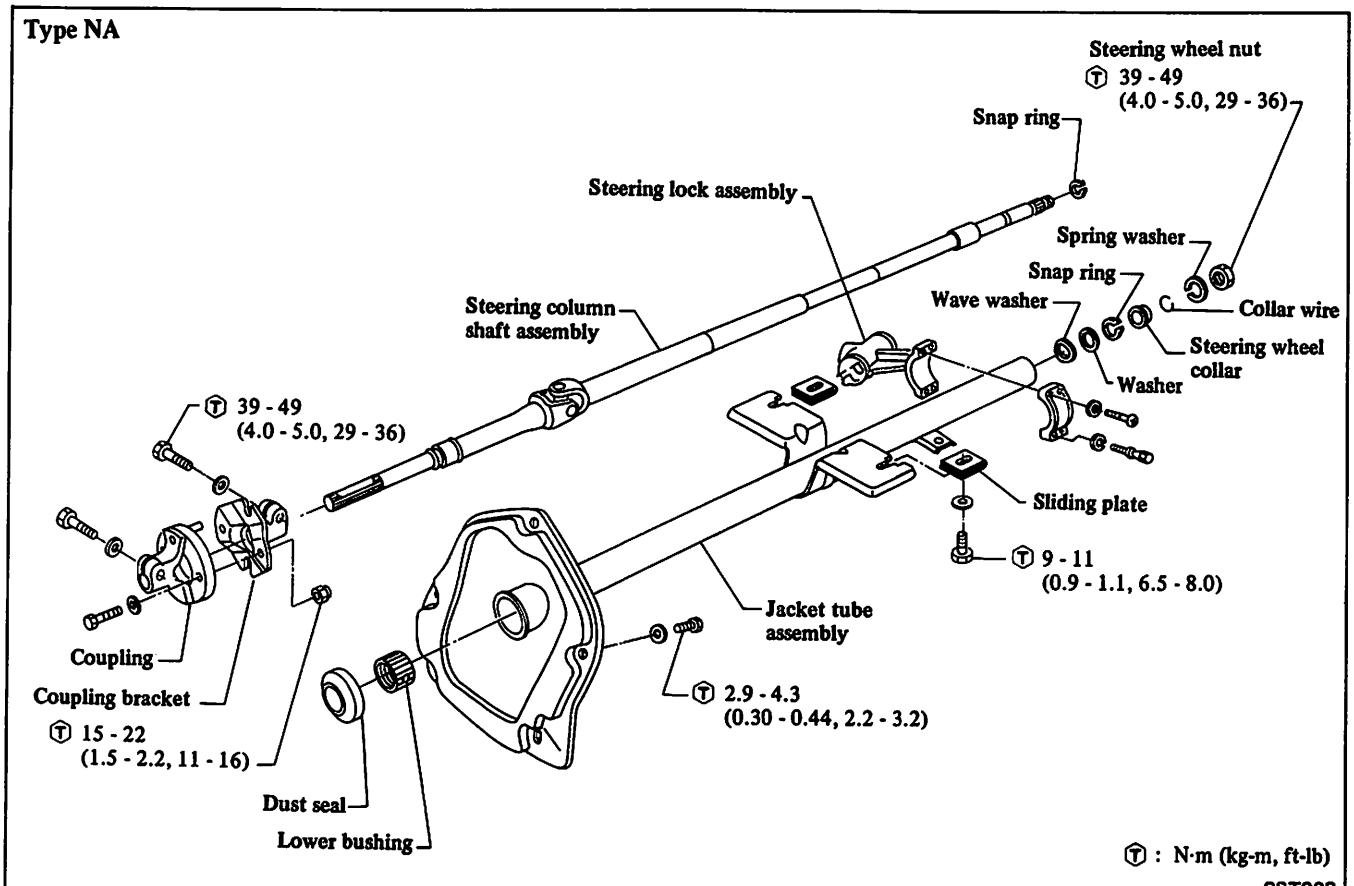

Type NB

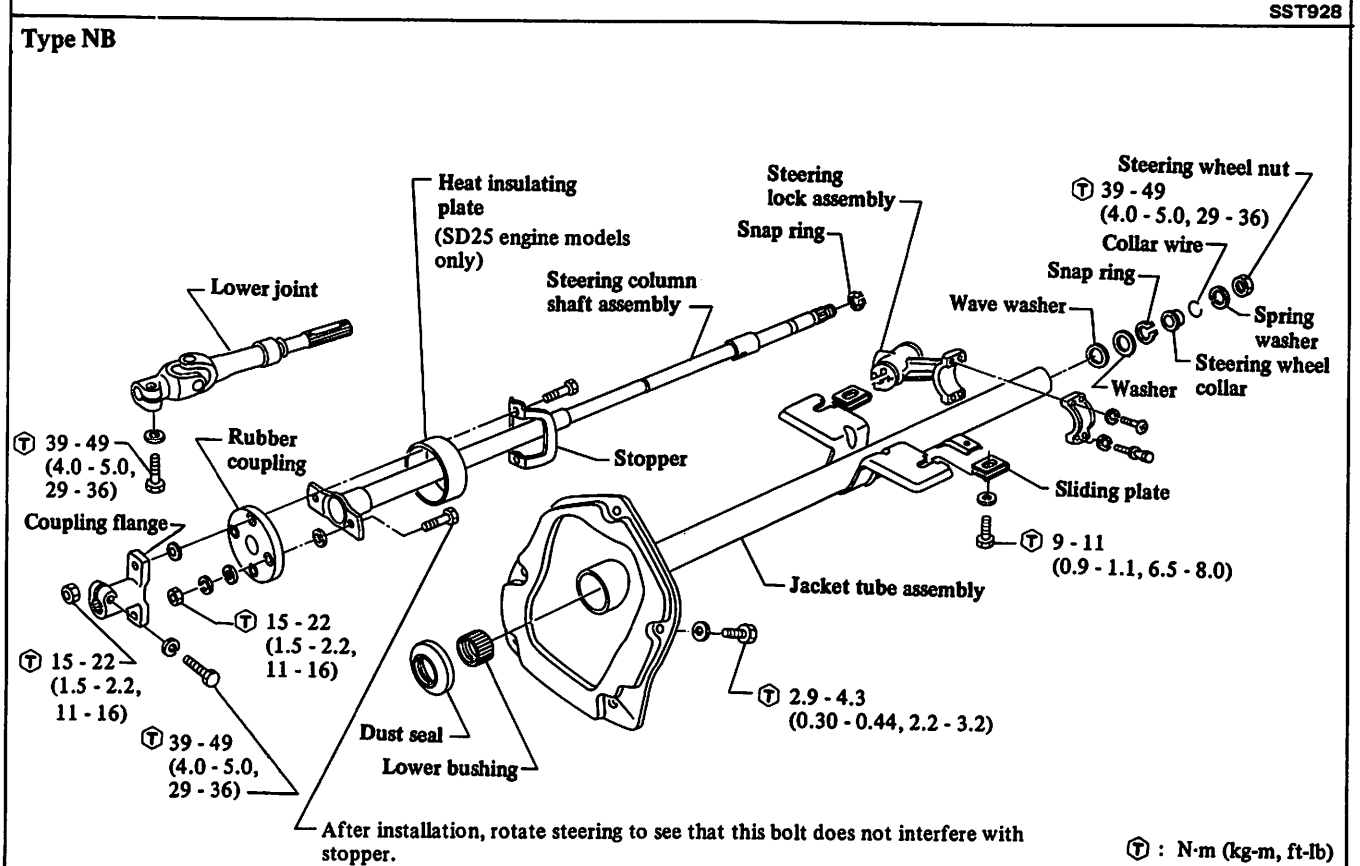

REMOVAL

1. Remove bolt securing worm shaft and rubber coupling.

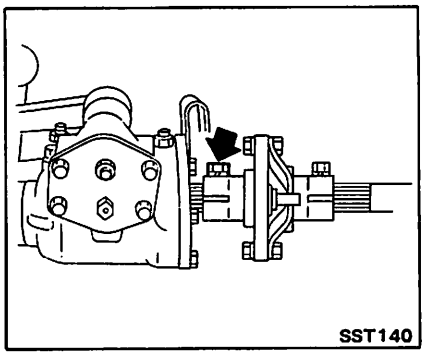

2. Remove steering wheel. **Refer to Steering Wheel.**
3. Remove steering column shell covers.
4. Remove combination switch assembly.

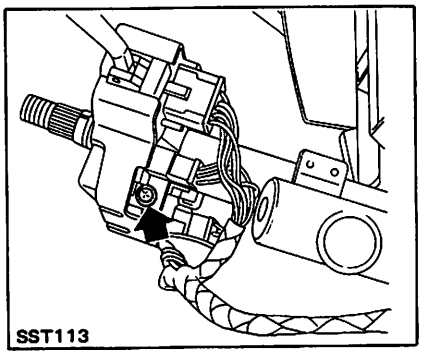

5. Remove heater duct from dash panel side.

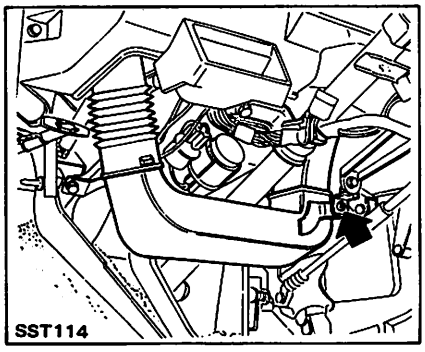

6. Remove jacket tube bracket from dash panel.

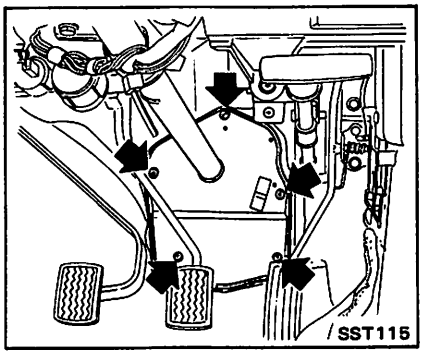

7. Remove column mounting bracket.

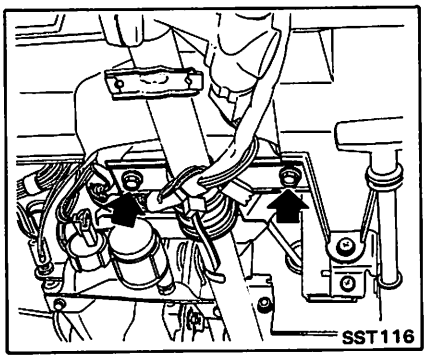

Be careful not to lose sliding plate.

8. Draw out steering column assembly from room side.

INSTALLATION

Install steering column in reverse order of removal.

1. Set wheels in a straight-ahead position.
2. Fit steering column assembly on to worm shaft.

Carefully install so that punch mark at top end of column shaft faces upward.

3. After sliding jacket tube bracket to dash panel, tighten nuts to retain it.

Ⓣ : Jacket tube bracket to dash panel
2.9 - 4.3 N·m
(0.30 - 0.44 kg-m,
2.2 - 3.2 ft-lb)

4. Tighten column mounting bracket temporarily.
5. Tighten worm shaft securing bolts temporarily to support upper side of steering column assembly.
6. Tighten worm shaft securing bolts and then tighten column mounting bracket securing bolts.

Ⓣ : Rubber coupling to worm shaft
39 - 49 N·m
(4.0 - 5.0 kg-m,
29 - 36 ft-lb)
Column mounting bracket
9 - 11 N·m
(0.9 - 1.1 kg-m,
6.5 - 8.0 ft-lb)

CAUTION:
a. Make sure that any undue stress is not applied to rubber coupling.
b. To avoid damaging bolt or serrations, align groove in worm shaft with bolt hole in rubber coupling.

7. Install steering wheel. **Refer to Steering Wheel.**
8. After installation, make sure that steering wheel turns smoothly.

DISASSEMBLY AND ASSEMBLY

1. Remove rubber coupling assembly.
2. Remove steering lock assembly, if necessary.
3. Remove snap ring, and then separate each part.

Do not reuse snap ring once it has been removed.

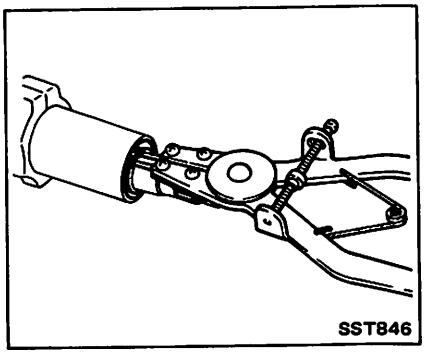

4. Remove dust seal and lower bushing.
5. Assemble steering column in the reverse order of disassembly, observing the following notes.

a. Fit lower bushing to jacket tube.

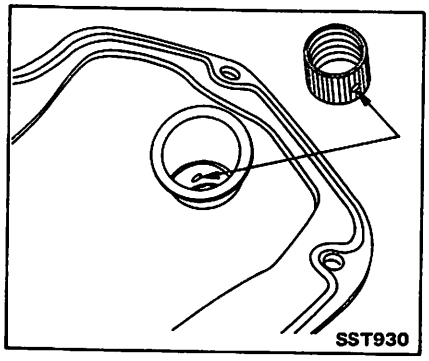

b. Apply a coat of grease to column bearing, lower bushing and dust seal.

c. Make sure that undue stress is not applied to column shaft in axial direction.

d. Ensure that rounded surface of snap ring faces toward bearing when snap ring is installed.

INSPECTION

1. When steering wheel can not be rotated smoothly, check the steering column for the following matters and replace faulty parts.
(1) Check column bearings for damage or unevenness. If so, lubricate with recommended multi-purpose grease or replace with a new one as steering column assembly.
(2) Check jacket tube for deformation or breakage, and replace if necessary.
2. When the vehicle comes into light collision, check dimensions "A", "B" and "C". If they are not within specifications, replace steering column as an assembly. For dimensions "A", "B" and "C", refer to S.D.S.

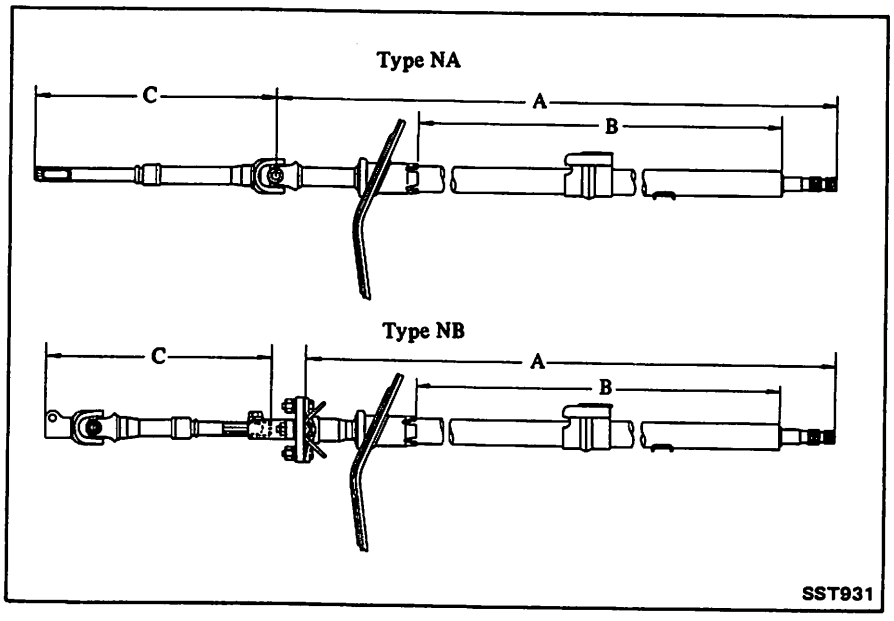

STEERING COLUMN (Tilt-type)

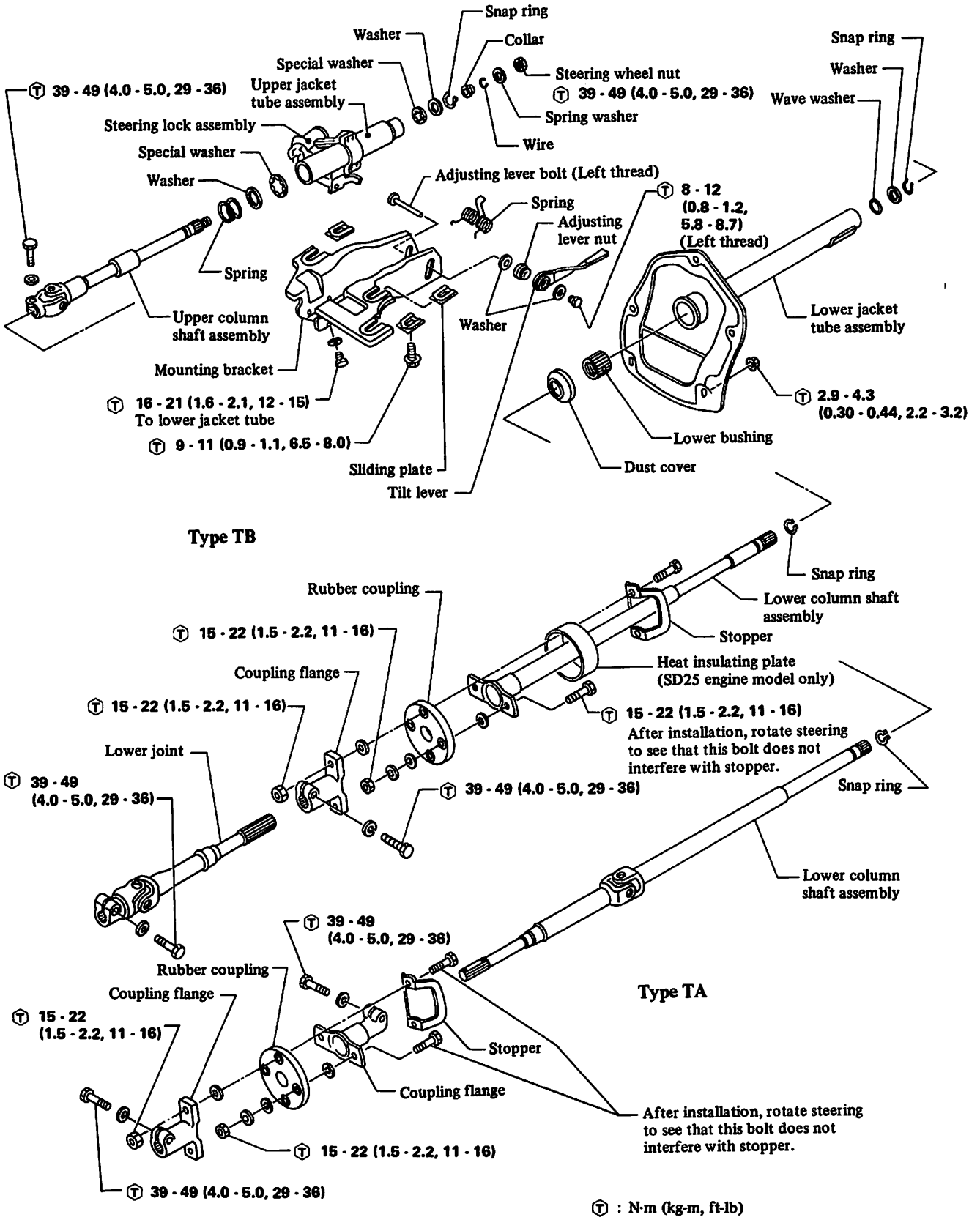

REMOVAL AND INSTALLATION

Refer to Steering Column (Non-tilt type) for removal and installation.

The non-tilt type steering column is secured with two bolts at the clamp, while the tile-type column is secured to the mounting bracket by means of three bolts.

DISASSEMBLY

Tilt mechanism (Mounting bracket)

1. Remove bolt securing tilt joint.

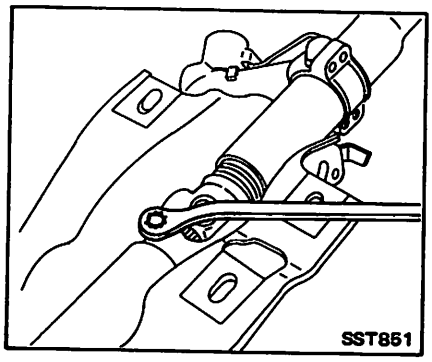

2. Remove spring.

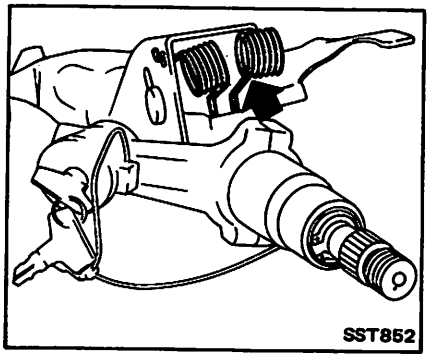

3. Remove bolt, and then separate each part.

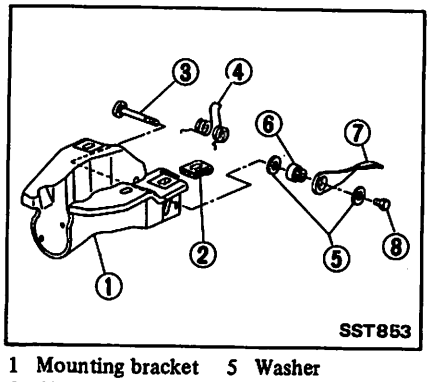

1 Mounting bracket
2 Sliding plate
3 Adjusting lever bolt (Left thread)
4 Spring
5 Washer
6 Adjusting lever nut
7 Tilt lever
8 Bolt (Left thread)

4. Remove bolts, and then separate mounting bracket.

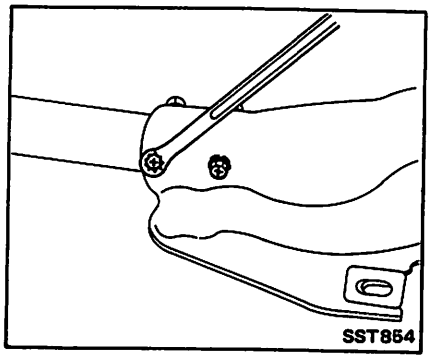

Lower jacket tube assembly

Remove snap ring, and then separate each part.

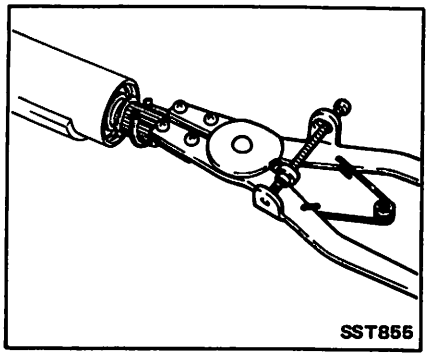

Upper jacket tube assembly

Remove snap ring, and then separate each part.

Be careful that the column spring does not spring out.

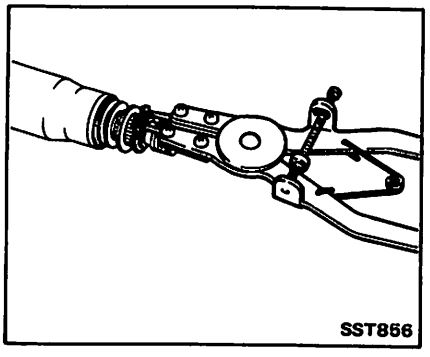

ASSEMBLY

Upper jacket tube assembly

1. Place spring, washer and spring seat to upper column shaft, and then insert upper column shaft to upper jacket tube.

Apply a coat of grease to bearings.

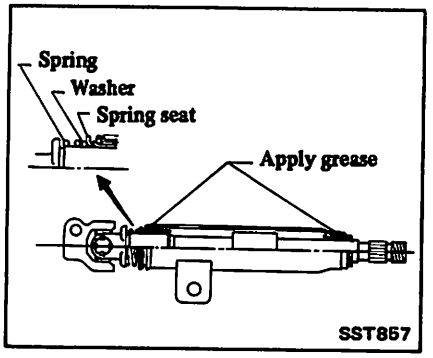

Bind column spring at both ends with wire and compress it when installing.

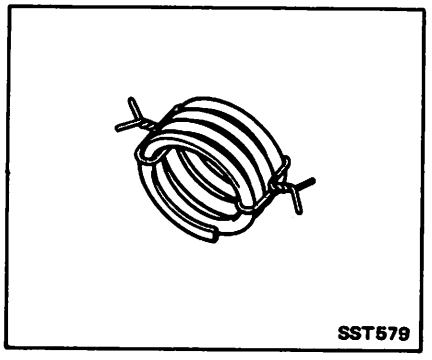

2. Set spring seat and washer, and then install snap ring.

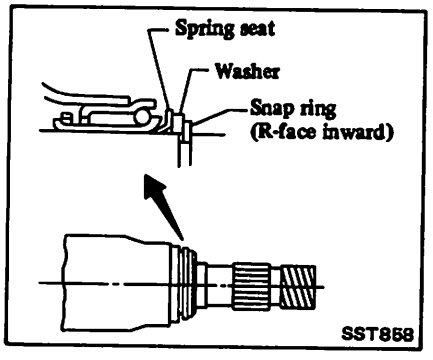

3. Remove wire after assembly is completed.

Lower jacket tube assembly

1. Fit lower bushing to lower jacket tube perfectly.

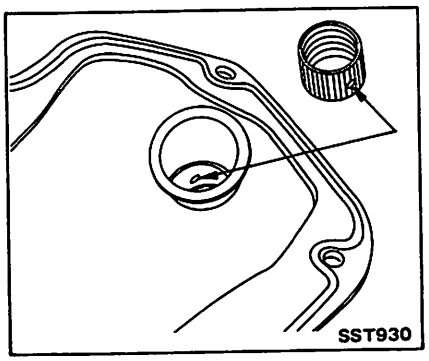

2. Apply a coat of grease to column bearing and lower bushing.
3. Insert lower column shaft into lower jacket tube, and then install wave washer, washer and snap ring.

- **Ensure that snap ring is positioned with its round surface facing toward bearing.**
- **Make sure that undue stress is not applied to column shaft in the axial direction.**

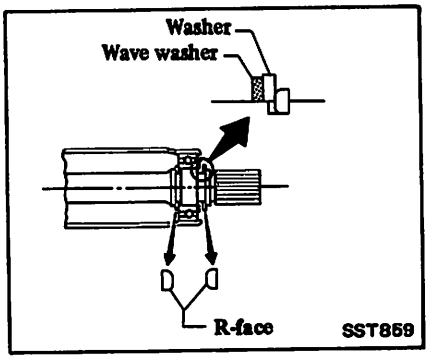

Tilt mechanism (Mounting bracket)

1. Tighten bolts.

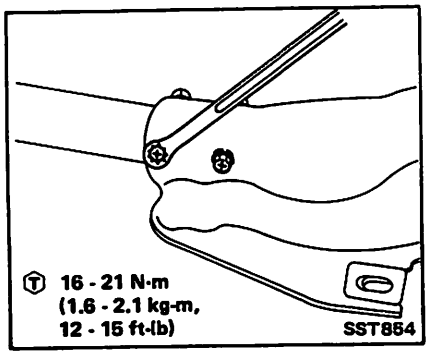

2. Install tilt mechanism component parts, and then adjust tilt mechanism.

Adjust tilt lever at serrations so that it contacts stopper on mounting bracket when it is tightened to 8 to 11 N·m (0.8 to 1.1 kg-m, 5.8 to 8.0 ft-lb).

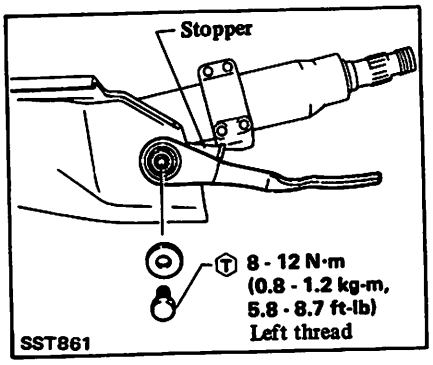

3. Tighten bolt.

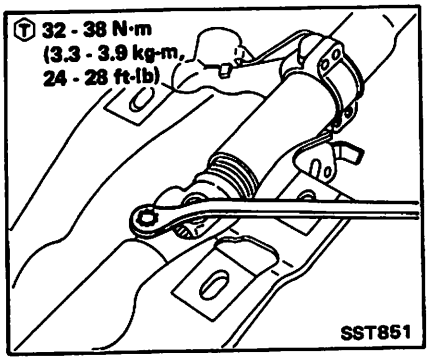

4. Move tilt lever from lock (where lever touches stopper) to release position (where lever is 80° away from stopper) several times to ensure that:
- Upper jacket tube is securely tightened when lever is at "lock," and
- Upper jacket moves smoothly when lever is at "release."

If necessary, adjust tilt mechanism.

INSPECTION

1. When steering wheel can not be rotated smoothly, check the steering column for the following matters and replace faulty parts.
(1) Check column bearings for damage or unevenness. If so, lubricate with recommended multi-purpose grease or replace with a new one as steering column assembly.
(2) Check jacket tube for deformation or breakage, and replace if necessary.

2. When the vehicle comes into light collision, check dimension "A", "B" and "C". If they are not within specifications, replace steering column as an assembly.

For dimensions "A", "B" and "C", refer to S.D.S.

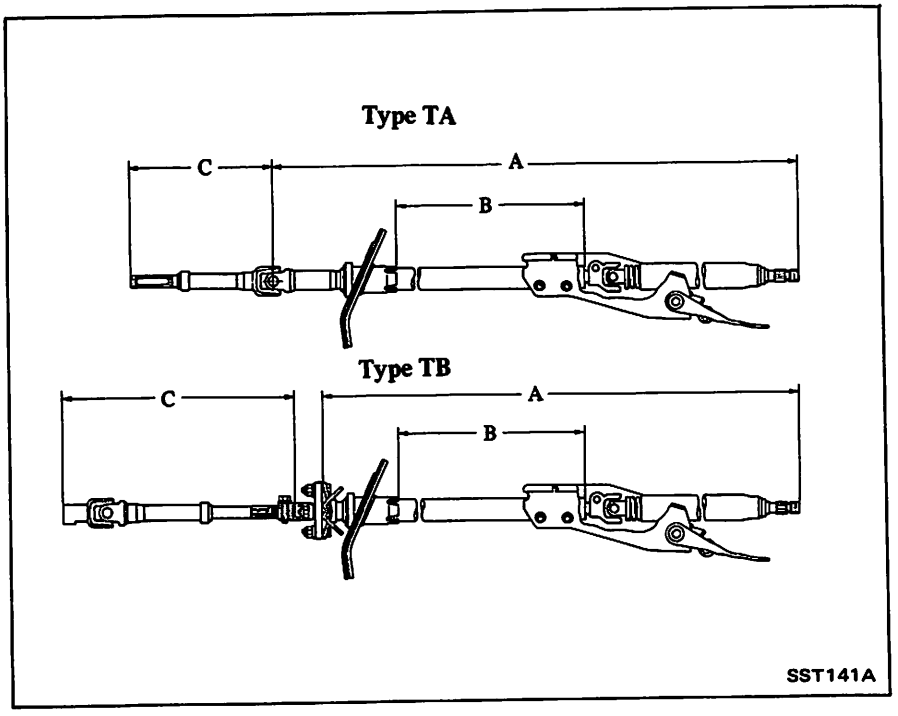

MANUAL STEERING GEAR (Model : VB56S)

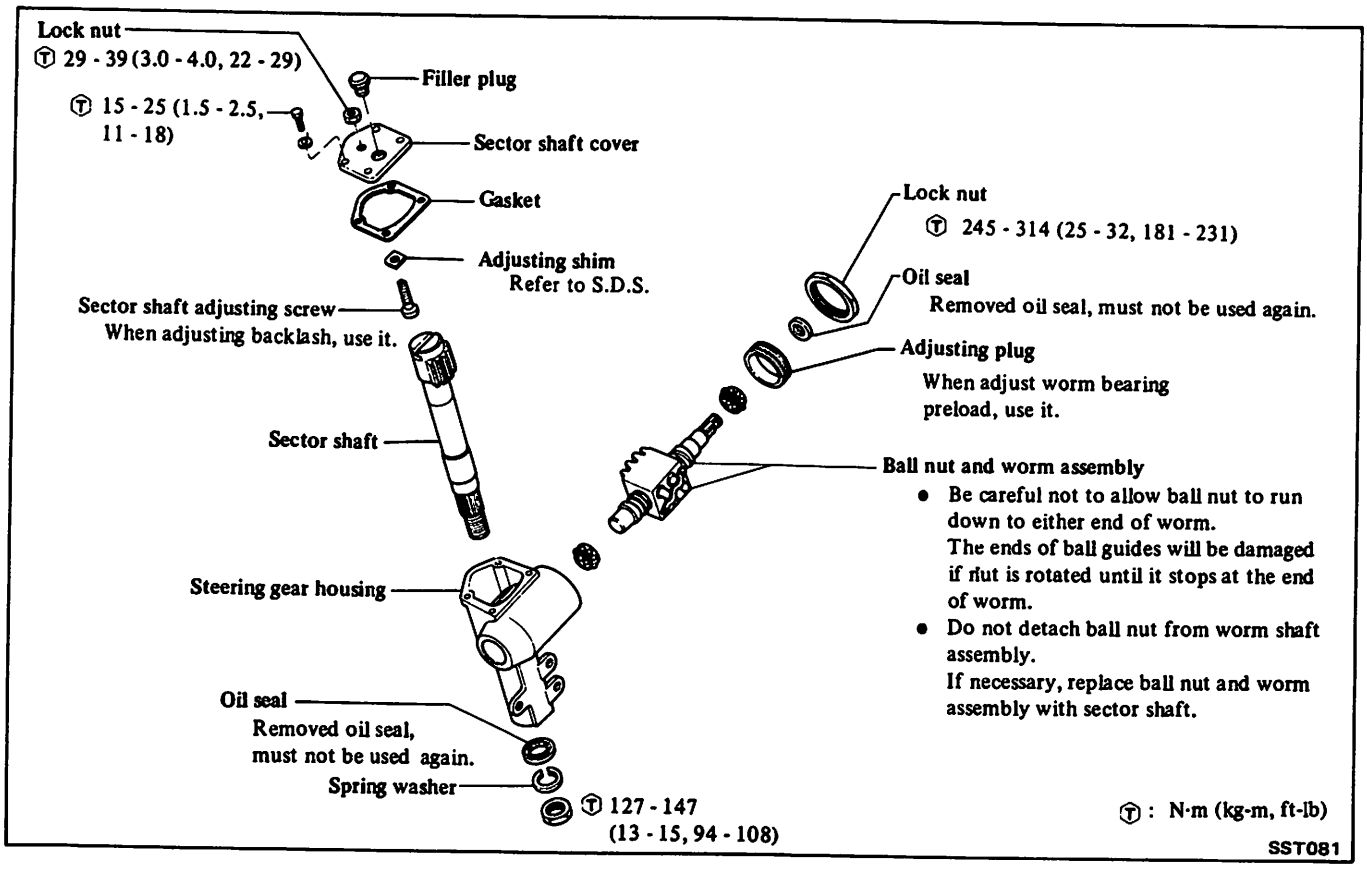

REMOVAL AND INSTALLATION

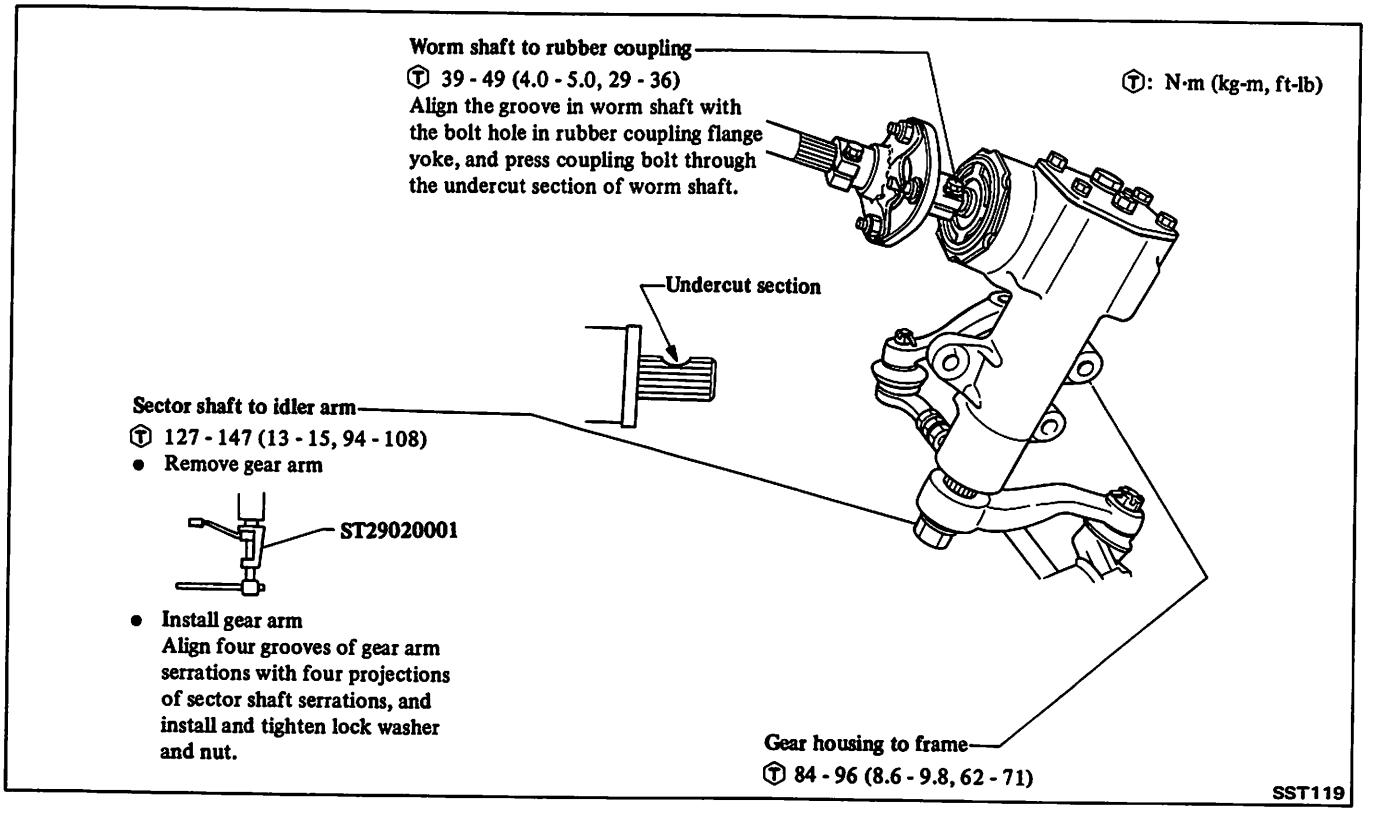

DISASSEMBLY

Before disassembling by hand, make sure external is clean and free from dust and dirt, and thoroughly drain gear fluid by removing filler plug.

1. Place steering gear in a vice using **Tool** KV48100301 in place.
2. Set worm gear in a straight-ahead position.

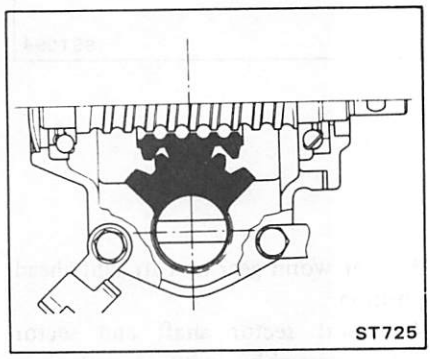

3. Remove sector shaft cover fixing bolts.

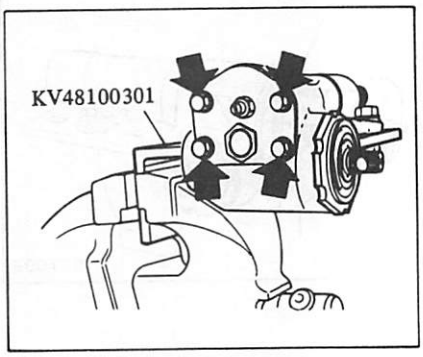

4. Remove sector shaft with sector shaft cover.

CAUTION:

a. When pullling sector shaft out, be careful not to damage oil seal or associated parts.
b. Set worm gear in a straight-ahead position.
c. Do not remove sector shaft needle bearings from steering gear housing. If necessary, replace gear housing assembly.

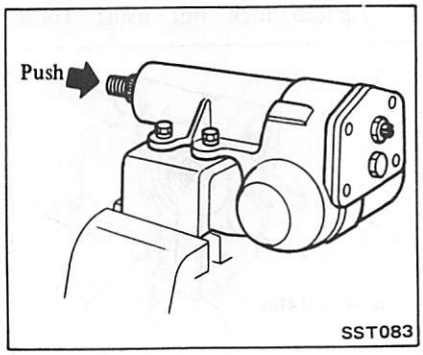

5. Remove sector shaft cover from sector shaft.
6. Remove sector shaft oil seal, **if necessary.**

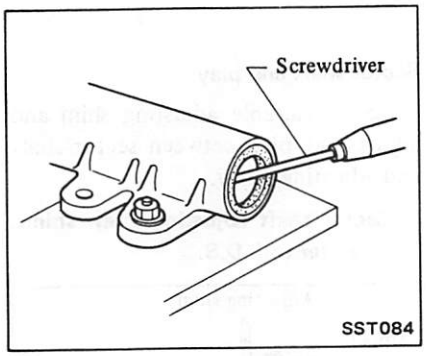

7. Loosen adjusting plug lock nut using **Tool.**

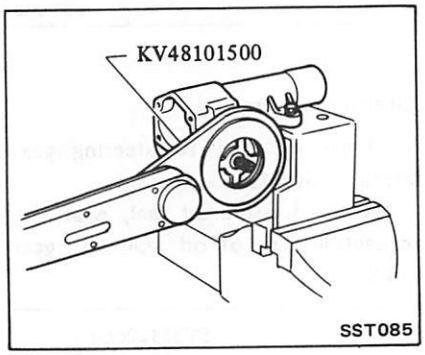

8. Draw out worm gear with worm bearing.

CAUTION:

a. Be careful not to allow ball nut to run down to either end of worm. Ends of ball guides will be damaged if nut is rotated until it stops at end of worm.
b. Do not detach ball nut from worm shaft assembly. If necessary, replace entire unit as an assembly.
c. Do not remove sector shaft needle bearings from steering gear housing. If necessary, replace entire gear housing as an assembly.

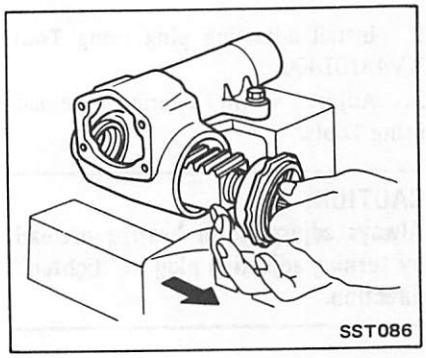

9. Remove oil seal from adjusting plug using **Tool.**

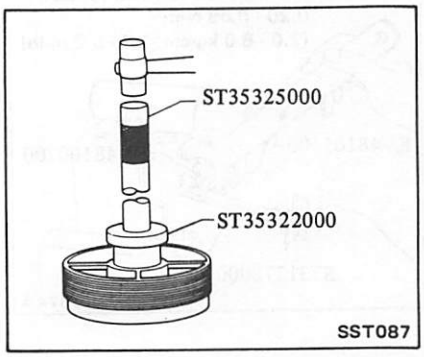

ASSEMBLY AND ADJUSTMENT

- **Before assembling and adjusting by hand, make sure each part is clean and lubricate with gear fluid.**
- **Fill space between sealing lips of new sector shaft and adjusting plug oil seals with recommended multi-purpose grease.**

Worm bearing preload

1. Fit worm gear assembly with worm bearing in gear housing.

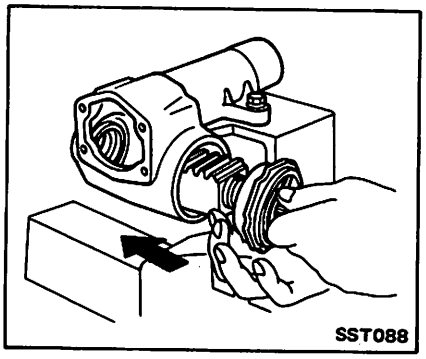

2. Install adjusting plug using **Tool** KV48101400.
3. Adjust worm bearing preload using **Tools.**

CAUTION:
Always adjust worm bearing preload by turning adjusting plug in "tighten" direction.

Rotate worm shaft a few turns in both directions to settle down worm bearing and measure preload.

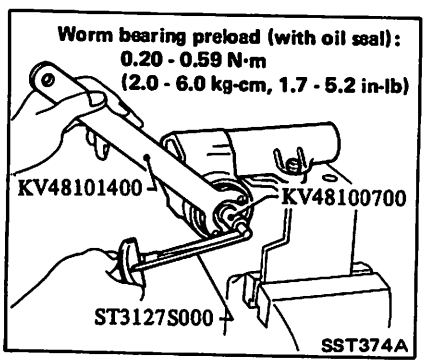

4. Apply suitable liquid sealant around lock nut inner surface.

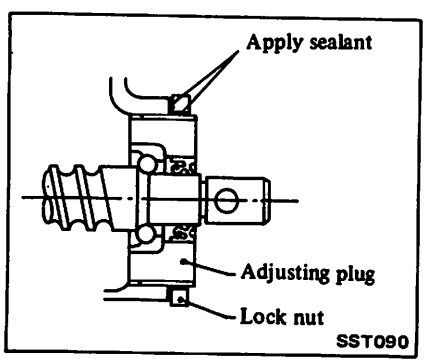

5. Tighten lock nut using **Tools.**

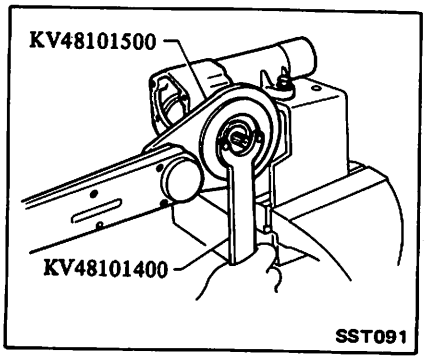

6. After tightening lock nut, check worm bearing preload to make sure it is within specification.

Sector shaft end play

Select suitable adjusting shim and adjust end play between sector shaft and adjusting screw.

Sector shaft adjusting screw shims:
Refer to S.D.S.

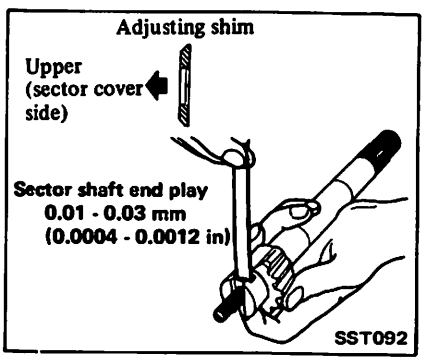

Steering gear preload

1. Press oil seal to steering gear housing using **Tool.**

Before pressing oil seal, coat seal contacting face of oil seal with gear fluid.

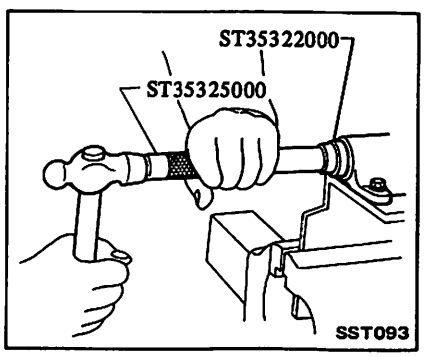

2. Install sector cover on adjusting screw with sector shaft.

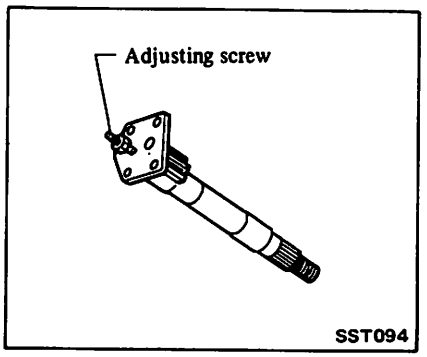

3. Set worm gear in a straight-ahead position.
4. Insert sector shaft and sector cover assembly with gasket into gear housing.

Carefully insert sector shaft in place, using care not to scratch oil seal.

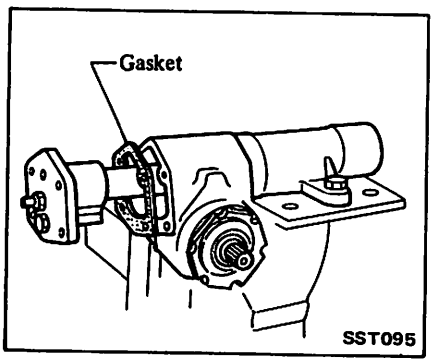

5. Tighten sector cover to gear housing.

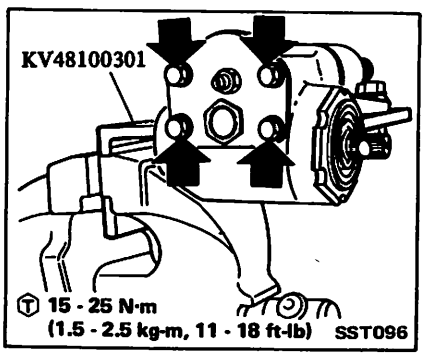

6. Pour recommended gear oil into assembly through filler hole and install filler plug.

Specified refill capacity:
Approximately 0.33 liter
(3/4 US pt, 5/8 Imp pt)

7. Tighten adjusting screw so that gear preload is within specification.

CAUTION:
Always adjust steering gear preload by turning adjusting screw in "tighten" direction.

Rotate worm gear a few turns in both directions to settle down steering gear and then measure steering gear preload in a straight-ahead position.

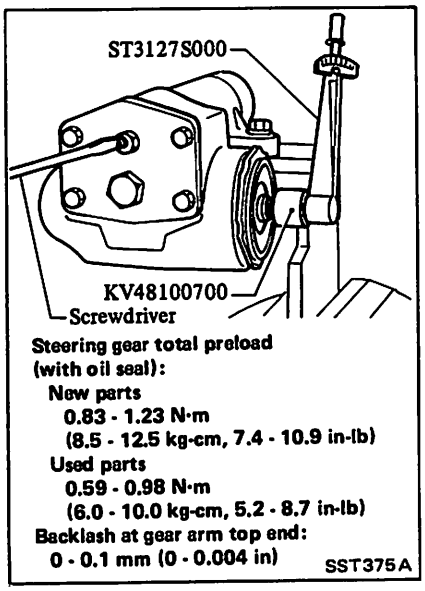

8. If found to be outside of above steering gear preload specifications, readjust adjusting screw until correct steering gear preload is obtained.

INSPECTION

Wash clean all the disassembled parts in solvent and check for condition.

Sector shaft

1. Check gear tooth surface for pitting, burrs, cracks or any other damage, and replace if necessary.
2. Check sector shaft for distortion on its serration, and replace if necessary. Also check gear housing for deformation.

Steering worm assembly

1. Inspect ball nut gear tooth surface, and replace if pitting, burrs, wear or any other damage is found.
2. Ball nut must rotate smoothly on worm gear. If found too tight, assembly should be replaced.

Check rotation of ball nut as follows:

(1) Move ball nut to either end of worm gear, and gradually stand worm shaft and ball nut assembly until ball nut moves downward on worm gear under its own weight.

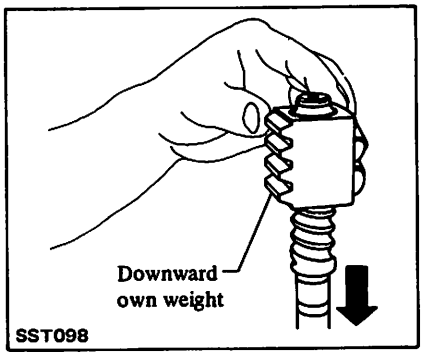

(2) If ball nut does not move freely over entire stroke, replace assembly.

Be careful not to damage ball nut guide tube while check is being made.

CAUTION:
Be careful not to allow ball nut to run down to either end of worm.

Bearing

1. Inspect worm bearing for wear, pitting or any other damage. Replace as required.

When replacing worm bearing, replace it as a set of bearing and outer race.

2. If sector shaft needle bearings are worn or damaged, replace as an assembly of gear housing and bearings.

Oil seals

Discard any oil seal which has once been removed. Replace oil seal if sealing lip is deformed or cracked. Also discard oil seal if spring is fatigued or dislocated.

POWER STEERING SYSTEM (Model : PB48S)

DESCRIPTION

POWER STEERING SYSTEM

The major components are as follows:

- Oil pump
- Power steering gear
- Oil piping

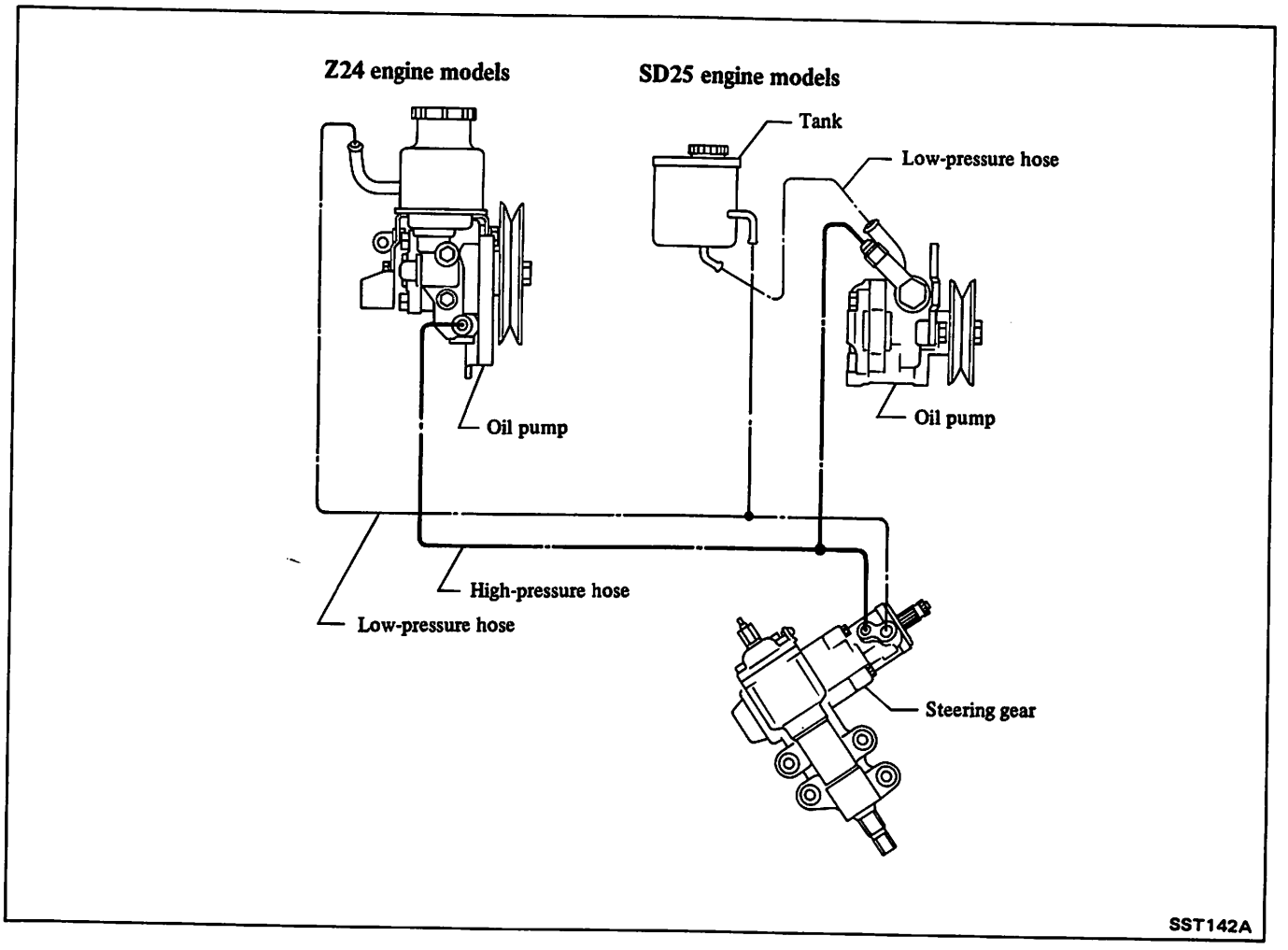

POWER STEERING GEAR AND OIL PUMP

The integral power steering gear and oil pump are an accurate oil pressure mechanism.

Only the sealing parts can be replaced. The remaining parts must be replaced as an assembly.

CAUTION:

a. The parts which can be disassembled are strongly restricted, and never disassemble other parts than the specified ones.
b. Disassembly should be performed in a place as clean as possible.
c. Hands should be cleaned before disassembly.
d. Do not use a rag. Be sure to use nylon or paper cloth.
e. Be sure to follow procedures and cautions indicated in the Service Manual.

POWER STEERING SYSTEM

REMOVAL

Before removing, clean exteriors of gear housing and oil pump with steam and dry with compressed air.

Steering gear

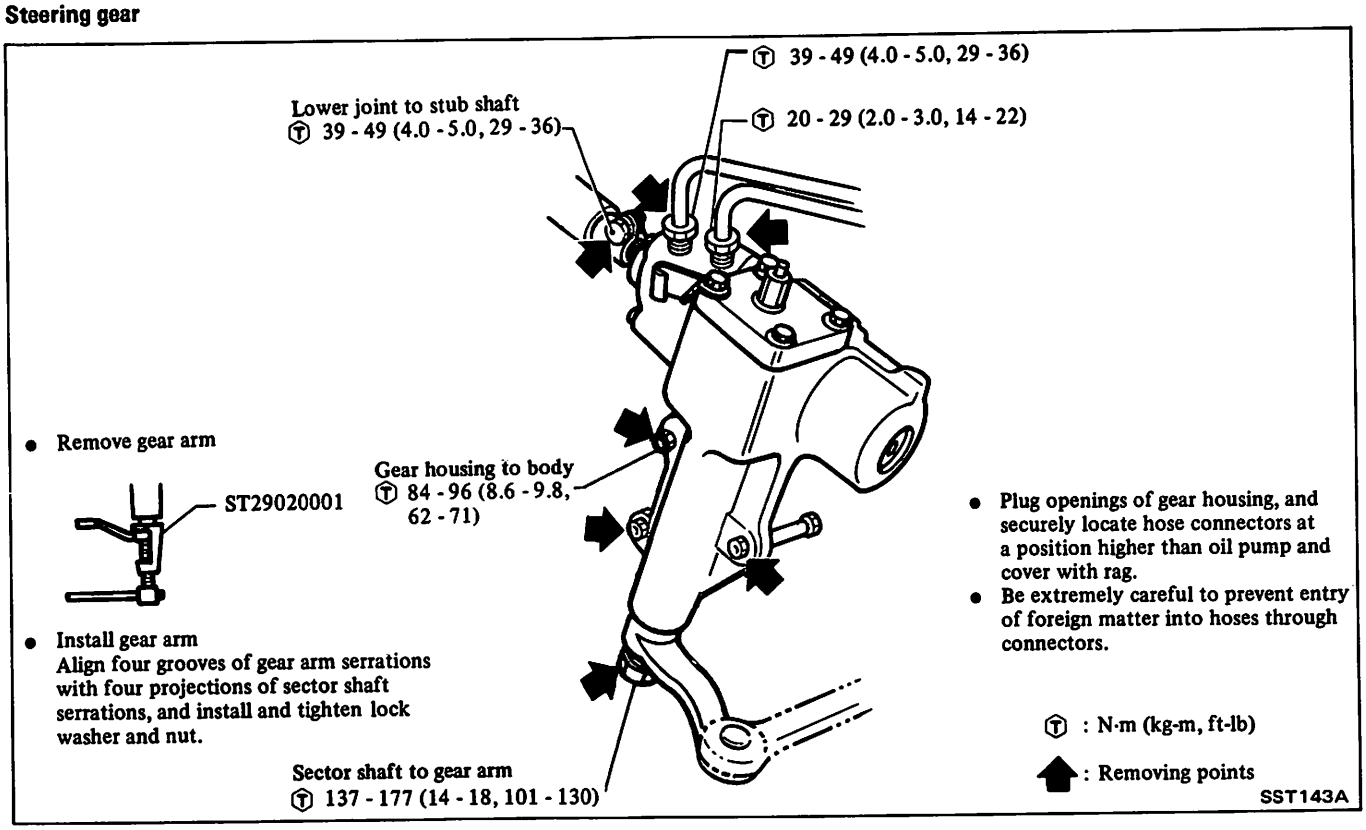

Oil pump

1. Loosen oil pump pulley lock nut.
   Turn belt adjusting bolt counter-clockwise.

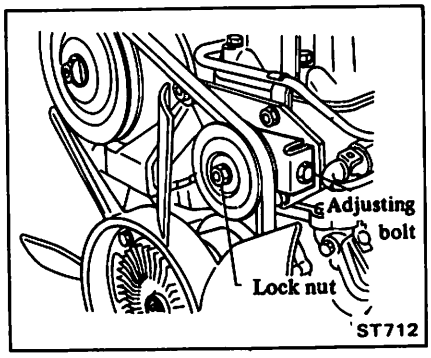

2. Remove oil pump belt.
3. Loosen (not remove) hoses at pump.

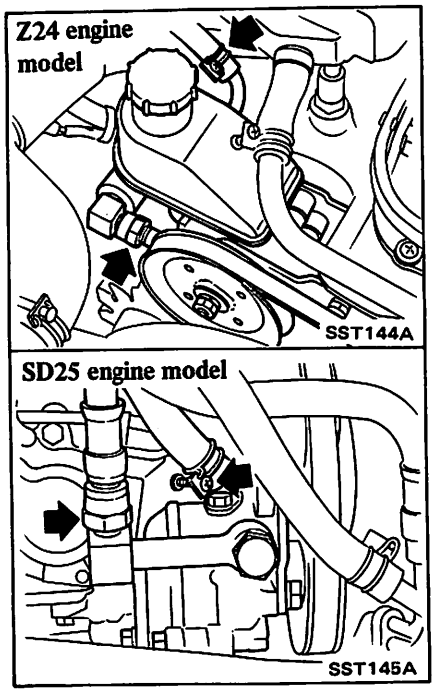

4. Remove oil pump.

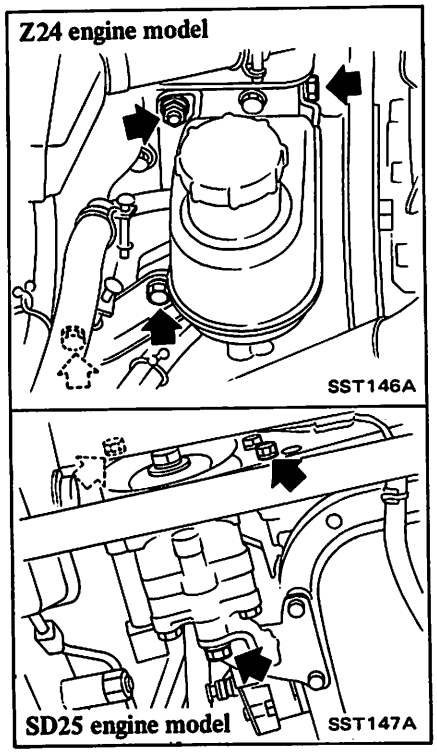

5. Remove reservoir tank (SD25 engine models only).

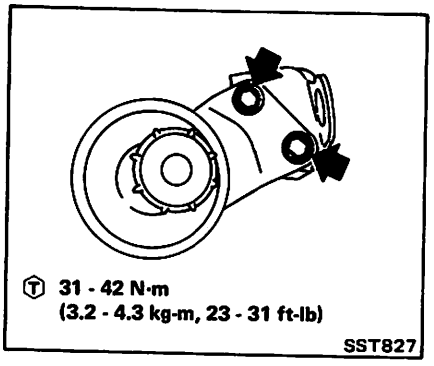

6. Disconnect hoses from pump and reservoir tank.

INSTALLATION AND ADJUSTMENT

Install steering gear in the reverse order of removal.

Fluid level

1. Check the fluid level in reservoir by observing the dipstick when the fluid is cold. Add fluid as necessary to bring the level into the proper range on dipstick.

CAUTION:
Do not overfill.

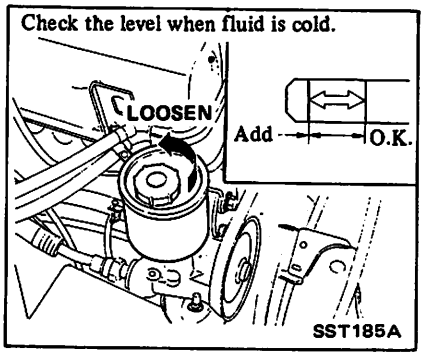

2. Check fluid level and leakage.

Recommended fluid is Automatic Transmission Fluid "Dexron Type".

Refer to Section MA for "Recommended Lubricant".

Fluid capacity:
Approximately
900 - 1,000 mℓ
(30.4 - 33.8 US fl oz,
31.7 - 35.2 Imp fl oz)

Pump belt adjustment

Refer to Checking and Adjusting Drive Belts (Section MA) for drive belt tension.

Check fluid leakage

1. Run engine at idle speed or 1,000 rpm.

Make sure temperature of fluid in pump rises to 60 to 80°C (140 to 176°F) with a temperature indicator.

2. Turn steering wheel to right-to-left several times.
3. Hold steering wheel at each "lock" position for five seconds and carefully check the following points for fluid leakage.

Power steering gear

- Oil seal at rear cover
- Intermediate cover
- Adjusting screw lock nut
- Sector shaft oil seal
- Sector cover O-ring

Power steering oil pump

- Rear cover
- Pulley
- Suction pipe
- Cap
- Connector
- Oil pressure line connectors

CAUTION:
Do not hold steering wheel at lock position for more than fifteen seconds at a time.

Hydraulic system check

To determine whether problem is in steering gear or oil pump, measure operating pressure.

Before conducting hydraulic system test, carefully check belt tension and condition of driving pulley.

Tires must be inflated to normal pressure.

1. Check fluid level and fluid leakage, adding oil if necessary.

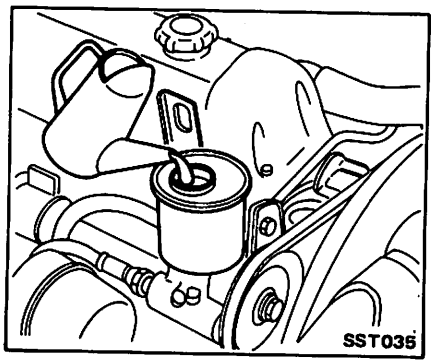

2. Run engine.

Make sure temperature of fluid in pump rises to 60 to 80°C (140 to 176°F) with a temperature indicator.

3. Stop engine.
4. Set **Tool**.

- **Gauge must be between shut-off valve and oil pump.**

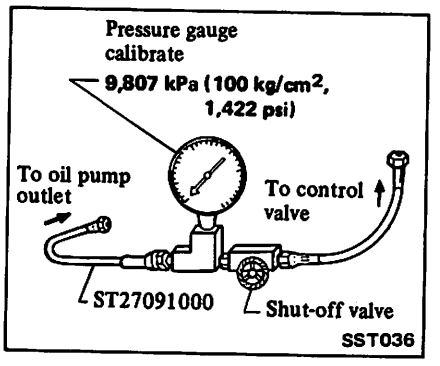

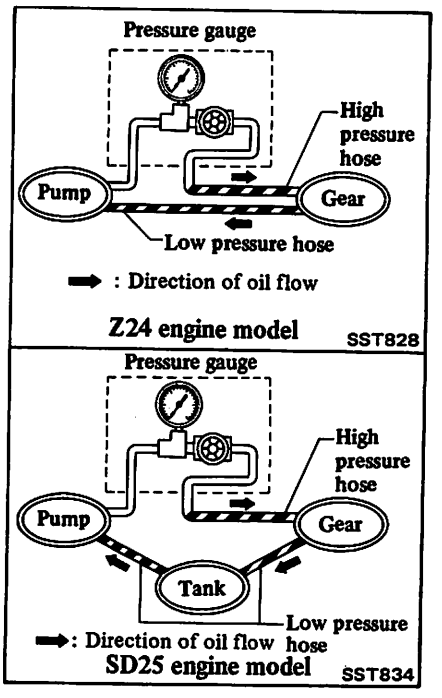

5. Open shut-off valve at **Tool**.

6. Check fluid level, **adding fluid if necessary.**
7. Run engine at idle **for 3 to 5 seconds.**
8. Stop engine and check fluid level, **adding fluid if necessary.**
9. Run engine and **check fluid level again, adding oil if necessary.**
10. Turn steering wheel fully in left or right until fluid reaches operating temperature.

- **Be sure that all connections are tight.**
- **Expel any air from system.**

11. Check pressure **with steering wheel fully turned in left and right.**

CAUTION:
Do not hold steering wheel at lock position for more than fifteen seconds, as this would abnormally increase fluid temperature and cause undue gear and pump wear.

Pressure should be as follows:

Normal pressure:
7,649 - 8,238 kPa
(78 - 84 kg/cm^2,
1,109 - 1,194 psi) at idling

12. If oil pressure is abnormal, slowly close shut-off valve and check oil pressure to determine which part is damaged, as follows:

Pressure	Damaged part
Normal	Gear
Abnormal	Pump

CAUTION:
Do not close shut-off valve for more than fifteen seconds, as this would abnormally increase lubricant temperature and cause undue pump wear.

13. Replace any part that is damaged.

CAUTION:
The power steering system consists primarily of an accurate hydraulic pressure unit.
Any abnormality in one of this unit's parts will cause the other part(s) to malfunction, or the oil to deteriorate. Whenever faulty parts must be replaced, oil should be discarded and all other parts should be cleaned.

14. Open shut-off valve, pour fresh oil into and bleed air from power steering system, as outlined in the "Bleeding Hydraulic System" section.
15. **Repeat steps 10 through 14** above until oil pressure is normal.

After checking hydraulic system, remove Tool and add fluid as necessary, then completely bleed air out of system.

Bleeding hydraulic system

1. Raise front end of vehicle until wheels clear ground.
2. Quickly turn steering wheel **all the way to right and left ten times and lightly touch wheel stoppers.**
3. Check fluid level, **adding fluid if necessary.**
4. Run engine. **Make sure temperature of fluid in pump rises to 60 to 80°C (140 to 176°F) with a temperature indicator.**
5. Stop engine, **adding fluid if necessary.**

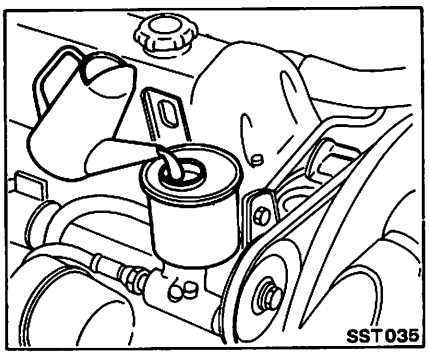

6. Run engine for 3 to 5 seconds.
7. Stop engine, **adding fluid if necessary.**
8. Quickly turn steering wheel **all the way to right and left ten times and lightly touch wheel stoppers.**
9. Check fluid level, **adding fluid if necessary.**
10. Start engine at idle.

Repeat steps 6 through 10 until air will be bled from pump

11. If air cannot be bled completely in steps 1 through 10, proceed as follows:

Turn steering wheel to right and left from lock to lock five to ten times. Carefully check fluid leakage with steering wheel held at each lock position for five seconds.

CAUTION:
Do not hold steering wheel at lock position for more than fifteen seconds at a time.

Steering wheel turning force check

1. Park car on a level, dry surface and set parking brake firmly.
2. Bring power steering fluid up to adequate operating temperature. [Approximately 60 to 80°C (140 to 176°F)].

- **It is easy to bring power steering fluid up to adequate operating temperature by idling engine and at the same time turning steering wheel from left to right for about two minutes. Alternatively, drive car several miles.**
- **Tires must be inflated to normal pressure.**

3. Check steering wheel turning torque when steering wheel has been turned 360° from straight-ahead position.

Steering wheel turning force:
24.5 - 29.4 N
(2.5 - 3.0 kg, 5.5 - 6.6 lb)
at circumference of steering wheel

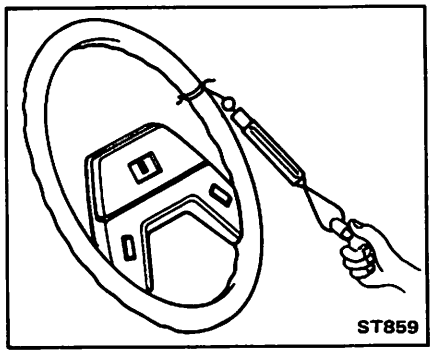

POWER STEERING GEAR

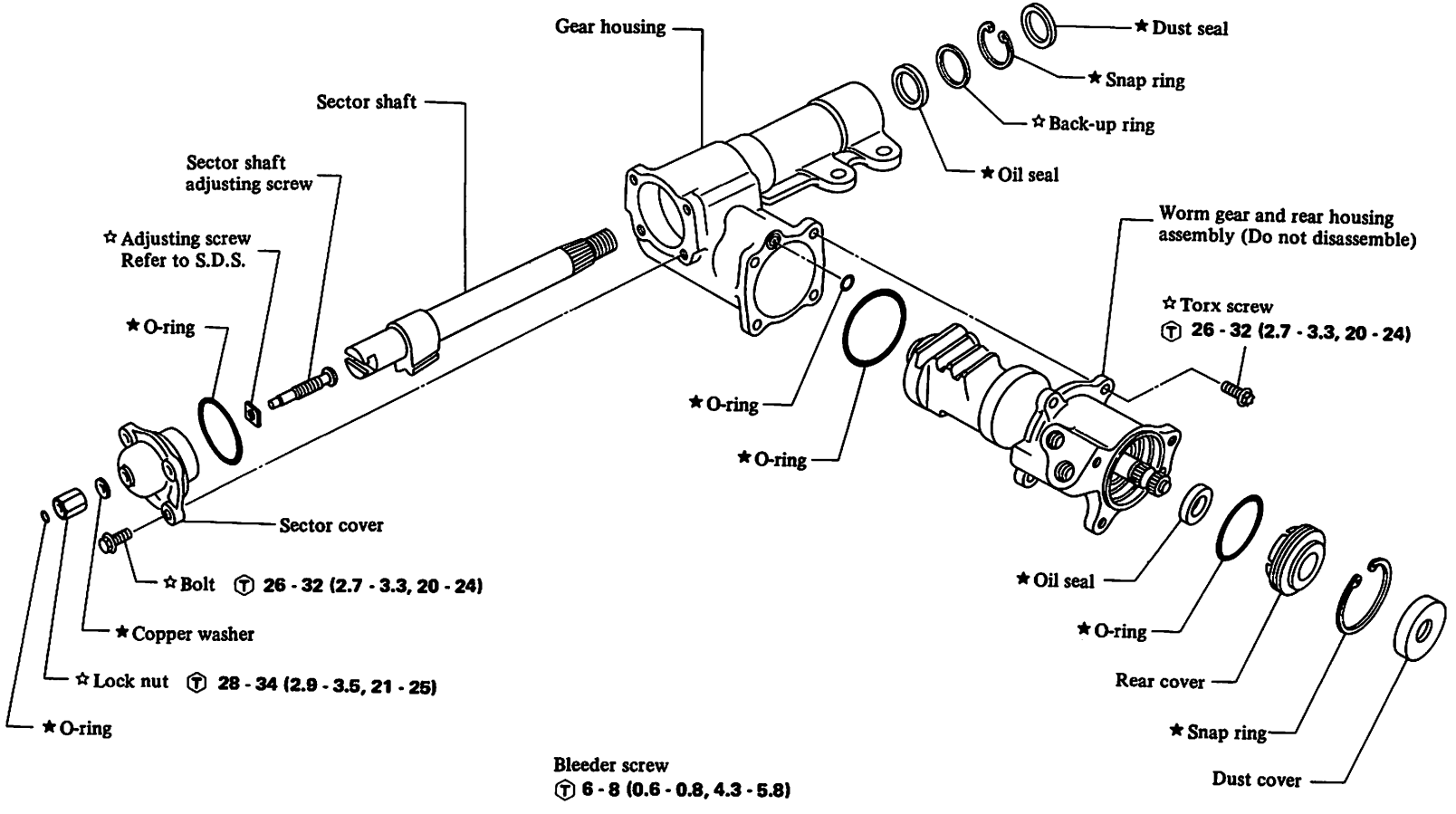

Ⓣ : N·m (kg-m, ft-lb)
★ or ☆: available for service replacement
★: always replace when disassembled.

SST148A

INSPECTION AND ADJUSTMENT

Wash clean all disassembled parts in suitable cleaning solvent and check their condition.

Check sealing portion.

- Adjusting screw nut O-ring.
- Sector shaft cover O-ring
- Sector shaft oil seal
- Rear cover oil seal and O-ring
- Rear housing O-ring
- Gear housing O-ring

Discard any oil seal and O-ring which have once been removed.

Replace oil seal and O-ring if sealing surface is deformed or cracked.

Turning torque measurement

1. Measure turning torque at 360° position.

(1) Install steering gear on **Tool.**

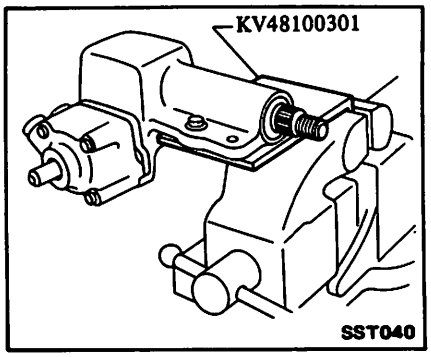

(2) Turn stub shaft all the way to right and left several times.

(3) Measure turning torque at 360° position from straight-ahead position using **Tool.**

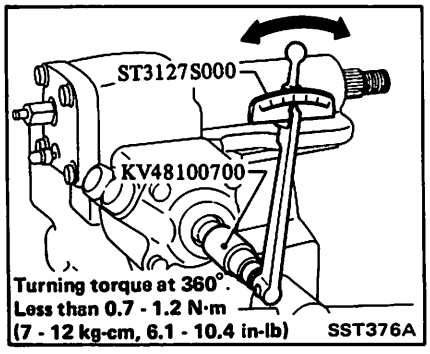

- **Stub shaft can be turned by wrapping vinyl tape around serration area of stub shaft and fitting wrench socket.**
- **If it is beyond specification, gear must be replaced as an assembly.**

2. Measure turning torque at straight-ahead position.

(1) Set worm gear in a straight-ahead position.

Straight-ahead position is position where stub shaft is turned 1.9 turns from lock position.

(2) Measure turning torque using **Tool.**

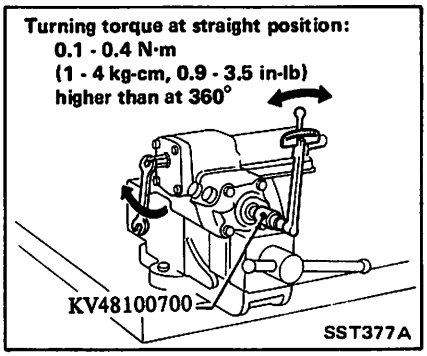

3. After adjustment is completed, tighten lock nut.

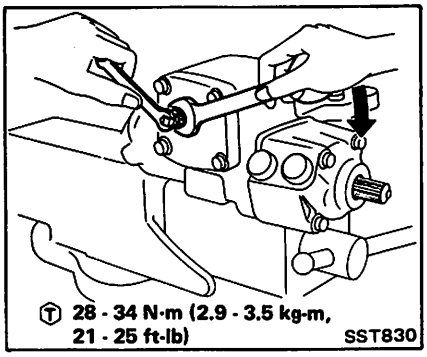

Measure turning torque. If they are not within specifications, replace gear assembly.

DISASSEMBLY

Before disassembly, measure turning torque.

If they are not within specifications, replace steering gear assembly.

CAUTION:
Each oil sealing parts, dust cover, special washer and snap ring once removed must not be used again.

Adjusting screw lock nut seal

Remove adjusting screw lock nut, and replace O-ring.

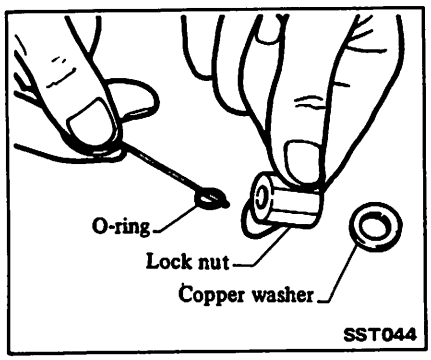

Sector shaft oil seal

1. Install steering gear on **Tool** KV48100301.
2. Set stub shaft in a straight-ahead position.

Straight-ahead position is a position where stub shaft is turned two turns by 45° from lock position.

3. Disconnect sector shaft cover bolt.

Do not loosen adjusting screw lock nut.

Do not turn lock nut unless necessary; otherwise it will damage O-ring, resulting in an oil leak.

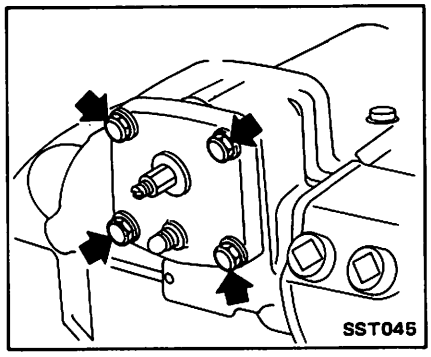

4. Draw out sector shaft.

Knock out end of sector shaft approximately 20 mm (0.79 in).

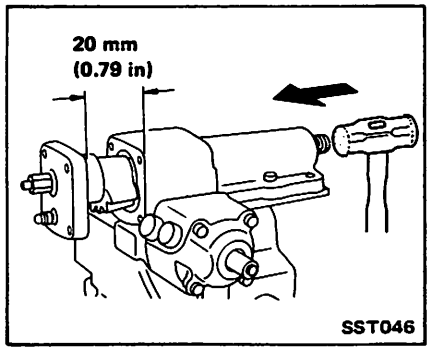

5. Connect a roll of plastic film to sector shaft.

Plastic film:
Thickness 0.1 mm (0.004 in)
Length x width
200 x 200 mm (7.87 x 7.87 in)

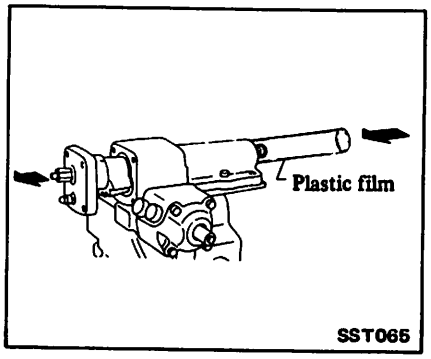

6. Pull out sector shaft by hand.

Attach plastic film to two bearings located inside gear housing while simultaneously pulling out sector shaft so that bearings will not drop into housing.

7. Remove dust seal.

Apply blade of screwdriver to dust seal lightly so that it will not damage inner side of gear housing.

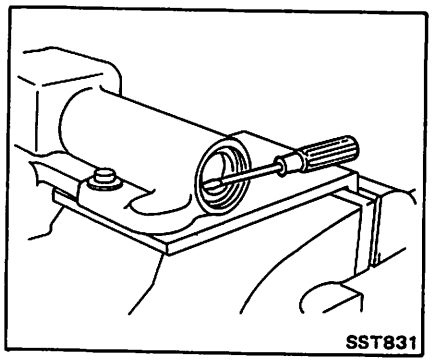

8. Remove snap ring.

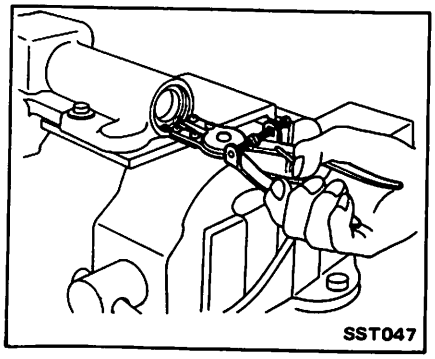

9. Remove special washer and oil seal.

Apply blade of screwdriver to oil seal lightly so that it will not damage inner side of gear housing.

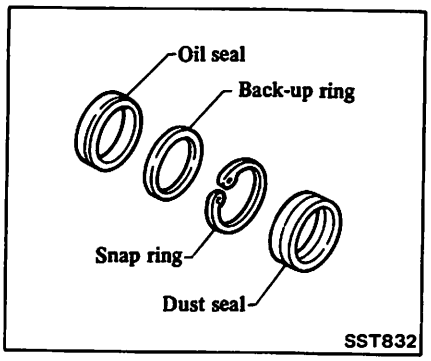

10. Remove O-ring.

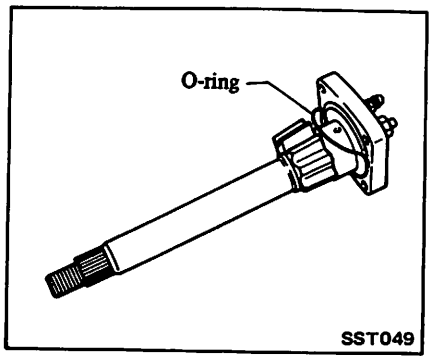

Rear housing O-ring

1. Remove sector shaft. Refer to steps 1 through 5 in "Disassembly of Sector Shaft Oil Seal".
2. Remove torx screws.

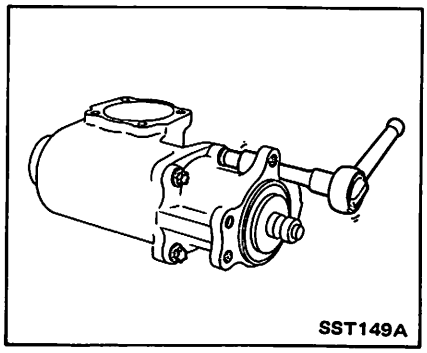

3. Remove rear housing together with worm gear assembly.

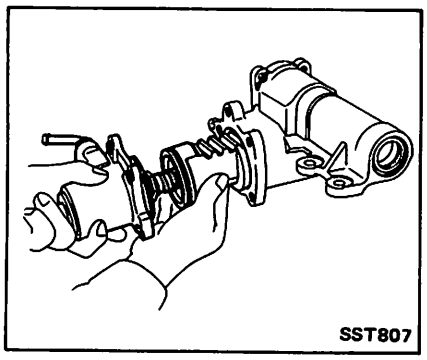

CAUTION:
a. When worm assembly is removed, piston may turn and come off under its own weight. Hold piston to prevent it from turning.
If piston-to-rear housing clearance exceeds 35 mm (1.38 in) by loosening, recirculating ball will be out of groove of worm; do not reinstall piston but replace the entire assembly.
b. Take care not to damage teflon ring at piston end when removing.

4. Remove O-rings.

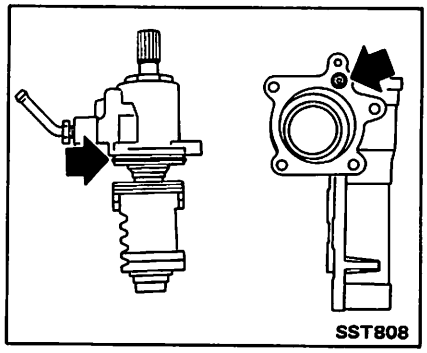

Rear cover O-ring and oil seal

1. Remove snap ring, then rear cover.

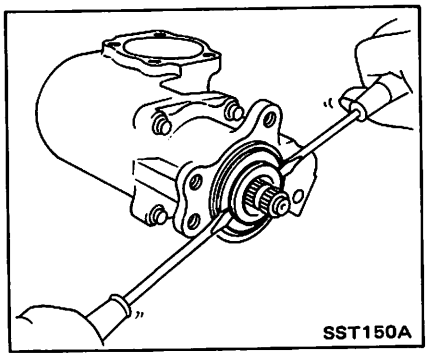

2. Remove O-ring and oil seal.

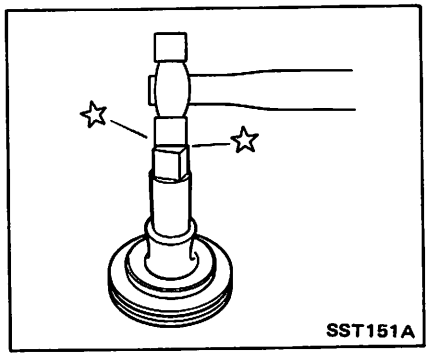

ASSEMBLY

Adjusting screw lock nut seal

Insert new O-ring into adjusting screw lock nut.

- **Before inserting, apply a thin coat of vaseline to O-ring.**
- **Insert O-ring to make sure it fits into groove.**

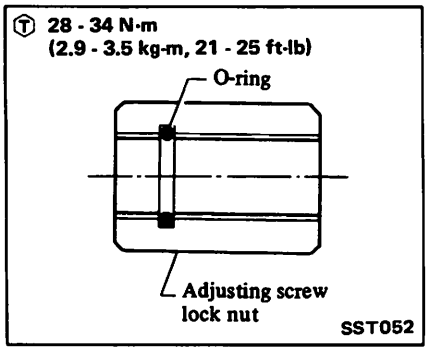

Sector shaft oil seal

- **When installing, be sure to use new oil seal, dust seal and special washer.**
- **Before installing, apply a thin coat of vaseline to new oil seal and dust seal.**

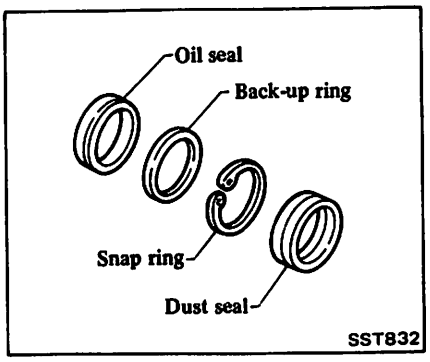

1. Press new oil seal and then install special washer.

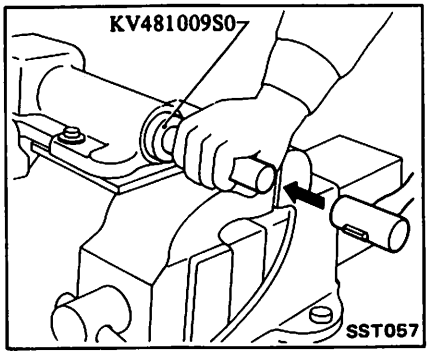

2. Install a new snap ring into gear housing.

CAUTION:

a. Turn snap ring to make sure it fits into groove.

b. Always install snap ring with its rounded edges facing oil seal.

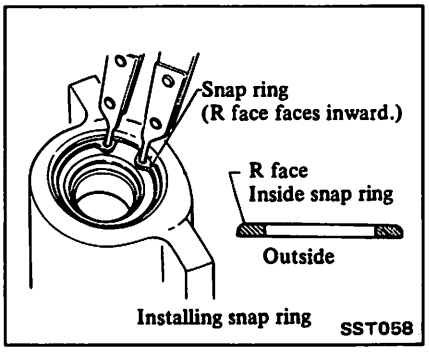

3. Press a new dust seal.

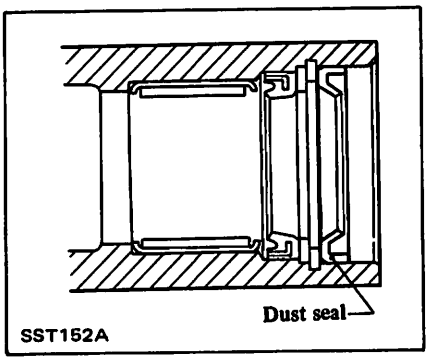

4. Fit new O-ring into sector shaft cover.

- **Before installing, apply a thin coat of vaseline to O-ring.**
- **Make certain that O-ring is installed properly, and not damaged by sector shaft.**

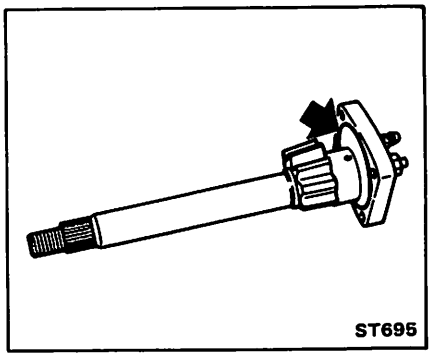

5. Set piston rack at straight-ahead position.

Turn piston rack about 10° to 15° toward yourself with your finger.

This is for smooth insertion of sector gear.

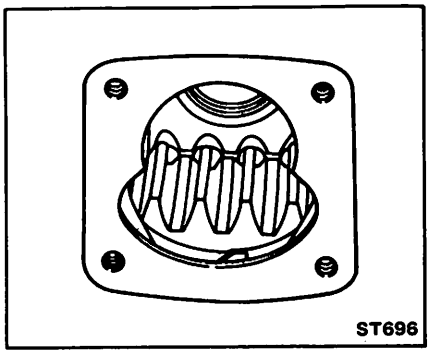

6. Wrap vinyl tape around serration area of sector shaft.

The reason is that vinyl tape prevents oil seal lip from being damaged during insertion.

7. Gradually insert sector shaft into gear housing, being careful not to damage oil seal.

When inserting sector shaft into gear housing, remove plastic film. Be careful not to drop bearings into gear housing.

8. Tighten sector shaft cover bolts.

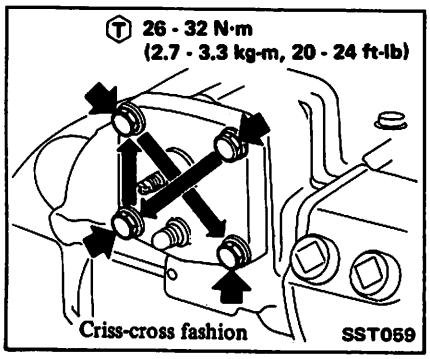

9. Check turning torque and steering gear preload.

Refer to Inspection and Adjustment.

- **If there is a great difference between values of turning torque before and after disassembly, it must be assumed that some new problem has occurred. It will be necessary to replace the entire assembly.**

Rear housing O-ring

1. Install new O-rings.

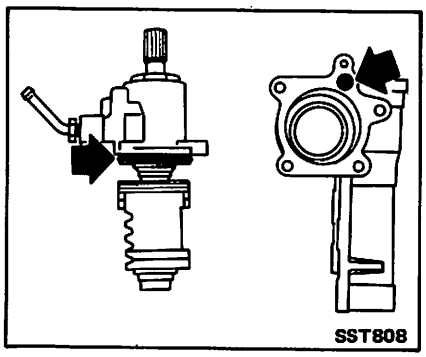

a. Before installing, apply a thin coat of vaseline to O-ring.
b. Make sure O-ring is installed correctly and is not damaged by worm gear.

2. Gradually insert worm gear and rear housing assembly into gear housing, being careful not to damage oil seal and O-rings.
3. Install torx screws.

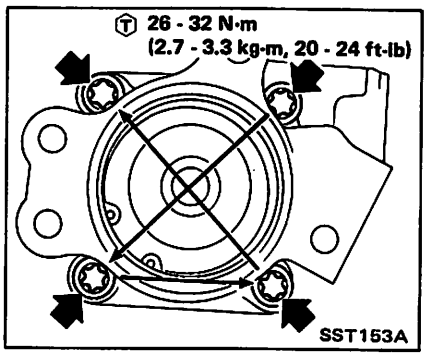

4. Assemble gear by referring to steps 5 through 7 in "Assembly of Sector Shaft Oil Seal".

Rear cover O-ring and oil seal

1. Install new O-ring and oil seal.

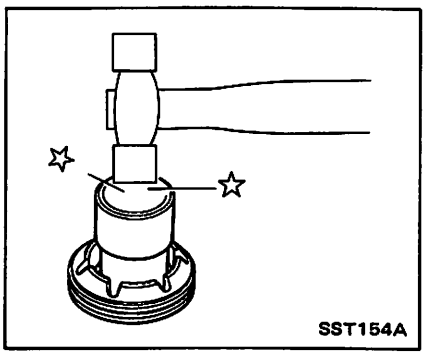

2. Install rear cover, then snap ring.

CAUTION:
a. Turn snap ring to make sure it fits into groove.
b. Always install snap ring with its rounded edge facing rear cover.

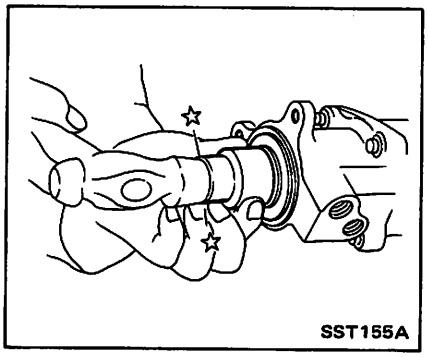

Sector shaft end play

Select suitable adjusting shim and adjust end play between sector shaft and adjusting screw.

Sector shaft adjusting screw shims: Refer to S.D.S.

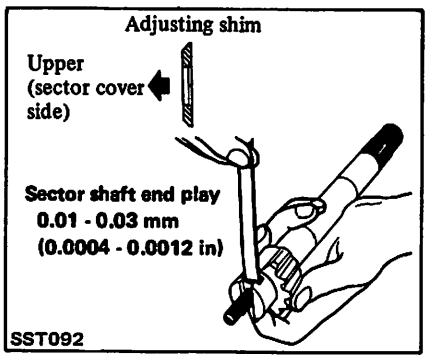

POWER STEERING OIL PUMP (Z24 engine model)

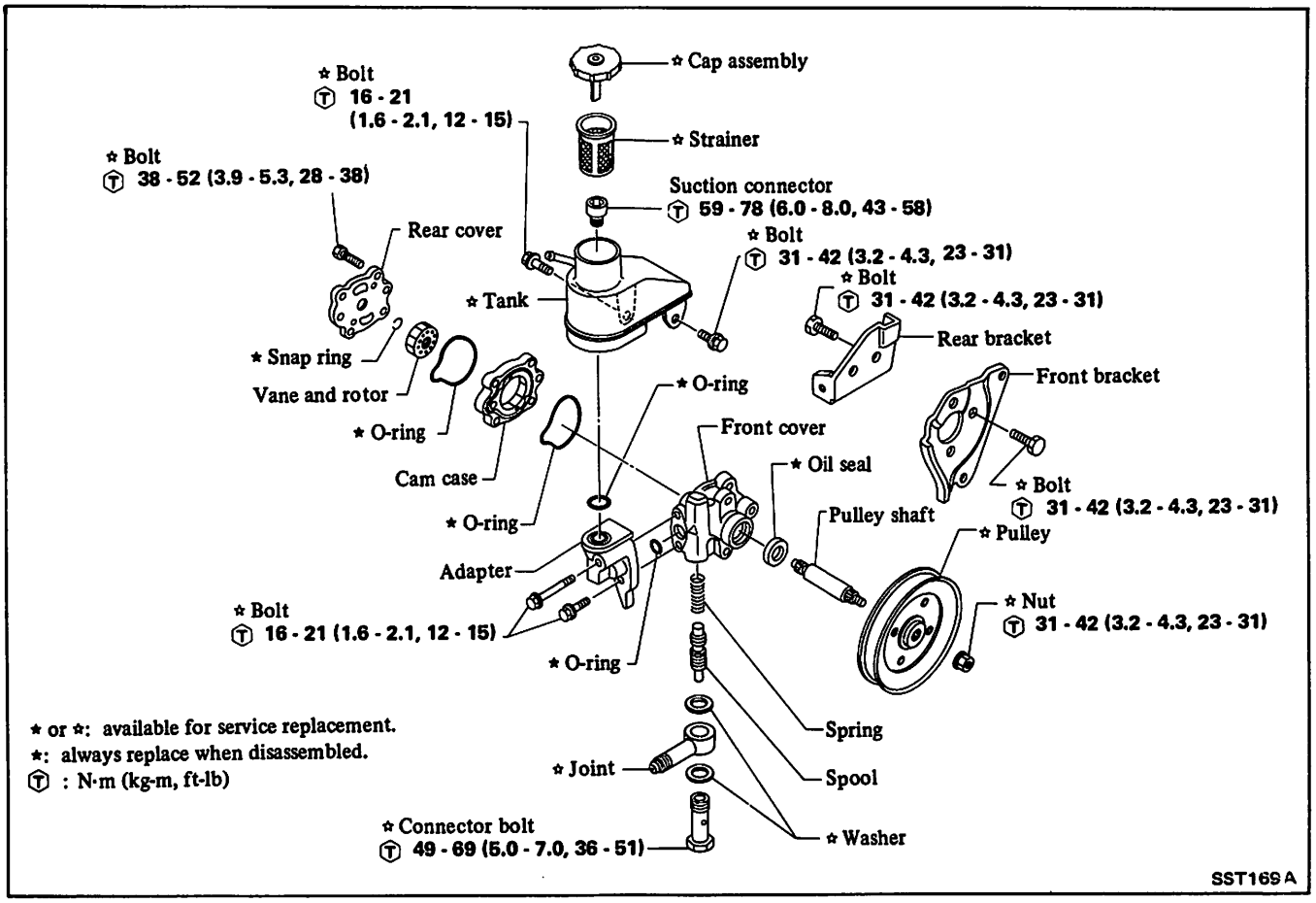

The power steering oil pump should be disassembled only if any of the following phenomena is noted.

- **Oil leak at the following points**

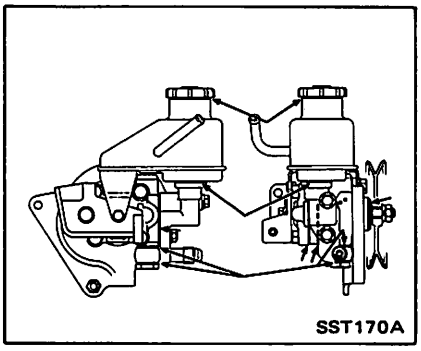

- **Deformed or damaged pulley**

CAUTION:

This power steering oil pump is a precision hydraulic unit. Extreme care should be taken to prevent entry of dust, dirt, metal chips, etc. into oil pump during disassembly.

DISASSEMBLY

1. Remove pulley.
2. Remove oil tank.

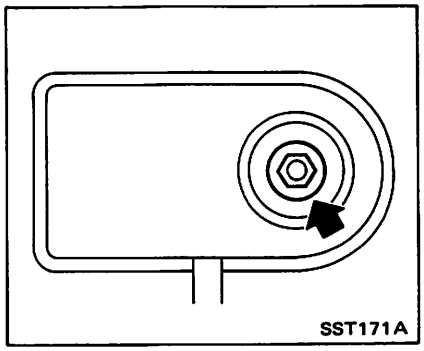

3. Make matching marks.

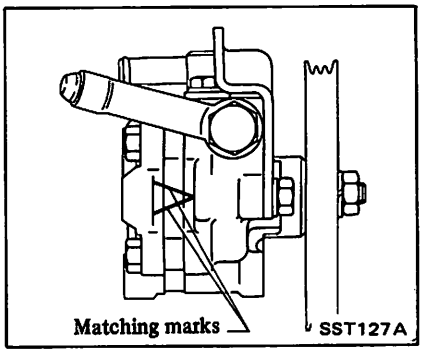

4. Remove rear cover.
5. Remove O-rings from cam case.

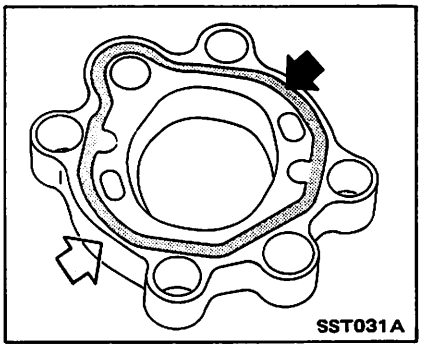

CAUTION:
When removing cam case, be sure that the vane does not come off the rotor.

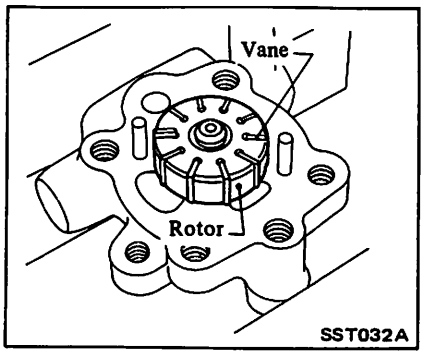

6. Remove snap ring, then draw pulley shaft out.

- **Be careful not to drop pulley shaft.**

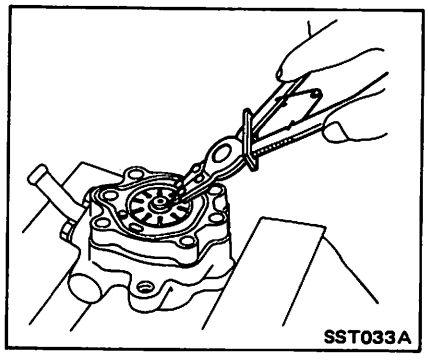

7. Install cam case and rear cover, then remove oil seal.

- **Be careful not to damage casing.**

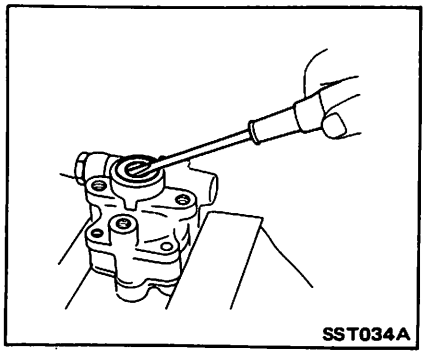

8. Remove connector.

- **Be careful not to drop spool.**

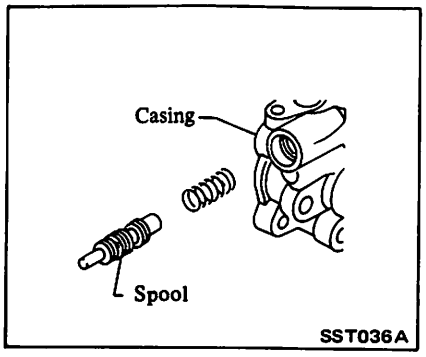

INSPECTION

Wash clean all disassembled parts in suitable cleaning solvent.

Pulley and pulley shaft

a. **If pulley is cracked or deformed, replace it.**
b. **If an oil leak is noticed around pulley shaft oil seal, replace it.**
c. **If serration of pulley or pulley shaft is deformed or worn, replace it.**

Connector

a. **If connector is deformed or cracked, replace oil pump assembly.**
b. **If an oil leak is noticed, replace O-ring.**

ASSEMBLY

Assemble oil pump in the reverse order of disassembly, noting the following instructions.

- Before installing O-rings and oil seal, apply a thin coat of power steering fluid to them.
- Make certain that O-rings and oil seal are installed properly.
- Be careful not to damage oil seal and also be careful of its direction when installing new oil seal.

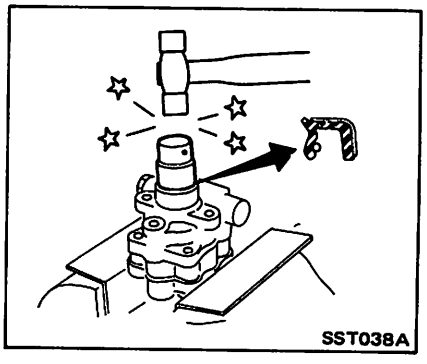

POWER STEERING OIL PUMP (SD25 engine model)

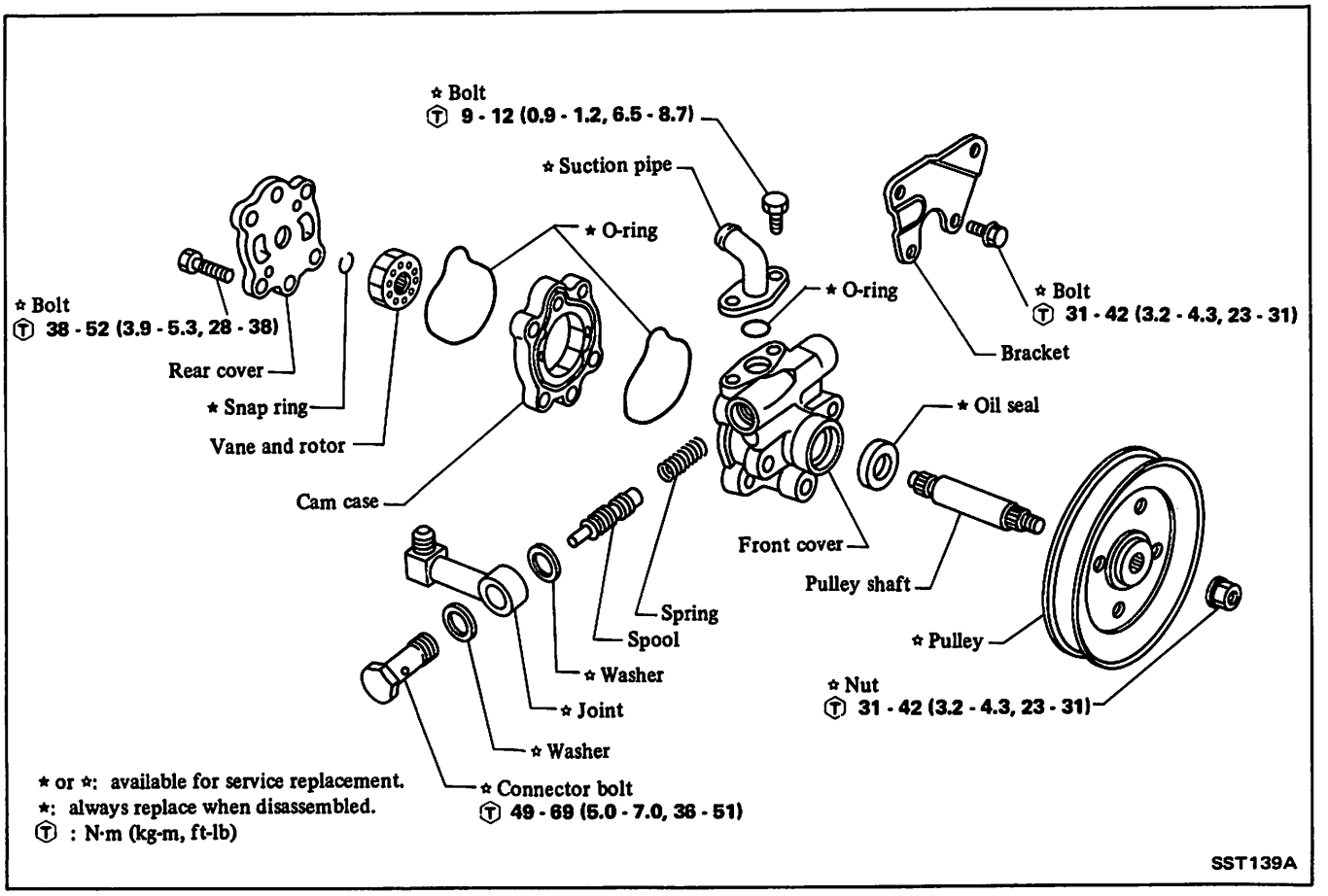

Servicing procedures for SD25 engine model are almost the same as those for Z24 engine model. For necessary procedures not described in this section, refer to Power Steering Oil Pump (Z24 engine model).

ASSEMBLY

- Install joint.

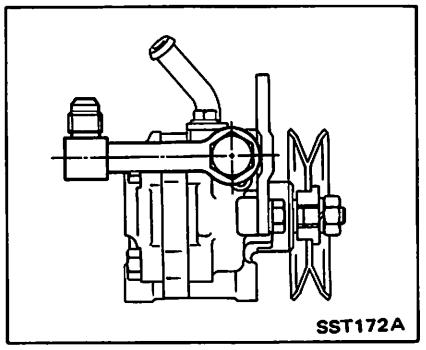

STEERING LINKAGE

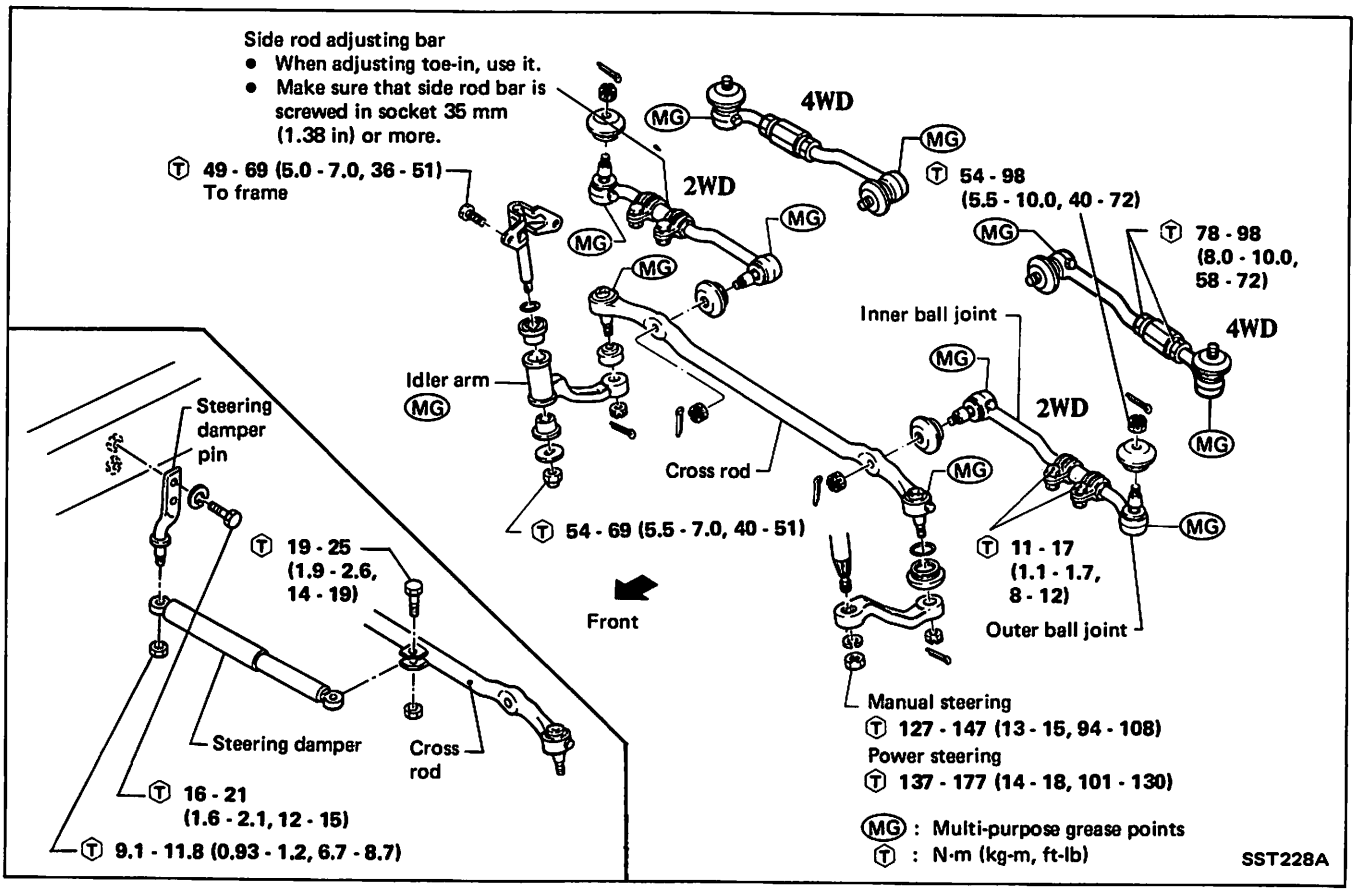

REMOVAL AND INSTALLATION

1. Jack up front of vehicle and support it on the safety stands.
2. Block rear wheels with chocks.
3. Remove gear arm using **Tool.**

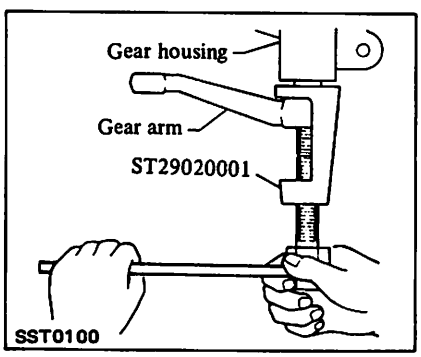

4. Remove idler arm assembly.

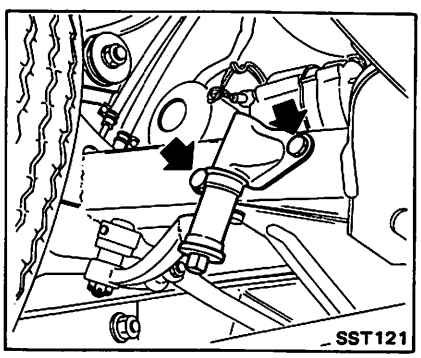

5. Remove side rod from knuckle arm using **Tool.**

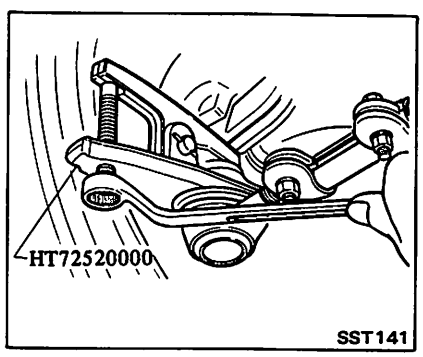

6. Install steering linkage in the reverse order of removal.

Ⓣ : Gear arm to sector shaft
Manual steering
127 - 147 N·m
(13 - 15 kg-m,
94 - 108 ft-lb)
Power steering
137 - 177 N·m
(14 - 18 kg-m,
101 - 130 ft-lb)
Idler arm to body frame
49 - 69 N·m
(5.0 - 7.0 kg-m,
36 - 51 ft-lb)
Side rod to knuckle arm
54 - 98 N·m
(5.5 - 10.0 kg-m,
40 - 72 ft-lb)

7. After installing steering linkage, check wheel alignment, and if necessary, adjust.

Refer to Section MA for adjustment.

DISASSEMBLY

Side rod

1. Remove both side rods from cross rod using **Tool** HT72520000.
2. Separate outer and inner ball joints from side rod adjusting tube.

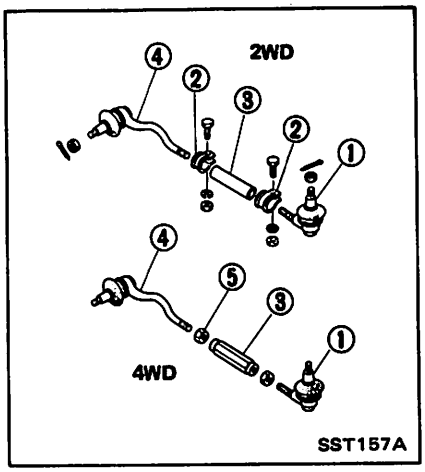

1 Outer side rod assembly
2 Side rod clamp
3 Side rod adjusting tube
4 Inner side rod assembly
5 Side rod lock nut

Idler arm assembly

Loosen nut, and separate each part.

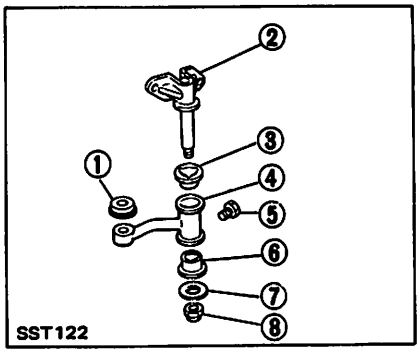

1 Dust cover
2 Idler bracket
3 Idler arm bushing
4 Idler arm
5 Filler plug
6 Idler arm bushing
7 Plain washer
8 Nut

ASSEMBLY

Assemble steering linkage in the reverse order of disassembly, observing the following instructions.

Idler arm assembly

To assemble idler arm, proceed as follows:

1. Apply coat of multi-purpose grease to bushing.

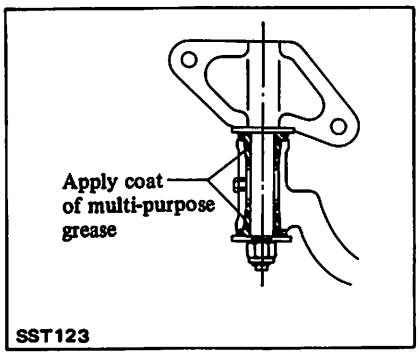

2. Press bushing into idler body, and insert shaft of idler bracket carefully until bushing protrudes.
3. Tighten nut.

Ⓣ : 54 - 69 N·m (5.5 - 7.0 kg-m, 40 - 51 ft-lb)

Cross rod and side rod

1. When side rod ball joints and side rod bar are separated, adjust side rod length correctly.

Adjustment should be done between ball stud centers.

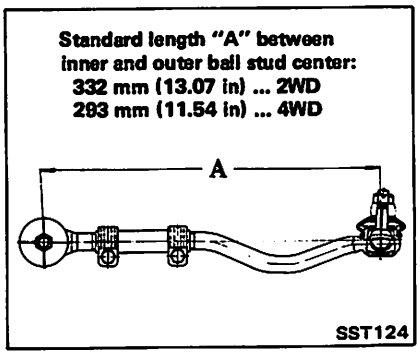

2. Tighten side rod clamp nut or lock nut.

2WD
Ⓣ : 11 - 17 N·m (1.1 - 1.7 kg-m, 8 - 12 ft-lb)

4WD
Ⓣ : 78 - 98 N·m (8.0 - 10.0 kg-m, 58 - 72 ft-lb)

Lock side rod clamp nut so that ball joint on outer socket is 90° with respect to that on inner socket.

INSPECTION

Ball joint

Ball joint is assembled at factory and cannot be disassembled.

1. Check ball joint for play. If ball stud is worn and play in axial direction is excessive or joint is hard to swing, replace as a complete unit.

Initial turning torque:
Ball joint
1.0 - 4.9 N·m (10 - 50 kg-cm, 8.7 - 43.4 in-lb)

2. Check condition of dust cover. If it is cracked excessively, replace ball joint.
3. Lubricate ball joint with recommended multi-purpose grease, if necessary.

To lubricate, remove plug and install grease nipple in its place.

Pump grease slowly until old grease is completely forced out. After greasing, reinstall plug.

When a high-pressure grease gun is used, operate the grease gun carefully so that grease is injected slowly and new grease does not come out from the clamp portion.

Idler arm assembly

Check rubber bushing of idler arm for breakage, wear or play, and if necessary replace.

Lubricate idler arm assembly with recommended multi-purpose grease, if necessary.

When lubricating, refer to Ball Joint for inspection.

Cross rod and side rod

Check side rod and cross rod for breakage, bend or crack, and replace with a new one if necessary.

Steering Damper

Check for oil leakage and measure damping force of damper, and replace if necessary.

Damping force:
981 N (100 kg, 221 lb) at 0.3 m (1.0 ft)/sec

Fixing location

Check fixing location (nuts and cotter pins) for looseness, play or breakage. When looseness or play is found, check for wear on tapered portion of ball stud, gear arm of idler arm.

When reassembling each ball joint, use new cotter pins.

SERVICE DATA AND SPECIFICATIONS (S.D.S.)

GENERAL SPECIFICATIONS

Steering column type		Collapsible	
Steering gear type		VB56S	PB48S
Turns of steering wheel on the vehicle (Lock-lock)		4.5	3.5
Steering gear ratio		19.0 - 22.5	16.49
Steering damper [at 0.3 m (1.0 ft)/sec]	N (kg, lb)	981 (100, 221)	

INSPECTION AND ADJUSTMENT

Steering wheel axial play	mm (in)	0 (0)
Steering wheel play	mm (in)	Less than 35 (1.38)

STEERING COLUMN

Unit: mm (in)

				Dimension		
				A	B	C
2WD	MS*	Non-tilt	(Type NA)	852.7 - 854.7 (33.57 - 33.65)	603.6 - 605.6 (23.76 - 23.84)	310.0 - 312.0 (12.20 - 12.28)
		Tilt	(Type TA)	852.7 - 854.7 (33.57 - 33.65)	328.6 - 330.6 (12.94 - 13.02)	310.0 - 312.0 (12.20 - 12.28)
	PS**	Non-tilt	(Type NB)	783.0 - 785.0 (30.83 - 30.91)	603.6 - 605.6 (23.76 - 23.84)	323.0 - 325.0 (12.72 - 12.80)
		Tilt	(Type TB)	783.0 - 785.0 (30.83 - 30.91)	328.6 - 330.6 (12.94 - 13.02)	323.0 - 325.0 (12.72 - 12.80)
4WD	MS*	Non-tilt	(Type NA)	852.7 - 854.7 (33.57 - 33.65)	603.6 - 605.6 (23.76 - 23.84)	350.0 - 352.0 (13.78 - 13.86)
		Tilt	(Type TA)	852.7 - 854.7 (33.57 - 33.65)	328.6 - 330.6 (12.94 - 13.02)	350.0 - 352.0 (13.78 - 13.86)
	PS**	Non-tilt	(Type NA)	852.7 - 854.7 (33.57 - 33.65)	603.6 - 605.6 (23.76 - 23.84)	264.0 - 266.0 (10.39 - 10.47)
		Tilt	(Type TA)	852.7 - 854.7 (33.57 - 33.65)	328.6 - 330.6 (12.94 - 13.02)	264.0 - 266.0 (10.39 - 10.47)

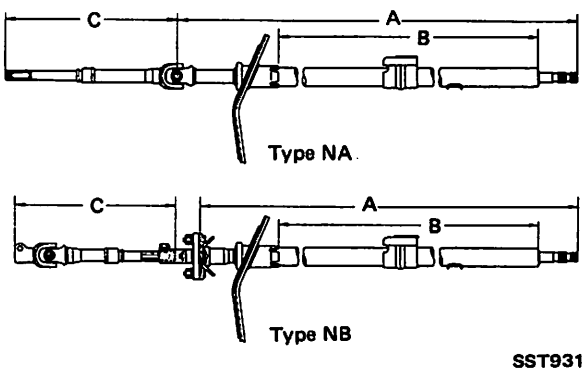

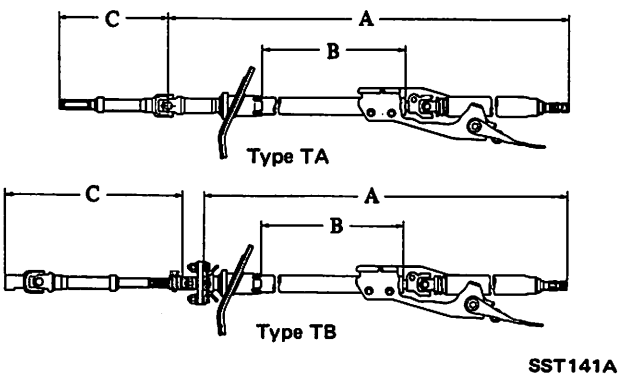

*: Manual steering
**: Power steering

MANUAL STEERING GEAR (Model: VB56S)

Worm bearing preload (With oil seal) N·m (kg-cm, in-lb)	0.20 - 0.59 (2.0 - 6.0, 1.7 - 5.2)	
Steering gear preload (With oil seal) N·m (kg-cm, in-lb)		
New parts	0.83 - 1.23 (8.5 - 12.5, 7.4 - 10.9)	
Used parts	0.59 - 0.98 (6.0 - 10.0, 5.2 - 8.7)	
Backlash at gear arm top end (In a straight-ahead position) mm (in)	0 - 0.1 (0 - 0.004)	
End play (Between sector shaft and adjusting screw) mm (in)	0.01 - 0.03 (0.0004 - 0.0012)	
Adjusting shim thickness	Thickness mm (in)	Part number
	1.575 - 1.600 (0.0620 - 0.0630)	48213-B0100
	1.550 - 1.575 (0.0610 - 0.0620)	48214-B0100
	1.525 - 1.550 (0.0600 - 0.0610)	48215-B0100
	1.500 - 1.525 (0.0591 - 0.0600)	48216-B0100
	1.475 - 1.500 (0.0581 - 0.0591)	48217-B0100
	1.450 - 1.475 (0.0571 - 0.0581)	48218-B0100
Oil capacity liters (US pt, Imp pt)	Approx. 0.33 (3/4, 5/8)	

POWER STEERING SYSTEM (Model: PB48S)

Steering wheel turning force (at circumference of steering wheel) N (kg, lb)	24.5 - 29.4 (2.5 - 3.0, 5.5 - 6.6)	
Oil pump pressure kPa (kg/cm², psi)	7,649 - 8,238 (78 - 84, 1,109 - 1,194) at idling	
Fluid capacity mℓ (US fl oz, Imp fl oz)	Approximately 900 - 1,000 (30.4 - 33.8, 31.7 - 35.2)	
Normal operating temperature °C (°F)	60 - 80 (140 - 176)	
Steering gear turning torque N·m (kg-cm, in-lb)		
Straight-ahead position (As compared with steering wheel turned 360°)	0.1 - 0.4 (1 - 4, 0.9 - 3.5) higher	
360° position from straight-ahead position	0.7 - 1.2 (7 - 12, 6.1 - 10.4)	
End play (Between sector shaft and adjusting screw) mm (in)	0.01 - 0.03 (0.0004 - 0.0012)	
Adjusting shim thickness	Thickness mm (in)	Part number
	1.575 - 1.600 (0.0620 - 0.0630)	48213-B0100
	1.550 - 1.575 (0.0610 - 0.0620)	48214-B0100
	1.525 - 1.550 (0.0600 - 0.0610)	48215-B0100
	1.500 - 1.525 (0.0591 - 0.0600)	48216-B0100
	1.475 - 1.500 (0.0581 - 0.0591)	48217-B0100
	1.450 - 1.475 (0.0571 - 0.0581)	48218-B0100

STEERING LINKAGE

Model	2WD	4WD
Ball joint initial turning torque N·m (kg-cm, in-lb)		
New part	1.0 - 4.9 (10 - 50, 8.7 - 43.4)	
Used part	More than 1.0 (10, 8.7)	
Standard side rod length mm (in)	Approx. 332 (13.07)	Approx. 293 (11.54)

TIGHTENING TORQUE

STEERING COLUMN

Unit	N·m	kg-m	ft-lb
Steering wheel nut	39 - 49	4.0 - 5.0	29 - 36
Jacket tube bracket to dash panel	2.9 - 4.3	0.30 - 0.44	2.2 - 3.2
Steering column mounting bracket	9 - 11	0.9 - 1.1	6.5 - 8.0
Coupling to column shaft and gear	39 - 49	4.0 - 5.0	29 - 36
Steering column shaft to coupling	39 - 49	4.0 - 5.0	29 - 36
Tilt joint fixing bolt	32 - 38	3.3 - 3.9	24 - 28
Tilt lever fixing bolt	8 - 12	0.8 - 1.2	5.8 - 8.7
Mounting bracket to lower jacket tube (Tilt type)	16 - 21	1.6 - 2.1	12 - 15
Coupling fixing nut	15 - 22	1.5 - 2.2	11 - 16

MANUAL STEERING GEAR (Model: VB56S)

Unit	N·m	kg-m	ft-lb
Steering gear housing to body side frame	84 - 96	8.6 - 9.8	62 - 71
Sector shaft to gear arm	127 - 147	13 - 15	94 - 108
Adjusting plug lock nut	245 - 314	25 - 32	181 - 231
Sector shaft cover bolt	15 - 25	1.5 - 2.5	11 - 18
Sector shaft adjusting screw lock nut	29 - 39	3.0 - 4.0	22 - 29

POWER STEERING SYSTEM (Model: PB48S)

Installation

Unit	N·m	kg-m	ft-lb
Gear arm to sector shaft	137 - 177	14 - 18	101 - 130
Steering gear housing to body	84 - 96	8.6 - 9.8	62 - 71
Oil pump to bracket			
Z24	16 - 21	1.6 - 2.1	12 - 15
(Oil pump to stay)	16 - 21	1.6 - 2.1	12 - 15
SD25			
Front (Pulley side)	16 - 21	1.6 - 2.1	12 - 15
Rear	19 - 25	1.9 - 2.6	14 - 19
Tank to bracket (SD25)	31 - 42	3.2 - 4.3	23 - 31
High-pressure pipe to gear	20 - 29	2.0 - 3.0	14 - 22
Low-pressure pipe to gear	39 - 49	4.0 - 5.0	29 - 36
Low-pressure hose clip bolt	3 - 6	0.3 - 0.6	2.2 - 4.3
High-pressure hose to oil pump	29 - 49	3.0 - 5.0	22 - 36

Power steering gear

Unit	N·m	kg-m	ft-lb
Sector shaft adjusting screw lock nut	28 - 34	2.9 - 3.5	21 - 25
Sector shaft cover bolt	26 - 32	2.7 - 3.3	20 - 24
Rear housing bolt	26 - 32	2.7 - 3.3	20 - 24
Bleeder screw	6 - 8	0.6 - 0.8	4.3 - 5.8

Power steering oil pump

Unit	N·m	kg-m	ft-lb
Pulley lock nut	31 - 42	3.2 - 4.3	23 - 31
Rear cover fixing bolt	38 - 52	3.9 - 5.3	28 - 38
Connector bolt	49 - 69	5.0 - 7.0	36 - 51
Suction connector (Z24)	59 - 78	6.0 - 8.0	43 - 58
Suction pipe (SD25)	9 - 12	0.9 - 1.2	6.5 - 8.7
Another fixing bolts			
M10 size	31 - 42	3.2 - 4.3	23 - 31
M8 size	16 - 21	1.6 - 2.1	12 - 15

STEERING LINKAGE

Unit	N·m	kg-m	ft-lb
Idle arm to body side frame	49 - 69	5.0 - 7.0	36 - 51
Ball stud nut	54 - 98	5.5 - 10.0	40 - 72
Idle arm nut	54 - 69	5.5 - 7.0	40 - 51
Side rod bar clamp nut (2WD)	11 - 17	1.1 - 1.7	8 - 12
Side rod lock nut (4WD)	78 - 98	8.0 - 10.0	58 - 72
Steering damper			
To cross rod	19 - 25	1.9 - 2.6	14 - 19
To bracket	9.1 - 11.8	0.93 - 1.2	6.7 - 8.7
Bracket to body	16 - 21	1.6 - 2.1	12 - 15

TROUBLE DIAGNOSES AND CORRECTIONS

Except for the following probable causes and corrective actions, refer to Trouble Diagnoses and Corrections in Front Axle and Front Suspension section.

MANUAL STEERING

Condition	Probable cause	Corrective action
Excessive wheel play.	Insufficiently tightened or improperly installed steering gear housing.	Retighten.
	Damaged steering linkage or ball joint.	Replace faulty parts.
	Incorrect adjustment of steering gear.	Adjust.
Vibration, shock or shimmying of steering wheel.	Insufficiently tightened or improperly installed steering gear housing.	Retighten.
	Wear of steering linkage.	Replace faulty parts.
	Damaged idler arm.	Replace.
	Worn column bearing, weakened column bearing spring, or loose clamp.	Replace or retighten.
Vehicle pulls to right or left.	Deformed steering linkage and/or suspension link.	Replace.
Stiff or heavy steering wheel.	Insufficient lubricants or mixing impurities in steering linkage or excessively worn steering linkage.	Replenish grease or replace the part.
	Worn or damaged steering gear and bearing.	Replace.
	Incorrectly adjusted steering gear.	Adjust.
	Deformed steering linkage.	Replace.
	Interference of steering column with turn signal switch.	Adjust.

POWER STEERING

Condition	Probable cause	Corrective action
Oil pressure does not build up.	Pump drive belt slipping on pulley.	Readjust belt tension.
	Pump malfunctioning.	Replace.
	Oil leaking through hose joints.	Replace or retighten copper washer.
	Oil leaking through power steering.	Replace sealing parts.
Steering wheel moves heavily.	Lack of oil in oil pump.*	Refill.
	Air present in oil.	Bleed air.
	Oil pressure too low.	See "Hydraulic system check".
	Wheel alignment out of specifications or air pressure in tires too low.*	Re-align or inflate tires to correct pressure.
	Steering gears improperly engaged.*	Replace gear assembly.
	Steering column out of alignment.*	Repair or replace.
	Worn or damaged ball joint at suspension and steering linkage.*	Replace.
	Idler arm dragging.*	Repair or replace.
Steering wheel fails to return.	Refer to items marked "*" above.	
	Front wheel caster improperly adjusted.	Readjust.
	Internal gears dragged or gouged.	Replace gear assembly.
Steering effort is not the same in both directions.	Oil leakage in steering gear.	Replace sealing parts.
	Stuffy oil passage in steering gear.	Replace gear assembly.
Unstable running.	Wheel bearing not properly adjusted.	Readjust.
	Stuck or damaged control valve in steering gear.	Replace gear assembly.
	Front wheel alignment not properly.	Readjust.
	Excessive steering gear play.	Readjust backlash or replace gear assembly.
	Play at suspension and linkage ball joint.	Replace.
Noisy pump.	Lack of oil in oil pump.	Refill.
	Hoses or oil filter clogged.	Clean or, if necessary, replace.
	Loose pulley.	Repair.
	Belt noisy or slapping.	Readjust tension.
	Broken pump part.	Replace.

SPECIAL SERVICE TOOLS

Tool number (Kent-Moore No.)	Tool name	Unit application	
		Model equipped with manual steering	Model equipped with power steering
ST27180001 (J25726-A)	Steering wheel puller	X	X
ST29020001 (J24319-01)	Steering gear arm puller	X	X
KV48101500 (J28802)	Lock nut wrench	X	–
KV48101400 (J28803)	Adjusting plug wrench	X	–
ST3127S000 (See J25765-A) ① GG91030000 (J25765-A) ② HT62940000 (–) ③ HT62900000 (–)	Preload gauge Torque wrench Socket adapter Socket adapter	X	X
① ST35322000 (–) ② ST35325000 (–)	Front wheel bearing drift	X	–
KV48100301 (–)	Strut & steering gear box attachment	X	X
HT72520000 (J25730-A)	Ball joint remover	X	X

Tool number (Kent-Moore No.)	Tool name	Unit application	
		Model equipped with manual steering	Model equipped with power steering
ST27091000 (J26357)	Pressure gauge 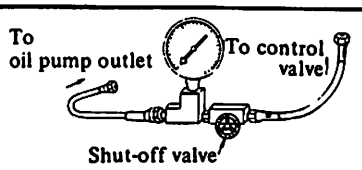	–	X
KV481009S0 (–) ① KV48100910 (–) ② KV48100920 (J26367) ③ KV48100930 (J26367)	Oil seal drift set Drift Adapter Adapter 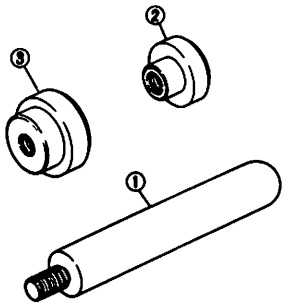	–	X
KV48100700 (–)	Torque adapter 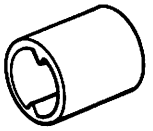	X	X

BODY & FRAME

SECTION BF

CONTENTS

GENERAL SERVICING ..... BF- 2
Clip and fastener ..... BF- 2
BODY FRONT END ..... BF- 4
FRONT DOOR ..... BF- 5
Power window ..... BF- 6
Power door lock ..... BF- 7
BODY REAR END ..... BF- 9
WINDSHIELD AND WINDOWS BF-10
Windshield BF-10
Back window BF-12
Side window BF-12
INTERIOR AND EXTERIOR BF-13
Interior BF-13
Exterior BF-14
INSTRUMENT PANEL AND SEAT BF-16
Instrument panel BF-16
Console box BF-17
Seat BF-17
Seat belt BF-18
SUN ROOF BF-19
Sun roof BF-19
BODY BF-20
Cab body BF-20
Rear body BF-21
FRAME BF-22
Body mounting BF-22
BODY ALIGNMENT BF-23
Engine compartment BF-23
Frame BF-24
SPECIAL SERVICE TOOLS BF-29

GENERAL SERVICING

- When removing of installing various parts, place a cloth or padding onto the vehicle body to prevent scratches.
- Handle trim, molding, instruments, grille, etc. carefully during removing or installation. Be careful not to soil or damage them.
- Apply sealing compound where necessary while installing parts.
- When applying sealing compound, be careful that the sealing compound does not protrude from parts.

CLIP AND FASTENER

- Clips and fasteners in BF section correspond to the following numbers and symbols.

No.	Symbol	Shape	Removal & Installation	Location
C101	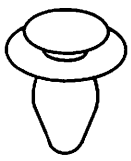 SBF092B	SBF109B	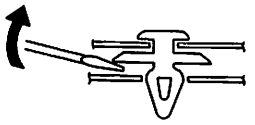 SBF094B	• Door Trim
C102	SBF113B	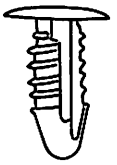 SBF137B	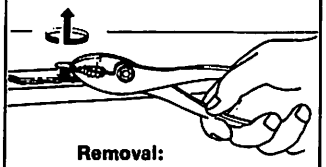 Removal: Pull up by rotating SBF115B	• Body side trim • Rear panel finisher
C110	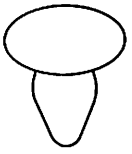 SBF290C	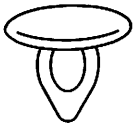 SBF291C	Removal: Remove with a flat-bladed screwdriver or pliers. 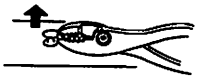 SBF292C	• Dash side finisher
C201	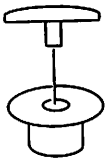 SBF240B	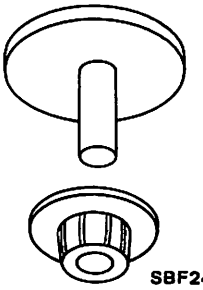 SBF241B	Removal: 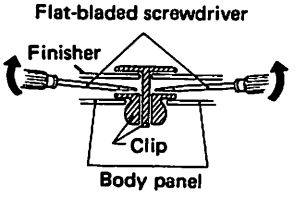 SBF242B	• Rear panel finisher • Air outlet grille

No.	Symbol	Shape	Removal & Installation	Location
CS102	SBF138B	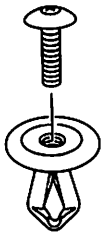 SBF139B	To remove, screw out with a Phillips screwdriver. 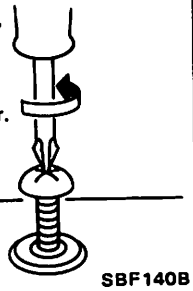 SBF140B	● Fender protector ● Cowl top grille
CG101	SBF144B	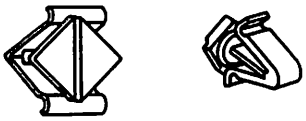 SBF145B	Removal: Rotate 45° to remove. Removal: Installation: 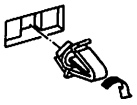 SBF085B	● Front grille
CG202	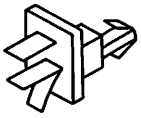 SBF243B	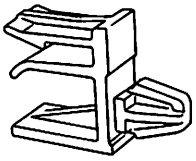 SBF244B	Installation: 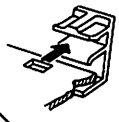 Removal: 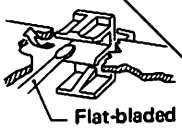 Flat-bladed screwdriver SBF245B	● Front grille
CR101	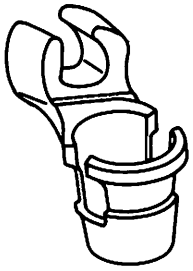 SBF106B		Removal: Holder portion of clip must be spread out to remove rod. 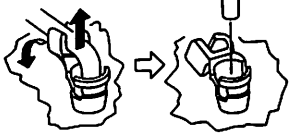 SBF146B	● Front door lock ● Tailgate lock
CE103	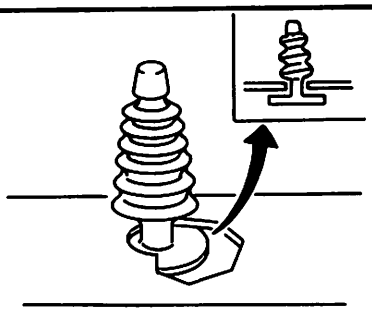 SBF104B		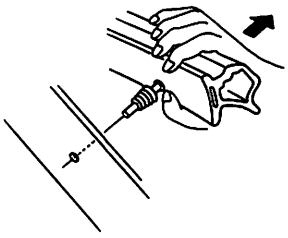 SBF147B	● Front door weatherstrip

BODY FRONT END

- When removing and installing hood, place a cloth or other padding on hood corners to avoid scratching vehicle body.
- When removing clip or fastener, refer to CLIP & FASTENER.
- Apply sealing compound where necessary while installing parts.

CAUTION:

a. Grille is made of plastic, so do not use excessive force.

b. Take care to keep oil away from grille.

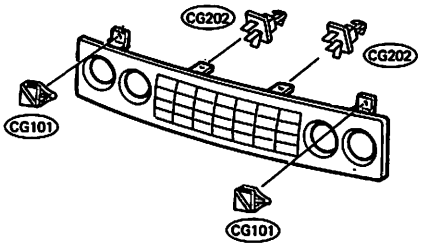

Hood lock adjustment
Figs. B & C

Ⓖ: Lubrication point

Adjusting shim CS102

Hood hinge
Fig. A

Hood adjustment

Bumper rubber adjustment
Adjust bumper rubber so that it contacts its mating panel.

- Check hood lock control operation.
Apply a coat of grease to hood lock's engaging mechanism.

Ⓣ 24 - 34
(2.4 - 3.5, 17 - 25)

CS102

Do not attempt to bend cable forcibly. Doing so increases effort required to unlock hood.

Be sure to seal mating surface.

Ⓣ : N·m (kg-m, ft-lb)

SBF246B

Ⓣ 25 - 35
(2.6 - 3.6,
19 - 26)

Hood hinge

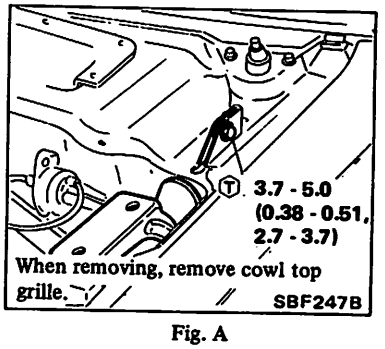

Fig. A

Hood lock adjustment

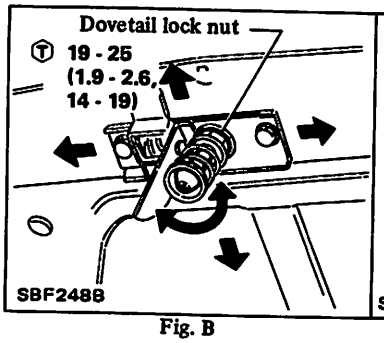

Fig. B

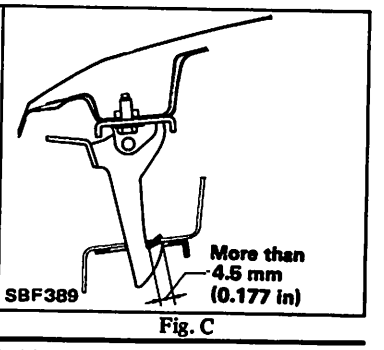

Fig. C

CAUTION:

To avoid accidental opening of hood while driving, be sure to properly engage hood lock.

FRONT DOOR

- When removing and installing door, place a cloth or other padding on door corners to avoid scratching vehicle body.
- Then removing clip and fastener, refer to CLIP & FASTENER.

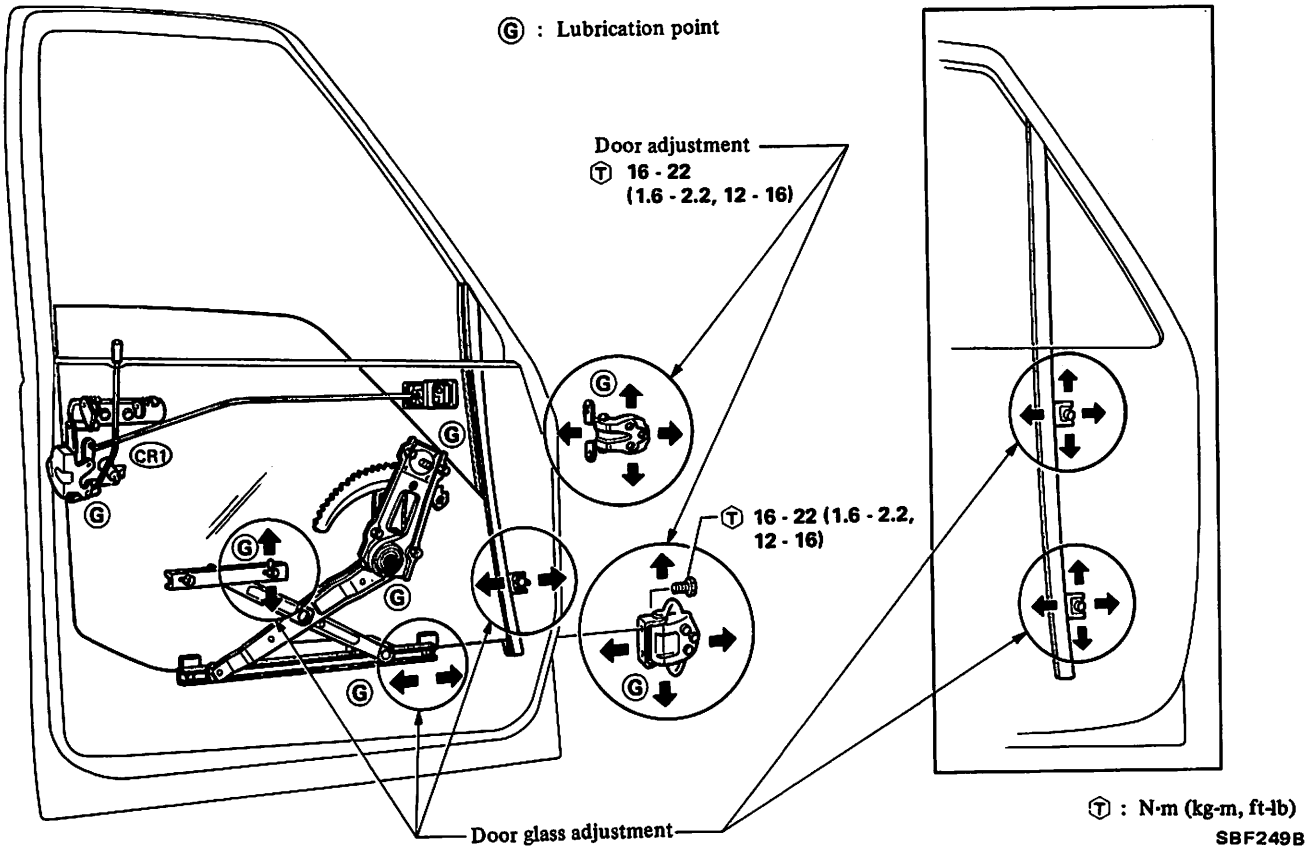

Regulator handle

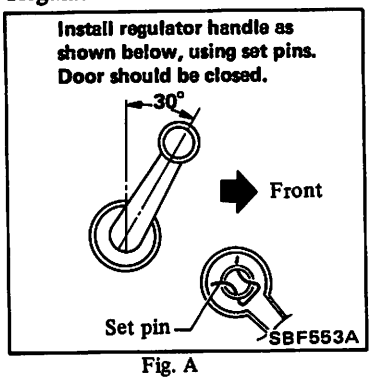

Fig. A

Door lock adjustment

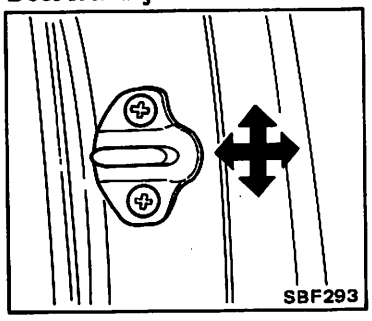

Fig. B

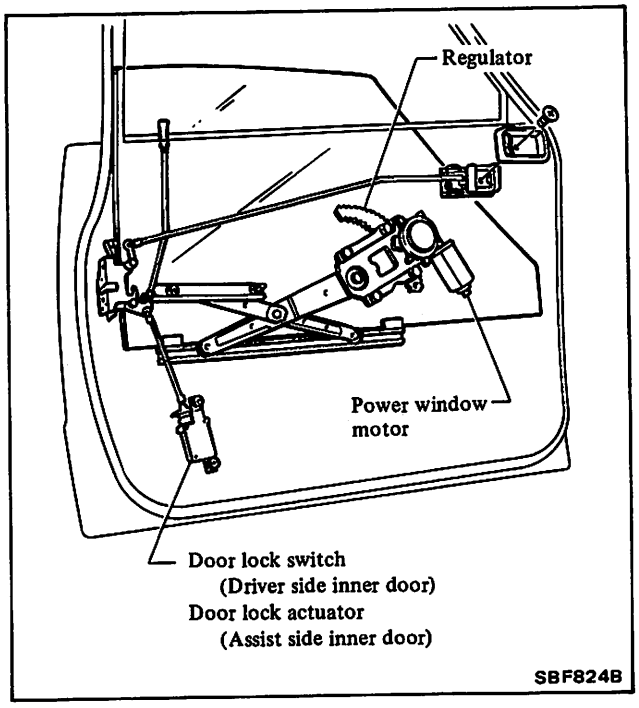

POWER WINDOW
WIRING DIAGRAM

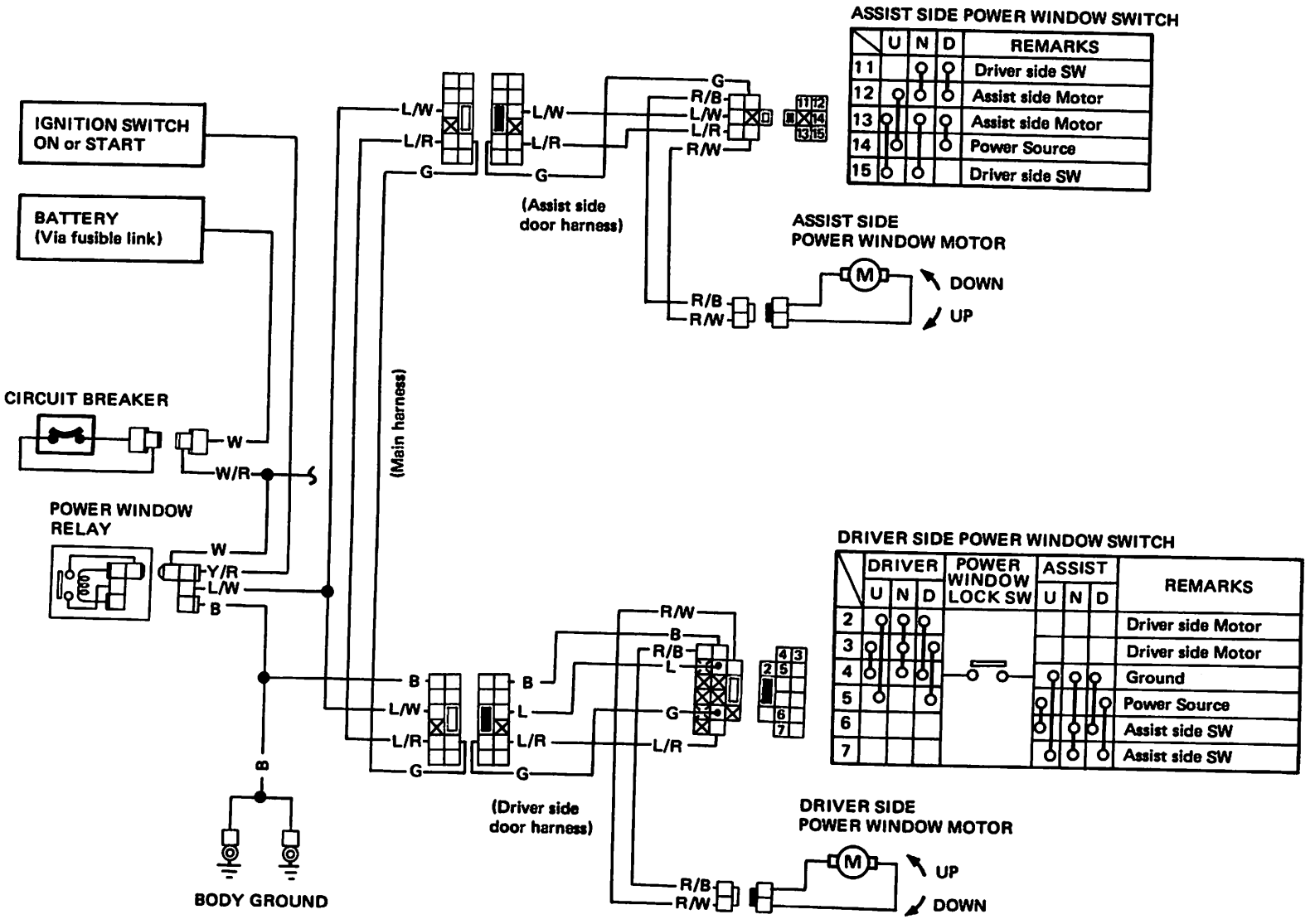

ASSIST SIDE POWER WINDOW SWITCH

	U	N	D	REMARKS
11		○	○	Driver side SW
12	○	○	○	Assist side Motor
13	○	○	○	Assist side Motor
14	○		○	Power Source
15	○	○		Driver side SW

DRIVER SIDE POWER WINDOW SWITCH

	DRIVER			POWER WINDOW LOCK SW	ASSIST			REMARKS
	U	N	D		U	N	D	
2	○	○	○					Driver side Motor
3	○	○	○					Driver side Motor
4	○	○	○	○ ○	○	○	○	Ground
5	○		○		○	○	○	Power Source
6					○	○	○	Assist side SW
7					○	○	○	Assist side SW

POWER DOOR LOCK

SCHEMATIC

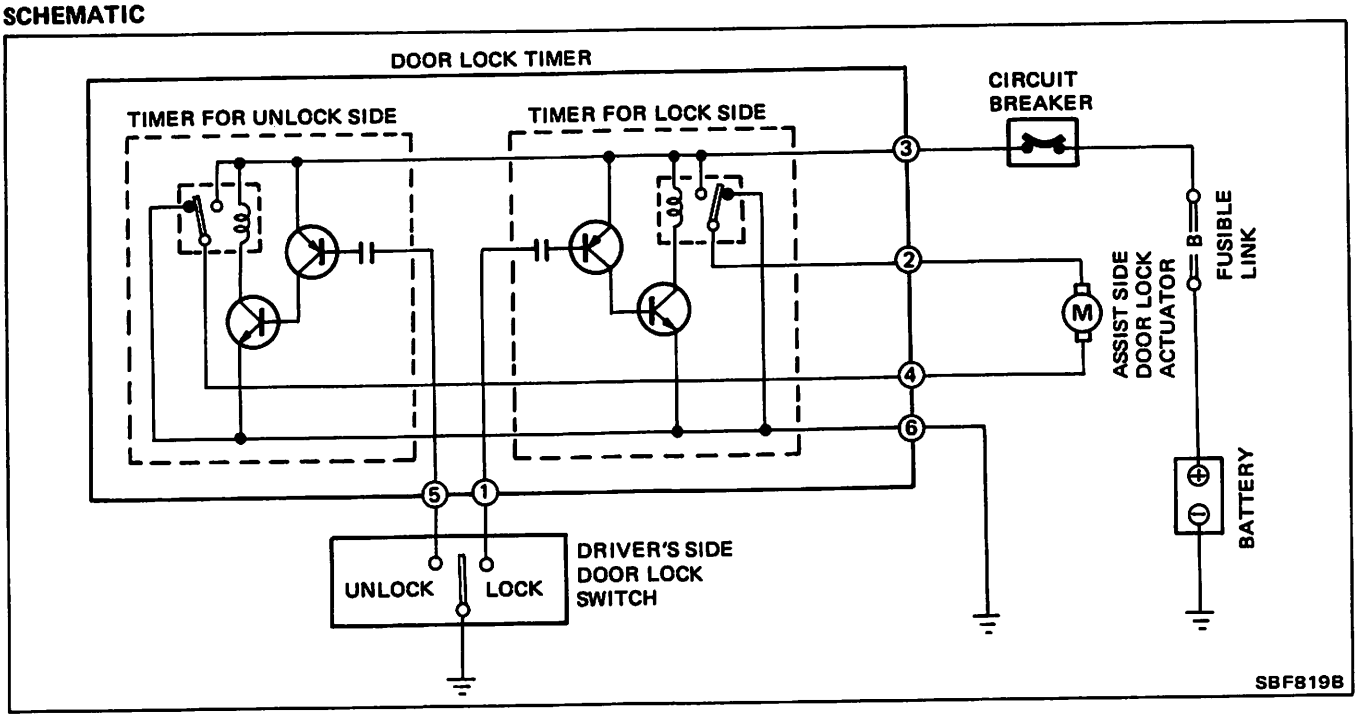

WIRING DIAGRAM

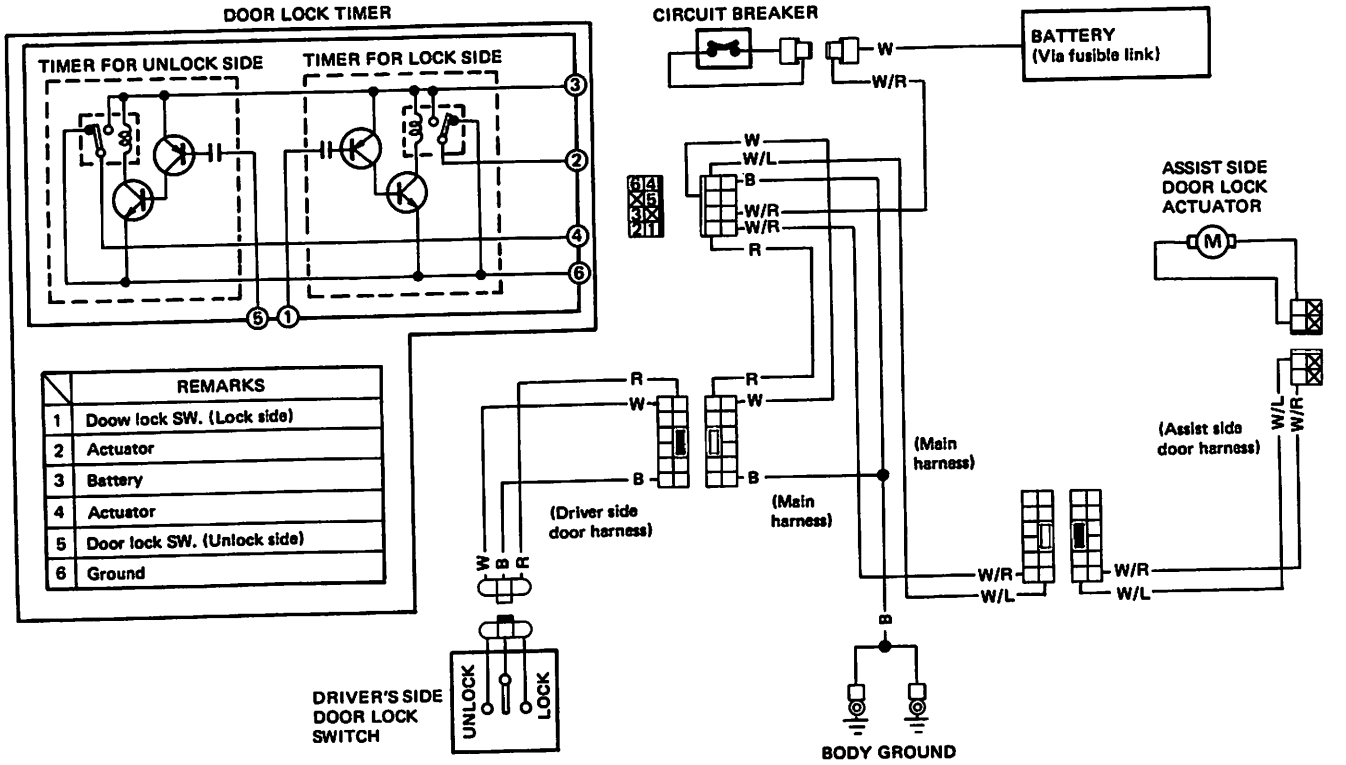

	REMARKS
1	Doow lock SW. (Lock side)
2	Actuator
3	Battery
4	Actuator
5	Door lock SW. (Unlock side)
6	Ground

DOOR LOCK TIMER

Inspection

1. Connect the test lamp and battery to door lock timer as shown below.

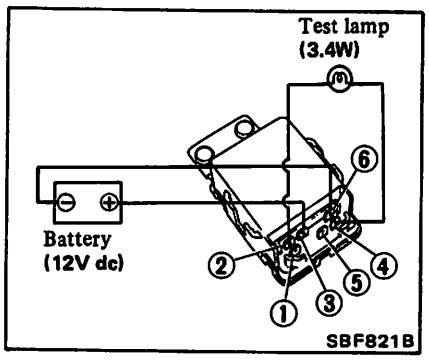

2. When terminal ① is grounded with a suitable lead wire, make sure test lamp lights up for 0.4 - 1.0 second.

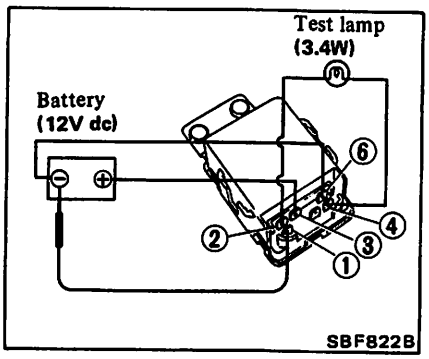

3. When terminal ⑤ is grounded with a suitable lead wire, make sure test lamp lights up for 0.4 - 1.0 second.

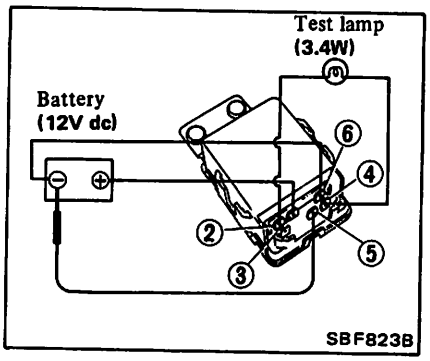

BODY REAR END

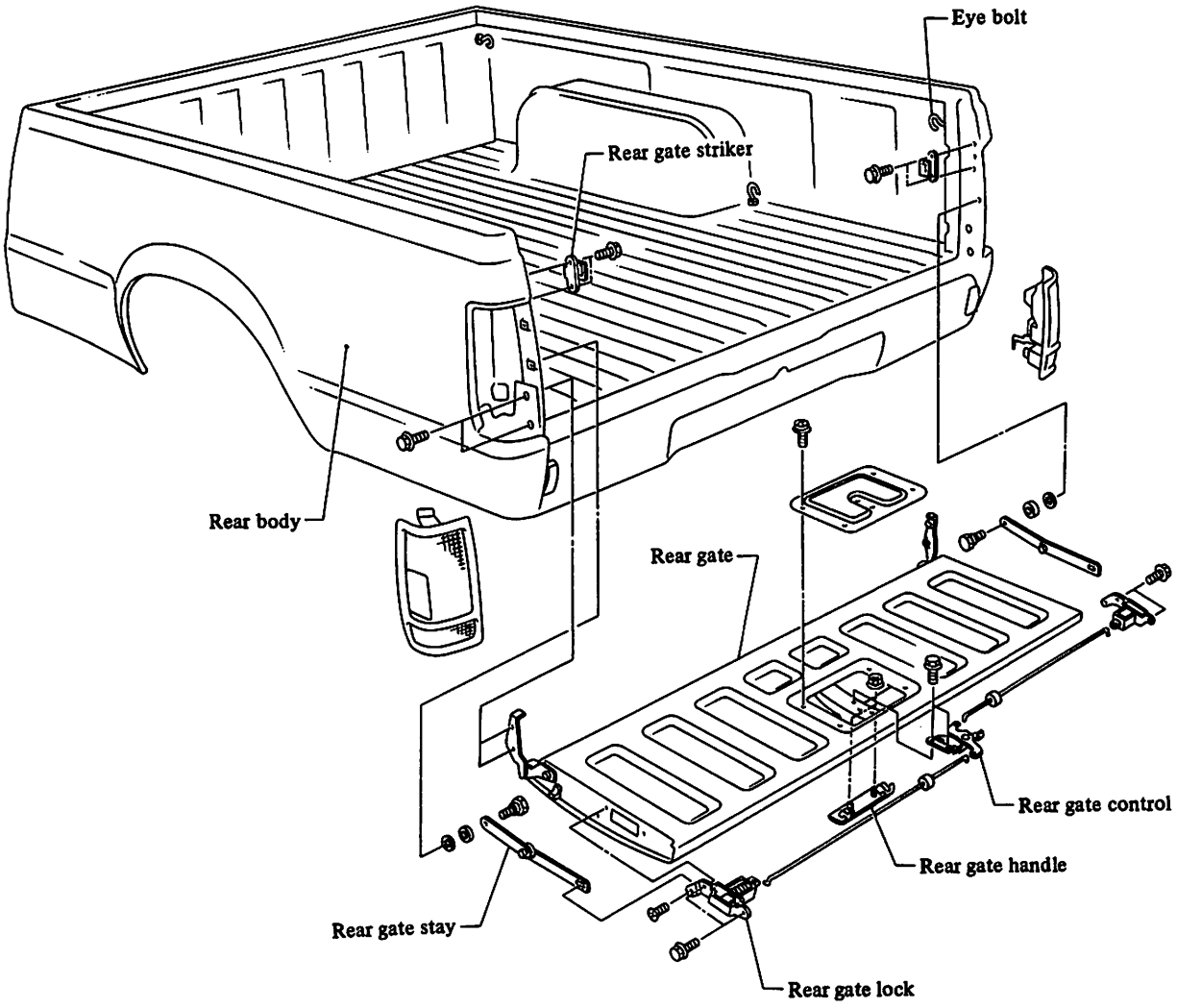

SBF858B

WINDSHIELD AND WINDOWS

WINDSHIELD

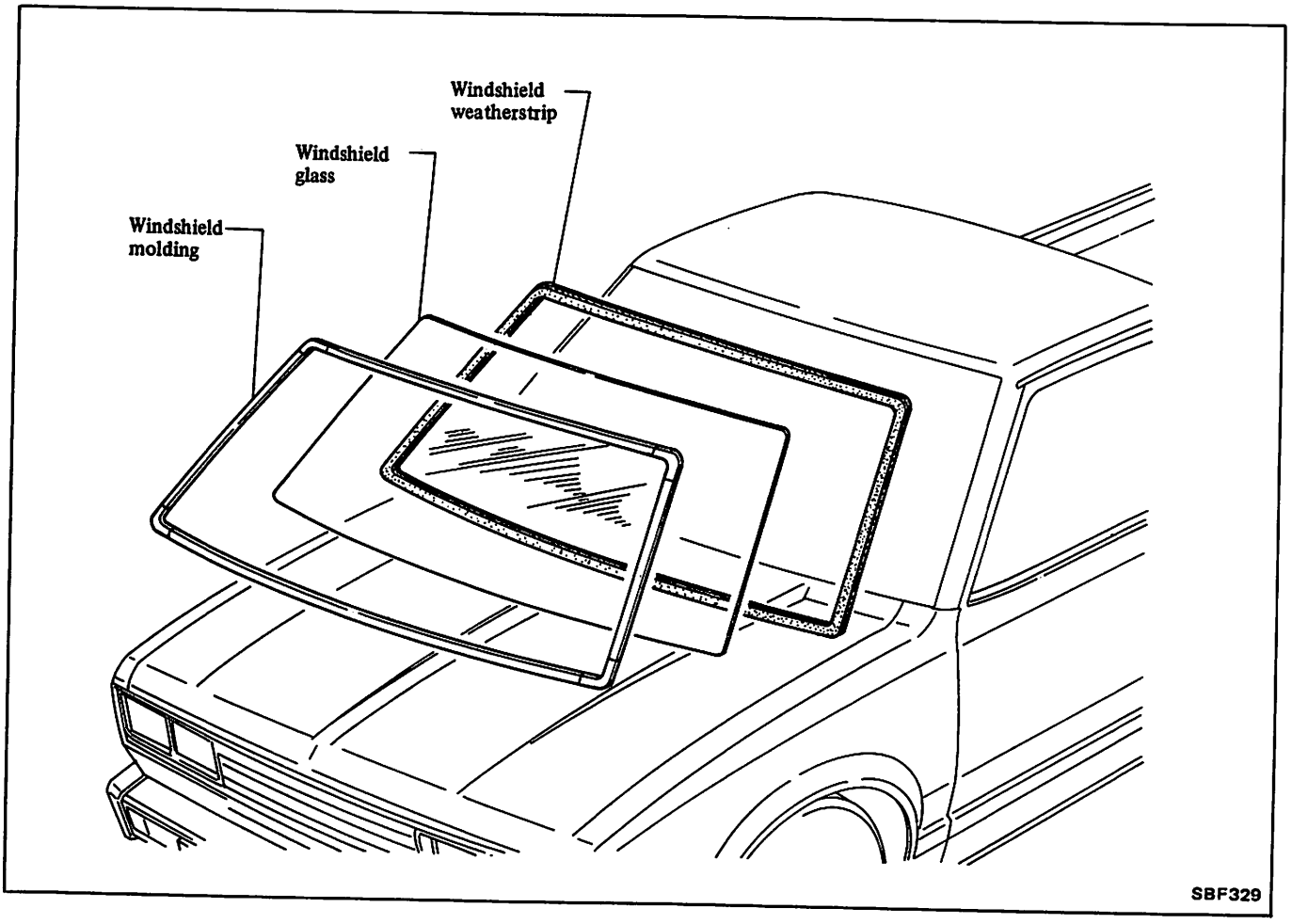

REMOVAL

1. Protect hood, front fenders, instrument panel and front seats with covers.
2. Remove windshield wiper arms.
3. Remove windshield moldings by prying them out.

CAUTION:
Be careful not to deform the molding.

4. Remove cowl top grille, and then remove windshield ratainer (if so equipped).

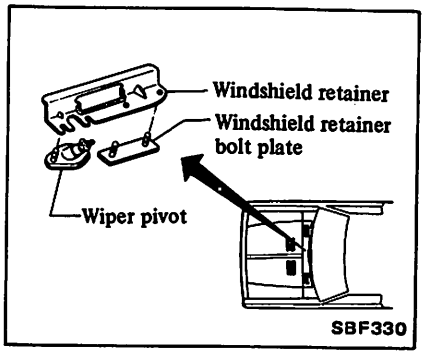

5. Attach Tool ST08800000 on windshield glass.
6. Detach adhesive on the windshield flange side by applying a spatula or conventional screwdriver from the outside.

7. Depressing weatherstrip toward outside, lightly tap and remove windshield glass to the outside.

Windshield glass should be removed from the upper side.

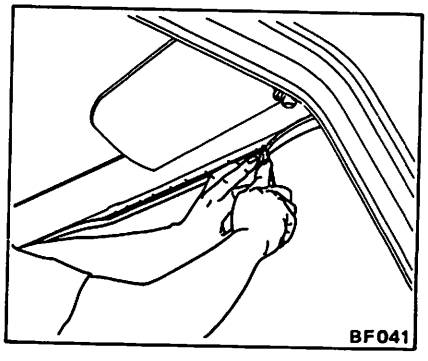

8. After windshield weatherstrip is free from body flange, with aid of a helper, remove windshield glass.

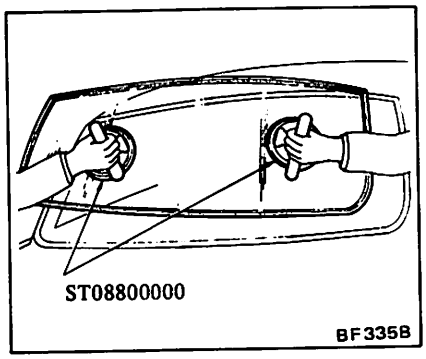

INSTALLATION

CAUTION:
Care should be exercised to make certain glass does not strike body metal during installation. Edge chips can lead to future breaks.

1. Clean out old adhesive in glass cavity of windshield.
2. Install weatherstrip to glass.

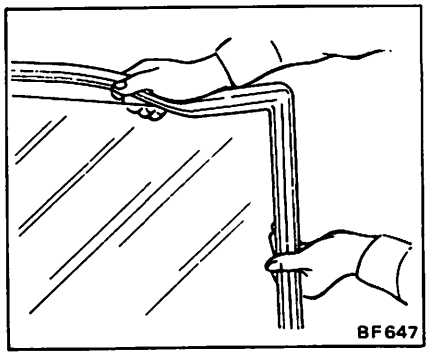

3. Apply adhesive to appropriate portions of weatherstrip as shown below.

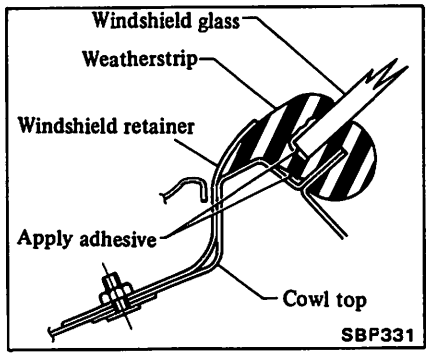

4. Insert a strong cord in the groove of weatherstrip where body flange fits.

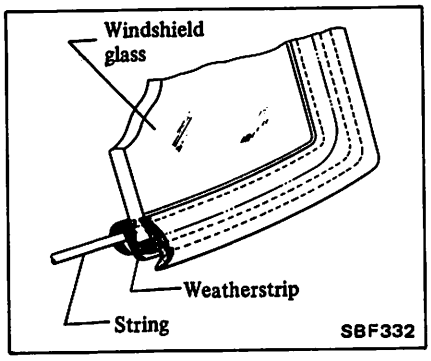

Tie ends of cord and tape to inside surface of glass at bottom center of glass.

5. Position and center windshield glass assembly in body opening.

Do not position glass by tapping or hammering at any time.

6. When glass and weatherstrip are properly positioned in body opening, slowly pull ends of cord, starting at lower center of windshield to seat lip of weatherstrip over body flange.

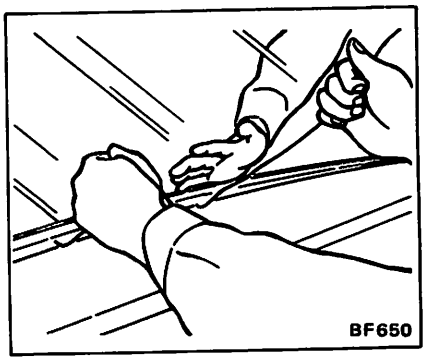

7. Cord should be pulled first across bottom of windshield, then up each side and finally across windshield top.

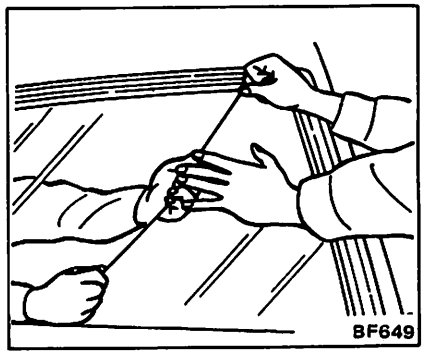

a. **The operation should be carried out by two persons; one works outside and the other inside.**
b. **If the weatherstrip is not fitted into the flange correctly but mounted on the flange, correctly fit the weatherstrip into the flange by the use of a spatula.**

8. Install all previously removed parts.

BACK WINDOW

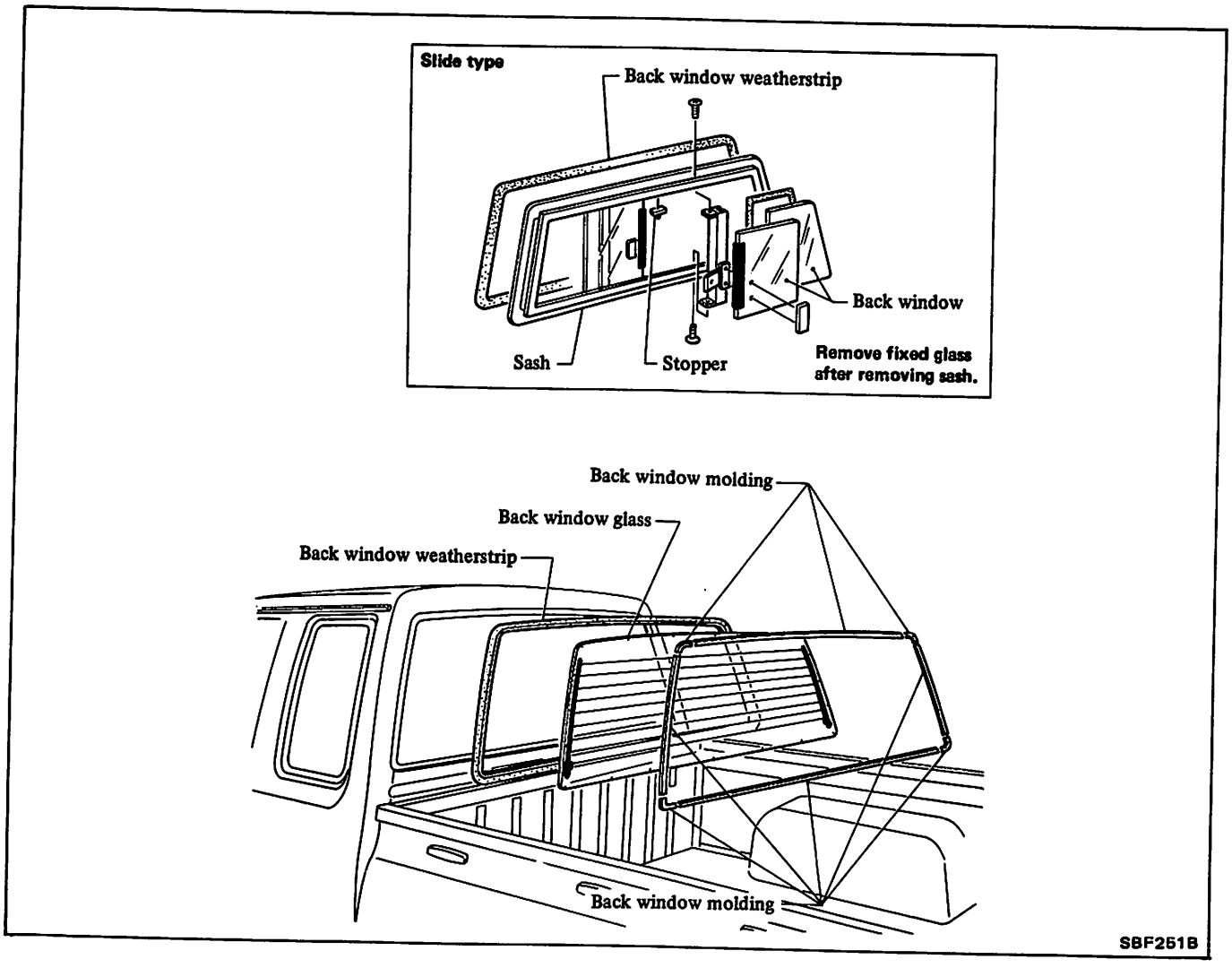

REMOVAL AND INSTALLATION

Method of installing the back window is the same as for the windshield except that there is no adhesive. Refer to WINDSHIELD.

SIDE WINDOW

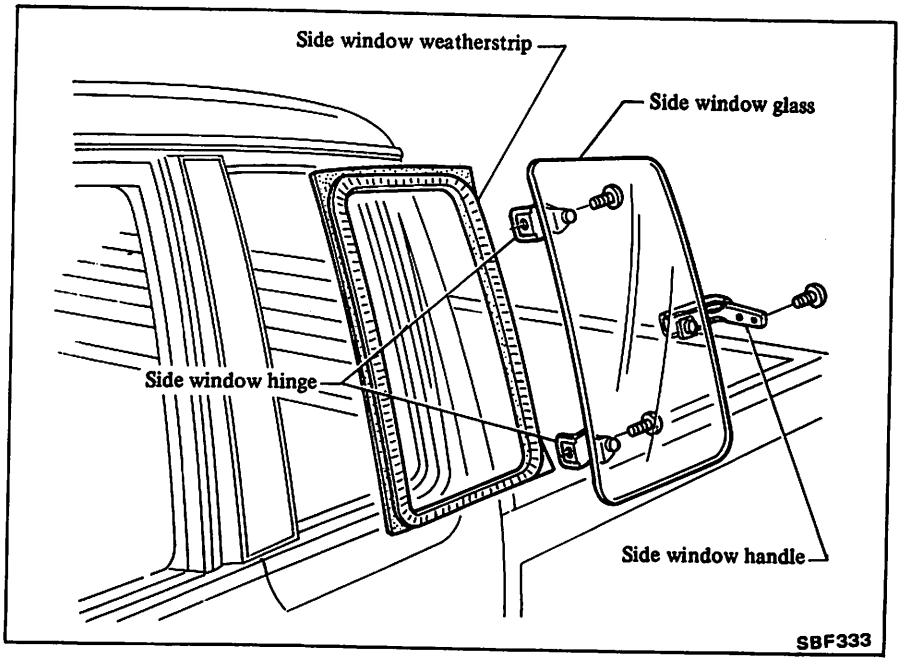

INTERIOR AND EXTERIOR

- When handling trim or molding, do not use excessive force and take care not to damage them.
- When removing clip or fastener, refer to CLIP & FASTENER.
- Apply sealing compound where necessary while installing parts.
- When applying sealing compound, be careful that the sealing compound does not protrude from parts.

INTERIOR

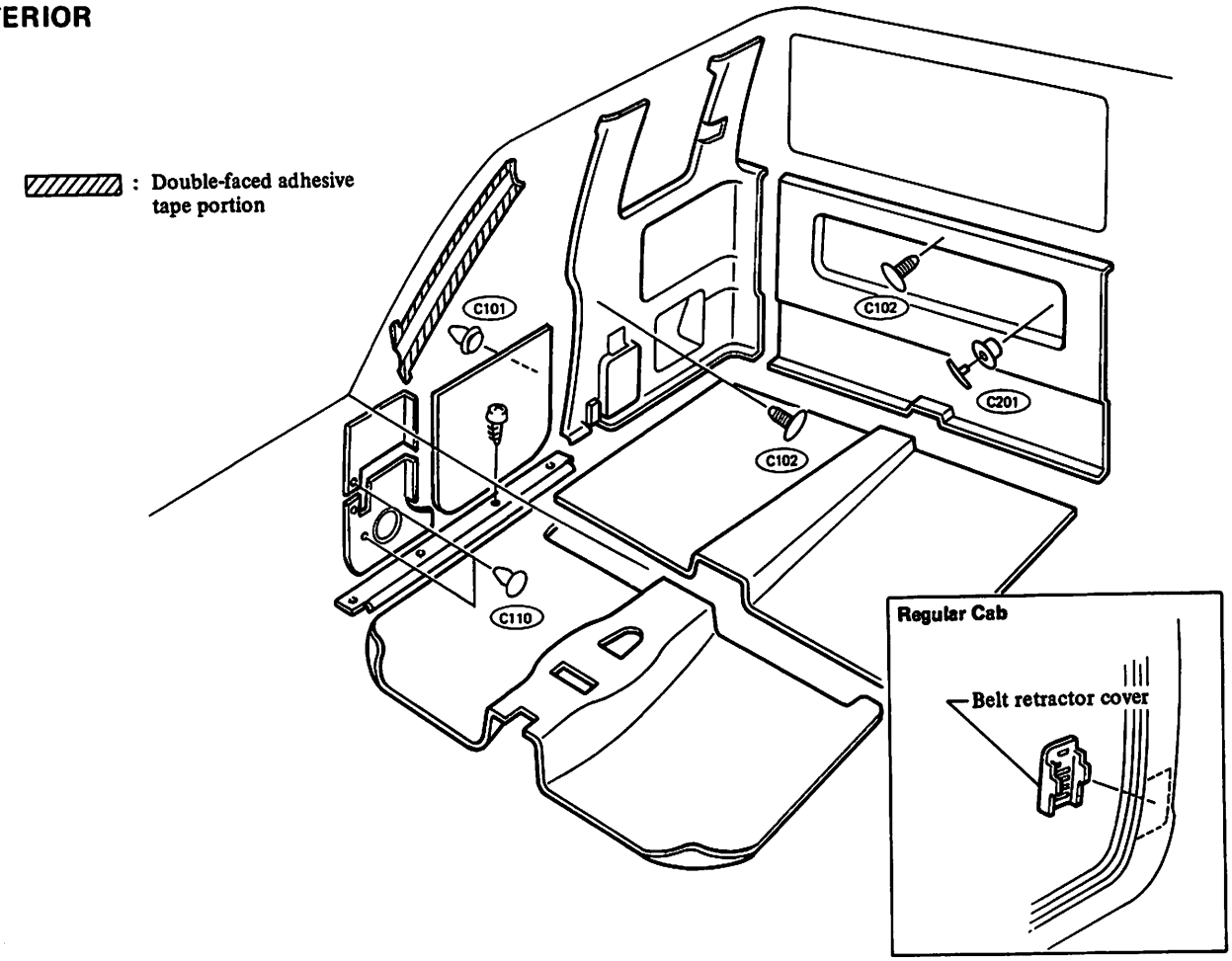

Roof trim

- **Before removing roof trim, remove windshield glass, back window, rear & rear side trim and windshield pillar cloth.**
- **When replacing headlining, also replace listing wire if deformed.**

SBF293C

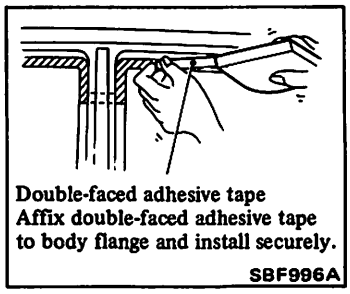

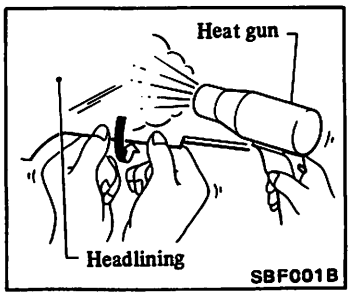

- **Install headlining from front to rear.**
- **Affix headlining to body flange starting from corner portion.**

EXTERIOR

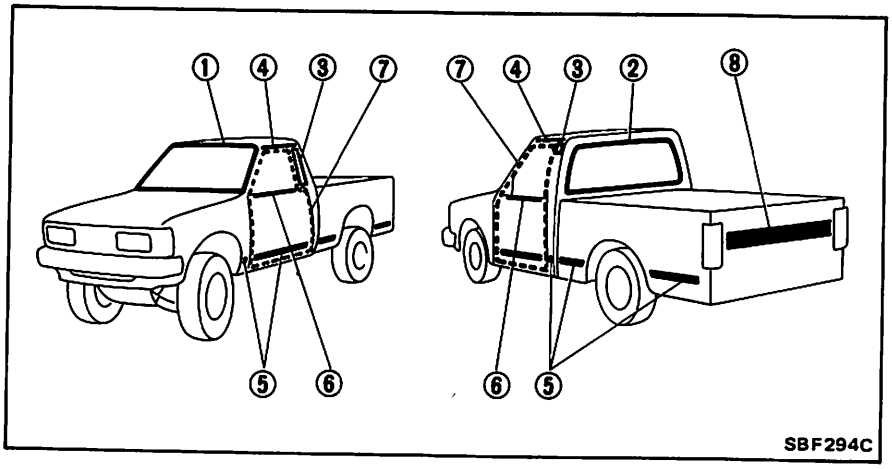

① ② WINDSHIELD & BACK DOOR MOLDING

Removal

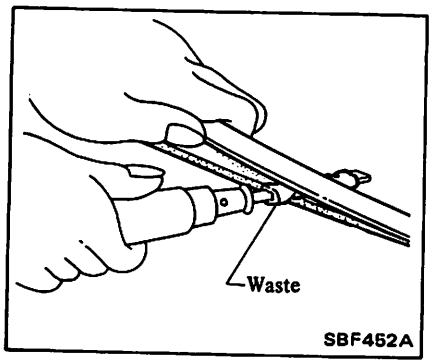

Installation

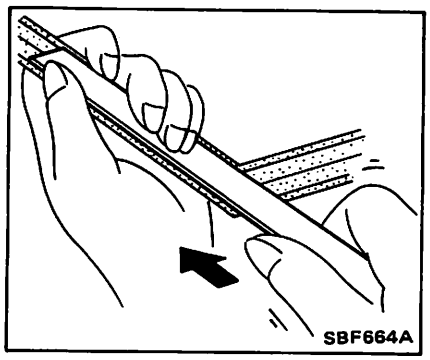

- **It is better to install glass after mounting molding on weatherstrip.**
- **When replacing molding without removing glass, be careful not to deform molding or scratch weatherstrip.**
- **To make installation easier, apply soapy water to the groove in the weatherstrip molding.**

③ AIR OUTLET GRILLE

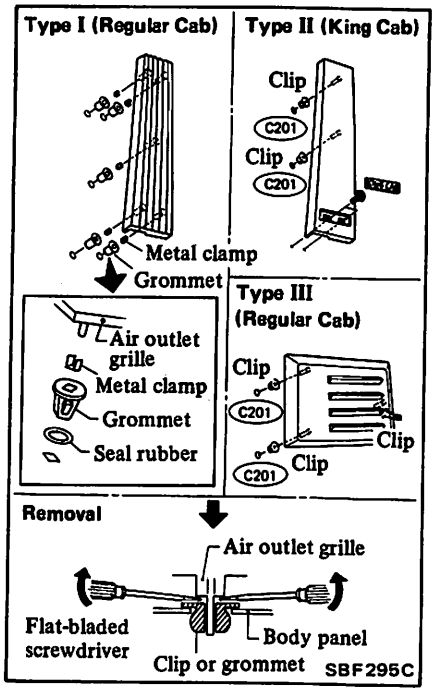

④ DRIP MOLDING

Installation

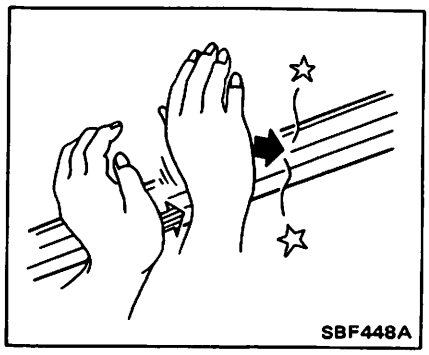

⑤ SIDE GUARD MOLDING

Side guard molding is affixed to body panel with double-faced adhesive tape. Remove it only if it is necessary to do so.

1. Direct heated air [maintained at 30 to 40°C (86 to 104°F)] from a heat gun at side guard molding.

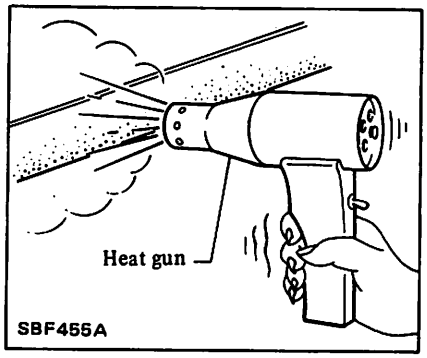

2. Bend molding edge up, and carefully remove molding.
3. Clean contacting face of body with unleaded gasoline.
Heat body panel and molding to 30 to 40°C (86 to 104°F) with a heat gun.
4. Remove tack paper from rear of molding and affix molding to the surface.

⑥ DOOR OUTSIDE MOLDING AND INSIDE SEAL

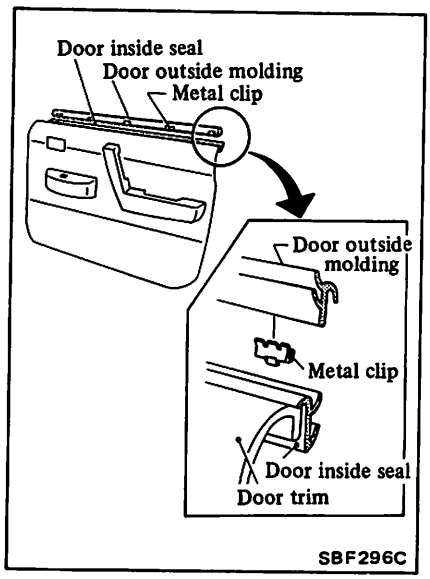

⑦ DOOR WEATHERSTRIP

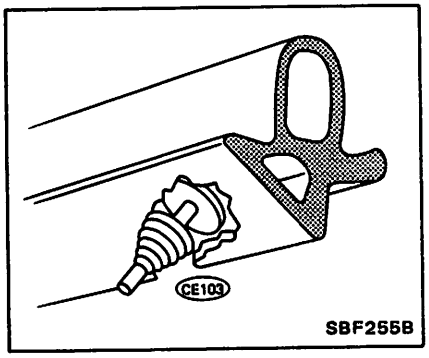

⑧ REAR GATE FINISHER

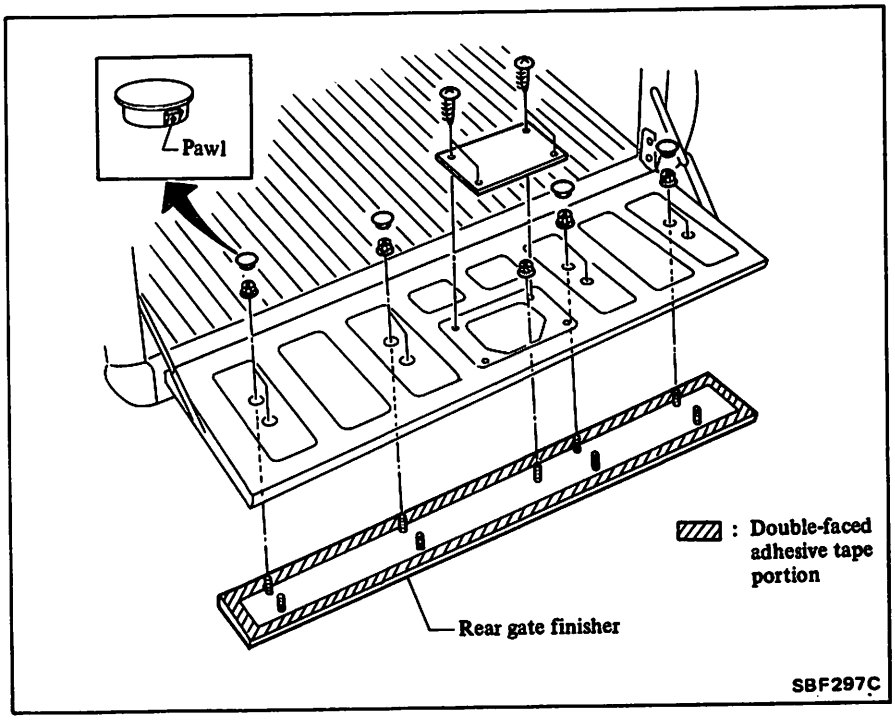

INSTRUMENT PANEL AND SEAT

INSTRUMENT PANEL

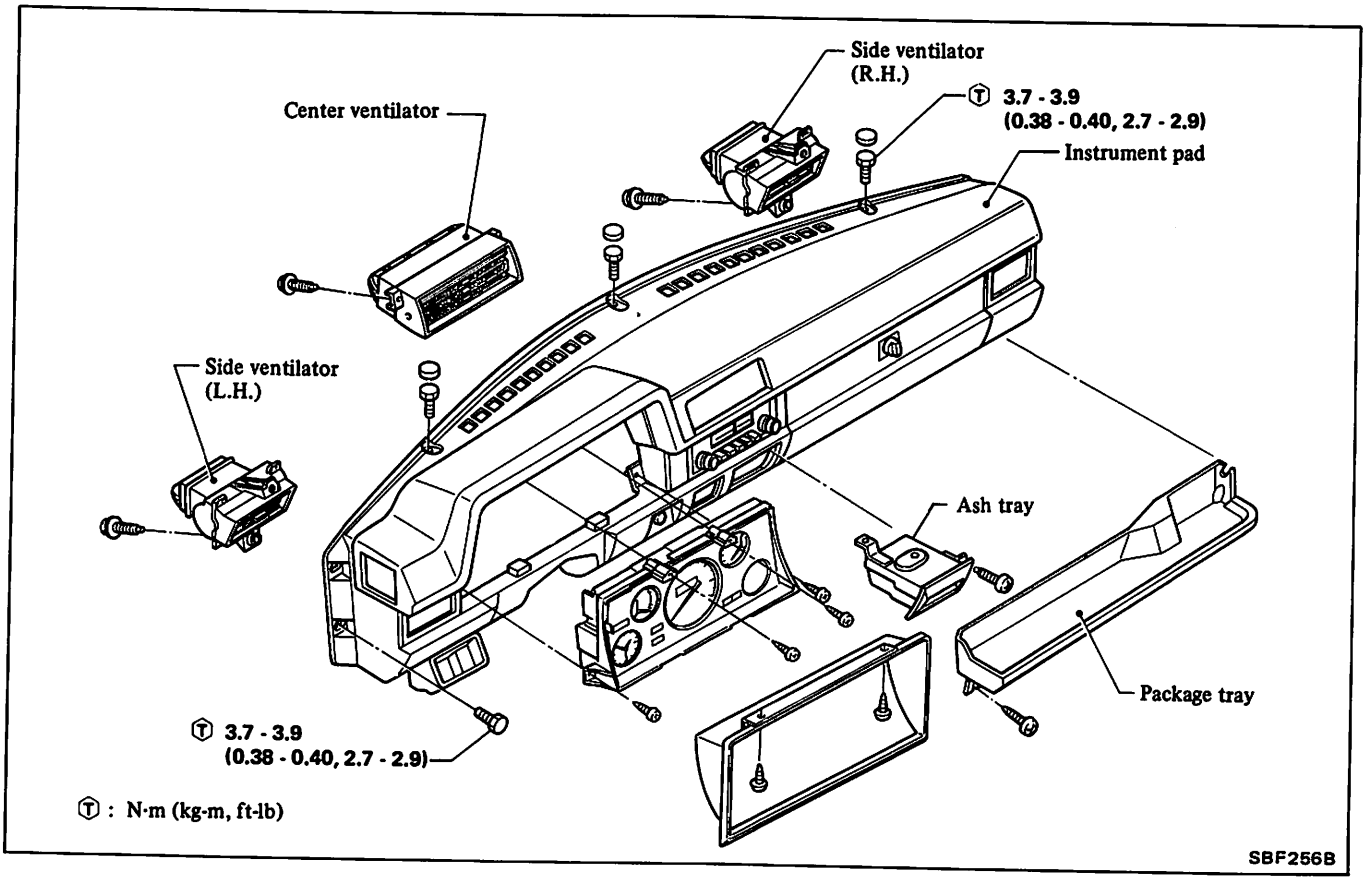

REMOVAL AND INSTALLATION

1. Disconnect battery ground cable.
2. Remove steering column shell cover.
3. Remove package tray (if so equipped).

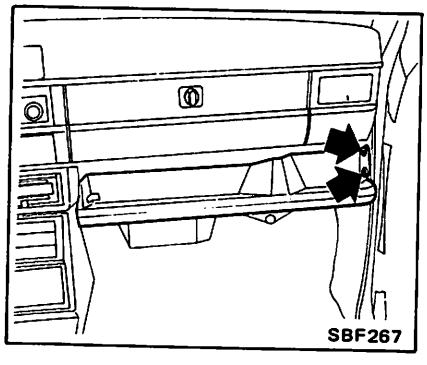

4. Disconnect speedometer cable behind speedometer.
5. Disconnect following wire harness connectors.
   - Center illumination
   - Cigarette lighter
   - Rear defogger switch
   - Clock
   - Turn signal switch
   - Other wire harness connections
6. Remove instrument panel upper side mounting bolts.

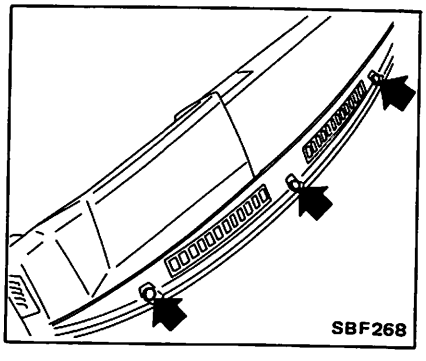

7. Remove instrument panel lower side mounting bolt.

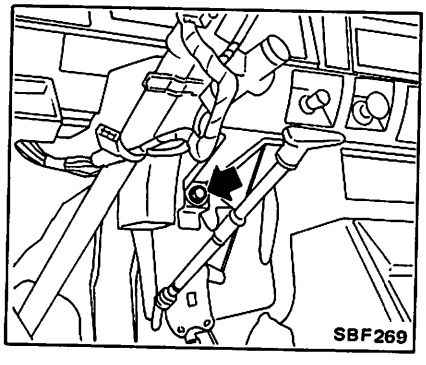

8. Remove instrument panel center mounting bolt (in glove box).

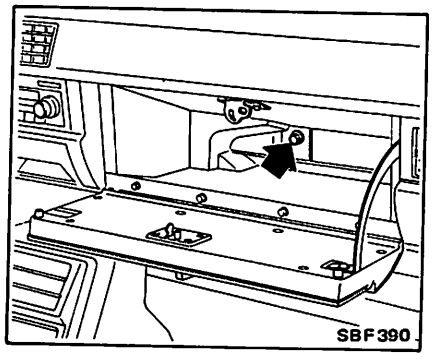

9. Remove instrument panel both side mounting bolts and then draw out instrument panel assembly.

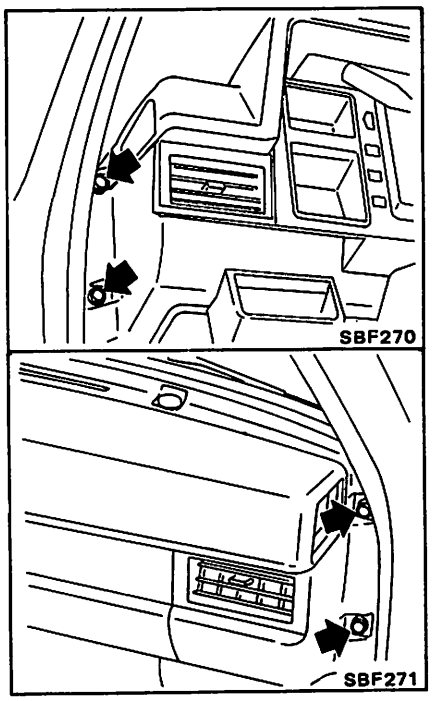

10. Installation is in the reverse order of removal.

CONSOLE BOX

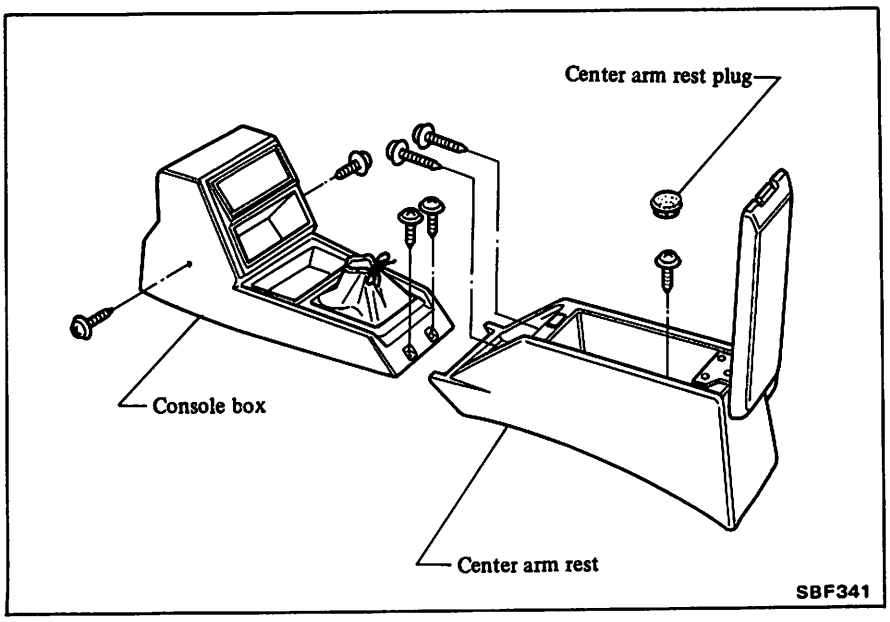

REMOVAL AND INSTALLATION

1. Remove center arm rest plug and center arm rest mounting screws, and then remove center arm rest.
2. Remove console box mounting screws, and then remove console box.
3. Installation is in reverse order of removal.

SEAT

REMOVAL AND INSTALLATION

Front seat

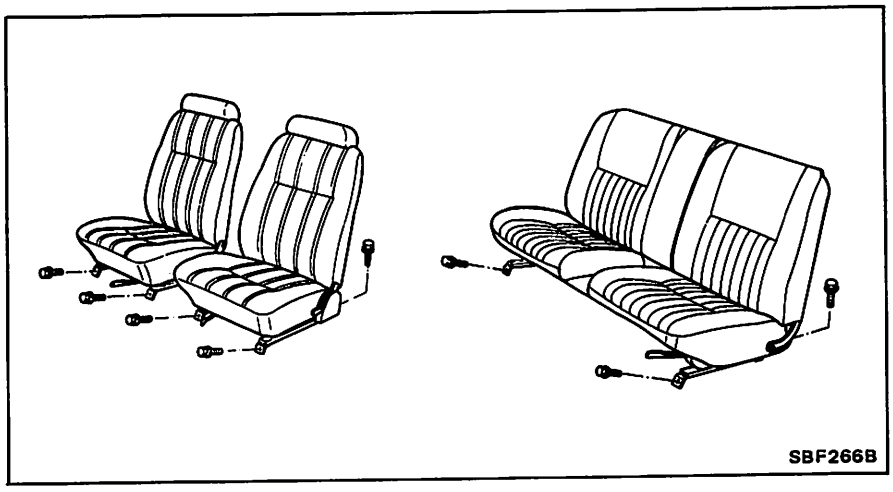

1. Remove bolts attaching front of seat bracket to floor.
2. Remove bolts attaching rear of seat bracket to floor.
3. Then remove front seat assembly from vehicle.
4. Installation is in reverse order of removal.

Jump seat (King Cab)

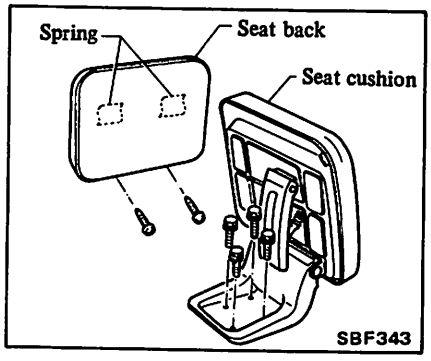

When removing seat back, remove seat back attaching screws and then lift seat back up.

WALK-IN ADJUSTMENT

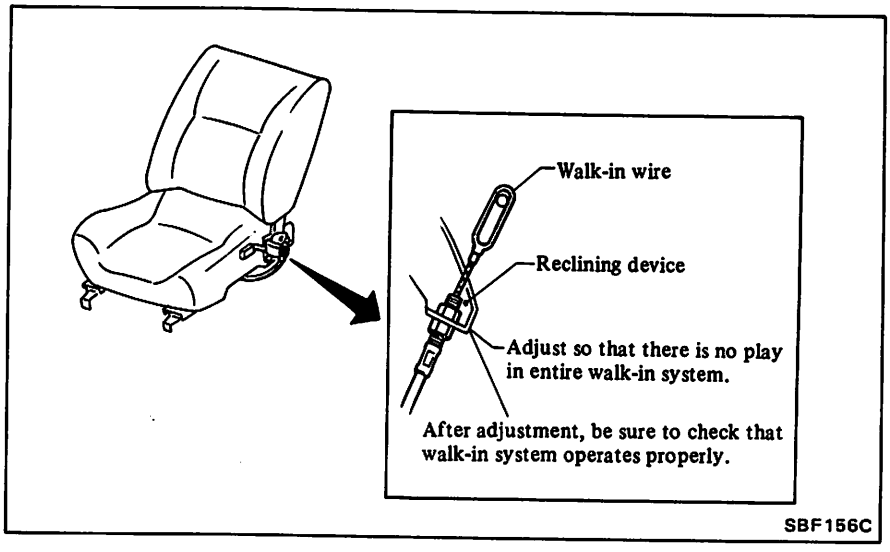

SEAT BELT

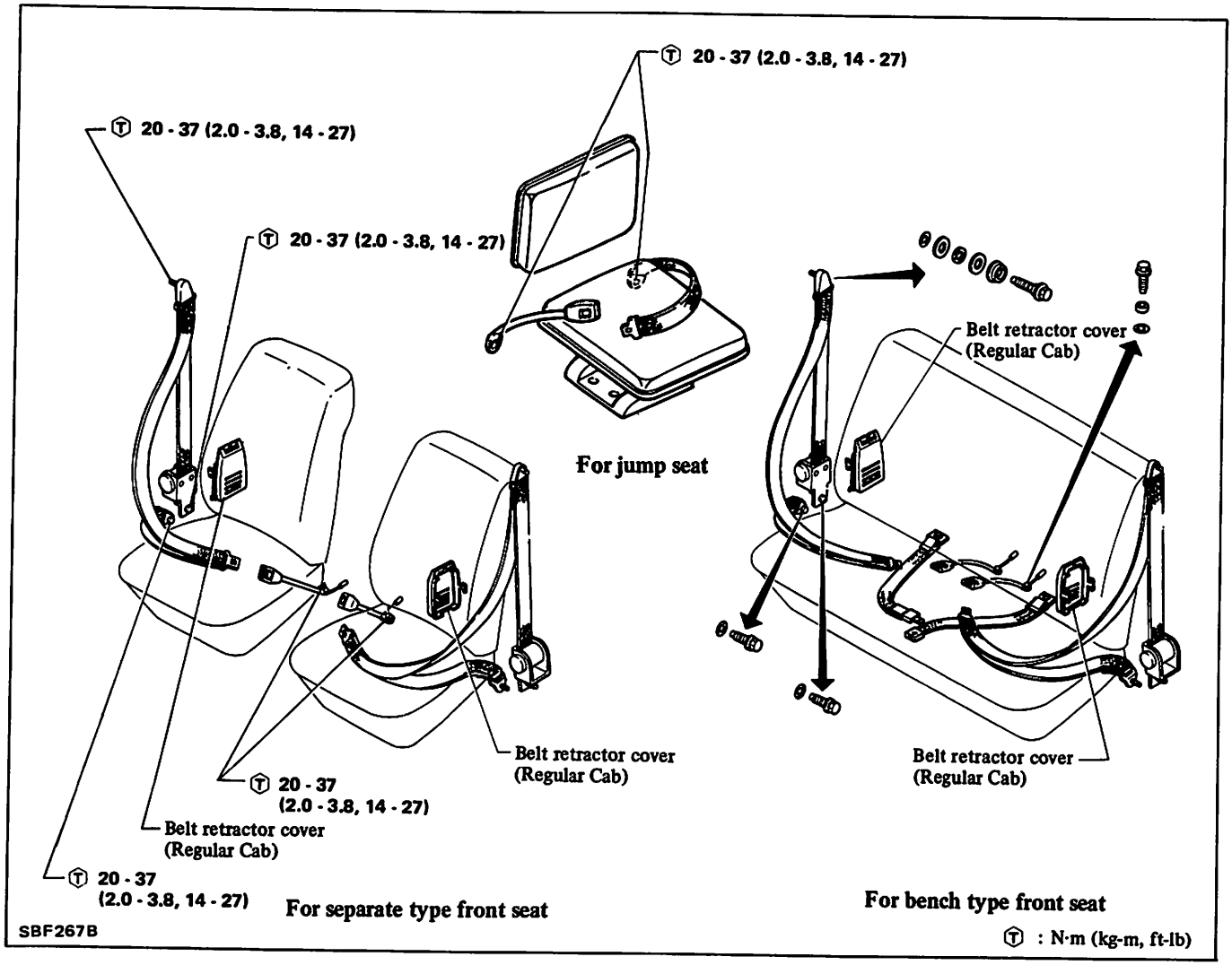

SUN ROOF

SUN ROOF

REMOVAL AND INSTALLATION

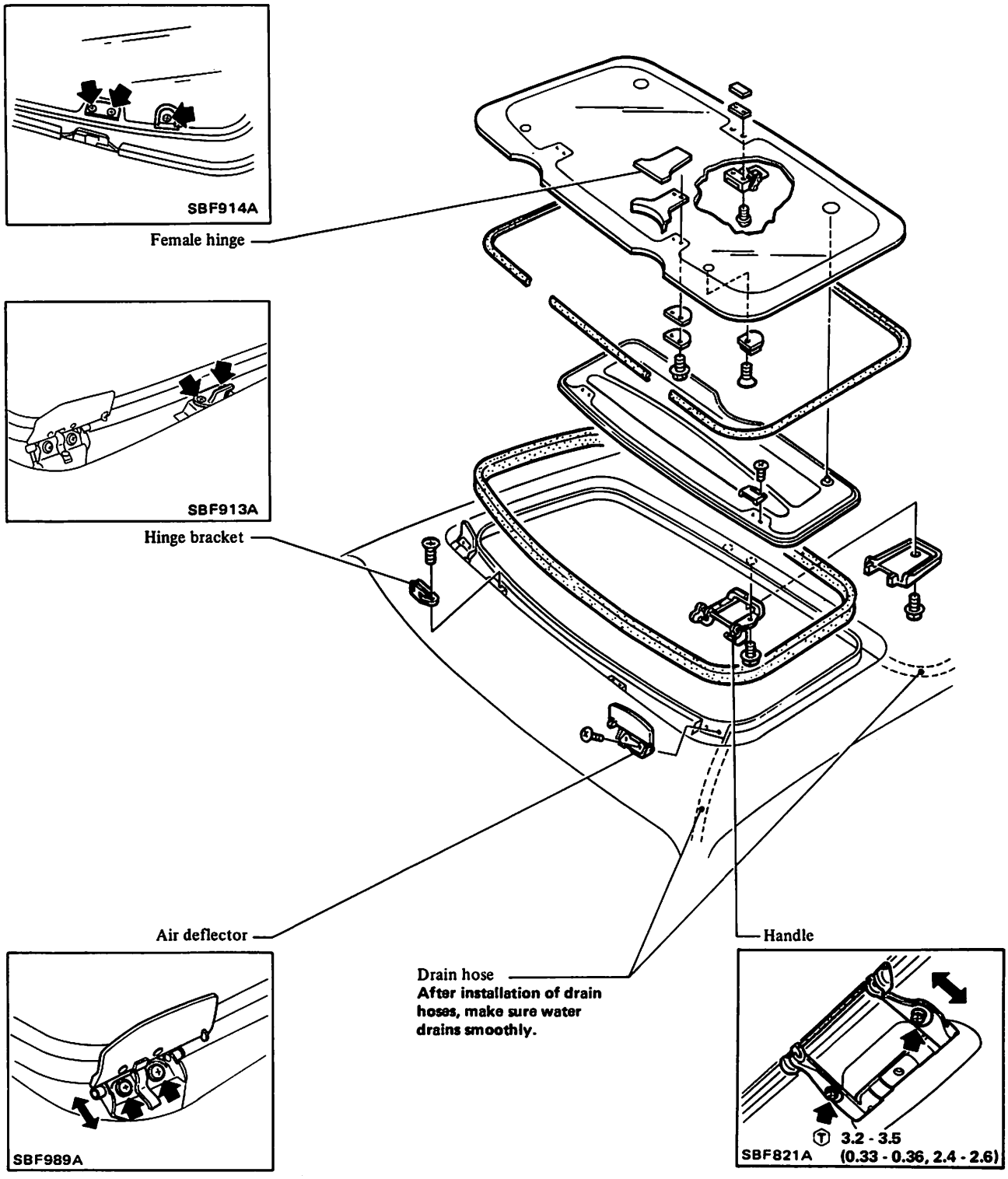

BODY

CAB BODY

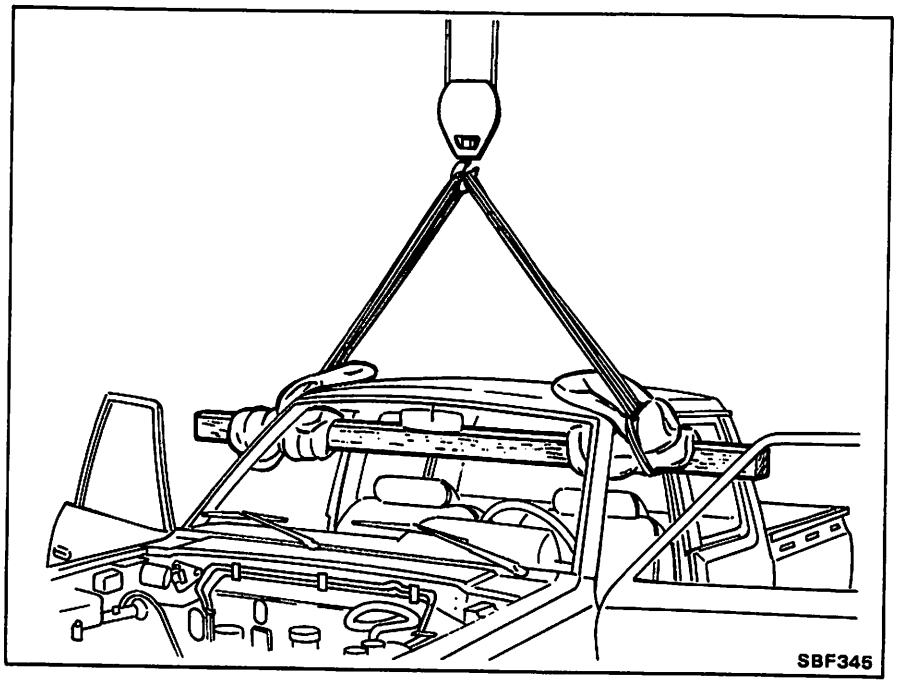

REMOVAL AND INSTALLATION

1. Remove hood.
2. Remove front bumper.
3. Remove following parts in engine compartment:
- Battery
- Air cleaner
- Tubes, pipes and hoses for emission control system
- Tubes and pipes for air conditioning system
- Brake booster vacuum hose
- Main harness and other wiring harness
- Accelerator control cable

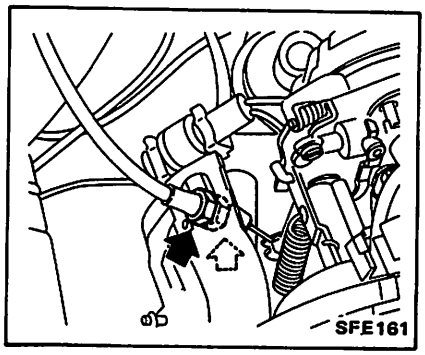

- Steering column from steering gear

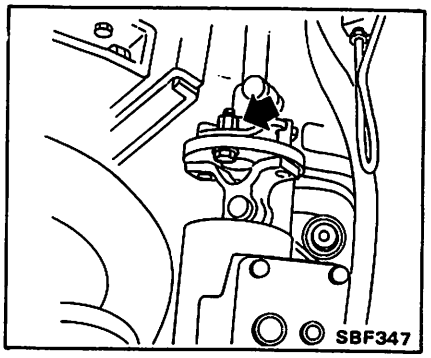

4. Remove radiator fixing bolts, then use ropes to fasten both radiator and radiator shroud to engine.

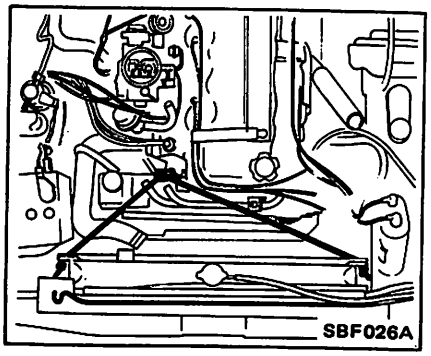

5. Disconnect brake and clutch line in engine compartment with Tool GG94310000.

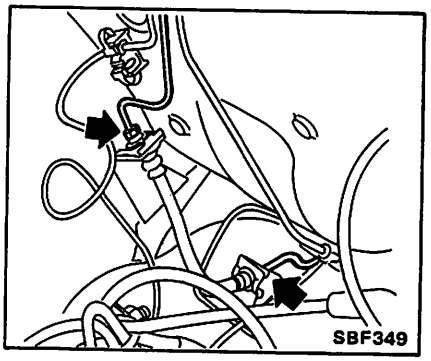

6. Disconnect brake line under body with Tool GG94310000.

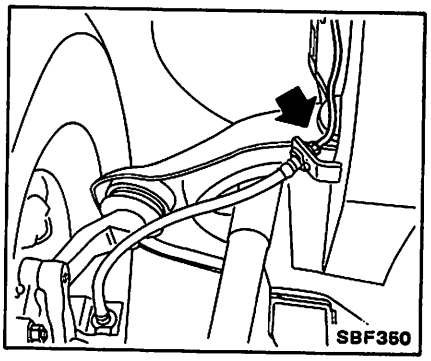

7. Remove following parts under body:
- Speedometer cable
- Transmission and transfer control levers
- Hand brake control lever and cable
- Main harness and other wiring harness

8. Remove bolts securing cab body to frame.
9. Remove cab body with suitable ropes and an overhead hoist.

In lifting up cab body, take care not to dash it against engine or rear body.

10. Installation is in reverse order of removal.

a. **Note position and location of insulators and washers used. Refer to Frame for Body Mounting.**
b. **Adjust hand brake stroke. Refer to Section MA.**
c. **Air bleed should be performed on brake and clutch lines. Refer to Section CL and Section BR.**

REAR BODY

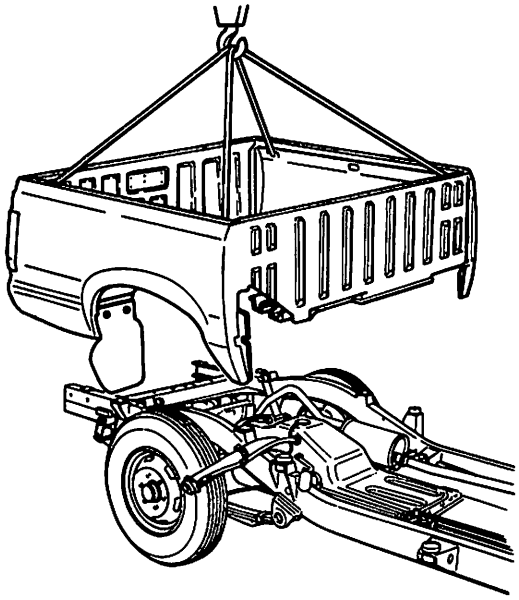

SBF859B

REMOVAL AND INSTALLATION

1. Disconnect battery ground cable.
2. Disconnect rear combination lamp and license plate lamp harness.
3. Remove fuel filler tube fixing screws.

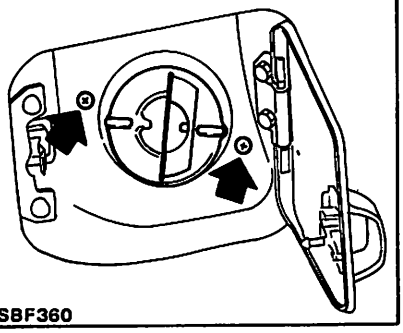

SBF360

4. Remove bolts securing rear body to frame.
5. Remove rear body with suitable ropes and an overhead hoist.

In lifting up rear body, take care not to dash it against cab body.

6. Installation is in reverse order of removal.

Note position and location of spacers and shims used. Refer to Frame for Body Mounting.

FRAME

BODY MOUNTING

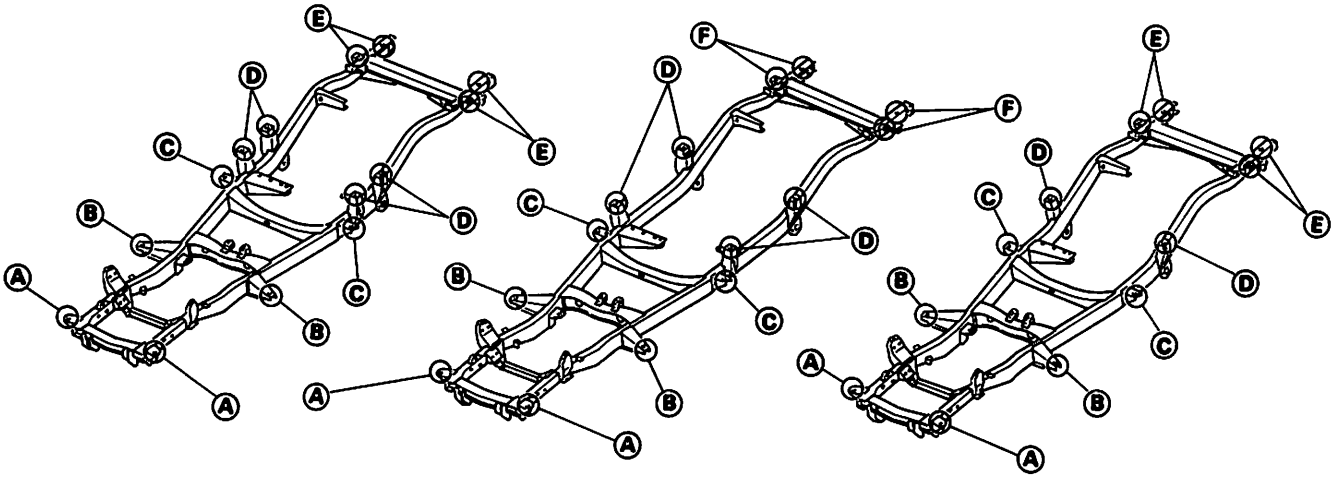

Regular Bed model

Long Bed model

King Cab model

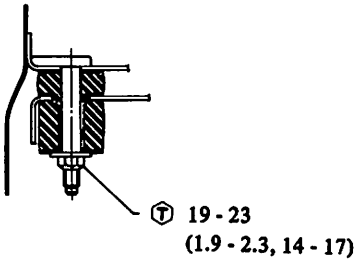

Section Ⓐ

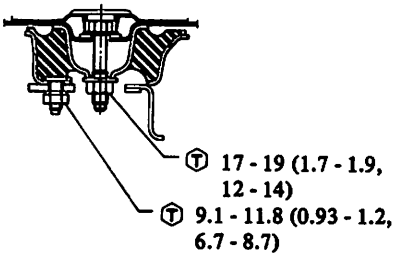

Section Ⓑ

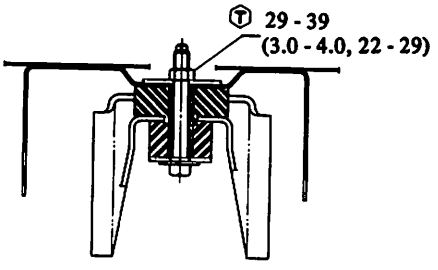

Section Ⓒ

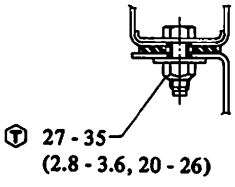

Section Ⓓ

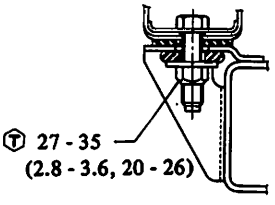

Section Ⓔ

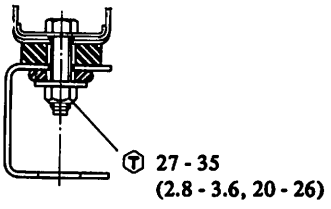

Section Ⓕ

Ⓣ: N·m (kg-m, ft-lb)

SBF301

BODY ALIGNMENT

- **All dimensions indicated in figures are actual ones.**
- When a tram tracking gauge is used, adjust both pointers to equal length and check the pointers and gauge itself to make sure there is no free play.
- When a measuring tape is used, check to be sure there is no elongation, twisting or bending.
- Measurements should be taken at the center of the mounting holes.
- All measurement points are positioned symmetrically.

ENGINE COMPARTMENT

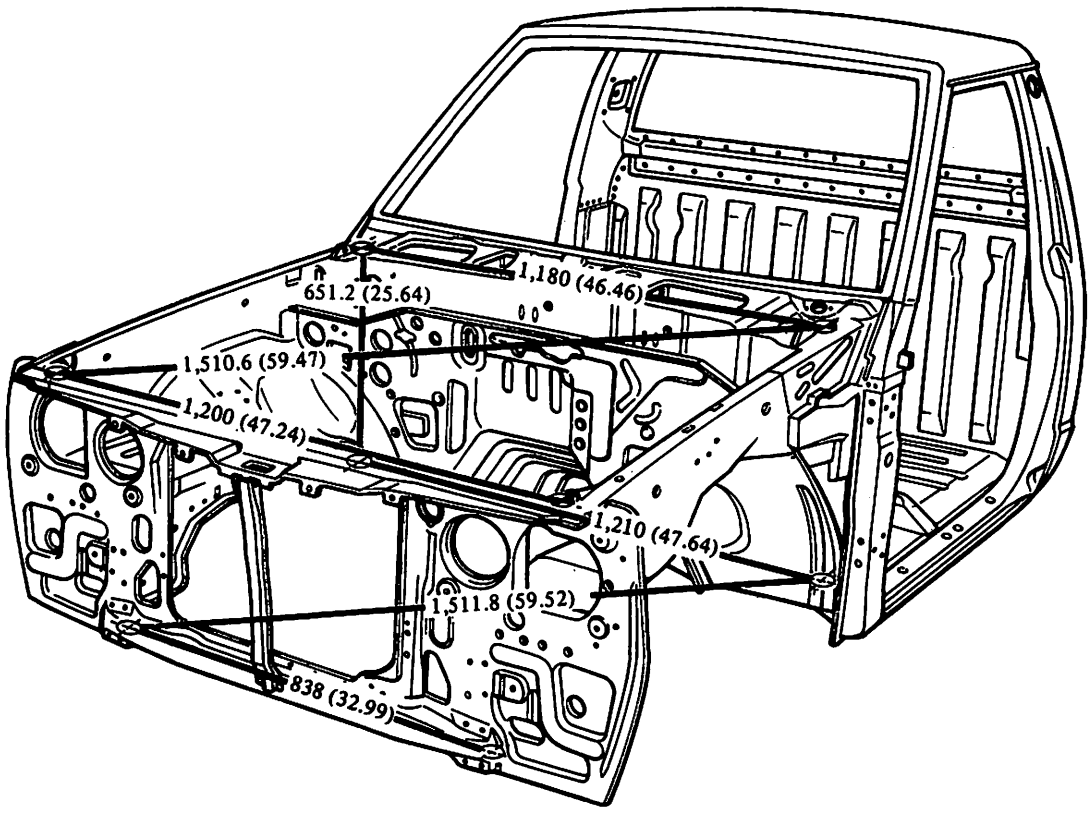

Unit: mm (in)

SBF357

FRAME

MEASUREMENT POINT

Cab & rear body mounting hole and front shock absorber upper mounting hole

Center of hole on top of bracket

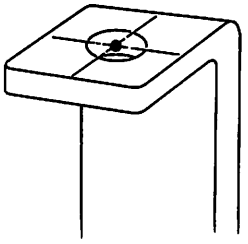

SBF274B

Model	Position
King Cab	Ⓐ Ⓒ Ⓓ Ⓔ Ⓕ Ⓖ Ⓗ ⓐ ⓒ ⓓ ⓔ ⓕ ⓖ ⓗ
Regular Cab (Long wheelbase)	Ⓐ Ⓒ Ⓓ Ⓔ Ⓕ Ⓖ Ⓗ Ⓘ ⓐ ⓒ ⓓ ⓔ ⓕ ⓖ ⓗ ⓘ
Regular Cab (Short wheelbase)	Ⓐ Ⓒ Ⓓ Ⓔ Ⓕ Ⓖ Ⓗ Ⓘ ⓐ ⓒ ⓓ ⓔ ⓕ ⓖ ⓗ ⓘ

Tension rod front mounting hole

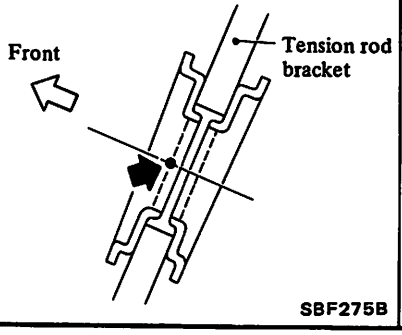

SBF275B

Model	Position
All 2WD models	Ⓑ ⓑ

Stabilizer mounting bracket locating hole

Center of hole in lower portion of mounting bracket

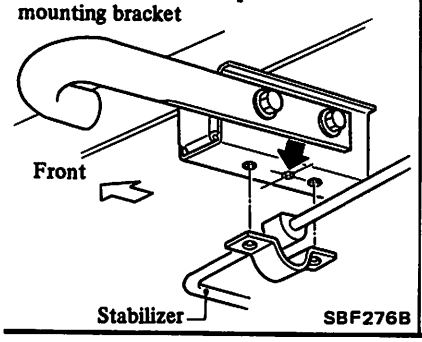

SBF276B

Model	Position
All 4WD models	Ⓑ ⓑ

Rear spring mounting

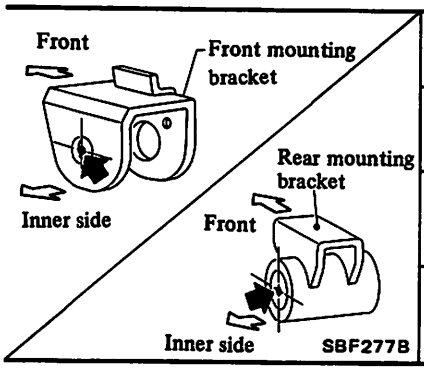

SBF277B

Model	Position
King Cab	Ⓘ ⓘ Ⓙ ⓙ
Regular Cab (Long wheelbase)	Ⓙ ⓙ Ⓚ ⓚ
Regular Cab (Short wheelbase)	Ⓙ ⓙ Ⓚ ⓚ

MEASUREMENT

4WD models

King Cab

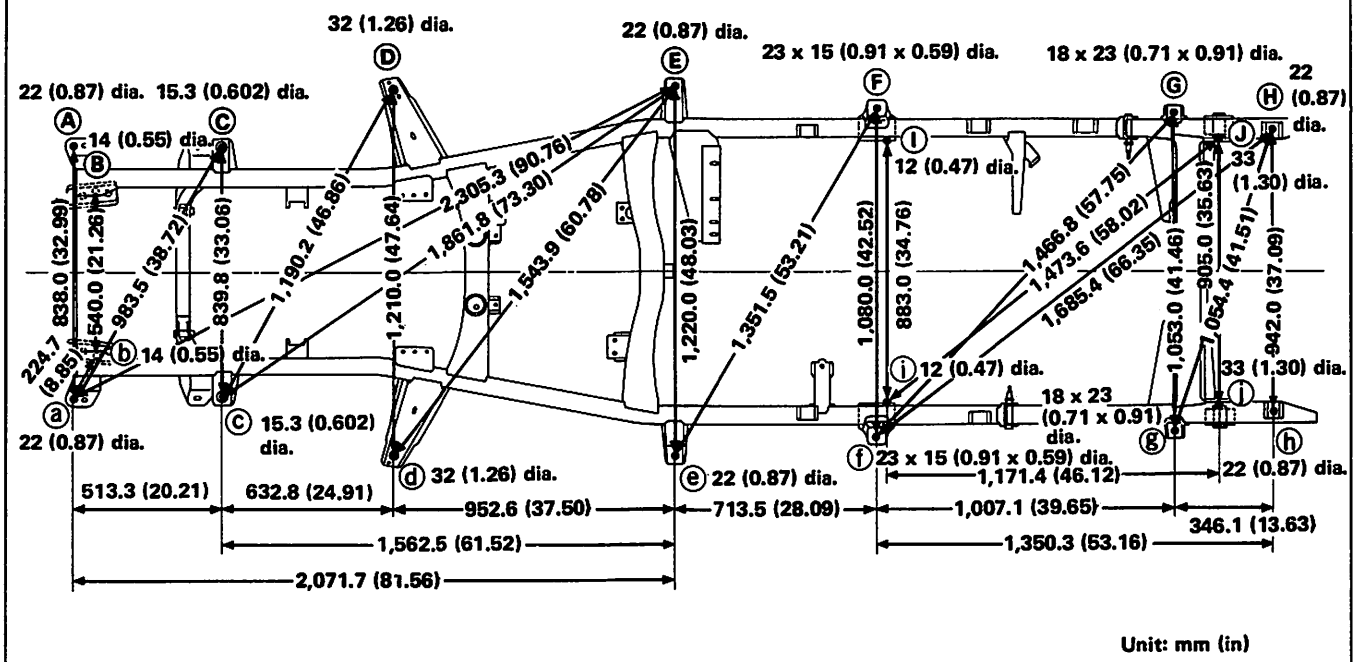

Regular Cab (Long wheelbase)

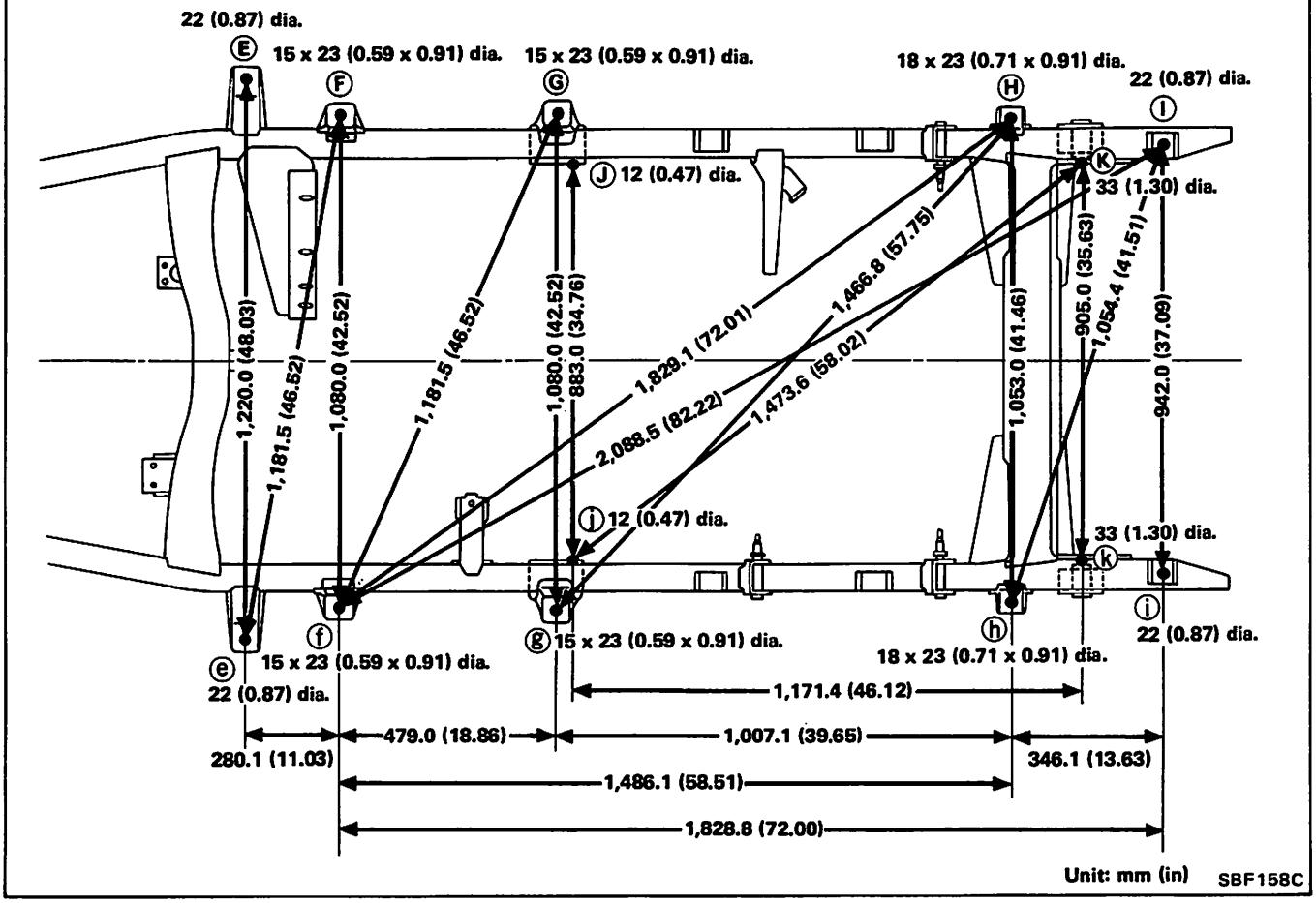

Regular Cab (Short wheelbase)

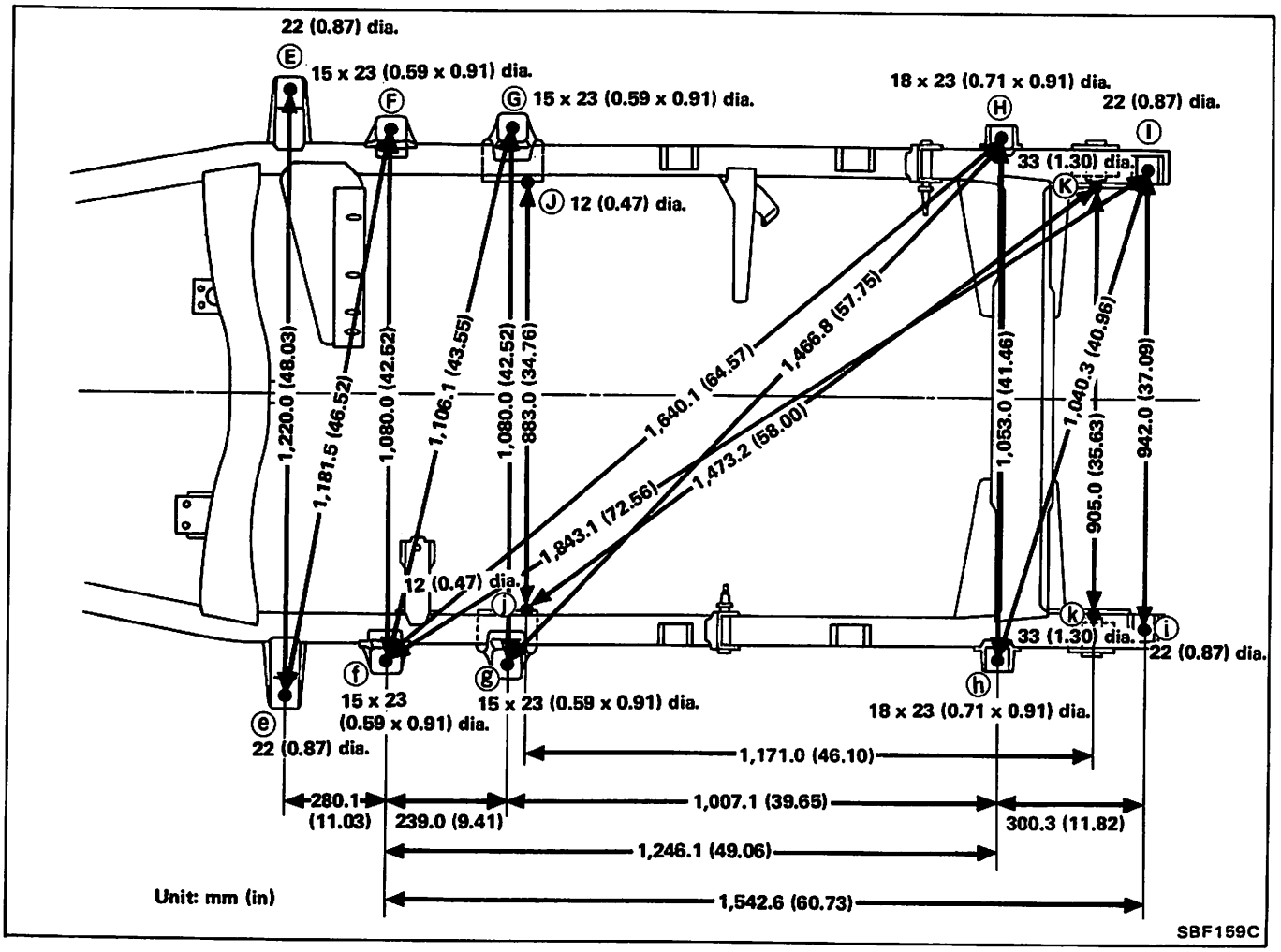

2WD models

King Cab

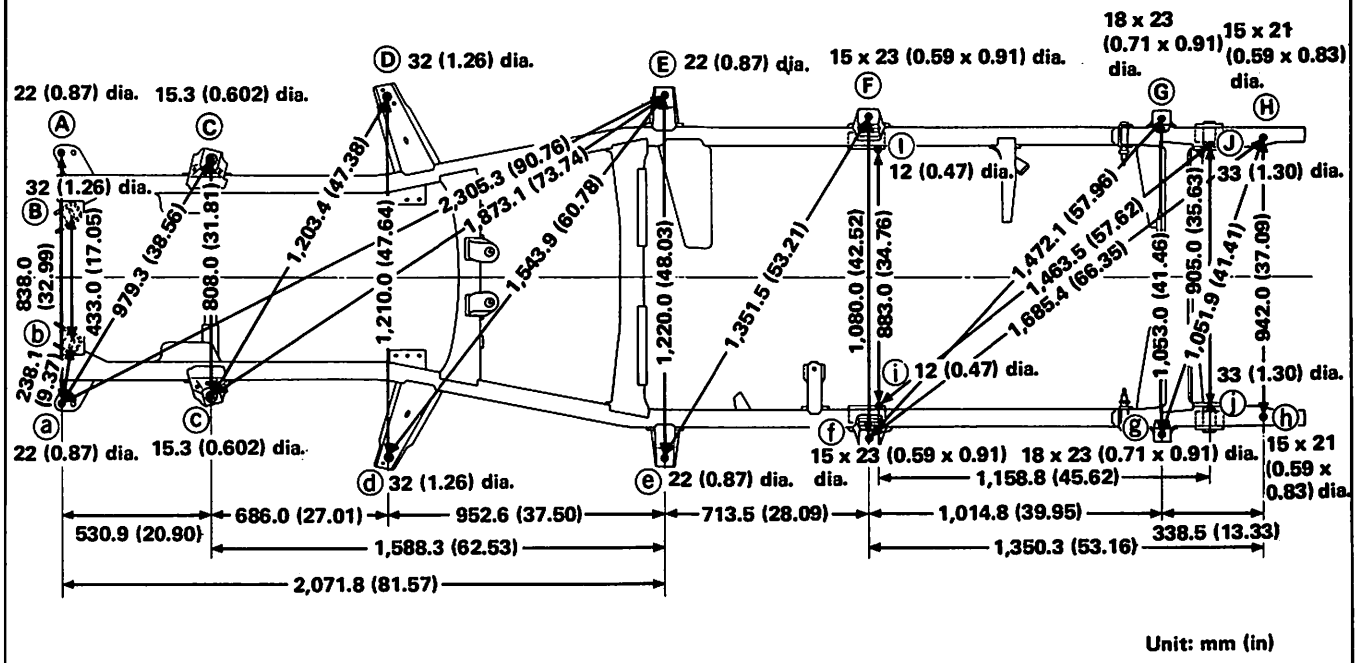

Regular Cab (Long wheelbase) & Heavy Duty

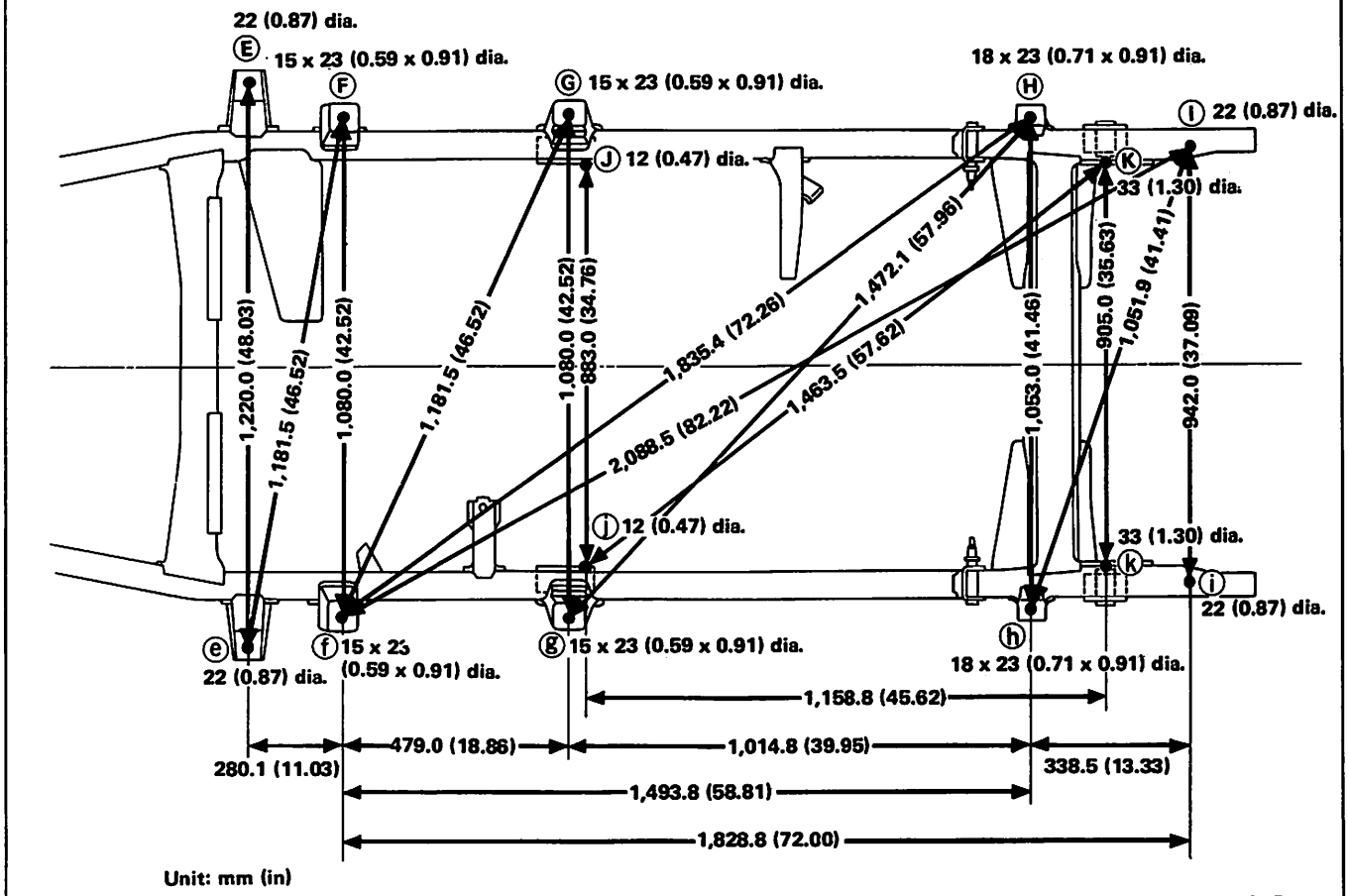

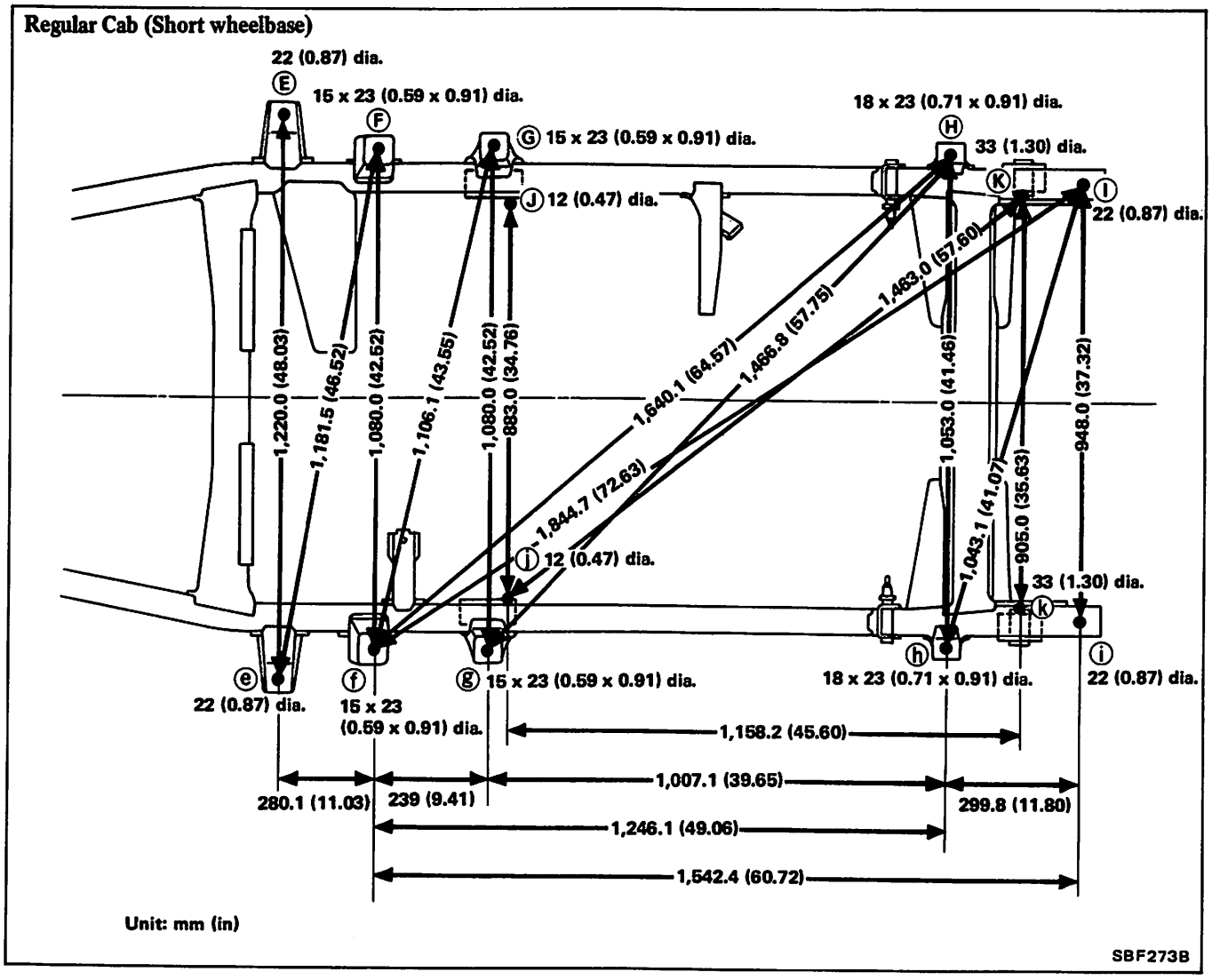
Regular Cab (Short wheelbase)
22 (0.87) dia.
E
15 x 23 (0.59 x 0.91) dia.
F
G 15 x 23 (0.59 x 0.91) dia.
J 12 (0.47) dia.
18 x 23 (0.71 x 0.91) dia.
H
33 (1.30) dia.
K
I
22 (0.87) dia.
1,220.0 (48.03)
1,181.5 (46.52)
1,080.0 (42.52)
1,106.1 (43.55)
1,080.0 (42.52)
883.0 (34.76)
1,640.1 (64.57)
1,466.8 (57.75)
1,463.0 (57.60)
1,053.0 (41.46)
948.0 (37.32)
1,844.7 (72.63)
1,043.1 (41.07)
905.0 (35.63)
j 12 (0.47) dia.
33 (1.30) dia.
k
e
22 (0.87) dia.
f
15 x 23
(0.59 x 0.91) dia.
g 15 x 23 (0.59 x 0.91) dia.
h
18 x 23 (0.71 x 0.91) dia.
i
22 (0.87) dia.
1,158.2 (45.60)
280.1 (11.03)
239 (9.41)
1,007.1 (39.65)
299.8 (11.80)
1,246.1 (49.06)
1,542.4 (60.72)
Unit: mm (in)
SBF273B

SPECIAL SERVICE TOOLS

Tool number (Kent-Moore No.)	Tool name
ST08800000 (–)	Sucker 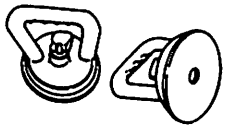
GG94310000 (–)	Flare nut torque wrench 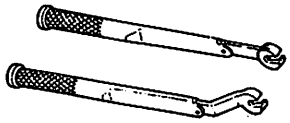

HEATER & AIR CONDITIONER

SECTION HA

CONTENTS

HEATER

DESCRIPTION (Heater) ..... HA- 3
Air flow ..... HA- 3
SERVICE PROCEDURES (Heater) ..... HA- 5
Heater duct and nozzle components .... HA- 5
Heater/Air conditioner control ..... HA- 5
Heater unit ..... HA- 7
Blower unit ..... HA- 8
Resistor ..... HA- 9
Heater relay ..... HA- 9
ELECTRICAL CIRCUIT (Heater) ..... HA- 9
Schematic ..... HA- 9
Wiring diagram HA-10
TROUBLE DIAGNOSES AND CORRECTIONS (Heater) HA-11

AIR CONDITIONER

DESCRIPTION (Air conditioner) HA-12
Refrigeration cycle HA-12
Air conditioner components HA-13
Location of electrical and vacuum unit HA-14
Vacuum line HA-14
Air flow HA-15
GENERAL SERVICE (Air conditioner) HA-16
Precautions HA-16
Installing manifold gauge HA-16
Handling refrigerant service can tap HA-17
Discharging refrigerant HA-17
Evacuating and charging refrigerant system HA-17
Refrigerant level check HA-19
Hose and pipe check HA-19
Checking refrigerant leak HA-20
Compressor oil level check HA-21
PERFORMANCE TEST (Air conditioner) HA-23
Performance chart-1 (In the hot climate) HA-23
Performance chart-2 (In the cold climate) HA-24
Performance test diagnoses HA-26
SERVICE PROCEDURES (Air conditioner) HA-30
Precautions for removal and installation HA-30
Refrigerant lines HA-31
Compressor idler pulley HA-32
Fast idle control device (F.I.C.D.) HA-32
Compressor HA-33
Condenser HA-33
Air conditioner duct and nozzle component HA-34
Air conditioner control HA-34
Cooling unit HA-34
Expansion valve HA-35
Thermo switch HA-35
Air conditioner relay HA-35
Blower unit HA-35
COMPRESSOR [Model DKV-14B (Diesel-Kiki make)] HA-36
Precautions HA-37
Compressor clutch HA-37
Thermal protector HA-38
COMPRESSOR [Model DKV-14C (Diesel-Kiki make)] HA-39
Precautions HA-40
Compressor clutch HA-40
Thermal protector HA-41
ELECTRICAL CIRCUIT (Air conditioner) HA-42
Schematic HA-42

Wiring diagram HA-42
TROUBLE DIAGNOSES AND CORRECTIONS HA-43
Air conditioner diagnoses HA-43
Compressor diagnoses HA-45
Blower motor diagnoses HA-47
Compressor clutch diagnoses HA-48
Compressor control device (F.I.C.D.) diagnoses HA-50
SERVICE DATA AND SPECIFICATIONS (S.D.S.) HA-52
General specifications HA-52
Inspection and adjustment HA-52
Tightening torque HA-52
SPECIAL SERVICE TOOLS HA-54

DESCRIPTION (Heater)

AIR FLOW

OFF

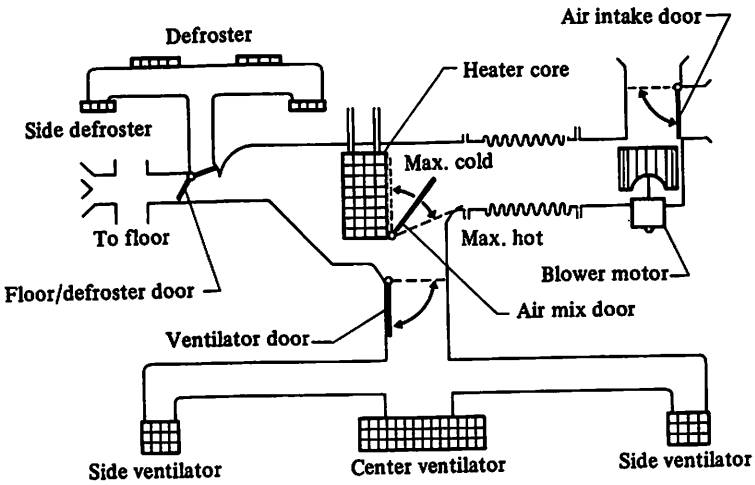

RHA118

VENT position

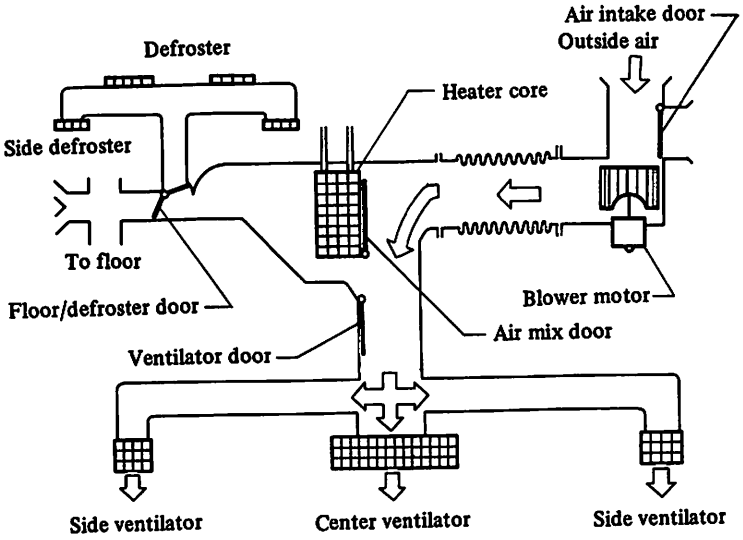

RHA119

B/L (BI-LEVEL) position

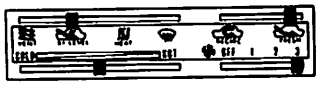

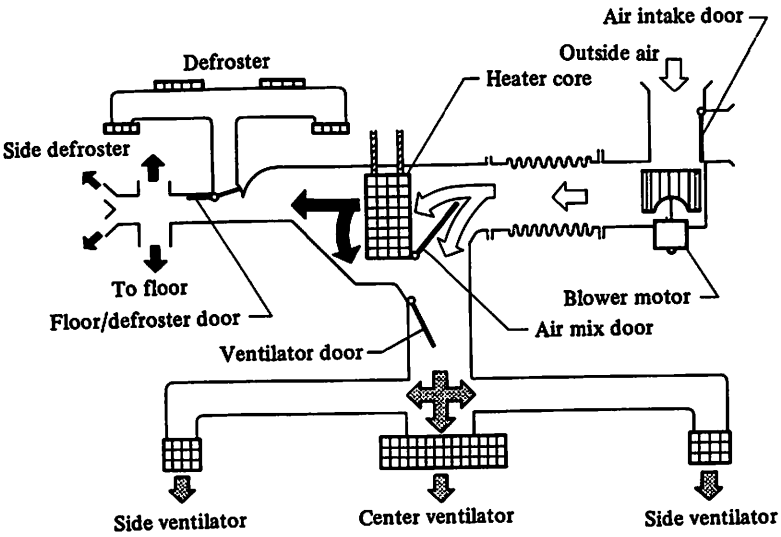

RHA120

HEAT position

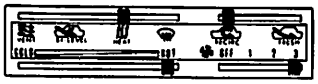

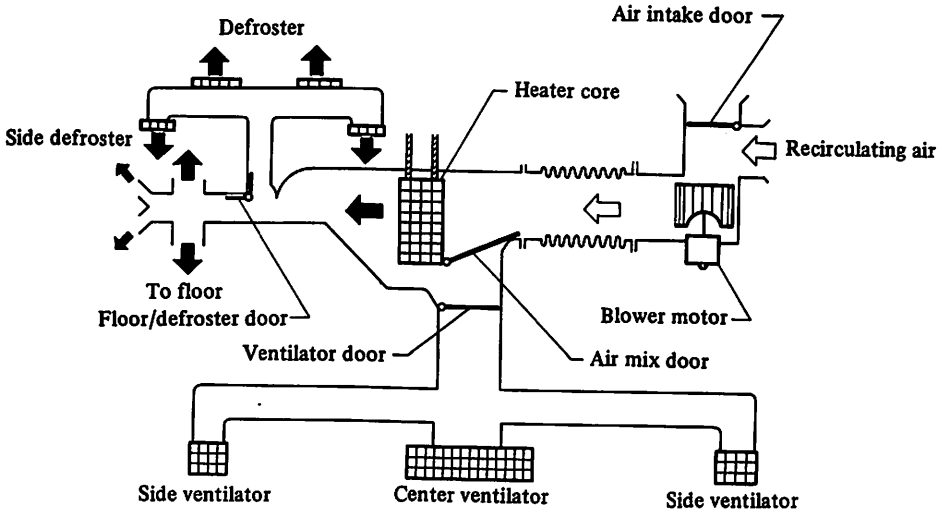

RHA121

position

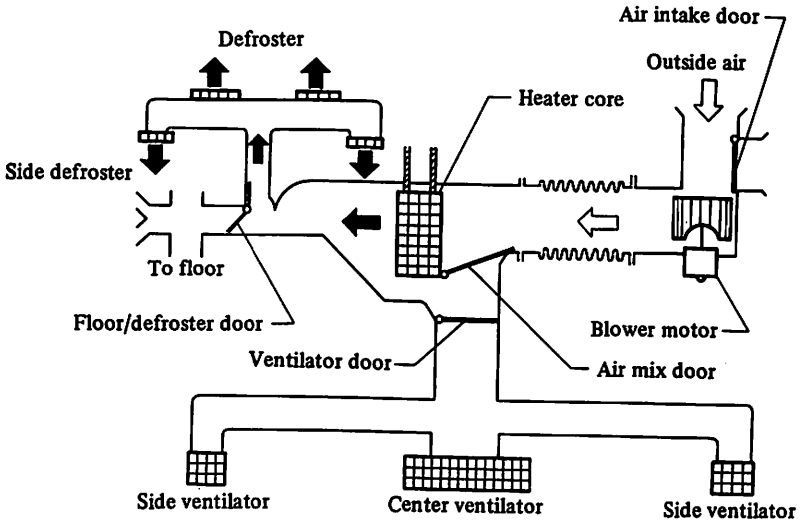

RHA122

SERVICE PROCEDURES (Heater)

HEATER DUCT AND NOZZLE COMPONENTS

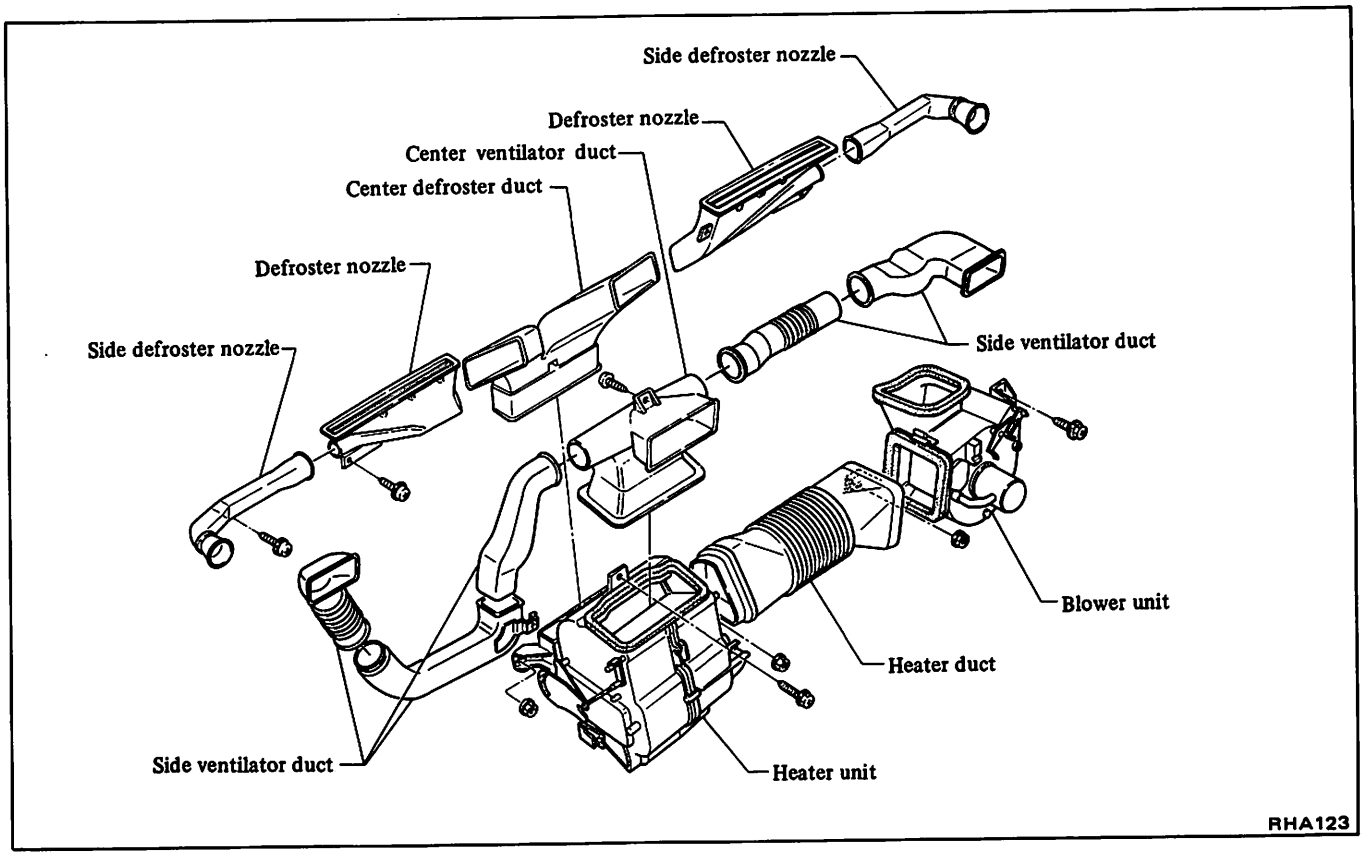

HEATER/AIR CONDITIONER CONTROL

REMOVAL AND INSTALLATION

1. Remove package tray.
2. Disconnect cables from heater unit and blower unit.

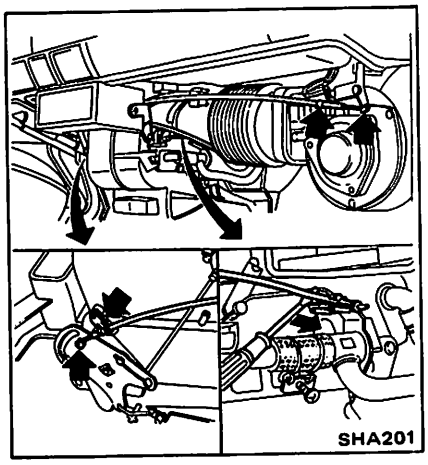

To facilitate disconnection of air mix door/water cock control cable from air conditioner equipped models, set temperature control lever in the "COLD" position.

3. Remove heater/air conditioner control knob and panel and then remove heater/air conditioner control.

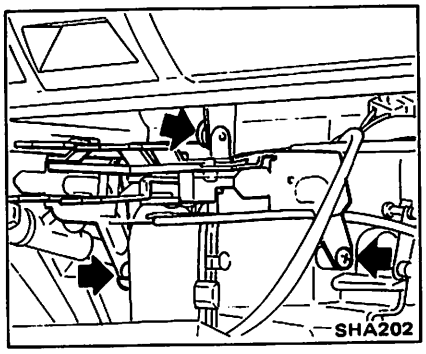

4. Installation is in the reverse order of removal. **Adjust control cables. Refer to Adjusting Heater/Air Conditioner Control.**

DISASSEMBLY AND ASSEMBLY

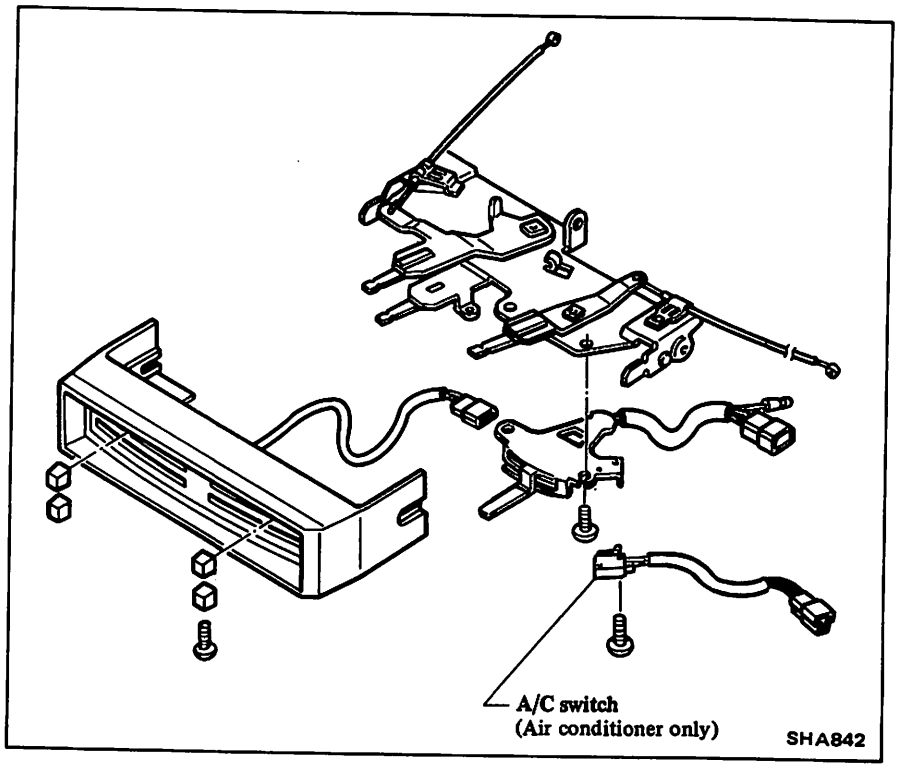

INSPECTION

Test continuity through switch with a test lamp or ohmmeter.

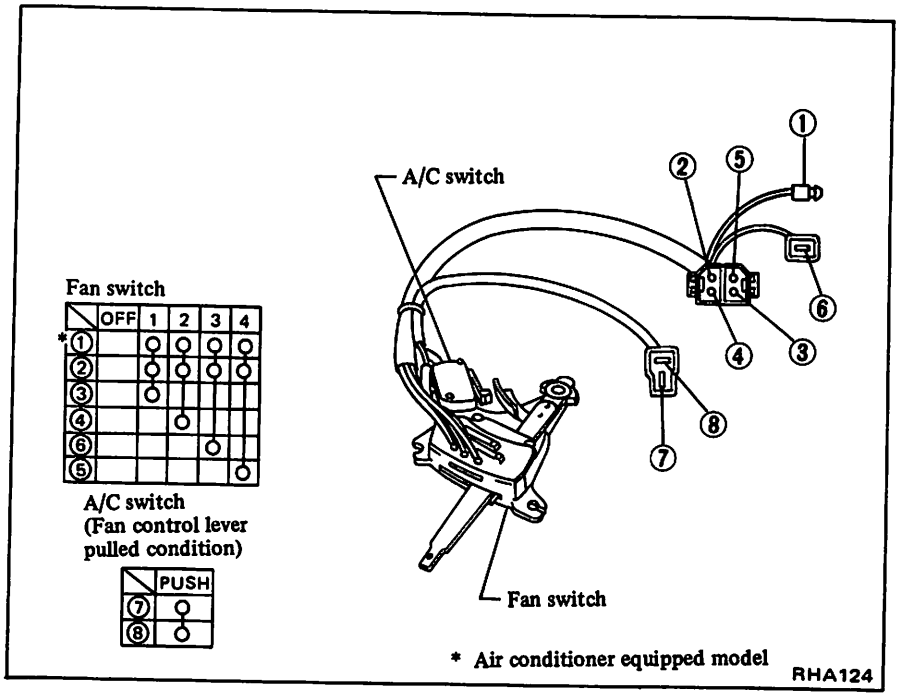

	OFF	1	2	3	4
*①		○	○	○	○
②		○	○	○	○
③		○			
④			○		
⑥				○	
⑤					○

A/C switch
(Fan control lever pulled condition)

	PUSH
⑦	○
⑧	○

ADJUSTING HEATER/AIR CONDITIONER CONTROL

Air intake door control cable

1. Set air intake lever in the "RECIRC" position.
2. Clamp the cable while pushing cable outer case and air intake door lever in direction of arrow.

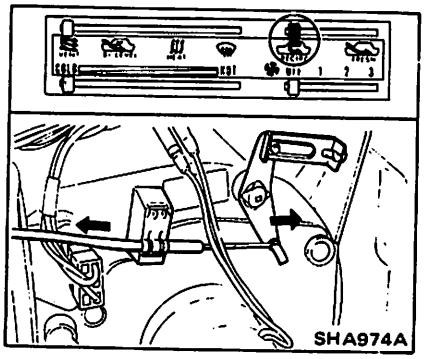

Air mix door/water cock control cable

1. Set temperature control lever in the "COLD" position.
2. Pull control cable outer case in direction of arrow so as to make clearance of about 2 mm (0.08 in) between ends of rod and water cock lever. Then clamp the cable.

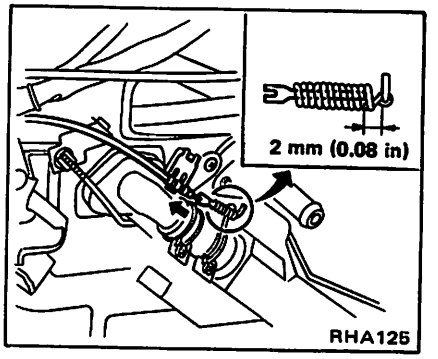

Floor door/ventilator door control cable

1. Set air control lever in "" position.
2. Move side link in the direction which the floor door closes. With side link held in that position, connect cable and clamp it securely.

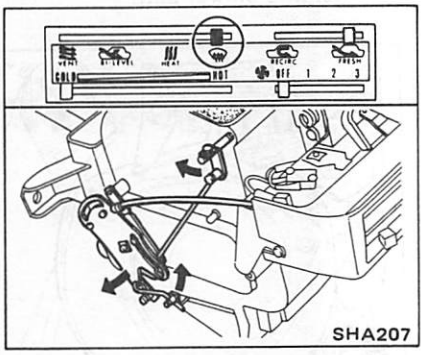

HEATER UNIT

REMOVAL AND INSTALLATION

1. Drain coolant from radiator.
2.
- Air conditioner equipped models
  Disconnect heater hose from engine.
- Except air conditioner equipped models

(1) Remove heater duct.
(2) Disconnect heater hose from heater unit.

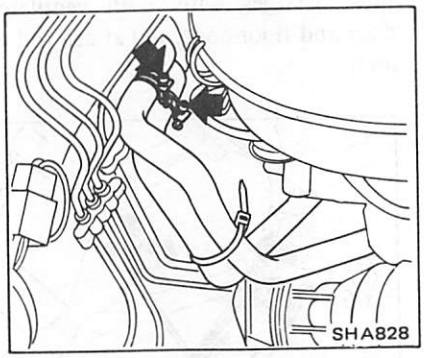

3. Remove console box and instrument assembly.
4. Disconnect air intake control cable from the blower unit.

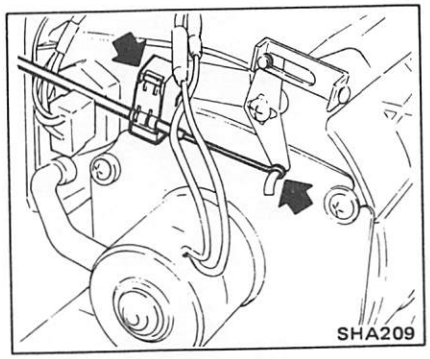

5. Air conditioner equipped models
(1) Remove blower unit.
(2) **Remove cooling unit mounting nuts and bolts. It is not necessary to remove cooling unit.**
6. Remove heater unit and then separate heater/air conditioner control assembly.

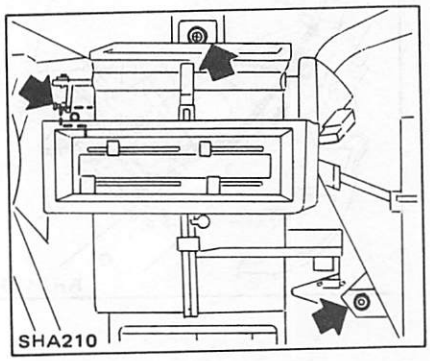

7. Installation is in the reverse order of removal.

Adjust heater control cable. Refer to Adjusting Heater/Air Conditioner Control.

DISASSEMBLY

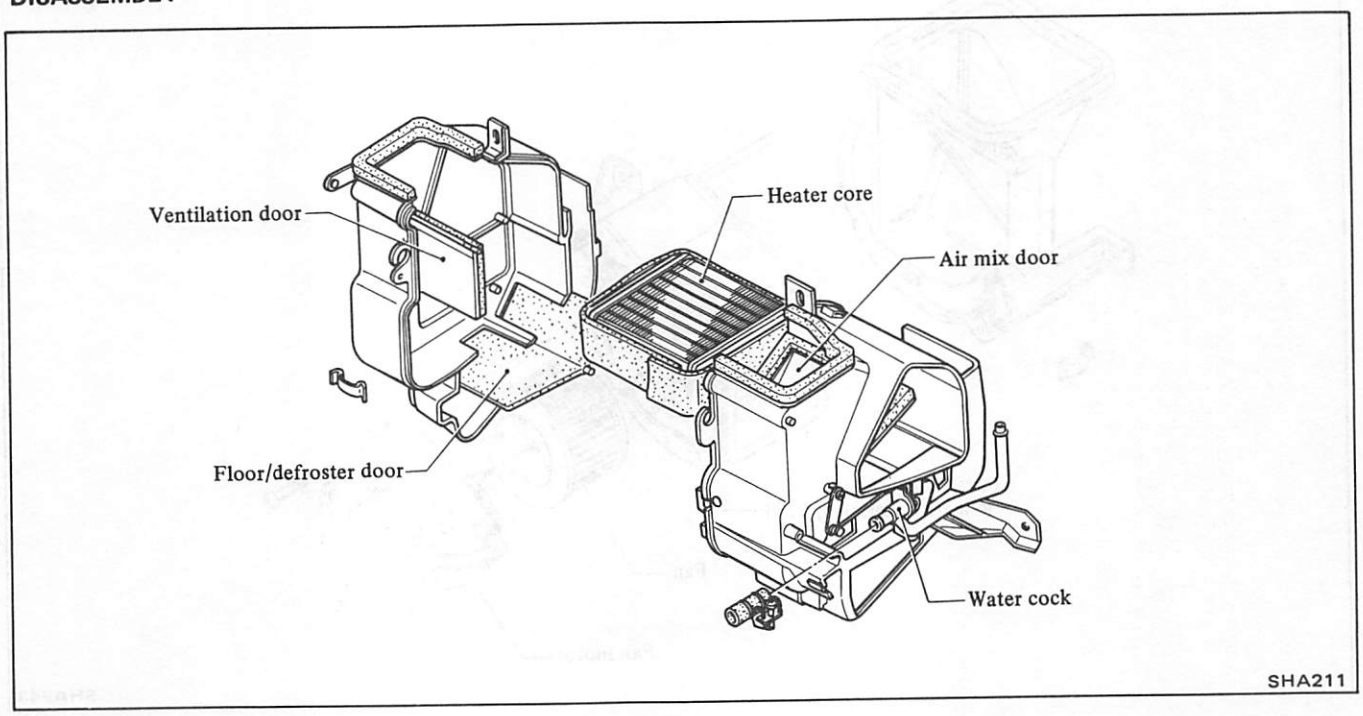

ASSEMBLY

Air mix door rod

Fully tilt air mix door towards heater core by pushing are mix door lever. With lever held in that position, install rod. Water cock should be closed.

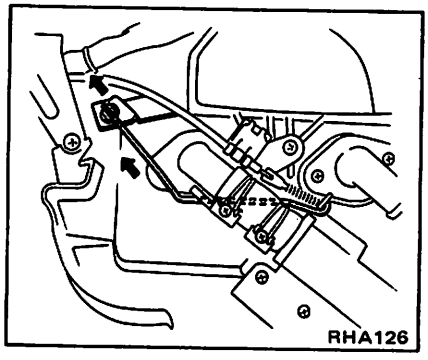

Floor door and ventilator door rod

Raise link all the way in the direction indicated by the arrow and close air flow passages with both ventilator door and floor door, and attach rod to lever.

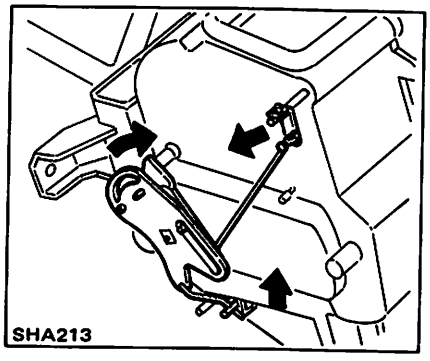

BLOWER UNIT

REMOVAL AND INSTALLATION

1. Disconnect battery ground cable.
2. Remove package tray.
3. Remove heater dust (Except air conditioner equipped models)
4. Disconnect resistor connector and air intake door cable.
5. Remove blower unit.

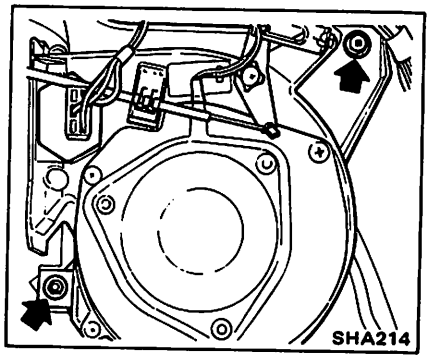

6. Installation is in the reverse order of removal.

Adjust air intake door control cable. Refer to Adjusting Heater/Air Conditioner Control.

DISASSEMBLY

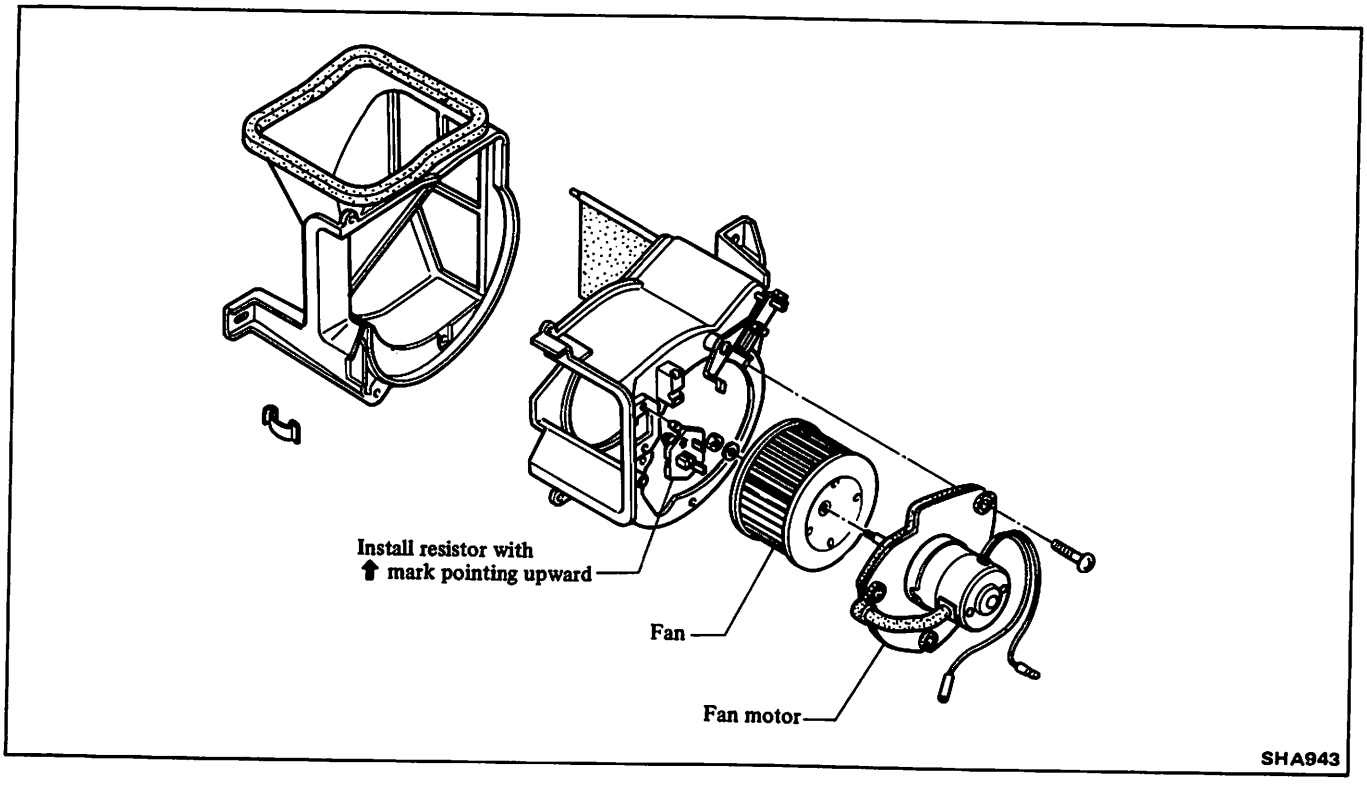

RESISTOR

INSPECTION

Test continuity through resistor with a test lamp or ohmmeter.

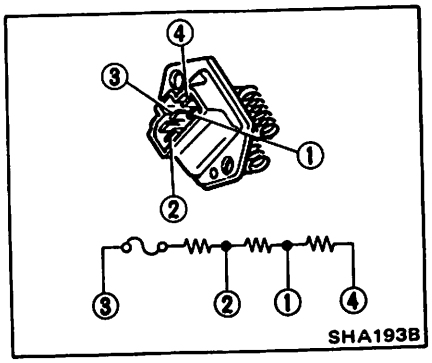

HEATER RELAY

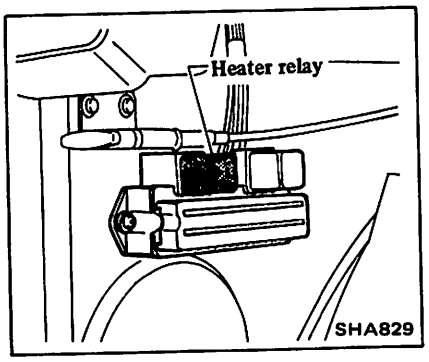

ELECTRICAL CIRCUIT (Heater)

SCHEMATIC

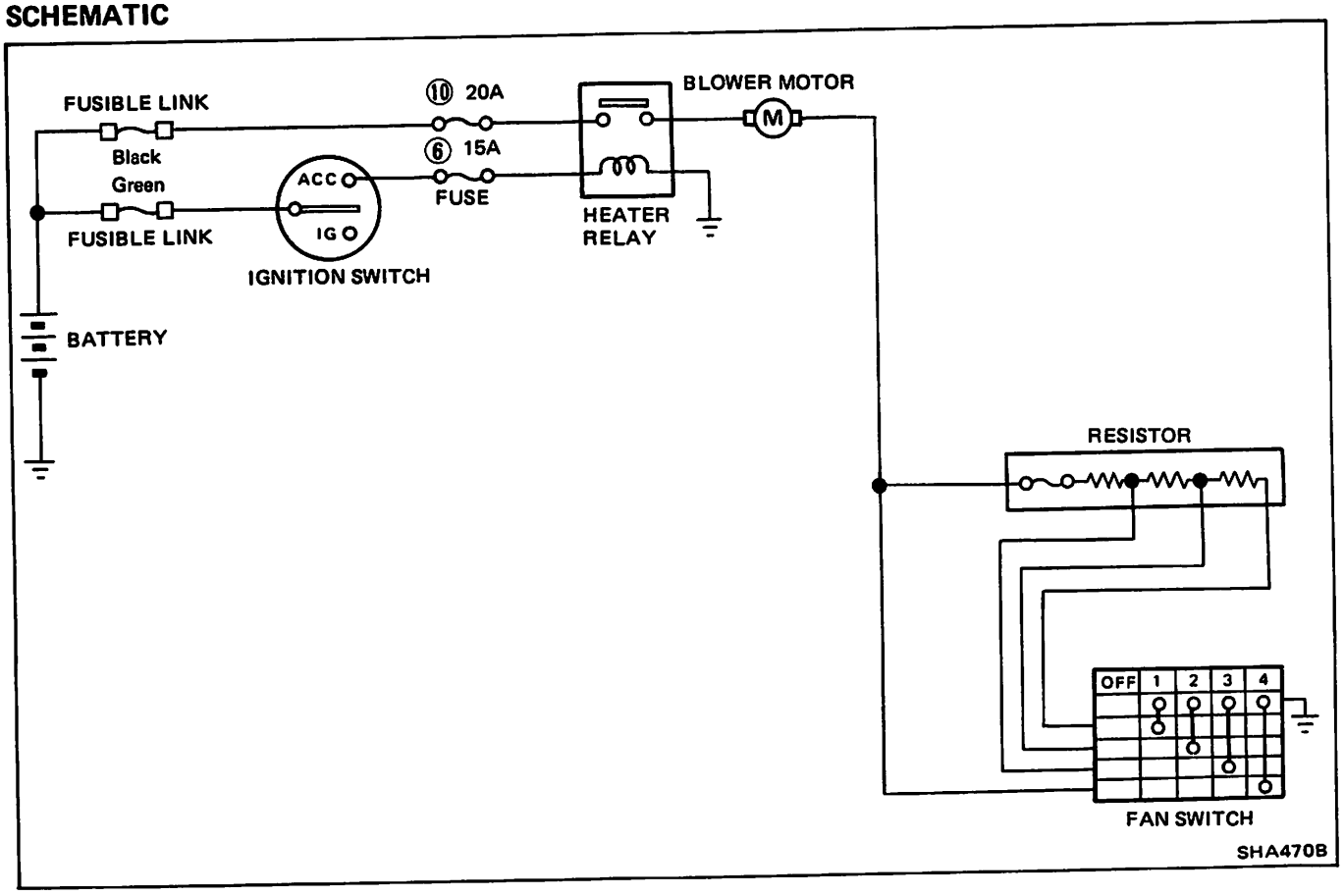

WIRING DIAGRAM

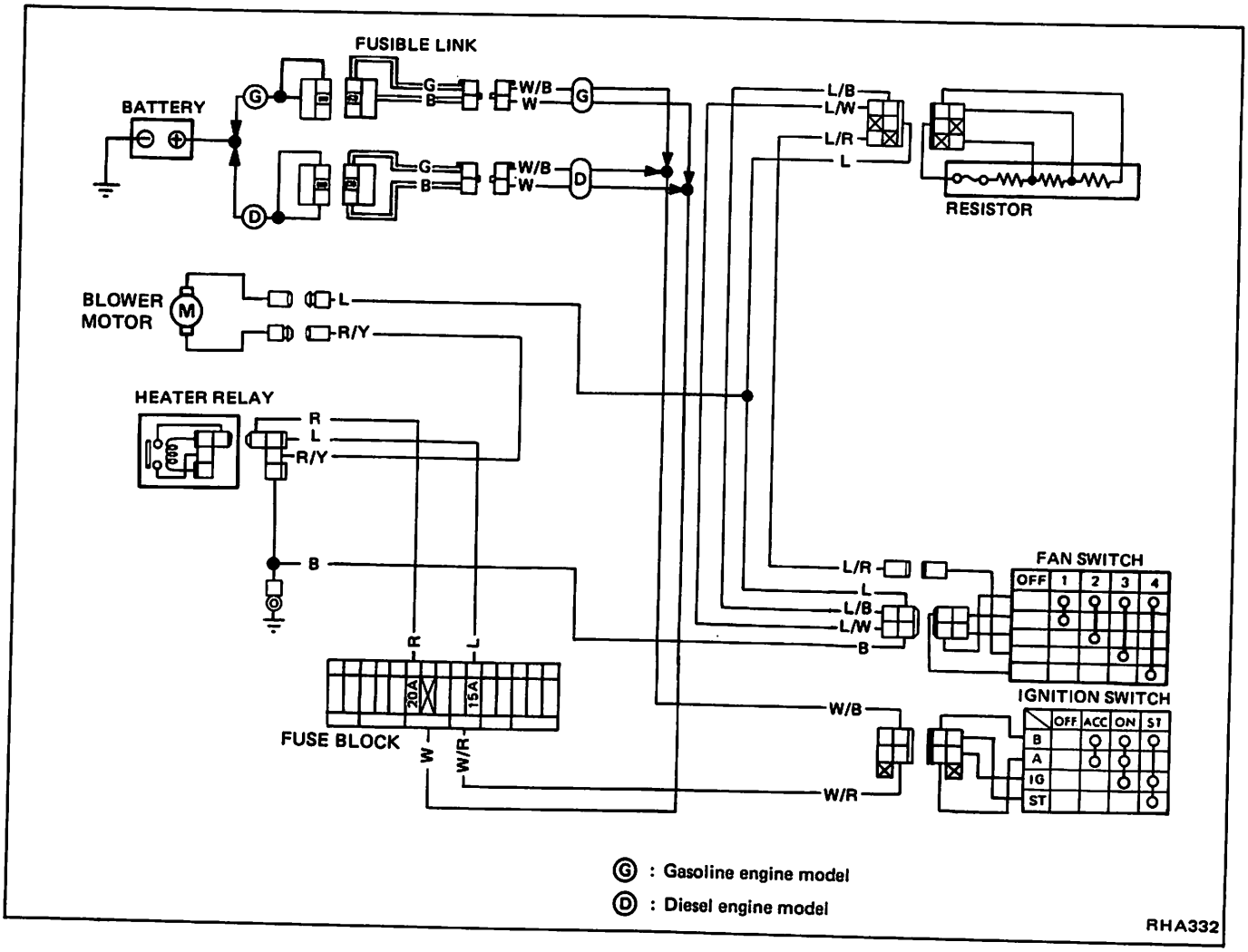

TROUBLE DIAGNOSES AND CORRECTIONS (Heater)

Condition	Probable cause	Corrective action
Insufficient heating performance. No heated air discharged.	Cooling water temperature too low.	Check thermostat. Replace as necessary.
	Heater core plugged.	Clean.
	Insufficient cooling water level.	Refill.
	Malfunctioning air mix door.	Adjust control cable.
	Malfunctioning water cock.	Check water cock. Replace as necessary. Adjust control cable.
Insufficient air flow to floor.	Blower motor speed too low.	Check motor terminal voltage. Repair poor connection and discontinuity. Replace motor if necessary.
	Malfunctioning floor door.	Adjust control cable.
Insufficient air flow to defroster.	Malfunctioning floor door.	Adjust control cable.
	Defroster nozzle plugged.	Clean.
	Leak at defroster duct-to-nozzle connection.	Correct.
Blower motor does not operate.	Faulty fan switch.	Replace.
	Faulty resistor.	Replace.
	Faulty blower motor.	Replace.
	Faulty heater relay.	Replace.
	Burned fuse.	Replace.
	Loose connector.	Connect securely.
Control lever drags.	Inner wire rubbing against outer case end.	Adjust control cable.
	Control cable bent excessively.	Correct.
	Malfunctioning doors, door levers, etc.	Check and correct.
Recirculating air is not taken in with air intake lever in RECIRC.	Air intake door does not operate properly.	Adjust control cable.
Noise from blower motor.	Loose bolt in blower motor.	Check and tighten loose bolts.

DESCRIPTION (Air conditioner)

REFRIGERATION CYCLE

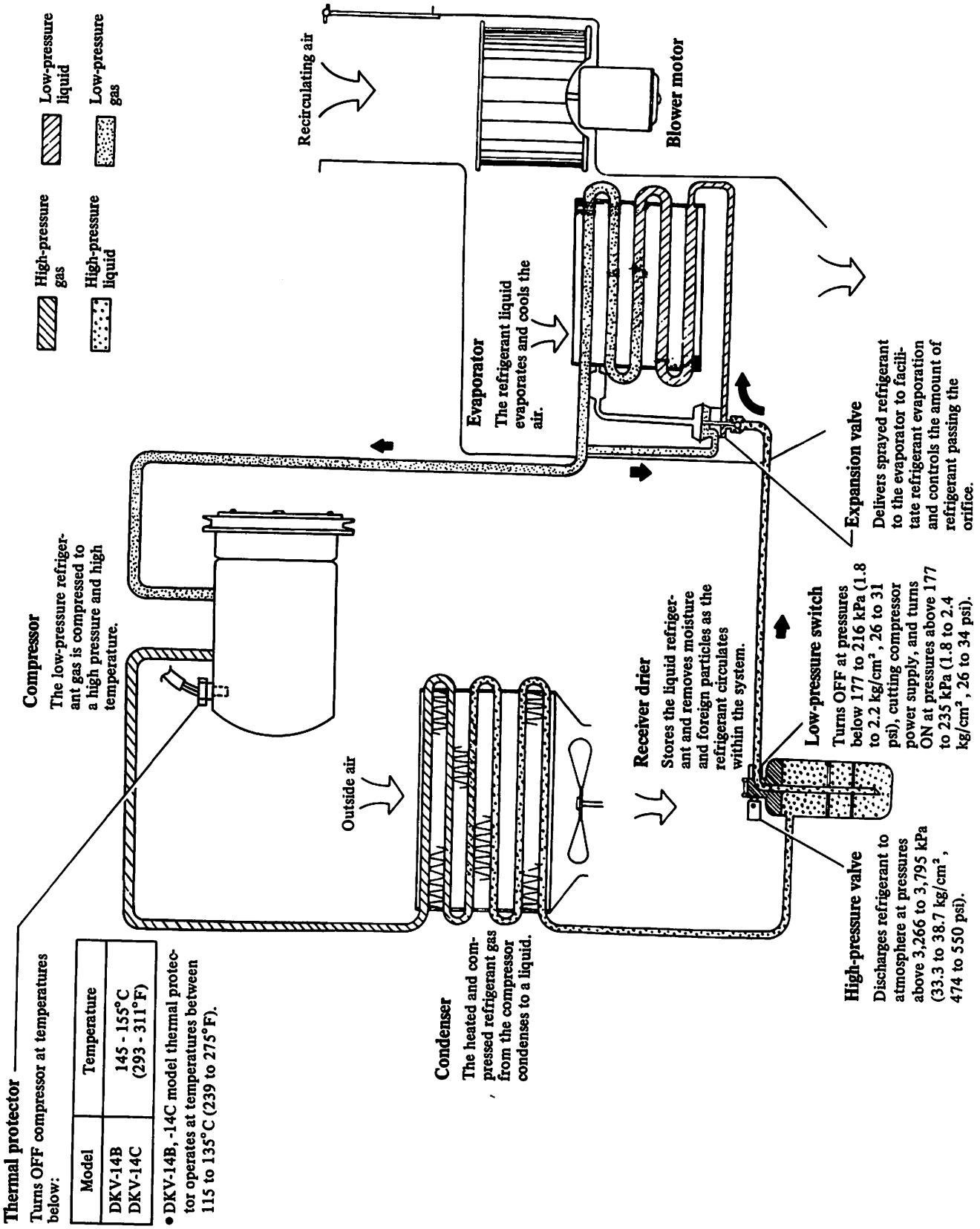

SHA977A

AIR CONDITIONER COMPONENTS

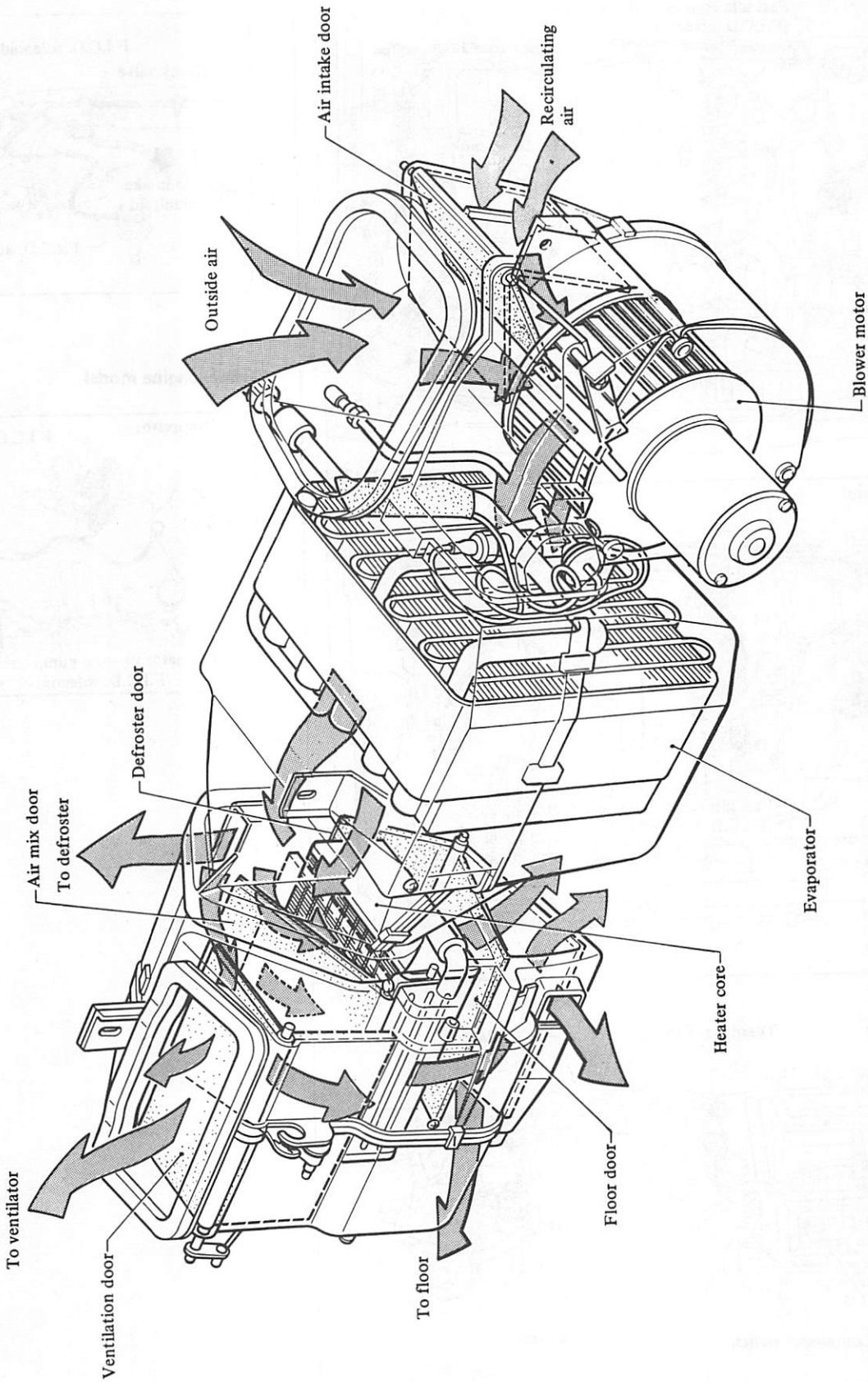

SHA978A

LOCATION OF ELECTRICAL AND VACUUM UNIT

Gasoline engine model

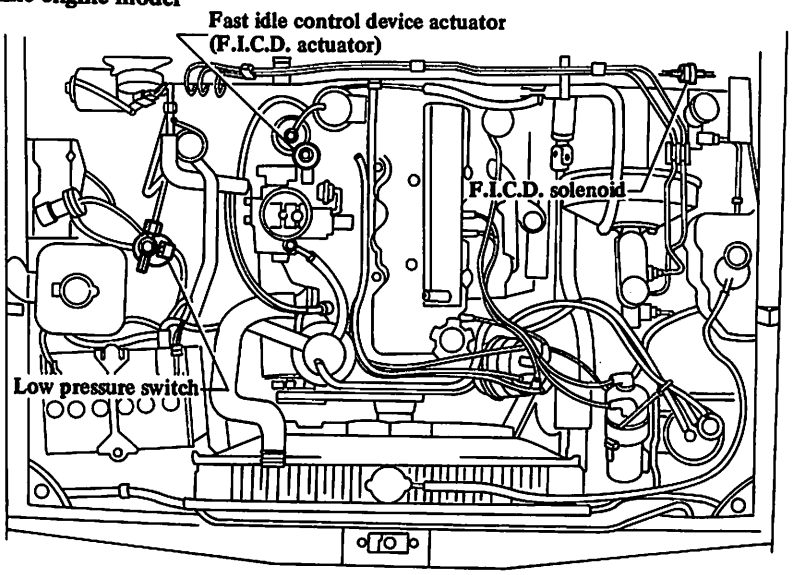

SHA223A

Diesel engine model

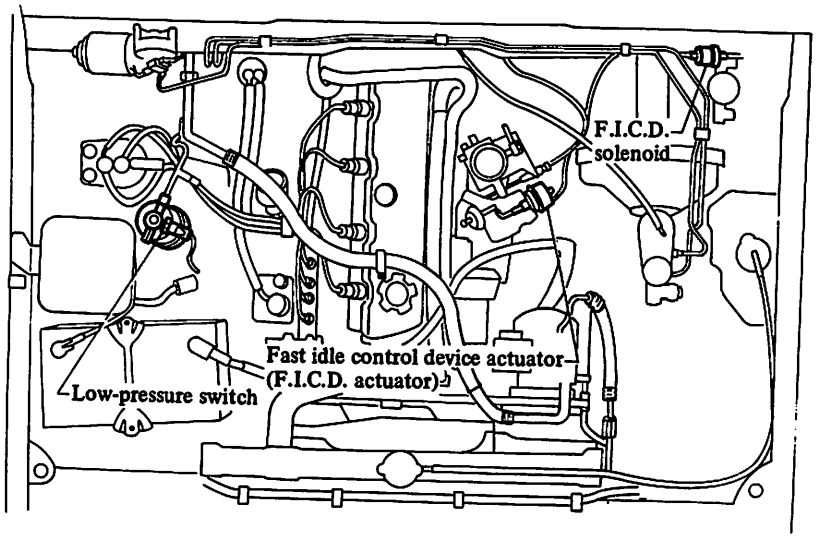

SHA979A

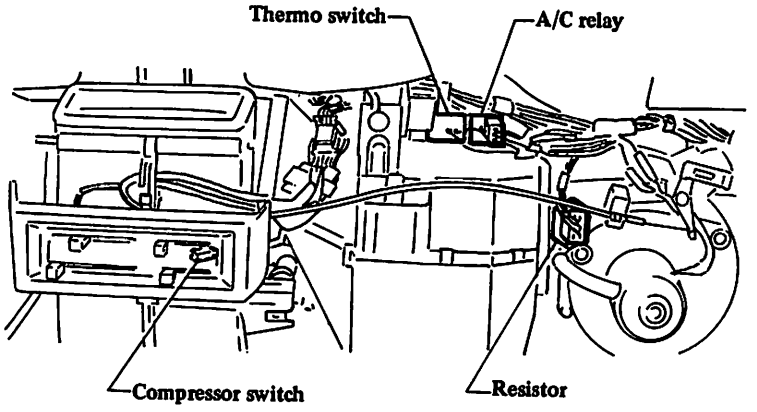

SHA225A

VACUUM LINE

Gasoline engine model

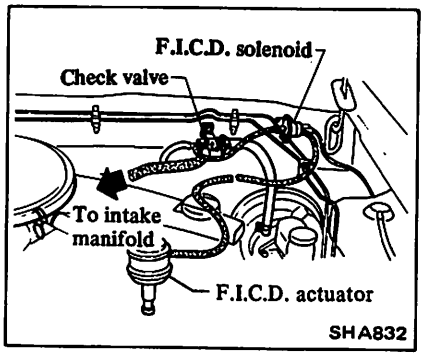

SHA832

Diesel engine model

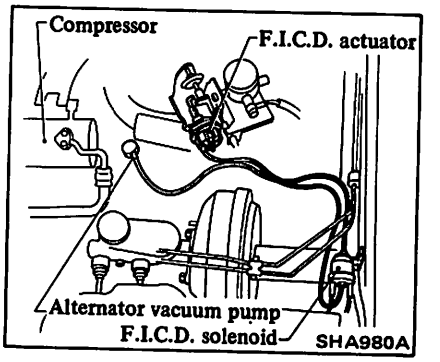

SHA980A

AIR FLOW

OFF

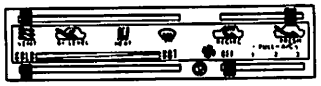

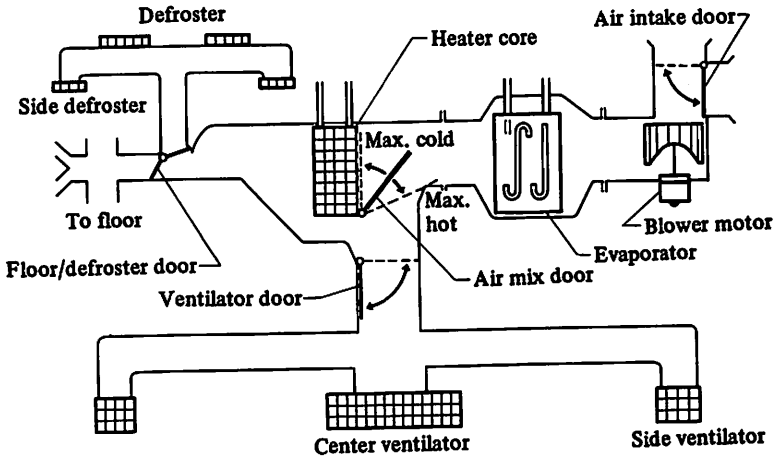

SHA792

VENT-A/C-position

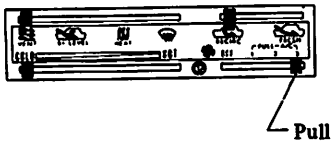

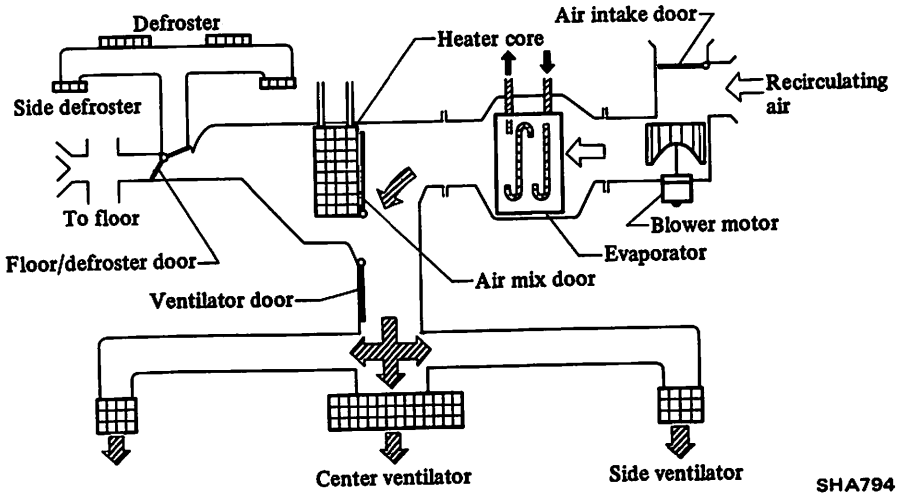

SHA794

BI-LEVEL-A/C-position

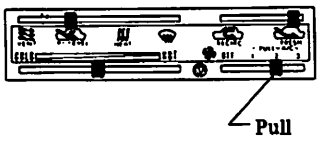

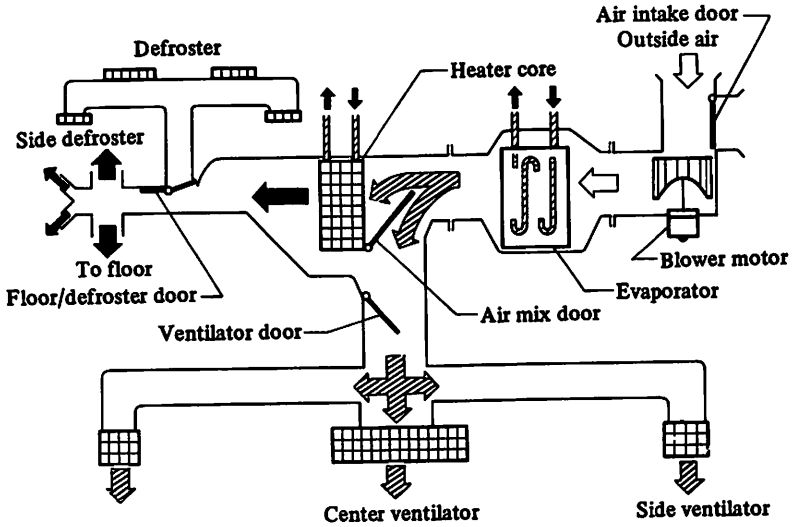

SHA795

VENT, B/L (BI-LEVEL), HEAT, HEAT (Fast heating), and (Fast defrosting) position

Refer to Description in Heater.

GENERAL SERVICE (Air conditioner)

PRECAUTIONS

WARNING:

1. Since direct contact of the liquid refrigerant with your skin will cause frostbite, always be careful when handling the refrigerant. Always wear goggles to protect your eyes when working around the system.
2. The refrigerant service container has a safe strength. However, if handled incorrectly, it will explode. Therefore, always follow the instructions on the label. In particular, never store it in a hot location [above 52°C (126°F)] or drop it from a high height.
3. The refrigerant gas it odorless and colorless and breathing may become difficult due to the lack of oxygen. Since the refrigerant gas is heavier than air and will lay close to the floor, be especially careful when handling it in small, confined spaces.
4. The refrigerant itself is nonflammable. However, a toxic gas (phosgene gas) is produced when it contacts fire and special care is therefore required when checking for leaks in the system with a halide torch.
5. Do not steam clean on the system, especially condenser since excessively high pressure will build up in the system, resulting in explosion of the system.
6. When connecting refrigerant lines, tighten within the specified torque using new O-rings to prevent refrigerant from leaking.

INSTALLING MANIFOLD GAUGE

Hoses for the low-pressure service valve (suction valve) and high-pressure service valve (discharge valve) should be connected securely to "high" and "low" connection, respectively, on the manifold gauge.

Refer to identification marks ("S": Suction side or "D": Discharge side) on compressor or Refrigerant Lines.

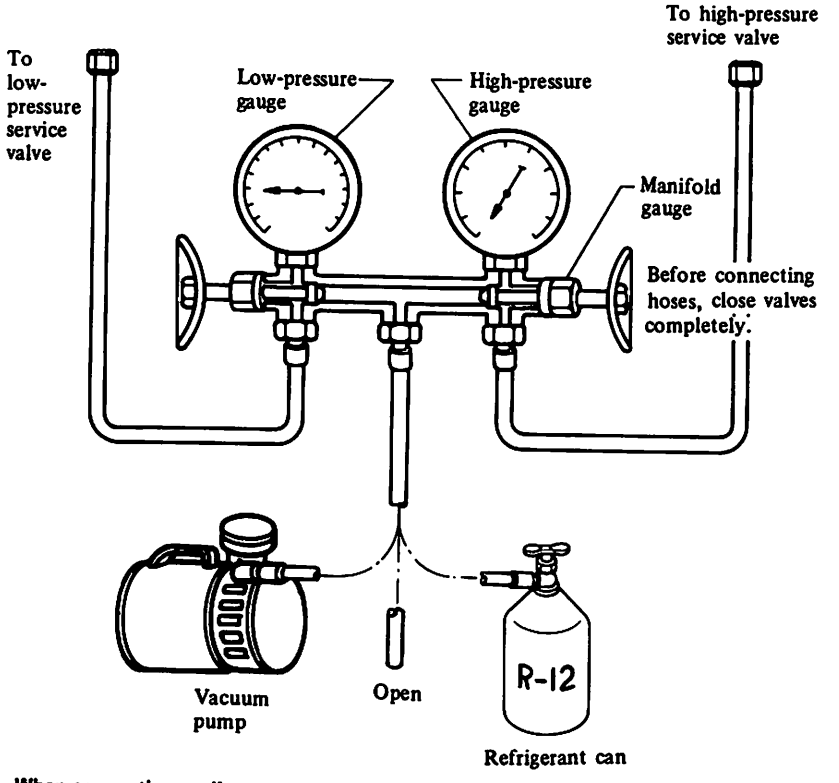

When connecting or disconnecting manifold gauge to refrigerant line, fully close both valves of manifold gauge. This procedure has to be done promptly.

SHA183

Do not use manifold gauge whose press point shape is different. Otherwise, insufficient evacuating may occur.

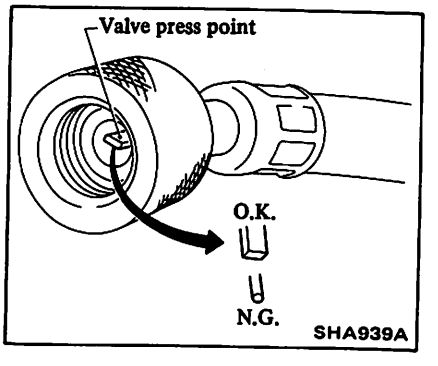

SHA939A

CAUTION:

Do not over-tighten valve cap.

HANDLING REFRIGERANT SERVICE CAN TAP

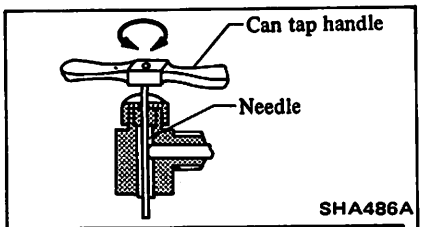

Turning direction of can tap handle	Moving direction of needle
Counterclockwise	Up
Clockwise	Down

- **Before attaching can tap to refrigerant can, turn can tap handle fully counterclockwise to raise the needle.**
- **After connecting manifold gauge to refrigerant can, be sure to purge air from charging hose by loosing charging hose nut at manifold gauge.**

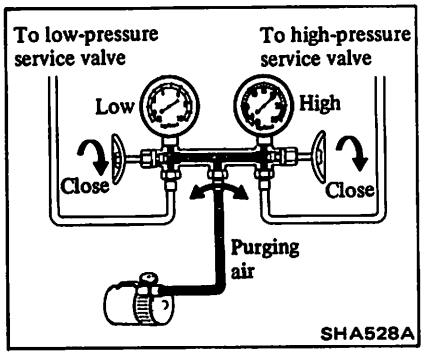

DISCHARGING REFRIGERANT

The pressurized refrigerant gas inside the system must be discharged at a pressure approaching atmospheric pressure prior to evacuating refrigerant inside the system.

Do not allow refrigerant to rush out. Otherwise, compressor oil will be discharged along with refrigerant.

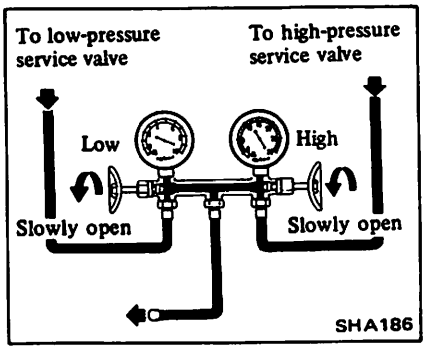

EVACUATING AND CHARGING REFRIGERANT SYSTEM

EVACUATING REFRIGERANT SYSTEM

1. Discharge refrigerant from system until pressure reaches atmospheric pressure.
2. Connect center charging hose to vacuum pump.
3. Close both valves of manifold gauge fully. Then start vacuum pump.
4. Open low-pressure valve and suck old refrigerant from system.

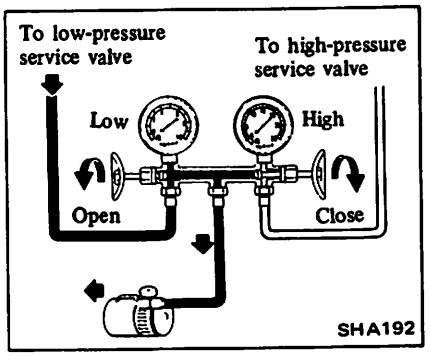

5. When low-pressure gauge reading has reached to approximately 66.7 kPa (500 mmHg, 19.69 inHg), slowly open high-pressure valve.

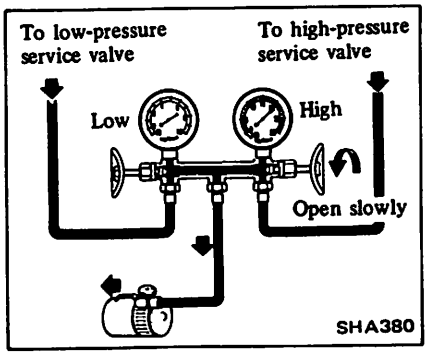

6. When pressure inside system has dropped to 101.3 kPa (760 mmHg, 29.92 inHg), fully close both valves of manifold gauge and stop vacuum pump. Let it stand for 5 to 10 minutes in this state and confirm that the reading does not rise.

a. **The low-pressure gauge reads lower by 3.3 kPa (25 mmHg, 0.98 inHg) per 300 m (1,000 ft) elevation. Perform evacuation according to the following table.**

Elevation m (ft)	Vacuum of system* kPa (mmHg, inHg)
0 (0)	101.3 (760, 29.92)
300 (1,000)	98.0 (735, 28.94)
600 (2,000)	94.6 (710, 27.95)
900 (3,000)	91.3 (685, 26.97)

*: Values show reading of the low-pressure gauge.

b. **The rate of ascension of the low-pressure gauge should be less than 3.3 kPa (25 mmHg, 0.98 inHg) in five minutes.**

If the pressure rises or the specified negative pressure can not be obtained, there is a leak in the system. In this case, repair the leak as described in the following.

(1) Charge system with a can of refrigerant [about 0.4 kg (0.9 lb)]. Refer to Charging Refrigerant.

(2) Check for refrigerant leakage with a leak detector. Repair any leakages found. Refer to Checking Refrigerant Leak.

(3) Discharge refrigerant again, and then evacuate system.

CHARGING REFRIGERANT SYSTEM

1. Evacuate refrigerant system.
2. Close manifold gauge valves securely and replace vacuum pump to refrigerant can.
3. Purge air from charging hose.

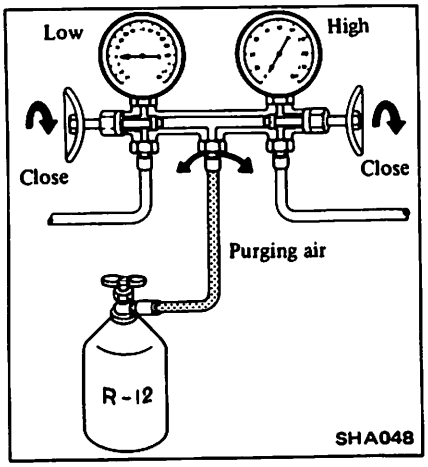

4. Charge refrigerant into system.

(1) **In case of charging refrigerant gas**

Open high- and low-pressure valves of manifold gauge and charge refrigerant into system.

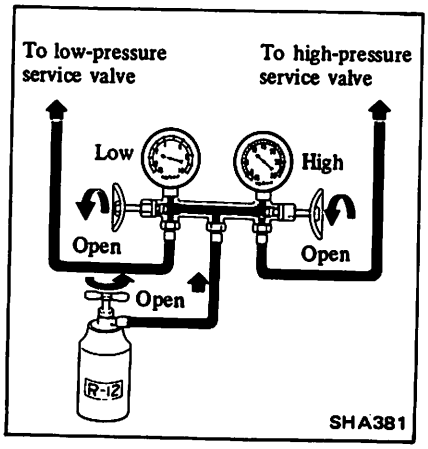

When refrigerant charging speed is slow, immerse refrigerant can in water, heated to a temperature of about 40°C (104°F), for a short time.

WARNING:

a. Under no circumstances the refrigerant can be warmed in water heated to a temperature of over 52°C (126°F).

b. A blow torch or stove must never be used to warm up the can.

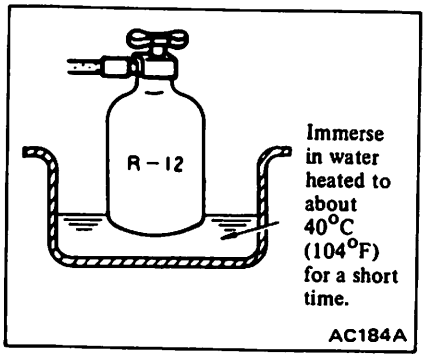

(2) **In case of charging liquefied refrigerant**

Open high pressure valve of manifold gauge and charge liquefied refrigerant into system with can upside down.

CAUTION:

When charging liquefied refrigerant into the system with the can turned upside down to reduce charging time, charge it only through high pressure (discharge) service valve. After completion of charging, the compressor should always be turned several times manually.

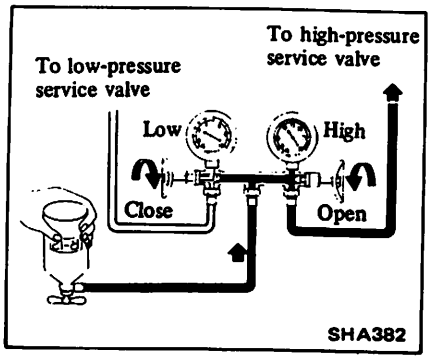

5. When refrigerant charging speed slows down, charge it while running the compressor for ease of charging.

WARNING:

Never charge refrigerant through high pressure side (discharge side) of system since this will force refrigerant back into refrigerant can and can may explode.

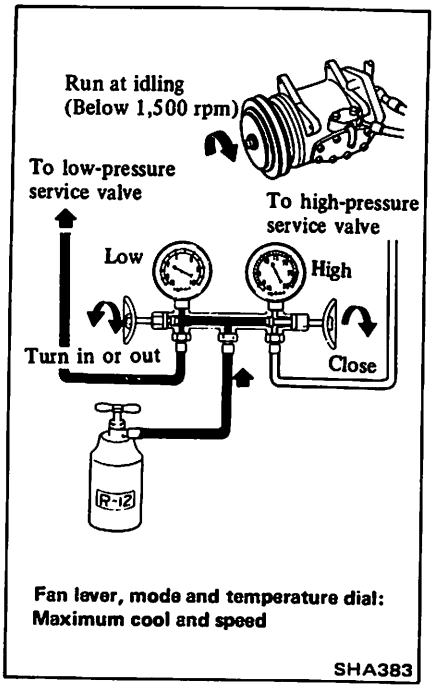

6. Charge refrigerant while controlling low-pressure gauge reading at 275 kPa (2.8 kg/cm², 40 psi) or less by turning in or out low-pressure valve of manifold gauge.

7. When refrigerant can is empty, replace it with a new one.

- **Replacement should be done with both valves of manifold gauge closed.**
- **Be sure to purge air from charging hose.**

8. Charge the specified amount of refrigerant into system by weighing charged refrigerant with scale. Overcharging will cause discharge pressure to rise.

Refrigerant capacity:
DKC model
0.9 - 1.1 kg (2.0 - 2.4 lb)

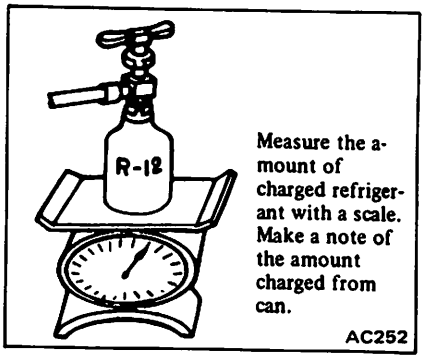

The state of the bubbles in sight glass should only be used for checking whether the amount of charged refrigerant is small or not. Refer to Refrigerant Level Check. The amount of charged refrigerant can be correctly judged by means of discharge pressure.

9. After charging, be sure to install valve cap on service valve.

10. Confirm that there are no leaks in system. Refer to Checking Refrigerant Leak.

Conducting a performance test prior to removing manifold gauge is a good service operation. Refer to Performance Test.

REFRIGERANT LEVEL CHECK

1. Open door windows.
2. Start the engine.
3. Set air conditioner switch to "ON" position.
4. Set temperature lever to maximum cold position.
5. Set blower to maximum speed.
6. Check sight glass after the lapse of about five minutes. Judge according to the following table.

Check item \ Amount of refrigerant	Almost no refrigerant	Insufficient	Suitable	Too much refrigerant
Temperature of high pressure and low pressure lines.	Almost no difference between high pressure and low pressure side temperature.	High pressure side is warm and low pressure side is fairly cold.	High pressure side is hot and low pressure side is cold.	High pressure side is abnormally hot.
State in sight glass.	Bubbles flow continuously. **Bubbles will disappear and something like mist will flow when refrigerant is nearly gone.** 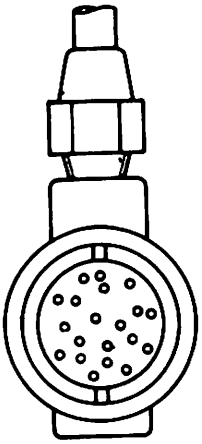 AC256	The bubbles are seen at intervals of 1 - 2 seconds. 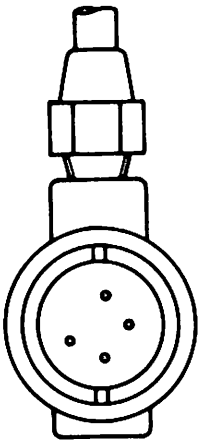 AC257	Almost transparent. Bubbles may appear when engine speed is raised and lowered. **No clear difference exists between these two conditions.** 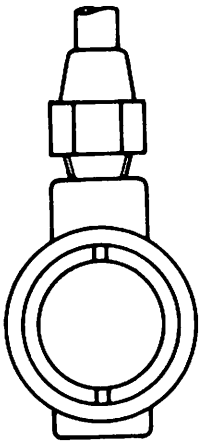 AC258	No bubbles can be seen.
Pressure of system.	High pressure side is abnormally low.	Both pressure on high and low pressure sides are slightly low.	Both pressures on high and low pressure sides are normal.	Both pressures on high and low pressure sides are abnormally high.
Repair.	**Stop compressor immediately** and conduct an overall check.	Check for gas leakage, repair as required, replenish and charge system.		Discharge refrigerant from service valve of low pressure side.

a. The bubbles seen through the sight glass are influenced by the ambient temperature. Since the bubbles are hard to show up in comparatively low temperatures below 20°C (68°F), it is possible that a slightly larger amount of refrigerant would be filled, if supplied according to the sight glass. Be sure to recheck the amount when it exceeds 20°C (68°F). In higher temperature the bubbles are easy to show up.

b. When the screen in the receiver drier is clogged, the bubbles will appear even if the amount of refrigerant is normal. In this case, the outlet side pipe of the receiver drier becomes considerably cold.

HOSE AND PIPE CHECK

Check heater and air conditioner for damaged hoses or pipes due to interference or friction with adjoining parts. If damage is minor, repair those affected hose or pipes. If damage is major and if there is the possibility of encountering holes, replace the affected parts.

Carefully check hoses and pipes, especially those located close to moving parts or sharp edge of panel.

CHECKING REFRIGERANT LEAK

Conduct a leak test with electric leak detector whenever leakage of refrigerant is suspected and when conducting service operations which are accompanied by disassembly or loosening of connection fittings.

Electric leak-detector

The leak detector is a delicate device that detects small amounts of halogen. **In order to use the device properly, read the manuals put out by each maker and perform the specified maintenance and inspections.**

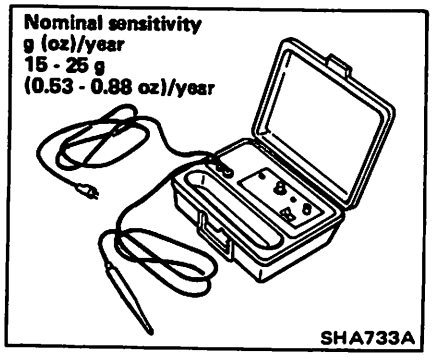

General precautions for handling leak detector

1. The probe must be correctly aimed at the point to be checked. Each fitting must be checked around its entire periphery. Refrigerant gas is heavier than air, so the underside of the fitting must also be checked.

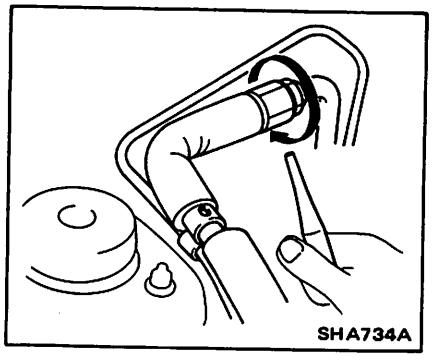

2. The probe must be held as close as possible to the checking point, within 3 mm (0.12 in) of the object.

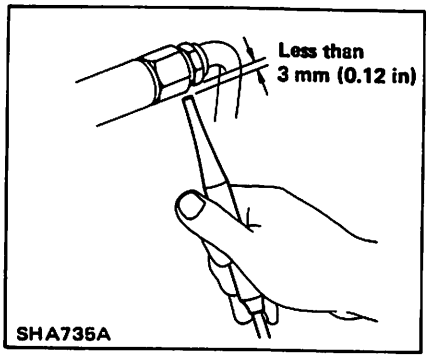

3. The detector requires a certain length of time to react to the gas. The moving speed of the probe must be maintained at less than 3 cm (1.2 in)/sec.

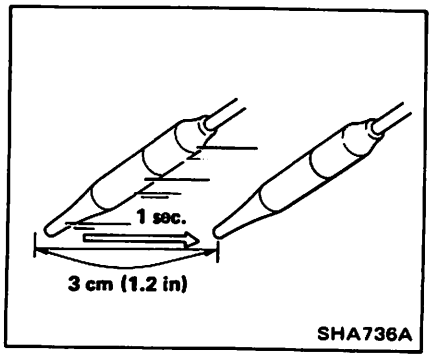

Measurement standard

If any reaction is noted using a detector having a nominal sensitivity of 15 to 25 g (0.53 to 0.88 oz)/year, that portion checked be found as leaking, and therefore must be repaired.

- The nominal sensitivity of the detector is determined under the assumption that all the leaking gas is collected by the detector. Accordingly, the quantity of gas actually leaking can amount to five to ten times the indicated value. Generally speaking, leakage of 150 to 200 g (5.29 to 7.05 oz) of refrigerant can cause insufficient cooling.
- Oil deposited during assembling must be wiped off before inspection. Refrigerant easily dissolves in oil, and the presence of oil can cause an error in measurement. This precaution is important when checking a used car for refrigerant leakage.
- If any trace of oil is noted at and around connection fittings, it is a sure indication that refrigerant is leaking.

MAJOR CHECK POINTS

(1) Compressor
- Compressor shaft seal (rotate the compressor by hand)
- Flexible hose connections
- Front and rear head gaskets
- Service valve

(2) Condenser
- Condenser pipe fitting
- Condenser inlet and outlet pipe connections

(3) Refrigerant lines
- Line connections

(4) Evaporator housing
- Inlet and outlet line connections
- Expansion valve

Insert a probe into drain hose to check for leakage inside cooling unit.

If a gas leak is detected, proceed as follows:

1. Check torque on the connection fitting and, if too loose, tighten to the proper torque. Refer to S.D.S. Check for gas leakage with a leak detector.
2. If leakage continues even after the fitting has been retightened, discharge refrigerant from system, disconnect the fittings, and check its seating face for damage. Always replace even if damage is slight.
3. Check compressor oil and add oil if required.
4. Charge refrigerant and recheck for gas leaks. If no leaks are found, evacuate and charge system.

OFF-SEASON MAINTENANCE

Even in the off-season, turn the compressor for 10 minutes at least once a month by running the engine at idling rpm.

COMPRESSOR OIL LEVEL CHECK

DIESEL-KIKI MAKE COMPRESSOR (Model DKV-14B)

1. Operate compressor at engine idling speed (800 to 1,200 rpm), with controls set for maximum cooling and high blower speed, for 20 to 30 minutes in order to return compressor oil to compressor.
2. Stop the engine and discharge refrigerant of system and then remove compressor from the car.
3. Drain compressor oil from compressor discharge port and **measure the amount.**

Amount of oil which can be drained:

Unit: mℓ (US fl oz, Imp fl oz)

DKV-14B (DKC-make)
70 - 120 (2.4 - 4.1, 2.5 - 4.2)*

*All oil cannot be drained from discharge port.

4. If the amount is less than 70 mℓ (2.4 US fl oz, 2.5 Imp fl oz), refrigerant may have leaked. Conduct leak tests on connections of each system, and if necessary repair or replace faulty parts.
5. Check the purity of the oil.

(1) Oil is clean.
Add oil as shown below.

Amount of oil to be added:

Unit: mℓ (US fl oz, Imp fl oz)

Amount of oil drained from old compressor	Adding amount of oil to old compressor
Above 70 (2.4, 2.5)	Same as the amount of oil drained*
Below 70 (2.4, 2.5)	70 (2.4, 2.5)

*: If amount of oil disposed is greater than under normal circumstances, flush system with refrigerant.
Add 250 mℓ (8.5 US fl oz, 8.8 Imp fl oz) of oil after flushing.

If compressor is to be replaced, it is necessary to drain oil from new compressor.

Amount of oil to be drained:

Unit: mℓ (US fl oz, Imp fl oz)

Amount of oil drained from old compressor	Draining amount of oil from new compressor
Above 70 (2.4, 2.5)	250 (8.5, 8.8) – [Amount of oil drained + 20 (0.7, 0.7)]
Below 70 (2.4, 2.5)	160 (5.4, 5.6)

(2) Oil contains chips or other foreign material. After system has been flushed with refrigerant, replace receiver dryer. Add 250 mℓ (8.5 US fl oz, 8.8 Imp fl oz) of oil.

Oil is sometimes hard to extract when compressor is cooled. Remove oil while compressor is warm [maintained to 40 to 50°C (104 to 122°F)].

COMPRESSOR OIL LEVEL CHECK

DIESEL-KIKI MAKE COMPRESSOR (Model DKV-14C)

This model, which is bound for some areas of California, is installed at the port.

1. Operate compressor at engine idling speed (800 to 1,200 rpm), with controls set for maximum cooling and high blower speed, for 20 to 30 minutes in order to return compressor oil to compressor.
2. Stop the engine and discharge refrigerant of system and then remove compressor from the car.
3. Drain compressor oil from compressor discharge port and **measure the amount.**

Amount of oil which can be drained:

Unit: mℓ (US fl oz, Imp fl oz)

DKV-14C (DKC-make)
70 - 120 (2.4 - 4.1, 2.5 - 4.2)*

*All oil cannot be drained from discharge port.

4. If the amount is less than 70 mℓ (2.4 US fl oz, 2.5 Imp fl oz), refrigerant may have leaked. Conduct leak tests on connections of each system, and if necessary repair or replace faulty parts.
5. Check the purity of the oil.

(1) Oil is clean.
Add oil as shown below.

Amount of oil to be added:

Unit: mℓ (US fl oz, Imp fl oz)

Amount of oil drained from old compressor	Adding amount of oil to old compressor
Above 70 (2.4, 2.5)	Same as the amount of oil drained*
Below 70 (2.4, 2.5)	70 (2.4, 2.5)

*: If amount of oil disposed is greater than under normal circumstances, flush system with refrigerant.
Add 250 mℓ (8.5 US fl oz, 8.8 Imp fl oz) of oil after flushing.

If compressor is to be replaced, it is necessary to drain oil from new compressor.

Amount of oil to be drained:

Unit: mℓ (US fl oz, Imp fl oz)

Amount of oil drained from old compressor	Draining amount of oil from new compressor
Above 70 (2.4, 2.5)	250 (8.5, 8.8) – [Amount of oil drained + 20 (0.7, 0.7)]
Below 70 (2.4, 2.5)	160 (5.4, 5.6)

(2) Oil contains chips or other foreign material. After system has been flushed with refrigerant, replace receiver dryer. Add 250 mℓ (8.5 US fl oz, 8.8 Imp fl oz) of oil.

Oil is sometimes hard to extract when compressor is cooled. Remove oil while compressor is warm [maintained to 40 to 50°C (104 to 122°F)].

PERFORMANCE TEST (Air conditioner)

PERFORMANCE CHART-1 (In the hot climate)

TEST CONDITION

Testing must be performed as follows.

Vehicle location:	Indoors or in the shade [Outside wind velocity: Less than 2 m (7 ft)/sec.]
Doors:	Closed
Door windows:	Open
Hood:	Open
Air control lever:	VENT-A/C-position
Temperature control lever:	Max. COLD position
Air intake lever:	RECIRC position
FAN control lever:	3 position
Engine speed:	1,500 rpm (constant)
Manifold gauge:	Connect manifold gauge to high (discharge) and low (suction) service valves.
Measurement of discharge air temperature:	Center outlet grille
Measurement of inside air relative humidity and temperature:	Blower assembly inlet
Measurement of ambient air relative humidity and temperature:	A point 1 m (3.3 ft) in front of condenser

TEST READING

Suction-to-discharge air temperature table

Recirculating air at blower assembly inlet		Discharge air temperature at center ventilator °C (°F)
Relative humidity %	Air temperature °C (°F)	
40 - 80	25 (77)	6.3 - 12.0 (43 - 54)
	30 (86)	10.4 - 17.8 (51 - 64)
	35 (95)	15.6 - 24.2 (60 - 76)

Ambient air temperature-to-compressor pressure table

Ambient air		kPa (kg/cm², psi)	kPa (kg/cm², psi)
Relative humidity %	Temperature °C (°F)	Pressure high (Discharge side)	Pressure low (Suction side)
40 - 80	27 (81)	971 - 1,177 (9.9 - 12.0, 141 - 171)	78 - 196 (0.8 - 2.0, 11 - 28)
	30 (86)	1,049 - 1,275 (10.7 - 13.0, 152 - 185)	88 - 226 (0.9 - 2.3, 13 - 33)
	35 (95)	1,266 - 1,481 (12.5 - 15.1, 178 - 215)	118 - 265 (1.2 - 2.7, 17 - 38)
	40 (104)	1,432 - 1,726 (14.6 - 17.6, 208 - 250)	157 - 314 (1.6 - 3.2, 23 - 46)

a. **The pressure will change in the following manner with changes in conditions:**
- **When blower speed is low, discharge pressure will drop.**
- **When the relative humidity of intake air is low, discharge pressure will drop.**

b. **The temperature will change in the following manner with changes in conditions:**
- **When the ambient air temperature is low, the outlet air temperautre will become low.**

If the test reveals that there is any abnormality in system pressure, isolate the cause and repair. Refer to Performance Test Diagnoses.

PERFORMANCE CHART-2 (In the cold climate)

When the ambient air temperature is low, conduct a performance test using the following conditions and measuring methods. If measured data are within the O.K. zone, performance is O.K.

TEST CONDITION

Doors:	Closed
Window:	Closed
Hood:	Open
Mode lever:	VENT or
Intake lever:	Recirc.
Fan lever:	HI or MAX
Air conditioner switch:	ON
Temperature lever:	Make cold-hot adjustment so intake air temperature (before the blower) can be set at 30°C (86°F). (Refer to "HOW TO MEASURE".)
Engine speed:	1,500 rpm
Intake air temperature:	30°C (86°F)
Compressor discharge pressure:	1,912 kPa (19.5 kg/cm², 277 psi) (Refer to "HOW TO MEASURE".)

ITEMS TO MEASURE

- Compressor discharge pressure
- Compressor suction pressure
- Outlet temperature
  Measure the outlet temperature by inserting a thermocouple into the connecting port between the cooling unit and heater unit, not into the vent in the instrument panel.
- Intake temperature
- Intake humidity
  Measure the intake air temperature (wet and dry bulb) immediately before the blower and determine the humidity by using the humidity conversion table.

HOW TO MEASURE

- When installation of the instruments used for measuring the above items, start the engine and turn on the air conditioner. Set the engine speed at 1,500 rpm and make an adjustment with the temperature lever so as to keep the intake air temperature at 30°C (86°F).
- The compressor discharge pressure should be raised to a pressure of 1,912 kPa (19.5 kg/cm², 277 psi) and set at that level by blocking the front of the air conditioner with corrugated paper (amount of blockage should be changed depending on the outside temperature at that time).
  When the intake air temperature reaches 30°C (86°F) and compressor discharge pressure 1,912 kPa (19.5 kg/cm², 277 psi), the above listed items should be measured and recorded. As a standard, measurement is started ten minutes after the A/C compressor is engaged. However, even if the above conditions are reached earlier due to the difference in temperature, etc., the A/C compressor should be operated for at least five minutes.
  Ten minutes after starting the A/C compressor, make sure that the intake relative humidity drops to below 50% and remains there. This means there is proper recirculation. If it fails to do this, check the recirculation system such as the intake unit for air tightness and the intake lever for proper operation. After completing this, measure the above listed items again.

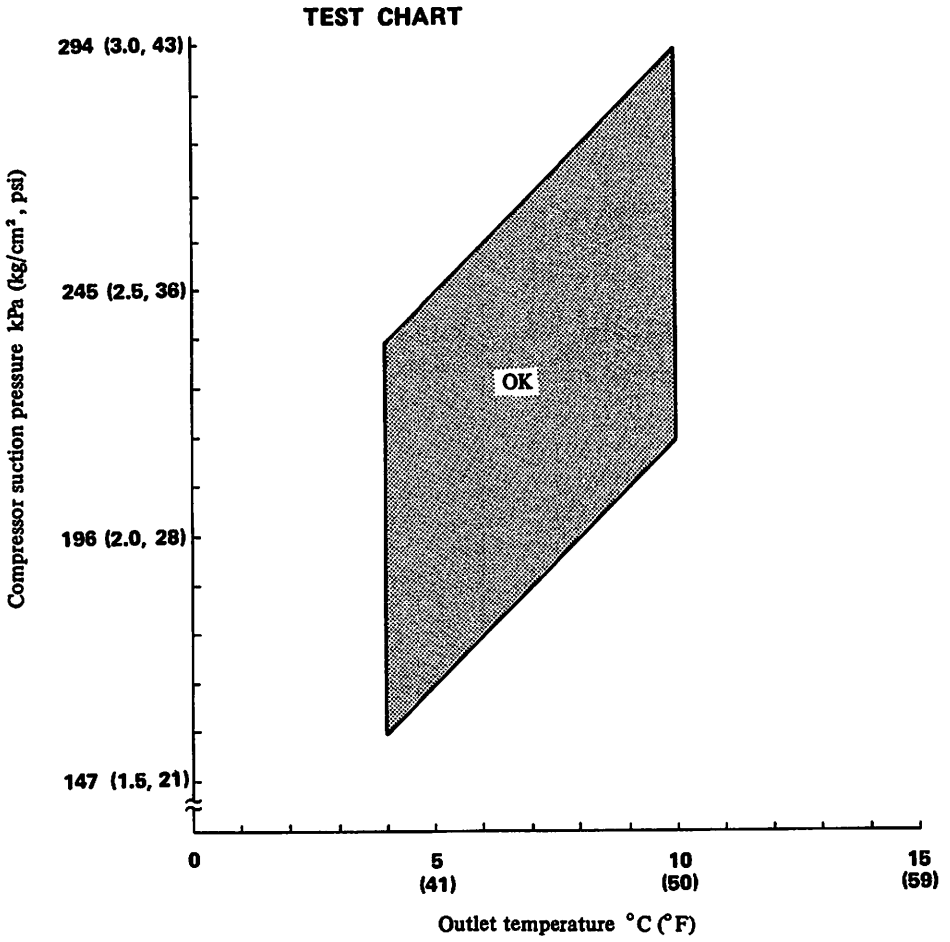
TEST CHART
294 (3.0, 43)
245 (2.5, 36)
196 (2.0, 28)
147 (1.5, 21)
Compressor suction pressure kPa (kg/cm², psi)
OK
0
5
(41)
10
(50)
15
(59)
Outlet temperature °C (°F)

SHA259B

PERFORMANCE TEST DIAGNOSES

Characteristics revealed on the manifold gauge reading for the air conditioning system are shown in the following.

As to the method of a performance test, refer to the item of "Performance Test".

In the following table, the portion smeared with ink on each gauge scale indicates a range based on the assumption that the air conditioning system is in good order. This range is described in PERFORMANCE CHART.

Condition		Probable cause	Corrective action
INSUFFICIENT REFRIGERANT CHARGE 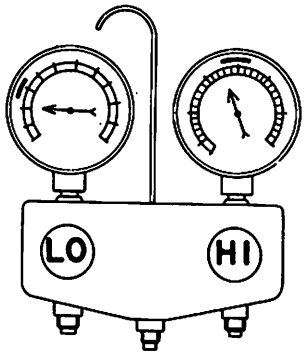 AC352A	Insufficient cooling. Bubbles appear in sight glass.	Refrigerant is small, or leaking a little.	1. Leak test. 2. Repair leak. 3. Charge system. **Note: Evacuate, as necessary, and recharge system.**
ALMOST NO REFRIGERANT 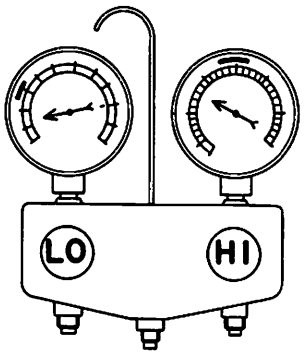 AC353A	No cooling action. In sight glass appear a lot of bubbles or something like mist.	Serious refrigerant leak.	**Stop compressor immediately.** 1. Leak test. 2. Discharge system. 3. Repair leak(s). 4. Replace receiver drier if necessary. 5. Check oil level. 6. Evacuate and recharge system.
FAULTY COMPRESSOR 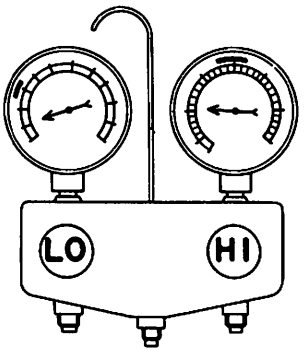 AC363A	Insufficient cooling.	Internal problem in compressor, or damaged gasket and valve.	1. Discharge system. 2. Remove and check compressor. 3. Repair or replace compressor. 4. Check oil level. 5. Replace receiver drier. 6. Evacuate and charge system.

Condition		Probable cause	Corrective action
FAULTY EXPANSION VALVE 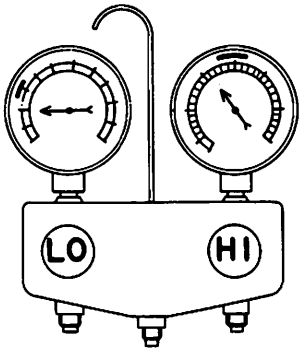 AC354A	Slight cooling. Sweating or frosted expansion valve inlet.	Expansion valve restricts refrigerant flow. ● Expansion valve is clogged. ● Expansion valve is inoperative. Valve stuck closed. Thermal bulb has lost charge.	If valve inlet reveals sweat or frost: 1. Discharge system. 2. Remove valve and clean it. Replace it if necessary. 3. Evacuate system. 4. Charge system. If valve does not operate: 1. Discharge system. 2. Replace valve. 3. Evacuate and charge system.
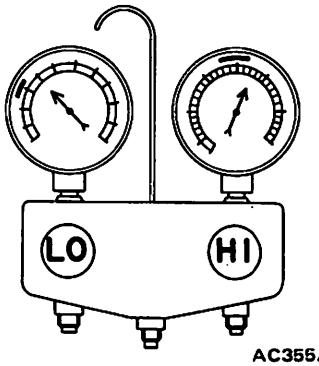 AC355A	Insufficient cooling. Sweated suction line.	Expansion valve allows too much refrigerant through evaporator.	Check valve for operation. If suction side does not show a pressure decrease, replace valve.
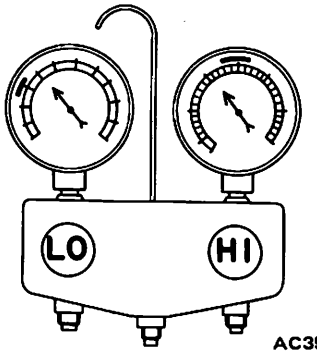 AC356A	No cooling. Sweating or frosted suction line.	Faulty expansion valve.	1. Discharge system. 2. Replace valve. 3. Evacuate and replace system.

Condition		Probable cause	Corrective action
AIR IN SYSTEM			
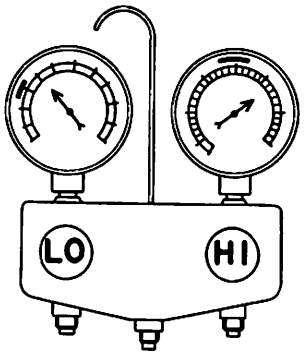 AC359A	Insufficient cooling. Sight glass shows occasional bubbles.	Air mixed with refrigerant in system.	1. Discharge system. 2. Replace receiver drier. 3. Evacuate and charge system.
MOISTURE IN SYSTEM			
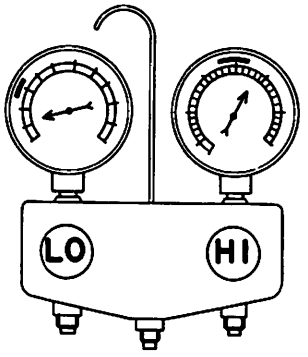 AC360A	After operation for a while, pressure on suction side may show vacuum pressure reading. During this condition, discharge air will be warm. As a warning of this, reading shows 39 kPa (0.4 kg/cm^2, 6 psi) vibration.	Drier is saturated with moisture. Moisture has frozen at expansion valve. Refrigerant flow is restricted.	1. Discharge system. 2. Replace receiver drier (twice if necessary). 3. Evacuate system completely. (Repeat 30-minute evacuating three times.) 4. Recharge system.
FAULTY CONDENSER			
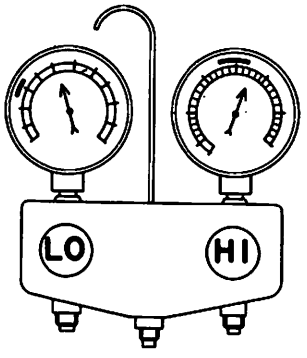 AC361A	No cooling action: engine may overheat. Bubbles appear in sight glass of drier. Suction line is very hot.	Usually malfunctioning condenser.	• Check fan belt and fluid coupling. • Check condenser for dirt accumulation. • Check engine cooling system for overheat. • Check for refrigerant overcharge. **If pressure remains high in spite of all above actions taken, remove and inspect the condenser for possible oil clogging.**

Condition		Probable cause	Corrective action
HIGH PRESSURE LINE BLOCKED 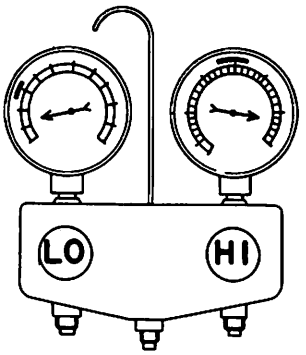 AC362A	Insufficient cooling. Frosted high pressure liquid line.	Drier clogged, or restriction in high pressure line	1. Discharge system. 2. Remove receiver drier or strainer and replace it. 3. Evacuate and charge system.
TOO MUCH OIL IN SYSTEM (Excessive) 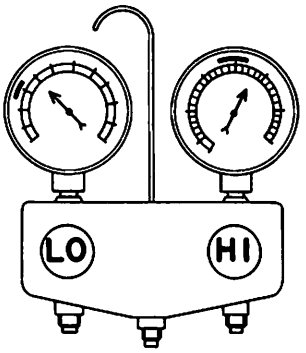 AC364A	Insufficient cooling.	Too much oil circulates with refrigerant, causing the cooling capacity of the system to be reduced.	Refer to Oil Level Check for correcting oil level.

SERVICE PROCEDURES (Air conditioner)

PRECAUTIONS FOR REMOVAL AND INSTALLATION

When replacing refrigerant cycle components, observe the following:

1. Disconnect battery ground cable.
2. Before starting work, be sure to discharge system.

WARNING:
Gradually loosen discharge side hose fitting, and remove it after remaining pressure has been released.

CAUTION:

- **When disconnecting or connecting tubes, be sure to use two wrenches on both tubes.**

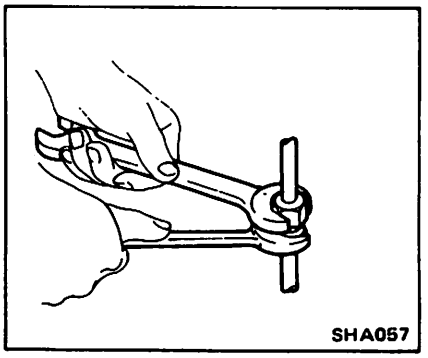

- **After disconnecting tubes, plug all openings immediately to prevent entrance of dirt and moisture.**

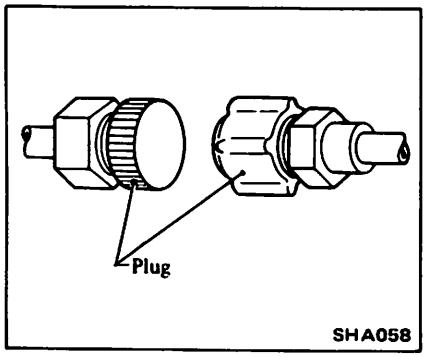

- **Compressed air must never be used to clean dirty line. Clean with refrigerant gas.**
- **Do not reuse used O-ring.**

- **When connecting tube, apply compressor oil to portions shown in illustration. Be careful not to apply oil to threaded portion.**
- **O-ring must be closely attached to inflated portion of tube.**

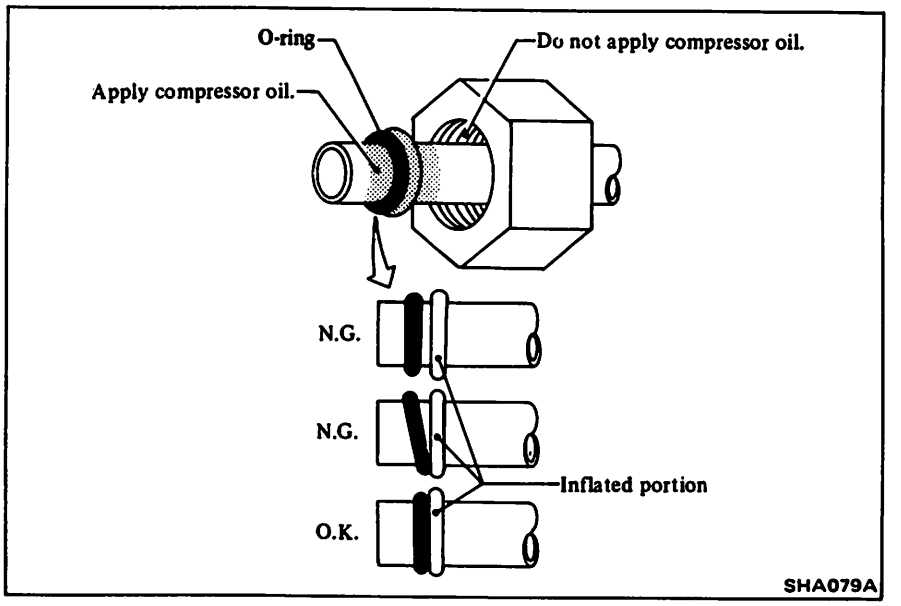

- **After inserting tube into union until O-ring is no more visible, tighten nut to specified torque.**

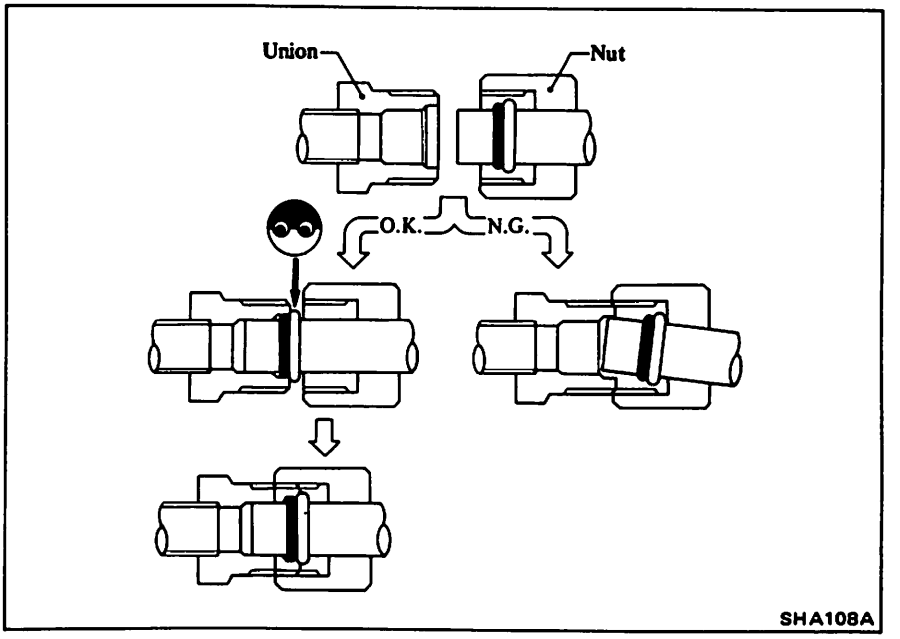

- **After connecting line, conduct leak test and make sure that there is no leak from connections.**

REFRIGERANT LINES

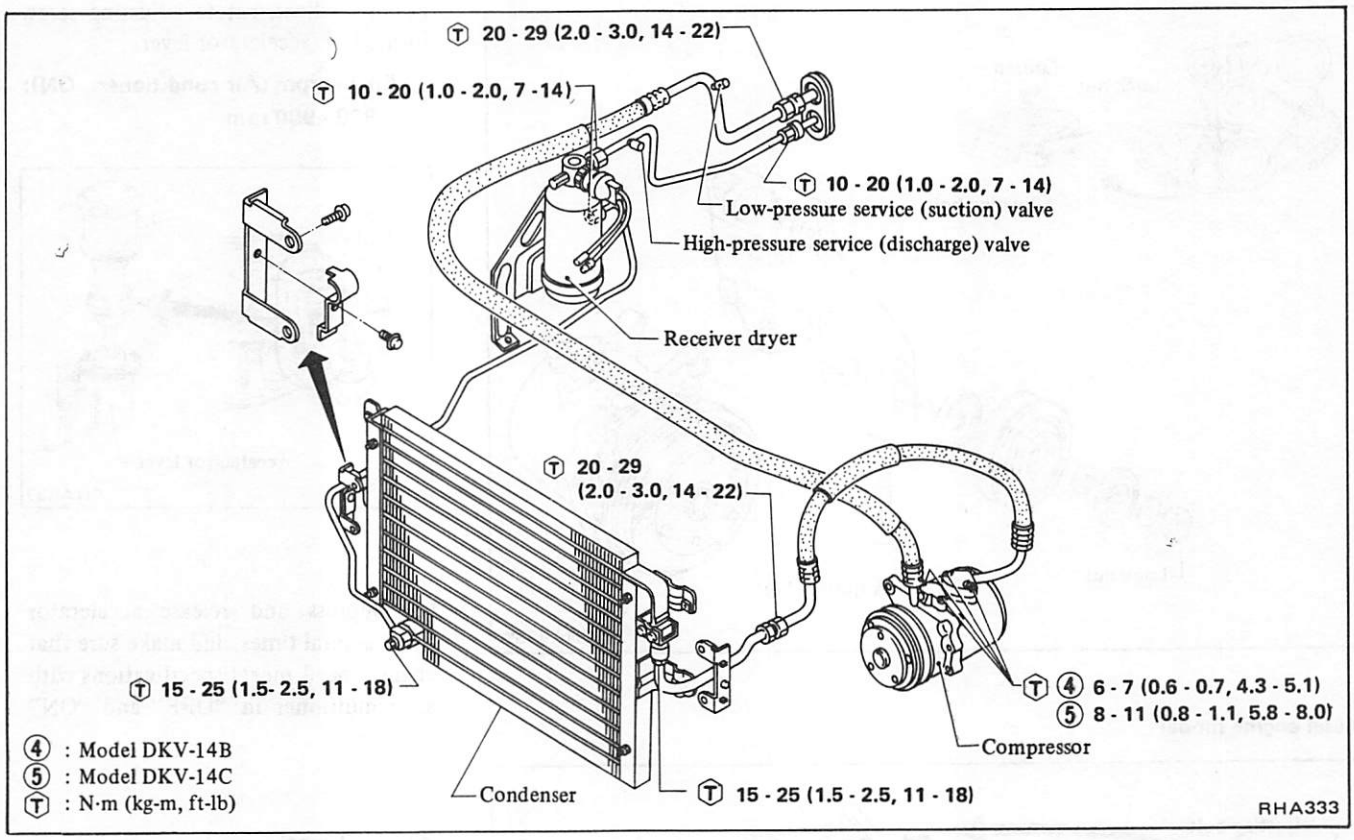

COMPRESSOR IDLER PULLEY

Gasoline engine model

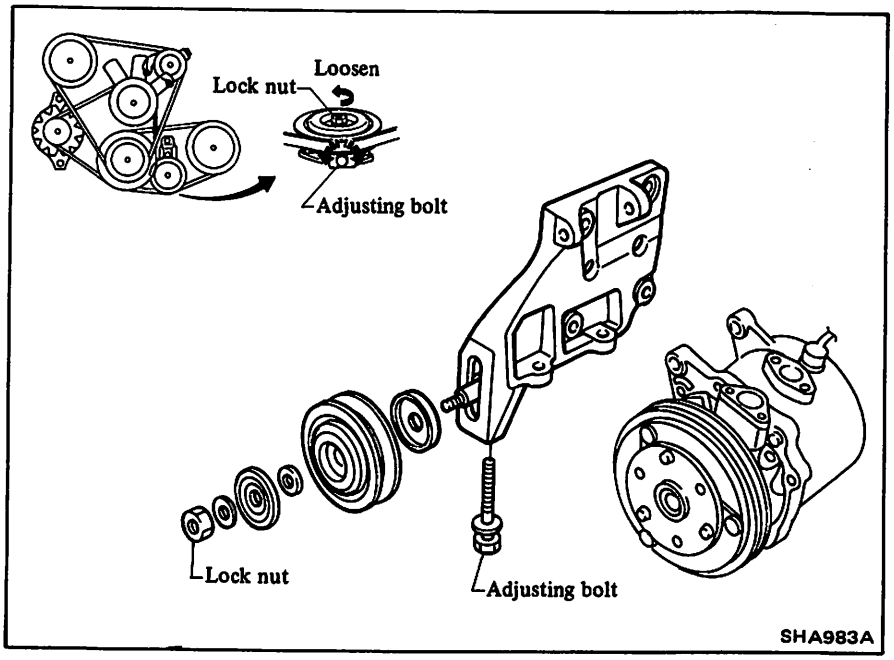

Diesel engine model

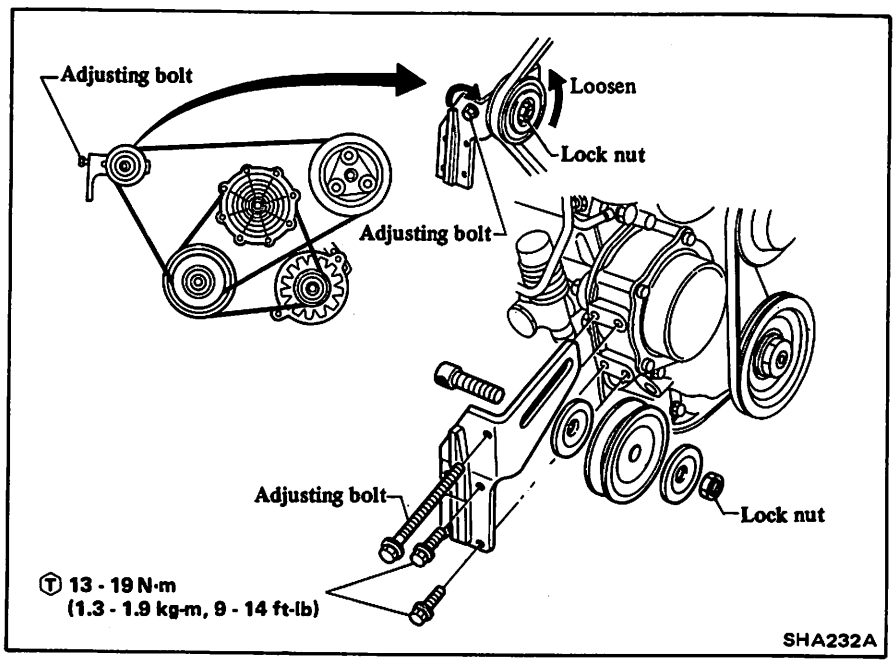

FAST IDLE CONTROL DEVICE (F.I.C.D.)

ADJUSTMENT OF IDLE SPEED

1. Warm up engine.
2. Make sure engine is at correct idle speed with air conditioner in OFF position.

Idling speed:
Refer to S.D.S. (MA section)

3. Set engine speed to the following specifications with air conditioner in ON position (when F.I.C.D. is actuated).

Gasoline engine model

M/T (F.I.C.D. actuator)

(1) To adjust, rotate adjusting screw located on accelerator lever.

Engine rpm (Air conditioner: ON):
800 - 900 rpm

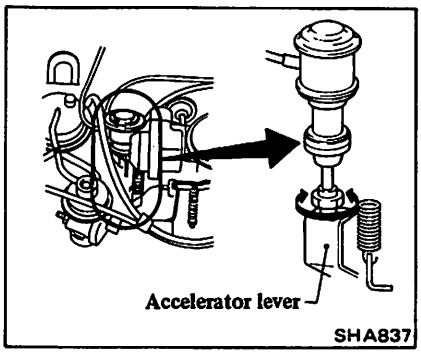

(2) Depress and release accelerator pedal several times, and make sure that engine speed meets specifications with air conditioner in "OFF" and "ON" position.

A/T (F.I. pot)

Check dash pot with air conditioning system "OFF".

(1) Turn throttle valve by hand, and read engine speed when dash pot just touches stopper lever.
(2) Adjust position of dash pot by adjusting screw until engine speed is in the specified range.

Specified engine speed:
1,500±200 rpm

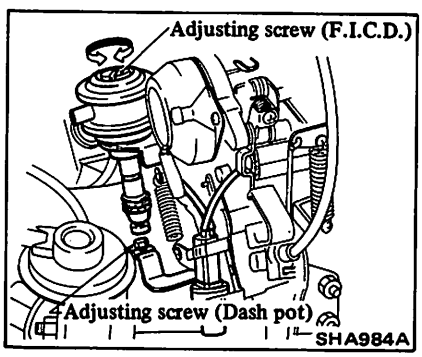

(3) Make sure that engine speed drops smoothly from 2,000 to 1,000 rpm in about three seconds.

(4) To adjust (F.I.C.D. system), rotate adjusting screw located on F.I. pot.

Engine rpm (Air conditioner: ON):
"D" position
800 - 900 rpm

(5) Depress and release accelerator pedal several times, and make sure that engine speed meets specifications with air conditioner in "OFF" and "ON" position.

Diesel engine model

(1) To adjust
Loosen lock nut and then rotate adjusting screw.
Tighten lock nut after adjusting.

Engine rpm (Air conditioner: ON):
800 - 900 rpm

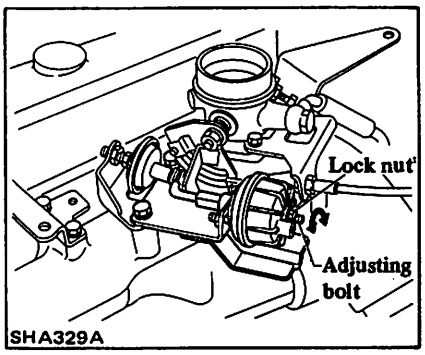

(2) Depress and release accelerator pedal several times, making sure that engine speed meets the proper specifications with air conditioner in "OFF" or "ON" position.

COMPRESSOR

REMOVAL AND INSTALLATION

1. Operate compressor, if possible, at engine idling speed, with air conditioner controls set for maximum cooling and high blower speed, for 10 to 15 minutes with all windows open to return oil into compressor.
2. Remove compressor drive belt.
(1) Loosen idler pulley lock nut.
(2) Fully loosen adjusting bolt.
3. Disconnect high (discharge) and low (suction) flexible hoses from compressor.
4. Disconnect compressor clutch harness.
5. Remove compressor.

CAUTION:
Do not attempt to leave the compressor on its side or upside down for a long time.

6. Installation is in the reverse order of removal.

Install a new O-ring.

Gasoline engine model

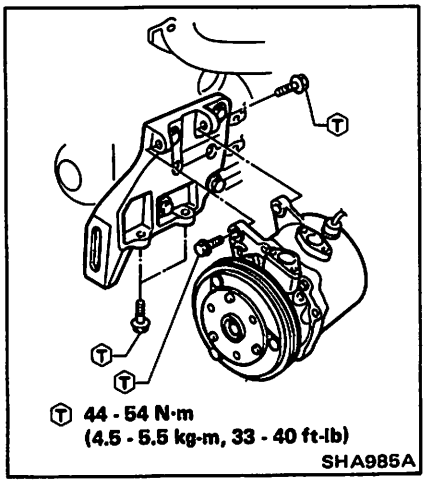

Before installing compressor onto bracket, connect both high-and low-pressure flexible hoses to it.

Diesel engine model

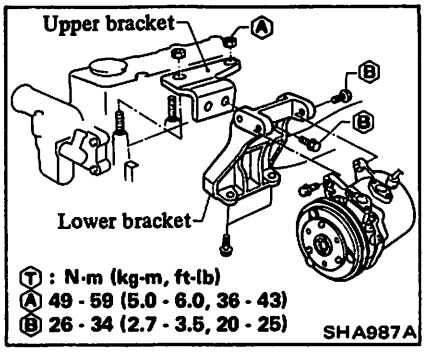

CONDENSER

REMOVAL AND INSTALLATION

1. Disconnect battery ground cable.
2. Drain engine coolant.
3. Remove radiator grille and radiator shroud.
4. Remove radiator.
5. Remove L.H. headlamp assembly.
6. Remove refrigerant tubes.
7. Disconnect refrigerant line from condenser.
8. Remove condenser mounting bolts and remove condenser.

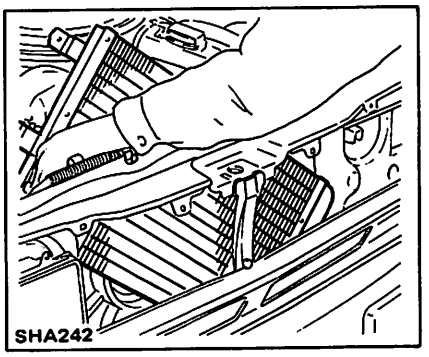

9. Installation is in the reverse order of removal.

INSPECTION

Inspect joints of inlet and outlet pipes for cracks and scratches. Upon finding any problem which may cause gas to leak, repair or replace condenser.

Condenser fins or air passages clogged with dirt, insects or leaves will reduce cooling efficiency of condenser. In such a case, clean fins or air passages with compressed air.

CAUTION:
Do not clean condenser with steam. Be sure to use cold water or compressed air.

AIR CONDITIONER DUCT AND NOZZLE COMPONENT

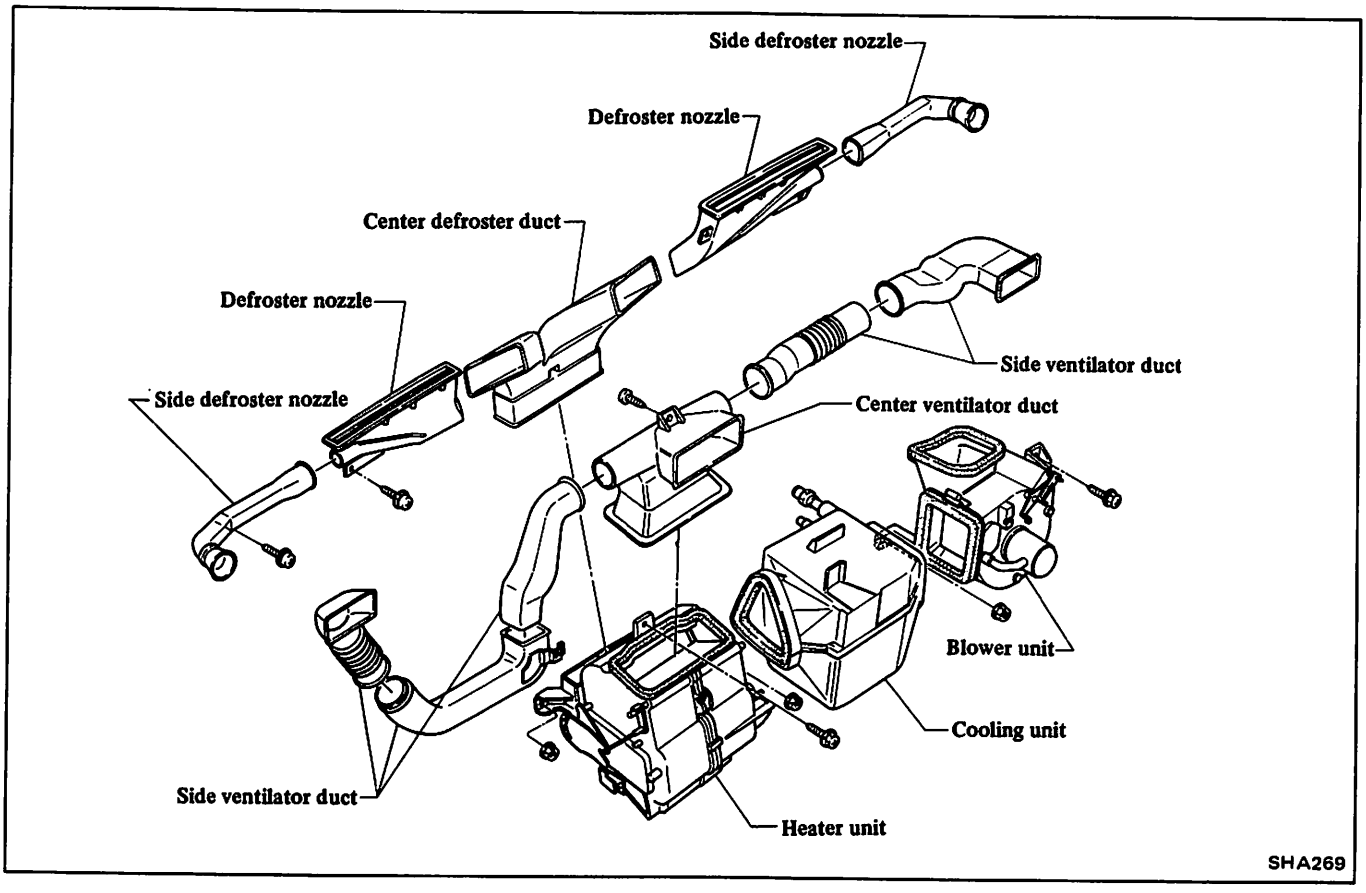

AIR CONDITIONER CONTROL

Refer to Heater/Air Conditioner Control in Heater.

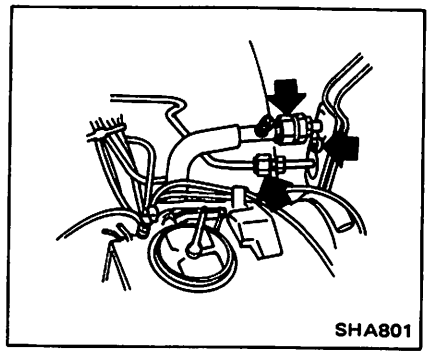

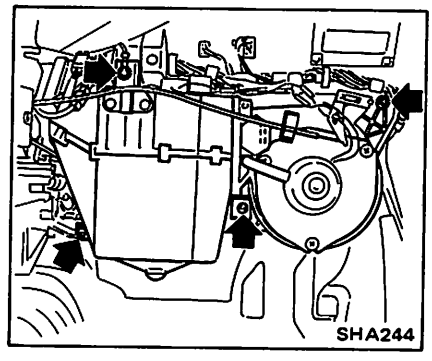

COOLING UNIT

REMOVAL AND INSTALLATION

1. Disconnect battery ground cable.
2. Disconnect refrigerant line from cooling unit and remove tube mounting bolt.
3. Remove instrument panel assembly. Refer to BF section.
4. Remove blower unit.
5. Remove cooling unit.
6. Installation is in the reverse order of removal.

Adjust air intake control cable. Refer to Adjusting Heater Control in Heater.

DISASSEMBLY AND ASSEMBLY

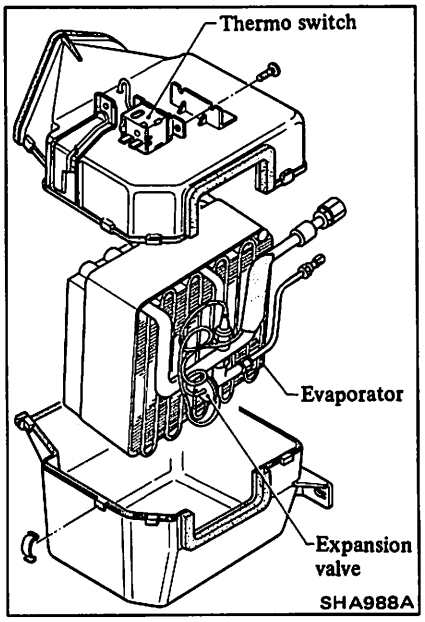

INSPECTION

Evaporator assembly

1. Clean fins and check for crack or corrosion.

CAUTION:
Do not clean evaporator with steam. Be sure to use cold water or compressed air.

2. Check for gas leaks at the fins and the expansion valves. If there are leaks, retighten or replace them.

Case

Replace case if it is cracked or deformed.

EXPANSION VALVE

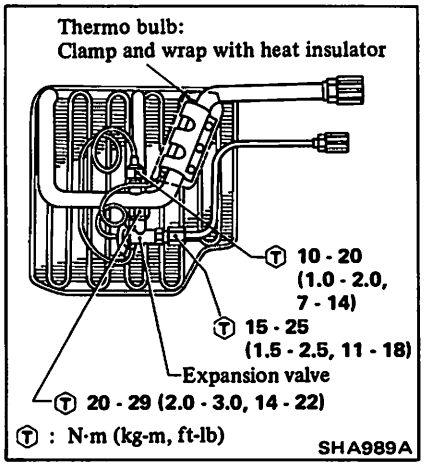

THERMO SWITCH

REMOVAL AND INSTALLATION

1. Remove colling unit.
2. Remove thermo switch.

CAUTION:
Capillary tube should not be bent too sharply.

3. Install thermo switch as follows.
- Insert capillary tube end between the core fins at 55 mm (2.17 in) from end of the core.

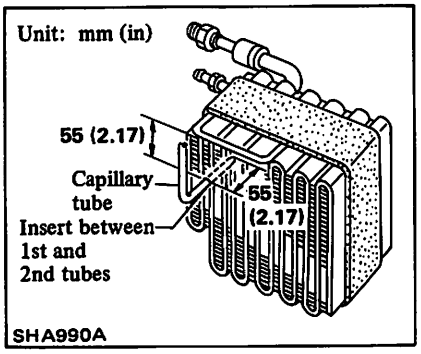

INSPECTION

Test continuity through thermo switch with a test lamp or ohmmeter.

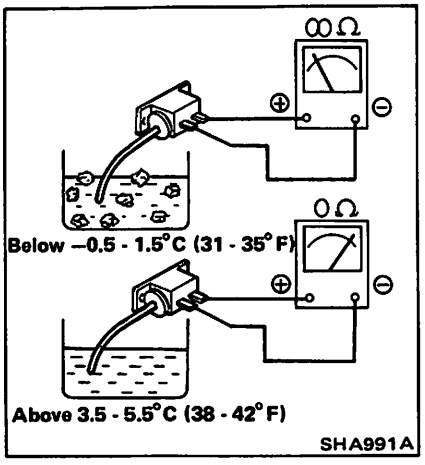

AIR CONDITIONER RELAY

REMOVAL AND INSTALLATION

1. Remove blower unit.
2. Disconnect relay connector and then remove relay.

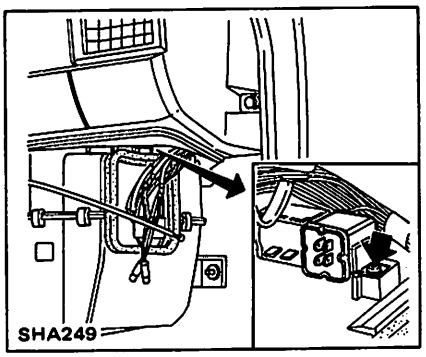

3. Installation is in the reverse order of removal.

INSPECTION

Test continuity through switch with a test lamp or ohmmeter.

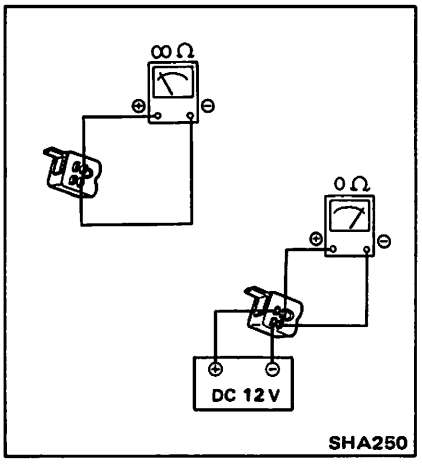

BLOWER UNIT

Refer to Blower Unit in Heater.

COMPRESSOR [Model DKV-14B (DIESEL-KIKI make)]

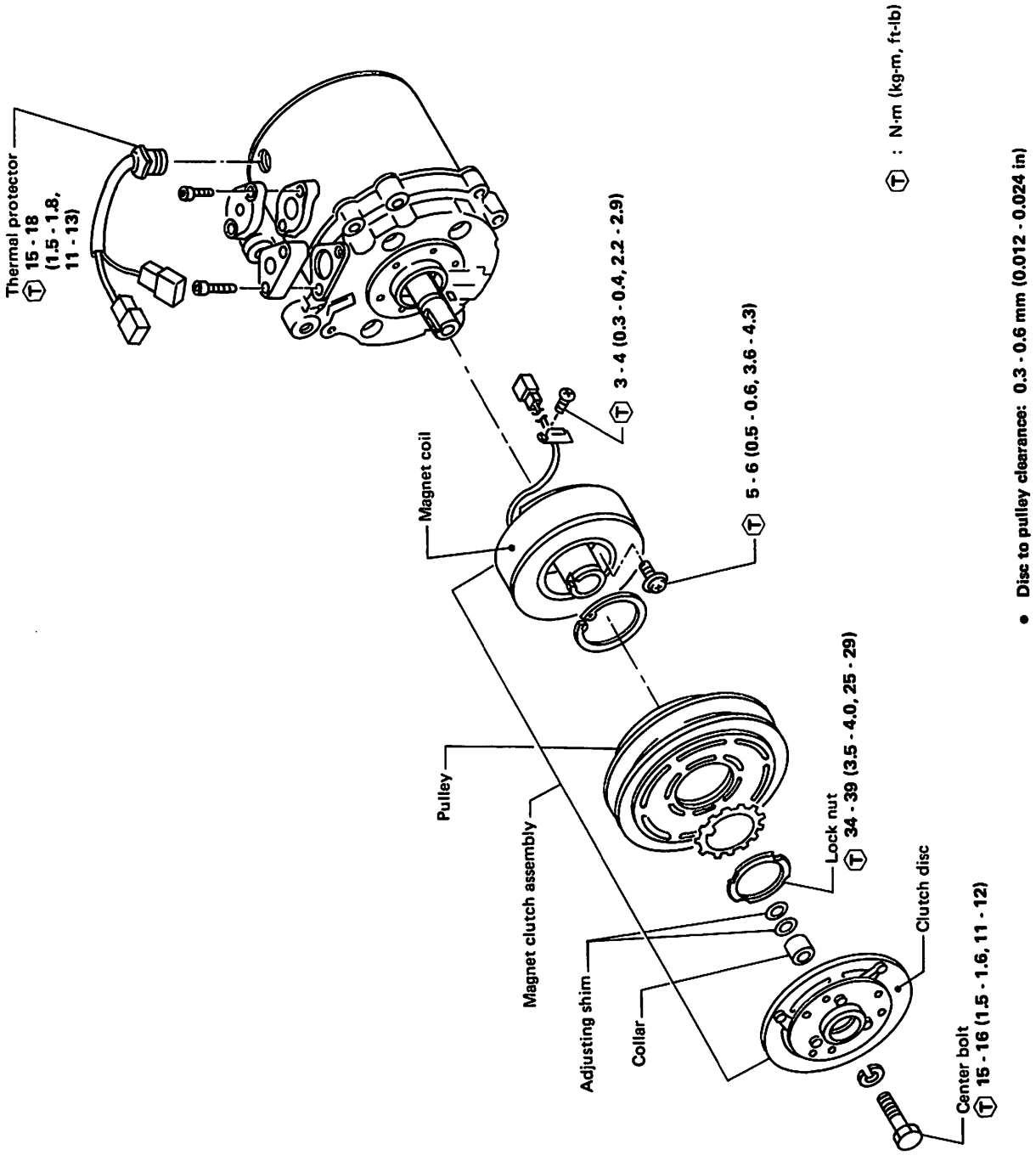

RHA112

PRECAUTIONS

1. **Plug all openings** in the compressor to prevent moisture and foreign matter from entering.
2. **Do not tilt the compressor more than 45° in any direction for more than 10 minutes, as this will cause the lubricating oil to enter the cylinder.** If under that condition, compressor should be operated suddenly, internal damage would result. To expel oil from cylinder, hand-crank compressor several times in its installed condition.

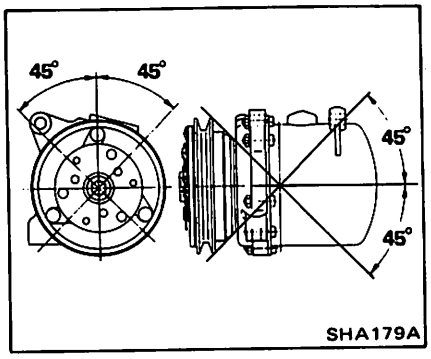

3. **Before replacing with a new compressor, drain specified amount of compressor oil from new compressor. Refer to Compressor Oil Level Check.**
4. When replacing parts, always replace O-ring with new ones.
5. When storing a compressor, be sure to fill it with refrigerant to prevent rusting. Add refrigerant at the low pressure side and purge air at the high pressure side, while rotating shaft by hand.

COMPRESSOR CLUTCH

The most likely source of problem is clutch slippage. Factors are listed here. Exercise ample care.

1. Clearance between clutch disc and pulley should be 0.3 to 0.6 mm (0.012 to 0.024 in) at all peripheral points.
2. Make sure that there is no oil or dirt on friction surfaces of clutch disc (clutch hub) and pulley. Remove any oil or dirt with a dry rag.
3. Make sure that terminal voltage at magnetic coil is above 10.5V.

REMOVAL

1. Using Tool, hold clutch plate. With suitable socket wrench, remove center bolt retaining clutch assembly to shaft.

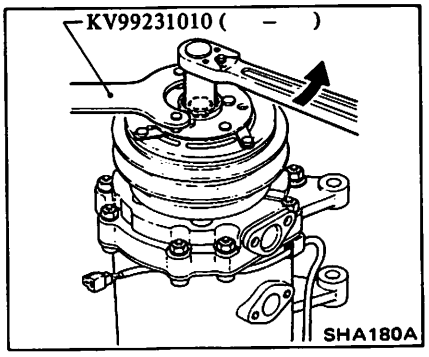

2. Thread tool into the bore of clutch hub, hold tool with wrench, and then thread in center bolt until clutch disc can be removed.

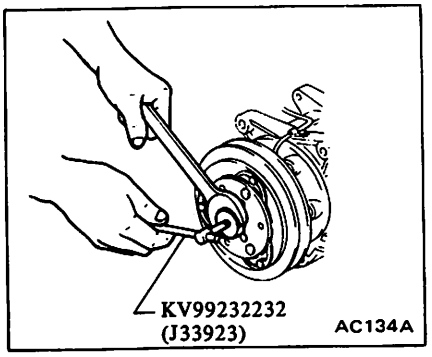

3. Remove clutch disc, collar and adjusting shims.
4. With an ordinary screwdriver, flatten lock washer tab.

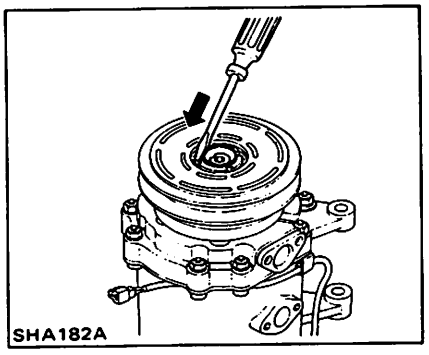

5. Using Tool, loosen lock nut. Remove lock nut and lock washer.

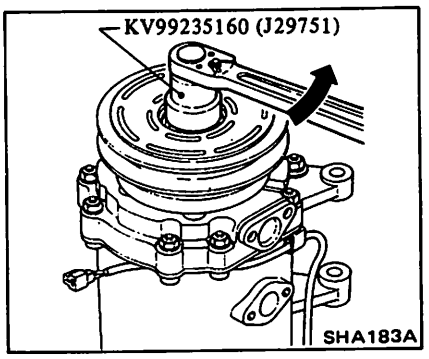

6. Remove pulley and bearing assembly. When the assembly can not be removed by hand, use a puller and suitable adapter.

Be careful not to scratch shaft or bend pulley.

7. Using an impact tool, loosen six coil mounting screws. Use of the impact tool is advisable as screws have been calked.

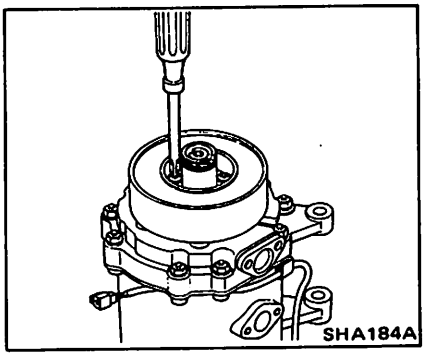

8. Remove key.
9. Remove clutch coil.

INSPECTION

1. Check the friction surfaces of the clutch for damage due to excessive heat, or excessive grooving due to slippage. If necessary, replace coil, pulley and bearing assembly, and clutch disc as a set.
2. Oil or dirt on the friction surfaces should be cleaned with a suitable solvent and a dry rag.
3. Check coil for shorted or opened binding leads.

INSTALLATION

1. Install key.
2. Position coil assembly on compressor body. Be sure that the electrical terminals are reassembled in the

original position. Install and tighten coil mounting screws evenly.

Ⓣ : Coil mounting screw
5 - 6 N·m
(0.5 - 0.6 kg-m,
3.6 - 4.3 ft-lb)

3. Press pulley assembly onto the neck of coil assembly using Tool.

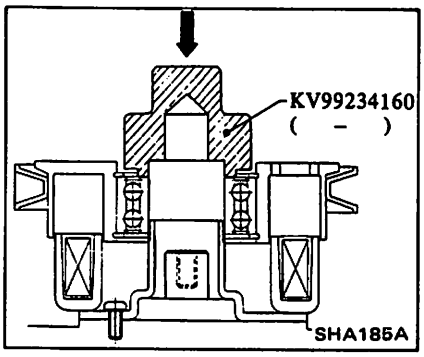

4. Align tab of lock washer with notch in magnet, and tighten lock nut.

Ⓣ : Lock nut
34 - 39 N·m
(3.5 - 4.0 kg-m,
25 - 29 ft-lb)

Wipe oil thoroughly off the clutch surface.

5. Select adjusting shim(s) which give(s) the correct clearance between pulley and clutch disc.

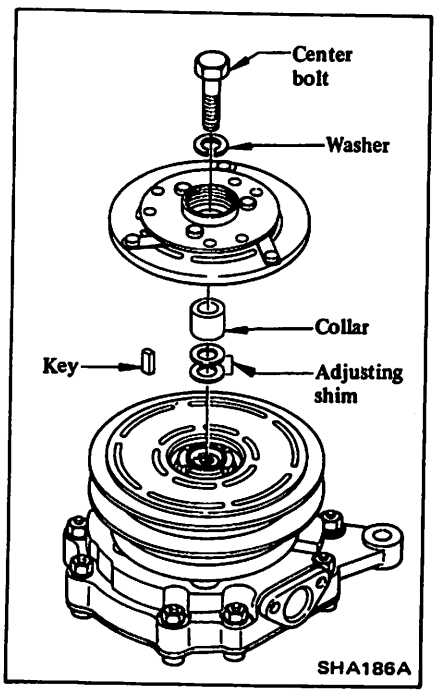

6. Using a plastic mallet, tape clutch disc in place on drive shaft.

Do not use excessive force with a plastic mallet or in a press, or internal damages may result.

7. Place spring washer and center bolt onto drive shaft. Tighten center bolt to drive clutch wheel onto drive shaft.

Ⓣ : Center bolt
15 - 16 N·m
(1.5 - 1.6 kg-m,
11 - 12 ft-lb)

At this time, hold clutch wheel with Tool KV99231010.

8. Check clearance around the entire periphery of clutch disc.

Disc-to-pulley clearance:
0.3 - 0.6 mm (0.012 - 0.024 in)

If the specified clearance is not obtained, replace adjusting spacer and readjust.

When replacing compressor clutch assembly, do not forget break-in operation, accomplished by engaging and disengaging the clutch some thirty times. Break-in operation raises the level of transmitted torque.

THERMAL PROTECTOR

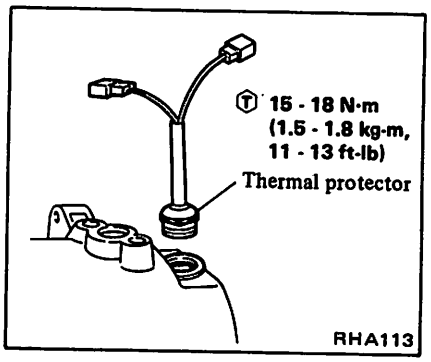

INSPECTION

Check continuity between two terminals.

COMPRESSOR [Model DKV-14C (DIESEL-KIKI make)]

This model, which is bound for some areas of California, is installed at the port.

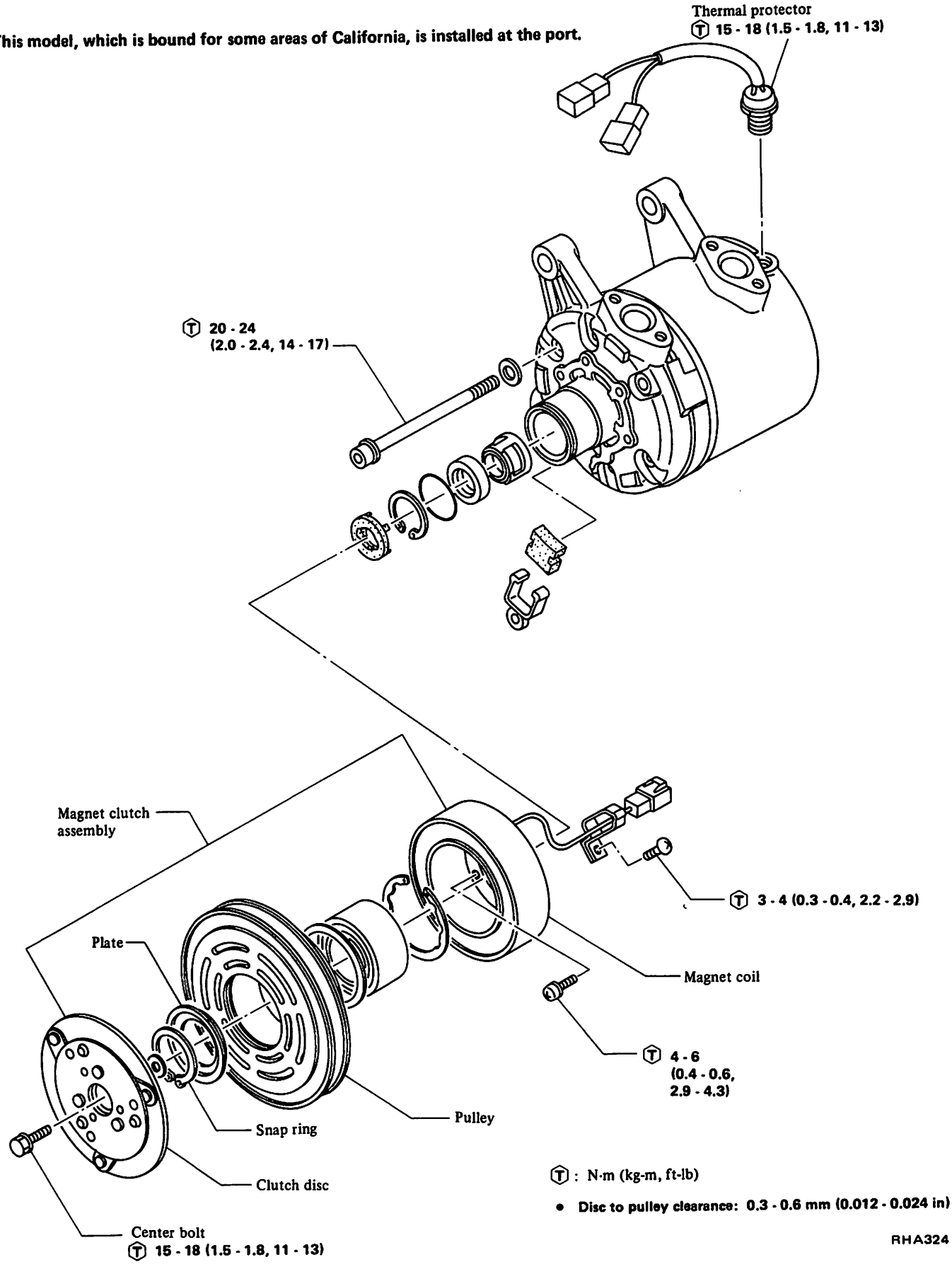

Ⓣ : N·m (kg-m, ft-lb)

- **Disc to pulley clearance: 0.3 - 0.6 mm (0.012 - 0.024 in)**

RHA324

PRECAUTIONS

1. **Plug all openings** in the compressor to prevent moisture and foreign matter from entering.
2. **Do not tilt the compressor more than 45° in any direction for more than 10 minutes, as this will cause the lubricating oil to enter the cylinder.** If under that condition, compressor should be operated suddenly, internal damage would result. To expel oil from cylinder, hand-crank compressor several times in its installed condition.

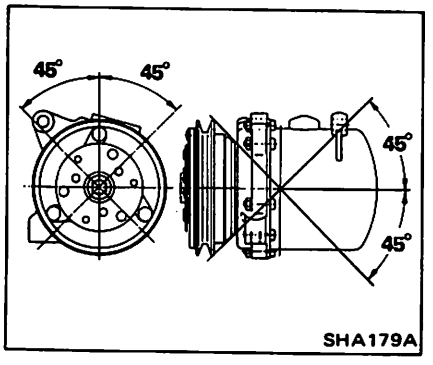

3. **Before replacing with a new compressor, drain specified amount of compressor oil from new compressor. Refer to Compressor Oil Level Check.**
4. When replacing parts, always replace O-ring with new ones.
5. When storing a compressor, be sure to fill it with refrigerant to prevent rusting. Add refrigerant at the low pressure side and purge air at the high pressure side, while rotating shaft by hand.

COMPRESSOR CLUTCH

The most likely source of problem is clutch slippage. Factors are listed here. Exercise ample care.

1. Clearance between clutch disc and pulley should be 0.3 to 0.6 mm (0.012 to 0.024 in) at all peripheral points.
2. Make sure that there is no oil or dirt on friction surfaces of clutch disc (clutch hub) and pulley. Remove any oil or dirt with a dry rag.
3. Make sure that terminal voltage at magnetic coil is above 10.5V.

REMOVAL

1. Using Tool, hold clutch plate. With suitable socket wrench, remove center bolt retaining clutch assembly to shaft.

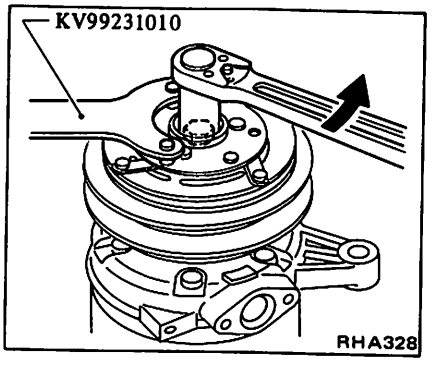

2. Thread tool into the bore of clutch hub, hold tool with wrench, and then thread in center bolt until clutch disc can be removed.

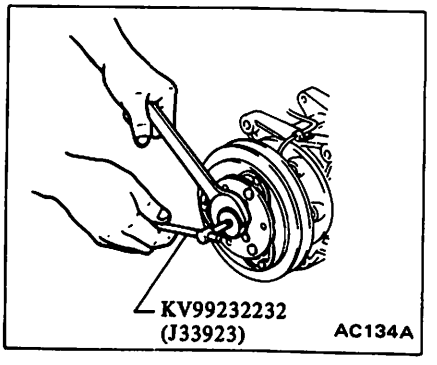

3. Remove clutch disc, collar and adjusting shims.
4. Expand snap ring with tool and remove snap ring and plate.
5. Remove pulley and bearing assembly. When the assembly can not be removed by hand, use a puller and suitable adapter.

Be careful not to scratch shaft or bend pulley.

6. Using an impact tool, loosen six coil mounting screws. Use of the impact tool is advisable as screws have been calked.

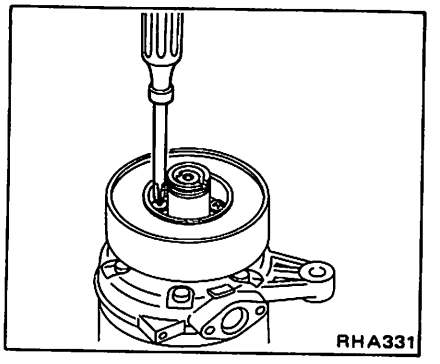

7. Remove key.
8. Remove clutch coil.

INSPECTION

1. Check the friction surfaces of the clutch for damage due to excessive heat, or excessive grooving due to slippage. If necessary, replace coil, pulley and bearing assembly, and clutch disc as a set.
2. Oil or dirt on the friction surfaces should be cleaned with a suitable solvent and a dry rag.
3. Check coil for shorted or opened binding leads.

INSTALLATION

1. Install key.
2. Position coil assembly on compressor body. Be sure that the electrical terminals are reassembled in the original position. Install and tighten coil mounting screws evenly.

Ⓣ : Coil mounting screw
5 - 6 N-m
(0.5 - 0.6 kg-m,
3.6 - 4.3 ft-lb)

3. Press pulley assembly onto the neck of coil assembly using Tool.

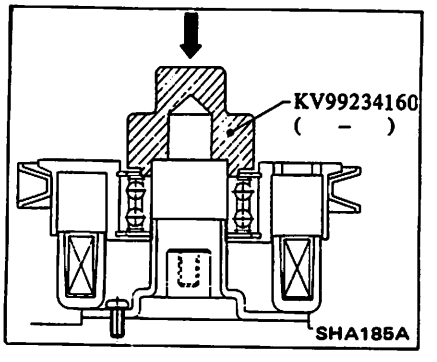

Wipe oil thoroughly off the clutch surface.

4. Select adjusting shim(s) which give(s) the correct clearance between pulley and clutch disc.

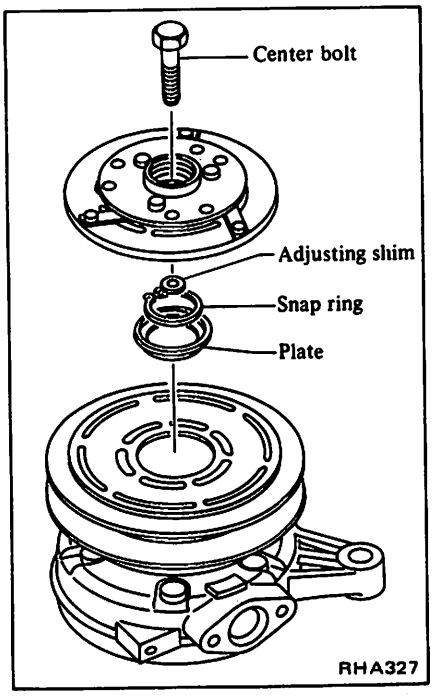

5. Using a plastic mallet, tape clutch disc in place on drive shaft.

Do not use excessive force with a plastic mallet or in a press, or internal damages may result.

6. Place spring washer and center bolt onto drive shaft. Tighten center bolt to drive clutch wheel onto drive shaft.

Ⓣ : Center bolt
15 - 18 N·m
(1.5 - 1.8 kg-m,
11 - 13 ft-lb)

At this time, hold clutch wheel with Tool KV99231010.

7. Check clearance around the entire periphery of clutch disc.

Disc-to-pulley clearance:
0.3 - 0.6 mm (0.012 - 0.024 in)

If the specified clearance is not obtained, replace adjusting spacer and readjust.

When replacing compressor clutch assembly, do not forget break-in operation, accomplished by engaging and disengaging the clutch some thirty times. Break-in operation raises the level of transmitted torque.

THERMAL PROTECTOR

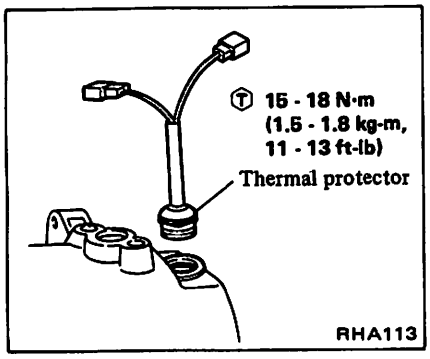

INSPECTION

Check continuity between two terminals.

ELECTRICAL CIRCUIT (Air conditioner)

SCHEMATIC

FAN SWITCH: OFF

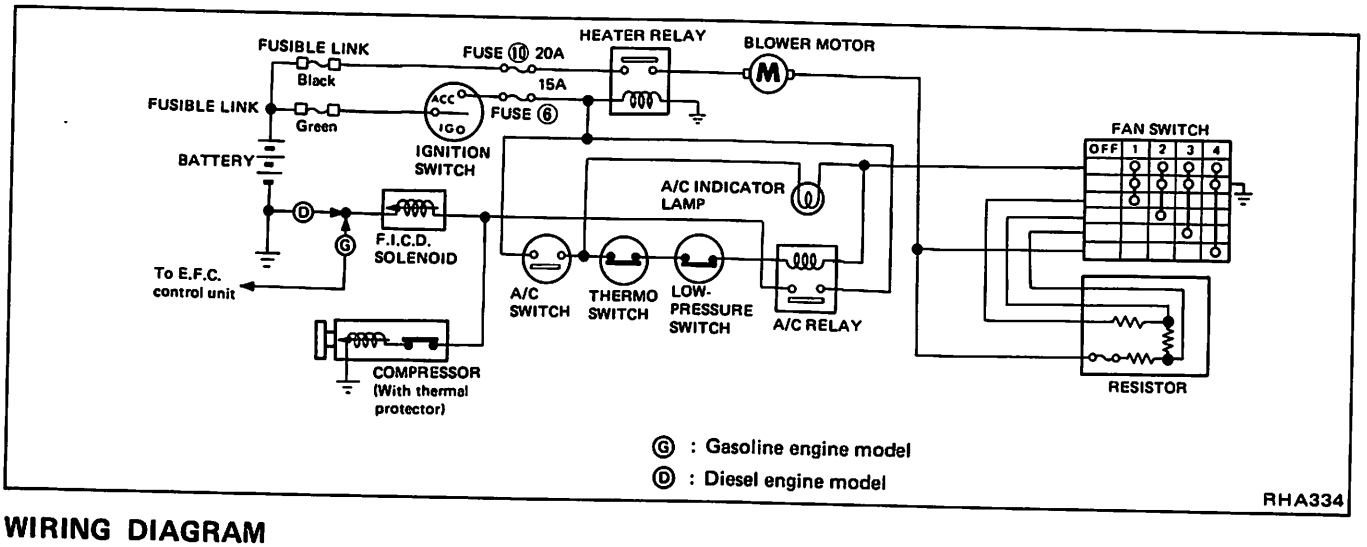

WIRING DIAGRAM

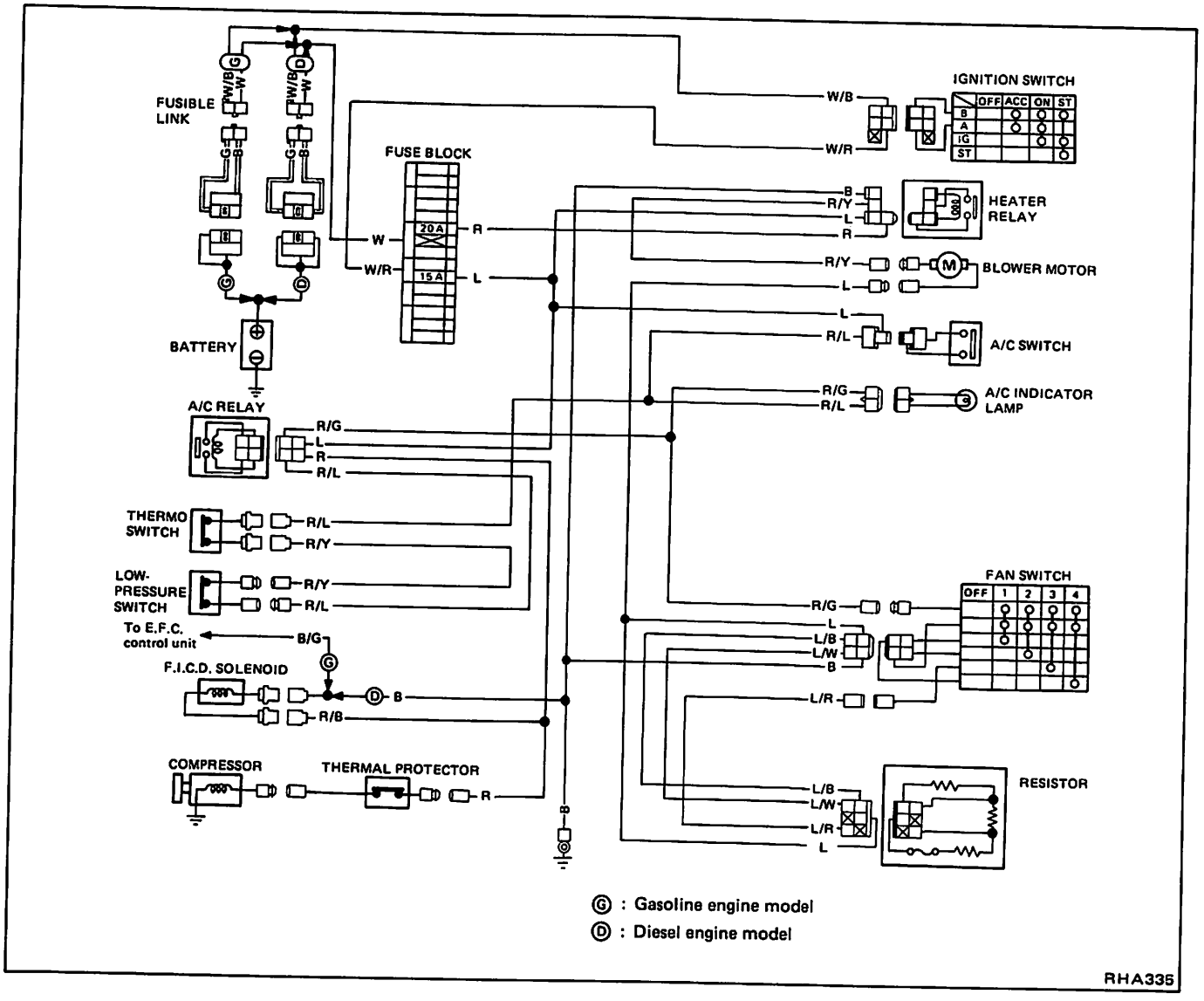

TROUBLE DIAGNOSES AND CORRECTIONS

AIR CONDITIONER DIAGNOSES

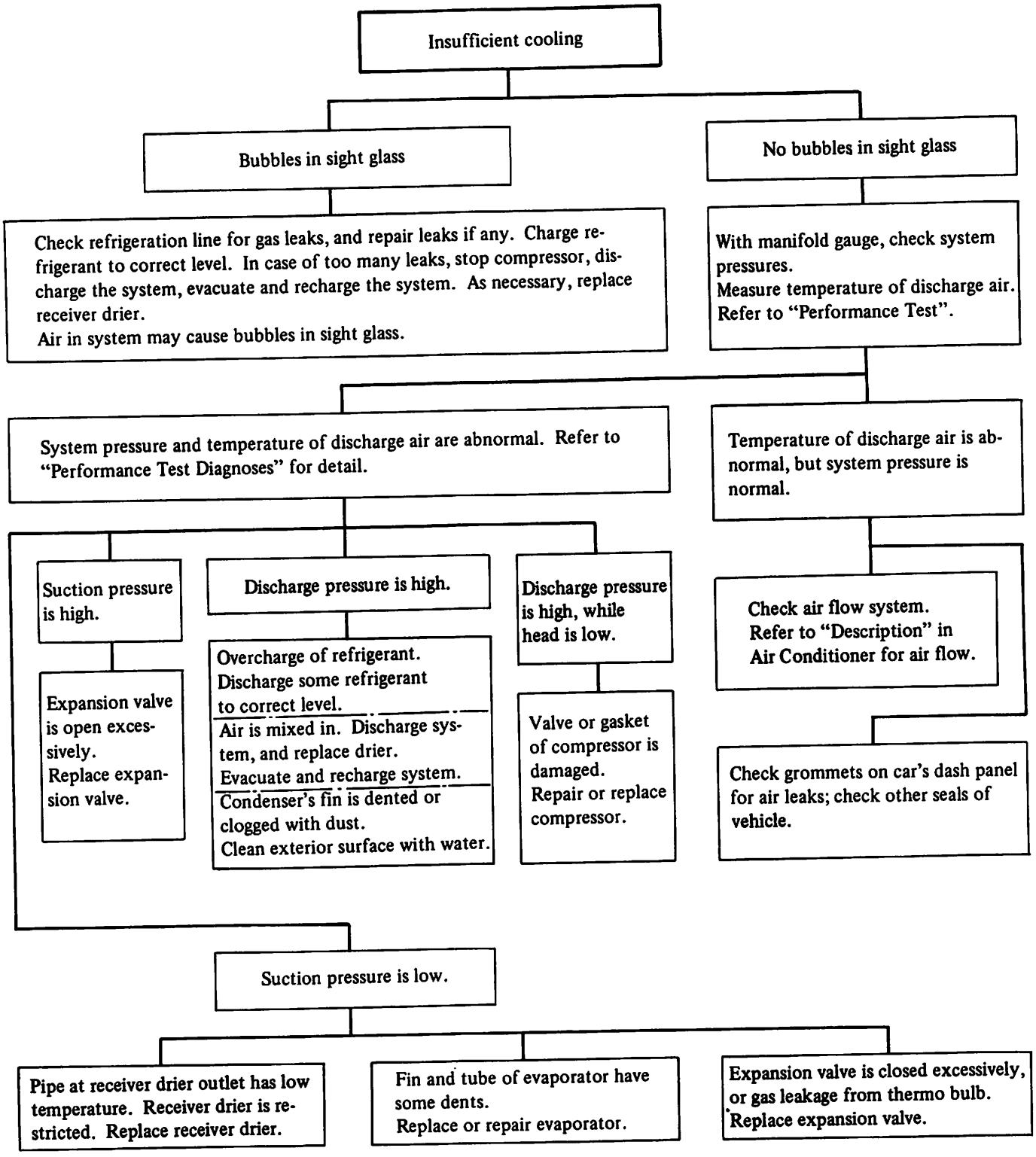

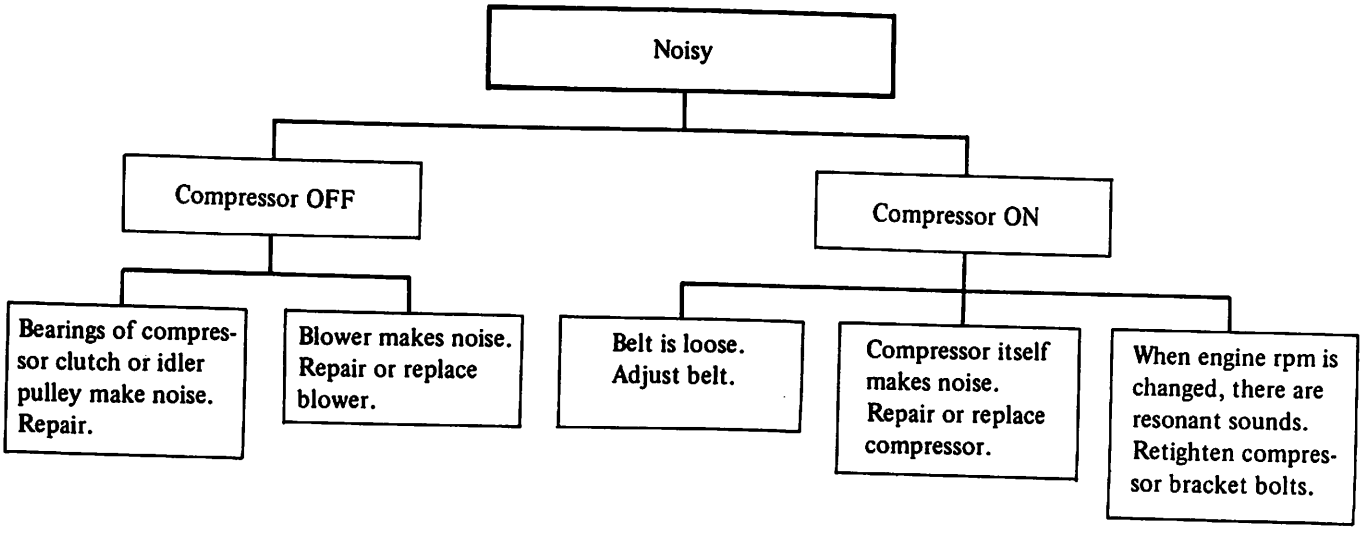
Noisy
Compressor OFF
Compressor ON
Bearings of compressor clutch or idler pulley make noise. Repair.
Blower makes noise. Repair or replace blower.
Belt is loose. Adjust belt.
Compressor itself makes noise. Repair or replace compressor.
When engine rpm is changed, there are resonant sounds. Retighten compressor bracket bolts.

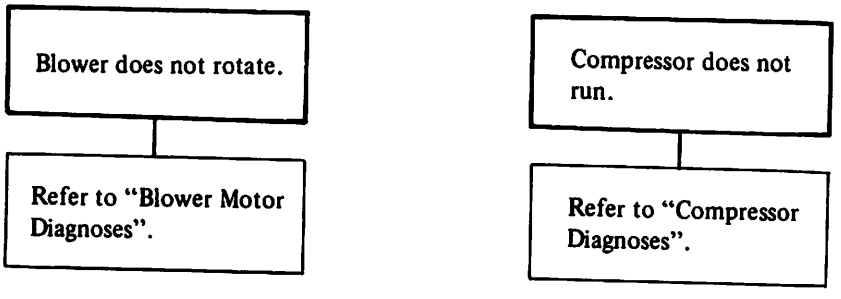
Blower does not rotate.
Refer to "Blower Motor Diagnoses".
Compressor does not run.
Refer to "Compressor Diagnoses".

COMPRESSOR DIAGNOSES

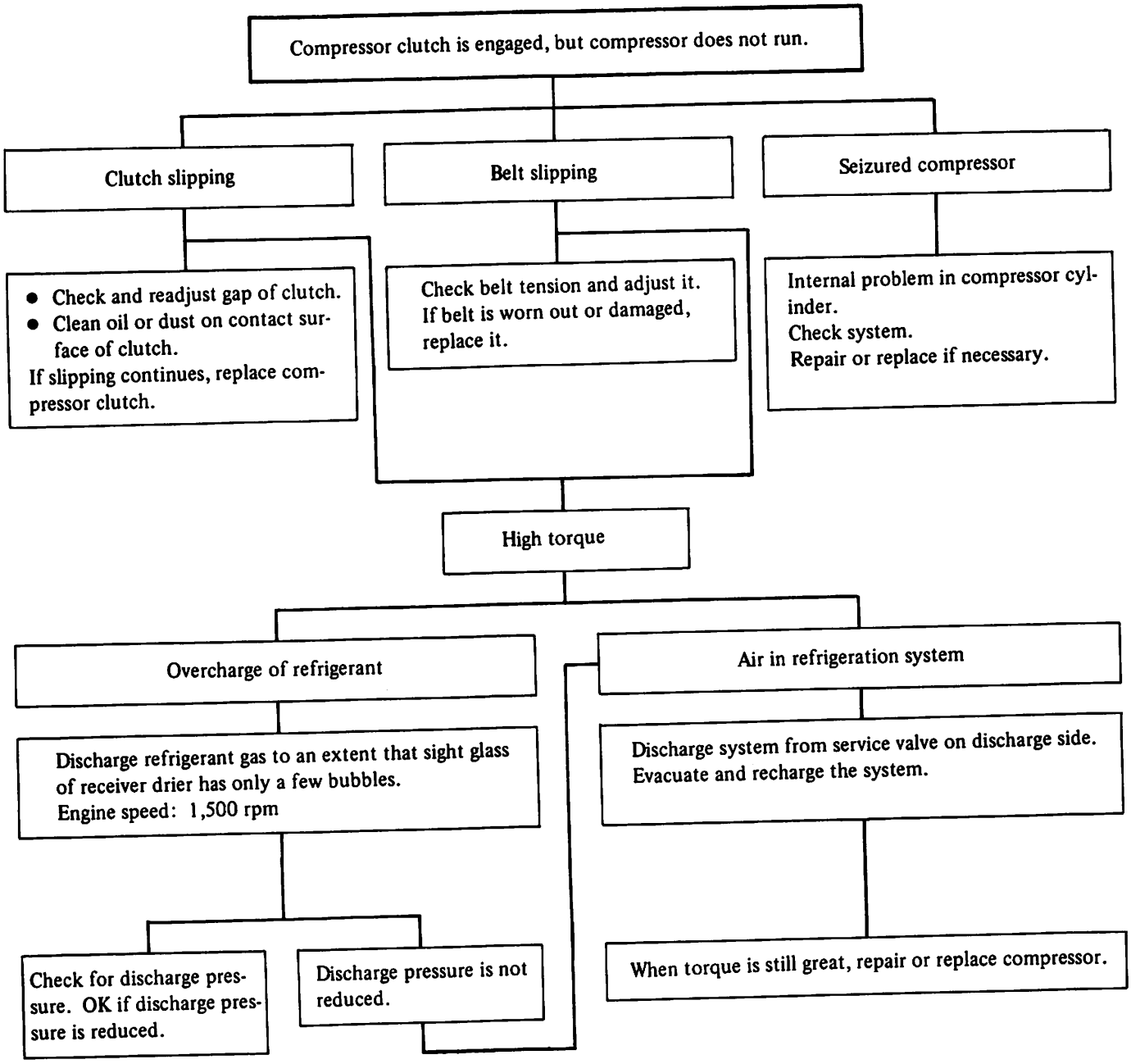

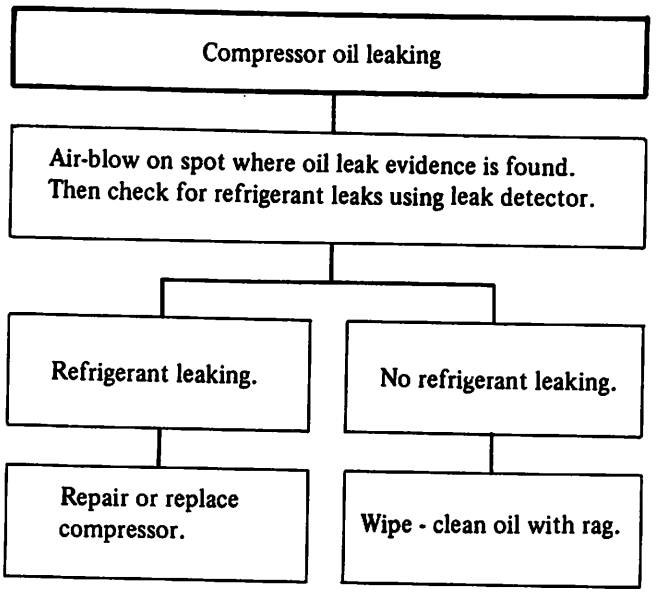
Compressor oil leaking
Air-blow on spot where oil leak evidence is found. Then check for refrigerant leaks using leak detector.
Refrigerant leaking.
No refrigerant leaking.
Repair or replace compressor.
Wipe - clean oil with rag.

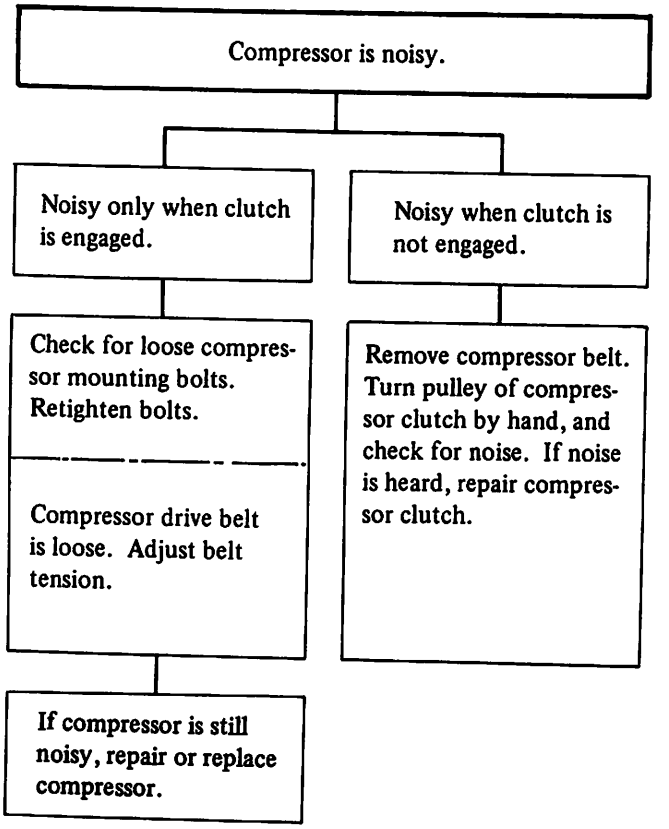
Compressor is noisy.
Noisy only when clutch is engaged.
Noisy when clutch is not engaged.
Check for loose compressor mounting bolts. Retighten bolts.
Compressor drive belt is loose. Adjust belt tension.
If compressor is still noisy, repair or replace compressor.
Remove compressor belt. Turn pulley of compressor clutch by hand, and check for noise. If noise is heard, repair compressor clutch.

BLOWER MOTOR DIAGNOSES

Test condition

Battery	: O.K.	Quick check: Check that turn signal operates.
Fusible link (Black)	: O.K.	
Fusible link (Green)	: O.K.	Quick check: Check that wiper operates.
Ignition switch	: O.K.	
Fuse 15A, 20A	: O.K.	
Position of ignition switch	: ACC	
Position of fan switch	: ON	

: Condition
: Check
: Probable cause

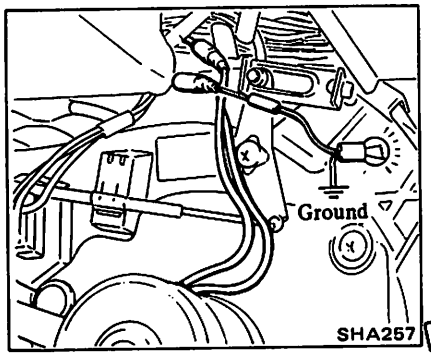

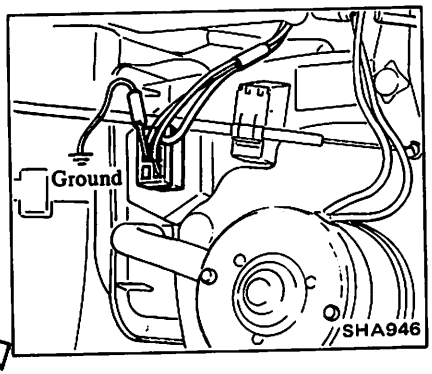

Blower motor does not run in any fan switch position.

Connect test light to red-yellow wire leading to fan motor.

Light OFF

Ground black wire leading to heater relay

Motor runs.

Poor grounding

Repair.

Motor does not run.

Faulty heater relay without problem in lead wire connection.

Replace.

Light ON

Ground blue wire leading to blower motor

Motor runs.

Ground black wire leading to fan switch.

Motor runs.

Poor grounding

Repair.

Motor does not run.

Faulty fan switch without problem in lead wire connection

Repair or replace.

Motor does not run.

Faulty blower motor without problem in lead wire connection

Repair or replace.

Blower motor does not run in one fan switch position.

Ground blue or blue-black or blue-red wire leading to resistor.

Motor runs.

Motor does not run.

Faulty resistor without problem in lead wire connection

Replace.

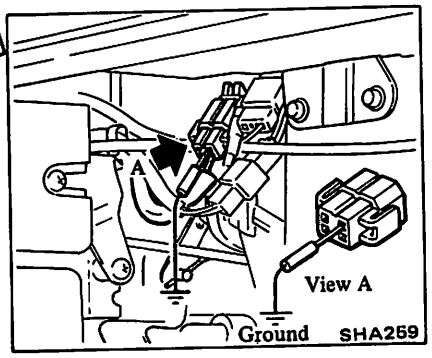

COMPRESSOR CLUTCH DIAGNOSES

Test condition

Refrigerant level	:	O.K.
Evaporator outlet air temperature	:	Above 5°C (41°F)
Battery	:	O.K.
Fusible link (Black)	:	O.K.
Fusible link (Green)	:	O.K.
Ignition switch	:	O.K.
Fuse 15A, 20A	:	O.K.
Position of ignition switch	:	ACC
Position of fan switch	:	ON AND PULL

Quick check: Check that turn signal operates.

Quick check: Check that wiper operates.

: Condition

: Check

: Probable cause

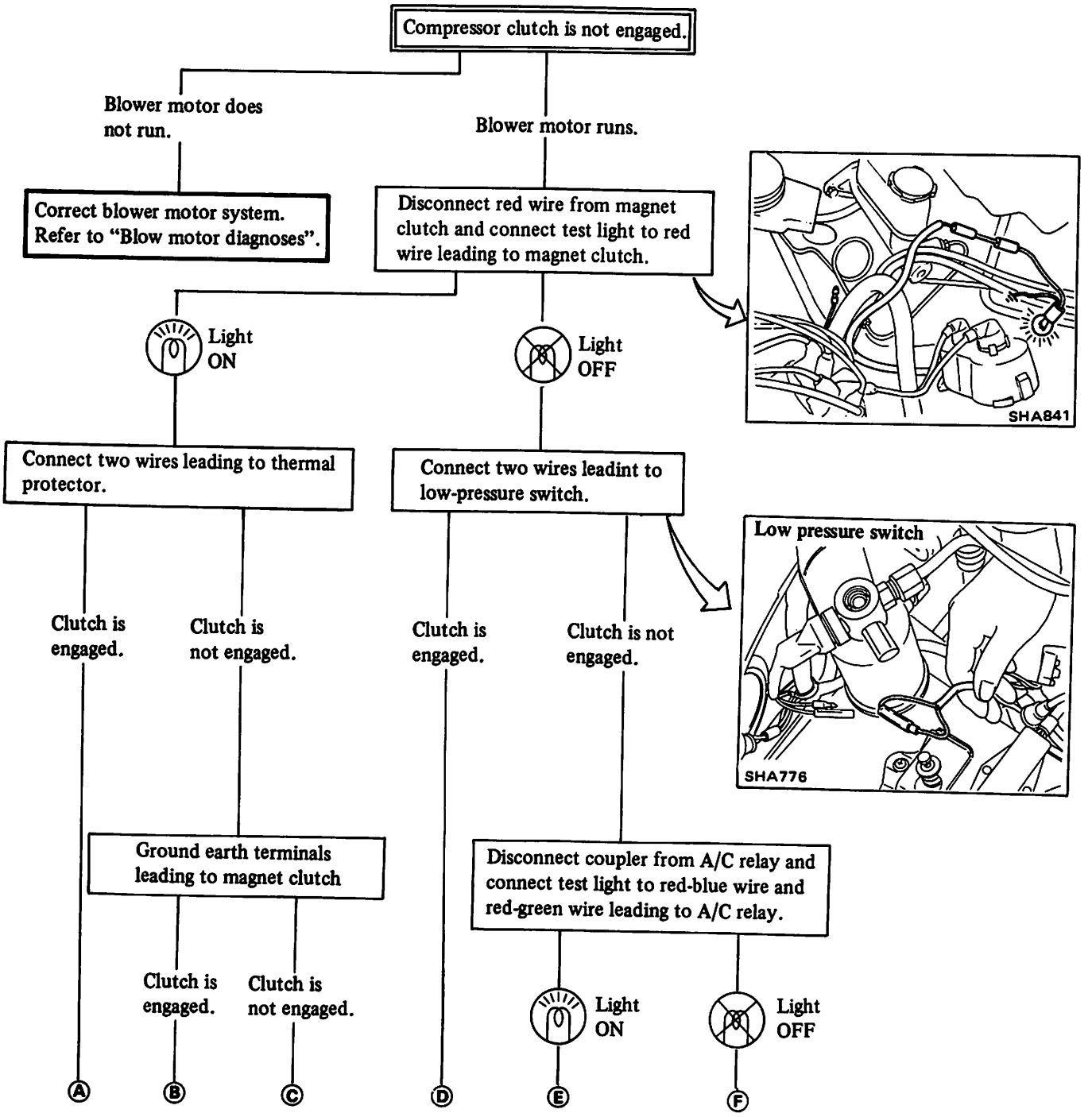

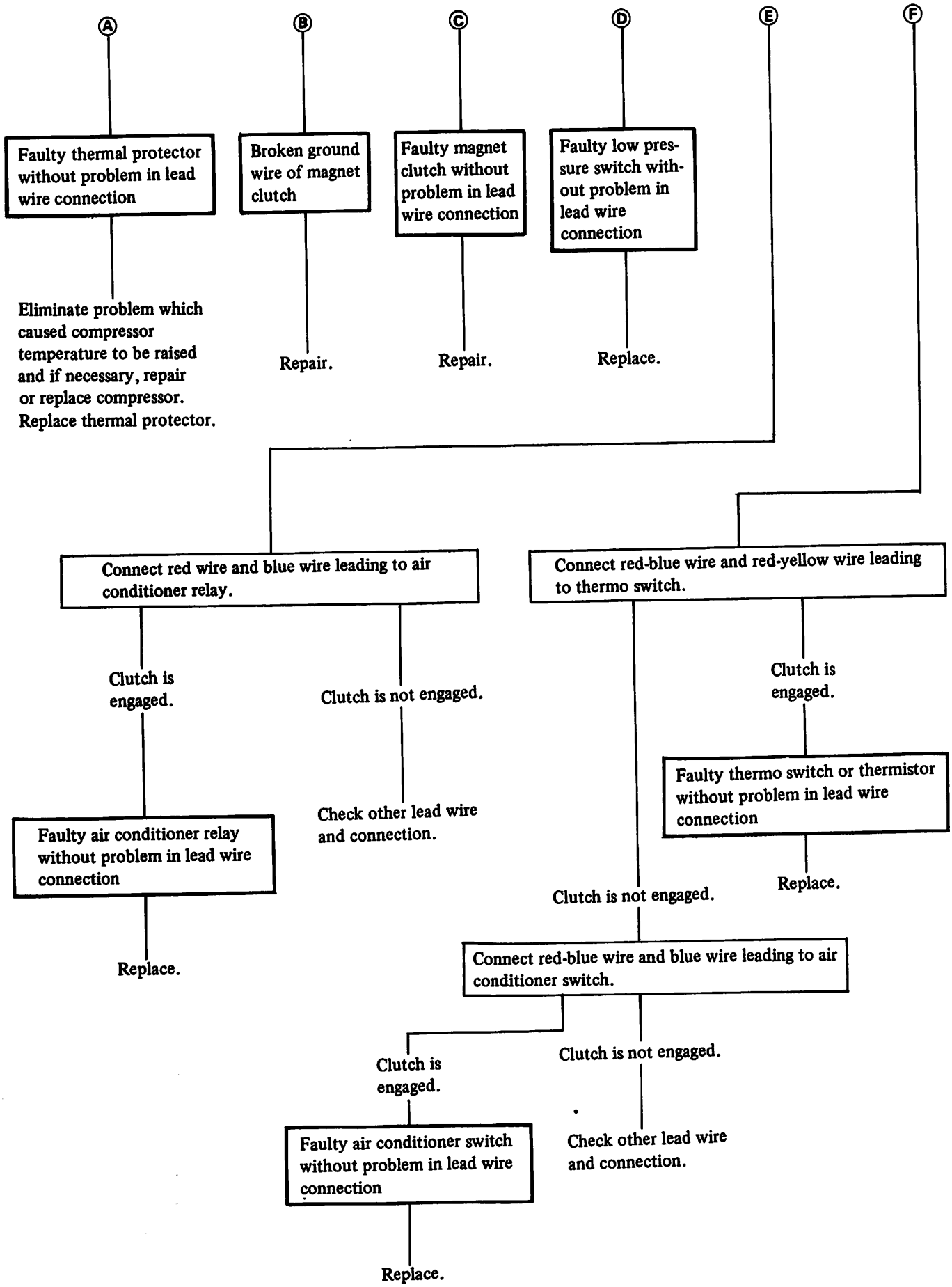
A
B
C
D
E
F
Faulty thermal protector without problem in lead wire connection
Eliminate problem which caused compressor temperature to be raised and if necessary, repair or replace compressor. Replace thermal protector.
Broken ground wire of magnet clutch
Repair.
Faulty magnet clutch without problem in lead wire connection
Repair.
Faulty low pressure switch without problem in lead wire connection
Replace.
Connect red wire and blue wire leading to air conditioner relay.
Clutch is engaged.
Faulty air conditioner relay without problem in lead wire connection
Replace.
Clutch is not engaged.
Check other lead wire and connection.
Connect red-blue wire and red-yellow wire leading to thermo switch.
Clutch is engaged.
Faulty thermo switch or thermistor without problem in lead wire connection
Replace.
Clutch is not engaged.
Connect red-blue wire and blue wire leading to air conditioner switch.
Clutch is engaged.
Faulty air conditioner switch without problem in lead wire connection
Replace.
Clutch is not engaged.
Check other lead wire and connection.

COMPRESSOR CONTROL DEVICE (F.I.C.D.) DIAGNOSES

Test condition

Evaporator outlet air temperature	:	Above 5°C (41°F)
Battery	:	O.K.
Fusible link (Black)	:	O.K.
Fusible link (Green)	:	O.K.
Ignition switch	:	O.K.
Fuse 15A, 20A	:	O.K.
Position of ignition switch	:	ON (With engine running)
Position of fan switch	:	ON AND PULL.

Quick check: Check that turn signal operates.

Quick check: Check that wiper operates.

: Condition

: Check

: Probable cause

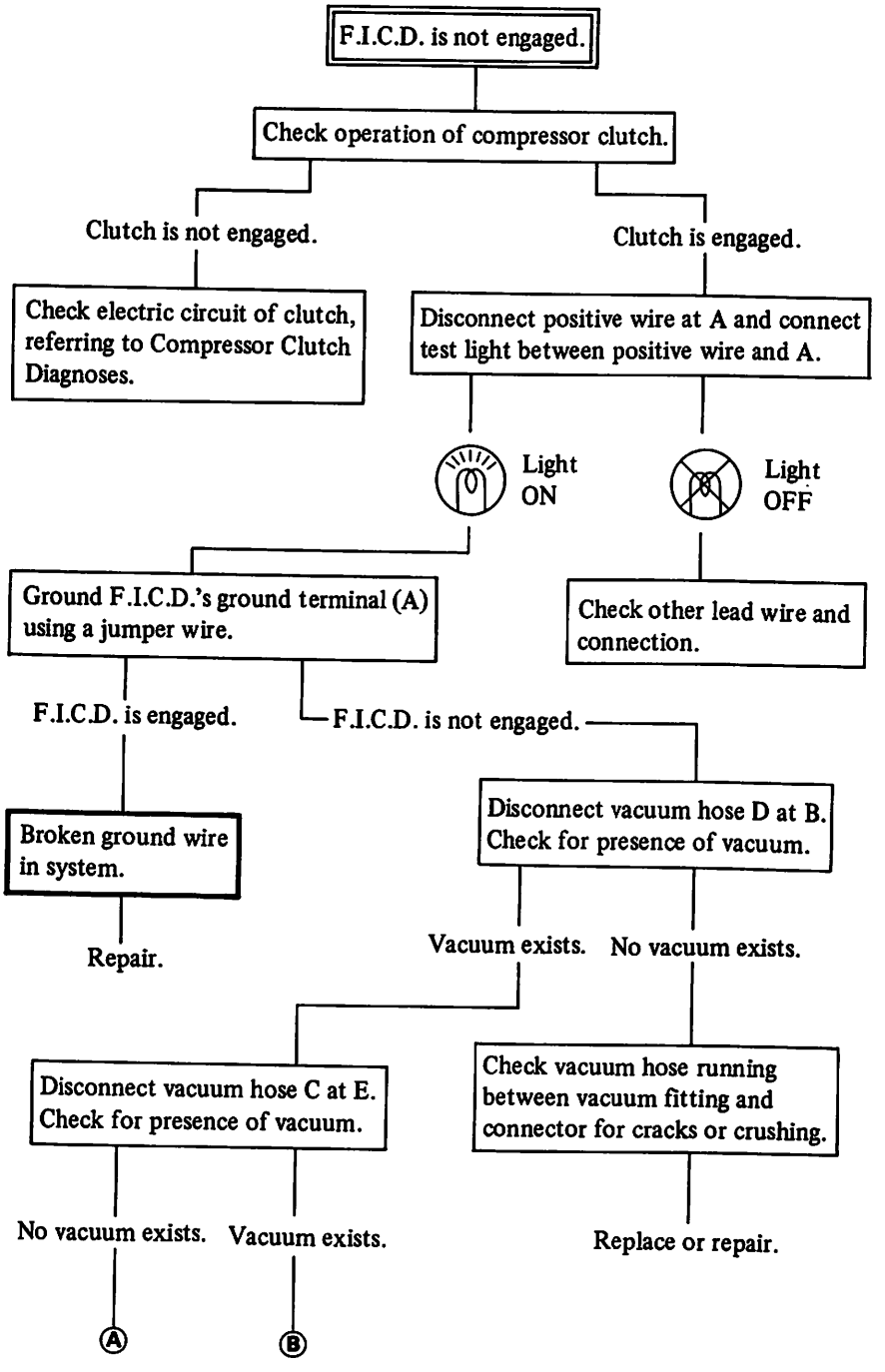

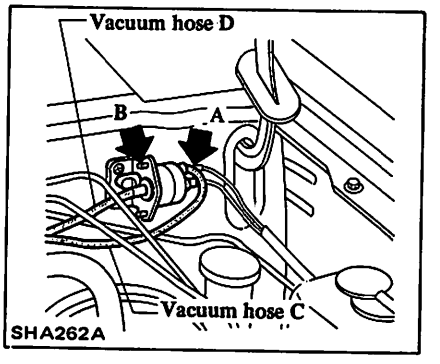

Gasoline engine model

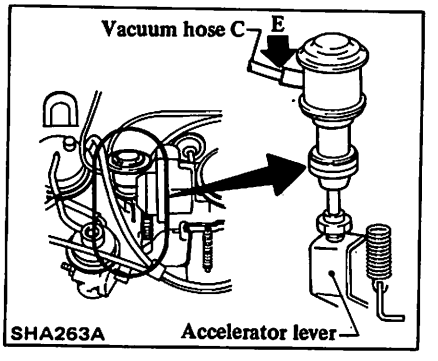

Diesel engine model

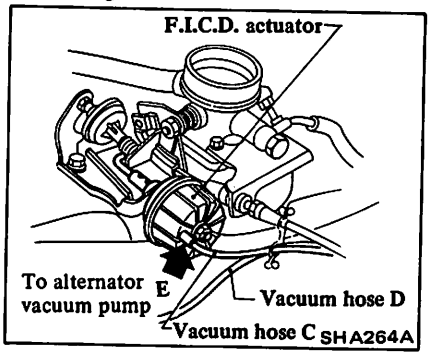

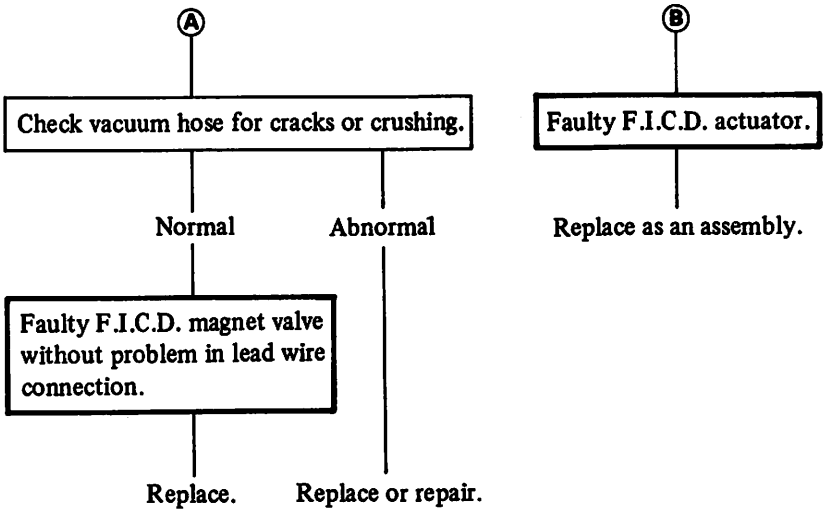
Ⓐ
Check vacuum hose for cracks or crushing.
Normal
Abnormal
Faulty F.I.C.D. magnet valve without problem in lead wire connection.
Replace.
Replace or repair.
Ⓑ
Faulty F.I.C.D. actuator.
Replace as an assembly.

SERVICE DATA AND SPECIFICATIONS (S.D.S.)

GENERAL SPECIFICATIONS

COMPRESSOR

Model	DKV-14B DKV-14C
Type	Vane rotary
Displacement cm^3 (cu in)/Rev	140 (8.54)
Direcion of rotation	Clockwise (Viewed from drive end)
Drive belt	A type

LUBRICATION OIL

	DKC model
Type	SUNISO 5GS
Capacity mℓ (US fl oz, Imp fl oz)	250 (8.5, 8.8)

REFRIGERANT

Type	R-12
Capacity kg (lb) DKC model	0.9 - 1.1 (2.0 - 2.4)

ENGINE IDLE SPEED

[When A/C is ON (F.I.C.D. actuated)]

All models
800 - 900 rpm

- Automatic transmission at "D" range.

INSPECTION AND ADJUSTMENT

BELT TENSION

Belt deflection mm (in)
[Applied pressure is 98 N (10 kg, 22 lb)]

	Used belt		New
	Limit	Adjust	
Z engine	13 (0.51)	8 - 10 (0.31 - 0.39)	6 - 8 (0.24 - 0.31)
SD engine	–	8 - 12 (0.31 - 0.47)	

COMPRESSOR

	DKC model
Clutch hub to pulley clearance mm (in)	0.30 - 0.60 (0.012 - 0.024)

TIGHTENING TORQUE

COMPRESSOR INSTALLATION

	Gasoline engine model			Diesel engine model (Nut)		
	N·m	kg-m	ft-lb	N·m	kg-m	ft-lb
Compressor bracket to cylinder block	44 - 54	4.5 - 5.5	33 - 40	26 - 34 (49 - 59)	2.7 - 3.5 (5.0 - 6.0)	20 - 25 (36 - 43)
Compressor to compressor bracket	44 - 54	4.5 - 5.5	33 - 40	26 - 34	2.7 - 3.5	20 - 25

COMPRESSOR

	DKV-14B			DKV-14C		
	N·m	kg-m	ft-lb	N·m	kg-m	ft-lb
Center bolt	15 - 16	1.5 - 1.6	11 - 12	15 - 18	1.5 - 1.8	11 - 13
Lock nut	34 - 39	3.5 - 4.0	25 - 29	–	–	–
Harness clamp fixing screw	3 - 4	0.3 - 0.4	2.2 - 2.9	3 - 4	0.3 - 0.4	2.2 - 2.9
Temperature fuse cap nut	15 - 18	1.5 - 1.8	11 - 13	15 - 18	1.5 - 1.8	11 - 13
Coil mounting screw	5 - 6	0.5 - 0.6	3.6 - 4.3	4 - 6	0.4 - 0.6	2.9 - 4.3

REFRIGERANT LINE

- When connecting pipes of different type, basically use lower torque.

Union type (pipe to pipe)

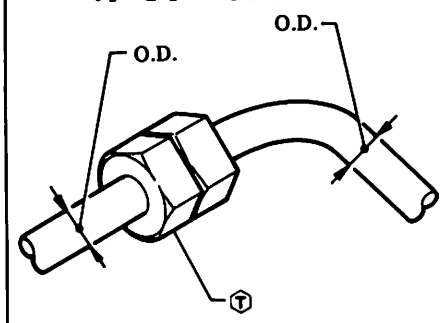

SHA669A

Pipe O.D. mm (in)	Material					
	Steel or copper			Aluminum		
	N·m	kg-m	ft-lb	N·m	kg-m	ft-lb
6 (1/4)	10 - 20	1.0 - 2.0	7 - 14	–	–	–
8 (5/16)	15 - 25	1.5 - 2.5	11 - 18	10 - 20	1.0 - 2.0	7 - 14
10 (3/8)	15 - 25	1.5 - 2.5	11 - 18	10 - 20	1.0 - 2.0	7 - 14
12 (1/2)	20 - 29	2.0 - 3.0	14 - 22	15 - 25	1.5 - 2.5	11 - 18
16 (5/8)	25 - 34	2.5 - 3.5	18 - 25	20 - 29	2.0 - 3.0	14 - 22
19 (3/4)	25 - 34	2.5 - 3.5	18 - 25	20 - 29	2.0 - 3.0	14 - 22

Union type (hose to hose)

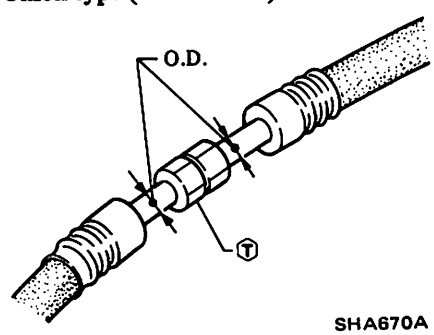

SHA670A

Pipe O.D. mm (in)	Material					
	Steel or copper			Aluminum		
	N·m	kg-m	ft-lb	N·m	kg-m	ft-lb
6 (1/4)	10 - 20	1.0 - 2.0	7 - 14	–	–	–
8 (5/16)	15 - 25	1.5 - 2.5	11 - 18	10 - 20	1.0 - 2.0	7 - 14
10 (3/8)	15 - 25	1.5 - 2.5	11 - 18	10 - 20	1.0 - 2.0	7 - 14
12 (1/2)	25 - 34	2.5 - 3.5	18 - 25	20 - 29	2.0 - 3.0	14 - 22
16 (5/8)	25 - 34	2.5 - 3.5	18 - 25	20 - 29	2.0 - 3.0	14 - 22

Union type (hose to pipe)

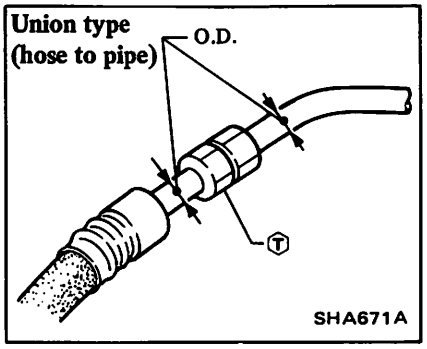

SHA671A

- Use tightening torque for flexible hose.

Plate type

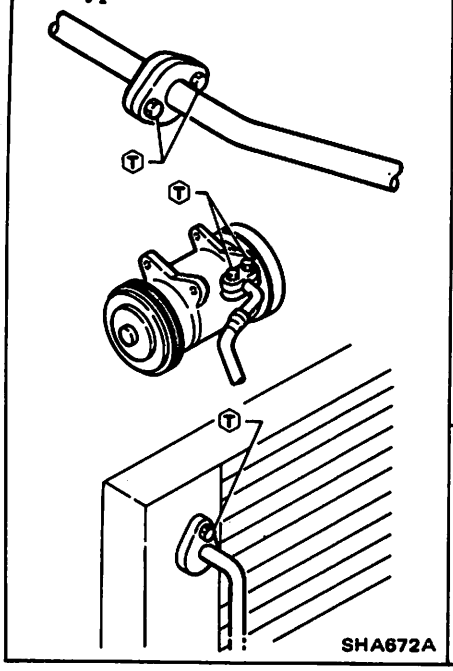

Bolt type				Tightening torque		
Grade	Nominal size	Bolt diameter mm (in)	Pitch mm (in)	N·m	kg-m	ft-lb
4T	M6	6.0 (0.236)	1.0 (0.039)	3 - 4	0.3 - 0.4	2.2 - 2.9
	M8	8.0 (0.315)	1.25 (0.0492)	8 - 11	0.8 - 1.1	5.8 - 8.0
	M10	10.0 (0.394)	1.5 (0.059)	16 - 22	1.6 - 2.2	12 - 16
7T	M6	6.0 (0.236)	1.0 (0.039)	6 - 7	0.6 - 0.7	4.3 - 5.1
	M8	8.0 (0.315)	1.25 (0.0492)	14 - 18	1.4 - 1.8	10 - 13
	M10	10.0 (0.394)	1.5 (0.059)	25 - 35	2.6 - 3.6	19 - 26

SPECIAL SERVICE TOOLS

Tool number (Kent-Moore No.)	Tool name
KV99231010 (–)	Clutch hub wrench 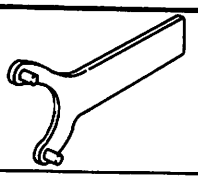
KV99232232 (J33923)	Clutch hub puller 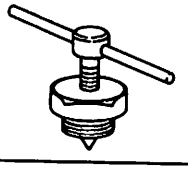
KV99235160 (J29751)	Nut wrench 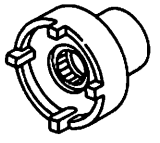
KV99234160 (–)	Pulley installer 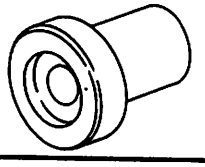

ELECTRICAL SYSTEM

SECTION EL

CONTENTS

ELECTRICAL DIAGNOSIS
INTRODUCTION ..... EL- 3
Basic rule of electricity ..... EL- 3
Wiring diagrams ..... EL- 3
Testing ..... EL- 4
Test instruments ..... EL- 4
Trouble-shooting approach ..... EL- 4
POWER SUPPLY ..... EL- 5
Schematic/Power supply routing ..... EL- 5
Fuse ..... EL- 6
Fusible link ..... EL- 6
Ignition switch ..... EL- 6
Standardized relay ..... EL- 7
BATTERY ..... EL- 8
How to handle battery ..... EL- 8
Specific gravity check ..... EL- 10
M.F. battery test and charging chart ... EL- 11
Service data and specifications (S.D.S.) ..... EL- 15
STARTING SYSTEM ..... EL- 16
Schematic (Gasoline engine models) ... EL- 16
Wiring diagram (Gasoline engine models) ..... EL- 16
Schematic (Diesel engine models) .... EL- 17
Wiring diagram (Diesel engine models) ..... EL- 17
Starting system trouble-shooting ..... EL- 18
Starter motor ..... EL- 19
Service data and specifications (S.D.S.) ..... EL- 27
CHARGING SYSTEM ..... EL- 28
Schematic (Gasoline engine models) ... EL- 28
Wiring diagram (Gasoline engine models) ..... EL- 28
Schematic (Diesel engine models) ..... EL- 29
Wiring diagram (Diesel engine models) ..... EL- 29
Charging system trouble-shooting ..... EL- 30
Alternator ..... EL- 31
IC voltage regulator ..... EL- 35
Service data and specifications (S.D.S.) ..... EL- 36
IGNITION SYSTEM (Gasoline engine model) ..... EL- 37
Schematic (Z24 engine model for U.S.A.) ..... EL- 37
Wiring diagram (Z24 engine model for U.S.A.) ..... EL- 38
Schematic (Z24 engine model for Canada) ..... EL- 39
Wiring diagram (Z24 engine model for Canada) ..... EL- 40
Schematic (Z20 engine model) ..... EL- 41
Wiring diagram (Z20 engine model) ... EL- 41
IC ignition system trouble-shooting ... EL- 42
Distributor (IC type) ..... EL- 45
Service data and specifications (S.D.S.) ..... EL- 48
GLOW SYSTEM (Diesel engine model) ..... EL- 50
Location ..... EL- 50
Schematic ..... EL- 50
Description ..... EL- 51
Wiring diagram ..... EL- 51
Inspection ..... EL- 52
Trouble diagnosis and corrections .... EL- 53
Pre-glow control check ..... EL- 54
After-glow control check ..... EL- 54
Glow indicator control check ..... EL- 54

INJECTION PUMP CONTROL SYSTEM ..... EL- 55
Description ..... EL- 55
Schematic ..... EL- 58
Wiring diagram ..... EL- 58
Trouble diagnoses and corrections .... EL- 59
Injection pump control system inspection ..... EL- 62
LIGHTING SYSTEM ..... EL- 65
Bulb specifications ..... EL- 65
Combination switch ..... EL- 65
Headlamp ..... EL- 67
Exterior lamps ..... EL- 69
Interior lamps ..... EL- 76
Illumination lamps ..... EL- 77
METERS, GAUGES AND WARNING SYSTEM ..... EL- 79
Combination meter ..... EL- 79
Meter and gauges ..... EL- 80
4-wheel drive indicator lamp ..... EL- 81
Voltmeter and oil pressure gauge ..... EL- 82
Warning lamps ..... EL- 86
Warning chime ..... EL- 88
WIPER AND WASHER ..... EL- 89
Windshield wiper and washer ..... EL- 89
ELECTRICAL ACCESSORIES ..... EL- 93
Horn, clock and inspection lamp ..... EL- 93
Rear window defogger, cigarette lighter and radio ..... EL- 94
AUTOMATIC SPEED CONTROL DEVICE (A.S.C.D.) ..... EL- 96
Description ..... EL- 96
Location ..... EL- 97
Function and operation ..... EL- 98
Trouble-shooting EL-101
Wiring diagram/A.S.C.D. EL-103
LOCATION OF ELECTRICAL UNITS EL-104
HARNESS LAYOUT EL-106
Description EL-106
Main harness (Engine compartment side) EL-107
Main harness (Passenger compartment side - A) EL-109
Main harness (Passenger compartment side - B), room lamp cable, rear window defogger cable and console harness EL-110
Instrument harness EL-110
Room lamp timer harness EL-111
Transmission harness EL-112
Chassis harness EL-113
Tail harness EL-113

Refer to section EF & EC for:
- ENGINE FUEL & EMISSION CONTROL SYSTEM

Refer to section HA for:
- HEATER
- AIR CONDITIONER

ELECTRICAL DIAGNOSIS INTRODUCTION

CAUTION: Before starting to work, be sure to turn ignition switch "OFF" and then disconnect battery ground cable.

The key to timely and accurate diagnosis of electrical problems is to:

- Have a basic understanding of electrical principles and electrical component operation.
- Be able to interpret wiring diagram and schematics.
- Know the various test methods and when to use each.
- Have a systematic approach to identify the specific cause of an electrical problem.

BASIC RULE OF ELECTRICITY

A complete electrical circuit must have:

- A Source (battery, alternator)
- A Load (lights, coil, amplifiers, motor, etc.)
- Electrical Pathway (connecting from the source to the load and back to the source); (wires, switches, body of vehicle ground). Remembering this basic rule will make it a lot easier to troubleshoot electrical problems.

WIRING DIAGRAMS

There is a schematic illustrating each electrical circuit. Accurate diagnosis of electrical problems requires that you effectively use and interpret this diagram. Since it uses a special language, i.e., symbols, codes and abbreviations, let's review the following chart.

ELECTRICAL SYMBOLS AND ABBREVIATIONS

SYMBOLS

- Single filament bulb
- Dual filament bulb
- Fuse
- Fusible link
- Diode
- Motor
- Transistor
- Resistor
- Coil
- Variable resistor
- Thermistor
- Reed switch
- Circuit breaker
- Condenser
- Switch (Normally open) or
- Switch (Normally closed) or
- Ground
- No connection between wires
- Connection between wires

CONNECTORS

- Pin-type connector (Male)
- Pin-type connector (Female)
- Plain-type connector (Male)
- Plain-type connector (Female)
- Bullet connector (Female and male)
- Plain connector (Female and male)

WIRE COLOR CODING

B	= Black	Br	= Brown
W	= White	Or	= Orange
R	= Red	P	= Pink
G	= Green	Pu	= Purple
L	= Blue	Gr	= Gray
Y	= Yellow	Sb	= Sky blue
Lg	= Light Green		

In case of color coding using a Stripe, Base Color is given first, followed by the Stripe Color:

Example: LW = Blue with White Stripe

ABBREVIATIONS

- ② : 2-door Hatchback
- ④ : 4-door Hatchback
- Ⓤ : For U.S.A.
- Ⓝ : For Canada
- Ⓖ : G models
- SGL : SGL models

To trace a problem in any electrical circuit, several types of diagrams can be used.

POWER SUPPLY ROUTING

This diagram is helpful in identifying specific problems in the power supply portion of the electrical circuits. For example, let's say a vehicle has inoperative rear window defogger. A quick check proves that turn signal lamp in the vehicle are operative. The power supply diagram shows that there cannot be a problem between the battery, ignition relay, ignition switch of fuse since the power supply circuit for the rear window defogger is common with the turn signal lamp. Therefore, the cause of this specific problem must lie past the fuse, such as in the wiring, rear window defogger, or ground.

SCHEMATIC

A schematic is a very simplified wiring diagram useful for tracing electrical current flow and studying the operation of an electrical circuit.

WIRING DIAGRAM

This diagram is a more "true to life" layout of a complete circuit than the schematic. It identifies types and number of connectors, electrical terminal positions in the connector, color coding of wires, and connector codes.

In order to quickly find the exact location of a connector, the connector codes can be cross-referenced to the harness layout illustrations in the back of this section.

TESTING

Many people think of electrical testing as connecting electrical test instruments into a circuit and measuring amps, volts and ohms. But there is really a lot more. In fact using test instruments should be one of the last steps in correcting an electrical problem.

SIGHT AND SOUND play an important role in electrical testing. Relays click, blowers spin, air condition clutches engage, lights illuminate, etc. Even though we cannot observe current flowing through a wire or a component, we can observe the effect it has on an electrical component. Sight and sound testing methods should be thoroughly exhausted before hooking up any test instrument.

SUBSTITUTION is another test method. For example, you suspect a bad ground at the tail lamp. Try a jumper wire from ground to the lamp. What about a questionable fuse? Simply replace it with another. In several instances substitution may turn out to be the most effective method of correcting an electrical problem.

TEST INSTRUMENTS

Problems that cannot be solved through sight, sound, or substitution can be solved by using the appropriate test instrument.

A general rule to follow while trouble-shooting is to perform the easiest and least expensive checks first. This often means giving some careful thought to a trouble-shooting plan. Some of the most frustrating and confusing electrical problems begin with a haphazard and planless start. Make sure the checks you have selected are going to give the answers you need. If you test the wrong circuit, use the wrong meter, or forget to check the meter scale and calibration, you just can't diagnose the problem.

TROUBLE-SHOOTING APPROACH

You should have a routine procedure or approach when trouble-shooting a problem, a method you are familiar with which gives you the maximum amount of information at minimum expense and effort. Sometimes it is helpful to ask yourself some questions first. For example:

WHAT IS THE PROBLEM? While this may seem a foolish question at first glance, the problem involved may not be the same as stated on the repair order or even as observed by the customer. Sometimes, other problems or symptoms have been overlooked. Do not forget to identify the problem and controls involved. Check to see what electrical components work and what components do not work. This is an opportune time to use sight and sound testing methods.

HOW DOES THE CIRCUIT WORK? Once the electrical problem has been identified, consult the wiring diagram in the service manual.

Study the simplified schematic to develop an understanding of how the circuit is supposed to work. Then use harness layout illustration, power supply routing diagram, and vehicle wiring diagram. Get an idea of how the circuit is laid out in the vehicle and how it interrelates with other circuits.

WHICH TEST IS BEST? Stop and think of exactly what information you need to reach a proper solution. Decide which test will give you the most information. Do not forget to think of where you are going to make your test connections. Make sure you are performing your test at the most advantageous point. You do not want to dismantle a dash assembly to check a component which could be tested at a more accessible location. For instance, it is much easier to check terminal connectors and plugs than to break into a harness.

Once the tests have been performed, you should have the information you need to reach a logical conclusion and solve the problem but, if not, then review your testing procedure. Be certain that you are performing the test correctly and your procedure is valid.

Remember the most complex circuits are constructed from combinations and/or variations of the basic circuit: Source, Conductors, and Load. If you keep this in mind, use the service manual, and follow a logical trouble-shooting sequence, you can effectively troubleshoot electrical problems.

POWER SUPPLY

CAUTION: Before starting to work, be sure to turn ignition switch "OFF" and then disconnect battery ground cable.

SCHEMATIC/POWER SUPPLY ROUTING

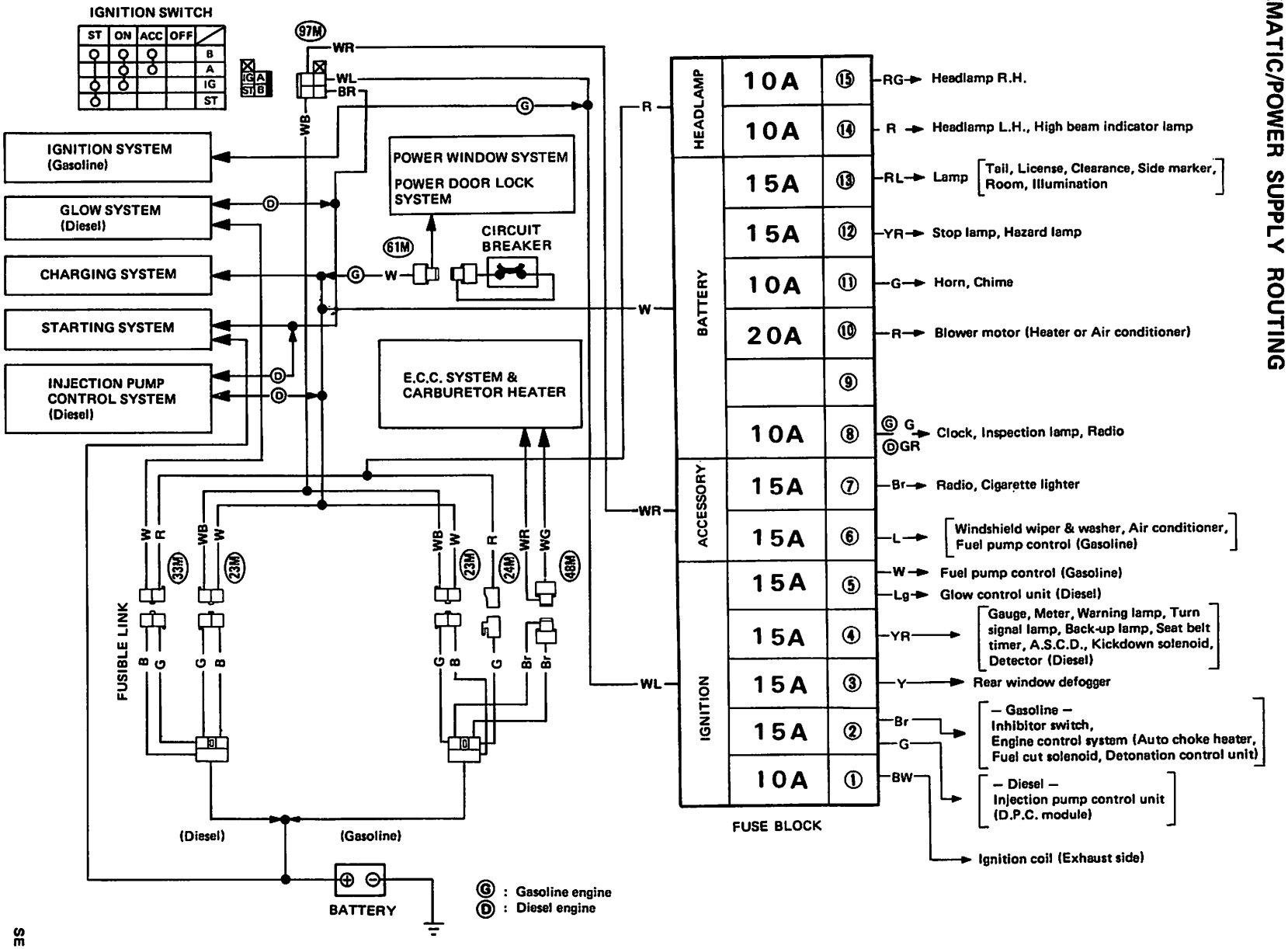

FUSE

INSPECTION

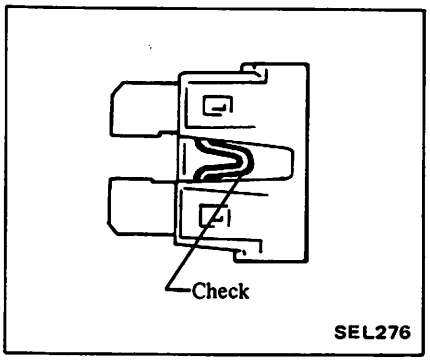

a. If fuse is blown, be sure to eliminate cause of problem before installing new fuse.
b. Use fuse of specified rating. Never use fuse of more than specified rating.
c. Do not install fuse in oblique direction; always insert it into fuse holder properly.
d. Remove fuse for clock if vehicle is not used for a long period of time.

FUSIBLE LINK

LOCATION

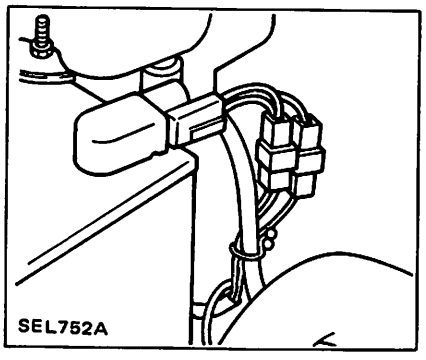

CAUTION:

a. If fusible link should melt, it is possible that critical circuit (power supply or large current carrying circuit) is shorted. In such a case, carefully check and eliminate cause of problem.
b. Never wrap periphery of fusible link with vinyl tape. Extreme care should be taken with this link to ensure that it does not come into contact with any other wiring harness or vinyl or rubber parts.

A melted fusible link can be detected either by visual inspection or by feeling with finger tip. If its condition is questionable, use circuit tester or test lamp.

IGNITION SWITCH

INSPECTION

Test continuity through switch with an ohmmeter.

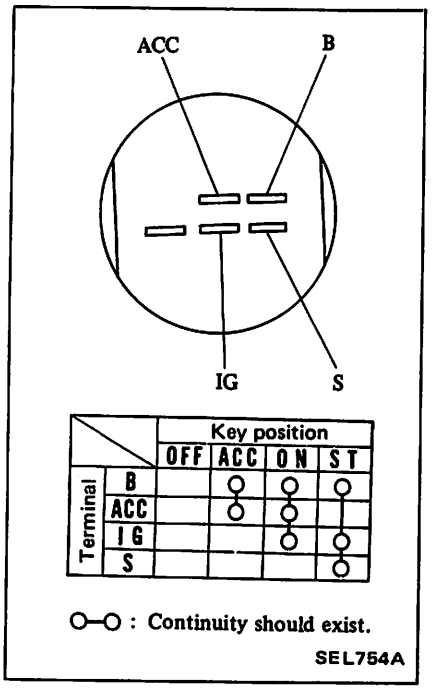

STANDARDIZED RELAY

Type	Outer view	Circuit	Symbols	Case color
1T	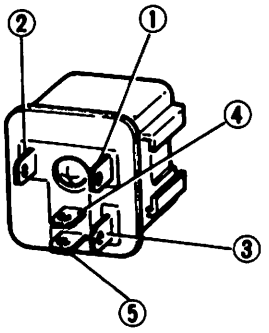	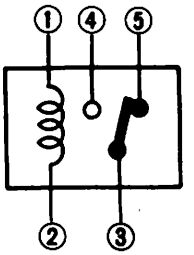	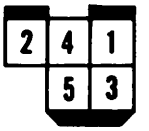	BLACK
1M	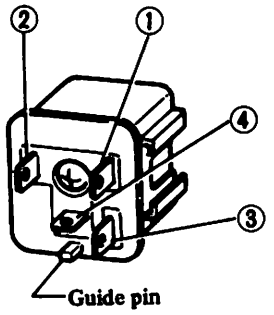	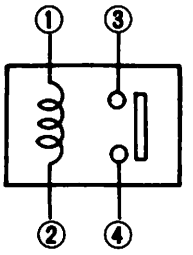	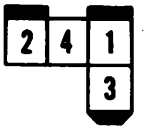	BLUE
2M	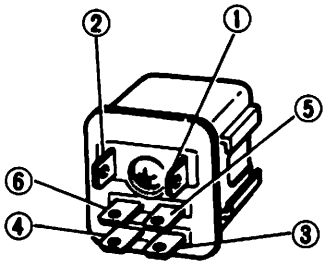	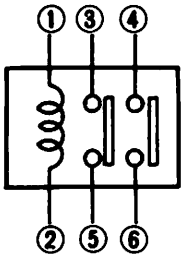	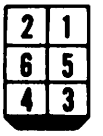	BROWN
1M·1B	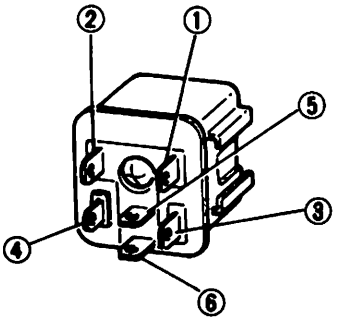	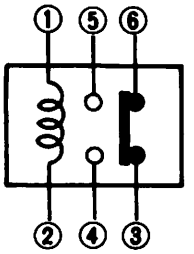	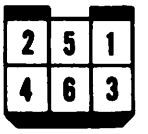	GRAY

SEL930A

CAUTION:

a. **If it becomes necessary to start the engine with a booster battery and jumper cables, use a 12-volt booster battery.**
b. **After connecting battery cables, ensure that they are tightly clamped to battery terminals for good contact.**
c. **Never add distilled water through the hole used to check specific gravity.**

How to Handle Battery

METHODS OF PREVENTING OVER-DISCHARGE

The following precautions must be taken to prevent over-discharging a battery.

- The battery surface (particularly its top) should always be kept clean and dry.

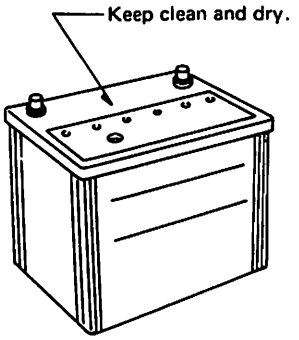

SEL711E

If the top surface of a battery is wet with electrolyte or water, leakage current will cause the battery to discharge. Always keep the battery clean and dry.

- When the vehicle is not going to be used over a long period of time, disconnect the negative battery terminal. (If the vehicle has an extended storage switch, turn it off.)

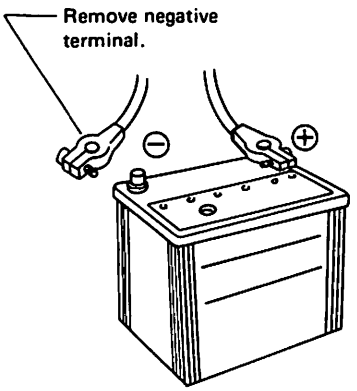

SEL712E

- Check the charge condition of the battery.

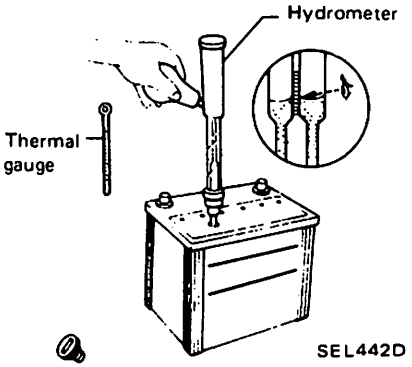

SEL442D

Periodically check the specific gravity of the electrolyte. Keep a close check on charge condition to prevent over-discharge.

CHECKING ELECTROLYTE LEVEL

WARNING:

Do not allow battery fluid to come in contact with skin, eyes, fabrics, or painted surfaces. After touching a battery, do not touch or rub your eyes until you have thoroughly washed your hands. If the acid contacts the eyes, skin or clothing, immediately flush with water for 15 minutes and seek medical attention.

Normally the battery does not require additional water. However, when the battery is used under severe conditions, adding distilled water may be necessary during the battery life.
To maintain serviceability, a perforated line has been added to the battery caution label.

How to Handle Battery (Cont'd)

- If the electrolyte level is low, remove label at perforated line.

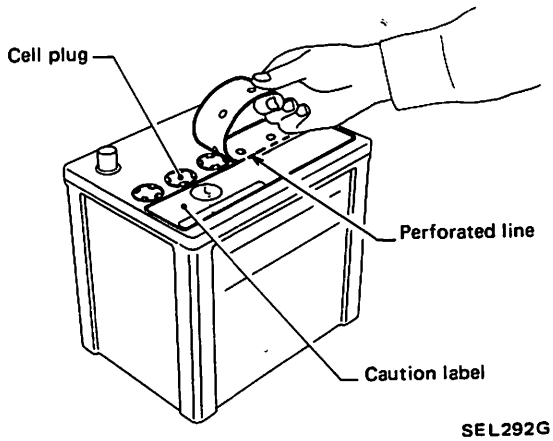

- Remove the cell plug using a suitable tool.
- Add distilled water up to the MAX level.

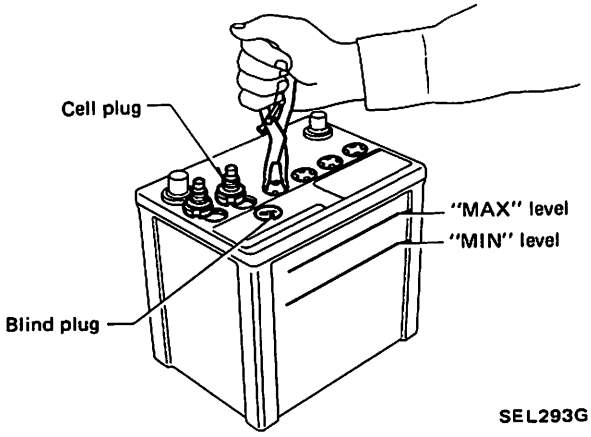

SULPHATION

When a battery has been left unattended for a long period of time and has a specific gravity of less than 1.100, it will be completely discharged, resulting in sulphation on the cell plates.

Compared with a battery discharged under normal conditions, the current flow in a "sulphated" battery is not as smooth although its voltage is high during the initial stage of charging, as shown in the following figure.

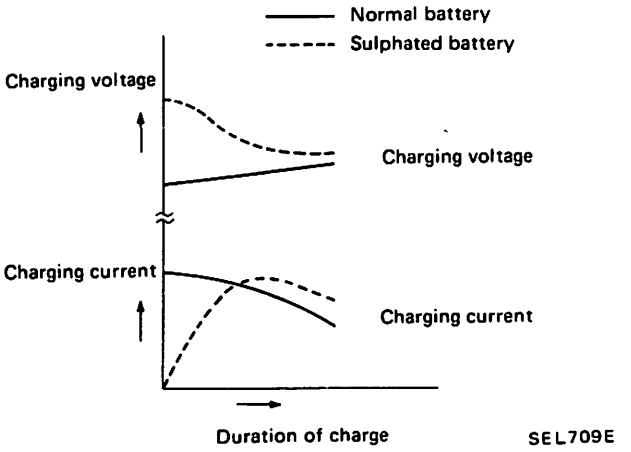

Specific Gravity Check

SPECIFIC GRAVITY CHECK

1. Read hydrometer and thermal gauge indications at eye level.

   Read top level with scale.

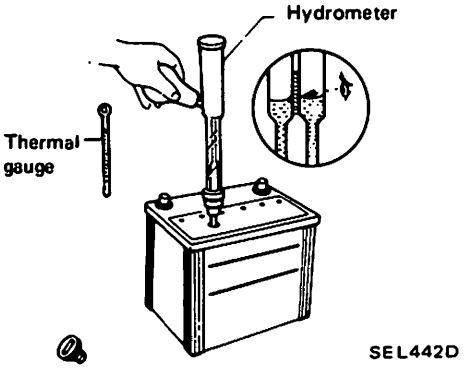

- When electrolyte level is too low, tilt battery case to raise it for easy measurement.

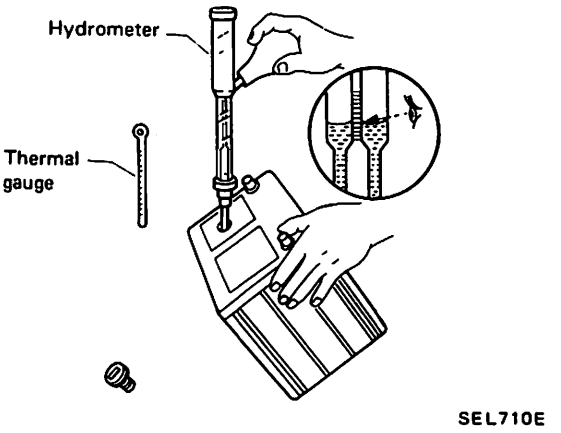

2. Convert into specific gravity at 20°C (68°F).

Example:

- When electrolyte temperature is 35°C (95°F) and specific gravity of electrolyte is 1.230, converted specific gravity at 20°C (68°F) is 1.240.
- When electrolyte temperature is 0°C (32°F) and specific gravity of electrolyte is 1.210, converted specific gravity at 20°C (68°F) is 1.196.

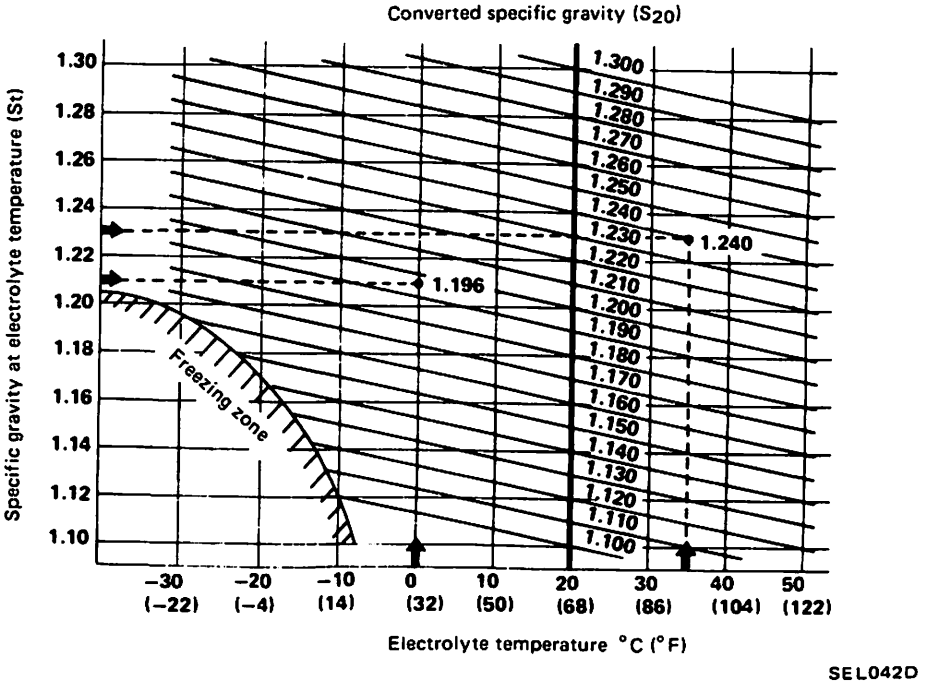

M.F. Battery Test and Charging Chart

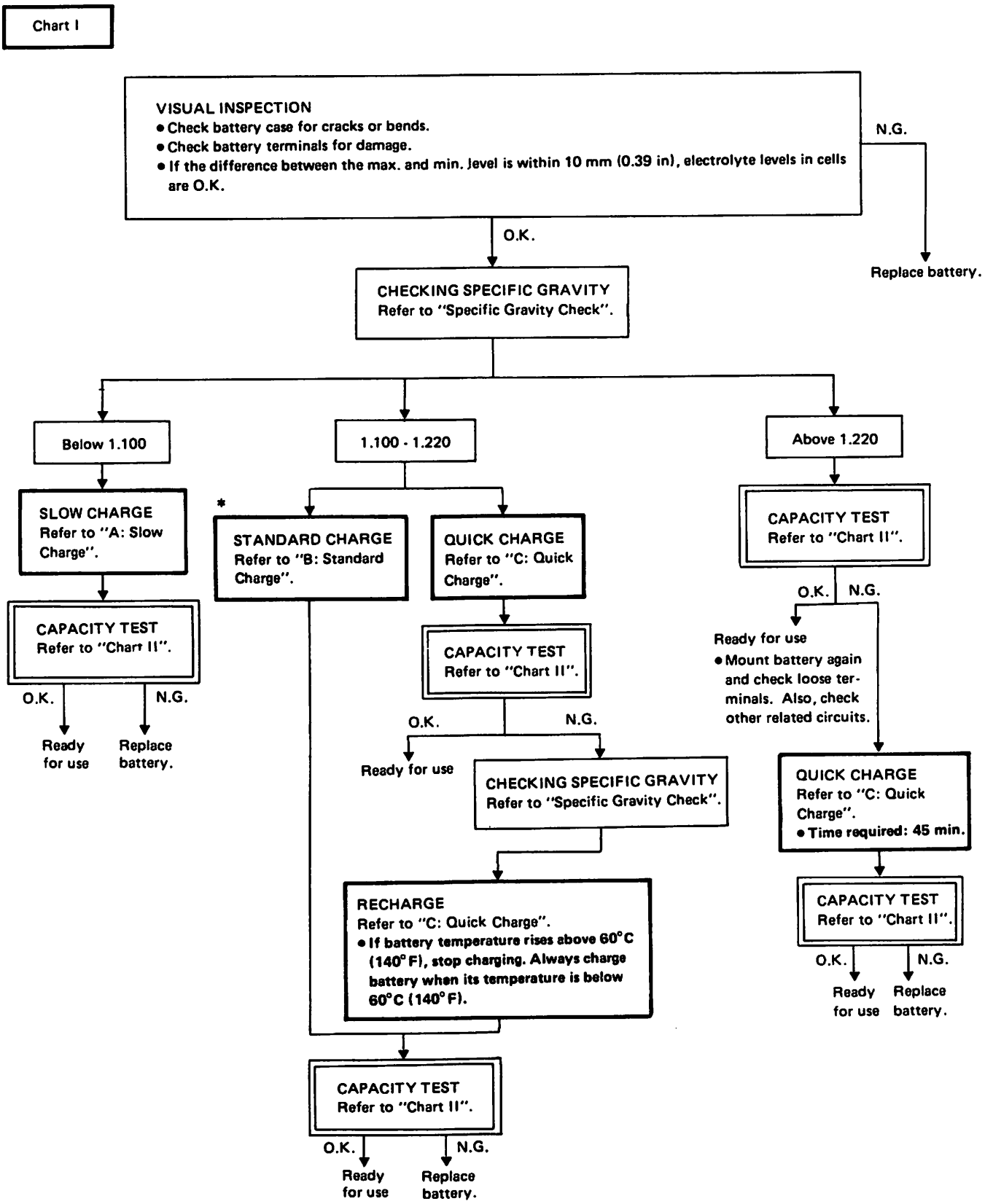

* "STANDARD CHARGE" is recommended in case that the vehicle is in storage after charging.

M.F. Battery Test and Charging Chart (Cont'd)

Chart II

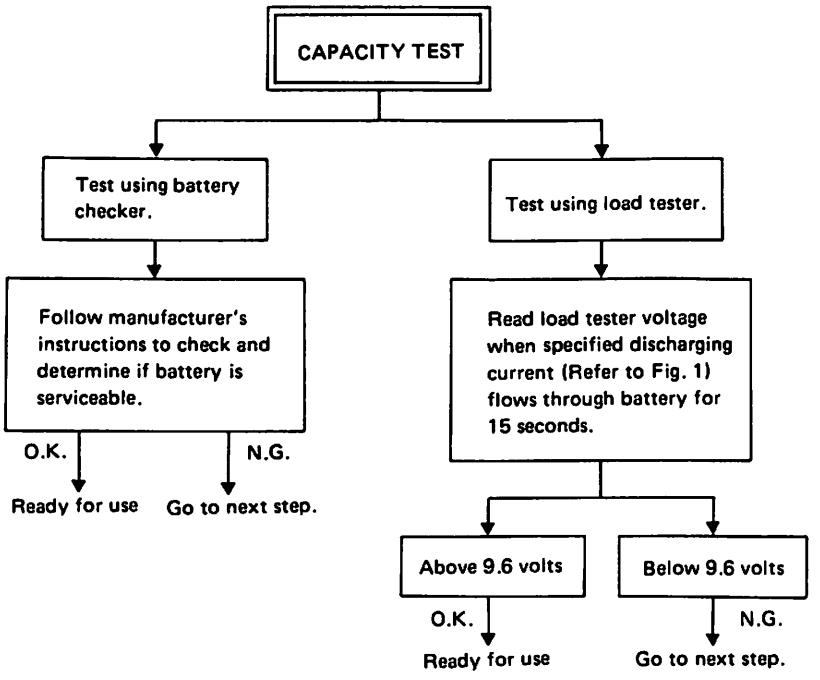

- Check battery type and determine the specified current using the following table.

Fig. 1 DISCHARGING CURRENT (Load tester)

Type	Current (A)
NS40S-MF	90 (A)
NS40ZA-MF	99 (A)
NS60-MF	135 (A)
N50S-MF	150 (A)
N60-MF 55D23-MF	180 (A)
NS70-MF	195 (A)
N70Z-MF	210 (A)
NX120-7-MF	240 (A)

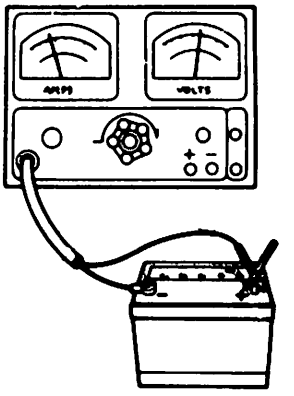

SEL697B

M.F. Battery Test and Charging Chart (Cont'd)

A: SLOW CHARGE

Determine initial charging current from specific gravity referring to Fig. 2.

- Charge battery.
- Check charging voltage 30 minutes after starting the battery charge.

12 to 15 volts — O.K. → Continue to charge for 12 hours.

Below 12 volts or above 15 volts — N.G. → Replace battery.

CHECKING SPECIFIC GRAVITY
Refer to "Specific Gravity Check".

Conduct additional charge as per Fig 3, if necessary.

Go to "CAPACITY TEST".

Fig. 2 INITIAL CHARGING CURRENT SETTING (Slow charge)

BATTERY TYPE / CONVERTED SPECIFIC GRAVITY	NS40S-MF NS40ZA-MF	NS60-MF	N60-MF 55D23-MF N50S-MF	NS70-MF	N70Z-MF	NX120-7-MF
Below 1.100	4.0 (A)	5.0 (A)	7.0 (A)	8.0 (A)	9.0 (A)	10.0 (A)

- Check battery type and determine the specified current using the following table.
- After starting charging, adjustment of charging current is not necessary.

Fig. 3 ADDITIONAL CHARGE (Slow charge)

Below 1.150	1.150 - 1.200	1.200 - 1.240	Above 1.240
Charge for 5 hours at initial charging current setting.	Charge for 4 hours at initial charging current setting.	Charge for 2 hours at initial charging current setting.	

Go to "CAPACITY TEST".

CAUTION:

a. Set charging current to value specified in Fig. 2. If charger is not capable of producing specified current value, set its charging current as close to that value as possible.

b. Keep battery away from open flame while it is being charged.

c. When connecting charger, connect leads first, then turn on charger. Do not turn on charger first, as this may cause a spark.

d. If battery temperature rises above 60°C (140°F), stop charging. Always charge battery when its temperature is below 60°C (140°F).

M.F. Battery Test and Charging Chart (Cont'd)

B: STANDARD CHARGE

Determine initial charging current from specific gravity, referring to Fig. 4.

↓

Charge battery for 8 hours.

↓

CHECKING SPECIFIC GRAVITY
Refer to "Specific Gravity Check".

↓

Conduct additional charge as per Fig. 5, if necessary.

↓

Go to "CAPACITY TEST".

Fig. 4 INITIAL CHARGING CURRENT SETTING (Standard charge)

BATTERY TYPE / CONVERTED SPECIFIC GRAVITY	NS40S-MF NS40ZA-MF	NS60-MF	N60-MF 55D23-MF N50S-MF	NS70-MF	N70Z-MF	NX120-7-MF
1.100 - 1.130	4.0 (A)	5.0 (A)	6.0 (A)	7.0 (A)	8.0 (A)	9.0 (A)
1.130 - 1.160	3.0 (A)	4.0 (A)	5.0 (A)	6.0 (A)	7.0 (A)	8.0 (A)
1.160 - 1.190	2.0 (A)	3.0 (A)	4.0 (A)	5.0 (A)	6.0 (A)	7.0 (A)
1.190 - 1.220	2.0 (A)	2.0 (A)	3.0 (A)	4.0 (A)	5.0 (A)	5.0 (A)

- Check battery type and determine the specified current using the following table.
- After starting charging, adjustment of charging current is not necessary.

Fig. 5 ADDITIONAL CHARGE (Standard charge)

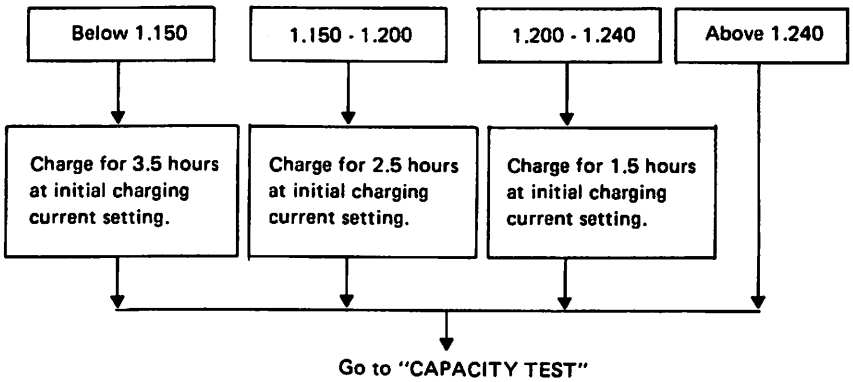

CAUTION:

a. Do not use standard charge method on a battery whose specific gravity is less than 1.100.
b. Set charging current to value specified in Fig. 4. If charger is not capable of producing specified current value, set its charging current as close to that value as possible.
c. Keep battery away from open flame while it is being charged.
d. When connecting charger, connect leads first, then turn on charger. Do not turn on charger first, as this may cause a spark.
e. If battery temperature rises above 60°C (140°F), stop charging. Always charge battery when its temperature is below 60°C (140°F).

M.F. Battery Test and Charging Chart (Cont'd)

C: QUICK CHARGE

Determine initial charging current setting and charging time from specific gravity, referring to Fig. 6.

↓

Charge battery

↓

Go to "CAPACITY TEST"

Fig. 6 INITIAL CHARGING CURRENT SETTING AND CHARGING TIME (Quick charge)

BATTERY TYPE / CURRENT [A] / CONVERTED SPECIFIC GRAVITY	NS40S -MF NS40ZA -MF	NS60-MF N50S-MF	N60-MF 55D23-MF NS70-MF	N70Z-MF NX120-7 -MF
	10 (A)	15 (A)	20 (A)	30 (A)
1.100 - 1.130	2.5 hours			
1.130 - 1.160	2.0 hours			
1.160 - 1.190	1.5 hours			
1.190 - 1.220	1.0 hours			
Above 1.220	0.75 hours (45 min.)			

- Check battery type and determine the specified current using the following table.
- After starting charging, adjustment of charging current is not necessary.

CAUTION:

a. Do not use quick charge method on a battery whose specific gravity is less than 1.100.

b. Set initial charging current to value specified in Fig. 6. If charger is not capable of producing specified current value, set its charging current as close to that value as possible.

c. Keep battery away from open flame while it is being charged.

d. When connecting charger, connect leads first, then turn on charger. Do not turn on charger first, as this may cause a spark.

e. Be careful of a rise in battery temperature because a large current flow is required during quick-charge operation.
If battery temperature rises above 60°C (140°F), stop charging. Always charge battery when its temperature is below 60°C (140°F).

f. Do not exceed the charging time specified in Fig. 6. Because if the battery is charged over the charging time, it can cause deterioration of the battery.

Service Data and Specifications (S.D.S.)

Type		55D23R-MF	NS70-MF
		Maintenance-free	
Applied model		Gasoline engine model	
		U.S.A.	U.S.A. option and Canada
Capacity	V-AH	12-60	12-65

Type		NX120-7-MF
		Maintenance-free
Applied model		Diesel engine model
Capacity	V-AH	12-80

STARTING SYSTEM

CAUTION: Before starting to work, be sure to turn ignition switch "OFF" and then disconnect battery ground cable.

SCHEMATIC (Gasoline engine models)

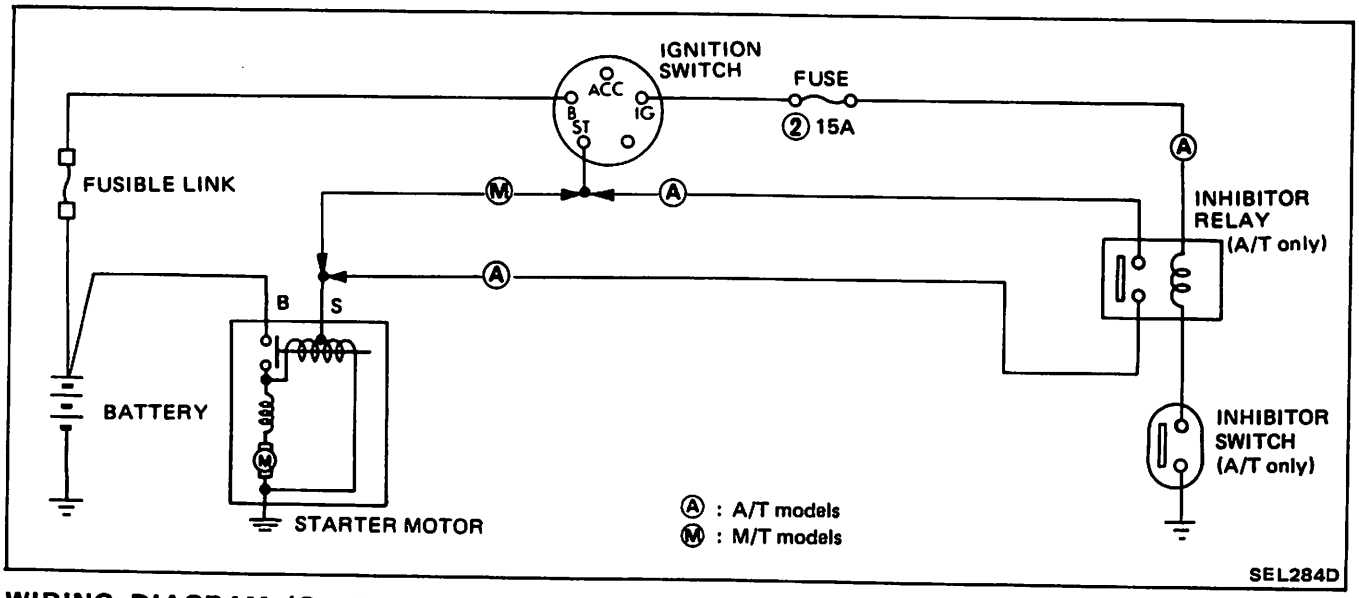

WIRING DIAGRAM (Gasoline engine models)

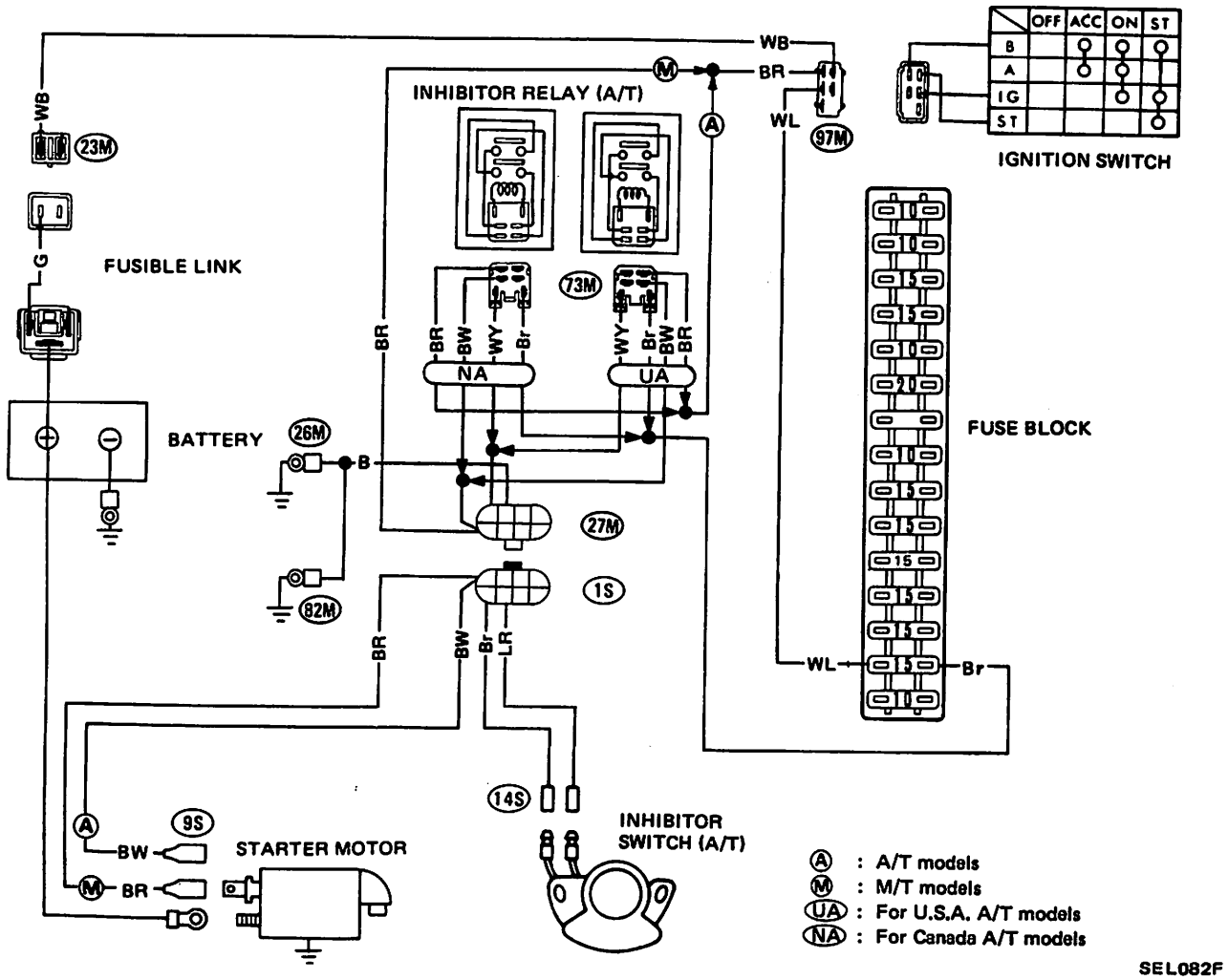

SCHEMATIC (Diesel engine models)

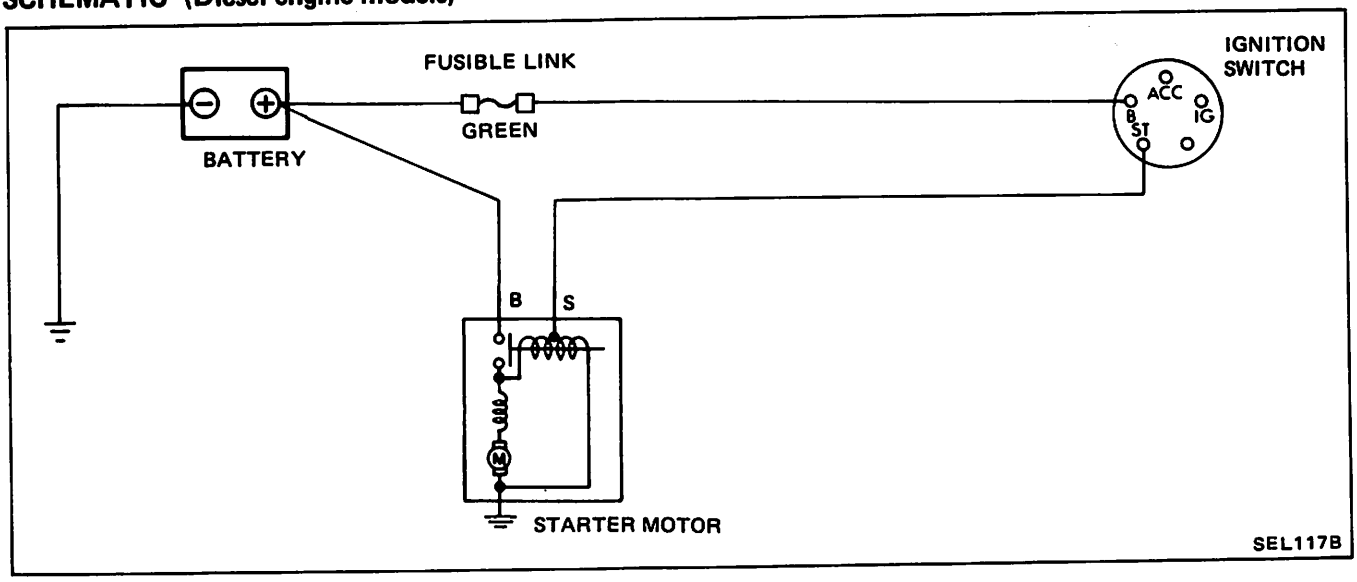

WIRING DIAGRAM (Diesel engine models)

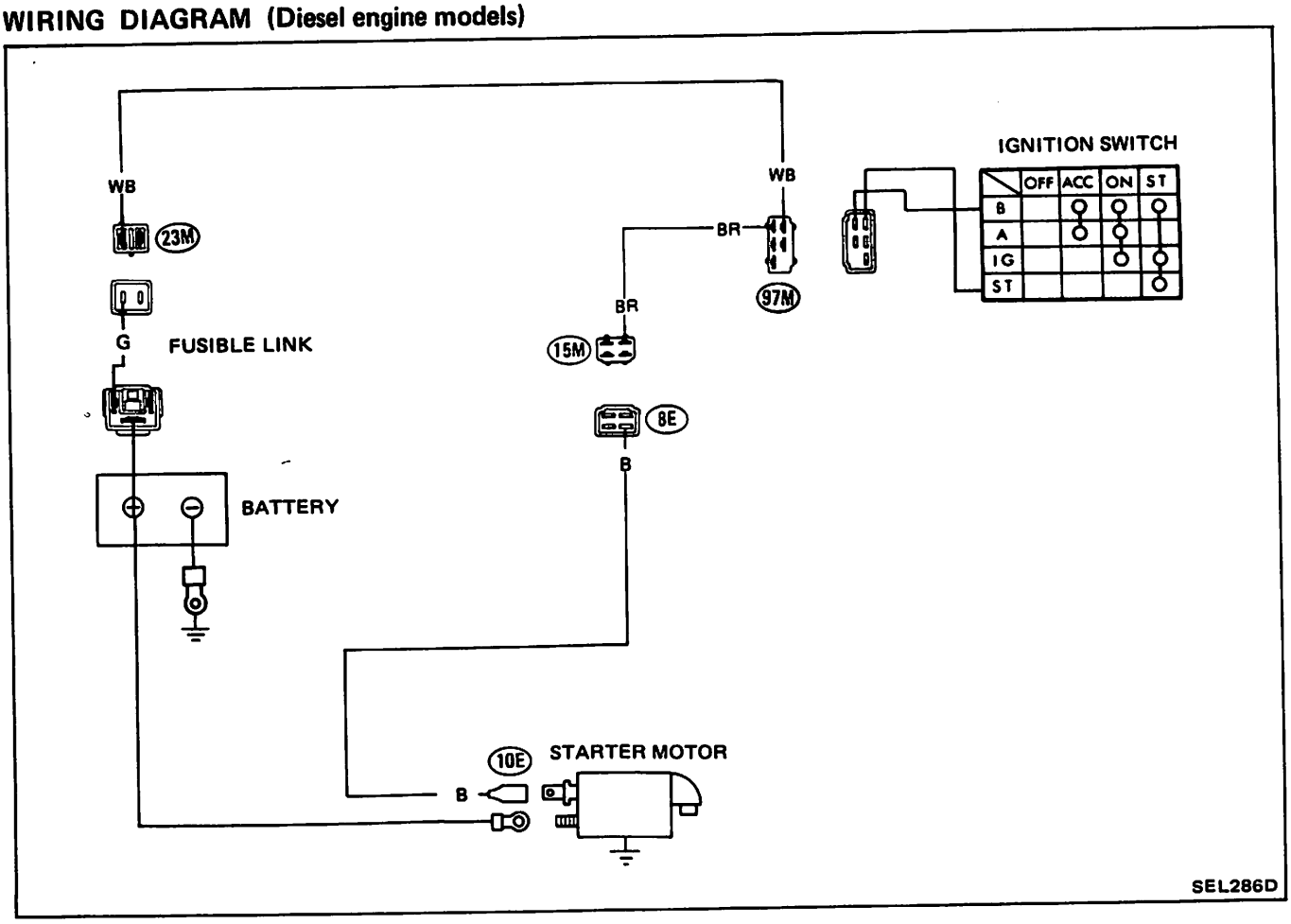

STARTING SYSTEM TROUBLE-SHOOTING

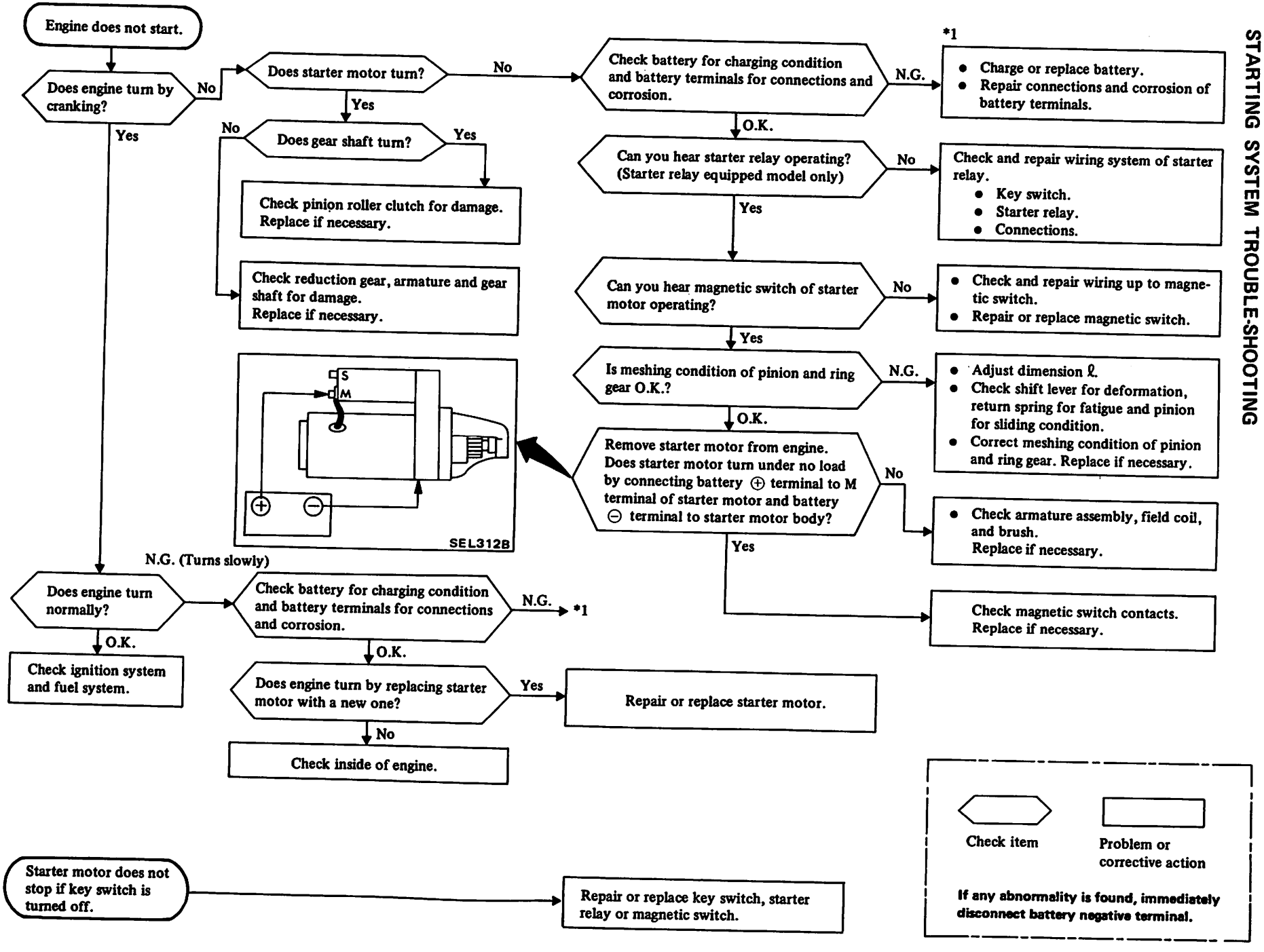

STARTER MOTOR

S114-295, -348, -426 and -427 (Gasoline engine model for U.S.A.)

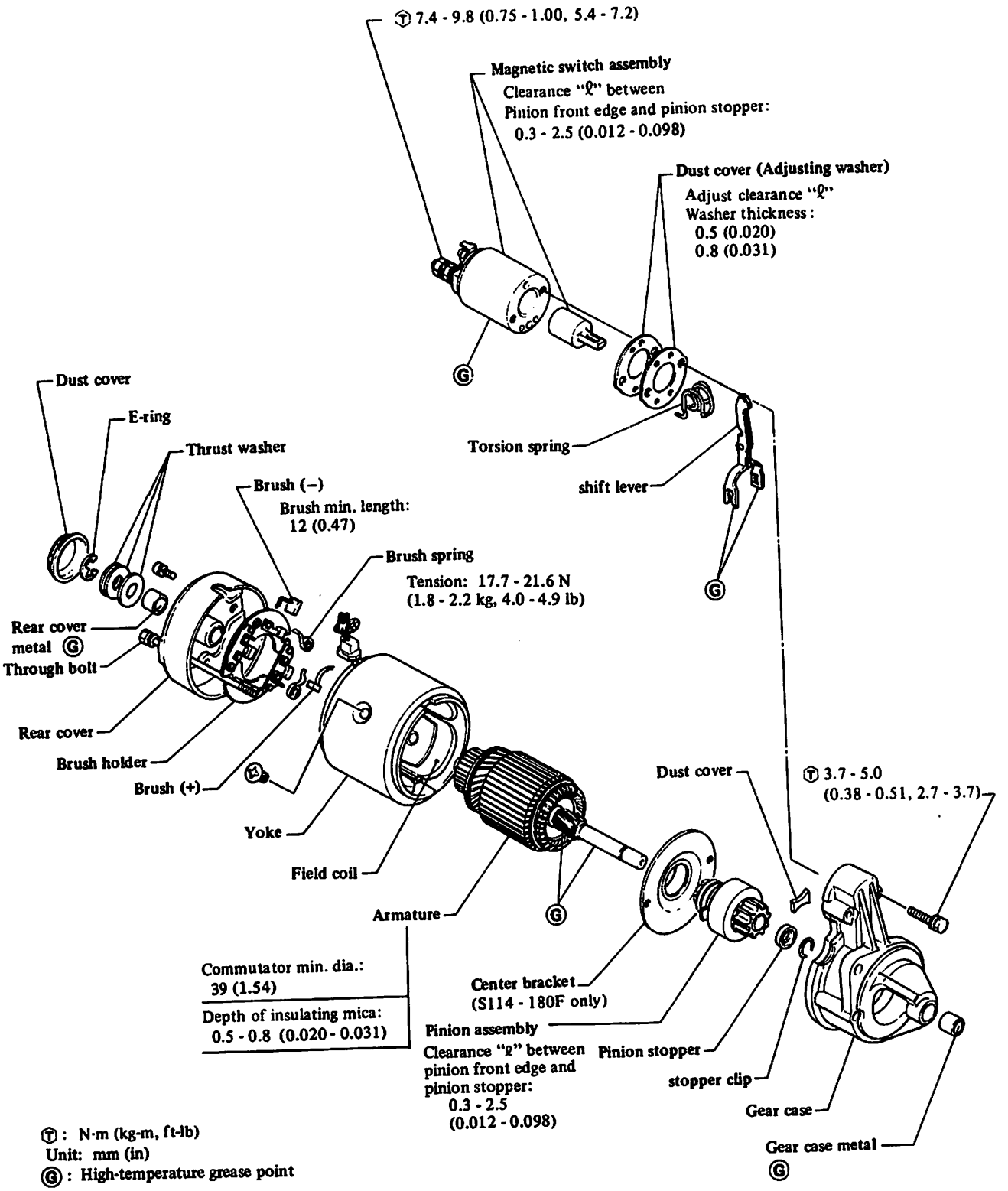

SEL536C

S114-304 (Gasoline engine model for Canada)

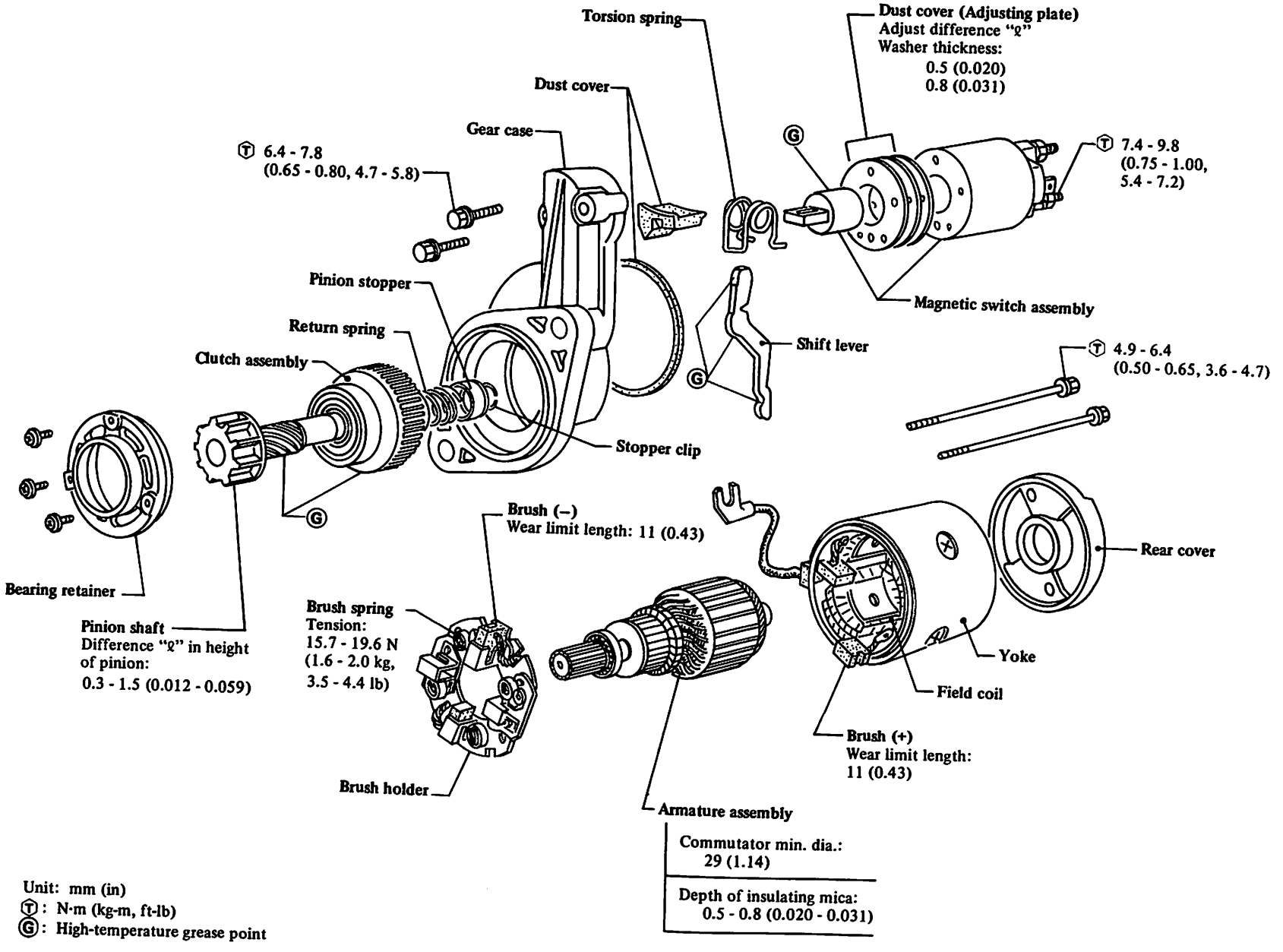

Unit: mm (in)
Ⓣ: N·m (kg-m, ft-lb)
Ⓖ: High-temperature grease point

SEL557B

S13-45B (Diesel engine model)

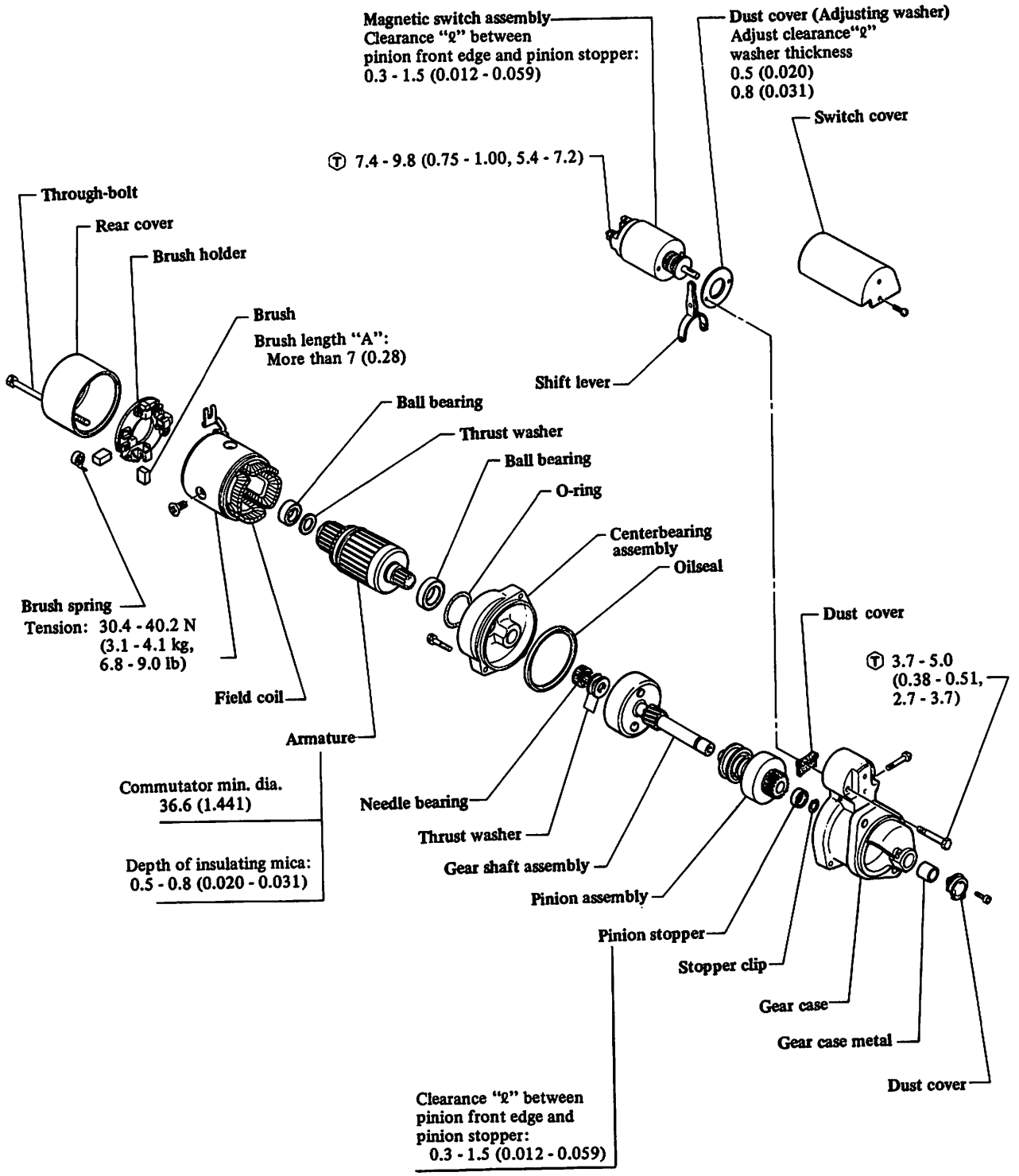

Ⓣ : N·m (kg-m, ft-lb)
Unit: mm (in)

SEL120B

DISASSEMBLY

S114-295, -348, -426 and -427

1. Remove magnetic switch.

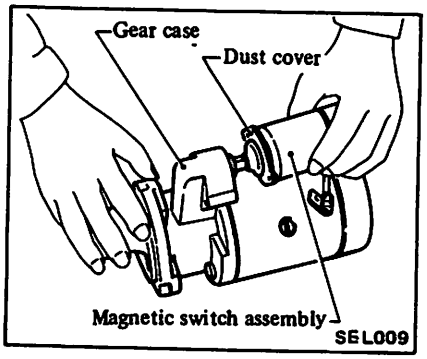

2. Remove rear cover.
(1) Remove dust cover, E-ring and thrust washer(s).
(2) Remove brush holder setscrews.
(3) Remove through-bolts.

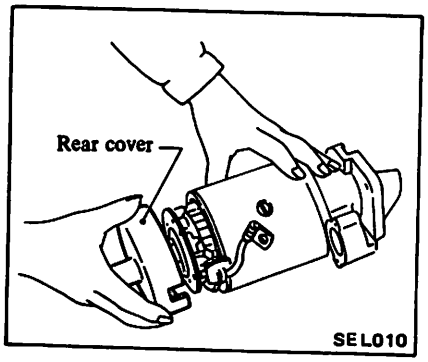

3. Lift up brush springs.

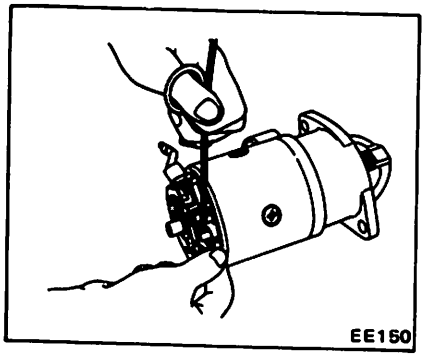

4. Remove brush holder

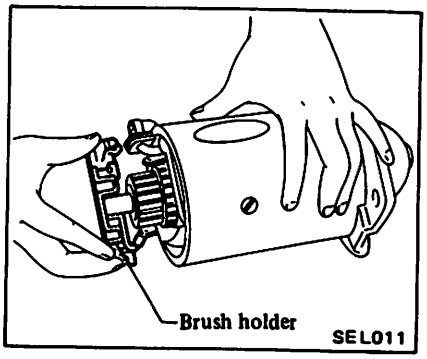

5. Remove yoke.

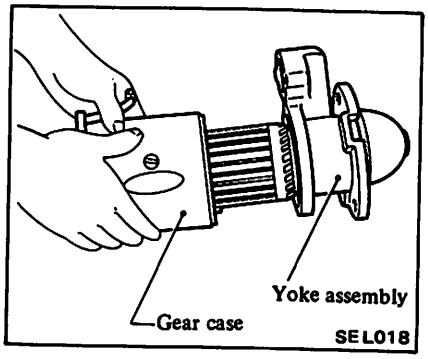

6. Withdraw armature and shift lever.

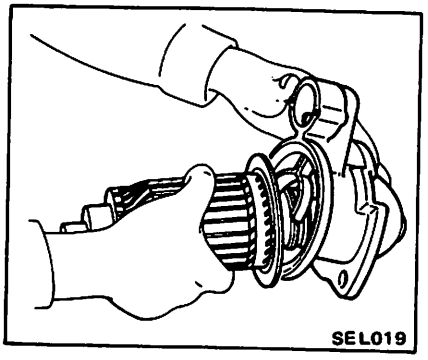

7. Remove overrunning clutch.
- Remove pinion stopper clip, pushing pinion stopper toward clutch side.

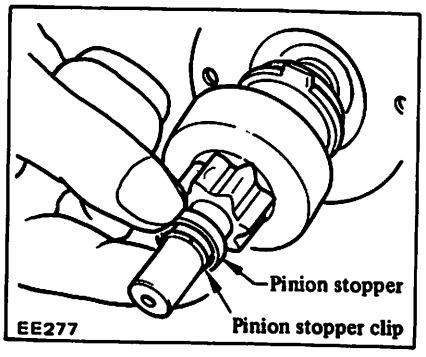

S114-304

1. Loosen nut from "M" terminal and remove lead wire.

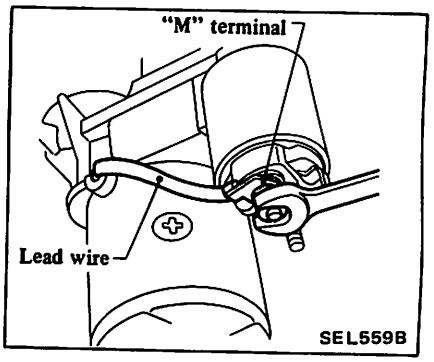

2. Remove through-bolts.
3. Draw out rear cover and motor assembly.

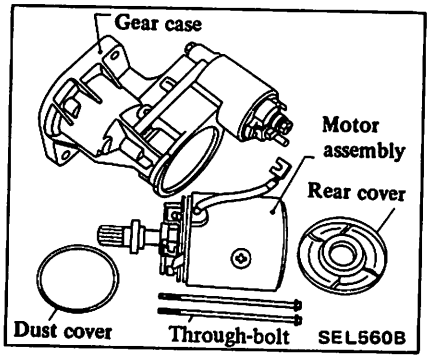

4. Remove brush holder.
(1) Lift brush spring and hold it against side surface of brush (–). This causes the brush (–) to separate from commutator.

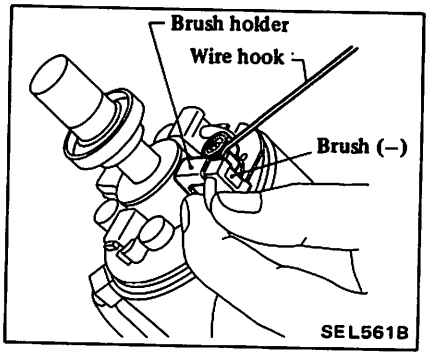

(2) Remove brush (+) from brush holder by lifting the brush spring.

5. Draw out armature assembly from yoke.

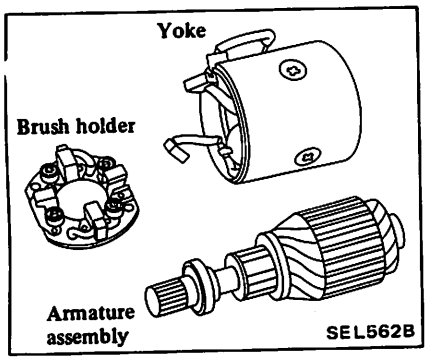

6. Remove magnetic switch assembly from gear case.

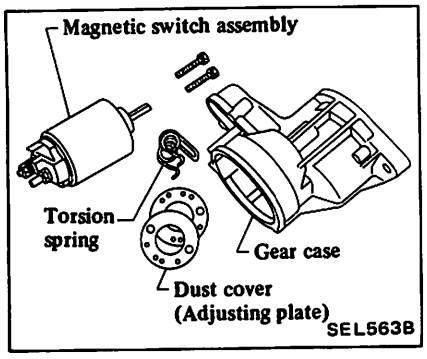

7. Remove dust cover and shift lever.

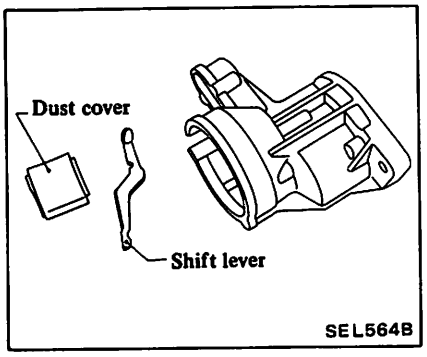

8. Remove bearing retainer and draw out pinion assembly.

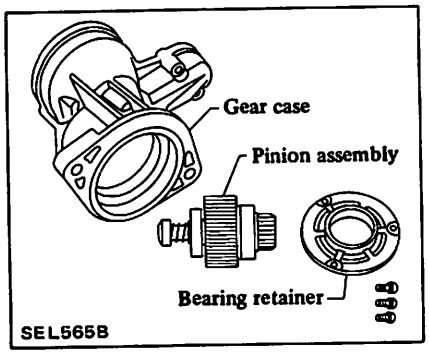

9. Remove pinion stopper clip.
Move pinion stopper toward pinion, and remove pinion stopper clip with a flat-bladed screwdriver.

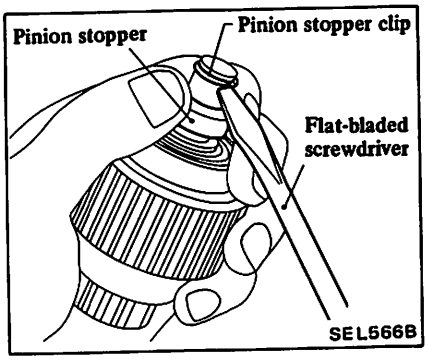

10. Remove pinion shaft from clutch assembly.

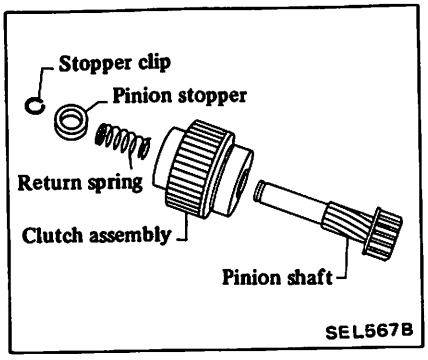

S13-45B

1. Remove switch cover.
2. Remove nut from terminal M and separate lead wire.

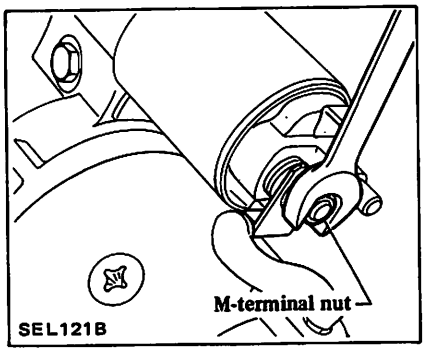

3. Remove bolts.

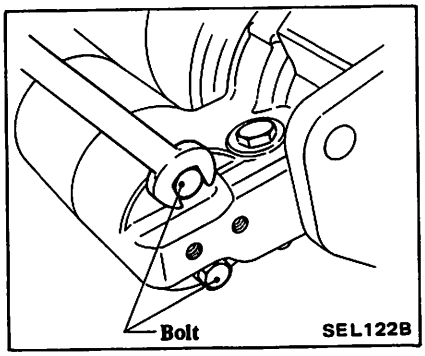

4. Remove magnetic switch assembly and dust cover.

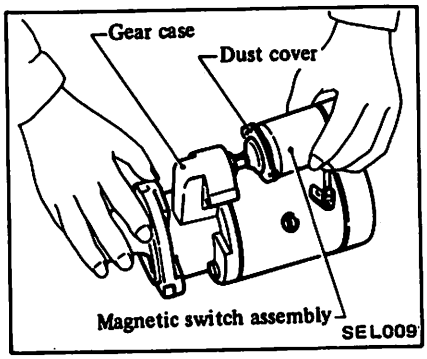

5. Remove screws and through-bolts.

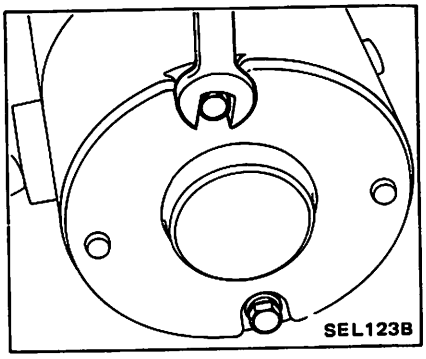

6. Remove rear cover assembly by prying carefully with screwdriver.

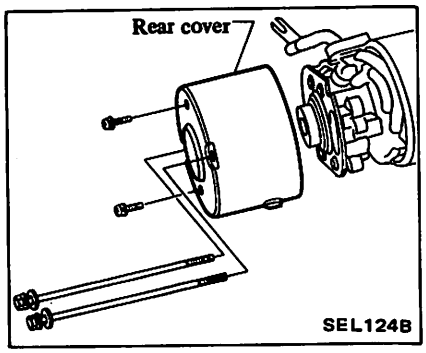

7. Lift up brush spring with wire and separate brush.

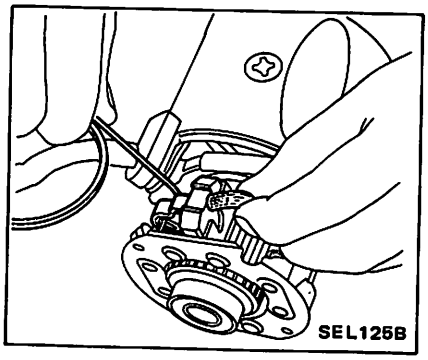

8. Remove brush holder and separate yoke, armature and center bracket.

CAUTION:
Be careful not to knock brush, commutator or coil against any adjacent part.

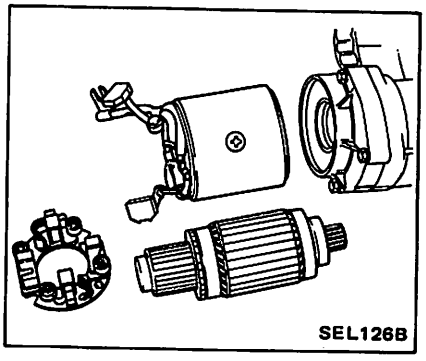

9. Separate gear case and center bearing.

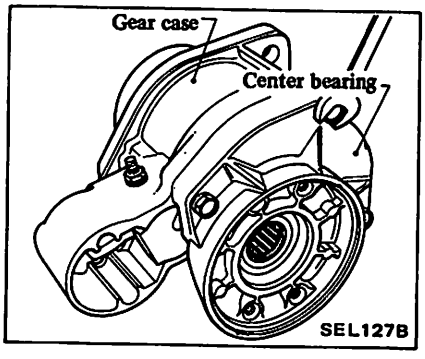

10. Remove shift lever pin.

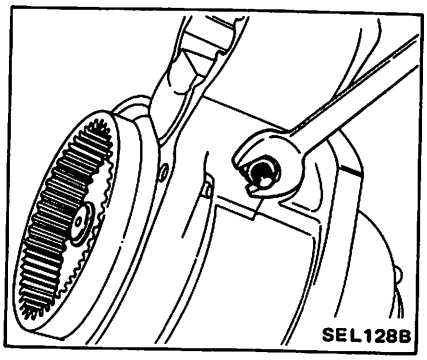

11. Remove dust cover, shift lever and gear shaft with pinion assembly.

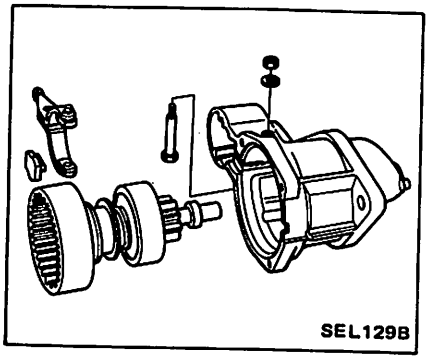

12. Remove dust cover from tip of gear case.

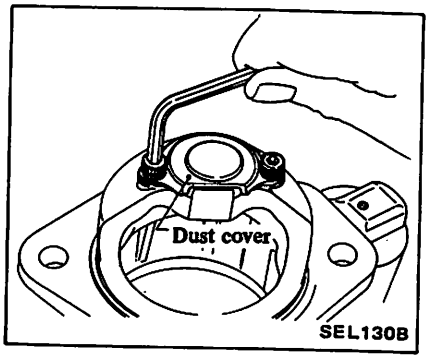

13. Slide pinion stopper to pinion side. Remove pinion stopper clip and detach pinion assembly from gear shaft.

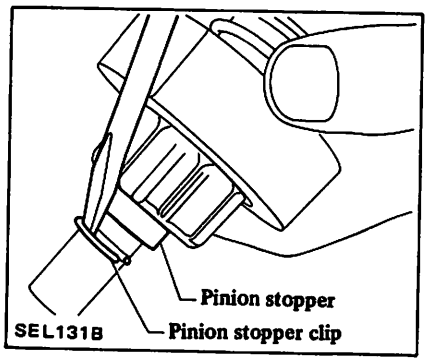

INSPECTION

Armature assembly

1. Check commutator surface.
- Rough ... Sand lightly with No. 500 sandpaper.

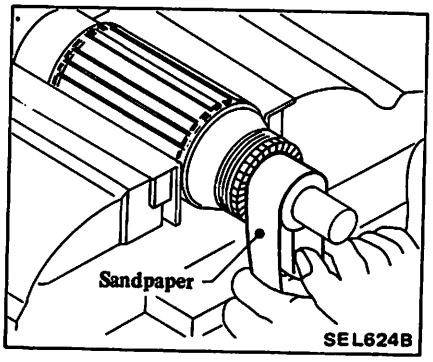

2. Check diameter of commutator.
Commutator minimum diameter:
- Less than specified value ... Replace.

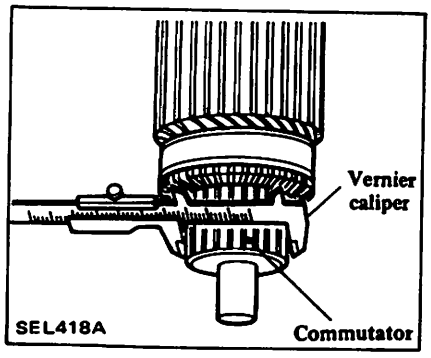

3. Check depth of insulating mica from commutator surface.
- Less than 0.2 mm (0.008 in) ... Undercut to 0.5 to 0.8 mm (0.020 to 0.031 in).

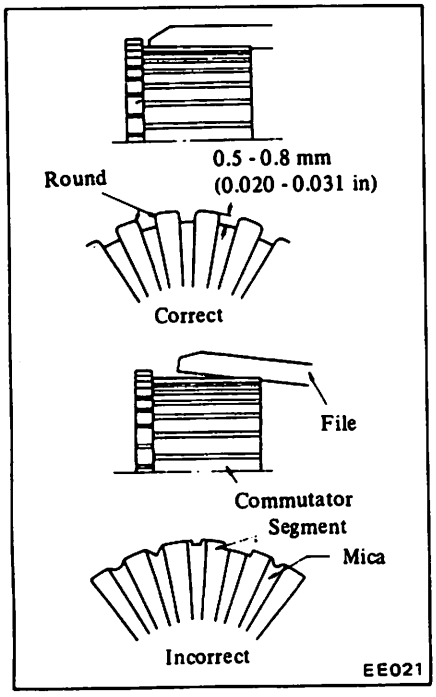

4. Continuity test (between two segments side by side).

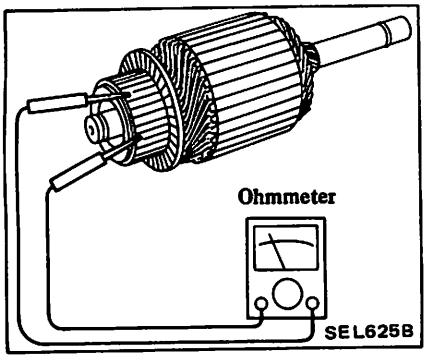

- No continuity ... Replace.

5. Insulation test (between each commutator bar and shaft).

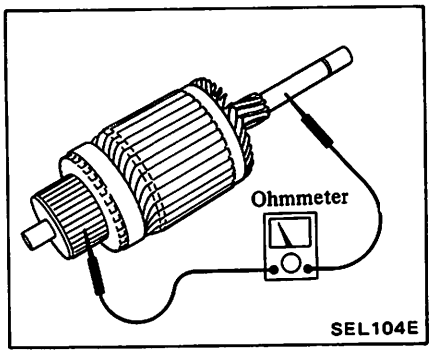

- Continuity exists ... Replace.

Field coil

1. Continuity test (between field coil positive terminal and positive brushes).

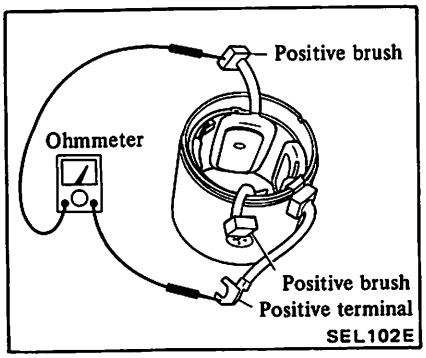

- No continuity ... Replace field coil.

2. Ground test (between field coil positive terminal and yoke).

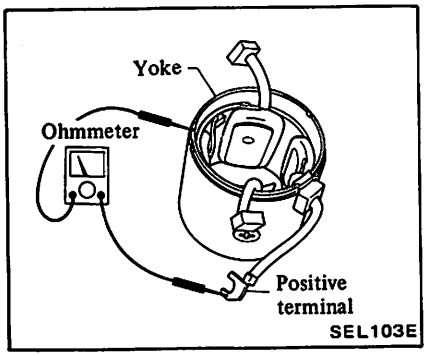

- Continuity exists ... Replace field coil.

Brush

Check wear of brush.

Wear limit length:
Refer to S.D.S.

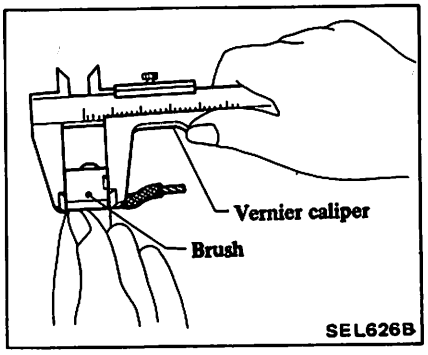

- Excessive wear ... Replace.

Brush holder

1. Perform insulation test between brush holder (positive side) and its base (negative side).

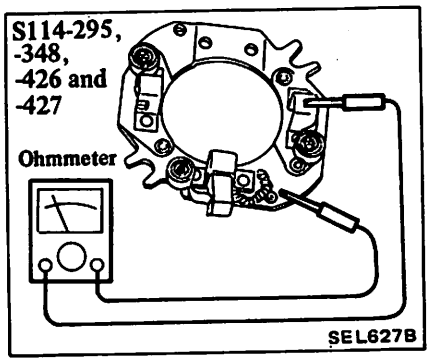

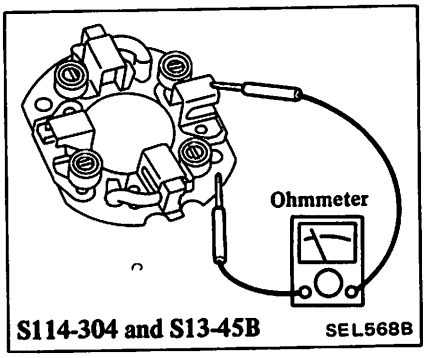

- Continuity exists ... Replace.

2. Check brush holder to see if it moves smoothly.
- If brush holder is bent, replace it; if sliding surface is dirty, clean.

Magnetic switch

1. Continuity test (between "S" terminal and switch body).

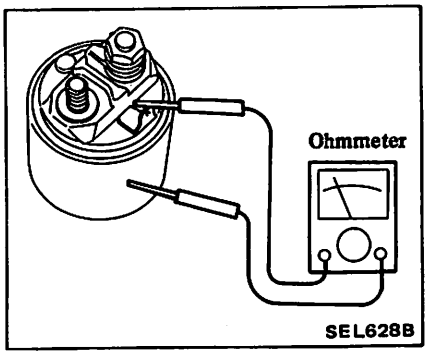

- No continuity ... Replace.

2. Continuity test (between "S" terminal and "M" terminal).

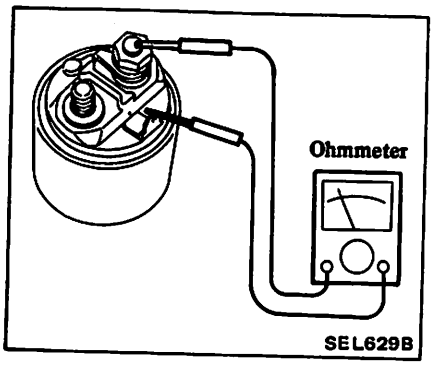

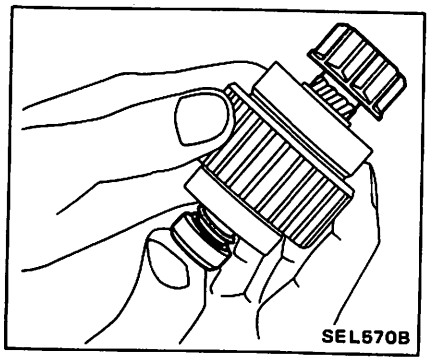

- If it is hard to move, apply grease or, if necessary, replace.

3. Inspect pinion teeth.
- If pinion teeth are worn or damaged, replace pinion.
  (Also check for condition of ring gear teeth.)

4. Inspect ball bearing (S114-304 unit only).
   Spin outer race of ball bearing to ensure that it turns smoothly without binding.

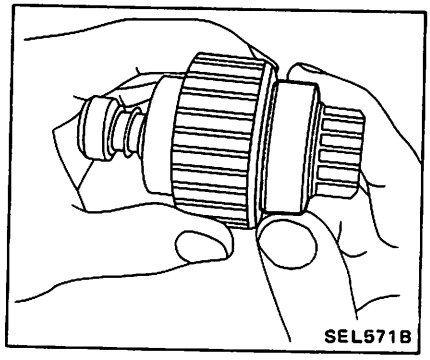

- Abnormal resistance ... Replace.

Pinion assembly

1. Check clutch.
Check pinion to see that it locks properly when turned in one direction and rotates smoothly in the opposite direction.

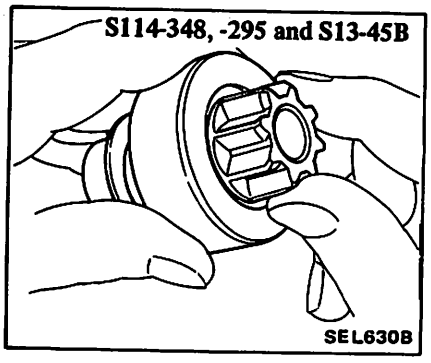

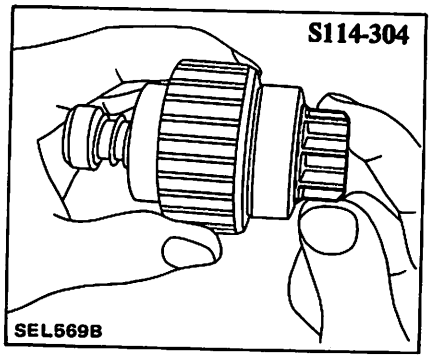

- Pinion does not lock or locks in both directions or unusual resistance is evident ... Replace.

2. Check pinion movement (S114-304 unit only).
   Check pinion to see if it moves smoothly.

ASSEMBLY

To assemble, reverse order of disassembly. Note the following:

a. Apply grease to portions indicated in table below.

	S114-295, -348, -426 and -427	S114-304 and S13-45B
Grease point.	• Rear cover metal • Gear case metal	• Reduction gear • Rear cover metal • Gear case metal
	• Frictional surface of pinion • Functional area of shift lever • Sliding surface of magnetic switch plunger	

b. Check pinion to see if its protruded length is correct.

S114-295, -348, -426, -427 and S13-45B

With pinion forced out by magnetic switch, push pinion back to remove slack and measure clearance "ℓ" between the front edge of the pinion and the pinion stopper.

Clearance "ℓ":
Refer to S.D.S.

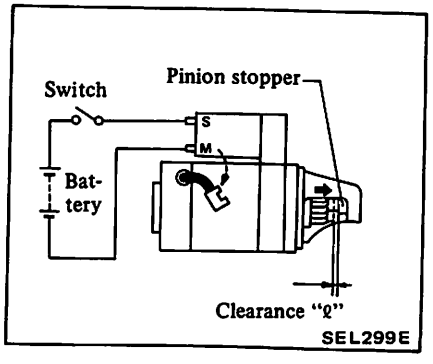

- Not in the specified value ... Adjust by dust cover (adjusting plate).

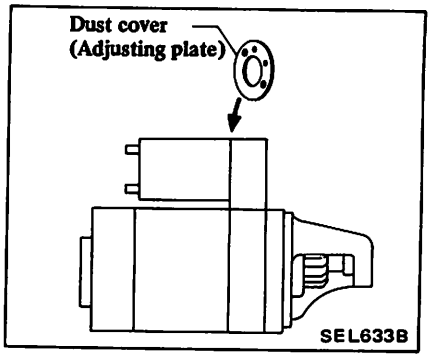

S114-304

Compare difference "ℓ" in height of pinion when it is pushed out with magnetic switch energized and when it is pulled out by hand until it touches stopper.

Difference "ℓ":
Refer to S.D.S.

- Not in the specified value ... Adjust by dust cover (adjusting plate).

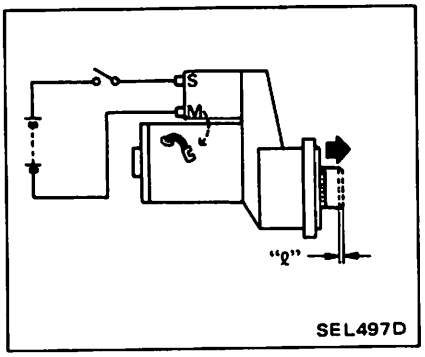

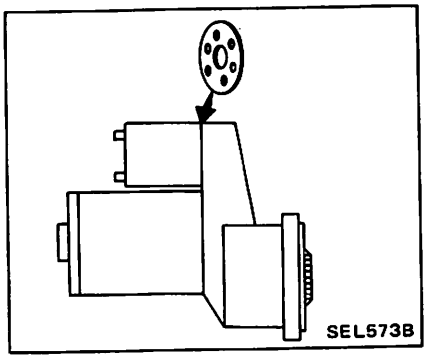

SERVICE DATA AND SPECIFICATIONS (S.D.S.)

STARTER MOTOR

Type		S114-295	S114-427	S114-348	S114-426	S114-304	S13-45B
		Non-reduction gear type				Reduction gear type	
Applied model		Gasoline engine model					Diesel engine model
		U.S.A.				Canada (A/T, M/T)	
		California	Except California	California	Except California		
		A/T		M/T			
System voltage	V	12					
No load Terminal voltage	V	11.5				11	12
Current	A	Less than 60				Less than 100	Less than 150
Revolution	rpm	More than 6,000		More than 7,000		More than 3,900	More than 3,500
Outer diameter of commutator	mm (in)	More than 39 (1.54)				More than 29 (1.14)	More than 36.6 (1.441)
Minimum length of brush	mm (in)	12 (0.47)				11 (0.43)	7 (0.28)
Brush spring tension	N (kg, lb)	17.7 - 21.6 (1.8 - 2.2, 4.0 - 4.9)				15.7 - 19.6 (1.6 - 2.0, 3.5 - 4.4)	30.4 - 40.2 (3.1 - 4.1, 6.8 - 9.0)
Clearance between bearing metal and armature shaft	mm (in)	Less than 0.2 (0.008)				–	Less than 0.2 (0.008)
Clearance "ℓ" between pinion front edge and pinion stopper	mm (in)	0.3 - 2.5 (0.012 - 0.098)				–	0.3 - 1.5 (0.012 - 0.059)
Difference "ℓ" in height of pinion	mm (in)	–		–		0.3 - 1.5 (0.012 - 0.059)	–

CHARGING SYSTEM

CAUTION: Before starting to work, be sure to turn ignition switch "OFF" and then disconnect battery ground cable.

SCHEMATIC (Gasoline engine models)

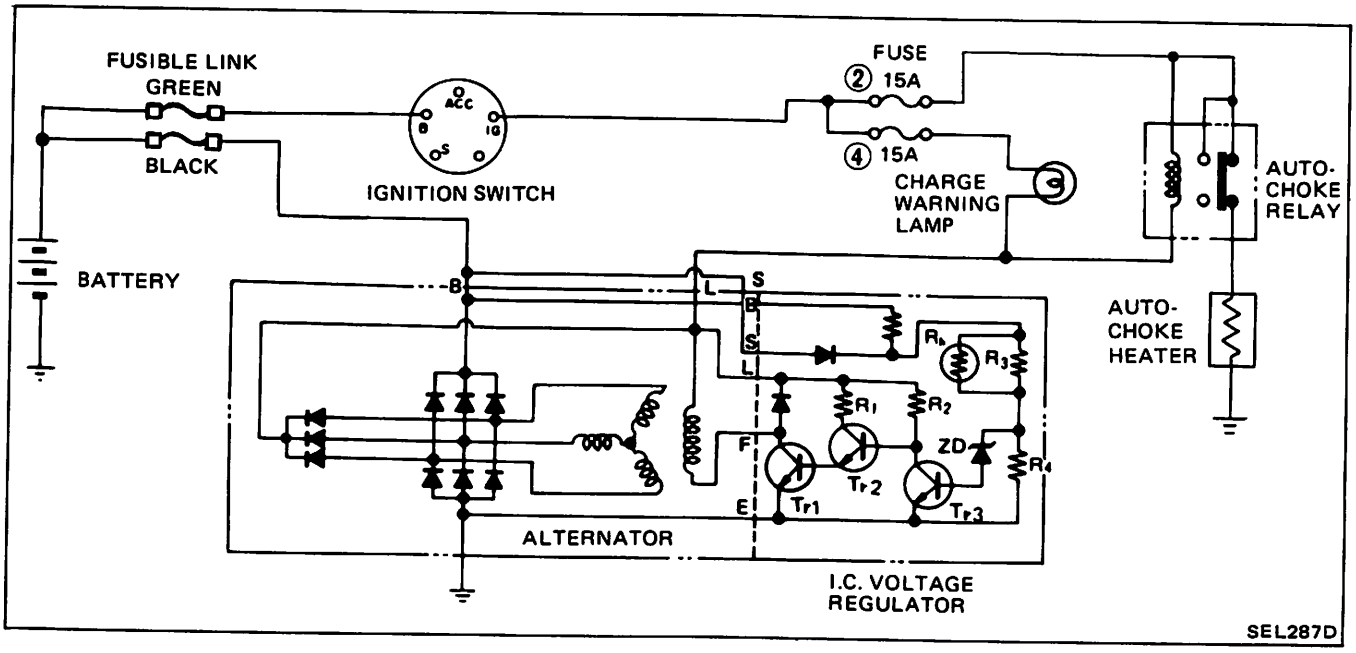

WIRING DIAGRAM (Gasoline engine models)

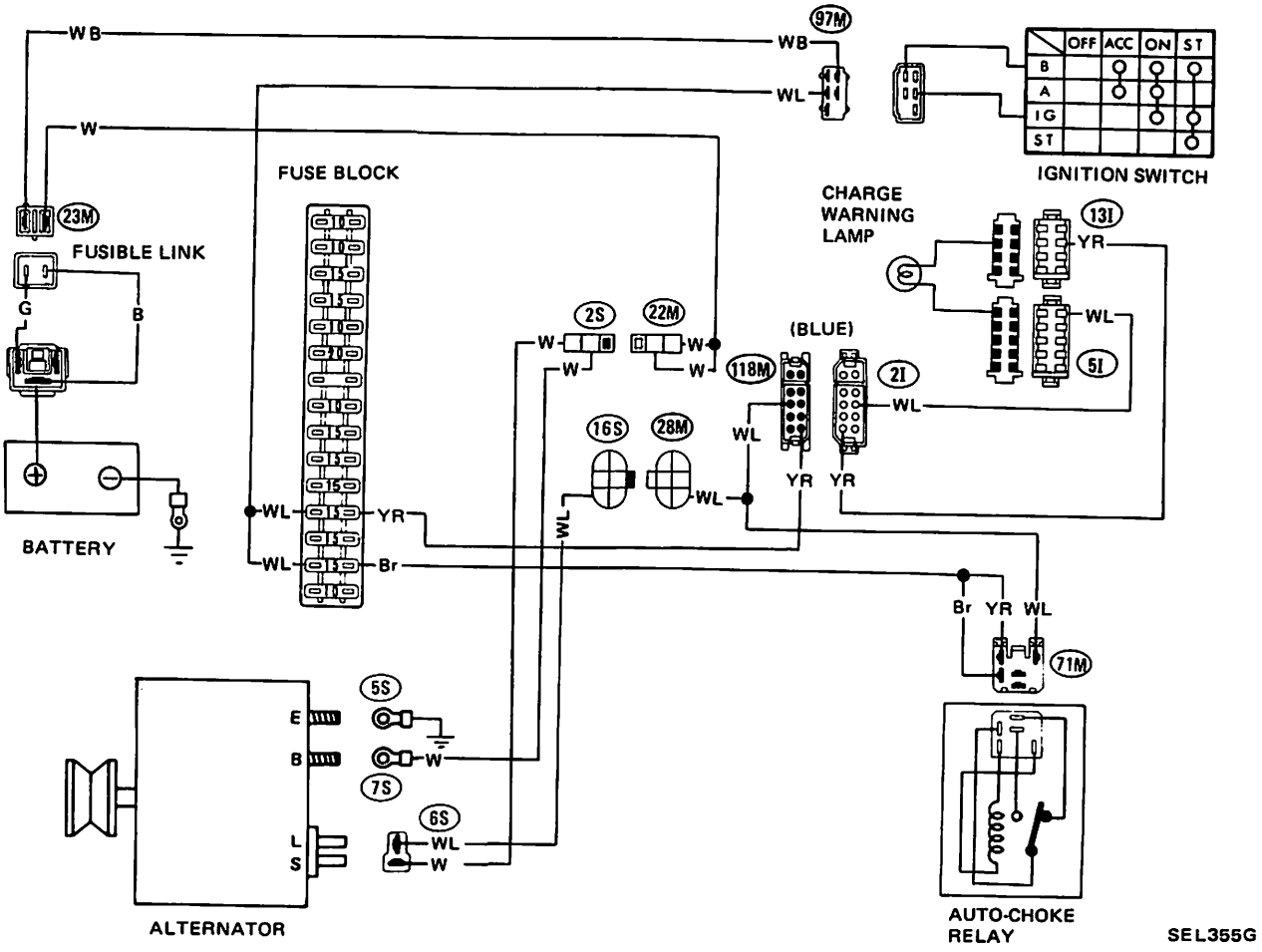

SCHEMATIC (Diesel engine models)

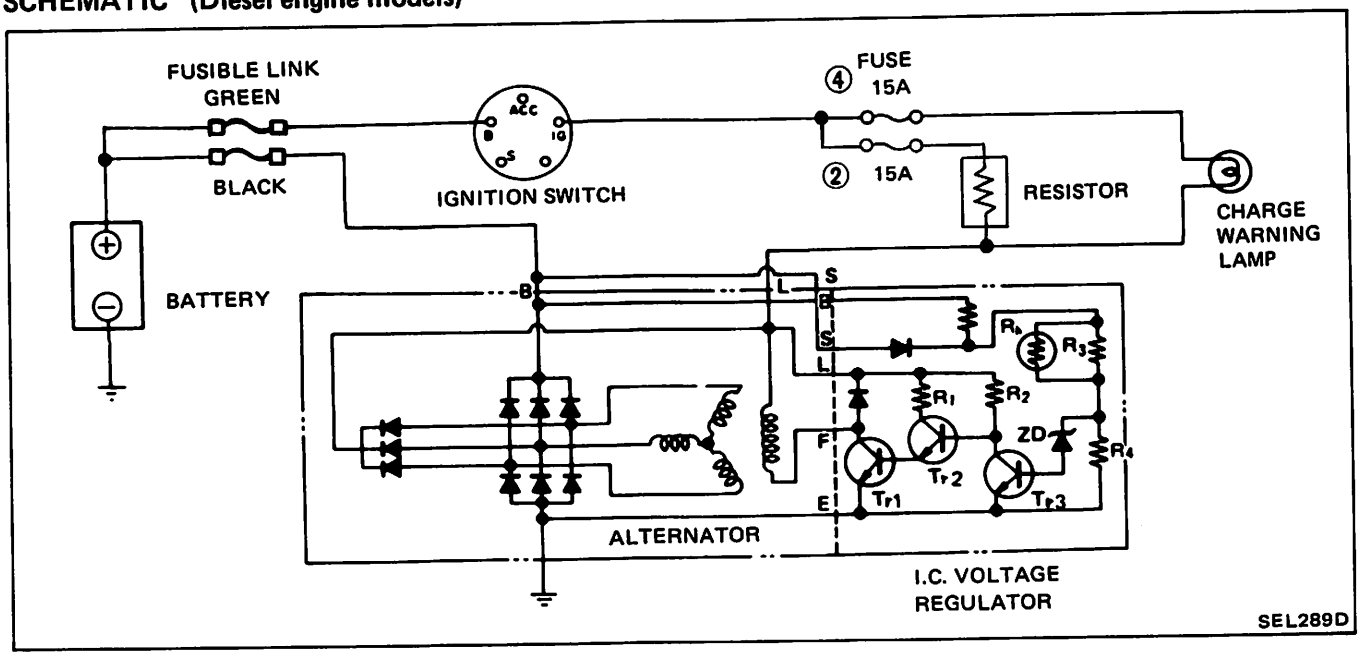

WIRING DIAGRAM (Diesel engine models)

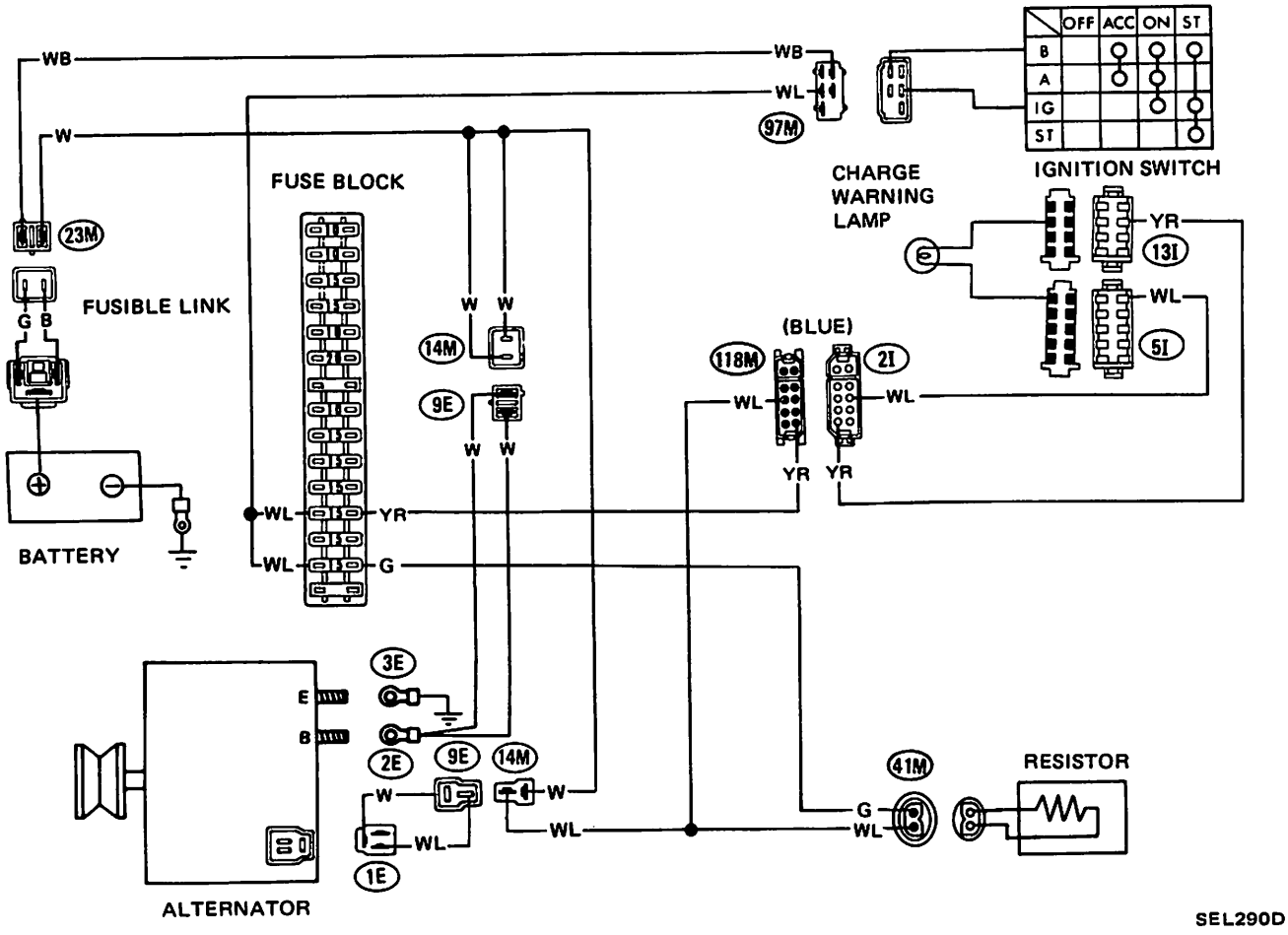

CHARGING SYSTEM TROUBLE-SHOOTING

Before conducting an alternator test, make sure that the battery is fully charged.

A 30-Volt voltmeter and suitable test probes are necessary for the test.

The alternator can be checked easily by referring to the Inspection Table.

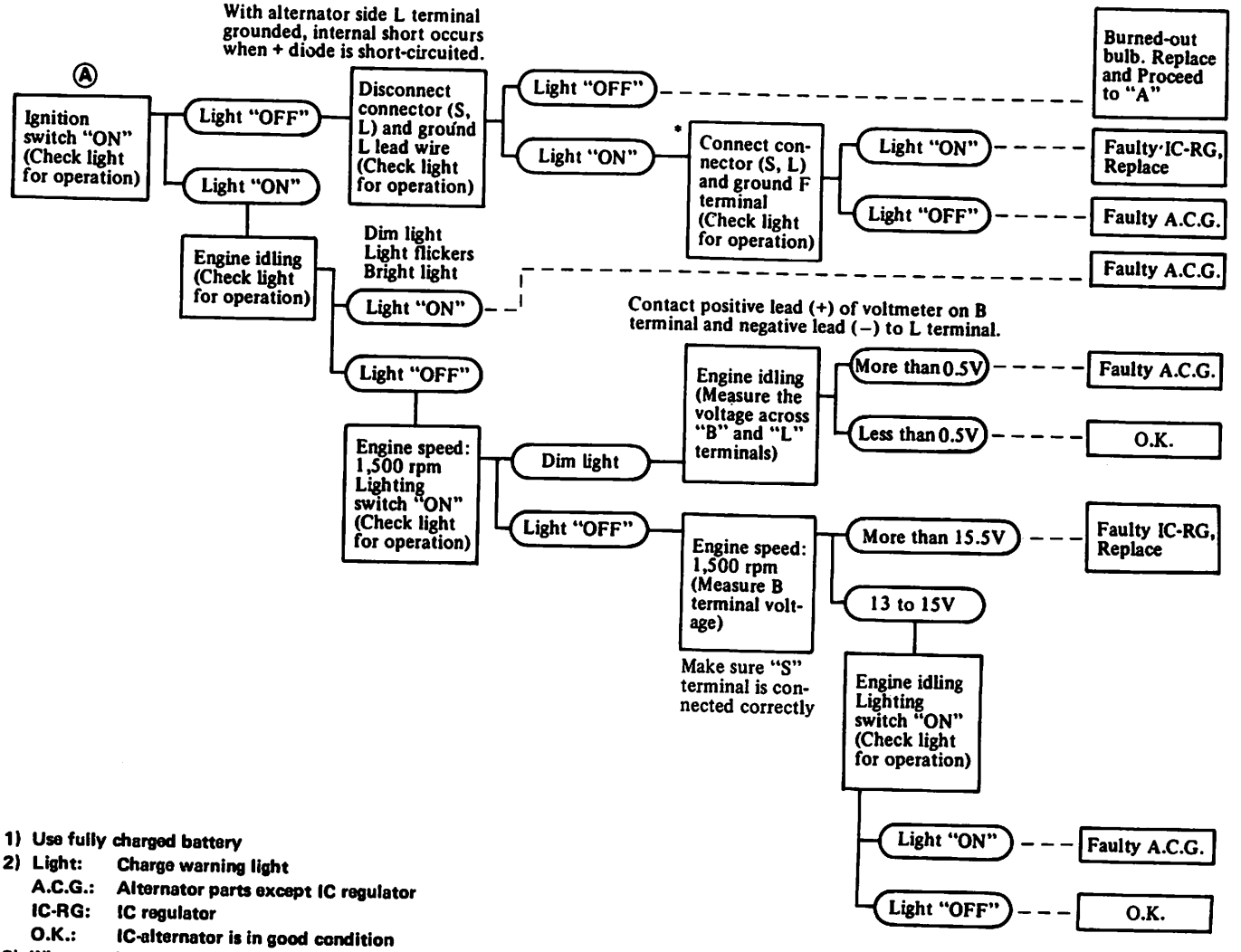

1) Use fully charged battery
2) Light: Charge warning light
   A.C.G.: Alternator parts except IC regulator
   IC-RG: IC regulator
   O.K.: IC-alternator is in good condition
3) When reaching "Faulty A.C.G.", remove alternator from car and disassemble, inspect and correct or replace faulty parts.
4) * Method of grounding F terminal

Gasoline engine model
Contact tip of wire with brush and attach wire to alternator body.

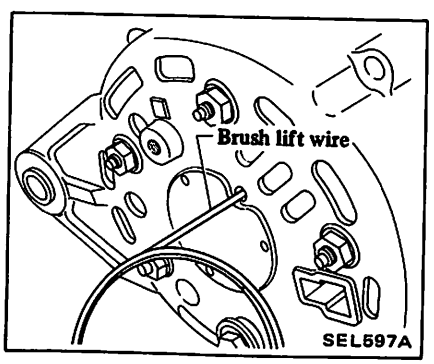

Diesel engine model
Remove vacuum pump and connect tip of wire with brush and attach wire to alternator body.

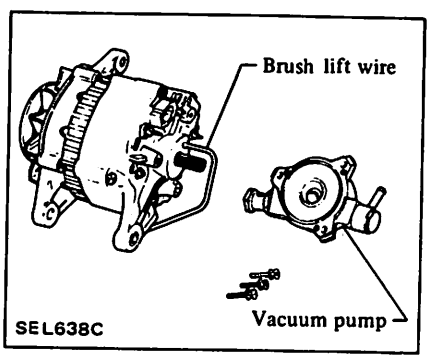

5) Terminals "S", "L", "BAT" and "E" are marked on rear cover of alternator.

ALTERNATOR

Gasoline engine model

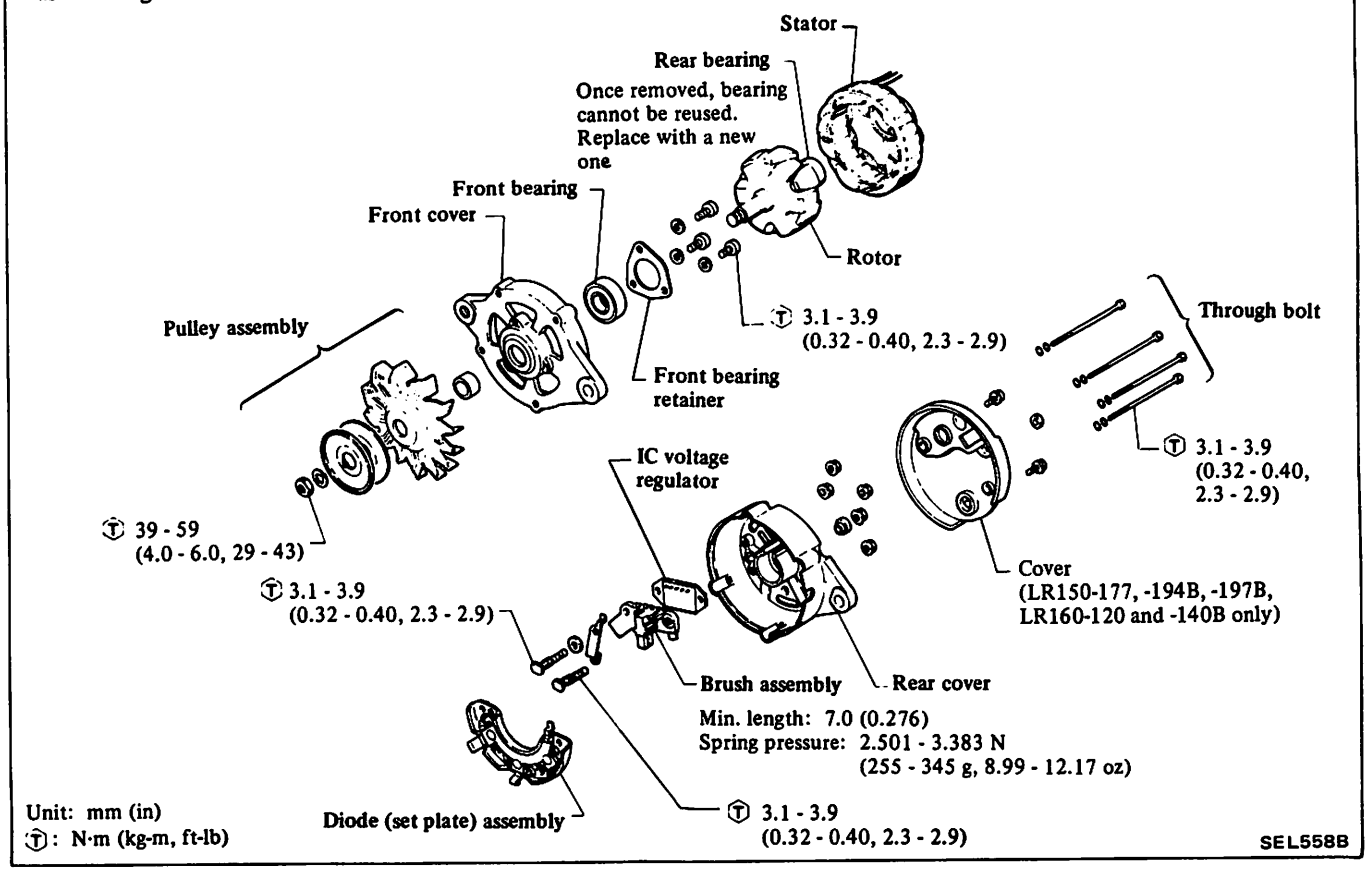

Diesel engine model

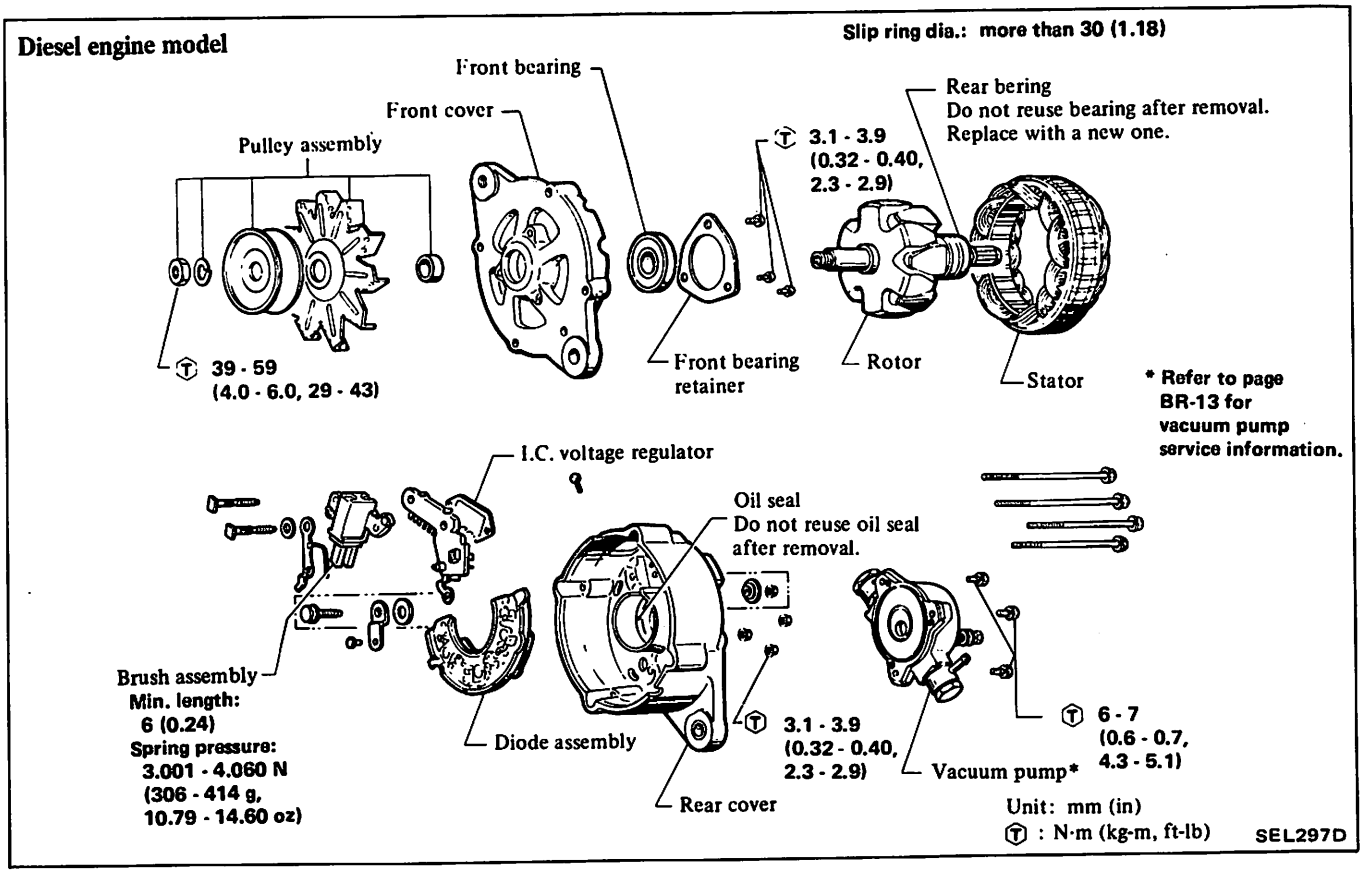

DISASSEMBLY

1. Remove vacuum pump (Diesel engine model only).

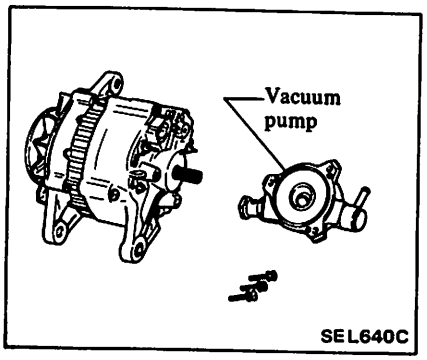

2. Remove through-bolts and the separate front cover and rear cover.

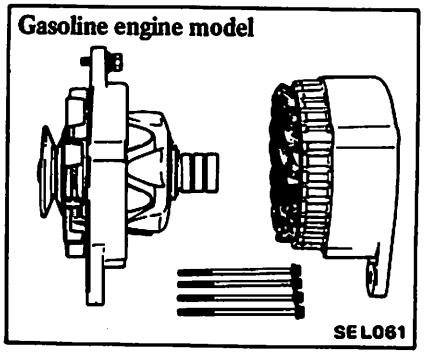

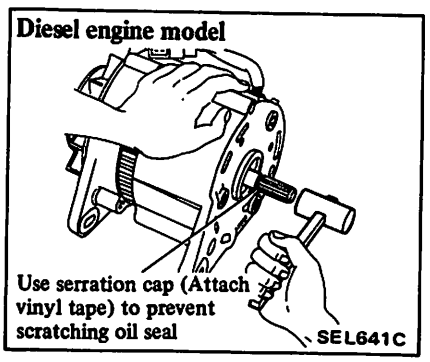

3. Remove pulley and fan.
(1) Place rear cover side of rotor in a vice.
(2) Remove pulley nut.

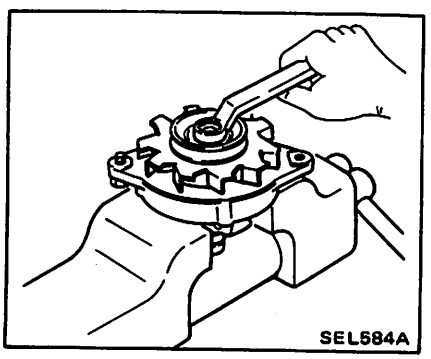

4. Remove setscrews from bearing retainer.

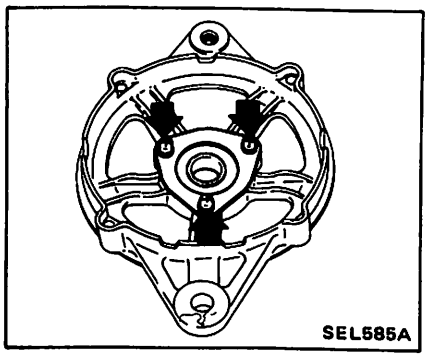

5. Remove attaching nuts and take out stator assembly.

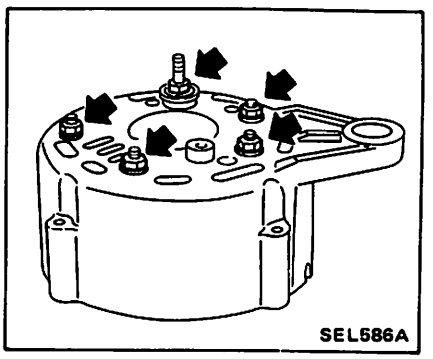

Rotor

Pull rear bearing off from rotor assembly with a press or bearing puller.

Once removed, bearing cannot be reused. Replace with a new one.

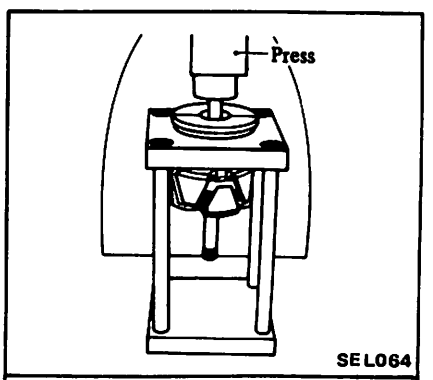

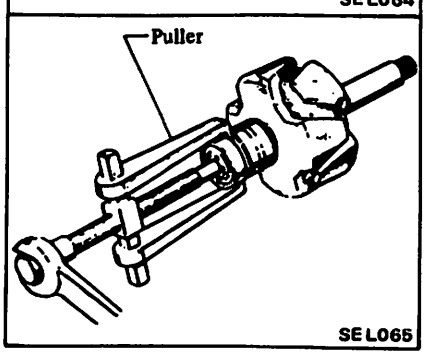

Stator

Disconnect stator coil leas wires from diode terminals

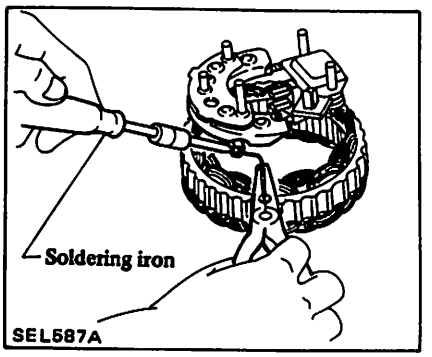

Replacement of oil seal (Only diesel engine model)

If oil leaks from oil seal or any abnormalities are found after inspection, replace oil seal.

1. Pry off oil seal.

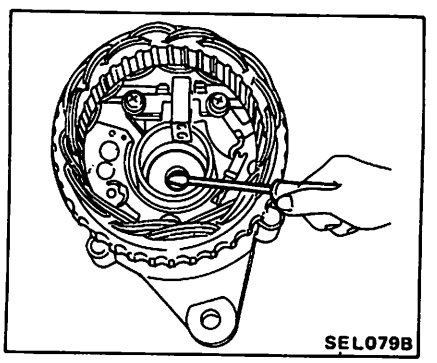

2. Apply engine oil to seal and install oil seal in position.

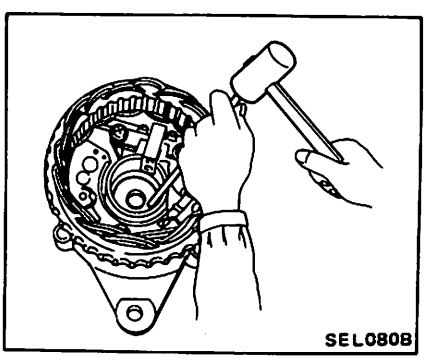

INSPECTION

Rotor

1. Continuity test.

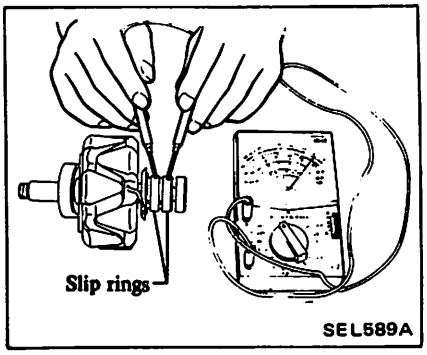

- No continuity ... Replace rotor.

2. Insulation test

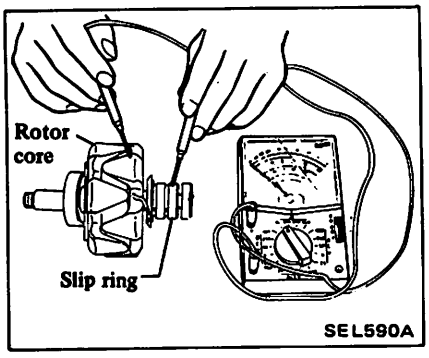

- Continuity exists ... Replace rotor.

3. Check slip ring for wear.

Slip ring outer diameter:
Refer to S.D.S.

If necessary, replace rotor assembly.

Stator

1. Continuity test

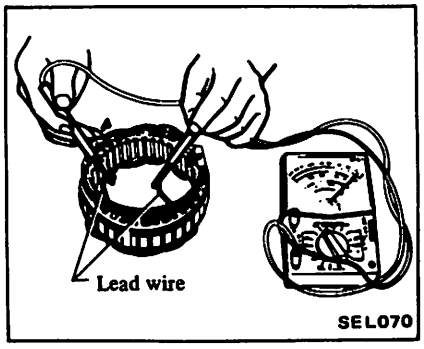

- No continuity ... Replace stator.

2. Insulation test

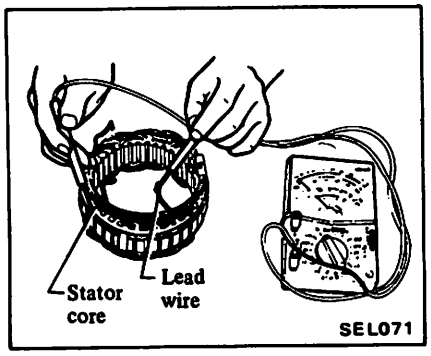

- Continuity exists ... Replace stator.

Diode

Perform a continuity test on diodes in both directions, using an ohmmeter.

Circuit tester terminal		Conduction
Positive	Negative	
(+) plate Holder plate	Diode terminal	Yes
Diode terminal	(+) plate Holder plate	No
(–) plate Rear cover	Diode terminal	No
Diode terminal	(–) plate Rear cover	Yes

Some ohmmeters use a reverse polarity, in which case continuity will be exactly opposite from the chart above.

Positive diode

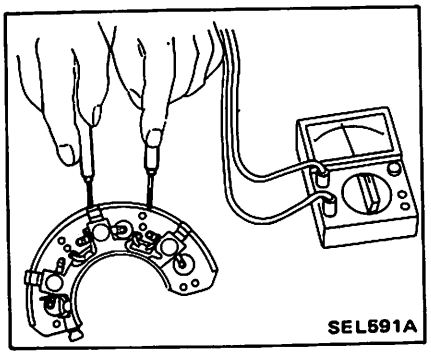

- Conduction test is N.G. ... Replace diode assembly.

Negative diode

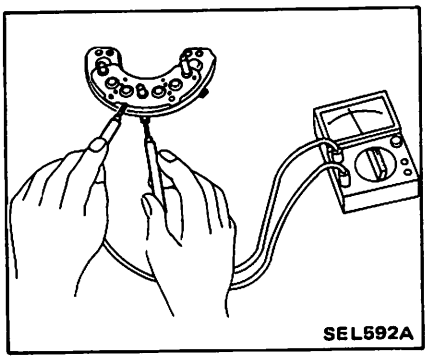

- Conduction test is N.G. ... Replace diode assembly.

Sub-diode

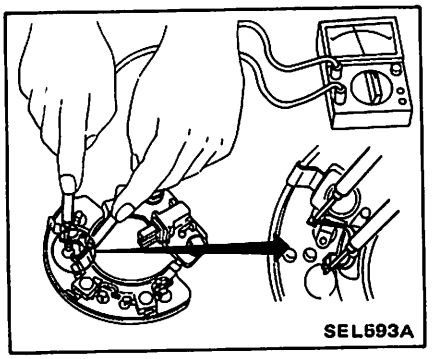

- Conduction test is N.G. ... Replace diode assembly.

Brush

1. Check smooth movement of brush.
- Not smooth ... Check brush holder and clean.
2. Check brush for wear.

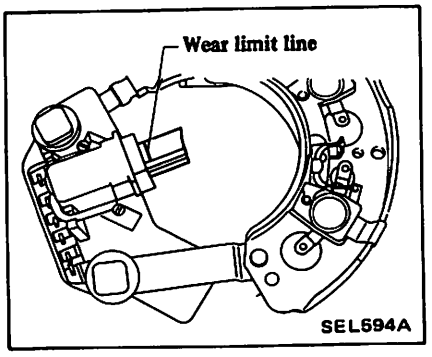

3. Check brush pig tail for damage.
- Damaged ... Replace.
4. Check brush spring pressure.

Measure brush spring pressure with brush projected approximately 2 mm (0.08 in) from brush holder.

Spring pressure:
Refer to S.D.S.

When brush is worn, pressure decreases approximately 0.196 N (20 g, 0.71 oz) per 1 mm (0.04 in) wear.

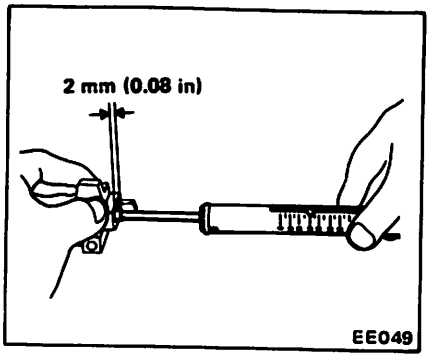

- Not in the specified value ... Replace brush assembly.

Oil seals (Only diesel engine model)

- Check oil seal for wear, cracks or deformation. Replace if necessary.
- Do not reuse oil seal once removed.

ASSEMBLY

Assemble alternator in the reverse order of disassembly, noting the following:

1. When soldering each stator coil lead wire to diode assembly terminal, carry out the operation as fast as possible.
2. When soldering brush lead wire, observe the following.

(1) Position brush so that it extends 11 mm (0.43 in) from brush holder.

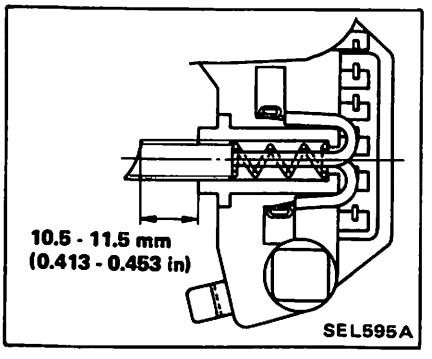

(2) Coil lead wire 1.5 times around terminal groove. Solder outside of terminal.

Ⓣ : Brush holder
3.1 - 3.9 N·m
(0.32 - 0.4 kg-m,
2.3 - 2.9 ft-lb)
Diode and IC regulator
3.1 - 3.9 N·m
(0.32 - 0.4 kg-m,
2.3 - 2.9 ft-lb)
Bearing retainer
3.1 - 3.9 N·m
(0.32 - 0.4 kg-m,
2.3 - 2.9 ft-lb)

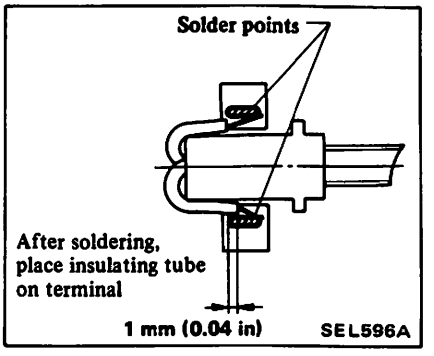

3. Tighten pulley nut and make sure that deflection of V-groove is proper.

Ⓣ : Pulley nut
39 - 59 N·m
(4 - 6 kg-m,
29 - 43 ft-lb)
V-groove deflection:
0.3 mm (0.012 in)

4. Before installing front and rear sides of alternator, push brush up with fingers and retain brush, by inserting brush lift into brush lift hole from outside.

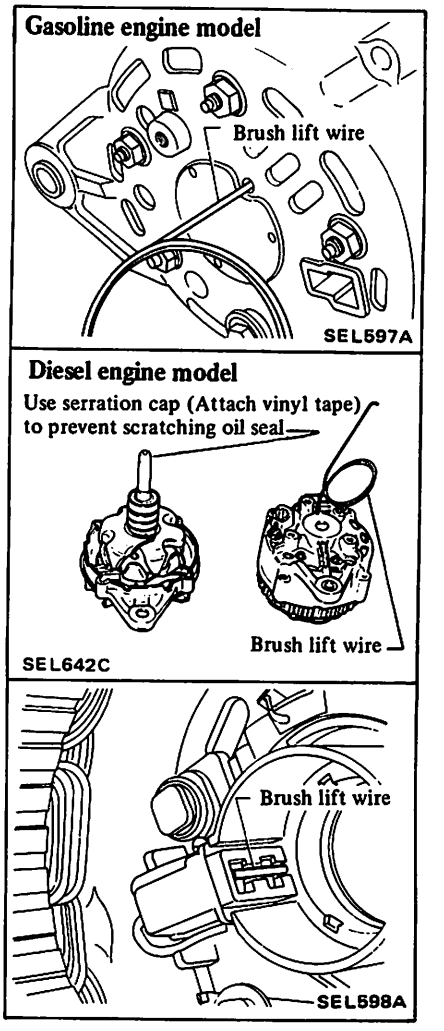

5. After installing front and rear sides of alternator, pull brush lift by pushing toward center.

Do not pull brush lift by pushing toward outside of cover as it will damage slip ring sliding surface.

6. Tighten through-bolts.

Ⓣ : Through-bolts
3.1 - 3.9 N·m
(0.32 - 0.4 kg-m,
2.3 - 2.9 ft-lb)

IC VOLTAGE REGULATOR

DESCRIPTION

The regulator consists essentially of integrated circuits incorporating transistors. These transistors interrupt and admit current flow to the alternator rotor coil, thus maintaining its output voltage at a constant value. Unlike in a mechanical type regulator, an electronic relay employing transistors is utilized. These transistors are enclosed in a very compact, sealed case. On the charge warning lamp circuit, a diode monitors generating voltage at the stator so that when the monitored voltage and charging voltage are equal during re-charging, the charge warning lamp is turned off. Accordingly, a charge warning relay is not employed in this circuit.

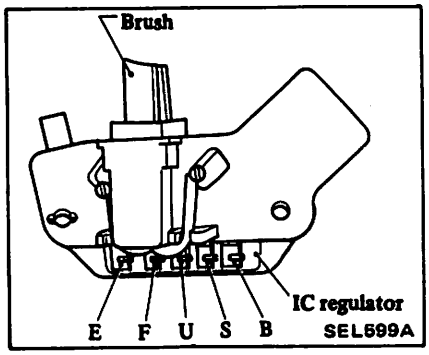

REPLACEMENT

Removal should be done only when IC regulator is being replaced.

1. Remove rivet and solder.

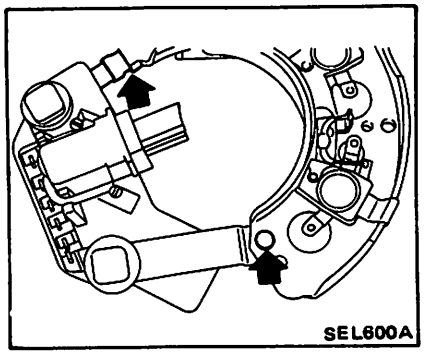

2. Remove the terminals solder and take out bolts.

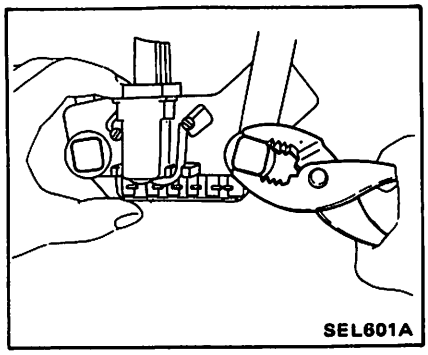

When installing the regulator, reverse order removal noting following.

(1) Put IC regulator on brush holder and press-fit bolts using hand press.

(2) Stake rivets using Tool.

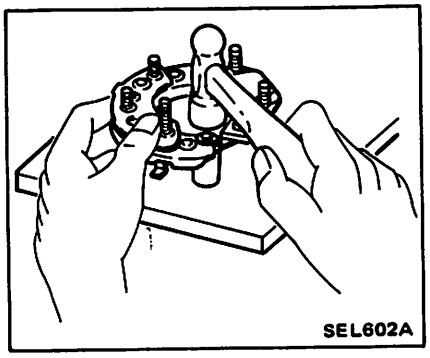

SERVICE DATA AND SPECIFICATIONS (S.D.S.)

ALTERNATOR

Gasoline engine model

Type	LR150-98B	LR150-197B	LR160-78B	LR160-140B	LR150-177	LR150-194B	LR160-120
Applied model	2WD				4WD		
	California (Except C & C*)	U.S.A. except California (except C & C*)	Canada, and C & C* for California	C & C* for U.S.A. except California	California	U.S.A. except California	Canada
Nominal rating V-A	12 - 50		12 - 60		12 - 50		12 - 60
Ground polarity	Negative						
Minimum revolution under no-load (When 14 volts is applied) rpm	Less than 1,000						
Hot output current A/rpm	More than 40/2,500 More than 50/5,000		More than 50/2,500 More than 60/5,000		More than 40/2,500 More than 50/5,000		More than 50/2,500 More than 60/5,000
Regulated output voltage V	14.4 - 15.0						
Wear limit length of brush mm (in)	More than 7 (0.28)	More than 6 (0.24)	More than 7 (0.28)	More than 6 (0.24)	More than 7 (0.28)	More than 6 (0.24)	More than 7 (0.28)
Brush spring pressure N (g, oz)	2.501 - 3.383 (255 - 345, 8.99 - 12.17)						
Slip ring outer diameter mm (in)	More than 30 (1.18)	More than 30.6 (1.205)	More than 30 (1.18)	More than 30.6 (1.205)	More than 30 (1.18)	More than 30.6 (1.205)	More than 30 (1.18)

Diesel engine model

Type	LR150-403	LR155-401
Applied model	U.S.A.	Canada
Nominal rating V-A	12 - 50	12 - 55
Ground polarity	Negative	
Minimum revolution under no-load (When 14 volts is applied) rpm	Less than 1,000	Less than 1,050
Hot output current A/rpm	More than 42/2,500 More than 50/5,000	More than 50/2,500 More than 55/5,000
Regulated output voltage V	14.4 - 15.0	
Wear limit length of brush mm (in)	More than 6 (0.24)	
Brush spring pressure N (g, oz)	3.001 - 4.060 (306 - 414, 10.79 - 14.60)	
Slip ring outer diameter mm (in)	More than 30 (1.18)	

*C & C: Cab & chassis model

IGNITION SYSTEM (Gasoline engine model)

CAUTION: Before starting to work, be sure to turn ignition switch "OFF" and then disconnect battery ground cable.

SCHEMATIC (Z24 engine model for U.S.A.)

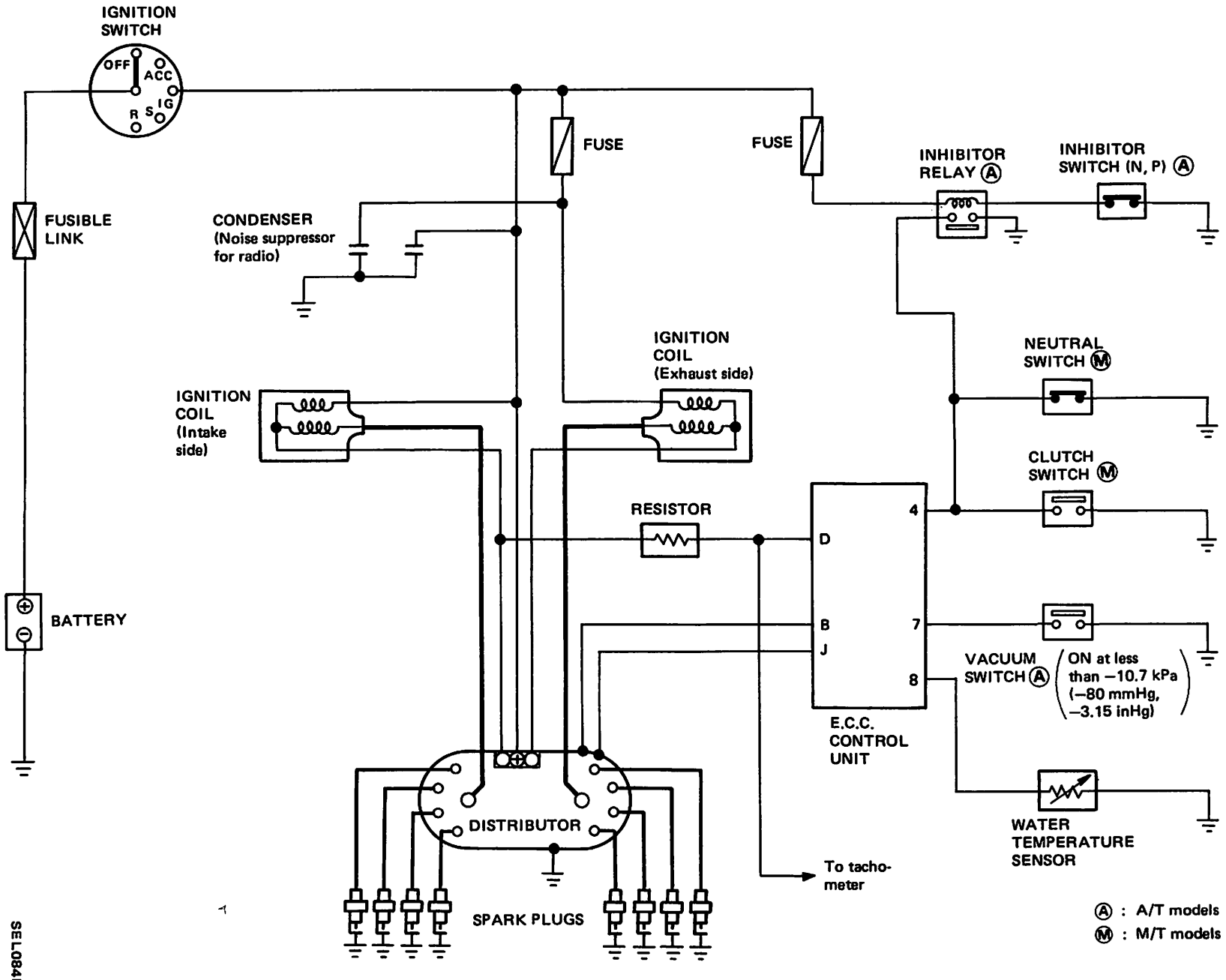

SEL084F

WIRING DIAGRAM (Z24 engine model for U.S.A.)

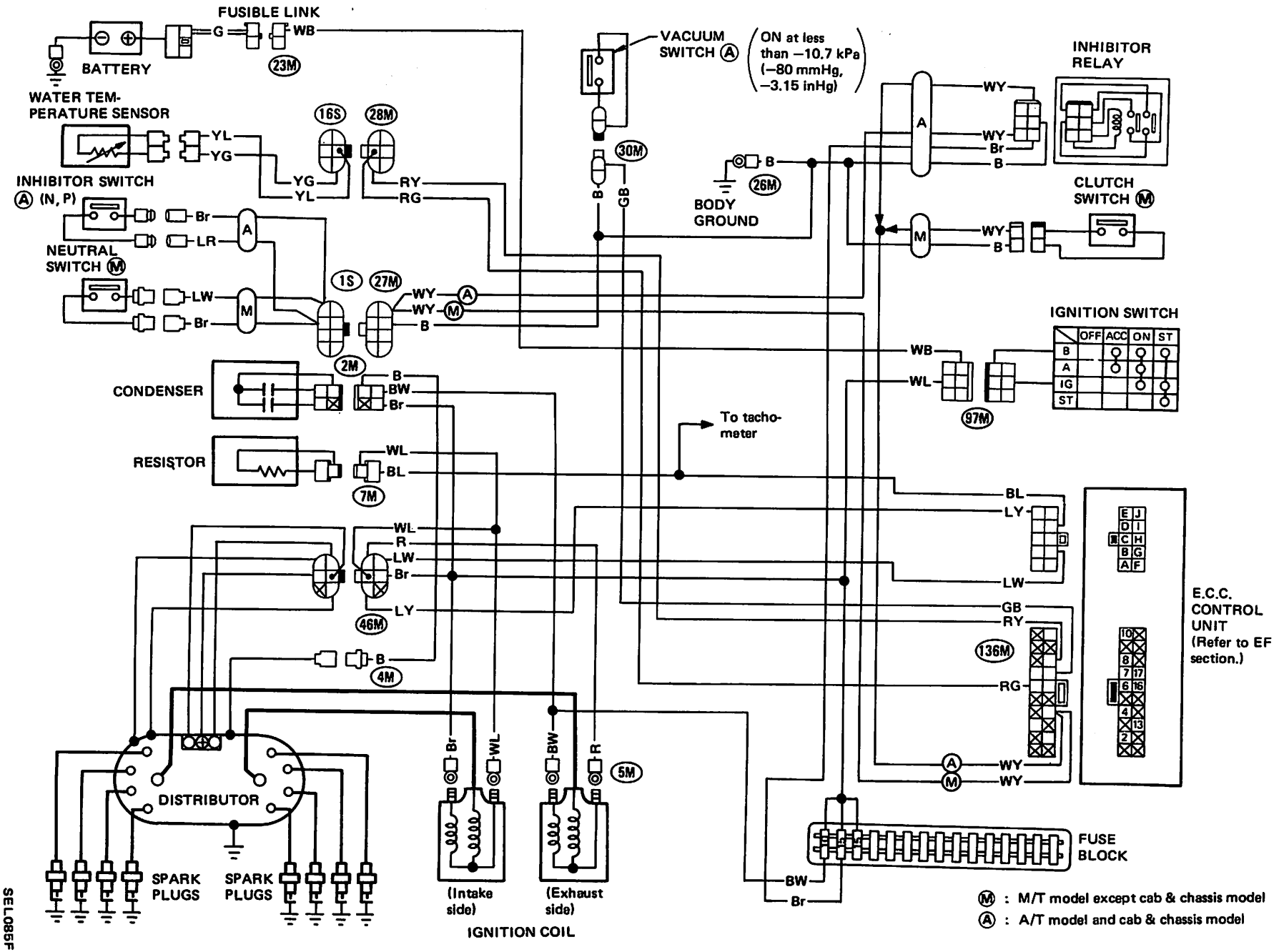

SEL085F

SCHEMATIC (Z24 engine model for Canada)

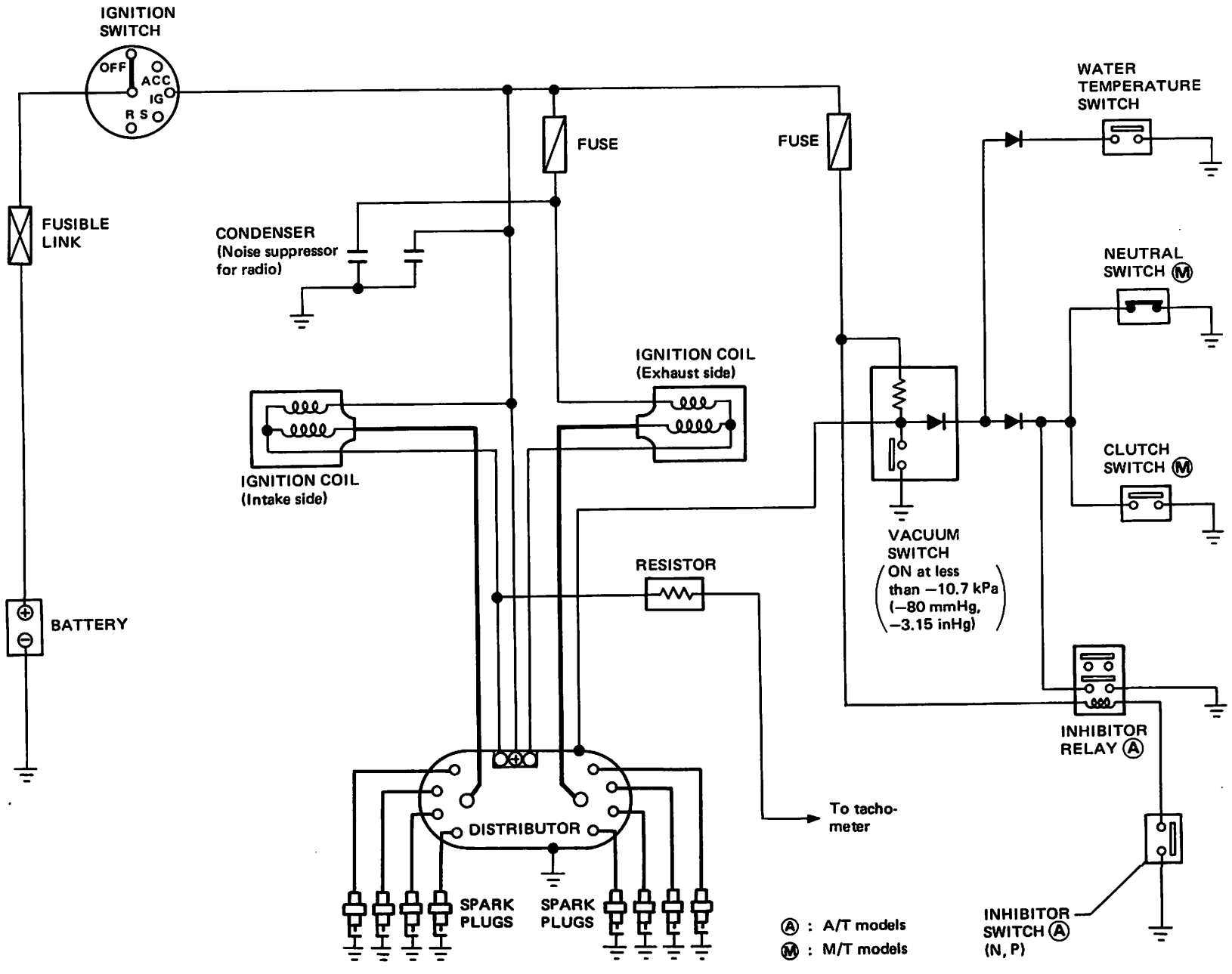

SEL086F

WIRING DIAGRAM (Z24 engine model for Canada)

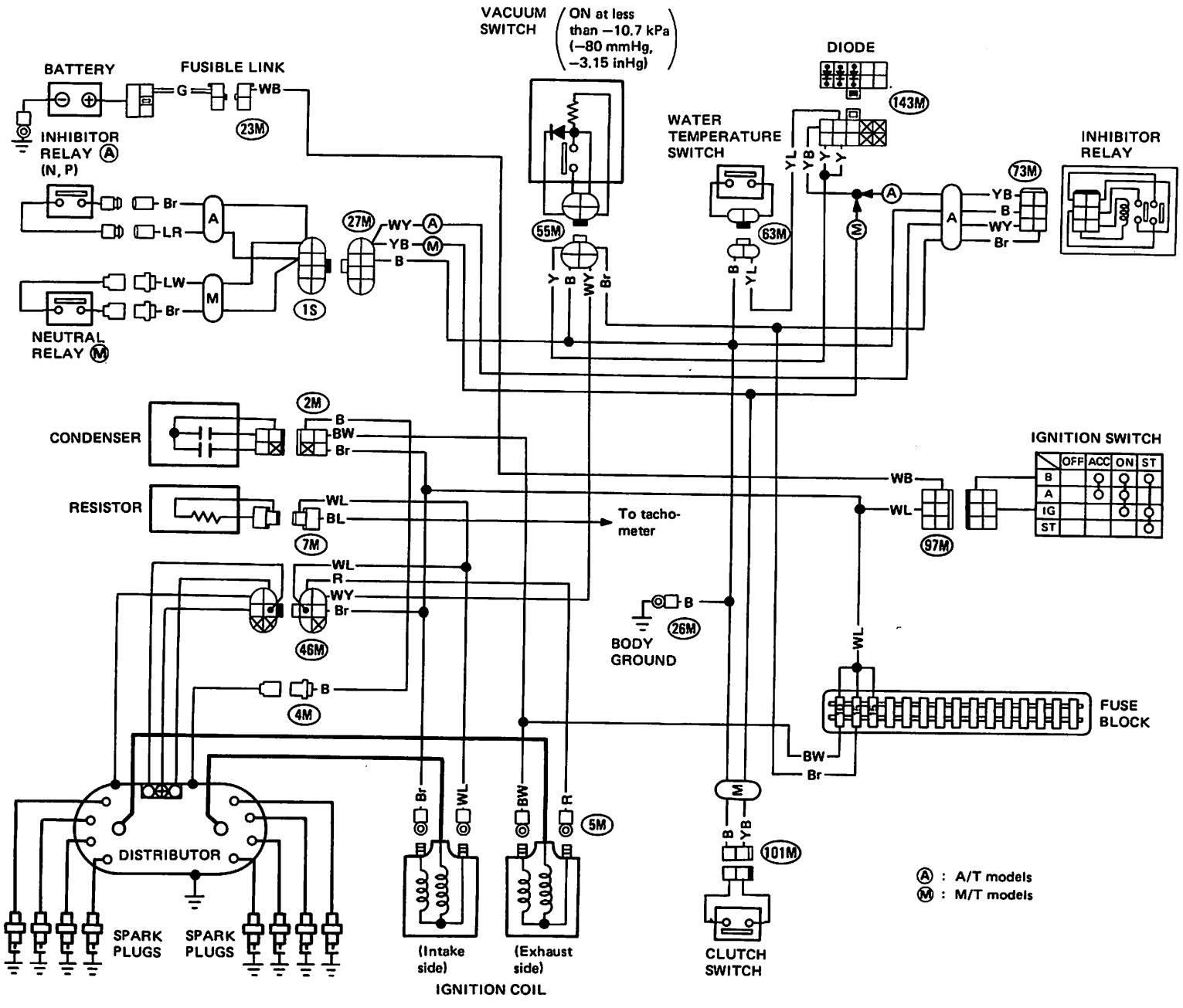

SEL356G

SCHEMATIC (Z20 engine model)

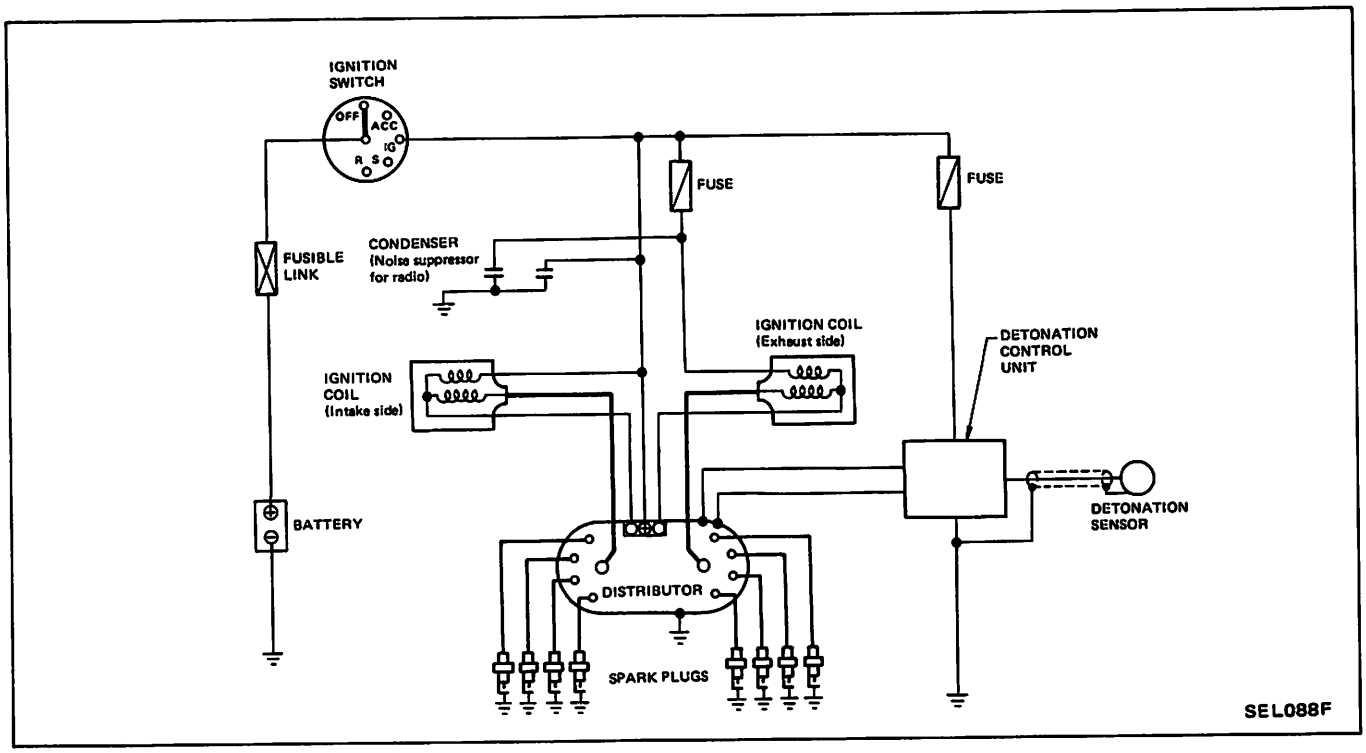

WIRING DIAGRAM (Z20 engine model)

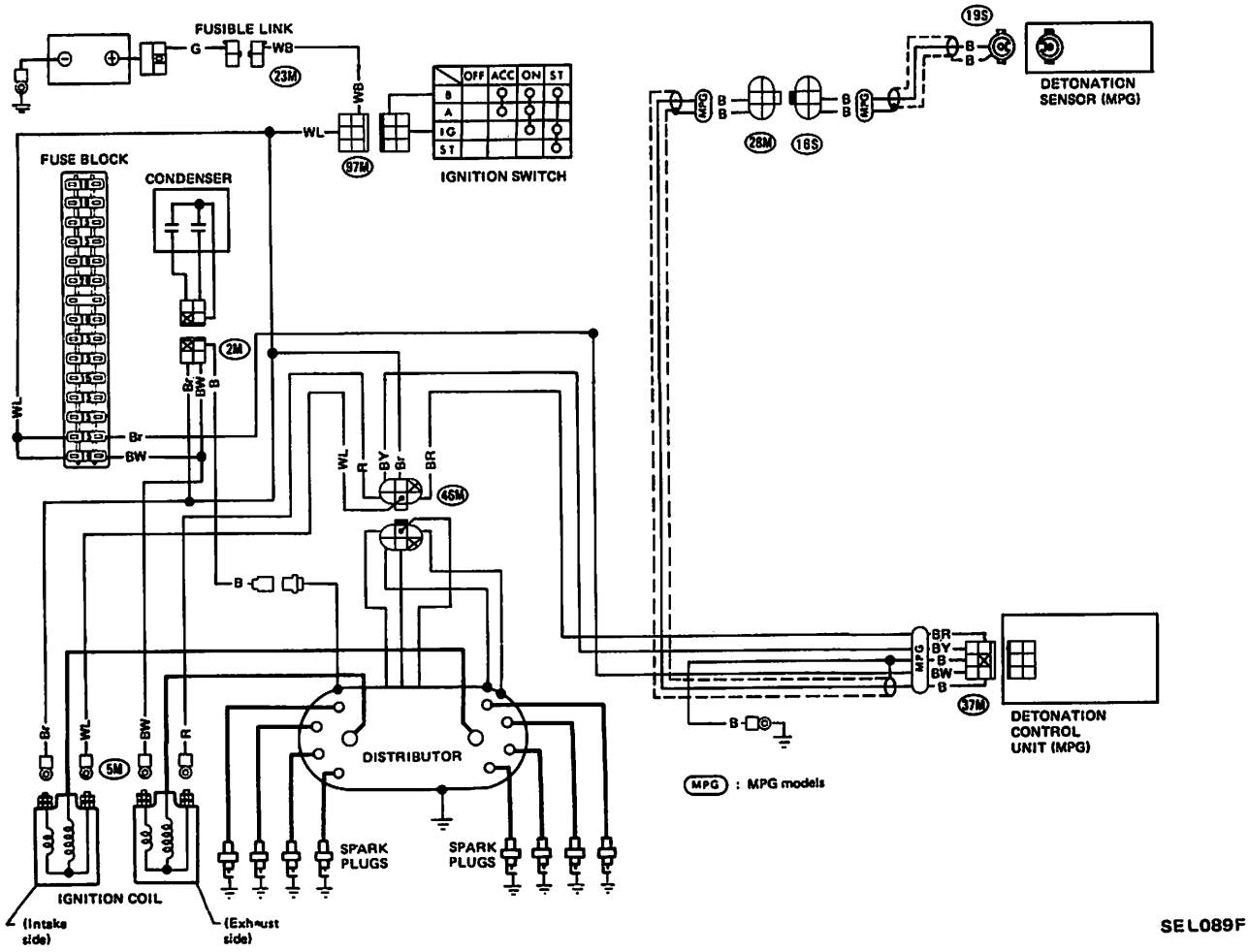

IC IGNITION SYSTEM TROUBLE-SHOOTING

Engine turns erratically.

Check ignition timing.

N.G. → Adjust.

O.K. → Attach adapter *1 to high tension cable and position tip of adapter approx. 6 mm (0.24 in) away from cylinder block. With adapter held in that position, crank engine to see if spark jumps across gaps between tip and cylinder block at regular intervals.

Engine turns but does not start. → Attach adapter *1 to high tension cable and position tip of adapter approx. 6 mm (0.24 in) away from cylinder block. With adapter held in that position, crank engine to see if spark jumps across gaps between tip and cylinder block at regular intervals.

Before cranking, disconnect harness connector to anti-dieseling solenoid. Before operation, make sure there is no inflammable.

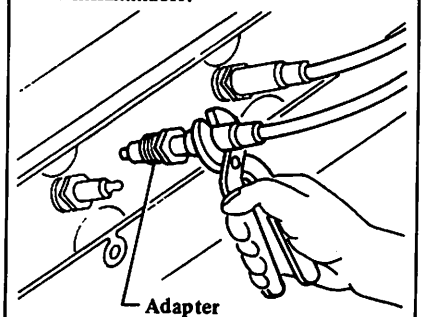

O.K. → Check for burned or fouled spark plug.

N.G. → Clean or replace.

O.K. → Check fuel system.

N.G. → Check air gap between reluctor and stator.

O.K. → Check IC ignition system.

Specified value ... Refer to S.D.S. If necessary, adjust air gap.

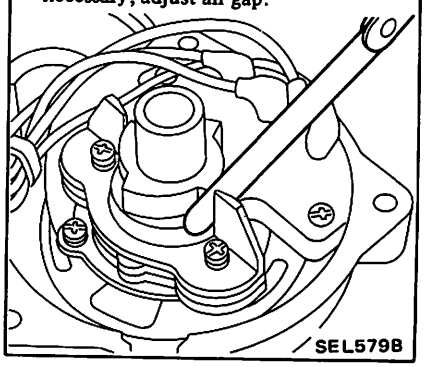

IC Ignition System is best checked using J-26350 Transistor Ignition Analyzer. However, if an analyzer is not available, a volt-ohm-milliammeter (V.O.M.) may be used to diagnose transistor ignition malfunctions. While this method requires more time, it can nevertheless provide accurate results. Follow the steps in the sequence indicated. If a fault is found, correct the problem before continuing. If all tests indicate "O.K." replace the IC Ignition Unit. DO NOT REPLACE THE UNIT UNTIL ALL TESTS HAVE BEEN COMPLETED AND INDICATE "O.K.".

Go to Test Table.

WARNING:
When current is flowing, never touch with bare hand high tension cables or any other parts with high voltage. If parts are moist, touching them could cause an electric shock, even if they are insulated. Always wear dry, well-insulated gloves or wrap affected parts with dry cloth before handling.

NOTE:
1. When performing the following tests, use a multitester which can measure accurately in the following ranges; 0 to 20V. D.C.; 0 to 1,000Ω; 0 to 10V A.C.; 0 to 50,000Ω.
2. If possible, start the vehicles and let it run for 5 to 15 minutes with the hood closed. This will bring all components to normal operating temperature, and will make it easier to diagnose intermittent problems.
3. It is not necessary to disconnect the harness connectors when performing the tests which follow. Simply insert the meter probes into the back of appropriate connector cavity.

*1:
Preparation of spark plug for checking
Many things can be utilized as an adapter. However, it is recommended that a used spark plug whose threaded portion has been half cut off as shown in the figure be utilized.

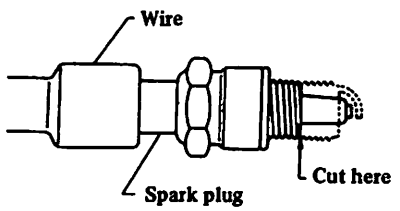

TEST TABLE

TEST	TEST METHOD	CONDITIONS	RESULT	ACTION
1. Battery Voltage (no load)	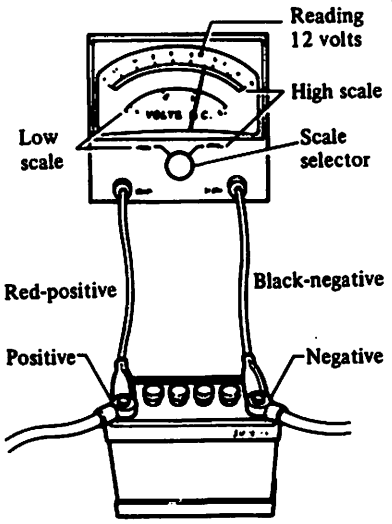	1. Ignition key in "OFF" position. 2. Connect voltmeter as illustrated and set to appropriate scale. 3. Read and record battery voltage reading. Battery voltage ☐	11.5 - 12.5 volts	Proceed to Step 2.
			Below 11.5 volts	Battery, charging system or starting system – Faulty. Refer to applicable sections in Service Manual to correct the situation.
2. Battery Cranking Voltage		1. Connect voltmeter as illustrated and set to appropriate scale. 2. Remove coil wire from distributor cap and ground it. 3. Read voltmeter while cranking engine for approximately 15 seconds. 4. Record voltage reading. Battery cranking voltage ☐	Voltage reading greater than 9.6 volts	Battery O.K. Proceed to Step 3.
			Voltage reading less than 9.6 volts	Battery, charging system or starting system – Faulty. Refer to applicable sections in Service Manual to correct the situation.
3. Secondary Wiring	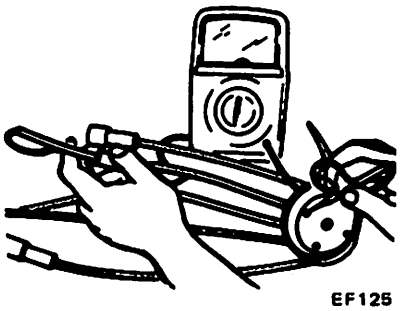	1. Connect ohmmeter as illustrated and measure the resistance of each high tension cable.	Resistance readings less than 30,000 ohms	Distributor cap and high tension cables – O.K. Proceed to Step 4.
			Resistance readings greater than 30,000 ohms	Replace high tension cable(s) and/or distributor cap as required.
4. Ignition Coil Secondary Circuit	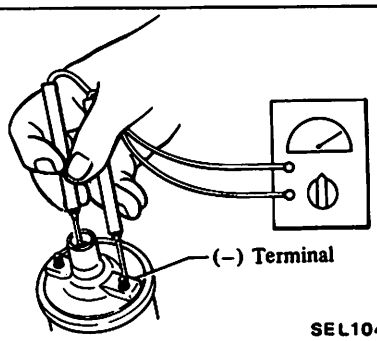	1. Ignition key in "OFF" position. 2. Coil wire removed from coil. 3. Connect ohmmeter as illustrated Check both coils.	7,300 - 11,000 ohms	Ignition coil secondary windings – O.K. Proceed to Step 5.
			Resistance reading not between 7,300 - 11,000 ohms	Faulty ignition coil – replace
5. Power Supply Circuit	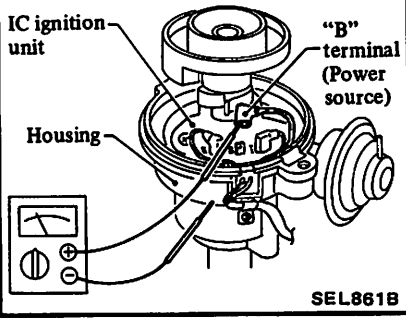	1. Connect voltmeter as illustrated and set to appropriate scale. 2. Turn ignition key to "ON" position.	11.5 - 12.5 volts	Proceed to Step 6.
			Below 11.5 volts Below 11.5 volts	Check wiring from ignition switch to I.C. unit.

(Continued next page)

TEST	TEST METHOD	CONDITIONS	RESULT	ACTION
6. Power Supply Circuit (Cranking)	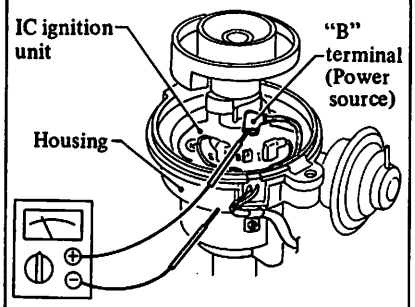 SEL861B	1. Connect voltmeter as illustrated and set to appropriate scale. 2. Pull out coil wire from distributor cap and ground it. 3. Turn key to "START" position and observe voltmeter while engine is cranking.	Voltage reading is less than 1 volt below battery cranking voltage and is greater than 8.6 volts.	Proceed to Step 7-A.
			Voltage reading is more than 1 volt below battery cranking voltage and/or is below 8.6 volts.	Check ignition switch and wiring from switch to I.C. unit.
7-A. Ignition Primary Circuit	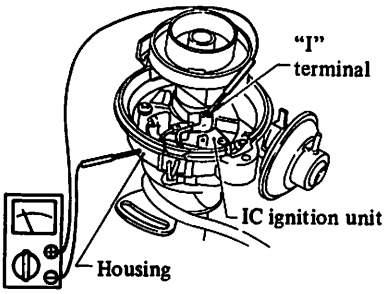 SEL862B	1. Connect voltmeter as illustrated and set to appropriate scale. 2. Ignition key in "ON" position.	11.5 - 12.5 volts	Proceed to Step 7-B.
			Below 11.5 volts	Proceed to Step 8.
7-B. Ignition Primary Circuit	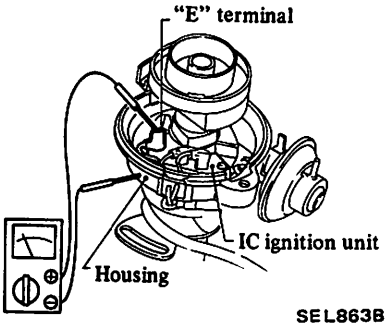 SEL863B	1. Connect voltmeter as illustrated and set to appropriate scale. 2. Ignition key in "ON" position.	11.5 - 12.5 volts	Proceed to Step 9.
			Below 11.5 volts	Proceed to Step 8.
8. Ignition Coil Primary Circuit	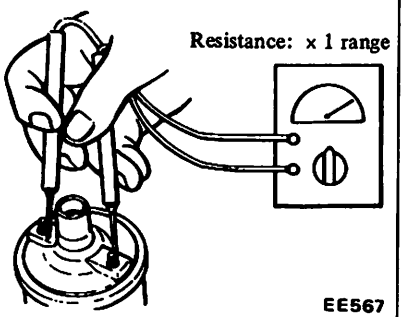 EE567	1. Ignition key in "OFF" position. 2. Coil wire removed from coil. 3. Connect ohmmeter as illustrated. **Check both coils.**	1.04 - 1.27 ohms	Ignition coil primary winding O.K. Check ignition switch and wiring from ignition switch to coil and IC unit.
			Resistance reading not between 1.04 - 1.27 ohms	Faulty ignition coil – replace.
9. I.C. Unit Ground Circuit	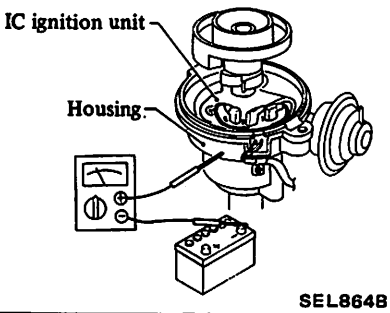 SEL864B	1. Connect voltmeter as illustrated and set to appropriate scale. 2. Pull out coil wire from distributor cap and ground it. 3. Turn key to "START" position and observe voltmeter while engine is cranking.	0.5 volts or less	Replace IC ignition unit assembly.
			More than 0.5 volts	Check distributor ground, wiring from chassis ground to battery including battery cable connections.

DISTRIBUTOR (IC type)

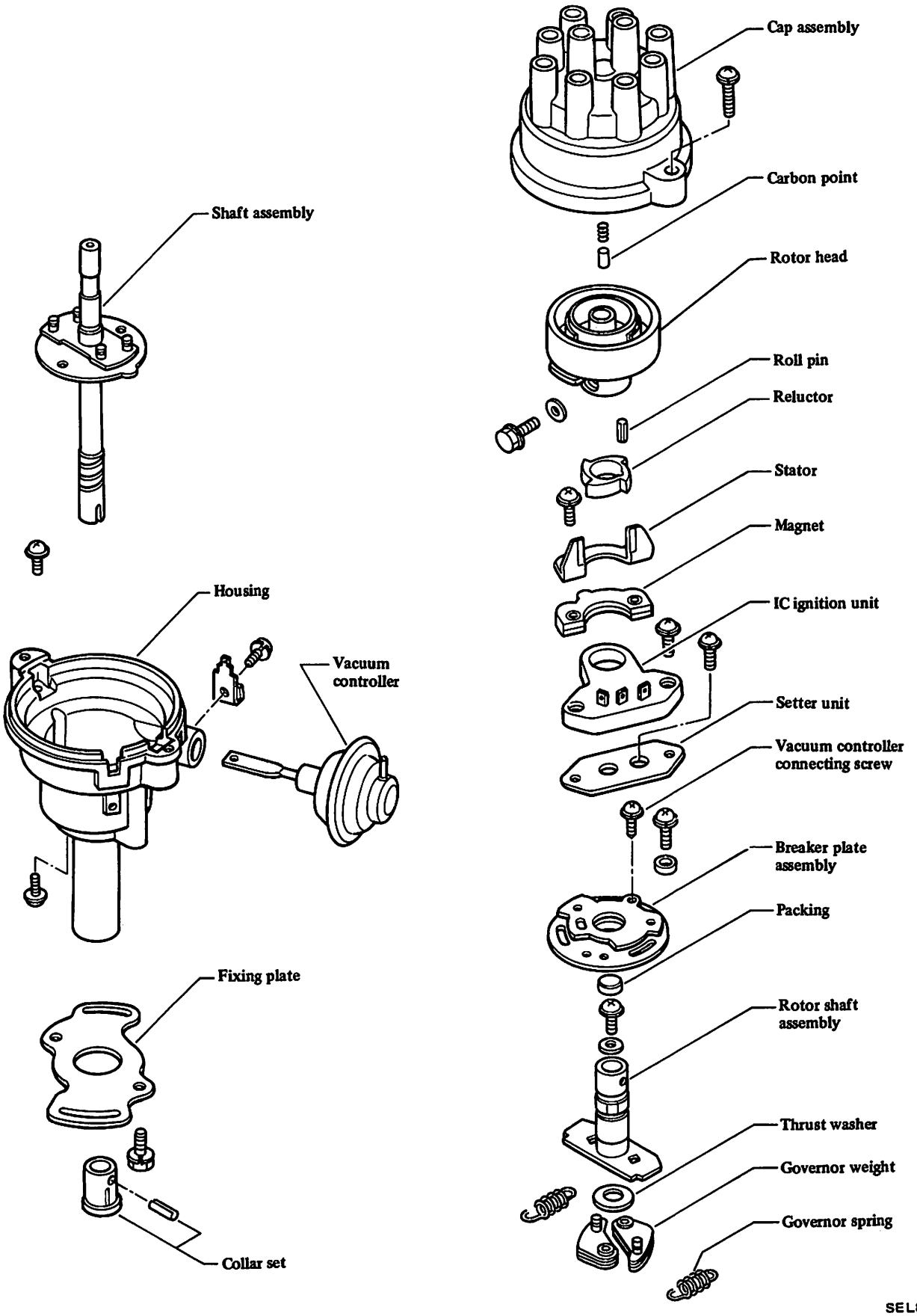

CHECKING AND ADJUSTMENT

Cap and rotor head

Check cap and rotor head for dust, carbon deposits and cracks.

Advance mechanisms

Specifications

Refer to S.D.S.

Vacuum advance mechanism mechanical parts

1. Check vacuum inlet for signs of leakages at its connection.
2. Check vacuum diaphragm for air leak.

If leak is found, replace vacuum controller assembly.

3. Inspect breaker plate for smooth moving.

If plate does not move smoothly, this condition could be due to sticky steel balls or pivot. Apply grease to steel balls or, if necessary, replace breaker plate as an assembly.

Centrifugal advance mechanical parts

When cause of engine malfunction is traced to centrifugal advance mechanical parts, use distributor tester to check its characteristics.

If nothing is wrong with its characteristics, conceivable causes are faulty or abnormal wear of driving part or others. So do not disassemble it.

In the event of improper characteristics, check closely rotor shaft assembly, governor weight and shaft.

If any of the above parts are malfunctioning, replace the parts.

DISASSEMBLY

1. Take off cap and remove rotor head.
2. Pry reluctor from shaft.

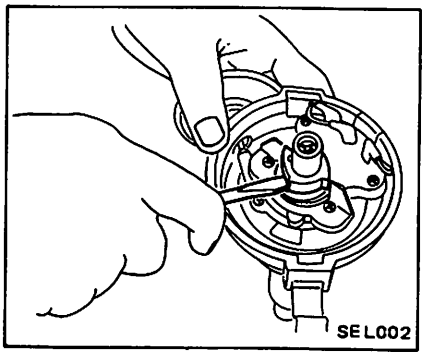

CAUTION:
When removing reluctor, be careful not to distort or damage the teeth.

3. Remove IC ignition unit and unit setter.
4. Remove stator and magnet.

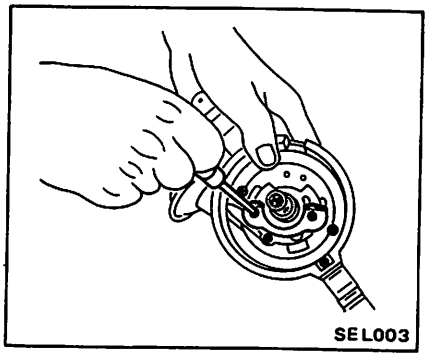

5. Remove vacuum control assembly.
6. Remove breaker plate.

Before disassembling, be sure to mark housing and fixing plate.

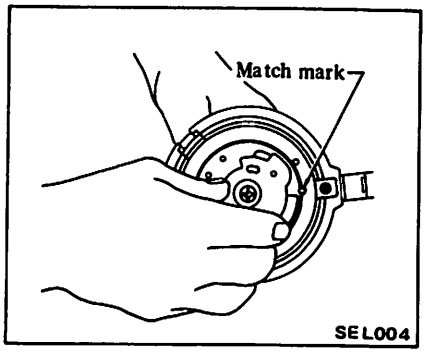

7. Remove fixing plate.

Mark housing and fixing plate.

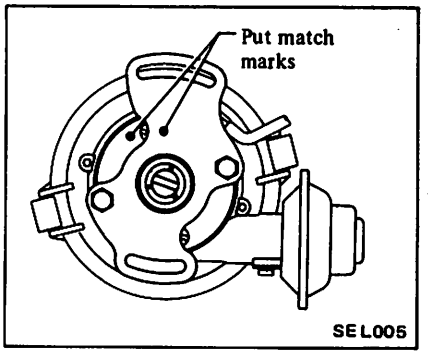

8. Remove collar.

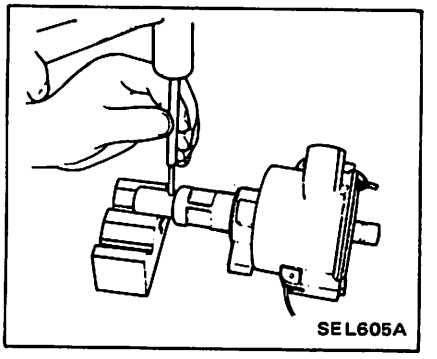

9. Remove bearing retainer attaching bolts.

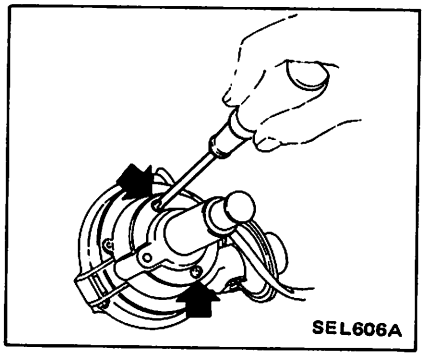

10. Remove rotor shaft and drive shaft.

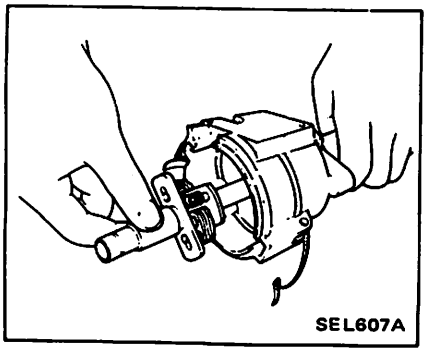

11. Mark rotor shaft and drive shaft. Remove packing from the top of rotor shaft and remove rotor shaft.

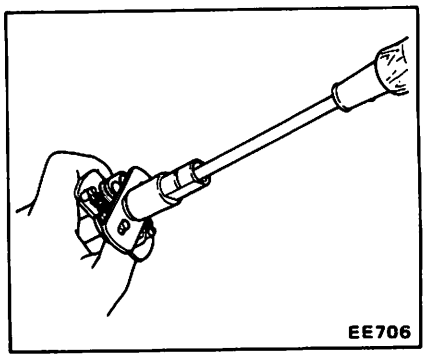

12. Mark one of the governor springs and its bracket. Also mark one of the governor weights and its pivot pins.
13. Carefully unhook and remove governor springs.
14. Remove governor weights. Apply grease to governor weights, after disassembling.

ASSEMBLY

To assembly, reverse the order of disassembly. Carefully observe the following instruction.

CAUTION:
Before installing IC ignition unit, make sure mating surfaces of IC ignition unit and distributor are clean and free from dust, sand and moisture.

1. Align match marks so that parts are assembled to their original positions.
2. Ensure that reluctor is properly oriented when installing on shaft. Always drive in new roll pin as shown in Figure.

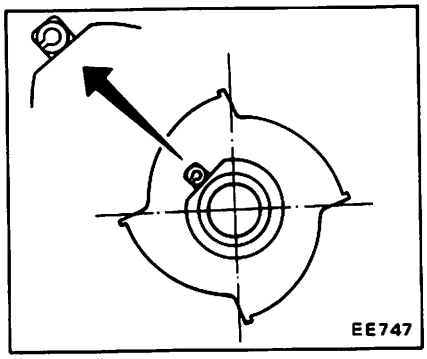

3. Apply grease to the top of rotor shaft as required.

4. Check the operation of governor before installing distributor on engine.
5. Properly center stator and reluctor before tightening.

Standard air gap:
0.3 - 0.5 mm
(0.012 - 0.020 in)

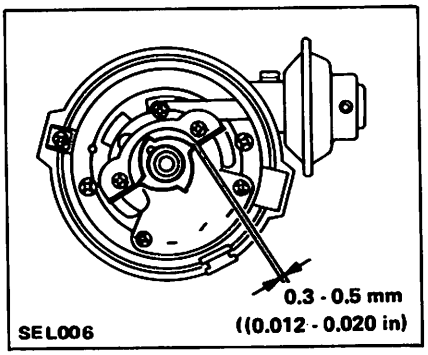

6. Adjust ignition timing after distributor is installed on engine.

SERVICE DATA AND SPECIFICATIONS (S.D.S.)

DISTRIBUTOR

Type	D4N84-01	D4N85-02	D4N84-03	D4N84-04	D4N84-05	D4N84-06	D4N85-01
Applied model	Z24 engine			Z20 engine	Z24 engine		
	Canada 4WD	U.S.A. 2WD (A/T) & California 4WD, 2WD (M/T)	Cab & chassis for Canada		Canada 2WD	Cab & chassis for California	U.S.A. 2WD (M/T) & 4WD except California
Firing order	1-3-4-2						
Rotating direction	Counterclockwise						
Air gap mm (in)	0.3 - 0.5 (0.012 - 0.020)						
Cap insulation resistance MΩ	More than 50						
Rotor head insulation resistance MΩ	More than 50						
Cap carbon point length mm (in)	More than 10 (0.39)						
Vacuum advance [Distributor degree/distributor kPa (mmHg, inHg)]	0°/10.7 (80, 3.15) 4°/15.66 - 20.0 (117.5 - 150, 4.626 - 5.91) 10°/33.3 (250, 9.84)	0°/10.7 (80, 3.15) 4°/13.40 - 20.0 (100.5 - 150, 3.957 - 5.91) 7.5°/26.7 (200, 7.87)	0°/13.3 (100, 3.94) 1.5°/14.7 - 20.0 (110 - 150, 4.33 - 5.91) 5°/22.7 (170, 6.69)	0°/9.3 (70, 2.76) 4°/15.66 - 20.0 (117.5 - 150, 4.626 - 5.91) 15°/37.3 (280, 11.02)	0°/10.7 (80, 3.15) 4°/15.66 - 20.0 (117.5 - 150, 4.626 - 5.91) 12.5°/40.0 (300, 11.81)	0°/13.3 (100, 3.94) 1.5°/14.7 - 20.0 (110 - 150, 4.33 - 5.91) 5°/22.7 (170, 6.69)	0°/10.7 (80, 3.15) 4°/13.3 - 20.0 (100 - 150, 3.94 - 5.91) 10°/33.3 (250, 9.84)
Centrifugal advance [Distributor degree/distributor rpm]	0°/650 7°/1,345 9.5°/2,100			0°/500 4°/1,200 6°/2,200	0°/650 7°/1,345 9.5°/2,100	0°/650 5°/1,200 9.5°/2,400	0°/650 7°/1,345 9.5°/2,100

IGNITION COIL

Type	CIT-88	STC-88	CIT-90	STC-90
Applied model	Z24 engine model		Z20 engine model	
Primary voltage V	12V			
Primary resistance [at 20°C (68°F)] Ω	1.05 - 1.27		0.84 - 1.02	
Secondary resistance [at 20°C (68°F)] kΩ	8.4 - 12.6		8.3 - 12.6	

SPARK PLUG

Applied model		All gasoline engine models	
		Intake side	Exhaust side
Type	Standard	BPR6ES	BPR5ES
	Hot	BPR5ES	
	Cold	BPR7ES	BPR6ES BPR7ES
Size (Screw dia. x reach) mm (in)		14 x 19 (0.55 x 0.75)	
Plug gap mm (in)		0.8 - 0.9 (0.031 - 0.035)	

GLOW SYSTEM (Diesel engine model)

CAUTION: Before starting to work, be sure to turn ignition switch "OFF" and then disconnect battery ground cable.

LOCATION

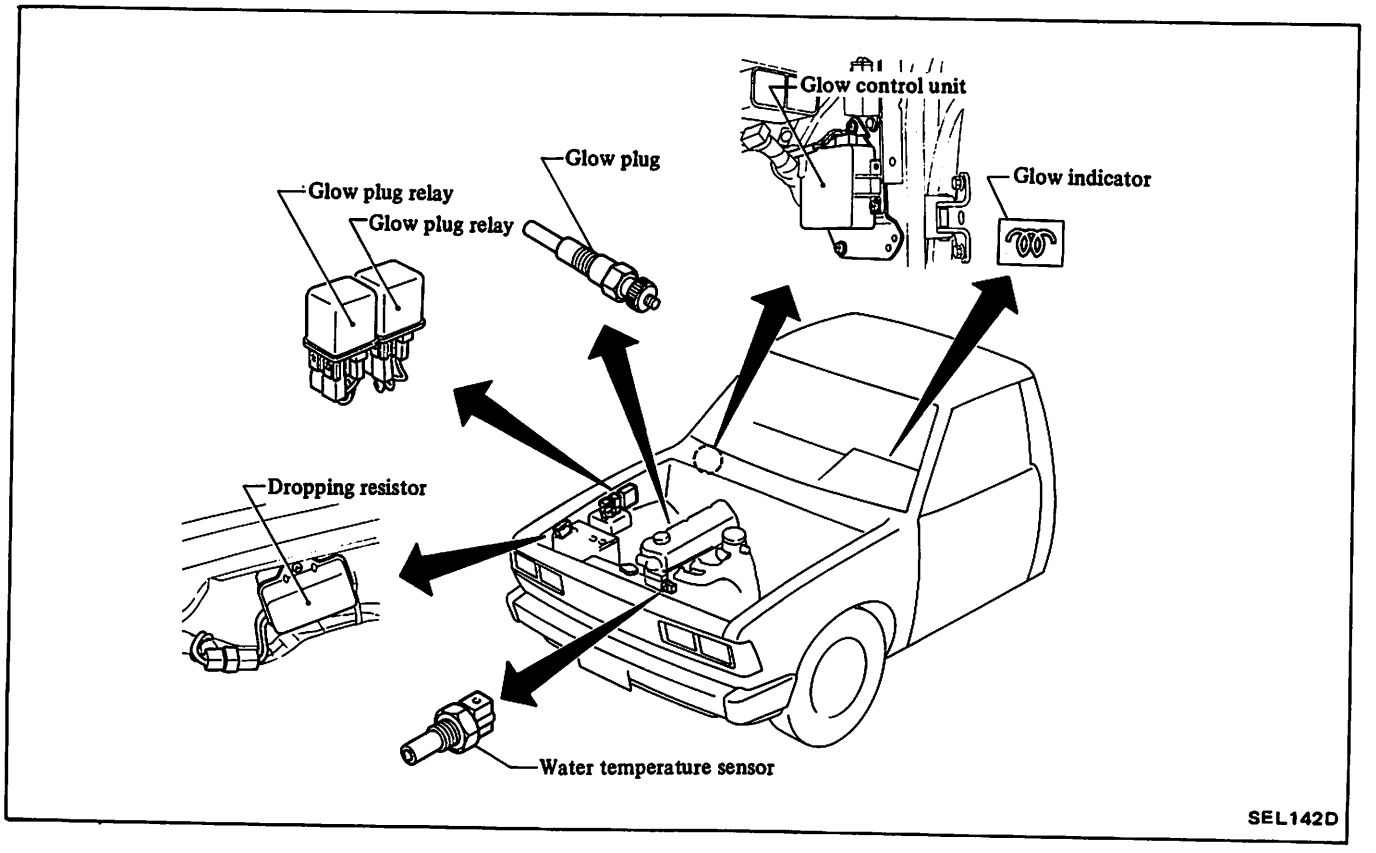

SCHEMATIC

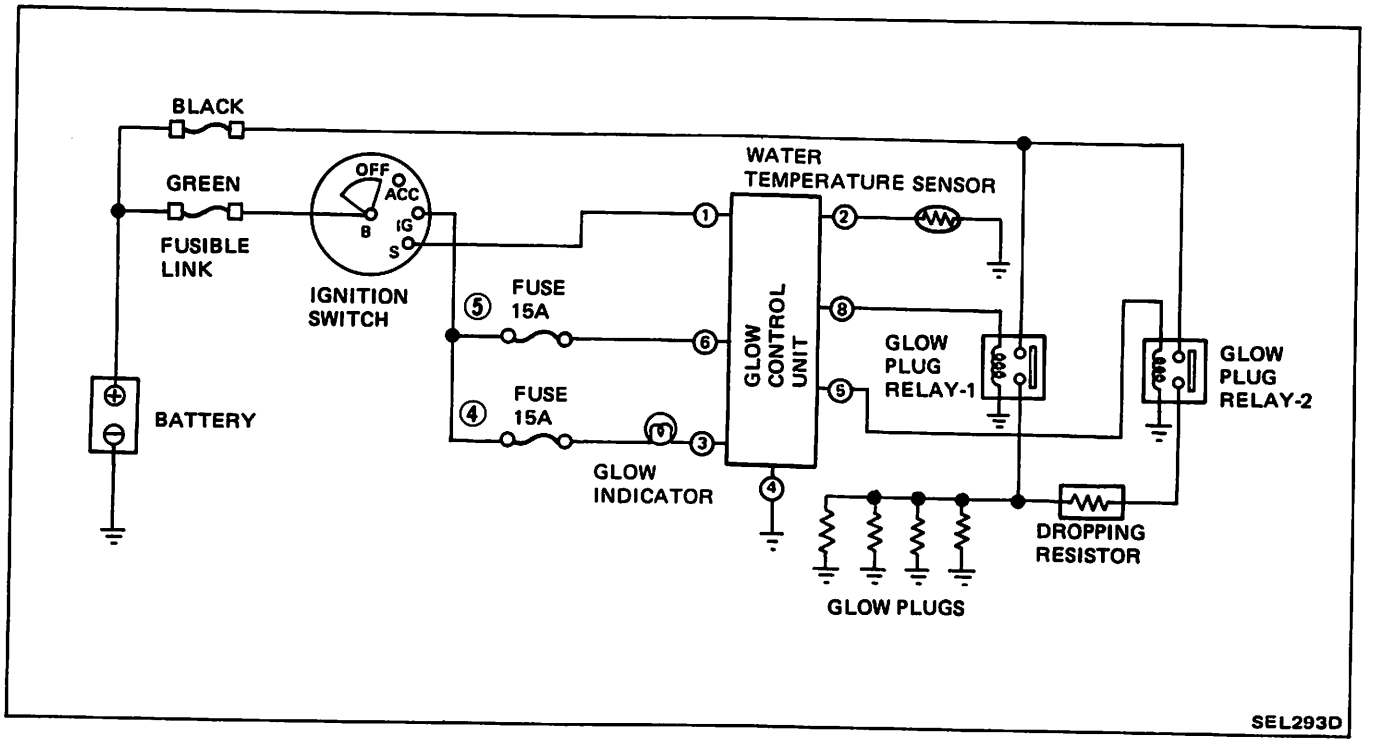

DESCRIPTION

The auto glow system provides the pre-glow (fast glow) operation before the engine starts as well as after-glow operation after the engine has started.

PRE-GLOW

When the ignition switch is turned on, the relay-1 is turned on and the "high-level" electric current flows through the glow plugs and heats up them quickly. After a given period, the control unit turns off the pilot lamp. The relay-1 automatically turns off after it has been on for 6 to 7 seconds.

AFTER-GLOW

When coolant temperature is lower than 50°C (122°F), the relay-2 turns on at the same time that the ignition switch is turned on. It remains on for 20 to 45 seconds depending on the coolant temperature and allows the "low-level" current to flow through the glow plugs. This improves the combustion performance of the engine after the engine has started. When the coolant temperature is higher than 50°C (122°F), the relay is turned on only during engine cranking.

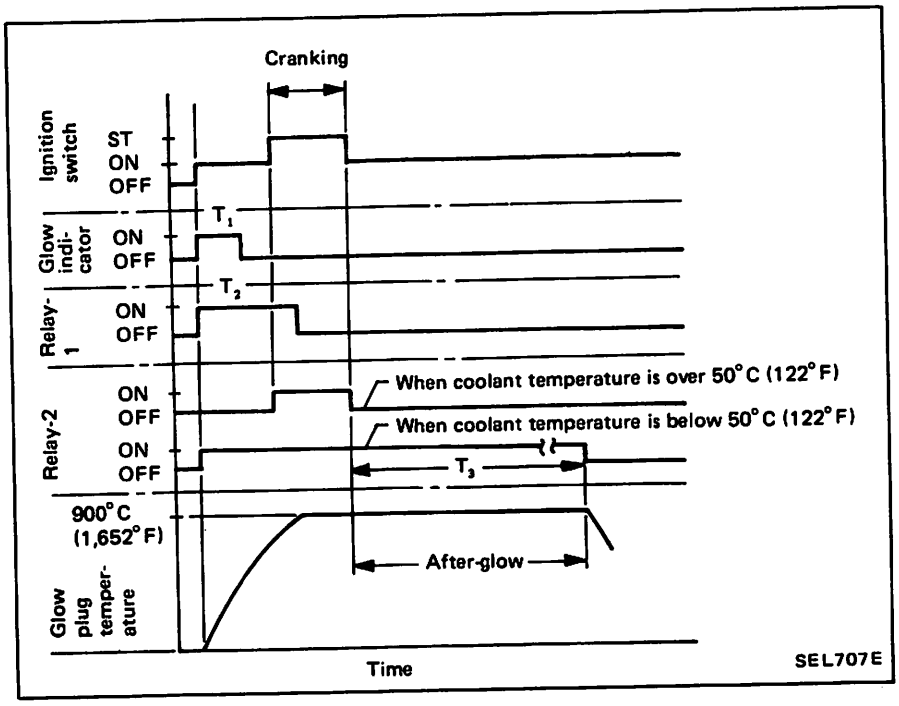

WIRING DIAGRAM

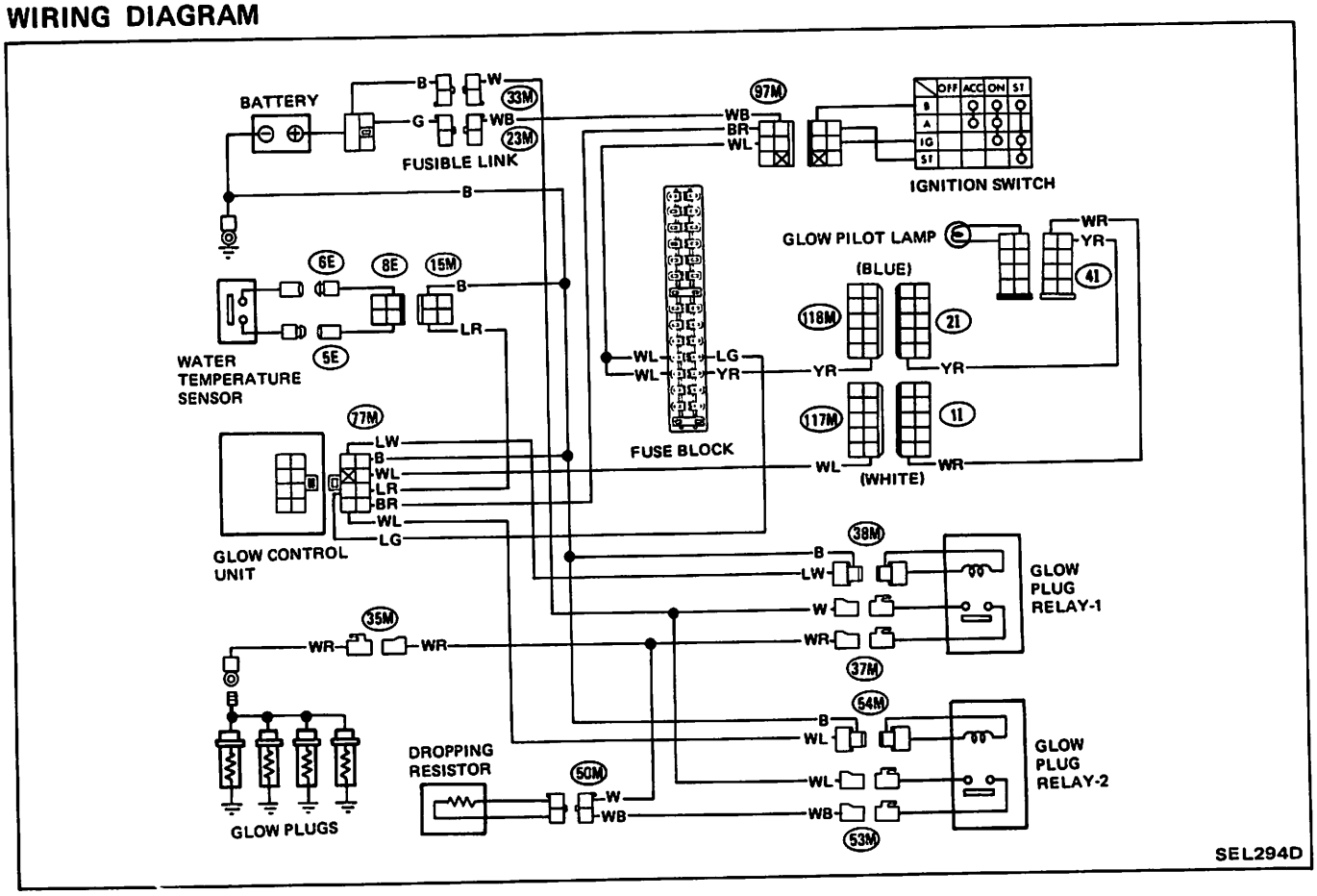

INSPECTION

GLOW PLUG

Check continuity in glow plugs.

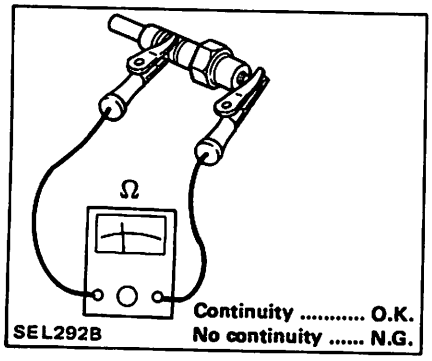

a. Do not continue to apply voltage to glow plug after it has glowed.
b. Be careful not to burn yourself while applying voltage.
c. Do not scratch glow plug pipe end.

GLOW PLUG RELAYS-1 AND -2

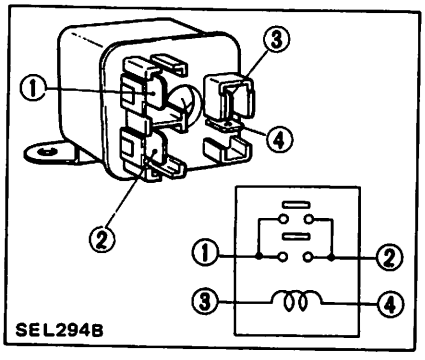

WATER TEMPERATURE SENSOR

Measure resistance to temperature. The specified values are shown below.

Temperature °C (°F)	Resistance kΩ
−10 (14)	7.0 - 11.4
20 (68)	2.1 - 2.9
50 (122)	0.68 - 1.00

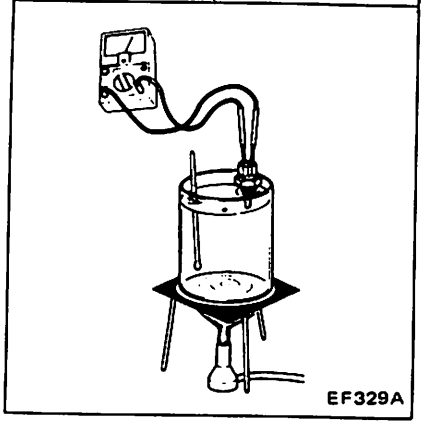

GLOW CONTROL UNIT

Control unit must not be checked as a single unit. Check control unit for operation as a system, referring to "Trouble Diagnoses and Corrections".

DROPPING RESISTOR

Resistance is approx. 0.1 Ω.

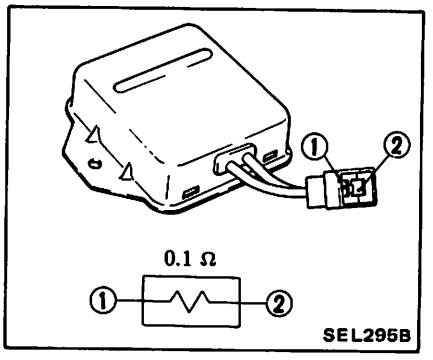

TROUBLE DIAGNOSES AND CORRECTIONS

TROUBLE-SHOOTING CHART

Test condition

- BATTERY : O.K.
- FUSIBLE LINK : O.K.
- FUSE : O.K.
- IGNITION SWITCH : O.K.
- IGNITION RELAY : O.K.

: Condition
: Check
: Probable cause

Before starting to troubleshoot the glow system, check connectors to determine if they are in good order.

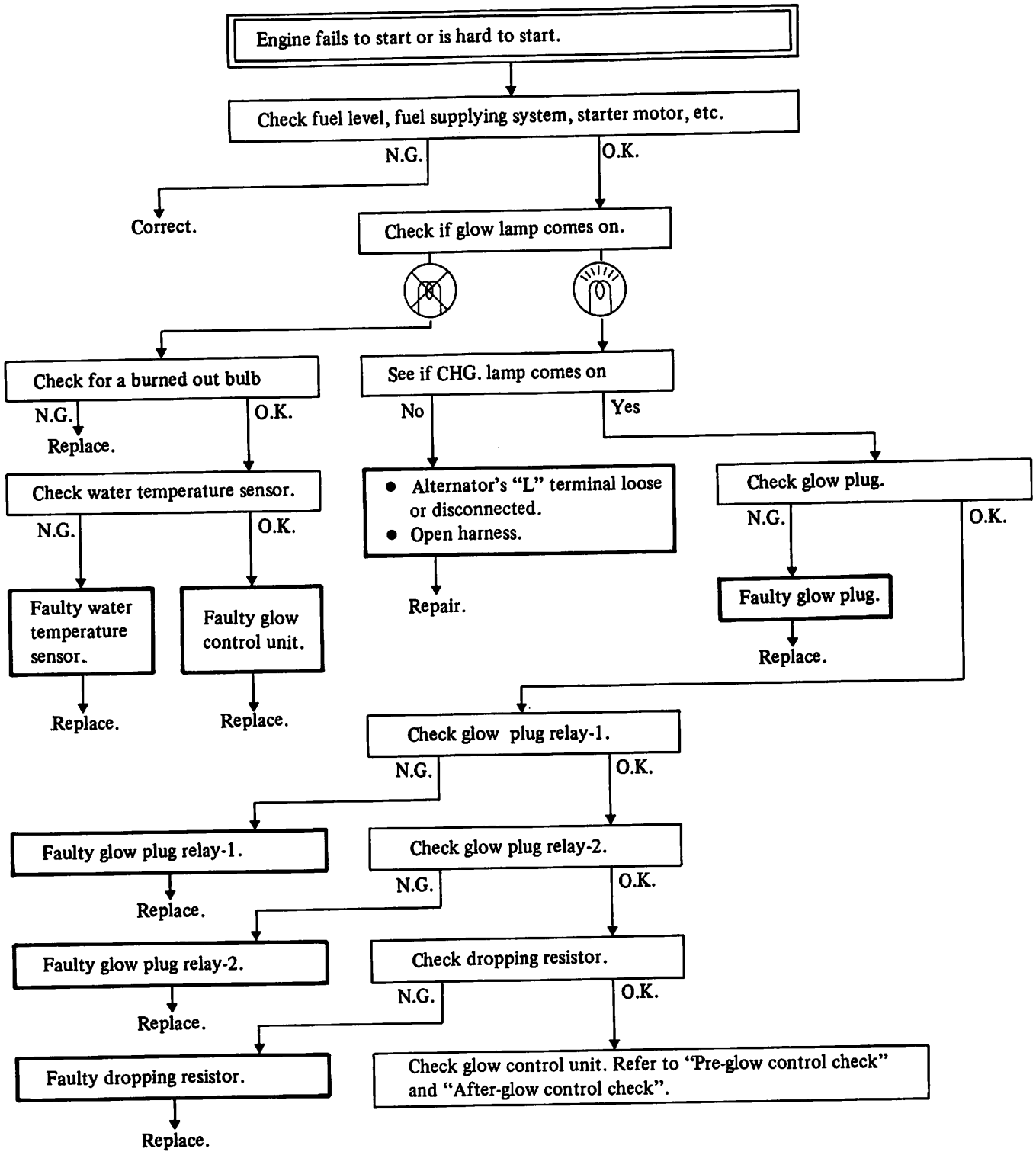

PRE-GLOW CONTROL CHECK

Connect test lamp to glow control unit as shown below. Measure the length of time that the test lamp is lighted.

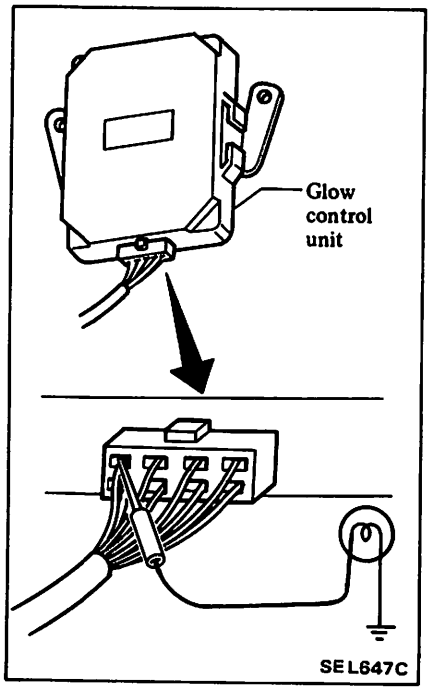

Time the test lamp should remain lit when the ignition switch is turned to "ON" from "OFF":
Approx. 2 - 7 seconds

The time will be shortened if the ignition switch is OFF only a short time. Therefore, when measuring the time, leave the ignition switch OFF for more than 1 minute, and then turn the ignition switch to ON.

AFTER-GLOW CONTROL CHECK

1. Connect test lamp to glow control unit as shown below.
2. Disconnect "S" terminal from starter motor.
3. Measure the time the test lamp remains lit.

Normal condition

- When the ignition switch is turned to "ON" from "START".

Engine coolant temperature °C (°F)	Time (sec.)
Below 20 (68) (approx.)	Approx. 20 - 50
Approx. 20 - 50 (68 - 122)	Approx. 20
Above 50 (122) (approx.)	0

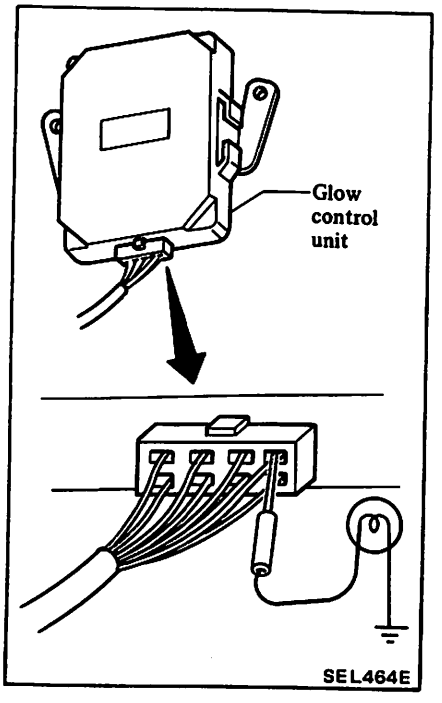

- When the ignition switch is in ST: Test lamp is ON (continuously) (Refer to above figure.)

GLOW INDICATOR CONTROL CHECK

Connect test lamp to glow control unit as shown below. Measure the time the test lamp is lit.

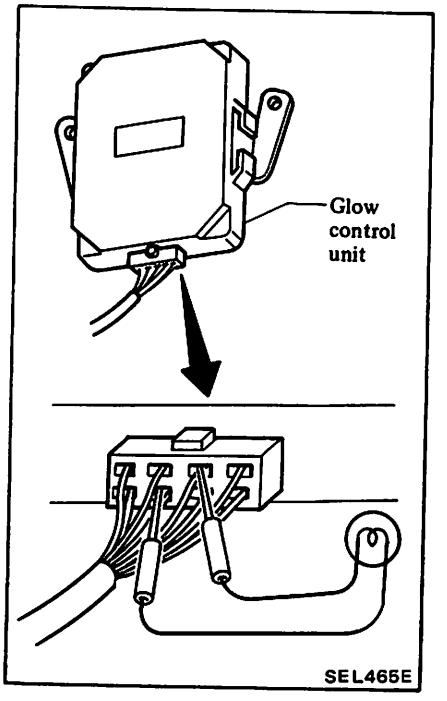

Time the test lamp should remain lit when the ignition switch is turned to "ON" from "OFF":
Approx. 0.5 - 7 seconds

INJECTION PUMP CONTROL SYSTEM

CAUTION: Before starting to work, be sure to turn ignition switch "OFF" and then disconnect battery ground cable.

DESCRIPTION

FUEL EXCESS OPERATION

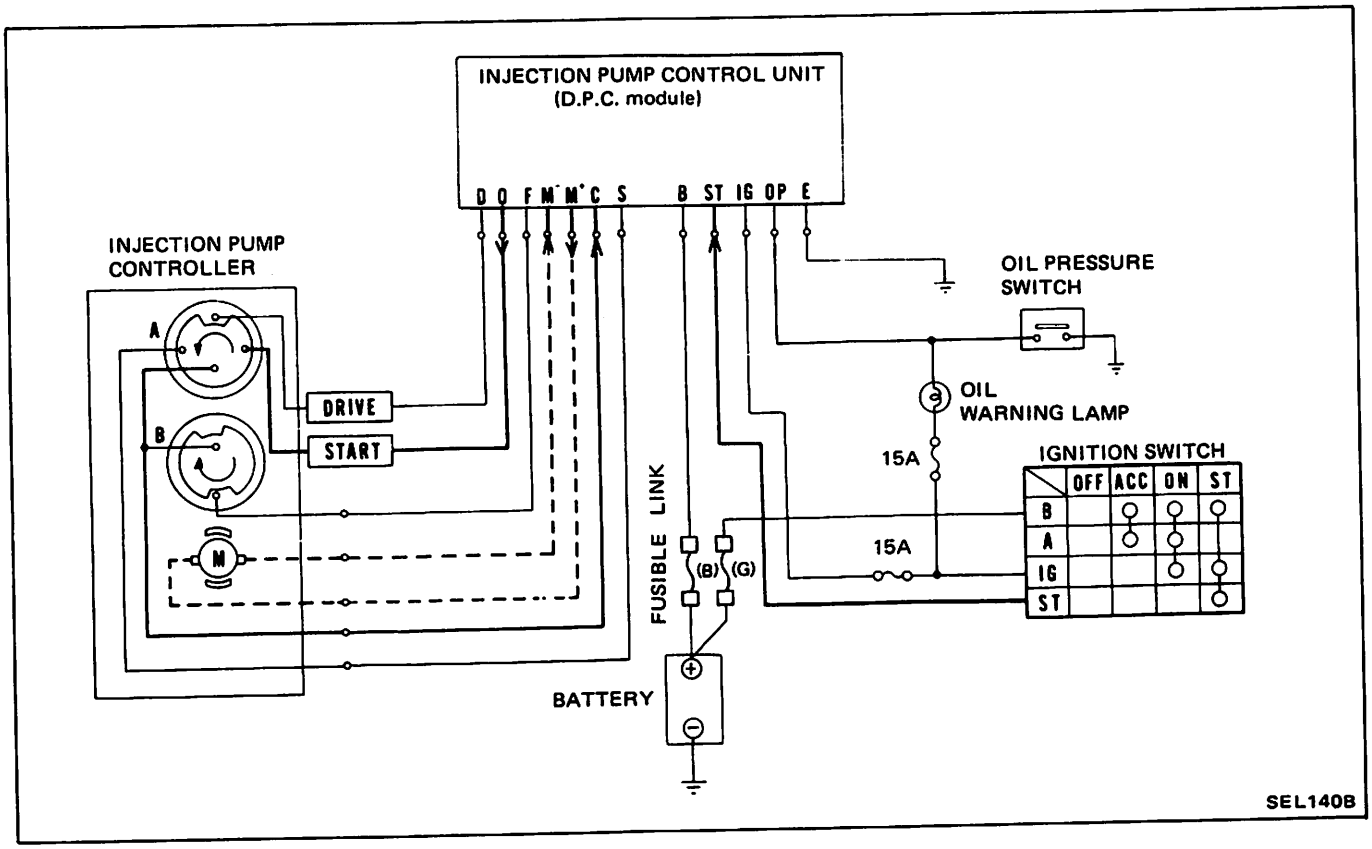

When the ignition switch is turned to "START", the fuel injection control unit activates. This permits an electrical current to flow in sequence via rotor A of the fuel injection pump controller, from terminal 0 to rotor A and terminal C, causing the fuel injection controller motor to run.

As the motor runs, rotor A rotates and, when it reaches its start position, current flow between terminal 0 and C is broken, which stops the motor's operation. The controller is thus brought to its START position.

DRIVE OPERATION

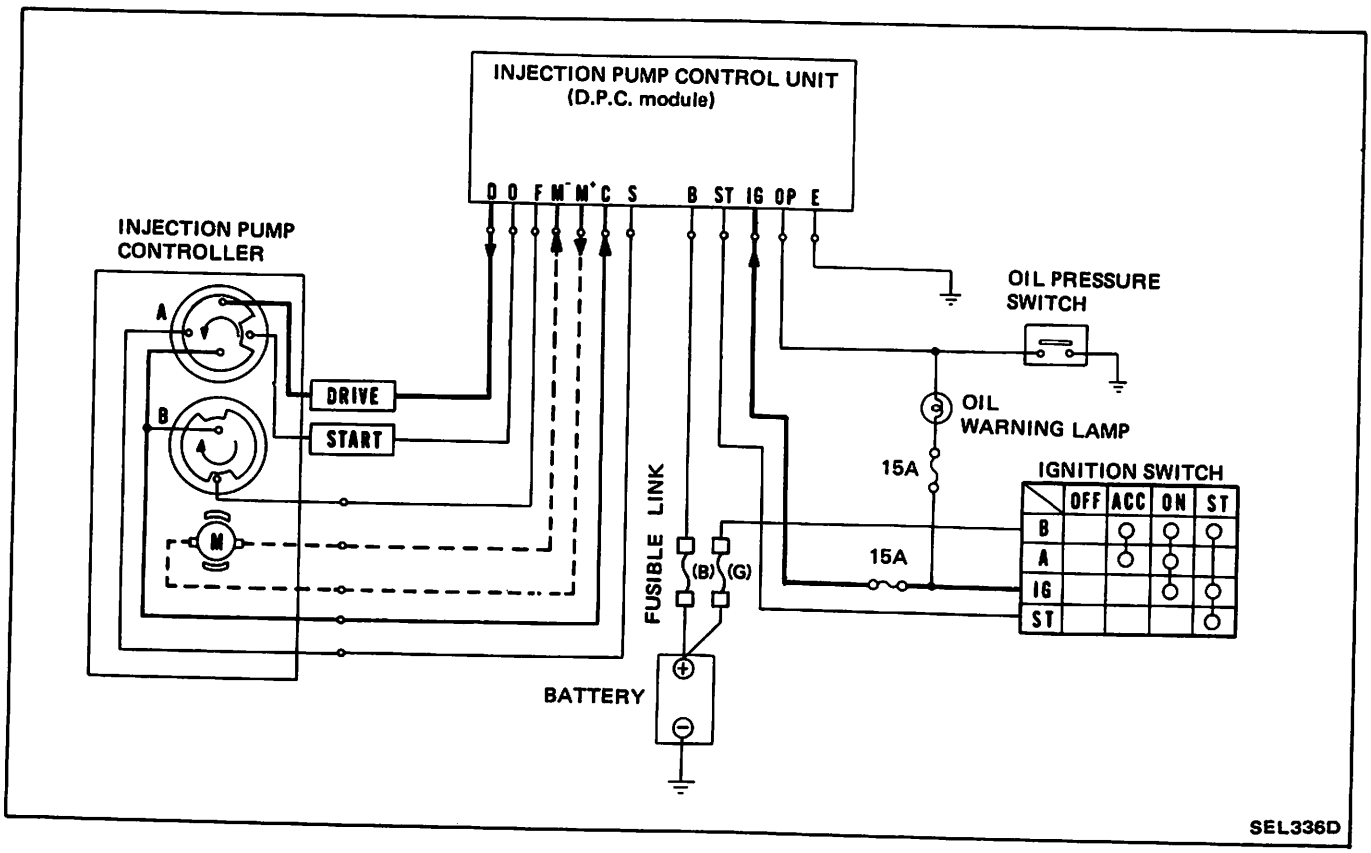

When the starting switch turned from "START" to "ON", the fuel injection pump control unit activates. This permits an electrical current to flow in sequence via rotor A of the fuel injection pump controller, from terminal D to rotor A and terminal C, causing the fuel injection controller motor to run. As the motor runs, rotor A rotates and, when it reaches its drive position, current flow between terminal D and C is broken, which stops the motor's operation. Thus, the controller is set at its DRIVE position.

ENGINE STOP OPERATION

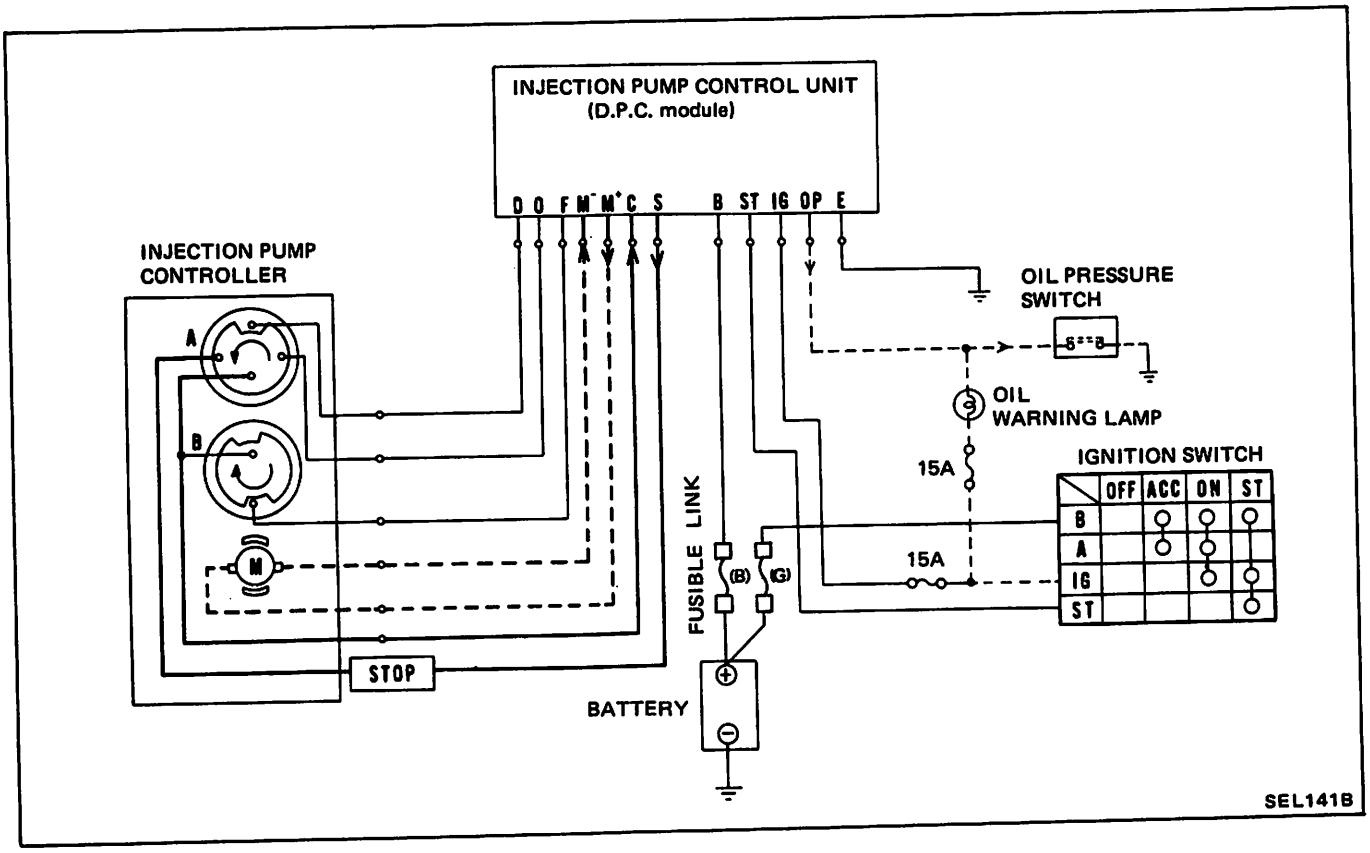

When the ignition switch is turned to "OFF" or when the oil pressure switch turns "ON", the fuel injection pump control unit will activate. When this happens, current flows in sequence through terminal S, rotor A and terminal C, causing the controller's motor to rotate as well as rotor A. As the rotor reaches the stop position, current flow between terminals S and C is broken and the motor will then stop. The controller is thus set at its STOP position.

SCHEMATIC

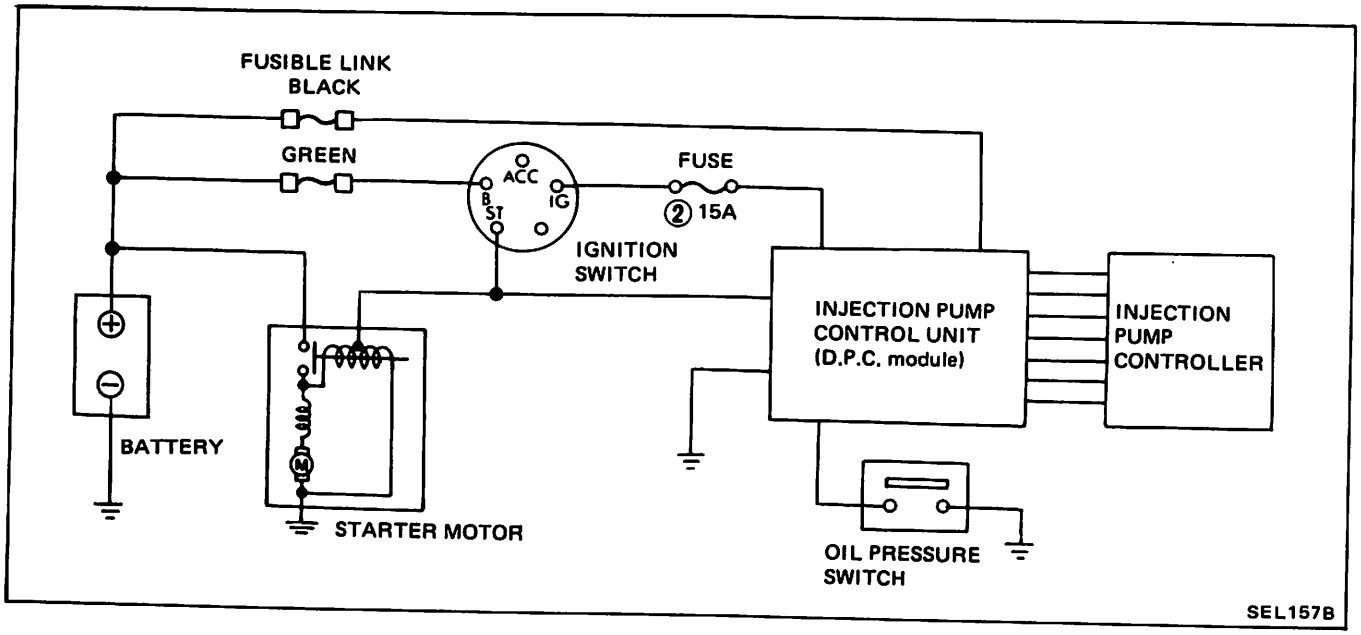

WIRING DIAGRAM

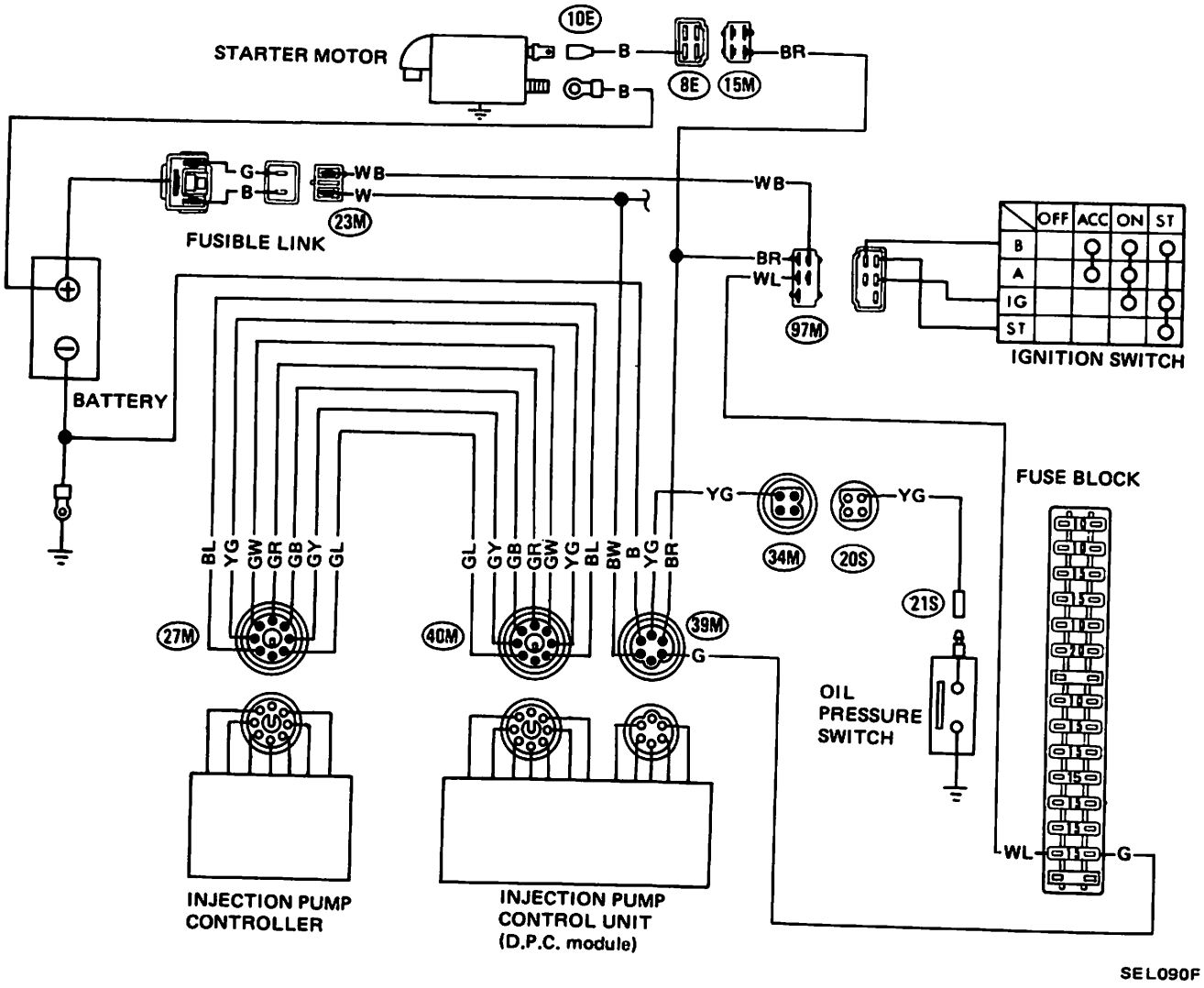

TROUBLE DIAGNOSES AND CORRECTIONS

TROUBLE-SHOOTING CHART

Case 1

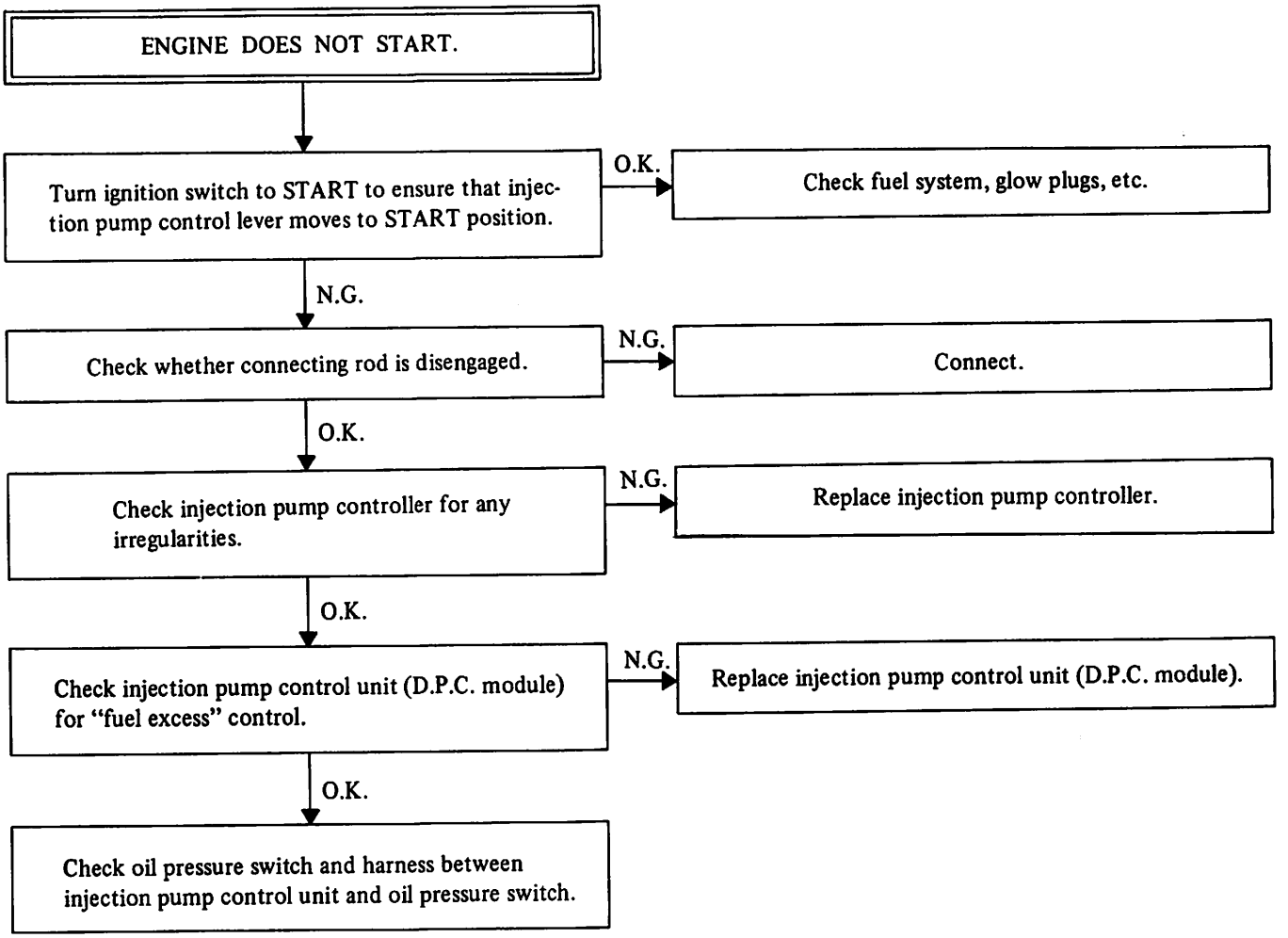

Case 2

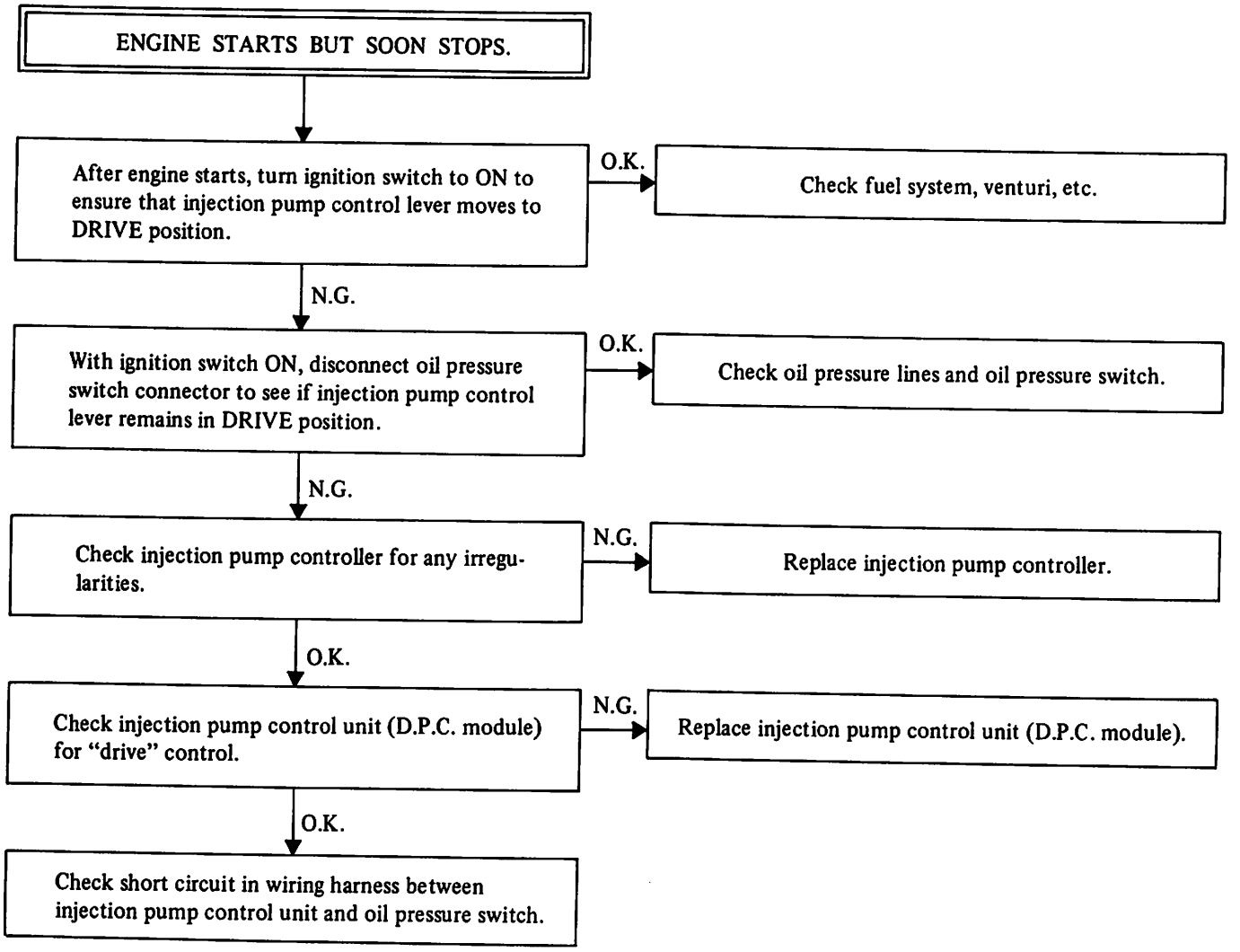
ENGINE STARTS BUT SOON STOPS.
After engine starts, turn ignition switch to ON to ensure that injection pump control lever moves to DRIVE position.
O.K.
Check fuel system, venturi, etc.
N.G.
With ignition switch ON, disconnect oil pressure switch connector to see if injection pump control lever remains in DRIVE position.
O.K.
Check oil pressure lines and oil pressure switch.
N.G.
Check injection pump controller for any irregularities.
N.G.
Replace injection pump controller.
O.K.
Check injection pump control unit (D.P.C. module) for "drive" control.
N.G.
Replace injection pump control unit (D.P.C. module).
O.K.
Check short circuit in wiring harness between injection pump control unit and oil pressure switch.

Case 3

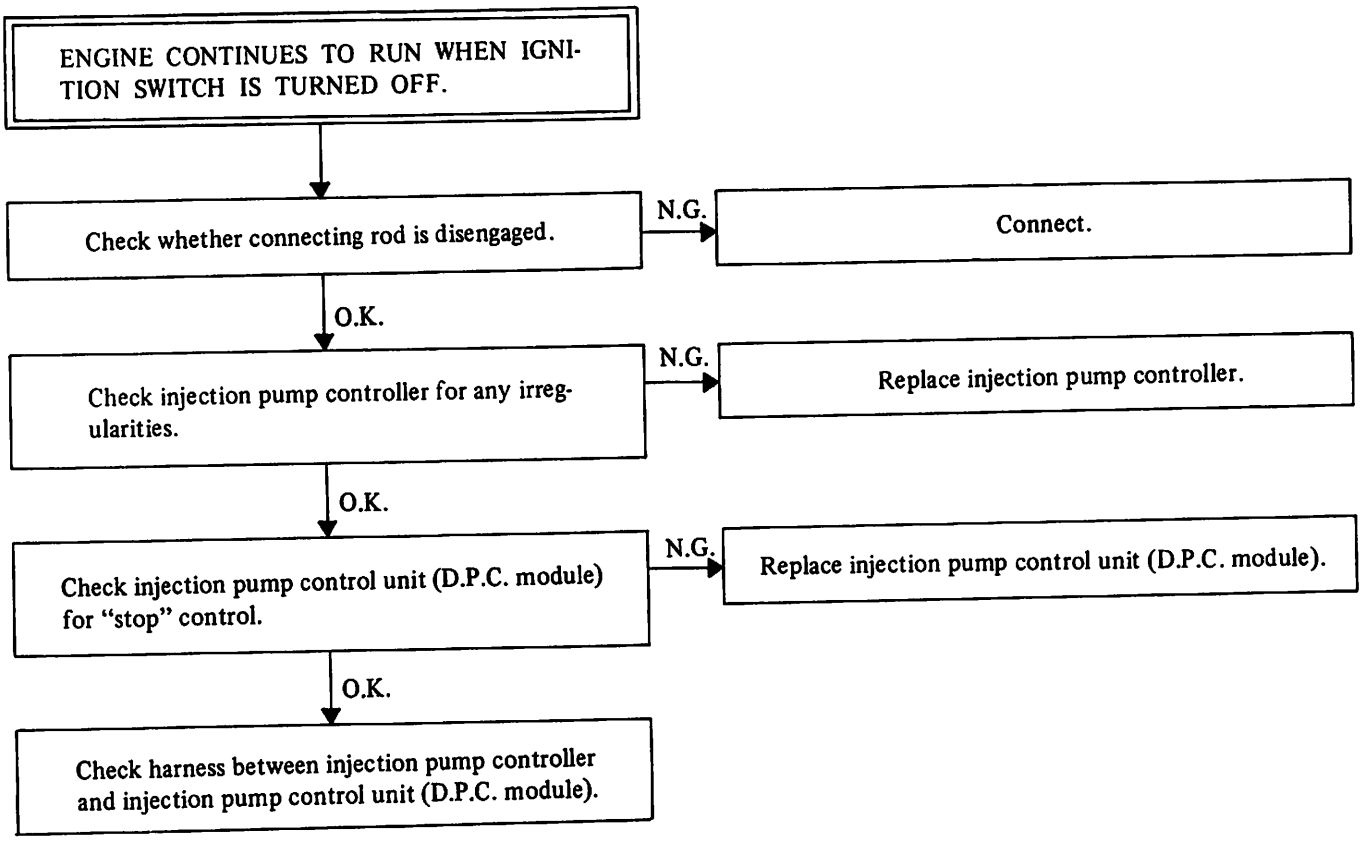
ENGINE CONTINUES TO RUN WHEN IGNITION SWITCH IS TURNED OFF.
Check whether connecting rod is disengaged.
N.G.
Connect.
O.K.
Check injection pump controller for any irregularities.
N.G.
Replace injection pump controller.
O.K.
Check injection pump control unit (D.P.C. module) for "stop" control.
N.G.
Replace injection pump control unit (D.P.C. module).
O.K.
Check harness between injection pump controller and injection pump control unit (D.P.C. module).

Case 4

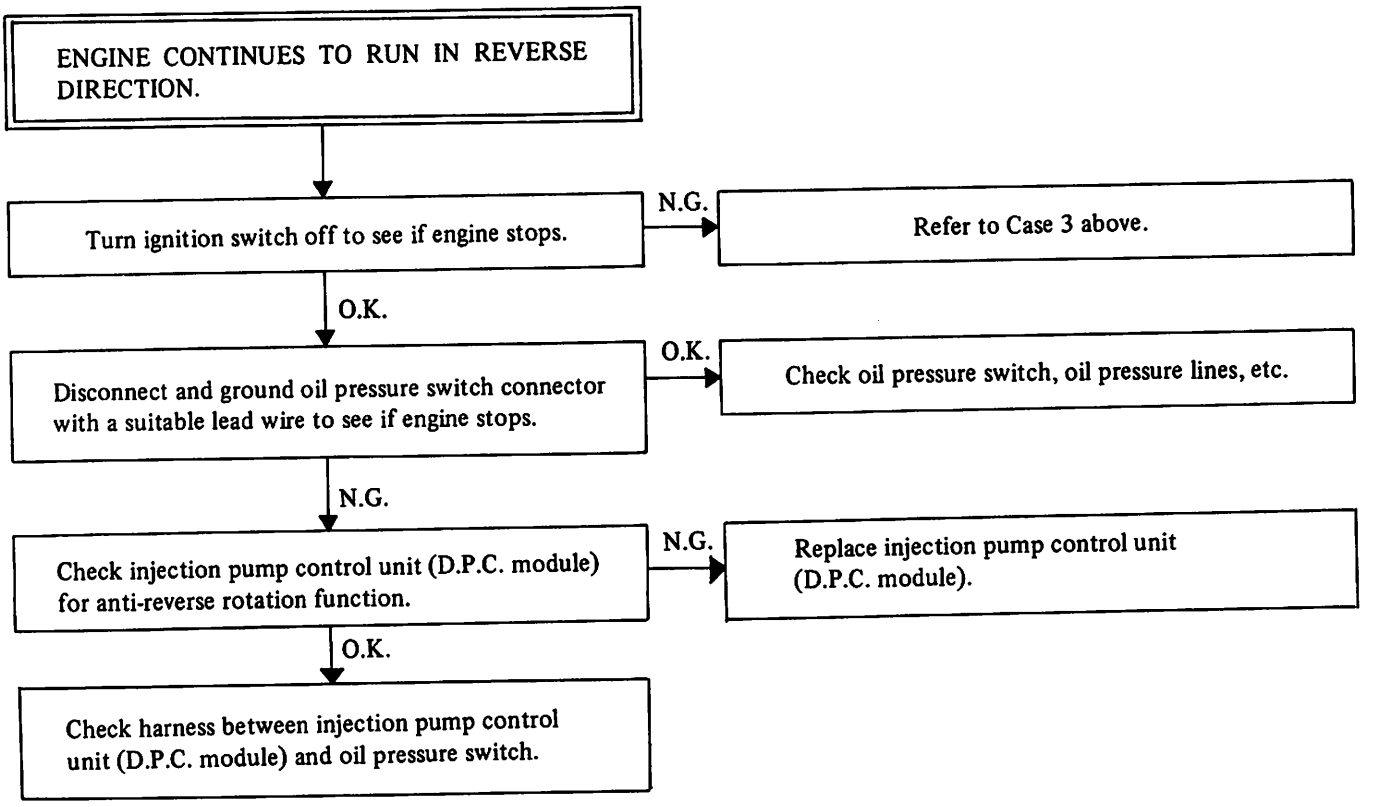
ENGINE CONTINUES TO RUN IN REVERSE DIRECTION.
Turn ignition switch off to see if engine stops.
N.G.
Refer to Case 3 above.
O.K.
Disconnect and ground oil pressure switch connector with a suitable lead wire to see if engine stops.
O.K.
Check oil pressure switch, oil pressure lines, etc.
N.G.
Check injection pump control unit (D.P.C. module) for anti-reverse rotation function.
N.G.
Replace injection pump control unit (D.P.C. module).
O.K.
Check harness between injection pump control unit (D.P.C. module) and oil pressure switch.

INJECTION PUMP CONTROL SYSTEM INSPECTION

ENTIRE SYSTEM

Inspect entire system for any irregularities. If any are found, refer to Trouble Diagnoses and Corrections chart in order to locate problems' cause and eliminate them as required.

(1) "START" operation

Turn ignition key to "START" in order to ensure that injection pump control lever moves to the start position.

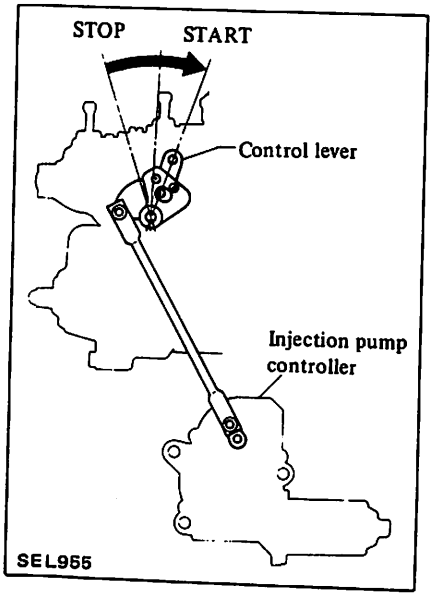

(2) "DRIVE" operation

Turn ignition key to "'ON" in order to ensure that injection pump control lever moves to the drive position.

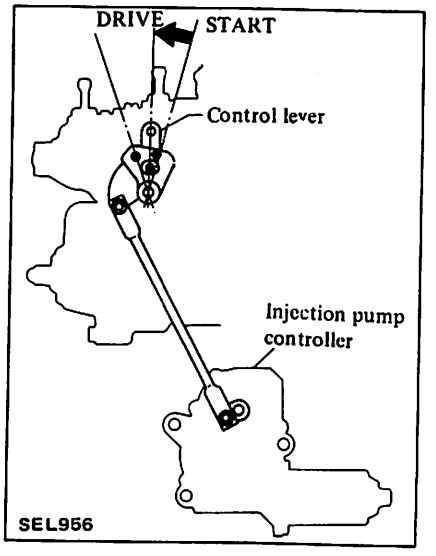

(3) "STOP" operation

1. Turn ignition switch to "OFF" in order to ensure that injection pump control lever moves to the stop position.
2. Start engine. Disconnect and ground oil pressure switch connector with a suitable lead wire to see if injection pump control lever moves to the stop position.

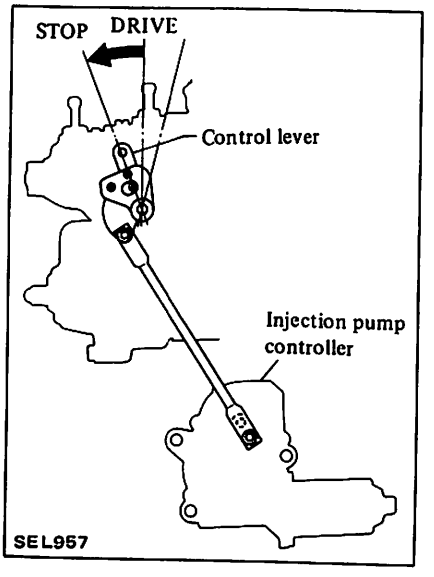

INJECTION PUMP CONTROL UNIT (D.P.C. module)

Preparation for check

1. Turn ignition switch OFF.
2. Disconnect harness connector from starter motor "S" terminal.
3. Disconnect the 8-pin harness connector from the injection pump control unit.
4. Connect test lamp between terminals (M+) and (M−) of injection pump control unit.

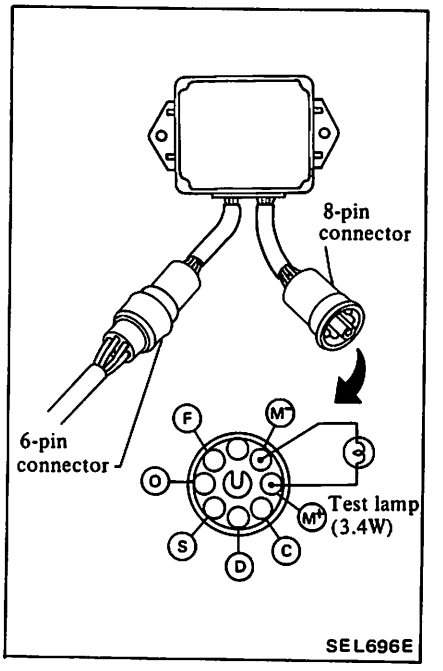

Engine stop control check

1. Turn ignition switch OFF.
2. Disconnect harness connector from oil pressure switch.
3. When connecting a suitable lead wire between terminals (S) and (C), test lamp should come on and then go off in about 10 to 20 seconds.

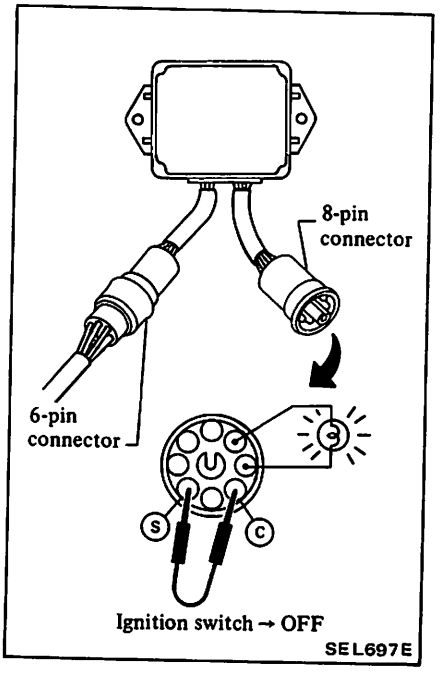

Drive position control check

1. Turn ignition switch OFF.
2. Disconnect harness connector from oil pressure switch.
3. Connect a suitable lead wire between terminals Ⓓ and Ⓒ.
4. When ignition switch is turned to "ON", test lamp should come on and go off in about 10 to 20 seconds.

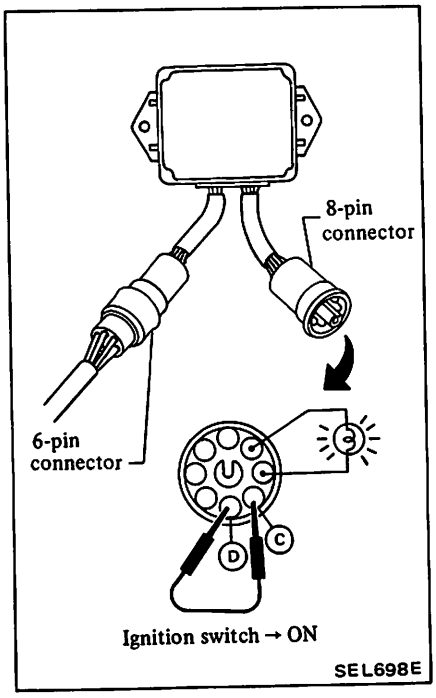

Fuel excess control check

1. Turn ignition switch OFF.
2. Disconnect harness connector from oil pressure switch and ground it with a suitable lead wire.
3. Connect a suitable lead wire between terminals Ⓞ and Ⓒ.
4. When ignition switch is turned to "START", test lamp should come on and then go off in about 10 to 20 seconds.

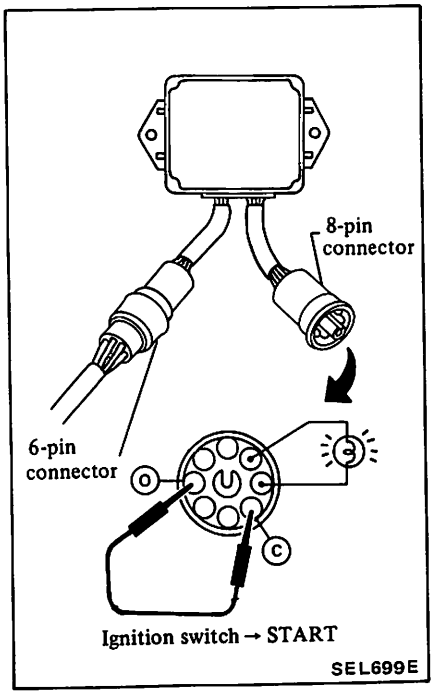

Anti-reverse rotation function check

1. Turn ignition switch OFF.
2. Disconnect harness connector from oil pressure switch and ground it with a suitable lead wire.
3. Connect a suitable lead wire between terminals Ⓢ and Ⓒ.
4. When ignition switch is turned to "ON", test lamp should come on and then go off in about 10 to 20 seconds.

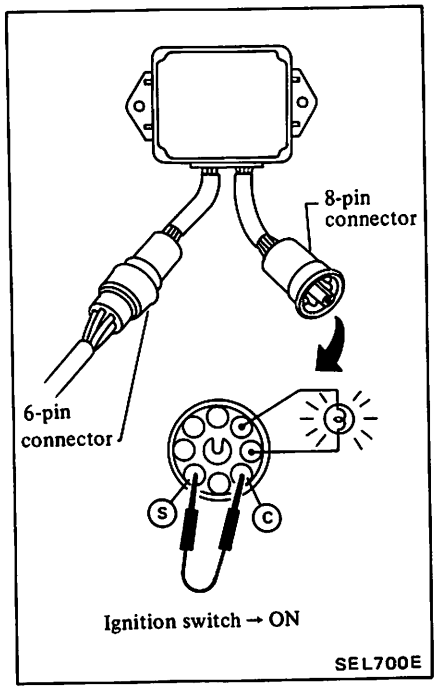

INJECTION PUMP CONTROLLER

Test A

Connect positive lead wire to terminal ⑬, and negative lead wire to terminal ⑭

Injection pump controller motor should run.

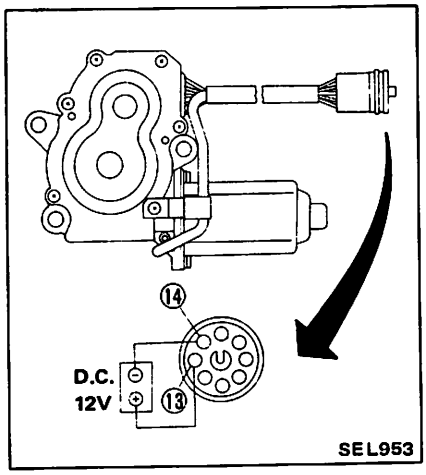

Test B

Fabricate adapters, as shown in the following illustration, and connect terminal Ⓐ to each of terminals listed in the table below. Injection pump control lever should stop at corresponding position.

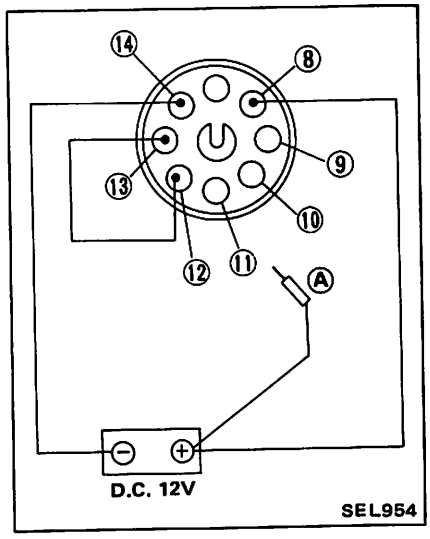

Be careful not to connect lead wire to the wrong terminals as this will damage injection pump controller.

Connect terminal Ⓐ to:	Corresponding position of injection pump control lever
Terminal ⑨	START
Terminal ⑩	STOP
Terminal ⑪	DRIVE

LIGHTING SYSTEM

CAUTION: Before starting to work, be sure to turn ignition switch "OFF" and then disconnect battery ground cable.

BULB SPECIFICATIONS

Item	Wattage (W)	SAE trade number
Headlamp (Sealed beam)		
Inner–High	50	4651
Outer–High/Low	40/60	4652
Halogen headlamp (Sealed beam)		
Inner (Type 1)–High	50	H4651
Outer (Type 2)–High/Low	35/35	H4656
Front combination lamp		
Turn signal	27	1156
Clearance	8	–
Side marker lamp		
Front	5	–
Rear	3.8	–
Rear combination lamp		
Stop & Turn signal/Tail	27/8	1157
Back-up	27	1156
License plate lamp	7.5	–
Room lamp		
Except King Cab	5	–
King Cab	10	–

COMBINATION SWITCH

REMOVAL AND INSTALLATION

1. Remove steering wheel.
2. Remove steering column cover.
3. Disconnect all combination switch wires.
4. Loosen retaining screw and remove combination switch.
5. To install combination switch, align protrusion on switch body with hole on steering column, and tighten retaining screw.

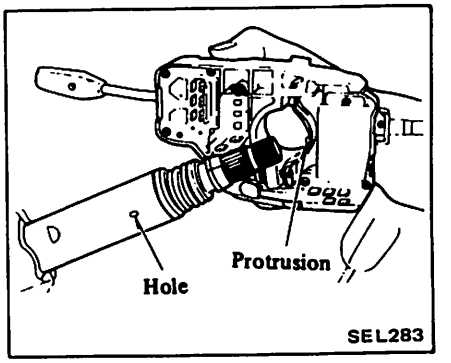

INSPECTION

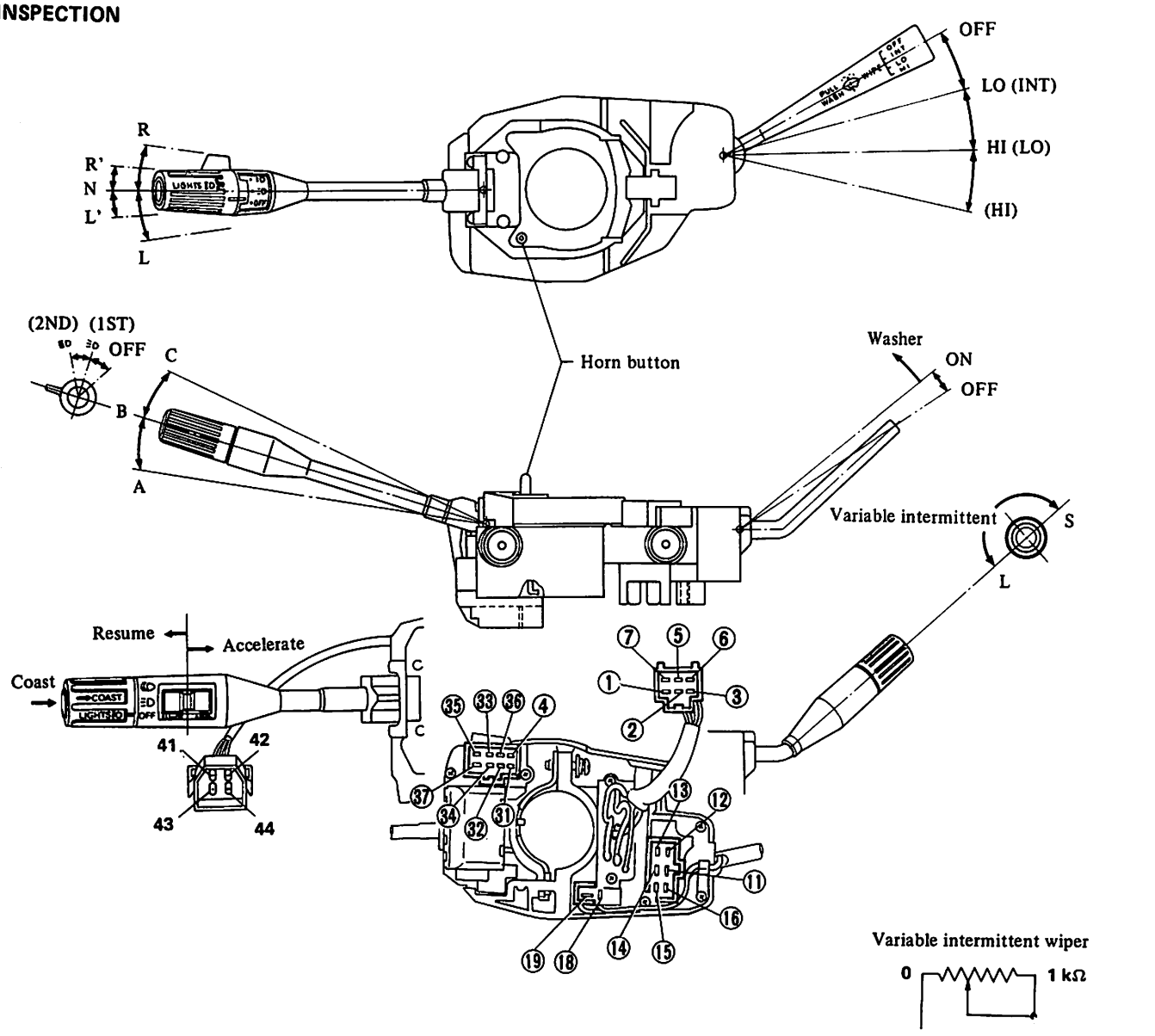

Turn signal switch

	LEVER R	LEVER N	LEVER L	HORN
1	○		○	
2				
3	○		○	
5	○	○	○	
6	○	○	○	
7	○	○	○	

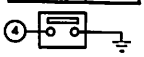

HORN BUTTON

Without intermittent wiper

	WIPER OFF	WIPER LO	WIPER HI	WASH
11				○
12	○			
13	○	○		
14				
15			○	
16		○	○	○

With intermittent wiper

	WIPER OFF	WIPER INT	WIPER LO	WIPER HI	WASH
11					○
12	○	○			
13	○	○	○		
14		○			
15				○	
16		○	○	○	○

Lighting switch

	OFF A	OFF B	OFF C	1ST A	1ST B	1ST C	2ND A	2ND B	2ND C
31			○			○	○	○	○
32			○			○	○	○	○
33			○		○	○	○	○	○
34			○			○	○	○	○
35					○			○	
36				○	○	○	○	○	○
37				○	○	○	○	○	○

A.S.C.D. set switch

	COAST	RESUME	ACCELERATE
41	○	○	○
42	○		
43		○	
44			○

SEL091F

HEADLAMP

WIRING DIAGRAM/HEADLAMP

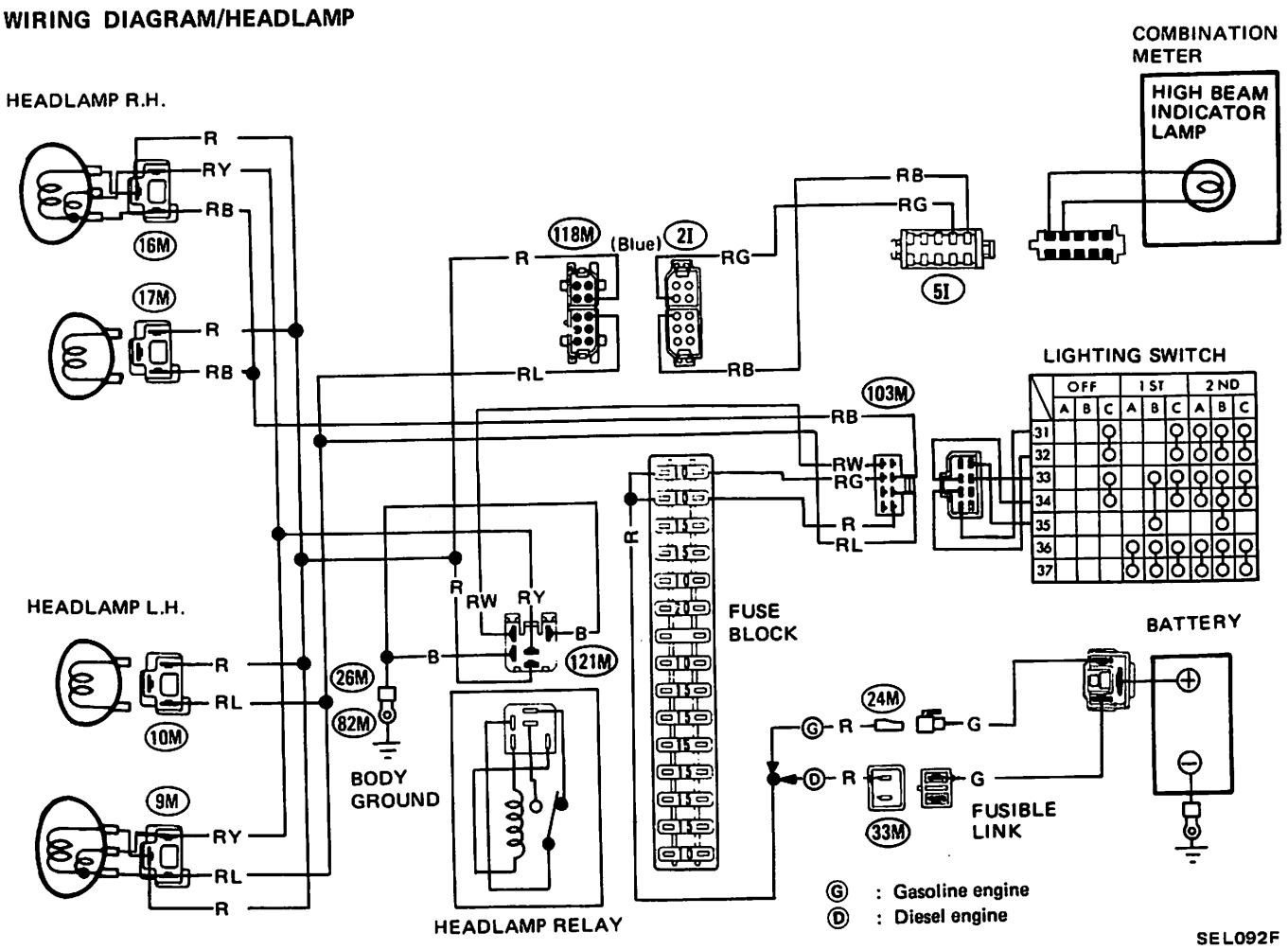

TROUBLE DIAGNOSES AND CORRECTIONS

Condition	Probable cause	Corrective action
Headlamps do not light for either high or low beam.	Burnt fusible link.	Correct cause and replace.
	Loose connection or open circuit.	Check wiring and/or repair connection.
	Faulty lighting switch.	Check and replace if necessary.
	Faulty lighting relay.	Check and replace if necessary.
	No ground.	Clean and tighten ground terminal.
High beam cannot be switched to low beam or vice versa.	Faulty lighting switch.	Check and replace if necessary.
	Faulty lighting relay.	Check and replace if necessary.
	Burnt fuse.	Correct cause and replace.
Headlamps dim.	Partly discharged or faulty battery.	Measure specific gravity of electrolyte and recharge of replace battery if necessary.
	Faulty charging system.	Measure voltage at headlamp terminals. If it is less than 12.8V, check charging system for proper operation.
	Poor ground or loose connection.	Clean and/or tighten.
	Burnt fusible link.	Replace.

Condition	Probable cause	Corrective action
Headlamp lights on only one side.	Faulty lighting switch. Loose headlamp connection. Faulty headlamp beam.	Check and replace if necessary. Repair. Replace.
Headlamp dim on one side.	Burnt fuse.	Correct cause and replace.

LIGHTING SWITCH

Refer to "COMBINATION SWITCH".

LIGHTING RELAY

Location

Lighting relay is installed on the left side of the dash panel. Refer to "LOCATION OF ELECTRICAL UNITS".

Inspection

Lighting relay is 1T type standardized relay. Refer to "STANDARDIZED RELAY".

AIMING ADJUSTMENT

To adjust headlamp's left-and-right aim, turn the adjusting screw that is located on the side of the headlamp; to adjust its up-and-down aim, turn the adjusting screw that is located on the top side of the headlamp.

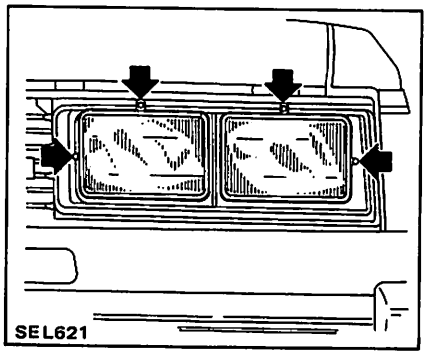

Before making headlamp aiming adjustment, observe the following instructions.

a. Keep all tires inflated to correct pressures.

b. Place car and tester on one and same flat surface.

c. See that there is no load in the car other than the driver.

For detailed aiming procedures, follow the regulations that are particular to your region.

When performing headlamp aiming adjustment, use an aiming machine, aiming wall screen or headlamp tester. For operating instructions of any aimer, it should be in good repair, calibrated and used according to respective operation manuals supplied with the unit.

If any aimer is not available, aiming adjustment can be done as follows:

Low beam

Turn headlamp low beam on.

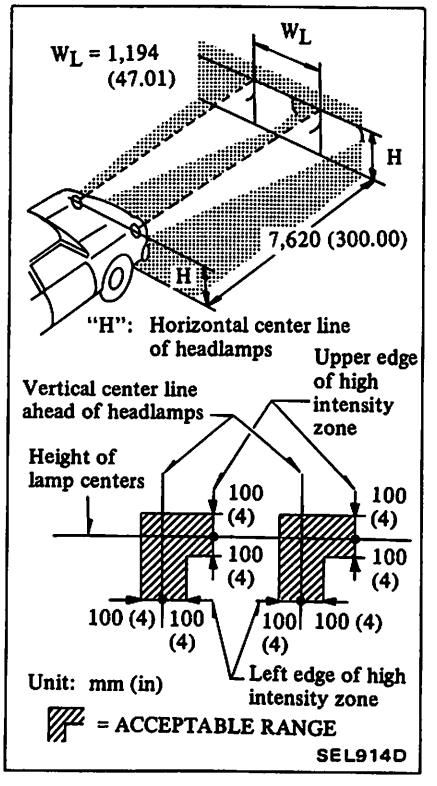

a. Adjust headlamps so that upper edge and left edge of high intensity zone are within the acceptable range as shown above.

b. Dotted lines in illustration show center of headlamp.

High beam

With type II unit lamps (outer lamps) covered, turn headlamps to high beam.

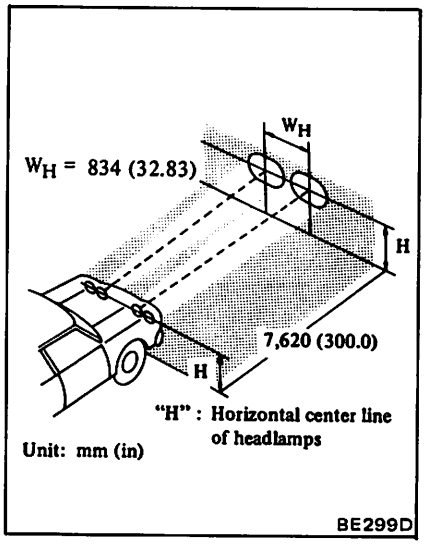

a. Adjust high beams so that main axis of light is parallel to center line of body.

b. Dotted lines in illustration show center of headlamp.

EXTERIOR LAMPS

CAUTION: Do not wipe lens surface using cloth dampened with gasoline.

SCHEMATIC/TAIL, CLEARANCE, SIDE MARKER AND LICENSE PLATE LAMPS

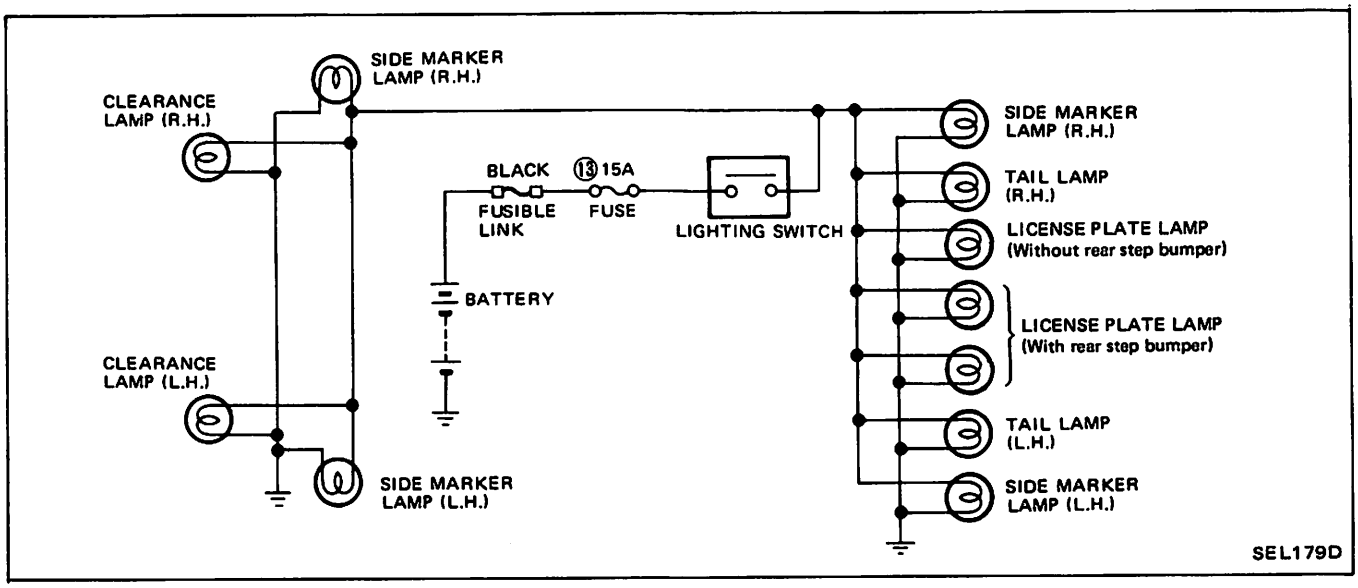

WIRING DIAGRAM/TAIL, CLEARANCE, SIDE MARKER AND LICENSE PLATE LAMPS

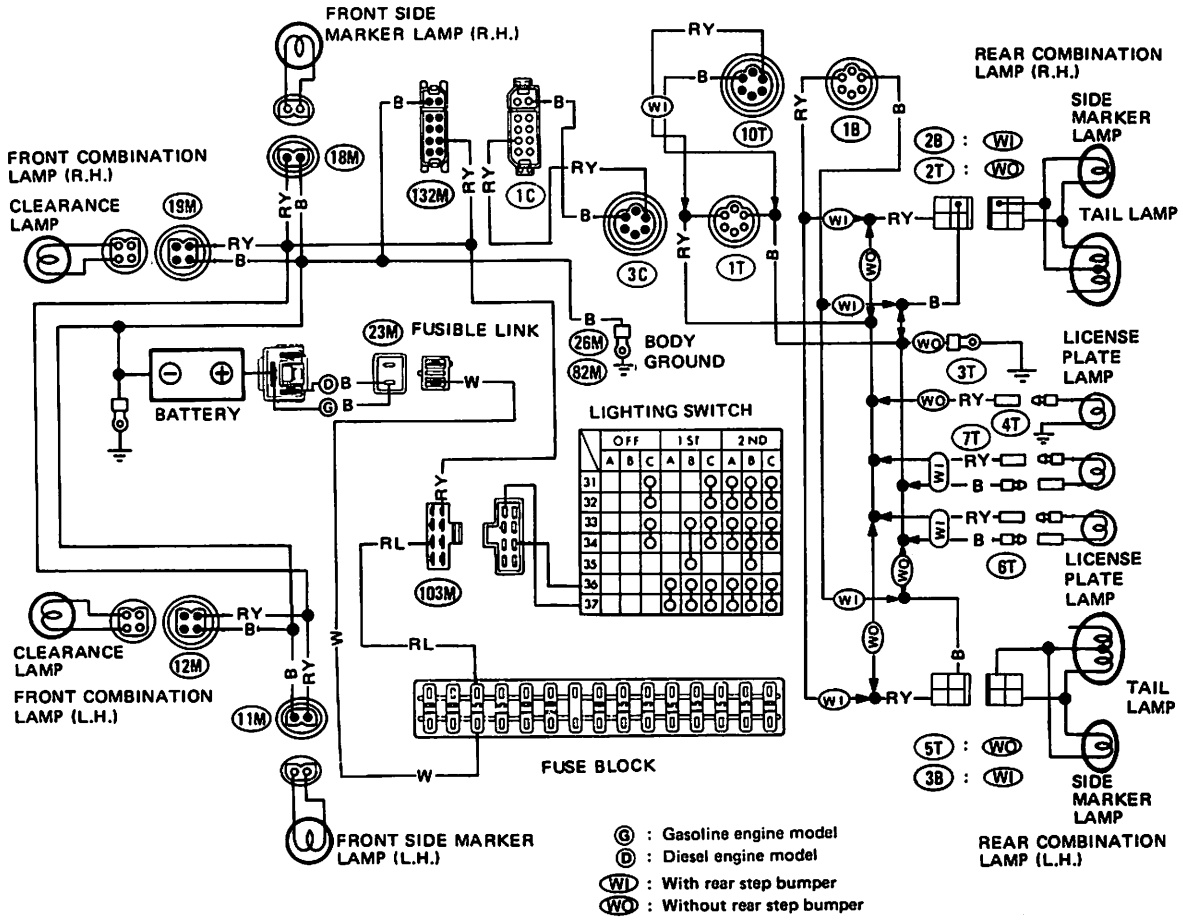

SCHEMATIC/STOP LAMPS

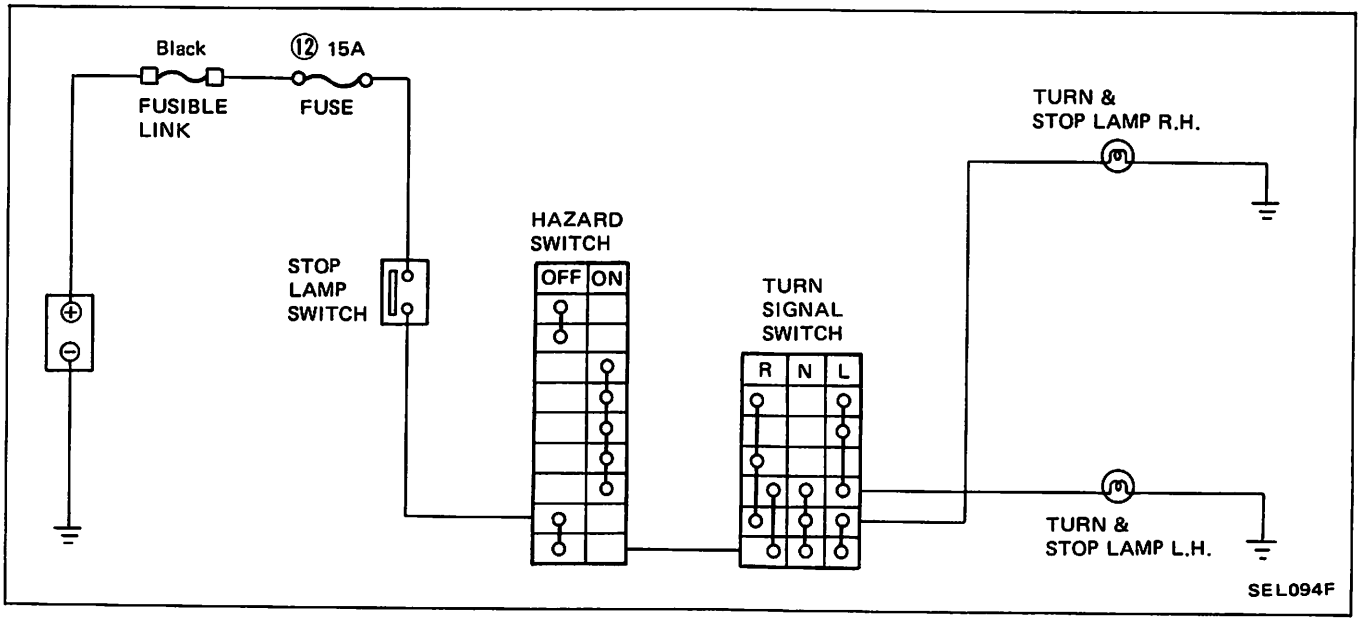

WIRING DIAGRAM/STOP LAMPS

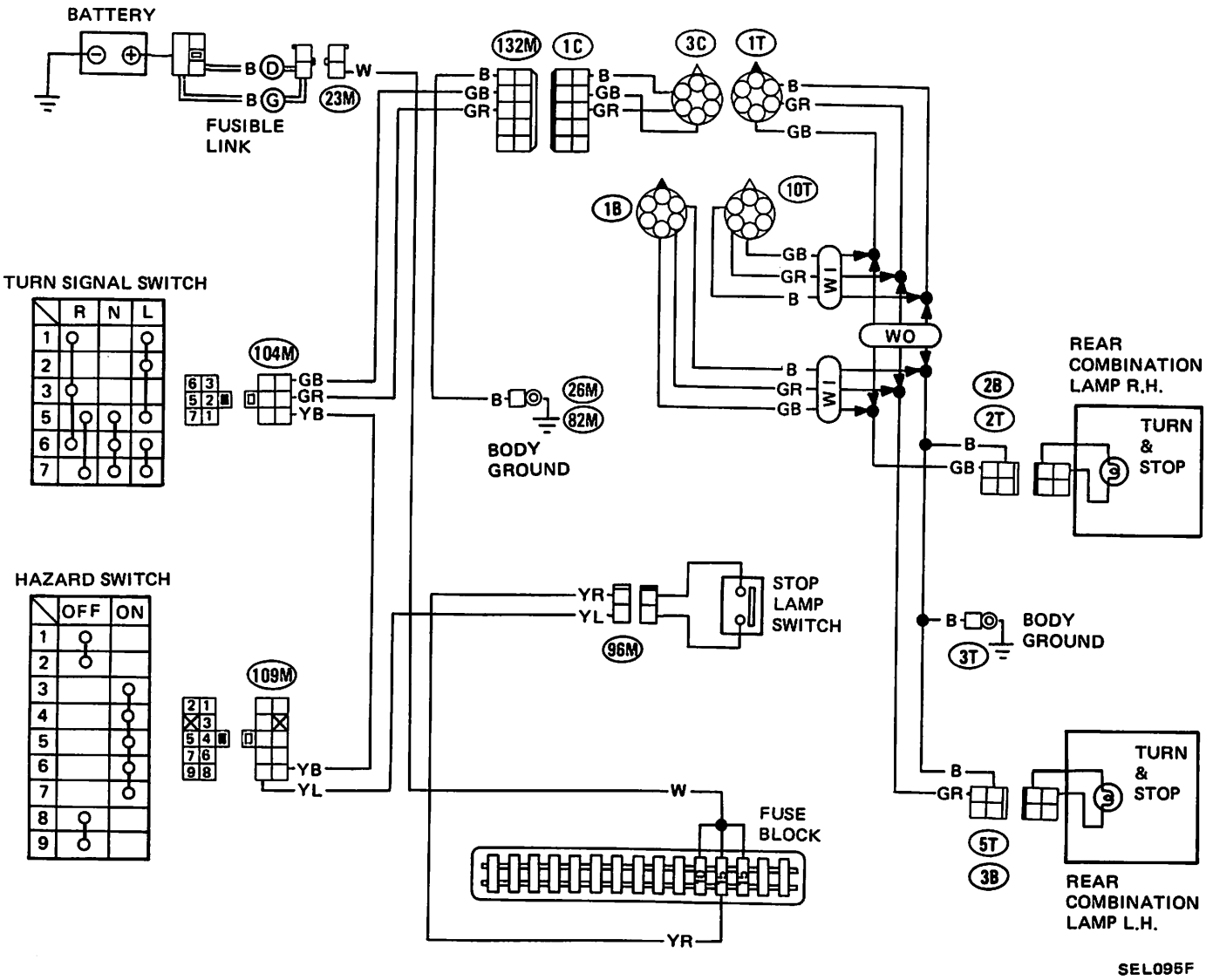

SCHEMATIC/BACK-UP LAMPS

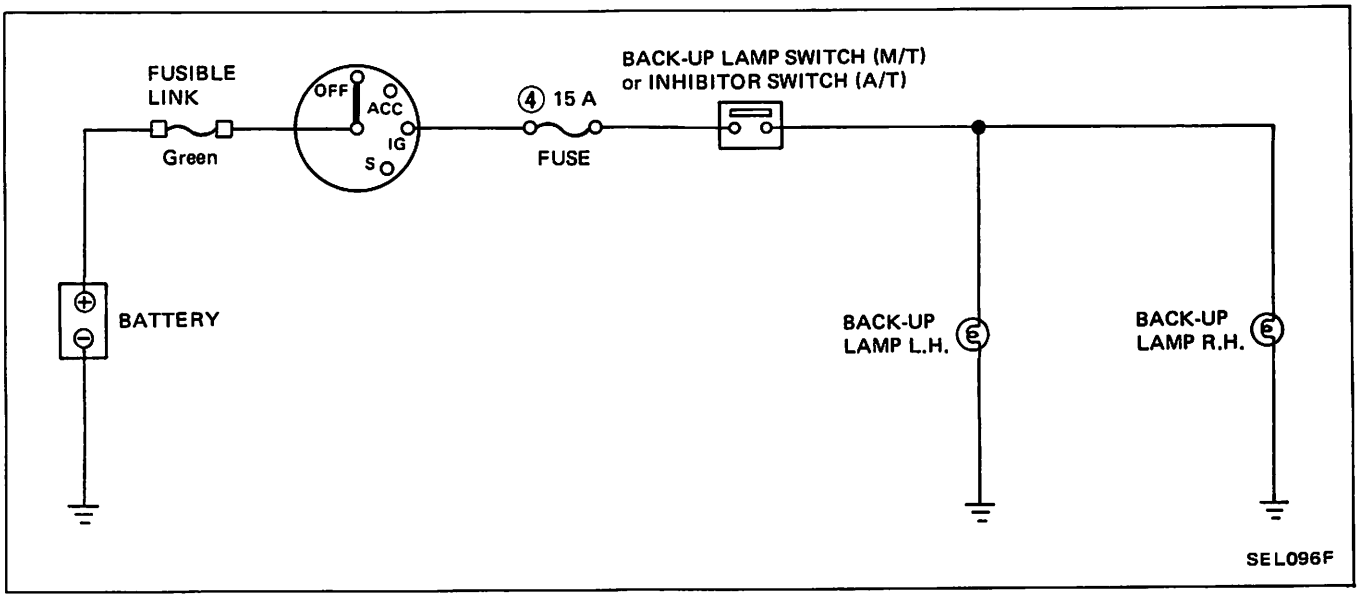

WIRING DIAGRAM/BACK-UP LAMPS

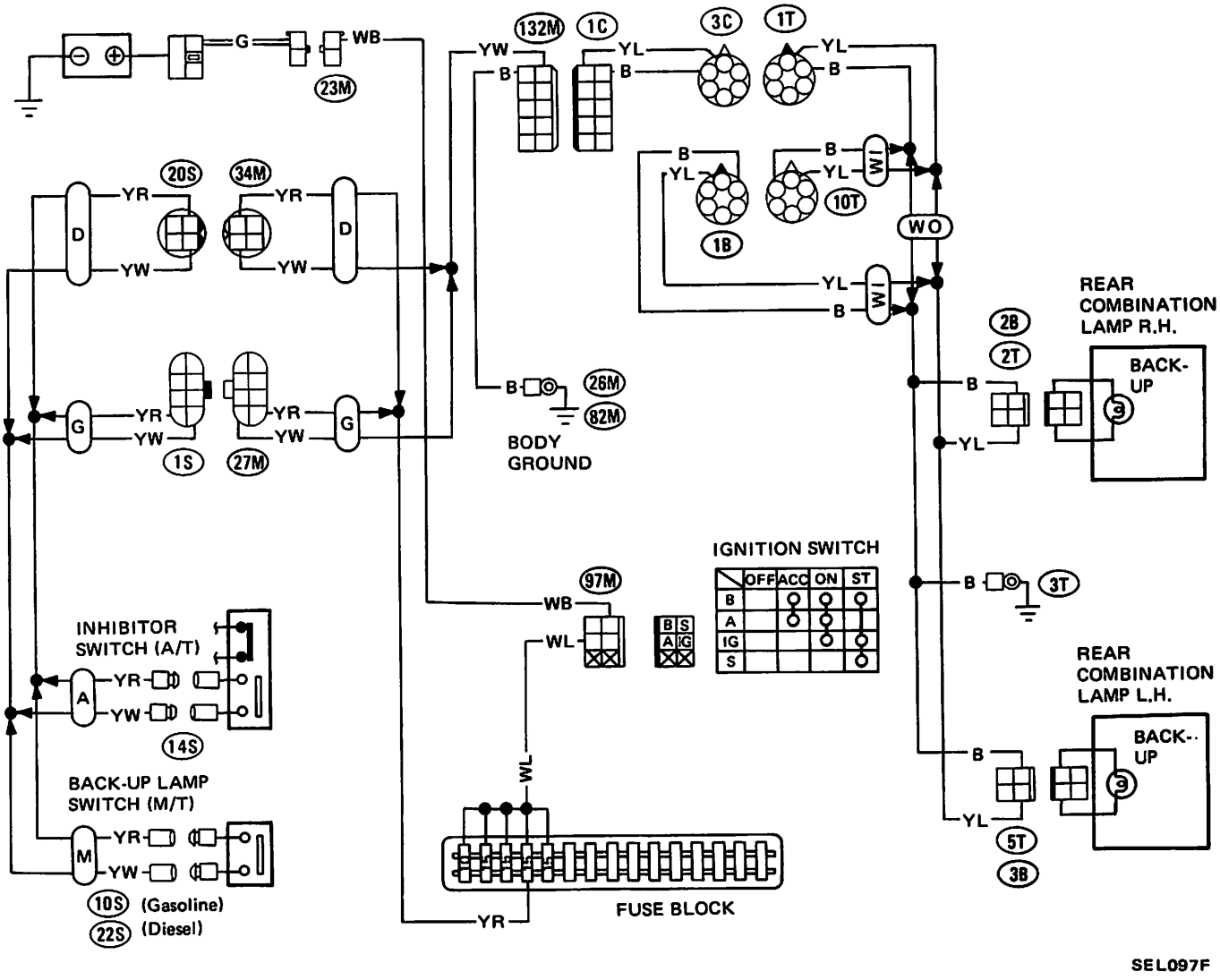

SCHEMATIC/TURN SIGNAL AND HAZARD WARNING LAMPS

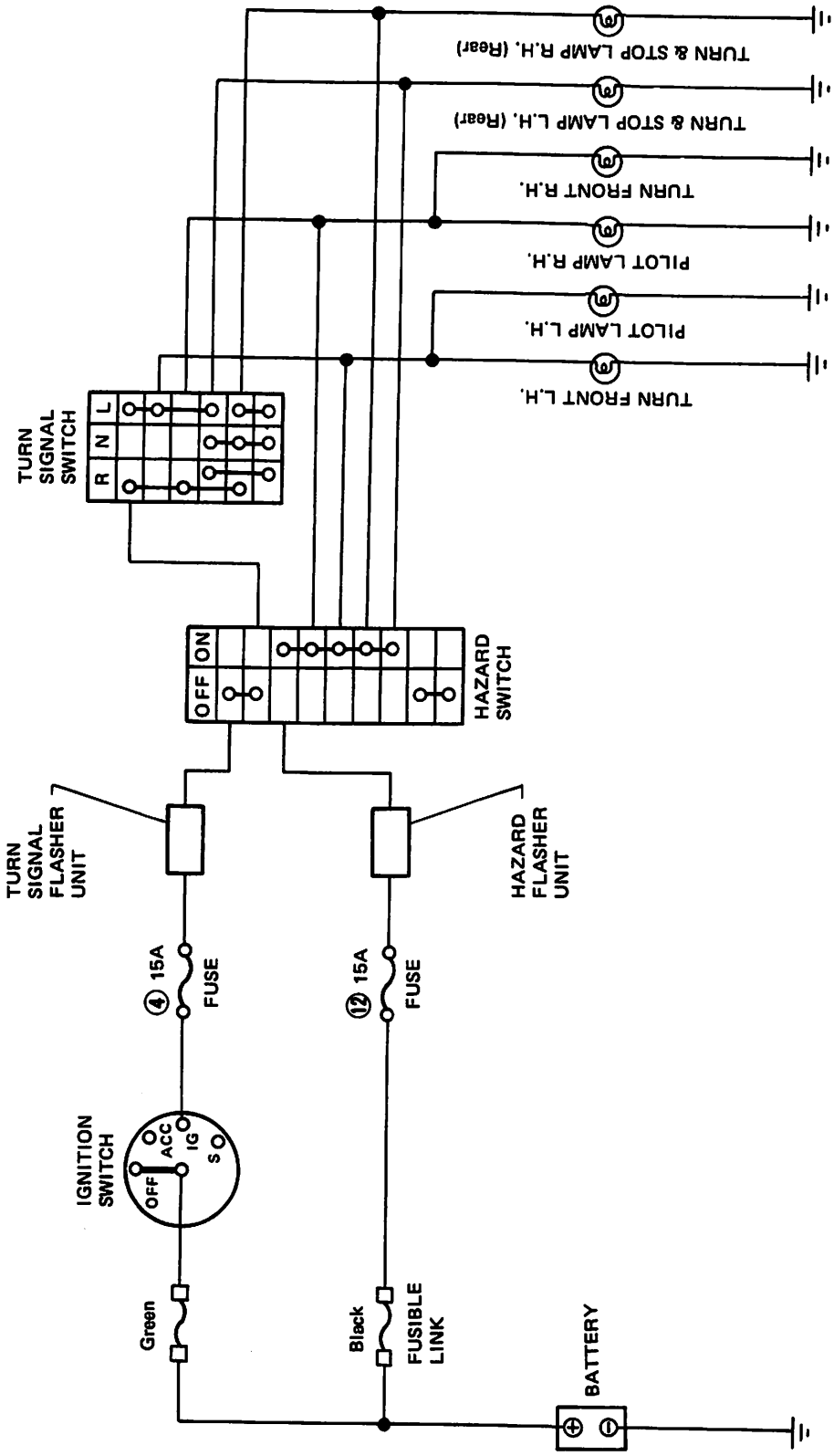

SEL098F

WIRING DIAGRAM/TURN SIGNAL AND HAZARD WARNING LAMPS

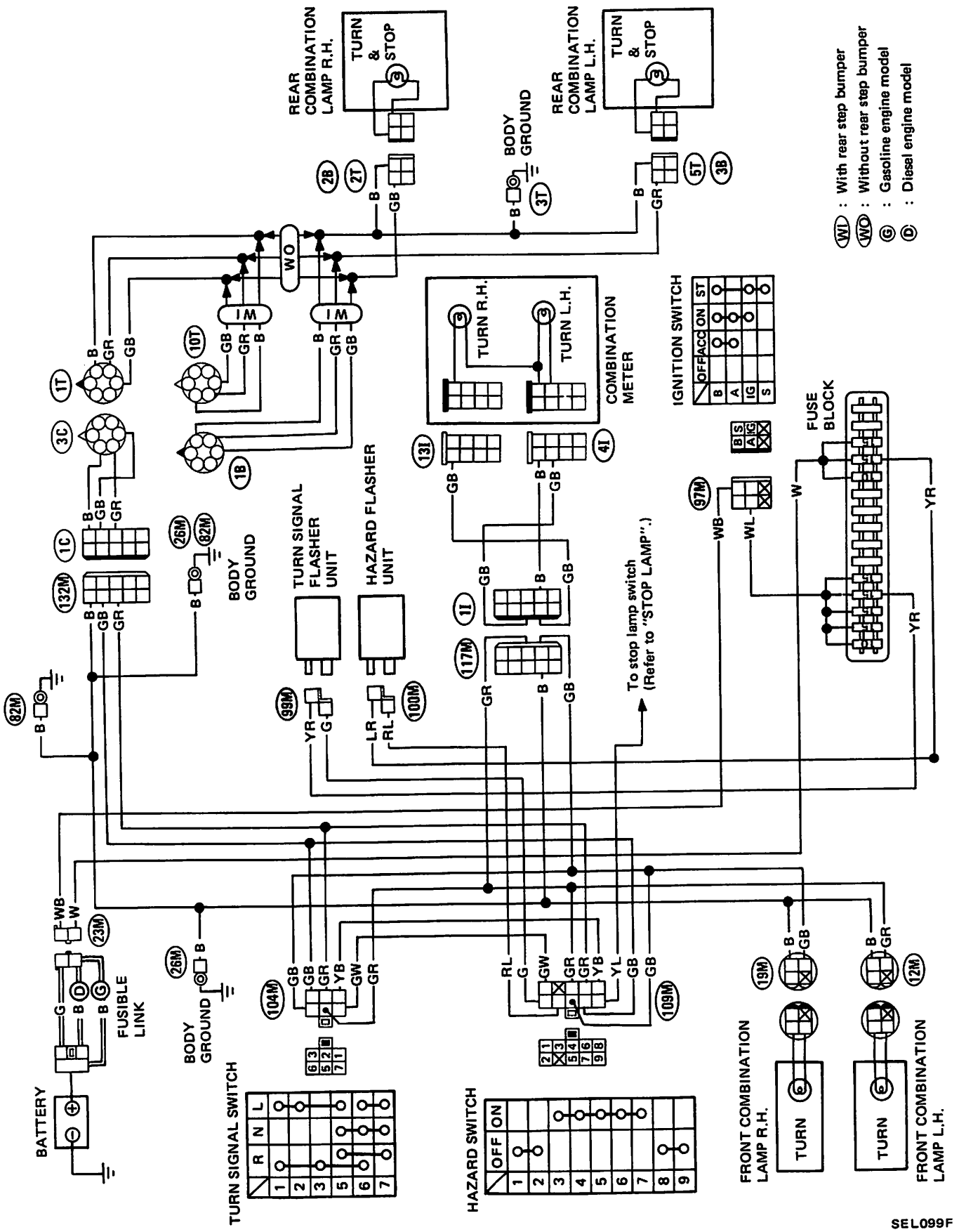

SEL099F

TROUBLE DIAGNOSES AND CORRECTIONS

Clearance, license plate and tail lamps

Condition	Probable cause	Corrective action
Neither left nor right lamp lights.	Burnt fuse. Burnt fusible link. Loose connection or open circuit. Faulty lighting switch.	Correct cause and replace. Correct cause and replace. Check wiring and/or repair connection. Replace if necessary.
Tail lamp on only one side lights.	Burnt bulb. Loose bulb. Loose connection or open circuit.	Replace. Repair lamp socket. Check wiring and/or repair connection.
Front or rear side lamps do not light.	Loose connection or open circuit. No ground.	Check wiring and/or repair connection. Clean and tighten ground terminal.

Stop lamps

Condition	Probable cause	Corrective action
Neither left nor right lamp lights.	Burnt fuse. Faulty stop lamp switch. No ground. Loose connection or open circuit.	Correct cause and replace. Conduct continuity test and replace if necessary. Clean and tighten ground terminal. Check wiring and/or repair connection.
Lamp on only one side lights.	Burnt bulb. Loose bulb. Loose connection or open circuit.	Replace. Repair lamp socket. Check wiring and/or repair connection.

Back-up lamps

Condition	Probable cause	Corrective action
Neither left nor right lamp lights.	Faulty back-up lamp switch (M/T) or inhibitor switch (A/T). Burnt fuse. Loose connection or open circuit.	Conduct continuity test and replace if necessary. Correct cause and replace. Check wiring and/or repair connection.
Lamp on only one side lights.	Burnt bulb. Loose bulb. Loose connection or open circuit.	Replace. Repair lamp socket. Check wiring and/or repair connection.

Turn signal and hazard warning lamps

Condition	Probable cause	Corrective action
Turn signals do not operate. (Hazard warning lamps operate)	Burnt fuse.	Correct cause and replace.
	Loose connection or open circuit.	Check wiring and/or repair connection.
	Faulty flasher unit.	Replace flasher unit.
	Faulty turn signal switch.	Conduct continuity test and replace if necessary.
	Faulty hazard switch.	Conduct continuity test and replace if necessary.
Hazard warning lamps do not operate. (Turn signals operate)	Burnt fuse.	Correct cause and replace.
	Faulty hazard warning flasher unit.	Replace hazard warning flasher unit.
	Faulty hazard switch.	Replace if necessary.
Turn and hazard flasher lamps do not operate.	Faulty hazard switch.	Replace if necessary.
	Loose connection.	Reconnect firmly.
No flasher click is heard.	Burnt bulb.	Replace.
	Faulty flasher unit.	Replace flasher unit.
	Loose connection.	Reconnect firmly.
Flashing cycle is too slow (Pilot lamp does not go out.), or too fast.	Bulb other than specified wattage being used.	Replace with one specified.
	Burnt bulb.	Replace.
	Loose connection.	Reconnect firmly.
	Faulty flasher unit.	Replace flasher unit.
Flashing cycle is irregular.	Burnt bulb.	Replace.
	Loose connection.	Repair.
	Bulbs other than specified wattage being used.	Replace with one specified.
	Faulty flasher unit.	Replace flasher unit.

LIGHTING SWITCH

Refer to "COMBINATION SWITCH".

STOP LAMP SWITCH

Inspection

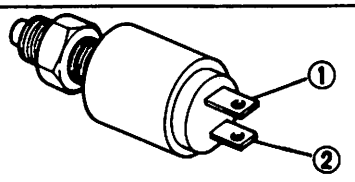

	NORMAL POSITION	PUSH PLUNGER
①	O	
②	O	

SEL368

Adjustment

Refer to MA section.

TURN SIGNAL SWITCH

Refer to "COMBINATION SWITCH".

HAZARD SWITCH

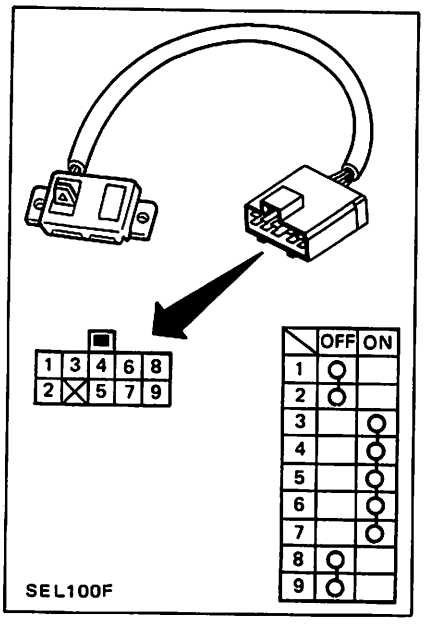

TURN SIGNAL FLASHER UNIT
HAZARD FLASHER UNIT

Location

Turn signal flasher unit and Hazard flasher unit are located on the steering column support (back side of instrument panel).

BACK-UP LAMP SWITCH
(Manual transmission)

Location

Back-up lamp switch is installed on the manual transmission case.

Inspection

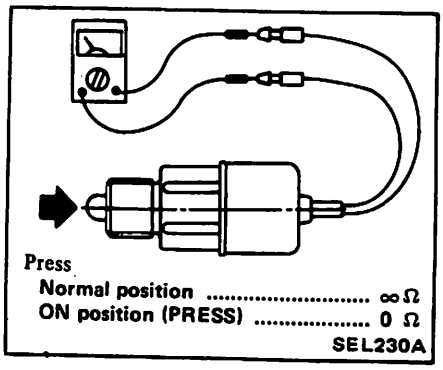

INTERIOR LAMPS

CAUTION: Do not wipe lens surface using cloth dampened with gasoline.

WIRING DIAGRAM/INTERIOR LAMP

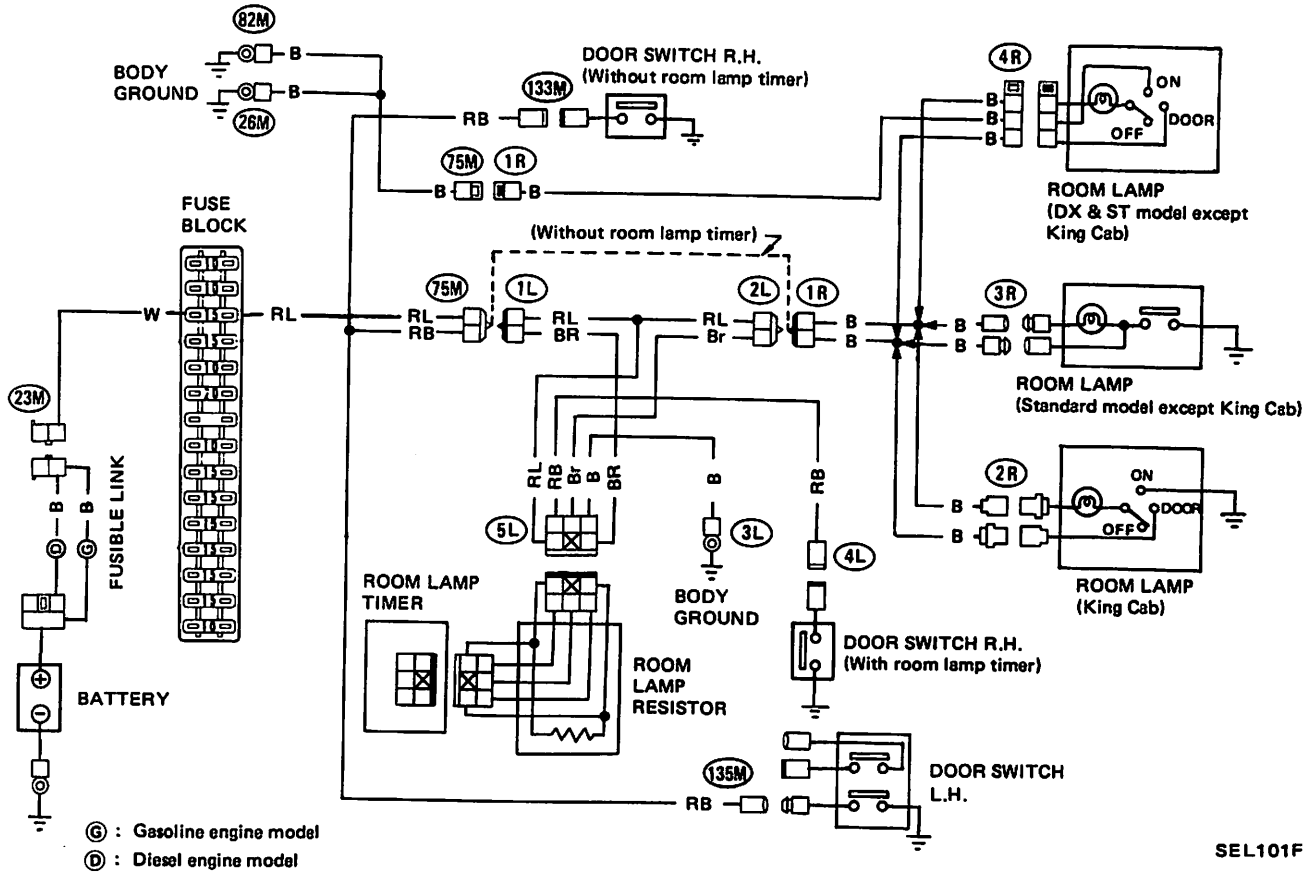

ROOM LAMP TIMER

Location

Room lamp timer is installed under the assist side seat. Refer to "LOCATION OF ELECTRICAL UNITS".

Inspection

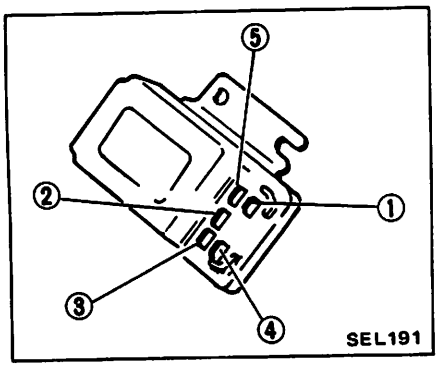

To inspect room lamp timer for proper operation, make following circuits.

Be careful not to connect lead wires to incorrect terminals as this will damage timer.

Test A

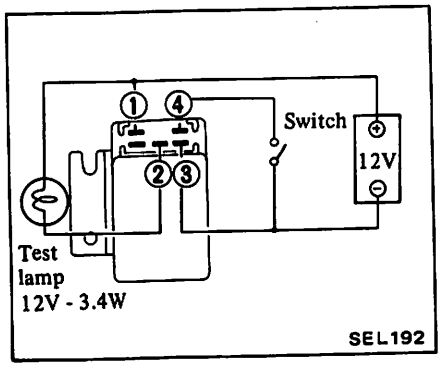

Test lamp will glow while switch is on. Then, turn off switch.
Test lamp will still glow several seconds after turning off switch.

Test B

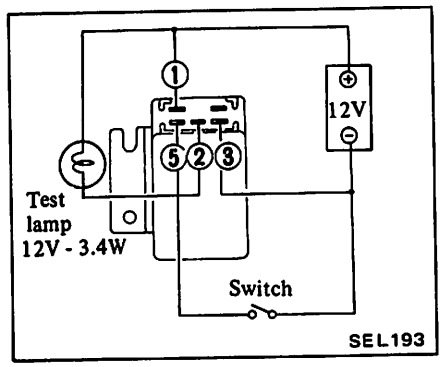

Test lamp will glow while switch is off. Then, test lamp will go out immediately after turning off switch.

ILLUMINATION LAMPS

SCHEMATIC/ILLUMINATION LAMPS

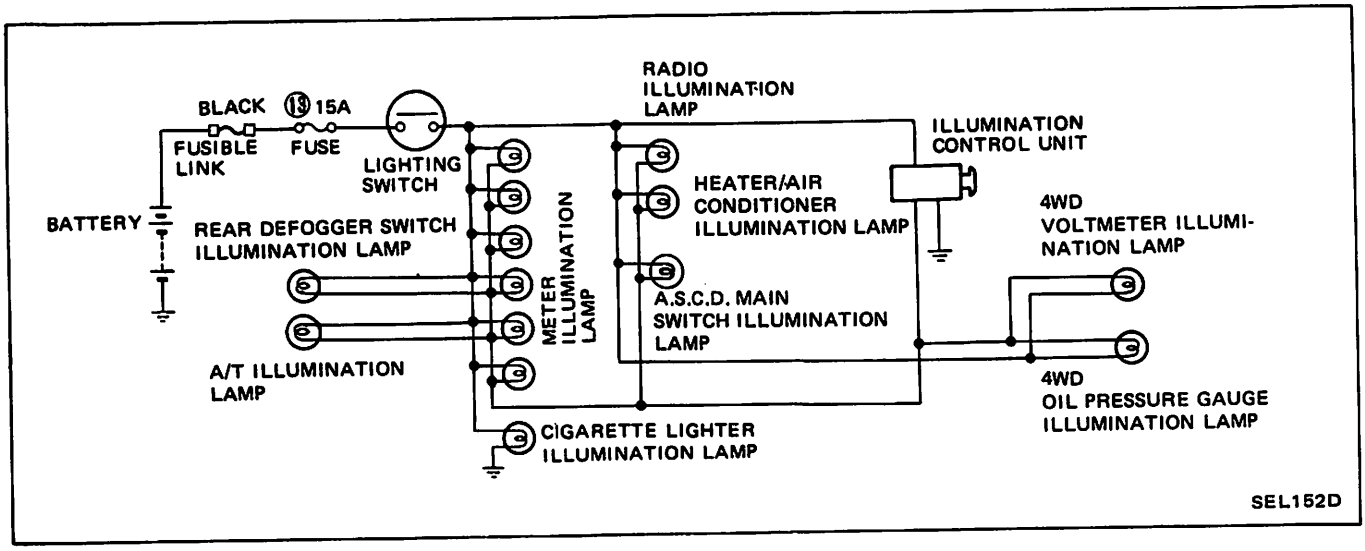

WIRING DIAGRAM/ILLUMINATION LAMPS

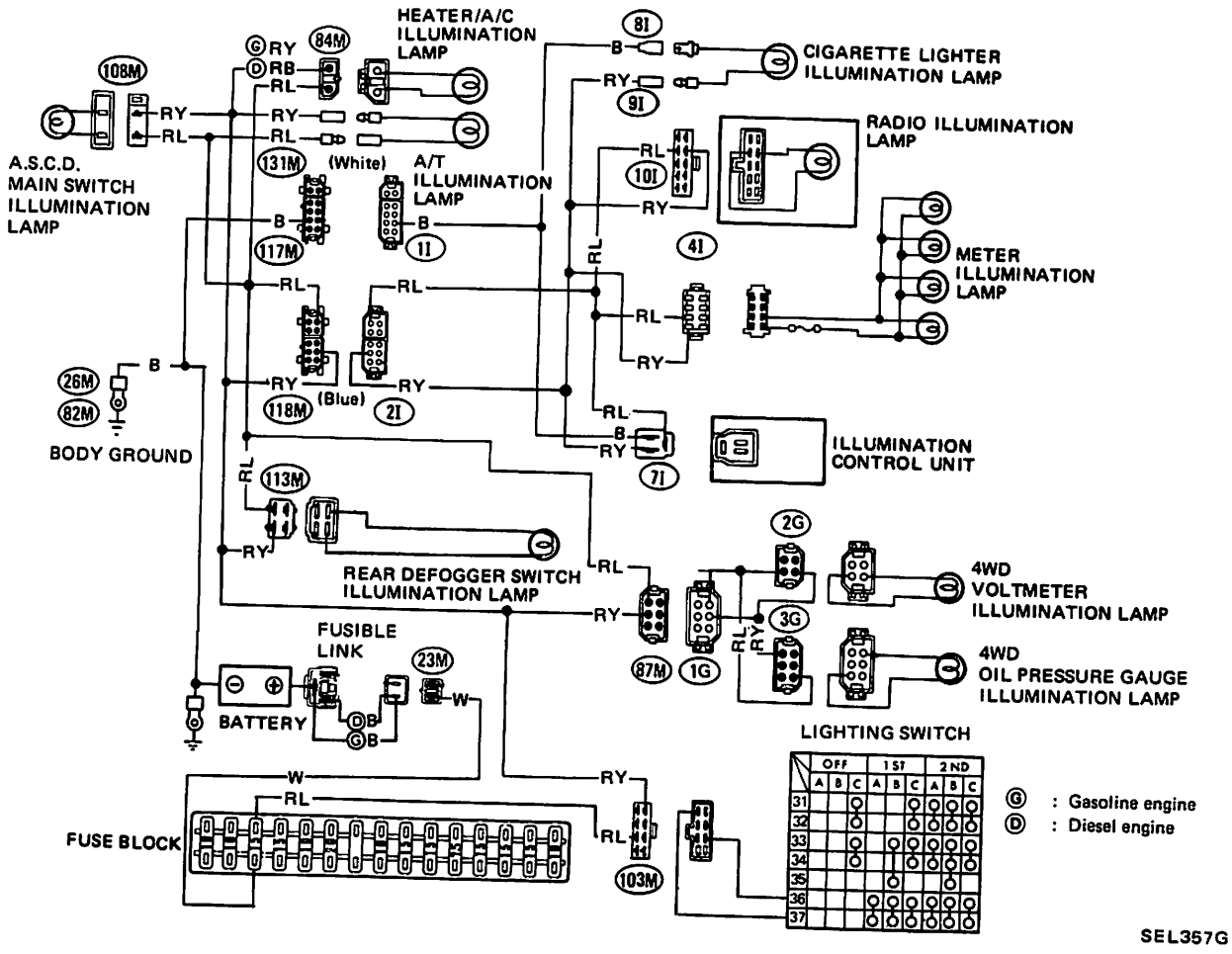

ILLUMINATION CONTROL UNIT

Inspection

1. Connect test lamp between terminal ① and positive (+) terminal.
2. Connect terminal ③ to positive (+) terminal, and terminal ② to negative (–) terminal.
3. Turn control knob right or left, and brightness of test lamp will vary.

Be careful not to connect lead wires to incorrect terminals as this will damage the unit.

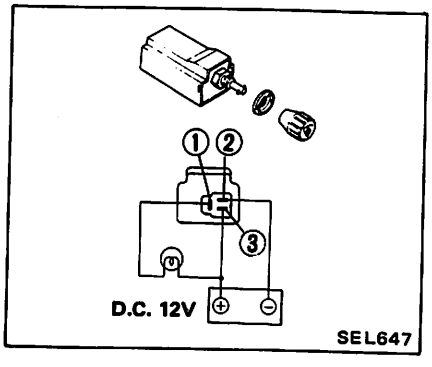

METERS, GAUGES AND WARNING SYSTEM

CAUTION: Before starting to work, be sure to turn ignition switch "OFF" and then disconnect battery ground cable.

COMBINATION METER

SCHEMATIC/COMBINATION METER

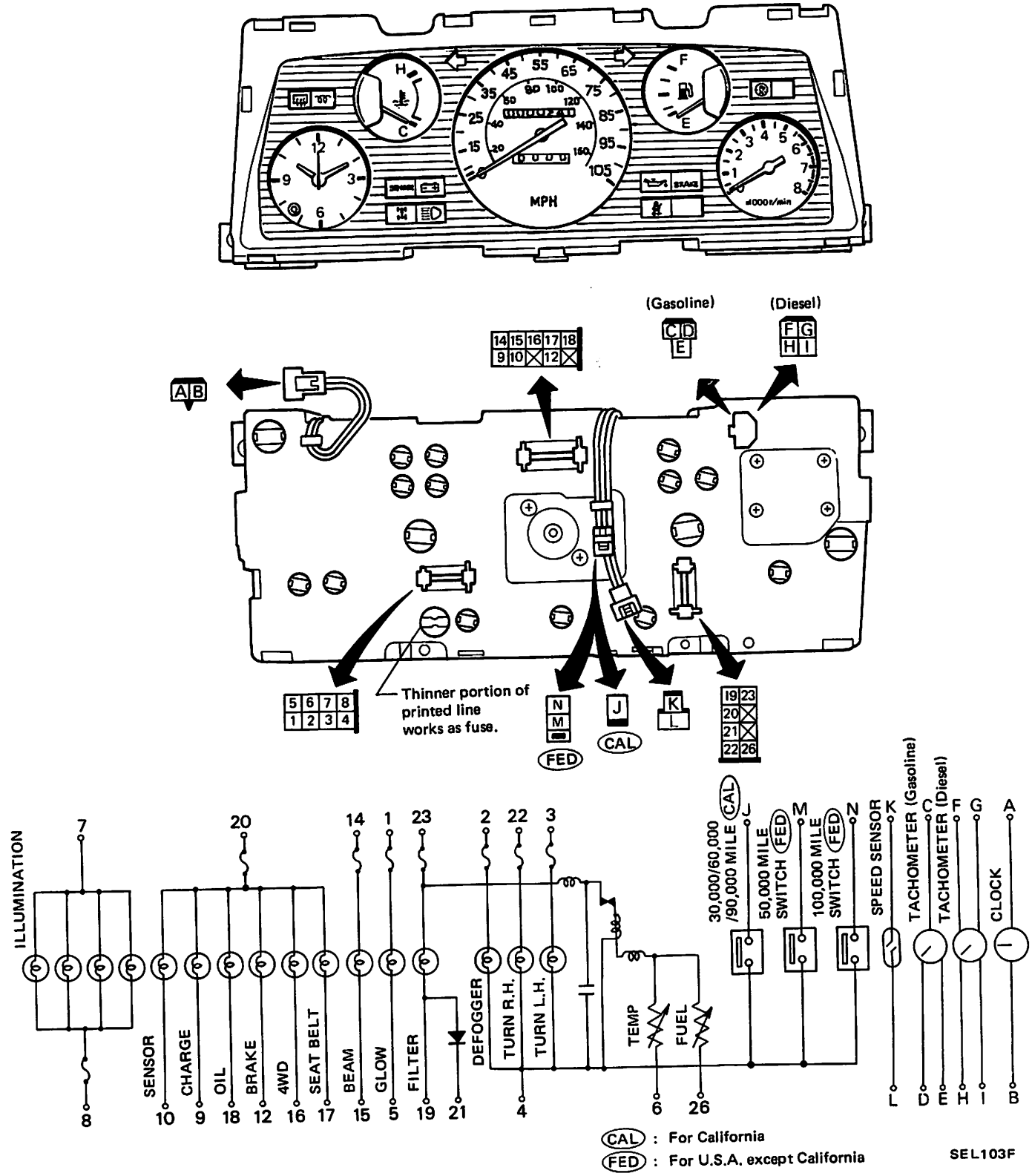

METER AND GAUGES

SCHEMATIC/METER AND GAUGES

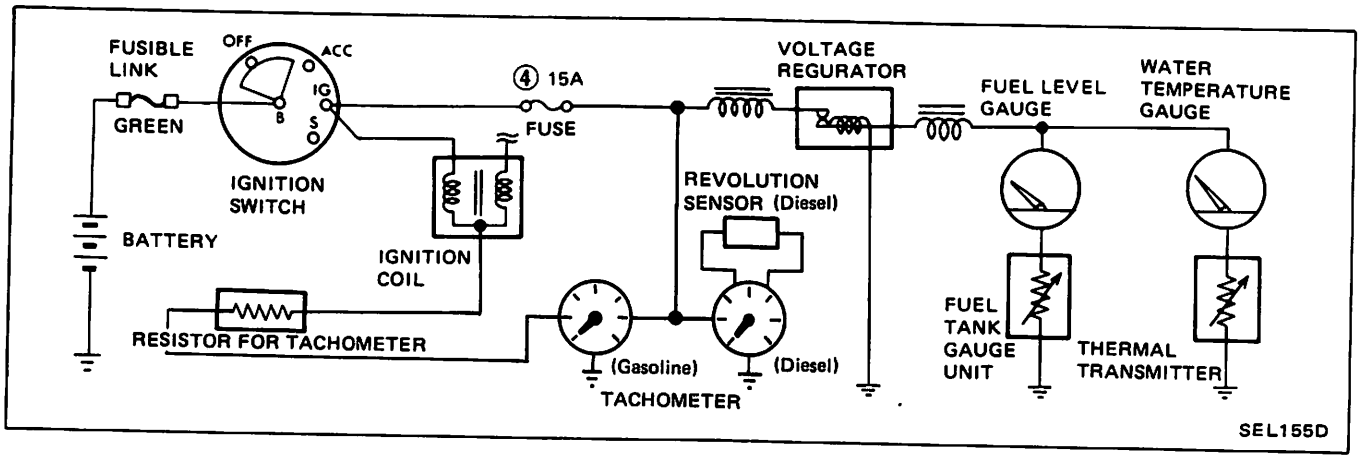

WIRING DIAGRAM/METER AND GAUGES

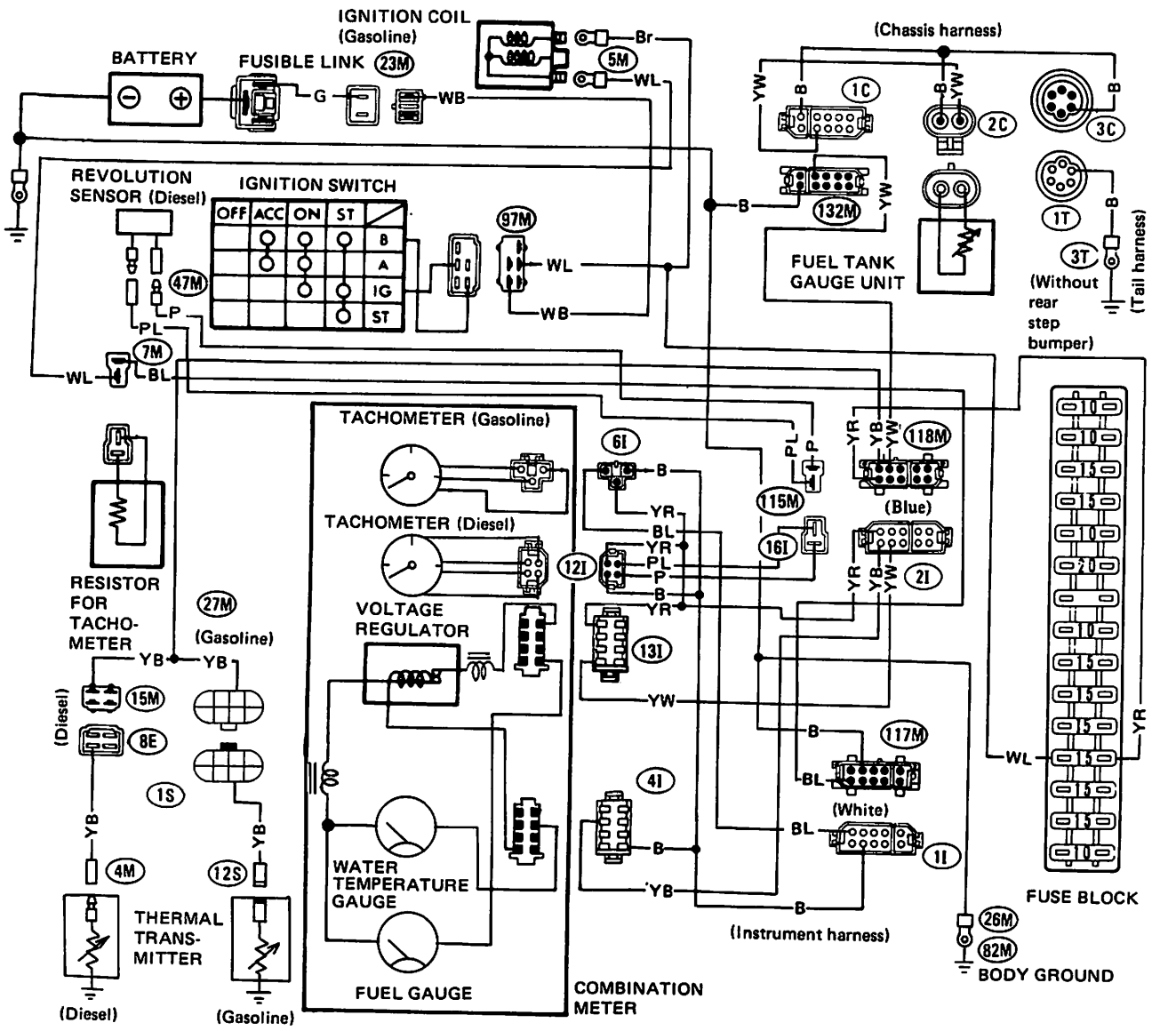

4-WHEEL DRIVE INDICATOR LAMP

WIRING DIAGRAM/4-WHEEL DRIVE INDICATOR LAMP

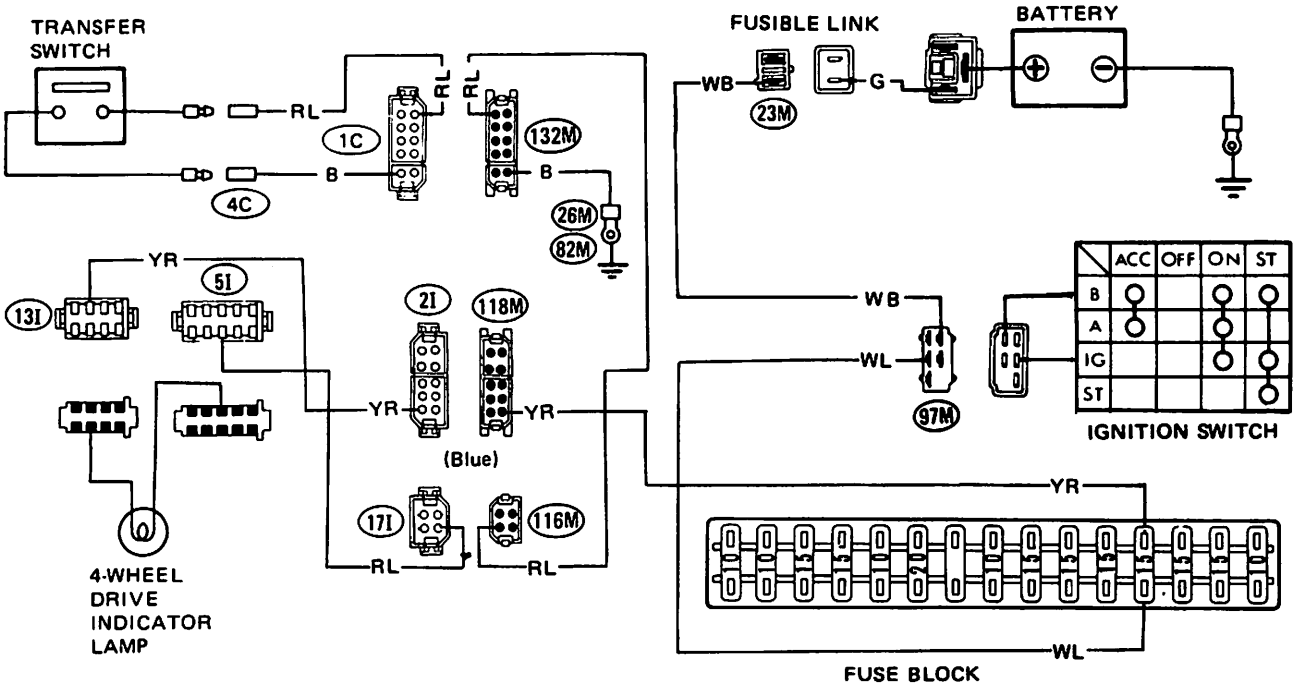

SEL157D

VOLTMETER AND OIL PRESSURE GAUGE

SCHEMATIC/VOLTMETER AND OIL PRESSURE GAUGE

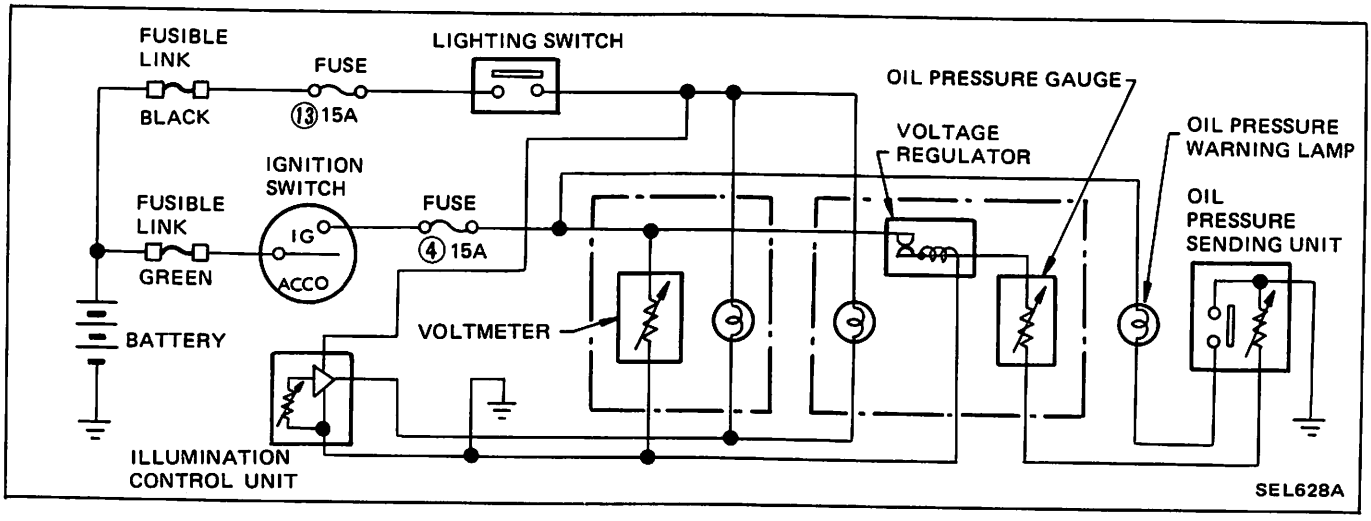

WIRING DIAGRAM/VOLTMETER AND OIL PRESSURE GAUGE

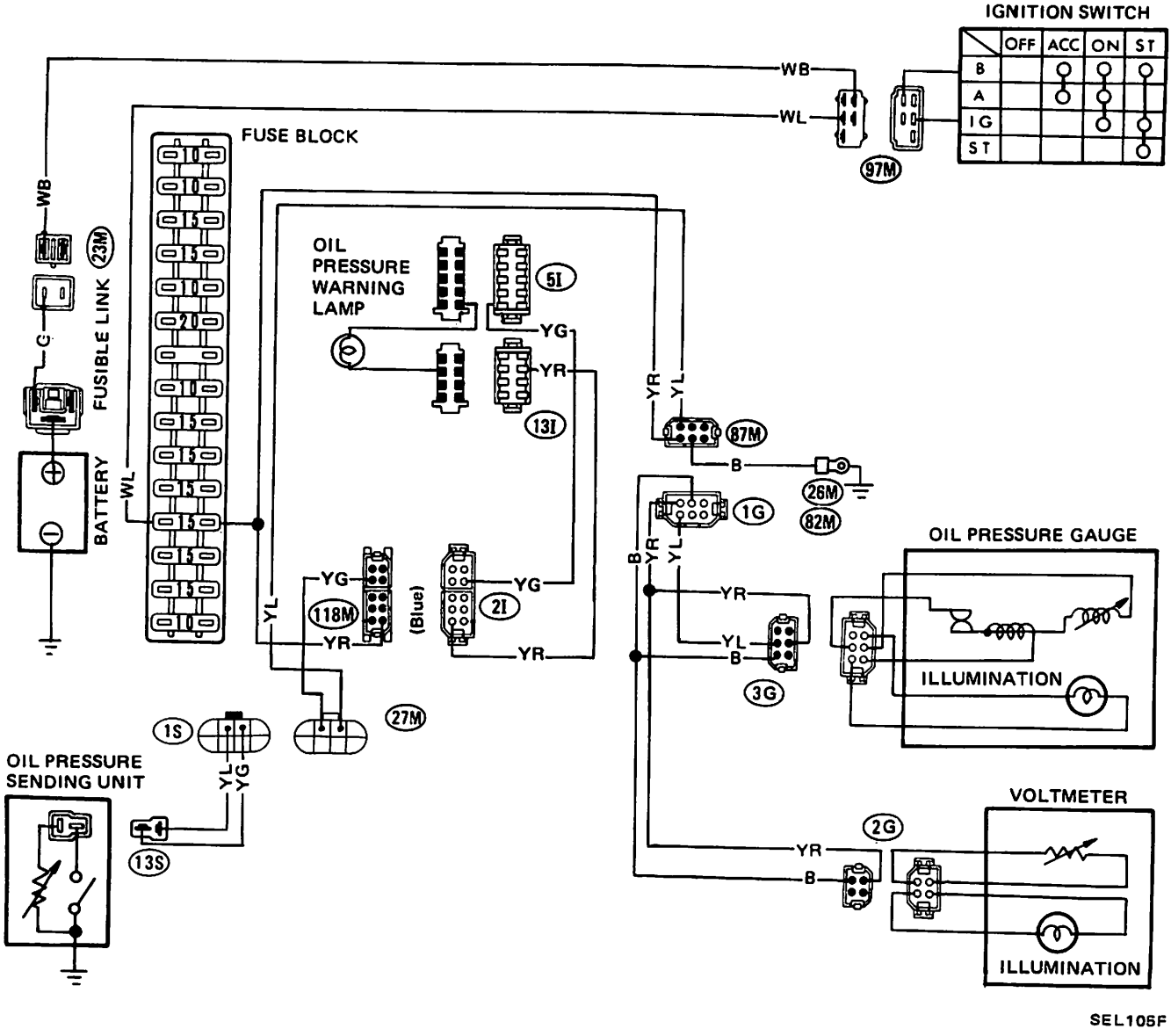

TROUBLE DIAGNOSES AND CORRECTIONS

Condition	Probable cause	Corrective action
Water temperature gauge		
Gauge does not operate.	Faulty thermal transmitter or loose terminal connection. (When wire to thermal transmitter is grounded, gauge pointer fluctuates.)	Replace thermal transmitter or correct terminal connection.
	Faulty water temperature gauge.	Replace water temperature gauge.
Gauge indicates only maximum temperature.	Faulty thermal transmitter. (Gauge pointer returns to original position when ignition switch is turned off.)	Replace thermal transmitter.
	Faulty water temperature gauge. (Gauge pointer indicates maximum temperature even after ignition switch is turned off.)	Replace water temperature gauge.
Gauge does not operate accurately.	Faulty water temperature gauge.	Replace water temperature gauge.
	Loose or poor connection.	Correct connector terminal contact.
Oil pressure gauge		
Oil pressure gauge does not operate.	Faulty oil pressure sending unit or loose terminal connection.	Replace oil pressure sending unit or correct terminal connection.
Gauge indicates only maximum pressure.	Faulty oil pressure gauge unit. (Gauge pointer returns to original position when ignition switch is turned off.)	Replace oil pressure gauge unit
	Faulty oil pressure gauge. (Gauge pointer indicates maximum pressure even after ignition switch is turned off.)	Replace oil pressure gauge
Fuel level gauge		
Fuel level gauge does not operate.	Faulty fuel tank gauge unit. [Pointer deflects when fuel tank gauge unit YW wire is grounded.]	Replace fuel tank gauge unit.
	Faulty fuel level gauge.	Replace fuel level gauge.
	Loose connection or open circuit.	Check wiring and/or repair connection.
Pointer indicates only "F" position.	Faulty fuel tank gauge unit.	Replace fuel tank gauge unit.
	Faulty fuel level gauge.	Replace fuel level gauge.
Fuel level gauge does not operate accurately.	Faulty fuel tank gauge unit.	Replace fuel tank gauge unit.
	Faulty fuel gauge.	Replace fuel level gauge.
	Poor or loose connection.	Correct connector terminal contact.
Volt gauge		
Volt gauge does not operate, or indicates incorrectly.	Faulty volt gauge.	Replace volt gauge.
	Loose or poor connection.	Check wiring and/or repair connection.

Tachometer

Condition	Probable cause	Corrective action
Tachometer pointer deflects.	Loose or poor connection. Faulty tachometer.	Repair. Repair or replace tachometer.
Tachometer pointer will not move.	Loose or poor connection. Faulty tachometer. Faulty revolution sensor. (Diesel)	Repair. Repair replace tachometer. Replace revolution sensor.

Speedometer

Condition	Probable cause	Corrective action
Neither speedometer pointer nor odometer operates.	Loose speedometer cable union nut. Broken speedometer cable. Damaged transmission speedometer pinion gear. Faulty speedometer.	Retighten. Replace speedometer cable. Replace transmission speedometer pinion gear. Replace speedometer.
Unstable speedometer pointer.	Loose speedometer cable nut. Damaged speedometer cable. Faulty speedometer.	Reinstall properly. Replace speedometer cable. Replace speedometer.
Unusual sound occurs in response to increase in driving speed.	Excessively bent or twisted speedometer cable inner wire or lack of lubrication. Faulty speedometer.	Replace or lubricate. Replace speedometer.
Inaccurate speedometer indication.	Faulty speedometer.	Replace speedometer.
Inaccurate odometer operation.	Faulty speedometer.	Replace speedometer.

FUEL TANK GAUGE UNIT

Inspection

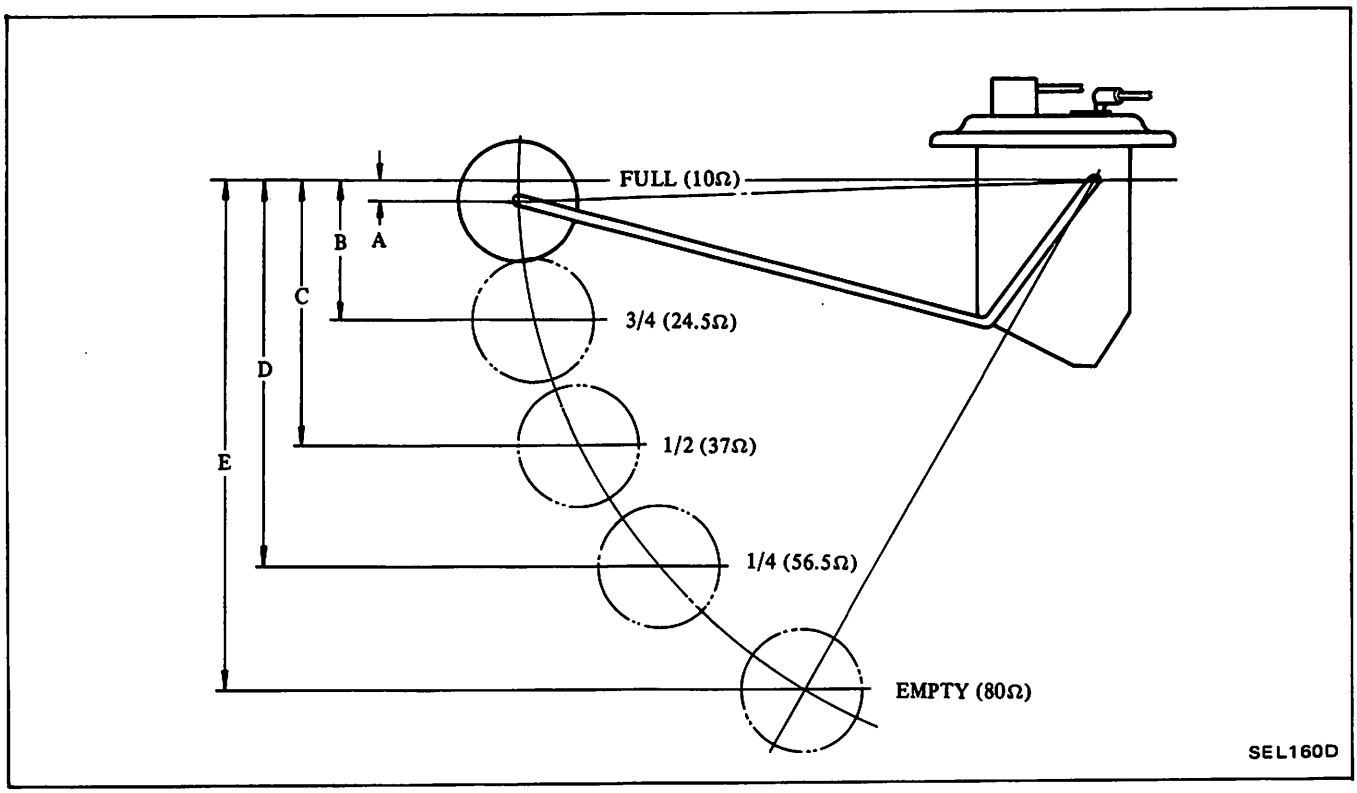

Float height

mm (in)

Model		A	B	C	D	E
2WD	Regular Bed model	32.5 (1.280)	91.5 (3.602)	151.5 (5.96)	211.5 (8.33)	252.5 (9.94)
	King Cab model	64.3 (2.531)	114.8 (4.52)	167.3 (6.59)	211.8 (8.34)	240.8 (9.48)
	Except Regular Bed & King Cab model	54.0 (2.126)	104.0 (4.09)	162.5 (6.40)	220.0 (8.66)	262.3 (10.33)
4WD	King Cab model	66.0 (2.598)	136.0 (5.35)	190.0 (7.48)	244.7 (9.63)	281.0 (11.06)
	Except King Cab model	50.0 (1.969)	118.0 (4.65)	185.0 (7.28)	252.0 (9.92)	296.0 (11.65)

WARNING LAMPS

SCHEMATIC/WARNING LAMPS

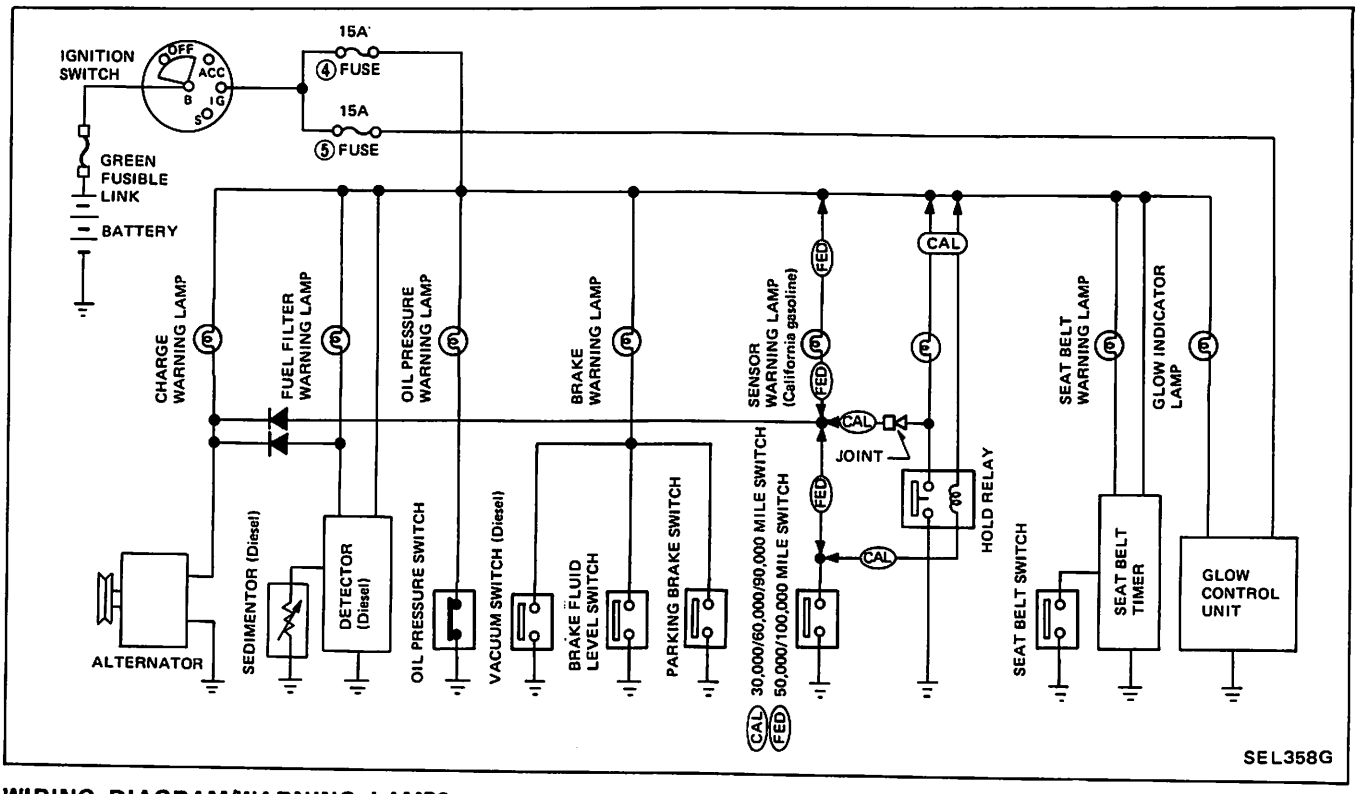

WIRING DIAGRAM/WARNING LAMPS

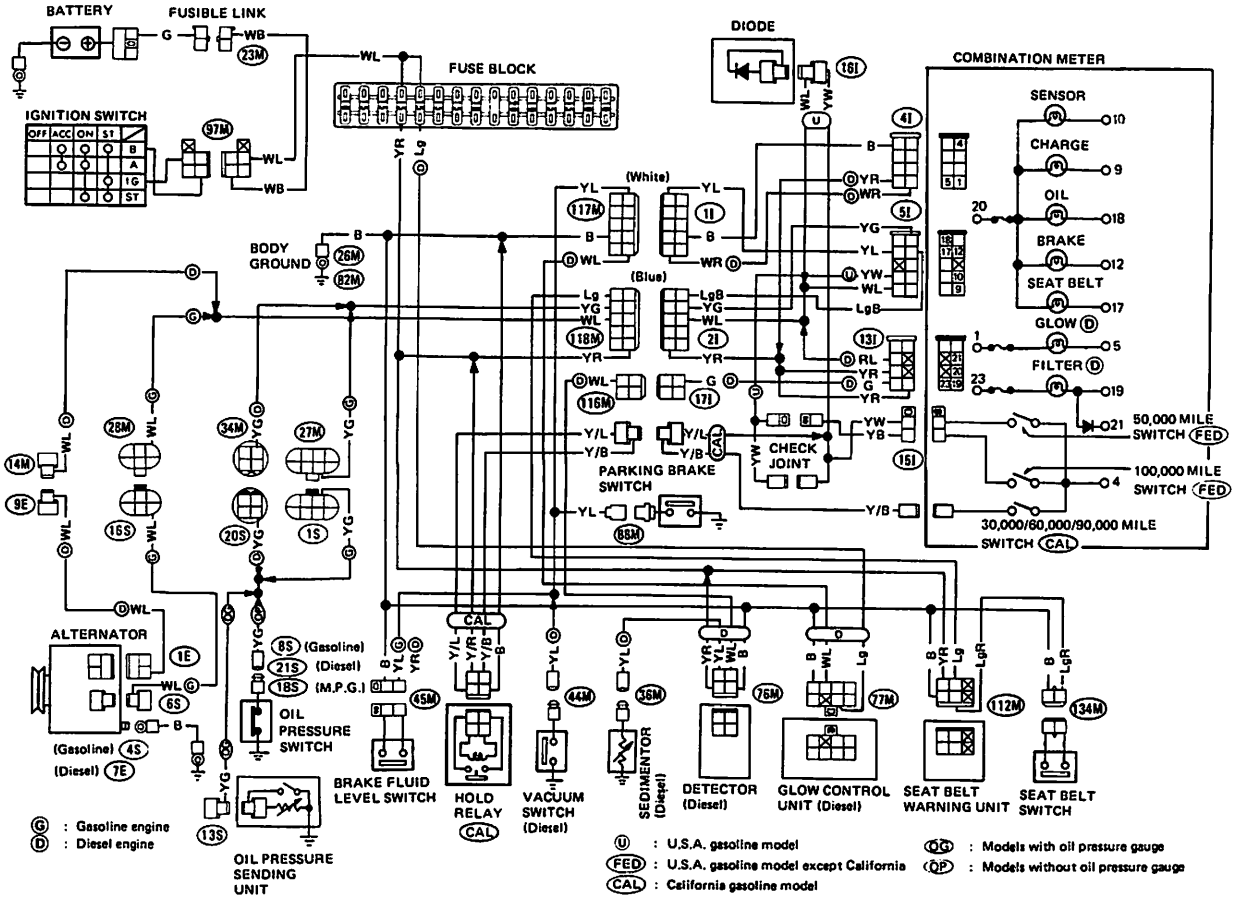

WARNING LAMPS

Condition	Probable cause	Corrective action
Change warning lamp Lamp does not go out when engine is started.	Faulty charging system.	Inspect charging system.
Oil pressure warning lamp Lamp does not lgiht when ignition switch is set to "ON".	Faulty oil pressure switch or loose switch termianl connection. (When lead wire connected to switch is grounded, warning lamp lights.)	Replace or correct connection.
Lamp does not go out while engine is being operated.	Lack of engine oil. Oil pressure too low. Faulty oil pressure switch.	Check oil level and add oil as required. Inspect engine oil pressure system. Replace.
Parking brake warning lamp Lamp does not go out.	Faulty parking brake switch (When parking brake lever is released).	Replace.
Glow indicator and sedimentor warning lamp Glow indicator lamp Auto-glow indicator lamp does not come on.	Faulty auto-glow system.	Inspect auto-glow system.
Sedimentor warning lamp Lamp does not come on when water is mixed in fuel filter.	Burned out bulb. Faulty detector. Faulty sedimentor.	Replace. Replace. Replace.

WARNING CHIME

WIRING DIAGRAM/WARNING CHIME

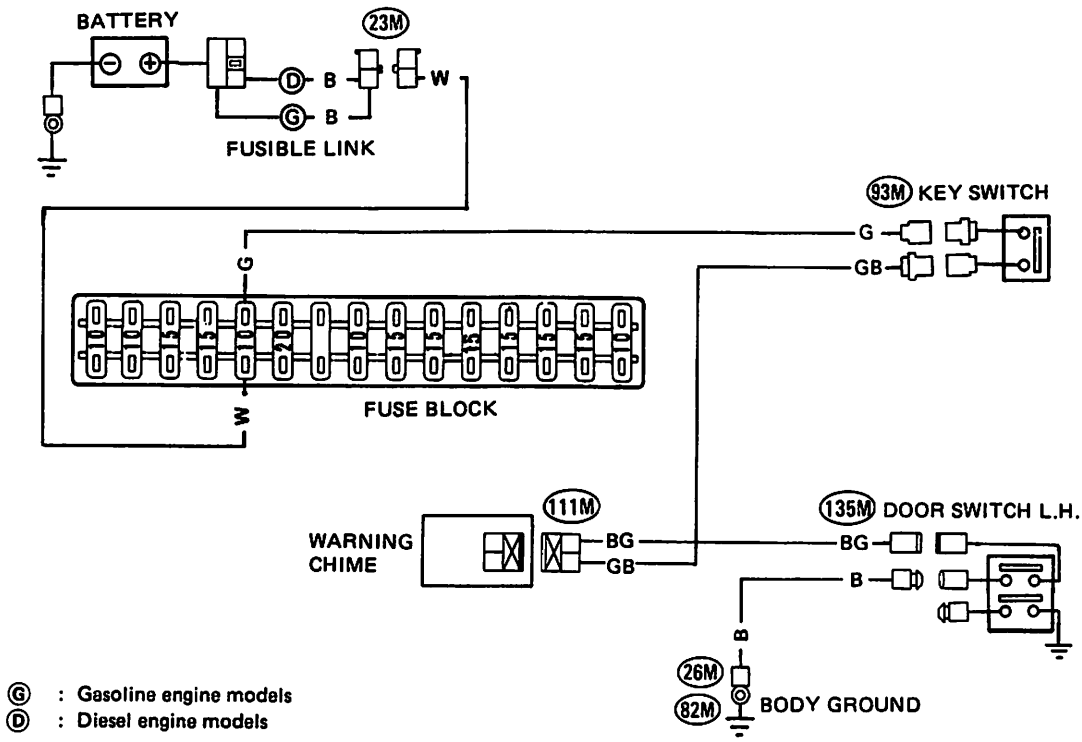

SEL163D

WIPER AND WASHER

CAUTION: Before starting to work, be sure to turn ignition switch "OFF" and then disconnect battery ground cable.

WINDSHIELD WIPER AND WASHER

SCHEMATIC/WINDSHIELD WIPER AND WASHER (Equipped with intermittent wiper)

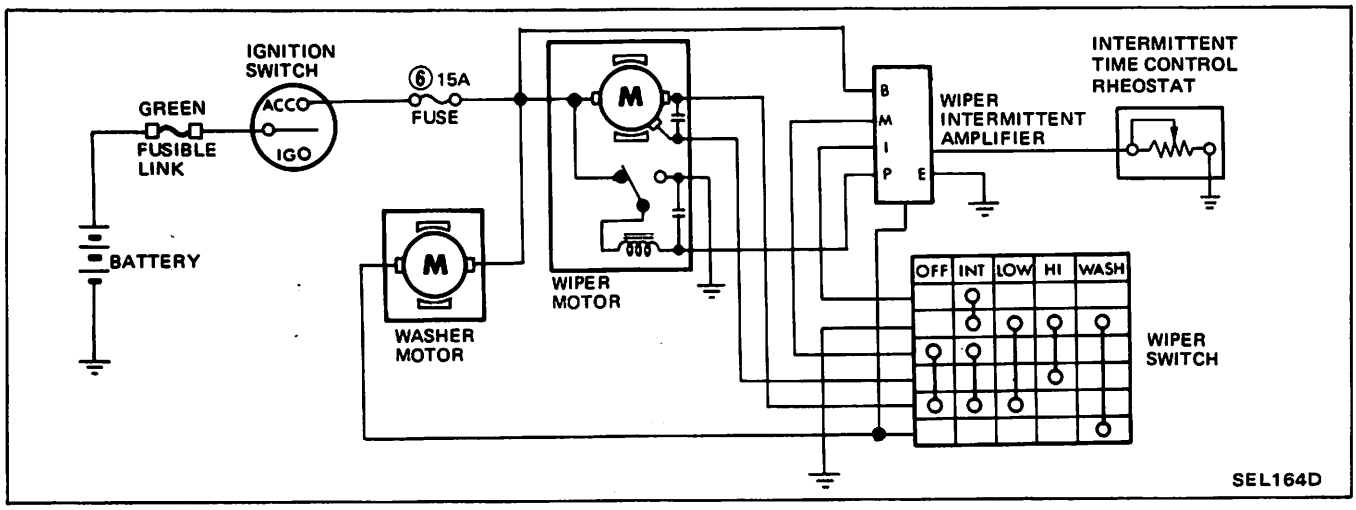

WIRING DIAGRAM/WINDSHIELD WIPER AND WASHER (Equipped with intermittent wiper)

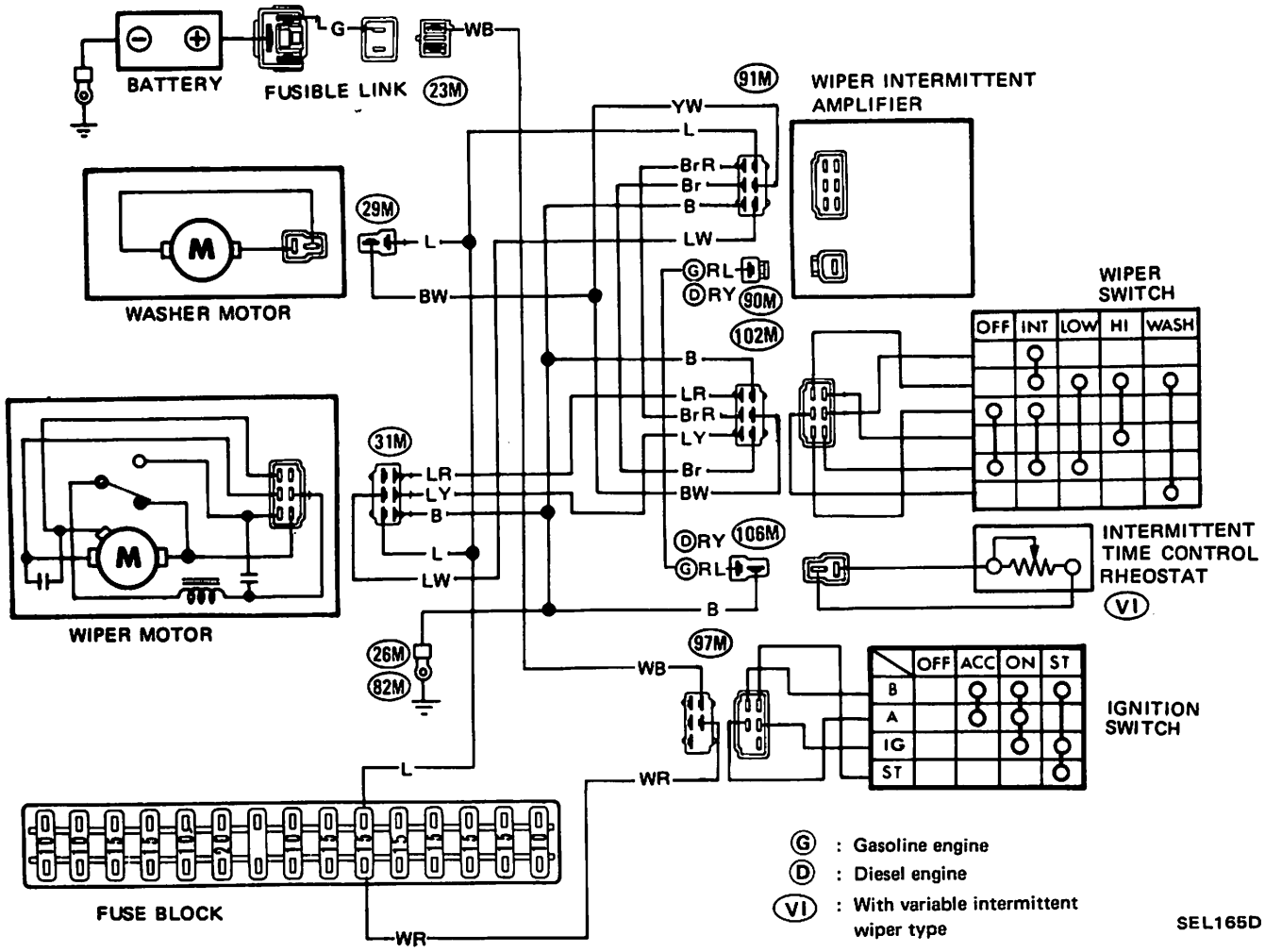

SCHEMATIC/WINDSHIELD WIPER AND WASHER (Not equipped with intermittent wiper)

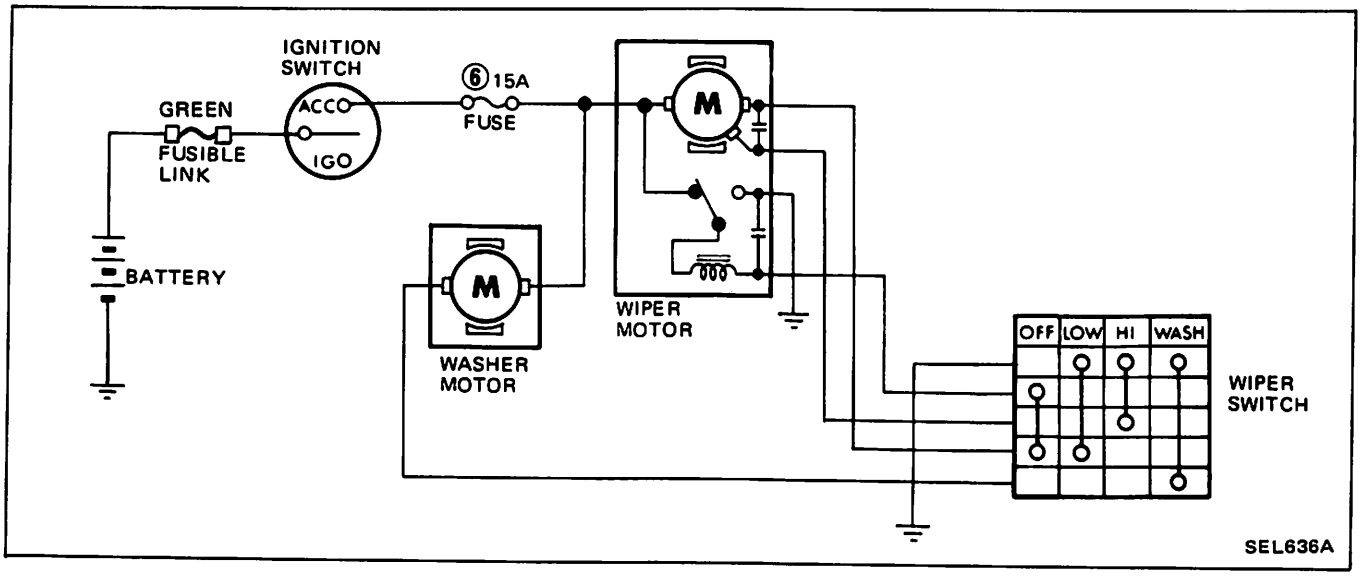

WIRING DIAGRAM/WINDSHIELD WIPER AND WASHER (Not equipped with intermittent wiper)

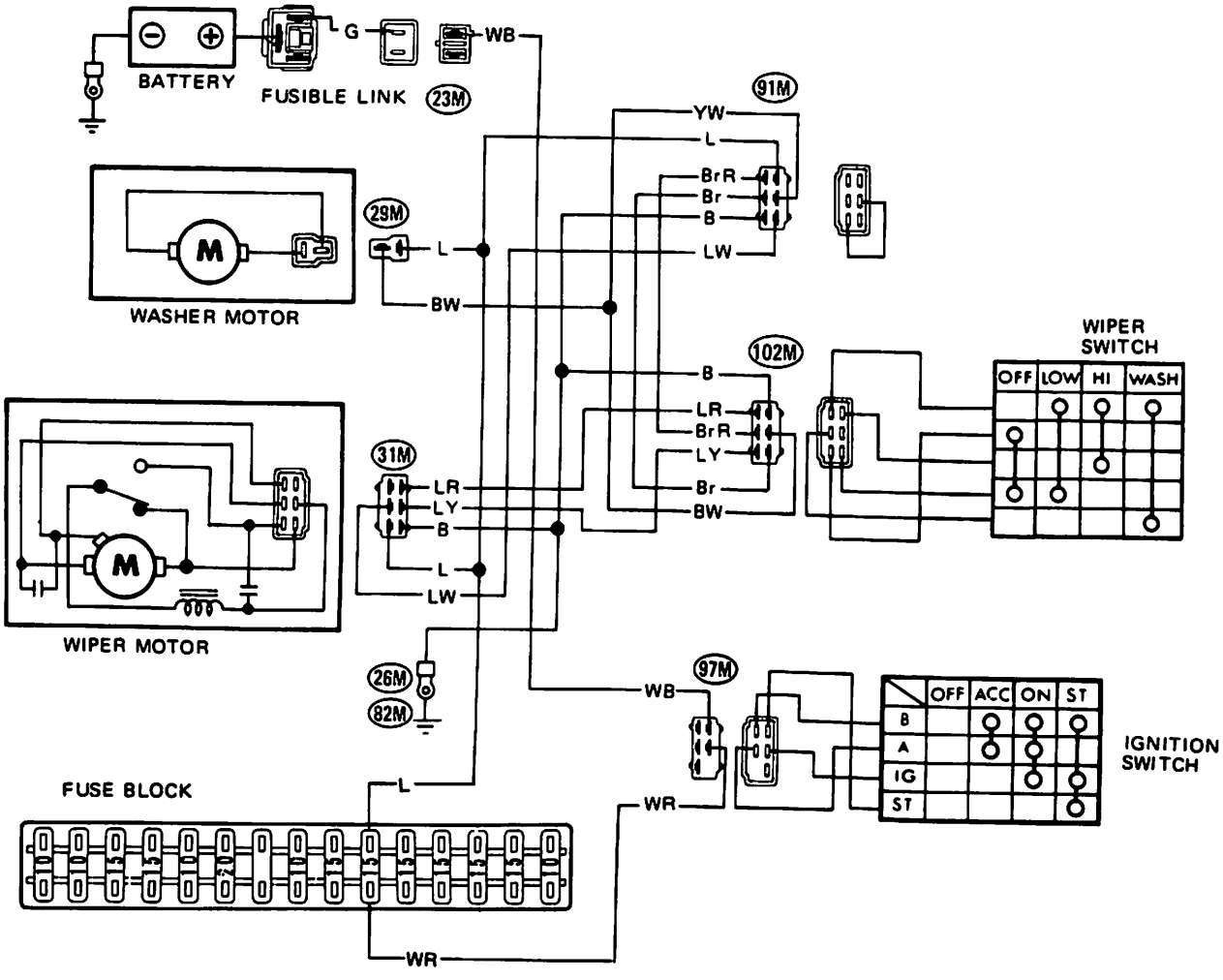

TROUBLE DIAGNOSES AND CORRECTIONS

Condition	Probable cause
Windshield wiper does not operate.	Burnt fuse. Loose connection or open circuit. Improper switch contact. Foreign material interrupts link mechanism. Disconnected rod. Seized or rusted arm shaft.
Windshield wiper operating speed is too slow.	Short circuit of motor armature. Worm brushes or seized shaft. Low source voltage. Humming of motor.
Windshield wiper does not stop correctly.	Faulty auto-stop device. Faulty wiper switch.
Washer fluid does not eject (Washer motor operates).	Clogged washer nozzle or hose.

Intermittent windshield wiper

Condition	Probable cause
Wiper does not operate intermittently but operates at low and high speeds.	Faulty wiper switch. Faulty wiring. Faulty intermittent amplifier.
Intermittent speed is too short for proper wiping.	Faulty auto-stop device. Faulty variable intermittent time control rheostat. Faulty intermittent amplifier.
Intermittent speed is too long for proper wiping.	Line voltage below 10 volts. Faulty intermittent time control rheostat. Faulty intermittent amplifier.
Wipers do not shut off.	Faulty wiper motor. Faulty intermittent amplifier.
Intermittent speed is erratic.	Faulty wiper switch. Faulty wiring. Faulty wiper motor. Faulty intermittent amplifier.

INTERMITTENT AMPLIFIER

Inspection

Intermittent type

To check intermittent amplifier for proper operation, fabricate adapters shown in the following illustration, and utilize the following procedures in the order enumerated.

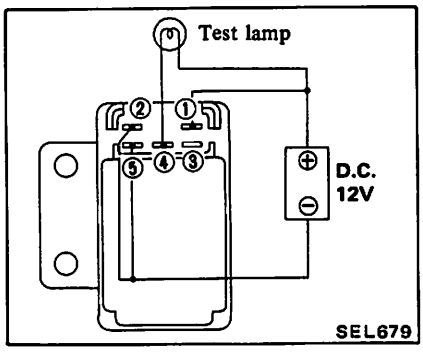

Failure to observe the order of these test procedures may lead to improper test results.

If results of following tests are satisfactory as indicated below, intermittent amplifier is functioning properly.

Be careful not to connect lead wires to incorrect terminals as this will damage intermittent amplifier.

1. Make sure that test lamp comes on when negative lead wire is connected to terminal ③.

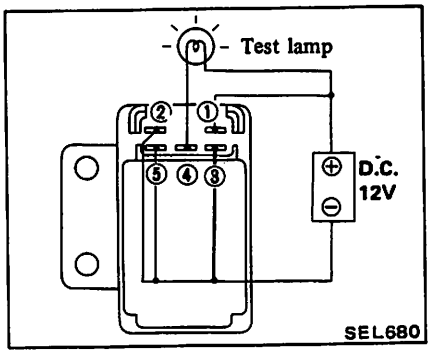

2. Disconnect lead wire from terminal ②. Test lamp should go out and comes on in about 6 seconds.

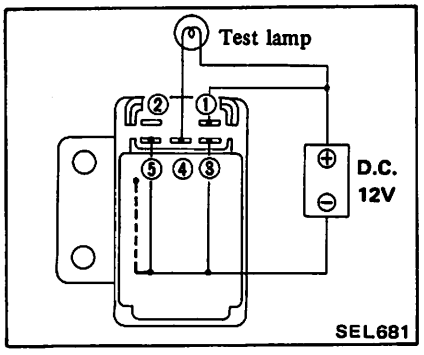

Variable intermittent type

Be careful not to connect lead wires to incorrect terminals.

1. Connect test lead wires.

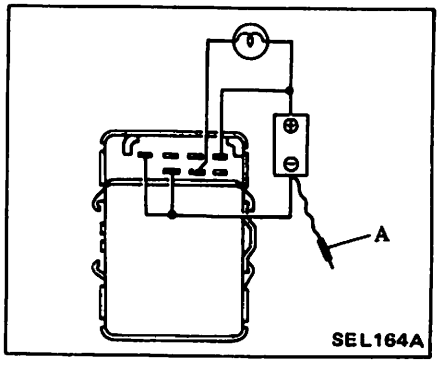

2. Make sure that test lamp comes on when negative lead wire (A) is connected.

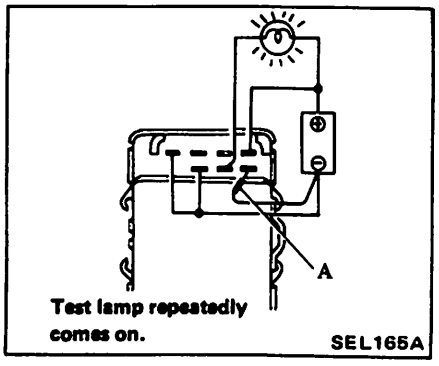

3. Disconnect lead wire (B).
Test lamp should go out and come back on in a few seconds.

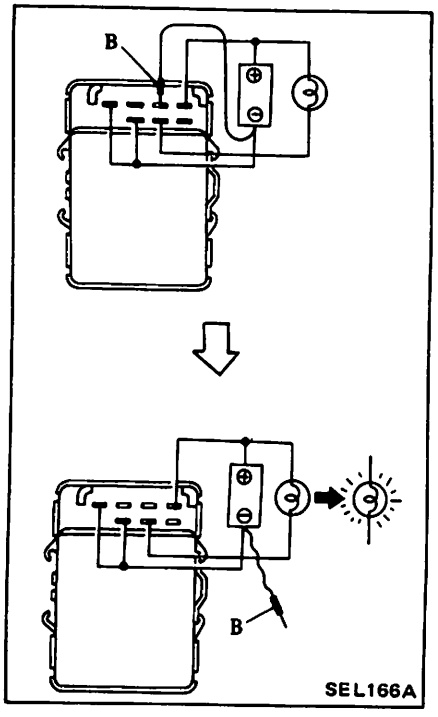

REMOVAL AND INSTALLATION

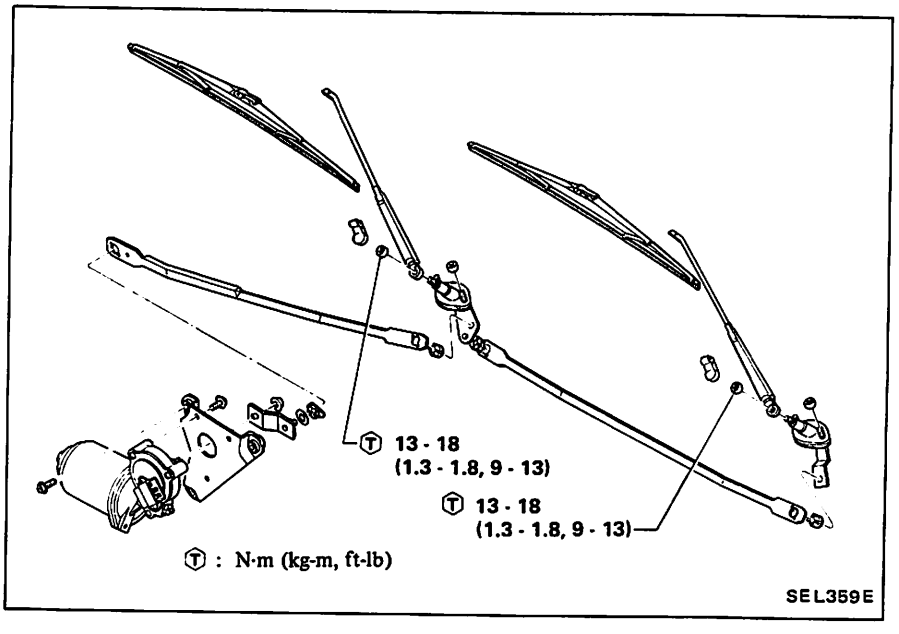

Adjustment

1. Prior to wiper arm installation, set wiper switch to "LOW" to operate wiper motor and then turn it "OFF" (Auto Stop).
2. Adjust wiper blades within clearance "C".
3. Eject washer fluid. Set wiper switch to "LOW" to operate wiper motor and then turn it "OFF".
4. Ensure that wiper blades stop within clearance "C".

Clearance "C":
20 - 30 mm (0.79 - 1.18 in)

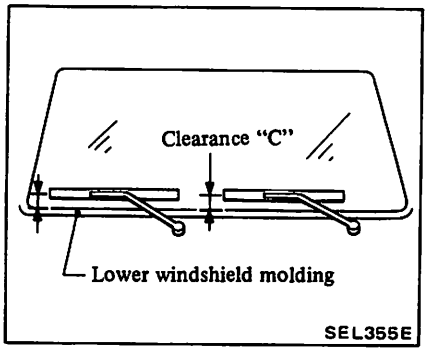

ELECTRICAL ACCESSORIES

CAUTION: Before starting to work, be sure to turn ignition switch "OFF" and then disconnect battery ground cable.

HORN, CLOCK AND INSPECTION LAMP

WIRING DIAGRAM/HORN, CLOCK AND INSPECTION LAMP

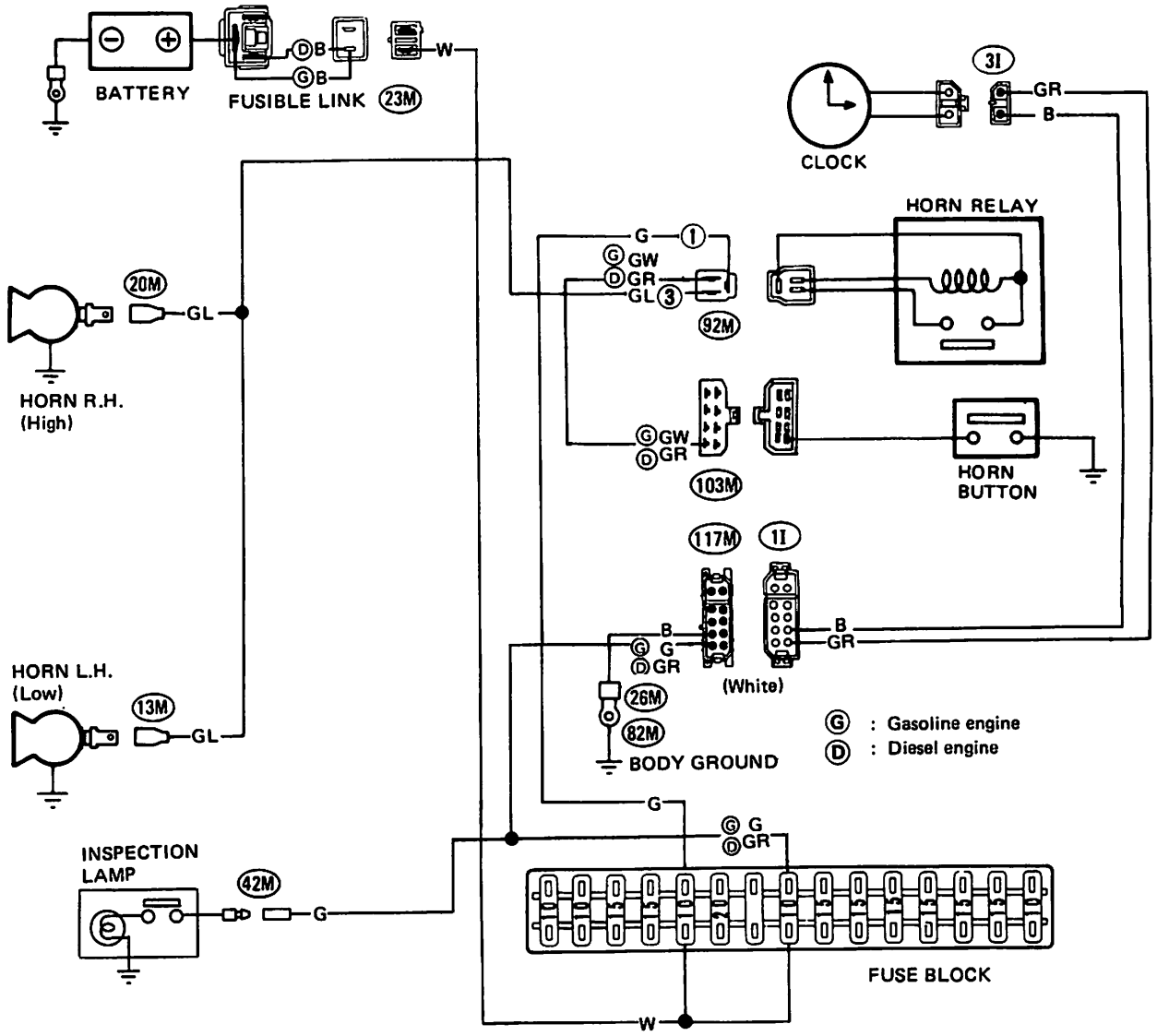

HORN BUTTON

Refer to "COMBINATION SWITCH".

HORN RELAY

Location

Refer to "LOCATION OF ELECTRICAL UNITS".

Inspection

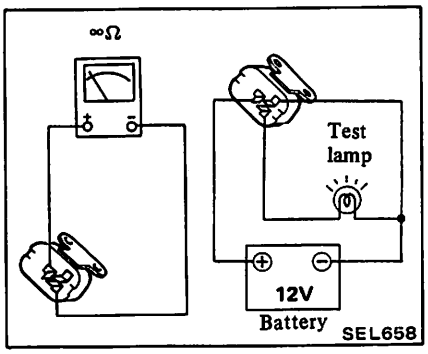

REAR WINDOW DEFOGGER, CIGARETTE LIGHTER AND RADIO

SCHEMATIC/REAR WINDOW DEFOGGER, CIGARETTE LIGHTER AND RADIO

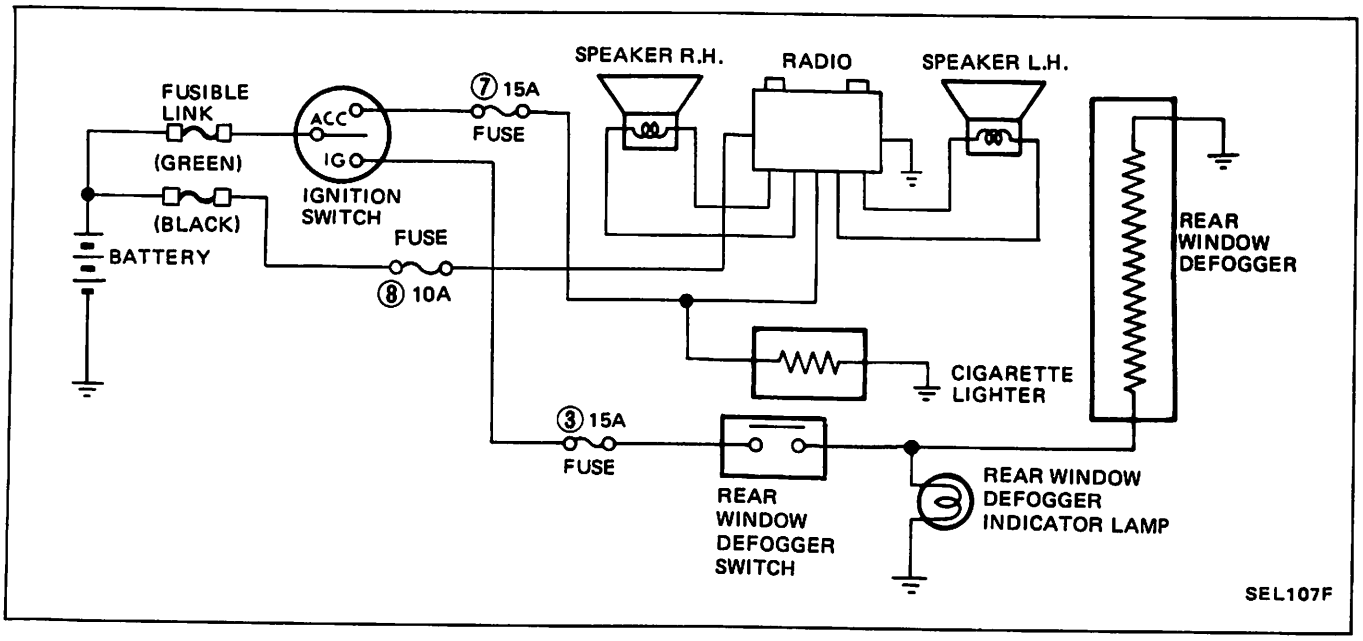

WIRING DIAGRAM/REAR WINDOW DEFOGGER, CIGARETTE LIGHTER AND RADIO

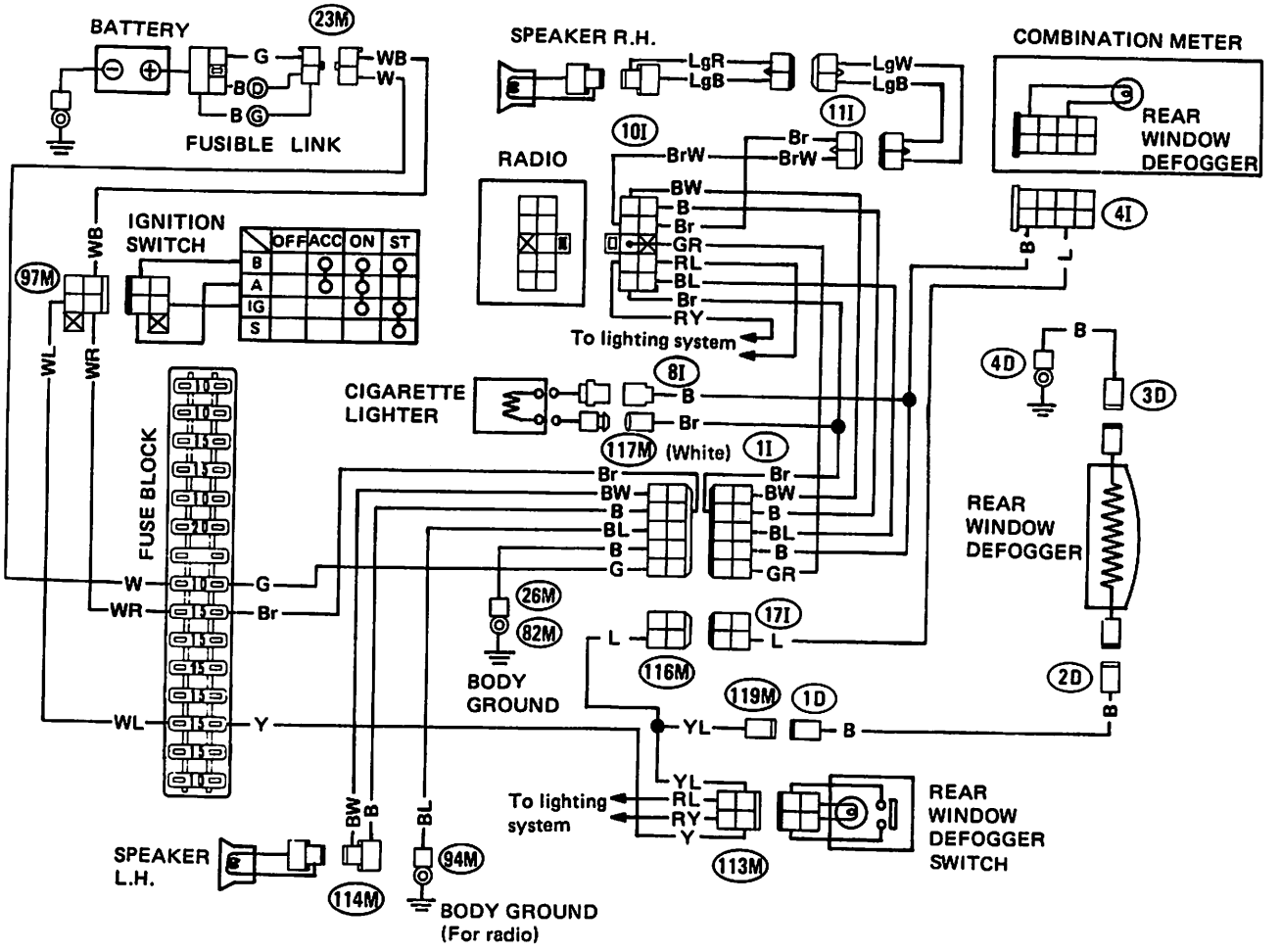

REAR WINDOW DEFOGGER FILAMENTS

Inspection

1. Connect probe of circuit tester (in Volt range) to middle portion of each filament. Engine should run.

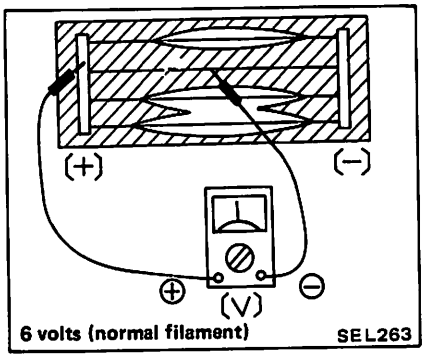

2. Tester indicates 0 or 12 volts if a filament is burned out.

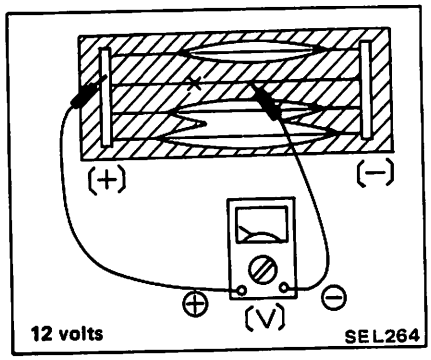

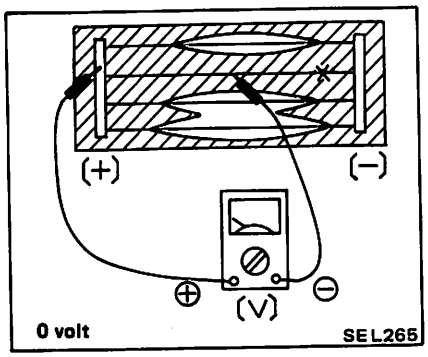

3. Burned out point can be detected by an abrupt deflection of tester pointer while moving probe to left and right along filament.

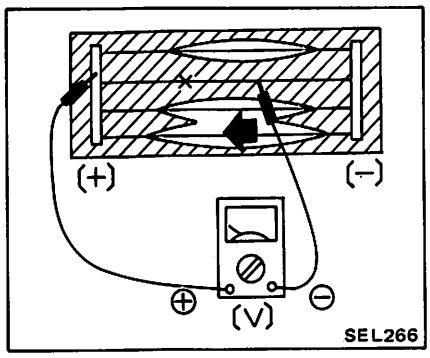

FILAMENT MAINTENANCE

Repair equipment

1. Conductive silver composition (Dupont No. 4817) or equivalent
2. Ruler, 30 cm (12 in) long
3. Drawing pen
4. Heat gun
5. Alcohol
6. Cloth

Repair procedure

1. Wipe broken heat wire and its surrounding area clean with a cloth dampended in alcohol.
2. Apply a small amount of conductive silver composition to tip of drawing pen.

Shake silver composition container before use.

3. Place ruler on glass along broken line. Deposit conductive silver composition on break with drawing pen. Slightly overlap existing heat wire on both sides [preferably 5 mm (0.20 in)] of the break.

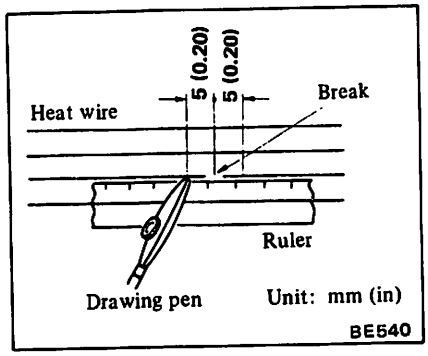

4. Wipe clean silver composition from tip of drawing pen.
5. After repair has been completed, check repaired wire for continuity. This check should be conducted 10 minutes after silver composition is deposited.

Do not touch repaired area while test is being conducted.

6. Apply a constant stream of hot air directly to the repaired area for approximately 20 minutes with a heat gun. A minimum distance of 3 cm (1.2 in) should be kept between repaired area and hot air outlet. If a heat gun is not available, let the repaired area dry for 24 hours.

RADIO

Antenna trimmer adjustment

The antenna trimmer should be adjusted in the following cases:

- Fading and weak AM reception.
- After installation of new antenna, feeder cable or radio receiver.

Before adjusting, be sure to check harness and antenna feeder cable connectors for proper connection.

1. Extend antenna completely.
2. Turn radio on, and turn volume control to increase speaker volume.
3. Push the AM selector button.
4. Tune in the weakest station (barely audible) on dial at the range around 14 (1,400 kHz).
5. Turn antenna trimmer to left or right slowly, and set it in the position where reception is strongest.

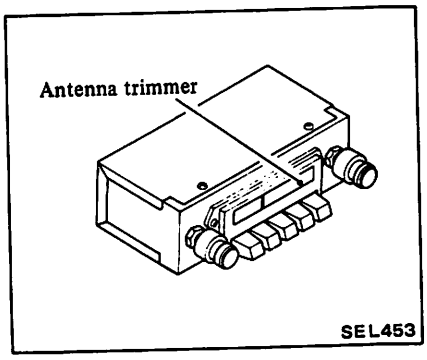

CAUTION:
Do not turn antenna trimmer more than one-half turn.

AUTOMATIC SPEED CONTROL DEVICE (A.S.C.D.)

CAUTION: Before starting to work, be sure to turn ignition switch "OFF" and then disconnect battery ground cable.

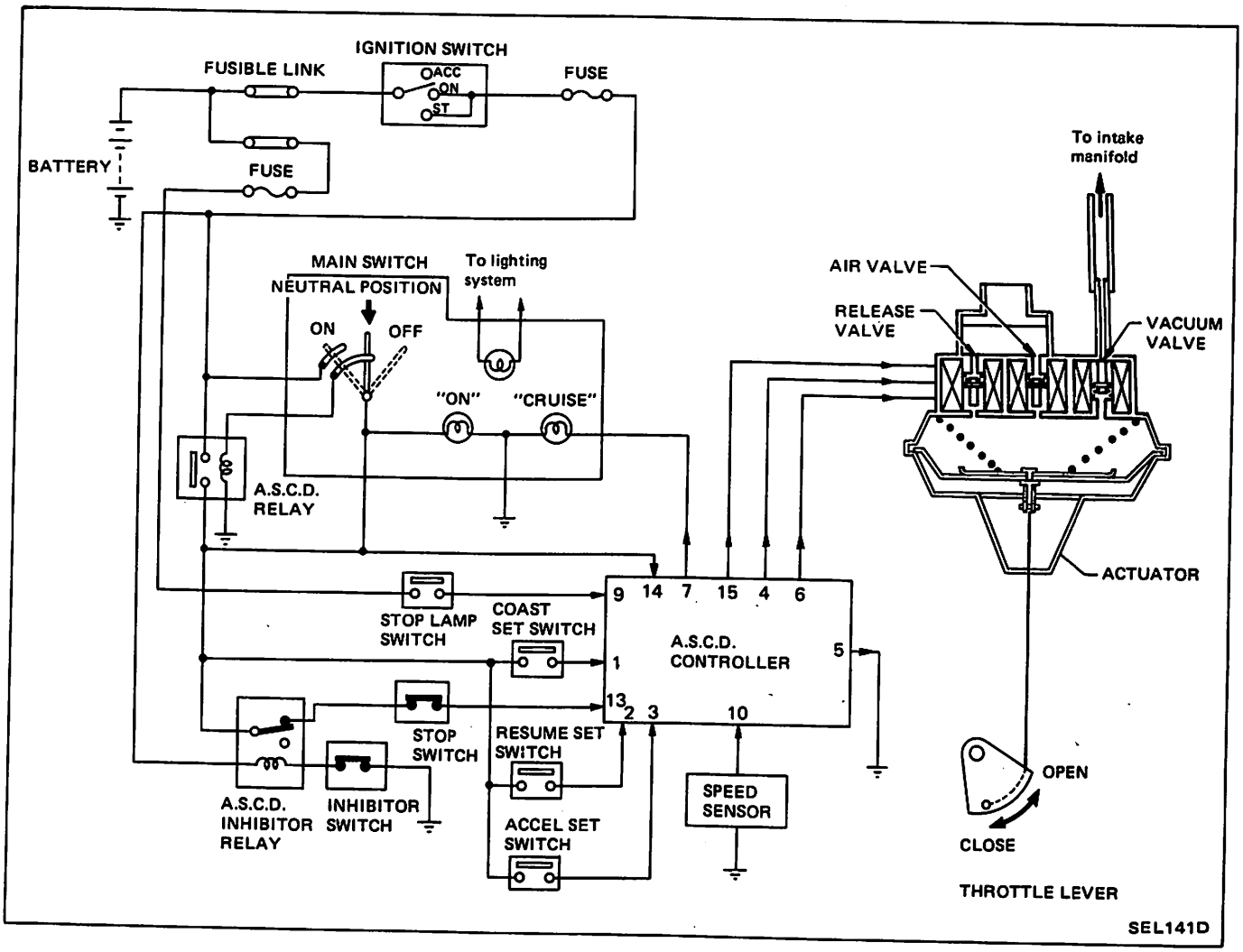

DESCRIPTION

The Automatic Speed Control Device (subsequently referred to as "A.S.C.D.") is a combined unit of electronic circuits with vacuum mechanisms.

The A.S.C.D. controller generates an electrical signal equivalent to the difference between the preset speed and the actual speed picked up by the speed sensor.

The A.S.C.D. is capable of maintaining speeds within the range of approximately 48 to 128 km/h (30 to 80 MPH).

LOCATION

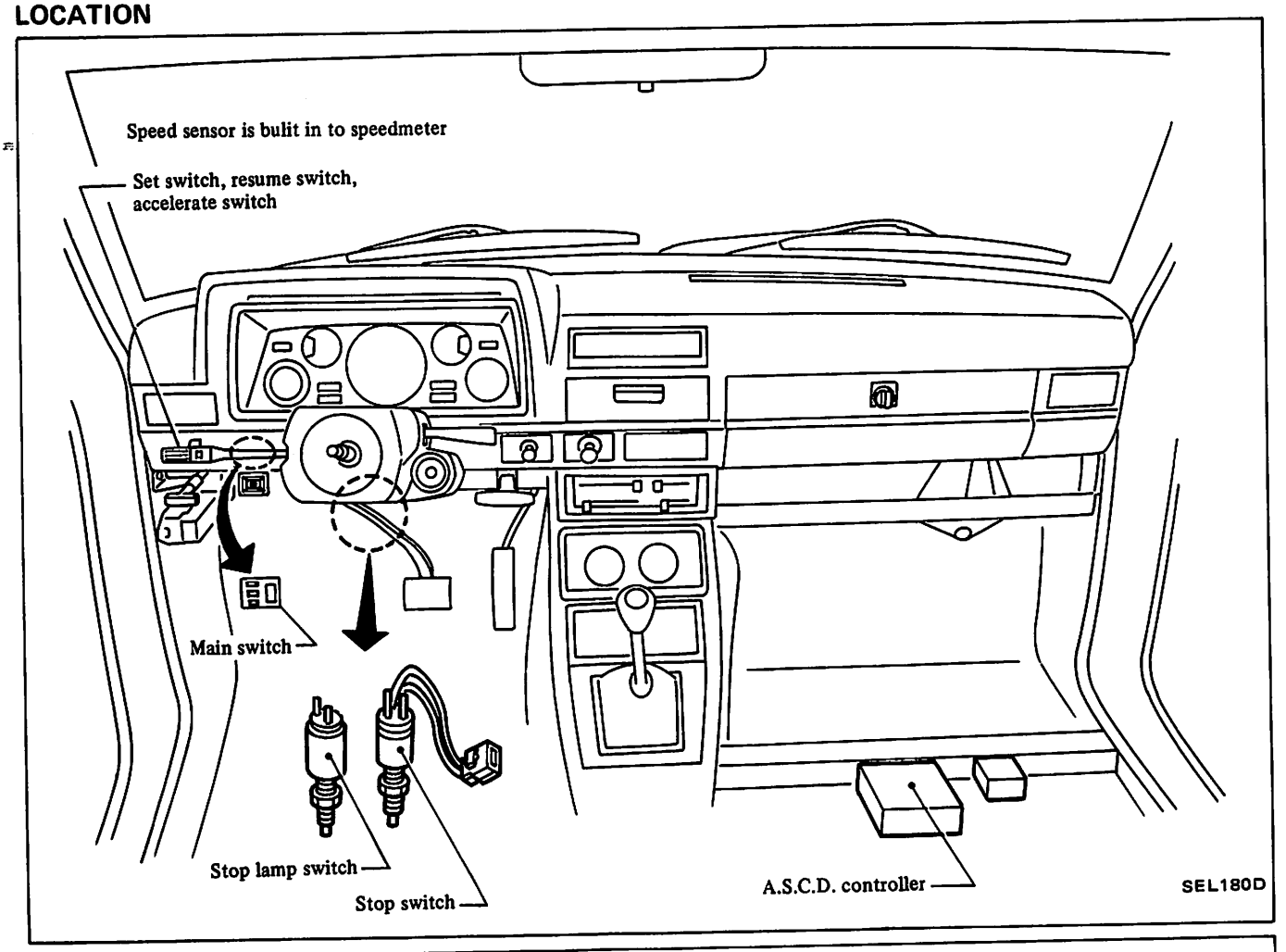
Speed sensor is bulit in to speedmeter
Set switch, resume switch, accelerate switch
Main switch
Stop lamp switch
Stop switch
A.S.C.D. controller
SEL180D

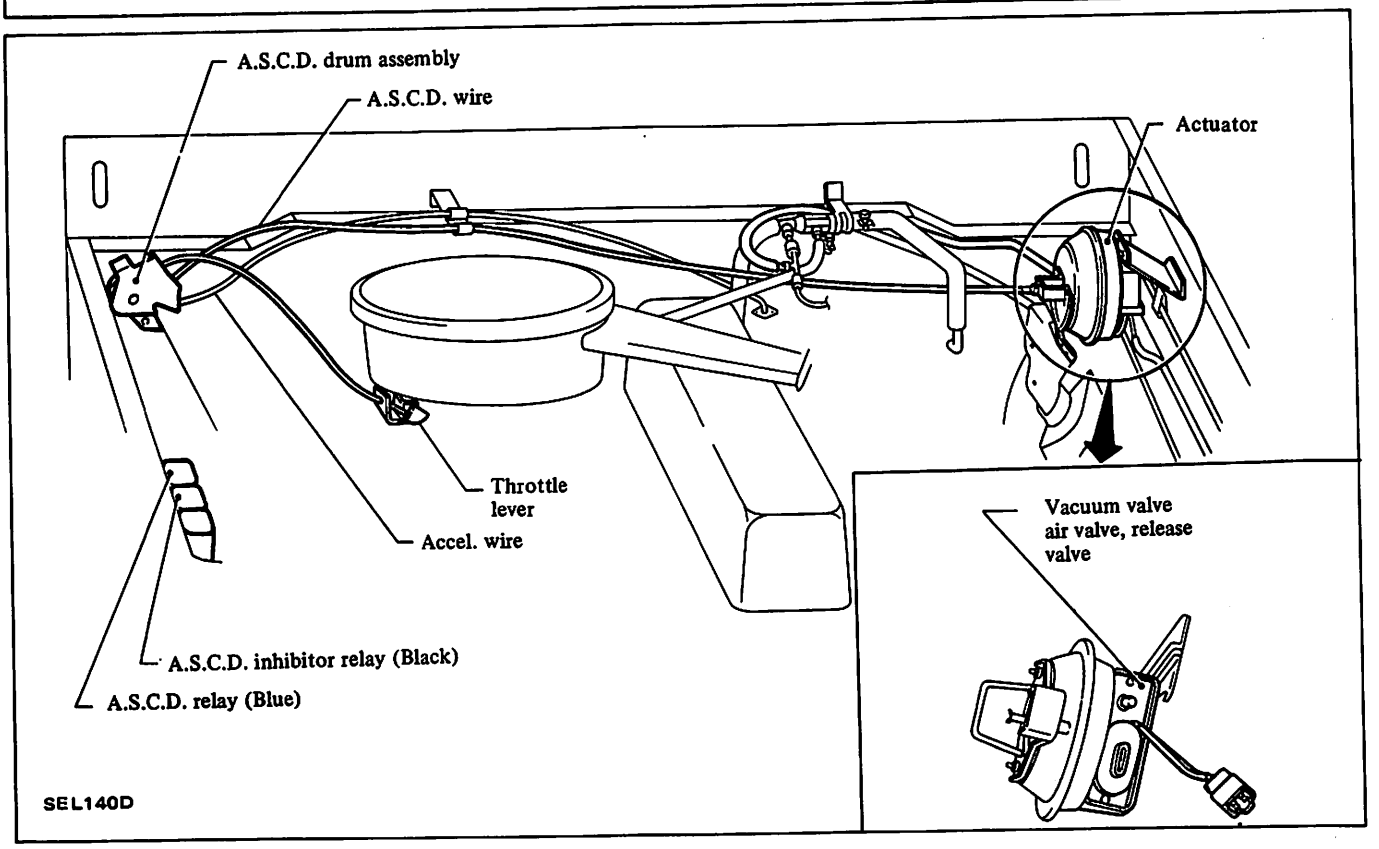
A.S.C.D. drum assembly
A.S.C.D. wire
Actuator
Throttle lever
Accel. wire
A.S.C.D. inhibitor relay (Black)
A.S.C.D. relay (Blue)
Vacuum valve air valve, release valve
SEL140D

FUNCTION AND OPERATION

MAIN SWITCH

When the main switch is turned ON with the ignition switch ON, the exciting coil of the relay will be energized and the relay will turn ON, thus supplying current to the system. Although the main switch automatically returns to its original position, the current is sent through the relay and fed to the exciting coil via the main switch; in this way, the relay will remain ON. When the ignition switch is turned off, the relay will also turn off. And the relay will remain inoperative until the main switch is turned ON, even if the ignition switch is set to ON.

SET SWITCH

The set switch has an ON-OFF switch type of circuit.
When the set switch is depressed, the CRUISE light illuminates. With the switch depressed, the controller cancels the preset car speed.
The controller will preset the car speed at which the car is running when the switch is released.

ACCELERATE & RESUME SWITCH

The accelerate & resume switch is designed to increase the set speed, or to return it to that speed at which the car was previously being driven before the set speed was cancelled by depression of the brake pedal, etc.
Depressing the "ACCEL" end of the switch causes the car speed to increase continuously; releasing it will set the car speed at that which the car is currently being driven. Depressing the "RESUME" end of the switch momentarily causes the car speed to automatically return to the set speed at which the car was being driven before the set speed was cancelled by depression of the brake pedal, etc. Keeping the "RESUME" end pressed causes the car speed to decrease; releasing it will return the car speed to that which the car was being driven before it was released.

SPEED SENSOR
(Contained in speedometer)

The speed sensor is an ON-OFF type sensor generating two pulser per revolution of the meter cable.

CONTROLLER

The controller receives a vehicle speed signal and other signals through various switches to control the operation of the various valves used in the actuator. With the ON-OFF operation of these switches, the vehicle speed is regulated and/or the cruise control is released. The cruise control has a fail-safe function.

ACTUATOR

The actuator contains three valves in it; the vacuum, air and release valves. These valves turn ON or OFF by signals transmitted from the controller to introduce atmospheric pressure or engine vacuum pressure into the actuator, thereby controlling the OPEN-CLOSE operation of the throttle lever.

VALVES

When the vacuum valve on, the vacuum pressure is introduced into the actuator; when it is off, the vacuum pressure is shut off. The air valve shuts off the atmospheric pressure and holds the vacuum pressure inside the vacuum chamber when it is on and introduces atmospheric pressure into it when the valve is off. When the release valve is on, it shuts off atmosphere; when it is off it introduces atmosphere.

STOP SWITCH

The stop switch is used to release the system. When the brake pedal is depressed, this switch cuts off the power supply to the A.S.C.D. circuit.

STOP LAMP SWITCH

This switch causes the stop light to operate. At the same time, the operating signal of the stop light circuit is sent to the controller in order to release the system.

INHIBITOR RELAY

The inhibitor relay releases the A.S.C.D. system when the selector is set to "N" or "P" position.

A.S.C.D. CABLE

Removal and installation

1. Disconnect cable from actuator.
(1) Loosen lock nut at actuator.
(2) Remove rubber boots.

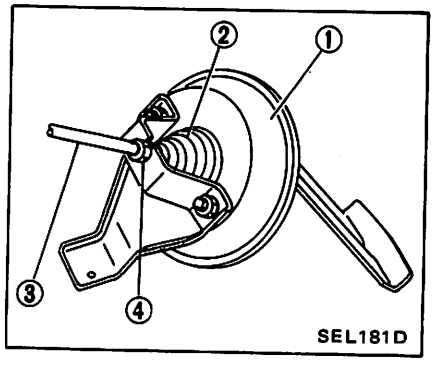

1 Actuator
2 Rubber boot
3 Cable
4 Lock nut

2. Loosen lock nut at intake manifold bracket.
3. To install the cable, reverse the order of removal.

Exercise care when removing and installing wire, so as not to deform wire end.

Adjustment

When installing, adjust A.S.C.D. cable as follows:
Without depressing the accelerator pedal, adjust the adjusting nut until cable free play is within specified value at throttle lever.
Then tighten lock nut.

Free play:
2 - 3 mm (0.08 - 0.12 in)

Do not increase tension of cable excessively, as this may cause throttle lever to rotate.

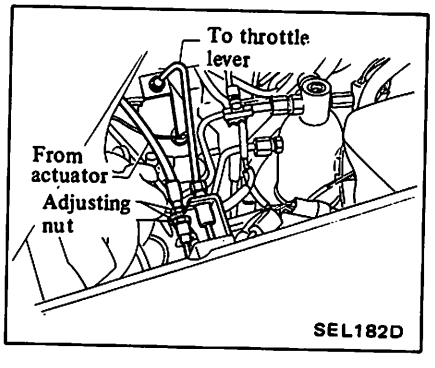

ACTUATOR

1. Disconnect battery ground cable.
2. Disconnect cable from actuator. Refer to A.S.C.D. cable for removal.
3. Disconnect harness connector vacuum hose.
4. Remove bolt attaching actuator to body.
5. To install actuator, reverse the order of removal.

Inspection

Apply battery voltage (approx. 12V) to each terminal as in the figure below, and apply vacuum to actuator.
If diaphragm moves smoothly, actuator is O.K.

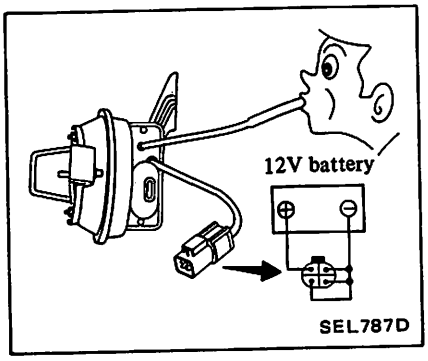

CAUTION:
When checking actuator by applying vacuum, do not apply engine vacuum directly.

VACUUM VALVE, AIR VALVE AND RELEASE VALVE

Inspection

1. Measure resistance values between terminal ① and terminals ②, ③ and ④.

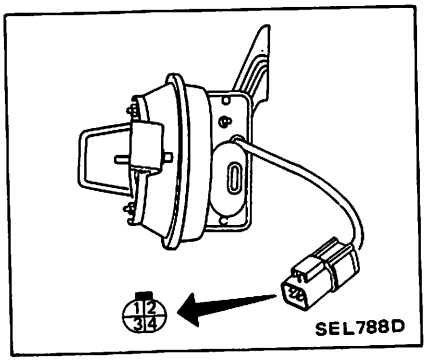

Continuity exist . . . . . O.K.

CAUTION:
Do not attempt to remove valves from actuator.

2. Apply voltage between terminal ① and terminals ②, ③ and ④, respectively, to make sure that a click is produced. Also check for proper conduction of vacuum pressure passages.

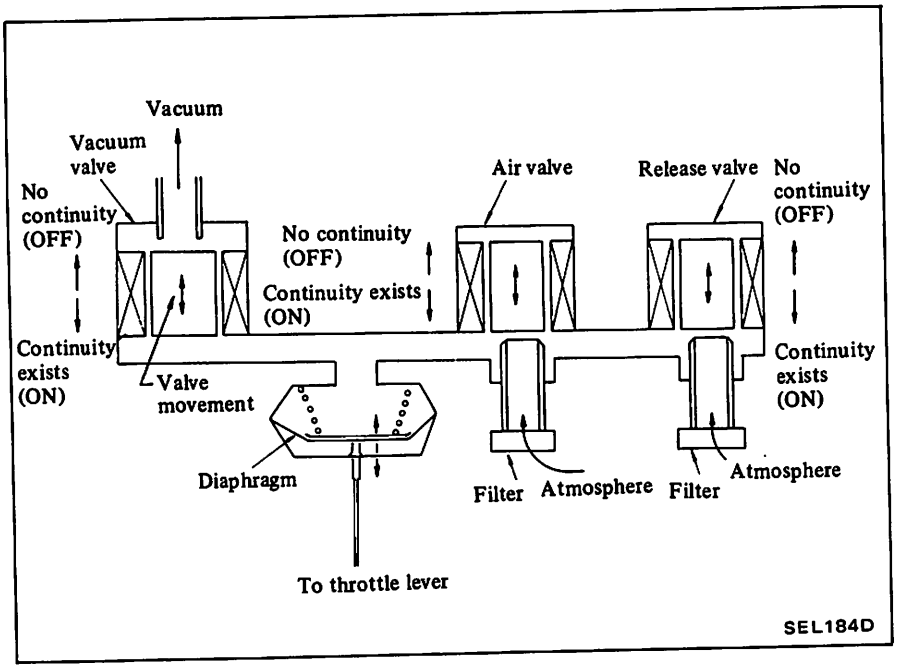

		Current flow	Vacuum pressure	Actuator interior	Atmospheric pressure
Valve operation	Vacuum valve	ON	o——o	o——o	
		OFF		Valves close. (OFF)	
	Air & release valves	ON			
		OFF		o——o	o——o

o——o : Passages conduct.

SPEED SENSOR
(Read switch type)

Location

The speed sensor is built into the speedometer.

Inspection

Inspection must be made with speed sensor installed to speedometer.
Turning speedometer slowly by hand, test continuity of speed sensor circuit.
Continuity exists two times a turn ..... O.K.

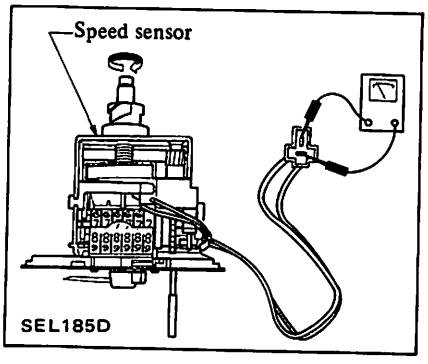

MAIN SWITCH

Inspection

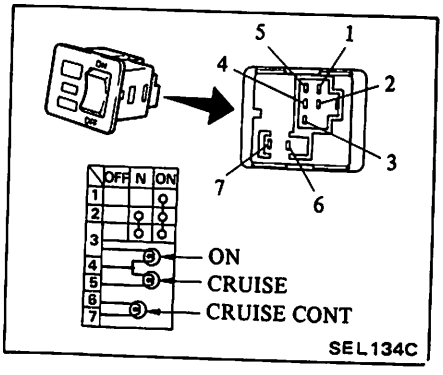

COAST SWITCH AND ACCELERATE & RESUME SWITCH

Inspection

Test continuity through switch with an ohmmeter.
Refer to "COMBINATION SWITCH".

STOP SWITCH

Inspection

Test continuity through switch with an ohmmeter.

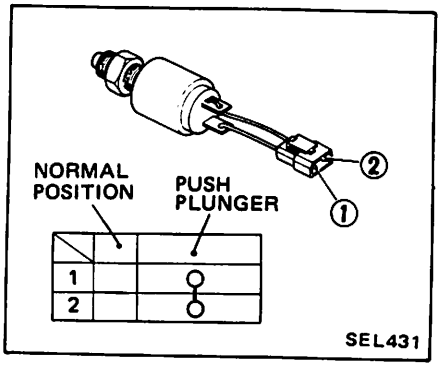

Adjustment

Adjustment of the stop switch is the same as the stop lamp switch.
Refer to MA section.

A.S.C.D. RELAY AND A.S.C.D. INHIBITOR RELAY

Location

The relay is located on the relay bracket. Refer to page EL-83.

Inspection

Refer to "STANDARDIZED RELAY".

A.S.C.D. CONTROLLER
(Microcomputor built-in)

Location

The controller is located under assistant seat. Refer to page EL-83.

Inspection

Controller must not be checked as a single part.

CAUTION:
Do not touch the circuit tester probe to any unnecessary terminal on controller. Doing so could cause damage to controller.

a. **Handle controller carefully to avoid damage.**
b. **Keep controller away from electric noise source to prevent A.S.C.D. system from malfunctioning and IC circuit, etc. from being degraded.**

TROUBLE-SHOOTING

PREPARATION

- Remove assist seat.

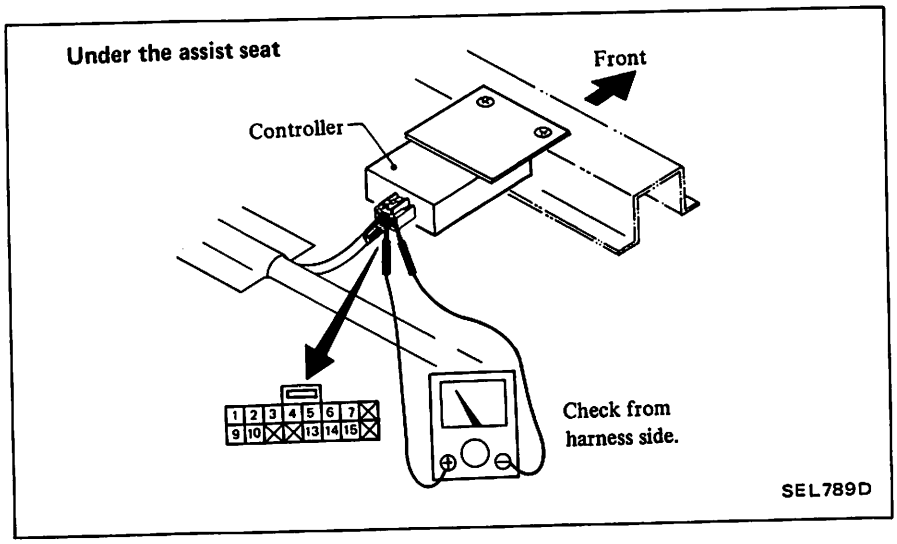

TROUBLE-SHOOTING

Speed cannot be set.

↓

Does A.S.C.D. indicator illuminate when A.S.C.D. main switch is turned ON after turning it OFF?

- Yes → Check vacuum hose for looseness.
- No → Check A.S.C.D. main switch and A.S.C.D. relay.

Check vacuum hose for looseness.

- O.K. → Check power supply circuit of A.S.C.D. control unit.

Check power supply circuit of A.S.C.D. control unit.

- O.K. → Check set switch circuit of A.S.C.D. control unit.
- N.G. → Check stop switch, clutch switch (M/T model), inhibitor relay and inhibitor switch (A/T model).

Check set switch circuit of A.S.C.D. control unit.

- O.K. → Check speed sensor.
- N.G. → Check set switch.

Check speed sensor.

- O.K. → Check A.S.C.D. actuator.
- N.G. → Replace speed sensor.

Check A.S.C.D. actuator.

- O.K. → Replace A.S.C.D. control unit.
- N.G. → Replace actuator.

POWER SUPPLY CIRCUIT CHECK

1. Release brake and clutch pedals.
2. Turn ignition switch ON.
3. Turn A.S.C.D. main switch ON.
4. Check voltage between ⑬ and ⑤ .

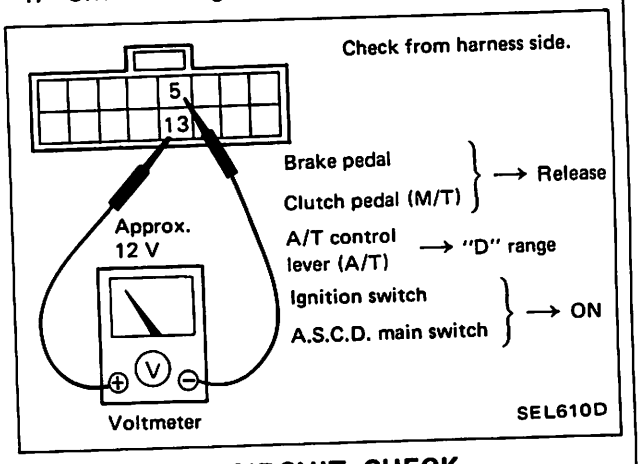

SET SWITCH CIRCUIT CHECK

1. Turn ignition switch OFF.
2. Depress A.S.C.D. set switch.
3. Check continuity between ① and ⑭ .

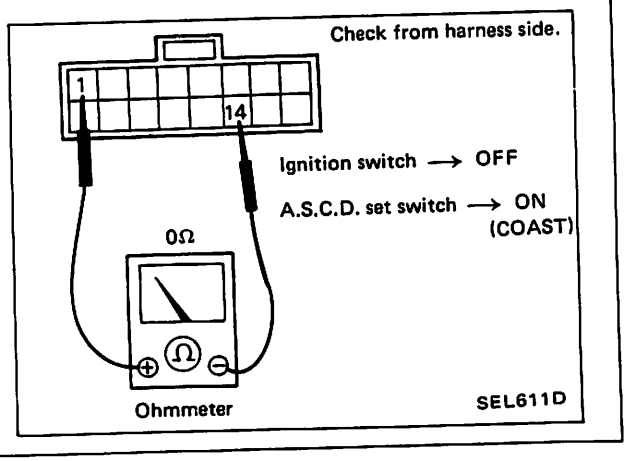

Resume switch does not operate.

↓

Check resume switch circuit.

- O.K. → Replace A.S.C.D. control unit.
- N.G. → Check resume switch.

Accelerate switch does not operate.

↓

Check accelerate switch circuit.

- O.K. → Replace A.S.C.D. control unit.
- N.G. → Check accelerate switch.

Vehicle speed hunts.

↓

Check vacuum hose for bends, crushed portions, cracks, etc.

- O.K. → ↓
- N.G. → Repair or replace hose.

Does A.S.C.D. wire move smoothly?

- O.K. → ↓
- N.G. → Repair or replace wire.

Check actuator.

- O.K. → Replace A.S.C.D. control unit.
- N.G. → Replace actuator.

RESUME SWITCH CIRCUIT CHECK

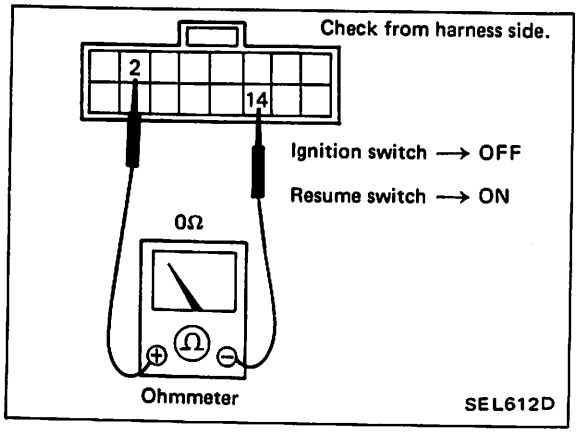

ACCELERATE SWITCH CIRCUIT CHECK

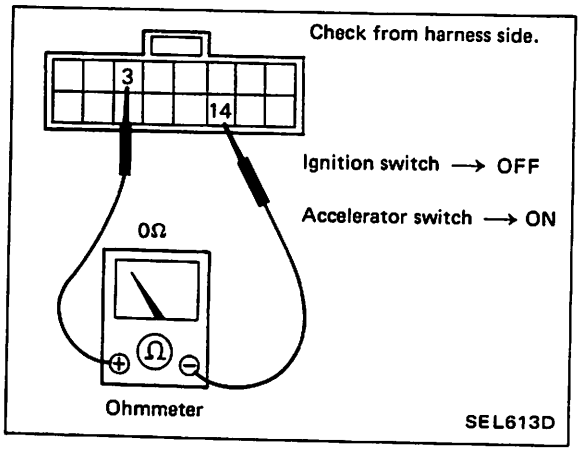

The difference between set speed and actual speed is great.

↓

Check A.S.C.D. wire and actuator for dragging.

- O.K. → ↓
- N.G. → Replace wire or actuator.

Check vacuum hose for bends, crushed portions, cracks, etc.

- O.K. → ↓
- N.G. → Repair or replace hose.

Check actuator.

- O.K. → Replace A.S.C.D. control unit.
- N.G. → Replace actuator.

WIRING DIAGRAM/A.S.C.D.

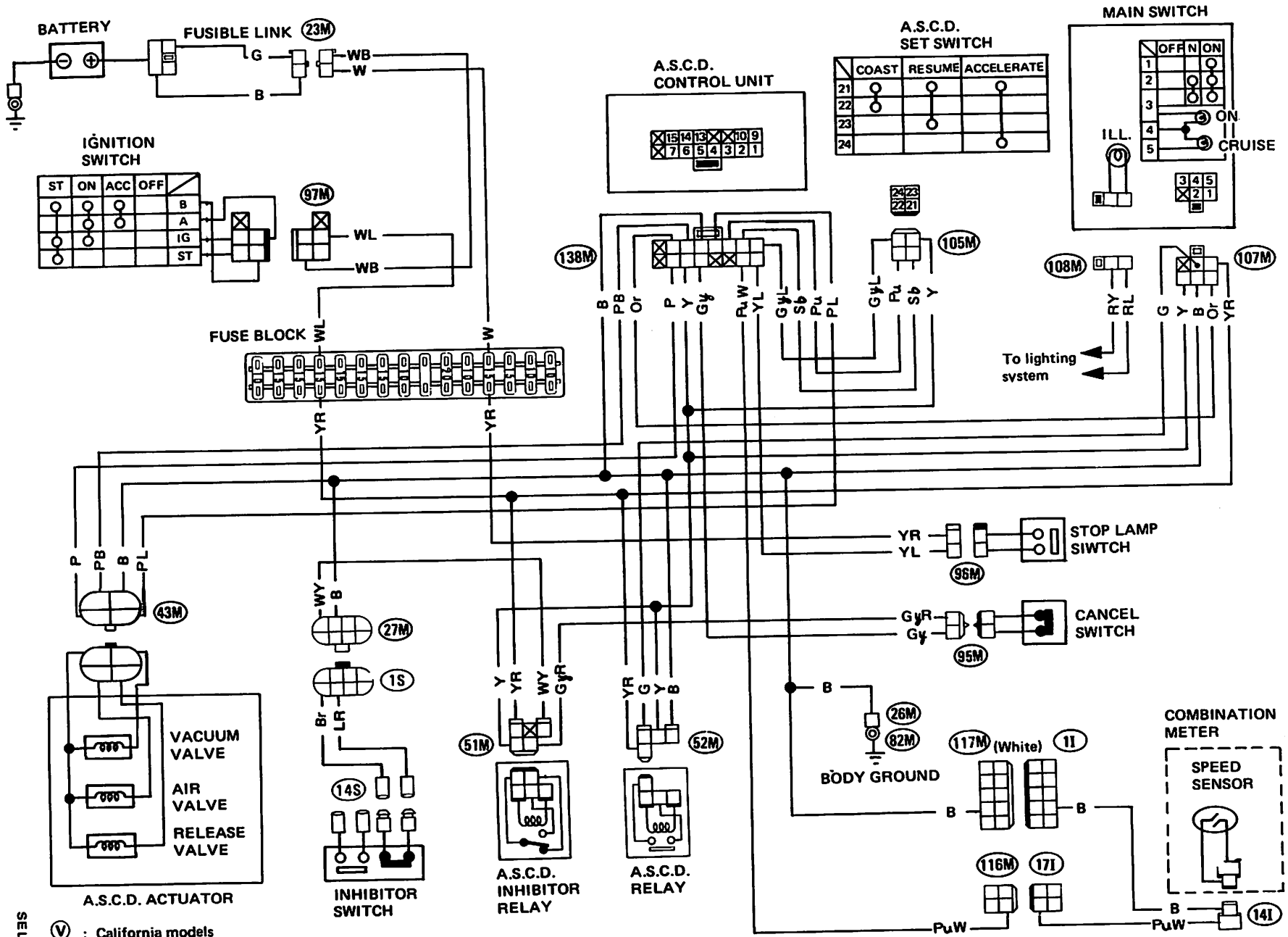

Ⓥ : California models

(UN) : U.S.A. models except for California and Canada models

SEL109F

LOCATION OF ELECTRICAL UNITS

CAUTION: Before starting to work, be sure to turn ignition switch "OFF" and then disconnect battery ground cable.

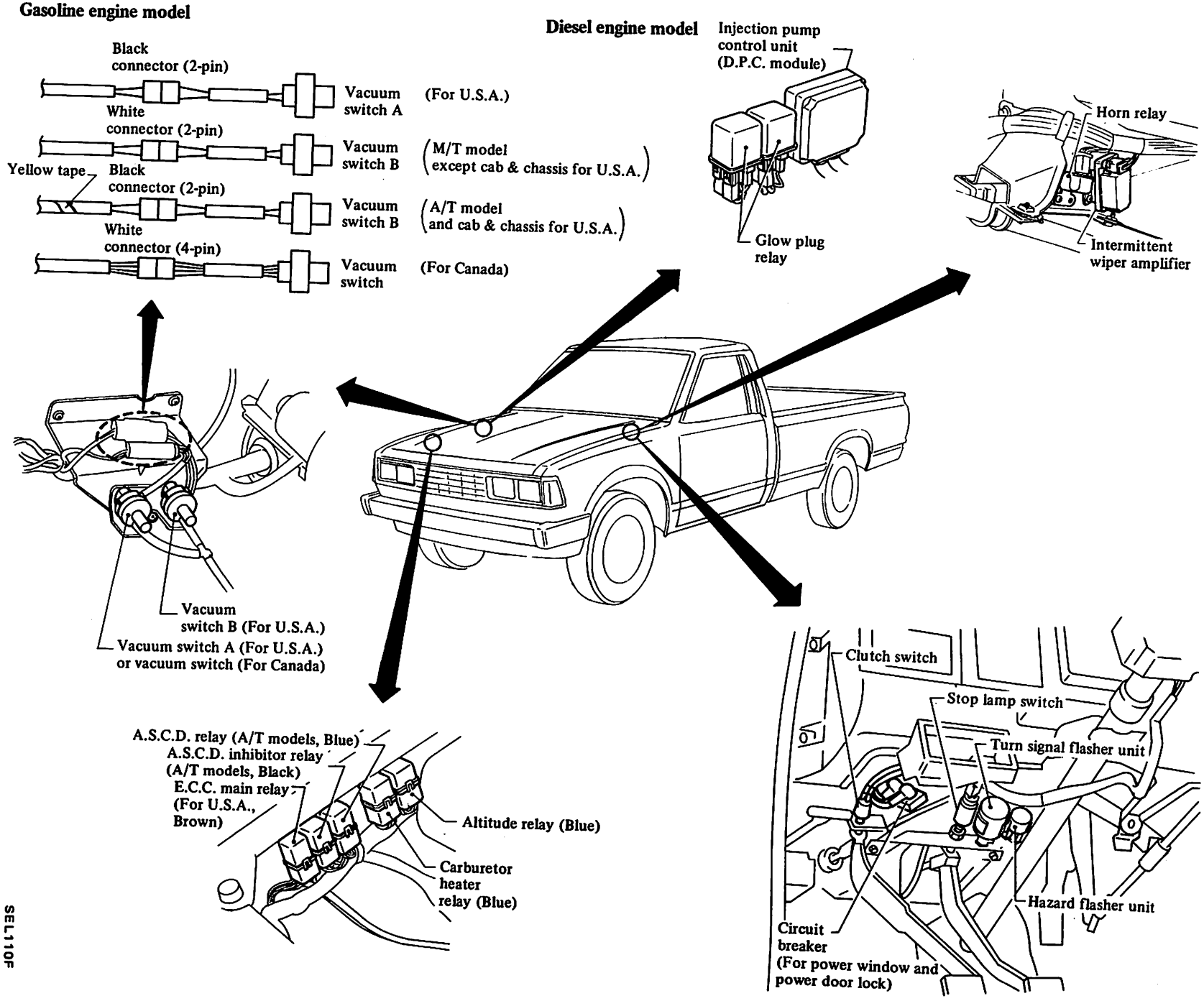

SEL110F

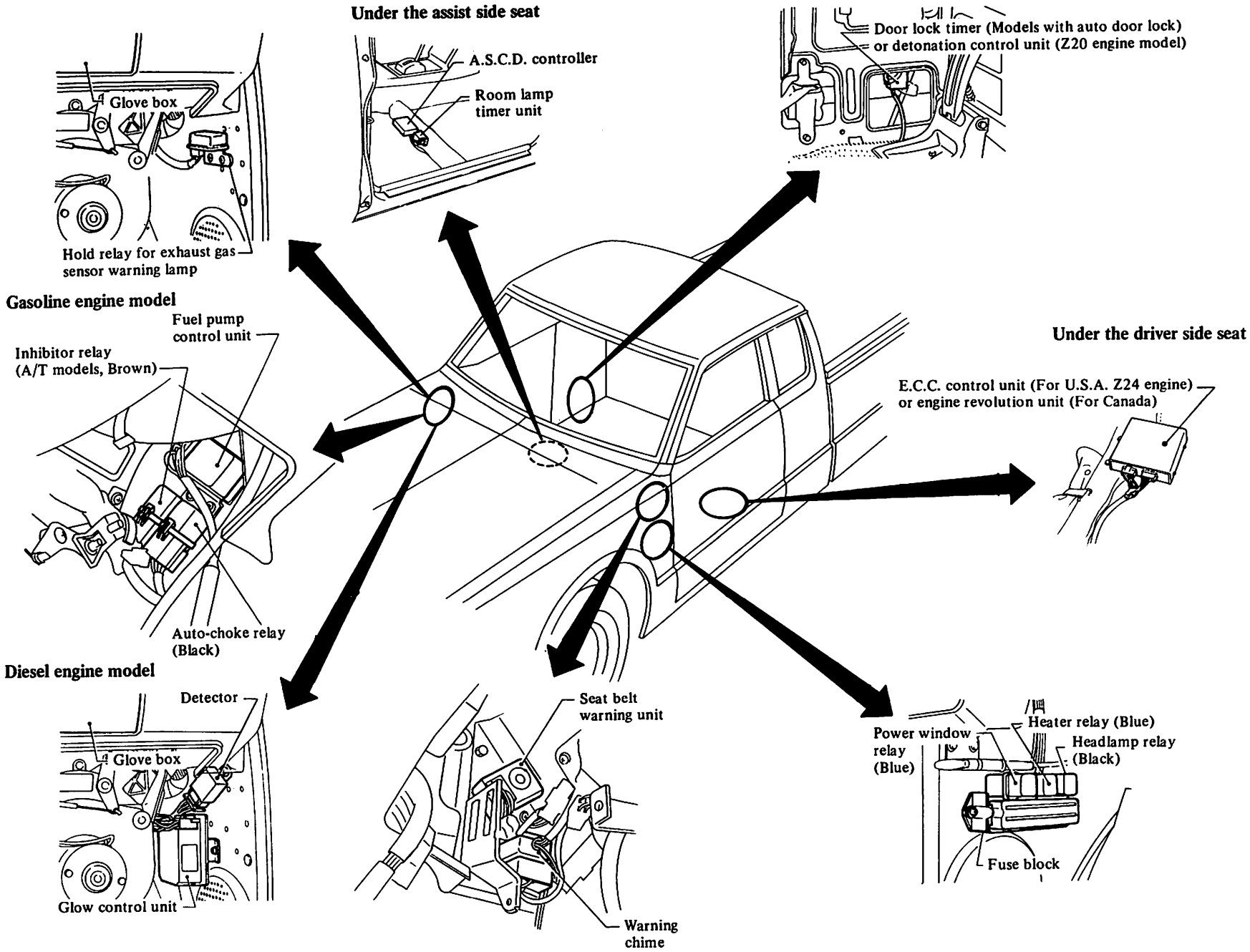
Under the assist side seat
A.S.C.D. controller
Room lamp timer unit
Door lock timer (Models with auto door lock) or detonation control unit (Z20 engine model)
Glove box
Hold relay for exhaust gas sensor warning lamp
Gasoline engine model
Fuel pump control unit
Inhibitor relay (A/T models, Brown)
Auto-choke relay (Black)
Under the driver side seat
E.C.C. control unit (For U.S.A. Z24 engine) or engine revolution unit (For Canada)
Diesel engine model
Detector
Glove box
Glow control unit
Seat belt warning unit
Warning chime
Power window relay (Blue)
Heater relay (Blue)
Headlamp relay (Black)
Fuse block

SEL111F

HARNESS LAYOUT

CAUTION: Before starting to work, be sure to turn ignition switch "OFF" and then disconnect battery ground cable.

For easy identification, connectors indicated in the system wiring diagram have the same numbers as those used in the harness layout schematic.

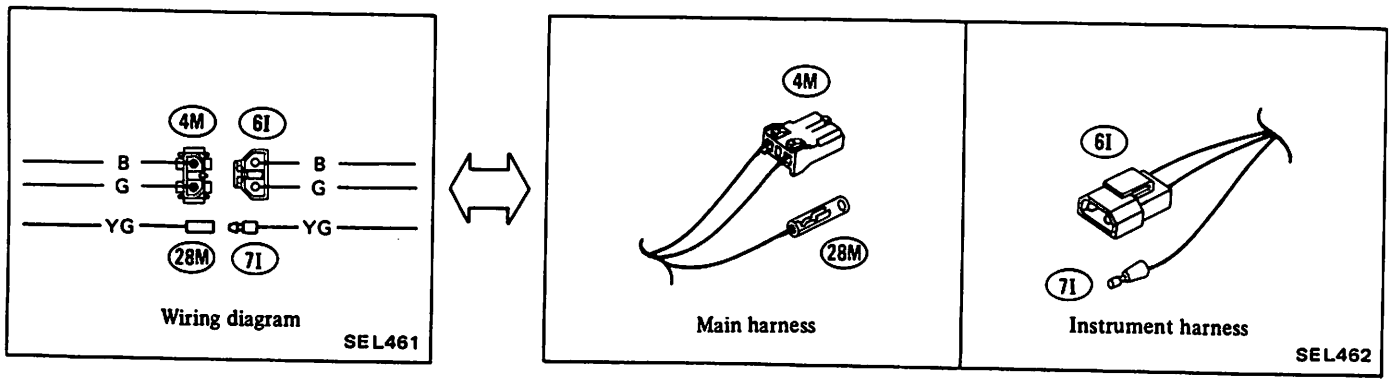

DESCRIPTION

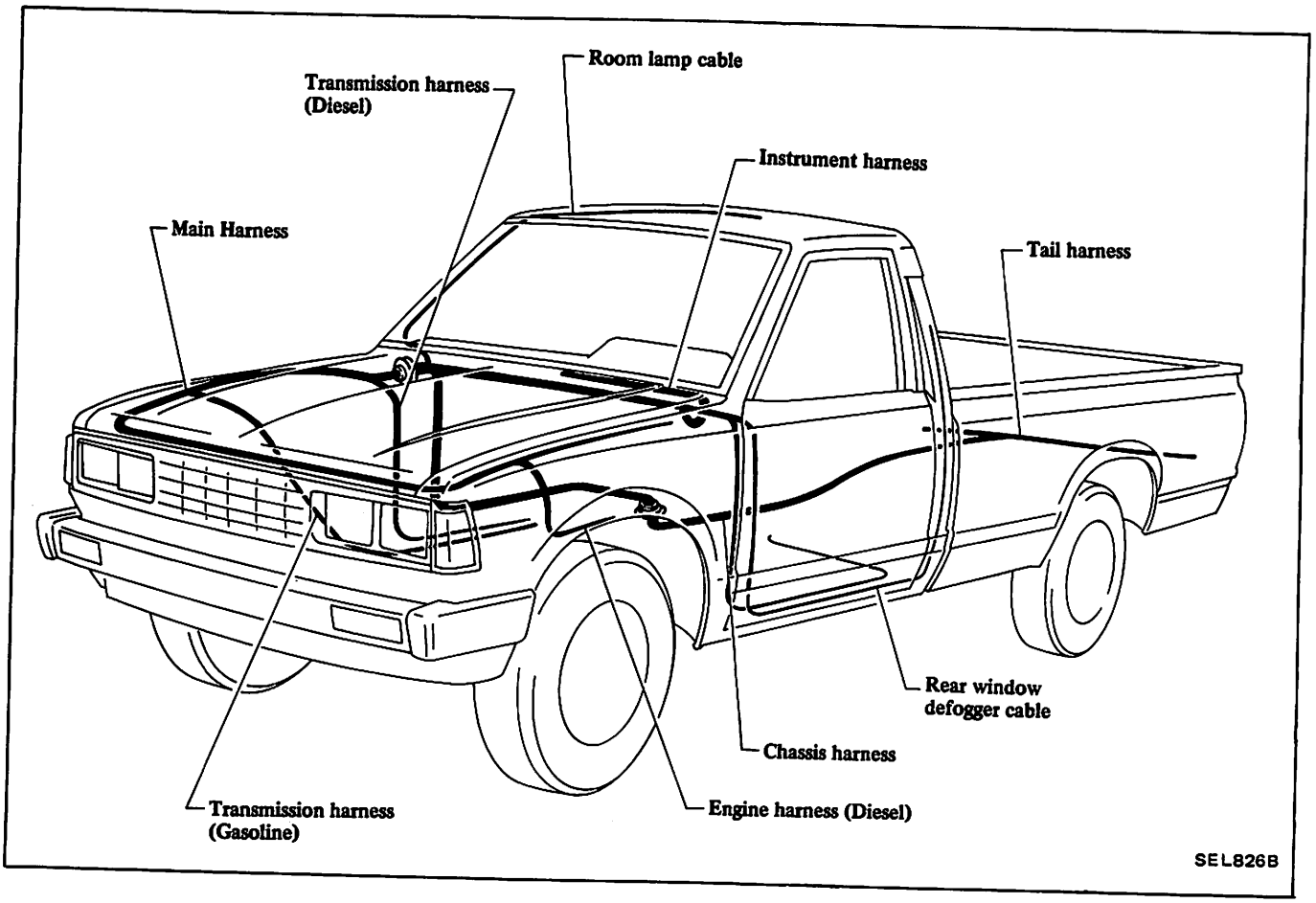

MAIN HARNESS (Engine compartment side)
GASOLINE ENGINE MODEL

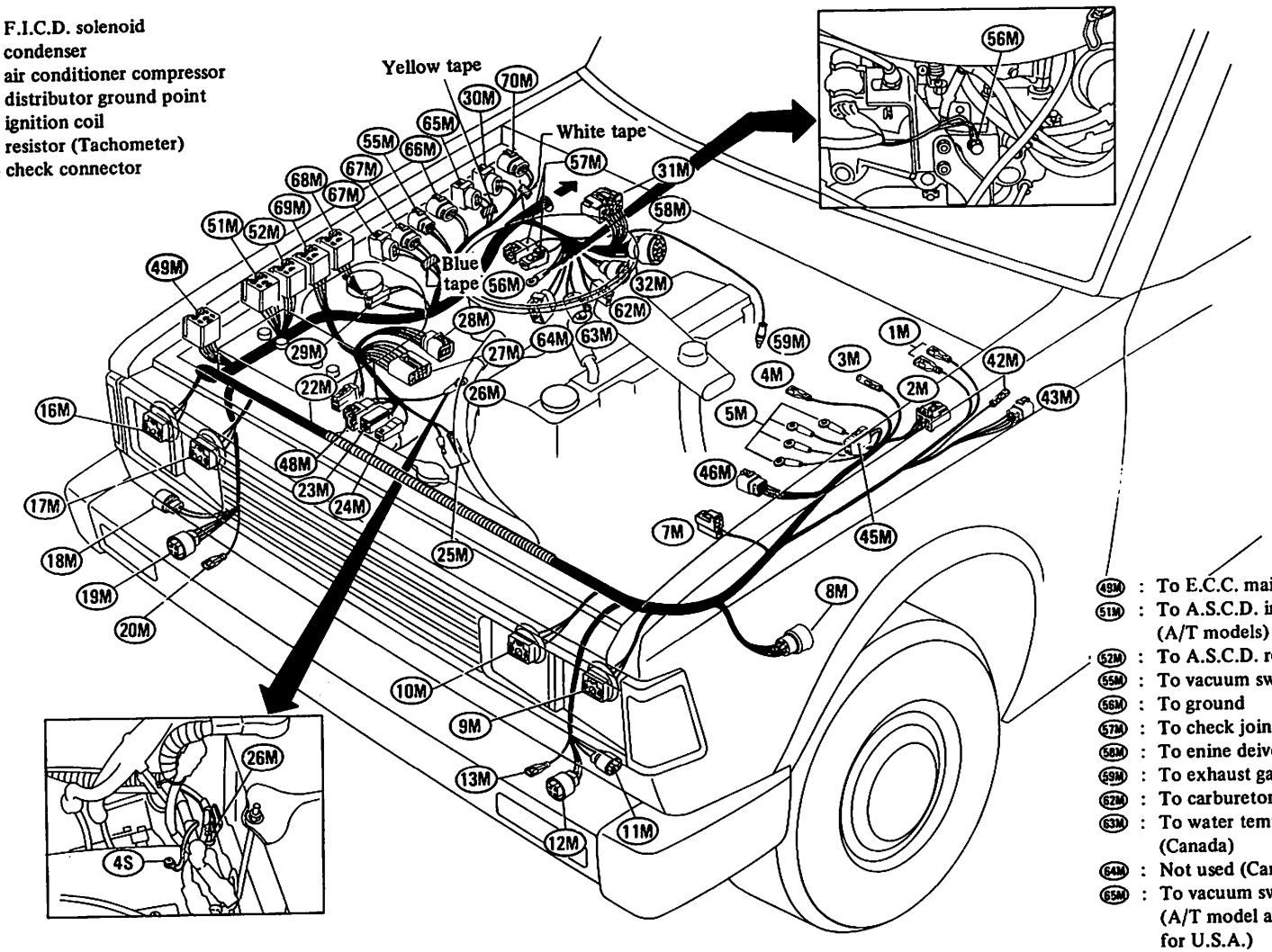

- 1M : To F.I.C.D. solenoid
- 2M : To condenser
- 3M : To air conditioner compressor
- 4M : To distributor ground point
- 5M : To ignition coil
- 7M : To resistor (Tachometer)
- 8M : To check connector

- 49M : To E.C.C. main relay
- 51M : To A.S.C.D. inhibitor relay (A/T models)
- 52M : To A.S.C.D. relay (A/T models)
- 55M : To vacuum switch (Canada)
- 56M : To ground
- 57M : To check joint
- 58M : To enine deivce (U.S.A.)
- 59M : To exhaust gas sensor
- 62M : To carburetor heater
- 63M : To water temperature switch (Canada)
- 64M : Not used (Canada)
- 65M : To vacuum switch B (A/T model and cab & chassis for U.S.A.)
- 66M : To vacuum switch B (M/T model for U.S.A.)
- 67M : Not used (Canada)
- 68M : To altitude relay (Optional for U.S.A. except California)
- 69M : To carbureotr heater relay
- 70M : To altitude solenoid (Optional for U.S.A. except California)

- 8M : To headlamp L.H. Type-2
- 10M : To headlamp L.H. Type-1
- 11M : To side marker lamp L.H.
- 12M : To front combination lamp L.H.
- 13M : To horn "Low"
- 16M : To headlamp R.H. Type-2
- 17M : To headlamp R.H. Type-1
- 18M : To side marker lamp R.H.

- 19M : To front combination lamp R.H.
- 20M : To horn "High"
- 22M : To transmission harness (2S)
- 23M : To fusible link
- 24M : To fusible link
- 25M : To low pressure switch
- 26M : To ground
- 27M : To transmission harness (1S)
- 28M : To transmission harness (16S)

- 29M : To windshield washer motor
- 30M : To vacuum switch A
- 31M : To wiper motor
- 32M : To engine device (Canada)
- 42M : To inspection lamp
- 43M : To A.S.C.D. actuator (A/T models)
- 45M : To brake fluid level switch
- 46M : To distributor
- 48M : To fusible link

SEL112F

HARNESS LAYOUT

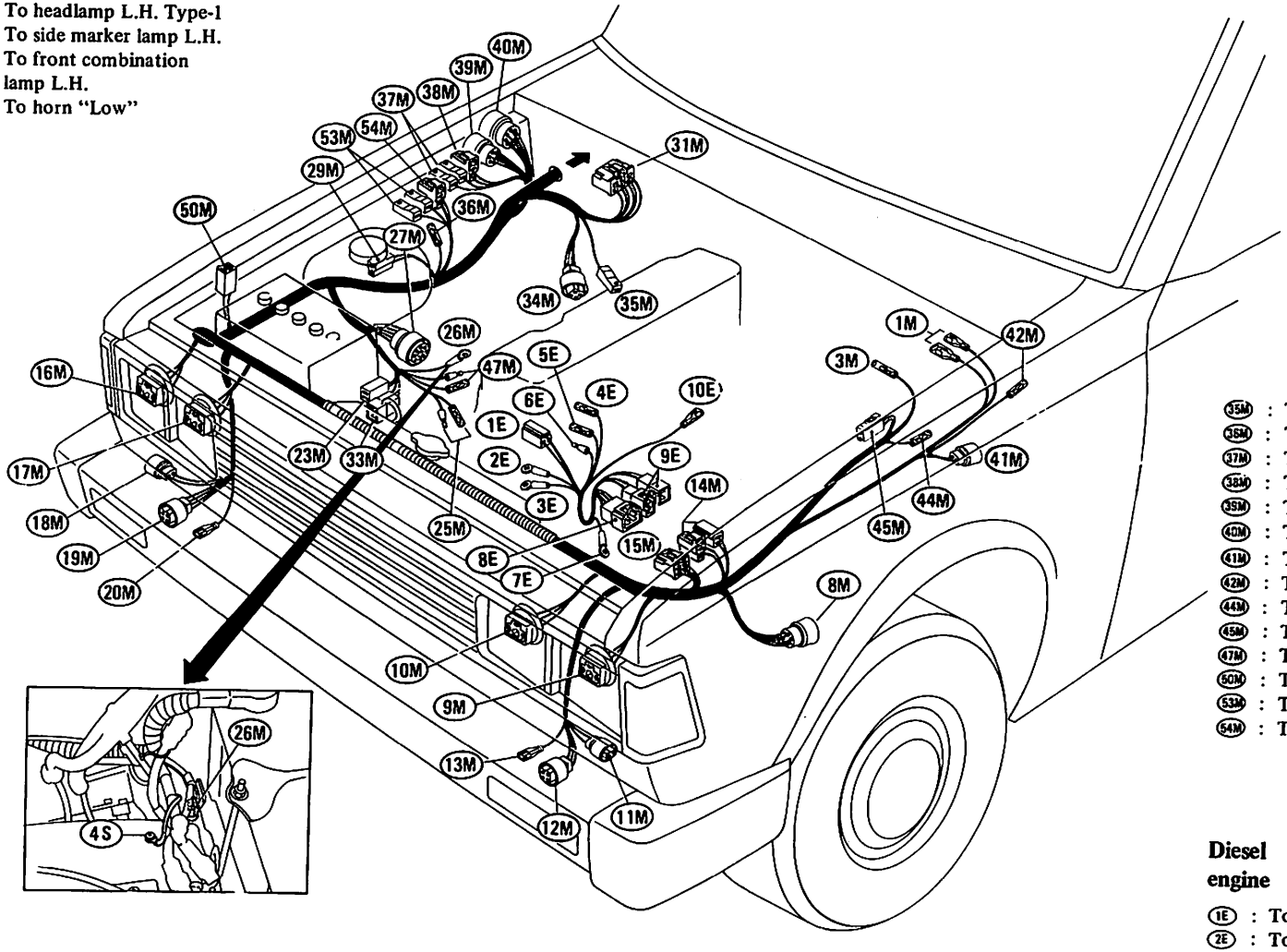

- 1M : To F.I.C.D. solenoid
- 3M : To air conditioner compressor
- 8M : To check connector
- 9M : To headlamp L.H. Type-2
- 10M : To headlamp L.H. Type-1
- 11M : To side marker lamp L.H.
- 12M : To front combination lamp L.H.
- 13M : To horn "Low"

- 35M : To glow plug
- 36M : To sedimentor
- 37M : To glow plug relay-1
- 38M : To glow plug relay-1
- 39M : To injection pump control unit
- 40M : To injection pump control unit
- 41M : To resistor 2.2 kΩ (alternator)
- 42M : To inspection lamp
- 44M : To brake vacuum switch
- 45M : To brake fluid level switch
- 47M : To revolution sensor
- 50M : To dropping resistor
- 53M : To glow relay-2
- 54M : To glow relay-2

- 16M : To headlamp R.H. Type-2
- 17M : To headlamp R.H. Type-1
- 18M : To side marker lamp R.H.
- 19M : To front combination lamp R.H.
- 20M : To horn "High"
- 23M : To fusible link
- 25M : To low pressure switch

- 26M : To ground
- 27M : To injection pump controller
- 29M : To windshield washer motor
- 31M : To wiper motor
- 33M : To fusible link
- 34M : To transmission harness 20S

Diesel engine

- 1E : To alternator
- 2E : To alternator
- 3E : To alternator
- 4E : To thermal transmitter
- 5E : To thermo switch
- 6E : To thermo switch
- 7E : To ground
- 8E : To main harness 15M
- 9E : To main harness 14M
- 10E : To startor motor

MAIN HARNESS (Passenger compartment side—A)

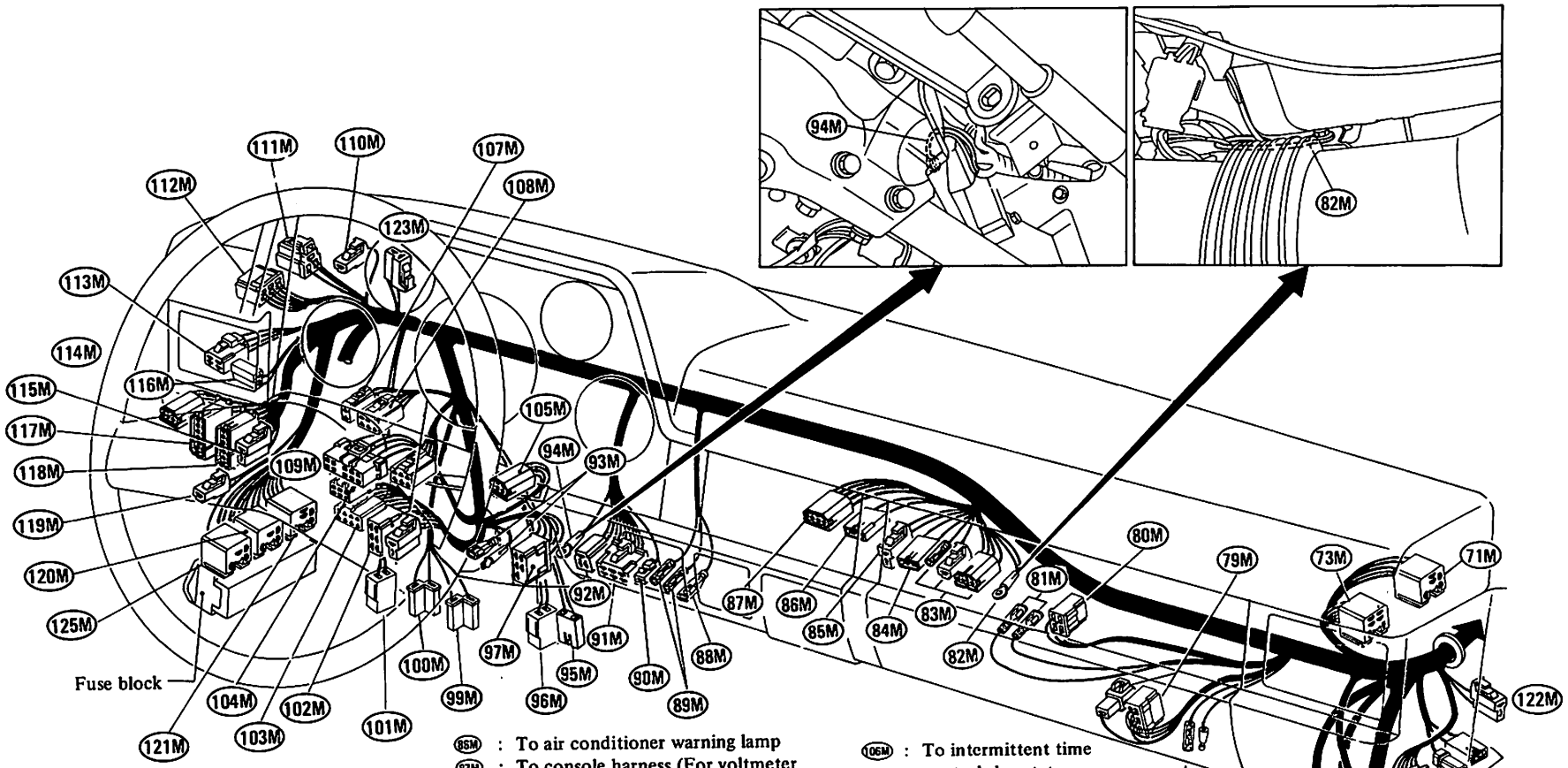

(G) : Gasoline engine
(D) : Diesel engine

71M : To auto-choke relay (G)
73M : To inhibitor relay (A/T models)
74M : To fuel pump control unit (G)
75M : To room lamp cable 1R or room lamp timer harness 1L
76M : To detector (D)
77M : To glow control unit (D)
78M : To blower motor
79M : To resistor
80M : To air conditioner relay
81M : To thermo switch
82M : To ground
83M : To fan switch
84M : To heater and air conditioner control panel illumination lamp
85M : To compressor switch
86M : To air conditioner warning lamp
87M : To console harness (For voltmeter and oil pressure gauge) (4WD)
88M : To parking brake switch
89M : To kickdown switch (A/T models) (G)
90M : To intermittent wiper amplifier
91M : To intermittent wiper amplifier
92M : To horn relay
93M : To key switch
94M : To ground (For radio)
95M : To cancel switch (A/T models) (G)
96M : To stop lamp switch
97M : To ignition switch
99M : To turn signal flasher unit
100M : To hazard flasher unit
101M : To clutch switch (M/T models) (G)
102M : To wiper and washer switch
103M : To lighting switch
104M : To turn signal switch
105M : To A.S.C.D. set switch (A/T models) (G)
106M : To intermittent time control rheostat
107M : To A.S.C.D. main switch (A/T models) (G)
108M : To A.S.C.D. main switch (A/T models) (G)
109M : To hazard switch
110M : To mirror harness
111M : To warning chime
112M : To seat belt timer
113M : To rear defogger switch
114M : To speaker L.H.
115M : To instrument harness 16I (D)
116M : To instrument harness 17I
117M : To instrument harness 1I (Connector color: White)
118M : To instrument harness 2I Connector color: Blue)
119M : To rear defogger cable 1D
120M : To heater relay
121M : To headlamp relay
122M : To altitude switch (Optional for U.S.A. except California)
123M : To circuit breaker (For power window and power door lock)
124M : To mirror switch
125M : To power window relay
126M : To hold relay

SEL114F

MAIN HARNESS (Passenger compartment side–B), ROOM LAMP CABLE, REAR WINDOW DEFOGGER CABLE AND CONSOLE HARNESS

Passenger compartment side - B

- (131M) : To A/T selector illumination lamp (A/T models)
- (132M) : To chassis harness (1C)
- (133M) : To door switch R.H.
- (134M) : To seat belt switch
- (135M) : To door switch L.H.
- (136M) : To E.C.C. control unit
- (137M) : To detonation control unit (M.P.G. models)
- (138M) : To A.S.C.D. control (Gasoline A/T models)
- (139M) : To door lock timer (For power door lock)
- (140M) : To door harness L.H.
- (141M) : To door harness L.H.
- (142M) : To engine revolution unit
- (143M) : Diode box (Canada)

Room lamp cable

- (1R) : To main harness (75M) or room lamp timer harness (2L)
- (2R) : To room lamp (King Cab)
- (3R) : To room lamp (Except King Cab)

Colsole harness (4WD)

- (1G) : To main harness
- (2G) : To voltmeter
- (3G) : To oil pressure gauge

Rear window defogger cable

- (1D) : To main harness (119M)
- (2D) : To rear window defogger
- (3D) : To rear window defogger
- (4D) : To ground

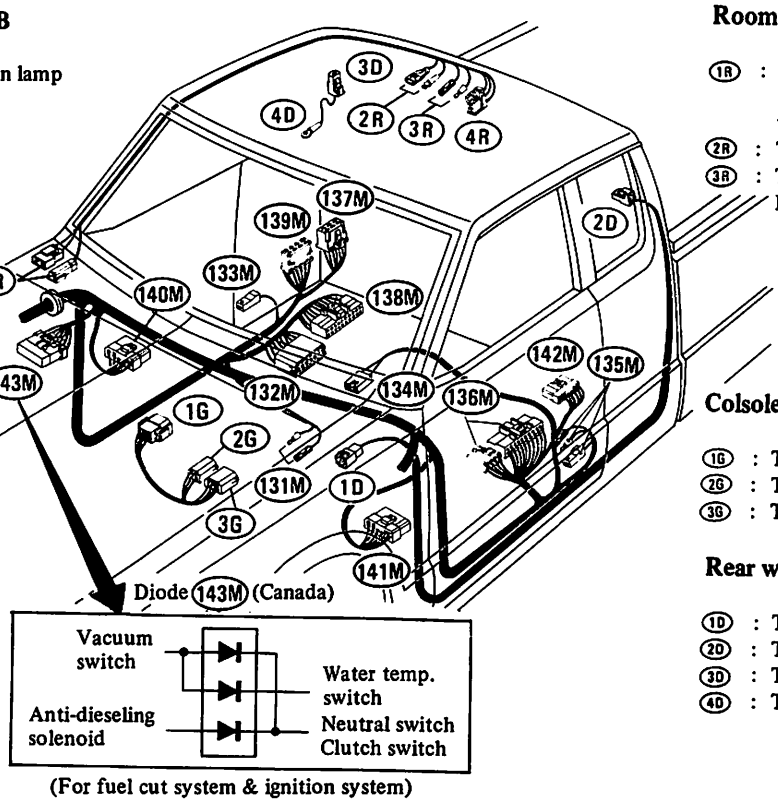

(For fuel cut system & ignition system)

SEL115F

INSTRUMENT HARNESS

- (1I) : To main harness (117M) (Connector color: White)
- (2I) : To main harness (118M) (Connector color: Blue)
- (3I) : To clock
- (4I) : To combinatoin meter
- (5I) : To combination meter
- (6I) : To tachometer (Gasoline)
- (7I) : To illumination control unit
- (8I) : To cigarette lighter
- (9I) : To cigarette lighter illumination lamp
- (10I) : To radio
- (11I) : To speaker harness
- (12I) : To tachometer (Diesel)
- (13I) : To combination meter
- (14I) : To speed sensor (A.S.C.D.)
- (15I) : To 30,000/60,000/90,000 mile switch (U.S.A. gasoline)
- (16I) : To main harness (115M) (Diesel)
- (17I) : To main harness (116M)
- (18I) : Check joint (U.S.A., gasoline)

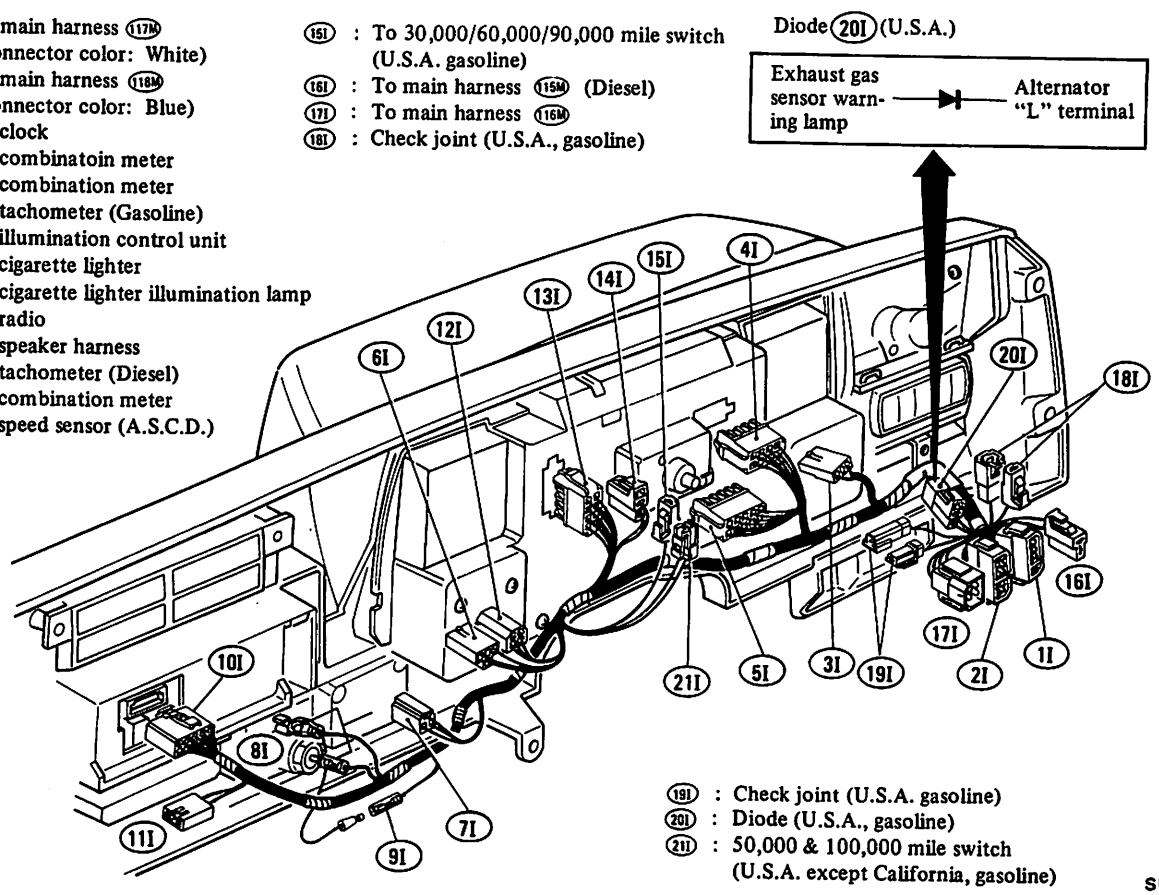

- (19I) : Check joint (U.S.A. gasoline)
- (20I) : Diode (U.S.A., gasoline)
- (21I) : 50,000 & 100,000 mile switch (U.S.A. except California, gasoline)

SEL116F

ROOM LAMP TIMER HARNESS

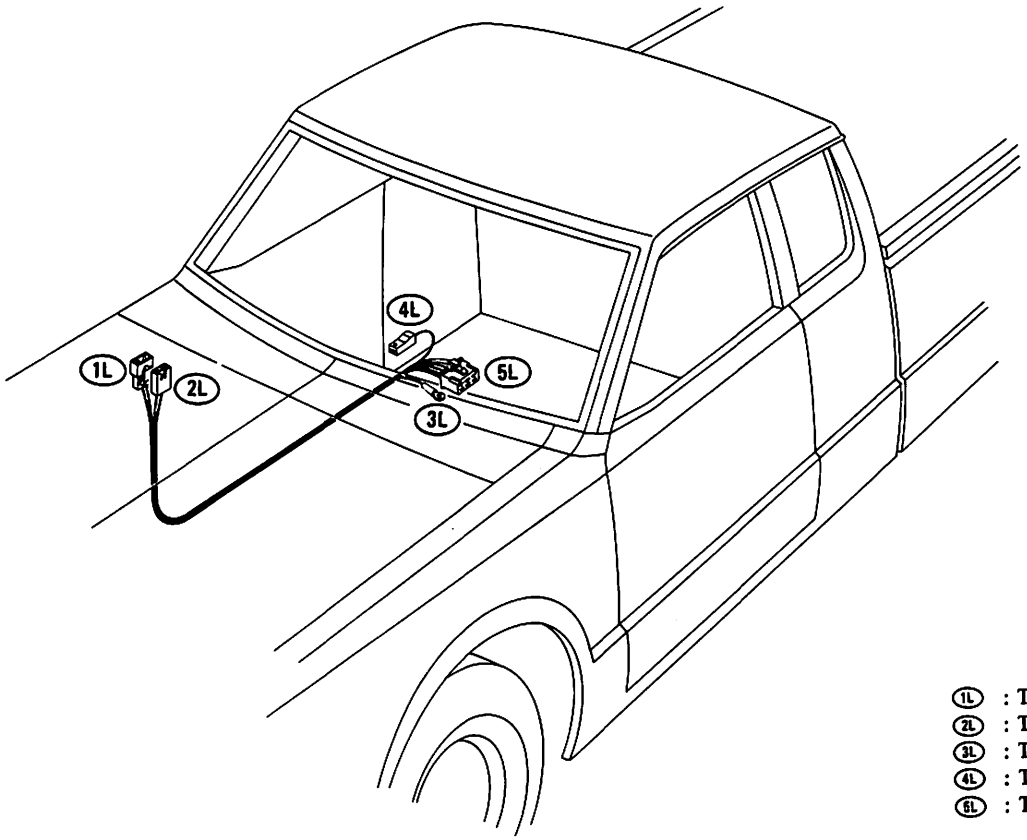

1L : To main harness 75M
2L : To room lamp cable 1R
3L : To ground
4L : To door switch R.H.
6L : To room lamp timer

SEL176D

TRANSMISSION HARNESS

MANUAL TRANSMISSION MODELS

Gasoline engine

(1S) : To main harness (27M)
(2S) : To main harness (22M)
(4S) : To ground
(5S) : To alternator "E" terminal
(6S) : To alternator "L" and "S" terminal
(7S) : To alternator "B" terminal

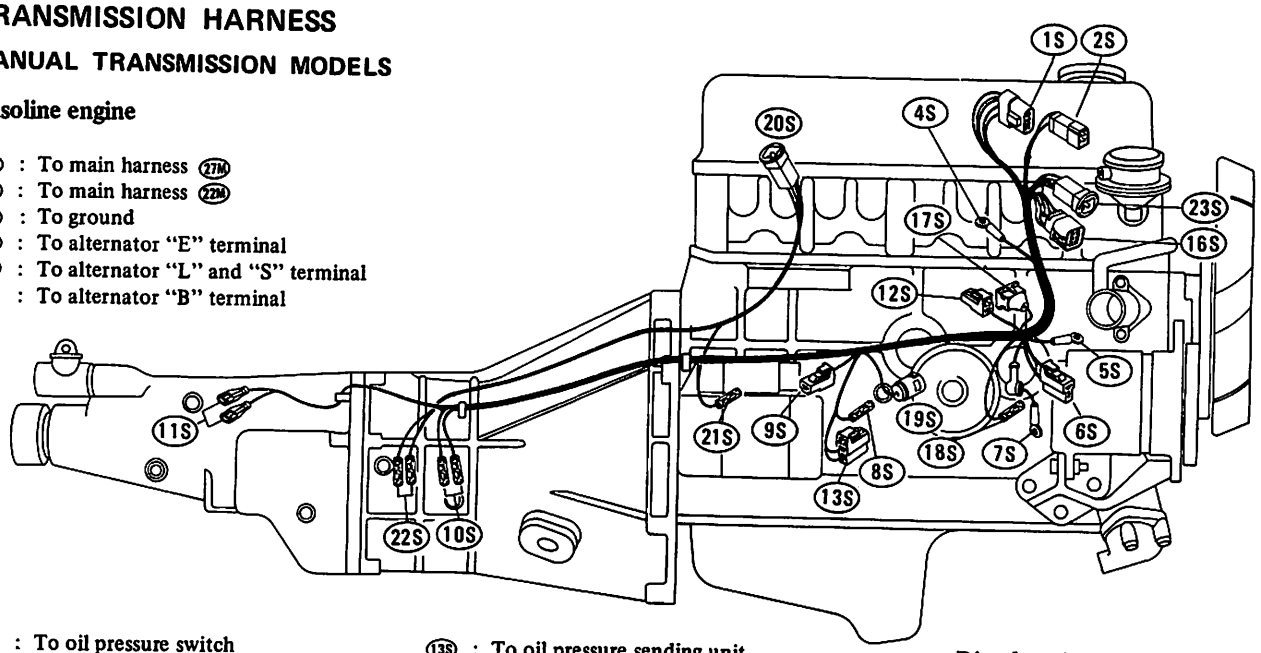

(8S) : To oil pressure switch (Except M.P.G. model)
(9S) : To starter motor "S" terminal
(10S) : To back-up lamp switch
(11S) : To neutral switch
(12S) : To thermal transmitter
(13S) : To oil pressure sending unit (Models equipped with oil pressure gauge)
(16S) : To main harness (28M)
(17S) : To water temperature sensor
(18S) : To oil pressure switch (M.P.G. models)
(19S) : To detonation sensor (M.P.G. models)

Diesel engine

(20S) : To main harness (34M)
(21S) : To oil pressure switch
(22S) : To back-up lamp switch
(23S) : To main harness (28M)

SEL117F

AUTOMATIC TRANSMISSION MODELS

(1S) : To main harness (27M)
(2S) : To main harness (22M)
(4S) : To ground
(5S) : To alternator "E" terminal
(6S) : To alternator "L" and "S" terminal
(7S) : To alternator "B" terminal
(8S) : To oil pressure switch
(9S) : To starter motor "S" terminal
(12S) : To thermal transmitter
(13S) : To oil pressure sending unit (Models equipped with oil pressure gauge)

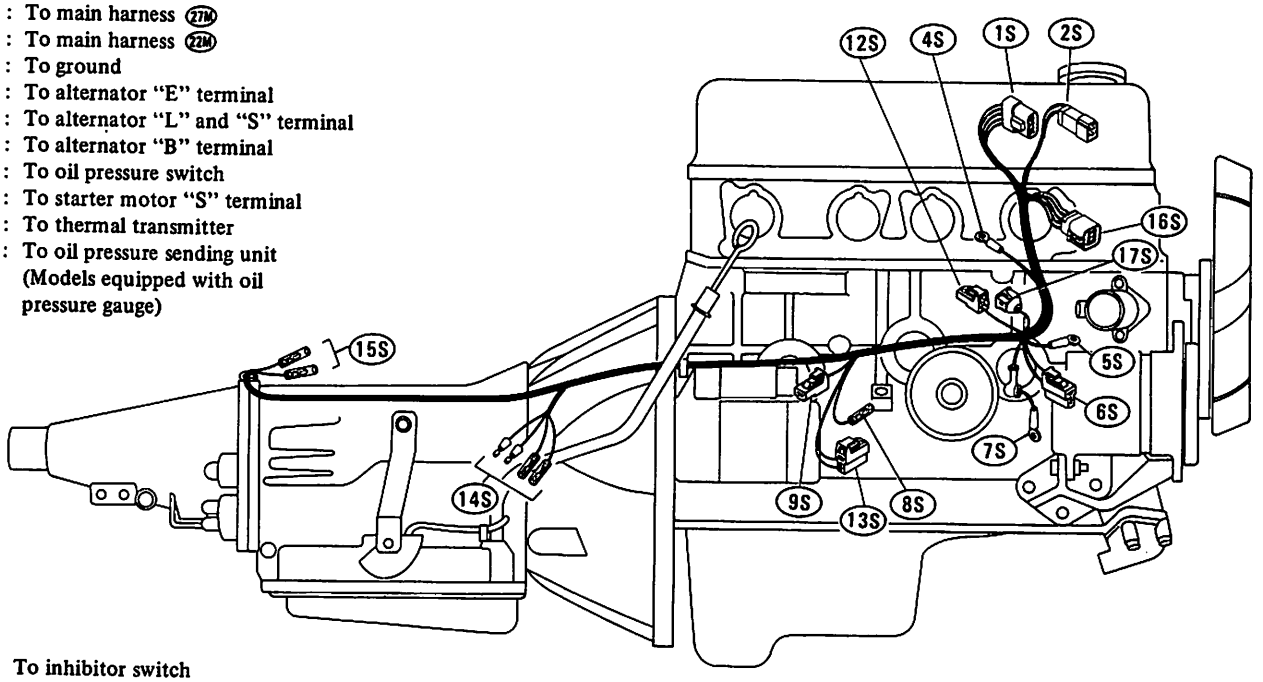

(14S) : To inhibitor switch
(15S) : To kickdown solenoid
(16S) : To main harness (28M) (California models)
(17S) : To temperature sensor (California models)

SEL118F

CHASSIS HARNESS

(1C) : To main harness (132M)
(2C) : To fuel tank gauge unit
(3C) : To tail harness (1T)
(4C) : To transfer switch (4WD)
(5C) : To electric fuel pump (Gasoline engine)

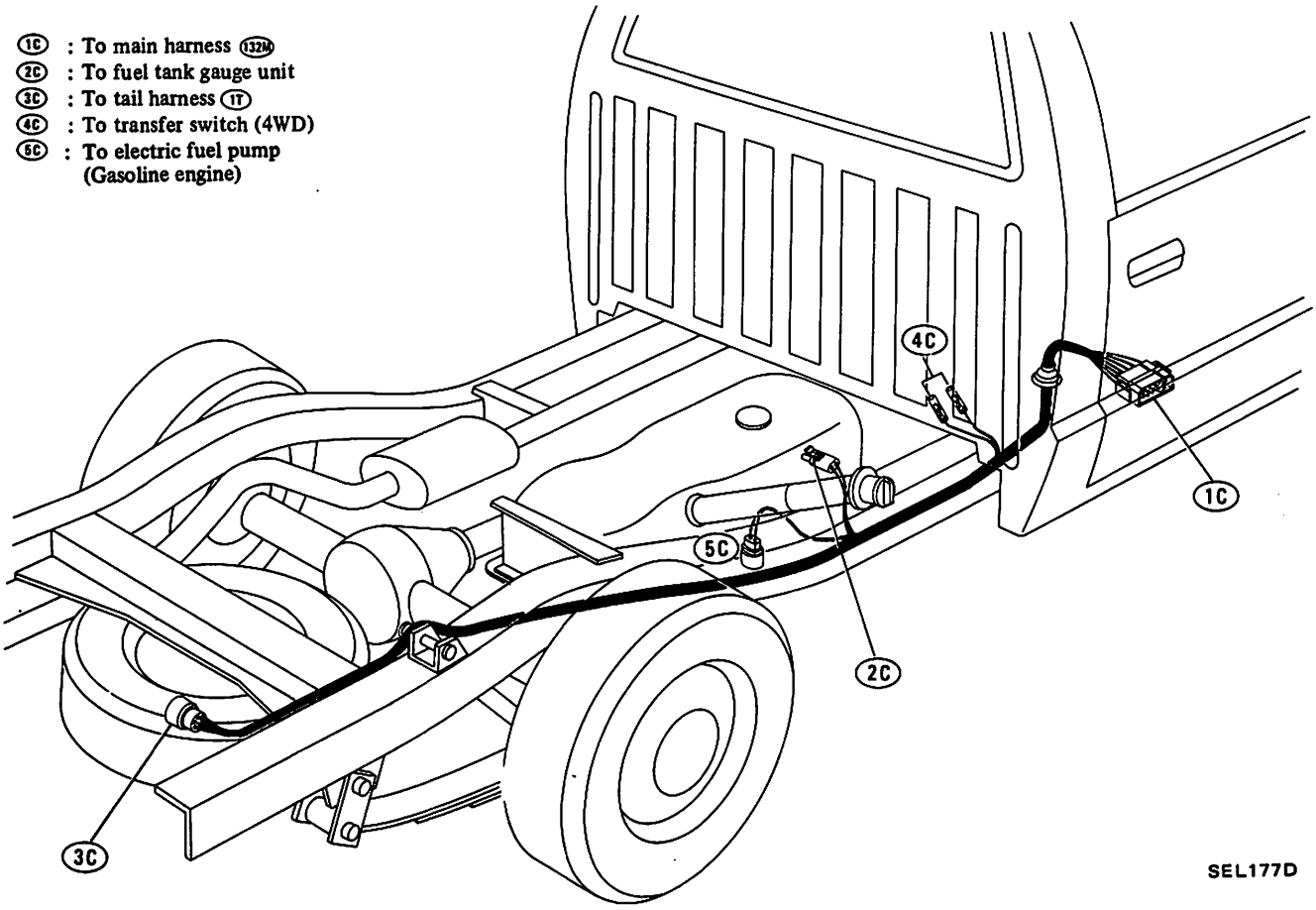

SEL177D

TAIL HARNESS

Tail harness

(1T) : To chassis harness (3C)
(2T) : To rear combinatiojn lamp R.H. (without rear step bumper)
(3T) : To ground (without rear step bumper)
(4T) : To license plate lamp (without rear step bumper)
(5T) : To rear combination lamp L.H. (without rear step bumper)
(6T) : To license plate lamp L.H. (with rear step bumper)
(7T) : To license plate lamp R.H. (with rear step bumper)
(10T) : To rear combination harness (with rear step bumper) (1B)

Rear combination harness (with step bumper)

(1B) : To tail harness (10T)
(2B) : To rear combination lamp R.H.
(3B) : To rear combination lamp L.H.

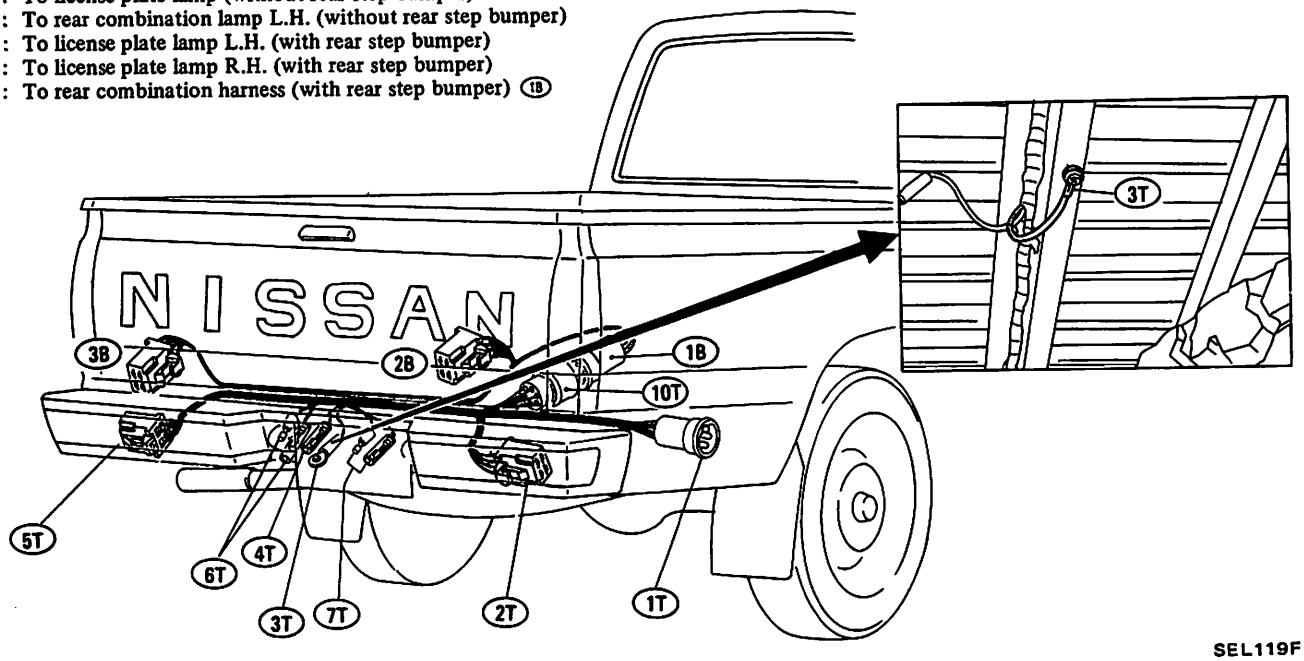

SEL119F

INCH TO METRIC CONVERSION TABLE

(Rounded-off for automotive use)

inches	mm	inches	mm
.100	2.54	.610	15.49
.110	2.79	.620	15.75
.120	3.05	.630	16.00
.130	3.30	.640	16.26
.140	3.56	.650	16.51
.150	3.81	.660	16.76
.160	4.06	.670	17.02
.170	4.32	.680	17.27
.180	4.57	.690	17.53
.190	4.83	.700	17.78
.200	5.08	.710	18.03
.210	5.33	.720	18.29
.220	5.59	.730	18.54
.230	5.84	.740	18.80
.240	6.10	.750	19.05
.250	6.35	.760	19.30
.260	6.60	.770	19.56
.270	6.86	.780	19.81
.280	7.11	.790	20.07
.290	7.37	.800	20.32
.300	7.62	.810	20.57
.310	7.87	.820	20.83
.320	8.13	.830	21.08
.330	8.38	.840	21.34
.340	8.64	.850	21.59
.350	8.89	.860	21.84
.360	9.14	.870	22.10
.370	9.40	.880	22.35
.380	9.65	.890	22.61
.390	9.91	.900	22.86
.400	10.16	.910	23.11
.410	10.41	.920	23.37
.420	10.67	.930	23.62
.430	10.92	.940	23.88
.440	11.18	.950	24.11
.450	11.43	.960	24.38
.460	11.68	.970	24.64
.470	11.94	.980	24.89
.480	12.19	.990	25.15
.490	12.45	1.000	25.40
.500	12.70	2.000	50.80
.510	12.95	3.000	76.20
.520	13.21	4.000	101.60
.530	13.46	5.000	127.00
.540	13.72	6.000	152.40
.550	13.97	7.000	177.80
.560	14.22	8.000	203.20
.570	14.48	9.000	228.60
.580	14.73	10.000	254.00
.590	14.99	20.000	508.00
.600	15.24		

METRIC TO INCH CONVERSION TABLE

(Rounded-off for automotive use)

mm	inches	mm	inches
1	.0394	51	2.008
2	.079	52	2.047
3	.118	53	2.087
4	.157	54	2.126
5	.197	55	2.165
6	.236	56	2.205
7	.276	57	2.244
8	.315	58	2.283
9	.354	59	2.323
10	.394	60	2.362
11	.433	61	2.402
12	472	62	2.441
13	.512	63	2.480
14	.551	64	2.520
15	.591	65	2.559
16	.630	66	2.598
17	.669	67	2.638
18	.709	68	2.677
19	.748	69	2.717
20	.787	70	2.756
21	.827	71	2.795
22	.866	72	2.835
23	.906	73	2.874
24	.945	74	2.913
25	.984	75	2.953
26	1.024	76	2.992
27	1.063	77	3.031
28	1.102	78	3.071
29	1.142	79	3.110
30	1.181	80	3.150
31	1.220	81	3.189
32	1.260	82	3.228
33	1.299	83	3.268
34	1.339	84	3.307
35	1.378	85	3.346
36	1.417	86	3.386
37	1.457	87	3.425
38	1.496	88	3.465
39	1.535	89	3.504
40	1.575	90	3.543
41	1.614	91	3.583
42	1.654	92	3.622
43	1.693	93	3.661
44	1.732	94	3.701
45	1.772	95	3.740
46	1.811	96	3.780
47	1.850	97	3.819
48	1.890	98	3.858
49	1.929	99	3.898
50	1.969	100	3.937

QUICK REFERENCE CHART : TRUCK 1986

ENGINE TUNE-UP DATA Z20 & Z24

Item	Model	U.S.A.			Canada	
		Z20	Z24			
			2WD	4WD	2WD	4WD
Idle speed rpm	M/T	700±100	800±100*3 700±100*4	800±100	650±100	800±100
	A/T	–	650±100	–	650±100	–
Ignition timing*1 (degree B.T.D.C. at idle speed)		5±2°	3±2°			
Dash pot touch speed rpm	M/T	1,800±200			–	
	A/T	1,500±200				
Valve clearance (Hot) mm (in)	Intake	0.30 (0.012)				
	Exhaust	0.30 (0.012)				
Compression pressure kPa (kg/cm², psi)/rpm	Standard	1,177 (12.0, 171)/350				
	Minimum	883 (9.0, 128)/350				
Spark plug standard Type	Intake side	BPR6ES				
	Exhaust side	BPR5ES				
Drive belt deflection (Cold)		Used belt deflection			Set deflection of new belt	
		Limit	Adjust			
Alternator mm (in)		16 (0.63)	9 - 11 (0.35 - 0.43)		7 - 9 (0.28 - 0.35)	
			10 - 13 (0.39 - 0.51)*2		8 - 11 (0.31 - 0.43)*2	
A/C compressor mm (in)		13 (0.51)	8 - 10 (0.31 - 0.39)		6 - 8 (0.24 - 0.31)	
P/S oil pump mm (in)		16 (0.63)	10 - 12 (0.39 - 0.47)		8 - 10 (0.31 - 0.39)	
Applied pushing force N (kg, lb)		98 (10, 22)				

*1 Ignition timing should be checked with distributor vacuum hose disconnected and plugged up.
*2 2WD equipped M/T without A/C for Canada
*3 Z24 except cab & chassis model
*4 Z24 cab & chassis model

ENGINE TUNE-UP DATA SD25

Idle speed rpm		700^{+100}_{-50}
Initial injection nozzle pressure kPa (kg/cm², psi)	Used	9,807 - 10,297 (100 - 105, 1,422 - 1,493)
	New	10,297 - 11,082 (105 - 113, 1,493 - 1,607)
Dash pot touch speed rpm		1,280 - 1,350
Valve clearance (Hot) mm (in)	Intake	0.35 (0.014)
	Exhaust	0.35 (0.014)
Compression pressure kPa (kg/cm², psi)/rpm	Standard	2,942 (30, 427)/200
	Minimum	2,452 (25, 356)/200
Drive belt deflection mm (in)		8 - 12 (0.31 - 0.47)
Applied pushing force N (kg, lb)		98 (10, 22)

CLUTCH PEDAL

Unit: mm (in)

Height	179 - 189 (7.05 - 7.44)
Free play	1 - 1.5 (0.039 - 0.059)

WHEEL ALIGNMENT (Unladen*)

Applied model		2WD	4WD
Camber degree		0° - 1°	0°10′ - 1°10′
Caster degree		50′ - 1°50′	55′ - 1°55′
Toe-in	mm (in)	2 - 4 (0.08 - 0.16)	1 - 3 (0.04 - 0.12)
	degree (Total toe-in)	22′ - 42′	10′ - 30′
Kingpin inclination degree		8°30′ - 9°30′	7°30′ - 8°30′
Front wheel turning angle (full turn) degree	Inside	34° - 36°	31° - 33°
	Outside	31° - 33°	29° - 31°
Front wheel toe-out turn degree	Inside	20°	20°
	Outside	18°	

*Tankful of fuel, radiator coolant and engine oil full. Spare tire, jack, hand tools, mats in designed position.

FRONT WHEEL BEARING

Item	Model	2WD		4WD	
Tightening torque N·m (kg-m, ft-lb)		34 - 39 (3.5 - 4.0, 25 - 29)		78 - 98 (8 - 10, 58 - 72)	
Return angle degree		45°		–	
Preload (At hub bolt) N (kg, lb)	New seal	28.4 (2.9, 6.4) or less		Wheel bearing lock nut Tightening torque N·m (kg-m, ft-lb)	78 - 98 (8 - 10, 58 - 72)
				Retightening torque after loosening wheel bearing lock nut N·m (kg-m, ft-lb)	0 (0, 0)
				Axial end play mm (in)	0 (0)
	Used seal	9.8 (1.0, 2.2) or less		Starting force at wheel hub bolt N (kg, lb)	A
				Turning angle degree	15° - 30°
				Starting force at wheel hub bolt N (kg, lb)	B
				Wheel bearing preload at wheel hub bolt B – A N (kg, lb)	7.06 - 20.99 (0.72 - 2.14, 1.59 - 4.72)

BRAKE

Unit: mm (in)

Disc brake Pad minimum thickness	2.0 (0.079)
Rotor repair limit Runout	0.07 (0.0028) or less
Minimum thickness	20.0 (0.787)
Drum brake Lining minimum thickness	1.5 (0.059)
Drum repair limit Maximum inner diameter	Single-tire: 255.5 (10.06)
	Double-tire: 221.5 (8.72)
Radial runout	0.05 (0.0020) or less
Out-of-roundness	0.03 (0.0012) or less
Taper Measured at point 45 (1.77) for DS25B and 60 (2.36) for DS22 from inlet	0.04 (0.0016) or less

WHEEL AND TIRE

Unit: psi (kPa, kg/cm²)

Tire size		Load	Moderate	Heavy
2WD	P195/75R14	Front Rear	24 (165, 1.7) 24 (165, 1.7)	24 (165, 1.7) 32 (221, 2.25)
	P205/75R14	Front Rear	24 (165, 1.7) 24 (165, 1.7)	24 (165, 1.7) 28 (196, 2.0)
	LT195/75R14 Single tire	Front Rear	36 (245, 2.5) 65 (451, 4.6)	36 (245, 2.5) 65 (451, 4.6)
	Double tire	Front Rear	36 (245, 2.5) 36 (245, 2.5)	36 (245, 2.5) 36 (245, 2.5)
	P185/80R14	Front Rear	27 (188, 1.9) 27 (188, 1.9)	27 (188, 1.9) 27 (188, 1.9)
4WD	P215/75R15, P225/75R15	Front Rear	28 (196, 2.0) 28 (196, 2.0)	28 (196, 2.0) 28 (196, 2.0)

Wheel nut tightening torque				
	Steel wheel	Single	118 - 147 N·m	12 - 15 kg·m	87 - 108 ft·lb
		Double	226 - 275 N·m	23 - 28 kg·m	166 - 203 ft·lb
	Aluminum wheel		78 - 98 N·m	8 - 10 kg·m	58 - 72 ft·lb

NISSAN MOTOR CO., LTD.
Export Service Department
Tokyo, Japan

Edition: July 1984
Printing: August 1986 (13)
Publication No. SM6E-0720U0

Reprinted in USA