https://truckmanualshub.com/

Genie®
A TEREX COMPANY

Operator's Manual

GS-1530
GS-1532
GS-1930
GS-1932
GS-2032
GS-2632
GS-3232
GS-2046
GS-2646
GS-3246

Australia

with
Maintenance
Information

Sixth Edition
First Printing
Part No. 227286

Downloaded from www.Manualslib.com manuals search engine

https://truckmanualshub.com/

Important

Read, understand and obey these safety rules and operating instructions before operating this machine. Only trained and authorized personnel shall be permitted to operate this machine. This manual should be considered a permanent part of your machine and should remain with the machine at all times. If you have any questions, call Genie Industries.

Contents

Page
Introduction 1
Symbol and Hazard Pictorials Definitions 3
General Safety 5
Personal Safety 8
Work Area Safety 9
Legend 16
Controls 19
Inspections 23
Operating Instructions 36
Transport and Lifting Instructions 51
Maintenance 55
Specifications 57

Contact us:

Internet: www.genielift.com
e-mail: techpub@genieind.com

Copyright © 1997 by Genie Industries

Sixth Edition: First Printing, January 2011

"Genie" is a registered trademark of Genie Industries in the U.S.A. and many other countries. "GS" is a trademark of Genie Industries.

These machines comply with AS 1418.10

Printed on recycled paper

Printed in U.S.A.

Downloaded from www.Manualslib.com manuals search engine

https://truckmanualshub.com/

Introduction

Owners, Users and Operators:

Genie appreciates your choice of our machine for your application. Our number one priority is user safety, which is best achieved by our joint efforts. We feel that you make a major contribution to safety if you, as the equipment users and operators:

1 **Comply** with employer, job site and governmental rules.

2 **Read, understand and follow** the instructions in this and other manuals supplied with this machine.

3 **Use good safe work practices** in a commonsense way.

4 **Only have trained/certified operators,** directed by informed and knowledgeable supervision, running the machine.

If there is anything in this manual that is not clear or which you believe should be added, please contact us.

Internet: www.genielift.com

E-mail: techpub@genieind.com

Danger

Failure to obey the instructions and safety rules in this manual will result in death or serious injury.

Do Not Operate Unless:

☑ You learn and practice the principles of safe machine operation contained in this operator's manual.

1 Avoid hazardous situations.

Know and understand the safety rules before going on to the next section.

2 Always perform a pre-operation inspection.

3 Always perform function tests prior to use.

4 Inspect the workplace.

5 Only use the machine as it was intended.

☑ You read, understand and obey the manufacturer's instructions and safety rules—safety and operator's manuals and machine decals.

☑ You read, understand and obey employer's safety rules and worksite regulations.

☑ You read, understand and obey all applicable governmental regulations.

☑ You are properly trained to safely operate the machine.

Downloaded from www.Manualslib.com manuals search engine

https://truckmanualshub.com/

Introduction

Hazard Classification

Genie uses symbols, color coding and signal words to identify the following:

⚠	Safety alert symbol—used to alert you to potential personal injury hazards. Obey all safety messages that follow this symbol to avoid possible injury or death.
⚠ DANGER Red	Indicates a hazardous situation which, if not avoided, will result in death or serious injury.
⚠ WARNING Orange	Indicates a hazardous situation which, if not avoided, could result in death or serious injury.
⚠ CAUTION Yellow	Indicates a hazardous situation which, if not avoided, could result in minor or moderate injury.
NOTICE Blue	Indicates a hazardous situation which, if not avoided, could result in property damage.

Intended Use

This machine is intended to be used only to lift personnel, along with their tools and materials to an aerial work site.

Safety Sign Maintenance

Replace any missing or damaged safety signs. Keep operator safety in mind at all times. Use mild soap and water to clean safety signs. Do not use solvent-based cleaners because they may damage the safety sign material.

Downloaded from www.Manualslib.com manuals search engine

https://truckmanualshub.com/

Symbol and Hazard Pictorials Definitions

Read the operator's manual	Read the service manual	Crush hazard	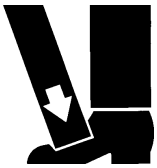 Crush hazard	Collision hazard
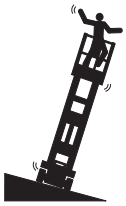 Tip-over hazard	Tip-over hazard	Tip-over hazard	Tip-over hazard	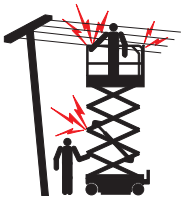 Electrocution hazard
Electrocution hazard	Explosion hazard	Fire hazard	Burn hazard	Skin injection hazard
Engage safety arm	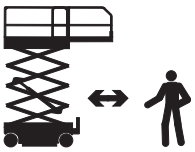 Keep away from moving parts	Keep clear of outriggers and tires	Move machine to level ground	Close chassis tray
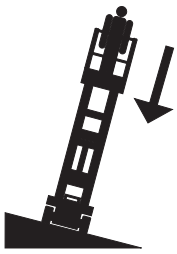 Lower the platform	Do not set up where it cannot be leveled with outriggers	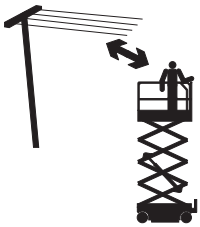 Maintain required clearance	Only trained maintenance personnel should access compartments	Use a piece of cardboard or paper to search for leaks

Downloaded from www.Manualslib.com manuals search engine

https://truckmanualshub.com/

Symbol and Hazard Pictorials Definitions

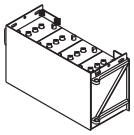 Batteries used as counterweights	Chock the wheels	Release brakes	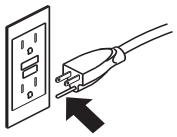 Grounded AC 3-wire only	Replace damaged wires and cords
Wheel load	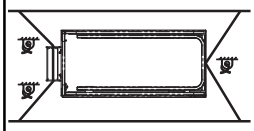 Transport diagram	Tiedown	Lanyard attachment point	No smoking
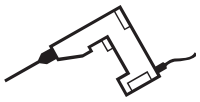 Voltage rating for power to platform	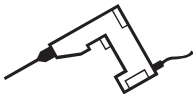 Pressure rating for air line to platform	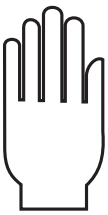 Side force	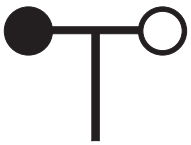 Wind speed	
Maximum capacity	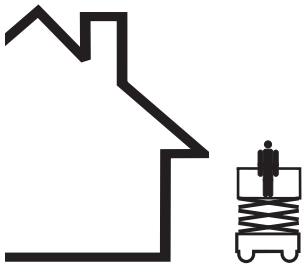 Outdoor	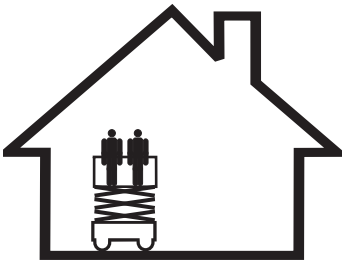 Indoor		

Downloaded from www.Manualslib.com manuals search engine

https://truckmanualshub.com/

General Safety

Safety signs and locations
Decals with words

114386

DANGER

Failure to read, understand and obey the operator's manual and the following safety rules will result in death or serious injury.

Improper Use Hazard

The operator is responsible for safe machine operation. This includes:

1 Avoid hazardous situations.
2 Always perform a pre-operation inspection.
3 Always perform function tests prior to use.
4 Inspect work place.
5 Only use the machine as it was intended.

Do not operate unless:

You read, understand and obey:
- manufacturer's instructions and safety rules— safety and operator's manuals and decals
- employer's safety rules
- applicable governmental regulations

You are properly trained to safely operate this machine

Electrocution Hazards

This machine is not electrically insulated and will not provide protection from contact with or proximity to electrical current.

Maintain required clearance.

Line voltage	Required clearance	
300V to 50KV	10 ft	3.05 m
50KV to 200KV	15 ft	4.60 m
200KV to 350KV	20 ft	6.10 m
350KV to 500KV	25 ft	7.62 m
500KV to 750KV	35 ft	10.67 m
750KV to 1000KV	45 ft	13.72 m

Explosion Hazards

Do not start engine if you smell or detect liquid petroleum gas (LPG), gasoline, diesel fuel or other explosive substances.

Do not refuel the machine with the engine running.

Tip-over Hazards

Do not exceed rated load capacity.

Do not raise platform unless machine is on a firm surface. Avoid drop-offs, holes and unstable or slippery surfaces.

Do not drive machine on a slope that exceeds the maximum slope or side slope rating for the machine.

Models without outriggers: Do not raise platform unless machine is on a level surface.

Models with outriggers: Do not raise platform unless machine is level.

Do not raise platform when wind speeds may exceed 28 mph / 12.5 m/s. Do not operate machine in strong or gusty winds. Do not increase surface area of platform or load. Increasing area exposed to wind will decrease machine stability.

Do not drive the machine on or near uneven terrain, unstable surfaces or other hazardous conditions with the platform raised.

Do not push off or pull toward any object outside of the platform.

Do not place or attach overhanging loads to any part of this machine.

Use extreme care and slow speeds while driving the machine in stowed position across uneven terrain, debris, unstable or slippery surfaces and near holes and drop-offs.

Do not alter or disable machine components that in any way affect safety and stability.

Do not place ladders or scaffolds in platform or against any part of this machine.

Do not use machine on a moving or mobile surface or vehicle.

Be sure all tires are in good condition, castle nuts are properly tightened and cotter pins are properly installed.

Fall Hazards

Do not sit, stand or climb on the platform guard rails. Maintain a firm footing on the platform floor at all times.

Do not climb down from the platform when raised.

Attach platform entry chain and close entry gate before operating.

Crushing Hazards

Keep hands and limbs out of scissors.

Use common sense and planning when operating machine with controller from ground. Maintain safe distances between operator, machine and fixed objects.

Collision Hazards

Be aware of limited sight distance and blind spots when driving or operating.

Check work area for overhead obstructions or other possible hazards.

Be aware of crushing hazard when grasping platform guard rail.

Observe and use color-coded direction arrows on the platform controls for drive and steer functions.

Damaged Machine Hazards

Do not use a damaged or malfunctioning machine.

Be sure all maintenance has been performed as specified in the appropriate operator's and service manuals

Be sure all decals are in place and legible.

Be sure safety, operator's and responsibilities manuals are complete, legible and in the storage container located on the platform. 114386 A

44736

DANGER

Tip-over Hazard

If tilt-alarm sounds, unit is on a severe slope. Death or serious injury could occur.

44736 C

1 Lower the platform.

2 Move the machine to level surface.

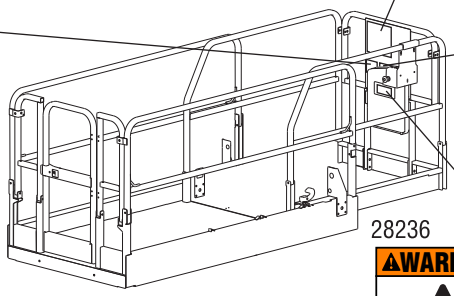

114359
(GS-3232 only)

DANGER

Tip-over Hazards

Improper use of outriggers will result in death or injury.

114359 A

Do not set machine up where it cannot be leveled using the outriggers.

Read the manual for safe operation of outrigger function.

28236

WARNING

Improper operation or maintenance can result in serious injury or death.

Read and understand Operator's Manual, Responsibilities Manual and Safety Manual and all safety signs before using or maintaining machine.

If you do not understand the information in the manuals, consult your supervisor, the owner or the manufacturer. 28236 D

Downloaded from www.Manualslib.com manuals search engine

https://truckmanualshub.com/

General Safety

Safety signs and locations

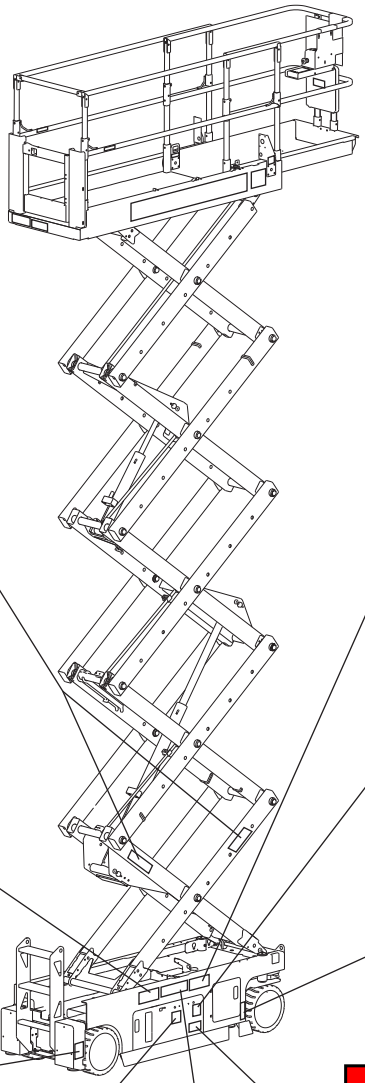

82561

DANGER

Crushing Hazard
Death or serious injury can result from contact with moving scissor arms.
82561 B

Engage safety arm before performing maintenance or repair.

See service manual.

44255

DANGER

Crushing hazard
Contact with moving parts will result in death or serious injury.
44255 C

Keep away from moving parts.

82558

WARNING

Injection Hazard
Escaping fluid under pressure can penetrate skin, causing serious injury.

Relieve pressure before disconnecting hydraulic lines. Keep away from leaks and pin holes. Use a piece of cardboard or paper to search for leaks. Do not use hand.

Fluid injected into skin must be surgically removed within a few hours by a doctor familiar with this type of injury or gangrene will result.
82558 B

114385

DANGER

Electrocution Hazard
Death or injury can result from contacting electric power lines.
Always contact the electric power line owner. The electric power shall be disconnected or the power lines moved or insulated before machine operations begin.

114385 A

Maintain required clearance.

Line voltage	Required clearance	
0 to 50KV	10 ft	3.05 m
50KV to 200KV	15 ft	4.60 m
200KV to 350KV	20 ft	6.10 m
350KV to 500KV	25 ft	7.62 m
500KV to 750KV	35 ft	10.67 m
750KV to 1000KV	45 ft	13.72 m

82506
(GS-3232 models only)

WARNING

Crushing hazard.
Lowering the outriggers or tires onto a person's foot can result in serious injury.
82506 B

Keep clear of outriggers and tires before lowering.

82506
(GS-3232 models only)

WARNING

Crushing hazard.
Lowering the outriggers or tires onto a person's foot can result in serious injury.
82506 B

Keep clear of outriggers and tires before lowering.

44737

DANGER

Tip-over hazard.
Raising the platform or driving the machine with chassis trays open will result in death or serious injury.

Close chassis trays before raising the platform or driving the machine.
44737 B

28175

WARNING

Compartment access is restricted.
Contact with components under any cover may result in serious injury.
28175 H

Only trained maintenance personnel should access compartments. Access by operator is only advised when performing Pre-operation Inspection. All compartments must remain closed and secured during operation.

72853

DANGER

Failure to read, understand and obey the safety rules will result in death or serious injury.

The operator is responsible for safe machine operation. This includes:
1 Avoid hazardous situations.
2 Always perform a pre-operation inspection.
3 Always perform function tests prior to use.
4 Inspect the work place.
5 Only use the machine as it was intended.

Do not operate unless:
You read, understand and obey:
- manufacturer's instructions and safety rules — safety and operator's manuals and decals
- employer's safety rules
- applicable governmental regulations

You are properly trained to safely operate this machine.
72853 A

Downloaded from www.Manualslib.com manuals search engine

https://truckmanualshub.com/

General Safety

Safety signs and locations

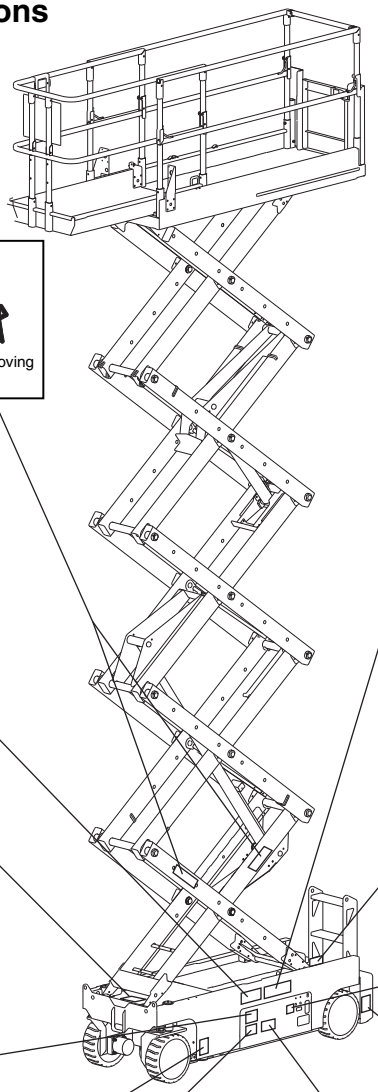

44255

DANGER

Crushing hazard Contact with moving parts will result in death or serious injury.

44255 C

Keep away from moving parts.

114385

DANGER

Electrocution Hazard

Death or injury can result from contacting electric power lines.

Always contact the electric power line owner. The electric power shall be disconnected or the power lines moved or insulated before machine operations begin.

114385 A

Maintain required clearance.

Line voltage	Required clearance	
0 to 50KV	10 ft	3.05 m
50KV to 200KV	15 ft	4.60 m
200KV to 350KV	20 ft	6.10 m
350KV to 500KV	25 ft	7.62 m
500KV to 750KV	35 ft	10.67 m
750KV to 1000KV	45 ft	13.72 m

82561

DANGER

Crushing Hazard

Death or serious injury can result from contact with moving scissor arms.

82561 B

Engage safety arm before performing maintenance or repair.

See service manual.

97712

DANGER

Collision Hazard

Failure to secure machine before releasing brakes will result in death or serious injury.

1 Make sure machine is on a firm, level surface or secured.

2 Chock wheels.

3 Release brakes.

INSTRUCTIONS

Brake Release Operation

1 Chock wheels to prevent machine from rolling.

2 Be sure winch line is properly secured to drive chassis tie points and path is clear of all obstructions.

3 Push in black brake release knob to open brake valve.

4 Pump red brake release pump knob.

After machine is loaded:

1 Chock wheels to prevent machine from rolling.

2 Press drive function select button. Press and hold function enable switch on control handle. Move control handle off center to reset brakes.

97712 B

31060

DANGER

Tip-over Hazard

Altering or disabling limit switches can result in machine tip-over. Machine tip-over will result in death or serious injury.

Do not alter or disable limit switch(s).

31060 C

31508

DANGER

Electrocution / Fire Hazard

Death or serious injury will result from use of improper or damaged cord and outlet.

Connect charger to a grounded AC 3-wire electrical outlet only.

Before each use, inspect for damaged cord, cables and wires. Replace damaged items before operating.

31508 D

31788

DANGER

Explosion / Burn Hazard

Ignition of explosive gases or contact with corrosive acid will cause death, burns or blindness

Keep all open flames and sparks away. Wear personal protective equipment, including face shield, gloves and long sleeve shirt.

READ MANUALS

Read all manuals prior to operation.

DO NOT OPERATE equipment if you do not understand the information in the manuals.

Consult your supervisor, the owner or the manufacturer.

31788 C

82506
(GS-3232 models only)

WARNING

Crushing hazard.

Lowering the outriggers or tires onto a person's foot can result in serious injury.

Keep clear of outriggers and tires before lowering.

114360

DANGER

Tip-over hazard. Failure to replace batteries with proper weight batteries will result in death or serious injury.

= 335 lbs / 152 kg

Batteries are used as counterweight and are critical to machine stability. Each battery must weigh 65 lbs / 29.5 kg. Battery box including batteries must weigh a minimum of 335 lbs / 152 kg.

114360 A

44737

DANGER

Tip-over hazard.

Raising the platform or driving the machine with chassis trays open will result in death or serious injury.

Close chassis trays before raising the platform or driving the machine.

44737 B

82506
(GS-3232 models only)

WARNING

Crushing hazard.

Lowering the outriggers or tires onto a person's foot can result in serious injury.

Keep clear of outriggers and tires before lowering.

Downloaded from www.Manualslib.com manuals search engine

https://truckmanualshub.com/

Personal Safety

Fall Protection

Personal fall protection equipment (PFPE) is not required when operating this machine. If PFPE is required by job site or employer rules, the following shall apply:

All PFPE must comply with applicable governmental regulations, and must be inspected and used in accordance with the manufacturer's instructions.

Downloaded from www.Manualslib.com manuals search engine

https://truckmanualshub.com/

Work Area Safety

Electrocution Hazards

This machine is not electrically insulated and will not provide protection from contact with or proximity to electrical current.

Maintain safe distances from electrical power lines and apparatus in accordance with applicable governmental regulations and the following chart.

Line Voltage Clearance	Required
0 to 50KV	3.05 m
50KV to 200KV	4.60 m
200KV to 350KV	6.10 m
350KV to 500KV	7.62 m
500KV to 750KV	10.67 m
750KV to 1000KV	13.72 m

Allow for platform movement, electrical line sway or sag and beware of strong or gusty winds.

Keep away from the machine if it contacts energized power lines. Personnel on the ground or in the platform must not touch or operate the machine until energized power lines are shut off.

Do not operate the machine during lightning or storms.

Do not use the machine as a ground for welding.

Tip-over Hazards

Occupants, equipment and materials must not exceed the maximum platform capacity. Models with capacity indicator:

The maximum capacity varies with the height of the platform.

Maximum Capacity - GS-1530 and GS-1532	
Height of platform	Maximum Capacity
4.6 m	272 kg
4 m	390 kg
2.8 m	484 kg
1.6 m	390 kg
1 m	344 kg

Maximum Capacity - GS-1930 and GS-1932	
Height of platform	Maximum Capacity
5.8 m	227 kg
5.2 m	320 kg
3.7 m	435 kg
1.6 m	320 kg
1 m	227 kg

Downloaded from www.Manualslib.com manuals search engine

https://truckmanualshub.com/

Work Area Safety

Maximum Capacity - GS-2032	
Height of platform	Maximum Capacity
6 m	363 kg
5.7 m	512 kg
3.5 m	693 kg
2.4 m	608 kg
1 m	454 kg

Maximum Capacity - GS-2046	
Height of platform	Maximum Capacity
6 m	544 kg
5.7 m	744 kg
3.5 m	985 kg
2.4 m	873 kg
1 m	635 kg

Maximum Capacity - GS-2632	
Height of platform	Maximum Capacity
7.9 m	227 kg
6.4 m	442 kg
4.5 m	479 kg
2.8 m	409 kg
1 m	281 kg

Maximum Capacity - GS-2646	
Height of platform	Maximum Capacity
7.9 m	454 kg
5.9 m	744 kg
4.5 m	798 kg
2.8 m	701 kg
1 m	454 kg

Maximum Capacity - GS-3232	
Height of platform	Maximum Capacity
9.8 m	227 kg
9.1 m	344 kg
5.4 m	498 kg
3.5 m	433 kg
1 m	227 kg

Maximum Capacity - GS-3246	
Height of platform	Maximum Capacity
9.8 m	318 kg
9.1 m	483 kg
5.4 m	699 kg
3.5 m	608 kg
1 m	318 kg

Downloaded from www.Manualslib.com manuals search engine

https://truckmanualshub.com/

Work Area Safety

Do not raise the platform unless the machine is on a firm, level surface.

Do not depend on the tilt alarm as a level indicator. The tilt alarm sounds on the chassis only when the machine is on a slope.

If the tilt alarm sounds:
Lower the platform. Move the machine to a firm, level surface. If the tilt alarm sounds when the platform is raised, use extreme caution to lower the platform.

Do not drive over 0.8 km/h with the platform raised.

Outdoor Use: Do not raise the platform when wind speeds may exceed 12.5 m/s. If wind speeds exceed 12.5 m/s when the platform is raised, lower the platform and do not continue to operate the machine.

Indoor Use: When raising the platform, follow ratings for allowable side force and number of occupants on the next page.

Do not operate the machine in strong or gusty winds. Do not increase the surface area of the platform or the load. Increasing the area exposed to the wind will decrease machine stability.

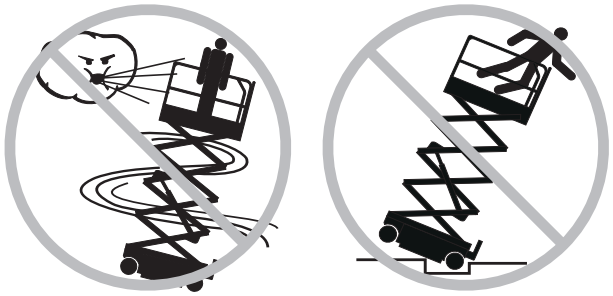

Use extreme care and slow speeds while driving the machine in a stowed position across uneven terrain, debris, unstable or slippery surfaces and near holes and drop-offs.

Do not drive the machine on or near uneven terrain, unstable surfaces or other hazardous conditions with the platform raised.

Do not use the machine as a crane.

Do not push the machine or other objects with the platform.

Do not contact adjacent structures with the platform.

Do not tie the platform to adjacent structures.

Do not place loads outside the platform perimeter.

Do not operate the machine with the chassis trays open.

Downloaded from www.Manualslib.com manuals search engine

https://truckmanualshub.com/

Work Area Safety

Do not push off or pull toward any object outside of the platform.

Maximum allowable manual force

Model	Manual Force	Maximum Occupants
GS-1530	400 N	Indoor use only - 2
GS-1532	400 N 200 N	Indoor - 2 Outdoor - 1
GS-1930	400 N	Indoor use only - 2
GS-1932	400 N 200 N	Indoor - 2 Outdoor - 1
GS-2032	400 N 200 N	Indoor - 2 Outdoor - 1
GS-2632	400 N	Indoor use only - 2
GS-3232	400 N	Indoor use only - 2
GS-2046	400 N	Indoor/Outdoor - 2
GS-2646	400 N	Indoor/Outdoor - 2
GS-3246	400 N 200 N	Indoor - 2 Outdoor - 1

Do not alter or disable the limit switches.

Do not alter or disable machine components that in any way affect safety and stability.

Do not replace items critical to machine stability with items of different weight or specification.

Do not use batteries that weigh less than the original equipment. Batteries are used as counterweight and are critical to machine stability. Each battery must weigh 29.5 kg. Battery box including batteries must weigh a minimum of 152 kg.

Do not modify or alter an aerial work platform without prior written permission from the manufacturer. Mounting attachments for holding tools or other materials onto the platform, toeboards or guard rail systems can increase the weight in the platform and the surface area of the platform or the load.

Do not place or attach fixed or overhanging loads to any part of this machine.

Do not place ladders or scaffolds in the platform or against any part of this machine.

Do not transport tools and materials unless they are evenly distributed and can be safely handled by person(s) in the platform.

Do not use the machine on a moving or mobile surface or vehicle.

Be sure all tires are in good condition, castle nuts are properly tightened and cotter pins are properly installed.

Downloaded from www.Manualslib.com manuals search engine

https://truckmanualshub.com/

Work Area Safety

If equipped with outriggers

Do not set the machine up where it cannot be leveled using only the outriggers.

Do not adjust the outriggers while the platform is raised.

Do not drive while the outriggers are lowered.

⚠ Crushing Hazard

Keep hands and limbs out of scissors.

Keep hands clear when folding rails.

Do not work under the platform or in the scissor links without the safety arm in place.

Use common sense and planning when operating the machine with the controller from the ground. Maintain safe distances between the operator, the machine and fixed objects.

⚠ Operation on Slopes Hazards

Do not drive the machine on a slope that exceeds the slope and side slope rating of the machine. Slope rating applies to machines in the stowed position.

Model	Maximum slope rating stowed position	Maximum side slope rating stowed position
GS-1530	30% (17°)	30% (17°)
GS-1532	30% (17°)	30% (17°)
GS-1930	25% (14°)	25% (14°)
GS-1932	25% (14°)	25% (14°)
GS-2032	30% (17°)	30% (17°)
GS-2632	25% (14°)	25% (14°)
GS-3232	25% (14°)	25% (14°)
GS-2046	30% (17°)	30% (17°)
GS-2646	30% (17°)	30% (17°)
GS-3246	25% (14°)	25% (14°)

Note: Slope rating is subject to ground conditions and adequate traction.

⚠ Fall Hazards

The guard rail system provides fall protection. If occupants of the platform are required to wear personal fall protection equipment (PFPE) due to job site or employer rules, PFPE and its use shall be in accordance with the PFPE manufacturer's instructions and applicable governmental requirements. Use approved lanyard attachment point provided.

Keep the platform floor clear of debris.

Attach the platform entry chain or close the entry gate before operating.

Do not operate the machine unless the guard rails are properly installed and the entry is secured for operation.

Do not sit, stand or climb on the platform guard rails. Maintain a firm footing on the platform floor at all times.

Do not climb down from the platform when raised.

Do not enter or exit the platform unless the machine is in the stowed position.

⚠ Collision Hazards

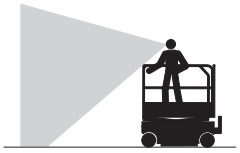

Be aware of limited sight distance and blind spots when driving or operating.

Be aware of extended platform position when moving the machine.

The machine must be on a level surface or secured before releasing the brakes.

Downloaded from www.Manualslib.com manuals search engine

https://truckmanualshub.com/

Work Area Safety

Check the work area for overhead obstructions or other possible hazards.

Be aware of crushing hazards when grasping the platform guard rail.

Operators must comply with employer, job site and governmental rules regarding use of personal protective equipment.

Do not lower the platform unless the area below is clear of personnel and obstructions.

Limit travel speed according to the condition of the ground surface, congestion, slope, location of personnel, and any other factors which may cause collision.

Do not operate a machine in the path of any crane or moving overhead machinery unless the controls of the crane have been locked out and/or precautions have been taken to prevent any potential collision.

No stunt driving or horseplay while operating a machine.

⚠ Bodily Injury Hazard

Do not operate the machine with a hydraulic oil or air leak. An air leak or hydraulic leak can penetrate and/or burn skin.

Improper contact with components under any cover will cause serious injury. Only trained maintenance personnel should access compartments. Access by the operator is only advised when performing a pre-operation inspection. All compartments must remain closed and secured during operation.

⚠ Explosion and Fire Hazards

Do not operate the machine or charge the battery in hazardous locations or locations where potentially flammable or explosive gases or particles may be present.

⚠ Damaged Machine Hazards

Do not use a damaged or malfunctioning machine.

Conduct a thorough pre-operation inspection of the machine and test all functions before each work shift. Immediately tag and remove from service a damaged or malfunctioning machine.

Be sure all maintenance has been performed as specified in this manual and the appropriate service manual.

Be sure all decals are in place and legible.

Be sure the operator’s, safety, and responsibilities manuals are complete, legible and in the storage container located on the platform.

⚠ Component Damage Hazards

Do not use any battery charger greater than 24V to charge the batteries.

Do not use the machine as a ground for welding.

Downloaded from www.Manualslib.com manuals search engine

https://truckmanualshub.com/

Battery Safety

Burn Hazards

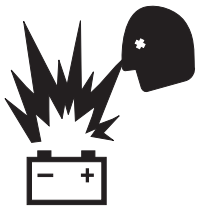

Batteries contain acid. Always wear protective clothing and eye wear when working with batteries.

Avoid spilling or contacting battery acid. Neutralize battery acid spills with baking soda and water.

Do not expose the batteries or the charger to water or rain during charging.

Explosion Hazards

Keep sparks, flames and lighted tobacco away from batteries. Batteries emit an explosive gas.

The battery tray should remain open during the entire charging cycle.

Do not contact the battery terminals or the cable clamps with tools that may cause sparks.

Component Damage Hazard

Do not use any battery charger greater than 24V to charge the batteries.

Electrocution / Burn Hazards

Connect the battery charger to a grounded, AC 3-wire electrical outlet only.

Inspect daily for damaged cords, cables and wires. Replace damaged items before operating.

Avoid electrical shock from contact with battery terminals. Remove all rings, watches and other jewelry.

Tip-over Hazard

Do not use batteries that weigh less than the original equipment. Batteries are used as counterweight and are critical to machine stability. Each battery must weigh 29.5 kg. Battery tray including batteries must weigh a minimum of 152 kg.

Lifting Hazard

Use the appropriate number of people and proper lifting techniques when lifting batteries.

Lockout After Each Use

1 Select a safe parking location—firm level surface, clear of obstruction and traffic.

2 Lower the platform.

3 Turn the key switch to the off position and remove the key to secure from unauthorized use.

4 Chock the wheels.

5 Charge the batteries.

Downloaded from www.Manualslib.com manuals search engine

https://truckmanualshub.com/

Legend

GS-1530
GS-1532
GS-1930
GS-1932

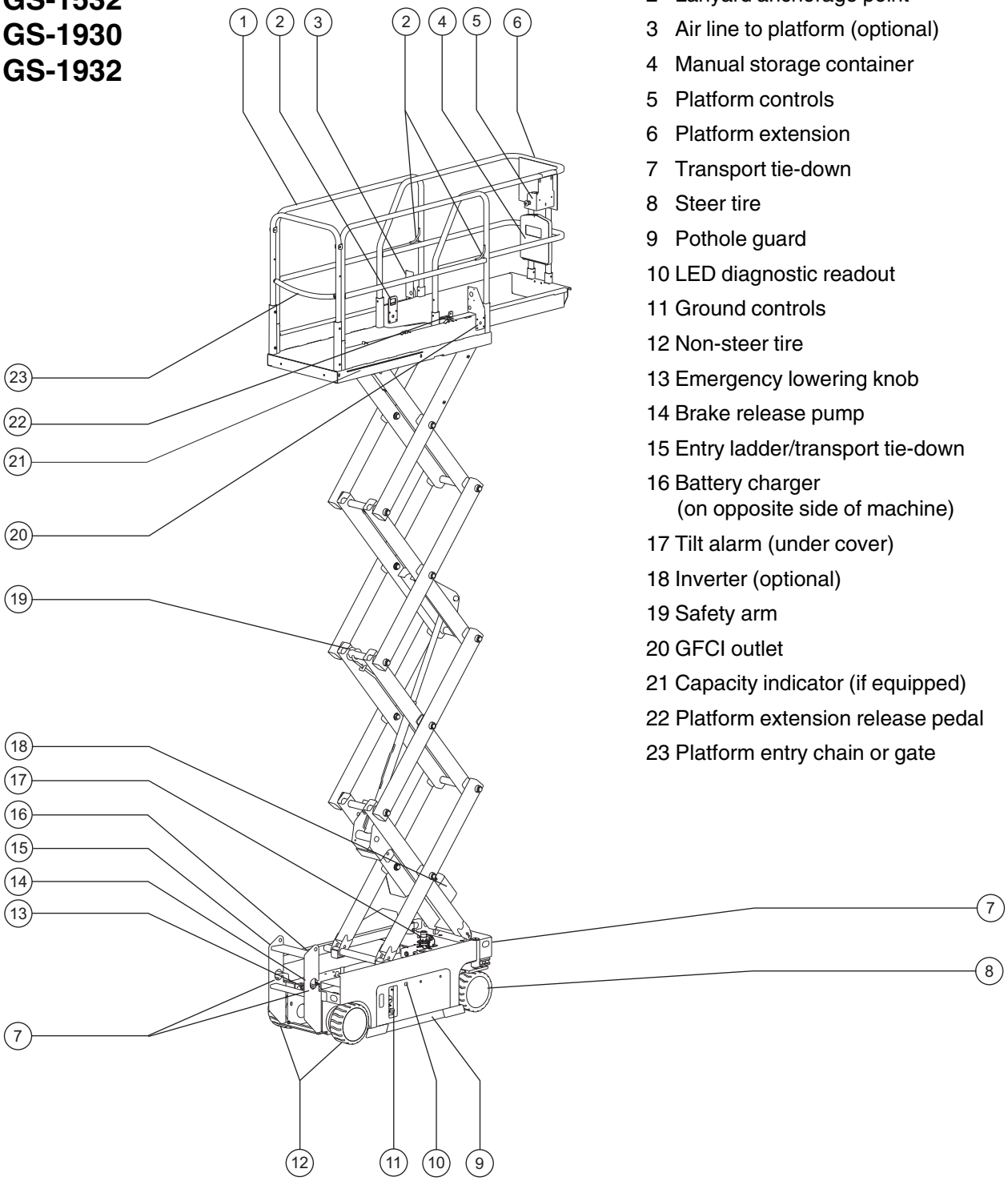

1 Platform guard rails
2 Lanyard anchorage point
3 Air line to platform (optional)
4 Manual storage container
5 Platform controls
6 Platform extension
7 Transport tie-down
8 Steer tire
9 Pothole guard
10 LED diagnostic readout
11 Ground controls
12 Non-steer tire
13 Emergency lowering knob
14 Brake release pump
15 Entry ladder/transport tie-down
16 Battery charger (on opposite side of machine)
17 Tilt alarm (under cover)
18 Inverter (optional)
19 Safety arm
20 GFCI outlet
21 Capacity indicator (if equipped)
22 Platform extension release pedal
23 Platform entry chain or gate

Downloaded from www.Manualslib.com manuals search engine

https://truckmanualshub.com/

Legend

GS-2032
GS-2632
GS-3232

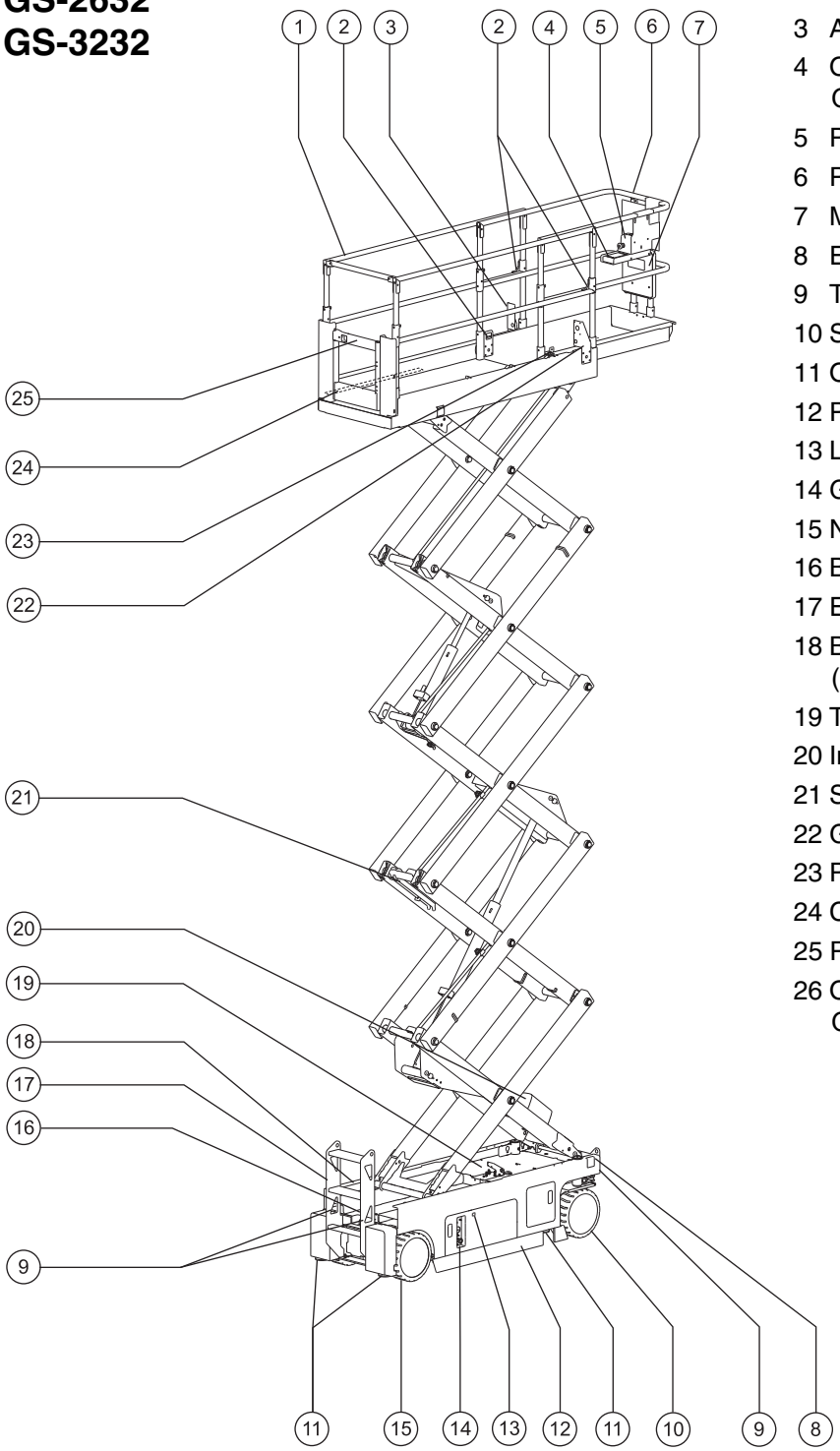

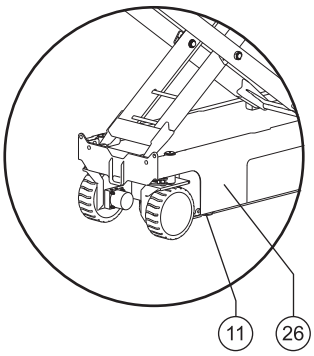

1 Platform guard rails
2 Lanyard anchorage point
3 Air line to platform (optional)
4 Outrigger controls - GS-3232 models
5 Platform controls
6 Platform extension
7 Manual storage container
8 Emergency lowering knob
9 Transport tie-down
10 Steer tire
11 Outrigger - GS-3232 models
12 Pothole guard
13 LED diagnostic readout
14 Ground controls
15 Non-steer tire
16 Brake release pump
17 Entry ladder/transport tie-down
18 Battery charger (on opposite side of machine)
19 Tilt alarm (under cover)
20 Inverter (optional)
21 Safety arm
22 GFCI outlet
23 Platform extension release pedal
24 Capacity indicator (if equipped)
25 Platform entry chain or gate
26 Outrigger control ECM - GS-3232 models

Downloaded from www.Manualslib.com manuals search engine

https://truckmanualshub.com/

Legend

GS-2046
GS-2646
GS-3246

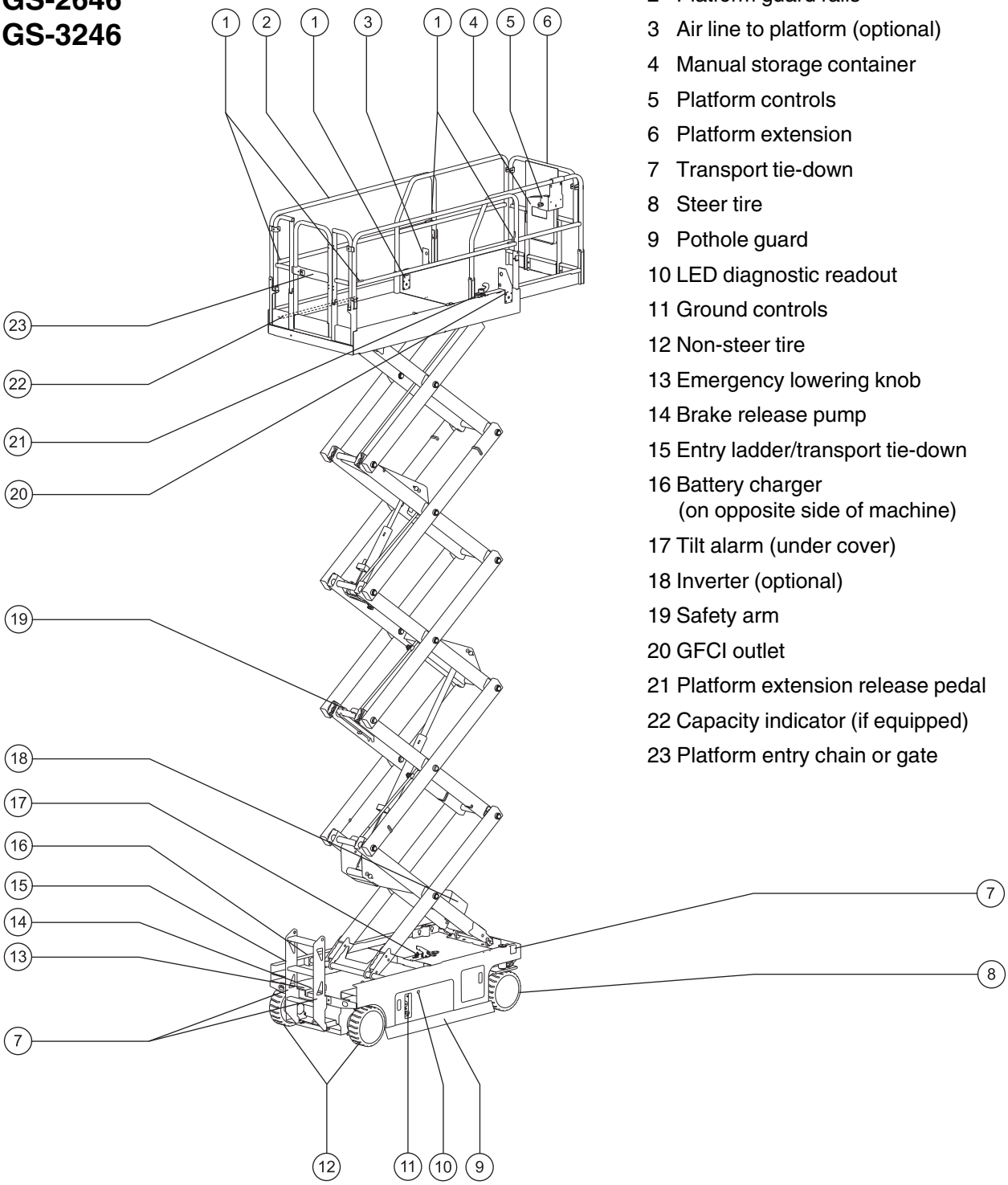

1 Lanyard anchorage point
2 Platform guard rails
3 Air line to platform (optional)
4 Manual storage container
5 Platform controls
6 Platform extension
7 Transport tie-down
8 Steer tire
9 Pothole guard
10 LED diagnostic readout
11 Ground controls
12 Non-steer tire
13 Emergency lowering knob
14 Brake release pump
15 Entry ladder/transport tie-down
16 Battery charger (on opposite side of machine)
17 Tilt alarm (under cover)
18 Inverter (optional)
19 Safety arm
20 GFCI outlet
21 Platform extension release pedal
22 Capacity indicator (if equipped)
23 Platform entry chain or gate

Downloaded from www.Manualslib.com manuals search engine

https://truckmanualshub.com/

Controls

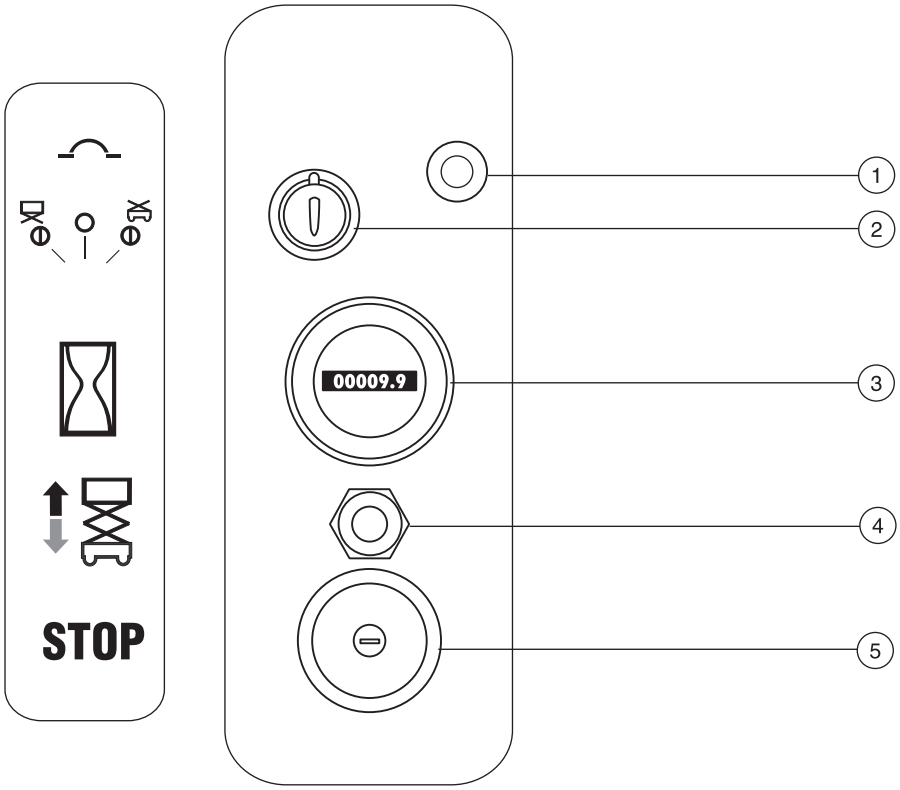

Ground Control Panel

1 7 amp breaker for electric circuits

2 Key switch for platform/off/ground selection

Turn the key switch to the platform position and the platform controls will operate. Turn the key switch to the off position and the machine will be off. Turn the key switch to the base position and the ground controls will operate.

3 Hour meter

Indicates the number of hours the machine has been put into use.

4 Platform up/down toggle switch

Move the switch up and the platform will raise. Move the switch down and the platform will lower.

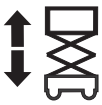

5 Red Emergency Stop button

Push in the red Emergency Stop button to the off position to stop all functions. Pull out the red Emergency Stop button to the on position to operate the machine.

Downloaded from www.Manualslib.com manuals search engine

https://truckmanualshub.com/

Controls

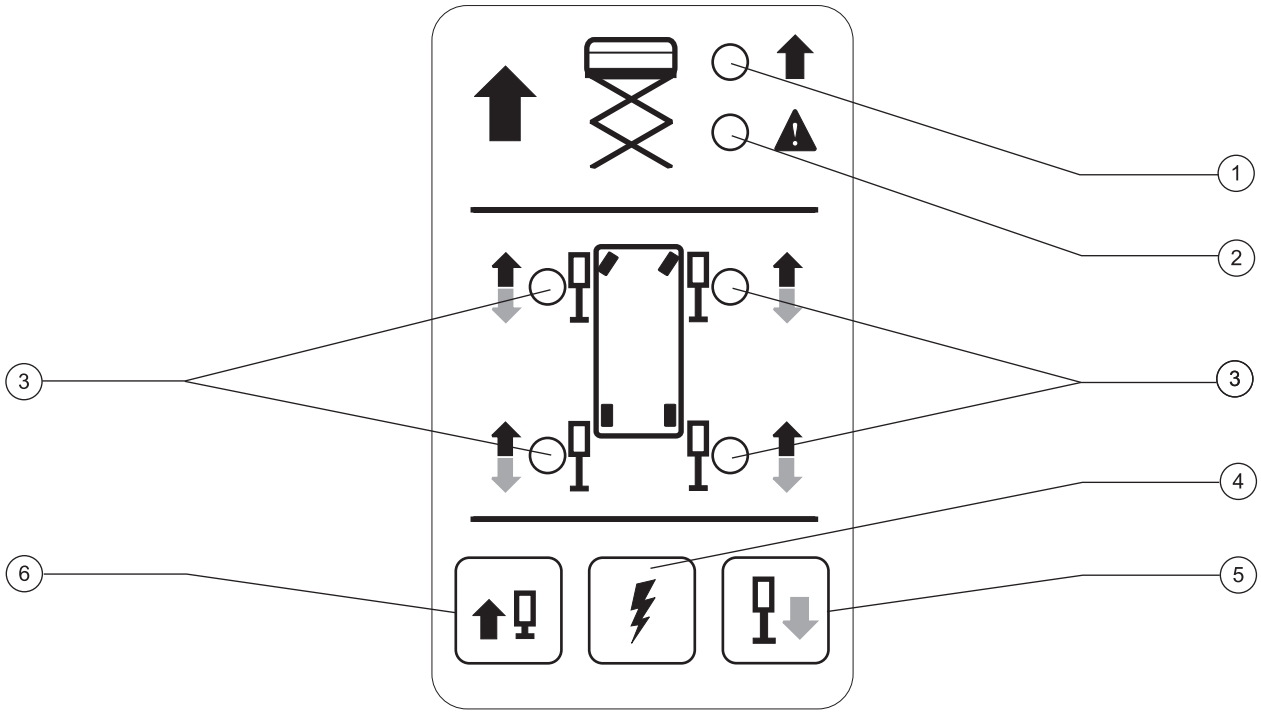

Outrigger Control Panel (GS-3232)

1 Lift enable indicator

Turns green to indicate that the up/down function can be operated.

2 Lift error indicator light

Turns red to indicate that the up/down function cannot be operated.

3 Individual outrigger indicator light

Turns solid green to indicate the outriggers made contact with the ground. Flashes red or solid red to indicate an error.

4 Function enable button

Press and hold the button to activate the outrigger extend or outrigger retract button.

5 Outrigger extend button.

Press this button and the outriggers will extend.

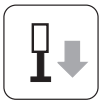

6 Outrigger retract button.

Press this button and the outriggers will retract.

Downloaded from www.Manualslib.com manuals search engine

https://truckmanualshub.com/

Controls

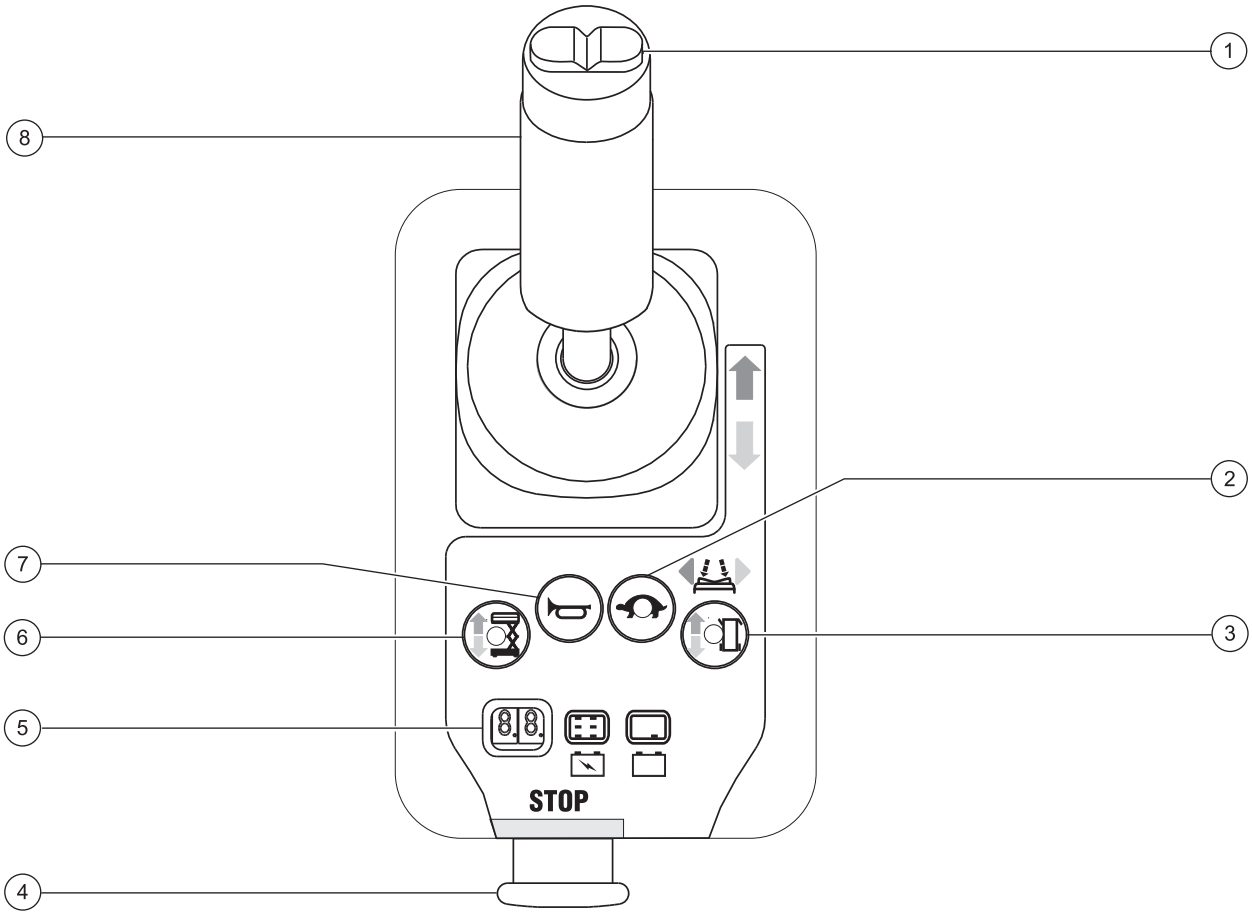

Platform Control Panel

1 Thumb rocker switch for steer functions

2 Drive speed button

3 Drive function select button

4 Red Emergency Stop button

5 LED

6 Lift function select button

7 Horn button

8 Proportional control handle and function enable switch for lift and drive functions

Downloaded from www.Manualslib.com manuals search engine

https://truckmanualshub.com/

Controls

Platform Control Panel

1 Thumb rocker switch for steer functions

Press the thumb rocker switch in either direction to activate steer function.

2 Drive speed button

Press this button to activate the slow or fast drive function.

3 Drive function select button

Press this button to activate the drive function.

4 Red Emergency Stop button

Push in the red Emergency Stop button to the off position to stop all functions. Pull out the red Emergency Stop button to the on position to operate the machine.

5 LED

Diagnostic read out, and battery charge indicator.

6 Lift function select button

Press this button to activate the lift function.

7 Horn Button

Push the horn button and the horn will sound. Release the horn button and the horn will stop.

8 Proportional control handle and function enable switch for lift and drive functions.

Lift function: Move the control handle in the direction indicated by the blue arrow and the platform will raise. Move the control handle in the direction indicated by the yellow arrow and the platform will lower. The descent alarm will sound while the platform is lowering.

Drive function: Move the control handle in the direction indicated by the blue arrow on the control panel and the machine will move in the direction that the blue arrow points. Move the control handle in the direction indicated by the yellow arrow on the control panel and the machine will move in the direction that the yellow arrow points.

Downloaded from www.Manualslib.com manuals search engine

https://truckmanualshub.com/

Inspections

Do Not Operate Unless:

☑ You learn and practice the principles of safe machine operation contained in this operator's manual.

1 Avoid hazardous situations.

2 Always perform a pre-operation inspection.

Know and understand the pre-operation inspection before going on to the next section.

3 Always perform function tests prior to use.

4 Inspect the workplace.

5 Only use the machine as it was intended.

Pre-operation Inspection Fundamentals

It is the responsibility of the operator to perform a pre-operation inspection and routine maintenance.

The pre-operation inspection is a visual inspection performed by the operator prior to each work shift. The inspection is designed to discover if anything is apparently wrong with a machine before the operator performs the function tests.

The pre-operation inspection also serves to determine if routine maintenance procedures are required. Only routine maintenance items specified in this manual may be performed by the operator.

Refer to the list on the next page and check each of the items.

If damage or any unauthorized variation from factory delivered condition is discovered, the machine must be tagged and removed from service.

Repairs to the machine may only be made by a qualified service technician, according to the manufacturer's specifications. After repairs are completed, the operator must perform a pre-operation inspection again before going on to the function tests.

Scheduled maintenance inspections shall be performed by qualified service technicians, according to the manufacturer's specifications and the requirements listed in the responsibilities manual.

Downloaded from www.Manualslib.com manuals search engine

https://truckmanualshub.com/

Inspections

Pre-operation Inspection

- Be sure that the operator's, safety and responsibilities manuals are complete, legible and in the storage container located in the platform.
- Be sure that all decals are legible and in place. See Inspections section.
- Check for hydraulic oil leaks and proper oil level. Add oil if needed. See Maintenance section.
- Check for battery fluid leaks and proper fluid level. Add distilled water if needed. See Maintenance section.

Check the following components or areas for damage, improperly installed or missing parts and unauthorized modifications:

- Electrical components, wiring and electrical cables
- Hydraulic hoses, fittings, cylinders and manifolds
- Battery pack and connections
- Drive motors
- Wear pads
- Tires and wheels
- Ground strap
- Limit switches, alarms and horn
- Alarms and beacons (if equipped)
- Nuts, bolts and other fasteners
- Platform entry chain or gate
- Brake release components
- Safety Arm
- Platform overload components
- Pothole guards
- Platform extension
- Scissor pins and retaining fasteners
- Platform control joystick

Check entire machine for:

- Cracks in welds or structural components
- Dents or damage to machine
- Excessive rust, corrosion or oxidation

- Be sure that all structural and other critical components are present and all associated fasteners and pins are in place and properly tightened.
- Be sure side rails are installed and bolts are fastened.
- Be sure that the chassis trays are closed and latched and the batteries are properly connected.

Note: If the platform must be raised to inspect the machine, make sure the safety arm is in place. See Operating Instructions section.

Downloaded from www.Manualslib.com manuals search engine

https://truckmanualshub.com/

Inspections

Do Not Operate Unless:

☑ You learn and practice the principles of safe machine operation contained in this operator's manual.

1 Avoid hazardous situations.

2 Always perform a pre-operation inspection.

3 Always perform function tests prior to use.

Know and understand the function tests before going on to the next section.

4 Inspect the workplace.

5 Only use the machine as it was intended.

Function Test Fundamentals

The function tests are designed to discover any malfunctions before the machine is put into service. The operator must follow the step-by-step instructions to test all machine functions.

A malfunctioning machine must never be used. If malfunctions are discovered, the machine must be tagged and removed from service. Repairs to the machine may only be made by a qualified service technician, according to the manufacturer's specifications.

After repairs are completed, the operator must perform a pre-operation inspection and function tests again before putting the machine into service.

Downloaded from www.Manualslib.com manuals search engine

https://truckmanualshub.com/

Inspections

1 Select a test area that is firm, level and free of obstruction.

2 Be sure the battery pack is connected.

At the Ground Controls

3 Pull out the platform and ground red Emergency Stop buttons to the on position.

4 Turn the key switch to ground control.

5 Observe the diagnostic LED readout on the platform controls.

⊙ Result: The LED should look like the picture at right.

Test Emergency Stop

6 Push in the ground red Emergency Stop button to the off position.

⊙ Result: No functions should operate.

7 Pull out the red Emergency Stop button to the on position.

Test the Up/Down Functions

The audible warnings on this machine and the standard horn all come from the same central alarm. The horn is a constant tone. The descent alarm sounds at 60 beeps per minute. The alarm that goes off when the pothole guards have not deployed sounds at 300 beeps per minute. The alarm that goes off when the machine is not level sounds at 600 beeps per minute. An optional automotive-style horn is also available.

8 Activate the up function.

⊙ Result: The platform should raise.

9 Activate the down function.

⊙ Result: The platform should lower. The descent alarm should sound while the platform is lowering.

Test Emergency Lowering

10 Activate the up function and raise the platform approximately 60 cm.

11 Pull the Emergency lowering knob located behind the entry ladder.

⊙ Result: The platform should lower. The descent alarm will not sound.

12 Turn the key switch to platform control.

At the Platform Controls

Test Emergency Stop

13 Push in the platform red Emergency Stop button to the off position.

⊙ Result: No functions should operate.

Test the Horn

14 Pull out the red Emergency Stop button to the on position.

15 Push the horn button.

⊙ Result: The horn should sound.

Downloaded from www.Manualslib.com manuals search engine

https://truckmanualshub.com/

Inspections

Test the Function Enable Switch

16 Do not hold the function enable switch on the control handle.

17 Slowly move the control handle in the direction indicated by the blue arrow, then in the direction indicated by the yellow arrow.

⊙ Result: No functions should operate.

Test the Up/Down Functions

18 Press the lift function select button.

19 Press and hold the function enable switch on the control handle.

20 Slowly move the control handle in the direction indicated by the blue arrow.

⊙ Result: The platform should raise. The pothole guards should deploy.

21 Release the control handle.

⊙ Result: The platform should stop raising.

22 Press and hold the function enable switch. Slowly move the control handle in the direction indicated by the yellow arrow.

⊙ Result: The platform should lower. The descent alarm should sound while the platform is lowering.

Test the Steering

Note: When performing the steer and drive function tests, stand in the platform facing the steer end of the machine.

23 Press the drive function select switch.

24 Press and hold the function enable switch on the control handle.

25 Depress the thumb rocker switch on top of the control handle in the direction identified by the blue triangle on the control panel.

⊙ Result: The steer wheels should turn in the direction that the blue triangle points on the control panel.

26 Depress the thumb rocker switch in the direction identified by the yellow triangle on the control panel.

⊙ Result: The steer wheels should turn in the direction that the yellow triangle points on the control panel.

Downloaded from www.Manualslib.com manuals search engine

https://truckmanualshub.com/

Inspections

Test Drive and Braking

27 Press and hold the function enable switch.

28 Slowly move the control handle in the direction indicated by the blue arrow on the control panel until the machine begins to move, then return the handle to the center position.

⊙ Result: The machine should move in the direction that the blue arrow points on the control panel, then come to an abrupt stop.

29 Slowly move the control handle in the direction indicated by the yellow arrow on the control panel until the machine begins to move, then return the handle to the center position.

⊙ Result: The machine should move in the direction that the yellow arrow points on the control panel, then come to an abrupt stop.

Note: The brakes must be able to hold the machine on any slope it is able to climb.

Test the Tilt Sensor Operation

Note: Perform this test from the ground with the platform controller. Do not stand in the platform.

30 Fully lower the platform.

31 Place a 2x4 or similar piece of wood under both wheels on one side and drive the machine up onto them.

32 Raise the platform approximately 2.1 m from the ground.

⊙ Result: The platform should stop elevating and the tilt alarm will sound at 600 beeps per minute.

33 Move the drive control handle in the direction indicated by the blue arrow, then move the drive control handle in the direction indicated by the yellow arrow.

⊙ Result: The drive function should not work in either direction.

34 Lower the platform and remove both pieces of wood.

Downloaded from www.Manualslib.com manuals search engine

https://truckmanualshub.com/

Inspections

Test Limited Drive Speed

35 Press the lift function select button.

36 Press and hold the function enable switch. Raise the platform approximately 1.2 m from the ground.

⊙ Result: The pothole guards should deploy.

37 Press the drive function select switch.

38 Press and hold the function enable switch. Slowly move the control handle to the full drive position.

⊙ Result: The maximum achievable drive speed with the platform raised should not exceed 20 cm/s.

If the drive speed with the platform raised exceeds 20 cm/s, immediately tag and remove the machine from service.

Test the Pothole Guards

Note: The pothole guards should automatically deploy when the platform is raised. The pothole guards activate another limit switch which allows the machine to continue to function. If the pothole guards do not deploy, an alarm sounds and the machine will not drive.

39 Raise the platform.

⊙ Result: When the platform is raised 1.2 m from the ground, the pothole guards should deploy.

40 Press on the pothole guards on one side, and then the other.

⊙ Result: The pothole guards should not move.

41 Lower the platform.

⊙ Result: The pothole guards should return to the stowed position.

42 Place a 2x4 or similar piece of wood under a pothole guard. Raise the platform.

⊙ Result: Before the platform is raised 2.1 m from the ground, an alarm should sound and the drive function should not work.

43 Lower the platform and remove the 2x4.

Downloaded from www.Manualslib.com manuals search engine

https://truckmanualshub.com/

Inspections

Test the Outrigger System

44 Press the lift function select button.

45 Press and hold the function enable switch on the control handle.

46 Slowly move the control handle in the direction indicated by the blue arrow.

⊙ Result: The platform should raise to 6.7 m and stop. The lift error indicator light will turn red.

47 Fully lower the platform.

48 Press and hold the outrigger extend button.

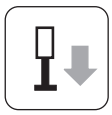

⊙ Result: The outriggers should not extend.

49 Press and hold the function enable button. Press and hold the outrigger extend button.

⊙ Result: The outriggers should extend. The individual outrigger LED indicator lights will turn green as the corresponding outrigger makes contact with the ground.

Continue pressing the function enable and the outrigger extend buttons until the lift enable indicator light turns green and a beep is heard. The machine is now level. At this point, the drive and steer functions are disabled.

50 Press and hold the function enable switch on the control handle.

51 Slowly move the control handle in the direction indicated by the blue arrow.

⊙ Result: The platform should raise to 9.8 m and stop.

52 Fully lower the platform.

53 Press and hold the outrigger retract button.

⊙ Result: The outriggers should not retract.

54 Press and hold the function enable button. Press and hold the outrigger retract button.

⊙ Result: The outriggers should start retracting.

Release the function enable and the outrigger retract buttons once the outriggers are off the ground. After approximately 5 seconds, the outrigger indicator lights will turn off. All functions are now restored.

Note: The machine drive speeds are reduced the first time the drive function is enabled after retracting the outriggers. The drive speeds are restored to normal after driving for approximately 6 seconds.

Downloaded from www.Manualslib.com manuals search engine

https://truckmanualshub.com/

Inspections

Do Not Operate Unless:

☑ You learn and practice the principles of safe machine operation contained in this operator's manual.

1 Avoid hazardous situations.

2 Always perform a pre-operation inspection.

3 Always perform function tests prior to use.

4 Inspect the workplace.

Know and understand the workplace inspection before going on to the next section.

5 Only use the machine as it was intended.

Fundamentals

The workplace inspection helps the operator determine if the workplace is suitable for safe machine operation. It should be performed by the operator prior to moving the machine to the workplace.

It is the operator's responsibility to read and remember the workplace hazards, then watch for and avoid them while moving, setting up and operating the machine.

Workplace Inspection

Be aware of and avoid the following hazardous situations:

- drop-offs or holes
- bumps, floor obstructions or debris
- sloped surfaces
- unstable or slippery surfaces
- overhead obstructions and high voltage conductors
- hazardous locations
- inadequate surface support to withstand all load forces imposed by the machine
- wind and weather conditions
- the presence of unauthorized personnel
- other possible unsafe conditions

Downloaded from www.Manualslib.com manuals search engine

https://truckmanualshub.com/

Inspections

Decal Inspection for models GS-1530, GS-1532, GS-1930 and GS-1932

Use the pictures on the next page to verify that all decals are legible and in place.

Below is a numerical list with quantities and descriptions.

Part No.	Description	Quantity
28174	Label - Power to Platform, 230V	2
28175	Warning - Compartment Access	1
28176	Label - Missing Manuals	1
28235	Label - Power to Platform, 115V	2
28236	Warning - Improper Operation	1
31060	Danger - Tip Over Hazard, Limit Switch	1
31508	Danger - Electrocution Hazard	1
31788	Danger - Battery Safety	1
40434	Label - Lanyard Anchorage	3
43089	Instructions - Operation, Ground Control	1
43093	Label - Tire Specification	4
43618	Label - Directional Arrows	2
43619	Label - Safety Arm	1
43658	Label - Power to Charger, 230V	1
44255	Danger - Crushing Hazard	4
44736	Danger - Tip-over Hazard, Tilt Alarm	1
44737	Danger - Tip-over Hazard, Trays Open	2
44753	Label - LED Diagnostic Readout	1
44980	Label - Power to Charger, 115V	1
44981	Label - Air Line to Platform, 110 PSI	2

Part No.	Description	Quantity
52475	Label - Transport Tie-down	5
65052	Label - ECM Fault Codes	2
62053	Cosmetic - Genie GS-1530	2
62054	Cosmetic - Genie GS-1930	2
72086	Label - Lifting Eye	4
72143	Label - Emergency Stop	1
72853	Danger - Improper Use Hazard	1
72970	Instructions - Battery Charger Operation	1
82287	Cosmetic - Genie GS-1932	2
82366	Label - Chevron Rando	1
82557	Label - Platform Controls Location	1
82558	Warning - Skin Injection Hazard	1
82559	Instructions - Annual Inspection	1
82561	Danger - Crushing Hazard	2
82566	Instructions - Maximum Manual Force, GS-1532 and GS-1932	1
82567	Ground Control Panel	1
82568	Cosmetic - Genie GS-1532	2
82570	Label - Wheel Load, GS-1530 and GS-1532	4
82571	Label - Wheel Load, GS-1930 and GS-1932	4

This inspection continues on the next page.

Downloaded from www.Manualslib.com manuals search engine

https://truckmanualshub.com/

Inspections

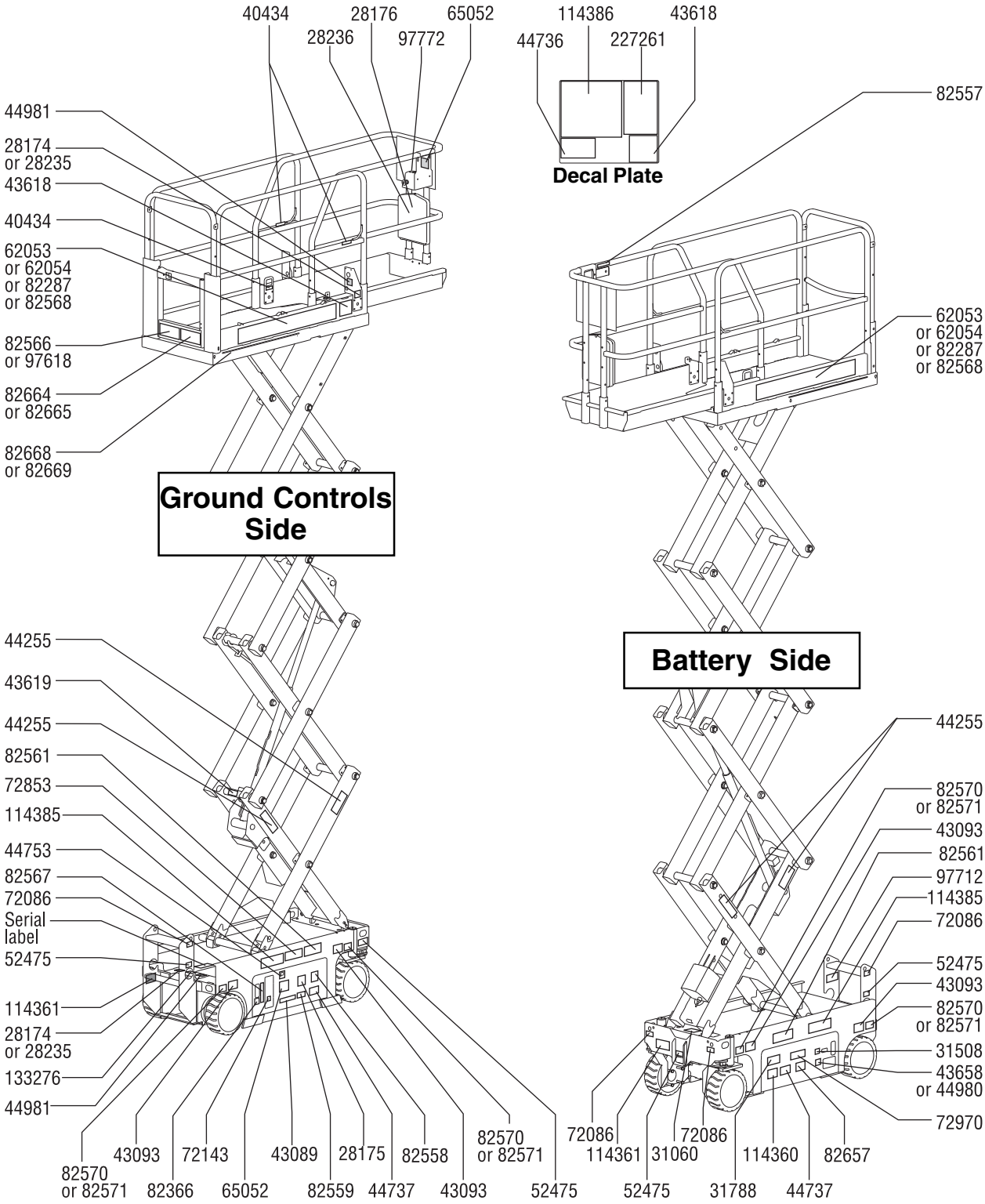

Downloaded from www.Manualslib.com manuals search engine

https://truckmanualshub.com/

Inspections

Decal Inspection for models GS-1530, GS-1532, GS-1930 and GS-1932

Use the pictures on the next page to verify that all decals are legible and in place.

Below is a numerical list with quantities and descriptions.

Part No.	Description	Quantity
82657	Instructions - Battery Connection Diagram	1
82664	Label - Maximum Capacity, GS-1530 and GS-1532	1
82665	Label - Maximum Capacity, GS-1930 and GS-1932	1
82668	Label - Capacity Indicator, GS-1530 and GS-1532 (if equipped)	1
82669	Label - Capacity Indicator, GS-1930 and GS-1932 (if equipped)	1
97618	Instructions - Maximum Manual Force, GS-1530 and GS-1930	1
97712	Danger/Instructions - Brake Release Safety and Operation	1
97772	Platform Control Panel	1
114360	Danger - Tip-over Hazard, Batteries	1
114361	Label - Transport Diagram	2
114385	Danger - Electrocution Hazard	2
114386	Danger - General Safety Rules	1
133276	Label - Emergency Lowering	1
227261	Instructions - Operation, Platform Control	1

Downloaded from www.Manualslib.com manuals search engine

https://truckmanualshub.com/

Inspections

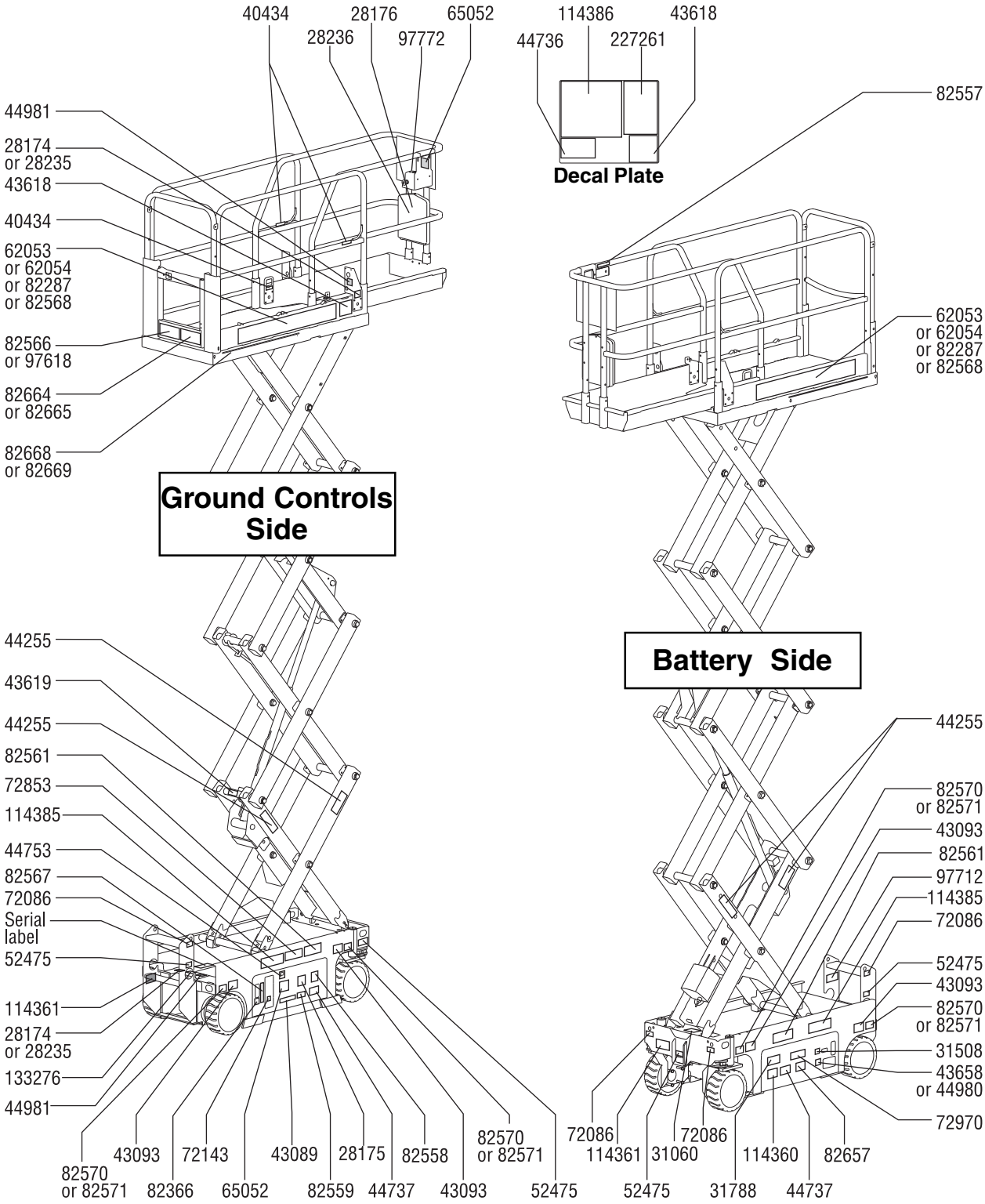

Downloaded from www.Manualslib.com manuals search engine

https://truckmanualshub.com/

Inspections

Decal Inspection for models GS-2032, GS-2632 and GS-3232

Use the pictures on the next page to verify that all decals are legible and in place.

Below is a numerical list with quantities and descriptions.

Part No.	Description	Quantity
28174	Label - Power to Platform, 230V	2
28175	Warning - Compartment Access	1
28176	Label - Missing Manuals	1
28235	Label - Power to Platform, 115V	2
28236	Warning - Improper Operation	1
31060	Danger - Tip-over Hazard, Limit Switch	1
31508	Danger - Power to Battery Charger	1
31788	Danger - Battery Safety	1
40434	Label - Lanyard Anchorage	5
43089	Instructions - Operation, Ground Control	1
43618	Label - Directional Arrows	2
43619	Label - Safety Arm	1
43658	Label - Power to Charger, 230V	1
44255	Danger - Crushing Hazard	4
44736	Danger - Tip-over Hazard, Tilt Alarm	1
44737	Danger - Tip-over Hazard, Trays Open	2
44753	Label - LED Diagnostic Readout	1
44980	Label - Power to Charger, 115V	1
44981	Label - Air to Platform, 110 PSI	2
46287	Notice - Tire Specification	4
52475	Label - Transport Tie-down	5
62055	Cosmetic - Genie GS-2032	2

Part No.	Description	Quantity
65052	Label - ECM Fault Codes	2
72086	Label - Lifting Eye	4
72143	Label - Emergency Stop	1
72853	Danger - Improper Use Hazard	1
72970	Instructions - Battery Charger Operation	1
72973	Cosmetic - Genie GS-2632	2
82307	Instructions - Maximum Manual Force, GS-2632 and GS-3232	1
82366	Label - Chevron Rando	1
82506	Danger - Foot Crushing Hazard	4
82557	Label - Platform Controls Location	1
82558	Warning - Skin Injection Hazard	1
82559	Instructions - Annual Inspection	1
82561	Danger - Crushing Hazard	2
82567	Ground Control Panel	1
82657	Instructions - Battery Connection Diagram	1
97683	Label - Capacity Indicator, GS-2032 (if equipped)	1
97684	Label - Capacity Indicator, GS-2632 (if equipped)	1
97685	Label - Maximum Capacity, GS-2032	1
97686	Label - Maximum Capacity, GS-2632	1

This inspection continues on the next page.

Downloaded from www.Manualslib.com manuals search engine

https://truckmanualshub.com/

Inspections

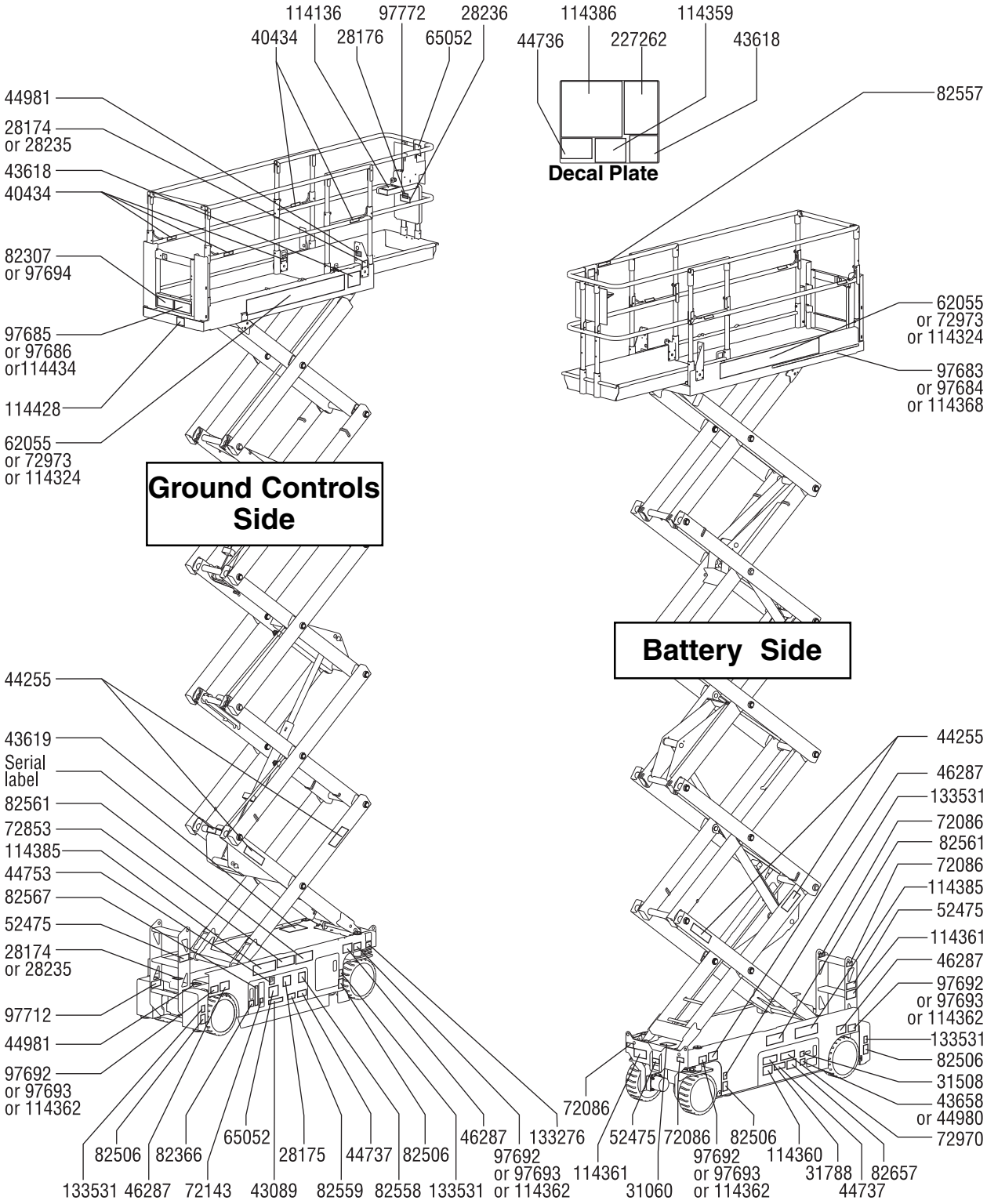

Downloaded from www.Manualslib.com manuals search engine

https://truckmanualshub.com/

Inspections

Decal Inspection for models GS-2032, GS-2632 and GS-3232

Use the pictures on the next page to verify that all decals are legible and in place.

Below is a numerical list with quantities and descriptions.

Part No.	Description	Quantity
97692	Label - Wheel Load, GS-2032	4
97693	Label - Wheel Load, GS-2632	4
97694	Instructions - Maximum Manual Force, GS-2032	1
97712	Danger/Instructions - Brake Release Safety and Operation	1
97772	Platform Control Panel	1
114136	Outrigger Control Panel, GS-3232	1
114324	Cosmetic - Genie GS-3232	2
114359	Danger - Tip over Hazard, Outriggers	1
114360	Danger - Tip-over Hazard, Batteries	1
114361	Label - Transport Diagram	2
114362	Label - Wheel Load, GS-3232	4
114368	Label - Capacity Indicator, GS-3232 (if equipped)	1
114385	Danger - Electrocution Hazard	2
114386	Danger - General Safety Rules	1
114428	Instructions - Maximum Travel Height	1
114434	Label - Maximum Capacity, GS-3232	1
133276	Label - Emergency Lowering	1
133531	Label - Outrigger Load, GS-3232	4
227262	Instructions - Operation, Platform Control	1

Downloaded from www.Manualslib.com manuals search engine

https://truckmanualshub.com/

Inspections

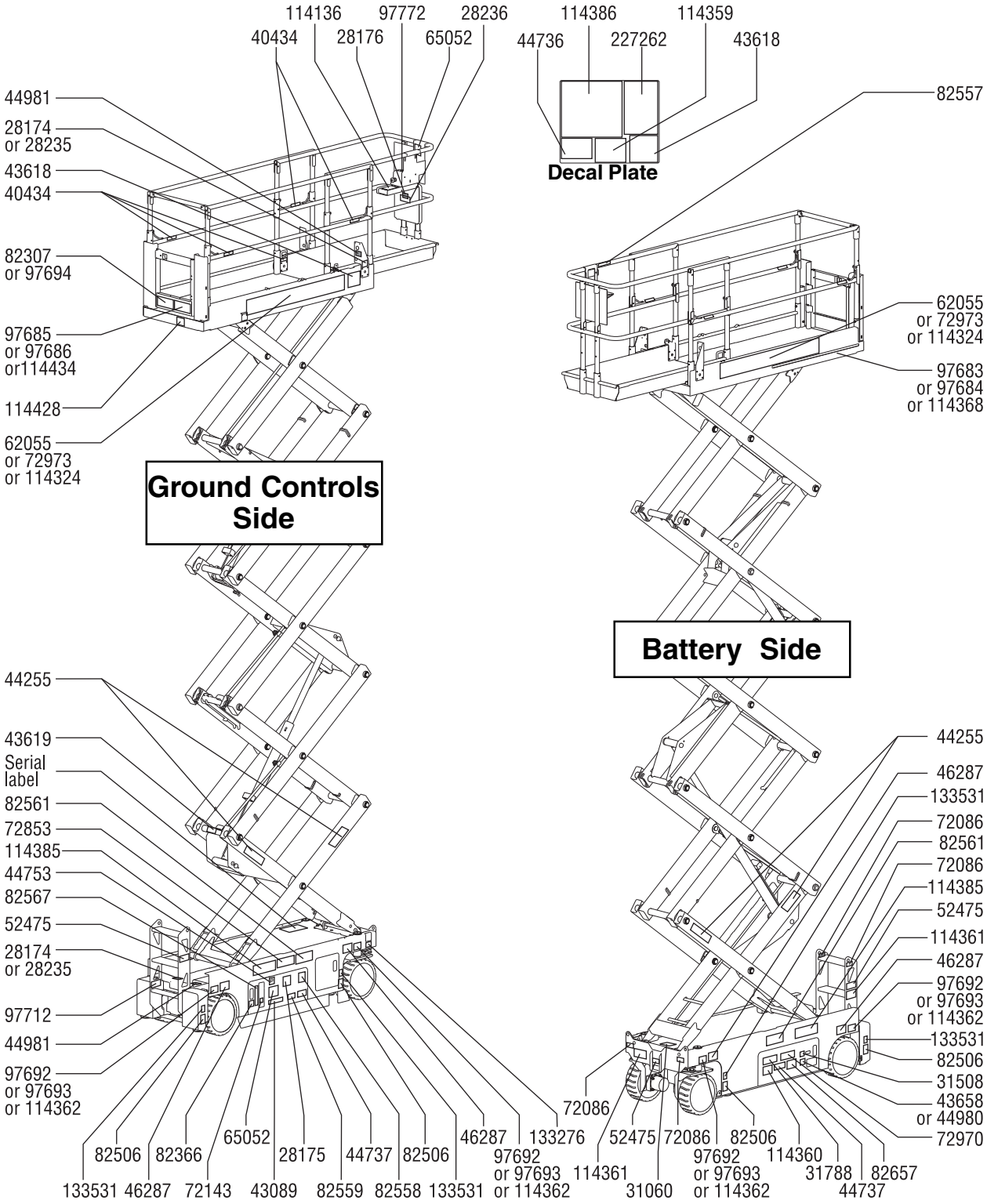

Downloaded from www.Manualslib.com manuals search engine

https://truckmanualshub.com/

Inspections

Decal Inspection for models GS-2046, GS-2646 and GS-3246

Use the pictures on the next page to verify that all decals are legible and in place.

Below is a numerical list with quantities and descriptions.

Part No.	Description	Quantity
28174	Label - Power to Platform, 230V	2
28175	Warning - Compartment Access	1
28176	Label - Missing Manuals	1
28235	Label - Power to Platform, 115V	2
28236	Warning - Improper Operation	1
31060	Danger - Tip-over Hazard, Limit Switch	1
31508	Danger - Electrocution Hazard	1
31788	Danger - Battery Safety	1
40434	Label - Lanyard Anchorage	5
43089	Instructions - Operation, Ground Control	1
43618	Label - Directional Arrows	2
43619	Label - Safety Arm	1
43658	Label - Power to Charger, 230V	1
44255	Danger - Crushing Hazard	4
44736	Danger - Tip-over, Tilt Alarm	1
44737	Danger - Tip-over, Trays Open	2
44753	Label - LED Diagnostic Readout	1
44980	Label - Power to Charger, 115V	1
44981	Label - Air Line to Platform, 110 PSI	2
46287	Notice - Tire Specification	4
52475	Label - Transport Tie-down	5

Part No.	Description	Quantity
62056	Cosmetic - Genie GS-2046	2
62057	Cosmetic - Genie GS-2646	2
62058	Cosmetic - Genie GS-3246	2
65052	Label - ECM Fault Codes	2
72086	Label - Lifting Eye	4
72143	Label - Emergency Stop	1
72853	Danger - Improper Use Hazard	1
72970	Instructions - Battery Charger Operation	1
82366	Label - Chevron Rando	1
82557	Label - Platform Controls Location	1
82558	Warning - Skin Injection Hazard	1
82559	Instructions - Annual Inspection	1
82561	Danger - Crushing Hazard	2
82567	Ground Control Panel	1
82657	Instructions - Battery Connection Diagram	1
82703	Label - Wheel Load, GS-2046	4
82704	Label - Wheel Load, GS-2646	4
82705	Label - Wheel Load, GS-3246	4
82787	Label - Maximum Capacity, GS-2046	1
82788	Label - Maximum Capacity, GS-2646	1
82789	Label - Maximum Capacity, GS-3246	1

This inspection continues on the next page.

Downloaded from www.Manualslib.com manuals search engine

https://truckmanualshub.com/

Inspections

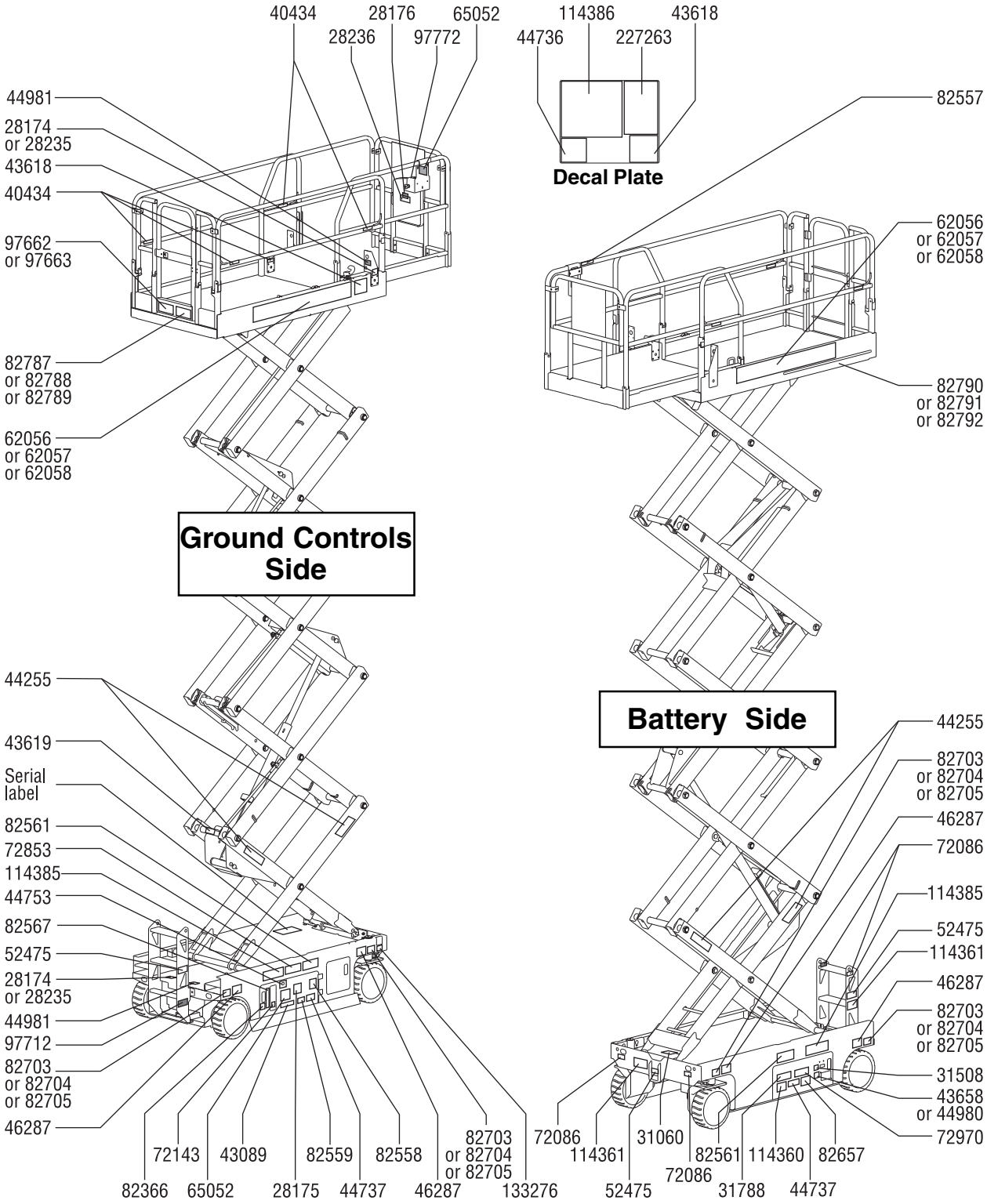

Downloaded from www.Manualslib.com manuals search engine

https://truckmanualshub.com/

Inspections

Decal Inspection for models GS-2046, GS-2646 and GS-3246

Use the pictures on the next page to verify that all decals are legible and in place.

Below is a numerical list with quantities and descriptions.

Part No.	Description	Quantity
82790	Label - Capacity Indicator, GS-2046 (if equipped)	1
82791	Label - Capacity Indicator, GS-2646 (if equipped)	1
82792	Label - Capacity Indicator, GS-3246 (if equipped)	1
97662	Instructions - Maximum Manual Force, GS-3246	1
97663	Instructions - Maximum Manual Force, GS-2046 and GS-2646	1
97712	Danger/Instructions - Brake Release Safety and Operation	1
97772	Platform Control Panel	1
114360	Danger - Tip-over Hazard, Batteries	1
114361	Label - Transport Diagram	2
114385	Danger - Electrocution Hazard	2
114386	Danger - General Safety Rules	1
133276	Label - Emergency Lowering	1
227263	Instructions - Operation, Platform Control	1

Downloaded from www.Manualslib.com manuals search engine

https://truckmanualshub.com/

Inspections

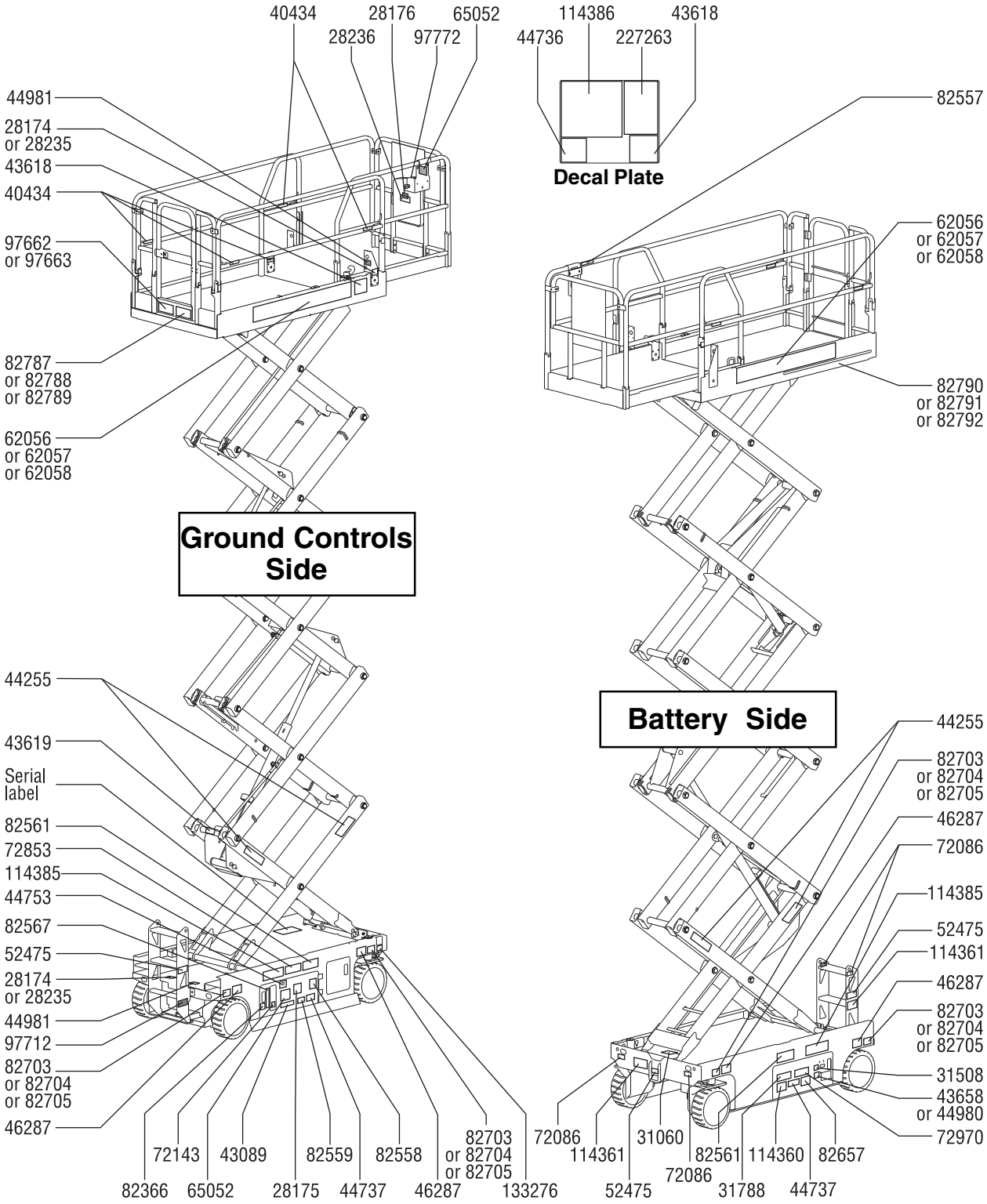

Downloaded from www.Manualslib.com manuals search engine

https://truckmanualshub.com/

Operating Instructions

Do Not Operate Unless:

☑ You learn and practice the principles of safe machine operation contained in this operator's manual.

1 Avoid hazardous situations.

2 Always perform a pre-operation inspection.

3 Always perform function tests prior to use.

4 Inspect the workplace.

5 Only use the machine as it was intended.

Fundamentals

The Operating Instructions section provides instructions for each aspect of machine operation. It is the operator's responsibility to follow all the safety rules and instructions in the operator's, safety and responsibilities manuals.

Using the machine for anything other than lifting personnel, along with their tools and materials, to an aerial work site is unsafe and dangerous.

Only trained and authorized personnel should be permitted to operate a machine. If more than one operator is expected to use a machine at different times in the same work shift, they must all be qualified operators and are all expected to follow all safety rules and instructions in the operator's, safety and responsibilities manuals. That means every new operator should perform a pre-operation inspection, function tests, and a workplace inspection before using the machine.

Downloaded from www.Manualslib.com manuals search engine

https://truckmanualshub.com/

Emergency Stop

Push in the red Emergency Stop button to the off position at the ground controls or the platform controls to stop all functions.

Repair any function that operates when either Emergency Stop button is pushed in.

Emergency Lowering

1 Pull the emergency lowering knob.

Operation From Ground

1 Turn the key switch to ground control.

2 Pull out both ground and platform red Emergency Stop buttons to the on position.

3 Be sure the battery pack is connected before operating the machine.

To Position Platform

1 Move the up/down toggle switch according to the markings on the control panel.

Drive and steer functions are not available from the ground controls.

Operation From Platform

1 Turn the key switch to platform control.

2 Pull out the ground and platform red Emergency Stop buttons to the on position.

3 Be sure the battery pack is connected before operating the machine.

To Position Platform

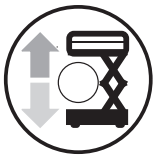

1 Press the lift function select button.

2 Press and hold the function enable switch on the control handle.

3 Move the control handle according to the markings on the control panel.

To Position with Outriggers (GS-3232 models)

To extend the outriggers:

1 Press and hold the function enable button.

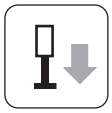

2 Press and hold the outrigger extend button.

The outriggers will begin to extend. The individual outrigger indicator light will turn solid green as the corresponding outrigger makes contact with the ground. Continue pressing the function enable and the outrigger extend buttons until the lift enable indicator light turns green and a beep is heard. The machine is now level.

When the lift error indicator light turns red, the up/down and drive functions are disabled. The lift error indicator light will turn red under the following conditions.

- The platform is raised to 6.7 m and the outriggers are not deployed.
- Not all outriggers are in contact with the ground.
- All four outriggers are in contact with the ground but the machine is not level.
- Error code.

Downloaded from www.Manualslib.com manuals search engine

https://truckmanualshub.com/

Operating Instructions

To retract the outrigger:

1 Press and hold the function enable button.

2 Press and hold the outrigger retract button.

Release the function enable and the outrigger retract buttons once the outriggers are off the ground. After approximately 5 seconds, the outrigger indicator lights will turn off. All functions are now restored.

Note: The machine drive speeds are reduced the first time the drive function is enabled after retracting the outriggers. The drive speeds are restored to normal after driving for approximately 6 seconds.

To Steer

1 Press the drive function select button.

2 Press and hold the function enable switch on the control handle.

3 Turn the steer wheels with the thumb rocker switch located on the top of the control handle.

To Drive

1 Press the drive function select button.

2 Press and hold the function enable switch on the control handle.

3 Increase speed: Slowly move the control handle off center.

Decrease speed: Slowly move the control handle toward center.

Stop: Return the control handle to center or release the function enable switch.

Use the color-coded direction arrows on the platform controls and on the platform to identify the direction the machine will travel.

Machine travel speed is restricted when the platform is raised.

Battery condition will affect machine performance. Machine drive speed and function speed will drop when the battery level indicator is flashing.

To reduce drive speed

The drive controls can operate in two different drive speed modes. When the drive speed button light is on, slow drive speed mode is active. When the button light is off, fast drive speed mode is active.

Press the drive speed button to select the desired drive speed.

⚠ Driving on a slope

Determine the slope and side slope ratings for the machine and determine the slope grade.

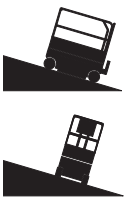

GS-1530, GS-1532, GS-2032, GS-2046 and GS-2646	
Maximum slope rating, stowed	30% (17°)
Maximum side slope rating, stowed	30% (17°)

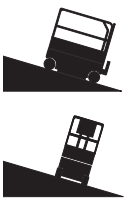

GS-1930, GS-1932, GS-2632, GS-3232 and GS-3246	
Maximum slope rating, stowed	25% (14°)
Maximum side slope rating, stowed	25% (14°)

Note: Slope rating is subject to ground conditions and adequate traction.

Press the drive speed button to the fast drive speed mode.

Downloaded from www.Manualslib.com manuals search engine

https://truckmanualshub.com/

Operating Instructions

To determine the slope grade:

Measure the slope with a digital inclinometer OR use the following procedure.

You will need:

carpenter's level

straight piece of wood, at least 1 m long

tape measure

Lay the piece of wood on the slope.

At the downhill end, lay the level on the top edge of the piece of wood and lift the end until the piece of wood is level.

While holding the piece of wood level, measure the distance from the bottom of the piece of wood to the ground.

Divide the tape measure distance (rise) by the length of the piece of wood (run) and multiply by 100.

Example:

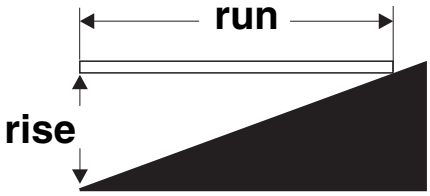

Run = 3.6 m

Rise = 0.3 m

0.3 m ÷ 3.6 m = 0.083 x 100 = 8.3%

If the slope exceeds the maximum slope or side slope rating, the machine must be winched or transported up or down the slope. See Transport and Lifting section.

Error indicator readout

If the LED diagnostic readout displays an error code, such as LL, push in and pull out the red Emergency Stop button to reset the system.

ECM Fault Codes

Code	Condition
--	Condition Normal
01	Internal ECM Error
02	ECM/Platform Communication Error
03	Undefined Platform Dip Switch Setting
12	Chassis Up/Down Toggle Closed At Start-up
18	Pothole Guard Failure
42	Platform Left Turn Switch Fault
43	Platform Right Turn Switch Fault
46	Platform Drive Enable Switch Fault
47	Platform Joystick Fault
52	Forward Coil Fault
53	Reverse Coil Fault
54	Up Coil Fault
55	Down Coil Fault
56	Right Coil Fault
57	Left Coil Fault
58	Brake Coil Fault
59	Parallel/Series Coil Fault
68	Low Battery Voltage
LL	Off-Level
OL	Overload Cutout Option

For more information, please consult the appropriate Genie Service Manual.

Downloaded from www.Manualslib.com manuals search engine

https://truckmanualshub.com/

Operating Instructions

Operation From Ground with Controller

Maintain safe distances between the operator, machine and fixed objects.

Be aware of the direction the machine will travel when using the controller.

Platform Overload

Flashing OL in the LED diagnostic readout indicates the platform is overloaded and no functions will operate. An alarm will sound.

1 Push in the Red Emergency stop button to the off position.

2 Remove weight from the platform.

3 Pull out the Red Emergency stop button to the on position.

Battery Level Indicator

Full Low

Use the LED diagnostic readout to determine the battery level.

How to use the Safety Arm

1 Raise the platform approximately 2.4 m from the ground.

2 Rotate the safety arm away from the machine and let it hang down.

3 Lower the platform until the safety arm rests securely on the link. Keep clear of the safety arm when lowering the platform.

How to Fold Down the Guardrails

GS-1530, GS-1532, GS-1930, GS-1932, GS-2032, GS-2632 and GS-3232

The platform railing system consists of one fold down rail section for the extension deck and one section for the main deck. All sections are held in place by four wire lock pins.

1 Fully lower the platform and retract the platform extension.

2 Remove the platform controls.

3 From inside the platform, remove the two rear extension deck wire lock pins.

4 From the rear of the extension deck railing, fold down the front rail assemble. Keep hands free of pinch points.

5 Replace the two removed pins back into each side rail bracket.

6 At the rear of the main deck, remove the two lower wire lock pins.

7 Carefully open the gate and move to the rear step or the ground.

8 From the rear step or from the ground, fold down the main deck railing assembly. Keep hands free of pinch points.

9 Replace the two removed pins back into each side rail bracket.

Note: To assist in the removal and replacement of the wire lock pins, pull or push back on the railing to compress the rubber bumpers.

Downloaded from www.Manualslib.com manuals search engine

https://truckmanualshub.com/

GS-2046, GS-2646 and GS-3246

The platform railing system consists of three fold down rail sections for the extension deck and three sections for the main deck. All six sections are held in place by four wire lock pins.

1 Fully lower the platform and retract the platform extension.

2 Remove the platform controls.

3 From inside the platform, remove the two front wire lock pins.

4 Fold down the front rail assembly. Keep hands clear of pinch points.

5 Replace the two removed pins back into each side rail bracket.

6 Fold down each side rail assembly. Keep hands clear of pinch points.

7 At the rear of the main deck, remove the two wire lock pins.

8 Carefully open the gate and move to the ground.

9 Fold down the rear gate and entry side rails as one unit. Keep hands clear of pinch points.

10 Fold down the left and right side rails. Keep hands clear of pinch points.

11 Replace the two removed pins back into each side rail bracket.

How to Raise the Guardrails

Follow the fold down instructions but in reverse order.

Downloaded from www.Manualslib.com manuals search engine

https://truckmanualshub.com/

Operating Instructions

Battery and Charger Instructions

Observe and Obey:

- ☑ Do not use an external charger or booster battery.
- ☑ Charge the battery in a well-ventilated area.
- ☑ Use proper AC input voltage for charging as indicated on the charger.
- ☑ Use only a Genie authorized battery and charger.

To Charge Battery

1 Be sure the batteries are connected before charging the batteries.

2 Open the battery compartment. The compartment should remain open for the entire charging cycle.

Maintenance - free batteries

3 Connect the battery charger to a grounded AC circuit.

4 The charger will indicate when the battery is fully charged.

Standard Batteries

3 Remove the battery vent caps and check the battery acid level. If necessary, add only enough distilled water to cover the plates. Do not overfill prior to the charge cycle.

4 Replace the battery vent caps.

5 Connect the battery charger to a grounded AC circuit.

6 The charger will indicate when the battery is fully charged.

7 Check the battery acid level when the charging cycle is complete. Replenish with distilled water to the bottom of the fill tube. Do not overfill.

Dry Battery Filling and Charging Instructions

1 Remove the battery vent caps and permanently remove the plastic seal from the battery vent openings.

2 Fill each cell with battery acid (electrolyte) until the level is sufficient to cover the plates.

Do not fill to maximum level until the battery charge cycle is complete. Overfilling can cause the battery acid to overflow during charging. Neutralize battery acid spills with baking soda and water.

3 Install the battery vent caps.

4 Charge the battery.

5 Check the battery acid level when the charging cycle is complete. Replenish with distilled water to the bottom of the fill tube. Do not overfill.

Downloaded from www.Manualslib.com manuals search engine

https://truckmanualshub.com/

Transport and Lifting Instructions

Observe and Obey:

- ☑ Genie Industries provides this securement information as a recommendation. Drivers are solely responsible for making sure machines are properly secured and the correct trailer is selected pursuant to US Department of Transportation regulations, other localized regulations, and their company policy.
- ☑ Genie customers needing to containerize any lift or Genie product should source a qualified freight forwarder with expertise in preparing, loading and securing construction and lifting equipment for international shipment.
- ☑ Only qualified aerial lift operators should move the machine on or off the truck.
- ☑ The transport vehicle must be parked on a level surface.
- ☑ The transport vehicle must be secured to prevent rolling while the machine is being loaded.
- ☑ Be sure the vehicle capacity, loading surfaces and chains or straps are sufficient to withstand the machine weight. Genie lifts are very heavy relative to their size. See the serial label for the machine weight.
- ☑ The machine must be on a level surface or secured before releasing the brakes.
- ☑ Do not allow the rails to fall when the snap pins are removed. Maintain a firm grasp on the rails when the rails are lowered.
- ☑ Do not drive the machine on a slope that exceeds the uphill, downhill or side slope rating. See Driving on a Slope in the Operating Instructions section.
- ☑ If the slope of the transport vehicle exceeds the maximum slope rating, the machine must be loaded and unloaded using a winch as described in the brake release operation.

Brake Release Operation

1 Chock the wheels to prevent the machine from rolling.

2 Be sure the winch line is properly secured to the drive chassis tie points and the path is clear of all obstructions.

3 Push in the black brake release knob to open the brake valve.

4 Pump the red brake release pump knob.

After the machine is loaded:

1 Chock the wheels to prevent the machine from rolling.

2 Pull the red Emergency Stop buttons on both the grounds and platform controls to the on position.

3 Press the drive function select button. Press and hold the function enable switch on the control handle. Move the control handle off center and immediately release it to reset the brakes.

4 Push the red Emergency stop buttons on both the grounds and platform controls to the off position.

Towing the Genie GS-1530, GS-1532, GS-1930, GS-1932, GS-2032, GS-2632, GS-3232, GS-2046, GS-2646 and GS-3246 is not recommended. If the machine must be towed, do not exceed 3.2 km/h.

Downloaded from www.Manualslib.com manuals search engine

https://truckmanualshub.com/

Transport and Lifting Instructions

⚠ Securing to Truck or Trailer for Transit

Always use the extension deck lock when the machine is transported.

Turn the key switch to the off position and remove the key before transporting.

Inspect the entire machine for loose or unsecured items.

Use chains or straps of ample load capacity.

Use a minimum of 2 chains or straps.

Adjust the rigging to prevent damage to the chains.

GS-1530
GS-1532
GS-1930
GS-1932

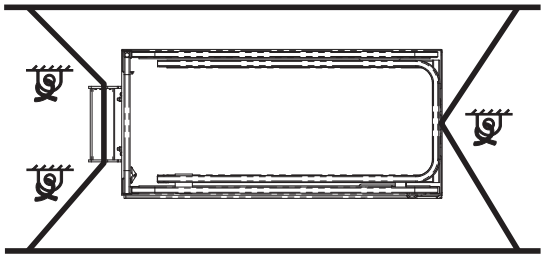

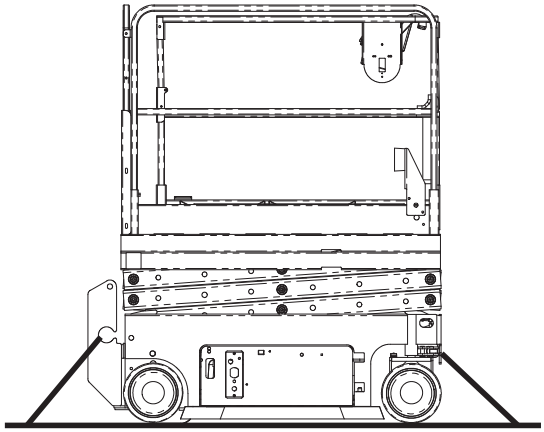

GS-2032 GS-2046
GS-2632 GS-2646
GS-3232 GS-3246

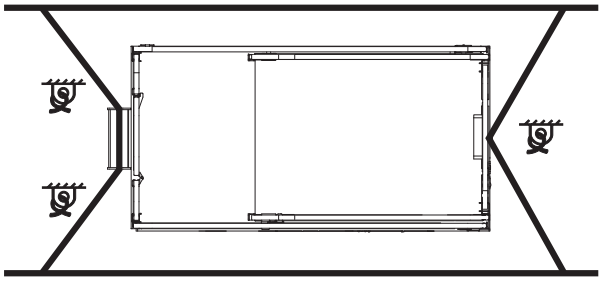

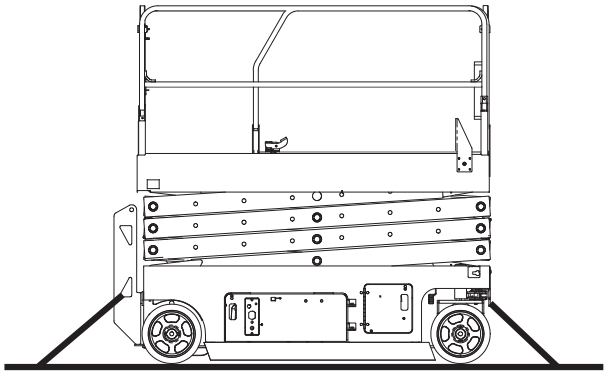

Downloaded from www.Manualslib.com manuals search engine

https://truckmanualshub.com/

Transport and Lifting Instructions

Observe and Obey:

- ☑ Only qualified riggers should rig and lift the machine.
- ☑ Be sure the crane capacity, loading surfaces and straps or lines are sufficient to withstand the machine weight. See the serial label for the machine weight.

Lifting the Machine with a Forklift

Be sure the extension deck, controls and component trays are secure. Remove all loose items on the machine.

Fully lower the platform. The platform must remain lowered during all loading and transport procedures.

Use the forklift pockets located on both sides of the ladder.

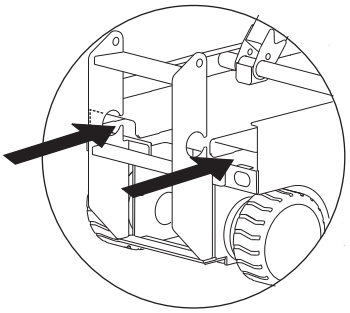

Position the forklift forks in position with the forklift pockets.

Drive forward to the full extent of the forks.

Raise the machine 15 cm and then tilt the forks back slightly to keep the machine secure.

Be sure the machine is level when lowering the forks.

NOTICE Lifting the machine from the side can result in component damage.

Downloaded from www.Manualslib.com manuals search engine

https://truckmanualshub.com/

Transport and Lifting Instructions

Lifting Instructions

Fully lower the platform. Be sure the extension deck, controls and component trays are secure. Remove all loose items on the machine.

Determine the center of gravity of your machine using the table below and the pictures on the next page.

Attach the rigging only to the designated lifting points on the machine. There are two 2.5 cm holes on the front of the machine and two holes in the ladder for lifting.

Adjust the rigging to prevent damage to the machine and to keep the machine level.

Center of Gravity Table

Model	X Axis	Y Axis
GS-1530	49.8 cm	47.2 cm
GS-1532	49.8 cm	47.2 cm
GS-1930	50.8 cm	49.5 cm
GS-1932	50.8 cm	49.5 cm
GS-2032	80.9 cm	53.9 cm
GS-2632	82.2 cm	59.3 cm
GS-3232	78.7 cm	67.3 cm
GS-2046	82.7 cm	56.8 cm
GS-2646	88.2 cm	56.7 cm
GS-3246	83.7 cm	59.9 cm

GS-1530
GS-1532
GS-1930
GS-1932

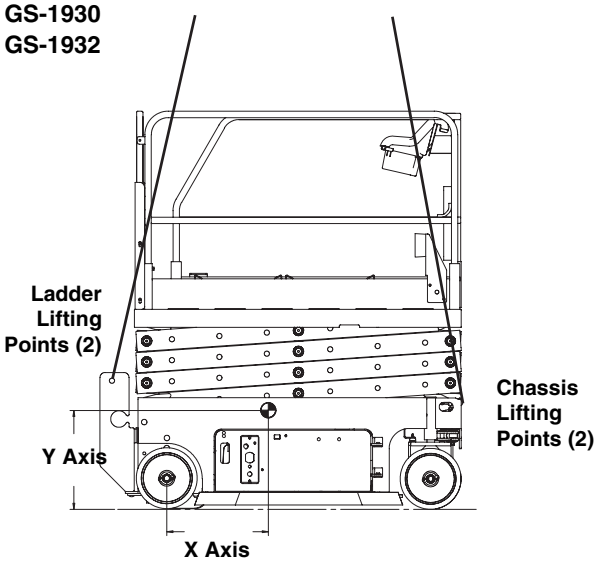

GS-2032
GS-2632
GS-3232
GS-2046
GS-2646
GS-3246

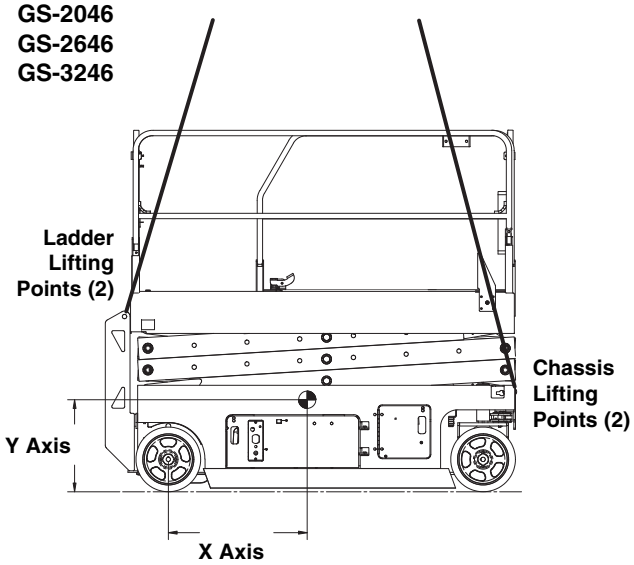

Downloaded from www.Manualslib.com manuals search engine

https://truckmanualshub.com/

Maintenance

Observe and Obey:

- ☑ Only routine maintenance items specified in this manual shall be performed by the operator.
- ☑ Scheduled maintenance inspections shall be completed by qualified service technicians, according to the manufacturer's specifications and the requirements specified in the responsibilities manual.
- ☑ Use only Genie approved replacement parts.

Maintenance Symbols Legend

The following symbols have been used in this manual to help communicate the intent of the instructions. When one or more of the symbols appears at the beginning of a maintenance procedure, it conveys the meaning below.

Indicates that tools will be required to perform this procedure.

Indicates that new parts will be required to perform this procedure.

Check the Hydraulic Oil Level

Maintaining the hydraulic oil at the proper levels is essential to machine operation. Improper hydraulic oil levels can damage hydraulic components. Daily checks allow the inspector to identify changes in oil level that might indicate the presence of hydraulic system problems.

Note: Perform this procedure with the platform in the stowed position.

1 Visually inspect the oil level in the hydraulic tank.

⊙ Result: The hydraulic oil level should be as marked on the tank.

2 Add oil if necessary. Do not overfill.

Hydraulic oil specifications	
Hydraulic oil type	Chevron Rando equivalent

Downloaded from www.Manualslib.com manuals search engine

https://truckmanualshub.com/

Maintenance

Check the Batteries

Proper battery condition is essential to good machine performance and operational safety. Improper fluid levels or damaged cables and connections can result in component damage and hazardous conditions.

Note: This procedure does not need to be performed on machines with sealed or maintenance - free batteries.

Electrocution hazard. Contact with hot or live circuits may result in death or serious injury. Remove all rings, watches and other jewelry.

Bodily injury hazard. Batteries contain acid. Avoid spilling or contacting battery acid. Neutralize battery acid spills with baking soda and water.

Note: Perform this test after fully charging the batteries.

1 Put on protective clothing and eye wear.

2 Be sure that the battery cable connections are tight and free of corrosion.

3 Be sure that the battery hold-down bars are in place and secure.

4 Remove the battery vent caps.

5 Check the battery acid level of each battery. If needed, replenish with distilled water to the bottom of the battery fill tube. Do not overfill.

6 Install the vent caps.

Note: Adding terminal protectors and a corrosion preventative sealant will help eliminate the corrosion on the battery terminals and cables.

Scheduled Maintenance

Maintenance performed quarterly, annually and every two years must be completed by a person trained and qualified to perform maintenance on this machine according to the procedures found in the service manual for this machine.

Machines that have been out of service for more than three months must receive the quarterly inspection before they are put back into service.

Downloaded from www.Manualslib.com manuals search engine

https://truckmanualshub.com/

Specifications

Model	GS-1530 and GS-1532
Height, working maximum	6.4 m
Height, platform maximum	4.6 m
Height, stowed maximum	2.07 m
Height, stowed maximum rails folded	1.72 cm
Platform height, stowed maximum	97 cm
Height, guard rails	1.10 m
Width GS-1530 GS-1532	 76 cm 81 cm
Length, stowed	1.83 m
Length, platform extended	2.72 m
Platform extension length	88.9 cm
Platform dimensions, (length x width)	1.6 m x 75 cm
Maximum load capacity,	272 - 484 kg
Maximum wind speed, GS-1530	0 m/s
Maximum wind speed, GS-1532	12.5 m/s
Wheelbase	1.32 m
Turning radius (outside)	1.55 m
Turning radius (inside)	0 cm
Ground clearance	6.1 cm
Ground clearance Pothole guards deployed	1.9 cm
Weight GS-1530 GS-1532 (Machine weights vary with option configurations. See serial label for specific machine weight.)	 1257 kg 1269 kg
Power source	4 Batteries, 6V 225AH
Battery charger voltage	85-264 VAC 60/50 Hz, 900 W

Continuous improvement of our products is a Genie policy. Product specifications are subject to change without notice or obligation.

Controls		Proportional
AC outlet in platform		standard
Maximum hydraulic pressure (functions)	3500 psi	241 bar
System voltage		24V
Tire size		12 x 4.5 x 8 in
Airborne noise emissions		
Sound pressure level at ground workstation		< 70 dBA
Sound pressure level at platform workstation		< 70 dBA
Vibration value does not exceed 2.5 m/s^2		
Maximum slope rating, stowed position		30% (17°)
Maximum side slope rating, stowed position		30% (17°)
Note: Slope rating is subject to ground conditions and adequate traction.		
Drive speeds		
Stowed, maximum		4.0 km/h
Platform raised, maximum		0.8 km/h 12.5 m/55 sec
Floor loading information, GS-1530		
Tire load, maximum		547 kg
Tire contact pressure		9.40 kg / cm^2 921 kPa
Occupied floor pressure		1216 kg / m^2 11.92 kPa
Floor loading information, GS-1532		
Tire load, maximum		547 kg
Tire contact pressure		9.43 kg / cm^2 924 kPa
Occupied floor pressure		1142 kg / m^2 11.2 kPa

Note: Floor loading information is approximate and does not incorporate different option configurations. It should be used only with adequate safety factors.

Downloaded from www.Manualslib.com manuals search engine

https://truckmanualshub.com/

Specifications

Model	GS-1930 and GS-1932
Height, working maximum	7.6 m
Height, platform maximum	5.8 m
Height, stowed maximum	2.10 m
Height, stowed maximum rails folded	1.75 cm
Platform height, stowed maximum	1.0 m
Height, guard rails	1.10 m
Width GS-1930 GS-1932	 76 cm 81 cm
Length, stowed	1.83 m
Length, platform extended	2.72 m
Platform extension length	88.9 cm
Platform dimensions, (length x width)	1.6 m x 75 cm
Maximum load capacity,	227 - 435 kg
Maximum wind speed, GS-1930	0 m/s
Maximum wind speed, GS-1932	12.5 m/s
Wheelbase	1.32 m
Turning radius (outside)	1.55 m
Turning radius (inside)	0 cm
Ground clearance	6.1 cm
Ground clearance Pothole guards deployed	1.9 cm
Weight GS-1930 GS-1932 (Machine weights vary with option configurations. See serial label for specific machine weight.)	 1476 kg 1483 kg
Power source	4 Batteries, 6V 225AH
Battery charger voltage	85-264 VAC 60/50 Hz, 900 W

Continuous improvement of our products is a Genie policy. Product specifications are subject to change without notice or obligation.

Controls	Proportional
AC outlet in platform	standard
Maximum hydraulic pressure (functions)	241 bar
System voltage	24V
Tire size	12 x 4.5 x 8 in
Airborne noise emissions	
Sound pressure level at ground workstation	< 70 dBA
Sound pressure level at platform workstation	< 70 dBA
Vibration value does not exceed 2.5 m/s^2	
Maximum slope rating, stowed position	25% (14°)
Maximum side slope rating stowed position	25% (14°)
Note: Slope rating is subject to ground conditions and adequate traction.	
Drive speeds	
Stowed, maximum	4.0 km/h
Platform raised, maximum	0.8 km/h 12.5 m/55 sec
Floor loading information, GS-1930	
Tire load, maximum	600 kg
Tire contact pressure	10.35 kg / cm^2 1014 kPa
Occupied floor pressure	1391 kg / m^2 13.65 kPa
Floor loading information, GS-1932	
Tire load, maximum	600 kg
Tire contact pressure	10.35 kg / cm^2 1014 kPa
Occupied floor pressure	1313 kg / m^2 12.88 kPa

Note: Floor loading information is approximate and does not incorporate different option configurations. It should be used only with adequate safety factors.

Downloaded from www.Manualslib.com manuals search engine

https://truckmanualshub.com/

Specifications

Model	GS-2032
Height, working maximum	7.9 m
Height, platform maximum	6.1 m
Height, stowed maximum	2.13 m
Height, stowed maximum rails folded	1.78 m
Platform height, stowed maximum	1.03 m
Height, guard rails	1.10 m
Width	81 cm
Length, stowed	2.44 m
Length, platform extended	3.33 m
Platform extension length	88.9 cm
Platform dimensions, (length x width)	2.26 m x 81cm
Maximum load capacity,	363 - 693 kg
Maximum wind speed	12.5 m/s
Wheelbase	1.85 m
Turning radius (outside)	2.12 m
Turning radius (inside)	0 cm
Ground clearance	8.9 cm
Ground clearance Pothole guards deployed	2.2 cm
Weight (Machine weights vary with option configurations. See serial label for specific machine weight.)	1830 kg

Power source	4 Batteries, 6V 225AH
Battery charger voltage	85-264 VAC 60/50 Hz, 900 W

Controls	Proportional
AC outlet in platform	standard
Maximum hydraulic pressure (functions)	241.3 bar
System voltage	24V
Tire size	15 x 5 x 11 1/4
Airborne noise emissions	
Sound pressure level at ground workstation	< 70 dBA
Sound pressure level at platform workstation	< 70 dBA
Vibration value does not exceed 2.5 m/s^2	
Maximum slope rating, stowed position	30% (17°)
Maximum side slope rating, stowed position	30% (17°)
Note: Slope rating is subject to ground conditions and adequate traction.	
Drive speeds	
Stowed, maximum	3.5 km/h
Platform raised, maximum	0.8 km/h 12.2 m/54 sec
Floor loading information	
Tire load, maximum	802 kg
Tire contact pressure	12.44 kg / cm^2 1219 kPa
Occupied floor pressure	1119 kg / m^2 11.68 kPa

Note: Floor loading information is approximate and does not incorporate different option configurations. It should be used only with adequate safety factors.

Continuous improvement of our products is a Genie policy. Product specifications are subject to change without notice or obligation.

Downloaded from www.Manualslib.com manuals search engine

https://truckmanualshub.com/

Specifications

Model	GS-2632
Height, working maximum	9.8 m
Height, platform maximum	7.9 m
Height, stowed maximum	2.26 m
Height, stowed maximum rails folded	1.91 m
Platform height, stowed maximum	1.16 m
Height, guard rails	1.10 m
Width	81 cm
Length, stowed	2.44 m
Length, platform extended	3.33 m
Platform extension length	88.9 cm
Platform dimensions, (length x width)	2.26 m x 81cm
Maximum load capacity,	227 - 479 kg
Maximum wind speed	0 m/s
Wheelbase	1.85 m
Turning radius (outside)	2.13 m
Turning radius (inside)	0 cm
Ground clearance	8.9 cm
Ground clearance Pothole guards deployed	2.2 cm
Weight (Machine weights vary with option configurations. See serial label for specific machine weight.)	1985 kg

Power source	4 Batteries, 6V 225AH
Battery charger voltage	85-264 VAC 60/50 Hz, 900 W
Controls	Proportional
AC outlet in platform	standard
Maximum hydraulic pressure (functions)	241.3 bar
System voltage	24V
Tire size	15 x 5 x 11 1/4
Airborne noise emissions	
Sound pressure level at ground workstation	< 70 dBA
Sound pressure level at platform workstation	< 70 dBA
Vibration value does not exceed 2.5 m/s^2	
Maximum slope rating, stowed position	25% (14°)
Maximum side slope rating, stowed position	25% (14°)
Note: Slope rating is subject to ground conditions and adequate traction.	
Drive speeds	
Stowed, maximum	3.5 km/h
Platform raised, maximum	0.8 km/h 12.2 m/54 sec
Floor loading information	
Tire load, maximum	830 kg
Tire contact pressure	12.87 kg / cm^2 1262 kPa
Occupied floor pressure	1187 kg / m^2 11.65 kPa

Note: Floor loading information is approximate and does not incorporate different option configurations. It should be used only with adequate safety factors.

Continuous improvement of our products is a Genie policy. Product specifications are subject to change without notice or obligation.

Downloaded from www.Manualslib.com manuals search engine

https://truckmanualshub.com/

Specifications

Model	GS-3232
Height, working maximum	11.6 m
Height, working drivable	8.5 m
Height, platform maximum	9.8 m
Height, platform drivable	6.7 m
Height, stowed maximum	2.38 m
Height, stowed maximum rails folded	2.04 m
Platform height, stowed maximum	1.28 m
Height, guard rails	1.10 m
Width	81 cm
Length, stowed	2.44 m
Length, platform extended	3.33 m
Platform extension length	88.9 cm
Platform dimensions, (length x width)	2.26 m x 81 cm
Maximum load capacity,	227 - 498 kg
Maximum wind speed	0 m/s
Wheelbase	1.85 m
Turning radius (outside)	2.13 m
Turning radius (inside)	0 cm
Ground clearance	8.9 cm
Ground clearance Pothole guards deployed	2.2 cm
Weight (Machine weights vary with option configurations. See serial label for specific machine weight.)	2352 kg
Power source	4 Batteries, 6V 225AH
Battery charger voltage	85-264 VAC 60/50 Hz, 900 W

Controls	Proportional
AC outlet in platform	standard
Maximum hydraulic pressure (functions)	241.3 bar
System voltage	24V
Tire size	15 x 5 x 11 1/4
Airborne noise emissions	
Sound pressure level at ground workstation	< 70 dBA
Sound pressure level at platform workstation	< 70 dBA
Vibration value does not exceed 2.5 m/s^2	
Maximum slope rating, stowed position	25% (14°)
Maximum side slope rating, stowed position	25% (14°)
Note: Slope rating is subject to ground conditions and adequate traction.	
Drive speeds	
Stowed, maximum	3.5 km/h
Platform raised, maximum	0.8 km/h 12.2 m/54 sec
Floor loading information	
Tire load, maximum	804 kg
Tire contact pressure	12.48 kg/cm^2 1223 kPA
Occupied floor pressure	1401 kg/m^2 13.76 kPA

Note: Floor loading information is approximate and does not incorporate different option configurations. It should be used only with adequate safety factors.

Continuous improvement of our products is a Genie policy. Product specifications are subject to change without notice or obligation.

Downloaded from www.Manualslib.com manuals search engine

https://truckmanualshub.com/

Specifications

Model	GS-2046
Height, working maximum	7.9 m
Height, platform maximum	6.1 m
Height, stowed maximum	2.14 m
Height, stowed maximum rails folded	1.55 m
Platform height, stowed maximum	1.04 m
Height, guard rails	1.10 cm
Width	1.16 m
Length, stowed	2.44 m
Length, platform extended	3.33 m
Platform extension length	88.9 cm
Platform dimensions, (length x width)	2.26 x 1.16 m
Maximum load capacity,	544 - 985 kg
Maximum wind speed	12.5 m/s
Wheelbase	1.85 m
Turning radius (outside)	2.29 m
Turning radius (inside)	0 cm
Ground clearance	10.2 cm
Ground clearance Pothole guards deployed	1.9 cm
Weight (Machine weights vary with option configurations. See serial label for specific machine weight.)	1945 kg
Power source	4 Batteries, 6V 225AH
Battery charger voltage	85-264 VAC 60/50 Hz, 900 W

Controls		Proportional
AC outlet in platform		standard
Maximum hydraulic pressure (functions)	3500 psi	241 bar
System voltage		24V
Tire size		15 x 5 x 11 1/4
Airborne noise emissions		
Sound pressure level at ground workstation		< 70 dBA
Sound pressure level at platform workstation		< 70 dBA
Vibration value does not exceed 2.5 m/s^2		
Maximum slope rating, stowed position		30% (17°)
Maximum side slope rating, stowed position		30% (17°)
Note: Slope rating is subject to ground conditions and adequate traction.		
Drive speeds		
Stowed, maximum		3.4 km/h
Platform raised, maximum		0.8 km/h 12.2 m/45 sec
Floor loading information		
Tire load, maximum		964 kg
Tire contact pressure		14.96 kg / cm^2 1465 kPa
Occupied floor pressure		963 kg / m^2 9.45 kPa

Note: Floor loading information is approximate and does not incorporate different option configurations. It should be used only with adequate safety factors.

Continuous improvement of our products is a Genie policy. Product specifications are subject to change without notice or obligation.

Downloaded from www.Manualslib.com manuals search engine

https://truckmanualshub.com/

Specifications

Model	GS-2646
Height, working maximum	9.8 m
Height, platform maximum	7.9 m
Height, stowed maximum	2.26 m
Height, stowed maximum rails folded	1.68 m
Platform height, stowed maximum	1.16 m
Height, guard rails	1.10 cm
Width	1.17 m
Length, stowed	2.44 m
Length, platform extended	3.33 m
Platform extension length	88.9 cm
Platform dimensions, (length x width)	2.26 x 1.16 m
Maximum load capacity,	454 - 798 kg
Maximum wind speed	12.5 m/s
Wheelbase	1.85 m
Turning radius (outside)	2.29 m
Turning radius (inside)	0 cm
Ground clearance	10.2 cm
Ground clearance Pothole guards deployed	1.9 cm
Weight (Machine weights vary with option configurations. See serial label for specific machine weight.)	2468 kg
Power source	4 Batteries, 6V 225AH
Battery charger voltage	85-264 VAC 60/50 Hz, 900 W

Controls	Proportional
AC outlet in platform	standard
Maximum hydraulic pressure (functions)	241 bar
System voltage	24V
Tire size	15 x 5 x 11 1/4
Airborne noise emissions	
Sound pressure level at ground workstation	< 70 dBA
Sound pressure level at platform workstation	< 70 dBA
Vibration value does not exceed 2.5 m/s^2	
Maximum slope rating, stowed position	30% (17°)
Maximum side slope rating, stowed position	30% (17°)
Note: Slope rating is subject to ground conditions and adequate traction.	
Drive speeds	
Stowed, maximum	3.5 km/h
Platform raised, maximum	0.8 km/h 12.2 m/45 sec
Floor loading information	
Tire load, maximum	1136 kg
Tire contact pressure	17.63 kg / cm^2 1727 kPa
Occupied floor pressure	1110 kg / m^2 10.89 kPa

Note: Floor loading information is approximate and does not incorporate different option configurations. It should be used only with adequate safety factors.

Continuous improvement of our products is a Genie policy. Product specifications are subject to change without notice or obligation.

Downloaded from www.Manualslib.com manuals search engine

https://truckmanualshub.com/

Specifications

Model	GS-3246
Height, working maximum	11.6 m
Height, platform maximum	9.8 m
Height, stowed maximum	2.37 m
Height, stowed maximum rails folded	1.80 m
Platform height, stowed maximum	1.28 m
Height, guard rails	1.10 cm
Width	1.17 m
Length, stowed	2.44 m
Length, platform extended	3.33 m
Platform extension length	88.9 cm
Platform dimensions, (length x width)	2.26 x 1.16 m
Maximum load capacity,	318 - 699 kg
Maximum wind speed	12.5 m/s
Wheelbase	1.85 m
Turning radius (outside)	2.29 m
Turning radius (inside)	0 cm
Ground clearance	10.2 cm
Ground clearance Pothole guards deployed	1.9 cm
Weight (Machine weights vary with option configurations. See serial label for specific machine weight.)	2796 kg
Power source	4 Batteries, 6V 225AH
Battery charger voltage	85-264 VAC 60/50 Hz, 900 W

Controls		Proportional
AC outlet in platform		standard
Maximum hydraulic pressure (functions)	3500 psi	241 bar
System voltage		24V
Tire size		15 x 5 x 11 1/4
Airborne noise emissions		
Sound pressure level at ground workstation		< 70 dBA
Sound pressure level at platform workstation		< 70 dBA
Vibration value does not exceed 2.5 m/s^2		
Maximum slope rating, stowed position		25% (14°)
Maximum side slope rating, stowed position		25% (14°)
Note: Slope rating is subject to ground conditions and adequate traction.		
Drive speeds		
Stowed, maximum		3.5 km/h
Platform raised, maximum		0.8 km/h 12.2 m/45 sec
Floor loading information		
Tire load, maximum		1183 kg
Tire contact pressure		18.36 kg / cm^2 1799 kPa
Occupied floor pressure		1198 kg / m^2 11.75 kPa

Note: Floor loading information is approximate and does not incorporate different option configurations. It should be used only with adequate safety factors.

Continuous improvement of our products is a Genie policy. Product specifications are subject to change without notice or obligation.

Downloaded from www.Manualslib.com manuals search engine

https://truckmanualshub.com/

Distributed By:

Genie North America
Phone 425.881.1800
Toll Free USA and Canada
800.536.1800
Fax 425.883.3475

Genie Australia Pty Ltd.
Phone +61 7 3375 1660
Fax +61 7 3375 1002

Genie China
Phone +86 21 53852570
Fax +86 21 53852569

Genie Malaysia
Phone +65 98 480 775
Fax +65 67 533 544

Genie Japan
Phone +81 3 3453 6082
Fax +81 3 3453 6083

Genie Korea
Phone +82 25 587 267
Fax +82 25 583 910

Genie Brasil
Phone +55 11 41 665 755
Fax +55 11 41 665 754

Genie Holland
Phone +31 183 581 102
Fax +31 183 581 566

Genie Scandinavia
Phone +46 31 575100
Fax +46 31 579020

Genie France
Phone +33 (0)2 37 26 09 99
Fax +33 (0)2 37 26 09 98

Genie Iberica
Phone +34 93 579 5042
Fax +34 93 579 5059

Genie Germany
Phone 0800 180 9017
Phone +49 422 149 1818
Fax +49 422 149 1820

Genie U.K.
Phone +44 (0)1476 584333
Fax +44 (0)1476 584334

Genie Mexico City
Phone +52 55 5666 5242
Fax +52 55 5666 3241

Downloaded from www.Manualslib.com manuals search engine