Operation & Maintenance Manual

VEAM320200

WA70-5

WHEEL LOADER

SERIAL NUMBERS H50051 and up

WARNING

Unsafe use of this machine may cause serious injury or death. Operators and maintenance personnel must read this manual before operating or maintaining this machine. This manual should be kept near the machine for reference and periodically reviewed by all personnel who will come into contact with it.

NOTICE

Komatsu has had the operating and maintenance instructions translated into all the languages of the member states in the European Union. Should you wish to have a version of the operating instructions in another language, please don't hesitate to ask at your local dealer's.

© 2004 Komatsu Hanomag GmbH
All Rights Reserved
Printed in Europe 10-04

KOMATSU

1. Introduction

1.1. Product publications information

VARIOUS PRODUCT PARTS & SERVICE PUBLICATIONS ARE AVAILABLE TO ALL **KOMATSU** CONSTRUCTION EQUIPMENT OWNERS, INCLUDING OPERATION & MAINTENANCE MANUALS, PARTS BOOKS AND SHOP MANUALS.

SPECIAL PUBLICATIONS SUCH AS SERVICE TOOL, AIR CONDITIONING, AND TURBOCHARGER SHOP MANUALS ARE ALSO AVAILABLE AS WELL AS SELECTED OPERATION & MAINTENANCE AND SHOP MANUALS IN FOREIGN LANGUAGES.

THE PUBLICATIONS LISTED BELOW ARE AVAILABLE FOR THIS PARTICULAR MACHINE(S).

DESCRIPTION	FORM NUMBER
PARTS BOOK - PAPER:	
Engine and Chassis	VZPB193200
OPERATION & MAINTENANCE MANUAL:	
Chassis	VEAM320200
SHOP MANUAL:	
Engine	CU3666417-00
Chassis	VEBM250100
SAFETY MANUAL:	_____

PARTS AND SERVICE PUBLICATIONS CAN *ONLY* BE ACQUIRED BY AUTHORIZED KOMATSU DISTRIBUTORS, USING THE KOMATSU AMERICA INTERNATIONAL COMPANY PARTS INVENTORY PROCESSING SYSTEM (PIPS).

IF THE PIPS SYSTEM IS NOT AVAILABLE AT THE DISTRIBUTOR LOCATION, THEN THE FOLLOWING REQUISITION FOR TECHNICAL SERVICE PUBLICATIONS AND SERVICE FORMS CAN BE USED. FORM KDC91D IS SHOWN ON THE REVERSE SIDE OF THIS PAGE.

REQUISITION FOR TECHNICAL SERVICE PUBLICATIONS AND SERVICE FORMS

COMPLETE FORM AND RETURN TO ——> **Komatsu America International Company**
440 North Fairway Drive
Vernon Hills, IL 60061-8112 U.S.A.
Attn: Technical Publications
Fax No. (847) 970-4186
Tel No. (847) 970-5887

SHIP TO ——————>

TYPE or **PRINT ONLY ——————>**

COMPANY NAME	PURCHASE ORDER NO.
ATTN.	
STREET ADDRESS	ORDRER DATE
CITY. STATE. ZIP CODE	
COUNTRY	

PHONE NO.	FAX NO.	SHIPPING METHOD	DISTR/BRANCH CODE

IMPORTANT - TO ASSURE SHIPMENT OF THE CORRECT PUBLICATION(S), THE MODEL NUMBER AND MACHINE SERIAL NUMBER MUST BE SHOWN.

QTY.	PUBLICATION FORM NO.	PARTS BOOK (P-PAPER, M-MICROFICHE)	PUBLICATION DESCRIPTION	MODEL NUMBER	SERIAL NUMBER

1.2. Foreword

The machine must be operated, cleaned, and maintained very carefully to ensure safe and troublefree operation. If you operate the machine correctly, these operating instructions will help you to avoid injuries and damage to property. To ensure this, these operating instructions take into account all applicable legal regulations and directives; the operating instructions comprise the following information:

- Notes on the Operating Instructions
- Notes on Transport
- Notes on Safety Regulations
- Operating Instructions
- Troubleshooting
- Maintenance Instructions
- Technical Data
- Notes on Lubricants and Operating Agents

The operating manual belongs to the machine and is stored in the lid of the hinged console, on the left of the driver's cab.

The operating instructions are part of the machine and must always be available at hand in the machine.

If the operating instructions have been lost or if they have become unreadable, because they are dirty, you may receive a new copy from Komatsu or your local Komatsu dealer. If the machine is resold, the operating instructions, the EU Declaration of Conformity (CE), and the licence are to be handed over to the new owner.

The owner of the machine has to ensure that

- all persons driving the machine have the legally required minimum age and are physically and mentally fit to perform the tasks they are charged with.
- all persons in charge with operating or maintaining the machine are appropriately instructed before operation or maintenance is started. They must have completely read and understood these operating instructions. In particular, this applies to the following section "Notes on Safety Regulations" and the chapter "Safety".
- the machine is correctly operated.
- the machine is not improperly modified.

Please note:

If the owner modifies safety-related parts of the machine, the certificate of conformity of the manufacturer will lapse and the person who has performed the modification has to issue a new certificate. Should you have any questions concerning this point, please do not hesitate to ask Komatsu.

Our continuous effort to improve the machine's design may lead to changes of machine details. However, the introduction of these improvements does not oblige us to perform them on machines which have already been delivered and are already in use.

If these improvements result in minor changes, these minor changes will not be described in the operating instructions. Should you require new available information about your machine or have any questions concerning the information given in the operating instructions, please do not hesitate to contact either Komatsu or your responsible Komatsu dealer.

These operating instructions may refer to attachments and special equipment not available from your local Komatsu dealer. Should you require attachments or special equipment, ask your responsible Komatsu dealer.

EU Directives

This machine is labelled with the CE mark indicating that it meets all basic requirements concerning safety and protection of health of the EU Machinery Directive 89/392/EEC, its supplements 91/368 EEC and 93/44 EEC for Europe, and the regulation 95/27/EEC. In addition, the harmonised European standards EN 292-2 and EN 474/1 of 1994, and EN 474-3 of 1996 were applied for manufacture of the machine. This fact is documented in the EU Declaration of Conformity (CE) which is supplied together with the machine.

This means that in those cases in which the machine is modified in such a way that safety of the machine is affected, the person responsible for safety of the machine is the one who has arranged for the machine to be modified. If you use the machine for any other purpose than that defined as correct use, you are the person who has to ensure that safety is maintained. Modifications of the machine or use of the machine for any other purpose than that specified as correct use may require a new CE mark and thus new issuing of an EU Declaration of Conformity.

If a machine is used in other countries than Germany, it may be possible that special national safety devices and specifications are missing which may be required for the application in the relevant country. For example, for Komatsu machines, the manufacturer has to design the cab roof in such a way that a warning beacon can be attached to the roof. However, when driving the machine on roads, this warning beacon must be covered.

Should you have any questions concerning standards and guidelines in the respective country the machine is to be used in, please ask your Komatsu dealer before you start commissioning the machine.

In addition to the operating instructions, you must also adhere to all legal regulations on public traffic and all applicable regulations on prevention of accidents.

Notes on later installation of electrical and electronical devices and components

Electrical or electronical devices and/or components installed later emit electromagnetic radiation which may influence the proper function of electronic components and parts of the machine. This may impair safety of the machine and endanger persons. For this reason, strictly adhere to the following safety notes.

If you later install electrical and electronical devices and/or components in the machine and connect them to the vehicle electrical system, you are responsible for any malfunctions of the vehicle electronics or other components resulting from this installation. Above all, check that all electrical and electronical components which you install later comply with the valid version of the EMC directive 89/336/EEC and that they are labelled with the CE mark.

The following requirements must additionally be met for a later installation of mobile communication systems.

- Only install devices which have a licence referring to valid national regulations.
- The device must be stationary.
- Only use portable or mobile devices in the cab, if they are connected to a stationary external aerial.
- Install the sender in such a way that it is physically separated from the vehicle electronics.
- When installing the aerial, make sure that it is installed correctly with a good chassis earth connection between the aerial and the chassis of the vehicle.

In addition, adhere to all information about installation and connection of cables and maximum power input indicated in the manufacturer's installation instructions of the machine.

1.3. Safety information

The procedures and precautionary measures concerning operation and maintenance only apply on the provision that the machine is used as intended.

Most accidents are caused by disregard of basic safety regulations during operation and maintenance of machines. In order to avoid accidents and thus damage to persons and property, read all applicable safety notes and warnings in these operating instructions and on the machine, before you start operation or maintenance of the machine and always adhere to these safety notes and warnings.

The following words are used in this manual and on stickers on the machine to signify safety instructions and enable them to be recognized as such at a glance:

DANGER

This word is used for safety messages and safety label where there is a probability of serious injury if the danger is not avoided. The safety instruction or sticker contains precautions which must be observed in order to avoid the danger. Failure to do so can also result in damage to the machine.

WARNING

This word is used for safety messages and safety label where there is a potentially dangerous situation which could lead to serious injury if the danger is not avoided. The safety instruction or sticker contains precautions which must be observed in order to avoid the danger. Failure to do so can also result in damage to the machine.

CAUTION

This word is used for safety messages and safety label in the event of danger which could result in minor or partly serious injuries if the danger is not avoided. It may also relate to dangers which may only result in damage to the machine.

NOTE

This word is used for precautions which have to be taken in order to avoid situations which could result in shortening the service lift of the machine.

The safety instructions are listed in the chapter "2. Safety" on page 2-1 and following.

The transport of persons in the work equipment is strictly forbidden!

We cannot foresee all circumstances which could result in potential danger during maintenance and operation. The safety instructions in this manual and on the machine, therefore, do not necessarily contain all possible safety precautions. If you are using a procedure or measure not explicitly permitted and recommended in this manual, you must ensure that you and anyone else can use any such procedure without any danger or damage to the machine whatsoever. Please contact your local Komatsu dealer if you have any doubts about the safety of any procedures.

1.4. Introduction

1.4.1. Intended use

This loader is a machine with independent transmission, moving on wheels. Driving in forward direction, the loader can load or dig material using its attachments intended for loading operations (i.e. bucket).

The standard operation cycle of a loader includes filling up and loading of the bucket, transporting the material and emptying the bucket.

In combination with the forklift truck attachment the picking up, transporting and putting down of stacked material is also considered to be part of the machine's intended use.

If you use the machine for any other purpose than specified above, we will not accept any responsibility for safety. All considerations concerning safety will then be up to the owner or the operating and maintenance personnel. In any case, neither you nor any other person are/is authorised to perform work and functions explicitly prohibited in these operating instructions.

Refer to chapter "3.3.9. Working with the wheel loader" on page 3-55 for more details.

1.4.2. Breaking-in the machine

Before the shipment, each machine was carefully checked and adjusted. A machine that is to be newly commissioned has to be treated with utmost care during its first 100 operating hours.

If the machine is used for work involving loads exceeding the specified maximum load for the running-in period, its performance may be impaired prematurely and its service life may be shortened. A new machine must be run in and maintained very carefully and thoroughly.

The following points are particularly important:

- Idle the engine for 5 minutes after starting it up.
- Avoid operation with heavy loads or at high speeds.
- Avoid sudden starts, sudden acceleration, sudden steering und sudden stops except in cases of emergency.

The precautions given in this manual for operating, maintenance, and safety procedures are only those that apply when this product is used for the specified purpose. If the machine is used for a purpose that is not listed in this manual Komatsu cannot bear any responsibility for safety. All consideration of safety in such operations is the responsibility of the user.

Operations that are prohibited in this manual must never be carried out under any circumstances.

1.5. Location of plates

1.5.1. Machine identification plate (PIN)

Position of the identification plate (1) (see enlargement)

Serial no. stamp marking (2)

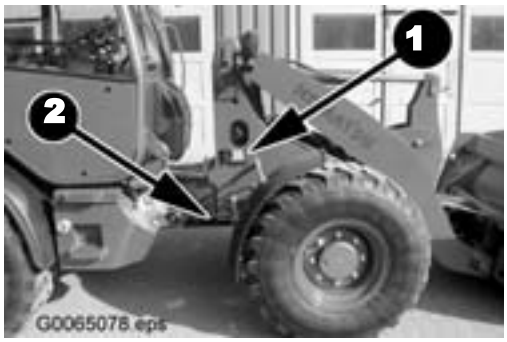

Machine identification plate (PIN)

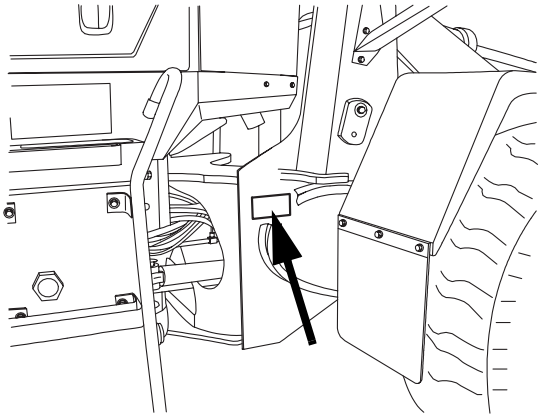

MODEL
SERIAL NO.
TOTAL WEIGHT LIMIT kg
ENGINE POWER kW
FRONT AXLE WEIGHT LIMIT kg
REAR AXLE WEIGHT LIMIT kg
Product Identification Number
MANUFACTURER Manufactured by KOMATSU HANOMAG GmbH for Komatsu Ltd., Tokyo, Japan
KOMATSU

GK020001_USA.eps

1.5.2. Engine name-plate

Engine name-plate with serial no.

G0065167

G0065095.eps

1.5.3. Axle serial no. plate

This plate is located on the right of front axle and on the left of rear axle (1).

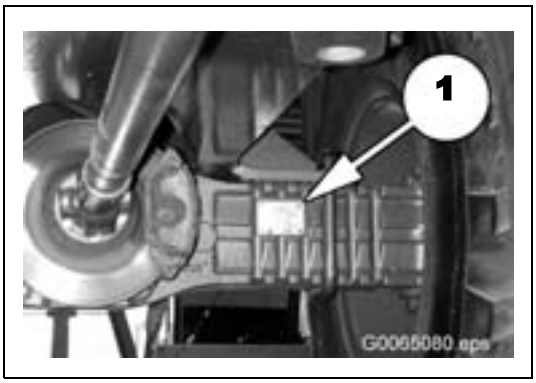

1.5.4. Transmission serial no. plate

This plate is located in travel direction front, above the transmission output (1).

1.5.5. ROPS/FOPS-Cab serial no. plate

This plate is located on the right inside cab on the rear beam (1).

1.5.6. Seat operator serial no. plate

This plate is located in front of seat, covered by the bellows.

1.5.7. Table to enter serial no. and distributor

Must be filled in before machine is put into service:

Machine serial No.:	
Engine serial No.:	
Name of Dealer:	Phone:
Address:	Fax:
Service Personnel for your machine:	E-mail

1.6. Emission Control Warranty

1.6.1. Emission control warranty statement (Applies to Canada only)

1. Products Warranted

Komatsu America International Company, Komatsu Mining Systems Inc. and Komatsu Utility Corporation (collectively "Komatsu") produce and/or market products under brand names of Komatsu, Dresser, Dressta, Haulpak and Galion. This emission warranty applies to new engines bearing the Komatsu name installed in these products and used in Canada in machines designed for industrial off-highway use. This warranty applies only to these engines produced on or after January 1, 2000. This warranty will be administered by Komatsu distribution in Canada.

2. Coverage

Komatsu warrants to the ultimate purchaser and each subsequent purchaser that the engine is designed, built and equipped so as to conform, at the time of sale by Komatsu, with all U.S. Federal emission regulations applicable at the time of manufacture and that is free from defects in workmanship or material which would cause it not meet these regulations within five years or 3,000 hours of operation, whichever occurs first, as measured from the date of delivery of the engine to the ultimate purchaser.

3. Limitations

Failures, other than those resulting from defects in materials or workmanship, are not covered by this warranty. Komatsu is not responsible for failures or damage resulting from what Komatsu determines to be abuse or neglect, including, but not limited to: operation without adequate coolant or lubricants; over fueling; over speeding; lack of maintenance of lubricating, cooling or intake systems; improper storage, starting, warm-up, run-in or shutdown practices; unauthorized modifications of the engine. Komatsu is also not responsible for failures caused by incorrect fuel or by water, dirt or other contaminants in the fuel. Komatsu is not responsible for non-engine repairs, "downtime" expense, related damage, fines, all business costs or other losses resulting from a warrantable failure.

KOMATSU IS NOT RESPONSIBLE FOR INCIDENTAL OR CONSEQUENTIAL DAMAGES.

This warranty, together with the express commercial warranties, are the sole warranties of Komatsu. **THERE ARE NO OTHER WARRANTIES, EXPRESS OR IMPLIED, OR OF MERCHANTABILITY OR FITNESS FOR A PARTICULAR PURPOSE.**

1.7. Garantie sur le contrôle des émissions

1.7.1. Énoncé de garantie sur le contrôle des émissions (applicable au Canada seulement)

1. Produits garantis:

Komatsu America International Company, Komatsu Mining Systems Inc. et Komatsu Utility Corporation (collectivement Komatsu) produisent et/ou font la mise en marché de produits portant les noms de marque Komatsu, Dresser, Dressta, Haulpak et Galion. Cette garantie sur le émissions s'applique à tous les nouveaux moteurs portant le nom Komatsu, installés dans ces produits et utilisés au Canada dans des machines conçues pour utilisation industrielle non-routière. Cette garantie s'applique seulement sur les moteurs produits à partir du 1 er Janvier 2000. Cette garantie sera administrée par la distribution de Komatsu au Canada.

2. Couverture

Komatsu garantit à l'acheteur ultime et chaque acheteur subséquent que le moteur est conçu, construit et equipé en toute conformité, au moment de la vente par Komatsu, avec toutes les Réglementations fédérales américaines sur les émissions applicables au moment de la fabrication et qu'il est exempt de défaults de construction ou de matériaux qui auraient pour effet de contrevenir à ces réglementations en dedans de 5 ans ou 3000 heures d'opération, mesuré à partir de la date de livraison du moteur au client ultime.

3. Limitations

Les bris, autres que ceux résultant de défaults de matériaux ou de construction, ne sont pas couverts par cette Garantie. Komatsu n'est pas responsable pour bris ou dommages résultant de ce que Komatsu détermine comme étant de l'abus ou négligence, incluant mais ne se limitant pas à: l'operation sans lubrifiants ou agent refroidissants adéquats; la suralimentation d'essence; la survitesse; le manque d'entretien des systémes de lubrification, de refroidissement ou d'entree; de pratiques non-propices d'entreposage, de mise en marche, de réchauffement, de conditionnement ou d'arrêt; les modifications non autorisées du moteur. De plus Komatsu n'est pas responsable de bris causés par de l'essence inadéquate ou de l'eau, des saletés ou autres contaminants dans l´essence. Komatsu n´est pas responsable des réparations non-reliées au moteur, des dépenses encourues suite aux temps d´arrêts, des dommages relatifs, amendes, et de tout autre coût d'affaires ou autres pertes résultant d'un bris couvert par la garantie.

KOMATSU N'EST PAS RESPONSABLE DES INCIDENTS OU DOMMAGES CONSÉQUENTS.

Cette garantie ainsi que les garanties expresses commerciales, sont les seules garanties Komatsu. **IL N'Y A AUCUNE AUTRE GARANTIE, EXPRESSE OU SOUS-ENTENDUE, MARCHANDABLE OU PROPICE A UNE UTILISATION PARTICULIÈRE.**

1.8. Table of contents

1. Introduction 1-1

1.1. Product publications information 1-2

1.2. Foreword 1-4

EU Directives 1-5

1.3. Safety information 1-7

1.4. Introduction 1-9

1.4.1. Intended use 1-9
1.4.2. Breaking-in the machine 1-10

1.5. Location of plates 1-11

1.5.1. Machine identification plate **(PIN) 1-11**
1.5.2. Engine name-plate 1-11
1.5.3. Axle serial no. plate 1-12
1.5.4. Transmission serial no. plate 1-12
1.5.5. ROPS/FOPS-Cab serial no. plate 1-12
1.5.6. Seat operator serial no. plate 1-13
1.5.7. Table to enter serial no. and distributor **..... 1-13**

1.6. Emission Control Warranty 1-14

1.6.1. Emission control warranty statement (Applies to Canada only) 1-14

1.7. Garantie sur le contrôle des émissions 1-15

1.7.1. Énoncé de garantie sur le contrôle des émissions (applicable au Canada seulement) 1-15

1.8. Table of contents 1-16

1.9. Dimensions, weights and operating data 1-23

1.10.CE-conforming equipment 1-24

1.10.1. CE-conforming equipment – part 1 1-24
1.10.2. CE-conforming equipment – part 2 1-24
1.10.3. Manufacturer-supplied CE-conforming equipment. 1-25

1.11.Loading and securing 1-28

2. Safety 2-1

2.1. General safety measures 2-2

2.1.1. Safety instructions 2-2
2.1.2. Safety devices 2-2
2.1.3. Emergency exit 2-2
2.1.4. Clothing and personal protection 2-3
2.1.5. Machine modifications 2-3
2.1.6. Before you leave the driver’s seat 2-3
2.1.7. Mounting and dismounting 2-4

2.1.8. Fire prevention and fire fighting ... 2-4
2.1.9. Protection against asbestos dust ... 2-5
2.1.10. Protection against injuries ... 2-5
2.1.11. Working at high temperatures ... 2-6
2.1.12. Roll-over protection system (ROPS) ... 2-6
2.1.13. Attachment for protection against falling objects (FOPS) ... 2-6
2.1.14. Attachments ... 2-7
2.1.15. Battery ... 2-7

2.2. Safety precautions during operation ... 2-8
2.2.1. Prior to daily starting up ... 2-8
Workplace safety ... 2-8
In the driver's cab ... 2-8
Indoor operation ... 2-9
Gas, dust, and inflammable vapours ... 2-9
Mirrors, windows and lighting ... 2-9
2.2.2. Machine operation ... 2-10
Before you start the engine ... 2-10
Reversing ... 2-10
Driving ... 2-11
Driving on slopes ... 2-11
Emergency Lowering System ... 2-12
Working close to power lines ... 2-13
Loading ... 2-14
Good Vision ... 2-14
Working on snow ... 2-14
Height limitation ... 2-15
Brakes ... 2-15
Working on loose soil ... 2-15
Working with the forklift truck attachment ... 2-15
Parking the machine ... 2-17
2.2.3. Transport ... 2-18
Loading and unloading the machine ... 2-18
Transport ... 2-18

2.3. Precautions for maintenance ... 2-19
2.3.1. Personnel ... 2-19
2.3.2. Before carrying out maintenance ... 2-19
2.3.3. During maintenance ... 2-26
2.3.4. Tyres ... 2-30

2.4. Safety labels on the machine ... 2-32
2.4.1. Positions and order numbers of information labels ... 2-32
2.4.2. Positions and order numbers of safety labels ... 2-33

3. Operation ... 3-1

3.1. General view 3-2
3.1.1. General view of the machine **3-2**
3.1.2. Controls and indicators **3-3**
Overall view **3-3**
Switches, controls and warning lights 3-4

3.2. Description of the individual elements 3-5
3.2.1. Instrument panel **3-5**
Warning lights 3-6
Control lamps 3-8
Measuring indicators 3-12
3.2.2. Switches **3-14**
3.2.3. Control levers and pedals 3-21
3.2.4. **Articulated steering catch 3-26**
3.2.5. Traction device 3-26
3.2.6. Socket (12 V) 3-27
3.2.7. Door unlocking system 3-27
3.2.8. Alarm horn for reverse driving – option **3-27**
3.2.9. Fuses 3-28
3.2.10. Slow-blowing fuses 3-29
3.2.11. Adjusting the heater and ventilation system 3-30
3.2.12. Air-conditioning 3-31

3.3. Operation 3-32
3.3.1. Pre-start checks 3-32
Visual inspection 3-32
Pre-start checks 3-34
Adjustments prior to machine start 3-39
Adjusting the driver’s seat 3-39
3.3.2. Starting the engine 3-43
Warming up the engine 3-44
3.3.3. Driving with the machine 3-45
Start-up 3-45
3.3.4. Changing the driving direction 3-47
3.3.5. Turning and steering 3-48
3.3.6. Braking 3-49
3.3.7. Stopping the machine 3-51
3.3.8. Operating the work equipment 3-52
Multifunctional lever 3-52
Control lever for special equipment 3-53
Switching lever of bucket 3-54
3.3.9. Working with the wheel loader 3-55
Tyre-appropriate operation 3-55
Switching on the 100 % differential lock (if equipped) 3-55
Loading work 3-56
Removal work 3-56
Excavation work 3-58
Planing 3-59

Transporting ... 3-60
Unloading ... 3-60
Working with the forklift truck attachment ... 3-61
3.3.10. Precautions for special operations ... 3-63
Permissible water depth ... 3-63
Working on snow ... 3-63
Dumping on steep slopes ... 3-63
Working in the vicinity of electrical overhead lines ... 3-63
Operation on slopes ... 3-63
Working on loose soil ... 3-63
If the service brake breaks down ... 3-63
Precautionary measures when driving up or down ... 3-64
Precautionary measures during machine travel ... 3-65
3.3.11. Adjusting the position of the work equipment ... 3-66
Selecting a work unit ... 3-66
Removing the work unit ... 3-68
Picking up the multi-purpose bucket ... 3-69
Removing the multi-purpose bucket ... 3-71
Level indicator for the bucket ... 3-71
3.3.12. Parking the machine ... 3-72
3.3.13. Switching off the engine ... 3-73
3.3.14. Check after stopping the engine ... 3-73
3.3.15. Locking ... 3-73
3.3.16. Tyre handling ... 3-74
Precautionary measures when handling tyres ... 3-74
Tyre pressure ... 3-74

3.4. Transporting the machine ... 3-76
3.4.1. Securing the articulated steering ... 3-76
3.4.2. Lifting the machine ... 3-77
3.4.3. Driving the machine onto loading area of transport vehicle ... 3-78
3.4.4. Securing the machine during the transport ... 3-79
3.4.5. After transport ... 3-79

3.5. Cold weather operation ... 3-80
3.5.1. Before the cold season ... 3-80
3.5.2. Precautions after completion of work ... 3-81
3.5.3. After the cold season ... 3-81

3.6. Long-term storage ... 3-82
3.6.1. Before storage ... 3-82
3.6.2. During storage ... 3-82
3.6.3. After storage ... 3-83

4. Troubleshooting ... 4-1

4.1. Towing the machine ... 4-2

4.2. Starting the engine with a booster cable ... 4-6

4.3. For insufficient braking effect ... 4-8

4.3.1. Checking the service brake ... 4-8
4.3.2. Checking the parking brake function ... 4-8

4.4. Emergency steering properties ... 4-9

4.5. Emergency lowering ... 4-9

4.6. Other troubles ... 4-10

4.6.1. Electrical system ... 4-10
4.6.2. Engine ... 4-11
4.6.3. Hydraulic system ... 4-14
4.6.4. Brakes ... 4-16
4.6.5. Steering ... 4-16
4.6.6. Axles ... 4-17
4.6.7. Driver's cab ... 4-17

5. Maintenance ... 5-1

5.1. Maintenance guide ... 5-2

5.1.1. Guidelines ... 5-2

5.2. Maintenance basics ... 5-9

5.2.1. Oil, fuel and coolant specifications ... 5-9
Oil ... 5-9
Fuel ... 5-10
Coolant ... 5-11
Grease ... 5-11
Storing oil and fuel ... 5-12
Filters ... 5-12
Biodegradable hydraulic oil and lubricants ... 5-12
5.2.2. Specifications of the electrical system ... 5-13
5.2.3. Wearing parts list ... 5-14

5.3. Lubricants, fuels and filling capacities ... 5-15

5.3.1. Lubrication chart ... 5-16

5.4. Tools and standard tightening torques (bolts, nuts) ... 5-17

5.4.1. Introduction of recommended tools ... 5-17
5.4.2. Torque list ... 5-18

5.5. Periodical replacement of safety-critical parts ... 5-20

5.6. Maintenance schedule chart ... 5-21

5.7. Service procedure ... 5-23

5.7.1. Pre-start checklist ... 5-23
Cooling system – checking the coolant level, topping up coolant ... 5-23

Cleaning the radiator segments ... 5-24
V-Belt, checking the condition ... 5-24
Engine, checking the oil level, topping up oil ... 5-24
Checking the fuel level – refuelling ... 5-26
Water separator at the fuel filter – Draining water and dirt sediments ... 5-27
Hand pump - Checking the oil level ... 5-27
Checking the controls ... 5-28
Checking the electrical connections ... 5-28
Heater/air conditioning – checking rate of air flow ... 5-29
Miscellaneous tests before starting work ... 5-29
5.7.2. Maintenance upon demand ... 5-30
Checking the air-conditioning system ... 5-30
Checking the window washing-fluid level, adding fluid ... 5-31
Re-charging a built-in battery ... 5-32
5.7.3. Maintenance after the first 50 operating hours ... 5-33
Hydraulic system, replacing the filter insert ... 5-33
Checking and tightening the wheel nuts ... 5-34
5.7.4. Maintenance after the first 250 operating hours ... 5-35
Front and rear axle – oil change ... 5-35
Transfer box gearing – changing oil ... 5-36
Checking and adjusting the valve clearance ... 5-36
5.7.5. Maintenance every 10 operating hours ... 5-37
Lubrication, articulated steering ... 5-37
5.7.6. Maintenance every 50 operating hours ... 5-38
Checking the service brake and oil level, refilling oil ... 5-38
Battery – checking the acid level ... 5-39
Lubrication, work unit ... 5-40
5.7.7. Maintenance every 250 operating hours ... 5-41
V-Belt, generator – checking and adjusting the tension ... 5-41
Air filter, removing and re-installing the filter insert, checking and cleaning the filter insert ... 5-42
Lubrication, steering cylinder ... 5-45
Lubrication, self-aligning bearings of rear axle ... 5-46
5.7.8. Maintenance every 500 operating hours ... 5-47
Engine – changing oil ... 5-47
Replacing the oil filter cartridge ... 5-48
Changing the fuel filter element ... 5-49
Bleeding the fuel system ... 5-50
Bleeding the low pressure side: ... 5-50
Bleeding the high pressure side: ... 5-50
Air filter, replacing the filter insert, replacing the safety filter ... 5-51
Heater/air conditioning – cleaning/replacing filter fleece ... 5-52
Cleaning the condenser of air conditioning ... 5-53
E.C.S.S.-pressure accumulator (Option) - checking gas pressure ... 5-53
Front and rear axle – checking the oil level ... 5-54
Transfer box gearing – checking the oil level ... 5-55
5.7.9. Maintenance every 1000 operating hours ... 5-56
V-Belt, generator – checking and adjusting the tension ... 5-56
Service Brake - Checking and adjusting oil ... 5-56

Checking and adjusting system pressures 5-56
Have the system pressures checked and adjusted at an authorised Komatsu garage. 5-56
Hydraulics – Exchanging the venting filters 5-57
Hydraulic system, replacing the filter insert 5-58
5.7.10. Maintenance every 1500 operating hours 5-59
Front and rear axle – oil change 5-59
Transfer box gearing – changing oil 5-60
5.7.11. Maintenance every 2000 operating hours 5-61
Cooling system – exchanging coolant and cleaning the system 5-61
Checking and adjusting the valve clearance 5-63
Hydraulic system, oil change 5-64
Ventilating the hydraulic oil tank 5-65
Checking the fuel pump 5-66
Checking the fuel and coolant tubes, replacing the tubes (if required) 5-66
Checking the water pump 5-66
5.7.12. Maintenance every 4000 operating hours 5-67
Lubrication, universal joint 5-67

6. Technical data 6-1

6.1. Technical data 6-2

6.2. Noise emission levels 6-3

6.3. Vibration level 6-3

6.4. Limit values for slopes 6-3

7. Special equipment and attachments 7-1

7.1. E.C.S.S. 7-2
7.1.1. Structure and functioning principle of the E.C.S.S. 7-2
7.1.2. Precautionary measures for switching on the E.C.S.S. 7-2
7.1.3. Operating the E.C.S.S. 7-3
Switching ON the E.C.S.S. 7-3
Switching OFF the E.C.S.S. 7-3
7.1.4. Precautions when handling the accumulator 7-4

8. Index 8-1

9. Notes 9-1

1.9. Dimensions, weights and operating data

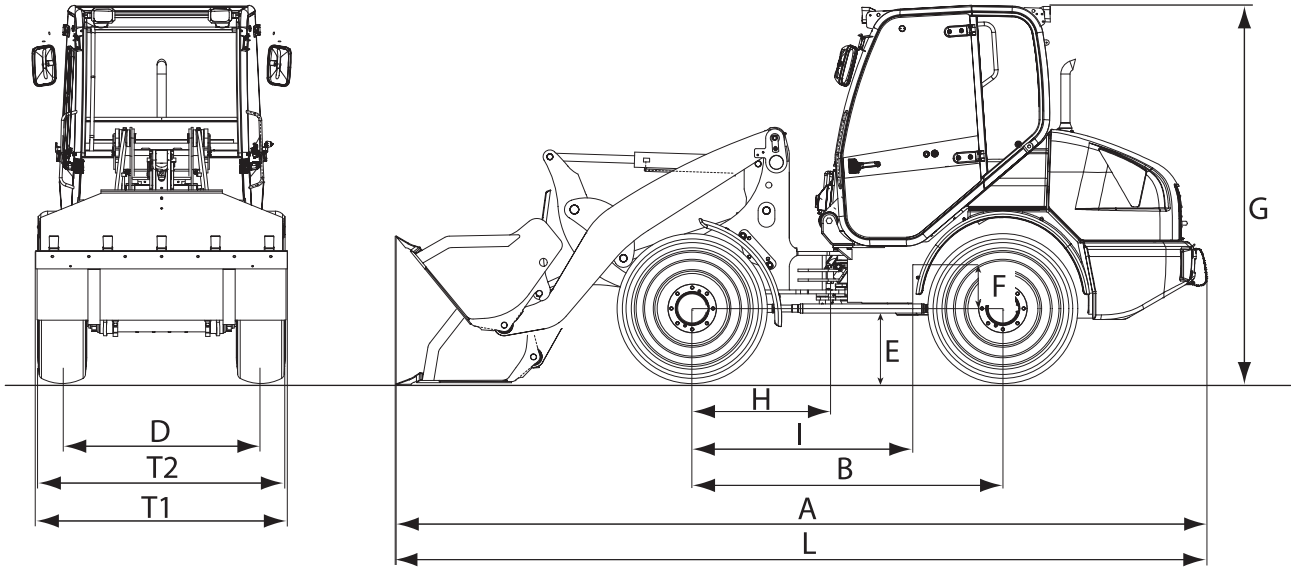

	Dimensions, weights and operating data					
	Bucket capacity to ISO 7546	0,85	m³	30.017	cuft	
	Material density	1,8	t/m³	3.033	pound/cubic yard	
	Static tipping load, straight	3700	kg	8157	pound	
	Static tipping load, 40° angle	3140	kg	6922	pound	
	Working load without CTW	1900	kg	4188	pound	
	Working load with CTW	2100	kg	4629	pound	
	Breakout force, hydraulic	40,6	kN	40.6	kN	
	Lifting capacity, hydraulic, on ground	41,10	kN	41.10	kN	
	Operating weight	4820	kg	10626	pound	
	Turning radius over bucket	4175	mm	13’ 7"	ft. in.	
L	Bucket length in transport position	5250	mm	17’ 3"	ft. in.	
A	Bucket length during planing	5320	mm	17’ 5"	ft. in.	
T1	Width with bucket	1800	mm	5’ 9"	ft. in.	
T2	Width without bucket (above wheels)	-	mm	-	ft. in.	
G	Height, including ROPS	2470	mm	8’ 1"	ft. in.	
D	Track	1360	mm	4’ 5"	ft. in.	
B	Width over tyres	2050	mm	6’ 8"	ft. in.	These values refer to machines with 12.5 - 18 tires
H	Distance articulated steer. - front axle	1025	mm	3’ 4"	ft. in.	
E	Ground clearance, axle /transfer gear ground clearance, cardan shaft	305 425	mm mm	12" 1’ 4"	ft. in. ft. in.	
F	Centre of gravity, height above axle centre	-	mm	-	ft. in.	CTW = additional counterweight
I	Centre of gravity, distance to front axle	-	mm	-	ft. in.	

1.10. CE-conforming equipment

1.10.1. CE-conforming equipment – part 1

CE-conforming equipment					
	1	2	3	4	–
	Type	Part No.	Volume cuft (m^3)	Hydr. pressure bar	Weight lb (kg)
Bucket	WA70-5	42U-70-22010	30.017 (0,85)	-	604 (274)
		42U-70-22020	30.017 (0,85)	-	650 (295)
		42T-70-22080	26.485 (0,75)	-	659 (299)
		42U-70-22120	44.143 (1,25)	-	760 (345)
		42U-70-22140	35.314 (1,0)	-	683 (310)

R500-1

1.10.2. CE-conforming equipment – part 2

CE-conforming equipment					
	1	2	3	4	–
	Type	Part No.	Work load of fork carrier STD lb (kg) / pair	Work load of fork carrier with CTW kg / pair	Weight lb (kg)
Fork carrier	WA70-5	42U-70-22050	3,968 (1,800)	-	476 (216)

R500-2

1.10.3. Manufacturer-supplied CE-conforming equipment.

The responsibility for observing valid regulations in the case of wheel loaders with "interchangeable equipment" (e.g. bucket or fork-lift) which was not supplied from works lies with the customer which was subsequently fitted to the machine.

The guidelines for CE Conformity and road-traffic registration are deemed to have been fulfilled when the manufacturer of the equipment confirms fulfilment.

The certification must be sent to the customer and the wheel loader manufacturer. The CE conformity declaration for a specific wheel loader is only legally valid once this has taken place.

The dimensions X1, X2, Y1 and Y2 must be provided by the manufacturer of the equipment for approval for use on public roads.

The dimension Sh (smallest tyre radius) must be added to the dimension D2.

The figure G (in kg) represents the maximum load (equipment and operating load) which may act upon this point.

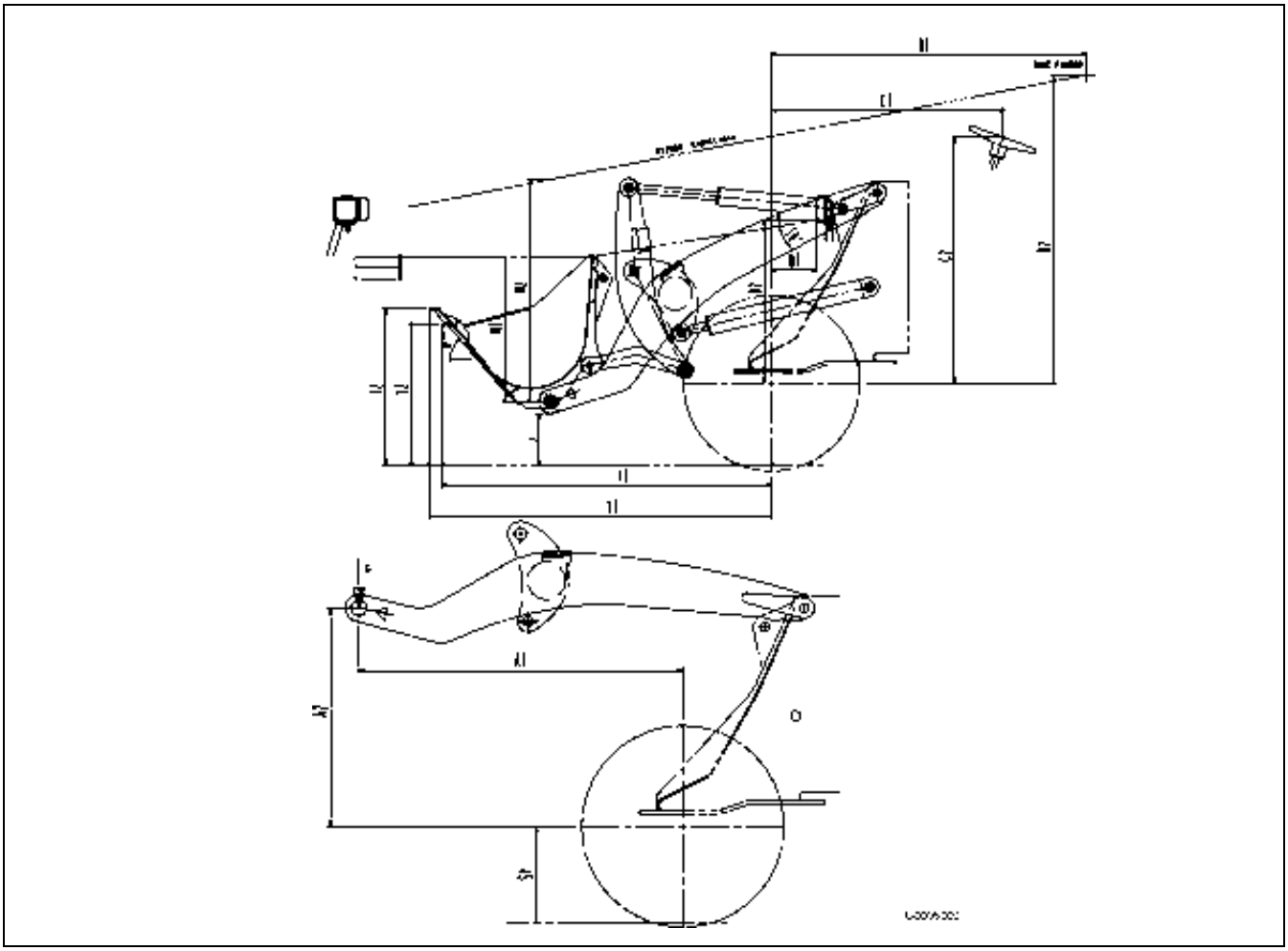

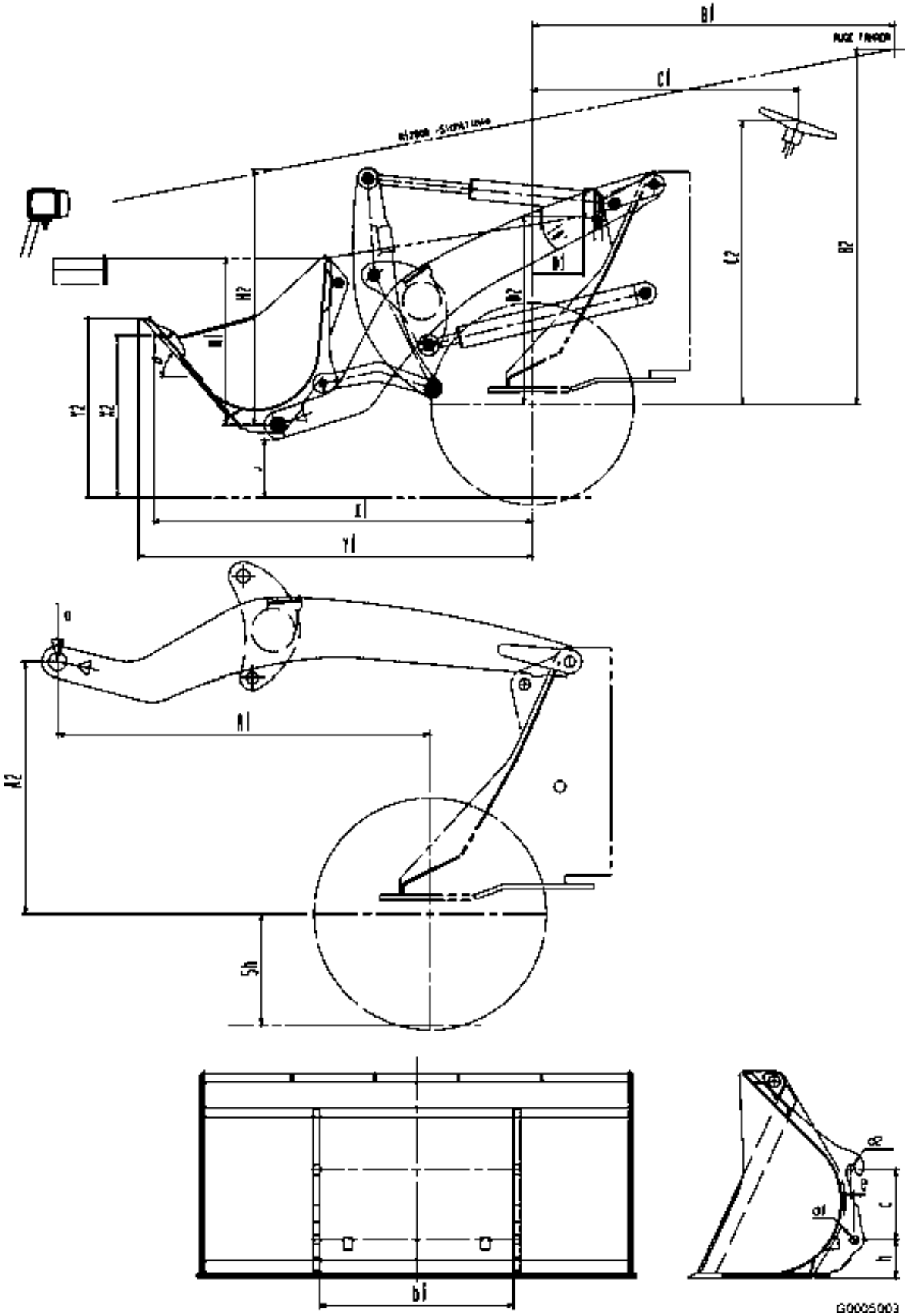
B1
C1
C2
B2
H2
Y2
X2
X1
Y1
A1
A2
5h
b1
c
h
G0005003

Manufacturer-supplied CE-conforming equipment.

A1 Distance: bucket pivoting point - front axle, horizontal

A2 Distance: bucket pivoting point - front axle, vertical

B1 Distance: driver's eye - front axle, horizontal

B2 Distance: driver's eye - front axle, vertical

D1 Distance front axle- lower edge of headlights, horizontal

D2 Distance front axle- lower edge of headlights, vertical

G Weight of the equipment and carrying load without additional counterweight

H1 Distance: bucket pivoting point - bucket upper edge, vertical (carrying position)

H2 Distance: bucket pivoting point - vision line, vertical (carrying position)

J Distance road level - lower edge of bucket in carrying position (to be considered during driving on public roads)

Sh Distance: road level - front axle

a Tip-in angle

b1 Bucket connection dimension boom width, interior

c Bucket connection dimension between d1 and d2, vertical

d1 Bucket connection dimension bolts for boom

d2 Bucket connection dimension bolt for tip-in rod

e Bucket connection dimension d1- d2 horizontally displaced

h Distance lower edge of bucket - drill hole of boom bolt

WA70-5	mm	
	ft. in.	mm
A1	5’ 4"	1.625
A2	3’ 7"	1.125
Sh	1’ 5"	450
B1	6’	1.820
B2	5’ 4"	1.650
C1	4’ 4"	1.330
C2	4’ 2"	1.280
D1	1’ 2"	375
D2	3’ 5"	1.070
G	5’ 2"	1.570
H1	2’ 9"	875
H2	4’	1.215
J	10.62"	270
X1	-	-
X2	-	-
Y1	-	-
Y2	-	-
a	51°	
b1	2’ 8"	860
c	12.28"	312
d1	ø 1.574	ø 40
d2	ø 1.574	ø 40
e	0.59"	15
h	7.87"	200
Tyre	12.5 - 18 Dunlop	
Bucket	42U-70-22010 30.017 cuft (0.85 m3)	

1.11. Loading and securing

Observe all safety instructions carefully in order to prevent accidents with severe injury. See "3.4. Transporting the machine" on page 3-76.

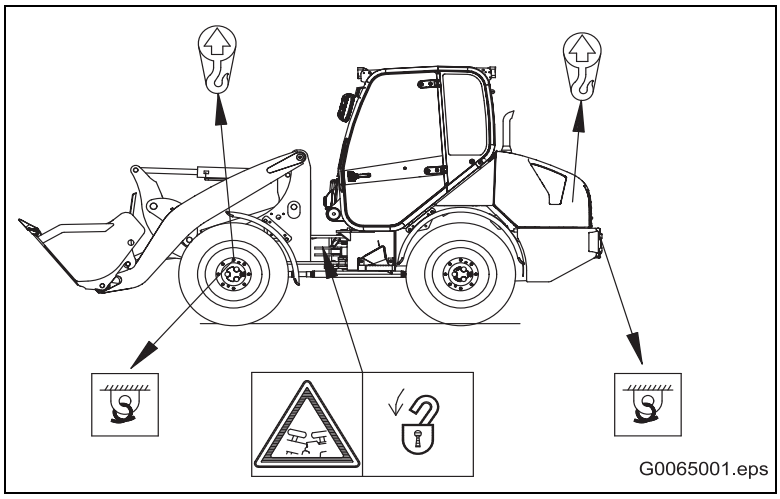

DANGER

- **Always secure articulated joint if maintenance or repair work is to be carried out or if the machine is going to be lifted or transported.**
- **An articulated joint may jack-knife unexpectedly if not secured. Danger of injury if joint jack-knifes.**

1. Set the machine to straight driving.
2. On the left: Loosen the spring bolt and remove the bolt (1).
3. On the right: Insert the bolt (2) and secure by means of the spring bolt.

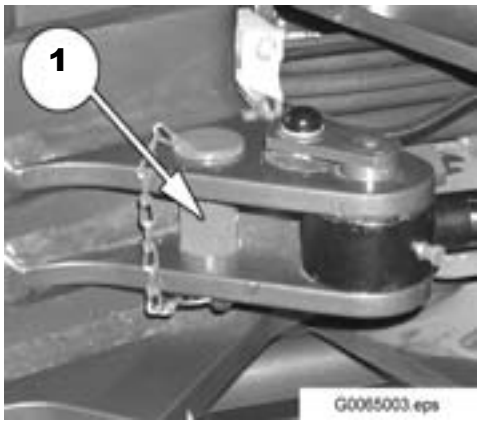

NOTE

Due to safety reasons and to avoid consequential damages, it is prohibited to attach other points (such as axles, cardan shafts, articulated joint, bucket teeth) than those specified for lifting and securing. It is also prohibited to attach ropes etc. to the driver's cabin.

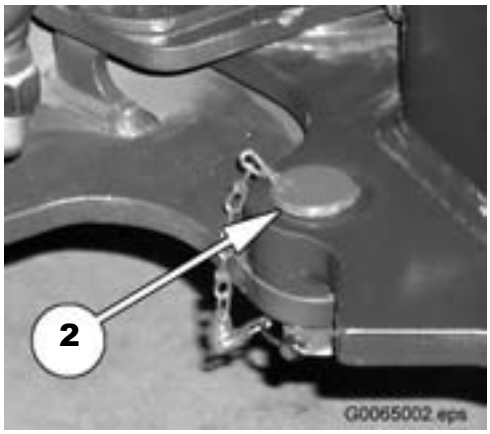

2. Safety

DANGER

Failure to adhere to these safety instructions can lead to accidents with serious injuries!
Read and adhere to all safety instructions.

This chapter also contains safety instructions for special equipment and attachments.

2.1. General safety measures

2.1.1. Safety instructions

- Do not operate or service the machine unless you have been trained and are authorised to do so.
- Always adhere to all instructions, measures, and safety instructions when operating or servicing the machine.
- When working together with other persons, agree beforehand on all hand signals that you want to use to avoid accidents due to misunderstandings.

2.1.2. Safety devices

- Check that all safety devices and covers of the machine are correctly installed.
- Ensure that damaged safety devices and covers are repaired before you start the machine.
- Use all safety devices as prescribed, e.g. the safety lever for the work hydraulic system and the safety belt.
- **Do not** remove any of the safety devices. Safety devices must be kept in perfect condition.

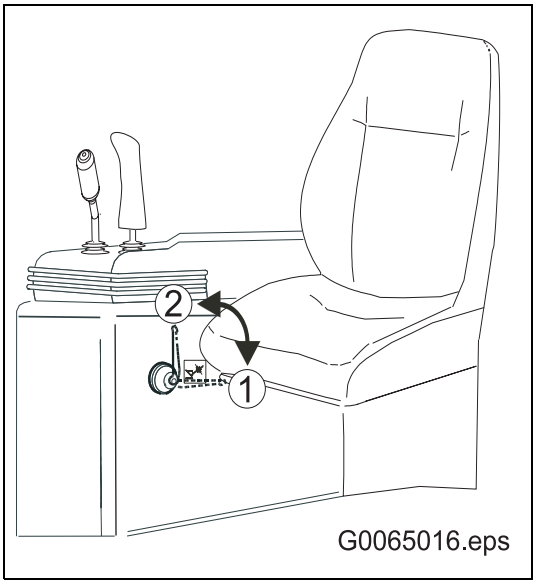

2.1.3. Emergency exit

In an emergency situation, you can use the window on the right-hand side of the driver's cab (2) (seen from the driving direction) as an emergency exit.

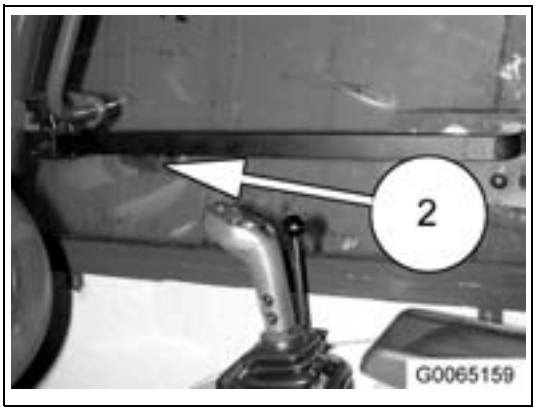

2.1.4. Clothing and personal protection

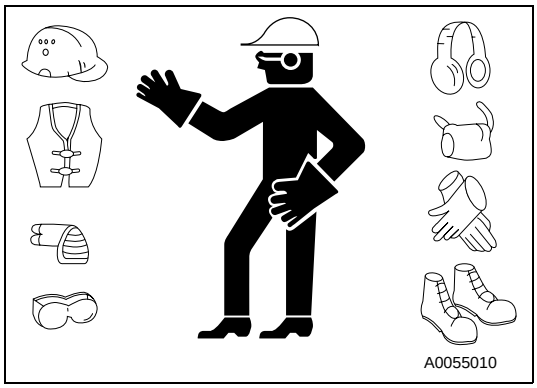

- Do not wear loose-fitting clothing, jewellery, or open long hair. There is danger that you get caught by control elements or moving parts leading to serious injuries.
- Immediately replace clothing stained with highly inflammable substances.
- When operating and servicing the machine, wear the appropriate protective equipment, e.g. safety helmet, safety goggles, safety shoes, dust protection mask, and safety gloves.
- Always wear safety goggles, safety helmet, and protective clothing, if it is likely that chippings or splinters will be produced while operating the machine (e.g. when removing or driving in bolts or cleaning with compressed air).
- Ensure that no unauthorised person is within the danger zone.

2.1.5. Machine modifications

- Komatsu will not be liable for modifications performed without prior expressed consent by the manufacturer.
- Komatsu will not be liable for any injuries or damage resulting from unapproved modifications.

2.1.6. Before you leave the driver’s seat

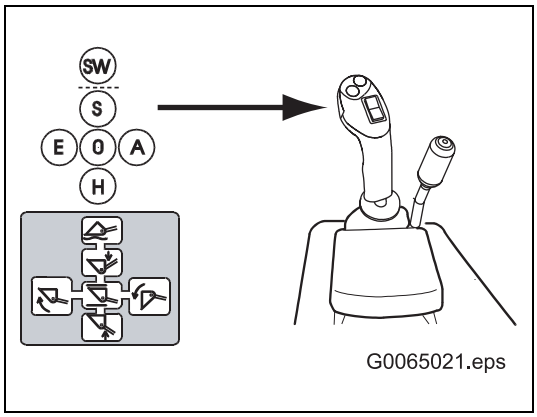

1. Lower the work unit onto the ground
2. Press slowly the multi-function lever to the front into position 'S'. The remaining hydraulics pressure will be reduced.
3. Switch off the engine.
4. Remove the ignition key before you leave the driver's seat. Store the ignition key in a safe place.
5. Close the cabin door.

2.1.7. Mounting and dismounting

- Do not jump on or off the machine. Do not mount on or dismount from a moving machine.
- Always use the handle bars and tread steps for mounting or dismounting the machine. Do not hold onto the control levers while mounting and dismounting.
- To ensure safe hold, hold the handle bar with one hand and stand on the tread steps with both feet. Optionally, stand on the tread steps with one foot and hold the handle bars with both hands.

2.1.8. Fire prevention and fire fighting

- Fuel, oil, and antifreezing compound are highly inflammable and could cause a fire.
- Do not approach inflammable material with naked light.
- Prior to refuelling, switch off the engine and stop smoking.
- Refuelling and refilling of oil are to be performed in sufficiently ventilated places.
- Store oil and fuel in special places appropriate for this purpose. Ensure that unauthorised persons do not have access to these places.
- Tightly close all cover caps.
- Check the fuel system, the lubrication system, and the hydraulic system for leaks. Have leaks repaired. Remove any excess oil, fuel, or other inflammable substances.
- Carefully and completely remove wooden chippings, leaves, paper, and other highly inflammable materials that may have collected in the engine compartment, since they could cause a fire.
- Do not operate the machine in the vicinity of naked light.

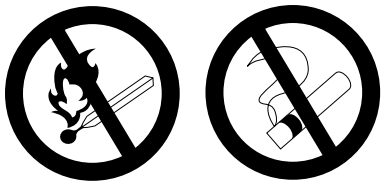

A0055040

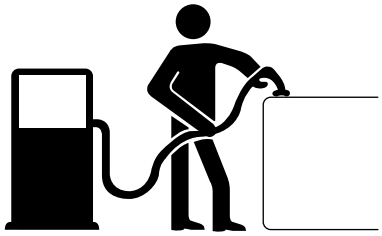

A0055030

A0055020

Fire extinguisher and first-aid kit

- A fire extinguisher can be stored in the compartment under the driver's seat. Two appropriate fastening points are already attached to the back of the compartment.
- A fully operational fire extinguisher must be available at hand.
- If, in the course of certain operations, there is danger of fire, fire extinguishers must be at hand. Familiarise with the use of the fire extinguishers.
- Inform yourself on measures to be taken in the event of a fire.
- The first-aid kit can be stored in the compartment under the driver's seat next to the fire extinguisher.
- Make sure that you know all telephone numbers of the persons that you need to contact in an emergency.

2.1.9. Protection against asbestos dust

Asbestos dust is a health hazard if breathed in. This machine is free of any parts containing asbestos.

When handling material that may contain asbestos fibres, strictly adhere to all legal instructions and regulations. Furthermore, adhere to the following protective measures for your own protection:

- Work, if possible, with a following wind.
- While working, wear an approved dust protection mask.
- After work, clean the machine with water to minimise formation of dust. Do not use compressed air for cleaning.

2.1.10. Protection against injuries

Do not insert any part of your body in the operating range of moving parts, such as work unit and cylinder, or machine and work unit. Never stand in a hazardous area. Distances vary when the work unit or steering are operated, this may lead to serious injuries.

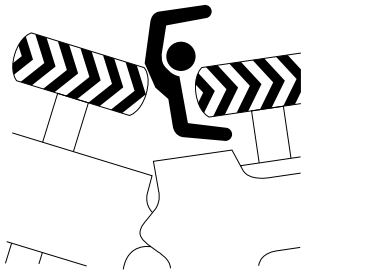

2.1.11. Working at high temperatures

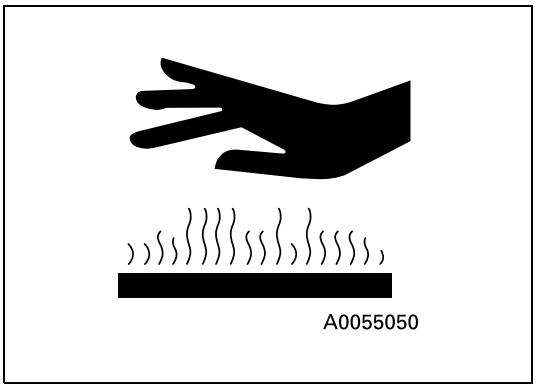

- Directly after operating the machine, the engine coolant, the engine oil, and the hydraulic oil are extremely hot and under pressure. Do not try to unscrew caps, drain water or oil, or replace filters directly after operating the machine, since this may lead to severe burns due to hot fluids or hot machine parts. Wait until the temperature has fallen. Strictly adhere to the described procedures when performing the required measures.
- Lower the work equipment.
- Switch off the engine and wait for the radiator to cool down before you unscrew the radiator cap. Slowly turn the radiator cap until it reaches the first catch to let the pressure escape. Then, proceed turning the cap further and remove it. If you do not let the pressure escape, boiling water may spurt out when you remove the radiator cap.
- Switch off the engine. Allow the hydraulic oil to cool down before you unscrew the cap of the hydraulic tank to drain the hydraulic oil. Slowly turn the cap of the hydraulic tank to let the pressure escape from the tank. If you do not let the pressure escape, oil may spurt out when you remove the cap of the hydraulic tank.

2.1.12. Roll-over protection system (ROPS)

- The roll-over protection system (ROPS) protects the operator and absorbs load and impact energy, if the machine should roll over.
- The ROPS is a fixed component of the cab. The machine must not be operated without this roll-over protection system.
- The ROPS meets the regulations of all member states of the EU. If, however, the ROPS is modified, damaged, or repaired without permission, its stability is impaired. In this case, the ROPS must be replaced, since its correct function can no longer be guaranteed.
- The ROPS can only provide maximum protection, if the driver wears the safety belt correctly. For this reason, the safety belt is to be worn when the machine is in operation.

2.1.13. Attachment for protection against falling objects (FOPS)

NOTE

FOPS is a fixed component of the cab.

When you work on a site where there is danger of falling rocks or other objects, the machines must be equipped with a FOPS. If the FOPS is modified without permission or damaged, its stability is impaired. In this case, the FOPS must be replaced, since its correct function can no longer be guaranteed.

2.1.14. Attachments

- Prior to assembly and operation of an additional attachment, read the attachment's manual and strictly adhere to the instructions on assembly and operation.
- Do not use attachments that have not been approved of by Komatsu or the responsible Komatsu dealer. If you use attachments which have not been approved of, safety, correct operation, and service life of the machine may be impaired.
- Komatsu are not liable for injuries, accidents, and damage resulting from the use of attachments that have not been approved.

2.1.15. Battery

The batteries are filled with sulphuric acid (battery acid).

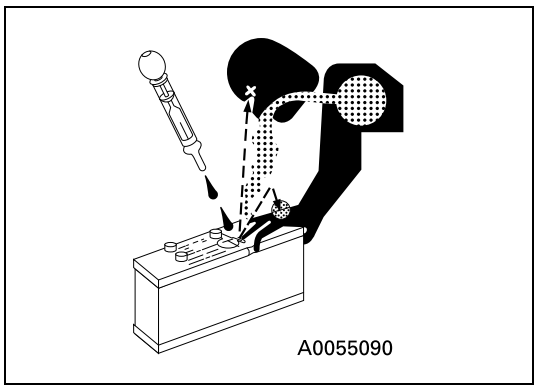

- **Always** wear safety goggles when handling batteries.
- Contact of battery acid with eyes can cause blindness. If acid should get into your eyes, immediately rinse your eyes with ample water and call for medical help. Rinse your eyes with water until a doctor arrives or you are able to visit an ophthalmologist or go to a hospital.
- Sulphuric acid that gets into contact with skin or clothing may cause acid burns. Immediately rinse the area that has come into contact with the acid with ample water.
- When working in the area of the battery, your hands may unintentionally get in touch with acid. For this reason, do not touch your eyes while working in the area of the battery. Always wash your hands after work.

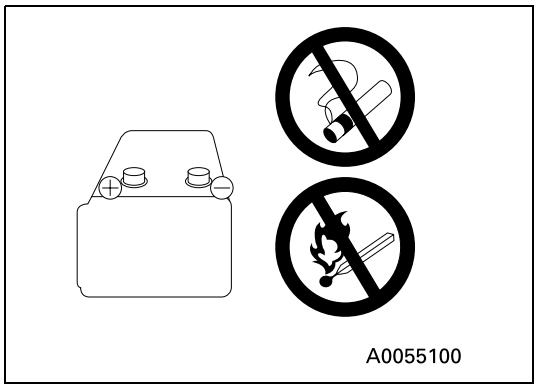

- Batteries produce detonating gas. Detonating gas is **extremely explosive** and may be ignited even by the smallest spark.
- Do **not** disconnect the battery while the engine is still running.
- Prior to start of work on batteries, set the start switch to '0'. Set the main switch of the battery (if installed) to 'Off'.
- Avoid any short-circuits via the poles or the pole terminals of the battery due to unintentional touching with metal objects, such as tools.

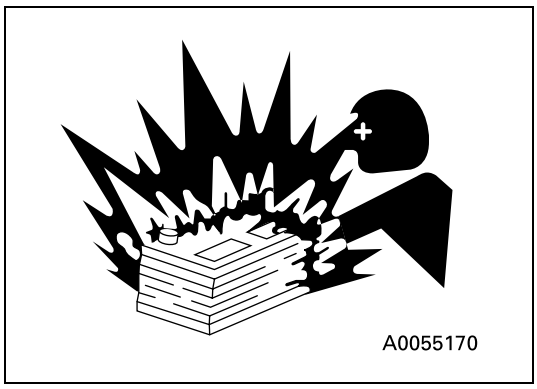

- When removing or inserting the battery, note which of the poles is the positive (+) and which is the negative (-) one. Always disconnect the mass cable first and reconnect it last.
- Tightly fasten the pole terminals. Loose pole terminals may produce sparks and thus cause explosions. Ensure that the cover of the positive pole (+) is always mounted.
- Tighten the cover caps.
- When repairing the electrical system or performing electric welding, disconnect the negative (-) pole terminal from the battery to interrupt the electric circuit.

2.2. Safety precautions during operation

2.2.1. Prior to daily starting up

Workplace safety

- Before you start operation, check the working area for dangerous working conditions.
- Inspect the surface of the soil in the working area and determine the optimum and safest procedure.
- Determine the required safety measures against dangers on public roads in co-operation with the owners, users, and responsible authorities.
- On sites where there are underground water pipes, gas pipes, or conduits for high voltage cables, contact the responsible supply company to determine the lines' positions. Ensure that these facilities will not be damaged.
- When working with water or crossing sand banks, first check the subsoil and depth and flow rate of the water. Ensure that the permitted water depth will not be exceeded.

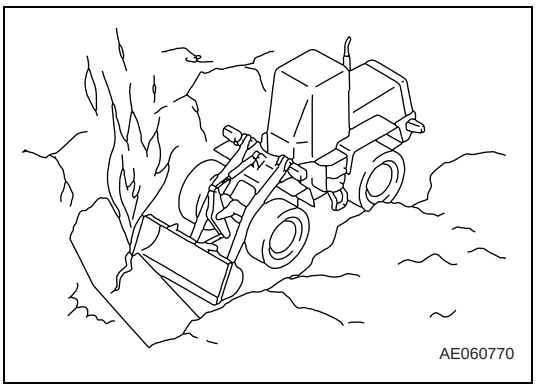

In the driver's cab

- Do not leave any tools or spare parts lying around in the cab. These may actuate, damage, or block control levers, pedals, or switches. Store these parts in the tool box.
- Keep the cab floor, the control elements, the tread steps, and the handrails free of oil, grease, and excessive dirt.
- Immediately repair any damage. Tighten loose screw connections.
- Check the safety belt, the belt buckle, and the fastening elements for damage and wear. Replace worn or damaged parts.

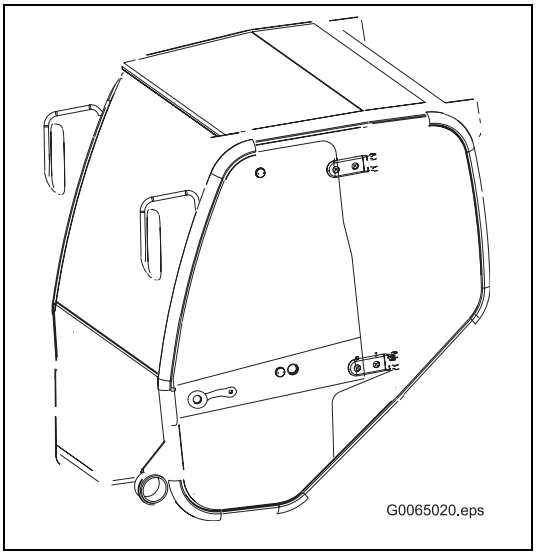

Indoor operation

Do not operate machines in-door unless these areas are sufficiently ventilated (e.g. workshops).

A0055060

CAUTION

Danger of intoxication!

Gas, dust, and inflammable vapours

Do not operate combustion engines in an environment that may contain inflammable gases or vapours. These gases, dusts, or vapours may ignite or be sucked in by the suction system, thus causing a rise in engine speed or an exceeding of the engine's maximum rpm. This may lead to a fire, an explosion, and major damage to property. It may also happen that the engine cannot be switched off anymore. Also refer to section "Indoor operation" on page 2-9.

Mirrors, windows and lighting

- Clean the windows and the headlights to ensure maximum sight.
- Adjust the rear-view mirror in such a way that you have an excellent view of the rear from the driver's seat. Keep the mirrors clean.
- Ensure that the complete lighting system operates properly and that it is correctly adjusted.
- Immediately replace broken window panes by new ones.

2.2.2. Machine operation

Before you start the engine

- Walk around the machine to check whether persons or objects are in the way before you get on the machine.
- Do not start the engine, if a warning sign has been attached to the control lever or another point.
- Sound the horn just before you start the engine.
- Start and operate the machine only from the driver's seat.
- Apart from the operator, no other person is permitted in the driver's cab or the vicinity of the machine.
- If the machine is provided with a reversing warning system, you must ensure that it operates correctly.
- Before you start the machine, check that the articulated steering is unlocked (Left side: position '1') and that the locking bar is attached to the frame by means of bolts and spring bolts.
- Always wear the safety belt when operating the machine.

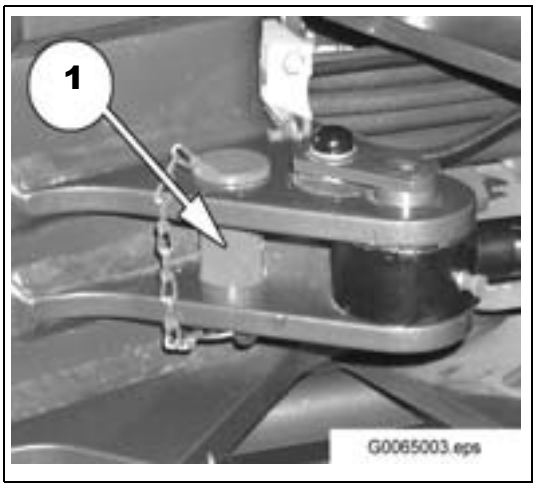

Reversing

These rules must be observed for all machines, i.e. also for those machines equipped with a reversing warning system:

- Check that there is nobody near the machine or in the way.
- Before you start reversing, sound the horn to warn persons within or near the operating area.
- When working in potentially dangerous areas or areas with obstructed view, ask another person to regulate and supervise traffic.

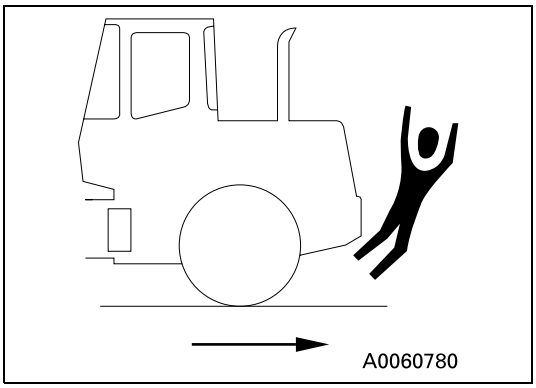

Driving

- During driving, the bucket is in its transport position. Make sure to heed the transport position indicator for this purpose.
- When driving on uneven ground, drive slowly and avoid sudden steering movements.
- You can continue to steer the machine even if the engine cuts out during a journey. This will require more force however.
- If the engine cuts out, move over straight to the side of the road, switch on the hazard warning lights and secure the machine.

Driving on slopes

- Keep sufficient distance to ridges and steep slopes. There is danger of the machine tipping over or sliding down on steep slopes, embankments, or hill flanks (approx. 200 to 300 mm). The limiting values are defined in chapter "6.4. Limit values for slopes" on page 6-3.
- To keep the centre of gravity as low as possible when driving on slopes, embankments, and hill flanks, you must set the bucket to a position just above the ground. In an emergency, quickly lower the bucket to the ground to stabilise the machine.
- Do not turn on a slope or drive across a slope. Turn or cross the section only level ground.
- When driving on slopes, avoid driving on grass, fallen leaves, or steel plates. Driving sideways on these surfaces may result in the machine sliding. Drive very slowly and carefully.
- When driving down a slope, use the braking power of the engine and drive slowly.
- If the engine stops while you are driving on a slope, immediately apply the service brake to stop the machine. Then apply the parking brake. Lower the work unit.
- When driving on a hill with a load, drive
  - uphill: in forward direction
  - downhill: in reverse direction

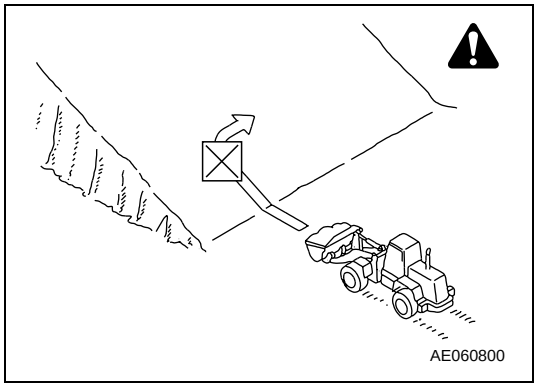

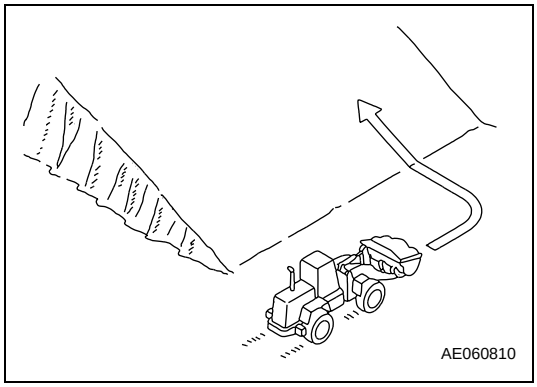

Emergency Lowering System

The machine is provided with a pressure accumulator for the work hydraulic system. If the engine is not running, you can lower the work unit with the multi-function lever.

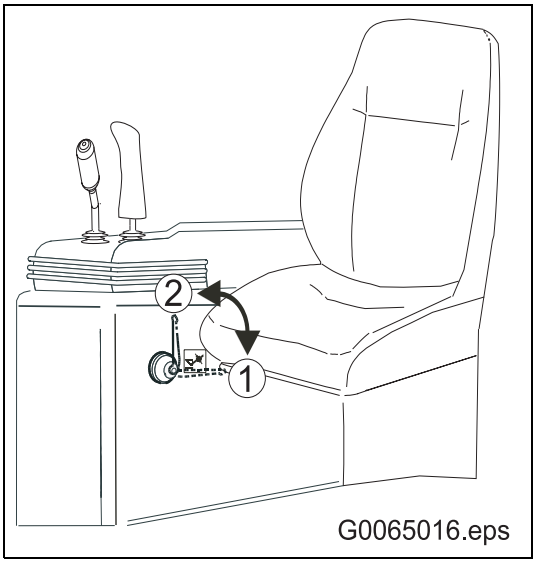

NOTE

If you have secured the work hydraulic system with the locking lever of the work hydraulic system, you cannot lower the work unit.

1. Make sure that nobody is standing below the work unit.
2. Press slowly the multi-function lever into position ‘‘P’’. The work unit is lowered.

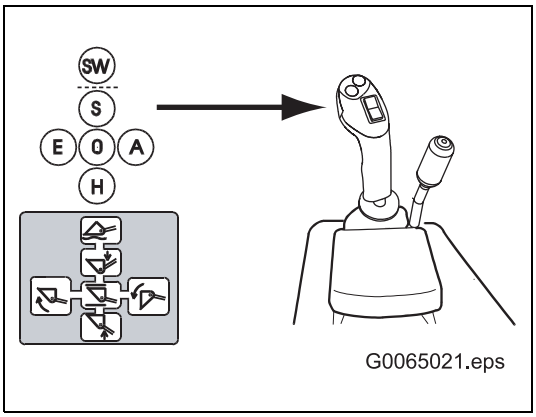

Working close to power lines

- A voltage overspill may occur, if you or the machine get too close to power lines. For this reason, always heed the required safety distance between the machine and the power lines.

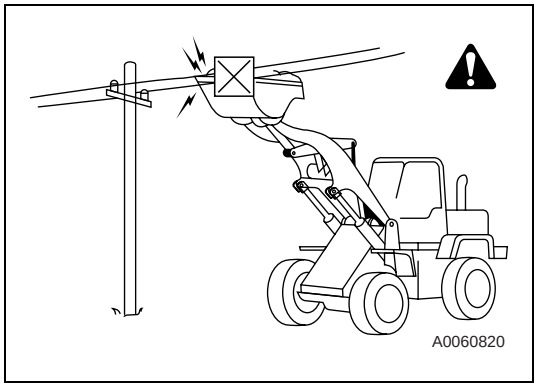

Nominal Voltage		Safety Distance	
	up to 1.000 V	3.280 ft	1 m
over 1 kV	up to 110 kV	9.842 ft	3 m
over 110 kV	up to 220 kV	13.123 ft	4 m
over 220 kV	up to 380 kV	16.404 ft	5 m
with unknown nominal voltage		16.404 ft	5 m

- The safety distances given here reflect the German safety standards. You can find the safety distances applying to your country in the relevant national regulations.
- Before you start work, obtain information about line voltages from your supply company.
- When estimating the distance, take into account all possible movements of the machine, the work unit, and the line. An uneven surface may result in the machine swaying, or wind may move the lines, etc.
- Should the work unit come into contact with a power line, proceed as follows:

1. Do not leave the driver's cab. The driver's cab is a "Faraday cage" protecting you from electric shock.
2. Warn other persons and tell them to stay far away from both the power line and your machine.
3. Try to move the machine out of the range of influence of the power line by moving it away from the line, moving away the work unit, etc.
4. Have the power in the line switched off.

Loading

- Proceed as follows to fill embankments, to backfill ditches, or to deposit earth over the edge of a hill:

  1. First, dump a heap of earth in front of the hill.

  2. Fill the bucket with earth again and drive the machine into the heap of earth. Dump the bucket contents behind the first heap of earth.

- The load is relieved very suddenly when the heap of earth is pushed over the edge of the hill or when the machine reaches the edge of the hill. If this happens, the driving speed may suddenly increase. For this reason, drive particularly slowly and carefully at these points.

- If possible, perform all load operations with a following wind to protect yourself against dust and impaired vision.

- Avoid sudden starts, turns, or stops when the bucket is full.

Good Vision

- When working in dark areas, switch on the working lights of the machine and provide additional lighting for the working area.

- If vision is impaired, e.g. due to mist, snow, or rain, interrupt work and wait until vision has improved to such an extent that safe work is ensured again.

Working on snow

- When working on snow or ice-covered surfaces, there is danger of the machine starting to skid even at a very flat angle. For this reason, drive slowly and avoid sudden starts, turns, or stops.

- Very often snow hides the edges of roads and other objects. For this reason, proceed very carefully when removing snow.

- When driving on hill flanks covered with snow do not brake abruptly to stop the machine. To stop the machine, lower the bucket onto the ground.

- The load may vary considerably, depending on the structure of the snow. For this reason, reduce the load and pay attention that the machine does not start to skid.

Height limitation

When working in areas with height limitations, e.g. in tunnels, beneath bridges or power transmission lines, or in garages, pay attention that the work unit does not touch or damage these facilities.

Brakes

- Use the brake pedal only for braking, do not use the brake pedal as a foot rest.
- When you are driving downhill you can use the braking force of the engine by reducing the speed (rpm) of the engine. If required, you can additionally press down the braking pedal for braking.

Working on loose soil

- Do not drive the machine too close to edges of hills, overhangs, and deep ditches.
- If the soil starts to sag at these locations, the machine may tip over, fall down, or roll over, thus injuring you severely.
- Take into account that the soil is wet and soft after heavy rainfall, or very loose after blasting.

Working with the forklift truck attachment

- Check daily, before starting operation, the fork tines of the machine for visual damages (e.g. fissures, cracks, abrasion).

  Also the protective device for unintentional removing or shifting of the fork tines may have no faults. Never operate with a damaged forklift truck attachment.
- Before inserting the forklift truck attachment into the quick-change unit, check whether it is appropriately locked in.
- Make sure that the distance between the individual fork tines is sufficient.
- Never exceed the maximum permitted loading capacity of the forklift truck attachment.

  It depends on the condition of the ground on which the work is to be performed and the stroke height. The values specified in chapter "1.10. CE-conforming equipment" on page 1-24 refer to the most unfavourable stroke position with the boom in horizontal position.

  The centre of gravity of the load lies 19.685 inch (500 mm) from the fork back and the fork tines (see drawing).

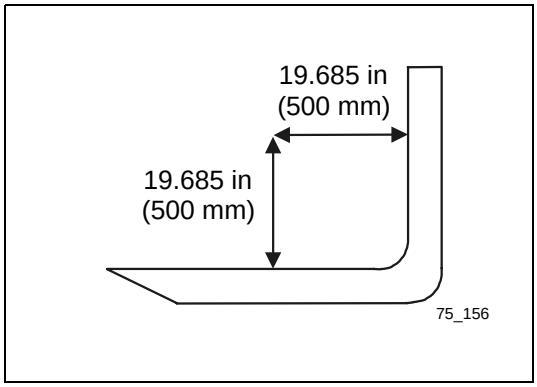

- Transports palettes only individually.

  If you are instructed by the responsible colleague to transport more than one box palette, which are also piled up, you must make sure in any case that the locations under which the forklift truck attachment is gripping for transporting are in perfect condition.

  The overall height of the palette pile must not exceed 6.56 ft (2 m).

  Make sure that the fork tines are adapted to the length of the load. Move the fork tines so far under the load that the load comes to a rest at the fork back.

- Make sure that the fork tines are adapted to the length of the load. Move the fork tines so far under the load that the load comes to a rest at the fork back.

- If you are transporting a load which is impairing your sight on the route, you must drive the machine into a direction in which you have free sight. If it cannot be avoided, drive backwards. If this is not possible, ask a colleague to assist you by clearing your way and indicating to you any obstacle.

  In this case, drive very slowly and extremely careful.

- During transporting, lower the boom to its transport position.

  Both red arrows of the transport position marking (see adjacent figure) on the bucket cylinder must be next to each other.

  Incline the load slightly to the back during the transport.

- Always drive slowly when you are transporting loads (speed range 1).

- If you are driving on slopes or hills, transport the load always in such a way that it is pointing to uphil.

- The boom performs a semicircular movement during the lifting.

  Lift the boom to the desired transporting height only shortly before approaching the deposit surface. This prevents that the load is damaged during the lifting.

- Lower the forklift truck attachment completely to the ground before quitting the driver's cab.

Parking the machine

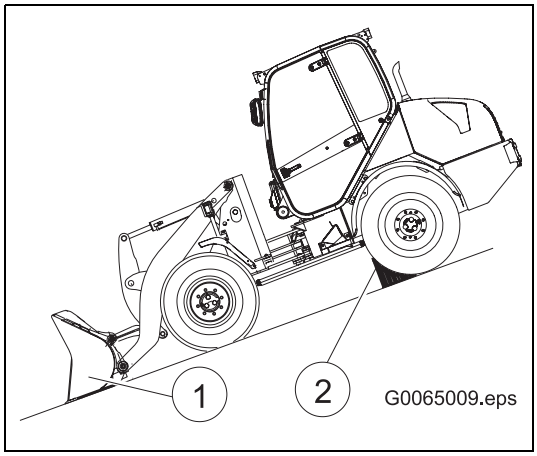

- If possible, park the machine on an even surface.

  If you have to park the machine on a slope, you must park the machine with the work unit pointing down the slope.

  Lower the work unit (1) until it firmly touches the ground, or let the cutting edge of the bucket sink deeply into the soil.

  Block the wheels with wheel chocks (2) to ensure that the machine cannot roll away.

- When parking the machine on public roads, ensure that it does not obstruct traffic.

  Put up signal lamps and required warning signs to ensure that passing traffic can clearly see the machine.

- Adhere to all regulations on parking vehicles and securing building sites.

- Before you leave the machine, completely lower the work unit onto the ground.

  Secure the control lever of the work hydraulic system against accidental operation.

  Switch off the motor.

  Lock all points that can be locked and store the key in a safe place.

2.2.3. Transport

Loading and unloading the machine

Loading and unloading is potentially dangerous. For this reason, proceed with extreme care.

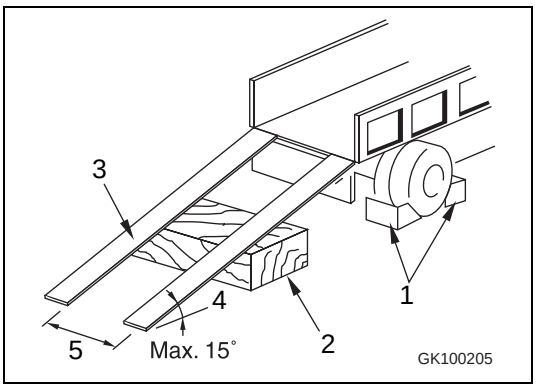

- Load and unload the machine only on solid and level ground. Keep a safety distance to the edge of the road.
- Block the wheels of the transport vehicle (1) and place support blocks (2) under both ramps before driving the machine onto the transport vehicle.
- Only use ramps (3) with appropriate carrying capacities and widths. The ramps must be long enough to ensure that the maximum loading gradient (4) of 15° is not exceeded.
- Ensure that the ramps are positioned and fastened safely and that both sides have the same height. Set the distance between the ramps to the distance between the wheel tracks (5).
- Ensure that the surfaces of the ramps are clean and free of grease, oil, ice, and loose material. Remove any dirt adhering to the wheels.
- When loading and unloading the machine, keep the engine speed low and drive slowly.
- Do not carry out steering movements on the ramps. If required, drive off the ramps again, correct alignment of the machine, and drive up again.
- After loading, i.e. when the machine is on the transport vehicle, apply the parking brake.
- Block the wheels of the machine with wheel chocks.
- Set the steering wheel of the machine to straight driving.
- Secure the articulated steering with the locking bolt (Right side: 1).

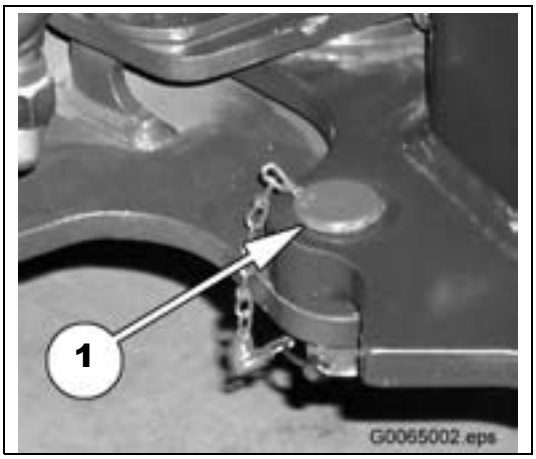

- Secure the machine on the transport vehicle by means of appropriate fastening equipment. Only use the attachment points on the machine for lifting and securing. For safety reasons, do not use any other points for fastening (e.g. axle, cardan shaft, articulated steering, bucket teeth, or strapping around the cab).

Transport

- When moving the machine on a transport vehicle, adhere to all applicable motor vehicle traffic regulations.
- Determine the transport route, taking into account the width, length, height, and weight of the load and, if necessary, have this approved by the responsible authorities.

2.3. Precautions for maintenance

2.3.1. Personnel

Do not service or repair the machine unless you are an appropriately qualified technician or have been appropriately instructed by a qualified technician.

2.3.2. Before carrying out maintenance

Warning sign

While the machine is being serviced, the engine must not be started and the control elements must not be actuated without prior agreement, since this could cause accidents with serious injury.

Always attach the **warning sign** to the control lever for the work hydraulic system to warn other persons that work is being performed on the machine. If required, put up additional warning signs around the machine.

You may purchase these warning signs from your Komatsu dealer.

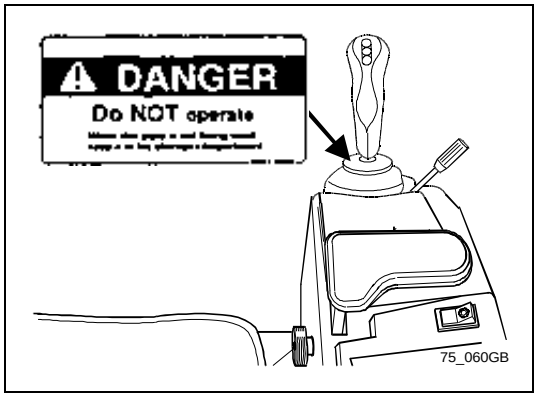

Tools

Only use tools which are suitable for the task you want to carry out. If you use damaged or makeshift tools or tools which are of inferior quality, injuries may occur.

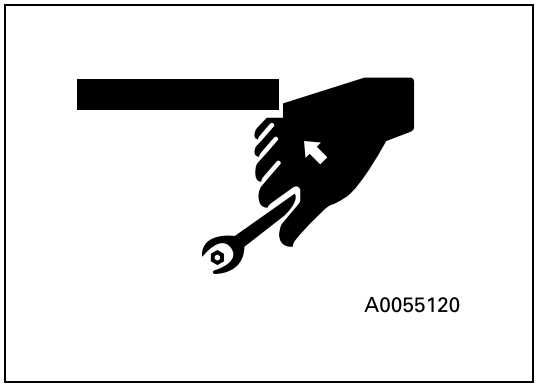

Safety-related parts

The quality of these parts is subject to normal wear and tear. For this reason, replace safety-related parts by new ones at regular intervals, regardless of whether they are defective or not.

Safety-related parts are:

- Fuel system:
  - fuel hose,
  - overflow hose,
  - tank cap
- Hydraulic system:
  - all hydraulic hoses

Immediately replace defective parts, even if the interval for replacement has not elapsed.

Replace hydraulic hoses every 6 years.

Prior to start of inspection and maintenance

Prior to start of inspection and maintenance operations, park the machine on solid, even ground. Lower the work unit.

If your machine is provided with E.C.S.S., you must switch off the E.C.S.S..

Switch off the engine and safeguard the machine.

If the engine has to be running during maintenance, e.g. for pressure checks of the hydraulic system, proceed with particular care. Carry out such measures with two persons with whom you have arranged clear hand signs beforehand.

One person must be seated on the driver's seat to ensure that the engine can be immediately switched off, if required. This person must always ask the second person before actuating the control levers.

The person performing the maintenance measures must take care not to touch or get caught by moving parts.

Securing the articulated steering

Before starting maintenance, secure the articulated steering against accidental movement using the locking bar on the right side (position 'A').

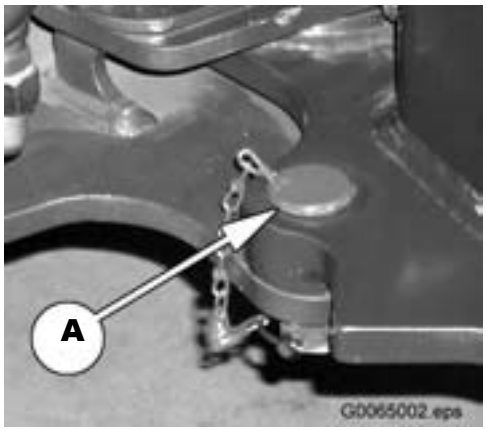

Supporting the boom

When work needs to be conducted under a raised boom then the boom must be supported against the danger of suddenly falling. For this purpose you should use either a jack stand, which should be positioned below the boom, or a support device (1) which is mounted over the piston rod.

The support device is available as an optional extra.

WA70-5	**42T-98-12050**

When using the support device the following procedure must be adhered to at all times.

1. Park the machine on a piece of level, solid ground.
2. Put the parking brake on.
3. Place the wheel chock in front of the wheels to prevent the machine from rolling away.
4. Lift the boom up sufficiently far so that the supporting device (1) can be installed over the lifting ram's piston rod.
5. Switch the engine off.
6. Position the supporting device (1) over the piston rod without standing under the boom and tighten the bolt (2) by hand.
7. With the engine off, lower the boom slowly until it rests on the support device (1).
8. Set the drive direction selector to "N" and move the working hydraulic's catch lever to position "1".

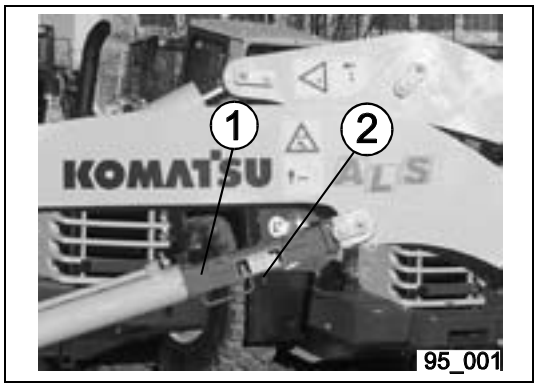

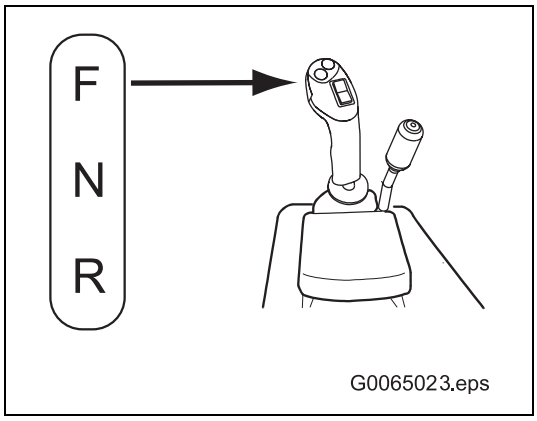

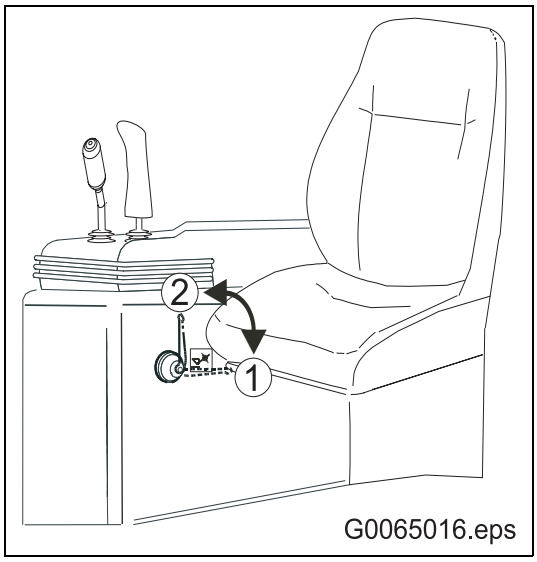

Tipping up the driver's cab

1. Park the machine on solid, level ground.
2. Lower the work unit to the ground and switch off the engine.
3. Use the locking bolt to secure the articulated steering (cross-reference "Securing the articulated steering", Page 2-24).

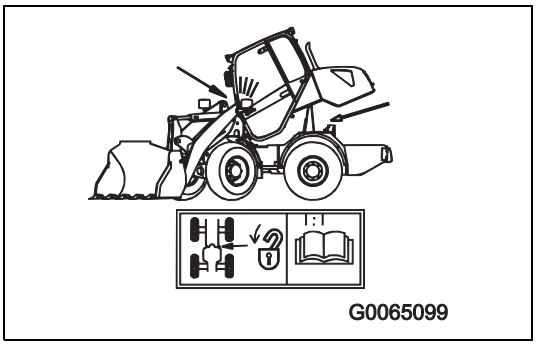

NOTE

The machine has to be positioned straight and the articulated steering has to be secured with the locking bolt! If the driver's cab is tipped up while the machine is bent, the front frame can cause damage to the windscreen!

4. Open the bonnet.
5. Remove the cab fastening screws under the rear wheel cover (arrow).

   2 screws on the left and 2 screws on the right (1).

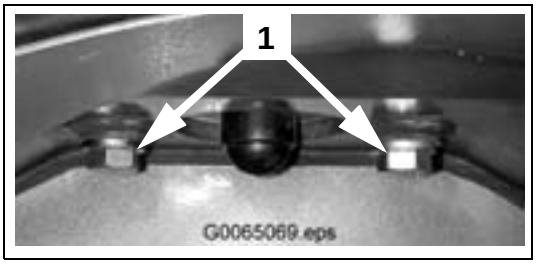

6. Take the hand pump lever out of its holder on the radiator (2) and insert it into the receptacle of the pump (3).

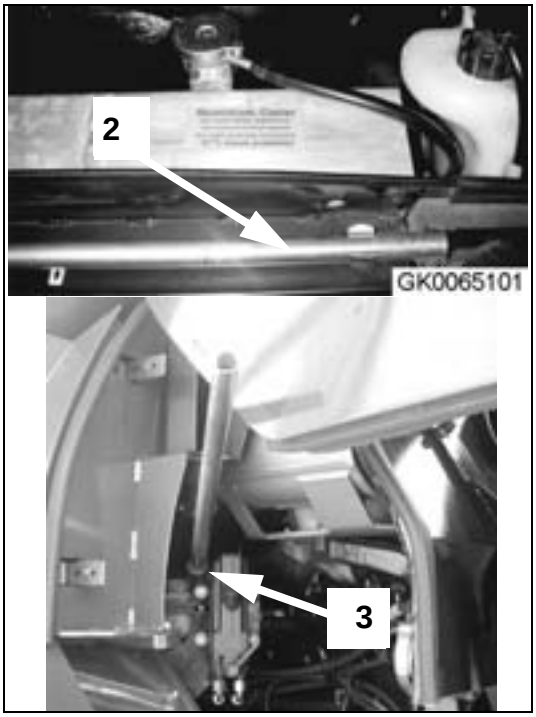

7. Set the lever at the pump to "pump up" and pump the cab upward until it reaches the limit stop.

8. Move the safety rod on the right side upward until it reaches the pin at the cab floor.

9. Set the lever at the pump to "pump down" and pump the cab downward until the safety rod is secure against the right side of the cab floor.

10. Take the lever out of the pump.

Tipping down the driver's cab

1. Insert the lever into the pump. Set the lever at the pump to "pump up" and pump the cab upward until it reaches the limit stop.

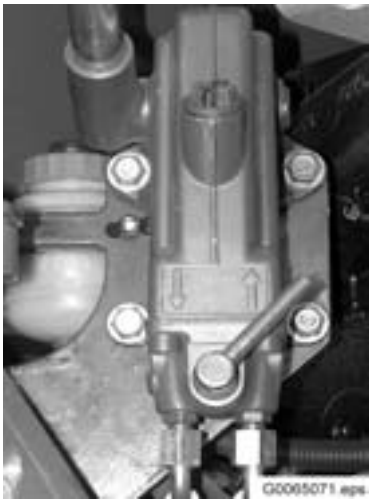

2. Fold down the safety rod on the right side and fasten it in this position (arrow).

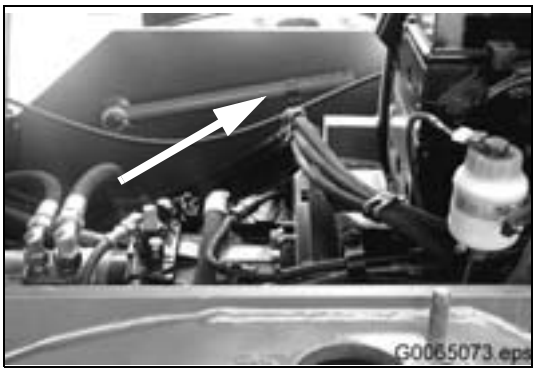

3. Set the lever to "pump down" and pump the cab downward until the cylinder is entirely retracted (the resistance at the lever increases markedly).

NOTE

Make sure that the guide pin (arrow) on the left of the rear frame is inserted into the guide bushing of the cab.

4. Screw in the fastening screws for the cab (2 left, 2 right) and tighten the screws.

   Torque = 2.3 kpm (230 Nm).

5. Remove the lever from the pump and fasten it to the radiator.

6. Close the bonnet.

2.3.3. During maintenance

Attachments

Attachments removed from the machine must be put down in a safe location in such a way that they cannot tip over.

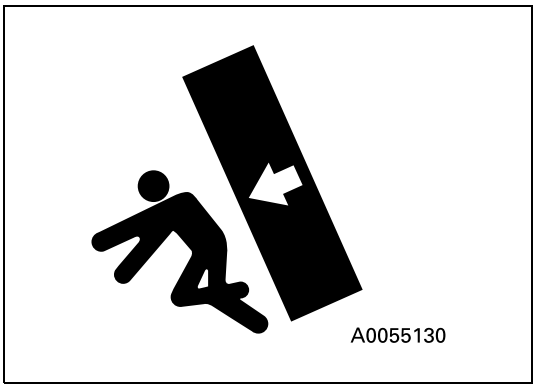

CAUTION

Caution - risk of injury!

Working under the machine

- Always lower all movable work units onto the ground or set them to their lowest positions before you start to perform maintenance or repair measures under the machine.
- Block the wheels of the machine using wheel chocks.
- Do not work under a machine that is not appropriately supported.

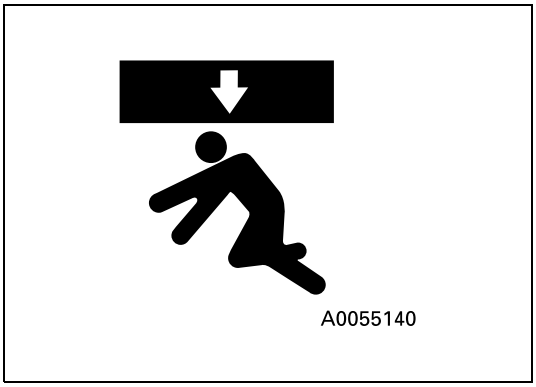

Keeping the machine clean

- Always keep the machine clean and tidy.
- Oil, grease, and tools lying around involve danger, since they may cause slipping or tripping over.
- Do not clean sensors, plugs, and the interior of the driver's cab with water or steam. If water seeps into the electric system, there is danger of uncontrolled and unintentional movement of the machine which may cause accidents.

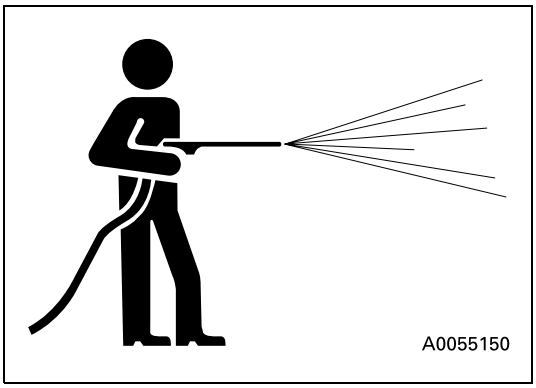

Specific measures

Always wear appropriate safety clothes and safety goggles when you perform grinding, welding, use a sledge hammer or carry out similar work.

Refuelling and topping up of oil

- Spilled fuel or oil involves danger of slipping and fire. For this reason, immediately remove any spilled liquid.
- Always refuel and top up oil in a place that is sufficiently ventilated.
- After refuelling and topping up, close the filling openings with cover caps.
- Do not use fuel for rinsing or cleaning of components.
- Ensure that neither oil nor fuel can seep into the soil or water. Dispose of used substances according to the relevant environmental regulations.
- If the machine is provided with a fuel sieve in the tank opening, do not remove this fuel sieve before you start refuelling.

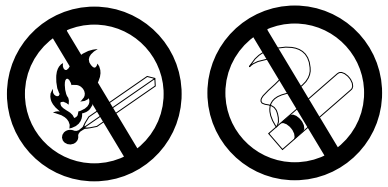
A0055040

A0055030

A0055020

Coolant

- The machine is provided with an aluminium cooling system. Apply only coolants in the prescribed mixing ration.
- Caution, antifreeze is highly inflammable.
- To check the coolant level, first switch off the engine and wait for the cooling system to cool down. Then, check the coolant level in the expansion tank.
- Slowly unscrew the cap to let the pressure escape.
- If required, top up water in the expansion tank.

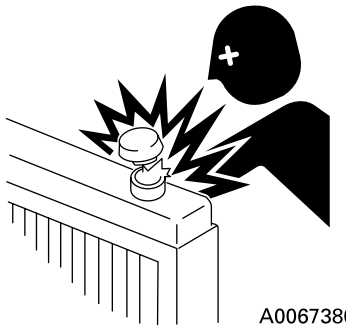
A0067380

Use of lighting

Always use explosion-proof lighting when checking fuel, oil, coolant, or battery acid.

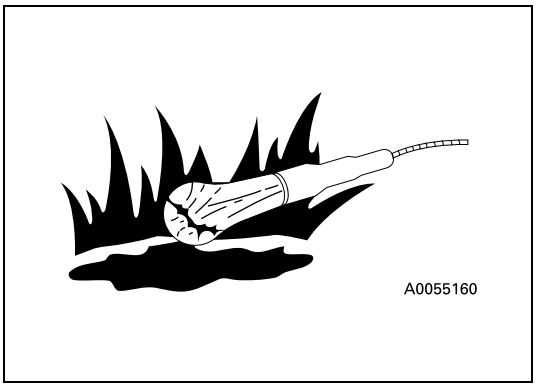

High-pressure hoses

- Neither bend high-pressure hoses nor hit them with hard objects. Do not use piping or hoses with fissures, cracks, or bends, since they may burst during operation.
- Immediately replace any loose or damaged fuel or oil hoses. Leaking fuel or oil involves danger of fire and slipping.
- Replace all hoses every six years at the latest.

Handling high-pressure oil

- Always take into account that the hydraulic lines are subjected to high pressure.
- Do not top up oil, drain oil, or perform maintenance or inspection measures unless the work unit is completely lowered and the system is depressurised.
- If oil comes out under high pressure, this involves danger of an oil jet penetrating the skin or getting into the eyes. For this reason, always wear safety goggles and thick safety gloves, and use a piece of cardboard or wood when checking for oil leaks.
- If you have been hit by an oil jet, immediately go and see a doctor and explain what has happened.

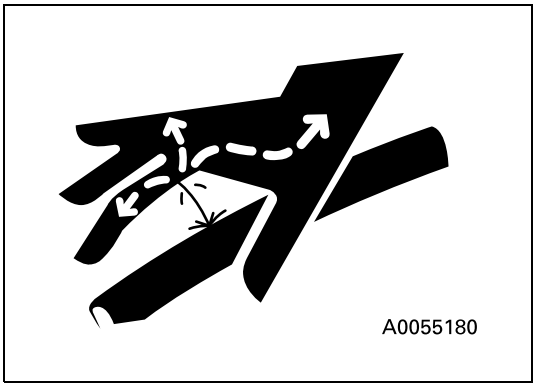

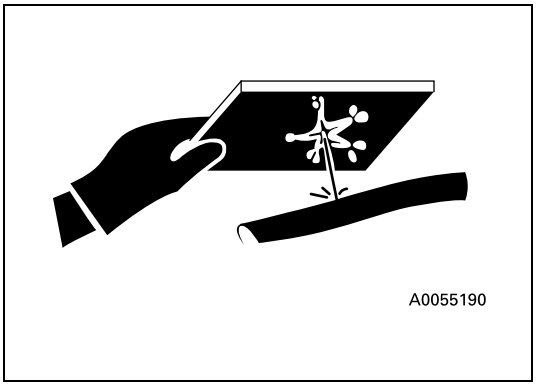

Handling of pressure accumulators

WARNING

Danger of injury! Pressure accumulator is filled with highly pressurised nitrogen.
Do not open or damage the pressure accumulator.

- Immediately inform your Komatsu dealer, if you detect malfunctions or defects of pressure accumulators.
- Filling the pressure accumulator with gas or topping up gas in the pressure accumulator is strictly limited to persons authorised to handle highly pressurised gas.
- Do not hit against the pressure accumulator.
- Keep naked light and sources of heat away from pressure accumulator.
- Do not drill holes into the pressure accumulator.
- Do not weld parts to the pressure accumulator.
- The service technicians must depressurise the hydraulic system before they can remove the pressure accumulator.
- The service technician must let the gas escape before they can disassemble the pressure accumulator.

Fan and belts

- Always keep sufficient distance from rotating parts and pay attention that nothing gets within the operating range of rotating parts.
- There is danger that parts getting caught by the fan or the belt are cut off or hurled away.
- Do not wear loose clothing, neckerchiefs or the like, or open, long hair that might get caught.

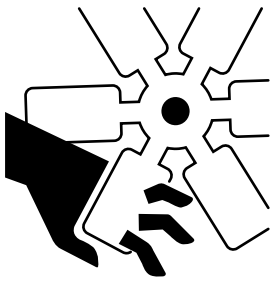

A0063830

Waste material

- Do not pour used oil into the sewage system, rivers, etc.
- Collect used oil of the machine in appropriate containers. Do not let oil flow out onto the ground.
- Adhere to all applicable laws and regulations when disposing of harmful substances, such as oil, fuel, coolant, solvents, filters, batteries, etc.

2.3.4. Tyres

Handling of tyres

(See "3.3.16. Tyre handling" on page 3-74)

Tyres may burst and the resulting blast wave or parts whirling around may cause severe injury or damage. Make sure that the applicable procedures for servicing and replacing of wheels or tyres are fully understood and that only correct procedures are used.

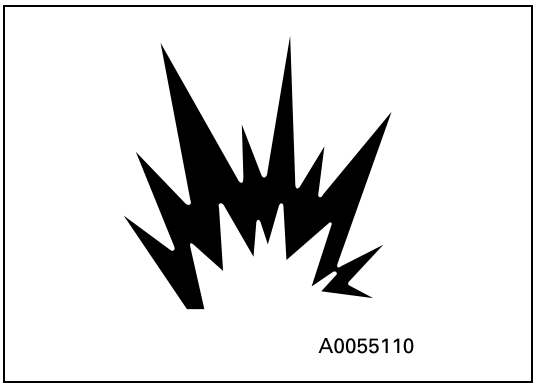

To ensure safety and reduce wear and tear, always adhere to the following instructions:

- Inflate tyres up to the defined pressure. If the tyre pressure is too low, the tyres may heat up and burst. If the tyre pressure is too high, there is also danger that the tyre may burst.
- If a tyre heats up considerably, inflammable gases are produced. A burning tyre may burst very easily, thus spreading fire over a large area.
- Check the tyre pressure when the tyres are still cold. Do not let off pressure, when the pressure in a warm tyre has increased.
- Do not light a fire and do not carry out welding near the tyre.
- Keep the working area free of pointed or sharp objects that may damage the tyre.
- Avoid any overload.

The values for the tyre pressure and for the permitted speed correspond to the manufacturer specifications and refer to standard operations. If you want to perform special operations, contact the responsible Komatsu dealer or the tyre manufacturer.

Storing tyres

- Basically, tyres must be stored in a protected room that cannot be accessed by unauthorised persons.
- Place the tyres on an even surface and incline them 60° to 70° (2) against a solid stopper. Secure the tyres with wheel chocks (1) so that they cannot roll away, tip over, or slip.
- If, however, a tyre tips over despite this safety measure, do not try to stop it, but get out of the way as quickly as possible, since tyres for construction machines are very heavy and may cause serious injuries.

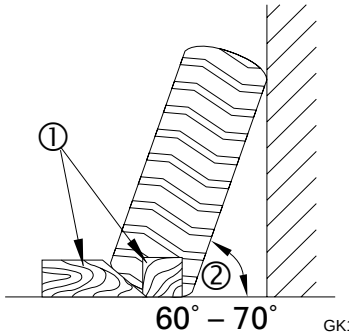

2.4. Safety labels on the machine

All safety labels must be kept clean all times. Missing or damaged safety labels must be replaced.

2.4.1. Positions and order numbers of information labels

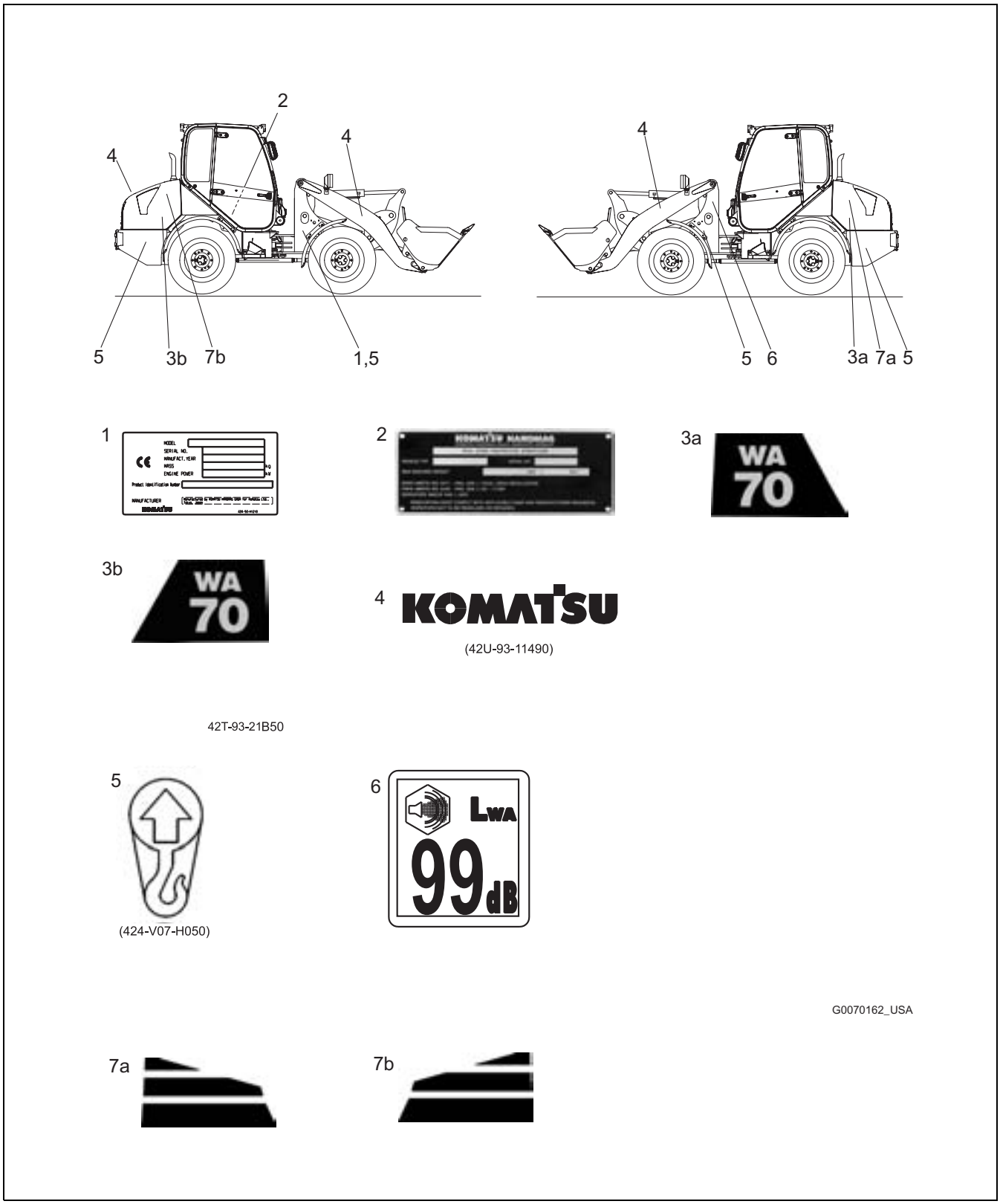

2.4.2. Positions and order numbers of safety labels

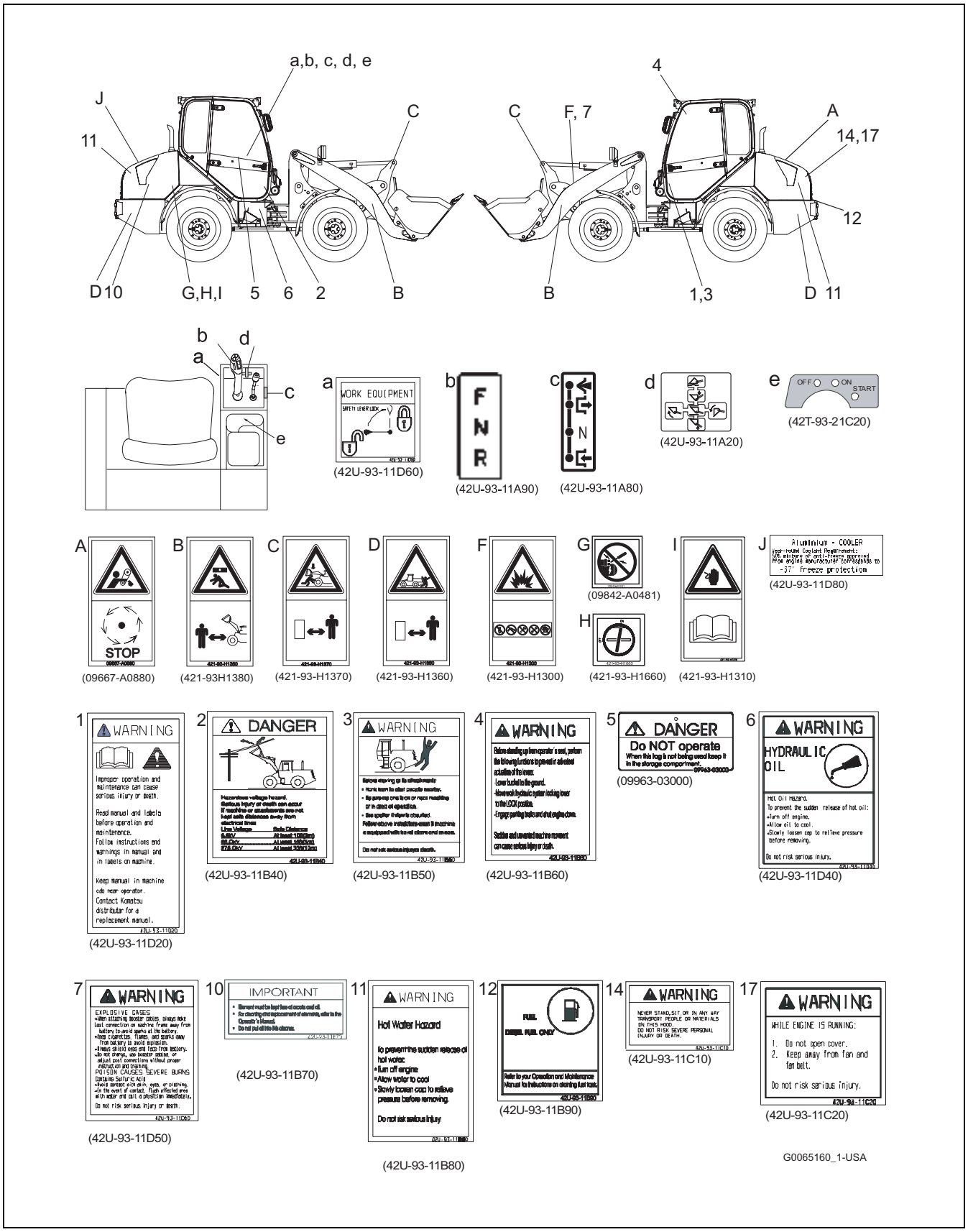

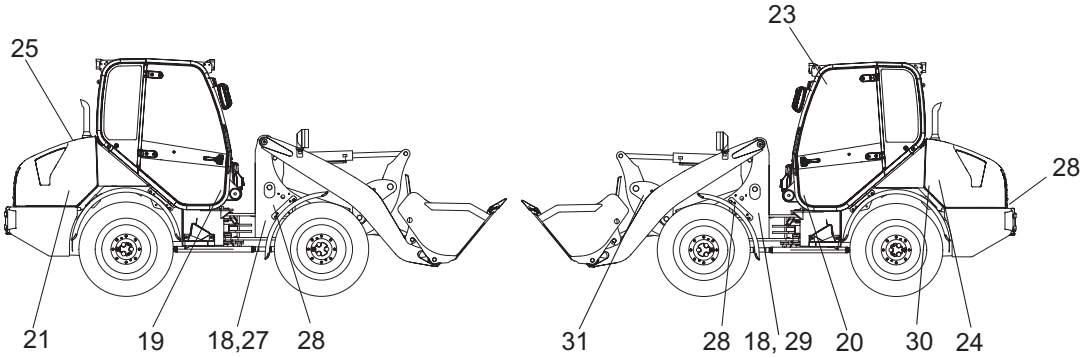

18

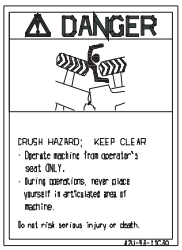

(42U-9311C30)

19

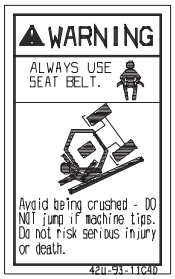

(42U-93-11C40)

20

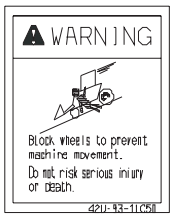

(42U-93-11C50)

21

(42U-93-11C60)

23

(42U-93-11C70)

24

(42U-93-11C80)

25

(42U-93-11C90)

27

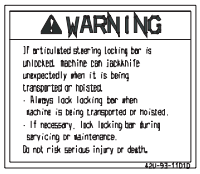

(42U-93-11D10)

28

(42U-93-11A60)

29

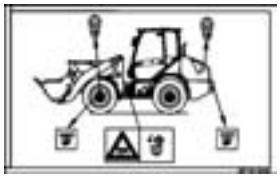

(42T-93-21A20)

30

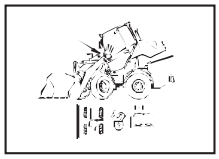

(42T-93-21B30)

31

(42T-93-21C10)

G0065160_2-USA

3. Operation

3.1. General view

3.1.1. General view of the machine

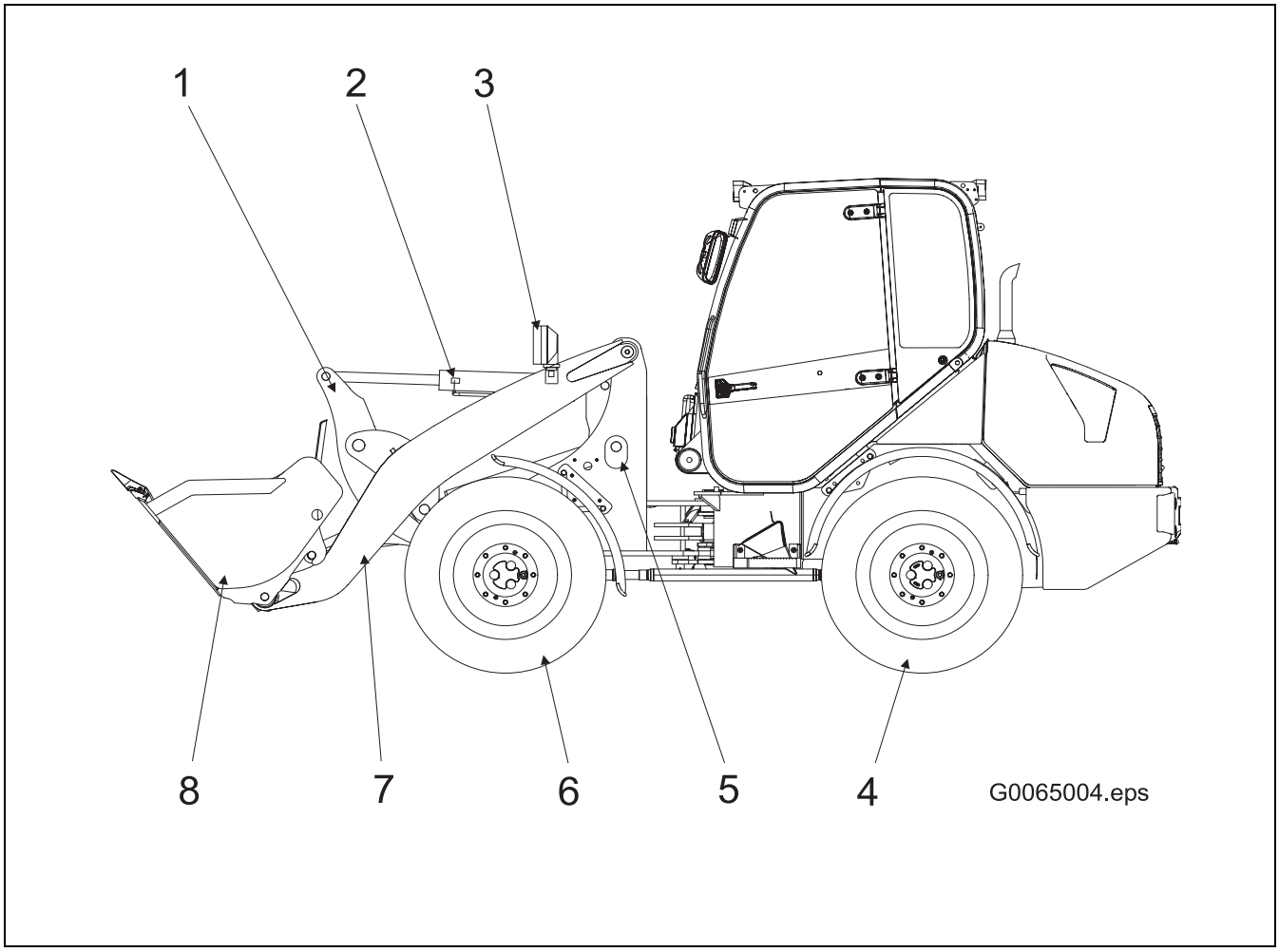

1	Tipping lever	5	Lift cylinder
2	Bucket cylinder	6	Front wheel
3	Indicator lamp, Headlamp	7	Boom
4	Rear wheel	8	Bucket

3.1.2. Controls and indicators

Overall view

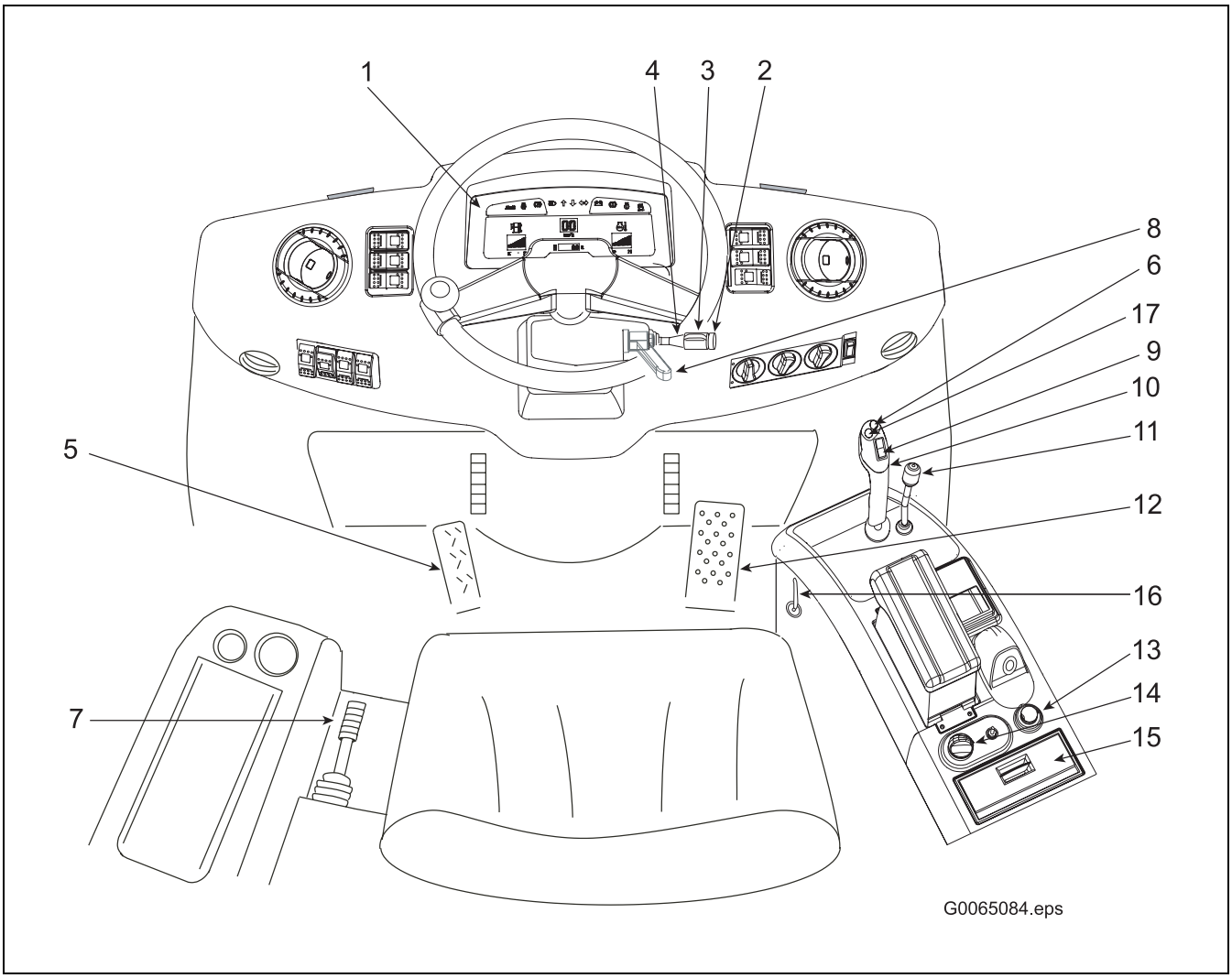

1	Instrument panel	9	Driving direction switch
2	Horn button	10	Multifunctional lever
3	Light switch	11	Control lever for special equipment
4	Direction indicator lever	12	Accelerator pedal
5	Inch-Brake pedal	13	Socket (12 V)
6	Speed range 2	14	Variable shift control switch
7	Parking brake	15	Car radio – option
8	Steering column adjustment	16	Safety lever for work hydraulic
		17	Differential lock 100%

Switches, controls and warning lights

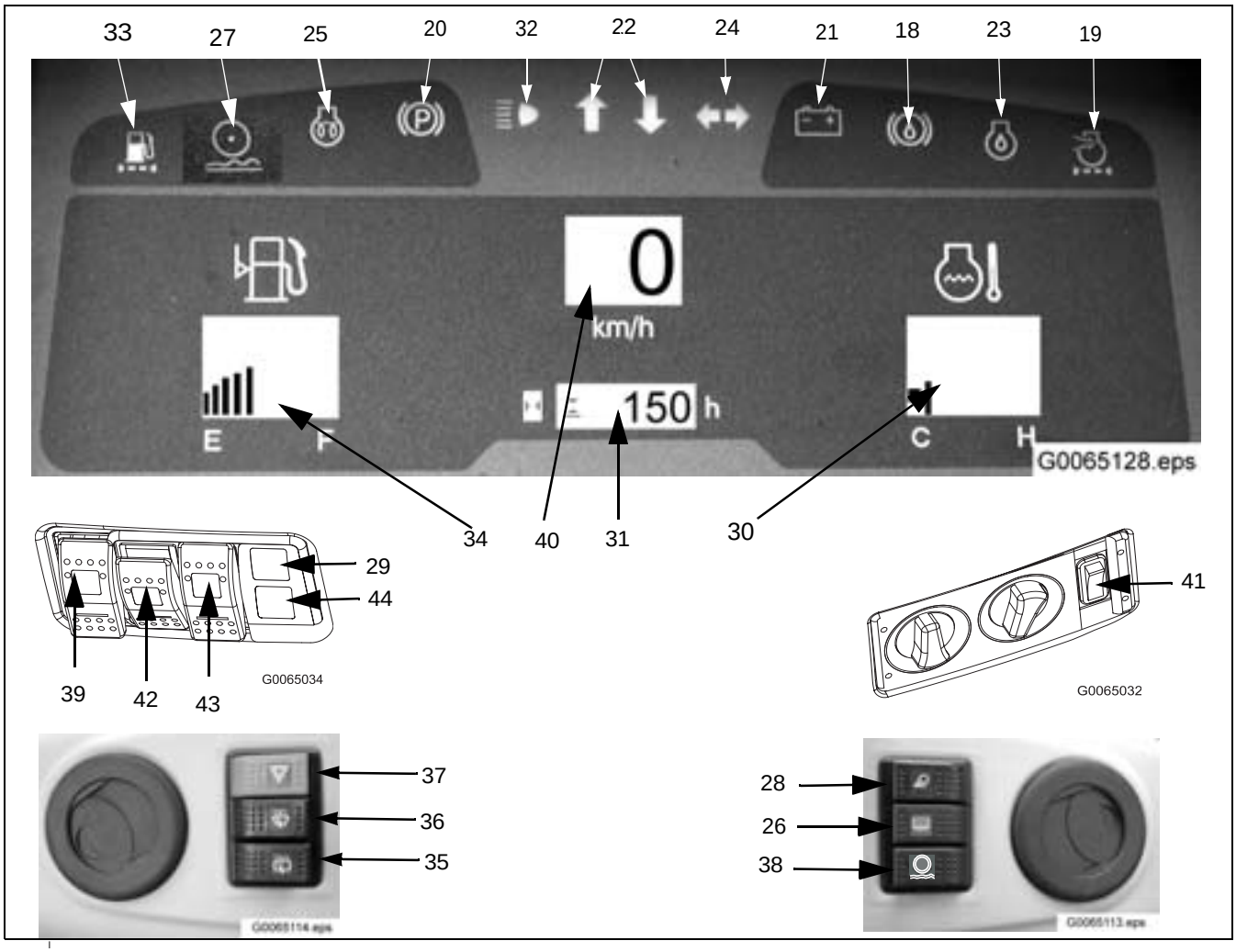

18	Brake fluid reservoir warning light	32	High beam control lamp
19	Air filter warning light	33	Warning light: Water separator
20	Parking brake control lamp	34	Fuel gauge
21	Charging current warning light	35	Wiper and washer system switch (rear window)
22	Direction indicator switch control lamp	36	Wiper and washer system switch (windscreen)
23	Engine oil pressure warning light	37	Hazard warning lights switch and control lamp
24	Flasher signal control lamp	38	E.C.S.S. switch with control lamp – option
25	Intake air pre-heater control lamp	39	Warning beacon switch with control lamp – option
26	Heated rear window control lamp	40	Meter display pilot lamp
27	E.C.S.S. control lampt – option	41	Air conditioning switch with control lamp– option
28	Working lights switch and control lamp	42	Control lamp in the switch of the 3rd control circuit - Optional
29	Switch and control lamp differential lock 100%	43	Control lamp in Sprayer switch - Optional
30	Coolant temperature indicator	44	Control lamp: Speed range 2
31	Operating hour meter		

3.2. Description of the individual elements

3.2.1. Instrument panel

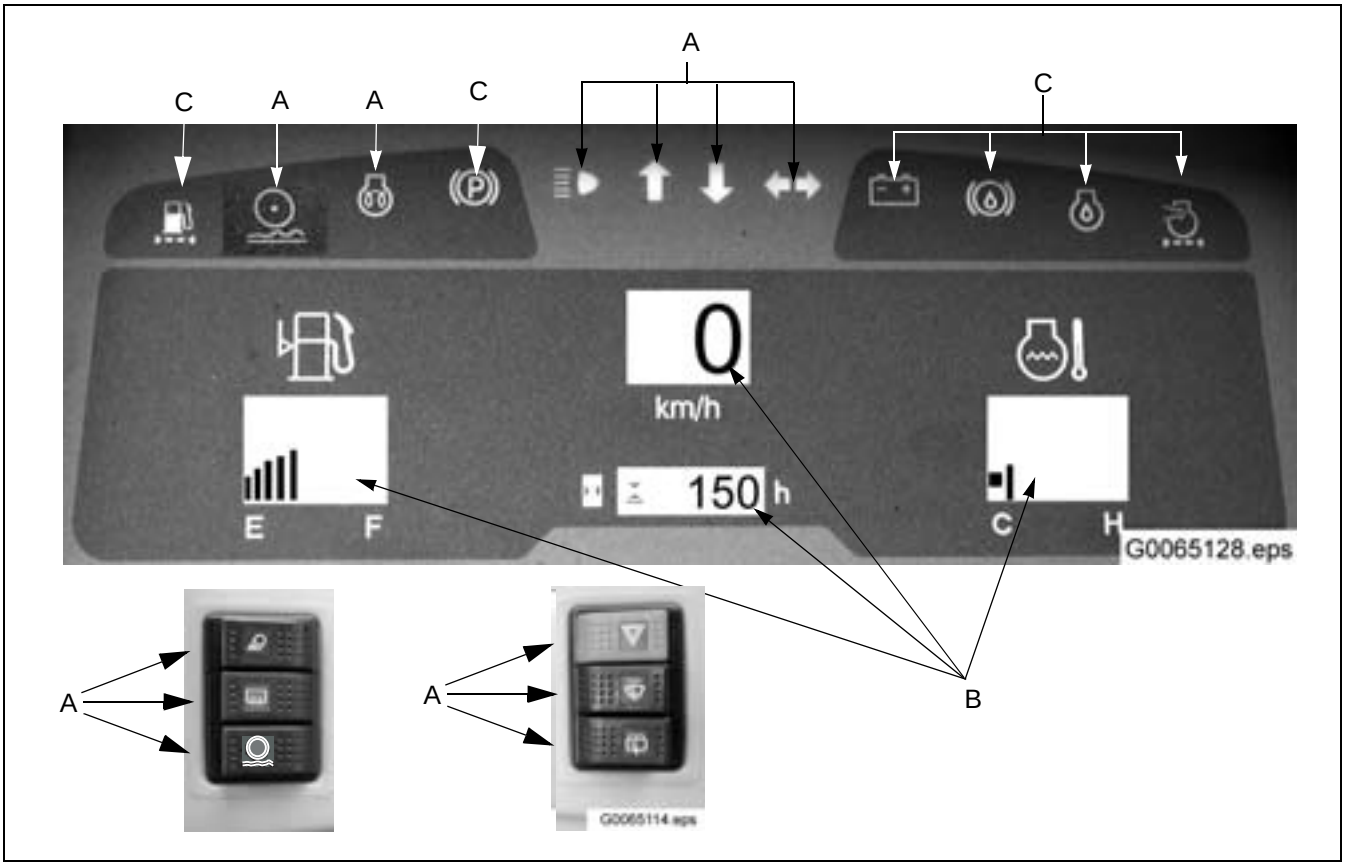

The instrument panel can be divided in

A **Control lamps**

B **Measuring indicators**

C **Warning lights**

In the following sections of this chapter, all elements required for an efficient machine operation are explained in detail.

Control lamps

This group comprises the control lamps for parking brake, high beam, low beam, heated rear windscreen, air preheater, direction indicator, driving direction switch, E.C.S.S. (option) and control lamps for the high-speed gear (option).

Measuring indicators

This group comprises the fuel gauge, the operating hour meter and the temperature indicator of the coolant.

Warning lights

This group comprises the warning lights for charging current, air filter, engine oil-pressure and brake fluid supply.

Warning lights

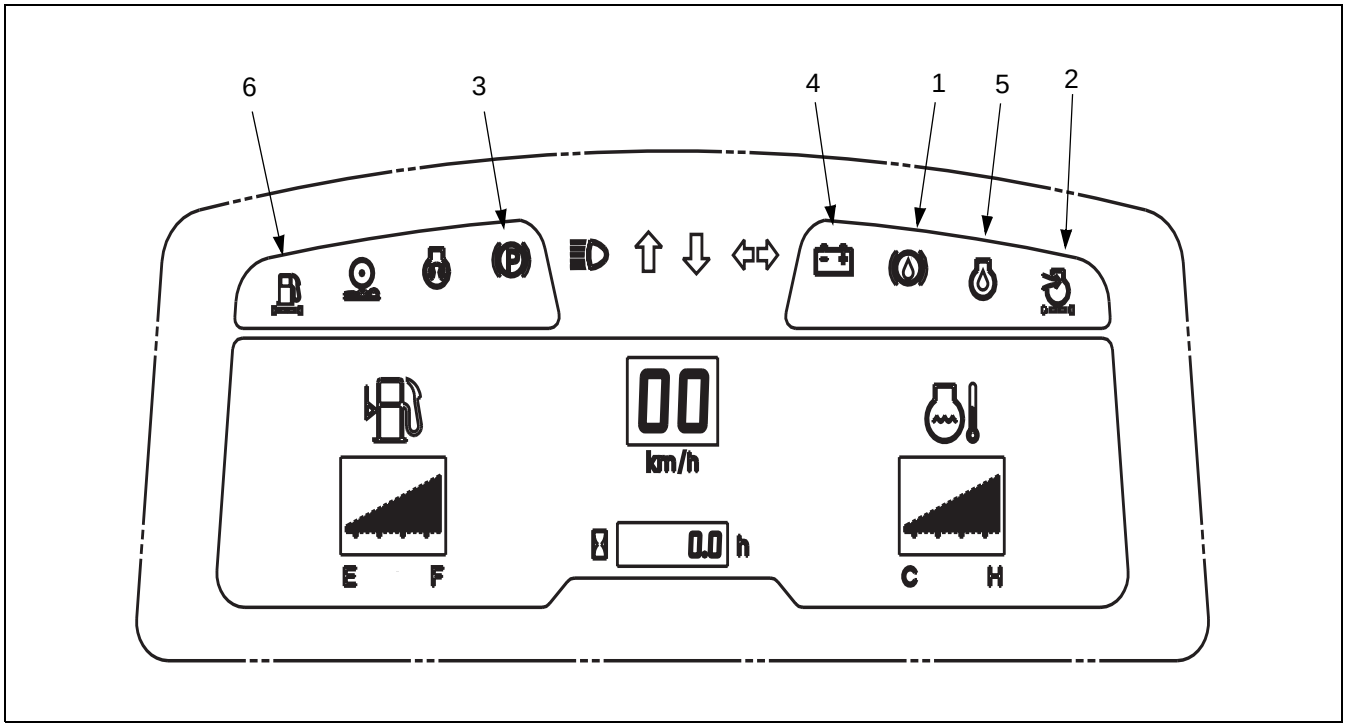

1 Brake fluid warning light
2 Air filter warning light
3 Parking brake control lamp
4 Charging current warning light
5 Engine oil-pressure warning light
6 Warning light: water separator

1. Brake fluid warning light

If the brake fluid supply is too low, the brake fluid warning light lights up in red.

In this case you must immediately stop the machine and switch off the engine. Proceed as described in chapter Troubleshooting: "4.6. Other troubles" on page 4-10“.

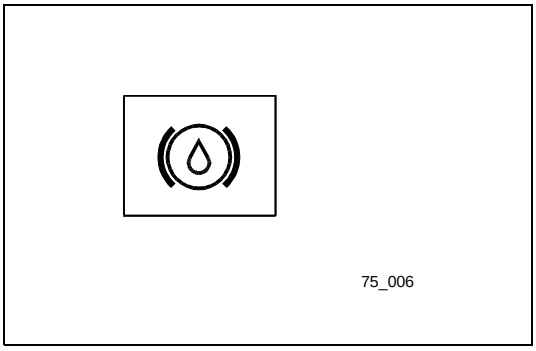

2. Air filter warning light

If the air filter is polluted, the air filter warning light lights up in red.

In this case, you must clean or exchange the air filter. Proceed as described in chapter Maintenance: "Air filter, removing and re-installing the filter insert, checking and cleaning the filter insert" on page 5-42.

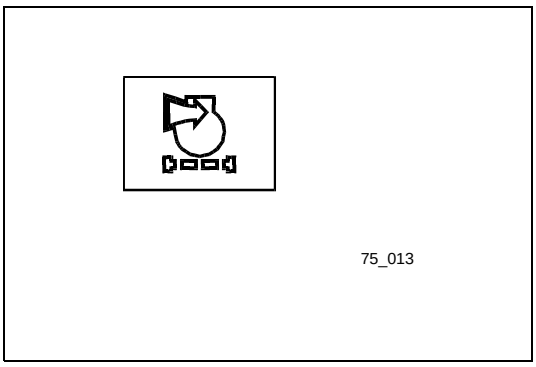

3. Parking brake control lamp

75_005

The parking brake control lamp lights up in red if you set the start switch to the 'I' operating position while the parking brake is applied.

In addition, the acoustic warner sounds if you set the driving direction switch to forward or reverse driving with the parking brake applied.

4. Charging current warning light

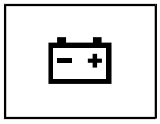

75_011

- Before you start up the engine:
  The charging current warning light must light up if you set the start switch to the 'I' operating position.
- With the engine running:
  As soon as the engine runs, the generator starts to generate current and to charge the battery. At the same time, the charging current warning light will go out. A fault is present, if the charging current warning light does not go out while the engine is running.

In the latter case, proceed as described in chapter "4.6. Other troubles" on page 4-10

5. Engine oil-pressure warning light

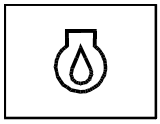

75_012

- Before you start up the engine:
  The engine oil-pressure warning light must light up if you set the start switch to the 'I' operating position. At the same time, the acoustic warner will sound.
- With the engine running:
  After starting the engine, the lubricating pressure builds up and the lamp goes out. If the engine oil-pressure warning light does not go out with the engine running or if it suddenly lights up during operation, while the acoustic warner sounds at the same time, a fault has occurred in the oil-pressure system.

In both cases, you must immediately stop the machine and switch off the engine. Proceed as described in the chapter "4.6. Other troubles" on page 4-10

6. Warning light: Water separator

G0065131.eps

The warning light of the water separator lights up in red when too much water has collected in the water separator at the fuel filer.

If this is the case, you have to drain the water from the water separator.

Proceed as described in the chapter Maintenance "Water separator at the fuel filter – Draining water and dirt sediments" on page 5-27.

Control lamps

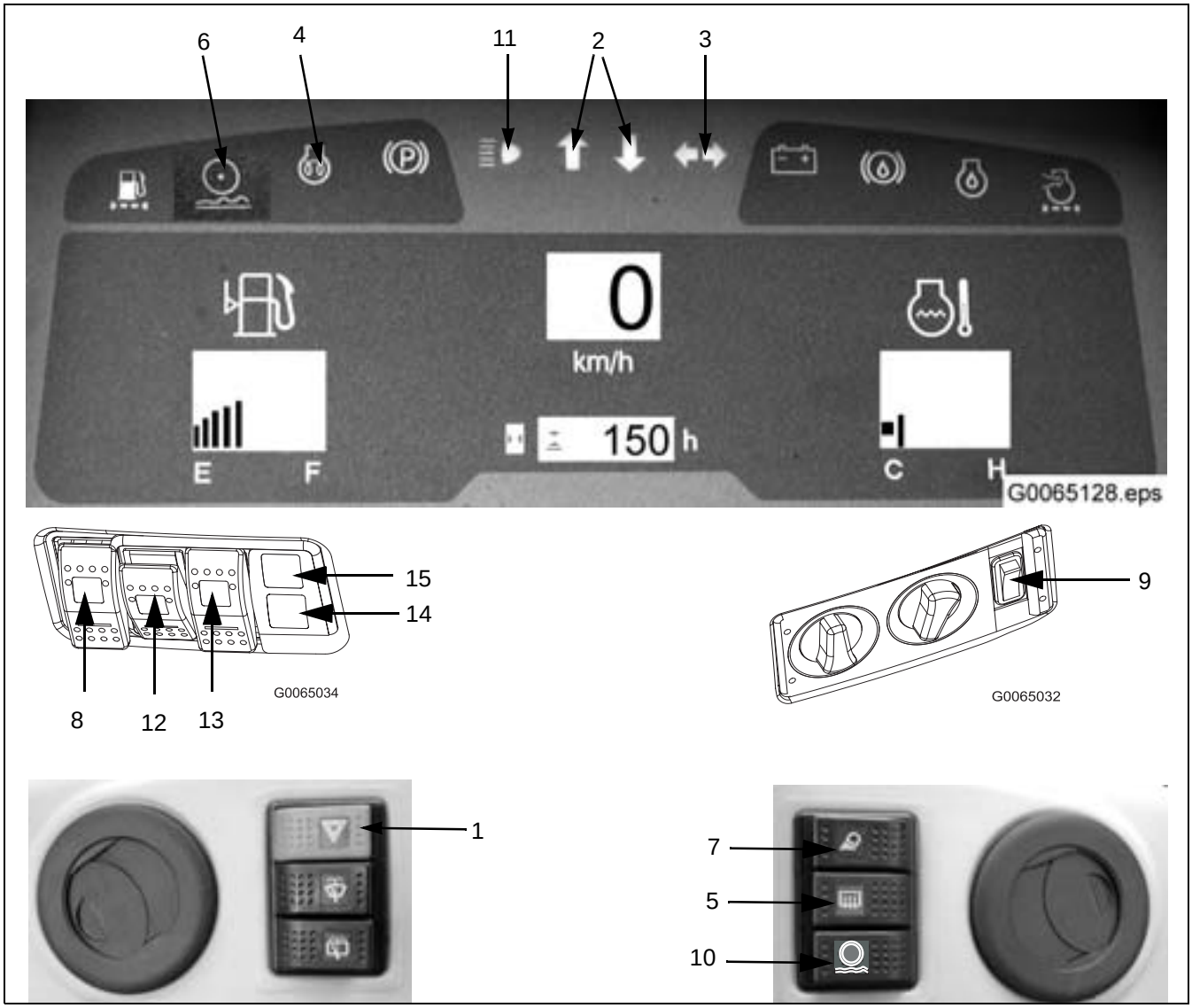

1 Control lamp in hazard warning lights switch
2 Driving direction switch indicators
3 Direction indicator control lamp
4 Air preheater control lamp
5 Heated rear windscreen indicator
6 E.C.S.S. control lamp (only activated for installed E.C.S.S.) – option
7 Control lamp in working lights switch
8 Control lamp in the warning beacon switch – option
9 Control lamp in the air conditioning switch – option
10 Control lamp in E.C.S.S. switch – option
11 High beam control lamp
12 Control lamp in the switch of the 3rd control circuit - Optional
13 Control lamp in Sprayer switch - Optional
14 Control lamp: Speed range 2
15 Control lamp: Differential lock 100%

1. Control lamp in hazard warning lights switch

The control lamp flashes when the hazard warning lights are switched on.

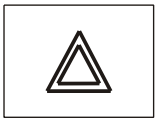

GK100815

2. Driving direction switch indicators

The indicators of the driving direction switch indicate which driving direction you have selected:

- left arrow lights up:
  Machine drives backwards
  (driving direction switch in 'R' position)
- right arrow lights up:
  Machine drives forward
  (driving direction switch in 'F' position)

If the driving direction switch is set to the 'N' neutral position, both control lamps will go out.

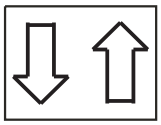

GK100836

3. Direction indicator control lamp

The direction indicator control lamp flashes if you have switched on the right or left direction indicators or the hazard flashers.

If the direction indicator control lamp flashes in very short intervals, a fault has occurred in the direction indicator system. In this case, proceed as described in chapter "4.6. Other troubles" on page 4-10.

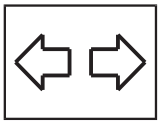

GK100837

4. Air preheater control lamp

The control lamp lights up, if you set the start switch to the 'I' operating position and if the air preheater is running.

It will go out if the heating cycle is over. The running period of the air preheater depends on the ambient temperature.

You can start the engine, after the control lamp has gone out.

GK100838

5. Heated rear windscreen indicator

The control lamp of the heated rear windscreen lights up, if you have switched on the heated rear windscreen.

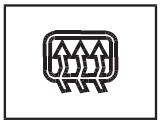

GK100839

6. E.C.S.S. control lamp (only activated for installed E.C.S.S. electronics) – option

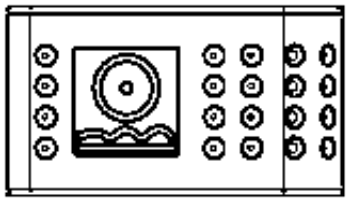

The E.C.S.S. control lamp on the instrument panel is only active if the E.C.S.S. is installed.

It lights up, when the E.C.S.S. is switched on and when the machine drives faster than 3.10 mph (5 km/h).

7. Control lamp in working lights switch

GK100816

The control lamp illuminates when the working lights are switched on.

8. Control lamp in the warning beacon switch – option

GK100846

The warning beacon switch with control lamp is only installed in machines which are provided with a warning beacon.

The control lamp in the switch lights up in green when the warning beacon is switched on.

9. Control lamp in the air conditioning switch – option

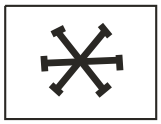

GK100845

The air conditioning switch with control lamp is only installed on machines which have been fitted with air conditioning.

The control lamp shines blue when the air conditioning is switched on.

10. Control lamp in E.C.S.S. switch – option

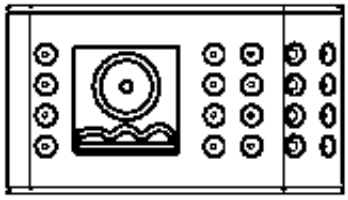

The E.C.S.S. switch with control lamp is only installed in machines equipped with E.C.S.S..

The control lamp in the switch flashes green when the E.C.S.S. are switched on.

11. High beam control lamp

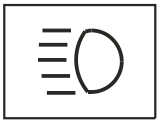

GK100840

The high beam control lamp illuminates when the high beam lights are switched on.

The control lamp also illuminates when you press the headlamp flasher.

12. Control lamp in the switch of the 3rd control circuit - Optional

This control lamp goes on when you switch on the sprayer (water supply) while using a sweeper.

As long as the control lamp is lit, the sprayer is on.

If you press the switch again, the sprayer (water supply) is switched off and the control lamp goes out.

13. Control lamp in Sprayer switch - Optional

This control lamp goes on when you switch on the sprayer (water supply) while using a sweeper.

As long as the control lamp is lit, the sprayer is on.

If you press the switch again, the sprayer (water supply) is switched off and the control lamp goes out.

14. Control lamp: Speed range 2

This control lamp goes on if you press the button (1) on the multi-function lever once and release it.

As long as the control lamp is on, the machine is operating in speed range 2.

If you press and release the button (1) again, the machine switches back to speed range 1 and the control lamp goes out.

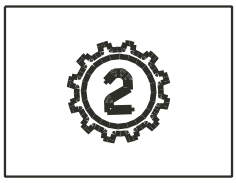

GK100817

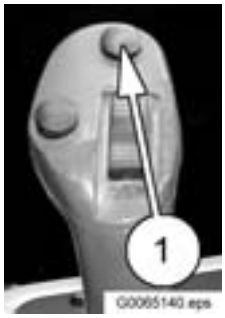

15. Control lamp: Differential lock 100%

This control lamp goes on if you press the button (2) on the multi-function lever and keep it pressed.

As long as you keep the button pressed, the control lamp remains lit and the differentials in the axles are locked 100%.

If you release the button (2), the differentials are unlocked and the control lamp goes out.

G0065133.eps

Measuring indicators

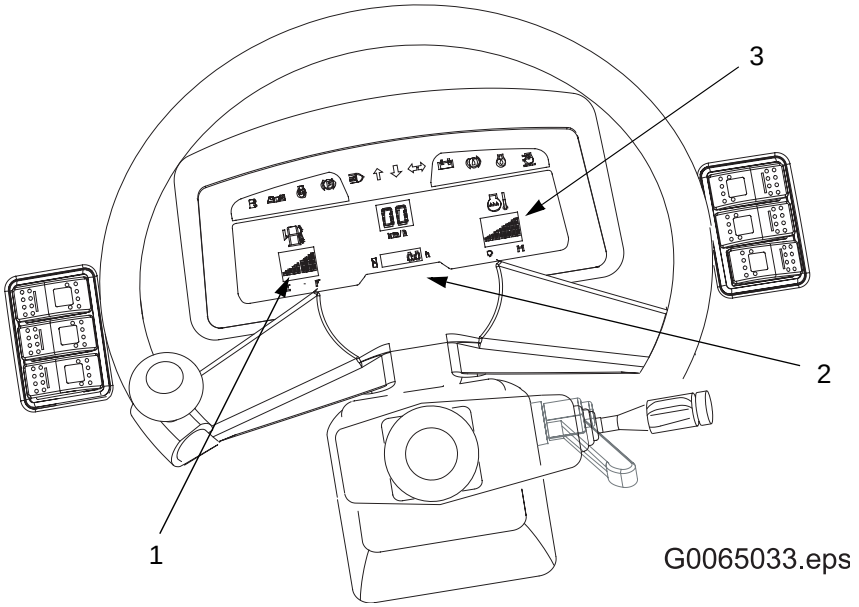

1 Fuel level indicator
2 Operating hour meter
3 Coolant temperature indicator

1. Fuel level indicator

If you set the start switch to the 'I' operating position, the fuel gauge indicates the available fuel supply.

F = The tank is full
E = The tank is in the critical range

During operation, it is recommended to keep the fuel supply between 'R' and '1'. If only the lowest 'R' LED lights up, it is time to refill fuel.

If there is no electric contact between the fuel gauge and the fuel level indicator, only the top LED lights up.

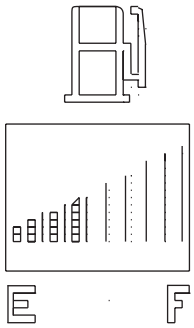

2. Operating hour meter

The operating hour meter indicates the total hours of operation. It only counts the hours with the engine running, no matter whether the machine is actually driving or not. If the operating hour meter is ON, the icon on top of the operating hour meter is flashing.

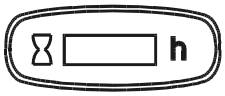

3. Coolant temperature indicator

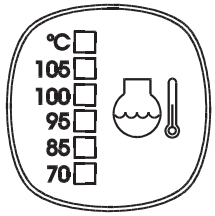

GK100849

The coolant temperature indicator shows the temperature of the coolant.

- If you set the power switch to the 'I' position with the coolant being warmer than 70° C, the temperature indicator will show the current coolant temperature.
- If the temperature is normal during operation, the green range of the temperature indicator lights up.
- If the coolant is too hot, the top red LED of the temperature indicator starts to flash. At the same time, the acoustic warner starts to sound.

  In this case, you must stop the machine and let the engine run idle at medium speed until the indicator returns to the green range.

  Proceed as described in chapter "4.6. Other troubles" on page 4-10.
- If there is no electric contact applied to the sensor, only the top LED lights up.

3.2.2. Switches

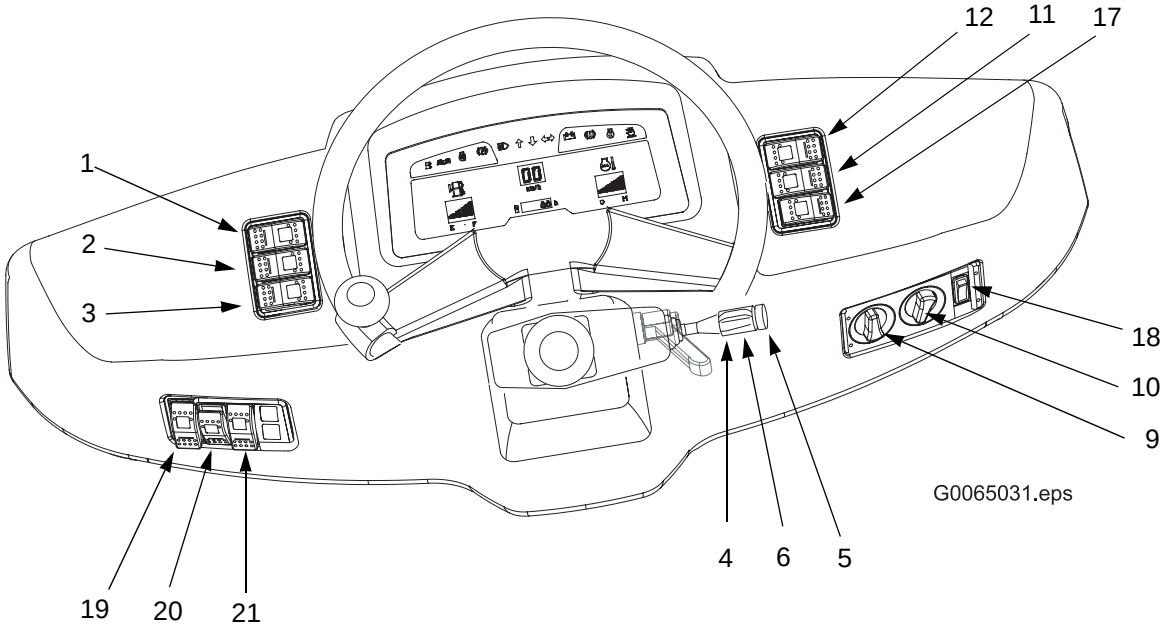

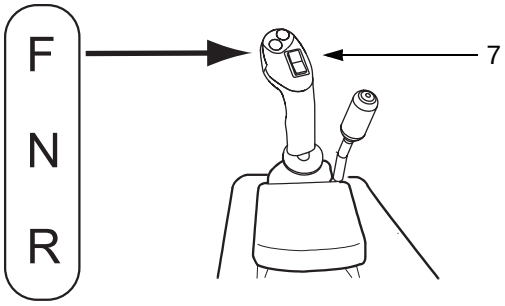

G0065023.eps

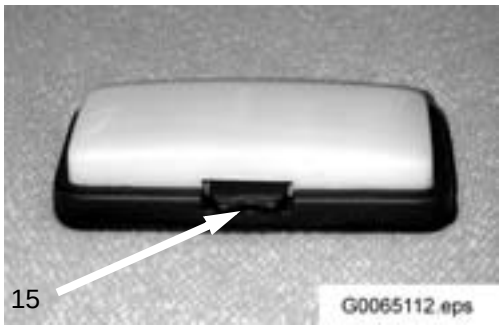

Aside the battery

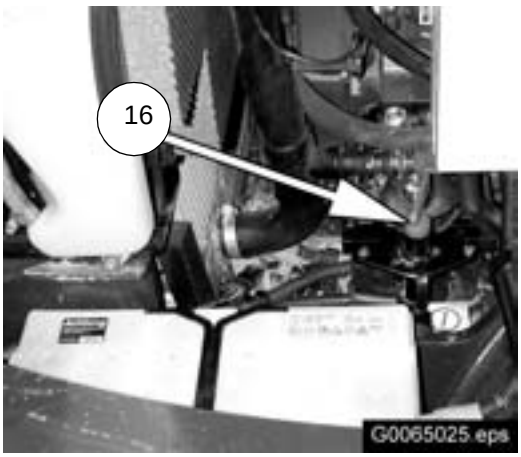

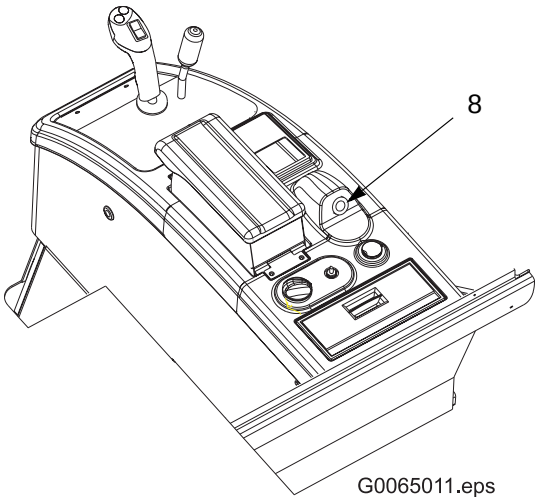

1 Switch and control lamp of hazard flashers
2 Switch of front windscreen wiper and washer
3 Switch of rear windscreen wiper and washer
4 Direction indicator lever
5 Horn button
6 Light switch
7 Driving direction switch
8 Start switch
9 Fan rotary switch, for ventilation and heating
10 Heating temperature switch
11 Heated rear windscreen switch
12 Working lights switch and control lamp
15 Switch for inside lighting
16 Battery main switch – option
17 E.C.S.S. switch with control lamp– option
18 Air conditioning switch with control lamp– option
19 Warning beacon switch with control lamp – option
20 Control lamp in the switch of the 3rd control circuit - Optional
21 Control lamp in Sprayer switch - Optional

1. Hazard flasher switch (with control lamp)

This switch is used to switch on/off the hazard flasher.

NOTE

You may switch on the hazard flasher only in an emergency situation.

If you switch on the hazard flasher, all direction indicators of the machine will start to flash. At the same time, the control lamp of the hazard flasher switch and the direction indicator control lamp start to flash.

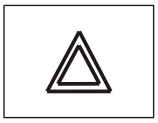

GK100815

2. Switch of front windscreen wiper and washer

This switch is used to switch on/off the front windscreen wiper and washer.

The switch has two switching stages:

- Switching stage '1' locks in permanently and is used to switch on/off the windscreen wiper.
- If you hold the switch pressed in switching stage '2', the wind-screen washer is only operated for the time you keep the switch pressed.

GK100814

3. Switch of rear windscreen wiper and washer

This switch is used to switch on/off the rear windscreen wiper and washer.

The switch has two switching stages:

- Switching stage '1' locks in permanently and is used to switch on/off the windscreen wiper.
- If you hold the switch pressed in switching stage '2', the windscreen washer is only operated for the time you keep the switch pressed.

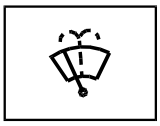

GK100814

4. Direction indicator lever

The direction indicator lever is used to switch on/off the direction indicators.

Indicate right turn = Press direction indicator lever to the front (1)

Indicate left turn = Draw direction indicator lever to the back (2)

After you have passed the bend, the direction indicator lever automatically returns to its home position and the direction indicator will be switched off.

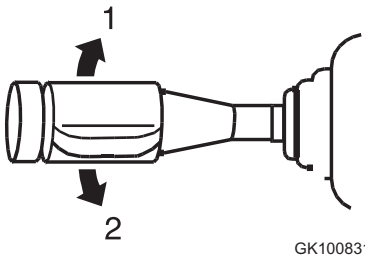

GK100831

5. Horn button

The horn sounds when you press the horn button.

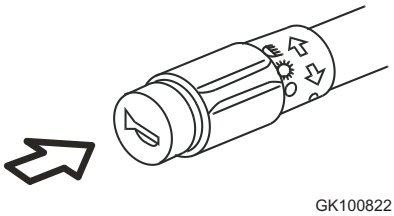

GK100822

6. Light switch

The light switch is used to switch on/off the main headlights, the side lamps and the taillights.

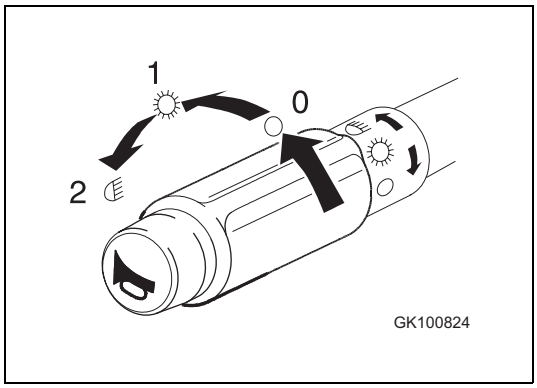

- Switching off the lights
  Switch in '0' position
- Switching on the parking light
  Turn the light switch to the front until it reaches position '1'. The side lamps and the taillights light up.
- Switching on the low beam
  Continue to turn the light switch until it reaches position '2'. All lights which were already switched on in position '1' (parking light) remain lit. In addition, the low beam is switched on. The low beam control lamp lights up.
- How to flash one’s lights (high beam)
  In order to flash your lights, you need to draw the lever briefly in the direction of the steering wheel. The high beam is only switched on as long as you draw the lever. The high beam control lamp will also light up for that time.
- Switching on the high beam
  In order to switch on the high beam you must press the lever completely down. In this position the lever locks in and the high beam control lamp lights up.

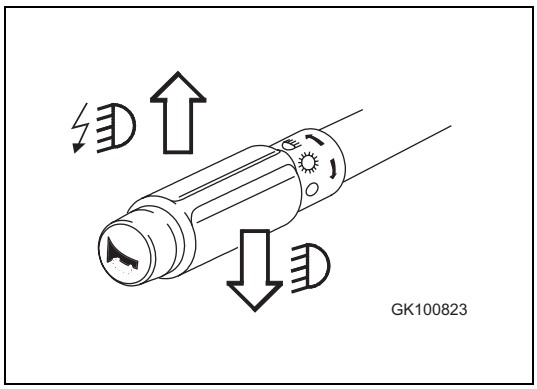

7. Driving direction switch

You can change the driving direction of the machine with the driving direction switch..

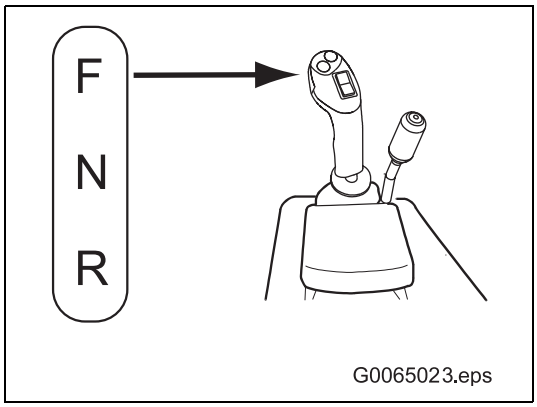

Position F = Forward driving

Position N = Neutral position

Position R = Reverse driving

NOTE

You can only start the engine if the driving direction switch is switched to the neutral position 'N'.

8. Start switch

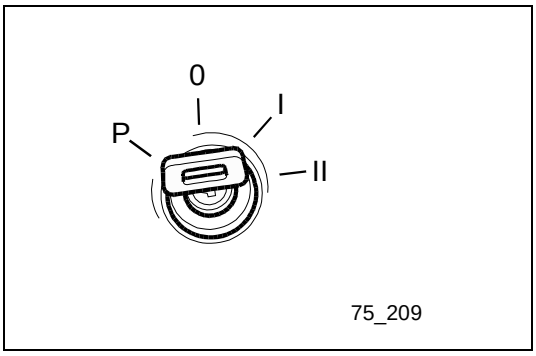

You can start and switch off the engine with the start switch.

- '0': Stop position
  In this position, the engine is switched off, permitting you to remove the ignition key. All functional circuits are interrupted in the stop position.
- 'I': Operating position
  The control lamps light up in the operating position 'I' and the air preheater is in operation. All functional circuits are activated. The ignition key remains in this position with the engine running.
- 'II': Start position
  In start position 'II', the engine starts.

NOTE

You may only start the engine, if the driving direction switch is set to the neutral position 'N'.

9. Fan rotary switch for ventilation and heating

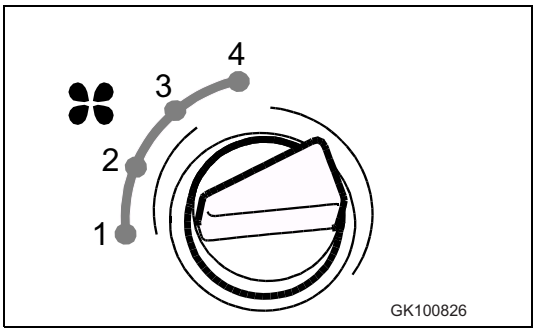

This rotary switch permits to regulate the fan step by step.

Position	1	=	Fan off
Position	2	=	Low air flow
Position	3	=	Medium air flow
Position	4	=	High air flow

10. Temperature rotary switch

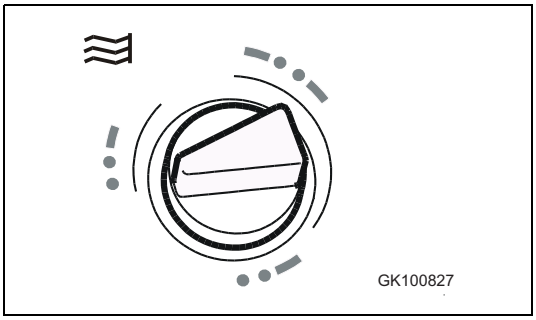

The temperature rotary switch permits to adjust continuously the capacity of the heating system from 'cold' (heating OFF) to 'warm'.

11. Heated rear windscreen switch

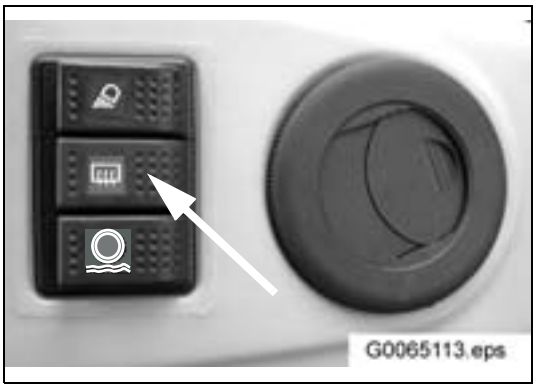

This rotary switch is used to switch on/off the heated rear windscreen.

12. Working lights switch (with control lamp)

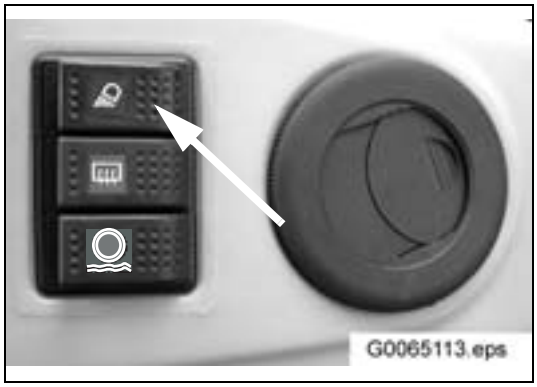

CAUTION

The front working lights may blind oncoming traffic! Before driving on public roads, turn off the working lights.

This switch is used to switch on/off the working lights.

15. Switch for inside lighting

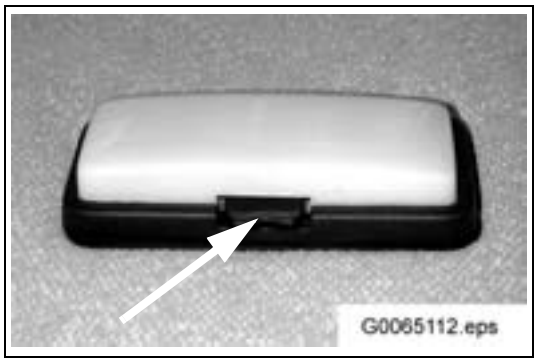

The inside lighting has three different switch settings:

Switch setting	1	=	Steady light
Switch setting	0	=	Off
Switch setting	2	=	Steady light

NOTE

You can also switch on the inside lighting, if the start switch is in stop position '0'. For this reason, switch off the inside lighting before you leave the driver's cab.

16. Battery main switch – option

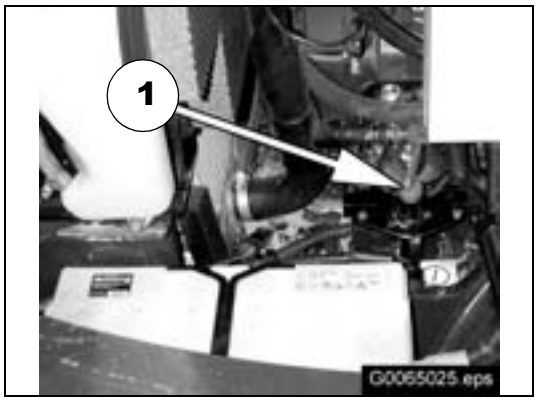

NOTE

Do not operate the battery main switch with the engine running!

The battery main switch (1) disconnects the power supply of the machine's electrical system. The switch is situated next to the battery in the rear section of the machine.

If the machine is to be taken out of service for a longer time, you must switch off the battery main switch and remove the ignition key.

17. E.C.S.S. switch (with control lamp) – option

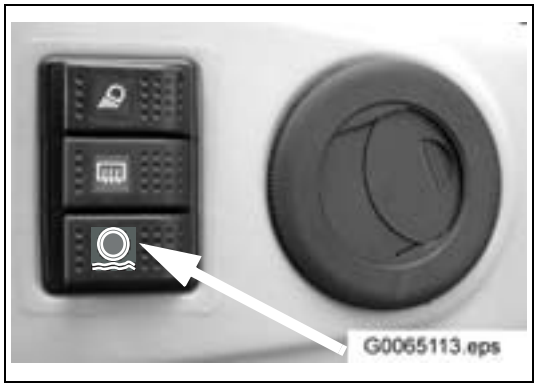

The E.C.S.S. switch is only installed in machines which are provided with E.C.S.S..

If you switch on the E.C.S.S. with this switch, the green control lamp lights up in this switch.

- If the machine drives faster than 3.10 mph (5 km/h), the E.C.S.S. is automatically activated and the E.C.S.S. control lamp lights up on the instrument panel.
- If the machine drives slower than 3.10 mph (5 km/h), the E.C.S.S. is switched off and the control lamp on the instrument panel goes out. However, the control lamp in the E.C.S.S. switch remains lit in green.

18. Air conditioning switch (with control lamp) – option

The air conditioning switch with control lamp is only installed on machines which have been fitted with air conditioning.

- If you turn the air conditioning and the blowers on with this switch, the control lamp shines blue and the air conditioning is in operation.
- If the blowers are switched off, the blue control lamp in the switch goes out and the air conditioning is no longer in operation.

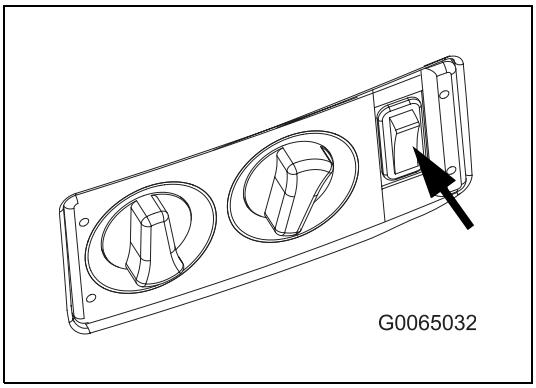

19. Warning beacon switch (with control lamp) – option

The warning beacon switch is only installed in machines which are provided with a warning beacon.

If you switch on the warning beacon, the green control lamp in the switch lights up.

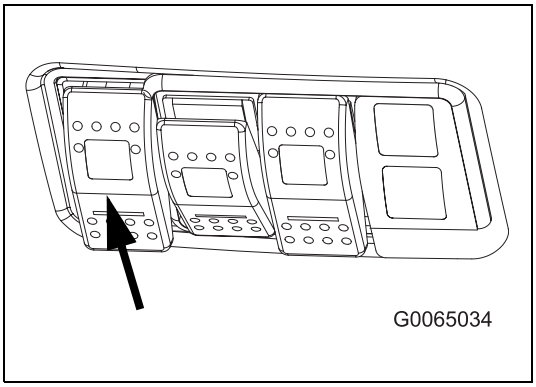

20. Control lamp in the switch of the 3rd control circuit - Optional

This control lamp goes on when you press and hold the switch to unlock the quick-change unit.

As long as the control lamp is lit, the quick-change unit is not locked.

If you release the switch, the quick-change unit locks and the control lamp goes out.

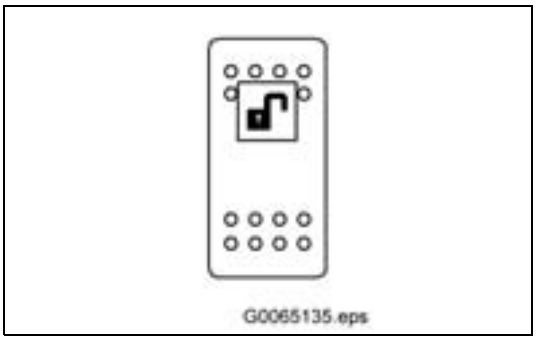

21. Control lamp in Sprayer switch - Optional

This control lamp goes on when you switch on the sprayer (water supply) while using a sweeper.

As long as the control lamp is lit, the sprayer is on.

If you press the switch again, the sprayer (water supply) is switched off and the control lamp goes out.

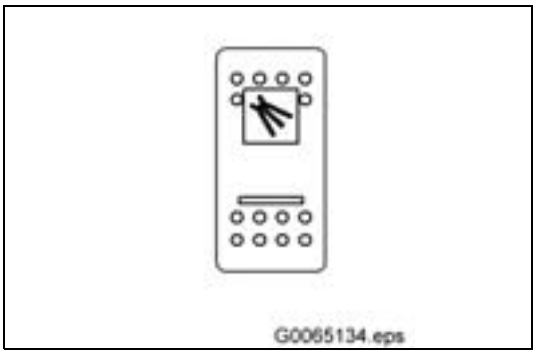

3.2.3. Control levers and pedals

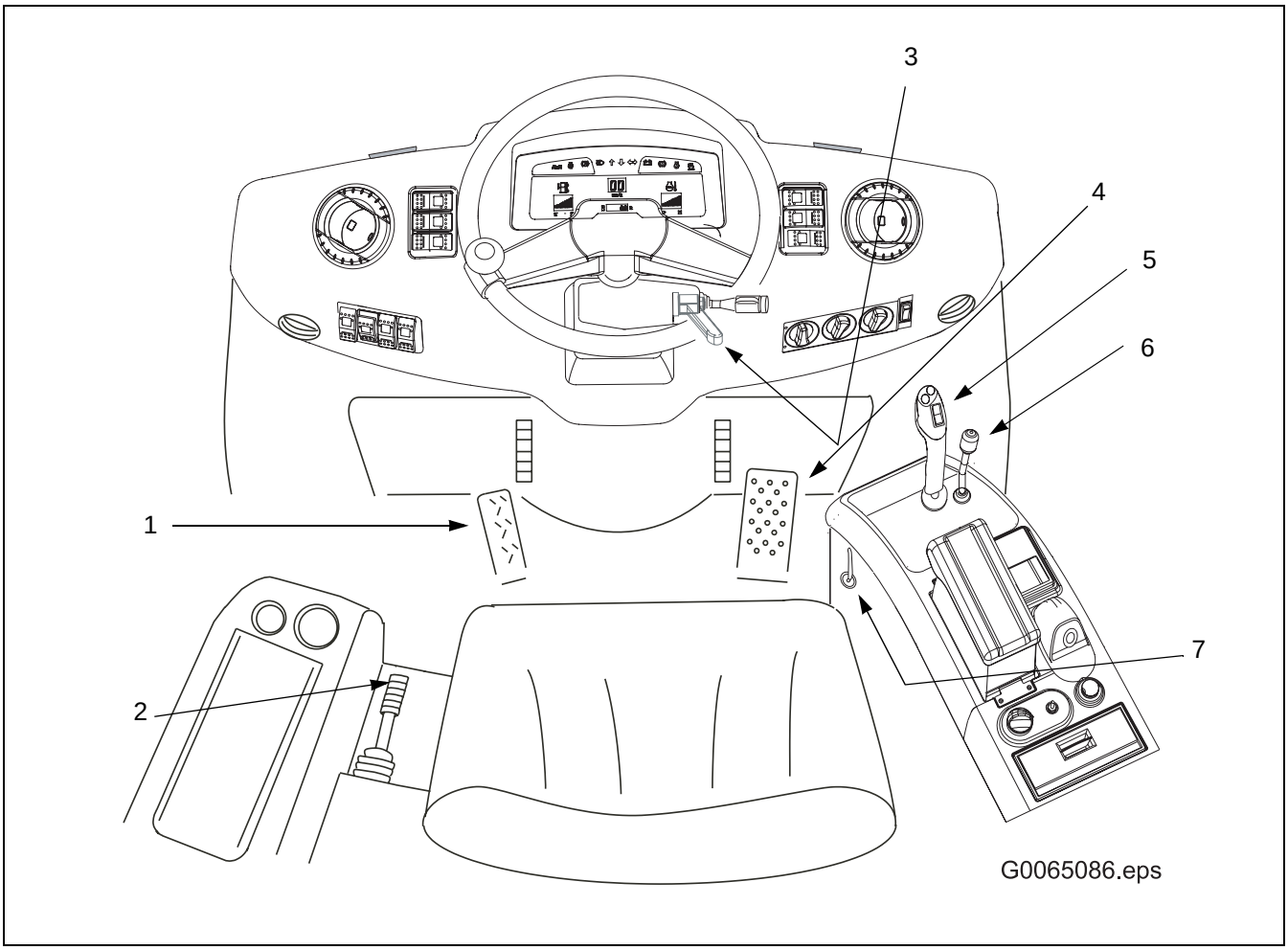

1 Brake pedal
2 Parking brake
3 Steering column adjustment
4 Accelerator pedal
5 Multifunctional lever
6 Control lever for special equipment
7 Safety lever for the work hydraulic system
8 Switching lever for bucket (without fig.)

1. Brake pedal

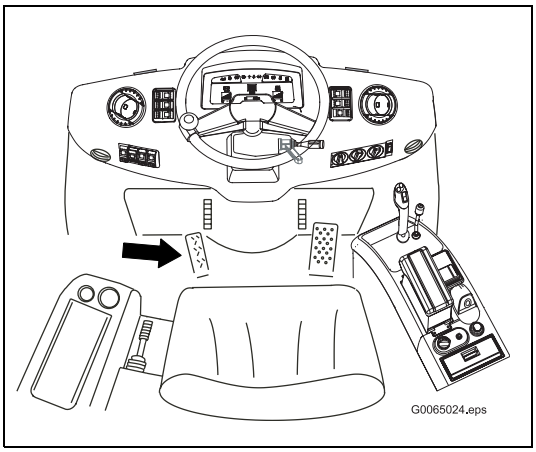

WARNING

- **If you are driving downhill, let the engine run and use the braking effect of the engine. If required, brake additionally using the brake pedal.**
- **Danger of accidents due to unintentional braking!**
- **Do not use the brake pedal as a foot rest.**

The brake is operated via a combined brake/inch pedal. The inching exerts an additional braking effect on the hydrostatic drive system.

2. Parking brake

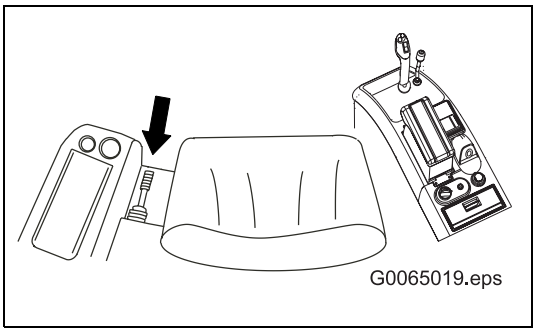

As soon as you pull the parking brake lever from its normal position, the braking action comes into effect. If the start switch is set to the 'I' operating position, the parking brake warning light lights up in the instrument panel. The machine will drive again, if you reloosen the parking brake.

NOTE

You cannot start the machine with the parking brake being applied. If you set the driving direction switch to the 'F' position (forward driving) or 'R' (reversing) with the parking brake still being applied, the alarm buzzer will sound.

3. Steering column adjustment

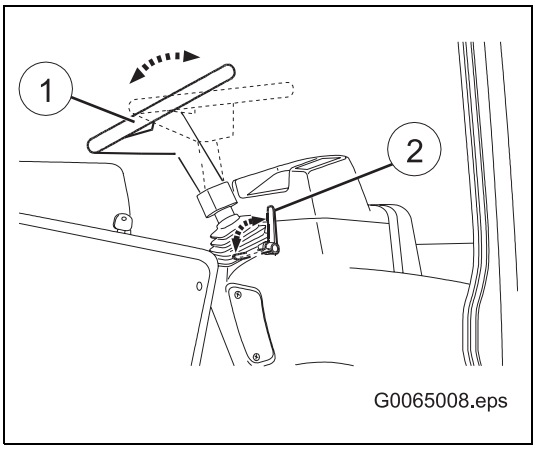

The lever (2) for adjusting the steering column (1) position permits to incline the steering column smoothly in two directions (front or back). The adjustment range is 4.921 inch (125 mm).

Proceed as described in chapter "Adjusting the steering column" on page 3-41

4. Accelerator pedal

The accelerator pedal regulates the speed (r.p.m.) and performance of the engine.

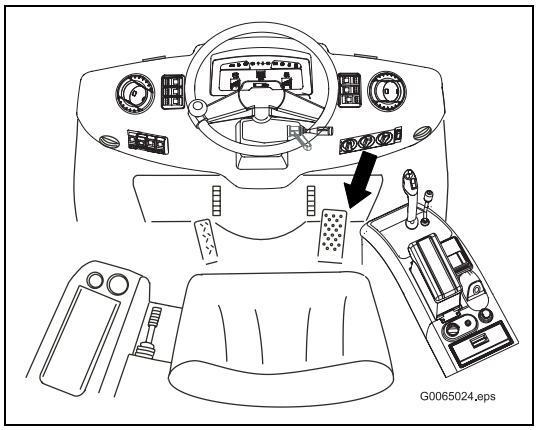

5. Multifunctional lever for the work hydraulic system

The work unit is operated with the multifunctional lever. The multifunctional lever has 6 positions which control the work unit as follows:

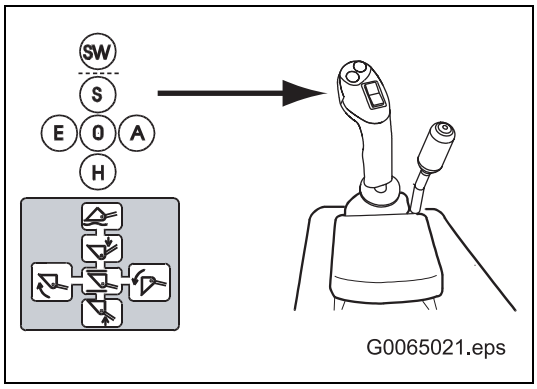

SW Float The multifunctional lever is locked in this position. The floating position is provided for planing operations (removing subsoil). In this switch position, the work unit is lowered by its own weight, and can be freely operated by external parties.

S Lower The boom is lowered in this position. If the engine is switched off, you can lower the boom in this position.

0 Hold The boom is held in position.

H Raise The boom is raised in position.

E Tilt IIn this position, the bucket is tilted.

A Dump In this position, the bucket is dumped.

6. Control lever for special equipment

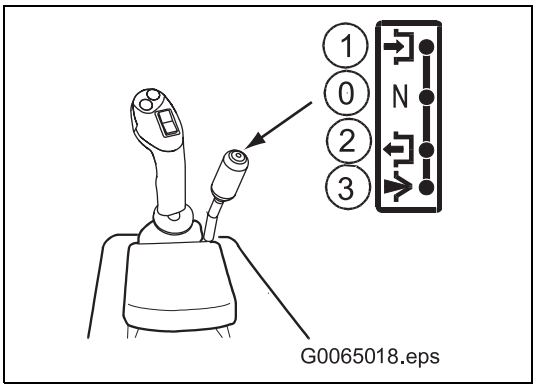

The control lever for special equipment has three switch settings whose functions depend on the type of the used special equipment.

- If the standard bucket, the light-weight material bucket or the forklift truck attachment is attached to the quick-change unit, the control lever for special equipment provides the following functions:

Position 1 = Locking pins for work unit are drawn in

Position 0 = Neutral position (locking pins are drawn in; you can pick up the work unit in this position)

Position 2 = Locking pins for work unit are extended

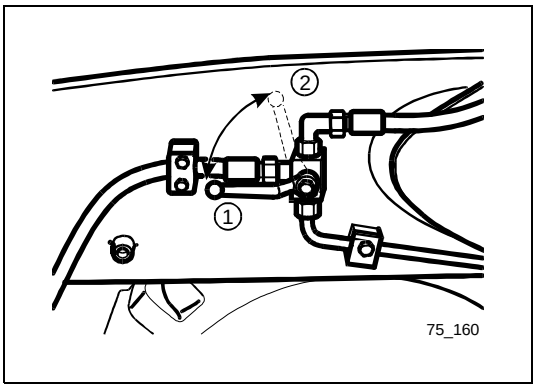

- If the multi-purpose bucket is attached to the quick-change unit, the control lever has the functional assignment described above. If the switching lever for the bucket is in position ‘1’, the multi-purpose bucket is active. You can then operate the multi-purpose bucket via the control lever for special equipment.
  It then has the following functions:

Position 1 = Close multi-purpose bucket

Position 0 = Neutral position

Position 2 = Open multi-purpose bucket

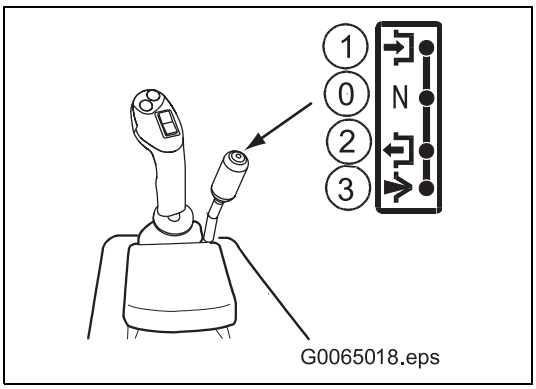

- If you use attachments requiring a steady oil flow (e.g. brush, snow remover), the control lever has the following functions:

Position 1 = Work unit turns backwards

Position 0 = Neutral position

Position 2 = Work unit turns forward

Position 3 = Work unit turns forward in permanent operation (locks in

- For permanent operation, you must set the control lever to position ‘3’. The control lever locks in this position.

NOTE

Without connected special equipment, you must not set the control lever for special equipment to switch settings ‘1’, ‘2’ or ‘3’. If you do not heed this note, the work hydraulic system will operate in order to counteract overpressure thus unnecessarily heating up the oil.

7. Safety lever for the work hydraulic system

The safety lever for the work hydraulic system protects the work hydraulic system against unintentional activation. Before driving on streets or beginning maintenance operations, it is required to block the work hydraulic system with this safety lever

Position 1 = working hydraulics locked

Position 2 = working hydraulics released

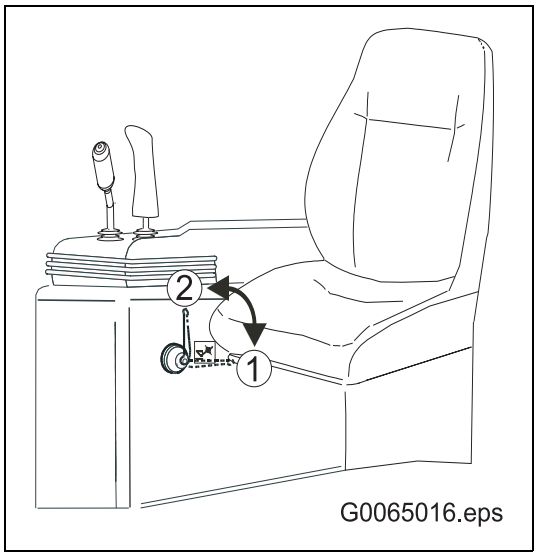

8. Switching lever of bucket

If you have the multi-purpose bucket attached to the machine, you can use this switching lever to change the function assignment of the control lever for special equipment (see "6. Control lever for special equipment" on page 3-24).

Position 1 = the control lever for special equipment operates the multi-purpose bucket.

Position 2 = the control lever for special equipment operates the quick-change unit.

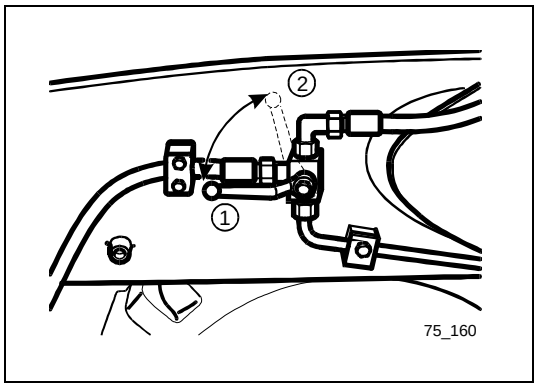

3.2.4. Articulated steering catch

The articulated steering catch is used to join rigidly the front and rear part of the machine, thus preventing the articulated steering from bending. You must block the articulated steering before the machine is hoisted or before repairs or maintenance operations are being performed.

1. On the left: Loosen the spring bolt and remove the bolt (1).
2. On the right: Insert the bolt (2) and secure by means of the spring bolt.

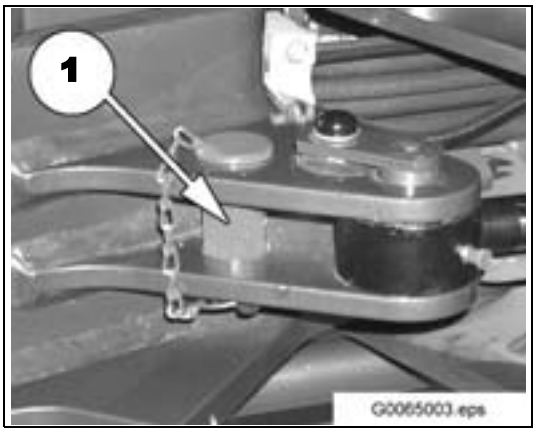

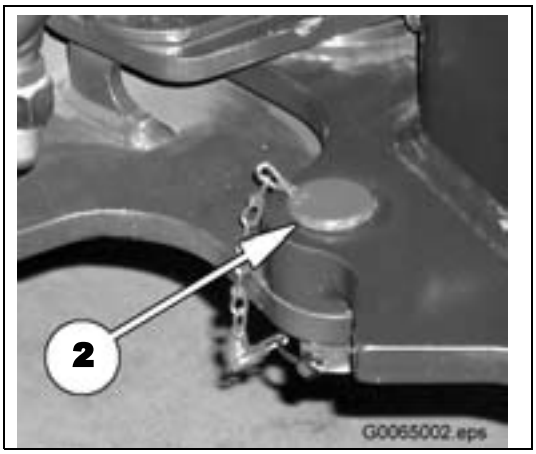

3.2.5. Traction device

You can use the traction device (hitch) to tow off, e.g., another machine or trailer.
You must also fix the machine at the tie bolt during transport. Always secure the bolt of the traction device, which is fixed to a chain, with the spring bolt.

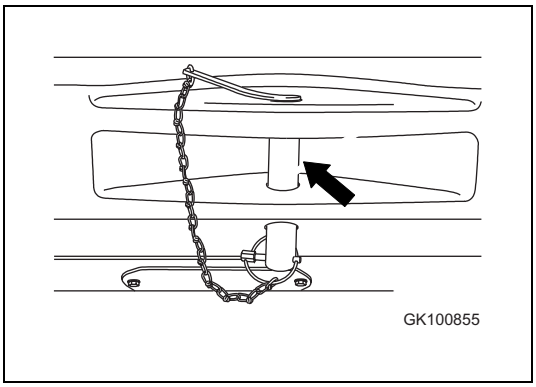

3.2.6. Socket (12 V)

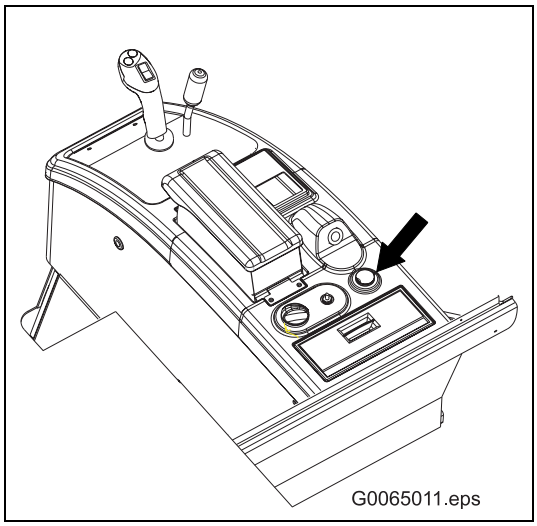

CAUTION

- **Danger of accidents!**
  Electrical devices may interfere with the on-board electronics.
- **For this reason, connect only the working lamp to the socket.**

You may connect a working lamp to the socket.

3.2.7. Door unlocking system

The cab door and window have a lock that engages when you open the door or window entirely (1) and that prevents the door or window from closing when the vehicle is moving. To close the door (2) or the window (3) again, you have to pull back the respective release mechanism.

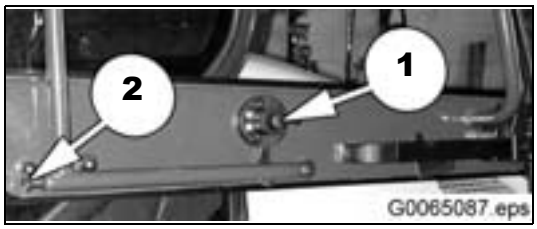

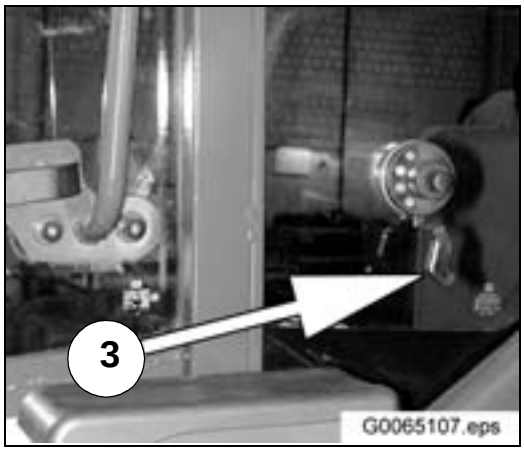

3.2.8. Alarm horn for reverse driving – option

The horn sounds if you have set the driving direction switch to the reverse/backwards position.

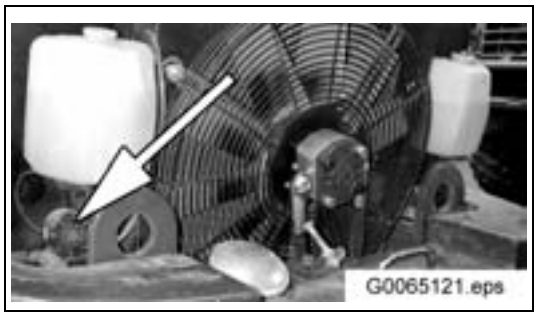

3.2.9. Fuses

CAUTION

- **Parts of the electrical system may be damaged, if you replace fuses with the ignition switched on!**
- **Turn the start switch to switching position '0' (OFF), before starting to replace fuses.**
- **Fuses with wrong amperages may cause fires due to electrical faults or may immediately blow again!**
- **Only replace defective fuses with fuses of the same rating.**

The fuses protect the electrical system. Replace defective, corroded, or loose fuses.

When the driver's cab is tipped up, the box can be found in the engine compartment on the right.

Fuse assignment

STARTER SWITCH SHUT OFF SOL.	10A 1	GEAR SOLENOIDS WORKING HYDRAULIC	10A 1	SOLENOIDS ALS MAGNET COIL DEDENT	10A 1
SOCKET (CIGARETTE LIGHTER)	10A 2	FLASHING LIGHT	10A 2	AIR CONDITION	25A 2
INTERIOR LIGHT RADIO MEMORY	10A 3	MAINMONITOR	10A 3	RADIO MAGNET VALVE COOLER	10A 3
HAZARD WARNING FLASHER	10A 4	WORKING LIGHT	20A 4	ROTATING BEACON DRIVING LIGHT	10A 4
WASH / WIPE FRONT / REAR	20A 5	POSITION LIGHT LEFT LICENCE LIGHT	10A 5	BACK UP ALARM SLIP DIFFERENTIAL	10A 5
BRAKE LIGHT HORN	10A 6	POSITION LIGHT RIGHT	10A 6	AIR SUSPENSION SEAT	10A 6
BLOWER FAN FRESH AIR / HEATER	20A 7	HEADLIGHT HIGH BEAM	10A 7	QUICK COUPLER SWEERER	10A 7
HEATER REAR WINDOW	20A 8	HEADLIGHT LOW BEAM	10A 8	CENTRAL LUBLICATION SPEED CONTROL	10A 8
DRIVE DIRECTION →					

42T-93-21200 ENGLISH

3.2.10. Slow-blowing fuses

If the power supply fails, a main fuse or relay might be blown. Check the electrical system and replace defect fuses or relays.

When the driver's cab is tipped up, the box can be found in the engine compartment on the right.

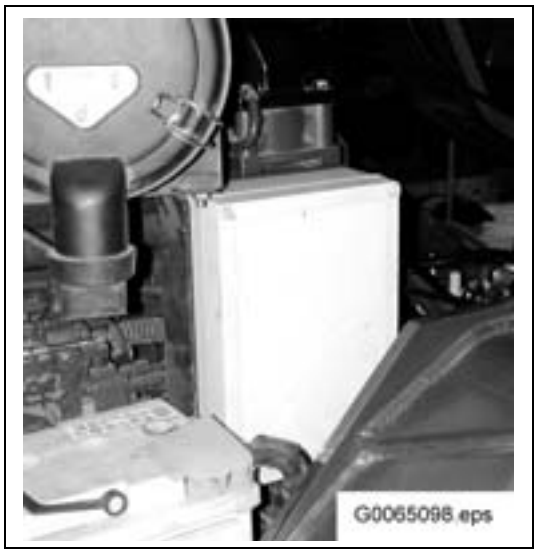

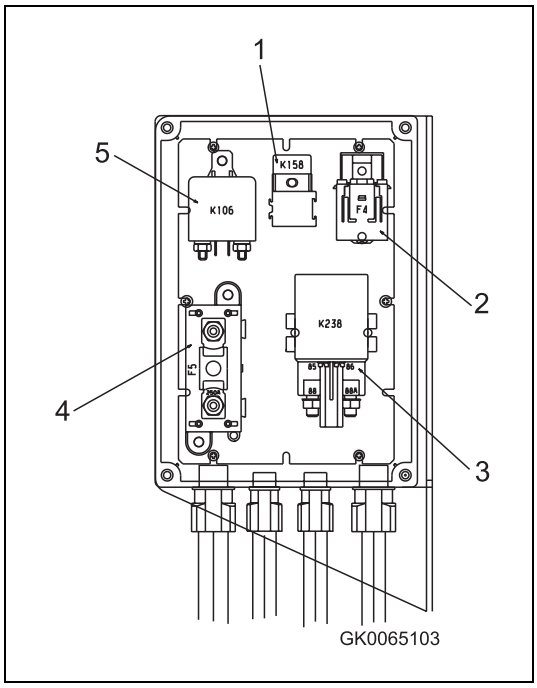

1	Relay, starter motor	92 Ω
2	Fuse, battery	100 A
3	Relay, air preheater for engine	12 Ω
4	Fuse, air preheater for engine	250 A
5	Relay, battery	32 Ω

3.2.11. Adjusting the heater and ventilation system

Adjusting the ventilation system

When the ventilation system is operated, air is blown into the driver's cab. If the cabin is closed, a light overpressure is built up, preventing dust from outside to settle down in the cab. To increase the volume of filtered fresh air, you can open the ventilation grid a little.

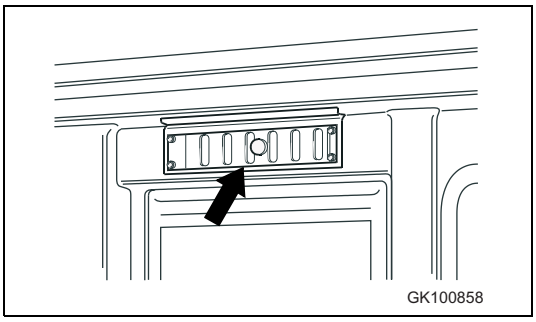

The air is distributed via the air ventilation nozzles (arrows) on the left-hand and right-hand side of the steering column.

- You may open or close the nozzles individually.
- The exhaust direction can be varied using the diffusing disks.
- You can direct the air ventilation nozzles onto the front windshield and the air ventilation nozzles onto the side windows.

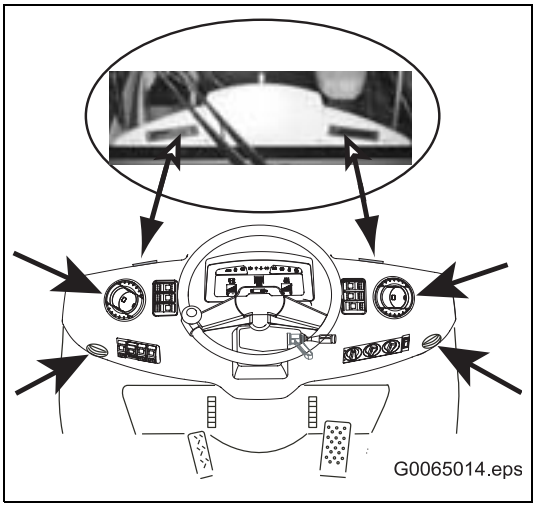

Adjusting the heating system

NOTE

The heating capacity depends on the coolant temperature of the engine. Full heating capacity is only realised, if the engine is completely warmed up.

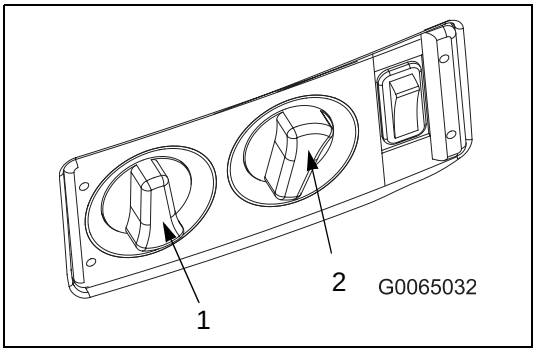

1 Blower rotary switch

2 Temperature rotary switch

You can realise maximum heating inside the cabin, if you open all air ventilation nozzles, set the temperature rotary switch to maximum heating power while switching on the fan with its highest level.

You may realise a comfortable temperature, if you open all air ventilation nozzles, set the temperature rotary switch to a comfortable temperature and set the fan to an appropriately low air throughput.

To cool down the temperature inside the cabin, open all air ventilation nozzles, set the temperature rotary switch to position 'Cold' and set the fan to its highest level.

To prevent premature tiredness due to lack of oxygen, it is recommended to open the door a little from time to time and to lock it in this position. Optionally, you may leave open the ventilation grid above the side window.

3.2.12. Air-conditioning

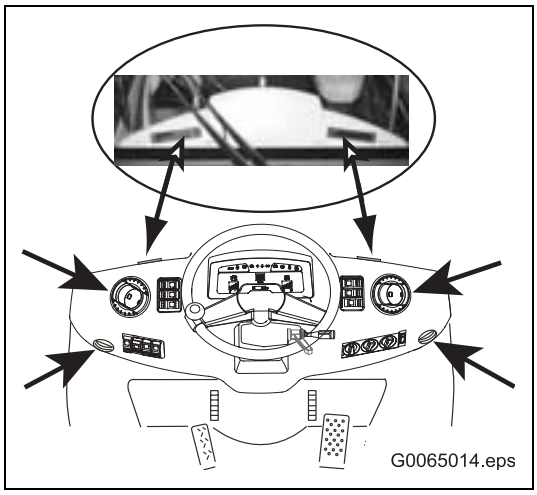

NOTE

Only operate the air-conditioning with the engine running. Run the air-conditioning for at least 10 minutes every month irrespective of season. This prevents the compressor shaft seal from drying out.

The windows and doors of the operator's cab must be closed when operating the air conditioning.

Attention: The circulating air jets (arrow) must be open.

We recommend ventilating the operator's cab thoroughly first when starting the machine and switching on the air conditioning if the machine has been standing in bright sunshine for any length of time.

Switching on the air-conditioning

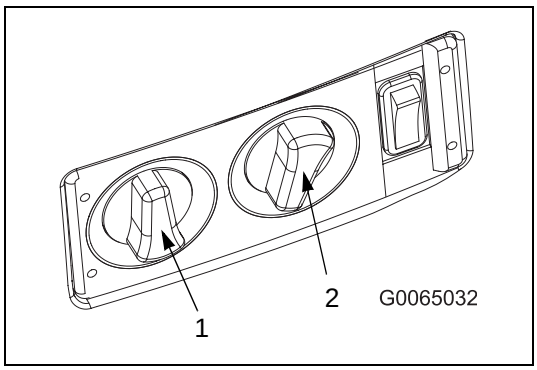

1. Turn the rotary switch (1) of the fan to position '4'.
2. Set the temperature control lever (2) to 'cold'.

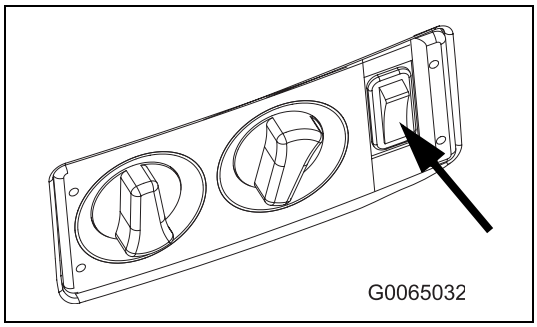

3. Press the switch for the air conditioning. The air conditioning system is now switched on and the control lamp in the switch shines blue. The greatest cooling effect is achieved with this setting, particularly if the engine is running at high revs. As soon as the required temperature has been reached, turn the blowers down by one stage and carry out any further adjustment of the temperature using the temperature control. The lowest blower setting can be used if only a low cooling effect is required.

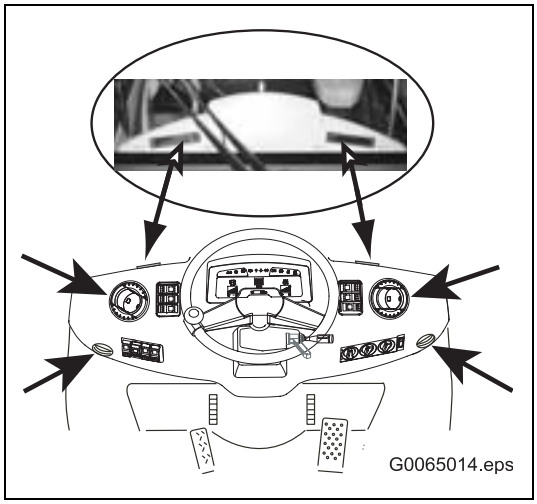

4. The air is distributed via the air ventilation nozzles on the left-hand and right-hand side of the steering column.
   - ❍ You may open or close the nozzles individually.
   - ❍ The exhaust direction can be varied using the diffusing disks.
   - ❍ You can direct the air ventilation nozzles onto the front windshield and the air ventilation nozzles (arrows) onto the side windows.

3.3. Operation

3.3.1. Pre-start checks

Visual inspection

WARNING

Danger of fire! Oil or fuel leaking out or accumulated combustible materials may catch fire at hot parts of the machine, e.g. the exhaust!
Prior to starting the machine, check the oil and fuel lines for leaks and immediately repair any leaks. Store combustible material in a safe place.

Before you start the engine

Check that there are no loose nuts or screws lying around the machine. Check that neither oil, nor fuel nor coolant are leaking out. Check the condition of the work unit and the hydraulic system. Check that there are no loose cables and accumulated dirt. Remove accumulated dirt and eliminate faults.

Before starting working with the machine

Perform daily the following measures:

1. **Check work unit**

   Check work unit, cylinder, connecting rods, and hoses for cracks, premature wear and tear, and play. Repair damaged parts.

2. **Remove dirt and dust**

   Check the area around the engine and the radiator for accumulated dirt or dust. Additionally check whether combustible material has accumulated near the battery or near hot parts of the machine, e.g. the exhaust. Remove completely any accumulated dirt or dust.

3. **Check for leakage of water or oil around engine**

   Check that there is no oil leakage from the engine or water leakage from the cooling system. If any abnormality is found, repair it.

4. **Check the gear unit, axles, hydraulic tank and hoses and the connecting points**

   Check whether oil is leaking out of the gear unit, axles, hydraulic tank and hoses, and connecting points. Repair damaged parts.

5. **Check brake hoses**

   Check that there is no oil leaking out at the brake hoses. Repair damaged parts.

6. Check wheels

Check the tyres for cracks, damages and wear and tear. Check the wheel rims and lock rings for cracks, damage, and wear and tear. Tighten loose wheel nuts. Repair damaged parts. Replace missing valve caps.

7. Check handrails

Check handrails for damage and loose screws. Repair damaged parts and tighten loose screws.

8. Check measuring and control indicators

Check measuring and control indicators for damage and loose screw connections. Replace defective parts. Remove dirt from surfaces.

9. Check air filter

Check the fastening screws of the air filter. Tighten loose screws.

10. Check battery terminals

Tighten loose battery terminals.

11. Check the automatic seat belt

If the automatic seat belt has been subjected to excessive loads, e.g. full braking manoeuvre or if the machine rolls over, the automatic seat belt must be replaced.

Check the belt, the mountings and the seat belt's buckle.

If the seat belt system's belt, mountings or buckle have been damaged the automatic seat belt must be replaced.

Check that the mounting's fastening screws are securely fixed in place.

Tighten any loose screws. Tightening torque: 2.5 - 3.0 kpm (25 - 30 Nm)

12. Check ROPS

Check whether screws are loose or damaged. Have loose screws tightened and damaged screws replaced by a Komatsu-dealer. Loose screws must only be tightened with the specified tightening torque. Damaged screws must only be replaced by original parts.

13. Check cab windows

Prior to start of work, clean the cab windows.

Pre-start checks

Cooling system – checking the coolant level, topping up coolant

CAUTION

- **A wrong water/coolant mixing ratio will damage the radiator! Always mix water and coolant in the ratio 50:50. This also applies to countries with a hot climate.**
- **Danger of fire! Coolant may ignite at hot engine!**
- **Do not top up coolant, unless the engine has cooled down sufficiently.**

1. Open the bonnet.
2. Check that the coolant level in the expansion tank is between the MAX and MIN markings. If the coolant level does not reach up to the MIN marking, top up coolant.
3. Therefore remove the cover cap of the expansion tank.
4. Top up coolant until the level reaches up to the MAX marking.
5. After topping up, firmly close the cover cap.
6. Usually, the radiator needs not to be opened. However, for safety reasons it is required to check the refrigerant level in the radiator after 2000 operating hours (see "Cooling system – exchanging coolant and cleaning the system" on page 5-61).
7. If the expansion tank is empty again after a short period of time, immediately have the cooling system checked for leaks and have any leaks repaired in the garage.

Checking the engine oil level – topping up oil

NOTE

After you have switched off the engine, wait at least 5 minutes before you check the engine oil level. The machine must stand on an even surface.

1. Pull out the oil dipstick (1) and wipe off the oil with a clean cloth.
2. Completely re-insert the oil dipstick and pull it out again after a few seconds. The oil level must be between the (H) and (L) markings on the oil dipstick.
3. If the oil level does not reach up to the (L) marking, top up engine oil. For detailed information on recommended oils, see section "5.3. Lubricants, fuels and filling capacities" on page 5-15.

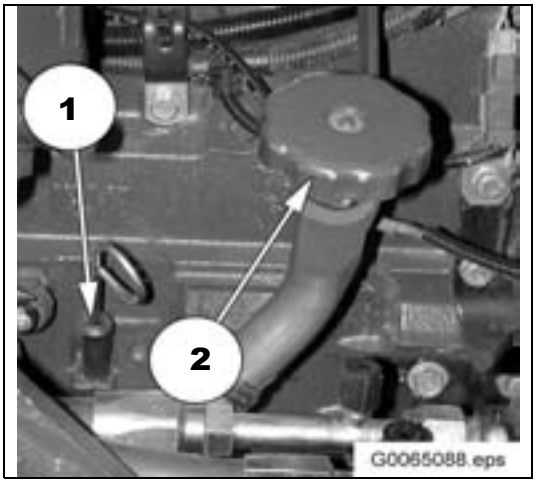

NOTE

Do not fill in too much oil in one go via the filler!

4. Wait three minutes before you check the oil level again. If the oil level is above the (H) marking, drain off some oil. (see section "Draining engine oil" on page 3-35).

5. Close the oil filler (2).

Draining engine oil

If you have topped up too much oil, you must drain off the excess oil. Have an oil trough with a sufficient capacity ready.

1. Put the oil trough under the drain screw.

2. Remove the cover cap (1) from the drain valve.

3. Screw on the drain hose (2) on the drain valve. This will cause the drain valve to open.

4. Drain the oil.

5. Remove the drain hose (2) from the drain valve. This will cause the drain valve to close.

6. Check oil level again.

7. Fit cap (1) back onto drain valve.

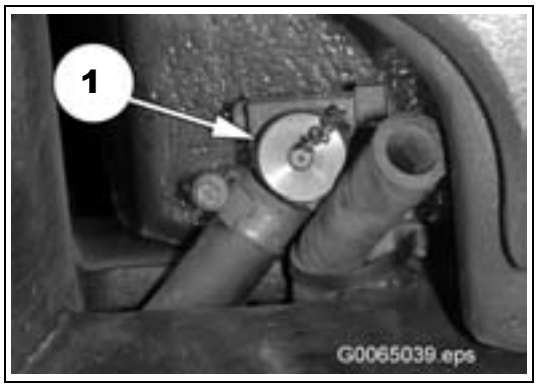

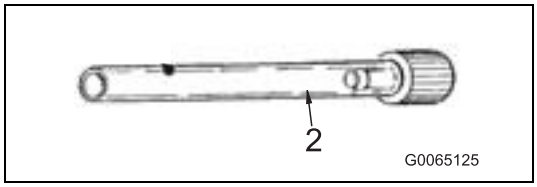

Checking the fuel level, refuelling

WARNING

- **Danger of fire! Fuel that has spilled over may ignite!**
- **Immediately remove fuel that has spilled over.**

1. Turn the start switch to the operating position 'I' and check the fuel level indicated on the fuel level indicator.

   F - fuel tank full

   E - fuel tank empty

2. Then, return the start switch to the stop position '0'.

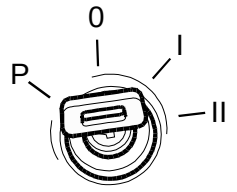

75_209

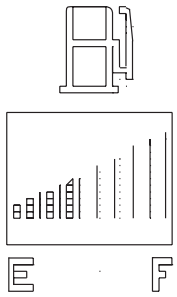

G0065035.eps

3. If required, refuel via the filler (1). For detailed information on fuels, see section "5.3. Lubricants, fuels and filling capacities" on page 5-15.

4. After refuelling, firmly close the filler.

Checking the controls

1. Turn the start switch to the operating position 'I'.

   An alarm buzzer sounds until the machine is started.

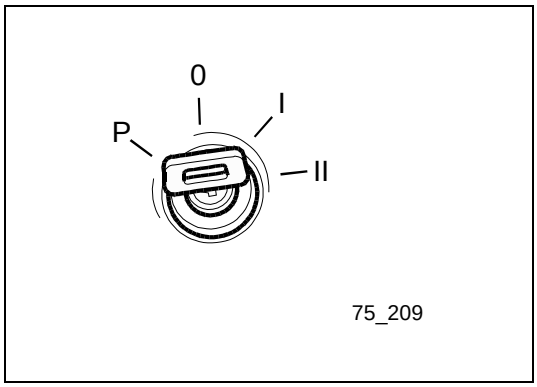

2. Check that the following alarm and control indicators are on until the engine is started:

   1 Parking brake
   2 Charging current
   3 Engine oil level
   4 Intake air preheater

3. Check that the fuel level indicator (5) indicates the fuel level in the fuel tank.

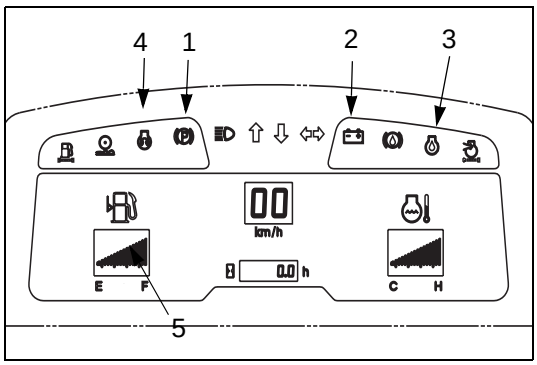

NOTE

Contact your responsible Komatsu dealer, if one or several of the indicators do not light up.

Do not only use the indicators to perform the checks prior to start. Always perform the work described as regular maintenance, too.

Checking the electrical connections

CAUTION

Danger of ignition! Inflammable material (leaves, twigs, grass, etc.) may ignite within the electrical system!
Remove inflammable material from the electrical system.

NOTE

If a fuse blows, or if there are any signs of a short-circuit within the electrical system, inform your responsible Komatsu dealer.

Regularly check that the terminals are fastened tightly, retighten loose terminals.

Heating/Air conditioning: checking rate of air flow

1. Turn start switch to position '1'.

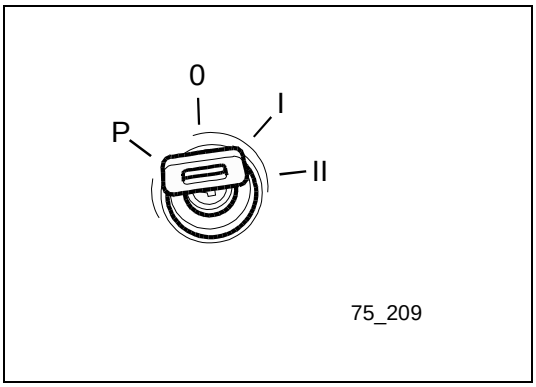

2. Switch blower on.
3. Check if air flow at the air-outlet nozzles to the right and left of the steering column is strong enough.

   Attention: The circulating air jets (arrows) must be open.

4. If insufficient air is coming out of the jets, either the filter fleece in the heating/air conditioning unit is dirty and will have to be cleaned or replaced or the condenser in the air conditioning system is dirty and will have to be cleaned; see "Heater/air conditioning – cleaning/replacing filter fleece" on page 5-52.

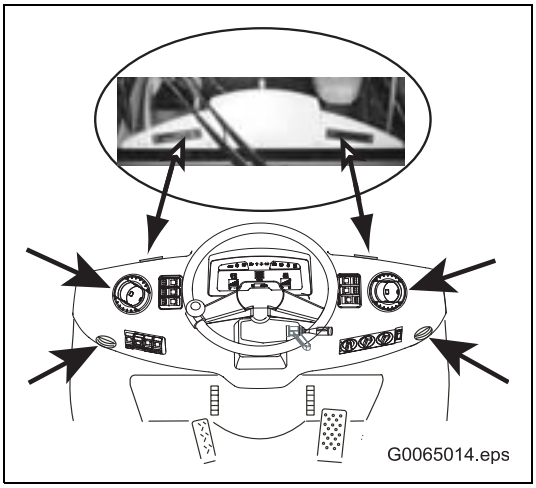

Other maintenance measures prior to start

- Check that the brake oil level reaches up to the marking.
- Check that the contacts at the float of the brake oil container are tightened correctly.
- Check that the lighting equipment operates correctly; check it for dirt and damage.
- Check the measuring instruments.
- Check both the horn and the reversing warning horn.
- Check both clearance and operation of the steering wheel.
- Check the function of the rear-view mirror; check it for dirt and damage.

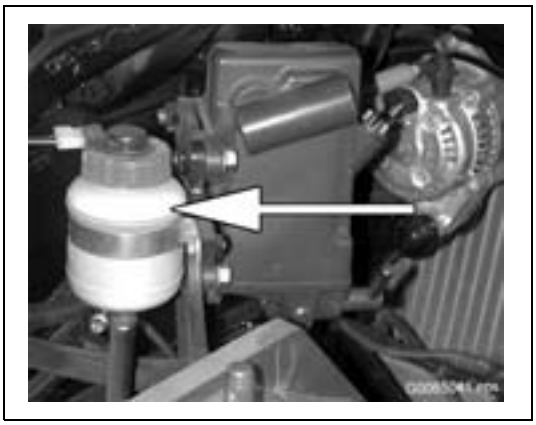

Adjustments prior to machine start

Adjusting the driver's seat

After each change of the driver, newly adjust the driver's seat. Before you start operation, check that the seat is adjusted in such a way that you can fully floor the brake pedal when you lean against the backrest.

Proceed as follows to adjust the seat according to your requirements:

Modell: ISRI

(1) Weight adjustment

Turn the handwheel (1) to set the vibration absorbing system to the weight of the driver.

(2) Adjustment of horizontal position

To adjust the horizontal seating position, pull the lever (2) and slide the seat forward or backward. To lock the position of the seat, release the lever again.

(3/4)Adjusting height and angle of inclination

You may adjust the height and the angle of inclination of the driver's seat with the spring-supported levers (3) and (4).

Use lever (3) to set the front part of the seat, use lever (4) to set the rear part of the seat. .

Adjusting the seat's height
Adjust the front and the rear section of the seat uniformly.

For this purpose, pull lever (3) and hold it in this position. To lift up the front part of the seat, it is necessary to relieve your weight from the front section of the seat cushion by standing up. Then, sit down on the front part in order to press down the front section of the seat. Release the lever if you have reached the right position. The seat is now locked in its position.

Then, pull lever (4) and hold it in this position. To lift up the rear part of the seat, it is necessary to relieve your weight from the rear section of the seat cushion by standing up. Then, sit down on the rear part in order to press down the rear section of the seat.

Release the lever if you have reached the right position. The seat is now locked in its position.

Adjusting the angle of inclination of the seat
Adjust the front and rear section of the seat with different settings.

Proceed as described above.

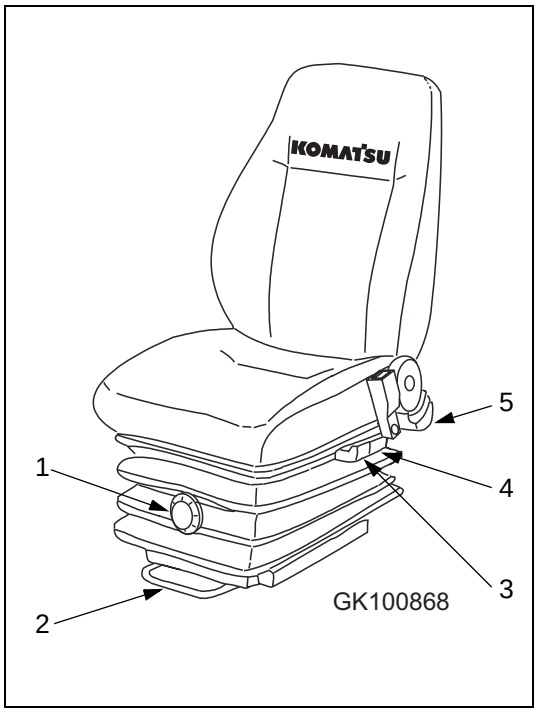

(5) Adjusting the backrest

To adjust the position of the backrest, slightly lean against the backrest, pull lever (5) and hold it in this position.

Relieve the backrest in order to bend it to the front. Press it to the back in order to bend it to the back.

Release lever (5) if the backrest is in the desired position.

The backrest will lock in automatically in this position.

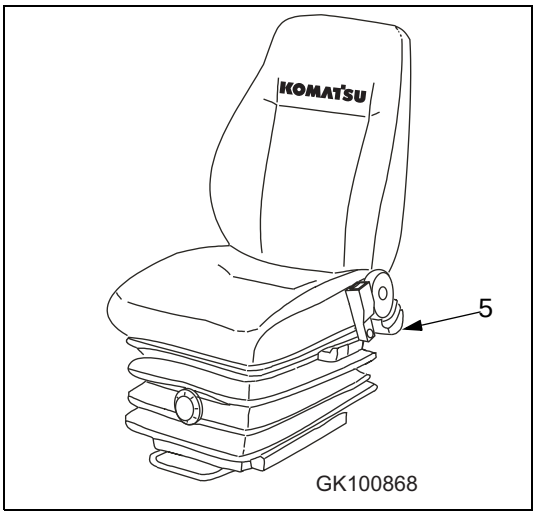

Modell: EURO SEAT

(1) Weight adjustment

Turn the handwheel (1) to set the vibration absorbing system to the weight of the driver.

(2) Adjustment of horizontal position

To adjust the horizontal seating position, pull the lever (2) and slide the seat forward or backward. To lock the position of the seat, release the lever again.

(3) Adjusting the height

You can use the handwheel (3) to adjust the height of the driver's seat.

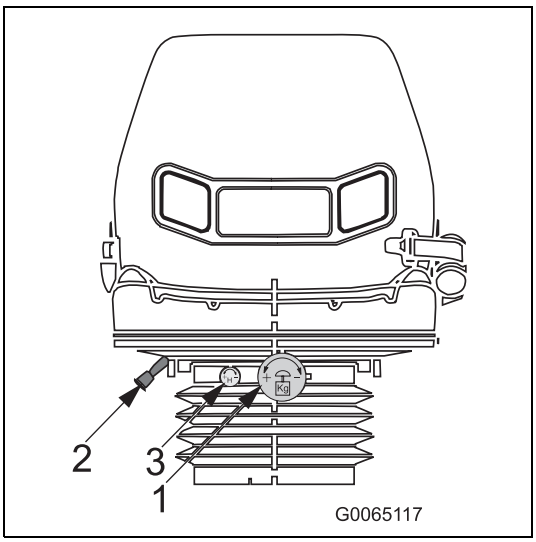

(4) Adjusting the backrest

To adjust the position of the backrest, slightly lean against the backrest, pull lever (4) and hold it in this position.

Relieve the backrest in order to bend it to the front. Press it to the back in order to bend it to the back.

Release lever (4) if the backrest is in the desired position.

The backrest will lock in automatically in this position.

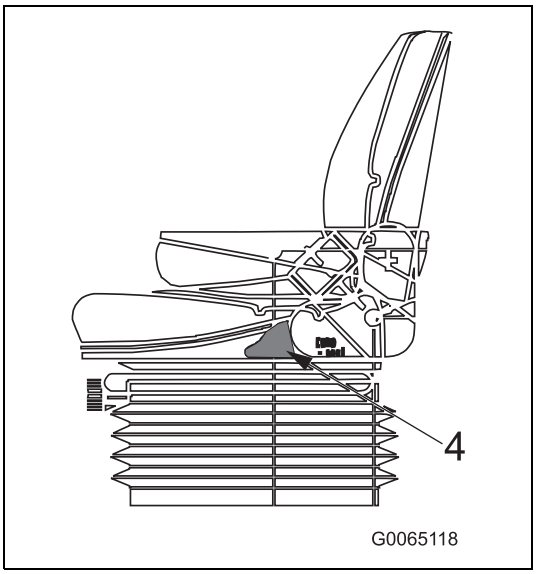

Adjusting the steering column

WARNING

- **Do not change the angle of inclination of the steering column while you are driving, since this may lead to severe accidents!**
- **Stop the machine, before you change the angle of inclination of the steering column.**

You may use this lever for continuous adjustment of the steering column's (1) angle of inclination. (Adjustment range 4.921 inch (125 mm))

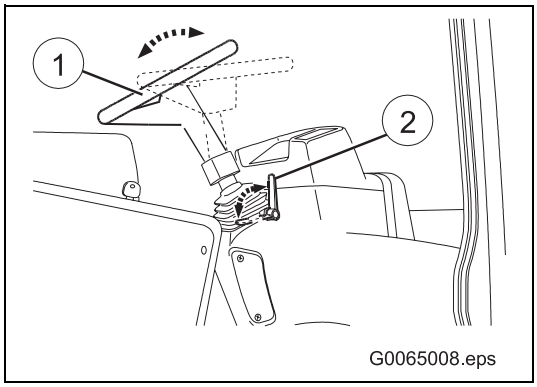

Proceed in the following manner:

1. Release the locking lever (2).
2. Adjust it in such a way that you can reach the steering wheel from a comfortable seating position while at the same time having an optimum view of the work unit. Hold the steering wheel in this position.
3. You can lock the steering column in this position by tightening the locking lever again.

Adjusting the armrest

Proceed as follows to adjust the height of the armrest:

1. Loosen the screw (1).
2. Either pull out or push back the armrest to reach the multifunctional lever.

   Your forearm should rest on the armrest at an angle of 90° to your upper arm.
3. Re-tighten the screw (1).

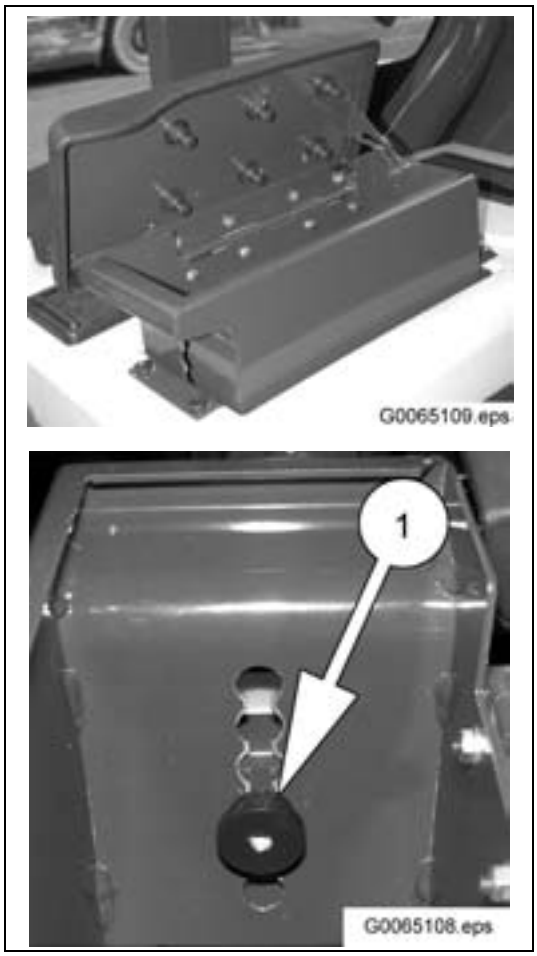

Adjusting the rear-view mirrors

Sit down on the driver's seat and adjust the rear-view mirrors to their required positions. You should be able to view the traffic coming from behind without having to change your seating position.

Putting on the safety belt

WARNING

- **Danger of injury! A damaged safety belt, a safety belt that has been stretched in an accident, or a safety belt the belt fixings or fastening screws of which have not been mounted correctly will not protect you sufficiently in case of accident!**
- **Replace the safety belt, if it is damaged, or if the machine has been involved in an accident. Check that the belt fixings and fastening screws are in perfect condition, before you put on the safety belt.**
- **If you have not put on the safety belt and are involved in an accident, this may lead to severe injuries!**
- **Put on the safety belt, before you start work and do not take it off during work. Put on the safety belt in such a way that it is not twisted and fits tightly.**

The machine is provided with a lap belt which automatically retracts. When pulled slowly, automatic belts ensure full freedom of action, but block immediately, if you suddenly brake or accelerate, or if you drive downhill or take corners.

Putting on the safety belt

1. Sit down on the driver's seat.
2. Slowly and continuously pull out the belt.
3. Insert the lock tongue into the lock socket until the lock engages.
4. Then, pull the belt to check whether or not the lock tongue is fully engaged.

NOTE

The belt cannot be pulled out unless it is completely wound up.

Taking off the safety belt

Press the orange button to release the lock of the safety belt and allow the belt to wind up.

3.3.2. Starting the engine

1. Pull the parking brake lever.
2. Set the drive direction switch to its neutral position 'N'.

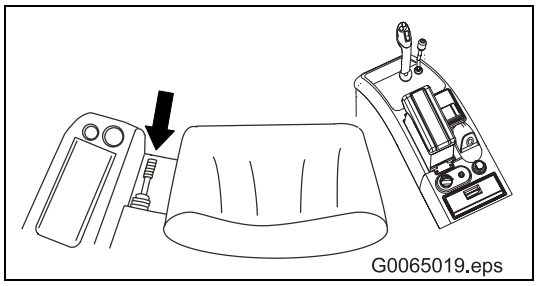

NOTE

You may only start the engine, if the driving direction switch is set to the neutral position 'N'.

CAUTION

- **Unintentional start-up of the engine may lead to severe accidents!**
- **Before starting up the engine, make sure that there are no persons or obstacles near the engine. In addition, sound the horn before you start the engine.**

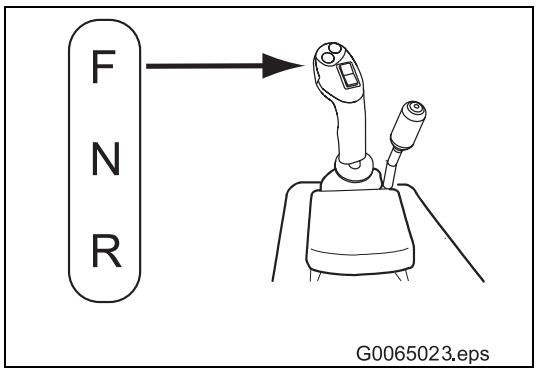

3. Turn the ignition key to operating position 'I'.
   - Fuel level (1) displayed.
   - The parking brake warning light (2) illuminates when the parking brake is applied.
   - The charging current (3) and engine oil pressure (4) warning lights illuminate.
   - The air intake preheater control lamp (5) illuminates when the air intake preheater is running.

   The running period of the air preheater depends on the ambient temperature. If the ambient temperature is low, the preheating process may take more time.
4. Press down slightly the accelerator pedal.
5. If the control lamp of the air preheater has gone out, you can turn the ignition key to the start position 'II' in order to start up the engine.

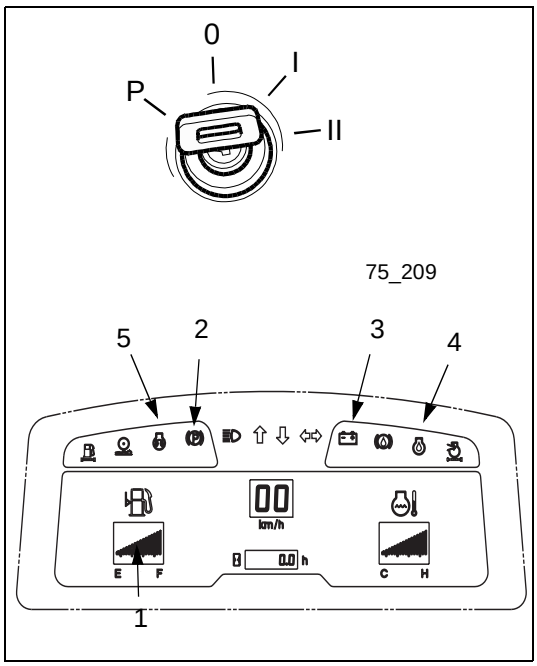

NOTE

Do not operate the starter for longer than 15 seconds. If the engine does not start up, wait at least two minutes before trying a restart. If the engine does not start up after several tries, find out the cause using the information indicated in the chapter "4.6. Other troubles" on page 4-10.

6. Release the ignition key as soon as the engine started. It automatically returns to the operating position 'I'.
7. Check whether all warning lights have gone out.

NOTE

For starting up the engine in cold weather, see chapter: "3.5. Cold weather operation" on page 3-80.

Warming up the engine

NOTE

- **You must not accelerate the engine abruptly before the warm-up phase is finished.**
- **Do not let the engine run idle for longer than 20 minutes at its lower or top speed. If it is necessary to let the engine run idle for a longer time, you must load the engine briefly from time to time or let it run at medium speed.**

Do not immediately begin with work after starting the engine. Prior to operation, perform the following preparations and checks:

1. Press down slightly the accelerator pedal and let the engine run without load at medium speed for approx. 5 minutes.
2. Proceed as follows in order to heat up the hydraulic oil at low ambient temperatures:

   Allow the engine to run consistently during the warm-up phase. For warming the hydraulic oil, reset the multi-function lever for the work hydraulic system in short intervals from position '0' (holding) into position 'E' (tip-in position). Then reset it to its '0' position.

   Make sure not to exceed the maximum time (10 seconds) permitted for the multi-function lever in the tip-in position.
3. While the engine is warming up, observe all measuring instruments and warning lights and eliminate immediately any fault.
4. Let the engine run with lightweight load further until the engine coolant temperature indicator (1) lights up in the green range.
5. Ensure that the exhaust gas colour is normal and that the exhaust pipe produces neither abnormal noises nor vibrations. Eliminate possible defects.

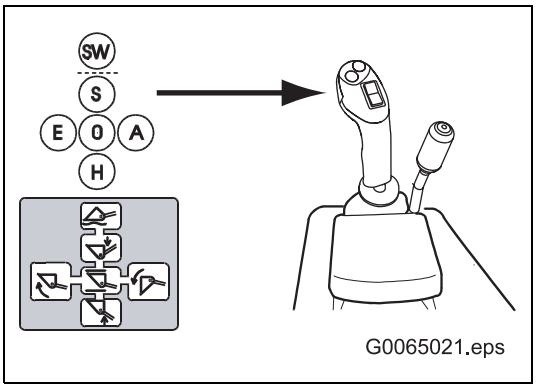

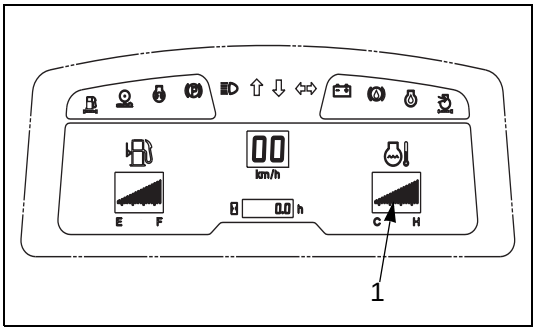

3.3.3. Driving with the machine

Start-up

CAUTION

Careless driving may lead to accidents! Before starting to drive, ensure that no persons are near the machine and sound the horn before you drive up.

1. Start up the engine as described in chapter "3.3.2. Starting the engine" on page 3-43
2. Raise the work unit into its transport position. If the work unit is in transport position, the two red arrows of the transport position marking on the lifting cylinder are next to each other.

3. Turn the lock lever for the work unit to position '1'. The boom will then be blocked during rides on public roads and cannot be moved.
4. Press down the brake pedal and hold it in this position.

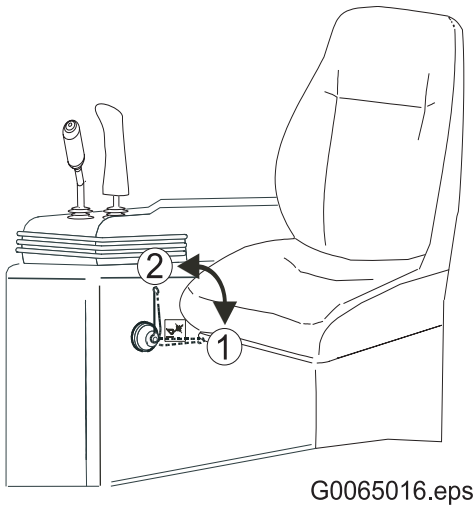

5. Release the parking brake. Press the celebration adjustment knob to this at the parking brake lever. Press down the locking button of the parking brake lever. The, release the locking button. The parking brake warning light goes out.

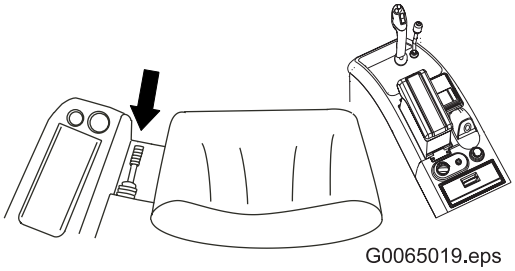

6. Set the drive direction switch to the desired direction setting.

   Position F = Driving forward
   Position N = Neutral
   Position R = Reversing

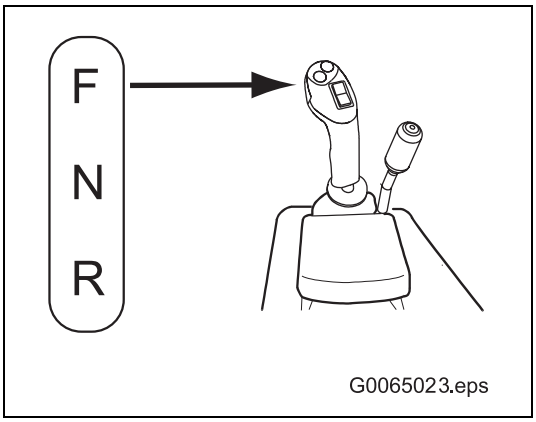

NOTE

If you set the drive direction switch in to forward or reverse driving, without having released the parking brake , the horn will sound.

7. Release the brake pedal and press down the accelerator pedal at the same time in order to start the machine..

Starting the machine on slopes

CAUTION

Careless driving may lead to accidents! Before starting up, ensure that no persons are near the machine and sound the horn before driving.

1. Start up the engine as described in chapter "3.3.2. Starting the engine" on page 3-43.
2. Make sure that the parking brake is pulled. The parking brake warning light lights up.
3. Press down the brake pedal.
4. Release the parking brake.
5. Set the drive direction switch to the desired direction setting.

   Position F = Driving forward
   Position N = Neutral
   Position R = Reversing

6. Press down the accelerator pedal and release slowly the brake pedal at the same time in order to start the machine.

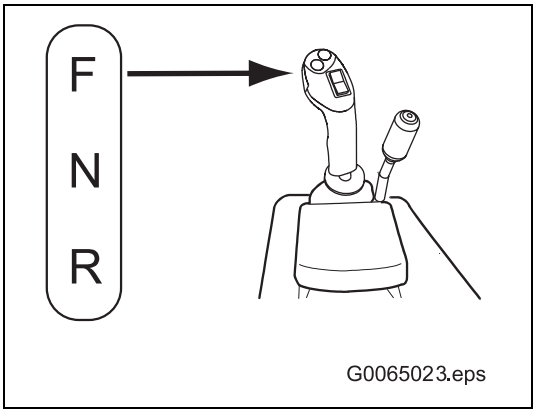

3.3.4. Changing the driving direction

WARNING

Careless changes of the driving direction may cause severe accidents!
Before you change the driving direction from forward to reverse driving or vice versa, you must make sure that no persons or obstacles are in your way.

CAUTION

The engine may be damaged if you are driving at a high speed and then change abruptly from forward to reverse driving or vice versa!
Brake until the machine has nearly come to a standstill before you change the driving direction.

The drive direction switch is used to switch between forward and reverse gear or vice versa. The machine may still roll, if you change the driving direction.

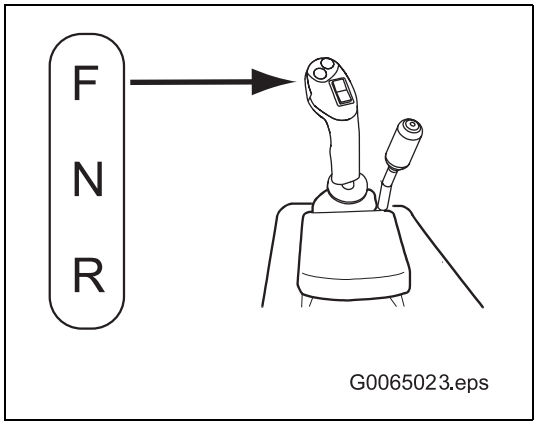

Position F = Driving forward
Position N = Neutral
Position R = Reversing

Reverse driving

The machine can drive forward or backwards (reversing) at the same speed.

Before driving backwards, make sure that nobody is in your way. If necessary, rely on another person for aid. Sound the horn before starting to drive to make sure, that anybody who might be in your way is appropriately warned.

While driving backwards, turn your head into the driving direction. It is not sufficient to rely on the rear view mirrors.

3.3.5. Turning and steering

NOTE

- **The machine may fall over if you turn abruptly at a high speed.**
- **If the machine is halted during the ride, the servo-assisted steering will be deactivated. You may then only proceed with steering the machine with considerably higher effort.**

Turning on slopes, dams or hills

Keep sufficient distance to ridges and steep slopes. There is danger of the machine tipping over or sliding down on steep slopes, embankments, or hill flanks. The limiting values are defined in chapter "6.4. Limit values for slopes" on page 6-3.

Do not turn on a slope or drive across a slope. Turn or cross the section only level ground. When driving on slopes, avoid driving on grass, fallen leaves, or steel plates. Driving sideways on these surfaces types may result in the machine sliding. Drive very slowly and carefully.

To keep the centre of gravity as low as possible when driving on slopes, embankments, and hill flanks, you must set the bucket to a position just above the ground (approx. 7.874 to 11.811 inch (200 to 300 mm)). In the event of an emergency, displace the bucket fast on the bottom in order to stabilise the engine.

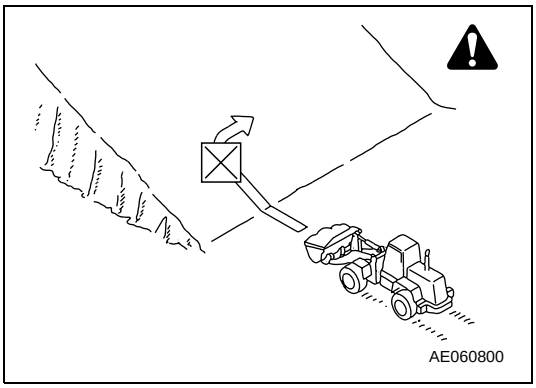

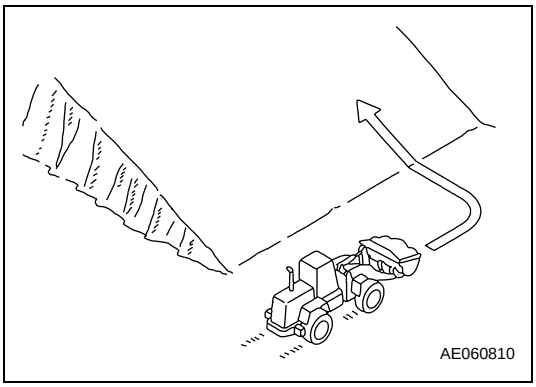

3.3.6. Braking

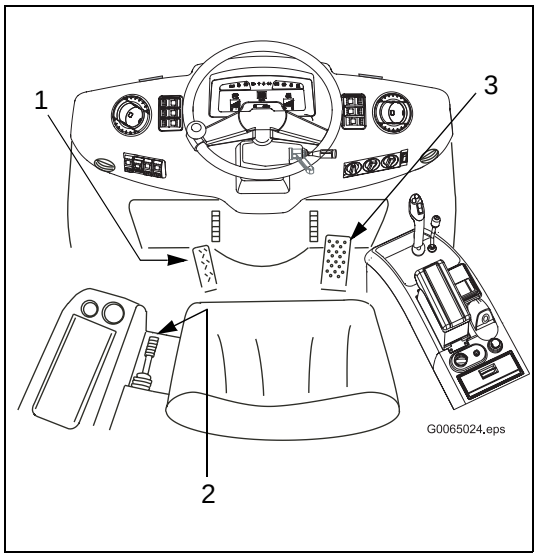

While driving, you may reduce your speed with the service brake (1).

After the machine has stopped, you must secure it with the parking brake (2).

Pulling the parking brake

1. Press the locking button.
2. Pull up the parking brake lever.
3. Release the locking button. The control lamp of the parking brake lights up.

Releasing the parking brake

1. Lift up the parking brake lever a little.
2. Press the locking button.
3. Push the parking brake lever down.
4. Release the locking button. The control lamp of the parking brake goes out.

Braking with the service brake

If the braking delay is not sufficient by relieving the pressure from the accelerator pedal, you must brake the machine with the service brake. For this purpose, press down the brake pedal.

The service brake (1) can also be used to adapt the driving speed to the respective driving and operating situation (3), independent of the accelerator pedal position.

If it is required to press down the accelerator pedal completely, in order to be able to use the full-load output of the engine of the work hydraulic system, you can nevertheless use the brake pedal to reduce the speed of the machine or to stop it completely.

If the service brake breaks down

If the machine is not stopped after pressing down the brake pedal, you must use the parking brake.

Braking on slopes

CAUTION

- **The service brake may overheat and be damaged while driving downhill!**
  Let the engine run while driving downhill. If required, brake in addition using the brake pedal.
- **Danger of accidents due to unintentional braking!**
  Do not use the brake pedal as a foot rest.

If you use the service brake too often while driving downhill, it may overheat and be damaged.

You can avoid this by driving downhill in the lower speed range and by using the braking effect of the engine.

3.3.7. Stopping the machine

Avoid abrupt stopping. Proceed as follows, if you want to stop the machine:

1. Release the accelerator pedal and press down the brake pedal.
2. Set the drive direction switch into its neutral position 'N'.
3. Apply the parking brake.
4. Lower the work unit onto the ground.

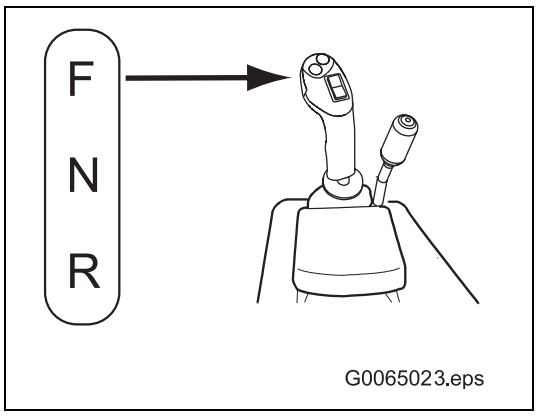

WARNING

- **Unintentional activation of the multifunctional-lever or moving of the equipment may lead to accidents!**
- **Before you leave the cab, turn the locking lever for the work hydraulic system into position '1'. As a result, the work hydraulic system is blocked.**

5. Protect the work hydraulic system against unintentional activation by turning the locking lever of the work hydraulic system into position ‘1’..

   Position 1 = working hydraulics locked

   Position 2 = working hydraulics released

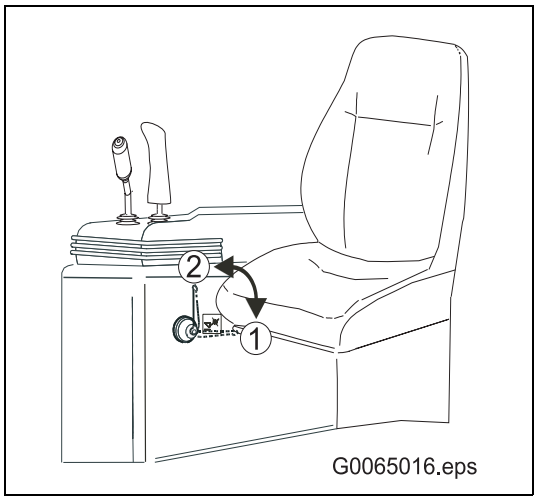

Parking the machine on a slope

Whenever possible, stop the machine on level ground.

- If you have to park the machine on a slope, it is required that you park it in such a way that the front section (work unit) points downhill.
- Lower the work unit onto the ground (1).
- Block the wheels with wheel chocks (2).

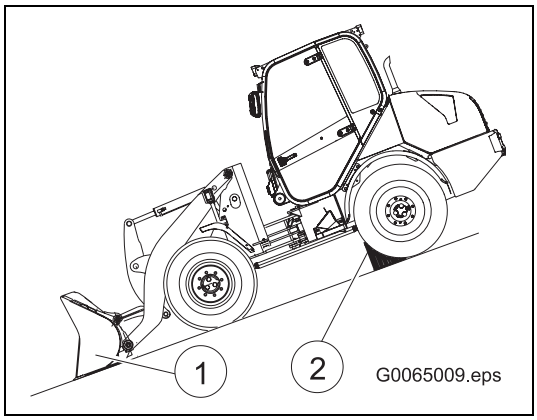

3.3.8. Operating the work equipment

Multifunctional lever

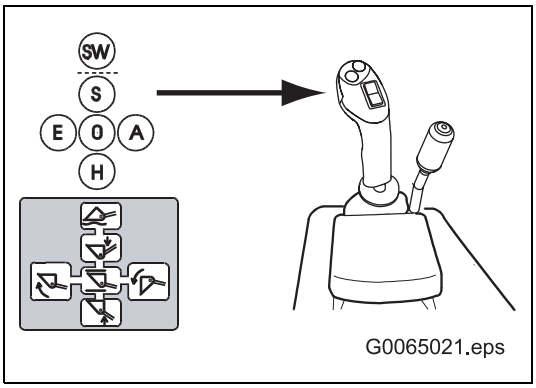

The work unit is operated with the multifunctional lever. The multifunctional lever has 6 positions which control the work unit as follows:

SW Float The multifunctional lever is locked in this position. The floating position is provided for planing operations (removing subsoil). In this switch position, the work unit is lowered by its own weight, and can be freely operated by external parties.

S Lower The boom is lowered in this position. If the engine is switched off, you can lower the boom in this position.

0 Hold The boom is held in position.

H Raise The boom is raised in position.

E Tilt In this position, the bucket is tilted.

A Dump In this position, the bucket is dumped.

Control lever for special equipment

The control lever for special equipment has three switch settings whose functions depend on the type of the used special equipment.

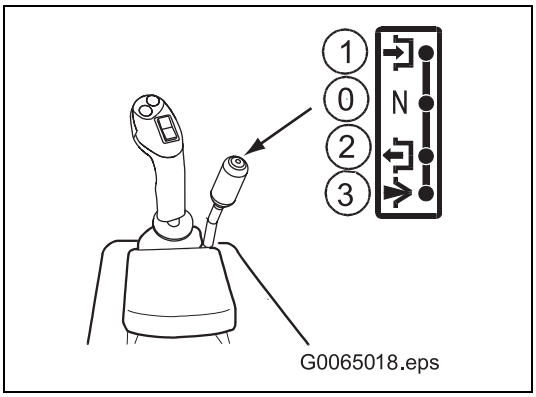

- If the standard bucket, the light-weight material bucket or the forklift truck attachment is attached to the quick-change unit, the control lever for special equipment provides the following functions:

Position 1 = Locking pins for work unit are drawn in

Position 0 = Neutral position (locking pins are drawn in; you can pick up the work unit in this position)

Position 2 = Locking pins for work unit are extended

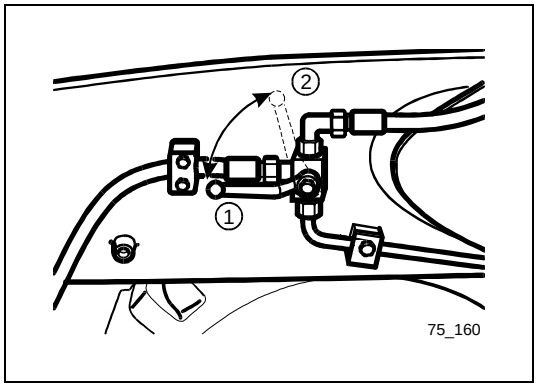

- If the multi-purpose bucket is attached to the quick-change unit, the control lever has the functional assignment described above. If the switching lever for the bucket is in position ‘1’, the multi-purpose bucket is active. You can then operate the multi-purpose bucket via the control lever for special equipment.
  It then has the following functions:

Position 1 = Close multi-purpose bucket

Position 0 = Neutral position

Position 2 = Open multi-purpose bucket

- If you use attachments requiring a steady oil flow (e.g. brush, snow remover), the control lever has the following functions:

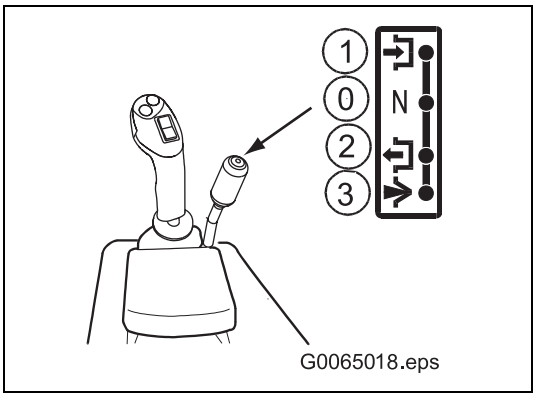

Position 1 = Work unit turns backwards

Position 0 = Neutral position

Position 2 = Work unit turns forward

Position 3 = Work unit turns forward in permanent operation (locks in

- For permanent operation, you must set the control lever to position ‘3’. The control lever locks in this position.

NOTE

Without connected special equipment, you must not set the control lever for special equipment to switch settings ‘1’, ‘2’ or ‘3’. If you do not heed this note, the work hydraulic system will operate in order to counteract overpressure thus unnecessarily heating up the oil.

Switching lever of bucket

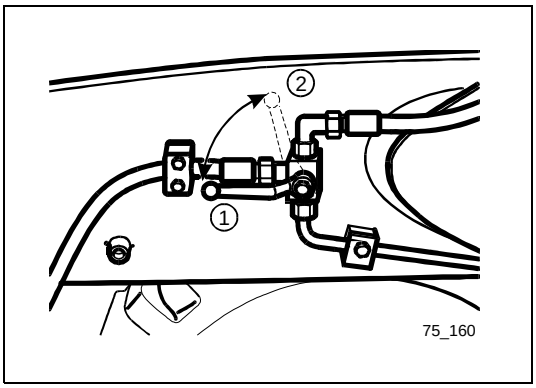

If you have the multi-purpose bucket attached to the machine, you can use this switching lever to change the function assignment of the control lever for special equipment.

Position 1 = the control lever for special equipment operates the multi-purpose bucket.

Position 2 = the control lever for special equipment operates the quick-change unit.

3.3.9. Working with the wheel loader

Tyre-appropriate operation

Removing heaps of loose soil or rock debris may cause premature wear and tear of the tyres due to cracks and small fissures. As a result, the service life of the tyres is reduced. Proceed as follows to avoid unnecessary wear and tear of the tyres:

- Try to work on level ground and remove any rocks and large stones which are sticking out of the surface.
- Always drive in straight direction into the heap or slope. This ensures that you have always the largest intrusive force while reducing tyre wear and tear at the same time.
- Drive slowly when removing agglomerated material and when loading blasted solid rock (speed range 1).
- For removing operations, lift the bucket as soon as you drive into the heap or slope. This procedure permits to increase the load of the front wheels, prevents slipway of the front wheels and reduces wear and tear of the tyres.
- Lower the bucket slowly onto the ground. If the bucket touches the ground too fast, the front wheels may be lifted from the ground, thus leading to premature wear and tear of the rear tyres.
- To prevent the front wheels from skidding, it is recommended to set the ground pressure of the front wheels as high as possible. Therefore, immediately lift the bucket a little after running into the heap or slope.

Switching on the 100 % differential lock (if equipped)

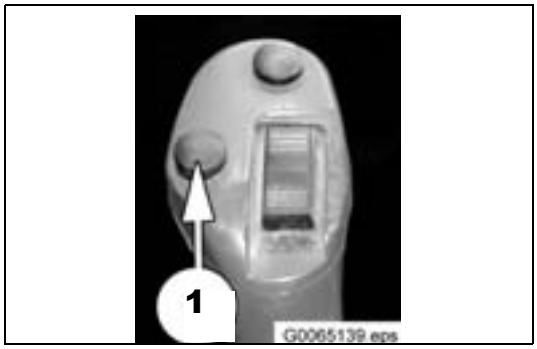

On soft, slippery ground the forward thrust can be improved by engaging the differential lock. It takes effect on all four wheels.

To engage the differential lock, press and hold the button (1) on the multifunction lever.

NOTE

The differential lock may only be switched on when the machine is in standstill.

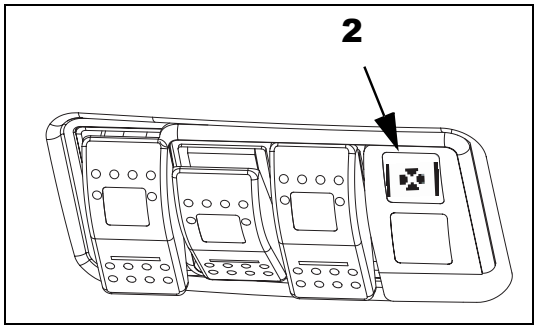

If the differential lock is on, the control lamp (2) at the bottom left of the instrument panel is lit.

If only one wheel on an axle turns when you start to drive with the differential lock engaged, stop and correct the steering until the lock engages properly.

To disengage the differential lock, release the button (1) on the multifunction lever.

The differential lock can be disengaged while you are driving

DANGER

When you drive in curves on hard ground, the differential lock has to be switched off.

Loading work

CAUTION

Danger of accidents! The machine may fall over if you transport a load with the bucket lifted too high!
Lower the bucket during transporting loads in order to lower the centre of gravity of the machine.

The loading operation of wheel loaders is based on the following cycle:

Removing or digging → Transport → Dumping

In the following sections, the individual operation steps of this cycle are explained.

Removal work

CAUTION

If you perform removal operations with bent machine, you may damage the articulated steering and the cardan shaft!
Always drive into the material which you want to remove in straight direction.

For removal operations, adhere to the instructions in section "Tyre-appropriate operation" on page 3-55. For removal operations, proceed as follows:

1. Drive in straight line to the piled up soil.
2. While driving forward, lower the bucket rapidly until it reaches a height of approx. 11.811 inch (30 cm) over the ground and hold the bucket in this position.

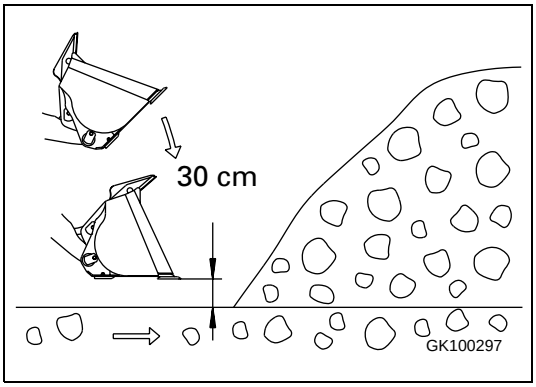

NOTE

If the bucket touches the ground, the front wheels may be lifted from the ground, resulting in premature wear and tear of the rear wheels.

3. Then, proceed with slowly lowering the bucket onto the ground.
4. Brake right in front of the material to be removed using the service brake, while pressing down the accelerator pedal at the same time.
5. Press down the accelerator pedal and drive the bucket into the material to be removed. In order to remove the material, it is required that you align horizontally the cutting edge of the bucket while driving into the material.

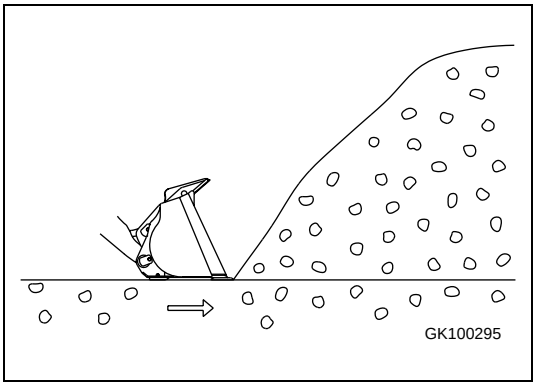

When you are loading rock debris, it is necessary to dump the bucket slightly down.
While removing rock debris, ensure that no rock gets under the bucket. This may lead to the front wheels being lifted from the ground, thus resulting in premature wear and tear of the rear wheels.
Always hold the load in the centre of the bucket. If the load is shifted to one side, the equilibrium of the machine will be impaired.

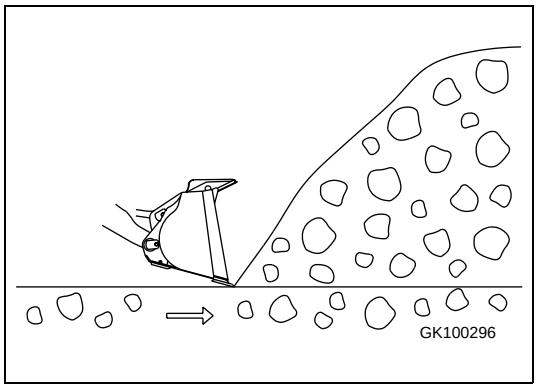

6. To prevent that the bucket dig in too deep into the material to be removed, you must lift the boom while driving into the material. Lifting the boom ensures a sufficient thrust force.

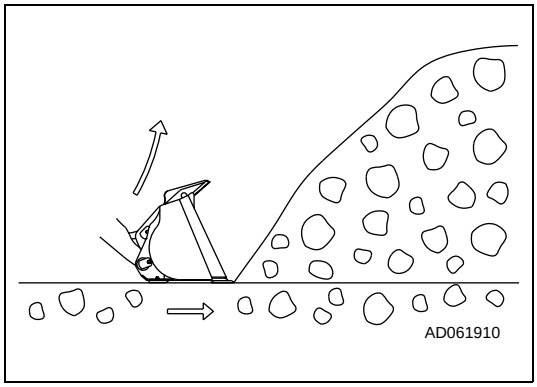

7. Tip in the bucket.

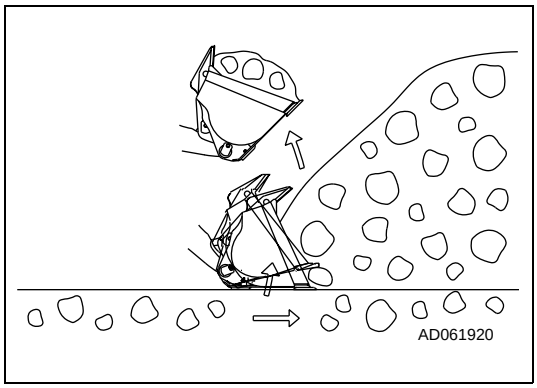

8. If there is too much material inside the bucket, you must briefly tip it in, dump it and lower it in order to reduce the load and to prevent that you lose the load during the transport.

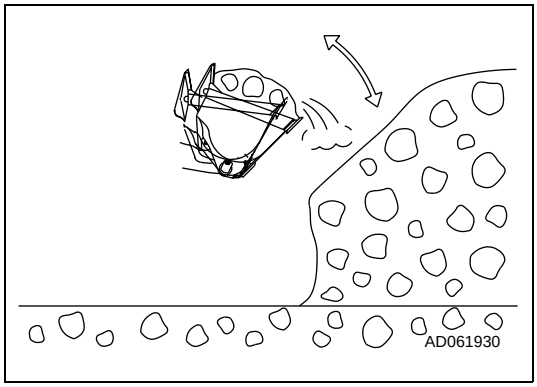

Excavation work

During excavation work, ensure that you do not load the bucket only on one side, as the equilibrium of the machine may be impaired.

1. Drive up to the soil heap in a straight line.
2. Slow down the machine using the service brake while keeping the accelerator pedal pressed down at the same time.
3. Bend the bucket edge slightly down.

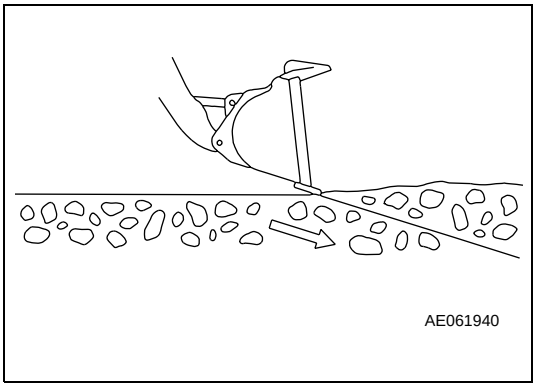

4. While driving forward, move slightly the multi-function lever of the boom in order to remove only a thin layer of the surface of the soil to be removed.

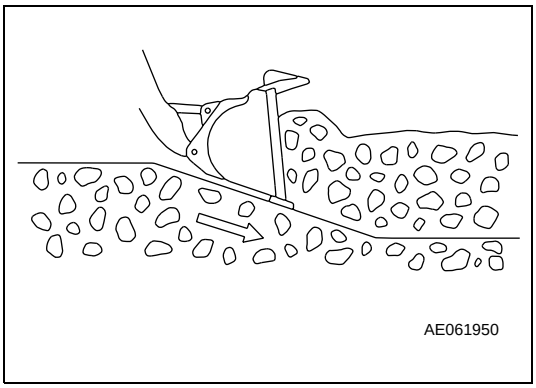

5. Move the multi-function lever of the boom slightly up and down to reduce the resistance during driving forward.

   While removing, ensure that the digging force is not applied only on one side of the bucket.

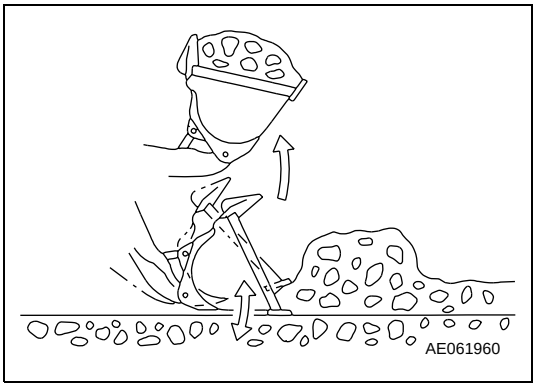

Planing

Planing operations are required for levelling the ground. For this purpose, a straight bucket without claws is suitable. Planing includes two operation steps - filling up and taking off ground.

Filling up

It may be necessary to fill up the uneven ground in front of the machine with soil. Proceed as follows:

NOTE

For fill-up operations, lower the bucket max. by 15° to the front.

Fill the bucket with soil. Drive slowly forward with the machine and distribute the soil little by little from the bucket. If you must fill up particularly large uneven surfaces, you should place additional soil in front of the bucket, which will be distributed when the machine is driving forward.

Taking off soil

If the surface is filled up, you may level the ground.

WARNING

Danger of accidents! Careless reverse driving may lead to severe accidents!
Before you drive backwards, make sure that nobody is behind the machine. Warn persons who are in your way by sounding the horn.

Dump the bucket slightly down. Drive backwards and draw the bucket over the ground.

In order to receive a particularly even surface, you must lower the boom to its floating position. Drive slowly backwards and draw the bucket with its plane underside over the ground.

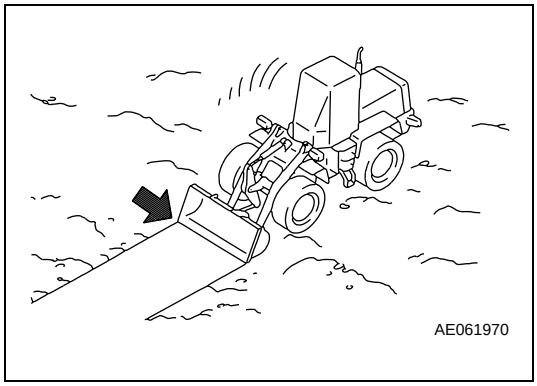

Prospecting

Prospecting is a special type of planing. It is used to wear off the top layer of soil.

CAUTION

The bucket teeth and bucket are damaged if you mine with the bucket in dumping position!
For prospecting operations, align the underside of the bucket until it is in parallel to the ground surface.

Always drive in the lower speed range while performing prospecting operations.

Transporting

Make sure that the transport route is in perfect condition and that nobody is in your way. Remove any rocks or large stones which have fallen down out of the operating range (described in chapter "Tyre-appropriate operation" on page 3-55). Hold the bucket in tip-in position. Lower the boom to its transport position. If the boom is in transport position, the two red arrows of the transport position marking on the bucket cylinder will be next to each other.

Unloading

Always select the dumping/unloading type with the smallest turning circle and driving effort in order to work as efficiently as possible.

WARNING

Danger of accidents! If you turn or brake abruptly with the lifted load, the load may fall out of the bucket and cause accidents!
Turn slowly with the load lifted and brake cautiously.

CAUTION

The bucket and the machine are damaged if you drive into a heap of soil or rocks with high speed!
Drive slowly into a heap of soil or rocks.

Avoid any excessive shaking of the bucket. Always operate with respect to the condition of the tyres (see section "Tyre-appropriate operation" on page 3-55).

Loading in diagonal direction

Align the machine in rectangular position to the heap. Drive the machine backwards in straight line after you have filled the bucket. Then, let the dump truck drive between heap and machine. Drive up to the dump truck and unload the material.

This operation requires not much time and reduces considerably the cycle times.

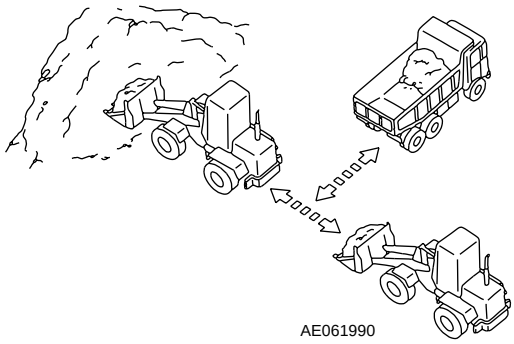

V-shaped loading

Position the dump truck in such a way that the angle between the dump and the dump truck is approx. 60°. Fill the bucket and shake it. This leads to a better distribution of the cargo in the bucket and prevents that material falls down to the back. Drive the machine backwards from the heap and align the machine with the dump truck. Raise the bucket to its maximum height. Drive up forward to the dump truck and unload the material.

If you keep the turning angle of the machine as small as possible, the work will be more efficiently.

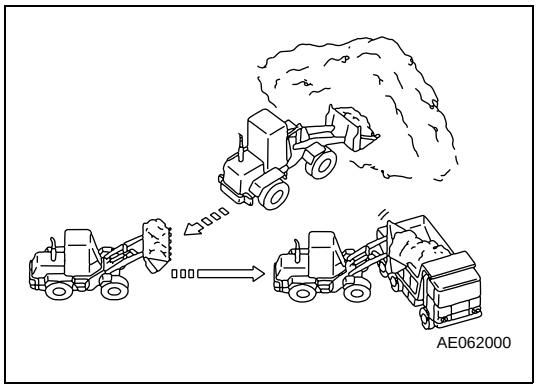

Piling up material

Do not position the bucket in its maximum tip-in or dumping position while piling up material. Instead, use the required mining angle. The rear counterweight must not touch the ground.

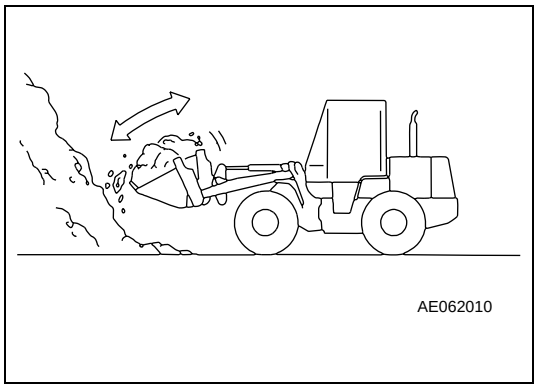

Working with the forklift truck attachment

Operations with an forklift truck attachment on a wheel loader differ from operations with the bucket or a forklift truck. Take into account the following notes and the instructions indicated in the chapter "2.1. General safety measures" on page 2-2.

- Do not take up loads which are so high that you cannot see onto the route.
- Hold the fork tines of the forklift truck attachment as horizontal as possible when you take up the load.
- During the ride, hold the load as low as possible in order to have free sight onto the route.
- Always drive slowly (speed range 1) with the load.
- The boom performs a semicircular stroke while performing the lifting movement. Raise the boom only immediately in front of the place at which you want unload to the height at which you want to unload. In such a way, you prevent that you damage the load while lifting it.
- Hold the forklift truck attachment as horizontal as possible while piling up.

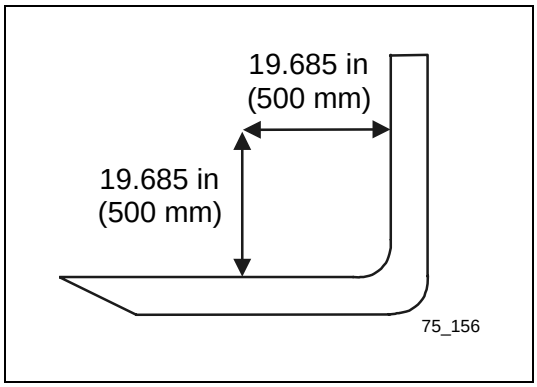

Picking up the load

1. Drive slowly up to the load to be picked up.

WARNING

Danger of accidents! If the load does not lie in centre of gravity, the stability of the machine is impaired.
Drive under the load until it is touching the fork back of the forklift truck attachment.

2. Drive so far under the load until it touches the fork back of the forklift truck attachment.
3. Tip in slightly the forklift truck attachment so that the load cannot fall down.
4. Lower the boom to its transport position. The two red arrows of the transport position marking on the bucket cylinder will then be lined up next to each other.
5. Then lift the load to the appropriate height only shortly before you reach the stacking surface. Raise the load a little higher than necessary.
6. Set the load surface slowly and from above onto the stacking.
7. Slowly lower the boom so far that you can pull out the fork tines below the load.
8. Make sure that nobody is behind the machine and drive off backwards from the stacking surface.

3.3.10. Precautions for special operations

Permissible water depth

While operating in water or on swampy ground, the water must not reach the underside of the axle housing.

Wash the machine after the work has been finished and check the lubricating points.

Working on snow

Adhere to the instructions in the chapter "Working on snow" on page 2-14.

Dumping on steep slopes

Adhere to the instructions in the chapter "Loading" on page 2-14.

Working in the vicinity of electrical overhead lines

Adhere to the instructions in the chapter "Working close to power lines" on page 2-13.

Operation on slopes

Adhere to the instructions in the chapter "Driving on slopes" on page 2-11.

Working on loose soil

Adhere to the instructions in the chapter "Working on loose soil" on page 2-15.

If the service brake breaks down

If the machine is not stopped after pressing down the brake pedal, you must use the parking brake.

Precautionary measures when driving up or down

Turning on slopes, dams or hills

Keep sufficient distance to ridges and steep slopes. There is danger of the machine tipping over or sliding down on steep slopes, embankments, or hill flanks. The limiting values are defined in chapter "6.4. Limit values for slopes" on page 6-3.

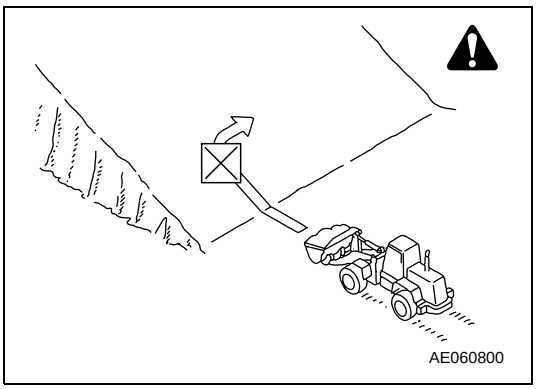

Do not turn on a slope or drive across a slope. Turn or cross the section only level ground. When driving on slopes, avoid driving on grass, fallen leaves, or steel plates. Driving sideways on these surfaces types may result in the machine sliding. Drive very slowly and carefully.

To keep the centre of gravity as low as possible when driving on slopes, embankments, and hill flanks, you must set the bucket to a position just above the ground (approx. 7.874 to 11.811 inch (200 to 300 mm)). In the event of an emergency, displace the bucket fast on the bottom in order to stabilise the engine.

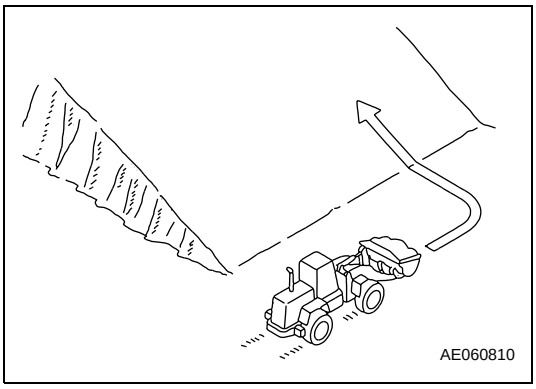

Braking on slopes

Adhere to the instructions in the chapter "Braking on slopes" on page 3-50.

Precautionary measures during machine travel

If the machine is driven over long routes at a high speed and without having adapted the tyre pressure, the tyres will become very hot.

This leads to premature wear and tear of the tyres which should be avoided if possible. Adhere to the following instructions if you must drive the machine over a long distance:

- Perform all pre-start checks before starting to drive (see chapter "3.3.1. Pre-start checks" on page 3-32).
- Fix supplementary hand tools before starting to drive.
- The required tyre pressure, the driving speed or the tyre type may vary depending on the condition or structure of the road o be used. Contact the responsible Komatsu trader or the tyre dealer to obtain the required information.
- The required tyre pressure can be found in the tyres and tyre pressure table in chapter "3.3.16. Tyre handling" on page 3-74.
- Check the tyre pressure with the tyres being cold before driving.
- Lower the work unit to its transport position and move it completely to its rear limit stop position.
- Always drive with empty bucket or empty forklift truck attachment.
- Adhere to the valid motor vehicle traffic regulations and drive very careful. Make sure that the working lights and the warning beacon are turned off while driving on public roads.
- Take a 30 minute break after driving for one hour. Check the tyres and all particularly strained parts during driving on public roads whether they are still fully functioning or damaged.

3.3.11. Adjusting the position of the work equipment

Selecting a work unit

Refer to chapter "1.10. CE-conforming equipment" on page 1-24 for information on the work units registered.

Picking up the work unit (except multi-purpose bucket)

Connect the multi-purpose bucket as described in section "Picking up the multi-purpose bucket" on page 3-69.

1. Make sure that the change-over lever for the additional control unit is in position '2' (fig. 75_160).
2. Start the engine.

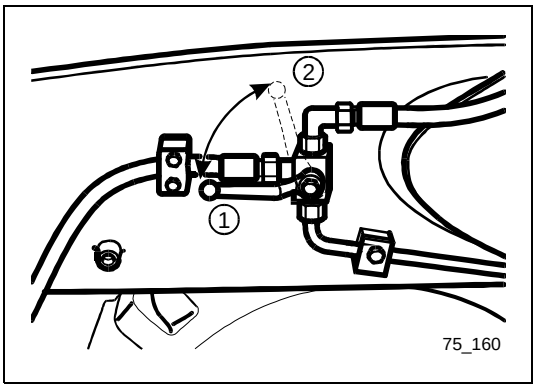

3. Unlock the quick-change unit by setting the control lever for special equipment into position ‘1’ (fig. G0065018.eps).

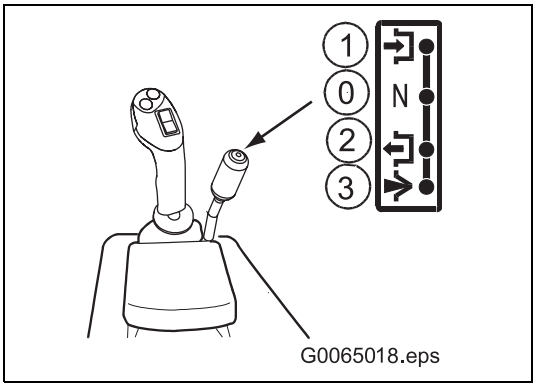

4. Lift the boom a slightly by setting the multi-function lever into position ‘H’ (fig. G0065021.eps).
5. Tilt the quick-change unit a slightly to the front by setting the multi-function lever into position ‘A’ (fig. G0065021.eps)

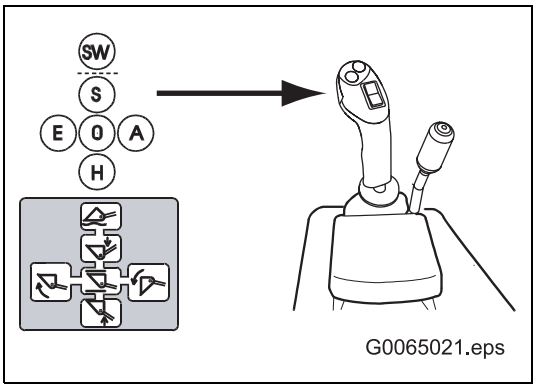

6. Drive the machine to the work unit until the quick-change unit (3) is below the pickup hooks of the work unit. Then, lift the boom until the work unit catches the quick-change unit.

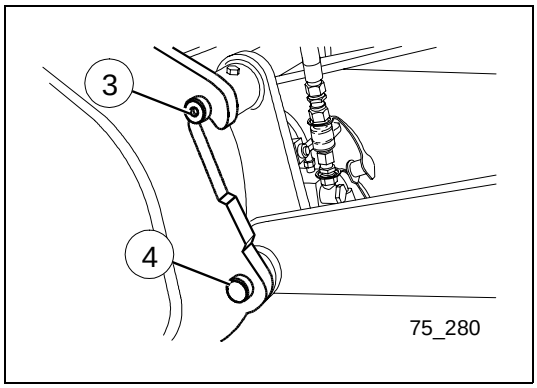

7. Tip in the quick-change unit until the work unit is connected to the limit stops on the the quick-change unit by setting the multi-function lever into position ‘E’ (fig. G0065021.eps).

8. Lock the quick-change unit by setting the control lever for special equipment into position ‘2’ (fig. G0065018.eps).
The interlocking pins (4) will then be visible (fig. 75_280).

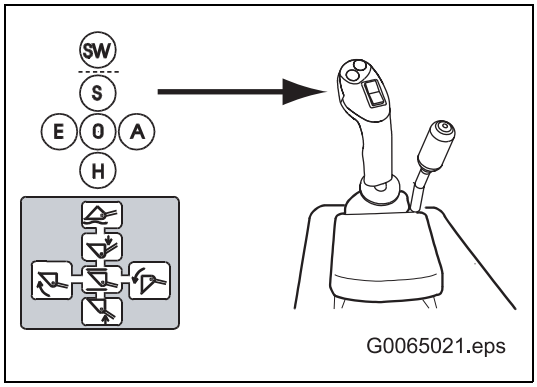

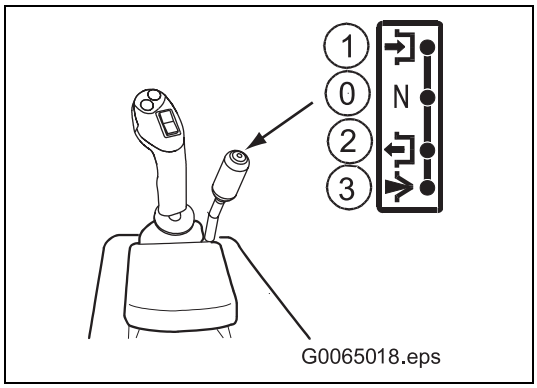

WARNING

If the work unit is not properly attached, it can suddenly fall down and cause severe accidents!
Carefully lift the work unit and check whether it is completely locked in by tipping it in and then dumping it.

9. Check whether the work unit is completely locked by tipping it in and then dumping it.

10. Set the change-over lever for the supplementary control circuit in position ,1' to its limit stop (figure 75_160).

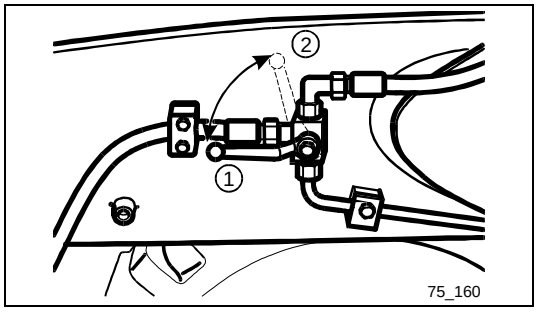

Removing the work unit

1. Lower the work unit onto level ground.
2. Unlock the quick-change unit by setting the control lever for special equipment into position ‘1’ (fig. G0065018.eps).

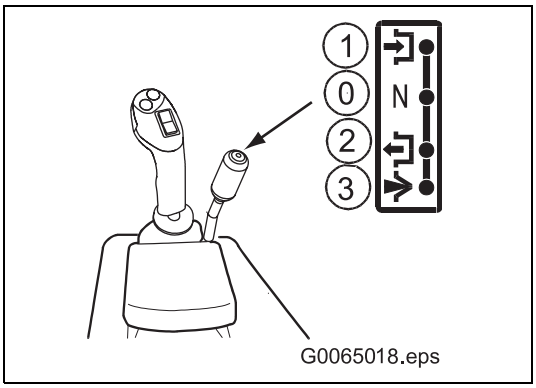

3. Set the quick-change unit into the dumping position ‘A’ using the multi-function lever, until the quick-change unit is unhooked of the work unit's pickup hooks.
4. Make sure that nobody is behind the machine and drive the machine away from the work unit.

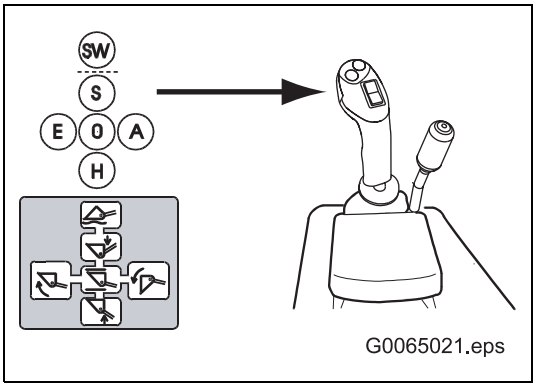

Picking up the multi-purpose bucket

1. Set the change-over lever for the additional control unit into position '2' (fig. 75_160).
2. Start the engine.

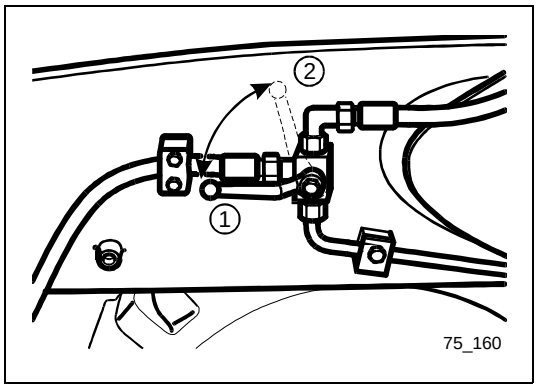

3. Unlock the quick-change unit by setting the control lever for special equipment into position ‘1’ (fig. G0065018.eps).

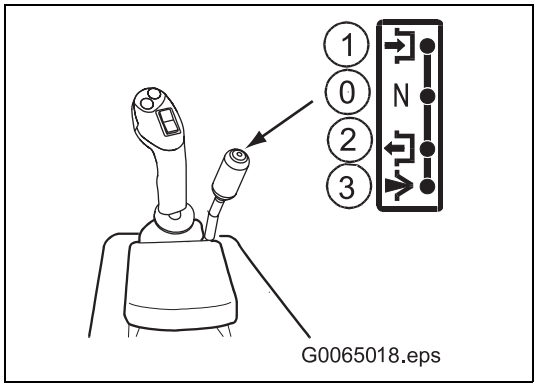

4. Lift the boom slightly, by setting the multi-function lever into position ‘H’ (fig. G0065021.eps).
5. Tilt the quick-change unit slightly to the front by setting the multi-function lever into position ‘A’ (fig. G0065021.eps)
6. Drive the machine to the work unit until the quick-change unit (1) is below the pickup hooks of the work unit. Then, lift the boom until the work unit catches the quick-change unit.
7. Tip in the quick-change unit until the work unit is connected to the limit stops on the the quick-change unit by setting the multi-function lever into position ‘E’ (fig. G0065021.eps).

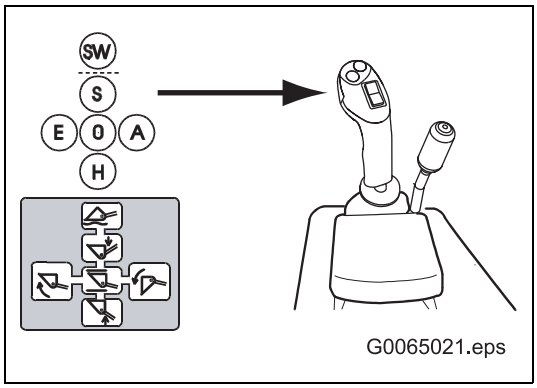

8. Lock the quick-change unit by setting the control lever for special equipment into position ‘2’ (fig. G0065018.eps).
9. Switch off the engine.

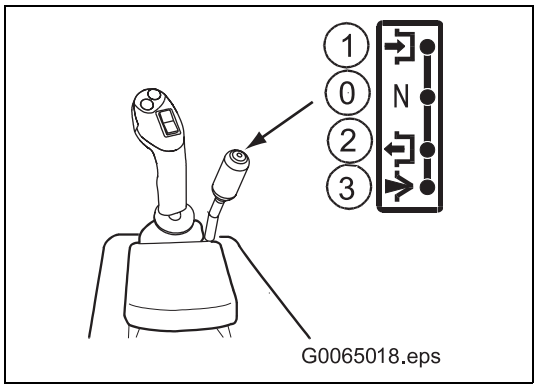

10. Set the change-over lever for the supplementary control circuit in position ‚1' to its limit stop (figure 75_160).

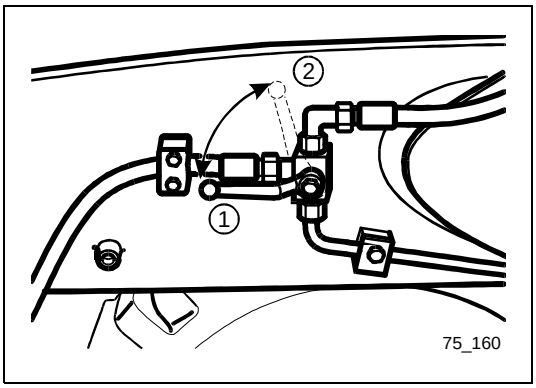

11. Set the control lever for special equipment to position ‚1' (figure G0065018.eps).

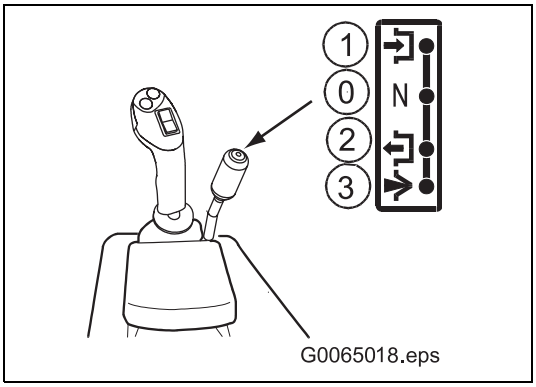

12. Connect the hydraulic hoses of the multi-purpose bucket to the quick couplings (2) (figure 75_161) and (3) (figure 75_275).

13. Start the engine.

    You can now operate the multi-purpose bucket with the control lever for special equipment (figure G0065018.eps).

Position	1	=	Close multi-purpose bucket
Position	0	=	Neutral position
Position	2	=	Open multi-purpose bucket

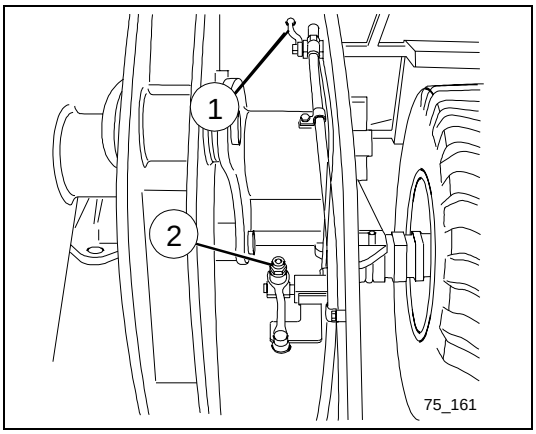

WARNING

If the work unit is not properly attached, it can suddenly fall down and cause severe accidents.
Carefully lift the work unit and check whether it is completely locked in by slowly tipping it in and dumping it.

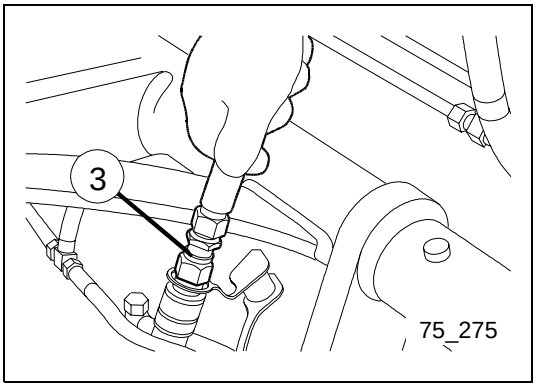

14. Check whether the work unit is completely locked by tipping it in and then dumping it.

Removing the multi-purpose bucket

1. Lower the multi-purpose bucket onto level ground.
2. Switch off the engine.
3. Set the control lever for special equipment first to position ‘1’ and then to position ‘2’ (figure G0065018.eps).

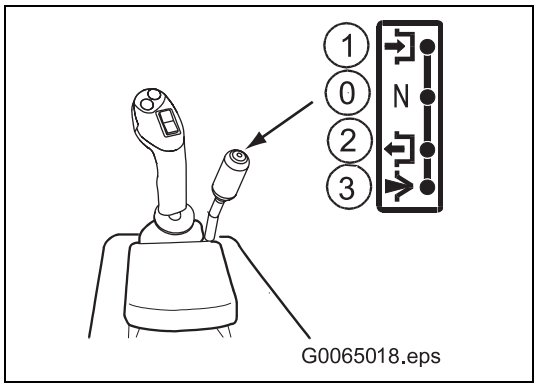

4. Turn the change-over lever for the supplementary control circuit to position ‘2’ until it reaches the limit stop (figure 75_160).
5. Disconnect the multi-purpose bucket hoses from the quick couplings.
6. Restart the engine.
7. Unlock the quick-change unit by setting the control lever for special equipment into position ‘1’ (fig. G0065018.eps).

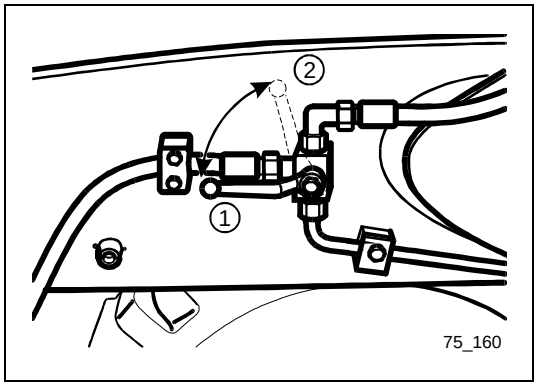

8. Set the quick-change unit into the dumping position ‘A’ (fig. G0065021.eps) using the multi-function lever, until the quick-change unit is unhooked of the work unit's pickup hooks.
9. Make sure that nobody is behind the machine and drive the machine away from the work unit.

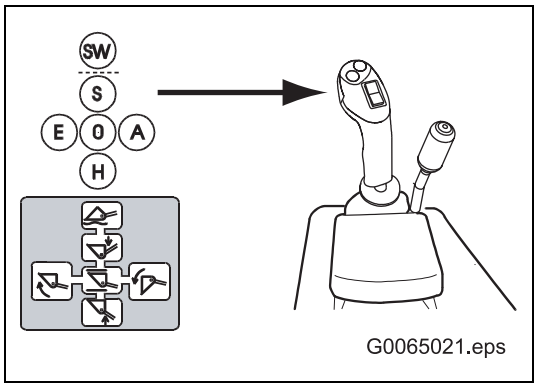

Level indicator for the bucket

On both sides of the bucket the upper edges (see arrow) are arranged in parallel to the bucket edge and can be used as a level indicator for the bucket.

You can recognise the position of the cutting edge of the bucket from the driver’s seat with the help of the level indicators.

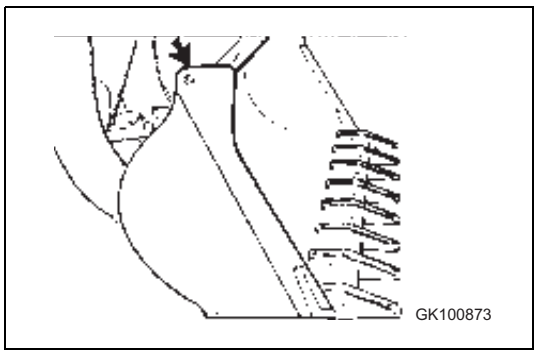

3.3.12. Parking the machine

Avoid abrupt stopping. Proceed as follows, if you want to stop the machine:

1. Release the accelerator pedal and press down the brake pedal.
2. Set the drive direction switch into its neutral position 'N'.
3. Apply the parking brake.
4. Lower the work unit onto the ground.

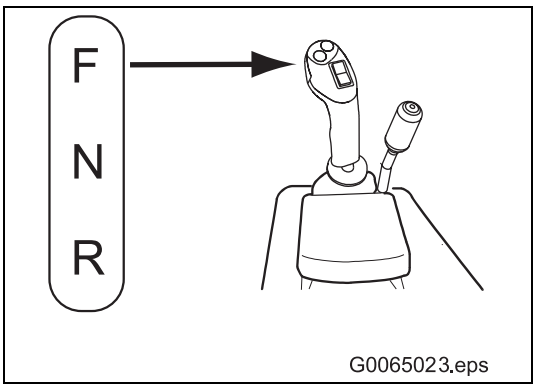

WARNING

- **Unintentional activation of the multifunctional-lever or moving of the equipment may lead to accidents!**
- **Before you leave the cab, turn the locking lever for the work hydraulic system into position '1'. As a result, the work hydraulic system is blocked.**

5. Protect the work hydraulic system against unintentional activation by turning the locking lever of the work hydraulic system into position ‘1’..

   Position 1 = working hydraulics locked

   Position 2 = working hydraulics released

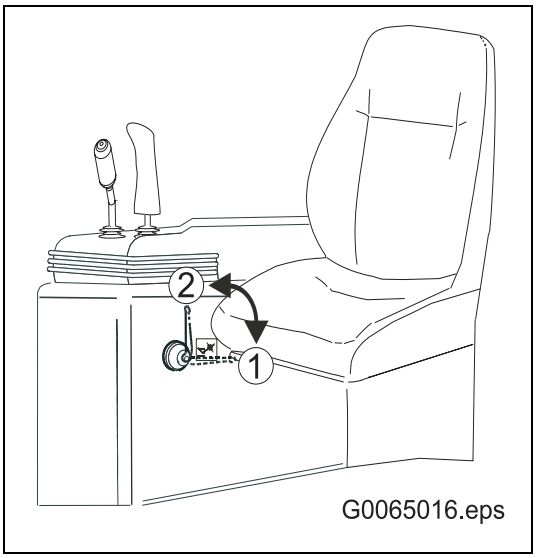

Parking the machine on a slope

- Whenever possible, stop the machine on level ground. If you have to park the machine on a slope, it is required that you park it in such a way that the front section (work unit) points downhill.
- Lower the work unit onto the ground (1).
- Block the wheels with wheel chocks (2).

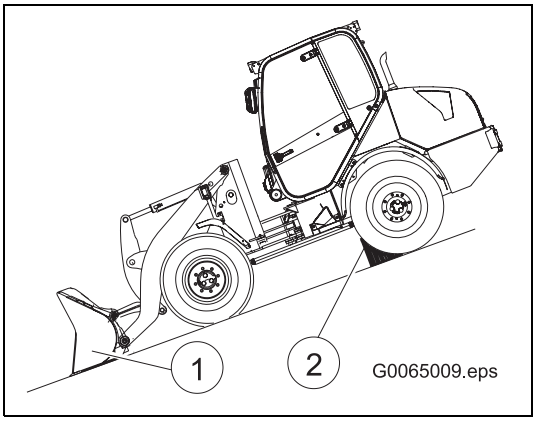

3.3.13. Switching off the engine

NOTE

If you switch off the engine abruptly after heavy operations without prior cool down period, the service life of the engine may be severely impaired. It is recommended to switch off the engine abruptly only in the event of an emergency.

1. Check the temperature of the engine with the help of the coolant temperature indicator (1).
2. If the engine is overheated, you must let it run at medium speed or 5 minutes before you switch it off, so that the engine can cool down sufficiently.
3. Lower the work unit.
4. Turn the ignition key into its stop position '0' in order to switch off the engine.
5. Pull the key from the start switch.

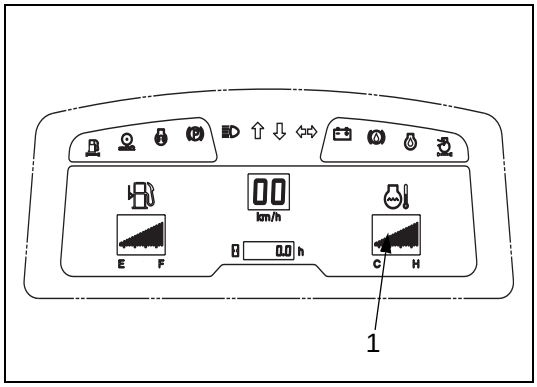

3.3.14. Check after stopping the engine

1. Walk around the machine and visually inspect the work unit, the car body and the chassis. In addition, pay attention to emerging oil and water. Eliminate immediately any fault or defect.
2. Fill up the fuel tank.
3. Remove highly flammable material from the engine room since it represents a fire risk.
4. Clean the chassis landing gear roughly.

3.3.15. Locking

Lock the following places:

1 Engine hood
2 Cab doors

NOTE

The ignition key fits all locks.

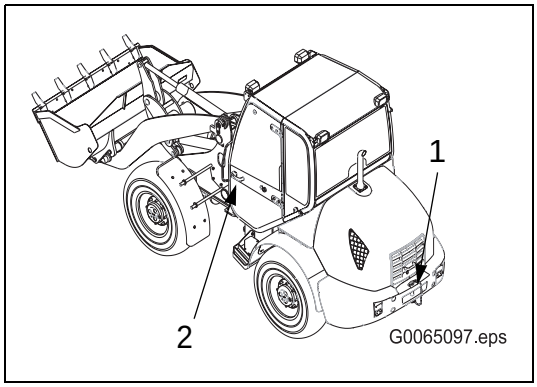

3.3.16. Tyre handling

Precautionary measures when handling tyres

If the following defects are found in tyres, they must be replaced for safety reasons.

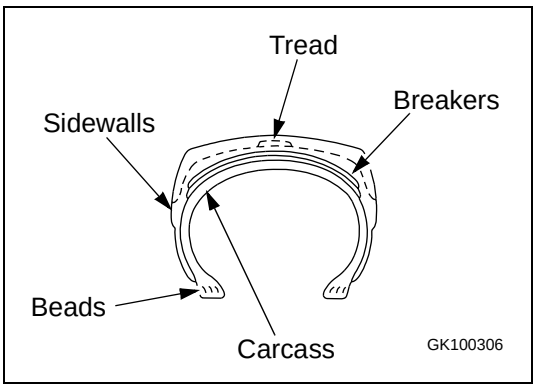

- Bead wire is broken or bent, or the tyre is greatly deformed.
- Excessive wear and the carcass ply (excluding breaker) is exposed for more than 1/4 of the circumference.
- Damage to the carcass exceeds 1/3 of the tire width.
- Tyre layers are separated.
- Radial cracks reach the carcass.
- Deformation or damage which makes the tyre unsuitable for use.

Tyre pressure

Measure the tyre pressure before starting the machine operation, when the tyres are cool.

If the tyre inflation pressure is too low, there will be overload; if it is too high, it will cause tyre cuts and shock burst. To prevent these problems, adjust the tyre inflation pressure according to the table on the next page.

- For operations on normal road surfaces, rock digging operations:

  _____ Upper range values in air pressure chart

- Stockpile operations on soft ground:

  _____ Average pressure values in air pressure chart

- Operations on sand (operations not using much digging force)

  _____ Lower range values in air pressure chart

$$\text{Deflection ratio} = \frac{H - h}{H} \times 100$$

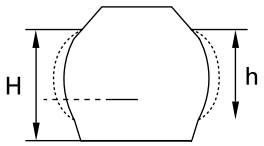

As a guideline for visual inspection, the deflection ratio of the front tyre (deflection/free height) is as follows:
When carrying normal load (lift arm horizontal): approx. 15 - 25%
When digging (rear wheels off ground): approx. 25 - 35%

When checking the tyre inflation pressure, check also for small scratches or peeling of the tire, for nails or pieces of metal which may cause punctures, and for any abnormal wear.

Clearing fallen stones and rocks from the working area and maintaining the surface will extend the tyre life and improve the economical case of the machine.

TYRES			RECOMMENDED AIR PRESSURE			
Manufacturer	Designation	Tread	Front axle		Rear axle	
			bar	psi	bar	psi
DUNLOP	12.0 - 18 T86		2,50	36	2,0	29
DUNLOP	15.5/55 R18 SP PG7		2,25	33	2,0	29
DUNLOP	335/80 R18 SPT9		2,5	36	2,25	33
MICHELIN	335/80 R18 XM 27 TL		2,0	29	1,8	23
DUNLOP	365/70 R18 SPT9		2,5	36	2,0	29
DUNLOP	12.5 - 18 MPT		2,0	29	1,75	25
MICHELIN	335/80 R18 XZSL		2,0	29	1,8	23
BARUM	12.5 - 18 NB38		2,0	29	1,75	25
DUNLOP	405-70-R18		2,25	33	2,0	29
BF GOODRICH	340/80-18		2,1	30	2,0	29
GOODYEAR	400/70 R18 IT520		2,2	32	1,8	23
GOODYEAR	400/70 R18 IT530		2,2	32	1,8	23
BRIDGESTONE	15,5/60 -18 8 PR FG		2,2	32	1,8	23

Correct inflation pressure levels have a significant impact on the service life and efficiency of the tyres. Only correct inflation pressures protect the tyres from getting damaged. Should the pressure rise as a result of heating, do not deflate the tyres. Check and adjust inflation pressures before moving off, i.e., with the tyres cold.

In extremlely severe applications and in load and carry applications involving lenghty hauls, the correct inflation pressure should be determined by the respective tyre manufacturer or an authorised service outlet on the spot.

If the deflection of the tyre is excessive, raise the inflation pressure accordingly (see section "Tyre pressure" on page 3-74).

3.4. Transporting the machine

If you have to transport the machine over far distances, either use a low bed loader or a railway wagon. You may lift the machine onto the transport vehicle. Optionally, you may drive it onto the low bed loader or railway wagon via loading ramp (also refer to "2.2.3. Transport" on page 2-18). Before you start driving, check that the following requirements are fulfilled: the roads are broad enough, the bridges are wide enough, the clearance heights of tunnels and the like are sufficient, the carrying capacities of roads and bridges are sufficient.

When transporting the machine, observe all related laws and regulations, and be careful to assure safety.

3.4.1. Securing the articulated steering

Secure the articulated steering before you lift up the machine or start to perform repair measures.

1. Set the machine to straight driving.
2. On the left: Loosen the spring bolt and remove the bolt (1).
3. On the right: Insert the bolt (2) and secure by means of the spring bolt.

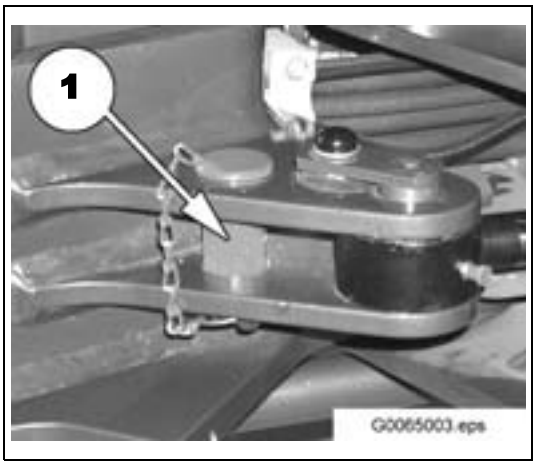

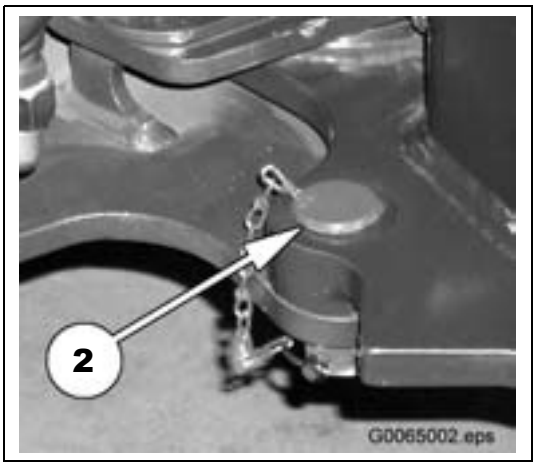

3.4.2. Lifting the machine

CAUTION

- **Danger of pinching! An unlocked articulated steering may suddenly move! Secure the articulated steering before you lift up the machine.**
- **Danger of accidents! Carrying ropes with insufficient carrying capacities may tear so that the machine may fall down! Only lift up the machine using carrying ropes with sufficient carrying capacities.**
- **Hoisting equipment with insufficient carrying capacities may suddenly bend and cause severe accidents! Only use hoisting equipment capable of carrying the machine's operating weight.**
- **Objects lying on the machine may fall down and cause injuries when the machine is lifted up! Remove all loose objects from the machine before you lift up the machine.**

CAUTION

Incorrectly attached ropes may damage the machine! Only fasten the eye hooks of the carrying ropes at the marked attachment points.

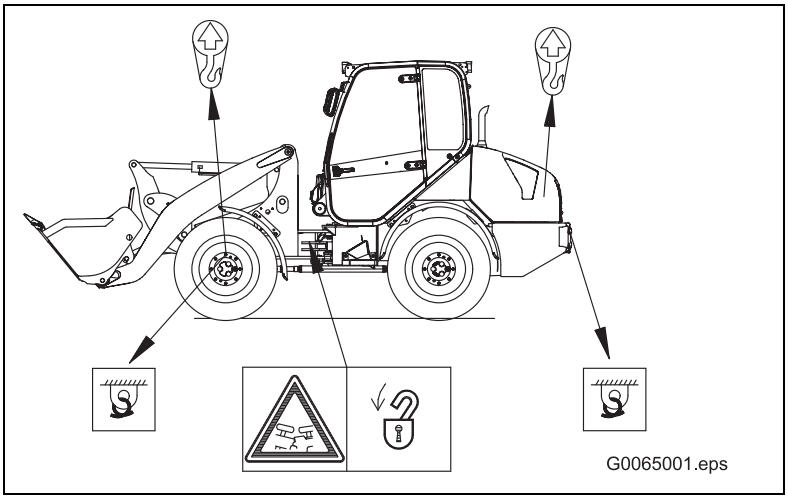

There are two attachment points each at the front part and the rear part of the machine. These attachment points are shown in the following figure. Information signs attached to the machine indicate the attachment points.To avoid damage to the machine, attach the eye hooks only to the attachment points.

When selecting the lifting equipment, take the operating weight of the machine into account. Insufficient carrying capacities of the lifting equipment may cause severe accidents. Also use carrying ropes with appropriate carrying capacities for the operating weight of the machine. Carrying ropes with insufficient carrying capacities may tear when the machine is lifted up and cause severe accidents. The operating weight of the machine depends on the attached bucket.

3.4.3. Driving the machine onto loading area of transport vehicle

WARNING

If the transport vehicle or the loading ramp starts skidding while you are driving up the loading ramp, the machine may fall off the ramp and cause severe accidents! Secure the transport vehicle against accidental movement. Secure the wheels of the low bed loader with wheel chocks or wedges.

The transport vehicle for the machine must have an appropriate work load. The operating weight of the machine depends on the attached equipment. The operating weights of the machine can be found in the respective table in the chapter "1.9. Dimensions, weights and operating data" on page 1-23"

- The articulated steering must be unlocked before the machine is driven onto the transport vehicle to ensure that the machine remains steerable.
- Remove any mud, snow, or ice adhering to the wheels to ensure that you can drive onto the ramps without danger of skidding.
- Do not load the machine via landing stage unless you have checked that the landing stage is broad enough and that its strength is sufficient to carry the load.
- The loading ramps (3) must be aligned to the wheel tracks (5) of the machine.
- The ramps must be long enough to ensure that the maximum loading gradient (4) of 15% is not exceeded. Support the loading ramps by placing support blocks (2) under both ramps.
- Make sure that the transport vehicle may neither tip over, start to skid, or roll away while you are driving it onto the transport vehicle. Secure the wheels of the low bed loader with wheel chocks (1) or wedges.
- Position the machine straight in front of the loading ramp and slowly drive up the loading ramp. Do not perform steering movements on the ramp.
- If required, drive off the ramp, correct the position of the machine on the ground and drive up the ramp again.

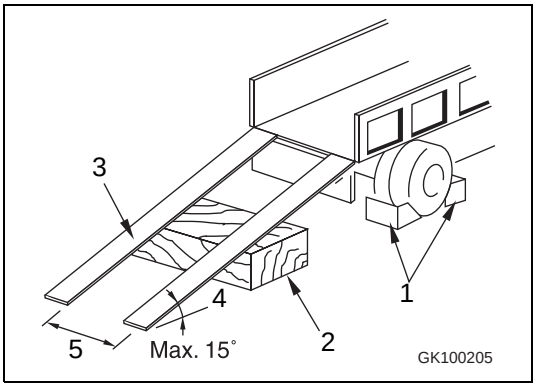

3.4.4. Securing the machine during the transport

DANGER

If the machine is insufficiently secured, it may start to skid or fall off the transport vehicle and cause severe accidents! Always secure the machine with ropes and wheel chocks or wedges to avoid falling down and skidding.

CAUTION

Stay ropes that are incorrectly attached may damage the machine! Only fasten the eye hooks of the stay ropes at the marked attachment points.

- When the machine is on the loading area of the transport vehicle, secure the articulated steering as described in the chapter "3.4.1. Securing the articulated steering" on page 3-76.
- Then, block the wheels of the machine with wheel chocks or wedges and secure the machine with ropes in such a way that it will neither start to skid nor tip over during transport.
- To avoid damage to the machine, only fasten the eye hooks of the stay ropes at the marked attachment points.
- The attachment points to be used are the two eye hooks at the front frame and the tie bolt at the rear frame of the machine. The positions of the attachment points are shown in the figure on the previous page.

3.4.5. After transport

- After transport, remove all securing devices, such as wheel chocks or wedges and ropes.
- Remove the catch of the articulated steering before you drive the machine off the transport vehicle. For this purpose, reverse the steps 1 through 4 described in the chapter "3.4.1. Securing the articulated steering" on page 3-76.

3.5. Cold weather operation

3.5.1. Before the cold season

Before the cold season begins, you should perform the following preparatory measures to ensure troublefree operation also in the winter months.

- The machine is provided with a aluminium radiator. Therefore, the cooling system must be set to -34.6°F (-37°C) for the whole year.
- Use oils with the prescribed viscosities which are suitable for the cold weather to be expected in your region (see "5.3. Lubricants, fuels and filling capacities" on page 5-15).
- Fill up with winter diesel fuel. At low temperatures, paraffin deposits of diesel fuel may block the filters and lines (see "5.3. Lubricants, fuels and filling capacities" on page 5-15).
- If the injection system, the starter, the battery and the generator are in perfect condition, it is ensured that the engine can be easily started and that the machine can be operated troublefree even in extremely cold weather. Let these important components be checked at an authorised garage before the winter starts.
- Insufficient compression pressure impairs the start-up behaviour of the engine, especially at low temperatures. Let the compression pressure be measured at an authorised garage.
- If the speed is continuously increased, the starter may remain switched on until the engine finally starts up.
- Let the engine warm up with increased idle speed for some minutes before starting to work. During the warm-up phase, operate the hydraulics devices several times without load.
- Add a standard antifreeze to the water in the windshield washer assy. If required, add 25 vol. % of alcohol (spirit) to the water.

3.5.2. Precautions after completion of work

Realise the following actions to make sure that the machine can be started the next time without problems:

- Remove mud and water from the car body. This prevents that sealings are damaged due to freezing.
- Park the machine on hard and dry ground. If this is not possible, you must park the machine on wooden planks. The planks prevent that the wheels are freezing to the ground.
- Drain off collected water from the fuel system.
- The battery capacity drops clearly at low temperatures. Therefore, dismount the battery in frost periods and store it in a warm place. Re-install it the next morning, before starting to work.

3.5.3. After the cold season

If the weather becomes warmer, you must fill up the prescribed fuel and use oils with prescribed viscosities (see chapter "5.3. Lubricants, fuels and filling capacities" on page 5-15.

3.6. Long-term storage

3.6.1. Before storage

Perform the following actions, if the machine is to be shut down over a longer period of time:

- Clean the entire machine, including the engine room, and let it dry.
- If possible park the machine at a dry, roofed location. A supplementary cover with a canvas cover is recommended.
- If the machine must be parked outside, you need to put wooden planks on the ground on which the machine is to be parked and covered with a canvas cover.
- Fill up the fuel tank. Lubricate the machine and change the oils.
- Apply a thin grease film to the piston rods of the hydraulic cylinders.
- Disconnect the negative terminals of the battery. Cover the battery or remove it and store filled up and completely charged it in a dry room which is frost-free in winter.
- Check whether the coolant is set to a temperature of -34.6°F (-37° C). Refill antifreeze, if necessary.

3.6.2. During storage

Perform the following actions in order to keep the machine in operating condition during the standstill:

CAUTION

Danger of poisoning, if the engine is run in-doors! Open the windows and doors before you start the engine in-doors.

- Let the engine run once a month.
- Wipe away the grease from the piston rods of the hydraulic cylinders.
- Drive the machine over a short route so that the movable parts are coated with a new oil film.
- Recharge the battery.

3.6.3. After storage

NOTE

If the machine was not moved once a month, contact the responsible Komatsu trader to arrange a maintenance appointment.

After a longer standstill period, perform the following works before starting up the machine:

- Remove the grease from the piston rods of the hydraulic cylinders.
- Check the oil levels and, if necessary, refill oil.
- Lubricate the machine, see chapter "5.6. Maintenance schedule chart" on page 5-21.

4. Troubleshooting

4.1. Towing the machine

WARNING

Towing with a tractor of insufficient weight may cause accidents! Perform towing using a machine weighing at least as much as the machine that you want to tow off.

CAUTION

Towing to start the engine will damage the hydrostatic drive system! Do not give the machine a tow to start the engine. This will not start the engine, but may damage the hydrostatic drive system.

To avoid damage to the hydrostatic drive system, do not tow the machine for more than 0.621 mile (1 km). The towing speed must not exceed 1.24 mph (2 km/h).

Perform towing using a machine weighing at least as much as the machine that you want to tow off. Connect both machines with appropriate towing attachments.

CAUTION

Towing attachments fastened to inappropriate points may damage the machine! Only fasten the towing attachment to the points provided for this purpose.

At the front part of the machine, fasten the towing attachment at the marked eyes. At the rear part of the machine, fasten the towing attachment at the hitch.

Before you tow a machine with a hydrostatic drive system, establish a short-circuit connection between the high-pressure side and the low-pressure side of the variable pump. For this purpose, turn the high-pressure valves in the valve block about 2 revolutions. Proceed as follows:

1. Set the driving-direction switch to position 'N'.

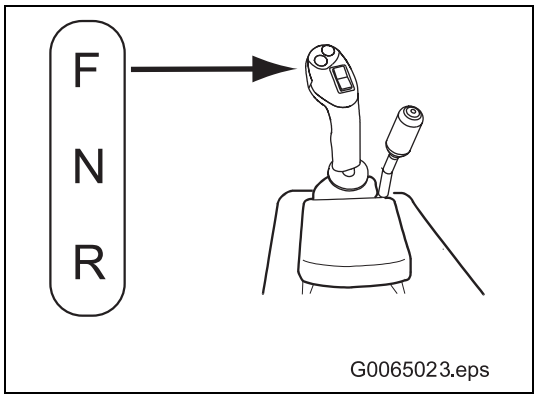

2. Tip up the driver's cab. Proceed as described in the Safety chapter, under "Tipping up the driver's cab" on page 2-22.
3. Remove the protective caps (2) of the valves.

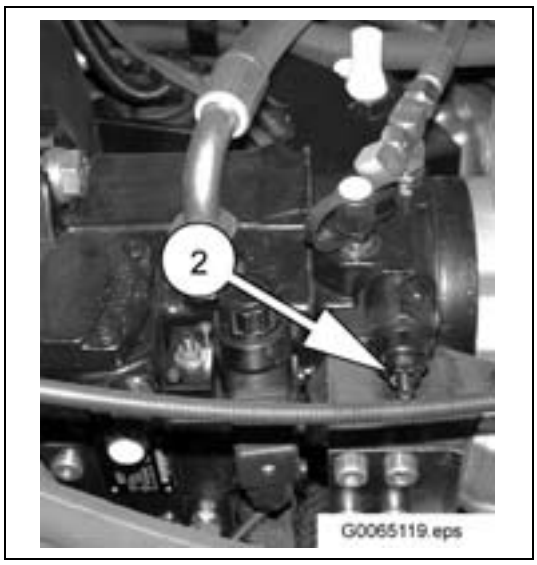

4. Hold the valve (3) with a wrench.
5. Loosen the lock nut (4) and screw in the threaded pin (5) clockwise by means of an Allen key until it is level with the top of the lock nut (4).
6. Retighten the lock nut (4). Perform this task on both valves.
7. Tip down the driver's cab. Proceed as described in the Safety chapter, under "Tipping down the driver's cab" on page 2-24.

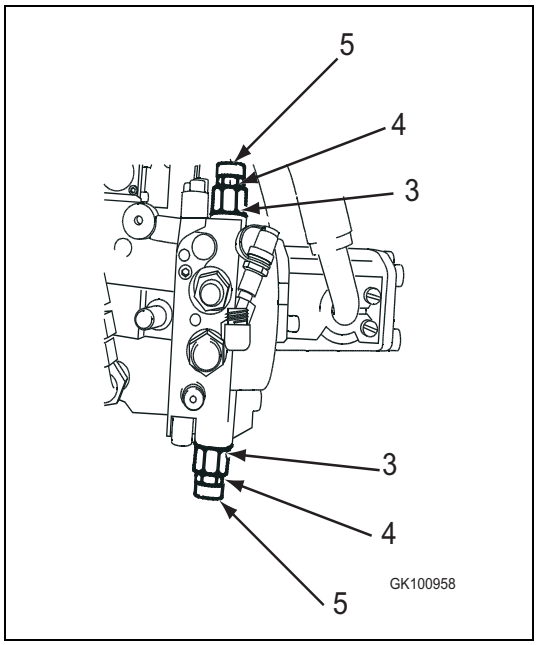

After towing:

1. Tip up the driver's cab. Proceed as described in the Safety chapter, under "Tipping up the driver's cab" on page 2-22.

2. After the towing is finished, loosen the lock nut (4) and unscrew the threaded pin (5) counter-clockwise until it stops. Hold the valve (3) with a wrench and retighten the lock nut (4). Perform this task on both valves.

3. Put the protective caps (2) on the valves.

4. Tip down the driver's cab. Proceed as described in the Safety chapter, under "Tipping down the driver's cab" on page 2-24.

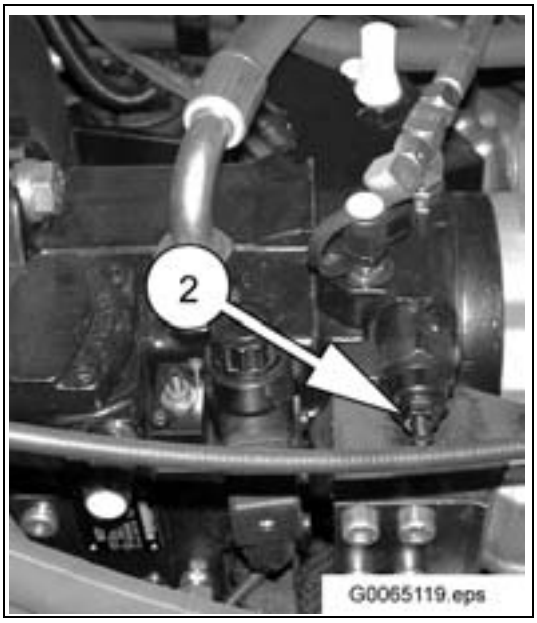

NOTE

When the engine is switched off, the power-assisted steering is not operational, i.e. you have to apply much more force to steer the machine.

If you lift up the rear axle of the machine with a lorry-mounted crane, you can tow off the machine over longer distances and at speeds exceeding 1.24 mph (2 km/h). Before you do this you must, however, remove the cardan shaft of the front axle. In addition, secure the articulated steering with the locking bar, in the same way as it is required for transport of the machine on a low bed loader or by train.

Towing a machine with defective brakes

WARNING

If the brakes of the machine that you want to give a tow are defective, uncontrolled movement of the machine may cause a crash while it is being towed!
Always use two machines to tow off a machine with defective brakes. Connect all three machines with appropriate towing attachments.

If you want to tow a machine with defective brakes, or if you have to tow a machine driving downhill, use two machines for towing.

Attach the machine that you want to give a tow to a larger machine with sufficient tractive and braking force. Attach a second machine to the rear part of the machine that you want to give a tow. In this way, you avoid uncontrolled movement of the machine.

Towing can be performed under various conditions. Thus, it is impossible to determine all the requirements that may apply to a particular condition.

When towing on an even and horizontal surface, the tractive force that you need is much less than the tractive force that you need when towing on a slope or uneven surface.

Please ask your responsible Komatsu dealer for details, if you want to give a particular machine a tow.

4.2. Starting the engine with a booster cable

For starting the engine with a booster cable, proceed as follows:

Precautions for connecting and disconnecting the booster

WARNING

- **When connecting the cables, never contact the positive (+) and negative (-) teminals.**
- **When starting the engine with a booster cable, always wear safety goggles.**
- **Be careful not to let the normal machine and defective machine contact each other. This prevents sparks from being generated near the battery which could ignite the hydrogen gas leaking from the battery. If hydrogen gas explodes, it may cause serious injury.**
- **Make sure that there is no mistake in the booster cable connections. The final connection is made to the engine block of the defective machine, but sparks will be generated when this is done, so connect it to a place as far as possible from the battery.**
- **Be careful when removing the cables from the machine that has been started. Do not allow the cable ends to contact each other or the machine to avoid hydrogen explosion.**

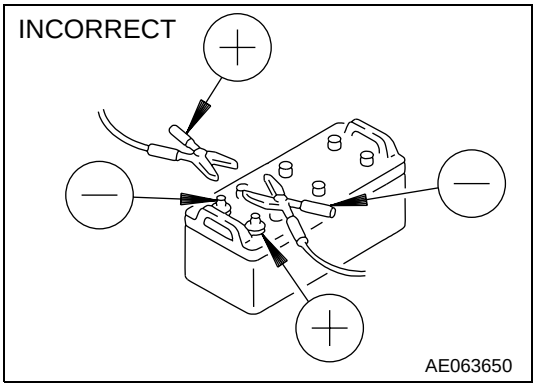

NOTE

- **The size of the booster cable and clip should be suitable for the battery size.**
- **The battery of the normal machine must have the same capacity as that of the engine to be started.**
- **Check the cables and clips for damage or corrosion.**
- **Make sure that the cables and clips are firmly connected.**

Connecting the booster cables

Keep the start switch set to OFF.
Connect the booster cable as follows, in the order of the numbers marked in the diagram.

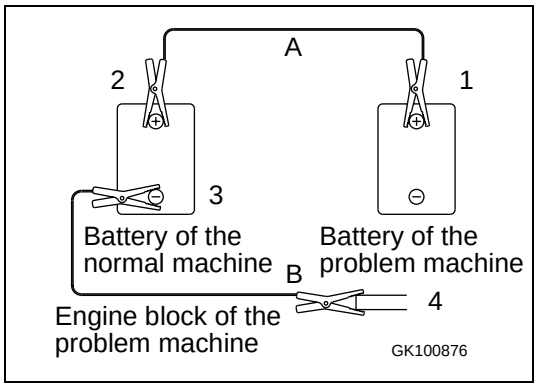

1. Make sure that the start switches of the normal and defective machine are both set to OFF.
2. Connect one clip of booster cable (A) to the positive (+) terminal of the defective machine.
3. Connect the other clip of booster cable (A) to the positive (+) terminal of the normal machine.
4. Connect one clip of booster cable (B) to the negative (-) terminal of the normal machine.
5. Connect the other clip of booster cable (B) to the engine block of the defective machine.
6. Let the engine run with a high speed.

Starting the engine

1. Make sure the clips are firmly connected to the battery terminals.
2. Turn the start switch of the defective machine to the START position and start the engine. If the engine does not start at first, wait for at least 2 minutes before trying again.

Disconnecting the booster cables

After the engine has started, disconnect the booster cables in reverse order in which they were connected.

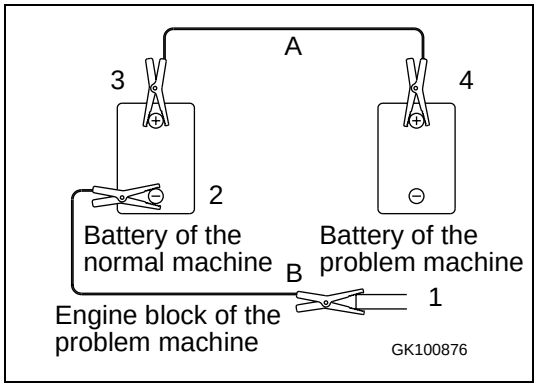

1. Remove one clip of booster cable (B) from the engine block of the defective machine.
2. Remove the other clip of booster cable (B) from the negative (-) terminal of the normal machine.
3. Remove one clip of booster cable (A) from the positive (+) terminal of the normal machine.
4. Remove the other clip of booster cable (A) from the positive (+) terminal of the defective machine.

4.3. For insufficient braking effect

4.3.1. Checking the service brake

Drive the machine at a speed of 12.42 mph (20 km/h) on a dry flat concrete road surface, and check whether the stopping distance is less than 16.404 ft (5 m).

NOTE

All repairs conducted on the braking system must be conducted at a Komatsu workshop.

4.3.2. Checking the parking brake function

1. Start the engine, set the machine to straight driving, and drive the machine with an empty bucket up a gradient of 25%.
2. Stop the machine with the service brake and do not release your foot again to keep the service brake applied.
3. Lower the bucket.
4. Set the driving direction switch (1) to its neutral position 'N'.
5. Switch off the engine.
6. Apply the parking brake (2) and slowly release the pedal of the service brake.

   The machine must stand still.

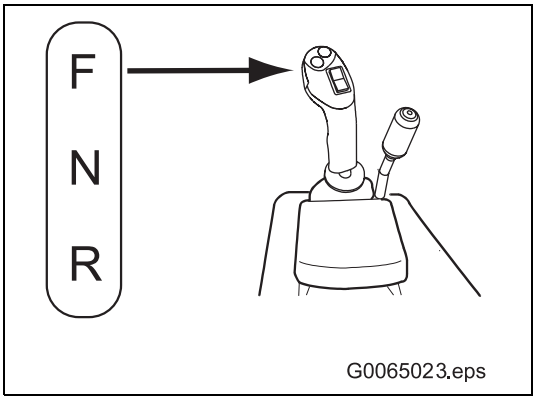

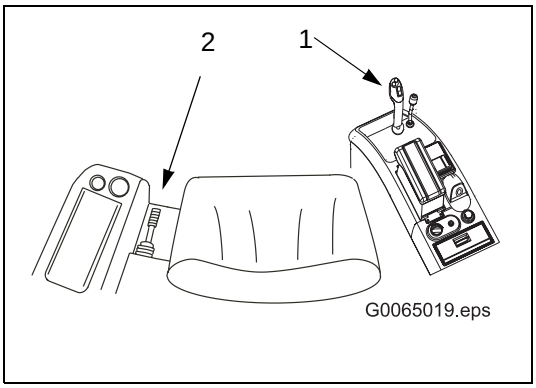

NOTE

All repairs conducted on the braking system must be conducted at a Komatsu workshop.

4.4. Emergency steering properties

You can continue to steer the machine even if the engine cuts out during a journey. This will require more force however.

If the engine cuts out, move over straight to the side of the road, switch on the hazard warning lights and secure the machine.

4.5. Emergency lowering

The machine is equipped with a pressure accumulator for the working hydraulics. If the engine is not running you can lower the working attachment to the ground using the multifunction lever – once only (emergency lowering).

NOTE

If you have secured the working hydraulics with the safety lever, you will however be unable to lower the working attachment.

Position 1 = working hydraulics locked

Position 2 = working hydraulics released

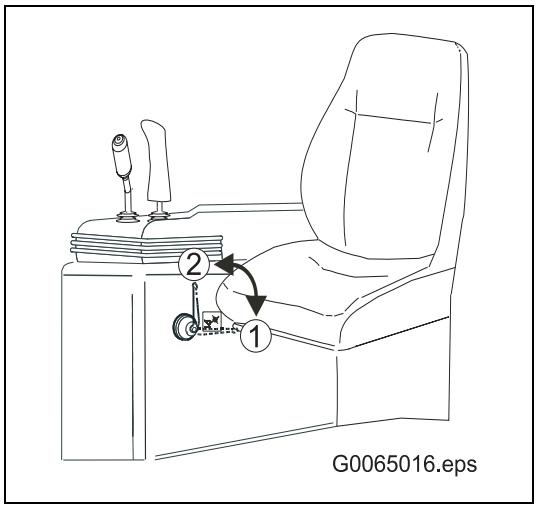

1. Make sure that no one is standing underneath the working attachment.
2. Move the multifunction lever slowly into position 'S'.

   The working attachment is lowered.

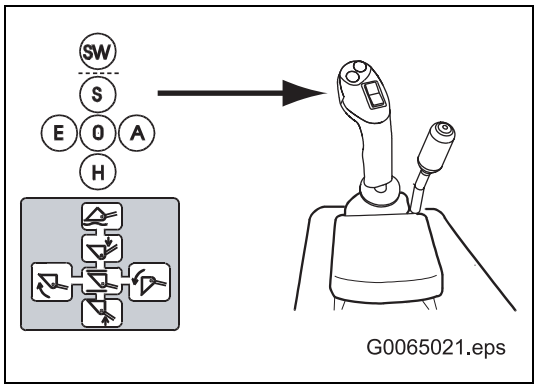

4.6. Other troubles

4.6.1. Electrical system

If faults or causes of faults are not listed below, have them rectified by a local dealer.

ELECTRICAL SYSTEM		
Fault	**Fault cause**	**Remedy**
Warning light charging current: warning light charging current is off, when the engine is switched off and the start switch is set to its operating position 'I'	Electrical connection without function	*) Check terminals, connections, and cables
Warning light charging current: warning light charging current does not go out when engine is running	Electrical connection without function	*) Check terminals, connections, and cables
	Generator without function	*) Check function of generator; replace defective generator
	Tension generator drive belt to low	Tension drive belt
Generator produces unusual noise	Generator defective	Replace generator
Starter does not start the engine	Electrical connection without function	*) Check terminals, connections, and cables
	Battery charge insufficient	Re-charge battery *) Check function of battery; replace defective battery
Starter pinion repeatedly engages and disengages	Battery charge insufficient	Re-charge battery
	Starter defective	*) Replace starter
Starter turns engine only slowly	Battery charge insufficient	Re-charge battery
	Starter defective	*) Replace starter
Starter disengages before engine is started	Battery charge insufficient	Re-charge battery
	Starter defective	*) Replace starter

*) Have this work performed by local dealer.

4.6.2. Engine

If faults or causes of faults are not listed below, have them rectified by local dealer.

ENGINE		
Fault	**Fault cause**	**Remedy**
Warning light engine oil pressure: with the engine running the warning light is on and an acoustic alarm signal is given	Oil level in engine too low	Top up engine oil
	Engine oil filter (filter cartridge) dirty	Replace engine oil filter (filter cartridge)
	Lines or hoses of engine lubricating system damaged	Check lines and hoses (visual check: oil leaks) *) Replace defective lines and hoses
	Line or hose connections of engine lubricating system leaky	Check line and hose connections (visual check: oil leaks) *) Repair leaky line and hose connections
	Oil pressure switch without function	*) Check function of oil pressure switch; replace defective oil pressure switch
Vapour is let off at the pressure valve of the radiator cap	Coolant level in radiator too low	Top up coolant (make sure mixture ratio is correct)
Coolant level too low	Leak in cooling system	Check lines and hoses (visual check: coolant leaks) *) Replace defective lines and hoses

*) Have this work performed by local dealer.

ENGINE (continued)		
Fault	**Fault cause**	**Remedy**
Temperature display coolant: temperature display coolant in red zone, top LED is flashing, acoustic alarm is given	Engine is overheated	Let the engine run idle without load, until the engine has sufficiently cooled down and the temperature indicator of the coolant has returned to the green range
	Tension of fan's drive belt too low	Tension drive belt
	Internal surface of engine cooling system furred or dirty	*) Clean internal surface of engine cooling system
	Radiator (radiator surfaces, fins) dirty	Clean radiator (radiator surfaces, fins)
	Thermostat without function	*) Check function of thermostat; replace defective thermostat
	Radiator cap either defective or loose	Replace defective radiator cap; re-tighten loose radiator cap
Temperature display coolant: with the engine at operating temperature, the temperature display coolant does not indicate a temperature	Temperature display without function	*) Check function of temperature display; replace defective temperature display
Engine does not start	Fuel tank empty	Refill fuel and bleed fuel system
	Air in fuel system	Bleed fuel system
	Injection pump or injection nozzles without function	*) Replace injection pump or injection nozzles
	Starting speed too low	See "Electrical System"
	Engine compression too low	*) Check tappet clearance
Exhaust fumes colour white or blue	Oil level in engine too high	Correct oil level
	Wrong fuel	Use prescribed fuel
Exhaust fumes colour temporarily black	Air filter insert dirty	Clean or replace air filter insert
	Injection nozzle defective	*) Replace injection nozzles
	Engine compression too low	*) Check tappet clearance
Temporarily, combustion sounds like breathing	Injection nozzles defective	Replace injection nozzles*)

*) Have this work performed by local dealer.

ENGINE (continued)		
Fault	**Fault cause**	**Remedy**
Unusual combustion noise	Wrong fuel	Use prescribed fuel
	Engine temperature too high (engine overheated)	Allow engine to cool down See "Engine - temperature display coolant"
Unusual mechanical noise	Defective silencer	*) Replace silencer
	Tappet clearance too wide	*) Adjust tappet clearance
Engine fails to start or goes out during operation and the top fuel gauge LED starts to flash	Fuel tank empty	Refill fuel and bleed fuel system
Warning light air filter: warning light air filter is on when engine is running	Air filter of filter insert dirty	Clean or replace filter insert of air filter

*) Have this work performed by local dealer.

4.6.3. Hydraulic system

If faults or causes of faults are not listed below, have them rectified by local dealer.

HYDROSTATIC DRIVE UNIT		
Fault	**Fault cause**	**Remedy**
Machine does not drive	Parking brake applied Oil level in hydraulic oil tank too low	Release parking brake
	Driving direction switch in position 'N'	Set driving direction switch to either position 'F' or 'R'
	Driving direction switch without function	*) Check function of driving direction switch
	Oil level in hydraulic oil tank too low	Top up hydraulic oil
Machine does only drive slowly and performance is poor	Hydrostatic motor motor does not swivel	Check hydrostatic motor for contamination; clean dirty hydraulic motor *) Check function of hydrostatic motor
	On-off-valve without function	*) Check function of on-off valve; replace defective on-off-valve
	Hydrostatic pump defective	*) Replace hydrostatic pump
	Wrong control pressure	*) Check control pressure; reset, if required
	Wrong high pressure	*) Check high pressure; reset, if required
	Inch valve defective or set incorrectly	*) Check setting of inch valve *) Replace defective inch valve
	Hydraulic filter dirty	Replace filter element of hydraulic filter
	Switching relay without function	*) Check function of switching relay; repair or replace defective switching relay

*) Have this work performed by local dealer.

HYDROSTATIC DRIVE UNIT (continued)		
Fault	**Fault cause**	**Remedy**
Hydrostatic drive unit overheated	Faulty operation of charge pump	*) Check function (pressure) of charge pump
	Hydraulic oil radiator (radiator surfaces, fins) dirty	Clean hydraulic oil radiator (radiator surfaces, fins)
	Faulty operation of radiator	Check tension of drive belt
	Hydraulic filter dirty	Replace filter element of hydraulic filter
	Oil level in hydraulic oil tank either too high or too low	Correct oil level in hydraulic oil tank
Unusual noise	Oil level in hydraulic oil tank too low	Top up hydraulic oil
	Inclusions of air in lines and units of the hydraulic system (faulty bleeding)	Bleed hydraulic system

WORK HYDRAULIC SYSTEM		
Fault	**Fault cause**	**Remedy**
Lifting power too low	Oil level in hydraulic tank too low	Top up hydraulic oil
Lifting power too slow	Filter insert of hydraulic oil filter dirty	Replace filter insert of hydraulic oil filter
Air bubbles in hydraulic oil	Wrong hydraulic oil quality	Fill in prescribed hydraulic oil
	Oil level in hydraulic oil tank too low	Top up hydraulic oil
Cylinders move jerky	Oil level in hydraulic oil tank too low	Top up hydraulic oil

*) Have this work performed by local dealer.

4.6.4. Brakes

If faults or causes of faults are not listed below, have them rectified by local dealer.

BRAKES		
Fault	**Fault cause**	**Remedy**
Brake has no effect	Multi-disks of brake worn	*) Replace multi-disks of brake
	Air in brake system	*) Bleed brake system
Warning light brake oil reserve: warning light brake oil reserve is on	Brake oil level in brake oil tank too low	Top up brake oil Check brake system for damage and leaks (visual check: brake oil leaks)

PARKING BRAKE		
Fault	**Fault cause**	**Remedy**
Brake is ineffective	Parking brake's brake lever is too loose	*) Adjust parking brake
	Brake's multi-disks are worn	*) Replace multi-disks

*) Have this work performed by local dealer.

4.6.5. Steering

If faults or causes of faults are not listed below, have them rectified by local dealer.

STEERING		
Fault	**Fault cause**	**Remedy**
Steering reacts slowly	Hydraulic system malfunctions	*) Check function of hydraulic system
Steering wobbles	Clearance of steering cylinder bolt too large	*) Check fastenings of steering cylinder; replace defective cylinder bolt.
	Faulty operation of hydraulic system	*) Check function of hydraulic system

*) Have this work performed by local dealer.

4.6.6. Axles

If faults or causes of faults are not listed below, have them rectified by local dealer.

AXLES		
Fault	**Fault cause**	**Remedy**
Noise	Oil level in axle too low	Top up oil

*) Have this work performed by local dealer.

4.6.7. Driver's cab

If faults or causes of faults are not listed below, have them rectified by local dealer.

DRIVER'S CAB		
Fault	**Fault cause**	**Remedy**
Blower: insufficient air flow	Blower filter clogged	Clean or replace filter

*) Have this work performed by local dealer.

5. Maintenance

5.1. Maintenance guide

5.1.1. Guidelines

Maintenance work is to be conducted by skilled personnel only. See section "2.3. Precautions for maintenance" on page 2-19.

Perform maintenance work on hard, flat ground.

Always move the machine to the proper maintenance and repair position.

The machine must be positioned as follows for maintenance, unless other specifications are expressly provided.

- Lower the working attachment onto the ground.
- Move the multifunction lever to the HOLD '0' position.

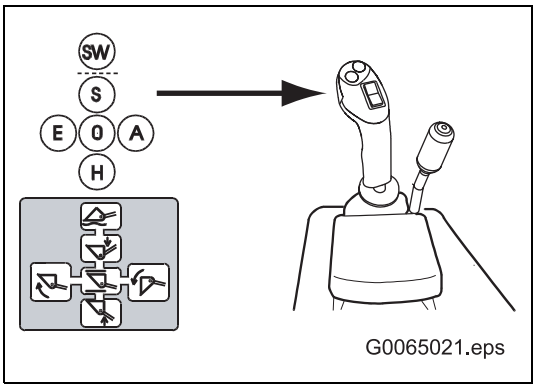

- Switch the working hydraulics safety lever to position ‘1’.

  Position 1 = working hydraulics locked
  Position 2 = working hydraulics released

- Apply service brake
- Lock the centre pivot steering when performing maintenance work by using the centre pivot steering locking lever.
- Place chocks before and behind the wheels.

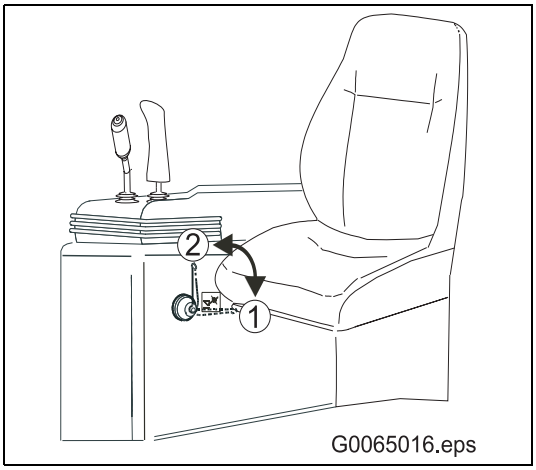

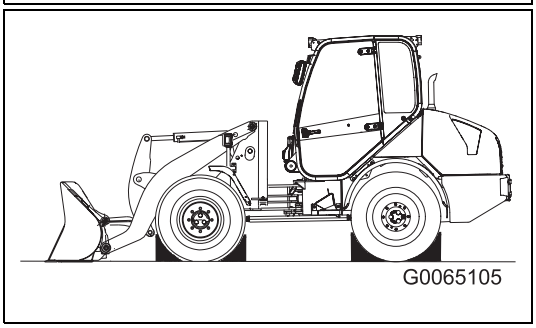

Tipping up the driver's cab

1. Park the machine on solid, level ground.
2. Lower the work unit to the ground and switch off the engine.
3. Use the locking bolt to secure the articulated steering (cross-reference "Securing the articulated steering", Page 2-24).

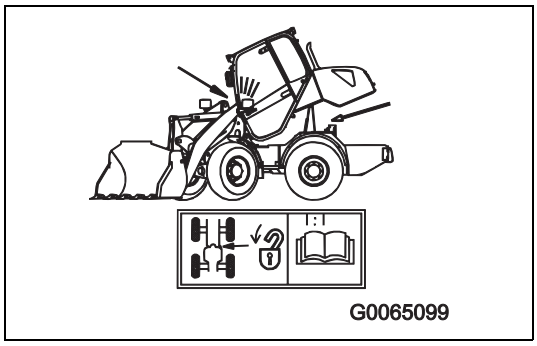

NOTE

The machine has to be positioned straight and the articulated steering has to be secured with the locking bolt! If the driver's cab is tipped up while the machine is bent, the front frame can cause damage to the windscreen!

4. Open the bonnet.
5. Remove the cab fastening screws under the rear wheel cover (arrow).

   2 screws on the left and 2 screws on the right (1).

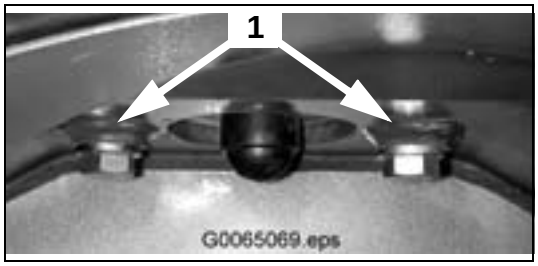

6. Take the hand pump lever out of its holder on the radiator (2) and insert it into the receptacle of the pump (3).

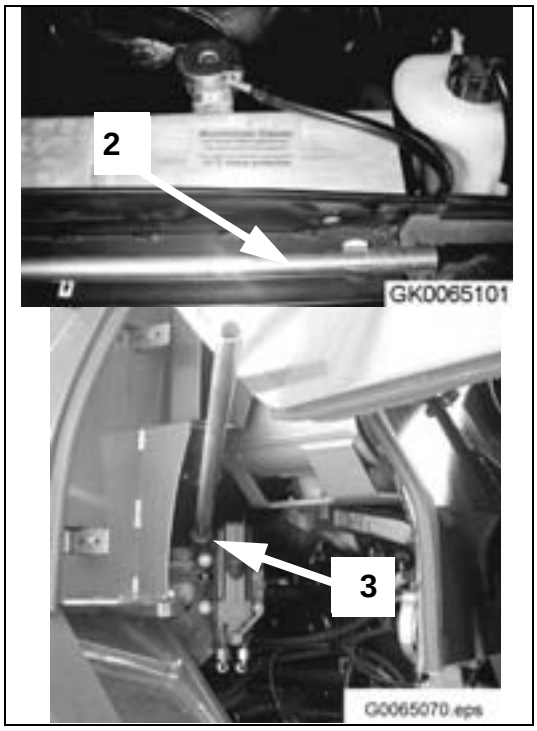

7. Set the lever at the pump to "pump up" and pump the cab upward until it reaches the limit stop.

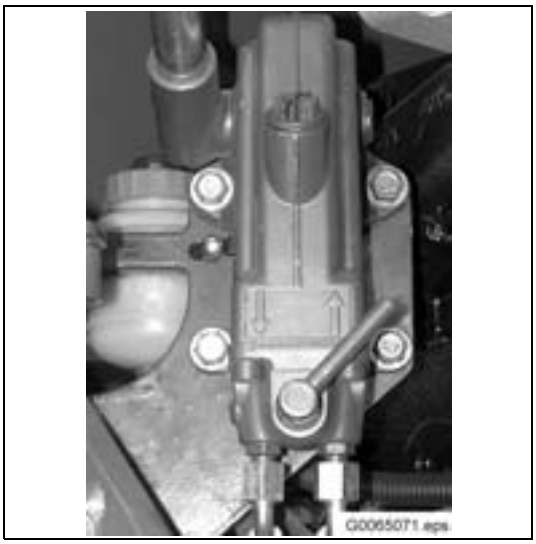

8. Move the safety rod on the right side upward until it reaches the pin at the cab floor.

9. Set the lever at the pump to "pump down" and pump the cab downward until the safety rod is secure against the right side of the cab floor.

10. Take the lever out of the pump.

Tipping down the driver's cab

1. Insert the lever into the pump. Set the lever at the pump to "pump up" and pump the cab upward until it reaches the limit stop.

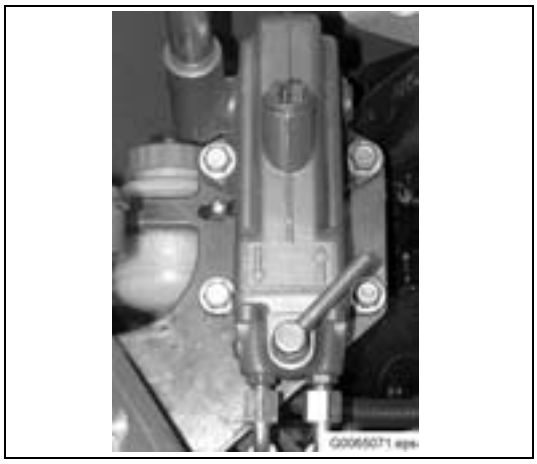

2. Fold down the safety rod on the right side and fasten it in this position (arrow).

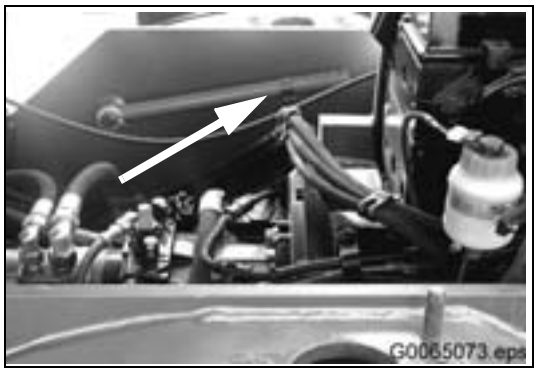

3. Set the lever to "pump down" and pump the cab downward until the cylinder is entirely retracted (the resistance at the lever increases markedly).

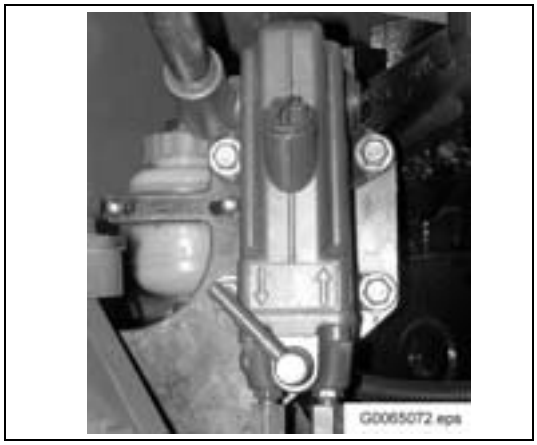

NOTE

Make sure that the guide pin (arrow) on the left of the rear frame is inserted into the guide bushing of the cab.

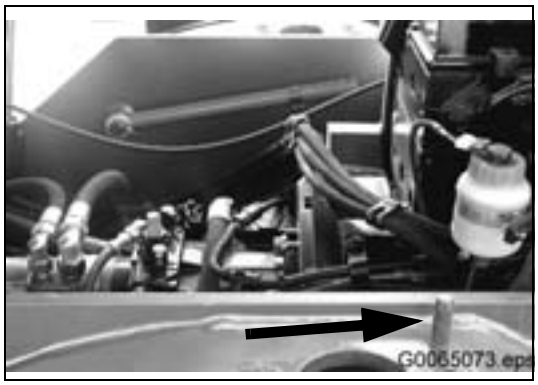

4. Screw in the fastening screws for the cab (2 left, 2 right) and tighten the screws.

   Torque = 2.3 kpm (230 Nm).

5. Remove the lever from the pump and fasten it to the radiator.
6. Close the bonnet.

Check service meter

Check the service meter every day to see if any maintenance is due.

Komatsu original replacement parts

Only use Komatsu original parts specified in the Parts Book as replacement parts.

Oils and grease

Use only original oils and grease by Komatsu. Choose oils and grease with the specified viscosity depending on the ambient temperature.

Use only clean oil and grease. Keep also containers for oil and grease clean. Be careful not to operate with foreign substances in the vicinity of oil and grease.

Washer fluid

Use automobile window washer fluid and make sure it is not contaminated with dust or dirt.

Keep the machine clean

Always keep the machine clean. This facilitates troubleshooting considerably. In particular, keep grease fitting, breathers and oil level gauges clean and avoid any contamination with foreign materials.

Be careful with hot fluids

Draining hot oils and coolants and removing their filters immediately after stopping the engine are hazardous. Allow the engine to cool before.

If the oil has to be drained when it is cold, warm it up to a suitable temperature (approx. 68 - 104°F / 20 - 40°C), then drain!

Check for foreign particles in drained oil and on filters

After oil is changed or filters are replaced, check the oil and filters for metallic particles and foreign materials. If large quantities of metallic particles or foreign materials are found, consult your Komatsu dealer.

Refilling fuel or oil, fuel strainer

Refill only fuel or oil in sufficiently ventilated places. If your machine is equipped with a fuel strainer, do not remove it while fueling. Re-close it after fueling.

Spilled fuel or oil may cause accidents due to slipping. It may also ignite. For this reason, always remove any spilled oil or fuel.

Never use fuel for cleaning or rinsing parts. Be careful not to contaminate soil or water with oil or fuel. Dispose oil and fuel in an appropriate manner.

Oil check or change

Check or change oils only in dust-free places to keep foreign particles away from oils.

Warning tag

Attach the warning tag to the start switch or other related control elements to avoid that somebody starts the engine during maintenance.

The warning tag is supplied together with the tools.

Safety labels

During the operation, always observe the precautions on the safety label attached to the machine.

Welding instructions

- Turn off the engine start switch (OFF position).
- Disconnect the negative terminal on the battery.
- Do not apply more than 200V continuously.
- Connect grounding cable within 3.28 ft (1 m) from the area to be welded.
- No seals or bearings may be between the area to be welded and the grounding point.
- Never weld any pipe or tube containing fuel or oil.
- Keep a safety distance of min. 3.28 ft (1 m) between the area to be welded and the battery.

Fire prevention

Use nonflammable cleaners or light oil for cleaning parts. Keep flame or cigarette light away from light oil.

Clamp faces

When O rings or gaskets are removed, clean the clamp faces and replace the O rings and gaskets with new ones. Be sure to fit O rings and gaskets during re-assembly!

Objects in your pockets

Keep your pockets free of loose objects which can fall out and drop into the machine (especially when bending over the machine).

Tyres check

When working in rocky areas, check the tyres for damage and for looseness, flaws, wear and tear. Re-tighten loose bolts and nuts.

Precautions when washing the machine

- Place the machine on a plane, even surface.
- Lower the work equipment to the ground.
- Apply the parking brake.
- Lock the wheels using support wedges to prevent the machine from rolling away.

  Proceed the following general measures, if you want to clean the machine:
- Never spray steam or water directly on the radiator.
- Do not allow water to get on any electrical component.

Pre- and post-work checks

Before starting work in mud, rain, snow or at the seashore, check plugs and valves for tightness. Wash the machine immediately after the work to protect components from rusting.

Lubricate components more frequently than usual. Be sure to lubricate work equipment pins daily if they are submerged in water.

On worksites where heavy-duty operations are common, reduce the maintenance and lubricating intervals.

Dusty worksites

When working at dusty worksites, take the following precautions:

- Inspect the air cleaner clogging warning lamp to see whether the air cleaner is blocked. Clean the air cleaner more frequently than specified.
- Clean the radiator core frequently to avoid clogging.
- Clean and replace the fuel filter frequently.
- Clean electrical components, especially the starter and alternator to avoid accumulation of dust.

Avoid mixing oils

Never mix oils of different brands. If you have only oil which is different from the oil brand used in the machine, do not add it but replace the entire oil.

5.2. Maintenance basics

5.2.1. Oil, fuel and coolant specifications

Oil

- Oil is used in the engine and work equipment under extremely severe conditions (high temperature, high pressure), and it deteriorates with use.
  Always use oil that matches the grade and temperature given in the Operation and Maintenance Manual. Even if the oil is not dirty, always replace the oil after the specified interval.

- Oil can be compared to blood in the human body, so always be careful when handling it to prevent any impurities (water, metal particles, dirt, etc.) from penetrating.
  The majority of problems with machines are caused by the entry of such impurities.
  Take particular care not to let any impurities penetrate when storing or adding oil.

- Never mix oils of different grades or brands. If only an oil is available which does not match the oil grade/brand in the machine then do not top up the oil, but replace all of it.

- Always add the specified amount of oil.
  Having too much oil or too little oil may both cause problems.

- If the oil in the work equipment is not clear, there is probably water or air getting into the circuit. In such cases, please contact your Komatsu distributor.

- When changing the oil, always replace the related filters at the same time.

- We recommend to have an analysis of the oil made periodically to check the condition of the machine. Those who wish to use this service, are requested to their Komatsu distributor.

Fuel

- The fuel pump is a precision instrument; if fuel containing water or dirt is used, it cannot work properly.
- Be extremely careful not to let impurities penetrate when storing or adding fuel.
- Always use the fuel specified in the Operation and Maintenance Manual.
  Fuel may congeal depending on the temperature (particularly at low temperatures below 5° F (-15°C)), so change to a fue matching this temperature.
- To prevent the moisture in the air from condensing and forming water inside the fuel tank, always fill the fuel tank after completing the day's work.
- Before starting the engine, or when 10 minutes have passed after adding fuel, drain the sediment and water from the fuel tank.
- If the engine runs out of fuel, or if the filters have been replaced, you must fill up the fuel pre-filter with fuel and may then restart the engine. For details, see "Bleeding the fuel system" on page 5-50.
- If the fuel sulphur content is between 0.5 and 1.0%, the oil change interval must be 1/2 normal.
  If the fuel sulphur content is more 1.0%, the oil change interval must be 1/4 normal.

Coolant

- River water contains large amounts of calcium and other impurities, so if it is used, scale will stick to the engine and radiator causing a defective heat exchange and overheating.
- Do not use water that is not suitable for drinking.
- When using anti-freeze, always observe the precautions given in the Operation and Maintenance Manual.
- Komatsu machines are supplied with Komatsu original anti-freeze in the coolant when the machine is shipped.
  This anti-freeze prevents corrosion in the cooling system.
  Therefore, it can be used as it is even in hot areas.
- Anti-freeze is flammable, so be extremely careful not to expose it to open flame or fire.
- The proportion of anti-freeze to water differs according to the ambient temperature.
  For details of the mixing ratios, see "Cooling system – exchanging coolant and cleaning the system" on page 5-61
- If the engine overheats, wait for the engine to cool before adding coolant.
- If the coolant level is low, it will cause overheating and corrosion due to the air in the coolant.

Grease

- Grease is used to prevent twisting and noise at the joints.
- The nipples not included in the maintenance section are nipples for overhaul, so they need not be lubricated.
  If any part becomes stiff after being used for a long time, add grease.
- Always wipe off all of the old grease that is pushed out when greasing. Be particularly careful to wipe off the old grease in places where sand or dirt in the grease would cause the rotating parts to wear.

Storing oil and fuel

- Keep oil and fuel indoors to prevent any water, dirt or other impurities from penetrating.
- When keeping barrels for a long period, lay down the barrel on its side so that the filler port is at the side (to prevent moisture from being sucked in).
  If barrels have to be stored outside, cover them with a waterproof sheet or take other measures to protect them.
- To prevent any change in quality during long term storage, be sure to use in the order of 'first in - first out' (use the oldest oil or fuel first).

Filters

- Filters are extremely important safety parts. They prevent impurities in the fuel and air circuits from entering important equipment and causing problems.
- Replace all filters periodically. For details, see the Operation and Maintenance Manual.
  However, when working under severe conditions, it is necessary to consider replacing the filters at shorter intervals according to the oil and fuel (sulfur content) being used.
- Never try to clean the filters (cartridge type) and use them again. Always replace with new filters.
- When replacing oil filters, check if any metal particles are stuck to the old filter. If any metal particles are found, please contact your Komatsu distributor.
- Do not open packs of spare filters until just before they are to be used.
- Always use original Komatsu filters.

Biodegradable hydraulic oil and lubricants

The use of biodegradable hydraulic oils and lubricants - on the basis of synthetic esters - for Komatsu machines is permitted. For information on the products cleared for use and best suited for your application contact our authorized service workshops.

5.2.2. Specifications of the electrical system

- If the wiring gets wet or the insulation is damaged, the electrical system leaks resulting in hazardous malfunctions of the machine.
- Maintenance work at the electrical system includes:

  1. check fan belt tension,
  2. check damage or wear to the fan belt ,
  3. check battery fluid level.

- Never remove or disassemble any electrical components installed in the machine.
- Never install any electrical components other than those specified by Komatsu.
- Be careful to keep the electrical system free of water when washing the machine or when it is raining.
- When working on the seashore, carefully clean the electrical system to prevent corrosion.
- The optional power source must never be connected to the fuse, start switch, or battery relay.

5.2.3. Wearing parts list

Wearing parts such as filter elements, air cleaner elements, bolt-on edges, etc. are to be replaced at the time of periodic maintenance or before their abrasion limits, are reached.
The wearing parts should be changed correctly in order to use the machine economically.

For replacement, KOMATSU genuine parts of excellent quality should be used.

*: See Part No. in Parts Book (KOMATSU).

When ordering parts, please check the part number in the Parts Book

The parts in parentheses are to be replaced at the same time.

Position	Part no.	Part name	Q'ty	Replacement interval
Engine Oil Filter	*	Cartridge	1	Maintenance every 500 operating hours
Fuel Filter	*	Cartridge	1	Maintenance every 500 operating hours
Hydraulic Oil Filter	*	Filter Element (O-Ring) (O-Ring)	1 (1) (1)	First maintenance after 50 operating hours Maintenance every 1000 operating hours
Engine Valve Cover Gasket	*	Gasket O-ring	1 3	First maintenance after 250 operating hours Maintenance every 2000 operating hours
Air Filter	*	Filter Insert Safety Filter	1 1	Maintenance every 500 operating hours

5.3. Lubricants, fuels and filling capacities

WA70-5	Lubricants, fuels and filling capacities					
	Lubricants, fuel etc.	**BI code **)**	**Quality grades**	**Temperature ranges**	**Viscosity ranges**	**Approx. filling capacity in US gal. (litres)**
Engine	Engine Oil EO	EO 1540 A EO 1030 A NRS	CCMC D4 or, if not available: API CE oder API CF-4 [2])	5°F to 113°F (-15°C to 45°C) -4°F to 86°F (-20°C to 30°C) 5°F to 68°F (-15°C to 20°C)	SAE 15W-40 [1]) SAE 10W-30 SAE 5W-30	1.98 / 1.84 (7.5 / 7.0*)
Transfer Gear Box Standard Type High Speed Version	Gear Oi GO	GO 80	API-GL4 or MIL-L-2105D	–	SAE 80 [1])	0.34 (1.3)
Front Axle	Gear Oi GO	GO 80	API-GL4 or MIL-L-2105D	–	SAE 80 [1])	Planet Gear: 2 x 0.18 (0.7) Differential: 1.84 (7.0)
Rear Axle	Gear Oi GO	GO 80	API-GL4 or MIL-L-2105D	–	SAE 80 [1])	Planet Gear: 2 x 0.18 (0.7) Differential: 1.84 (7.0)
Hydraulic system, steering	Hydraulic Oil HYD	HYD 0530 HYD 1030 HYD 1540	HVLP HVLP D	5°F to 68°F (-15° to 20°C) -4°F to 86°F (-20° to 30°C) -5°F to 113°F (-15° to 45°C)	ISO VG 46 [1]) ISO VG 68 ISO VG 100	11.88 / 7.92 (45 / 30*)
	or Engine Oil EO	EO 1540 A EO 1030 A NRS	CCMC D4 or, if not available: API CE or API CF-4 [2])	5°F to 113°F (-15°C to 45°C) -4°F to 86°F (-20°C to 30°C) 5°F to 68°F (-15°C to 20°C)	SAE 15W-40 [1]) SAE 10W-30 SAE 5W-30	
	or Hydraulic Oil BIO-E-HYD	BIO-E-HYD 0530	HEES (acc. to VDMA fluid technology)	5°F to 68°F (-15°C to 20°C)	ISO VG 46	
Service Brake	Automatic Transmission Gear Oil	ATF	TYP A, Suffix A	–	–	0.15 (0.6)
Cooling system	Long-Time Coolant	SP-C	Antifreeze and Corrosion Protection	Proportion of Mixture: 50% Coolant : 50% Water Min. Freeze Proofing: -29°F (-34° C)		17,0
Fuel tank	Diesel fuel [3])	CFPP Class B CFPP Class D CFPP Class E CFPP Class F	DIN-EN 590	to 32°F (0°C) to 14°F (-10°C) to 5°F (-15°C) to -4°F (-20°C)	–	34.34 (130)
Grease nipples	Multi-purpose grease MPG on a lithium base	MPG-A	KP 2N-20	–	NLGI 2	
Air conditioning	Coolant Refrigerating machine oil	NRS NRS	R134a (CFC-free) PAG (polyalkyleneglycol)	-	-	2.64 lb. (1200 g) 0.047 (180 cm³)

The specified filling capacities are approximate guidelines; test specifications are binding. The selection of the viscosity class depends on the predominantly existing outside temperature. The temperature limits are to be regarded as guidelines which can be exceeded up or down for a brief period.

*) Topping-up quantity

[1]) Works filling

[2]) If no engine oil of the API CE or API CF-4 specification is available, API CC or API CD-classified engine oil can be used alternatively. The oil change intervals must be split in half in this case, however.

[3]) If the fuel sulphur content is between 0.5 and 1.0 %, the oil change interval must be 1/2 normal. With a sulphur content of more than 1.0 %, the oil change interval must be 1/4 normal.

**) BI codes are the "standard lubricants" for construction machinery and vehicles of the Hauptverband der Deutschen Bauindustrie e.V. (BI). The brochure "Regelschmierstoffe für Baumaschinen- und Fahrzeuge" (Standard Lubricants for Construction Machinery and Vehicles" can be obtained from bookstores or Bauverlag GmbH, Wiesbaden and Berlin, under the ISBN no. 3-7625-3102-1."

5.3.1. Lubrication chart

WA65/70-5

LUBRICATION CHART

CHECK · ADD

CHANGE

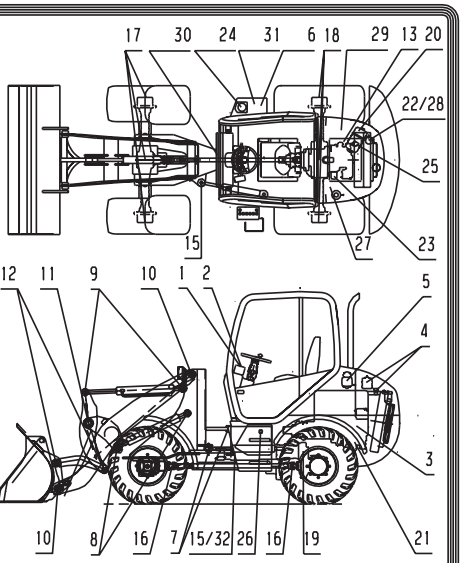

					LUBRICATION POINT
DAILY	1	DISPLAY			1
	2	FUEL LEVEL	F		1
	3	ENGINE OIL	EO		1
	4	COOLANT	CL		1
	5	BRAKE SYSTEM	HO		1
	6	HYDRAULIC TANK	HO		1
	27	HAND PUMP	HO		1
	28	WATER SEPARATOR			1
10h	7	ARTICULATED JOINT	G		2
50h	8	LIFT CYLINDER PIN	G		2
	9	DUMP CYLINDER PIN			2
	10	LIFT ARM PIVOT PIN			4
	11	BELLCRANK PIN			2
	12	QUICK COUPLER			2
	29	BATTERY			1
250h	20	AIR CLEANER			1
	15	STEERING CYLINDER PIN	G		2
	32	REAR AXLE			2
500h	21	ENGINE OIL	EO	7.5	1
	23	ENGINE OIL FILTER			1
	22	FUEL FILTER			1
	20	AIR CLEANER			1
	30	HEATER/AIR CONDITIONER			1
	17	FRONT AXLE	AXO		1
	18	REAR AXLE			1
	19	GEAR BOX			1

					LUBRICATION POINT
1000h	5	BRAKE SYSTEM	HO	0.6	1
	24	*HYDRAULIC OIL FILTER			1
	31	HYDRAULIC TANK BREATHER			1
1500h	17	**FRONT AXLE	AXO	7.0 2x0.7	1
	18	**REAR AXLE		7.0 2x0.7	1
	19	**GEAR BOX		1.3	1
2000h	25	COOLING SYSTEM		9.1	1
	26	HYDRAULIC OIL	HO	30	1
4000h	16	UNIVERSAL SHAFT	G		2

1. LUBRICATION INTERVALS ARE BASED ON THE SERVICE METER READING.
2. ABBREVIATIONS
   EO: ENGINE OIL G: LITHIUM GREASE NO. 2 F: DIESEL FUEL
   AXO: AXLE OIL CL: COOLING LIQUID HO: HYDRAULIC OIL
   FOR THE BRANDS OF EO, F AND AXO REFER TO THE OPERATION AND MAINTENANCE MANUAL
3. NUMBERS AT THE LEFT SIDE OF THE CHART INDICATE THE NUMBER OF MAINTENANCE POINTS. REFER TO THE ABOVE ILLUSTRATION.
4. ITEMS MARKED * SHOULD BE PERFORMED INTHE FIRST SERVICE FOR NEW CARS 50-HOURS DRIVING.
   ITEMS MARKED ** SHOULD BE PERFORMED IN THE FIRST SERVICE FOR NEW CARS 250-HOURS DRIVING.
5. REFER TO THE OPERATION AND MAINTENANCE MANUAL FOR DETAILS.

42T-93-21C60

5.4. Tools and standard tightening torques (bolts, nuts)

5.4.1. Introduction of recommended tools

No.	Name of tool	Part No.	Remarks
1	Wrench set	42T-09-H0450 42T-09-H0460 42T-09-H0470 42T-09-H0440	Applicable width across flats 8/10 mm 13/15 mm 17/19 mm 24/27 mm
2	Screwdriver	421-98-H1120	–
3	Screwdriver	421-98-H1110	–
6	Grease gun	424-98-H1010	–
7	Hose	424-98-H1020	(for grease gun)
8	Grease cartridge	07950-90403	(Lithium base grease: 400g)
9	Hammer	421-98-H1140	–
10	Pocket	421-98-H1130	–

If any of the above tools are broken, please order them from your KOMATSU distributor.

5.4.2. Torque list

Unless otherwise specified, tighten the metric bolts and nuts to the torque shown in the table.

The tightening torque is determined by the width across flats of the nut and bolt.

If it is necessary to replace any nut or bolt, always use a Komatsu genuine part of the same size as the part that was replaced..

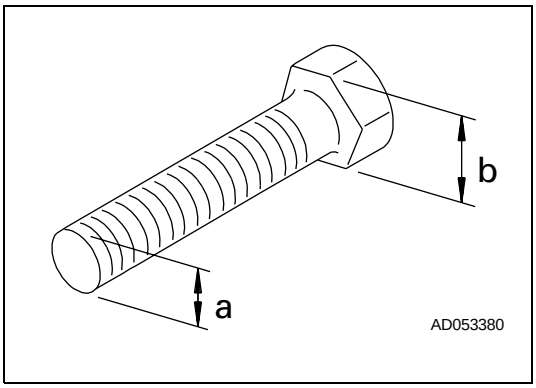

Metric Fine Screw Thread - Strength Class 10.9					
Tread diameter of the bolt (mm) (a)	Width over flats (mm) (b)	Steel		Aluminium Cas	
		Nm	kpm	Nm	kpm
M6	10	14.0	1.4	7.7	0.77
M8	13	35.0	3.5	19.0	1.9
M10	17 (15)	70.0	7.0	37.0	3.7
M12	19	115.0	11.5	64.0	6.4
M14	22	185.0	18.5	101.5	10.15
M16	24	280.0	28.0	158.0	15.8
M18	27	390.0	39.0	218.0	21.8
M20	30	560.0	56.0	306.5	30.65
M22	32	750.0	75.0	416.0	41.6
M24	36	960.0	96.0	528.5	52.85
M27	41	1400.0	140.0	774.0	77.4
M30	46	1900.0	190.0	1053.0	105.3
M33	50	2600.0	260.0	–	–
M36	55	3300.0	330.0	–	–
M39	60	4300.0	430.0	–	–

NOTE

When tightening panels or other parts having tightening fixtures made of plastic, be careful not to use excessive tightening torque: doing so will damage the plastic parts.

Metric Fine Screw Thread - Strength Class 10.9					
Tread diameter of the bolt (mm) (a)	**Width over flats (mm) (b)**	**Steel**		**Aluminium Cas**	
		Nm	**kpm**	**Nm**	**kpm**
M8 × 1	13	35.0	3.5	20.0	2.0
M10 × 1	17 (15)	75.0	7.5	42.0	4.2
M10 × 1.25	17 (15)	70.0	7.0	39.0	3.9
M12 × 1.25	19	125.0	12.5	70.0	7.0
M12 × 1.5	19	120.0	12.0	67.0	6.7
M14 × 1.5	22	200.0	20.0	110.0	11.0
M16 × 1.5	24	300.0	30.0	167.5	16.75
M18 × 1.5	27	440.0	44.0	243.0	24.3
M18 × 2	27	420.0	42.0	230.0	23.0
M20 × 1.5	30	620.0	62.0	338.5	33.85
M20 × 2	30	–	–	322.5	32.25
M22 × 1.5	32	820.0	82.0	454.5	45.45
M22 × 2	32	–	–	436.0	43.6
M24 × 1.5	36	1090.0	109.0	596.0	59.6
M24 × 2	36	1040.0	104.0	573.0	57.3
M27 × 2	41	1500.0	150.0	832.0	83.2
M30 × 2	46	2120.0	212.0	1158.0	115.8
M33 × 2	50	2800.0	280.0	–	–
M36 × 3	55	3500.0	350.0	–	–
M39 × 3	60	4600.0	460.0	–	–

5.5. Periodical replacement of safety-critical parts

To ensure trouble-free operation of the machine, the user of the machine must always carry out periodic maintenance. In addition, to maintain safety standards, the user should also periodically replace all safety related parts, which are particularly closely connected to safety and fire prevention.

- The standard service life under normal conditions should not exceed 6 years.
- Hoses must be replaced as soon as the following damage is noticeable:
  - damage to the outer layer through to the intermediate layer,
  - brittleness in the outer layer,
  - distortions in pressurised or unpressurised state not conforming with the original shape of the installed hose,
  - leakages,
  - damage to the hose fittings or to the connection between fittings and hose,
  - storage damage (the shelf life of the hose should not exceed 2 years).

When replacing the hoses, always replace the O-rings, gaskets, and other such parts at the same time.

Ask your Komatsu distributor to replace the safety critical parts.

5.6. Maintenance schedule chart

	Service Procedure	see page
5.7.1	**Pre-start checklist**	**5-23**
	Cooling system – checking the coolant level, topping up coolant	5-23
	Cleaning the radiator segments	5-24
	V-Belt, checking the condition	5-24
	Engine, checking the oil level, topping up oil	5-24
	Checking the fuel level – refuelling	5-26
	Water separator at the fuel filter – Draining water and dirt sediments	5-27
	Hand pump - Checking the oil level	5-27
	Checking the controls	5-28
	Checking the electrical connections	5-28
	Heater/air conditioning – checking rate of air flow	5-29
	Miscellaneous tests before starting work	5-29
5.7.2	**Maintenance upon demand**	**5-30**
	Checking the air-conditioning system	5-30
	Checking the window washing-fluid level, adding fluid	5-31
	Re-charging a built-in battery	5-32
5.7.3	**Maintenance after the first 50 operating hours**	**5-33**
	Hydraulic system, replacing the filter insert	5-33
	Checking and tightening the wheel nuts	5-34
5.7.4	**Maintenance after the first 250 operating hours**	**5-35**
	Front and rear axle – oil change	5-35
	Transfer box gearing – changing oil	5-36
	Checking and adjusting the valve clearance	5-36
5.7.5	**Maintenance every 10 operating hours**	**5-37**
	Lubrication, articulated steering	5-37
5.7.6	**Maintenance every 50 operating hours**	**5-38**
	Checking the service brake and oil level, refilling oil	5-38
	Battery – checking the acid level	5-39
	Lubrication, work unit	5-40
5.7.7	**Maintenance every 250 operating hours**	**5-41**
	V-Belt, generator – checking and adjusting the tension	5-41
	Air filter, removing and re-installing the filter insert, checking and cleaning the filter insert	5-42
	Lubrication, steering cylinder	5-45
	Lubrication, self-aligning bearings of rear axle	5-46
5.7.8	**Maintenance every 500 operating hours**	**5-47**
	Engine – changing oil	5-47

	Service Procedure	see page
	Replacing the oil filter cartridge	5-48
	Changing the fuel filter element	5-49
	Bleeding the fuel system	5-50
	Bleeding the low pressure side:	5-50
	Bleeding the high pressure side:	5-50
	Air filter, replacing the filter insert, replacing the safety filter	5-51
	Heater/air conditioning – cleaning/replacing filter fleece	5-52
	Cleaning the condenser of air conditioning	5-53
	E.C.S.S.-pressure accumulator (Option) - checking gas pressure	5-53
	Front and rear axle – checking the oil level	5-54
	Transfer box gearing – checking the oil level	5-55
5.7.9	**Maintenance every 1000 operating hours**	**5-56**
	V-Belt, generator – checking and adjusting the tension	5-56
	Service Brake - Checking and adjusting oil	5-56
	Checking and adjusting system pressures	5-56
	Hydraulics – Exchanging the venting filters	5-57
	Hydraulic system, replacing the filter insert	5-58
5.7.10	**Maintenance every 1500 operating hours**	**5-59**
	Front and rear axle – oil change	5-59
	Transfer box gearing – changing oil	5-60
5.7.11	**Maintenance every 2000 operating hours**	**5-61**
	Cooling system – exchanging coolant and cleaning the system	5-61
	Checking and adjusting the valve clearance	5-63
	Hydraulic system, oil change	5-64
	Ventilating the hydraulic oil tank	5-65
	Checking the fuel pump	5-66
	Checking the fuel and coolant tubes, replacing the tubes (if required)	5-66
	Checking the water pump	5-66
5.7.12	**Maintenance every 4000 operating hours**	**5-67**
	Lubrication, universal joint	5-67

5.7. Service procedure

5.7.1. Pre-start checklist

Cooling system – checking the coolant level, topping up coolant

CAUTION

- **A wrong water/coolant mixing ratio will damage the radiator! Always mix water and coolant in the ratio 50 : 50. This also applies to countries with a hot climate.**
- **Danger of fire! Coolant may ignite at hot engine!**
- **Do not top up coolant, unless the engine has cooled down sufficiently.**

1. Open the bonnet.
2. Check that the coolant level in the expansion tank is between the MAX and MIN markings. If the coolant level does not reach up to the MIN marking, top up coolant.
3. Therefore remove the cover cap of the expansion tank.
4. Top up coolant until the level reaches up to the MAX marking.
5. After topping up, firmly close the cover cap.
6. Usually, the radiator needs not to be opened. However, for safety reasons it is required to check the refrigerant level in the radiator after 50 operating hours (see "5.7.9. Maintenance every 1000 operating hours" on page 5-56).
7. If the expansion tank is empty again after a short period of time, immediately have the cooling system checked for leaks and have any leaks repaired in the garage.

Cleaning the radiator segments

The radiator segments must be checked daily and cleaned with compressed air, if required.

NOTE

Do not hold the compressed air nozzle or water nozzle too close to the radiator segments. Use no scrubber for cleaning since the plates may be damaged

V-Belt, checking the condition

Check the drive belt for fissures.

- Transversal fissures in direction of the belt width are permitted.
- Longitudinal fissures in direction of the belt length crossing transversal fissures, missing parts, or damaged tissue layers are not permitted.
- In these cases, replace the drive belt.

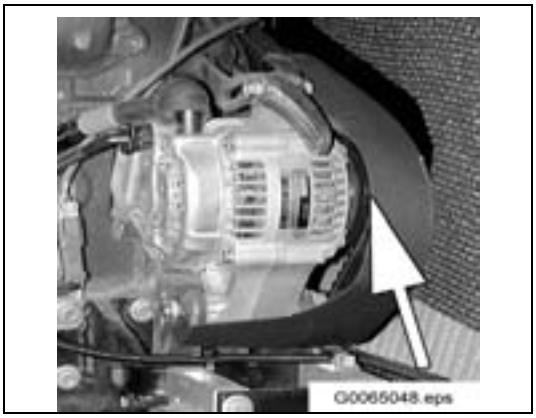

Engine, checking the oil level, topping up oil

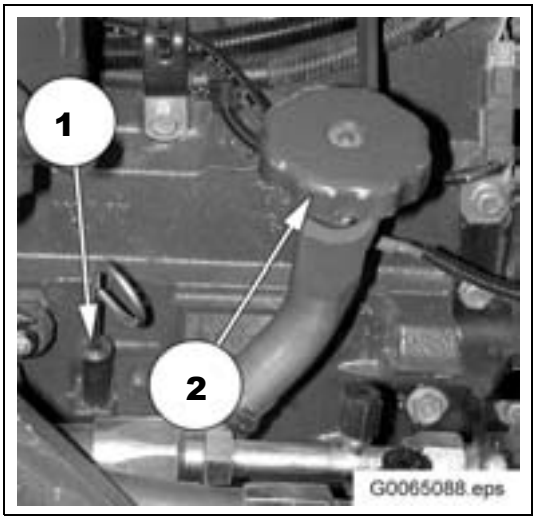

NOTE

After you have switched off the engine, wait at least 5 minutes before you check the engine oil level. The machine must stand on an even surface.

1. Pull out the oil dipstick (1) and wipe off the oil with a clean cloth.
2. Completely re-insert the oil dipstick and pull it out again after a few seconds. The oil level must be between the (H) and (L) markings on the oil dipstick.
3. If the oil level does not reach up to the (L) marking, top up engine oil. For detailed information on recommended oils, see section "5.3. Lubricants, fuels and filling capacities" on page 5-15.

NOTE

Do not fill in too much oil in one go via the filler!

4. Wait three minutes before you check the oil level again. If the oil level is above the (H) marking, drain off some oil (see "Engine, draining off oil" on page 5-25).
5. Close the oil filler (2).

Engine, draining off oil

If you have topped up too much oil, you must drain off the excess oil. Have an oil trough with a sufficient capacity ready.

1. Put the oil trough under the drain screw (arrow).
2. Remove the cover cap (1) from the drain valve.
3. Screw on the drain hose (2) on the drain valve. This will cause the drain valve to open.
4. Drain the oil.
5. Detach drain hose (2) from drain valve. This causes the drain valve to close.
6. Check oil level again.
7. Fit cap back onto drain valve (1).

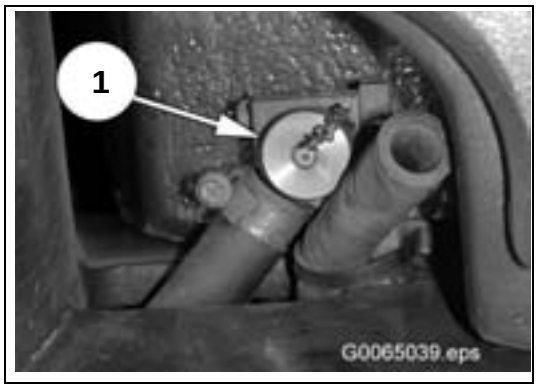

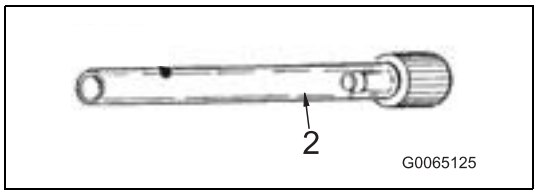

Checking the fuel level – refuelling

WARNING

- **Danger of fire! Fuel that has spilled over may ignite!**
- **Immediately remove fuel that has spilled over.**

1. Turn the start switch to the operating position 'I' and check the fuel level indicated on the fuel level indicator.

   F - tank full

   E - tank empty

   Then, return the start switch to the stop position '0'.

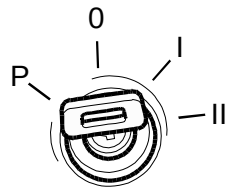

75_209

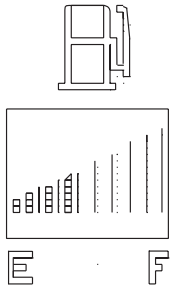

G0065035.eps

2. If required, refuel via the filler (1). For detailed information on fuels, see section "5.3. Lubricants, fuels and filling capacities" on page 5-15.
3. After refuelling, firmly close the filler.

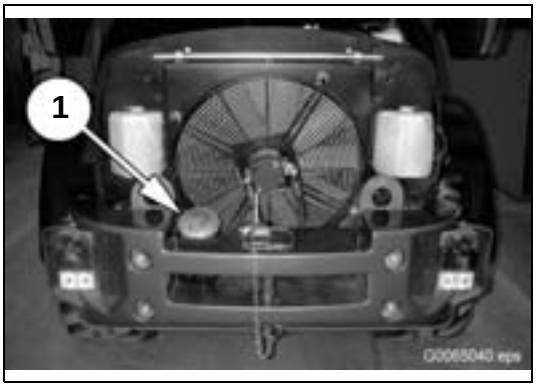

Water separator at the fuel filter – Draining water and dirt sediments

1. Keep a container ready for collecting the fluid from the water separator.
2. Unscrew the valve (1) at the bottom of the water separator by 4 rotations.
3. Drain off the water and dirt sediments until pure fuel flows out.
4. Screw the valve (1) tight again, clockwise.

WARNING

Do not pull the valve too tight, it could damage the thread!

NOTE

If you have drained more than 60 ml, it is recommended that you fill the filter with fuel to prevent problems when starting the motor.

1. Loosen the vent screw (1) on the injection pump.
2. Move the pump button (2) on the fuel filter until there are no more bubbles in the fuel flowing from the vent screw.
3. Retighten the vent screw (1).

Hand pump - Checking the oil level

1. The oil level in the hand pump is checked with the cab tipped down.
2. Remove the screw plug (1).
3. The oil level has to be up to the lower edge of the filling hole (arrow).
4. If required, add oil (cross-reference to the list of consumables).
5. Replace the screw plug into the filling hole (1) and pull it hand-tight.

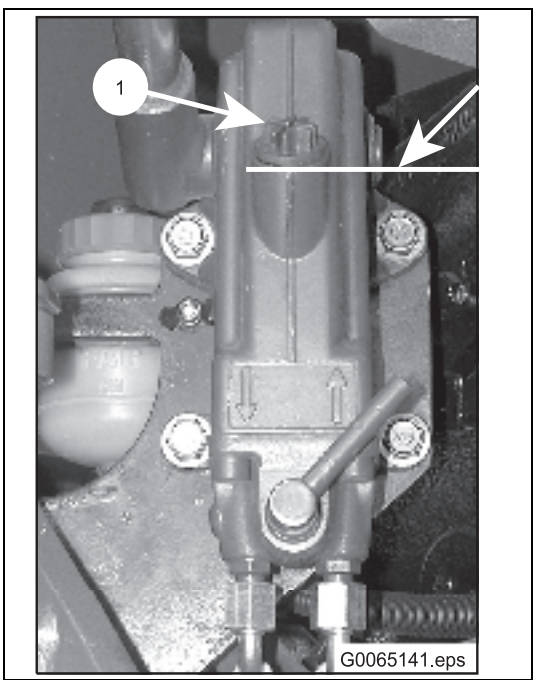

Checking the controls

1. Turn the start switch to the operating position 'I'.

   An alarm buzzer sounds until the machine is started.

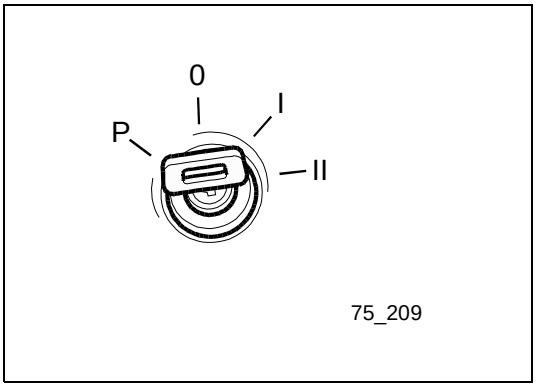

2. Check that the following alarm and control indicators are on until the engine is started:

   1 Parking brake
   2 Charging current
   3 Engine oil level
   4 Intake air preheater

3. Check that the fuel level indicator (5) indicates the fuel level in the fuel tank.

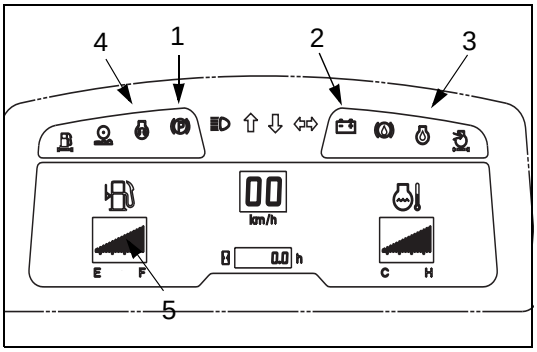

NOTE

Contact your responsible Komatsu dealer, if one or several of the indicators do not light up.

Do not only use the indicators to perform the checks prior to start. Always perform the work described as regular maintenance, too.

Checking the electrical connections

CAUTION

- **Danger of ignition! Inflammable material (leaves, twigs, grass, etc.) may ignite within the electrical system!**
- **Remove inflammable material from the electrical system.**

NOTE

If a fuse blows, or if there are any signs of a short-circuit within the electrical system, inform your responsible Komatsu dealer.

Regularly check that the terminals are fastened tightly, retighten loose terminals.

Heater/air conditioning – checking rate of air flow

1. Turn start switch to position 'I'.

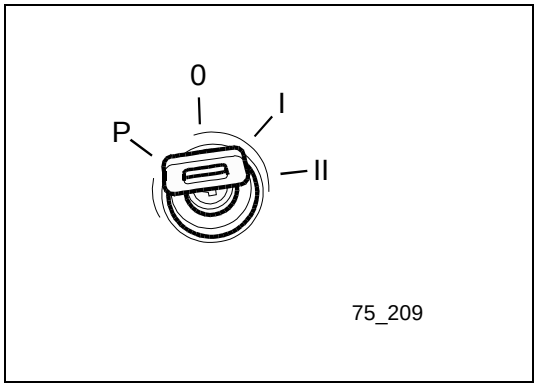

2. Switch blower on.
3. Check whether sufficient air flows out of the air outlet nozzles (arrows).

   Caution: the recirculation nozzles must be open! (arrows)

4. If insufficient air is coming out of the jets, either the filter fleece in the heating/air conditioning unit is dirty and will have to be cleaned or replaced or the condenser in the air conditioning system is dirty and will have to be cleaned; see "Heater/air conditioning – cleaning/replacing filter fleece" on page 5-52.

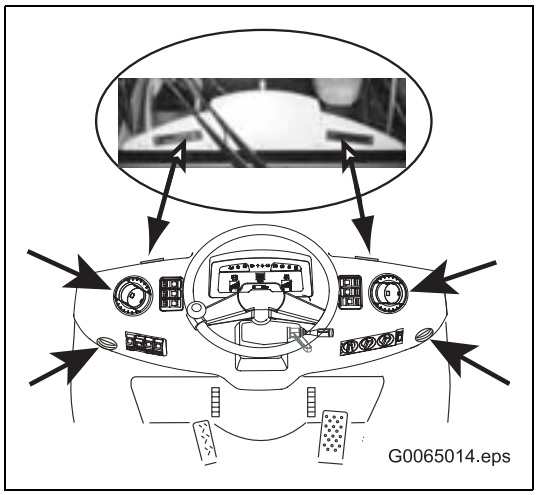

Miscellaneous tests before starting work

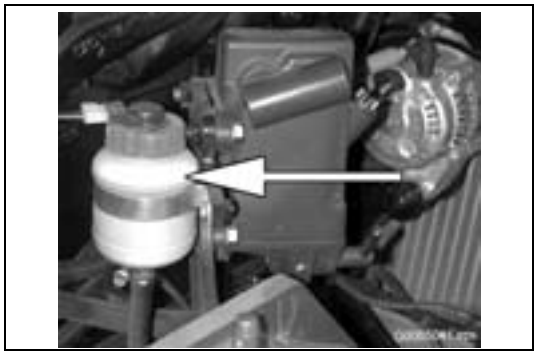

- Check that the brake fluid in the brake fluid tank reaches the marking.
- Check that the contacts at the float of the brake oil container are tightened correctly.
- Check that the lighting equipment operates correctly; check it for dirt and damage.
- Check the measuring instruments.
- Check both the horn and the reversing warning horn.
- Check both clearance and operation of the steering wheel.
- Check the function of the rear-view mirror; check it for dirt and damage.

5.7.2. Maintenance upon demand

Checking the air-conditioning system

Check the air-conditioning system twice a year, in spring and autumn.

Cleaning the condenser of air conditioning

NOTE

Do not wash the condenser with a steam cleaner. Otherwise, the condenser will get hot and may break down.

If there is mud or dust sticking to the air conditioner condenser, clean it with water.

If the water pressure is too high, the fins may get deformed. When washing with a high pressure washing device, apply the water from a reasonable distance.

Checking the coolant level

WARNING

If the liquid gets into your eyes or on your hands, it may cause loss of sight or frostbite: Therefore never loosen any part of the refrigerant circuit.

Operate the cooler of the air-conditioning system for 5 - 10 minutes, then touch the high pressure portion and low pressure portion of the compressor (or high pressure hose and low pressure hose joint) with your hand. At the same time, inspect the flow of coolant (R134a) through the sight glass to check the gas level.

Contact your Komatsu dealer for this inspection.

The sight glass is installed next to the receiver at the side of the condenser. To this end the ladder at the right must be removed and the condenser folded out.

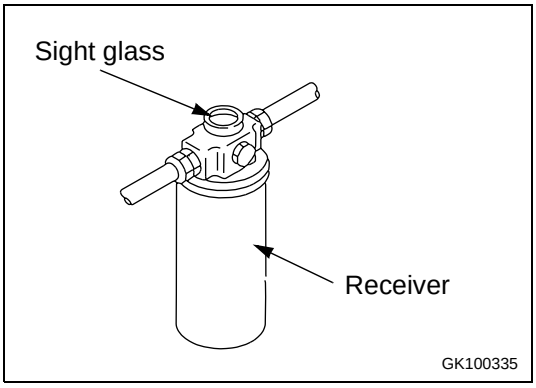

.

Color condition	Normal	Abnormal	
Temperature of high and low pressures pipes	High pressure pipe is hot. Low presure pipe is cold. Clear difference in temperature.	High pressure pipe is warm. Low pressure pipe is cold. Little difference in temperature.	Amost no difference in temperature between high and low pressure pipes.
Sight glass	Almost transparent. All bubbles disappear if the engine speed is increased or reduced. 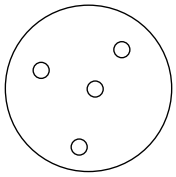	Bubbles are always visible. Sometimes becomes transparent, or white bubbles appear. 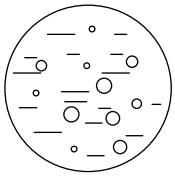	Opaque substance is visible in the fluid. 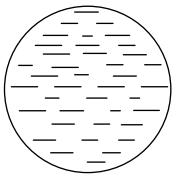
Pipe connections	Properly connected.	Some parts contaminated with oil.	Some parts heavily stained with oil.
General conditions of cooler	Coolant level correct, no abnormalitities. Ready for use.	Ther may be a leak somewhere. Call service repair shop for inspection.	Almost all coolant has leaked out. Contact service repair shop immediately.

Checking the window washing-fluid level, adding fluid

Check the washing-fluid level in washer tank. When the fluid has run short, add window washing fluid for cars.

To prevent the nozzles from clogging, be careful not to let dust get into the fluid

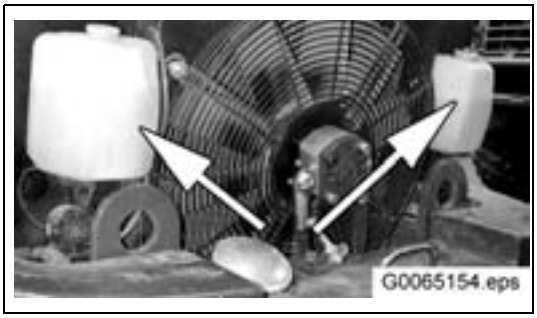

Re-charging a built-in battery

- Disconnect the cable of the negative pole before re-charging or pull the battery main switch, in order to interrupt the power supply. Otherwise, the alternator is damaged due to high voltage peaks.
- Remove all battery plugs before re-charging to ensure sufficient ventilation.
  To prevent gas explosions, do not come near the battery with fire and do not produce any sparks.
- Interrupt the charging process if the temperature of the battery acid exceeds 113°F (45° C).
- Switch off the battery charger, as soon as the battery is recharged. If the battery is overloaded, the following situations may occur:
  - The battery may be overheated
  - Decrease in the battery acid volume
  - Damage of the electrode plates.
- Do not mix up the cables (positive (+) and negative (-)

Before performing maintenance operations, remove all cables from the battery poles. Only exceptions: acid level check or the measurement of the specific density.

5.7.3. Maintenance after the first 50 operating hours

Hydraulic system, replacing the filter insert

WARNING

- **Frequent contact between used hydraulic oil and skin may cause skin lesions and other physical damage!**
- **Wear rubber gloves when changing the filter. Thoroughly wash off any hydraulic oil adhering to your skin.**

1. Lower the work unit onto the floor.
2. Park the machine.
3. Turn the inlet and ventilation screw (1) several revolutions to let the pressure escape.
4. Clean the surface of the filter cap (2) and the area around the filter cap.
5. Unscrew the filter cap.
6. Pull out the filter element (3) at the handle (4) .
7. Pull the filter element off the handle and dispose of the filter element.
8. Clean the inner surface of the filter housing. Before you start cleaning, check that there is no undesired material in the filter housing.
9. Put the handle onto the new filter element.
10. Insert the new filter element into the housing.
11. Screw on the filter cap and tighten it with 2.0 kpm (20 Nm).
12. Loosen the feeding and ventilation screw by turning it a couple of rotations.
13. Start up the engine.
14. Bring the boom into its highest position.
15. Bring bucket into its tip-in position (up to its limit stop).
16. Re-tighten the feeding and ventilation screw.
17. Perform a test run and check that the system is tight.

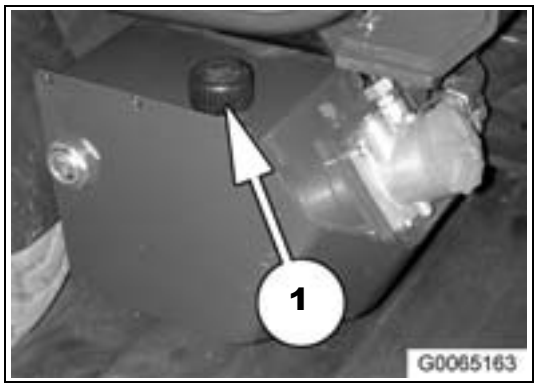

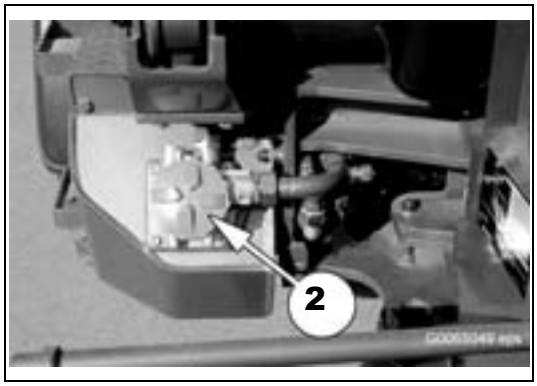

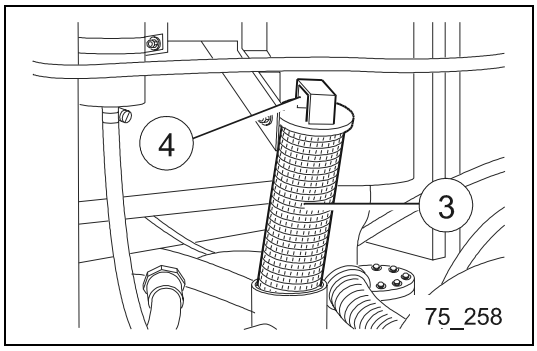

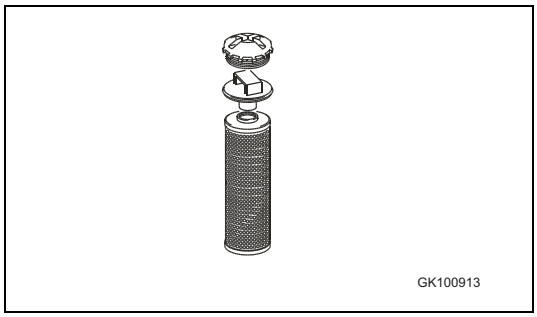

Checking and tightening the wheel nuts

WARNING

Loose wheel nuts may cause severe accidents!
Regularly check and tighten the wheel nuts.

Tightening of loose nuts (1).

Nut torque: 45 - 55 kpm (450 - 500 Nm)

NOTE

If a threaded bolts breaks, replace all threaded bolts of the respective wheel.

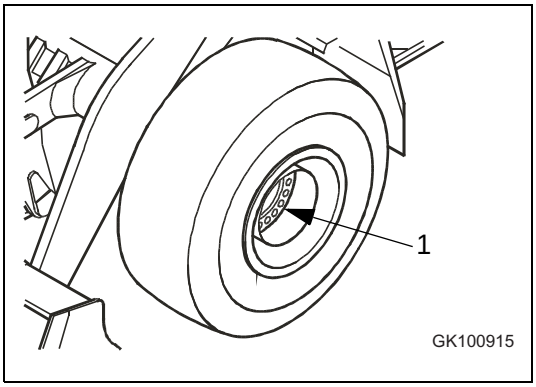

5.7.4. Maintenance after the first 250 operating hours

Front and rear axle – oil change

WARNING

- **Frequent contact between used hydraulic oil and skin may cause skin lesions and other physical damage!**
- **Wear rubber gloves when changing the oil. Thoroughly wash off any hydraulic oil adhering to your skin.**

DANGER

- **There is danger of severe accidents, if you perform mainte-nance work at a machine that has not been parked and secured correctly!**
- **Park the machine on a solid, even surface and secure it, before you start to perform maintenance work.**

Planetary gearing

1. Start engine. Raise work unit and drive the machine until the drain plug (1) for the planetary gearing on the wheel where you want to change the oil has reached its lowest point. Switch off engine. Lower work unit and apply parking brake.
2. Place drip pan or container underneath the drain plug (1).
3. Unscrew drain plug (1) and drain oil into container.
4. Drive machine until the planetary gearing drain plug hole (1) is in a horizontal (3 o'clock") position.
5. Fill planetary gearing with oil until the oil reaches the lower lip of the drain plug hole (1).
6. Clean drain plug and attach clean, undamaged (or new) washer.
7. Screw drain plug in tight.
8. Change oil in other wheels of the front and rear axle following the same procedure as described under no. 1 - 7 above.

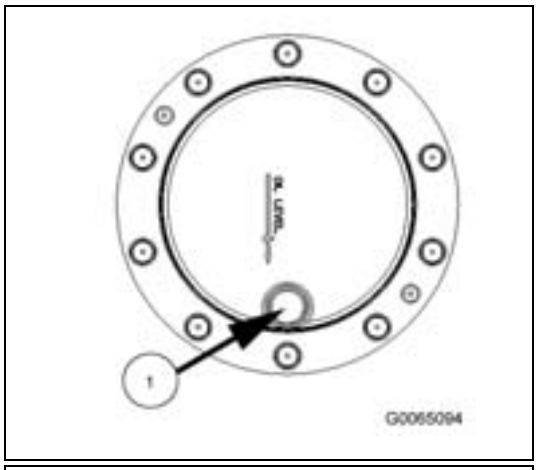

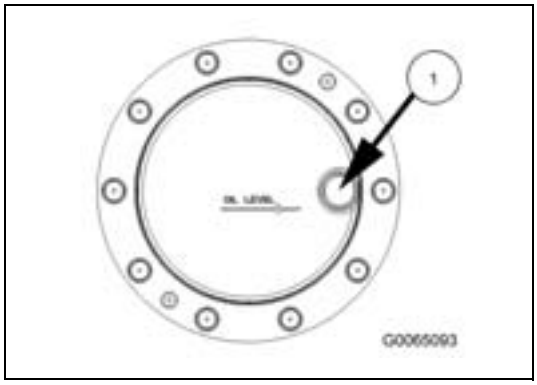

Differential

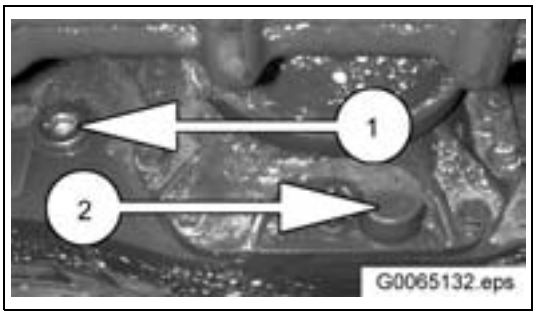

1. Put a container under the oil drain hole (2)

   Remove the screw plugs of the oil drain hole (2) and the fill and check hole (1). Drain the oil.

2. Clean the screw plugs and equip with seals that are in perfect order.
3. Screw tight the screw plug (2).
4. Fill in oil through the fill and check hole (1), until the oil reaches the lower edge.
5. Screw tight the screw plug (1).
6. Perform this task at the front and the rear axles.

Transfer box gearing – changing oil

WARNING

- **Frequent contact between used oil and skin may cause skin lesions and other physical damage!**
- **Wear rubber gloves when changing the oil. Thoroughly wash off any oil adhering to your skin.**

DANGER

- **There is danger of severe accidents, if you perform mainte-nance work at a machine that has not been parked and secured correctly!**
- **Park the machine on a solid, even surface and secure it, before you start to perform maintenance work.**

Have an oil trough with a sufficient capacity ready.

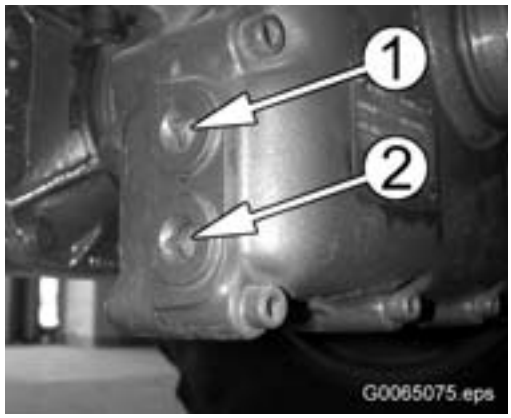

1. Before you start maintenance work, park and secure the machine as described in the chapter "5.1. Maintenance guide" on page 5-2.
2. Unscrew the screw plugs (1) and (2) .
3. Drain the oil.
4. Clean the screw plugs and replace the gaskets.
5. Tightly screw in the screw plug (2).
6. Fill in oil via the check drill hole (1), until the oil reaches up to the bottom edge of the check drill hole.
7. Tightly screw in the screw plug (1)

Checking and adjusting the valve clearance

Have the valve clearance checked and adjusted at an authorised Komatsu garage.

5.7.5. Maintenance every 10 operating hours

Lubrication, articulated steering

DANGER

There is danger of severe accidents, if you perform maintenance work at a machine that has not been parked and secured correctly!
Park the machine on a solid, even surface and secure it, before you start to perform maintenance work.

1. Before you start maintenance work, park and secure the machine as described in the chapter "5.1Maintenance guide 5-2".
2. Clean the grease nipples marked by arrows.

   Articulated steering (2 points)
3. Use a grease gun to fill the grease nipples with a sufficient volume of lubricating grease.
4. Remove the used lubricating grease that is pressed out of the bearings.

NOTE

Perform lubrication more frequently, when working in a continually wet or salty environment.

5.7.6. Maintenance every 50 operating hours

All maintenance operations to be performed after 10 hours of operation also fall into this maintenance category.

Checking the service brake and oil level, refilling oil

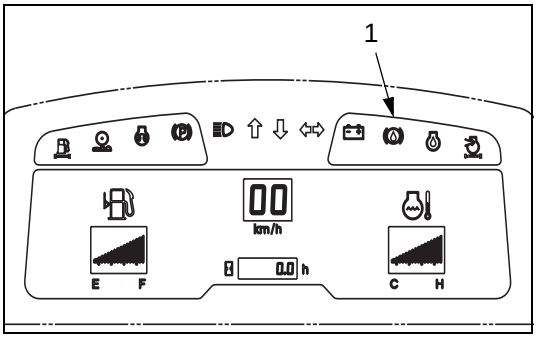

WARNING

- **Danger of accidents! If the oil level is too low, the service brake may break down!**
- **If the brake fluid supply control lamp (1) lights up, you must immediately stop and check the oil level.**

CAUTION

- **Danger of accidents! If you use usually available brake fluid for filling up, the operational efficiency of the brake system may be impaired!**
- **Use only the prescribed oil for filling up! Do not use brake fluid! Pay attention to utmost cleanness!**

1. For maintenance operations, park and secure machine as described in chapter "5.1. Maintenance guide" on page 5-2 .
2. Check the brake fluid level at the expansion tank. The oil level must be 0.394 - 0.787 inch (10 - 20 mm) below the upper edge of the expansion tank (marking).
3. If you detect a significant oil loss, inform the responsible Komatsu dealer.

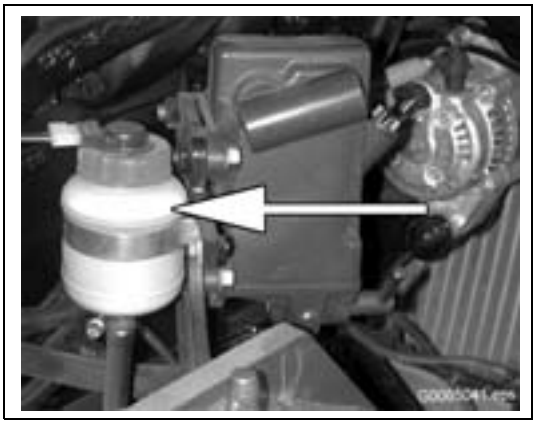

Battery – checking the acid level

WARNING

- **Danger of injury! The battery contains strongly aggressive battery acid which may squirt out and burn your eyes!**
- **Carry goggles and rubber gloves if you work on the battery. Immediately rinse your eyes or skin using plenty of water and go to see a doctor.**
- **Gases which may explode can form inside in the battery!**
- **Go not come with open fire or sparks into proximity of the battery. Do not smoke.**

1. For maintenance operations, park and secure the machine as described in chapter "5.1. Maintenance guide" on page 5-2.
2. Check the battery and pole terminals for proper fit.
3. Clean the environment of the plugs.
4. Remove all plugs and check whether the battery acid is at the acid level markings. Refill distilled water if the acid level is too low.

NOTE

In cold weather, refill distilled water only immediately before the starting the machine. The water can then mix with the battery acid and does not freeze.

5. Measure the specific density of the battery acid and read off the battery charging using the following conversion table.

Battery	Temperature			
	68°F (20°C)	41°F (5°C)	14°F (-10°C)	-13°F (-25°C)
Charge	Specific Density (kg/l)			
full	1,28	1,29	1,30	1,31
half	1,20	1,21	1,22	1,23
empty	1,12	1,13	1,14	1,15

6. Recharge insufficiently charged batteries.
7. Lock the cells with the cleaned plugs.

Lubrication, work unit

Lubricating points of the work unit

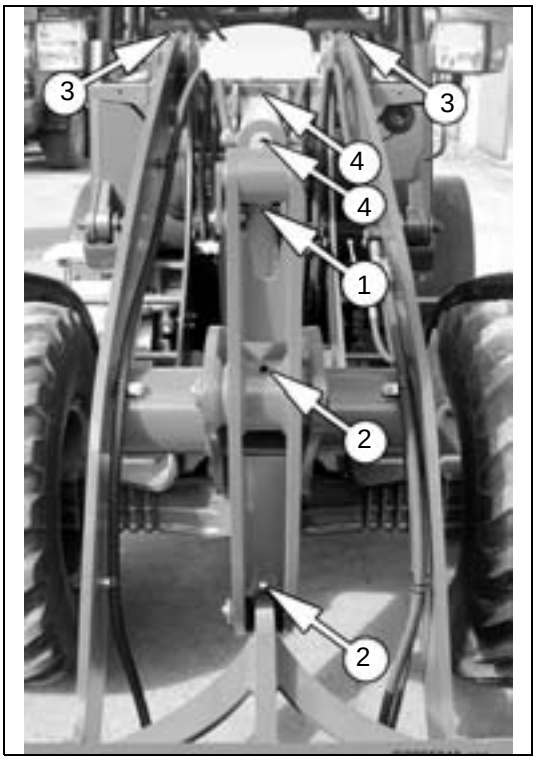

DANGER

- **If you perform maintenance operations at a machine which is not properly parked and secured, severe accidents may occur!**
- **Park the machine on firm, level ground and secure it before starting the maintenance operations.**

1. Park and secure machine for the maintenance operations as described in chapter "5.1. Maintenance guide" on page 5-2.
2. Clean the grease nipples which are indicated by the arrows.
3. Use a grease gun to press sufficient grease into the grease nipples.

(1)	Lifting cylinder right and left side	(2 locations)
(2)	Rocker arm	(2 locations)
(3)	Boom	(2 locations)
(4)	Tipping cylinder	(2 locations)
(5)	Quick-change unit	(2 locations)
(6)	Clamshell bucket	(6 locations)

4. Remove the old grease which is extruding at the bearings.

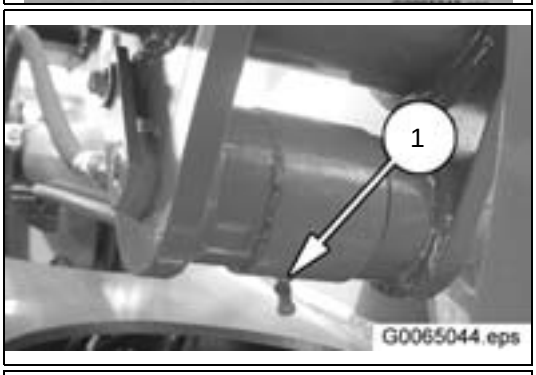

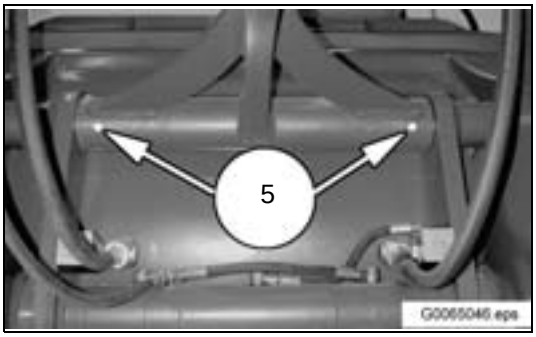

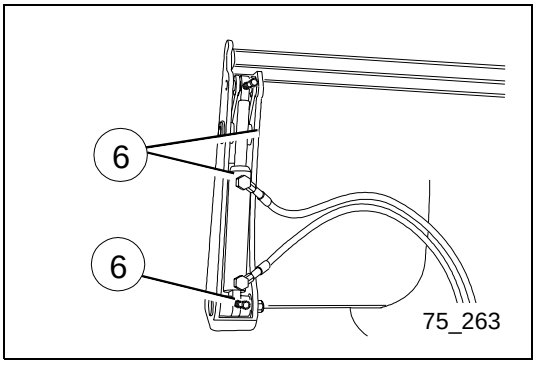

NOTE

If you operate in humid conditions or in a salty environment, you must reduce the lubricating intervals.

5.7.7. Maintenance every 250 operating hours

All maintenance operations to be performed after 10 and 50 hours of operation fall also into this maintenance category.

V-Belt, generator – checking and adjusting the tension

DANGER

- **There is danger of severe accidents, if you perform maintenance work at a machine that has not been parked and secured correctly!**
- **Park the machine on a solid, even surface and secure it, before you start to perform maintenance work.**
- **Danger of injuries! When the engine is in operation, there is danger of severe injuries by moving parts within the engine compartment! Do not work within the engine compartment, while the engine is in operation.**

1. Before you start maintenance work, park and secure the machine as described in the chapter "5.1. Maintenance guide" on page 5-2.
2. Press down the V-belt in the middle of the longest straight part. You should be able to press the V-belt down about 0.394 - 0.590 inch (10 - 15 mm).
   If you can press down the V-belt more than 0.394 - 0.590 inch (10 - 15 mm), adjust the tension as follows:
3. Loosen the fastening screw (1) at the generator.
4. Loosen the connecting screw (2) between the generator and the guide rail.
5. Loosen the fastening screw (3) at the guide rail.
6. Tilt the generator to adjust the tension of the V-belt.
7. Fasten the generator and the guide rail.
8. Check the tension of the V-belt and re-adjust it, if required.

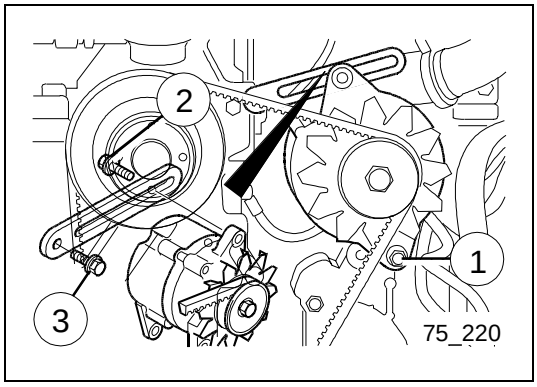

Air filter, removing and re-installing the filter insert, checking and cleaning the filter insert

Structure of the air filter

The air filter consists of the air filter housing, the dust exhaust valve, the filter cartridge and the safety filter.

Maintenance demand

If the air filter warning indicator (1) lights up, the air filter cartridge is dirty. You must clean or exchange it immediately.

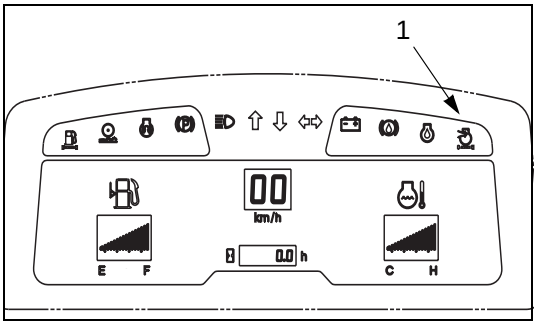

The filter insert has to be checked for perfect condition and be cleaned every 250 operating hours, no matter whether the control light is lit or not. If the filter insert is damaged or deformed, it must be exchanged.

A dirty safety filter indicates that the filter cartridge is damaged. In this case, both - filter cartridge and safety filter - must be exchanged.

Removing the filter cartridge

WARNING

Danger of injury! When the engine is running, you may hurt yourself on the movable components inside the engine room!
Do not perform any operation in the engine room with the engine running!

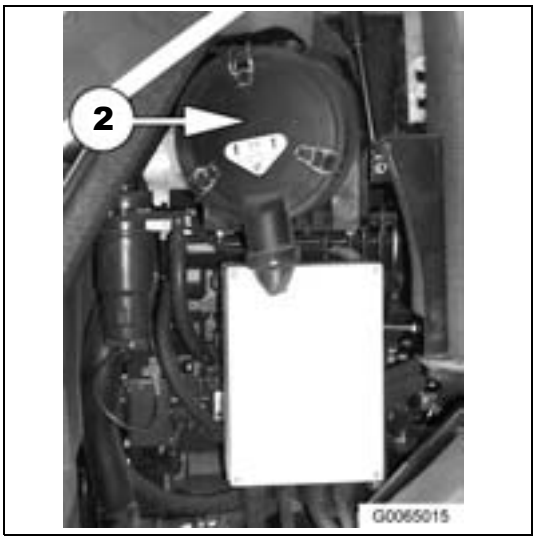

1. For maintenance operations, park and secure machine as described in chapter "5.1. Maintenance guide" on page 5-2 .
2. Open the twistlocks on the cover of the air filter housing (2).
3. Remove the cover of air filter housing.
4. Pull out the filter cartridge (3).
5. Clean thoroughly the interior of the filter housing with a cloth.

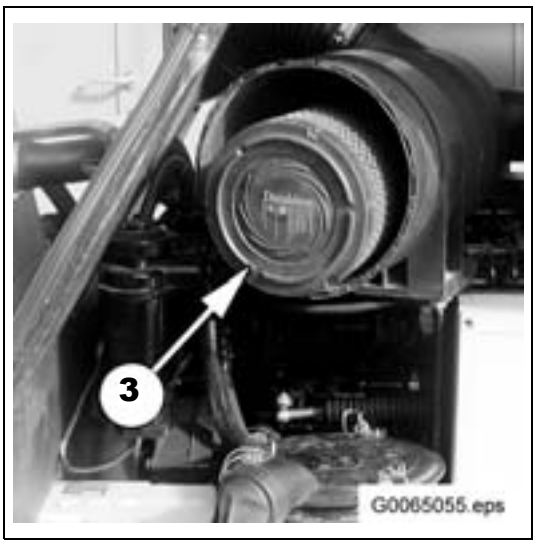

Cleaning or exchanging the filter cartridge

Depending on the degree of contamination, the air-filter insert can be cleaned using compressed air or water to which a mild detergent can be added.

NOTE

- **The air-filter insert must be replaced, if the air-filter control light lights up only short time after cleaning.**
- **Do not clean the safety filter (refer to chapter "Air filter, replacing the filter insert, replacing the safety filter" on page 5-51).**

- **Cleaning with compressed air**

CAUTION

Whirled up dust particles may hurt the eyes! Carry goggles if you clean the filter cartridges with compressed air.
Dangerous dust particles may irritate the lung! Carry a dust-protection mask if you clean the filter cartridges with compressed air.

Blow out the air filter cartridge with dry compressed air (max. 87 psi / 6 bars) starting with the interior and then proceeding to the outside. The air nozzle is to be moved up and down the paper with a minimum distance of 1.18 inch (3 cm). You can stop the cleaning if no more dust comes out.

Do not clean the cartridge by hitting it or by beating it against other objects.

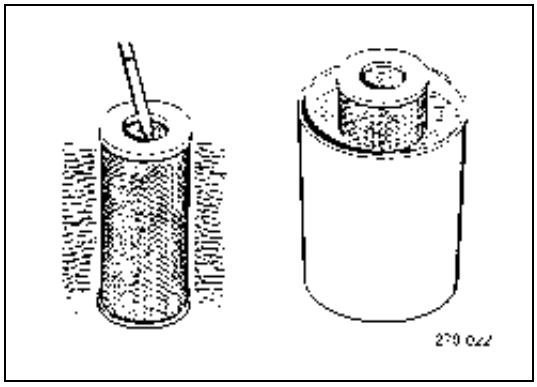

- **Cleaning with water and cleaning agents**

After the dust has been blown out, the filter cartridge can also be additionally cleaned using warm water with a mild cleaning agent max. 122°F (50°C) to remove adhering oil, grease, soot, etc. For this purpose, swing the cartridge back and forth in the solution.

Then, rinse the filter cartridge with clean water starting with the inside and then proceeding to the outside (max. 43.5 psi / 3 bars) and let it dry at a temperature of max. 122°F (50°C).

Checking the filter cartridge

Usually, it is required to check each air filter cartridge before it is re-installed. For this purpose, insert a into the cartridge and visually check the filter paper against the transmitted light. If you detect small holes or spots on which the paper is thin, the insert is defective and must be replaced.

Check filter cartridges for damaged seals.

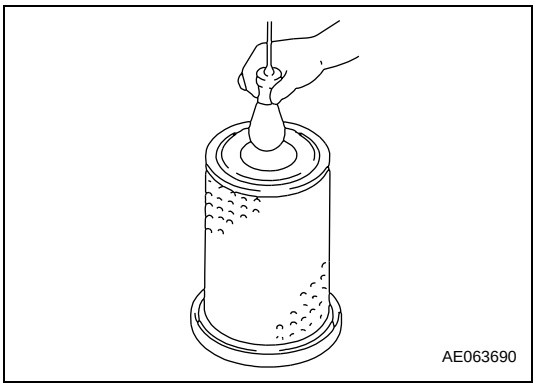

NOTE

Also new filter cartridges must be checked before they are assembled.

Assembling the air filter cartridge

1. Check the safety filter for proper fit.
2. Insert the filter cartridge into filter housing in such a way that the seal of the insert locks firmly on the collar of the housing rear panel.
3. Assemble the air filter cap.

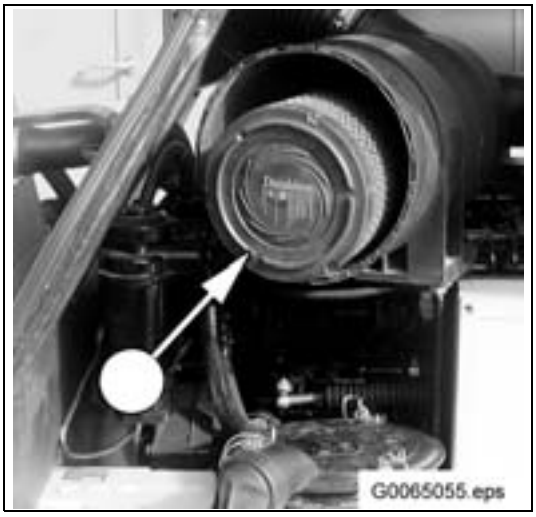

NOTE

If the control lamp lights up again after a short time, you must replace both, the air filter cartridge and the safety filter (refer to chapter "Air filter, removing and re-installing the filter insert, checking and cleaning the filter insert" on page 5-42).

Lubrication, steering cylinder

NOTE

If you operate in humid conditions or in a salty environment, you must shorten the lubricating intervals.

DANGER

- **If you perform maintenance operations at a machine which is not properly parked and secured, severe accidents may occur!**
- **Park the machine on firm, level ground and secure it before starting the maintenance operations.**

1. For maintenance operations, park the machine as described in chapter "5.1. Maintenance guide" on page 5-2
2. Clean the grease nipples which are indicated by the arrows.
3. Use a grease gun to press sufficient grease into the grease nipples.
4. Remove the old grease which is extruding at the bearings.

   (1) Front steering cylinder (1 location)

   (2) Rear steering cylinder (1 location)

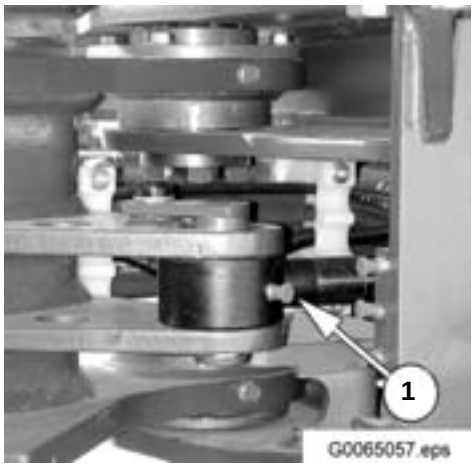

Lubrication, self-aligning bearings of rear axle

NOTE

If you operate in humid conditions or in a salty environment, you must shorten the lubricating intervals.

DANGER

- **If you perform maintenance operations at a machine which is not properly parked and secured, severe accidents may occur!**
- **Park the machine on firm, level ground and secure it before starting the maintenance operations.**

1. For maintenance operations, park the machine as described in chapter "5.1. Maintenance guide" on page 5-2
2. Clean the grease nipples which are indicated by the arrows.
3. Use a grease gun to press sufficient grease into the grease nipples.
4. Remove the old grease which is extruding at the bearings.

   Self-aligning bearings of rear axle (1) (2)

5.7.8. Maintenance every 500 operating hours

All maintenance operations to be performed after 10, 50, 100 and 250 hours of operation also fall into this maintenance category.

Engine – changing oil

WARNING

- **Frequent skin contact with used engine oil may cause skin lesions!**
  Thoroughly remove any engine oil adhering to your skin.
- **Hot engine oil may cause scalding!**
  Wear rubber gloves and place the oil trough under the discharge opening in such a way that you do not get in contact with the oil when it is running out.

CAUTION

- **There is danger of severe accidents, if you perform maintenance work at a machine that has not been parked and secured correctly!**
- **Park the machine on a solid, even surface and secure it, before you start to perform maintenance work.**

NOTE

Do not perform an oil change, unless the engine is switched off and at operating temperature.

1. Before you start maintenance work, park and secure the machine as described in the chapter "5.1. Maintenance guide" on page 5-2.
2. Put the oil trough under the drain screw (arrow).
3. Remove the cover cap (1) from the drain valve.
4. Screw on the drain hose (2) on the drain valve. This will cause the drain valve to open.
5. Drain the oil.
6. Check the removed oil for metal parts or undesired material. If the oil contains such particles, inform the responsible Komatsu dealer.
   Detach drain hose (2) from drain valve. This causes the drain valve to close.
7. Fit cap back onto drain valve (1).

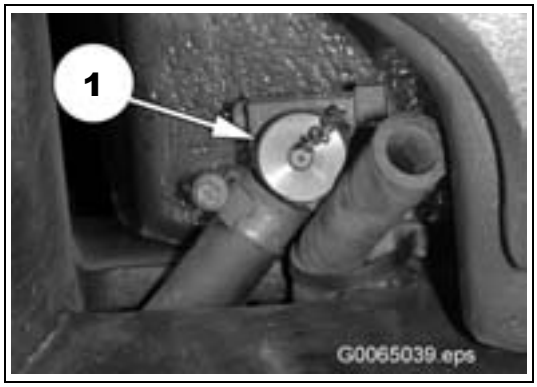

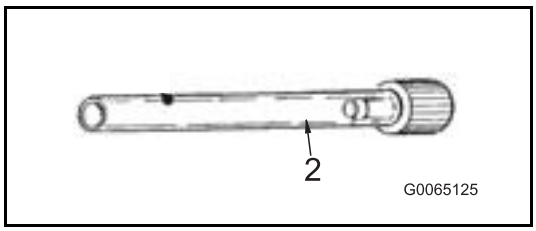

Replacing the oil filter cartridge

1. Turn the filter screwdriver anti-clockwise to unscrew the filter cartridge (1).
2. Clean the filter holder. Completely fill up the new filter cartridge with engine oil. Slightly oil both the gasket and the thread of the cartridge with engine oil. Screw in the filter cartridge again.
3. When installing the filter cartridge, make sure that the sealing surface of the cartridge slightly touches the filter holder. Then, tighten the filter cartridge according to the filter manufacturer's specification.

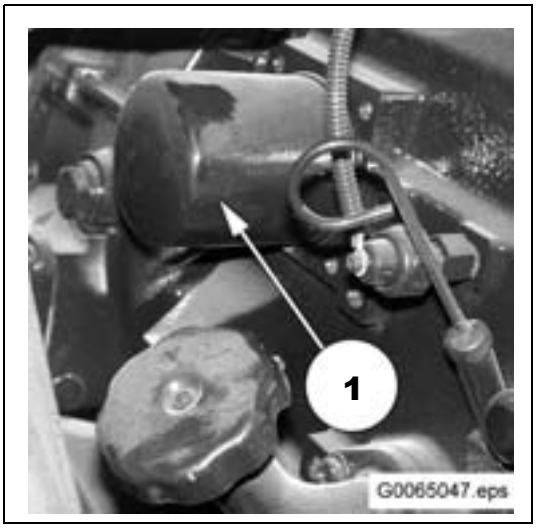

4. After replacing the filter cartridge, fill in clean engine oil through the oil filler (2) until the oil level reaches up to the (H) marking on the oil dipstick.
   For details on recommended engine oils see section "5.3. Lubricants, fuels and filling capacities" on page 5-15.
5. Close the oil filler (2).
6. Let the engine run in idle for about five minutes and check whether oil is leaking out.
7. Switch off the engine.
8. Wait about ten minutes, then check the oil level again. The oil level must be between the 'H' and 'L' markings on the oil dipstick.
   For further details see section "Engine, checking the oil level, topping up oil" on page 5-24.

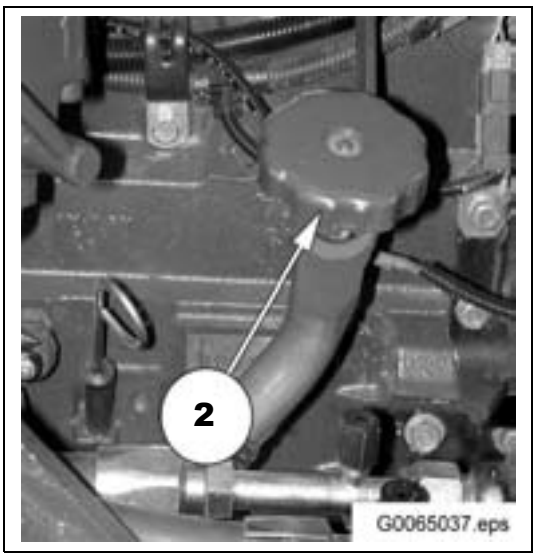

Changing the fuel filter element

DANGER

- **Danger of fire! Fuel may ignite on hot surfaces!**
- **Only change the filter elements if the engine has sufficiently cooled down. Stay away with open fire or sparks while handling with fuel. Do not smoke.**

1. For maintenance tasks, park and secure the machine as described in chapter "5.1. Maintenance guide" on page 5-2.
2. Clean the area around the fuel filter (1).
3. Unplug the connector (2) of the sensor (3).
4. Use the filter wrench to unscrew the filter cartridge counterclockwise.
5. Unscrew and remove the sensor (3) and O-ring (4) from the fuel filter.
6. Screw the sensor (3) and new O-ring (4) onto the new fuel filter.
7. Clean the filter head (5).
8. Fill the new filter cartridge (1) with clean fuel.
9. Apply a thin layer of oil to the sealing surfaces of the filter cartridge.
10. When reinstalling the filter cartridge, screw it in by hand until the seal makes contact. Subsequently tighten the filter cartridge (observe the instructions of the filter manufacturer).
11. Reconnect the connector (2) of the sensor (3).
12. Subsequently vent the fuel system.
13. Start the engine and check for leaks.

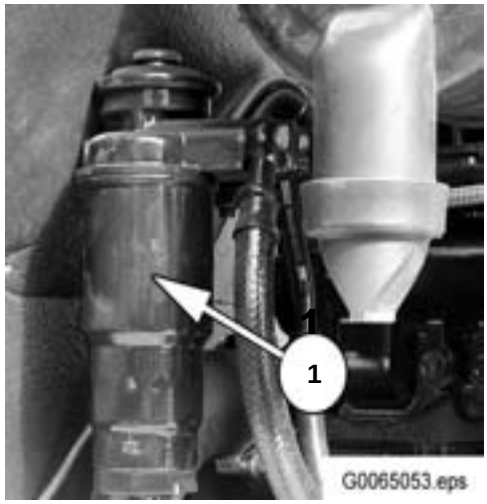

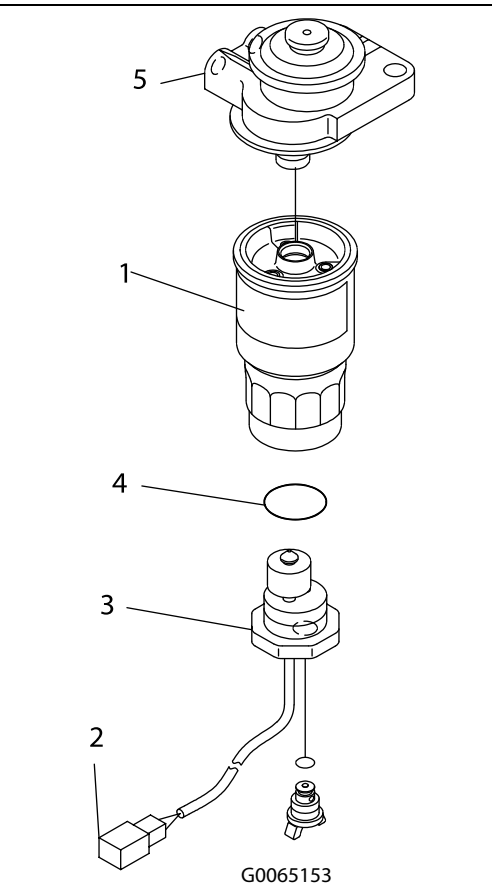

Bleeding the fuel system

DANGER

Fuel in the injection system is under pressure. Carry goggles and rubber gloves if you work on the injection pump. If you are hit by a high-pressure fuel beam, immediately go into medical treatment.

For maintenance operations, park and secure machine as described in chapter "5.1. Maintenance guide" on page 5-2.

Bleeding the low pressure side:

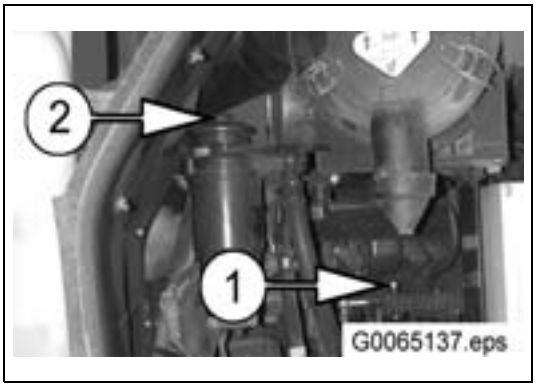

1. Loosen the vent screw (1) on the injection pump.
2. Move the pump button (2) on the fuel filter until there are no more bubbles in the fuel flowing from the vent screw.
3. Retighten the vent screw (1).

Bleeding the high pressure side:

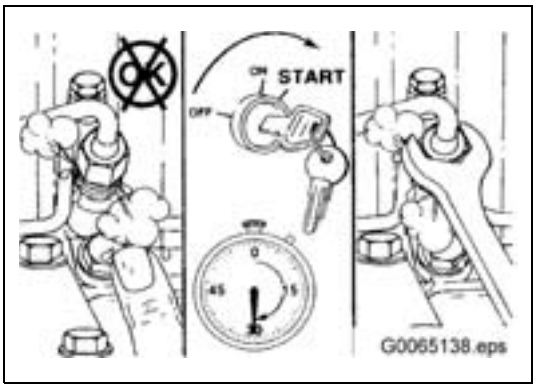

WARNING

Danger of injury! When the engine is running, you may hurt yourself on the movable components inside the engine room.

1. Crank the engine (max. 30 seconds) and vent the lines consecutively, until the engine is running smoothly.

NOTE

If the fuel system has run empty during driving, or if repairs or maintenance operations are to be performed, it is necessary to bleed the system.

Air filter, replacing the filter insert, replacing the safety filter

Replacing the filter insert

NOTE

If the filter element is replaced for the third time in sequence, it is required to replace also the safety filter.

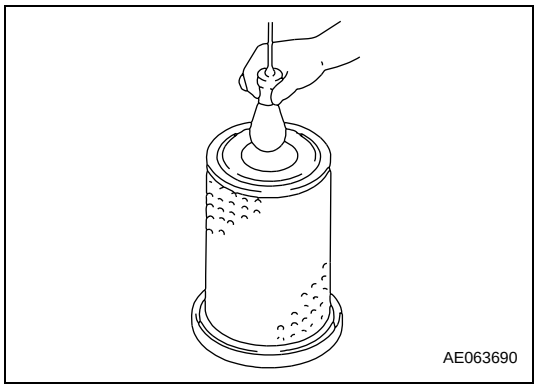

1. Open the air filter and remove the air-filter insert (1). Proceed as described in chapter "Air filter, removing and re-installing the filter insert, checking and cleaning the filter insert" on page 5-42
2. Use a source of light (e.g. **torch**) to check the new air filter for damages
3. Re-install the air-filter insert as described in chapter "Air filter, removing and re-installing the filter insert, checking and cleaning the filter insert" on page 5-42

Replacing the safety filter

NOTE

If the filter element is replaced for the third time in sequence, it is required to replace also the safety filter.

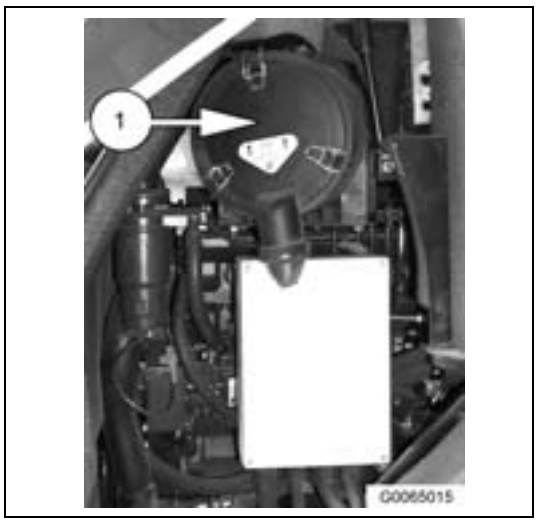

1. Open the air filter and remove the air-filter insert (1). Proceed as described in chapter "Air filter, removing and re-installing the filter insert, checking and cleaning the filter insert" on page 5-42.
2. Pull out the safety filter (2).
3. In order to prevent that dust enters the interior of the engine, it is required to the air aspiration opening of the engine with a clean cloth or similar.
4. Clean the interior of the air-filter enclosure and **remove the cloth from the air aspiration opening.**
5. Use a source of light (e.g. **torch**) to check the new safety filter for damages. If it is in perfect condition, press it firmly into place.
6. Re-install the air-filter insert as described in chapter "Air filter, removing and re-installing the filter insert, checking and cleaning the filter insert" on page 5-42.

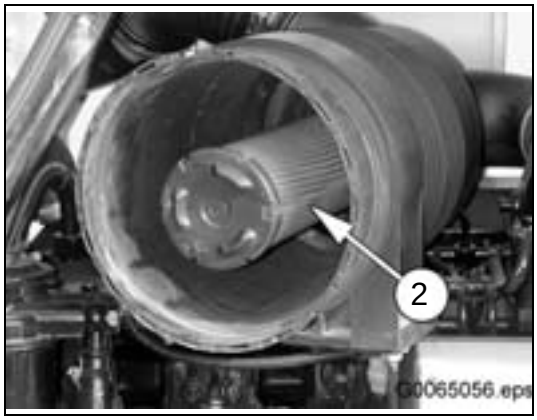

Heater/air conditioning – cleaning/replacing filter fleece

Clean filter fleece of heater unit

NOTE

If the filter fleece is too dirty it must be replaced.

1. Remove screws on the front cover (1) on the driver's cab (4 screws).
2. Withdraw filter (2) from the heater unit (3).
3. Clean the filter in warm water (86°F - 104°F / 30 - 40°C) which has had a little household cleaning solvent added to it.

   Caution: Neither rub the filter fleece nor wring it out.
4. Allow the filter fleece to dry.
5. Insert dried filter fleece (2) back into the heater unit (3).

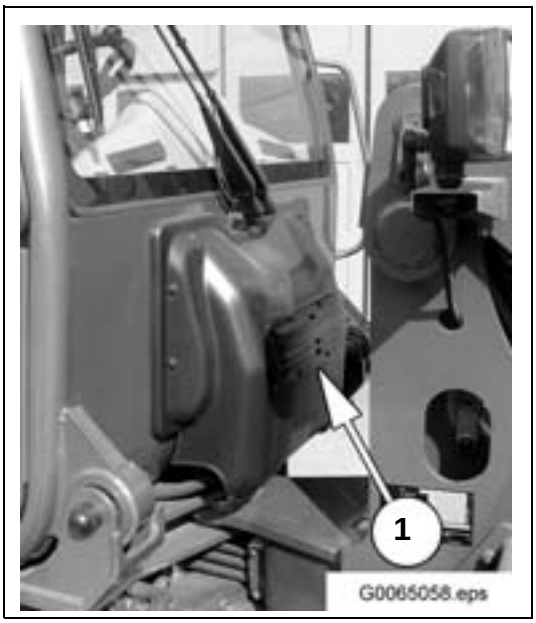

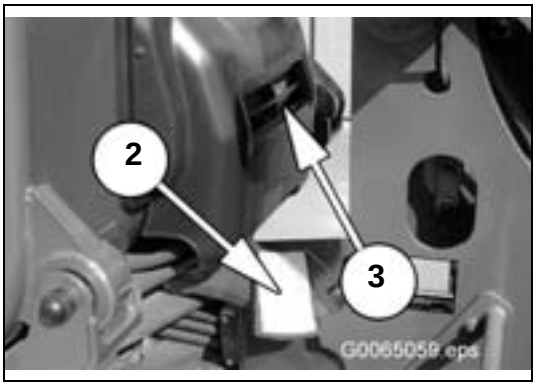

6. Switch on the blower and check the air flow at the air-outlet nozzles to the right and left of the steering column.

   Caution: The right and left circulating air jets (arrow) must be open.
7. If the air flow is still too weak the filter fleece must be replaced.
8. Screw front cover (1) back on.

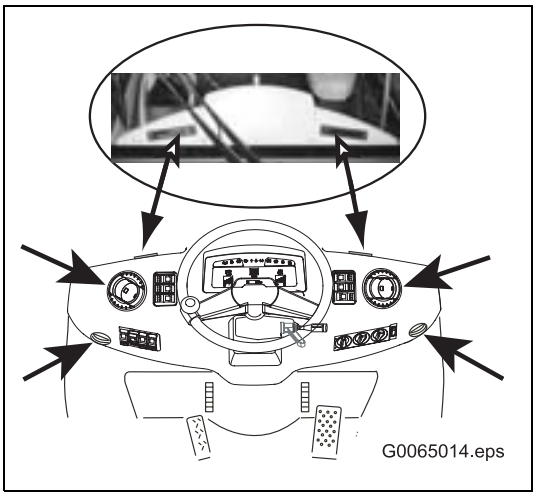

Cleaning the condenser of air conditioning

NOTE

Do not wash the condenser with a steam cleaner. Otherwise, the condenser will get hot and may break down.

If there is mud or dust sticking to the air conditioner condenser, clean it with water.

If the water pressure is too high, the fins may get deformed. When washing with a high pressure washing device, apply the water from a reasonable distance.

E.C.S.S.-pressure accumulator (Option) - checking gas pressure

Ask your Komatsu dealer to check the accumulator gas pressure. (Gas pressure: 20 bar)

Front and rear axle – checking the oil level

CAUTION

- **There is danger of severe accidents, if you perform maintenance work at a machine that has not been parked and secured correctly!**
- **Park the machine on a solid, even surface and secure it, before you start to perform maintenance work.**

Before you start maintenance work, park and secure the machine as described in the chapter "5.1. Maintenance guide" on page 5-2.

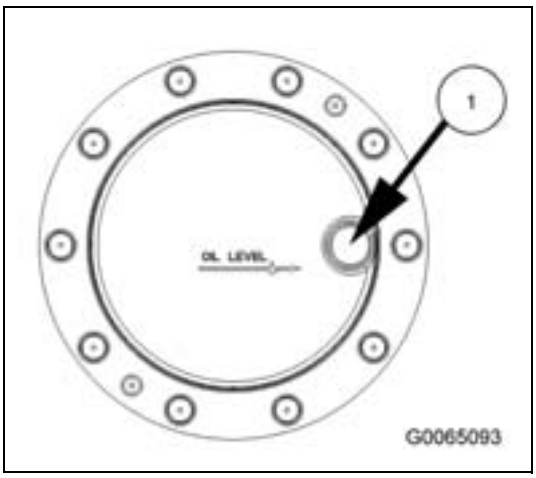

Planet gear

1. Start engine, raise work unit and drive the machine until the oil level marking at the planetary gearing of the wheel which you are checking is in horizontal position. Switch off engine. Lower work unit and apply parking brake.
2. Unscrew the locking screw (1) of the drill hole.
3. Check the oil level. The oil level must reach up to the bottom edge of the check drill hole.
4. If the oil level is too low, top up oil via the check drill hole of the screw plug.

   For details on recommended oils, see section "5.3. Lubricants, fuels and filling capacities" on page 5-15.
5. Tightly screw in the screw plug.
6. Check the oil level at the other wheel of the front and rear axle. For this purpose, proceed as described under points 1 through 5.

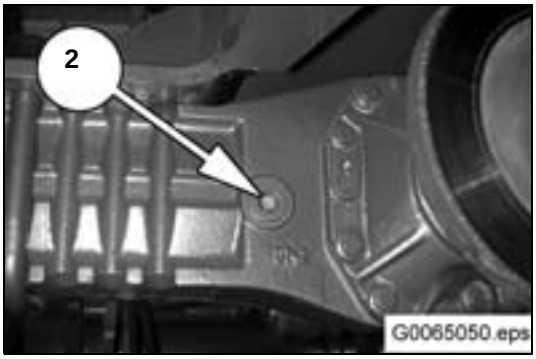

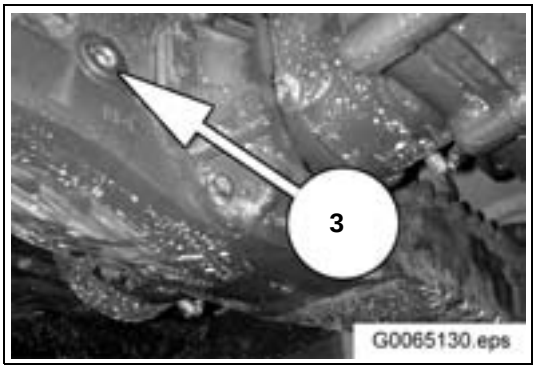

Differential

1. Unscrew the locking screw (2) of the drill hole at the front axle. Check the oil level as described under points 3 through 5 in section "Planet gear".
2. Unscrew the locking screw (3) of the drill hole at the rear axle. Check the oil level as described under points 3 through 5 in section "Planet gear".

Transfer box gearing – checking the oil level

NOTE

If the engine is not running, the oil level in the transfer box can significantly rise. Therefore, only check the gear oil level with the engine running idle at operating temperature. The gearshift assembly must be in neutral position.

DANGER

- **If you perform maintenance operations at a machine which is not properly parked and secured, severe accidents may occur!**
- **Park the machine on firm, level ground and secure it before starting the maintenance operations.**

1. For maintenance operations, park and secure machine as described in chapter "5.1. Maintenance guide" on page 5-2.
2. Clean the screw plug (1) and the adjacent environment.
3. Unscrew the screw plug.
4. Check the oil level. The oil level must be at the lower edge of the control drill hole of the screw.
5. If the oil level is too low, fill up with oil using the control drill hole of the screw (1).
6. Clean the screw plug and insert a new packing ring.
7. Re-tighten firmly the screw plug.

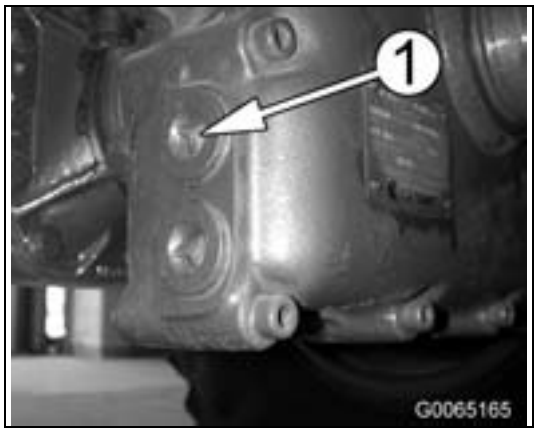

5.7.9. Maintenance every 1000 operating hours

All maintenance operations to be performed after 10, 50, 100, 250 and 500 hours of operation also fall into this maintenance category.

V-Belt, generator – checking and adjusting the tension

DANGER

- **There is danger of severe accidents, if you perform maintenance work at a machine that has not been parked and secured correctly!**
- **Park the machine on a solid, even surface and secure it, before you start to perform maintenance work.**
- **Danger of injuries! When the engine is in operation, there is danger of severe injuries by moving parts within the engine compartment! Do not work within the engine compartment, while the engine is in operation.**

1. Before you start maintenance work, park and secure the machine as described in the chapter "5.1Maintenance guide 5-2".
2. Press down the V-belt in the middle of the longest straight part. You should be able to press the V-belt down about 0.394 - 0.590 inch (10 - 15 mm).
   If you can press down the V-belt more than 0.394 - 0.590 inch (10 - 15 mm), adjust the tension as follows:
3. Loosen the fastening screw (1) at the generator.
4. Loosen the connecting screw (2) between the generator and the guide rail.
5. Loosen the fastening screw (3) at the guide rail.
6. Tilt the generator to adjust the tension of the V-belt.
7. Fasten the generator and the guide rail.
8. Check the tension of the V-belt and re-adjust it, if required.

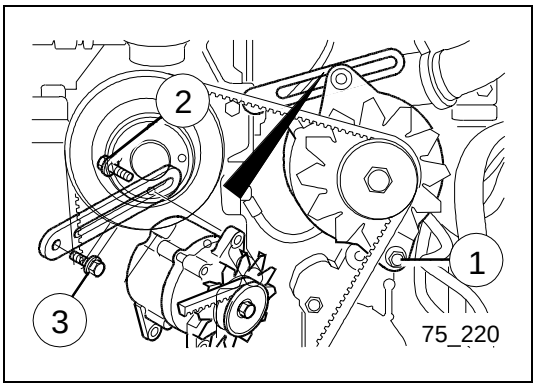

Service Brake - Checking and adjusting oil

Alll repairs on the brake system must be performed by a garage which is authorised by Komatsu.

- Changing oil
- Checking tubes and lines
- Checking the brake disks for wear and tear
- Adjusting the clearance of the brake disks

Checking and adjusting system pressures

Have the system pressures checked and adjusted at an authorised Komatsu garage.

Hydraulics – Exchanging the venting filters

WARNING

- **Repeated skin contact with used hydraulic oil can cause skin damage and other bodily harm!**
- **Wear rubber gloves when exchanging the filter. Carefully wash off the hydraulic oil that has come into contact with the skin.**

1. Lower the work unit to the ground.
2. Switch off the machine.
3. Unscrew the cover on the hydraulic tank (arrow).
4. Clean the filter (1) and the area surrounding it.
5. Unscrew the old filter (1) and O-ring.
6. Screw in a new filter (1) with O-ring and hand-tighten.
7. Do a trial run to check that the system is free of leakage.
8. Screw the cover back onto the hydraulic tank.

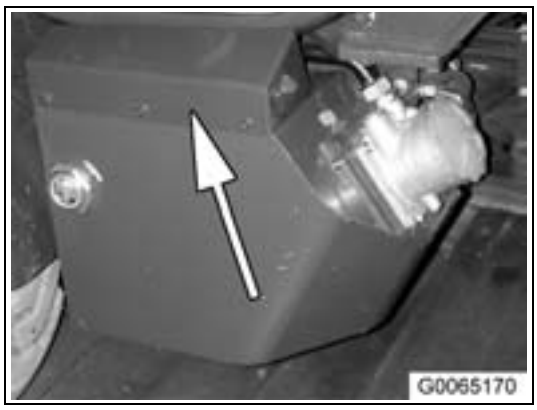

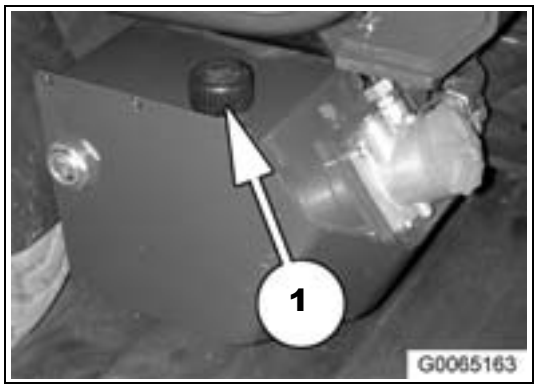

Hydraulic system, replacing the filter insert

WARNING

- **Frequent contact between used hydraulic oil and skin may cause skin lesions and other physical damage!**
- **Wear rubber gloves when changing the filter. Thoroughly wash off any hydraulic oil adhering to your skin.**

1. Lower the work unit onto the floor.
2. Park the machine.
3. Turn the inlet and ventilation screw (1) several revolutions to let the pressure escape.
4. Clean the surface of the filter cap (2) and the area around the filter cap.
5. Unscrew the filter cap.
6. Pull out the filter element (3) at the handle (4) .
7. Pull the filter element off the handle and dispose of the filter element.
8. Clean the inner surface of the filter housing. Before you start cleaning, check that there is no undesired material in the filter housing.
9. Put the handle onto the new filter element.
10. Insert the new filter element into the housing.
11. Screw on the filter cap and tighten it with 2.0 kpm (20 Nm).
12. Loosen the feeding and ventilation screw by turning it a couple of rotations.
13. Start up the engine.
14. Bring the boom into its highest position.
15. Bring bucket into its tip-in position (up to its limit stop).
16. Re-tighten the feeding and ventilation screw.
17. Perform a test run and check that the system is tight.

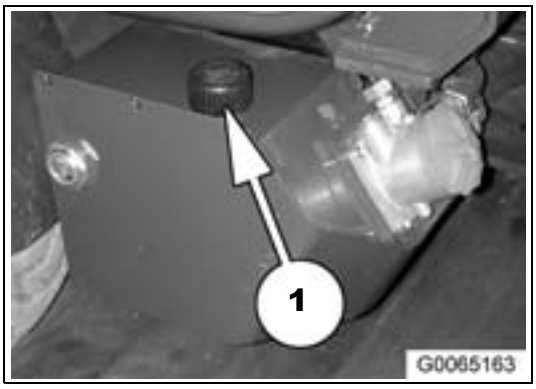

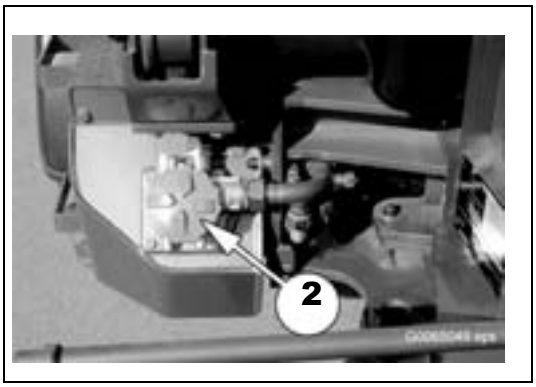

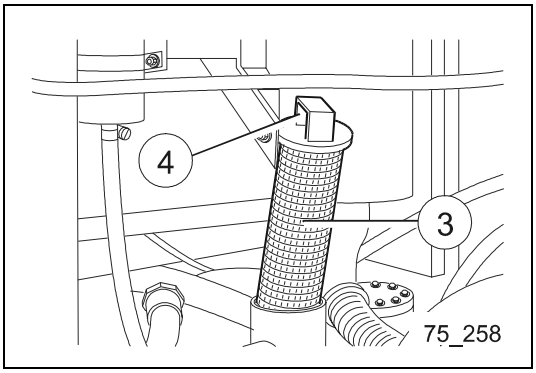

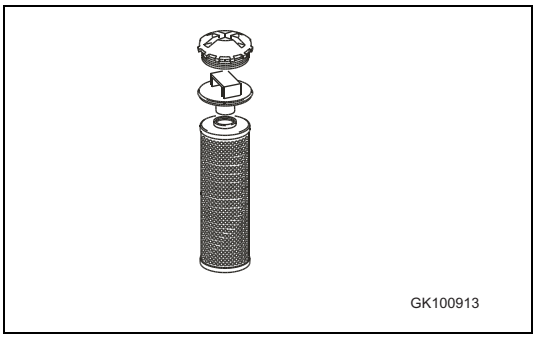

5.7.10. Maintenance every 1500 operating hours

All maintenance operations to be performed after 10, 50, 100, 250, 500 anfd 1000 hours of operation also fall into this maintenance category.

Front and rear axle – oil change

WARNING

- **Frequent contact between used hydraulic oil and skin may cause skin lesions and other physical damage!**
- **Wear rubber gloves when changing the oil. Thoroughly wash off any hydraulic oil adhering to your skin.**

DANGER

- **There is danger of severe accidents, if you perform maintenance work at a machine that has not been parked and secured correctly!**
- **Park the machine on a solid, even surface and secure it, before you start to perform maintenance work.**

Planetary gearing

1. Start engine. Raise work unit and drive the machine until the drain plug (1) for the planetary gearing on the wheel where you want to change the oil has reached its lowest point. Switch off engine. Lower work unit and apply parking brake.
2. Place drip pan or container underneath the drain plug (1).
3. Unscrew drain plug (1) and drain oil into container.
4. Drive machine until the planetary gearing drain plug hole (1) is in a horizontal (3 o'clock) position.
5. Fill planetary gearing with oil until the oil reaches the lower lip of the drain plug hole (1).
6. Clean drain plug and attach clean, undamaged (or new) washer.
7. Screw drain plug in tight.
8. Change oil in other wheels of the front and rear axle following the same procedure as described under no. 1 - 7 above.

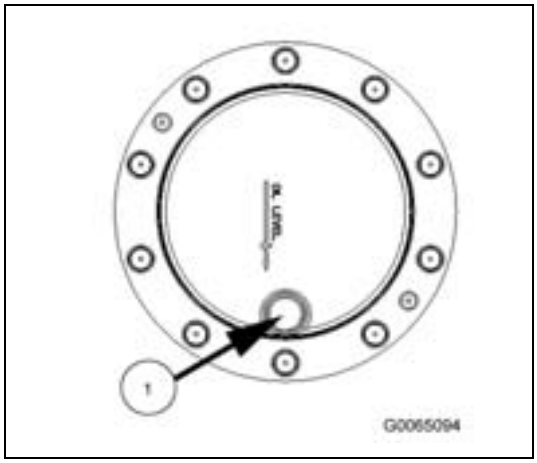

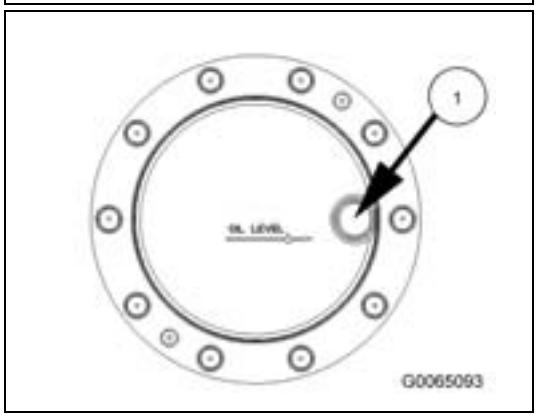

Differential

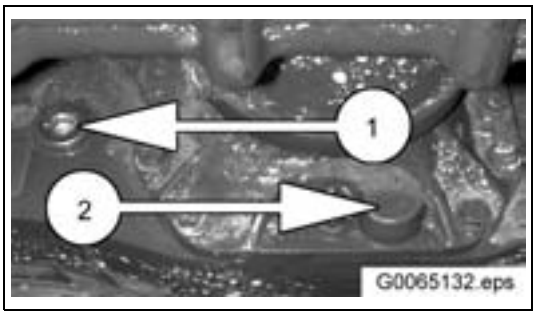

1. Put a container under the oil drain hole (2)

   Remove the screw plugs of the oil drain hole (2) and the fill and check hole (1). Drain the oil.

2. Clean the screw plugs and equip with seals that are in perfect order.

3. Screw tight the screw plug (2).

4. Fill in oil through the fill and check hole (1), until the oil reaches the lower edge.

5. Screw tight the screw plug (1).

6. Perform this task at the front and the rear axles.

Transfer box gearing – changing oil

WARNING

- **Frequent contact between used oil and skin may cause skin lesions and other physical damage!**
- **Wear rubber gloves when changing the oil. Thoroughly wash off any oil adhering to your skin.**

DANGER

- **There is danger of severe accidents, if you perform maintenance work at a machine that has not been parked and secured correctly!**
- **Park the machine on a solid, even surface and secure it, before you start to perform maintenance work.**

Have an oil trough with a sufficient capacity ready.

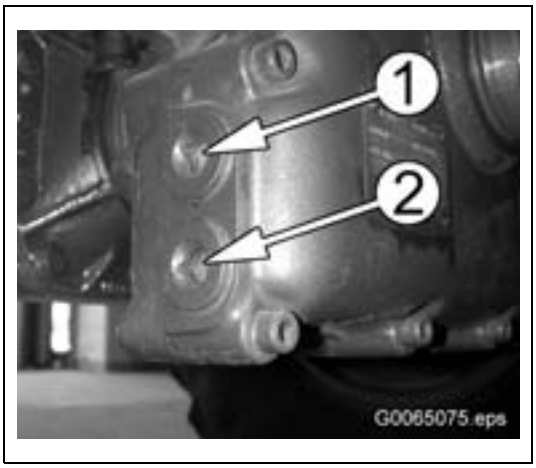

1. Before you start maintenance work, park and secure the machine as described in the chapter "5.1. Maintenance guide" on page 5-2.

2. Unscrew the screw plugs (1) and (2) .

3. Drain the oil.

4. Clean the screw plugs and replace the gaskets.

5. Tightly screw in the screw plug (2).

6. Fill in oil via the check drill hole (1), until the oil reaches up to the bottom edge of the check drill hole.

7. Tightly screw in the screw plug (1)

5.7.11. Maintenance every 2000 operating hours

All maintenance operations to be performed after 10, 50, 100, 250, 500 and 1000 hours of operation also fall into this maintenance category.

Cooling system – exchanging coolant and cleaning the system

WARNING

- **Danger of being burnt! The coolant is under pressure if the engine is hot. Hot coolant may squirt out during opening.**
- **Check the coolant level only after the engine has sufficiently cooled down. Open the cover of the radiator (arrow) by turning it slowly so that the pressure can escape.**

DANGER

Danger of fire! Antifreeze may ignite at the hot engine! Wait until the engine has cooled down, before refilling antifreeze.

NOTE

- **The coolant must be exchanged after max. two years.**
- **While preparing the coolant, make sure to adhere to the prescribed mixing proportions to ensure a freezing protection up to -34.6°F (-37°C)! This is also valid for countries with moderate climate.**

The coolant has to consist of 50 vol.% coolant additive and 50 vol.% water. Only monoethylene glycol and dieethylene glycol are permitted as coolant additives which are both contained in commercially available standard coolants.

If the water contains too much lime, the cooling system may be impaired. In this case, use a mixture of potable water and distilled or deionized water.

In areas where the water is hard, always add KOMATSU genuine corrosion resistor agent KI. One packet of corrosion resistor (No. 600-411-1120) agent contains 100g (0.22 lb). The standard density of the mixture should be 7g/liter (0.065 oz/US gal).

Draining off the coolant

1. Switch off the engine and let it cool down.
2. Swivel the radiator cap (arrow) slowly to the side, up to the first fixed stop, and let the pressure escape. Then press down the cover, while proceeding with swivelling. Then, remove the cover.
3. Stretch a tube onto the drain opening (1) of the discharge cock and insert the other tube end into the collecting container.
4. Open the discharge cock and let the coolant run off.
5. Close the discharge cock.

Cleaning the cooling system

NOTE

The cooling system may only be filled slowly since otherwise the included air cannot escape completely. After filling up, wait approx. 3 minutes and refill liquid, if required.

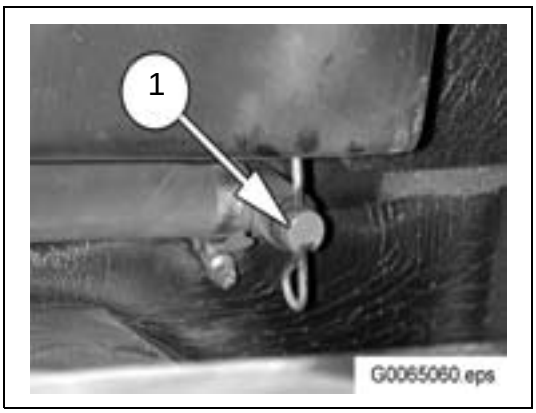

1. Fill up the cooling system slowly with cleaning fluid

   (Adhere to the specifications of the cleaning agent manufacturer)
2. With the radiator cap opened, let the engine run for 5 minutes with a coolant temperature of approx. 176°F (80°C).
3. After the cleaning, switch off the engine and open the drain valve (1) to let the entire cooling system run empty.

   Re-lock the drain valve (1) and slowly fill the cooling system with clean water.
4. Let the engine run for five minutes with a coolant temperature of approx. 176°F (80°C).
5. Then, let the cooling system run empty again. If the extruding water is not clean, the cooling system must be re-flushed until the extruding water is clean.
6. Close the drain valve.

Filling Up Coolant

1. Empty and clean the expansion tank.
2. Prepare the coolant as prescribed.
3. Fill up the coolant slowly into the cooling system up to the overflow shoot of the radiator.
4. To bleed the cooling system while the radiator cap is removed, let the engine run idle for three minutes with its lower speed (rpm) and then for another five minutes with its top speed. Fill up with coolant if the coolant level in the radiator is dropping.
5. Switch off the engine, wait approx. three minutes and then refill coolant up to overflow shoot of the radiator. Re-lock the radiator.
6. Fill up coolant into the expansion tank, until the coolant level is between the MAX and MIN markings.

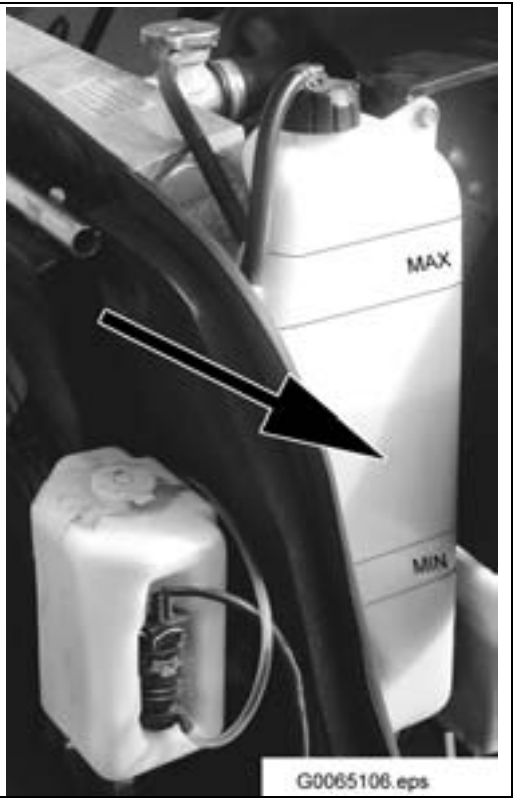

Checking and adjusting the valve clearance

Have the valve clearance checked and adjusted at an authorised Komatsu garage.

Hydraulic system, oil change

WARNING

- **Frequent skin contact with used hydraulic oil may cause skin damages and other injuries! Carry rubber gloves for exchanging the filter. Wash any spilled hydraulic oil thoroughly from your skin.**
- **Danger of being burnt! The hydraulics tank is under pressure. Hot hydraulic oil may squirt out and cause injuries! Carry rubber gloves and hold the oil trough under the discharge hole in such a way that you cannot come into contact with the extruding oil.**

Keep a collecting container with sufficient capacity ready.

1. Park the machine on level ground.
2. Lower the work unit onto the ground.
3. Switch off the engine.
4. Secure on the right side the articulated steering with the locking bolt.

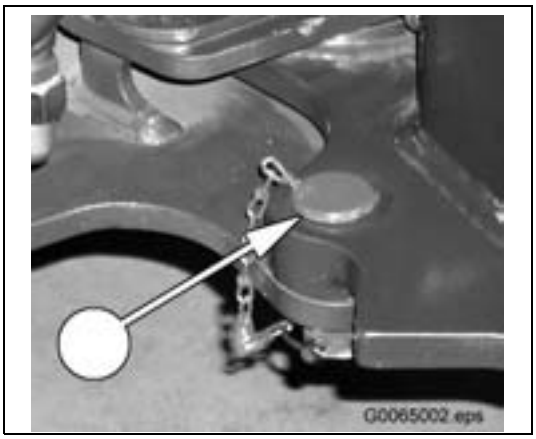

5. Unlock the feeding and ventilation screw (1) by turning it slowly to let the pressure escape.

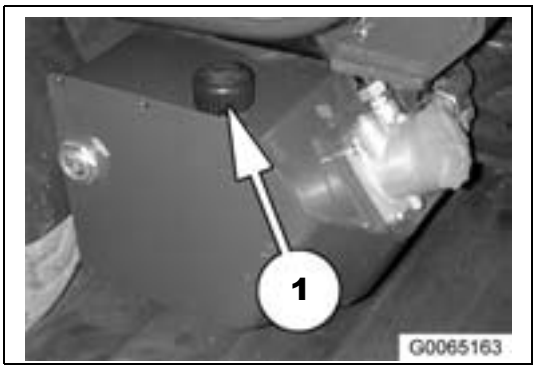

6. Loosen the screw plug (2) of the hydraulic oil tank and let the oil run off.
7. Open drain valve (3) gradually to drain the oil.
8. After draining the oil, close drain valve (3).
9. Re-tighten the screw plug with its seal being in perfect condition.
10. Unscrew the feeding and ventilation screw (1).
11. Fill up oil until the oil level is between the centre and top edge of the inspection glass.
12. Start up the engine.
13. Raise and lower the work unit several times, while operating the bucket at the same time.
14. Lower the bucket onto the ground and bring it into mining position.
15. Check the oil level with the engine running idle in its low speed position.
16. Ventilate the hydraulic oil tank (see section "Ventilating the hydraulic oil tank" on page 5-65).

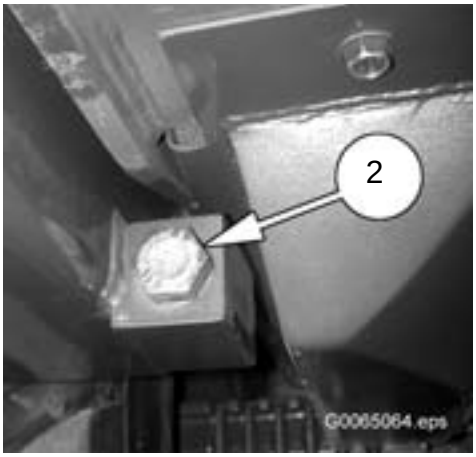

NOTE

Do not fill up with too much hydraulic oil! Otherwise, the pressure in the hydraulic oil container increases inadmissibly high.

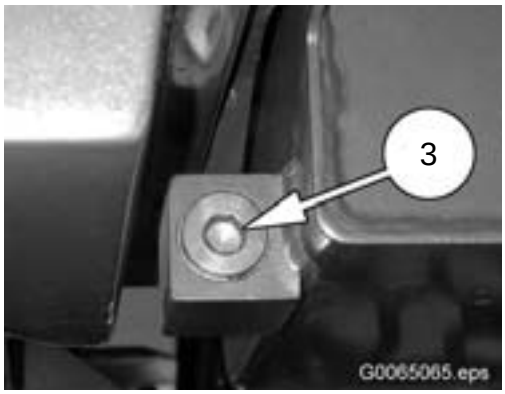

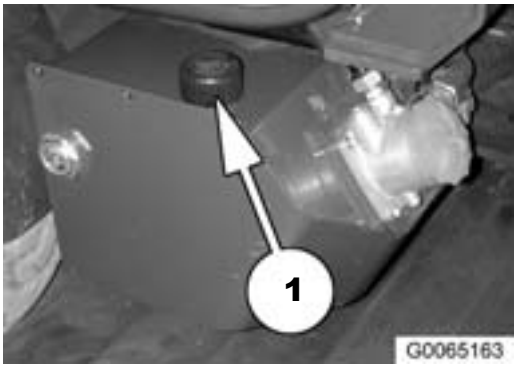

Ventilating the hydraulic oil tank

1. Loosen the feeding and ventilation screw by turning it a couple of rotations.
2. Start up the engine.
3. Bring the boom into its highest position.
4. Bring bucket into its tip-in position (up to its limit stop).
5. Re-tighten the feeding and ventilation screw.

Checking the fuel pump

Let the fuel pump be checked at a garage which is authorised by Komatsu.

Checking the fuel and coolant tubes, replacing the tubes (if required)

Have the fuel and coolant tubes checked and replaced, if required, at an authorised Komatsu garage.

Checking the water pump

Let the water pump be checked at a garage which is authorised by Komatsu

5.7.12. Maintenance every 4000 operating hours

All maintenance operations to be performed after 10, 50, 100, 250, 500, 1000 and 2000 hours of operation also fall into this maintenance category.

Lubrication, universal joint

DANGER

- **If you perform maintenance tasks on a machine that is not properly parked and secured, there is danger of severe accidents!**
- **Park the machine on hard, level ground and secure the machine before you start with the maintenance tasks.**

1. For maintenance tasks, park and secure the machine as described in chapter "5.1. Maintenance guide" on page 5-2.
2. Unscrew the sealing plug (arrow) from the cardan shaft.
3. Screw a grease nipple (1) into the cardan shaft.
4. Lubricate the cardan shaft with special grease (2), until grease escapes at the bearings.
5. Remove the grease that escaped at the bearings.
6. Unscrew the grease nipple from the cardan shaft.
7. Screw the sealing plug back in and pull it tight.
8. Perform this maintenance task at the front and rear of the cardan shaft.

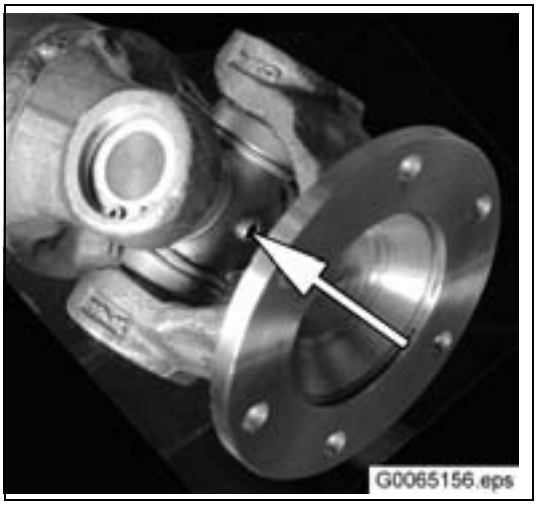

NOTE

Only "Staburags NBU 12/300 KP" special grease may be used for maintenance. Using different grease will reduce the life span of the cardan shaft.

Pos.	Name	Order number
1	Grease nipple	42Y-00-H3040
2	Grease	42S-09-H1030

6. Technical data

6.1. Technical data

WA70-5

Performance		
Engine	Model	Komatsu 4D95LE-3
	Engine Output (ISO 9249)	45 kw (60.3 Hp)
	Torque, max. (ISO 9249)	214Nm
	Starting motor	12 V - 2,2 kW
	Alternator	12 V - 60 A
	Battery	92 Ah
Driving Speed Standard type forwards and backwards	1st Drive range 2nd Drive range	0 - 8.00 mph (5.0 km/h) 0 - 12.43 mph (20 km/h
Tractive force, max.		35,2 kN
Turning radius	Over bucket	13’ 7" ft. in. (4.175 mm)
	Over tires	12’ 1" ft. in. (3.680 mm)
Bucket, Standard		42U-70-22010 (30.017 cuft / 0,85 m^3)

6.2. Noise emission levels

Two plates indicating the machine noise level are attached.

In accordance with ISO 6396

the value for the sound pressure level is L_{pA} = 99 dB/A

In accordance with EC Directive 2000/14/EG

the value for the sound power level is L_{WA}= 99 dB/A

No alterations may be made to the machine which could have an influence on the noise emission level.

6.3. Vibration level

When used for its intended purpose, levels of vibration for the earthworking machine transmitted from the operator's seat are lower or equal to the test vibrations for the relative machinery class in compliance with ISO 7096. The actual accelaration value of the upper limbs is less than 2.5 m/s². The actual acceleration value for the body is less than 0.76 m/s². These values were determined using a representative machine and with the help of the measurement procedures that are defined in the directives ISO 2631/1 and ISO 5349.

6.4. Limit values for slopes

Maximum slope angle for machine operation

If operating the machine on a slope, its angle must not exceed 35° uphill, downhill or sideways. If you angle the machine at more than 35° during operation, the motor, transmission, hydraulic system or axles, will not be supplied with sufficient oil and can be damaged.

A	uphill	30°
B	downhill	30°
C	sideways	30°

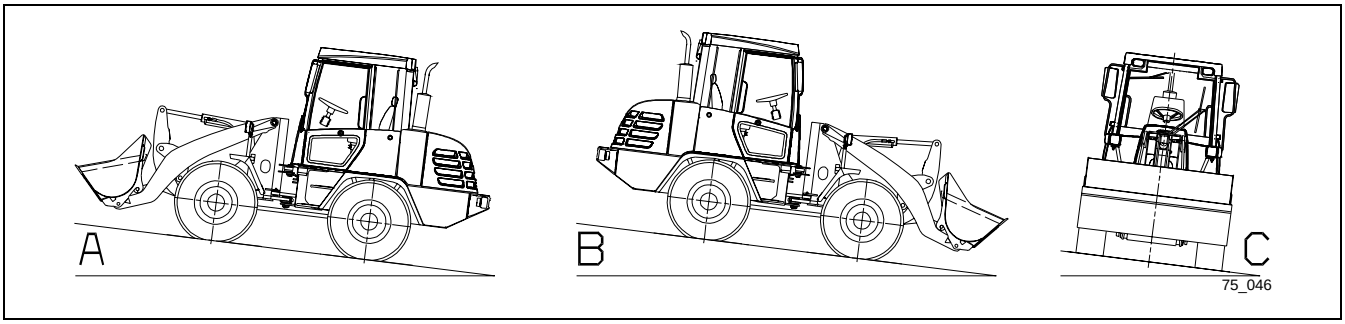

7. Special equipment and attachments

7.1. E.C.S.S.

Always read this section before installing and operating the E.C.S.S. as safe as possible.

7.1.1. Structure and functioning principle of the E.C.S.S.

- The E.C.S.S. uses the hydraulic spring effect of the hydraulic accumulator installed to the circuit at the lift cylinder base end to absorb the vibration of the chassis when the machine is travelling. This enables the machine to travel smoothly at high speed.
- The E.C.S.S. consists of the E.C.S.S. switch, hydraulic accumulator and solenoid valves. When the travel damper switch is turned ON, the solenoid valves open, the circuit at the lift cylinder base end is connected with the hydraulic accumulator.

7.1.2. Precautionary measures for switching on the E.C.S.S.

WARNING

If the E.C.S.S. system is switched on during a journey, or when the working attachment is in raised position, it may move up or down depending upon the bucket load.
For this reason, extreme caution is advised when operating the switch.

When inspecting and servicing the machine, E.C.S.S. lower the work equipment to the ground then turn the E.C.S.S. switch OFF before beginning to service.

NOTE

The E.C.S.S. system is activated when the transmission is shifted in 2nd gear and the machine is traveling at a speed higher than 3.10 mph (5 km/h).

7.1.3. Operating the E.C.S.S.

Switching ON the E.C.S.S.

1. Precondition:

   Speed range No. 2 must be switched on in order to ensure that the E.C.S.S. system can be activated. To do this, press the "Driving range up to 12 mph (20 km/h)" button.

2. Press the E.C.S.S. switch.

   The green control lamp in the switch lights up.

   - If the machine drives faster than 3.10 mph (5 km/h), the E.C.S.S. is automatically activated and the E.C.S.S. control lamp lights up on the dash panel.
   - If the machine drives slower than 3.10 mph (5 km/h), the E.C.S.S. is switched off and the control lamp on the dash panel goes out.
   - However, the control lamp in the E.C.S.S. switch remains lit in green.

NOTE

- **To ensure that the E.C.S.S. system can remain fully effective when the machine is underway, do not tilt the bucket all the way through till it touches the limit stops.**
- **Do not support the boom when on the road.**

Switching OFF the E.C.S.S.

1. Press the E.C.S.S. switch.

   The control lamp in the switch goes out.

7.1.4. Precautions when handling the accumulator

WARNING

Danger of injury! Pressure accumulator is filled with highly pressurised nitrogen.
Do not open or damage the pressure accumulator.

- Immediately inform your Komatsu dealer, if you detect malfunctions or defects of pressure accumulators.
- Filling the pressure accumulator with gas or topping up gas in the pressure accumulator is strictly limited to persons authorised to handle highly pressurised gas.
- Do not hit against the pressure accumulator.
- Keep naked light and sources of heat away from pressure accumulator.
- Do not drill holes into the pressure accumulator.
- Do not weld parts to the pressure accumulator.
- The service technicians must depressurise the hydraulic system before they can remove the pressure accumulator.
- The service technician must let the gas escape before they can disassemble the pressure accumulator.

8. Index

A

Accelerator pedal 3-23
Adjusting driver's seat 3-39
Adjusting operator's seat 3-39
Air conditioning
  Condenser 5-30, 5-53
  Filter fleece 5-52
  Operation 3-31
Air ventilation nozzles 3-30, 3-31
Alarm horn for reverse driving 3-27
Articulated steering catch 3-26
Attachment for protection against falling objects (FOPS) 2-6

B

Battery
  Connecting/disconnecting 2-7
  Filling up battery acid 2-7
Bleeding the fuel system
  High pressure side 5-50
  Low pressure side 5-50
Booster cables 4-6
Brake
  Actuating 3-49
  Braking 3-49
  Braking on slopes 3-50
  Braking with the service brake 3-49
  Checking parking brake 4-8
  Checking the parking brake function 4-8
  Checking the service brake 4-8
  If the service brake breaks down 3-63
  Insufficient braking action 4-8
Bucket
  Level indicator 3-71
  Manual lowering 2-12

C

Changing driving direction 3-47
Changing oil
  Front axle 5-35
  Rear axle 5-35
  Transfer box 5-36, 5-60
Checking the service brake and oil level 5-38
Checks before starting 3-32, 3-34
Cold weather operation 3-80
Control lamp
  Air conditioning 3-10
  Air-intake preheater 3-9
  Direction indicators 3-9
  Driving direction switch 3-9
  E.C.S.S. electronics 3-10
  E.C.S.S. electronics, in switch 3-10
  Hazard warning lights 3-9
  Heated rear window 3-9
  High beam 3-10
  in working lights switch 3-10
  Special equipment 3-5
  Warning beacon 3-10
Control lamps
  High-beam headlights . . 3-4, 3-8, 3-11, 3-15, 3-20
Control lever
  for special equipment 3-24, 3-53
  Steering column adjustment 3-22
  Switching lever of bucket 3-25, 3-54
Control monitors
  Main control monitor 3-5
  Maintenance monitor 3-5
Coolant
  Filling up 3-80
Cooling system
  Changing coolant 5-61
  Checking coolant level 3-34, 5-23
  Cleaning coolant 5-61
  Topping up coolant 3-34, 5-23

D

Dimension 1-23
Direction indicator lever 3-16
Drive direction lever 3-47
Driving 3-45
  High-speed 3-47
  Steering 3-48
  Turning 3-48
Driving direction switch 3-17

E

E.C.S.S. 7-2
  switch 3-19
Emergency exit 2-2
Emergency lowering system 2-12, 4-9
Emergency steering system 4-9
Emission Control Warranty Statement 1-14
Engine
  Changing engine oil 5-47
  Checks before starting 3-34
  Machine identification plate 1-11
  Starting 3-32, 3-43
    Checks before starting 2-10
    with booster cable 4-6
  Switching off 3-73
    Check after stopping 3-73
  Technical data 6-2
  Topping up coolant 2-6
  Topping up engine oil 2-6
  Warm-up phase 3-44
Engine oil
  Checking oil level 3-34
  Top up 3-34
Énoncé De Garantie Sur Le Contrôle Des Émissions 1-15
Equipment, CE-conforming 1-24
EU directives 1-5
  CE Conformity 1-5

Machinery Directive 1-5
Excavation work 3-58

F

Fire extinguisher 2-5
Fire prevention 2-4
First-aid kit 2-5
FOPS (see Attachment for protection against falling objects) 2-6
Front axle
Changing oil 5-35
Fuel
Checking fuel level 5-26
Fuel level indicator 3-12
Refuelling 5-26
Fuses 3-28

G

Garantie sur le contrôle des émissions 1-15
General view
Machine 3-2

H

Heating
Adjustment 3-30
High beam 3-17
Hydraulic system
Hydraulic oil
Topping up 2-6

I

Indicators (see control lamps) 3-5
Instrument panel 3-5
Intended use 1-9

K

Komatsu distributor, address 1-13

L

Liability 1-5
Lights
Headlamp flasher 3-17
High beam 3-17
Low beam 3-17
Parking lights 3-17
Loading work 3-56
Locking 3-73
Low beam 3-17
Lubricant, general 5-9
Lubricants
Table 5-15
Lubrication 5-16
Lubrication, self-aligning bearings of rear axle . . . 5-46

M

Machine
Before leaving 2-3
Breaking in 1-10
Cleaning 2-5
Driving with high-speed gear 3-47
General view 3-2
Intended use 1-9
Lifting 3-77
Loading 1-28, 2-18
Locking 3-73
Modifications 1-6
Parking 2-17, 3-72
Parking on a slope 3-51
Refuelling 5-26
Securing 1-28
Specifications 1-11, 1-13
Start-up 3-45
on slopes 3-46
Steering 3-48
Stopping 3-51
Towing 4-2
Transport 3-76
with transport vehicle 3-78
Turning 3-48
Machine identification plate 1-11
Machine modifications 1-5
Machine specifications 1-11
Machinery Directive 1-5
Maintenance
After storage 3-83
Air conditioning
Checking the air-conditioning system . . . 5-30
Cleaning the condenser 5-30, 5-53
Air filter
Replacing the filter insert 5-51
Before starting 3-32
Before storage 3-82
Checking and adjusting system pressures . . . 5-56
Checking the controls 5-28
Cold weather operation 3-81
Coolant level
Checking 5-23
Topping up 5-23
Cooling system
Cleaning the radiator segments 5-24
Cleaning the system 5-61
Exchanging coolant 5-61
During storage 3-82
Engine
Changing oil 5-47
Checking the oil level 5-24
Draining off oil 5-24
Replacing the oil filter cartridge 5-47
Topping up oil 5-24
every 10 operating hours 5-37
every 250 operating hours 5-35
every 50 operating hours 5-38, 5-56
Front and rear axle

Checking the oil level 5-54
Hand pump - Checking the oil level 5-27
Heater/air conditioning
Cleaning/replacing filter fleece 5-52
Hydraulic system
Changing the filter insert 5-34
Oil change 5-64
Ventilating the hydraulic oil tank 5-65
Hydraulics
Exchanging the filter insert 5-57
Exchanging the venting filters 5-57
Lubrication 5-40, 5-45, 5-67
Work unit 5-40
Maintenance guidelines 5-2
Maintenance schedule chart 5-21
Miscellaneous tests before starting work 5-29
Prior to start 3-32
System pressures
Checking and adjusting 5-56
Transfer box gearing
Changing oil 5-36, 5-55, 5-60
Valve play
Checking and adjusting 5-36
V-belt
Checking and setting the tension 5-57
Checking the condition 5-24, 5-57
Washing-fluid level 5-31
Water separator at the fuel filter 5-27
Wheel nuts
Checking 5-34
Maintenance after the first 250 operating hours . 5-35
Checking and adjusting the valve clearance . 5-36
Front and rear axle – oil change 5-35
Transfer box gearing – changing oil 5-36
Maintenance after the first 50 operating hours . . 5-38
Battery – Checking acid level 5-39
Checking the service brake and oil level 5-38
Lubrication, work unit 5-40
Maintenance every 10 operating hours 5-37
Lubrication, articulated steering 5-37
Maintenance every 1000 operating hours 5-56
Checking and adjusting system pressures . . . 5-56
Service Brake - Checking and adjusting oil . . 5-56
V-Belt, generator – checking and adjusting . . 5-56
Maintenance every 1500 operating hours 5-59
Front and rear axle –Changing oil 5-59
Transfer box gearing – Changing oil 5-60
Maintenance every 2000 operating hours 5-61
Checking fuel and coolant tubes 5-66
Checking the fuel pump 5-66
Checking the water pump 5-66
Cooling system – exchanging and checking . 5-61
Hydraulic system, oil change 5-64
Valve play – Checking and adjusting 5-63
Ventilating the hydraulic oil tank 5-65
Maintenance every 250 operating hours
Air filter – Cleaning and checking 5-42
Lubrication 5-45
V-Belt, generator – checking and adjusting . . 5-41
Maintenance every 4000 operating hours 5-67
Lubrication, universal joint 5-67
Maintenance every 50 operating hours 5-33
Checking and tightening the wheel nuts 5-34
Hydraulic system, replacing the filter insert . . . 5-33
Maintenance every 500 operating hours 5-47
Air filter, replacing the safety filter 5-51
Engine – changing oil and replacing 5-47
Front and rear axle – Checking oil level 5-54
Fuel system – Bleeding the fuel system 5-50
Fuel system – Changing the filter element . . . 5-49
Heater/air conditioning
– cleaning/replacing filter 5-52
Hydraulic system – Changing the filter insert . 5-51
Replacing the oil filter cartridge 5-48
Transfer box gearing – Checking oil 5-55
Maintenance upon demand 5-30
Checking the air-conditioning system 5-30
Checking the coolant level 5-30
Checking the window washing-fluid level 5-31
Re-charging a built-in battery 5-32
Measuring indicators 3-12
Measuring instruments
Coolant temperature indicator 3-13
Fuel level indicator 3-12
Operating hour meter 3-12
Multifunctional lever
Function 3-52

N

Noise emission level 6-3

O

Operating conditions
Asbestos containing material 2-5
Working
at high temperatures 2-6
close to power lines 2-13
on snow 2-14
Working on loose soil 2-15
Operating data 1-23
Operating elements 3-3
Measuring indicators 3-12
Overall view 3-3
Switches 3-14
Operating hour meter 3-12
Operating material, general 5-9
Operation
Articulated steering catch 3-26
Changing direction 3-47
in cold weather 3-80
Loading 2-14
Loading in diagonal direction 3-60
Multifunctional lever 3-23
Piling up material 3-61
Precautionary measures 3-63
Preparing storage 3-82
Pre-start checks 3-32

Removal work 3-6
Stopping 3-51
V-shaped loading 3-61
Wheeled loader 3-55
Work equipment 3-52

P

Parking brake 3-22
Parking lights 3-17
Parking on a slope 3-51, 3-72
Pedals
Accelerator 3-23
Inch-Brake pedal 3-22
Precautionary measures
Driving up/down 3-64
During machine travel 3-65
In-water operation 3-63
Pressure accumulator
Precautions for maintenance 2-29
Pressure accumulator (E.C.S.S.) 7-4
Pre-start checklist 5-23
Checking the controls 5-28
Checking the electrical connections 5-28
Checking the fuel level – refuelling 5-26
Cleaning the radiator segments 5-24
Cooling system – checking the coolant level . 5-23
Engine, checking the oil level, topping up oil . 5-24
Heater/air conditioning – checking 5-29
Miscellaneous tests before starting work 5-29
V-belt, checking the condition 5-24
Protective clothing 2-3
Purging the fuel system 5-50

R

Removal work 3-56
Repeated 5-57
Roll-over protection system 2-6
ROPS (see Roll-over protection system) 2-6

S

Safety belt 3-42
Safety devices
Attachment for protection against falling objects (FOPS) 2-6
Fire extinguisher 2-5
First-aid kit 2-5
Roll-over protection system 2-6
Safety information 1-7
Safety instructions
asbestos dust 2-5
Battery 2-7
Coolant 2-6, 2-27
Driving 2-11
Engine coolant 2-6
Engine oil 2-6
Fan and belts 2-29
Fire prevention 2-4
Forklift truck attachment 2-15
Height limitation 2-15
High-pressure hoses 2-28
High-pressure oil 2-28
Hydraulic oil 2-6
Information 1-7
Loading 2-14
Loading operations 2-14
Machine transport 2-18
Parking the machine 2-3
Protective clothing 2-3
Subsequent installation 1-6
Waste material 2-29
Workplace 2-14
Safety labels on the machine 2-32
Safety lever for the work hydraulic system 3-25
Safety measures
Cab 2-8
General 2-9
Operation 2-8
Workplace 2-8
Serial no. plate
Axle 1-12
Serial number 1-13
Service procedure 5-23
Slopes, limits 6-3
Slow-blowing fuses 3-29
Socket 3-27
Standards
EU directives 1-5
Start switch 3-18
Start-up
Preparation 3-32
Steering column adjustment 3-41
Steering, machine 3-48
Switches 3-14
Air conditioning 3-20
Battery main switch 3-19
Direction indicator lever 3-16
Driving direction switch 3-17
E.C.S.S.-electronics 3-19
Fan 3-18
Front windscreen wiper 3-15
General view 3-4
Hazard flasher switch 3-15
Heated rear windscreen 3-18
Lamp switch 3-19
Light switch 3-17
Rear windsreen wiper 3-16
Start switch 3-18
Temperature rotary switch 3-18
Warning beacon switch 3-20
Switching off, Engine 3-73

T

Table of contents 1-16
Technical data 6-2
Noise emission level 6-3
Vibration level 6-3
Temperature indicator 3-13

Tightening torques 5-18
Tipping down the driver's cab 2-24
Tipping up the driver's cab 2-22
Tools 5-17
Towing, Machine 4-2
Traction device 3-26
Transfer box
  Changing oil 5-36, 5-60
  Checking oil 5-55
Transport
  Machine 3-76
Transporting 3-60
Troubleshooting table
  Brakes 4-16
  Cab 4-17
  Electrics 4-10
  Engine 4-11
  Hydraulics 4-14
  Steering 4-16
Turning, machine 3-48
Tyre pressure
  table 3-75
Tyres 3-74

V

V-belt
  checking the condtion 5-24
Ventilation system
  Adjustment 3-30
Vibration level 6-3

W

Warm-up phase 3-44
Warning lamps
  Air filter 3-6
  Battery 3-7
  Brake fluid 3-6
  Engine oil pressure 3-7
  Parking brake 3-7
Washing fluid 5-31
Wearing parts list 5-14
Weights 1-23
Work hydraulic system
  Multifunction control lever 3-23
  Safety lever 3-25
Work unit
  Adjustment 3-66
  Manual lowering 2-12
  Multifunctional lever 3-52
  Picking up the multi-purpose bucket 3-69
  Removal 3-68
  Removing the multi-purpose bucket 3-71
  Selecting 3-66
Working with the machine
  Excavation work 3-58
  Forklift truck attachment 3-61
  Loading work 3-56
  Planing 3-59
  Removal work 3-56
  Transporting 3-60
  Tyre-appropriate operation 3-55
  Unloading 3-60
Workplace, Safety at the 2-13, 2-15

9. Notes