https://truckmanualshub.com/

SERVICE MANUAL

SERVICE MANUAL SECTION

3200, 4200, 4300, 4400, 7300, 7400, 7500, 7600, 8500, 8600 SERIES Built After March 10, 2004 — ELECTRICAL CIRCUIT DIAGRAMS

Truck Model: 3200
Start Date: 03/11/2004

Truck Model: 4200
Start Date: 03/11/2004

Truck Model: 4300
Start Date: 03/11/2004

Truck Model: 4400
Start Date: 03/11/2004

Truck Model: 7300
Start Date: 03/11/2004

Truck Model: 7400
Start Date: 03/11/2004

Truck Model: 7500
Start Date: 03/11/2004

Truck Model: 7600
Start Date: 03/11/2004

Truck Model: 8500
Start Date: 03/11/2004

Truck Model: 8600
Start Date: 03/11/2004

S082854
Copyright © 06/17/2004 International Truck and Engine Corporation

Downloaded from www.Manualslib.com manuals search engine

https://truckmanualshub.com/

S082854

06/17/2004

Copyright © 06/17/2004 International Truck and Engine Corporation

Downloaded from www.Manualslib.com manuals search engine

https://truckmanualshub.com/

Table of Contents

INSTRUCTIONS AND CHARTS (CHAPTER 1)....1
CIRCUIT NUMBER IDENTIFICATION AND LOCATION CHART, P. 1....1
CIRCUIT NUMBER IDENTIFICATION AND LOCATION CHART, P. 2....2
CIRCUIT NUMBER IDENTIFICATION AND LOCATION CHART, P. 3....3
CIRCUIT NUMBER IDENTIFICATION AND LOCATION CHART, P. 4....4
CIRCUIT NUMBER IDENTIFICATION AND LOCATION CHART, P. 5....5
NAVPAK/ECM I6 ENGINE CONTROLLER CONNECTOR PIN NUMBER IDENTIFICATION, P. 6....6
CIRCUIT DIAGRAM INSTRUCTIONS, P. 7....7
CIRCUIT DIAGRAM INSTRUCTIONS, P. 8....8
SCHEMATIC SYMBOL CHART, P. 9....9
RELAY FUNCTIONS, P. 10....10
LAMP BULB CHART, P. 11....11
INTERNATIONAL V8 AND I6 ECM CONTROLLER CONNECTORS PIN NUMBER IDENTIFICATION, P.12....12

12 VOLT POWER DISTRIBUTION CIRCUIT DIAGRAMS (CHAPTER 2)....13
ACCESSORY, P. 1....13
BATTERY FEEDS, CAB, P. 2....14
BATTERY, P. 3....15
1708 DATA LINK, P. 4....16
SWITCH DATA LINK, P. 5....17
DRIVETRAIN 1939 DATA LINK (CAB), P. 6....18
DRIVETRAIN 1939 DATA LINK (CHASSIS), P. 7....19
GROUNDS CHASSIS, P. 8....20
GROUNDS CHASSIS, P. 9....21
GROUNDS IP, P. 10....22
GROUNDS IP, P. 11....23
IGNITION CAB, P. 12....24
IGNITION CAB, P. 13....25
IGNITION FEEDS, CHASSIS, P. 14....26
START, P. 15....27

CAB ACCESSORIES (CHAPTER 3)....28
CIGAR LIGHTER AND POWER FEEDS, P. 1....28
CB POWER, P. 2....29
COMPASS AND TEMPERATURE DISPLAY, P. 3....30
FRONT DOORS WINDOWS AND LOCKS (POWER), P. 4....31
CREW DOORS WINDOWS AND LOCKS (POWER), P. 5....32
HORN, DUAL ELECTRIC, P. 6....33
MIRRORS (HEATED, LIGHTED AND POWER), P. 7....34
RADIO (ENTERTAINMENT), SPEAKERS, P. 8....35
WINDSHIELD WIPER AND WASHER PUMP, P. 9....36
2–WAY RADIO, P. 10....37
SWITCH PACK, OPTIONAL GAUGE PACK, P. 11....38
LIGHTED AIR SHIELD, P. 12....39
ROOF AUX. LOAD, P. 13....40
SATELLITE COMMUNICATION QUALCOMM-MCT AND IMCT SYSTEMS, P. 14....41

Downloaded from www.Manualslib.com manuals search engine

https://truckmanualshub.com/

SELF CONTAINED AIR SEAT, P. 15....42
DIGITAL CLOCK PTC, P. 16....43
TRANSMISSION ALLISON LCT COLUMN SHIFTER, P. 17....44
HEATED SEATS FOR 7700 MODELS ONLY, P. 18....45
BACKUP CAMERA, P. 19....46
XATA COMPUTER, P. 20....47
KEYLESS IGNITION SYSTEM, P. 21....48

12V CHARGING + CRANKING SYSTEM (CHAPTER 4)....49
I6 EGR ENGINES, P. 1....49
V8 AVNT ENGINES, P. 2....50
CATERPILLAR, CUMMINS ISM ENGINES, P. 3....51
I6 HEUI ENGINES, P. 4....52
CATERPILLAR ENGINES, CUMMINS ISM AND WITH EATON ULTRASHIFT/DM2, P. 5....53
I6 EGR ENGINES WITH AIR START, P. 6....54

FANS AND ENGINE ACCESSORIES (CHAPTER 5)....55
FAN WIRING, P. 1....55
ETHER START, P. 2....56
SNOW VALVE, P. 3....57
FAN WIRING, CATERPILLAR AND CUMMINS, P. 4....58

ELECTRONIC ENGINES (CHAPTER 6)....59
ELECTRONIC ENGINE CONTROLS, I6–EGR ENGINES, P. 1....59
ELECTRONIC ENGINE CONTROLS, I6–EGR ENGINE CRUISE CONTROL AND BODY BUILDER CONNECTIONS, P. 2....60
ELECTRONIC ENGINE CONTROLS, (V8–AVNT) ENGINES, P. 3....61
ELECTRONIC ENGINE CONTROLS, V8–AVNT ENGINE CRUISE CONTROL AND BODY BUILDER CONNECTIONS, P. 4....62
CATERPILLAR C10, C11, C12, AND C13 ENGINES, P. 5....63
CUMMINS ISM ENGINE, P. 6....64
I6 HEUI ENGINE, P. 7....65
I6 HEUI ENGINE CRUISE CONTROL AND BODY BUILDER CONNECTIONS WITH MANUAL TRANSMISSION, P. 8....66

GAUGES WITH AND WITHOUT INTEGRAL WARNING LIGHT (CHAPTER 7)....67
IP/GAUGE LIST, P. 1....67
WARNING LIGHT LIST, P. 2....68
WARNING LIGHTS CONTROLLED BY ENGINE, TRANSMISSION, ABS CONTROLLER, P. 3....69
ENGINE OIL PRESSURE AND TEMP, SPEEDOMETER, TACH, VOLTMETER AND WATER TEMP GAUGE CIRCUITS, P. 4....70
IP/GAUGES AND WARNING LIGHTS — GAUGE CLUSTER, P. 5....71
AIR PRESSURE INPUT CIRCUIT, P. 6....72
AXLE TEMPERATURE, FWD REAR AND REAR AXLES, GAUGE INPUT CIRCUIT, P. 7....73
FUEL GAUGE INPUT CIRCUIT (SINGLE TANK) DIFFERENTIAL LOCK WARNING LAMPS, P. 8....74
GAUGES AND WARNING LIGHTS — FUEL FILTER RESTRICTION AND WATER IN FUEL LIGHTS, P. 9....75
GAUGES AND WARNING LIGHTS — PARK BRAKE LIGHT AND TRANSMISSION OIL TEMP. GAUGE, P. 10....76
GAUGES AND WARNING LIGHTS — AMMETER, P. 11....77
ENGINE OIL TEMPERATURE GAUGE WITH CATERPILLAR, P. 12....78
FRONT AXLE ENGAGEMENT LAMP, P. 13....79

Downloaded from www.Manualslib.com manuals search engine

https://truckmanualshub.com/

LIGHTS (CHAPTER 8)....80
BACK UP LIGHTS, P. 1....80
LIGHT SYSTEMS — CLEARANCE, MARKER, PARK, TAIL, TURN AND STOP LAMPS, P. 2....81
LIGHT SYSTEMS — CLEARANCE, MARKER, PARK, TAIL, TURN AND STOP LAMPS (CONT.), P. 3....82
LIGHT SYSTEMS — TURN SIGNAL AND STOP SWITCHES, P. 4....83
DOME LIGHT, MAP LIGHT, P. 5....84
DOME LIGHT, MAP LIGHT (CONT.), P. 6....85
FOG LIGHT AND WORK LIGHT, P. 7....86
HEADLIGHTS, P. 8....87
AUX. HEADLIGHTS, AUX. PARK, AUX TURN, P. 9....88
PANEL LIGHTS, P. 10....89

CHASSIS ACCESSORIES (CHAPTER 9)....90
AIR DRYER AND HEATED DRAIN VALVE, P. 1....90
ANTILOCK BRAKE SYSTEM (ABS), AIR, P. 2....91
ANTILOCK BRAKE SYSTEM (ABS), AIR, TRACTION CONTROL, P. 3....92
ANTILOCK BRAKE SYSTEM (ABS), HYDRAULIC, P. 4....93
ANTILOCK BRAKE SYSTEM (ABS), HYDRAULIC (CONT.), P. 5....94
ANTILOCK BRAKE SYSTEM (ABS), HYDRAULIC (CONT.), P. 6....95
TWO SPEED AXLE SWITCH WITH MANUAL TRANSMISSION AND I6 HEUI FUEL HEATER N/WARN LIGHTS, P. 7....96
BRAKE SYSTEM, HYDRAULIC, P. 8....97
FUEL TRANSFER PUMP, P. 9....98
BACK OF CAB BODY BUILDER AND TRAILER STOP, TAIL, MARKER, P. 10....99
BODY BUILDER AND TRAILER TURNS, CENTER PIN ABS, CENTER PIN AUX, P. 11....100
BODY BUILDER AND TRAILER SOCKET BACK OF CAB SOCKETS, P. 12....101
BODY BUILDER AND TRAILER SOCKET END OF FRAME (EOF) SOCKET AND BODY BUILDER, P. 13....102
AIR SOLENOID 4–WAY PACK, P. 14....103
REMOTE POWER UNITS, SOLENOID PACKS, REMOTE ENGINE SPEED CONTROLLER, P. 15....104
HYD POWER PARK, P. 16....105
AIR SUSPENSION, P. 17....106
AUX. TRAILER, ACC CONTROLLED, P. 18....107
AUX. TRAILER, BTRY CONTROLLED, P. 19....108
LIFT AXLES (NON-STEERABLE), P. 20....109
LIFT AXLES (STEERABLE), P. 21....110
AIR ACTUATED PARK BRAKE, P. 22....111
ANTILOCK BRAKE SYSTEM, WABCO AIR, P. 23....112
ANTILOCK BRAKE SYSTEM, WABCO AIR, P. 24....113
LIFT AXLES, WITH NON—STEERABLE FOR SS MODELS, P. 25....114
FUEL / WATER SEPARATOR WITH 12VDC FUEL PREHEATER, P. 26....115
ELECTRONIC TRAILER BRAKE ACCOMMODATION, P. 27....116
LECTRASHIFT ACCOMMODATION, P. 28....117
AUXILIARY 40 AMP CIRCUIT, P. 29....118
HOURMETER, CUSTOMER MOUNTED PTO, P. 30....119
REMOTE START/ STOP, P. 31....120
LIFT AXLE WITH 14RAR, P. 32....121
LIFT GATE, P. 33....122
LIFT AXLE MULTIPLEX, P. 34....123

TRANSMISSIONS (CHAPTER 10)....124

Downloaded from www.Manualslib.com manuals search engine

https://truckmanualshub.com/

ALLISON LCT TRANSMISSION OR ALLISON 1000, 2000, 2400, P. 1.....124
ALLISON MD TRANSMISSION, P. 2.....125
ALLISON MD TRANSMISSION (WTEC), P. 3.....126
ALLISON MD TRANSMISSION (CONT.), P. 4.....127
TRANSMISSION, WTEC MD W/AUTO NEUTRAL, P. 5.....128
EATON AUTOSHIFT TRANSMISSION, P. 6.....129
EATON AUTOSHIFT TRANSMISSION (CONT.), P. 7.....130
EATON LIGHTNING TRANSMISSION, P. 8.....131
ALLISON HD TRANSMISSION, P. 9.....132
ALLISON HD TRANSMISSION, P. 10.....133
ALLISON HD TRANSMISSION, P. 11.....134
ALLISON HD TRANSMISSION WITH AUTO NEUTRAL, P. 12.....135
ALLISON HD TRANSMISSION WITH AUTO NEUTRAL AND WITH 0013WUA, P. 13.....136
ALLISON LCT TRANSMISSION (ALLISON 1000, 2000, 2400) WITH I6 HEUI, P. 14.....137
TRANSMISSION RETARDER CONTROL WIRING WITH MD XMSN, HARD WIRED EFFECTS, P. 15.....138
TRANSMISSION RETARDER CONTROL WIRING WITH MD XMSN, HARD WIRED EFFECTS, P. 16.....139

AIR CONDITIONING (CHAPTER 11).....140
HVAC SYSTEMS, P. 1.....140
AIR CONDITIONING (ONLY), P. 2.....141
AUTOTHERM SYSTEMS, P. 3.....142

CONNECTOR COMPOSITES (CHAPTER 12).....143
CONNECTOR COMPOSITES (10M), (71), (72), (345F), P. 1.....143
CONNECTOR COMPOSITES (420F), (420M), (520), (521), (522), (523), (524), P. 2.....144
CONNECTOR COMPOSITES (1002), (1003), (1010), P. 3.....145
CONNECTOR COMPOSITE (1011), P. 4.....146
CONNECTOR COMPOSITE (1012), P. 5.....147
CONNECTOR COMPOSITE (1013), P. 6.....148
CONNECTOR COMPOSITE (1014), P. 7.....149
CONNECTOR COMPOSITES (1018), (1019M), (1020M), (1021M), (1022M), P. 8.....150
CONNECTOR COMPOSITES (1027M, F), (1100), (1101A), (1101), (1102), P. 9.....151
CONNECTOR COMPOSITES (1104), (1106), (1200), (1210), P. 10.....152
CONNECTOR COMPOSITES (1300), (1301), (1400), (1402), (1410), (1500), (1510), P. 11.....153
CONNECTOR COMPOSITES (1553), (1554F), (1555), (1600), (1601), (1650), P. 12.....154
CONNECTOR COMPOSITES (1652), (1657M), (1658), (1659), (1800), P. 13.....155
CONNECTOR COMPOSITES (1804), (1807), (1808), (1809), (1810), (1811), (1812), (1813), (1814), (1815), P. 14.....156
CONNECTOR COMPOSITES (1820), (1822), (1823), (1824), (1828), (1860), (1861), (1901M), (1915), P. 15.....157
CONNECTOR COMPOSITES (1918), (1935), (1920), (2000), (2002M), (2003M), (2004M), (2005M), P. 16.....158
CONNECTOR COMPOSITES (2006M), (2007F), (2021F), (2021M), (2022F), (2022M), (2111M), (2112M), (2113M), (2114M), (2115M), (2116M), (2117M), (2301M), (2302M), (2303M), P. 17...159
CONNECTOR COMPOSITES (2304M), (2305M), (2306M), (2307F), (2308F), (2502F), (2502M), (2503F, M), (2600F, M), P. 18.....160
CONNECTOR COMPOSITES (2601M, F), (2602M, F), (3000M), (3000F), (3002M), (3003), (3100M), (3200F, M), (3201M), (3202), (3203M), P. 19.....161
CONNECTOR COMPOSITES (3204M, F), (3209), (3210M), (3211M), (4000), P. 20.....162
CONNECTOR COMPOSITE (4001), P. 21.....163
CONNECTOR COMPOSITE (4002), P. 22.....164

Downloaded from www.Manualslib.com manuals search engine

https://truckmanualshub.com/

CONNECTOR COMPOSITE (4003), P. 23.....165
CONNECTOR COMPOSITES (4004), (4007), (4008), P. 24.....166
CONNECTOR COMPOSITE (4014), P. 25.....167
CONNECTOR COMPOSITE (4014/1700), P. 26.....168
CONNECTOR COMPOSITES (4015), (4017), (4018), (4019), (4020), (4021), (4022), (4023), P. 27.....169
CONNECTOR COMPOSITES (4024), (4030), (4031), (4032), (4033), (4040), (4041), P. 28.....170
CONNECTOR COMPOSITES (4070), (4071), (4087), (4098), (4101), P. 29.....171
CONNECTOR COMPOSITE (4103), P. 30.....172
CONNECTOR COMPOSITES (4105), (4111), (4120), (4301), P. 31.....173
CONNECTOR COMPOSITES (4305), (4410), (4410B), (4410C), (4410D), (4410E), (4410H), (4410M), (4411), P. 32.....174
CONNECTOR COMPOSITES (4411A), (4411B), (4412), (4415), (4450), (4450A), (4460A), (4460), P. 33.....175
CONNECTOR COMPOSITE (4705), P. 34.....176
CONNECTOR COMPOSITES (4810), (4712F), (4820), (4713F), (4830), (4840), (4850), P. 35.....177
CONNECTOR COMPOSITES (4900), (4910), (4950), (4951), P. 36.....178
CONNECTOR COMPOSITES (6007), (6011), P. 37.....179
CONNECTOR COMPOSITES (6013M), (6014), P. 38.....180
CONNECTOR COMPOSITES (6015), (6020), (6021), P. 39.....181
CONNECTOR COMPOSITES (6200), (6316), (6323), (6332), (6333), (6334), (6400), (6401M), (6401), (6406), (6407), (6407D), (6409), (6500), P. 40.....182
CONNECTOR COMPOSITES (6550), (6703), (6704), (6708), (7103), (7104), (7104A), (7105), (7106), (7111), P. 41.....183
CONNECTOR COMPOSITES (7200), (7202), (7203), P. 42.....184
CONNECTOR COMPOSITES (7204), (7205), (7206), (7211), (7212), (7213), P. 43.....185
CONNECTOR COMPOSITES (7214), (7300), (7301), P. 44.....186
CONNECTOR COMPOSITES (7302), (7304), (7305), (7306), (7500), (7502), (7600), (7601), P. 45.....187
CONNECTOR COMPOSITES (7603), (7604), (7605), (7606), (7607), (7608), (7609), (7610), (7611), (7612), (7613), (7615), (7700), (7702), (7703), (7703A), P. 46.....188
CONNECTOR COMPOSITES (7800), (7801M), (7803), (7900), (7901), P. 47.....189
CONNECTOR COMPOSITES (7905), (7906), (8000), (8001), (8102), (8150), (8151), (8200), P. 48.....190
CONNECTOR COMPOSITES (8201), (8301), (8310), (8311), (8312), (8400), (8500), (8501), (8502), (8502A), P. 49.....191
CONNECTOR COMPOSITES (8503), (8503A), (8505), (8506), (8507), (8508), (8509), (8600), (8601), (8602), P. 50.....192
CONNECTOR COMPOSITES (8700), (8701), (8800), (8801), (8802), (8803), (8805), P. 51.....193
CONNECTOR COMPOSITES (9001), (9002), (9100), (9101), (9102), (9103), (9104), (9254), (9255), P. 52.....194
CONNECTOR COMPOSITES (9260), (9261), (9262), (9263), (9264), (9265), (9303A), P. 53.....195
CONNECTOR COMPOSITES (9405), (9501), (9502), (9503), (9504), (9505), (9506), P. 54.....196
CONNECTOR COMPOSITES (9507), (9508), (9509), (9510), (9511), (9512), (9513), (9514), (9515), P. 55.....197
CONNECTOR COMPOSITES (9516), (9517), (9518), (9519), P. 56.....198
CONNECTOR COMPOSITE (9700), P. 57.....199
CONNECTOR COMPOSITE (9700), P. 58.....200
CONNECTOR COMPOSITES (9715), (9715A), (9715B), P. 59.....201
CONNECTOR COMPOSITES (9716), (9716A), (9716B), P. 60.....202
CONNECTOR COMPOSITES (9717A), (9717B), P. 61.....203
CONNECTOR COMPOSITES (9718), (9719), (9720), (9733), (9734), (9736), (9754), (9762), (9763), P. 62.....204

Downloaded from www.Manualslib.com manuals search engine

https://truckmanualshub.com/

CONNECTOR COMPOSITES (9777), (9778), (9800), P. 63.....205
CONNECTOR COMPOSITES (9870), (9871), (9811), (9812), (9814), (9815), (9830), (9850), (9860), (9865M), (9900), (9900A), (9913A), P. 64.....206
CONNECTOR COMPOSITES (9913B), (9914), (4100), (4109), (4112), (6502), (7107), (7208), (7615), P. 65.....207

Downloaded from www.Manualslib.com manuals search engine

https://truckmanualshub.com/

INSTRUCTIONS AND CHARTS (CHAPTER 1)

CIRCUIT NUMBER IDENTIFICATION AND LOCATION CHART, P. 1

INTERNATIONAL TRUCK AND ENGINE CORPORATION THIS PRINT IS PROVIDED ON A RESTRICTED BASIS AND IS NOT TO BE USED IN ANY WAY DETRIMENTAL TO THE INTEREST OF INTERNATIONAL TRUCK AND ENGINE CORPORATION.	ELECTRICAL CIRCUIT DIAGRAM CHAPTER 1 INTERNATIONAL CIRCUIT NUMBER IDENTIFICATIOIN AND LOCATION

PREFIX DESIGNATIONS

PREFIX	LOCATION
A	Cab-instrument Panel Module
B	Cab-Driver Control Module
C	Cab-Header/Clearance Lights
D	Cab-Roof/Rear Panel
E	Cab-Left Door/Doors
F	Cab-Right Door/Doors
H	Cab-Sleeper
J	Cab-Dash(outside)
K	Engine/Radiator
L	Transmission
M	Chassis/Front End (Cab Dash Panel Forward)
N	Chassis/Center Section (Cab Dash Panel to Cab RR Xmbr)
P	Chassis/Wheel Base Section
R	Chassis/Suspension/Rear Axle/Axles
S	Chassis/AF Section/Stop/Tail/Turn Lights

CIRCUIT NUMBER AND IDENTIFICATIONS

CIRCUIT NUMBER	COLOR	DESCRIPTION
1	LTBL	ALTERNATOR - FIELD
2	RD	ALTERNATOR - CHARGE
3	DKBL GY	1708 DATA LINK, SWITCH DATA LINK (+) 1708 DATA LINK, SWITCH DATA LINK (-)
4		SERIAL/DATA COMMUNICATION J1922
5	YL GN	DRIVE TRAIN J1939 DATA LINK (+) DRIVE TRAIN J1939 DATA LINK (-)
6	GY	LOW VOLTAGE ELECTRONIC FEED (< 9 VOLTS)
7	RD	ALTERNATOR - RESISTANCE
8		

CHK	DATE	CHANGE	REV	REFERENCE	DRAWN	NAME		
PEC	16JAN01	PRODUCTION RELEASE.	A	P54304U	U00DLCK	42/43/44/85/8600 & 73/74/7500 CIRC DIAGRAMS		
					RELEASE NO.	DATE	PART NO.	SHEET
					P52778H	09AUG00	AE08-52365	01

Figure 1 Circuit Number Identification and Location Chart

Downloaded from www.Manualslib.com manuals search engine

https://truckmanualshub.com/

CIRCUIT NUMBER IDENTIFICATION AND LOCATION CHART, P. 2

INTERNATIONAL TRUCK AND ENGINE CORPORATION

THIS PRINT IS PROVIDED ON A RESTRICTED BASIS AND IS NOT TO BE USED IN ANY WAY DETRIMENTAL TO THE INTEREST OF INTERNATIONAL TRUCK AND ENGINE CORPORATION.

ELECTRICAL CIRCUIT DIAGRAM CHAPTER 1

INTERNATIONAL CIRCUIT NUMBER IDENTIFICATION AND LOCATION (CONT.)

CIRCUIT NUMBER AND IDENTIFICATIONS (CONT.)

CIRCUIT NUMBER	COLOR	DESCRIPTION
9	GY	ZERO VOLT REFERENCE (ZVR)
10	WH	CHASSIS/ENGINE GROUND
11	WH	CAB/SLEEPER GROUND
12	LTBL	ACCESSORY FEED
13	PK BK	IGNITION FEED IGNITION FEED (BODY BUILDER CONNECTOR)
14	RD	BATTERY FEED
15	RD	KEY SWITCH FEED
16		
17	PK	STARTER CONTROL
18	PK	GLOW PLUG/PRE-HEATER
19	GY	ENGINE SHUTDOWN
20	LTGN	REMOTE POWER MODULE
21	TN	COLD START CONTROLS (ETHER)
22		
23	TN	ENGINE FAN/SHUTTERS
24	GY	ENGINE EXHAUST BRAKE
25	TN	PYROMETER
26	TN	AMMETER
27	TN	VOLTMETER
28	TN	INSTRUMENTS AND GAUGES
29	TN	ENGINE WATER TEMPERATURE
30	TN	ENGINE OIL TEMPERATURE
31	TN	TRANSMISSION OIL TEMPERATURE
32	TN	AXLE OIL TEMPERATURE

CHK	DATE	CHANGE	REV	REFERENCE	DRAWN	NAME		
PEC	16JAN01	PRODUCTION RELEASE.	A	P54304U	U00JXP9	42/43/44/85/8600 & 73/74/7500 CIRC DIAGRAMS		
					RELEASE NO.	DATE	PART NO.	SHEET
					P52778H	09AUG00	AE08-52365	02

Figure 2 Circuit Number Identification and Location Chart (Cont.)

Downloaded from www.Manualslib.com manuals search engine

https://truckmanualshub.com/

CIRCUIT NUMBER IDENTIFICATION AND LOCATION CHART, P. 3

INTERNATIONAL TRUCK AND ENGINE CORPORATION

THIS PRINT IS PROVIDED ON A RESTRICTED BASIS AND IS NOT TO BE USED IN ANY WAY DETRIMENTAL TO THE INTEREST OF INTERNATIONAL TRUCK AND ENGINE CORPORATION.

ELECTRICAL CIRCUIT DIAGRAM CHAPTER 1

INTERNATIONAL CIRCUIT NUMBER IDENTIFICATION AND LOCATION (CONT.)

CIRCUIT NUMBER AND IDENTIFICATIONS (CONT.)

CIRCUIT NUMBER	COLOR	DESCRIPTION
33	TN	ENGINE OIL LEVEL
34	TN	COOLANT LEVEL
35	TN	ENGINE OIL PRESSURE
36	TN	FUEL LEVEL
37	TN	FUEL PUMP
38		
39	GY	AIR DRYER HEATER
40	GY	LOW AIR PRESSURE WARNING
41	TN	AIR TEMPERATURE
42	GY	FRONT AXLE ENGAGED
43	GY	POWER DIVIDER LOCK (PDL) WARNING
44	GY	PARK BRAKE WARNING
45	LTGN	ANTI - THEFT WARNING
46	GY	POWER TAKE - OFF WARNING
47	GY	SPEEDOMETER
48	GY	TACHOMETER
49	GY	DIFFERENTIAL LOCK WARNING
50	YL	LIGHT SWITCH FEED
51	YL	DIMMER SWITCH FEED
52	YL	HEADLIGHT HI - BEAM
53	YL	HEADLIGHT LO - BEAM
54	BN	PARKING/MARKER LIGHTS
55	OR	TURN SIGNAL - FEED
56	OR	TURN SIGNAL LIGHTS - LEFT
	YL	TURN SIGNAL LIGHTS - LEFT (BODY BUILDER CONNECTION)
57	OR	TURN SIGNAL LIGHTS - RIGHT
	LT GN	TURN SIGNAL LIGHTS - RIGHT (BODY BUILDER CONNECTION)

CHK	DATE	CHANGE	REV	REFERENCE	DRAWN	NAME		
PEC	16JAN01	PRODUCTION RELEASE.	A	P54304U	U00DLCK	42/43/44/85/8600 & 73/74/7500 CIRC DIAGRAMS		
					RELEASE NO.	DATE	PART NO.	SHEET
					P52778H	15 MAY 00	AE08-52365	03

Figure 3 Circuit Number Identification and Location Chart (Cont.)

Downloaded from www.Manualslib.com manuals search engine

https://truckmanualshub.com/

CIRCUIT NUMBER IDENTIFICATION AND LOCATION CHART, P. 4

INTERNATIONAL TRUCK AND ENGINE CORPORATION

THIS PRINT IS PROVIDED ON A RESTRICTED BASIS AND IS NOT TO BE USED IN ANY WAY DETRIMENTAL TO THE INTEREST OF INTERNATIONAL TRUCK AND ENGINE CORPORATION.

ELECTRICAL CIRCUIT DIAGRAM CHAPTER 1

INTERNATIONAL CIRCUIT NUMBER IDENTIFICATION AND LOCATION (CONT.)

CIRCUIT NUMBER AND IDENTIFICATIONS (CONT.)

CIRCUIT NUMBER	COLOR	DESCRIPTION
58	BN	CLEARANCE/IDENTIFICATION LIGHTS
59	GY	SOLENOID
60	OR	HAZARD LIGHTS
61	GY	AIR SUSPENSION
62	DKBL	PANEL LIGHTS
63	DKBL	COURTESY/DOME LIGHTS
64	YL	FOG/DRIVING LIGHTS
65	OR	CAB REAR FLOOD LIGHT
66	YL	DAYTIME RUNNING LIGHTS
67		
68	BN	TAIL LIGHTS
69	BN	LICENSE PLATE LIGHT
70	OR RD	STOP LIGHTS STOP LIGHTS (BODY BUILDER CONNECTION)
71	OR LTBL	BACK - UP LIGHTS BACK - UP LIGHTS (BODY BUILDER CONNECTION)
72	OR	TRAILER AUXILIARY FEED - BATTERY
73	LTGN	PWM
74	LTGN	HEATER RECIRC MOTOR
75	LTGN	HEATER BLOWER MOTOR
76	LTGN	AUXILIARY FAN
77	LTGN	AIR CONDITIONER
78	LTGN	MIRRORS - HEATED; MOTORIZED
79	GY	SEAT BELTS
80	BK	SLEEPER BOX RELAY - FEED
81	LTGN	POWER DOOR LOCKS

CHK	DATE	CHANGE	REV	REFERENCE	DRAWN	NAME		
PEC	16JAN01	PRODUCTION RELEASE.	A	P54304U	U00DLCK	42/43/44/85/8600 & 73/74/7500 CIRC DIAGRAMS		
					RELEASE NO.	DATE	PART NO.	SHEET
					P52778H	15MAY00	AE08-52365	04

Figure 4 Circuit Number Identification and Location Chart (Cont.)

Downloaded from www.Manualslib.com manuals search engine

https://truckmanualshub.com/

CIRCUIT NUMBER IDENTIFICATION AND LOCATION CHART, P. 5

INTERNATIONAL TRUCK AND ENGINE CORPORATION

THIS PRINT IS PROVIDED ON A RESTRICTED BASIS AND IS NOT TO BE USED IN ANY WAY DETRIMENTAL TO THE INTEREST OF THE INTERNATIONAL TRUCK AND ENGINE CORPORATION.

ELECTRICAL CIRCUIT DIAGRAM

CHAPTER 1

INTERNATIONAL CIRCUIT NUMBER IDENTIFICATION AND LOCTION (CONT.)

CIRCUIT NUMBER AND IDENTIFICATIONS (CONT.)

CIRCUIT NUMBER	COLOR	DESCRIPTION
82	GY	WINDSHIELD WIPER
83	LTGN	POWER WINDOWS
84	LTGN	CIGAR LIGHTER
85	GY	HORN
86	LTGN	RADIO - ENTERTAINMENT/CLOCK
87	GY	WINDSHIELD WASHER
88	LTGN	CLOCK/HOURMETER
89	VT	AIR BAG
90	GY	HYDRAULIC BRAKE PUMP
91	VT	INTERCOMMUNICATIONS
92	TN	TRANSMISSION CONTROLS - ELECTRONIC
93	TN	AXLE SHIFT CONTROL
94	GY	ANTILOCK BRAKE SYSTEM
95	TN	EXHAUST EMISSION
96	YL	SNOW PLOW LIGHTS/CRUISE CONTROL
97	VT	ENGINE CONTROLS - ELECTRONIC
98	BK	DATALINK AND DIAGNOSTICS
99	VT	ACCELERATOR POSITION SENSOR (APS)
100	GY	AIR HORN (ELECTRIC SOLENOID ACTUATED)
101	TN	BRAKE APPLICATION AIR
102	YL	FLASH TO PASS
103	LTGN	BODY BUILDER AUX. FEED
104	DKBL	REMOTE START/STOP
105	LTGN	HEATED SEATS

CHK	DATE	CHANGE	REV	REFERENCE	DRAWN	NAME		
JKP	30MAY03	ADDED 103, 104, 105 & COLOR TO 100, 101, 102.	C	58205F	U00DLCK	42/43/44/85/8600 & 73/74/7500 CIRC DIAGRAMS		
					RELEASE NO.	DATE	PART NO.	SHEET
					P52778H	15MAY00	AE08-52365	05

Figure 5 Circuit Number Identification and Location Chart (Cont.)

Downloaded from www.Manualslib.com manuals search engine

https://truckmanualshub.com/

NAVPAK/ECM I6 ENGINE CONTROLLER CONNECTOR PIN NUMBER IDENTIFICATION, P. 6

INTERNATIONAL TRUCK AND ENGINE CORPORATION

THIS PRINT IS PROVIDED ON A RESTRICTED BASIS AND IS NOT TO BE USED IN ANY WAY DETRIMENTAL TO THE INTEREST OF INTERNATIONAL TRUCK AND ENGINE CORPORATION.

ELECTRICAL CIRCUIT DIAGRAM

CHAPTER 1

INTERNATIONAL NAVPAK/ECM I6 ENGINE CONTROLLER CONNECTOR PIN NUMBER IDENTIFICATION

ECM PIN #	TERM	DESCRIPTION	ECM PIN #	TERM	DESCRIPTION
12	AAT	AMBIENT AIR TEMP. SENSOR	27	IVS	IDLE VALIDATION SWITCH
33	ACD	A/C DEMAND	54	OWL	OIL/WATER WARNING LIGHT
8	APS	ACCELERATOR POS. SENSOR	25	PWR RLY	CEC MAIN POWER RELAY SIGNAL
16	ATA(+)	J1708 DATALINK (+)	31	RAS	RESUME/ACCELERATE
17	ATA(-)	J1708 DATALINK (-)	37	RPRF	PRESET SPEED
29	BAP	BAROMETRIC AIR PRESS. SENSOR	30	RPS	REMOTE ACCELERATOR POS. SENS. SIG.
43	BN01	BRAKE STATUS #1	6	RPS_RTN	REMOTE ACCELERATOR POS. SENS RTN.
44	BN02	BRAKE STATUS #2	36	RVAR	VARIBLE SPEED SWITCH
18	CAN SHLD	DRIVETRAIN J1939 DATALINK SHLD	32	SCS	SET/COAST
19	CAN(+)	DRIVETRAIN J1939 DATALINK (+)	45	SIL	SERVICE INTERVAL LIGHT
20	CAN(-)	DRIVETRAIN J1939 DATALINK (-)	34	STI	SELF TEST INPUT
15	CBE_SEL1	RETARDER/EXHAUST BRAKE REQUEST	48	SUL	SHIFT UP LIGHT
10	CLS	COOLANT LEVEL SENSOR	59	TACA	TACHOMETER A
35	COD	CRUISE ON/OFF	60	TACB	TACHOMETER B
21	DC (+)	POWER	38	TCSS	TORQUE CURVE SELECTION INPUT
22	DC (+)	POWER	28	TSA	TWO SPEED AXLE
1	DC (-)	GROUND	3	VBREF(5V)	ACCELERATOR SENSOR SUPPLY
2	DC (-)	GROUND	11	VBREF GND	ACCELERATOR SENSOR GROUND
26	DDS	DRIVELINE DISENGAUGED INPUT	5	VCREF(5V)	REMOTE ACCELERATOR SENS. SUPPLY
42	DPS	GROUND	7	VCREF GND	REMOTE ACCELERATOR SENSOR GND
46	ECI	ENGINE CRANK INHIBIT	24	VIGN	IGNITION FEED
56	EDL	TRANSMISSION KICKDOWN	47	VRE	RETARDER/EXHAUST BRAKE ENABLE
53	GPL	GLOW PLUG LIGHT	39	VSS(+)	VEHICLE SPEED SENSOR (+)
4	HGE	HYD. PRESS GOVERNOR ENABLE	40	VSS(-)	VEHICLE SPEED SENSOR (-)
49	HMI	HYDRAULIC PRESS GOVERNOR IND. LT	58	VSSCALA	SPEEDOMETER SIGNAL A
13	HPS	HYDRAULIC PRESSURE SENSOR	57	VSSCALB	SPEEDOMETER SIGNAL B
41	HSO (+)	POWER	55	WARN	ENGINE WARNING LIGHT
23	HSO (-)	GROUND			

CHK	DATE	CHANGE	REV	REFERENCE	DRAWN	NAME
CNA	12SEP03	ADDED PIN # CHART.	C	58774T	U00JXP9	42/43/44/85/8600 & 73/74/7500 CIRC DIAGRAMS

RELEASE NO.	DATE	PART NO.	SHEET
P52778H	09AUG00	AE08-52365	06

Figure 6 NAVPAK/ECM I6 Engine Controller Connector Pin Number Identification

Downloaded from www.Manualslib.com manuals search engine

https://truckmanualshub.com/

CIRCUIT DIAGRAM INSTRUCTIONS, P. 7

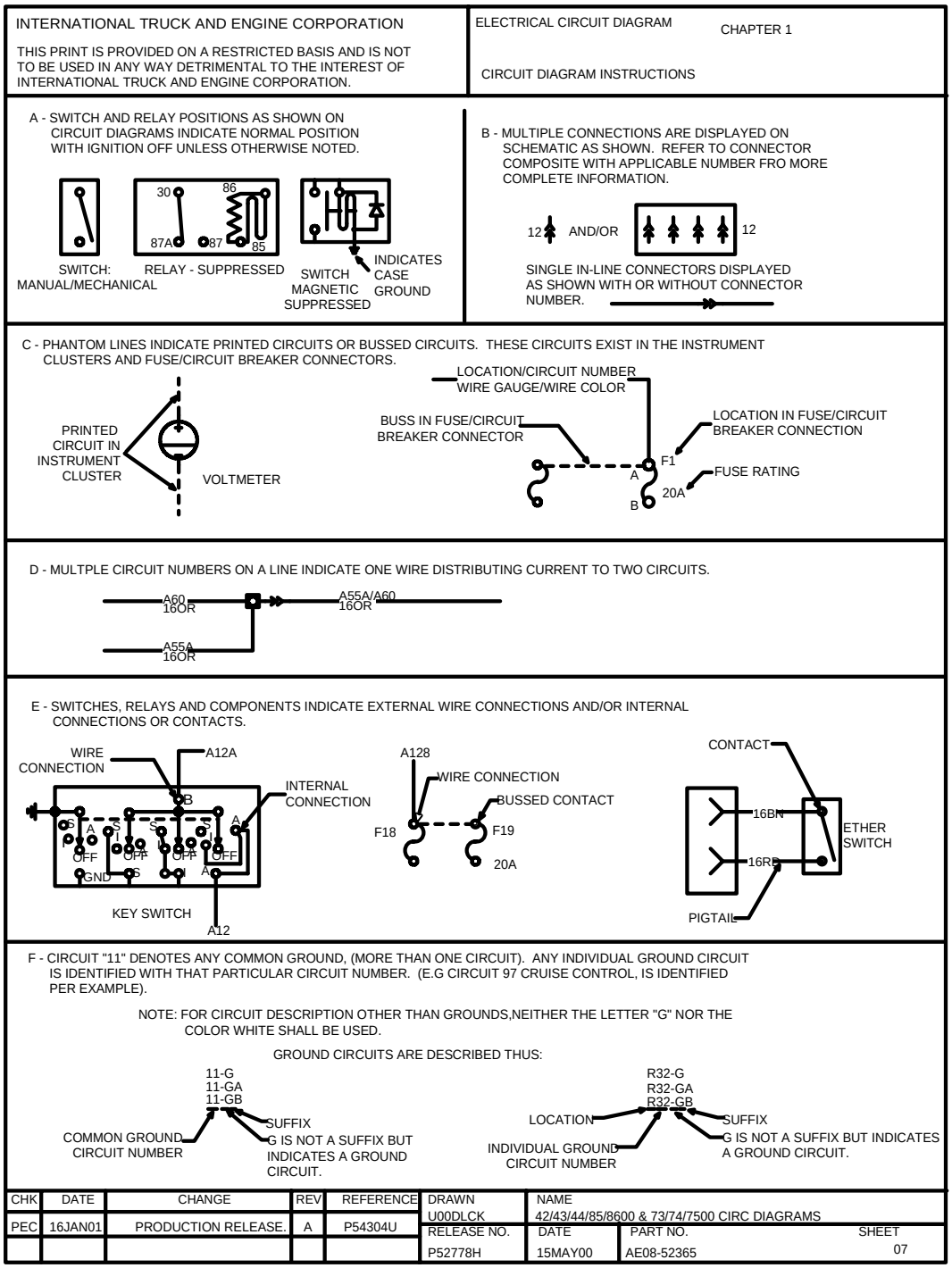

Figure 7 Circuit Diagram Instructions

Downloaded from www.Manualslib.com manuals search engine

https://truckmanualshub.com/

CIRCUIT DIAGRAM INSTRUCTIONS, P. 8

INTERNATIONAL TRUCK AND ENGINE CORPORATION

THIS PRINT IS PROVIDED ON A RESTRICTED BASIS AND IS NOT TO BE USED IN ANY WAY DETRIMENTAL TO THE INTEREST OF INTERNATIONAL TRUCK AND ENGINE CORPORATION.

ELECTRICAL CIRCUIT DIAGRAM

CHAPTER 1

CIRCUIT DIAGRAM INSTRUCTIONS

G - ABBREVIATIONS: COLOR, NOUN AND ENGINE

COLOR ABBREVIATION

AQ - AQUA
BK - BLACK
BL - BLUE
BN - BROWN
DK GN - DARK GREEN
GD - GOLD
GY - GRAY
GN - GREEN
LT BL - LIGHT BLUE
LT GN - LIGHT GREEN
OR - ORANGE
PK - PINK
PL - PURPLE
RD - RED
SIL - SILVER
TN - TAN
VT - VIOLET
WH - WHITE
YL - YELLOW

NOUN ABBREVIATION

A, ACC - ACCESSORY
AC - AIR CONDITIONER
AUX - AUXILIARY
AWG - AMERICAN WIRE GAUGE
B, BAT - BATTERY
CONN - CONNECTION OR CONNECTOR
DRL - DAYTIME RUNNING LIGHTS
ENG - ENGINE
FWD - FORWARD
GA - GAUGE
G, GND - GROUND
I, IGN - IGNITION
IND - INDICATOR
L - LEFT
LT - LIGHT
W/O - WITHOUT
OPT - OPTIONAL
R - RIGHT
S - START OR SENDER
THERMO - THERMOSTAT
W/ - WITH

ENGINE ABBREVIATION

ISM - MFG (CUMMINS) 10.8 LITER ELECTRONIC ENGINE CONTROL

N14E PLUS - MFG (CUMMINS) 14 LITER ELECTRONIC ENGINE CONTROL

C-10,C-12 - MFG (CATERPILLAR) 10.3 LITER ELECTRONIC ENGINE CONTROL

V8-AVNT - MFG (INTERNATIONAL) V8 6.0 LITER ELECTRONIC ENGINE CONTROL

I6-HEUI - MFG (INTERNATIONAL) NGD I6 DT466 & DT/HT530 ELECTRONIC ENGINE CONTROL

CHK	DATE	CHANGE	REV	REFERENCE	DRAWN	NAME		
PEC	16JAN01	PRODUCTION RELEASE.	A	P54304U	U00JXP9	42/43/44/85/8600 & 73/74/7500 CIRC DIAGRAMS		
					RELEASE NO.	DATE	PART NO.	SHEET
					P52778H	10AUG00	AE08-52365	08

Figure 8 Circuit Diagram Instructions (Cont.)

Downloaded from www.Manualslib.com manuals search engine

https://truckmanualshub.com/

SCHEMATIC SYMBOL CHART, P. 9

INTERNATIONAL TRUCK AND ENGINE CORPORATION

THIS PRINT IS PROVIDED ON A RESTRICTED BASIS AND IS NOT TO BE USED IN ANY WAY DETRIMENTAL TO THE INTEREST OF INTERNATIONAL TRUCK AND ENGINE CORPORATION.

ELECTRICAL CIRCUIT DIAGRAM CHAPTER 1

SCHEMATIC SYMBOL CHART

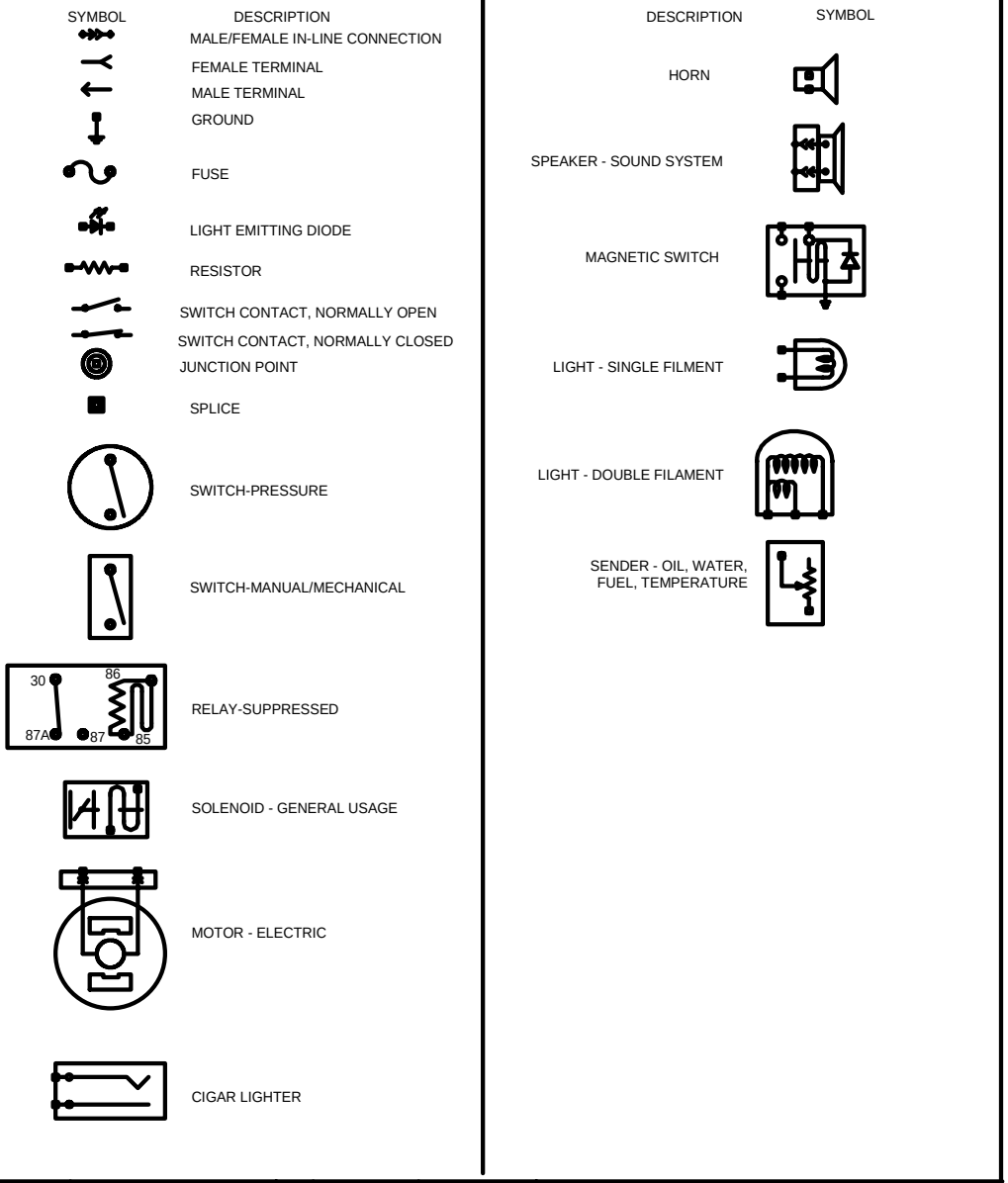

CHK	DATE	CHANGE	REV	REFERENCE	DRAWN	NAME		
PEC	16JAN01	PRODUCTION RELEASE.	A	P54304U	U00DLCK	42/43/44/85/8600 & 73/74/7500 CIRC DIAGRAMS		
					RELEASE NO.	DATE	PART NO.	SHEET
					P52778H	19MAY00	AE08-52365	09

Figure 9 Schematic Symbol Chart

Downloaded from www.Manualslib.com manuals search engine

https://truckmanualshub.com/

RELAY FUNCTIONS, P. 10

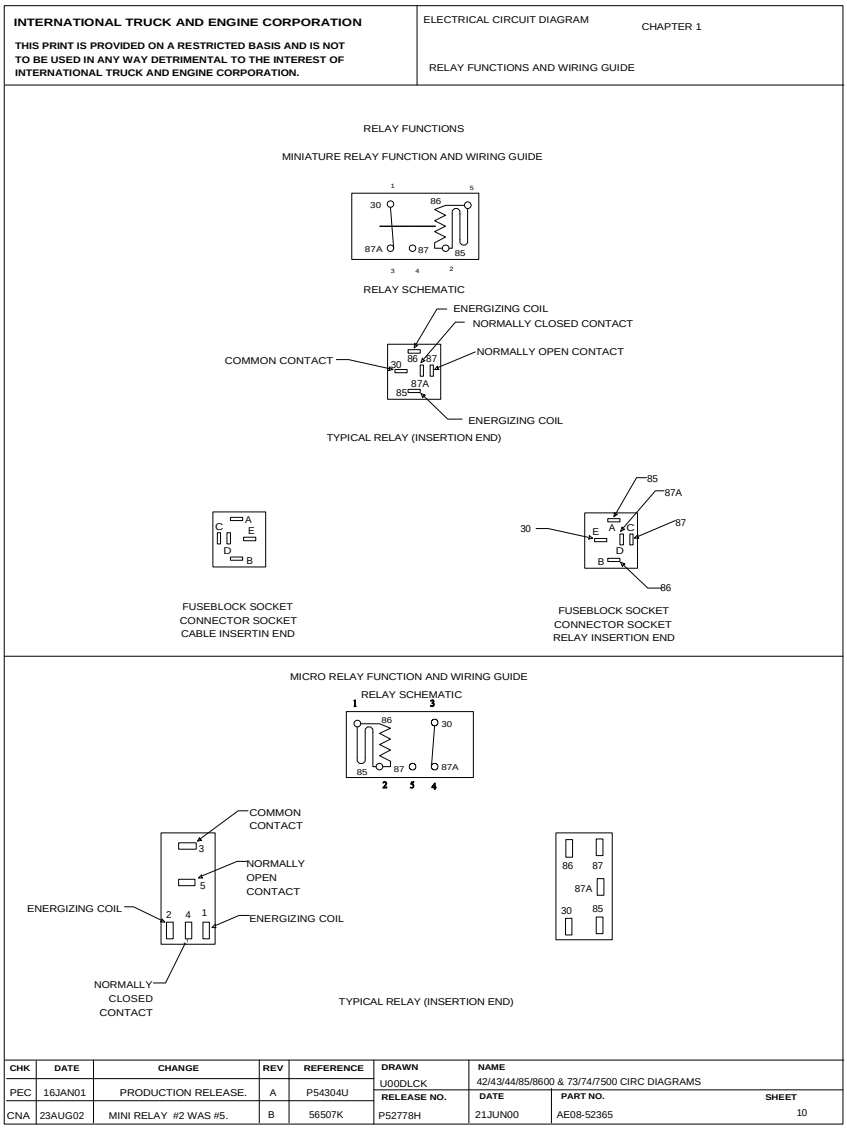

Figure 10 Relay Functions

Downloaded from www.Manualslib.com manuals search engine

https://truckmanualshub.com/

LAMP BULB CHART, P. 11

INTERNATIONAL TRUCK AND ENGINE CORPORATION

THIS PRINT IS PROVIDED ON A RESTRICTED BASIS AND IS NOT TO BE USED IN ANY WAY DETRIMENTAL TO THE INTEREST OF INTERNATIONAL TRUCK AND ENGINE CORPORATION.

ELECTRICAL CIRCUIT DIAGRAM — CHAPTER 1

LAMP BULB CHART

BULB APPLICATION	CANDLEPOWER OR WATTS	BULB TRADE NUMBER
BACK-UP LIGHTS	32 CANDLEPOWER	GE1156
CLEARANCE & INDENTIFICATION	3 CANDLEPOWER	GE193
COURTESY LIGHT	3 CANDLEPOWER	GE168
DOME LIGHTS	12 CANDLEPOWER	GE561
FOG LIGHTS	55 CANDLEPOWER	VH550
HEAD LIGHTS:		
LOW BEAMS	65 WATTS	GE9007
HIGH BEAMS	65 WATTS	GE9007
INSTRUMENT CLUSTER:		
GAUGE BACK LIGHT		082S270538-3
GAUGE WARNING LED (RED)		082S272109-3
RANGE INHIBIT LED (YELLOW)		082S272109-4
COLD AMBIENT PROTECTION LED (YELLOW)		082S272109-4
FUEL FILTER LED (YELLOW)		082S272109-4
WARN ENGINE LED (YELLOW)		082S272109-4
STOP ENGINE LED (RED)		082S272109-3
BRAKE PRESSURE LED (RED)		082S272109-3
BRAKE FLUID LED (RED)		082S272109-3
WAIT TO START LED (YELLOW)		082S272109-4
CHECK TRANSMISSION LED (YELLOW)		082S272109-4
TRAILER ABS LED (YELLOW)		082S272109-4
WASHER FLUID LED (YELLOW)		082S272109-4
LEFT TURN SIGNAL LED (GREEN)		082S272109-2
TRACTION CONTROL LED (GREEN)		082S272109-2
WATER IN FUEL LED(YELLOW)		082S272109-4
PARK FLUID LED LIGHT (RED)		082S272109-3
CHECK ELECTRICAL SYSTEMS LED (YELLOW)		082S272109-4
PARK BRAKE LED (RED)		082S272109-3
CRUISE CTRL ACTIVE LED (GREEN)		082S272109-2
ANTILOCK BRAKING SYSTEM LED (YELLOW)		082S272109-4
RIGHT TURN LED (GREEN)		082S272109-2
COOLANT LEVEL LED (RED)		082S272109-3
SEAT BELT LED (RED)		082S272109-3
HIGH BEAM ICON LED (BLUE)		082S272109-5
CHECK AIR CONDITIONER LED (YELLOW)		082S272109-4
RETARD OVER HEAT LED (RED)		082S272109-3
PTO/THROTTLE LED (RED)		082S272109-3
MAP LIGHT	3 CANDLEPOWER	1816
SIDE MARKER		2458
STOP & TURN/TAIL & LICENSE PLATE	32/3 CANDLEPOWER	1157
TURN SIGNAL/MARKER (FENDER)		3157
TURN SIGNAL & MARKER LIGHT		2356
WORK (TRAILER HOOK-UP) LIGHT		4411

CHK	DATE	CHANGE	REV	REFERENCE	DRAWN	NAME
PEC	16JAN01	PRODUCTION RELEASE.	A	P54304U	U00DLCK	42/43/44/85/8600 & 73/74/7500 CIRC DIAGRAMS
PEC	18JUN01	REVISED DRWG SHEET.	B	P54634F	RELEASE NO. P52778H	DATE 20JUN00 / PART NO. AE08-52365 / SHEET 11

Figure 11 Lamp Bulb Chart

Downloaded from www.Manualslib.com manuals search engine

https://truckmanualshub.com/

INTERNATIONAL V8 AND I6 ECM CONTROLLER CONNECTORS PIN NUMBER IDENTIFICATION, P.12

INTERNATIONAL TRUCK AND ENGINE CORPORATION

THIS PRINT IS PROVIDED ON A RESTRICTED BASIS AND IS NOT TO BE USED IN ANY WAY DETRIMENTAL TO THE INTEREST OF INTERNATIONAL TRUCK AND ENGINE CORPORATION.

ELECTRICAL CIRCUIT DIAGRAM

CHAPTER 1

INTERNATIONAL V8 & I6 ECM CONTROLLER CONNECTORS PIN NUMBER IDENTIFICATION

CONNECTOR X3 REFERENCE (6020)

ECM PIN #	TERM	DESCRIPTION
1	FPM	FUEL PUMP MONITIOR
2	FLI	FUEL LEVEL INDICATOR
3	KL.15	IGNITION FEED
4	ECL	ENGINE COOLANT LEVEL
5	MPR	MAIN POWER RELAY
6	KL.31	GROUND
7	KL.31	GROUND
8	DDS	DRIVELINE DISENAGE SWITCH
9	FPC	FUEL PUMP CONTROL
10	TCSS	TORQUE CURVE SELECT SWITCH
11	TACH	TACHOMETER CONTROL
12	CAN1+	DRIVETRAIN J1939 DATALINK +
13	CAN1-	DRIVETRAIN J1939 DATALINK -
14	RAS	RESUME/ACCELERATE
15	CAN1-SHLD	DRIVETRAIN 1939 DATALINK SHLD
16		NOT POPULATED
17	VSS_CAL	VEHICLE SPEED SENSOR CALIBRATION
18	VRE	VEHICLE RETARDER ENABLE
19	RPRE	REMOTE PRESET PTO ENABLE
20	RVAR	REMOTE VARIABLE PTO ENABLE
21	SCS	SET/COAST
22	ESHTR	ELECTRONIC SHUTTER RELAY
23	ECI	ENGINE CRANK INHIBIT
24	BAP	BAROMETRIC AIR PRESSURE

CONNECTOR X4 REFERENCE (6021)

ECM PIN #	TERM	DESCRIPTION
1	KL.87	BATTERY POWER
2	KL.87	BATTERY POWER
3		NOT POPULATED
4	VBREF	SENSOR REFERENCE VOLTAGE
5		NOT POPULATED
6	LSI_SPARE2	LOW SPEED INPUT 2
7		NOT POPULATED
8		NOT POPULATED
9	VSS-	VEHICLE SPEED SENSOR-
10	VSS+	VEHICLE SPEED SENSOR+
11		NOT POPULATED
12	IVS	IDLE VALIDATION SWITCH
13		NOT POPULATED
14	EFAN	ELECTRIC FAN CONTROL
15	LSO_SPARE4	LOW SIDE OUTPUT 4
16		NOT POPULATED
17		NOT POPULATED
18	APS	ACCELERATION POSITION SENSOR
19		NOT POPULATED
20	ATA+	J1708 DATALINK +
21	ATA-	J1708 DATALINK -
22		NOT POPULATED
23	GSC	GENSET SPEED CONTROL
24	KL.31B	SENSOR REFERENCE GROUND

CHK	DATE	CHANGE	REV	REFERENCE	DRAWN	NAME		
CNA	25FEB03	PIN 6 OF CONN X4 INOUT CHANGED TO INPUT	B	58928S	U00DLCK	42/43/44/85/8600 & 73/74/7500 CIRC DIAGRAMS		
					RELEASE NO.	DATE	PART NO.	SHEET
					P54304U	16JAN01	AE08-52365	12

Figure 12 International V8 and I6 ECM Controller Connectors Pin Number Identification

Downloaded from www.Manualslib.com manuals search engine

https://truckmanualshub.com/

12 VOLT POWER DISTRIBUTION CIRCUIT DIAGRAMS (CHAPTER 2)

ACCESSORY, P. 1

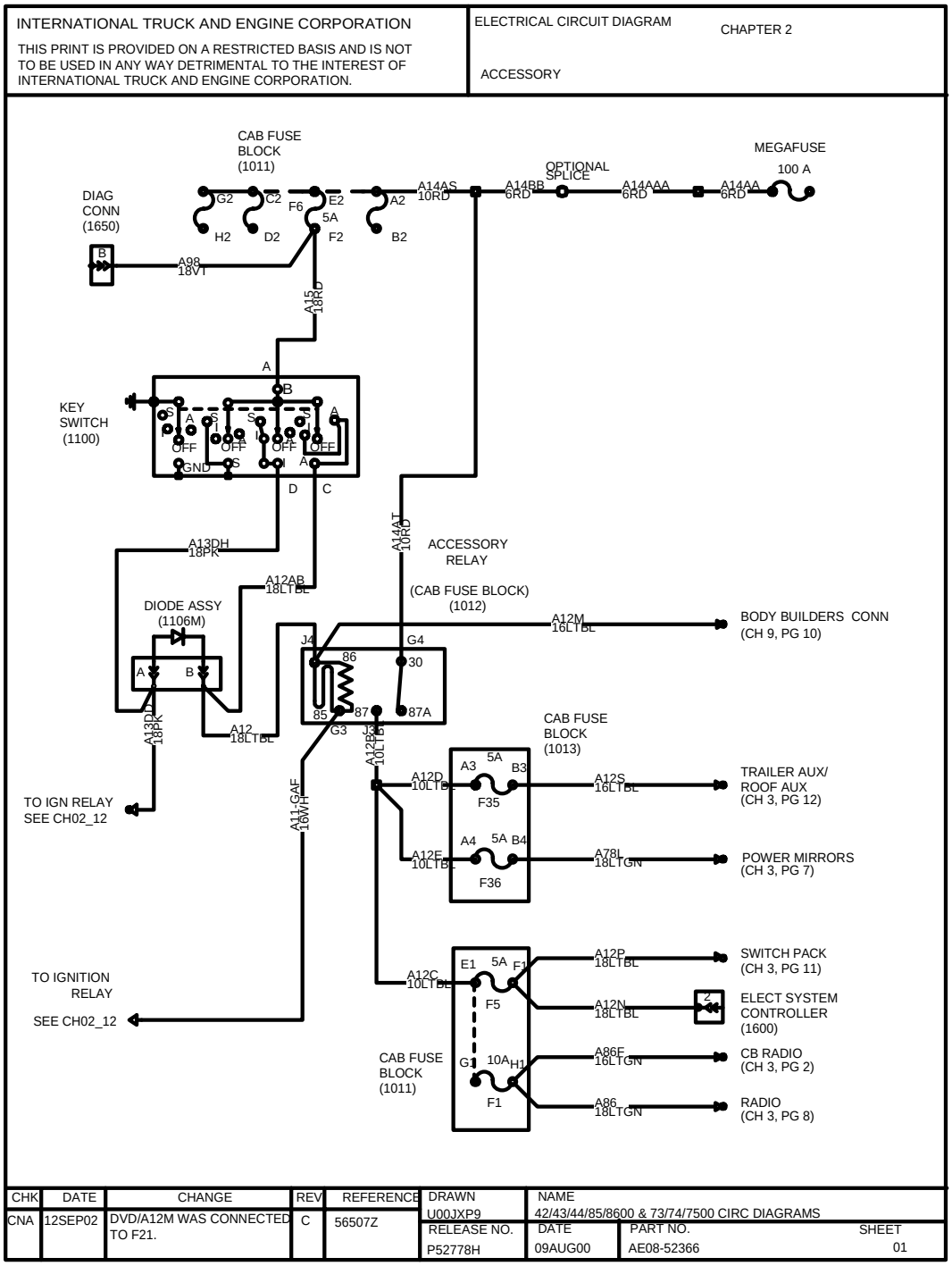

Figure 13 Accessory

Downloaded from www.Manualslib.com manuals search engine

https://truckmanualshub.com/

BATTERY FEEDS, CAB, P. 2

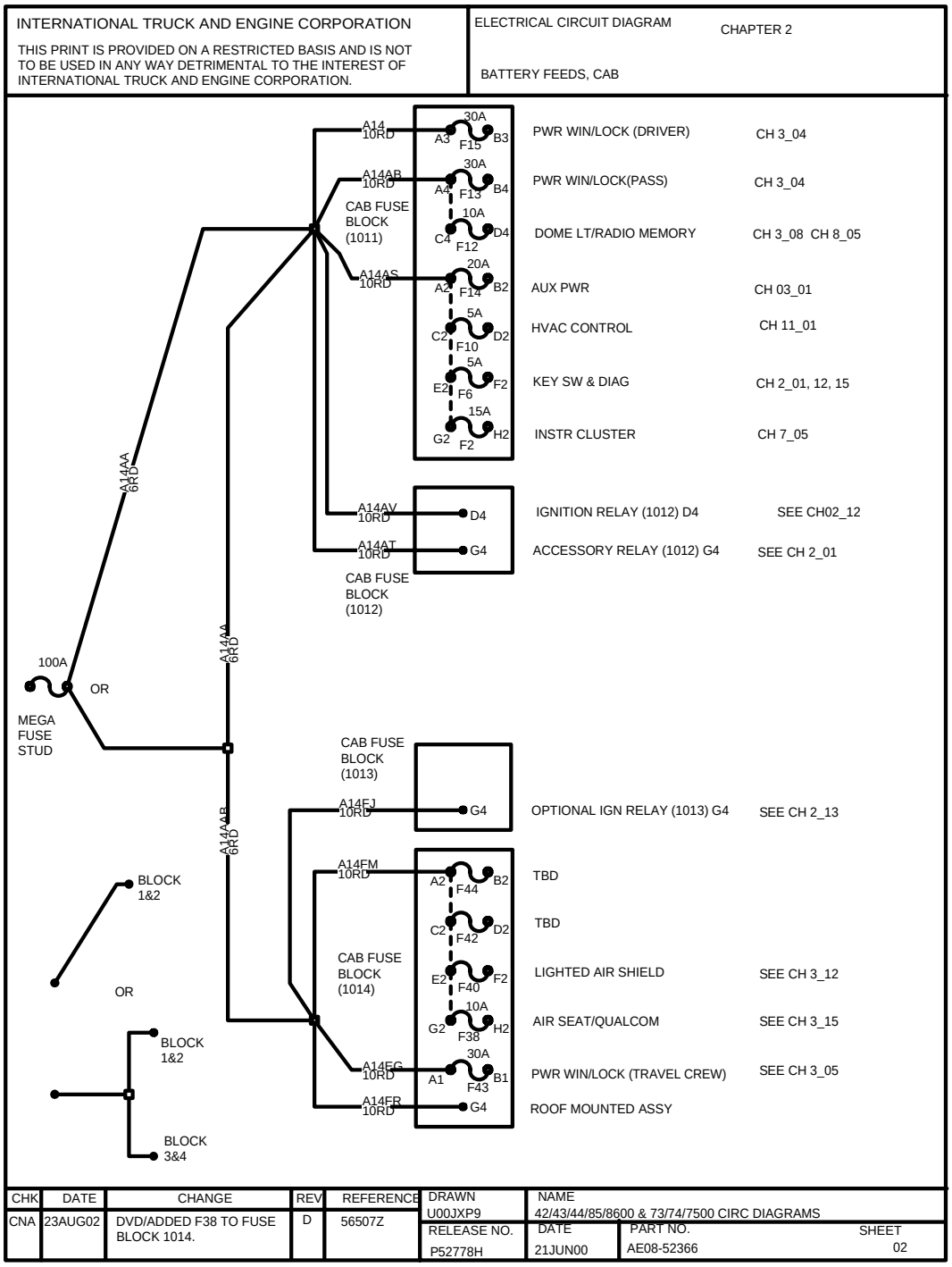

Figure 14 Battery Feeds, Cab

Downloaded from www.Manualslib.com manuals search engine

https://truckmanualshub.com/

BATTERY, P. 3

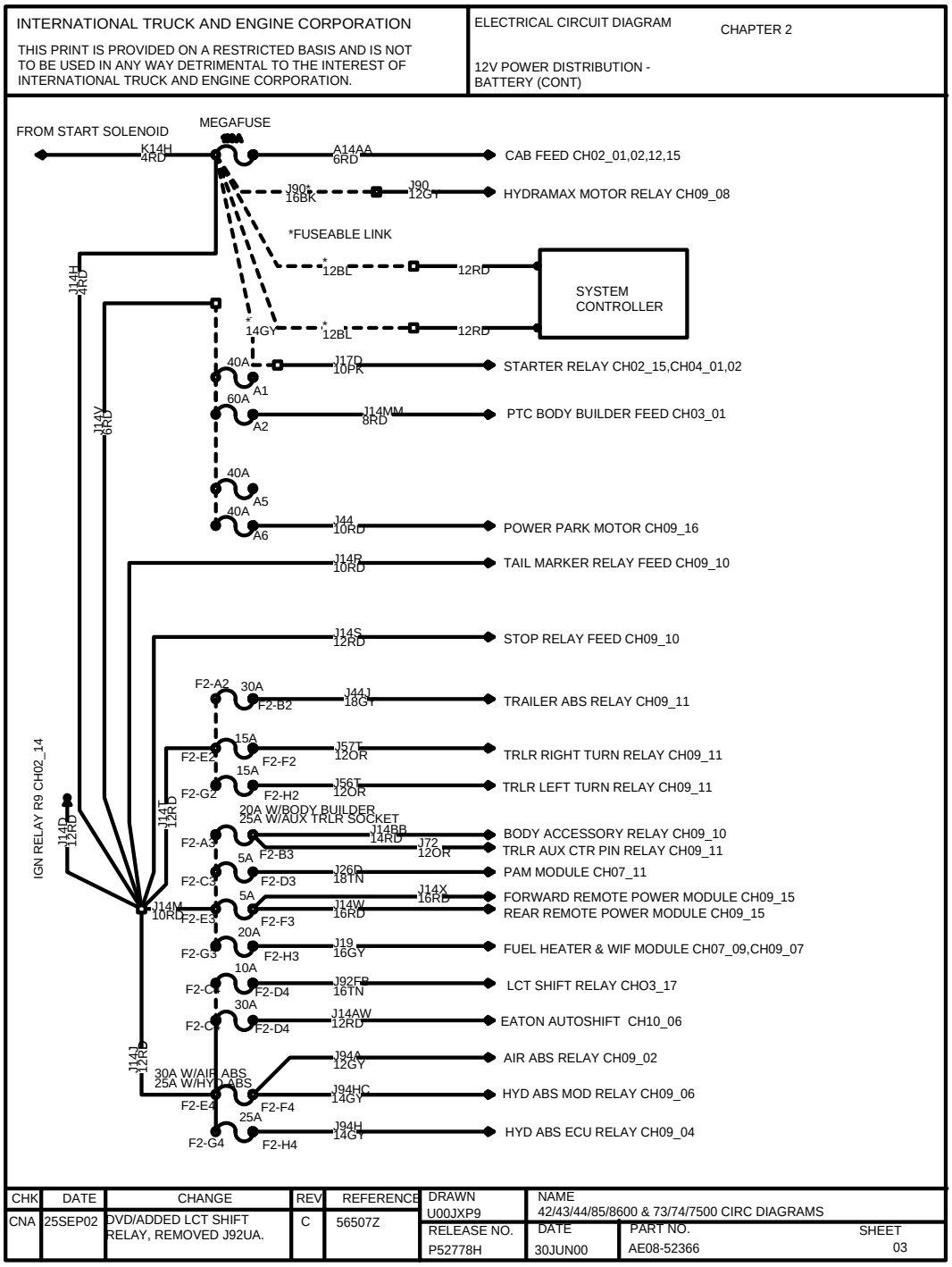

Figure 15 Battery

Downloaded from www.Manualslib.com manuals search engine

https://truckmanualshub.com/

1708 DATA LINK, P. 4

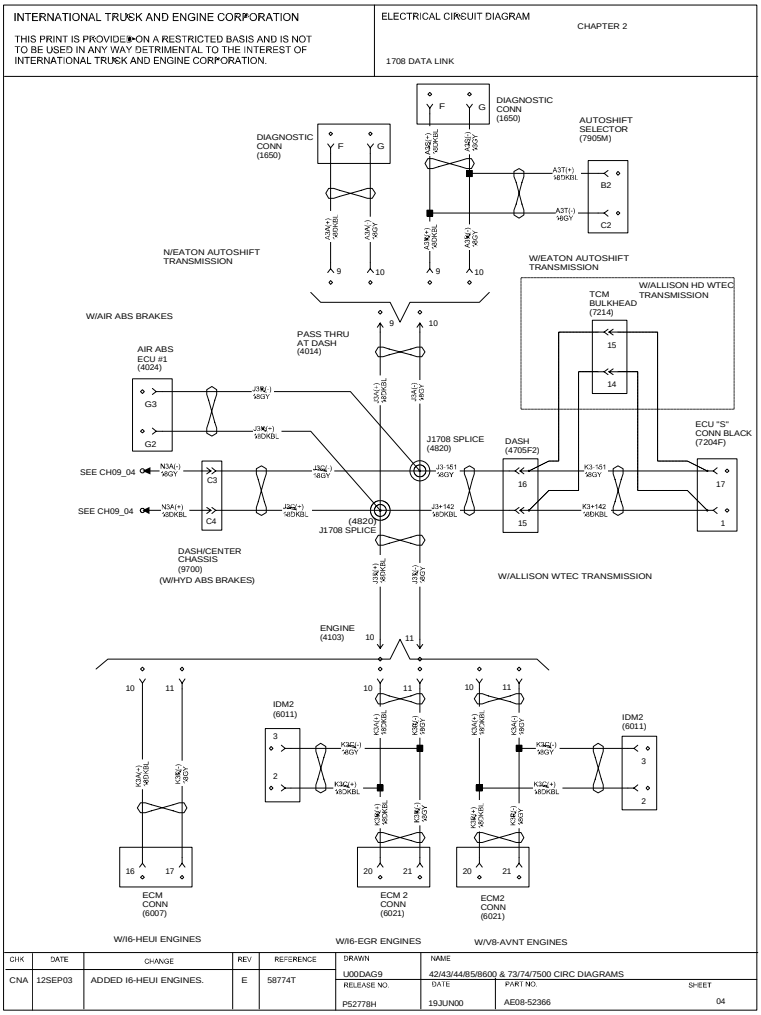

Figure 16 1708 Data Link

Downloaded from www.Manualslib.com manuals search engine

https://truckmanualshub.com/

SWITCH DATA LINK, P. 5

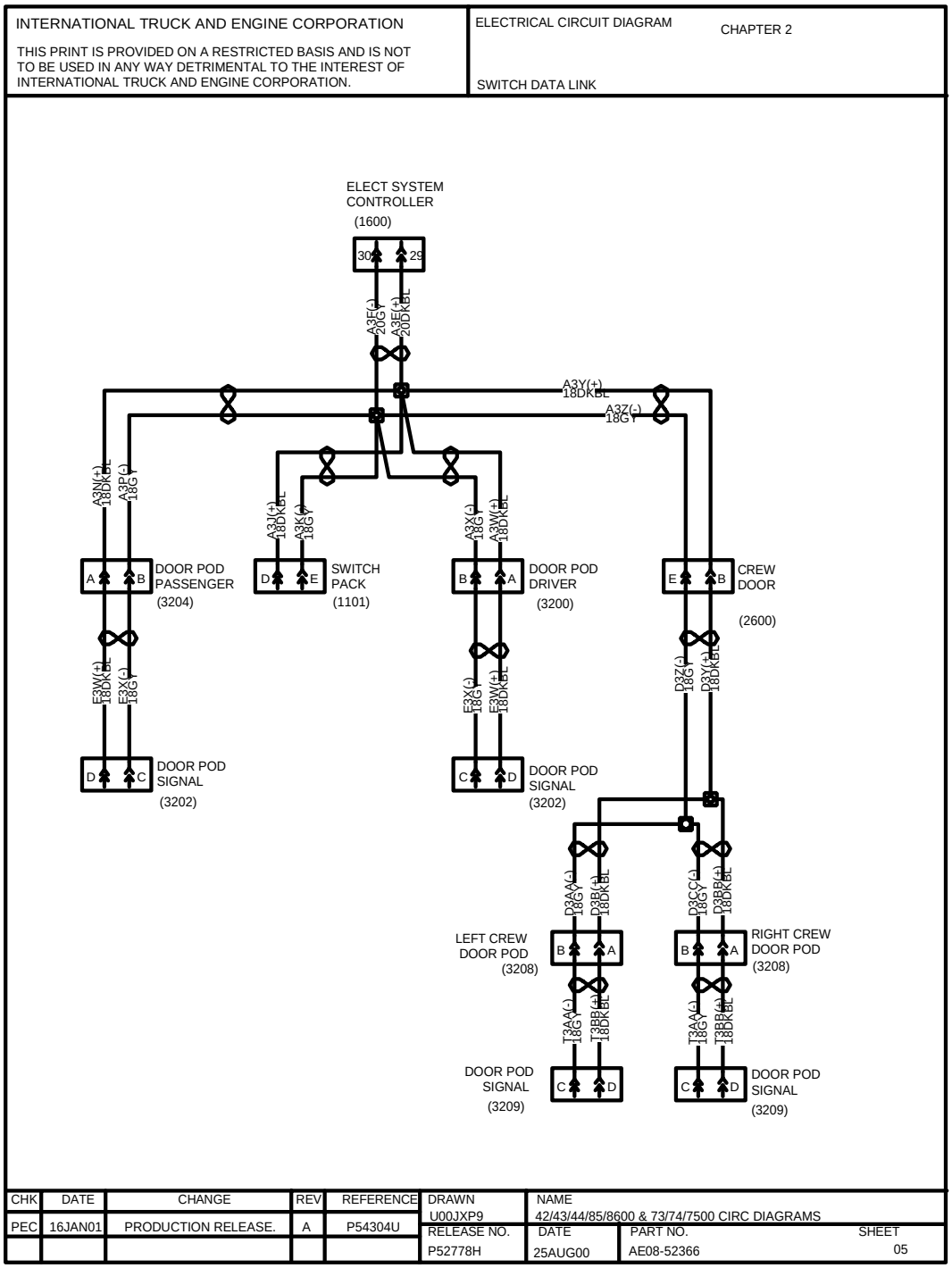

Figure 17 Switch Data Link

Downloaded from www.Manualslib.com manuals search engine

https://truckmanualshub.com/

DRIVETRAIN 1939 DATA LINK (CAB), P. 6

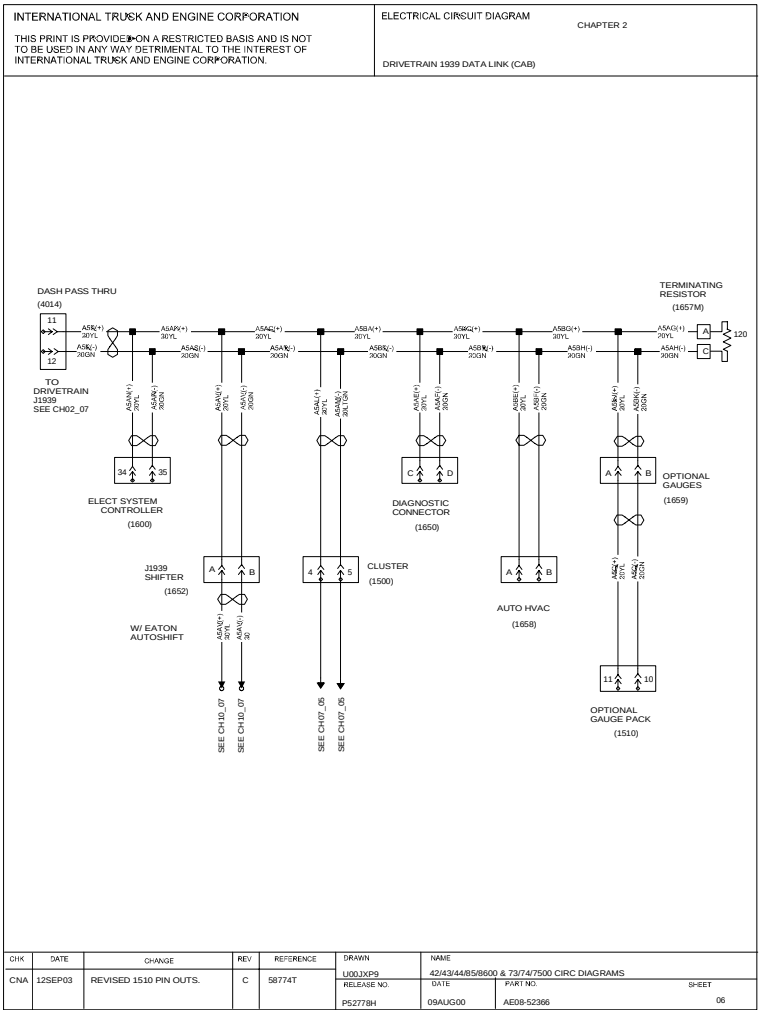

Figure 18 Drivetrain 1939 Data Link (Cab)

Downloaded from www.Manualslib.com manuals search engine

https://truckmanualshub.com/

DRIVETRAIN 1939 DATA LINK (CHASSIS), P. 7

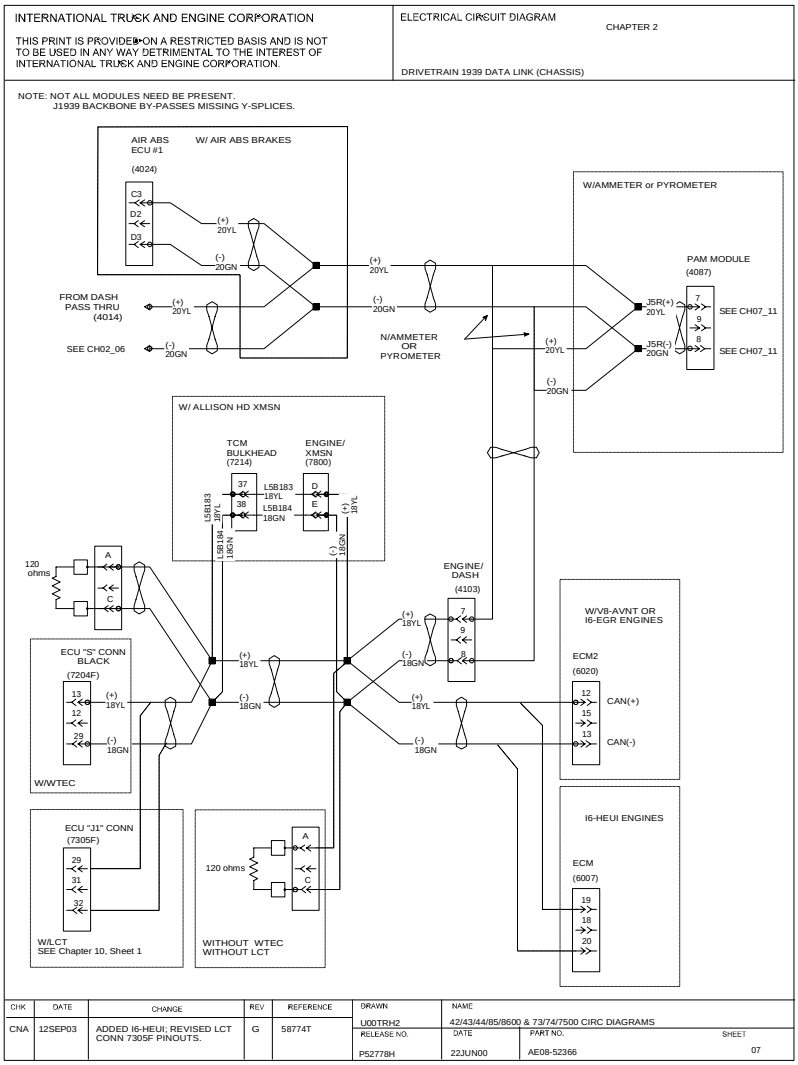

Figure 19 Drivetrain 1939 Data Link (Chassis)

Downloaded from www.Manualslib.com manuals search engine

https://truckmanualshub.com/

GROUNDS CHASSIS, P. 8

INTERNATIONAL TRUCK AND ENGINE CORPORATION

THIS PRINT IS PROVIDED ON A RESTRICTED BASIS AND IS NOT TO BE USED IN ANY WAY DETRIMENTAL TO THE INTEREST OF INTERNATIONAL TRUCK AND ENGINE CORPORATION.

ELECTRICAL CIRCUIT DIAGRAM CHAPTER 2

GROUNDS, CHASSIS

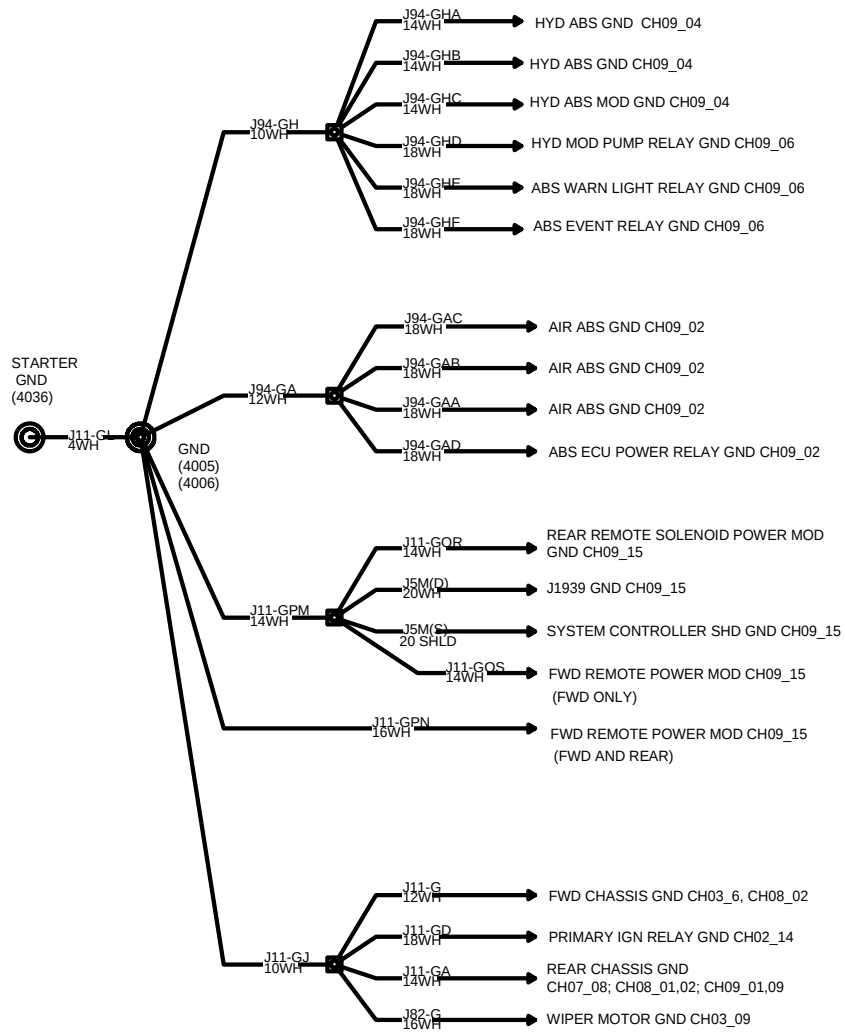

CHK	DATE	CHANGE	REV	REFERENCE	DRAWN	NAME		
PEC	16JAN01	PRODUCTION RELEASE.	A	P54304U	U00JXP9	42/43/44/85/8600 & 73/74/7500 CIRC DIAGRAMS		
					RELEASE NO.	DATE	PART NO.	SHEET
					52778H	26MAY00	AE08-52366	08

Figure 20 Grounds Chassis

Downloaded from www.Manualslib.com manuals search engine

https://truckmanualshub.com/

GROUNDS CHASSIS, P. 9

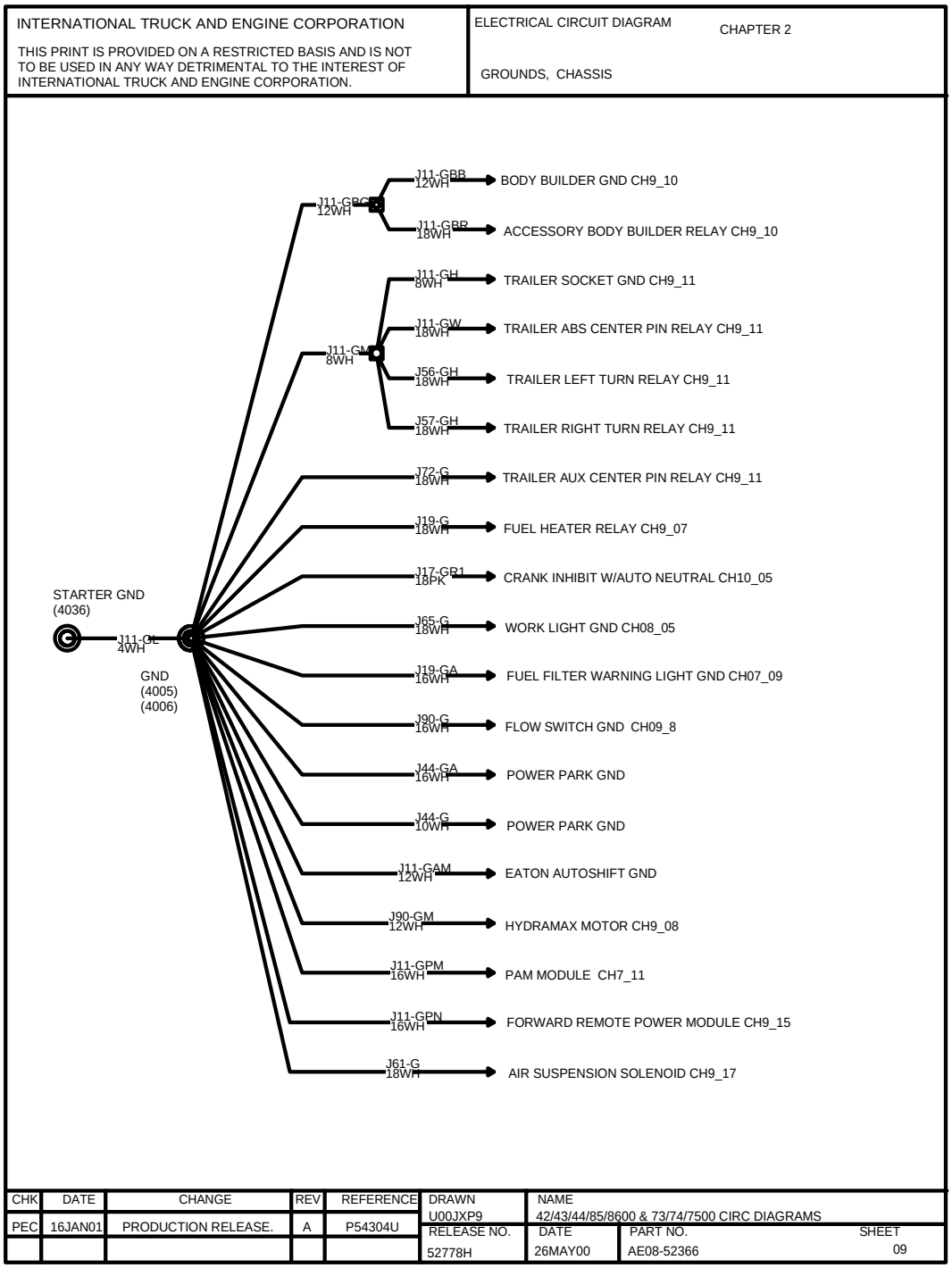

Figure 21 Grounds Chassis (Cont.)

Downloaded from www.Manualslib.com manuals search engine

https://truckmanualshub.com/

GROUNDS IP, P. 10

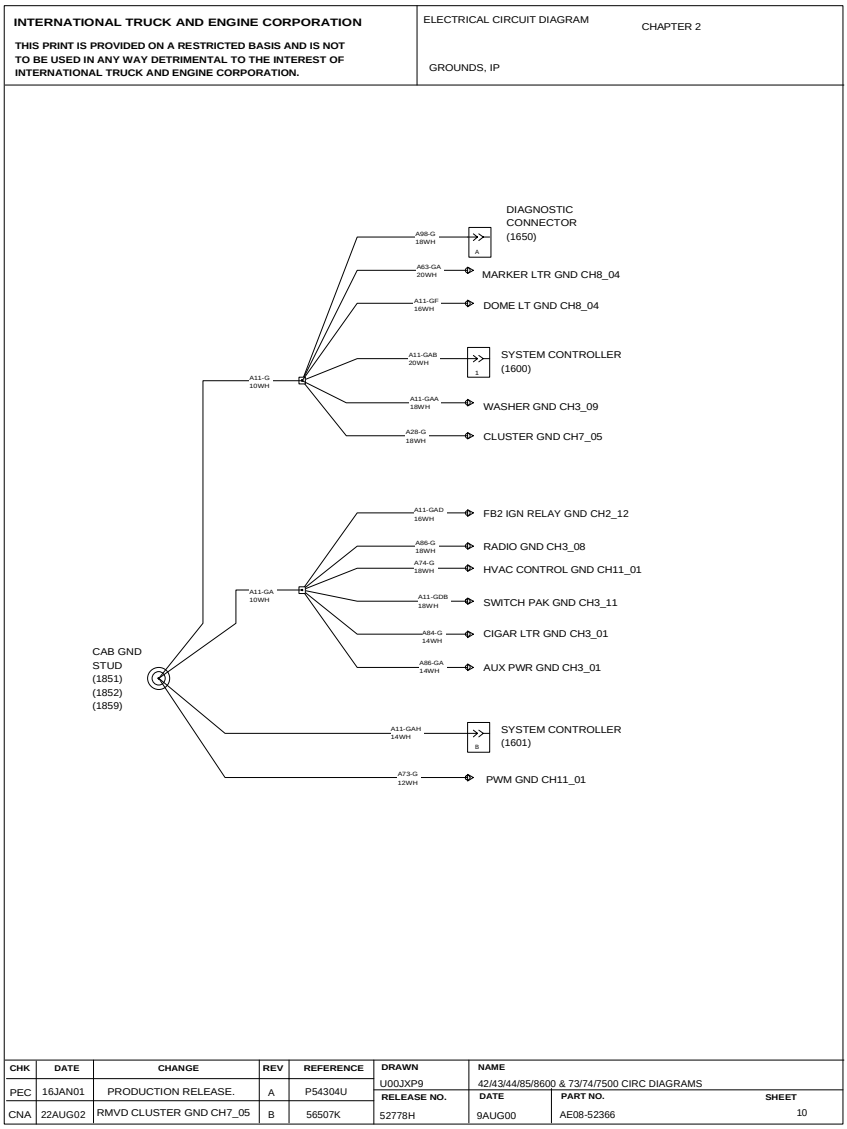

Figure 22 Grounds IP

Downloaded from www.Manualslib.com manuals search engine

https://truckmanualshub.com/

GROUNDS IP, P. 11

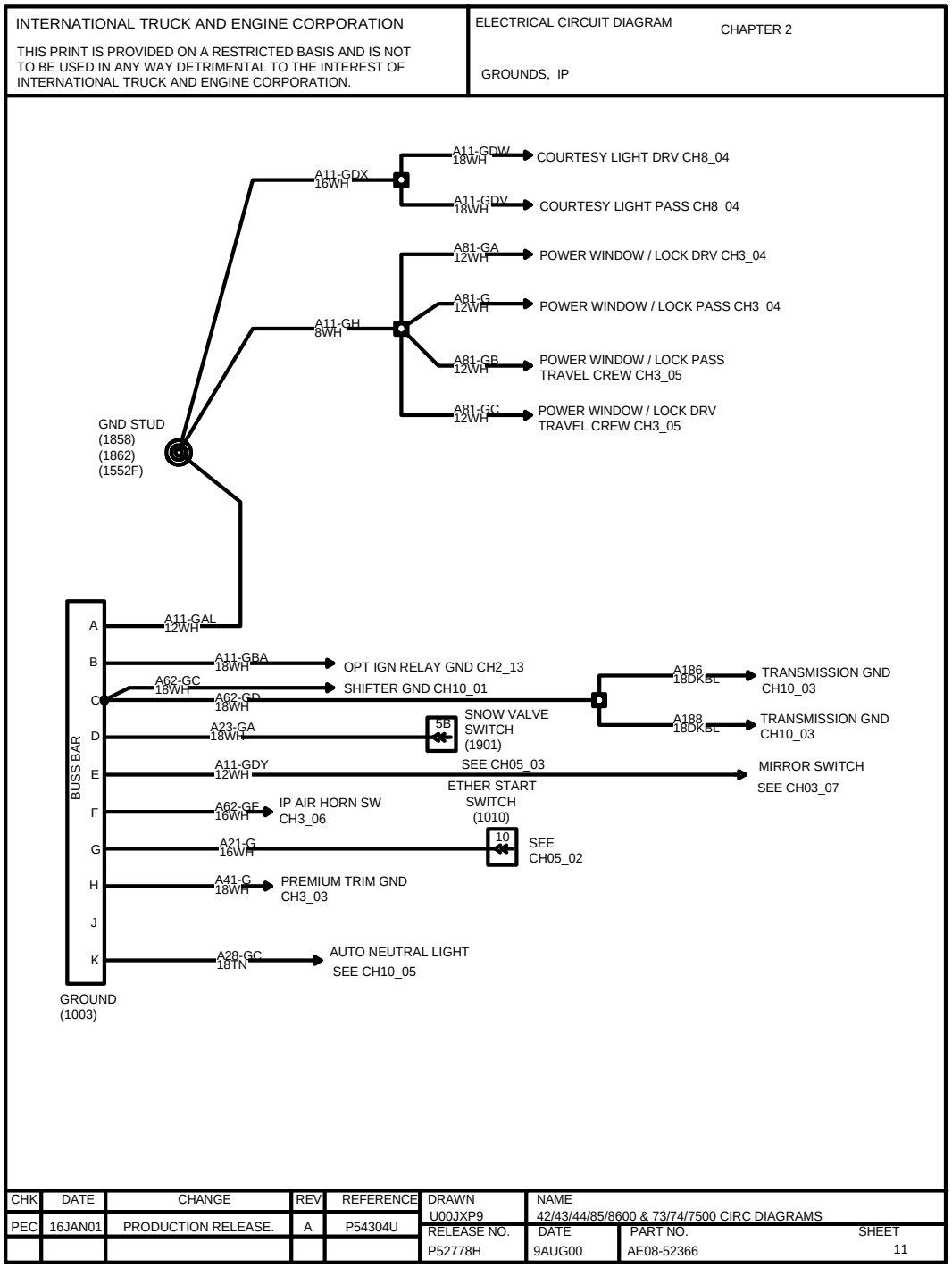

Figure 23 Grounds IP

Downloaded from www.Manualslib.com manuals search engine

https://truckmanualshub.com/

IGNITION CAB, P. 12

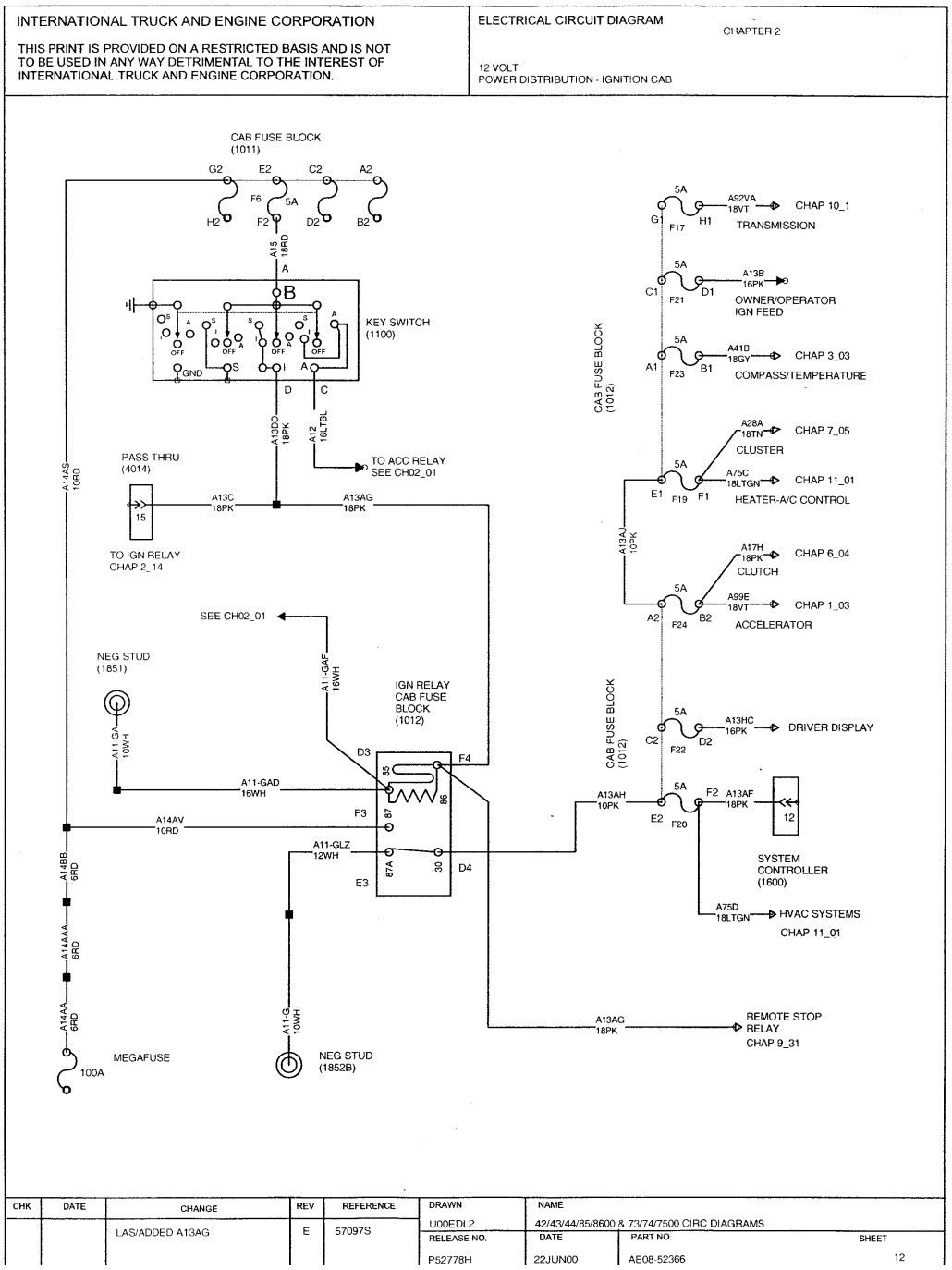

Figure 24 Ignition Cab

Downloaded from www.Manualslib.com manuals search engine

https://truckmanualshub.com/

IGNITION CAB, P. 13

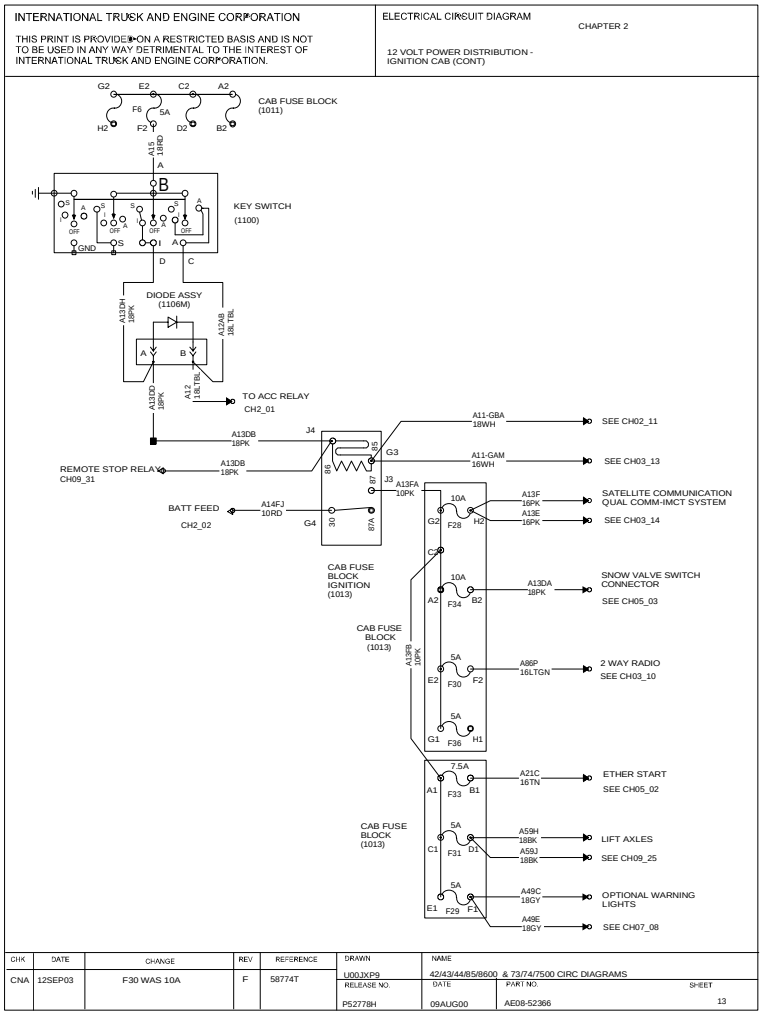

Figure 25 Ignition Cab (Cont.)

Downloaded from www.Manualslib.com manuals search engine

https://truckmanualshub.com/

IGNITION FEEDS, CHASSIS, P. 14

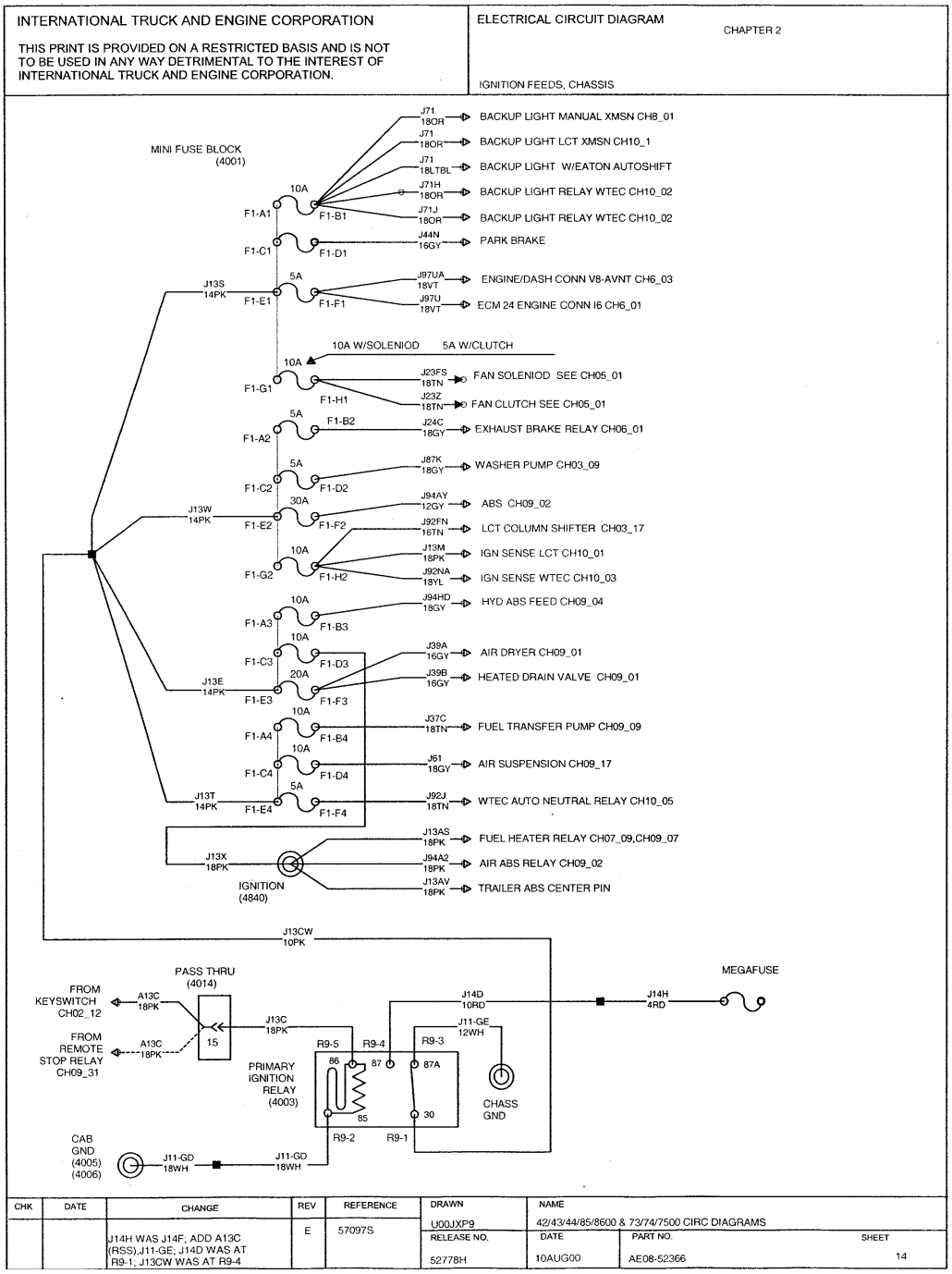

Figure 26 Ignition Feeds, Chassis

Downloaded from www.Manualslib.com manuals search engine

https://truckmanualshub.com/

START, P. 15

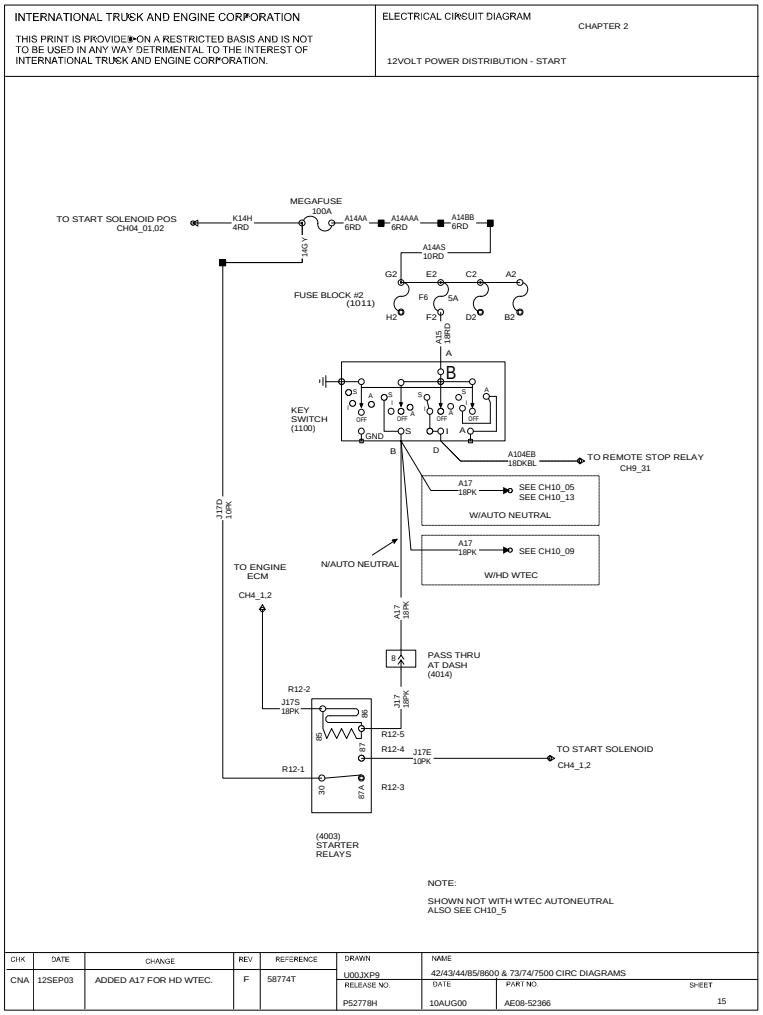

Figure 27 Start

Downloaded from www.Manualslib.com manuals search engine

https://truckmanualshub.com/

CAB ACCESSORIES (CHAPTER 3)

CIGAR LIGHTER AND POWER FEEDS, P. 1

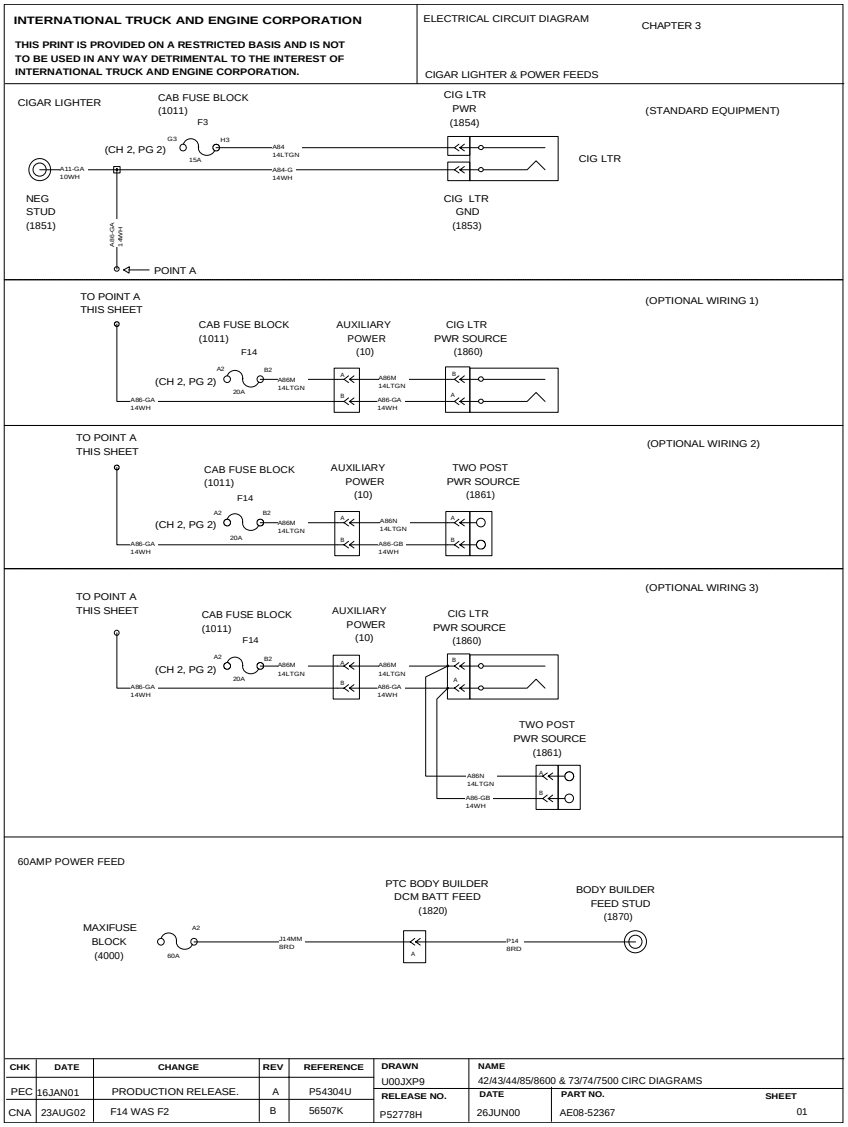

Figure 28 Cigar Lighter and Power Feeds

Downloaded from www.Manualslib.com manuals search engine

https://truckmanualshub.com/

CB POWER, P. 2

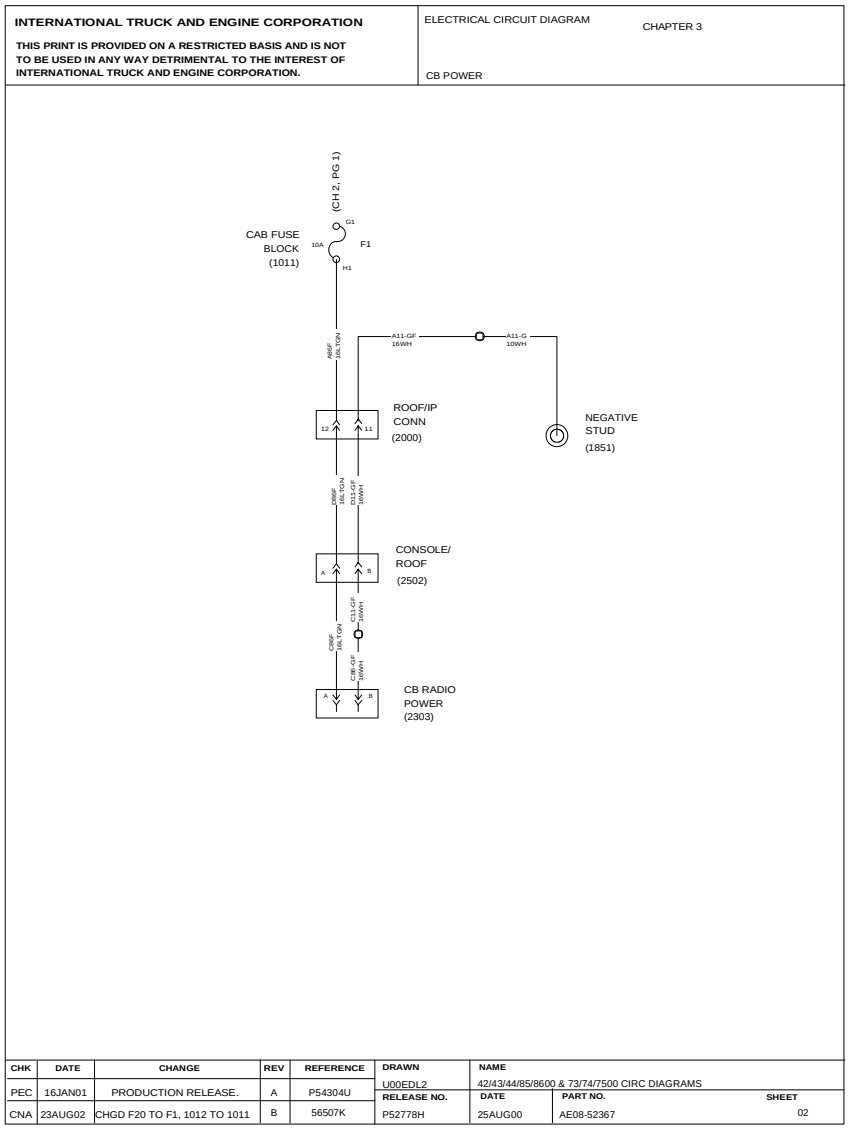

Figure 29 CB Power

Downloaded from www.Manualslib.com manuals search engine

https://truckmanualshub.com/

COMPASS AND TEMPERATURE DISPLAY, P. 3

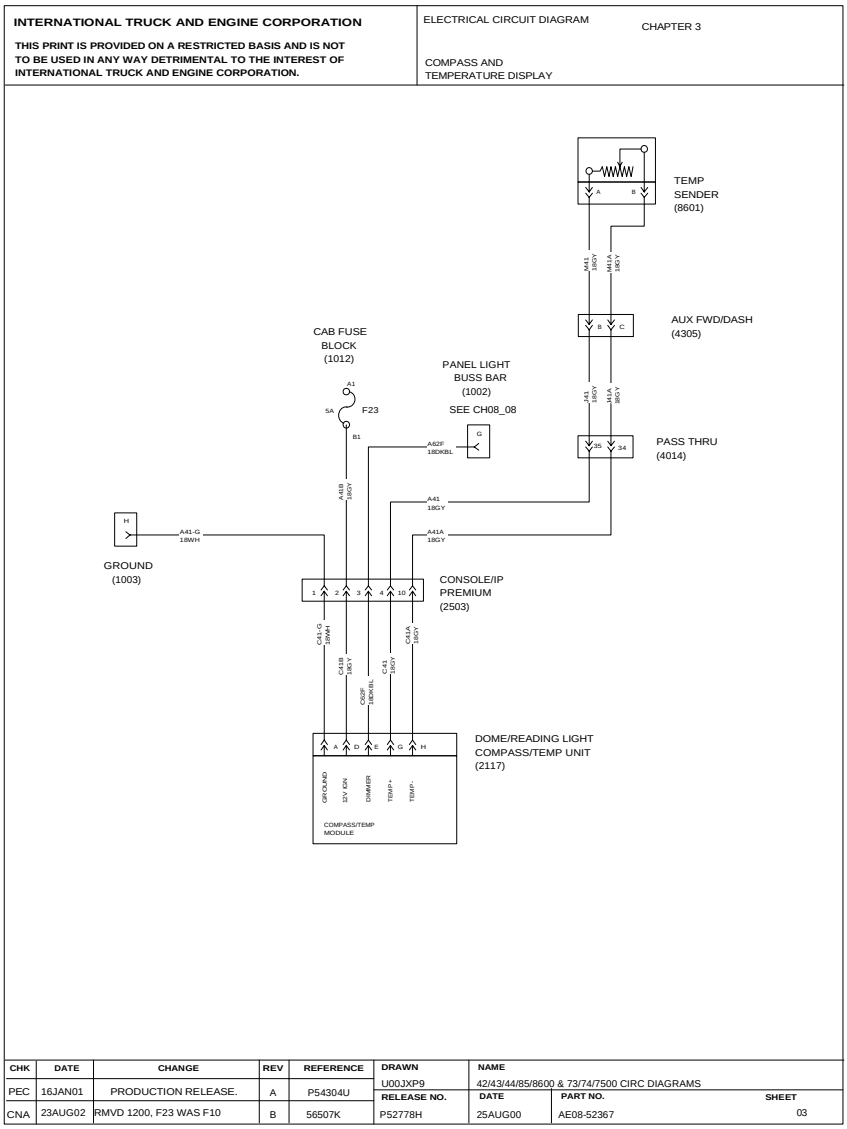

Figure 30 Compass and Temperature Display

Downloaded from www.Manualslib.com manuals search engine

https://truckmanualshub.com/

FRONT DOORS WINDOWS AND LOCKS (POWER), P. 4

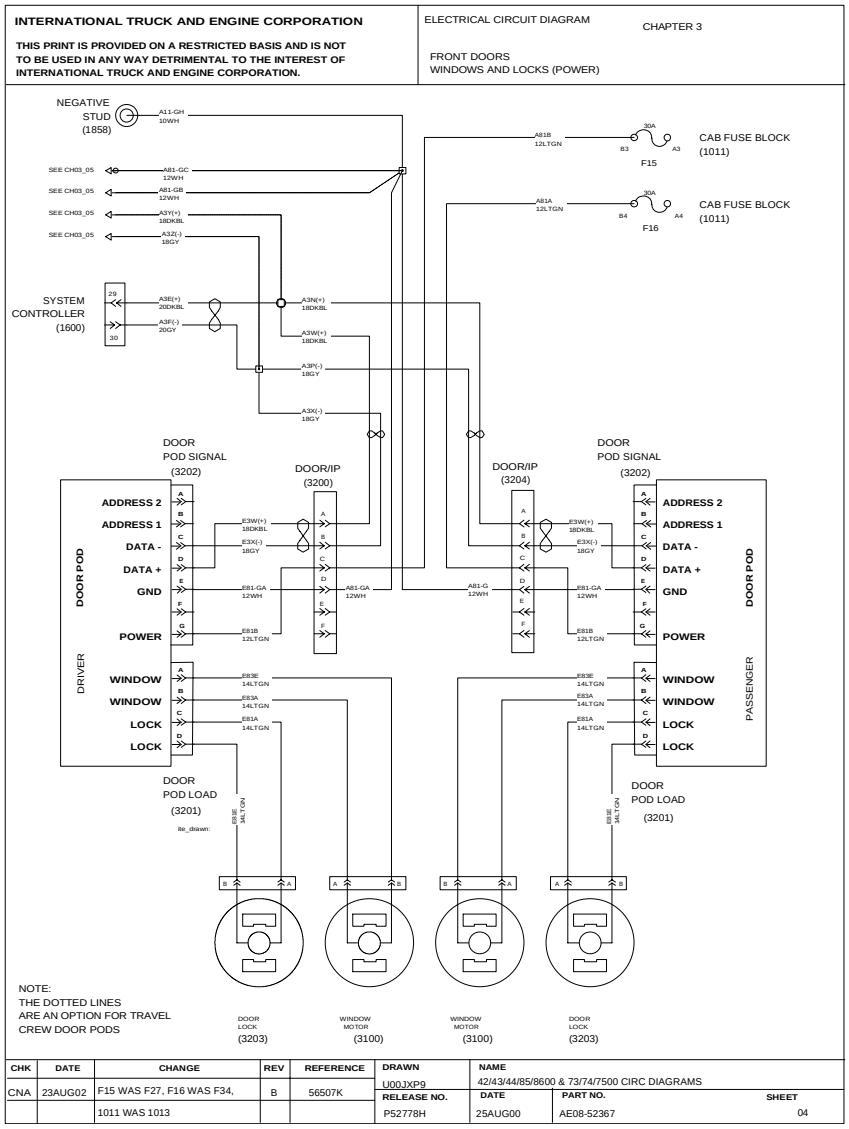

Figure 31 Front Doors Windows and Locks (Power)

Downloaded from www.Manualslib.com manuals search engine

https://truckmanualshub.com/

CREW DOORS WINDOWS AND LOCKS (POWER), P. 5

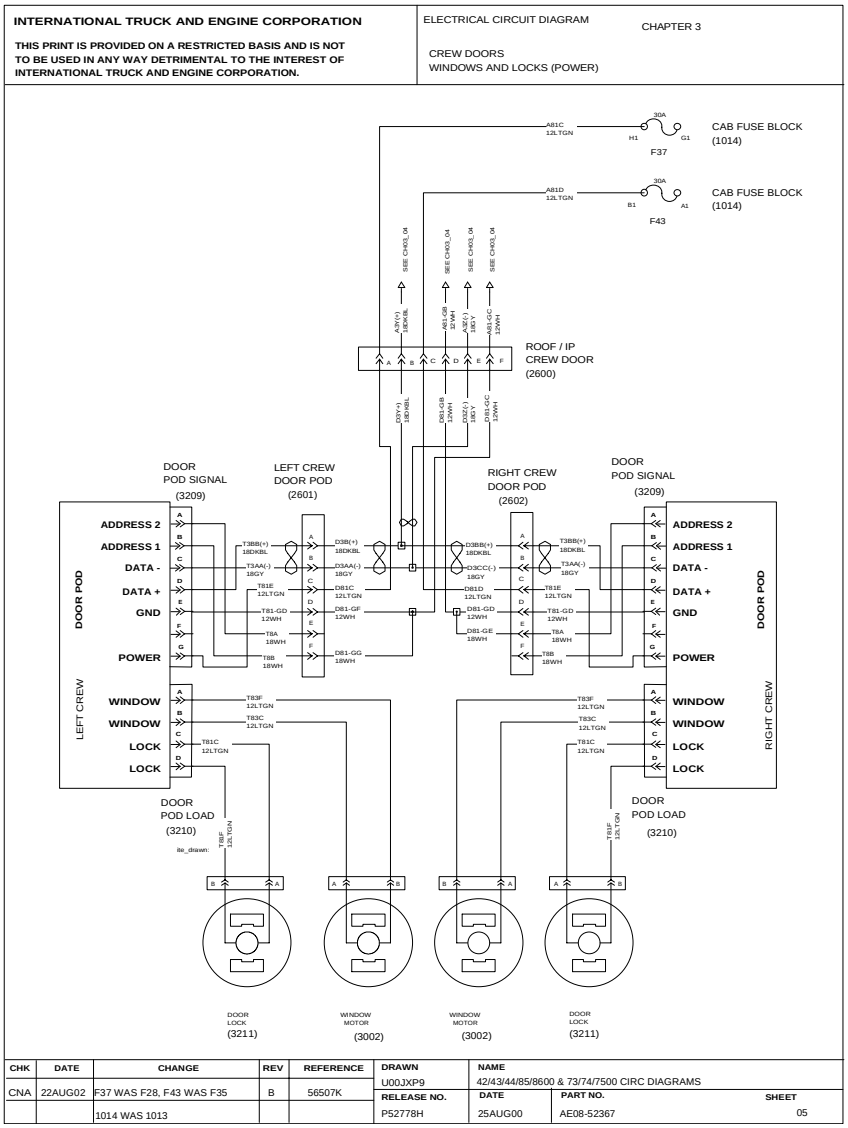

Figure 32 Crew Doors Windows and Locks (Power)

Downloaded from www.Manualslib.com manuals search engine

https://truckmanualshub.com/

HORN, DUAL ELECTRIC, P. 6

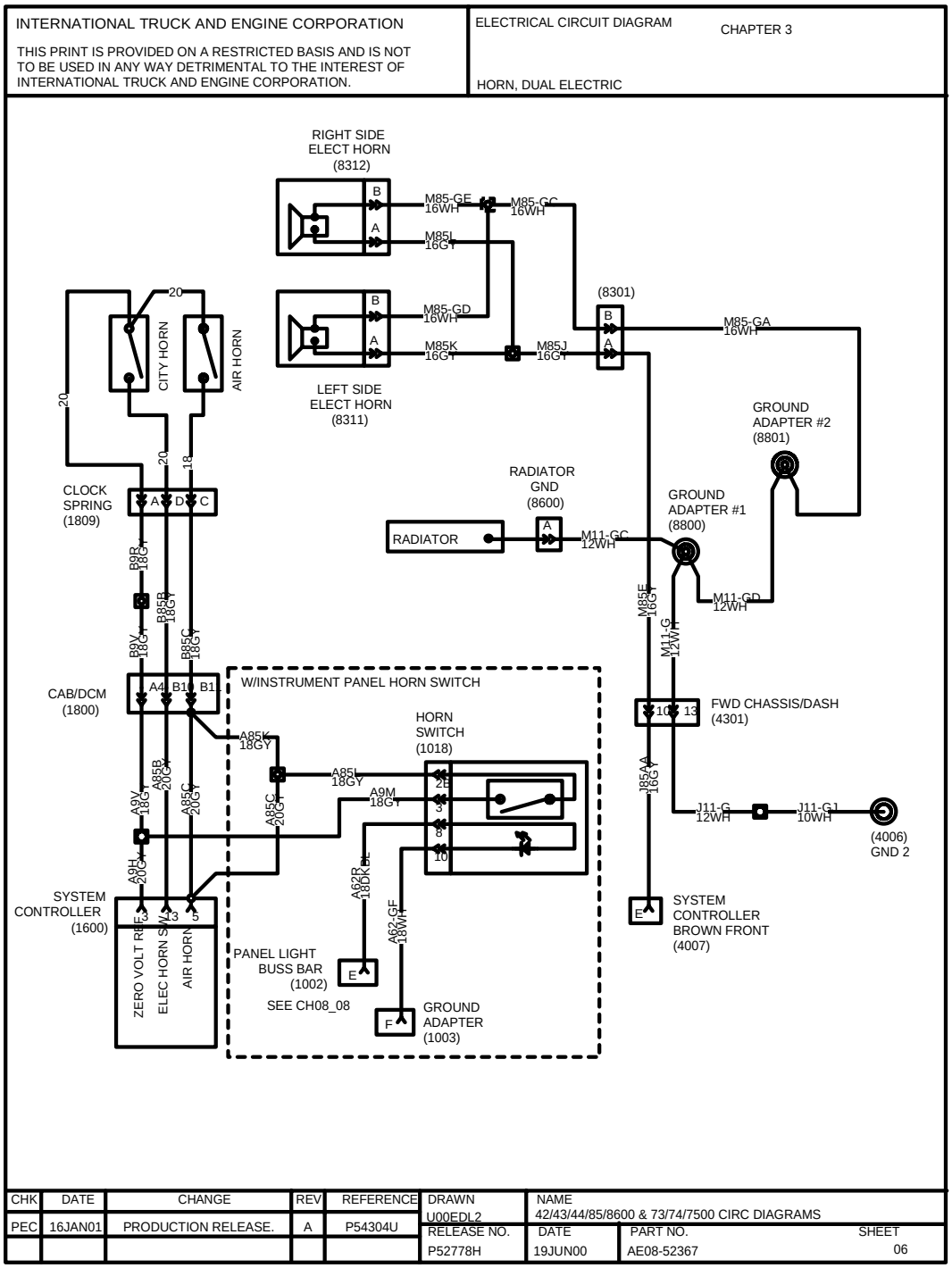

Figure 33 Horn, Dual Electric

Downloaded from www.Manualslib.com manuals search engine

https://truckmanualshub.com/

MIRRORS (HEATED, LIGHTED AND POWER), P. 7

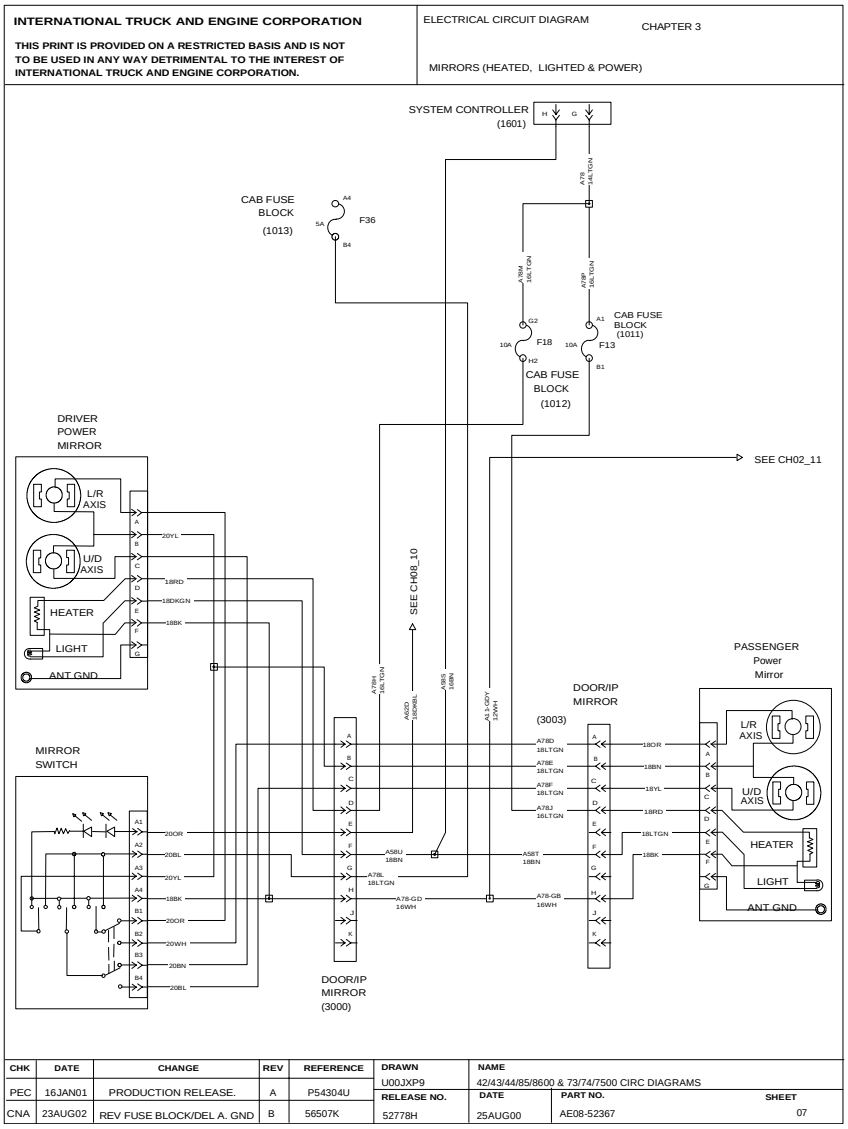

Figure 34 Mirrors (Heated, Lighted and Power)

Downloaded from www.Manualslib.com manuals search engine

https://truckmanualshub.com/

RADIO (ENTERTAINMENT), SPEAKERS, P. 8

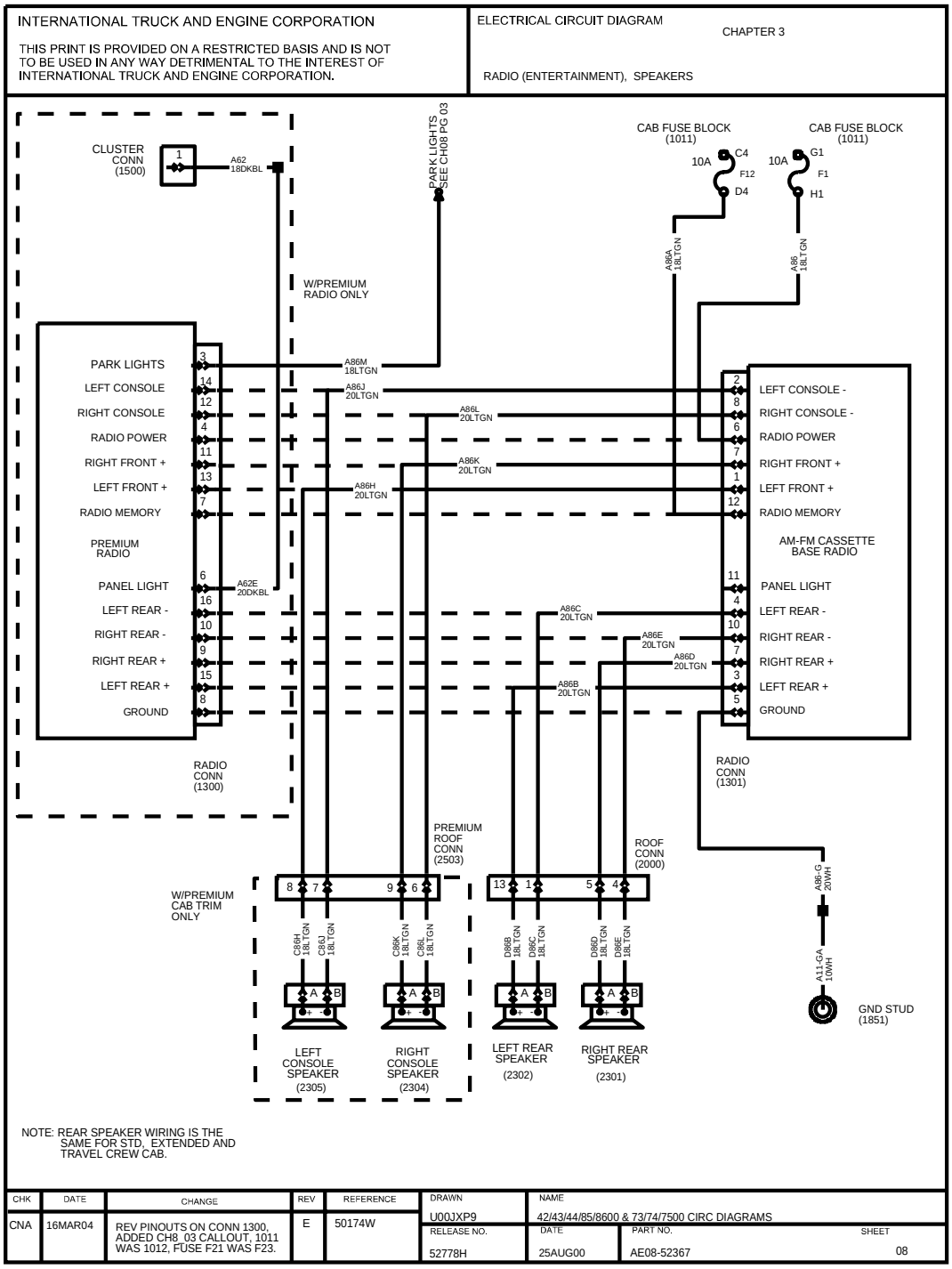

Figure 35 Radio (Entertainment), Speakers

Downloaded from www.Manualslib.com manuals search engine

https://truckmanualshub.com/

WINDSHIELD WIPER AND WASHER PUMP, P. 9

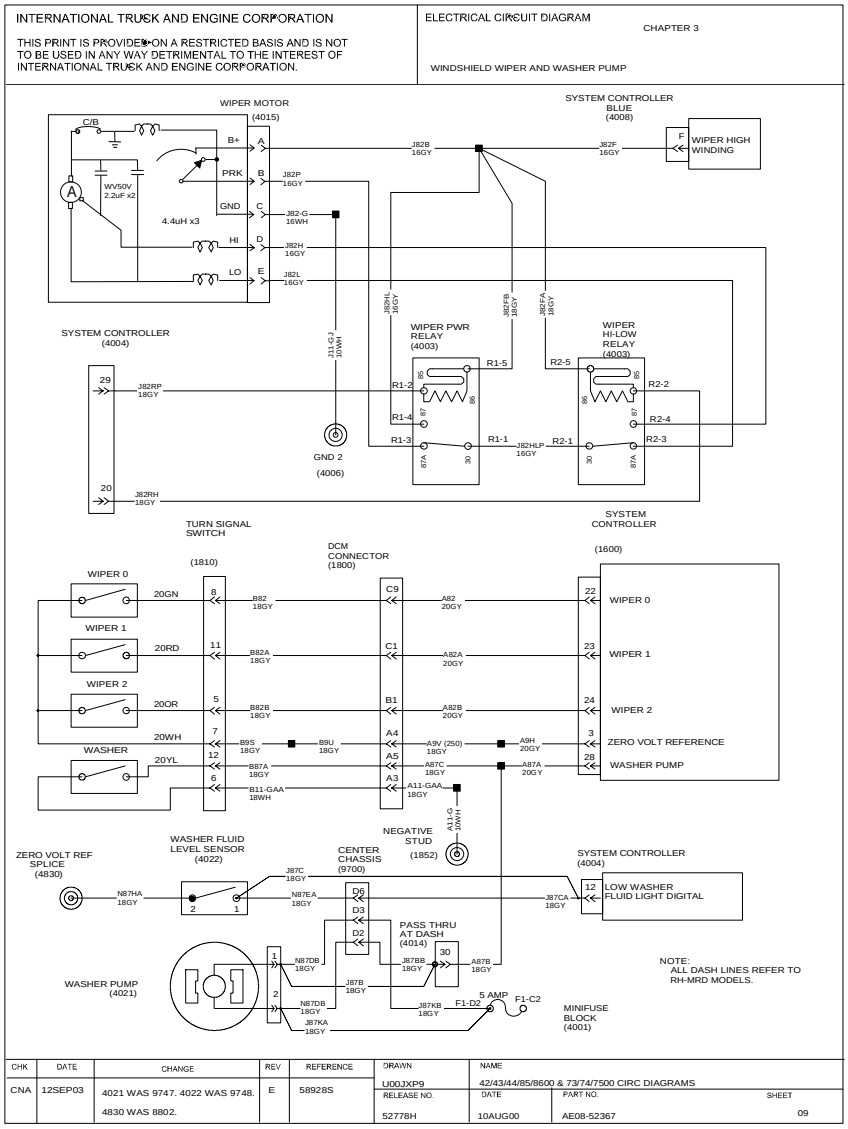

Figure 36 Windshield Wiper and Washer Pump

Downloaded from www.Manualslib.com manuals search engine

https://truckmanualshub.com/

2–WAY RADIO, P. 10

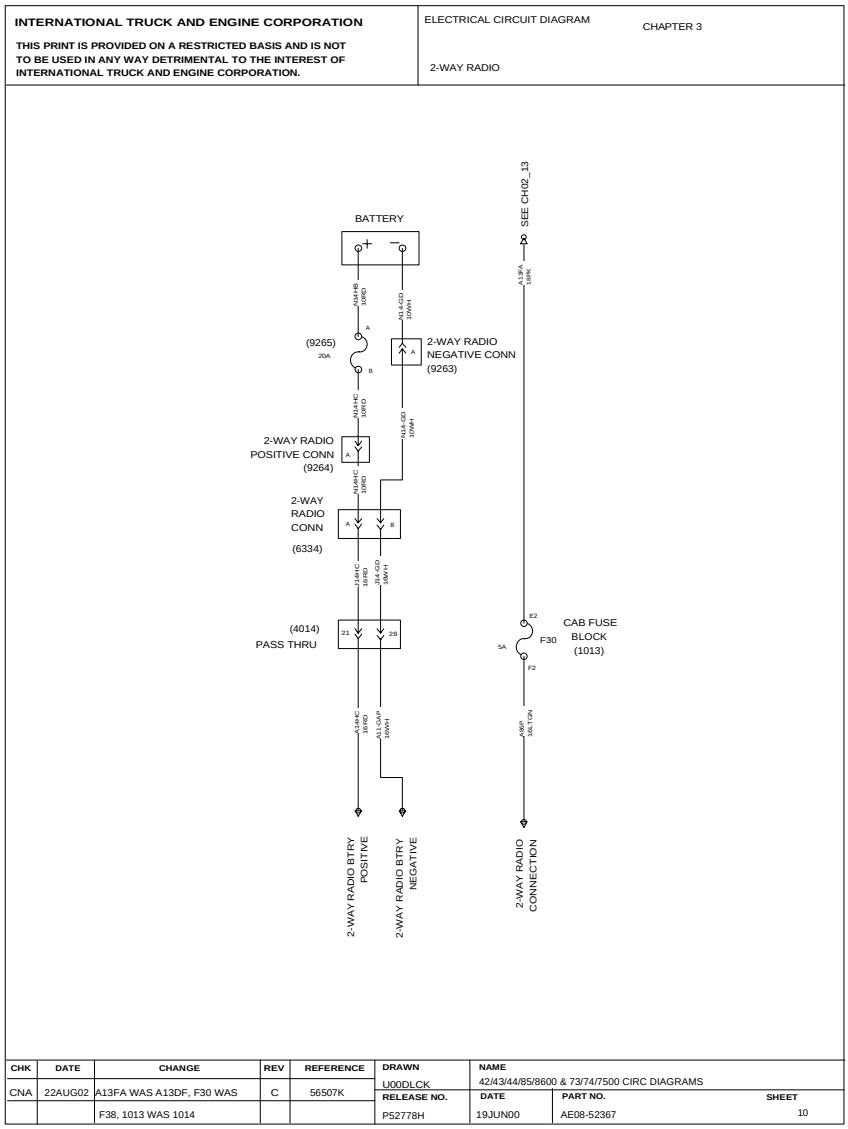

Figure 37 2–Way Radio

Downloaded from www.Manualslib.com manuals search engine

https://truckmanualshub.com/

SWITCH PACK, OPTIONAL GAUGE PACK, P. 11

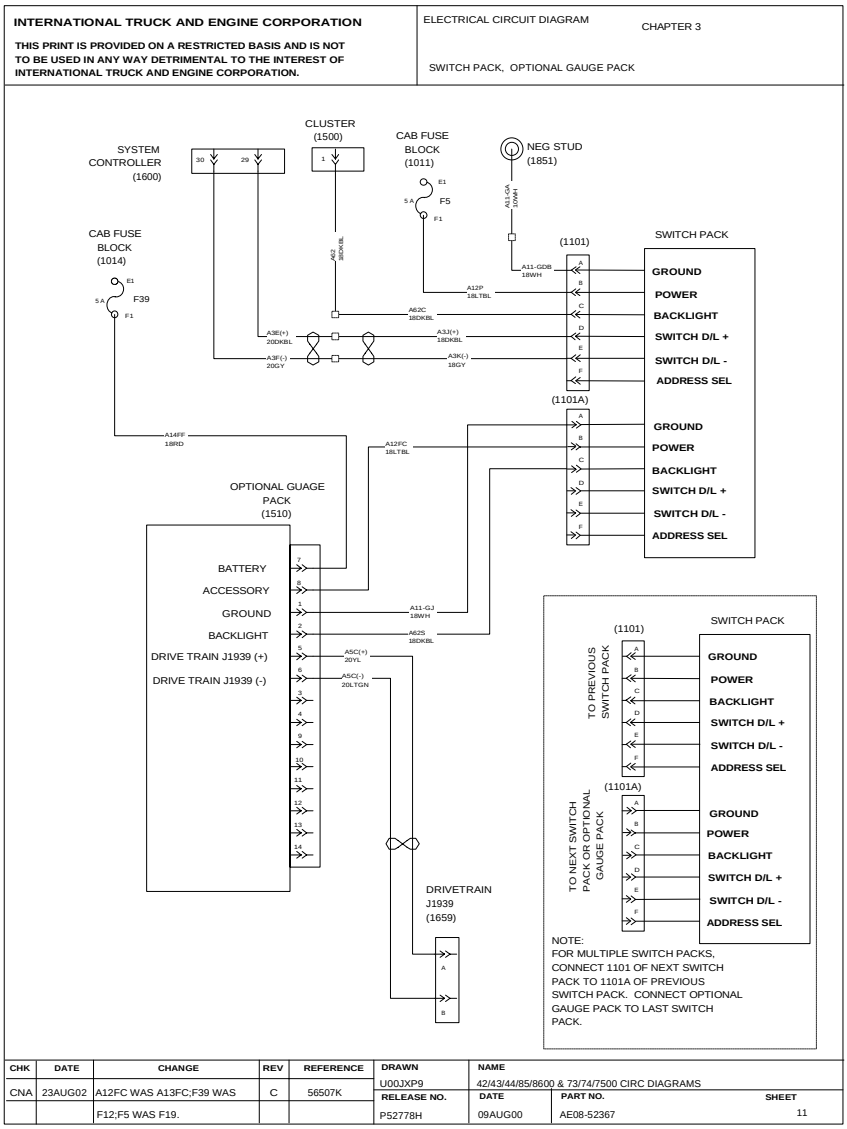

Figure 38 Switch Pack, Optional Gauge Pack

Downloaded from www.Manualslib.com manuals search engine

https://truckmanualshub.com/

LIGHTED AIR SHIELD, P. 12

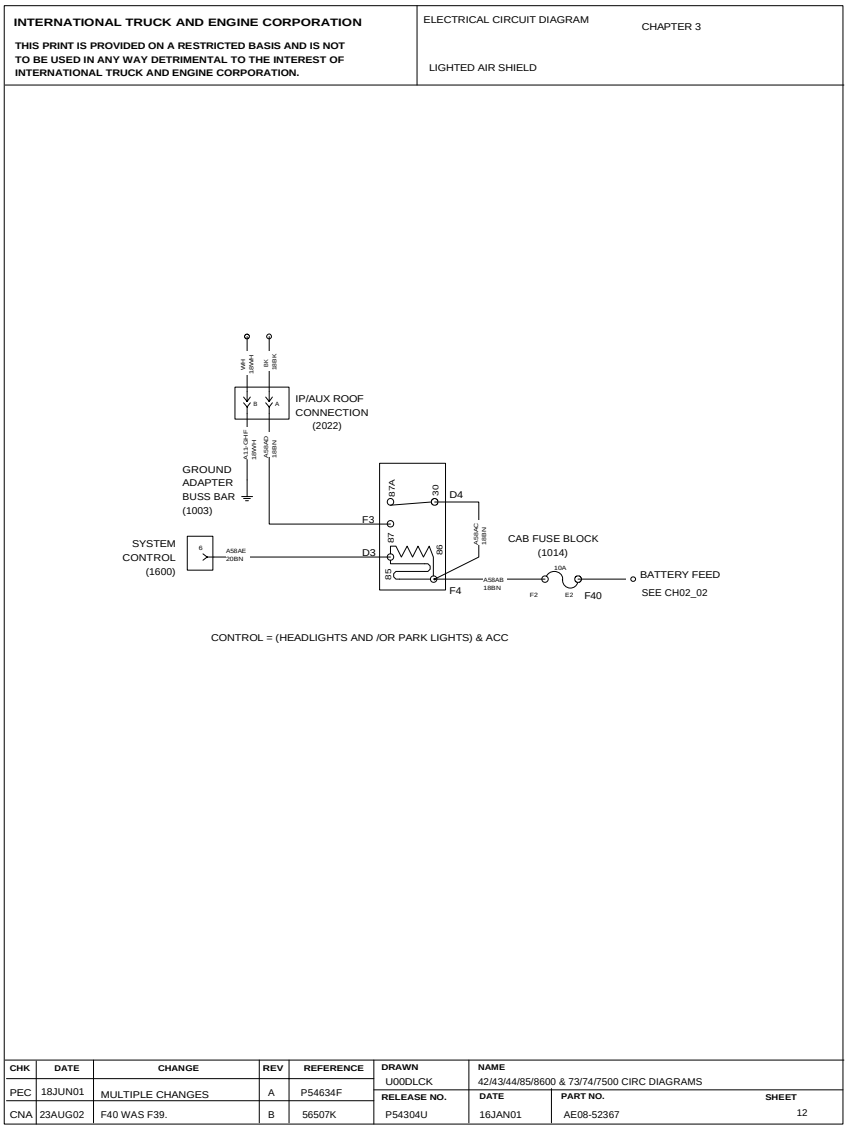

Figure 39 Lighted Air Shield

Downloaded from www.Manualslib.com manuals search engine

https://truckmanualshub.com/

ROOF AUX. LOAD, P. 13

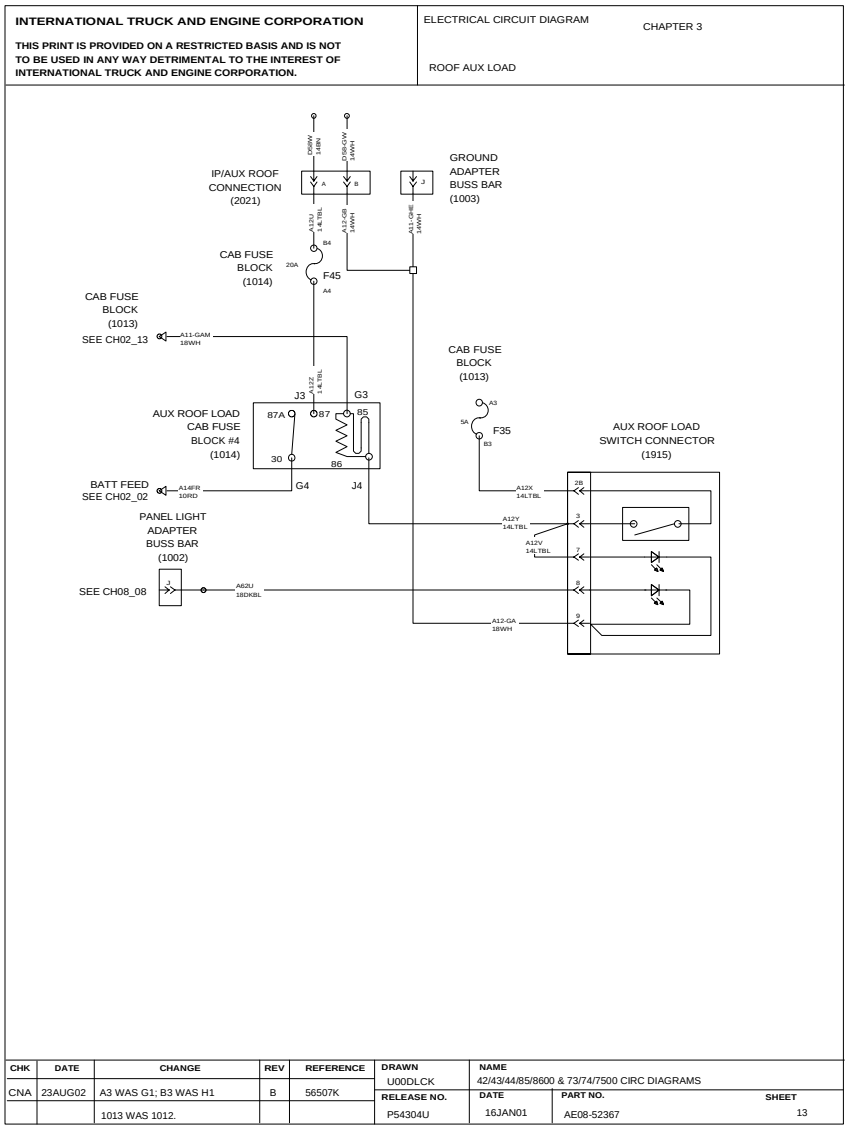

Figure 40 Roof Aux. Load

Downloaded from www.Manualslib.com manuals search engine

https://truckmanualshub.com/

SATELLITE COMMUNICATION QUALCOMM-MCT AND IMCT SYSTEMS, P. 14

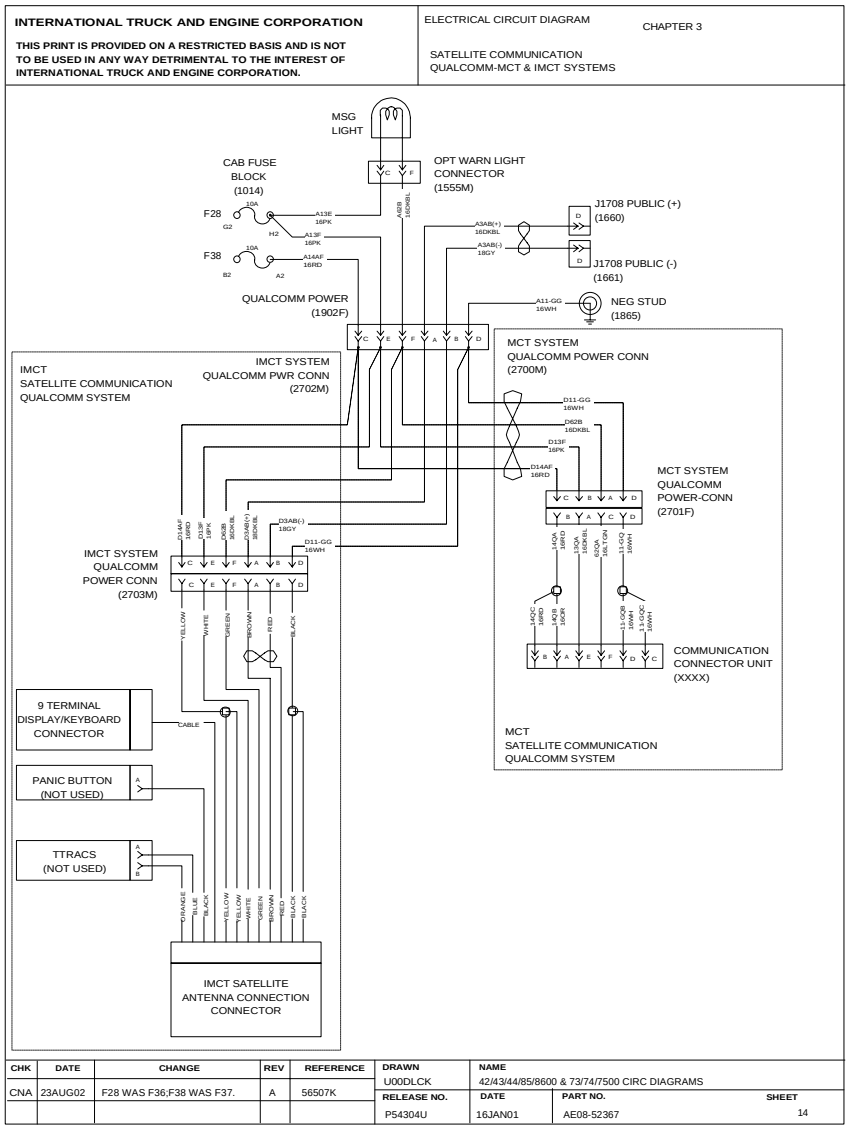

Figure 41 Satellite Communication Qualcomm-MCT and IMCT Systems

Downloaded from www.Manualslib.com manuals search engine

https://truckmanualshub.com/

SELF CONTAINED AIR SEAT, P. 15

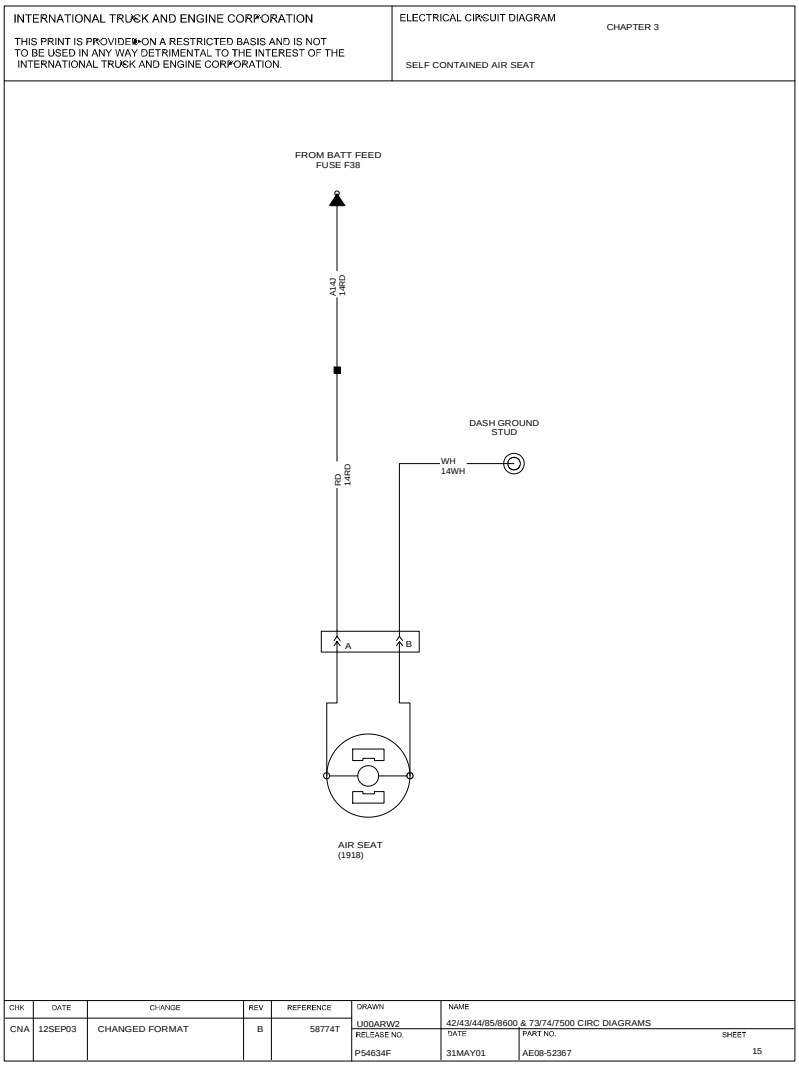

Figure 42 Self Contained Air Seat

Downloaded from www.Manualslib.com manuals search engine

https://truckmanualshub.com/

DIGITAL CLOCK PTC, P. 16

INTERNATIONAL TRUCK AND ENGINE CORPORATION

THIS PRINT IS PROVIDED ON A RESTRICTED BASIS AND IS NOT TO BE USED IN ANY WAY DETRIMENTAL TO THE INTEREST OF THE INTERNATIONAL TRUCK AND ENGINE CORPORATION.

ELECTRICAL CIRCUIT DIAGRAM

CHAPTER 3

DIGITAL CLOCK PTC

GEOMETRY WAS REMOVED

CHK	DATE	CHANGE	REV	REFERENCE	DRAWN	NAME
CNA	12SEP03	CHANGED FORMAT	B	58774T	U00DLCK	42/43/44/85/8600 & 73/74/7500 CIRC DIAGRAMS

RELEASE NO.	DATE	PART NO.	SHEET
P54634F	05MAY01	AE08-52367	16

Figure 43 Digital Clock PTC

Downloaded from www.Manualslib.com manuals search engine

https://truckmanualshub.com/

TRANSMISSION ALLISON LCT COLUMN SHIFTER, P. 17

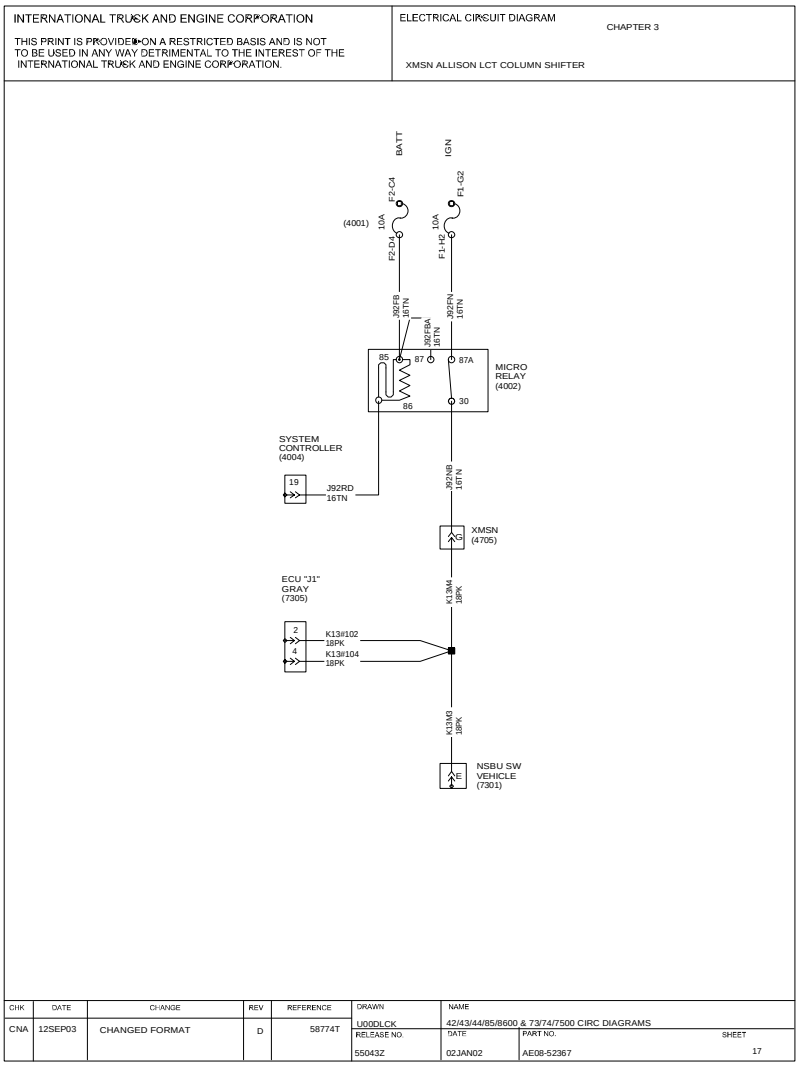

Figure 44 Transmission Allison LCT Column Shifter

Downloaded from www.Manualslib.com manuals search engine

https://truckmanualshub.com/

HEATED SEATS FOR 7700 MODELS ONLY, P. 18

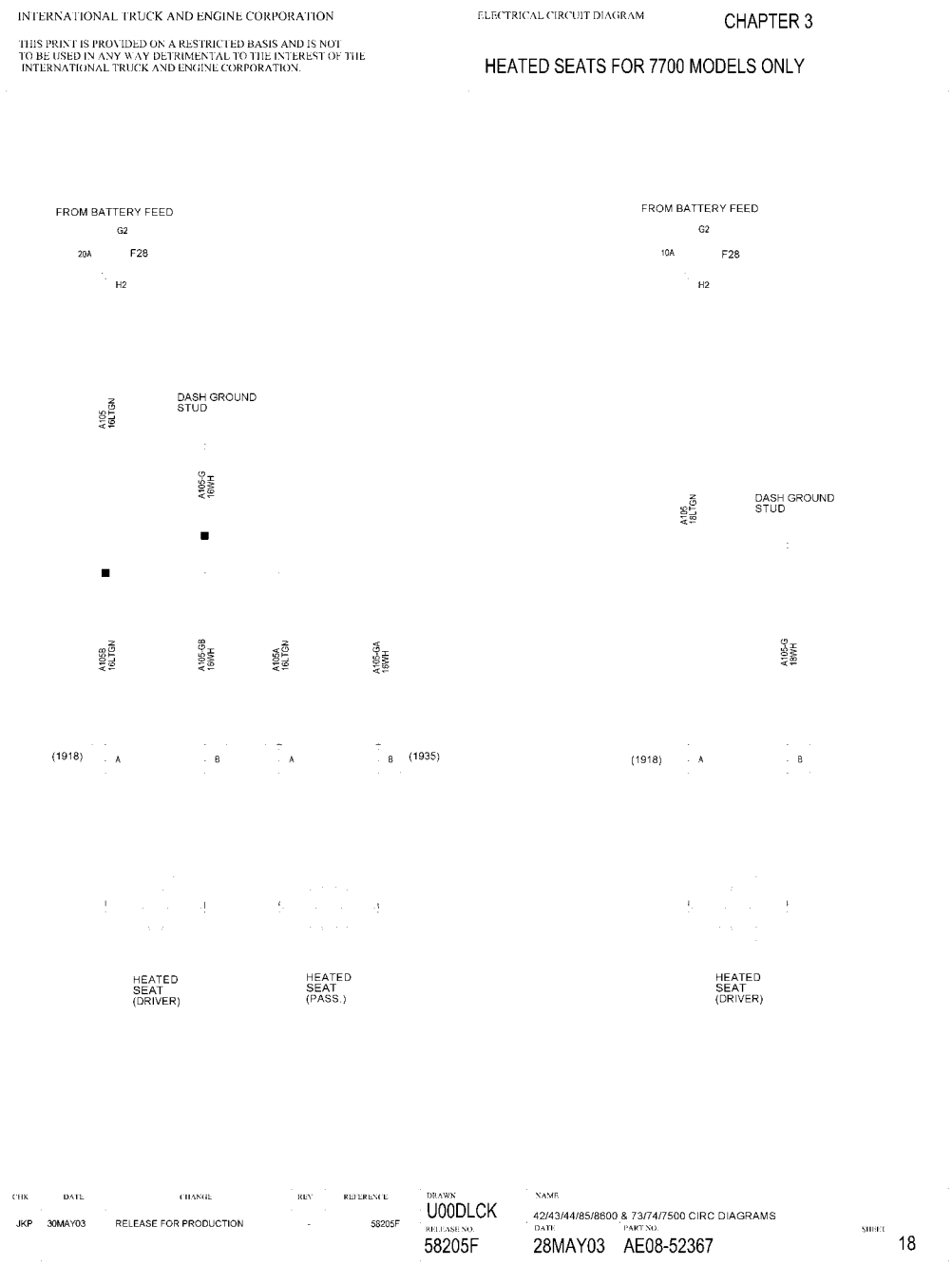

Figure 45 Heated Seats for 7700 Models Only

Downloaded from www.Manualslib.com manuals search engine

https://truckmanualshub.com/

BACKUP CAMERA, P. 19

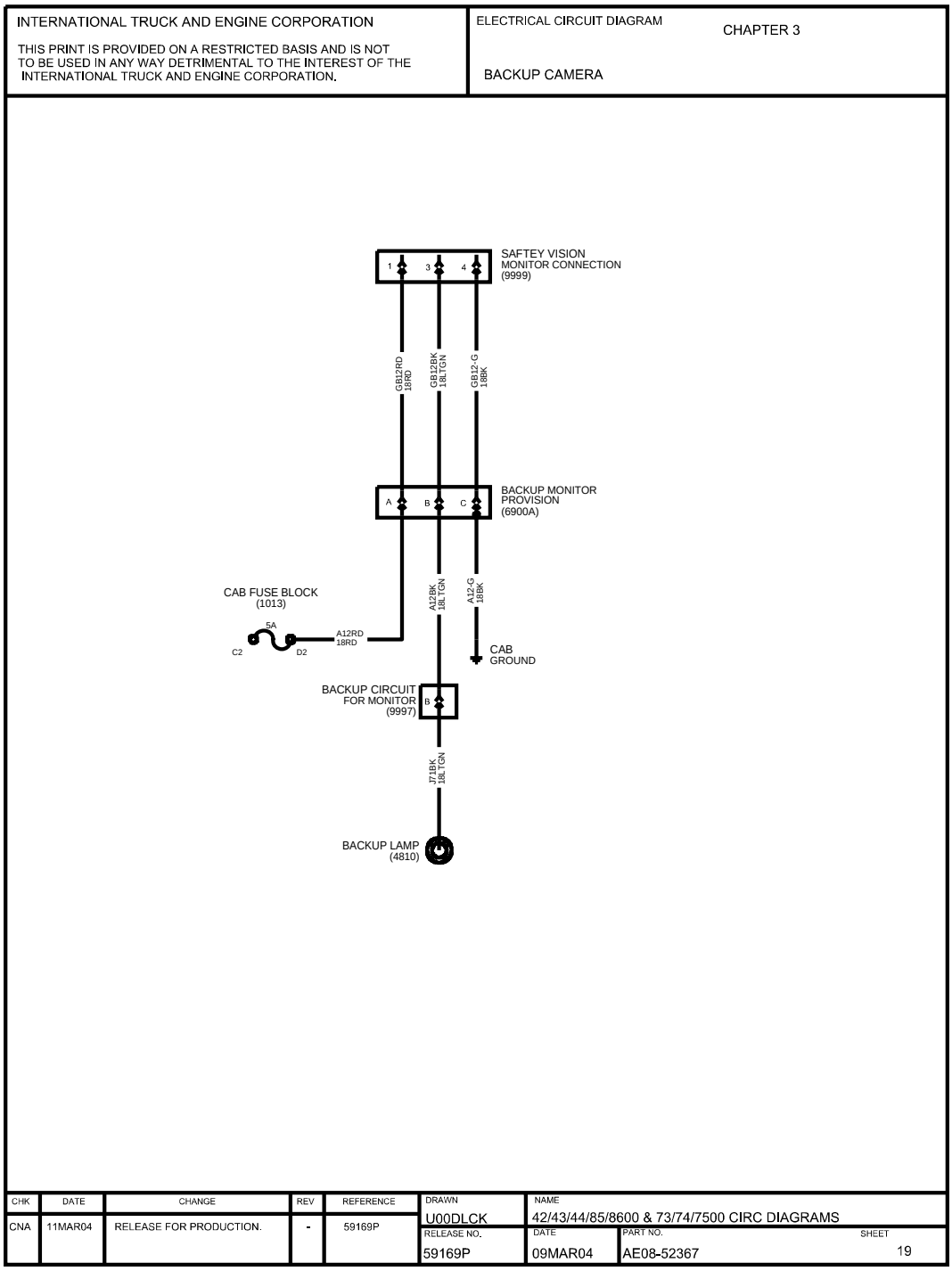

Figure 46 Backup Camera

Downloaded from www.Manualslib.com manuals search engine

https://truckmanualshub.com/

XATA COMPUTER, P. 20

INTERNATIONAL TRUCK AND ENGINE CORPORATION

THIS PRINT IS PROVIDED ON A RESTRICTED BASIS AND IS NOT TO BE USED IN ANY WAY DETRIMENTAL TO THE INTEREST OF THE INTERNATIONAL TRUCK AND ENGINE CORPORATION.

ELECTRICAL CIRCUIT DIAGRAM

CHAPTER 3

XATA COMPUTER

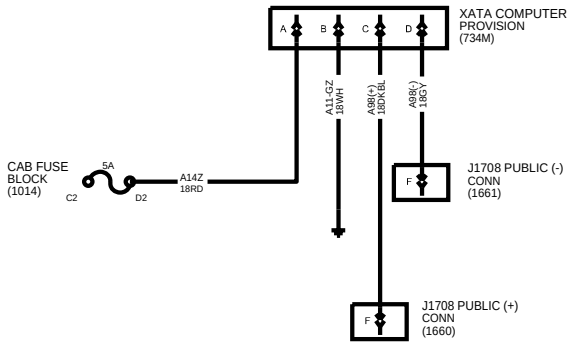

CHK	DATE	CHANGE	REV	REFERENCE	DRAWN	NAME		
CNA	11MAR04	RELEASE FOR PRODUCTION.	-	59169P	U00DLCK	42/43/44/85/8600 & 73/74/7500 CIRC DIAGRAMS		
					RELEASE NO.	DATE	PART NO.	SHEET
					59169P	09MAR04	AE08-52367	20

Figure 47 XATA Computer

Downloaded from www.Manualslib.com manuals search engine

https://truckmanualshub.com/

KEYLESS IGNITION SYSTEM, P. 21

INTERNATIONAL TRUCK AND ENGINE CORPORATION

THIS PRINT IS PROVIDED ON A RESTRICTED BASIS AND IS NOT TO BE USED IN ANY WAY DETRIMENTAL TO THE INTEREST OF THE INTERNATIONAL TRUCK AND ENGINE CORPORATION.

ELECTRICAL CIRCUIT DIAGRAM

CHAPTER 3

KEYLESS IGNITION SYSTEM

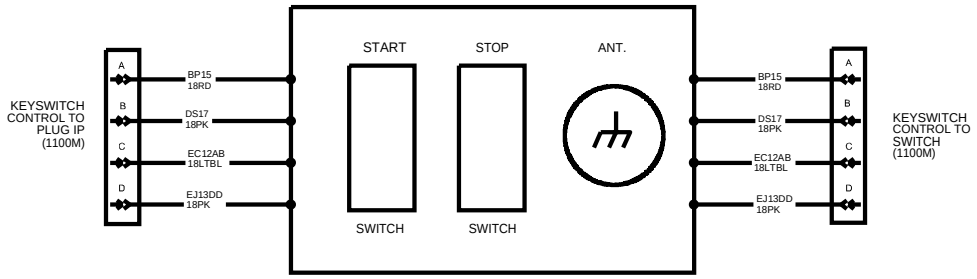

CHK	DATE	CHANGE	REV	REFERENCE	DRAWN	NAME		
CNA	11MAR04	RELEASE FOR PRODUCTION.	-	59169P	U00DLCK	42/43/44/85/8600 & 73/74/7500 CIRC DIAGRAMS		
					RELEASE NO. 59169P	DATE 09MAR04	PART NO. AE08-52367	SHEET 21

Figure 48 Keyless Ignition System

Downloaded from www.Manualslib.com manuals search engine

https://truckmanualshub.com/

12V CHARGING + CRANKING SYSTEM (CHAPTER 4)

I6 EGR ENGINES, P. 1

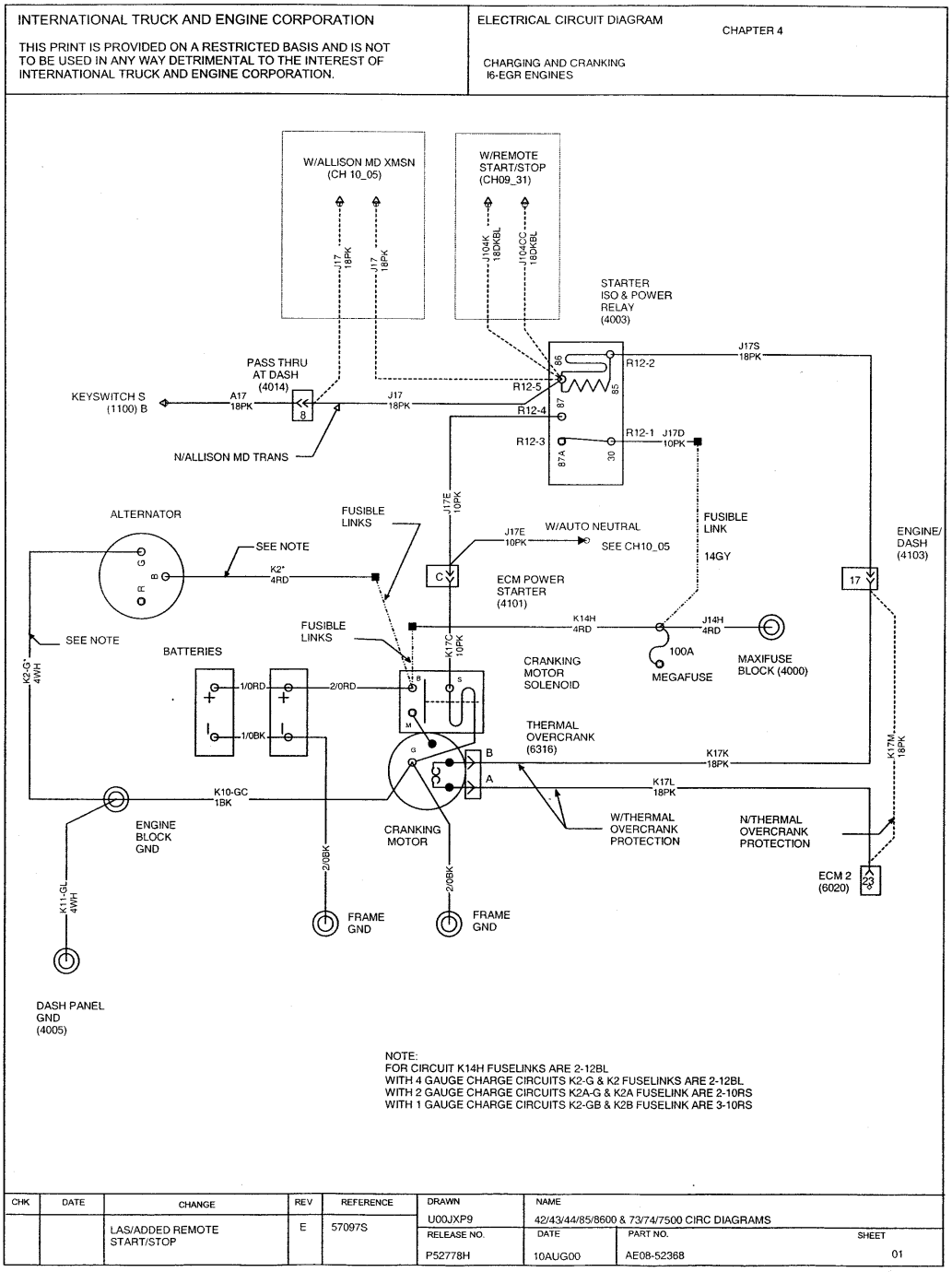

Figure 49 I6 EGR Engines

Downloaded from www.Manualslib.com manuals search engine

https://truckmanualshub.com/

V8 AVNT ENGINES, P. 2

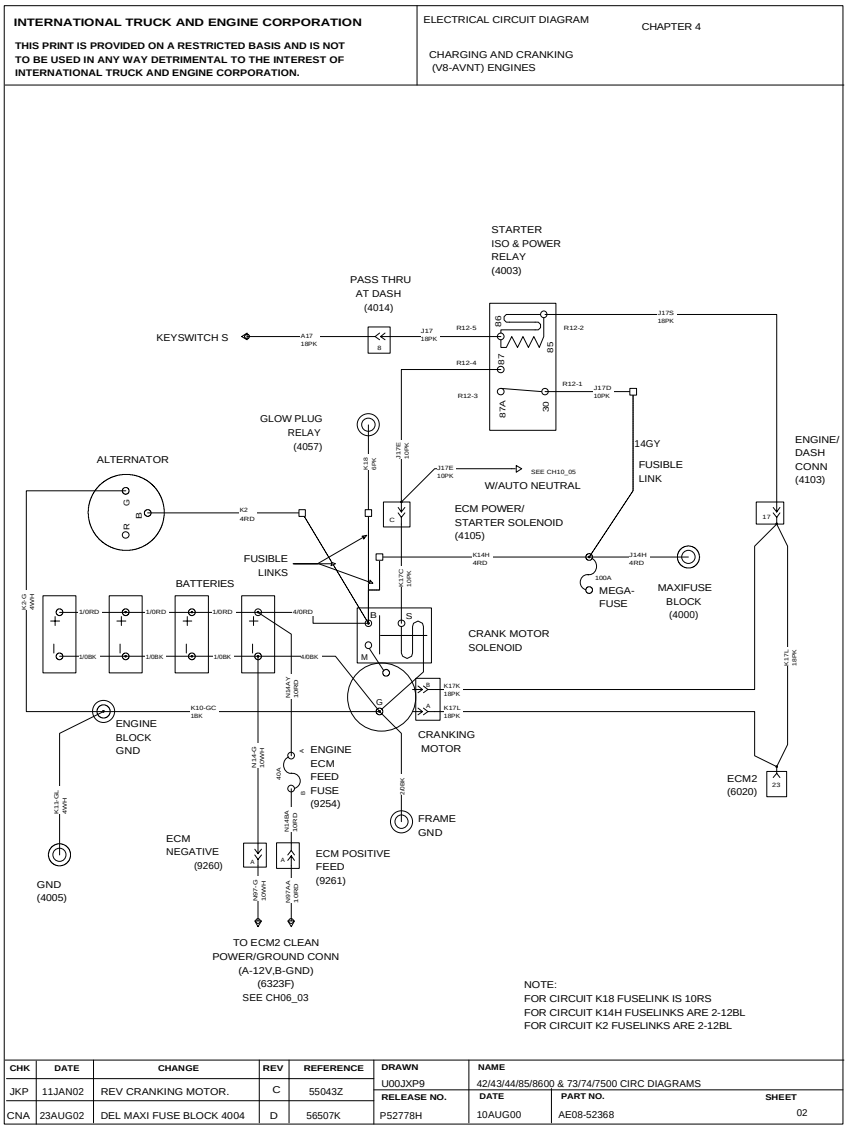

Figure 50 V8 AVNT Engines

Downloaded from www.Manualslib.com manuals search engine

https://truckmanualshub.com/

CATERPILLAR, CUMMINS ISM ENGINES, P. 3

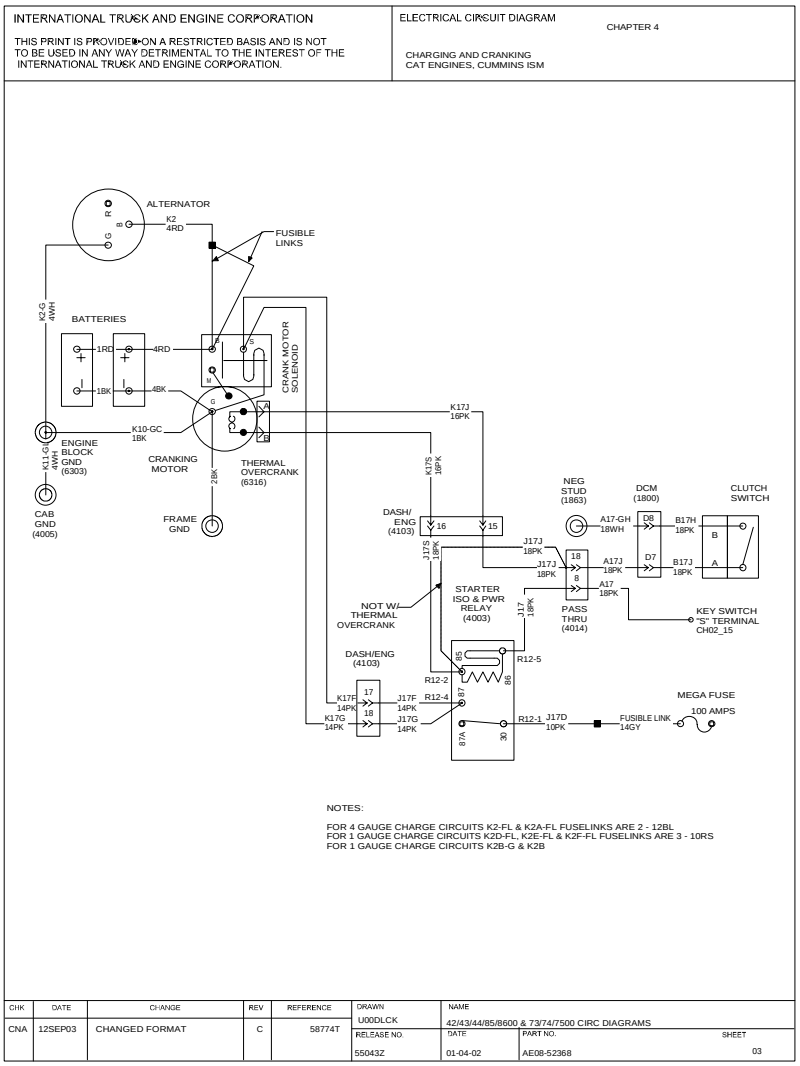

Figure 51 Caterpillar, Cummins ISM Engines

Downloaded from www.Manualslib.com manuals search engine

https://truckmanualshub.com/

I6 HEUI ENGINES, P. 4

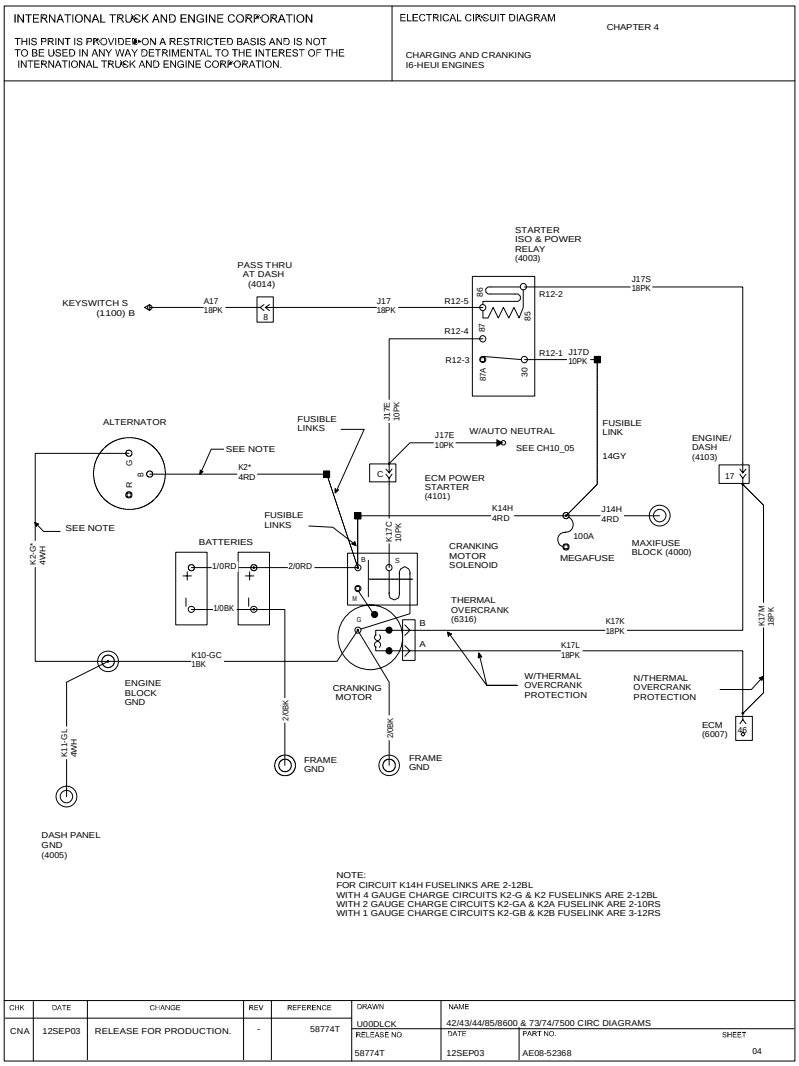

Figure 52 I6 HEUI Engines

Downloaded from www.Manualslib.com manuals search engine

https://truckmanualshub.com/

CATERPILLAR ENGINES, CUMMINS ISM AND WITH EATON ULTRASHIFT/DM2, P. 5

INTERNATIONAL TRUCK AND ENGINE CORPORATION

THIS PRINT IS PROVIDED ON A RESTRICTED BASIS AND IS NOT TO BE USED IN ANY WAY DETRIMENTAL TO THE INTEREST OF THE INTERNATIONAL TRUCK AND ENGINE CORPORATION.

ELECTRICAL CIRCUIT DIAGRAM

CHAPTER 4

CHARGING AND CRANKING CAT ENGINES, CUMMINS ISM & W/EATON ULTRASHIFT/DM2

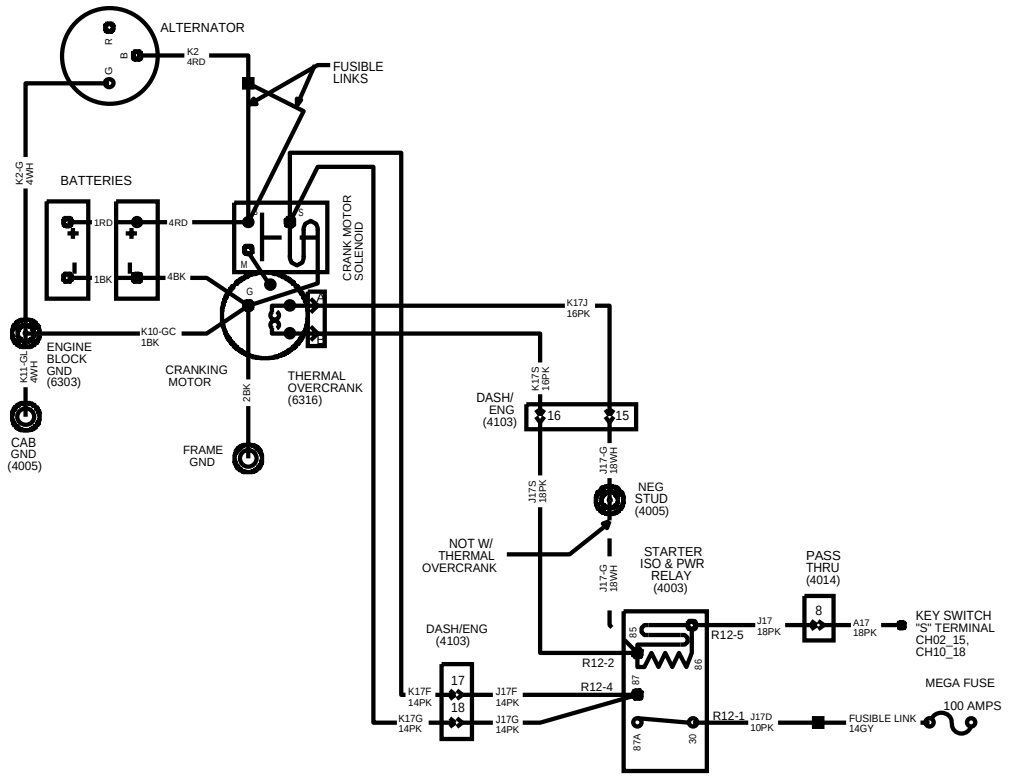

NOTES:

FOR 4 GAUGE CHARGE CIRCUITS K2-FL & K2A-FL FUSELINKS ARE 2 - 12BL
FOR 1 GAUGE CHARGE CIRCUITS K2D-FL, K2E-FL & K2F-FL FUSELINKS ARE 3 - 10RS
FOR 1 GAUGE CHARGE CIRCUITS K2B-G & K2B

CHK	DATE	CHANGE	REV	REFERENCE	DRAWN	NAME		
CNA	17DEC03	RELEASE FOR PRODUCTION.	-	58689K	U00DLCK	42/43/44/85/8600 & 73/74/7500 CIRC DIAGRAMS		
					RELEASE NO. 58689K	DATE 17NOV03	PART NO. AE08-52368	SHEET 05

Figure 53 Caterpillar Engines, Cummins ISM and with Eaton Ultrashift/DM2

Downloaded from www.Manualslib.com manuals search engine

https://truckmanualshub.com/

I6 EGR ENGINES WITH AIR START, P. 6

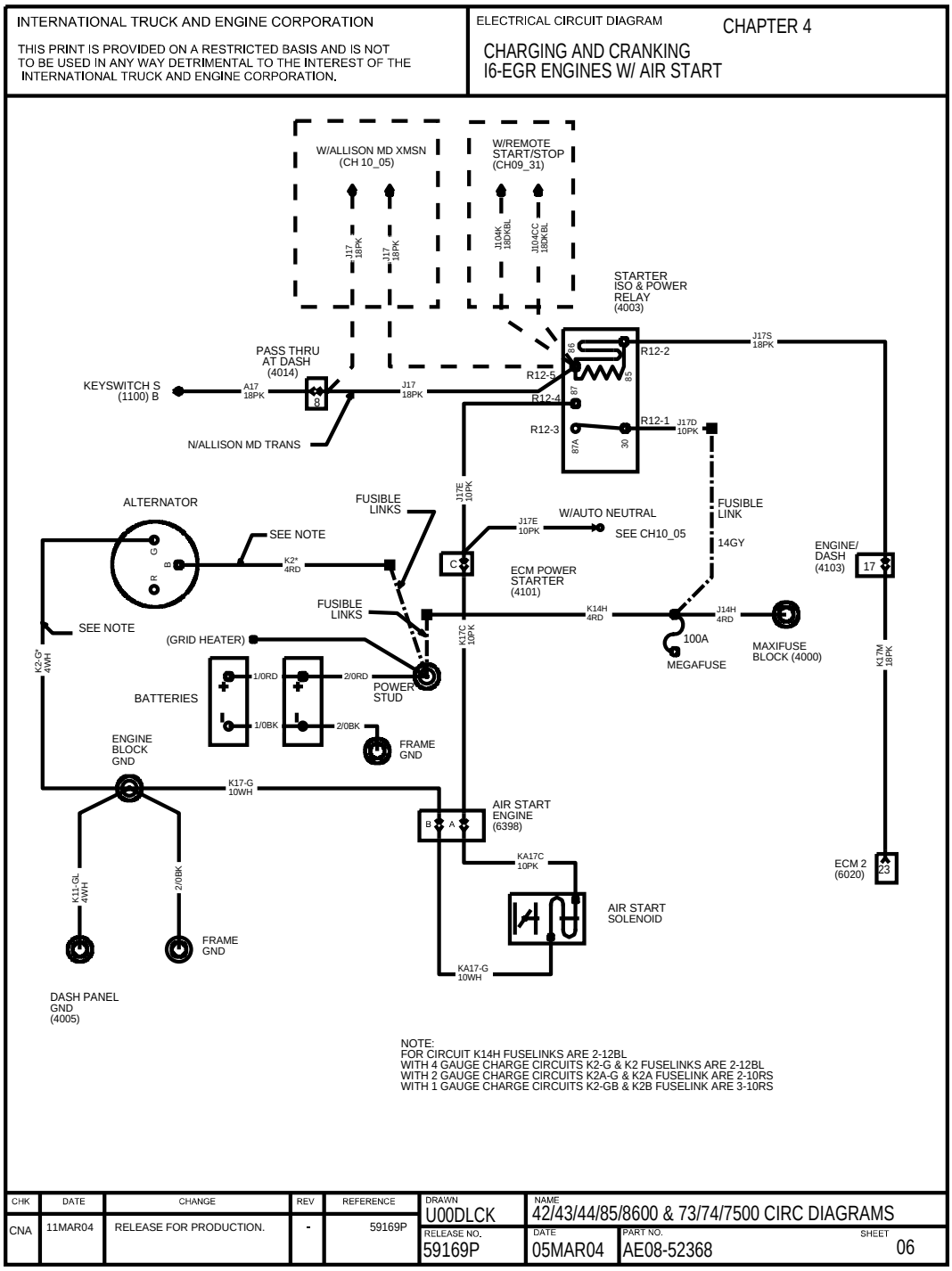

Figure 54 I6 EGR Engines with Air Start

Downloaded from www.Manualslib.com manuals search engine

https://truckmanualshub.com/

FANS AND ENGINE ACCESSORIES (CHAPTER 5)

FAN WIRING, P. 1

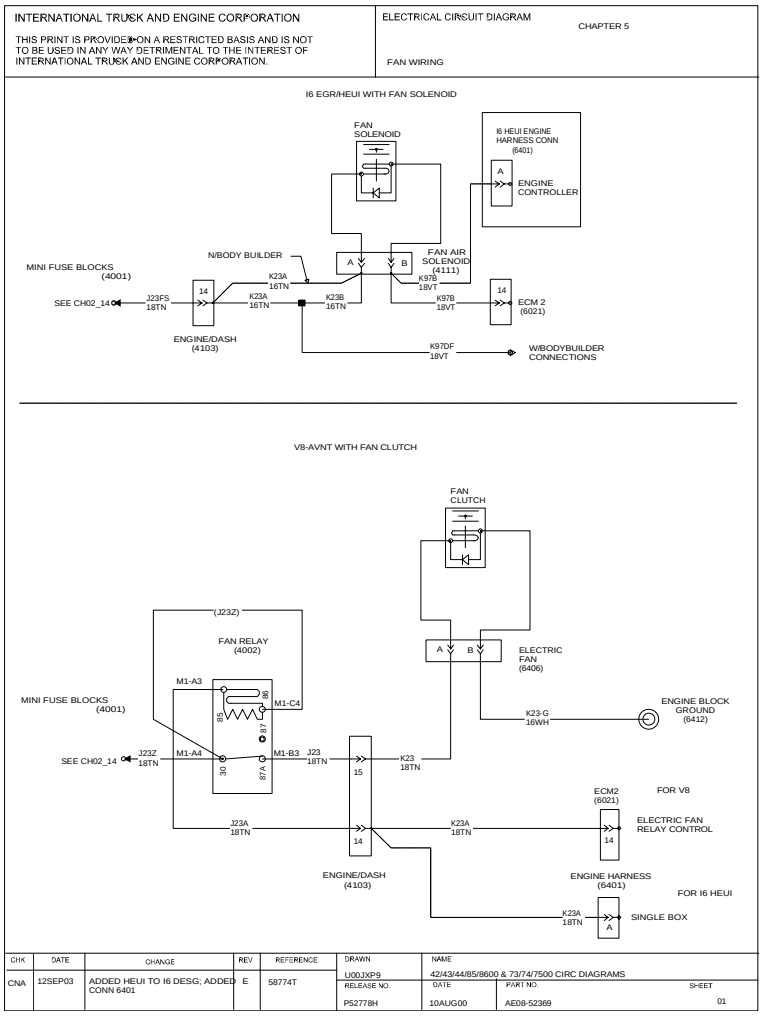

Figure 55 Fan Wiring

Downloaded from www.Manualslib.com manuals search engine

https://truckmanualshub.com/

ETHER START, P. 2

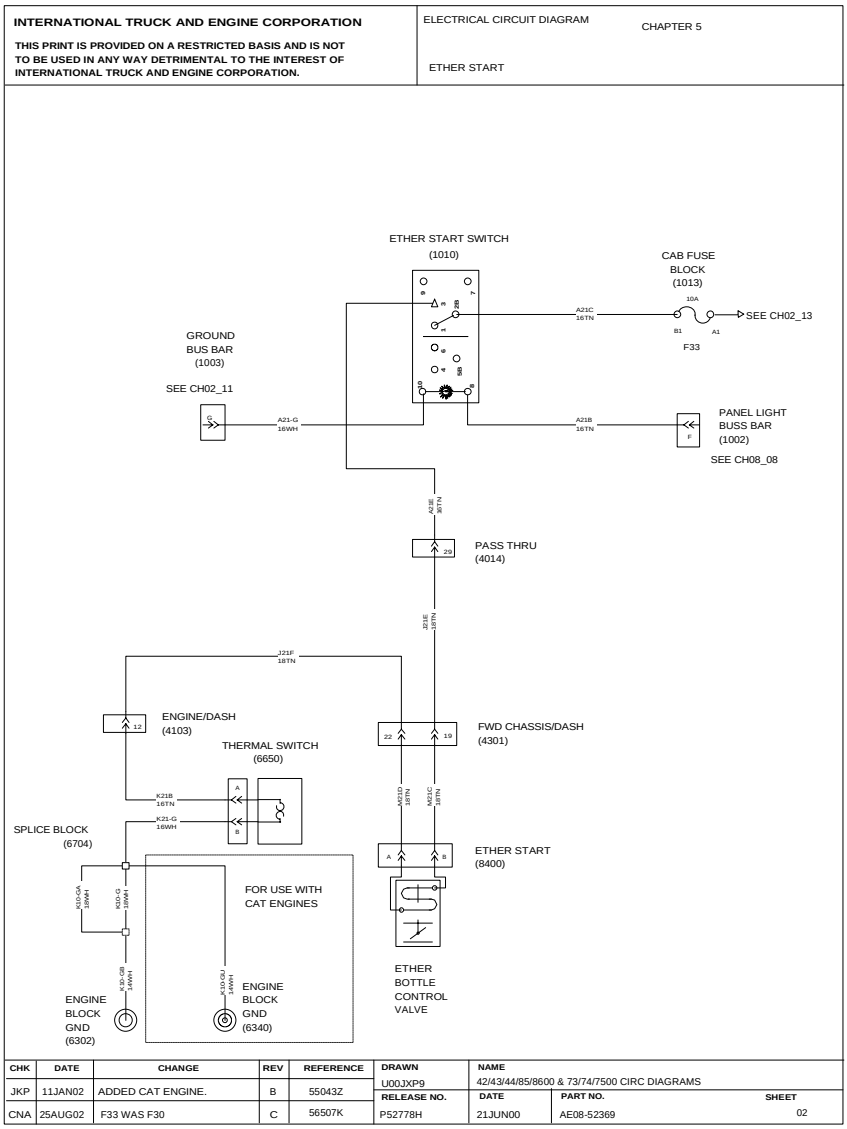

Figure 56 Ether Start

Downloaded from www.Manualslib.com manuals search engine

https://truckmanualshub.com/

SNOW VALVE, P. 3

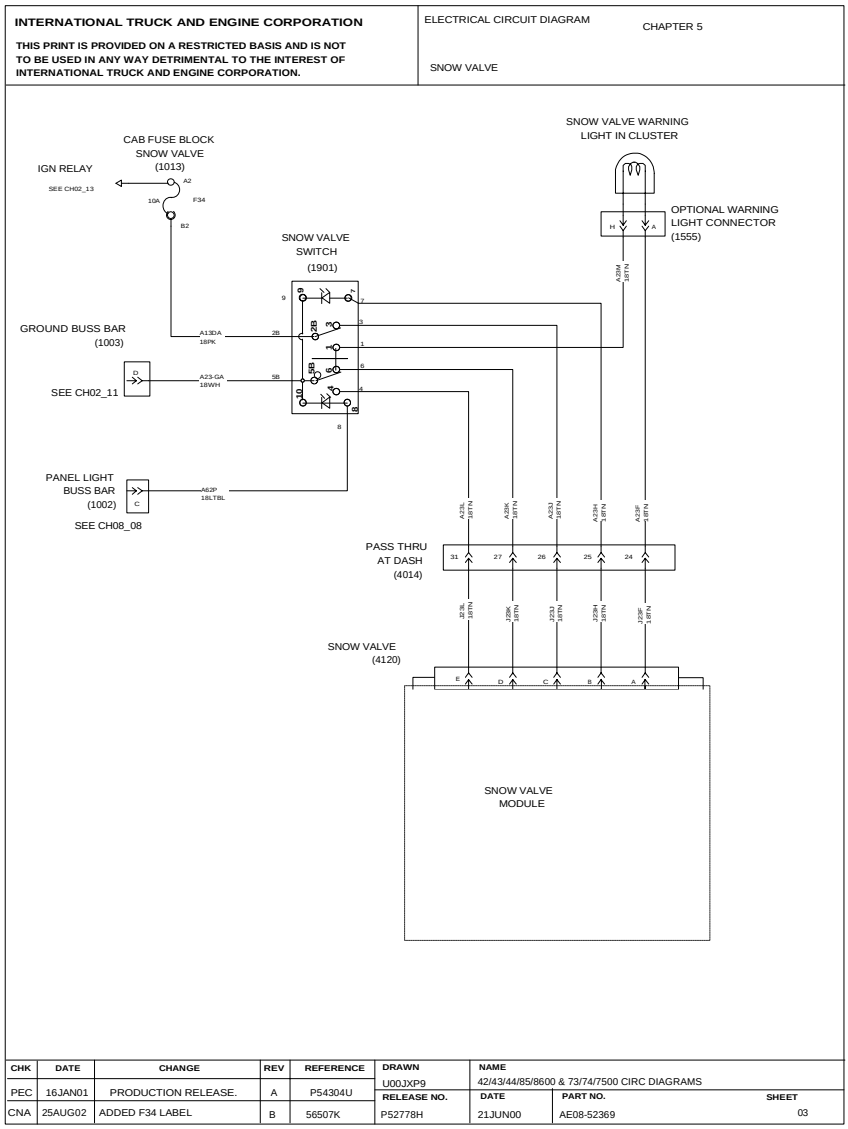

Figure 57 Snow Valve

Downloaded from www.Manualslib.com manuals search engine

https://truckmanualshub.com/

FAN WIRING, CATERPILLAR AND CUMMINS, P. 4

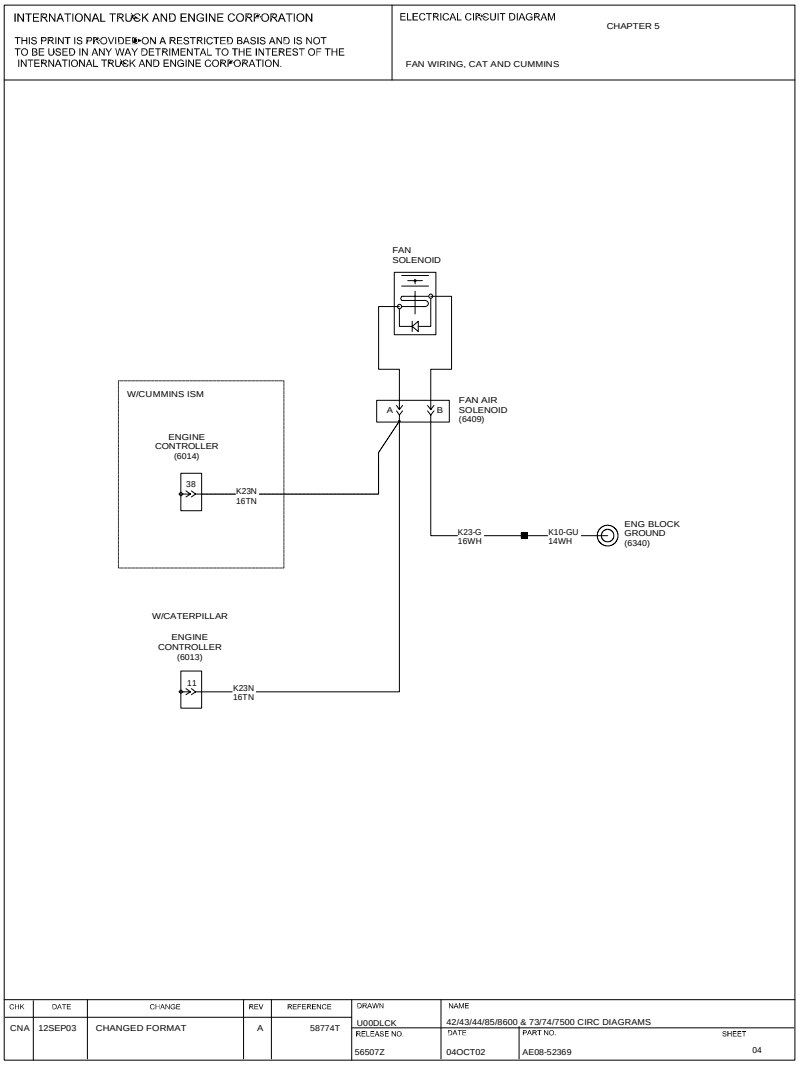

Figure 58 Fan Wiring, Caterpillar and Cummins

Downloaded from www.Manualslib.com manuals search engine

https://truckmanualshub.com/

ELECTRONIC ENGINES (CHAPTER 6)

ELECTRONIC ENGINE CONTROLS, I6–EGR ENGINES, P. 1

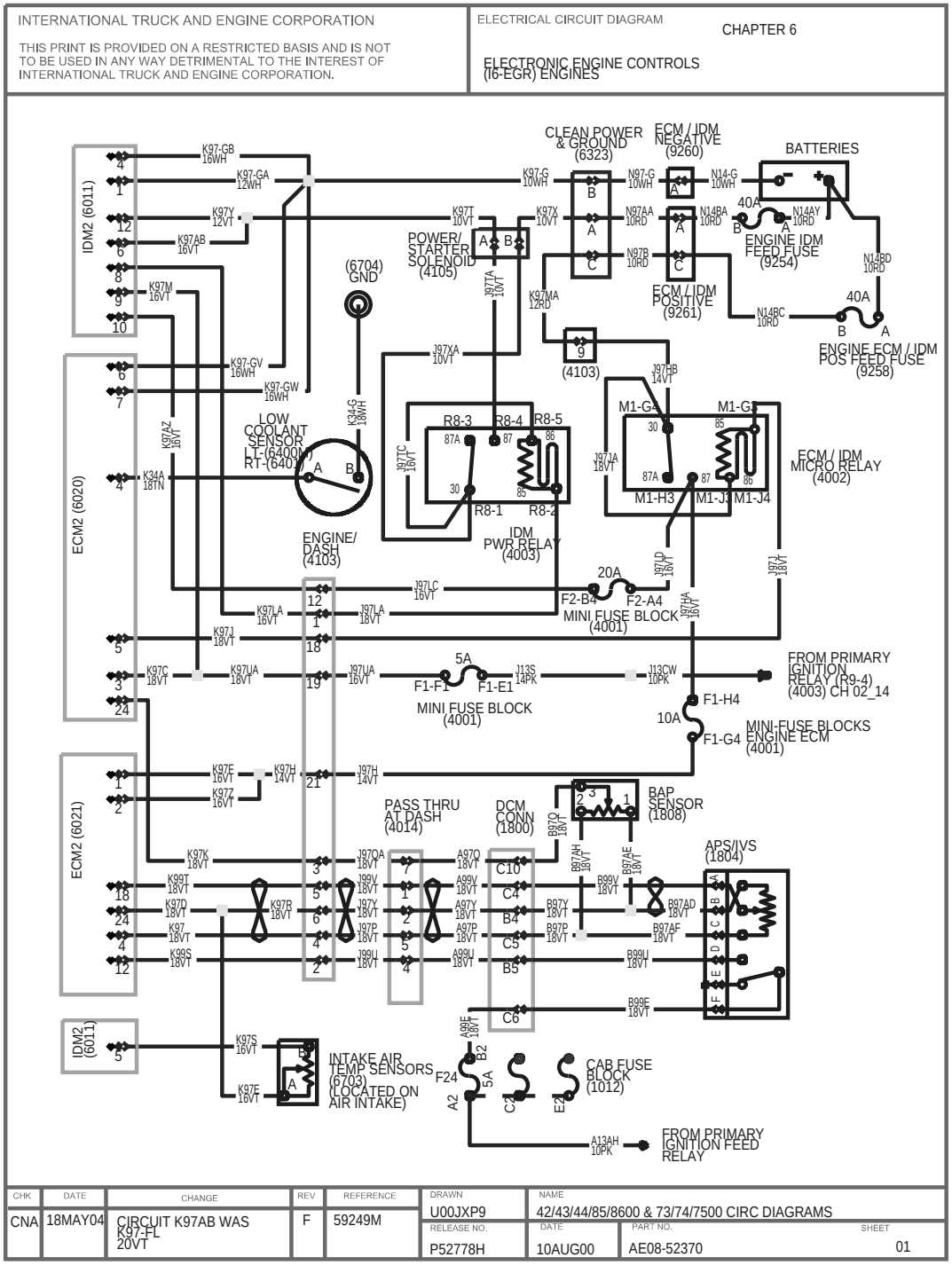

Figure 59 Electronic Engine Controls, I6–EGR Engines

Downloaded from www.Manualslib.com manuals search engine

https://truckmanualshub.com/

ELECTRONIC ENGINE CONTROLS, I6–EGR ENGINE CRUISE CONTROL AND BODY BUILDER CONNECTIONS, P. 2

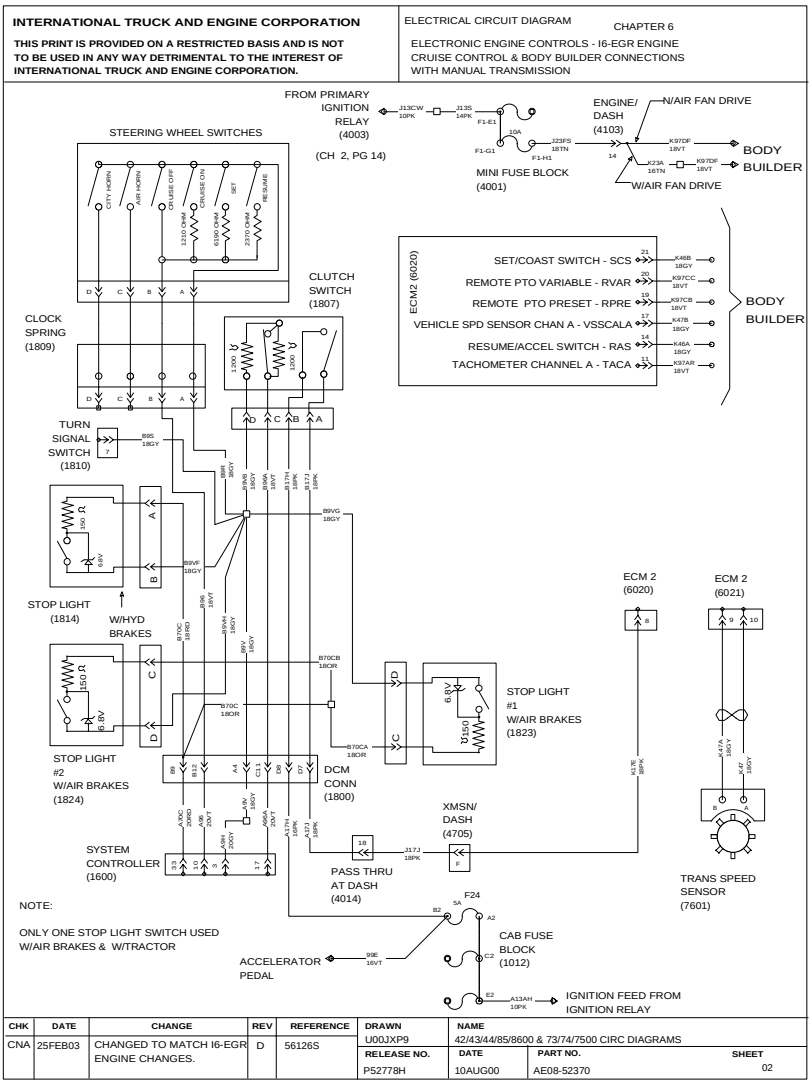

Figure 60 Electronic Engine Controls, I6–EGR Engine Cruise Control and Body Builder Connections

Downloaded from www.Manualslib.com manuals search engine

https://truckmanualshub.com/

ELECTRONIC ENGINE CONTROLS, (V8–AVNT) ENGINES, P. 3

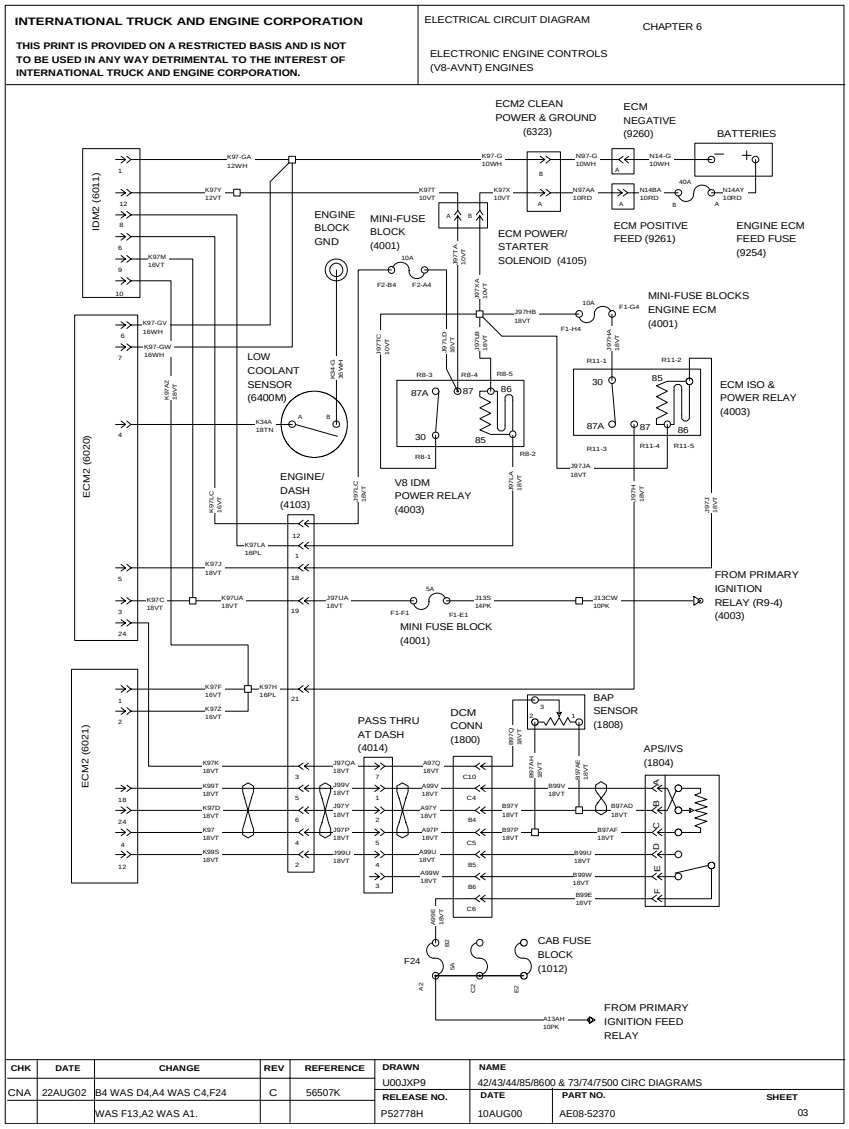

Figure 61 Electronic Engine Controls, (V8–AVNT) Engines

Downloaded from www.Manualslib.com manuals search engine

https://truckmanualshub.com/

ELECTRONIC ENGINE CONTROLS, V8–AVNT ENGINE CRUISE CONTROL AND BODY BUILDER CONNECTIONS, P. 4

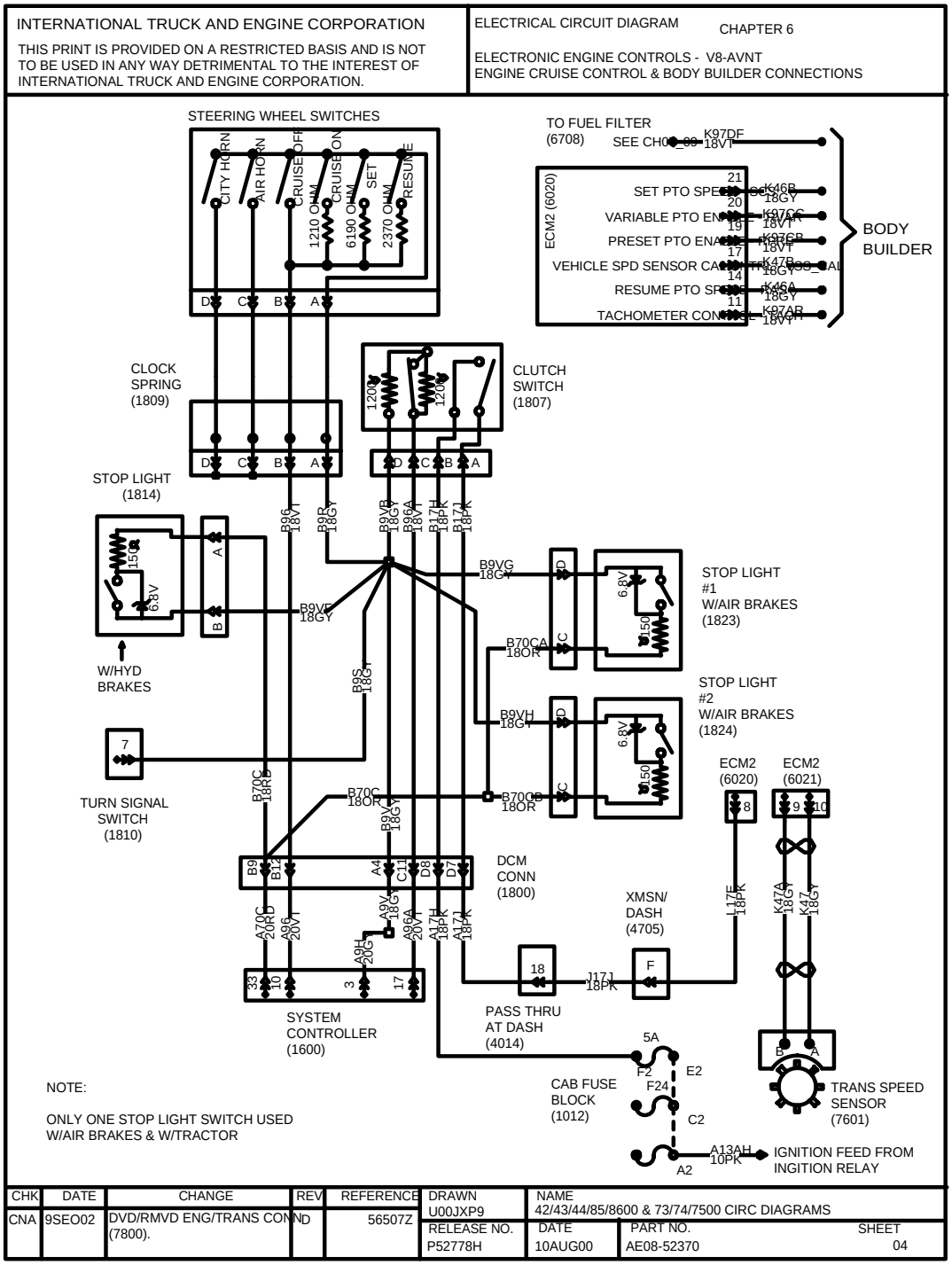

Figure 62 Electronic Engine Controls, V8–AVNT Engine Cruise Control and Body Builder Connections

Downloaded from www.Manualslib.com manuals search engine

https://truckmanualshub.com/

CATERPILLAR C10, C11, C12, AND C13 ENGINES, P. 5

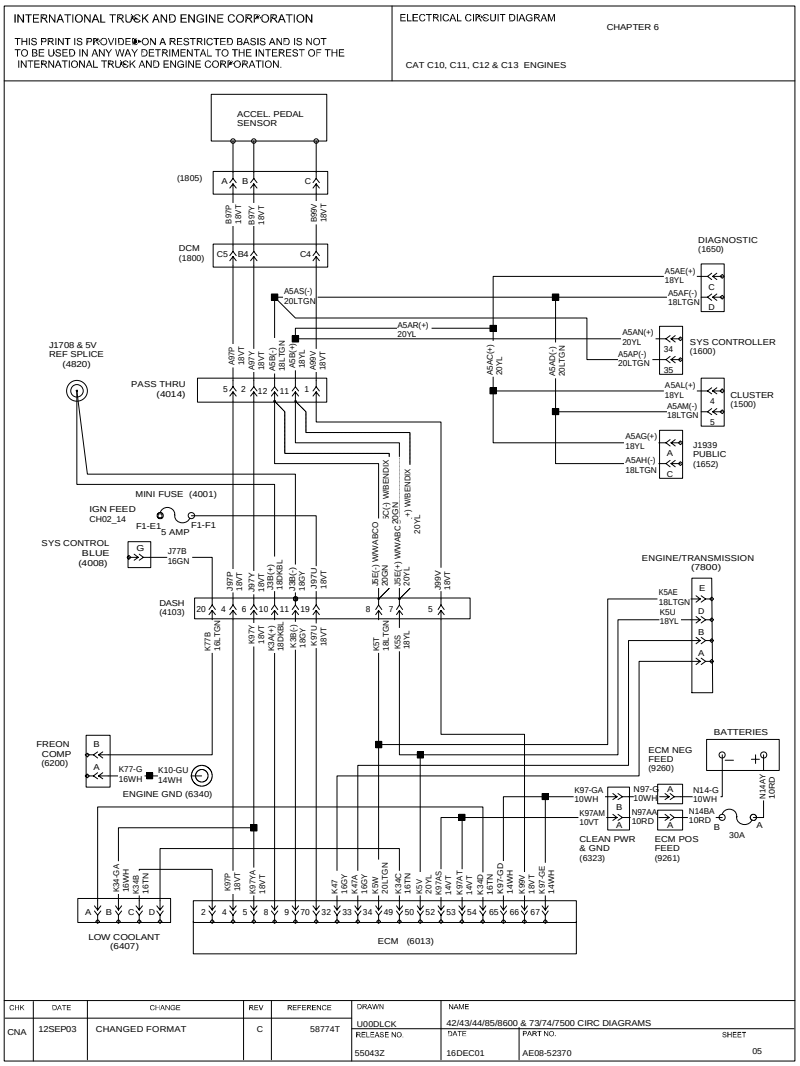

Figure 63 Caterpillar C10, C11, C12, and C13 Engines

Downloaded from www.Manualslib.com manuals search engine

https://truckmanualshub.com/

CUMMINS ISM ENGINE, P. 6

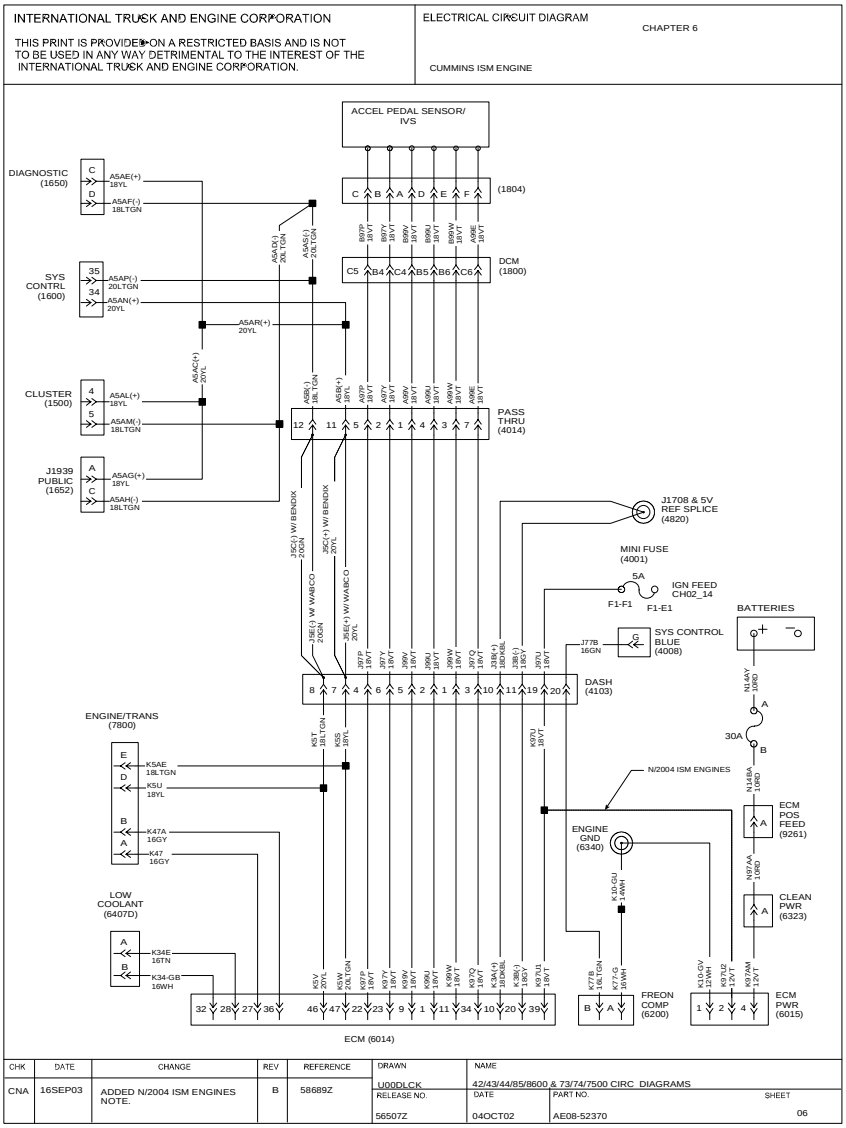

Figure 64 Cummins ISM Engine

Downloaded from www.Manualslib.com manuals search engine

https://truckmanualshub.com/

I6 HEUI ENGINE, P. 7

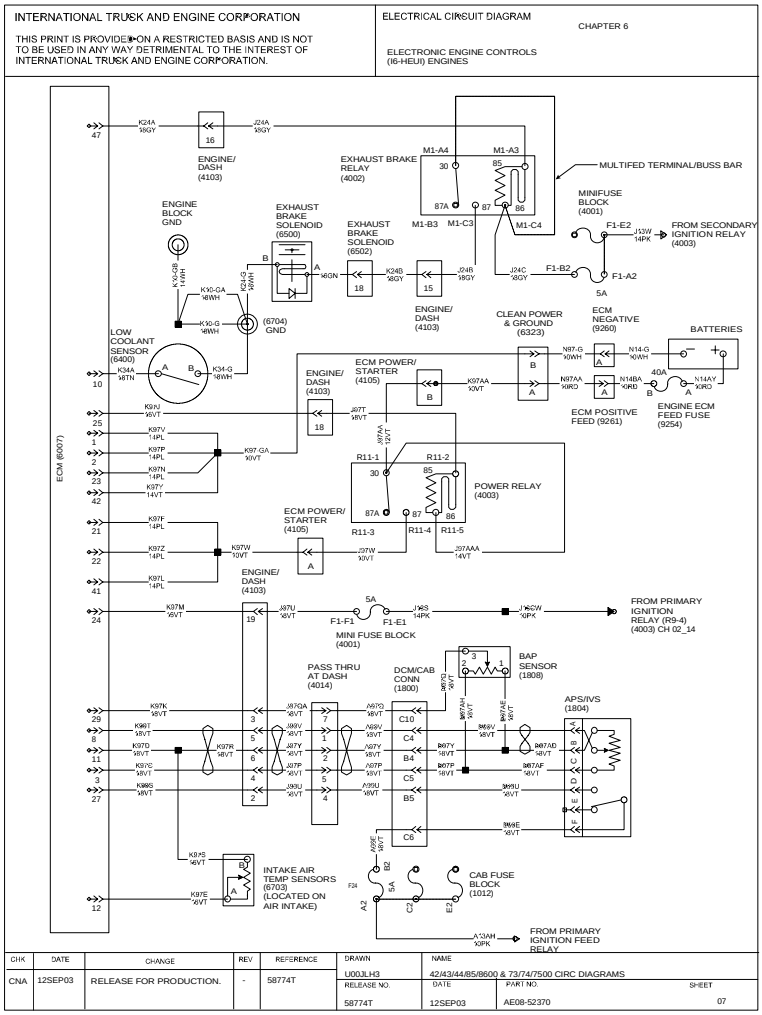

Figure 65 I6 HEUI Engine

Downloaded from www.Manualslib.com manuals search engine

https://truckmanualshub.com/

I6 HEUI ENGINE CRUISE CONTROL AND BODY BUILDER CONNECTIONS WITH MANUAL TRANSMISSION, P. 8

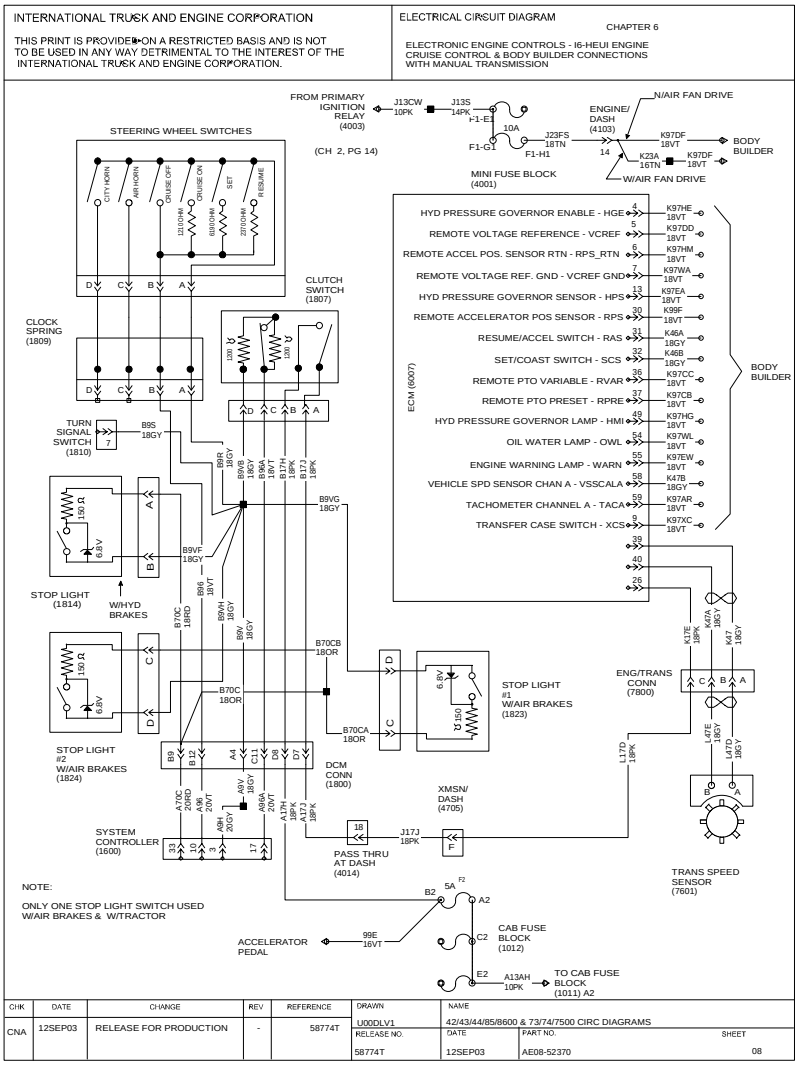

Figure 66 I6 HEUI Engine Cruise Control and Body Builder Connections with Manual Transmission

Downloaded from www.Manualslib.com manuals search engine