https://truckmanualshub.com/

CANYCOM

Off-road Rubber Track Dumper

S100

OPERATOR'S MANUAL

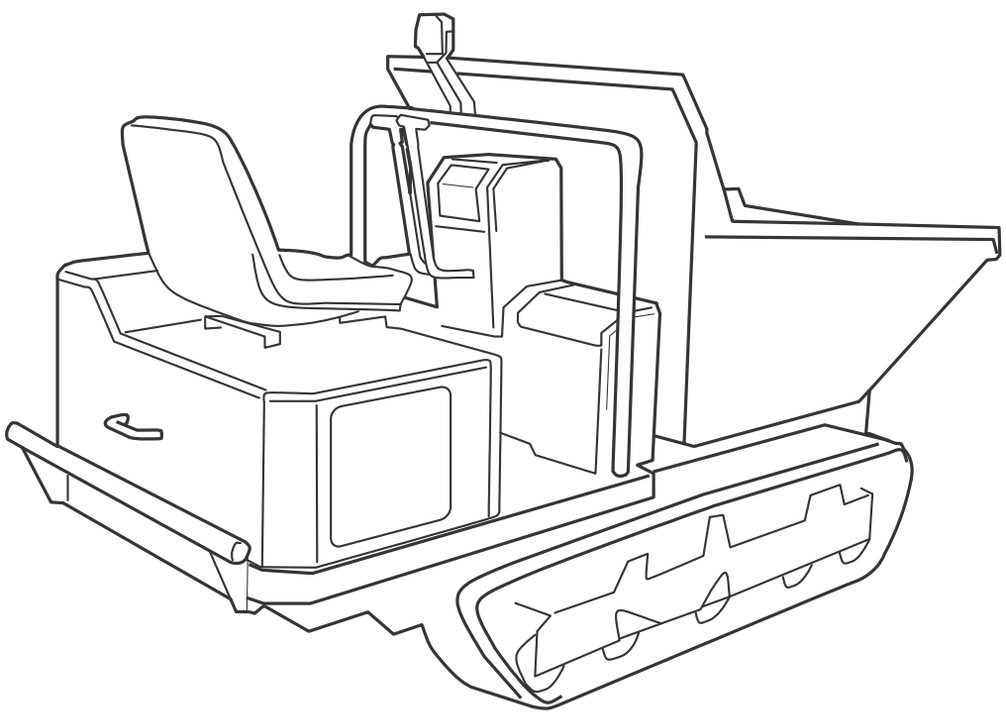

⚠ WARNING

Read this manual completely before operating or maintaining this machine. Failure to follow safety precautions could result in serious injury or death. Keep this manual for future reference for you and for all those who operate and maintain this machine.

Feb. 2004, 3677 5101 001

CHIKUSUI CANYCOM, INC.
90-1 Fukumasu, Yoshiimachi,
Ukihagun, Fukuoka, Japan 839-1396
Tel.(0943)75-2195 Fax.(0943)75-4396

https://truckmanualshub.com/

Warning Words Used in This Manual

To indicate the level of danger (or the degree of the failure), the following four signal words are used to identify the safety messages in this manual. Their meanings are as follows.

Signal word	Meaning
⚠ DANGER	Indicates an imminently hazardous situation which, if not avoided by following these instructions and precautions, will result in death or serious injury.
⚠ WARNING	Indicates a potentially hazardous situation which, if not avoided by following these instructions and precautions, could result in death or injury.
⚠ CAUTION	Indicates a potentially hazardous situation which, if not avoided by following these instructions and precautions, may result in minor or moderate injury.
NOTICE	This word is used for precautions that are recommended or to emphasize the importance of information.

Notice to Users and Maintenance Personnel

Thank you for purchasing this machine.
Always be sure to read and understand this manual thoroughly before using your machine. This will enable you to use it correctly.

⚠ WARNING

The machine can be very dangerous if the safety precautions in this manual and on the labels attached to this machine are not followed. Always follow the instructions and safety precautions, or serious injury or death could result.

This machine should only be used for its intended purpose: hauling and dumping.

Any other use could be dangerous.

Also driving this machine on a public road or a road regarded as a public road may be illegal.

⚠ WARNING

Do not modify this machine. Also do not remove the safety cover of the body before running. A serious accident could result.

https://truckmanualshub.com/

Notice to Owner

Be sure that everyone who uses this machine, including those who rent or lease this machine, receives a copy of the Operator's Manual and understands the importance of reading and following the information in this manual.

https://truckmanualshub.com/

Contents

1. Introduction 1

1.1 Purpose of This Manual 1
1.2 Structure of This Manual 1
1.3 Warning Labels Attached to This Machine 2

2. Warranty and After-sales Service 4

3. Rules for Safe Operation and Maintenance 5

4. Component Names and Functions 10

5. Product Specifications 12

5.1 Specifications of This Product 12
5.2 Details of Tool Bag 13

6. Operation 14

6.1 Preparation Before Operation 14
6.1.1 Adding Fuel 14
6.1.2 Cheking Engine Oil Level and Adding Oil 15
6.1.2 Cheking Engine Cooling Water Level and Adding Water 15
6.2 Method of Starting 16
6.2.1 Preparation of Starting 16
6.2.2 Normal Starting 17
6.2.3 Starting in Winter or in Cold Areas 20

https://truckmanualshub.com/

6.3 Method of Operating 21
6.4 Stopping 23
6.5 Operating Dump 25

7. Maintenance 28

7.1 Periodic Inspection Table 28
7.2 Fuel, Lubricant, and Coolant Chart 32
7.3 Replacement Parts Chart 33
7.4 Adding Oil 34
7.4.1 Engine Oil 34
7.4.2 Transmission Fluid 35
7.4.2 HST Fluid (Hydraulic Fluid) 36
7.5 Lubricating 37
7.6 Adding Water 38
7.6.1 Engine Cooling Water 38
7.6.2 Battery Electrolyte 39
7.7 Cleaning and Replacement 41
7.7.1 Air Cleaner Element 41
7.7.2 Engine Oil Filter 42
7.7.3 Suction Filter and Line Filter 43
7.7.4 Fuel Filter 43
7.8 Adjustments 44
7.8.1 Bleeding Air from Fuel System 44
7.8.2 Parking Brake 44
7.8.3 V-belt for Traveling 45
7.8.4 V-belt for Hydraulic Pressure 45
7.8.5 Fan Belt Tension 46

https://truckmanualshub.com/

7.8.6 Track Tension 46
7.8.7 Steering Lever 47
7.9 Electrical System 49
7.9.1 Fuses 49
7.10 Maintenance After Use 50

8. Storage (Long-term Storage) 51

8.1 Machine 51
8.1.1 Crawler 51
8.1.2 Clutch 51
8.2 Battery 52
8.3 Engine 52
8.3.1 Cleaning of Air Cleaner Element 52
8.3.2 Replacing Engine Oil 53
8.3.3 Fuel Cock 53

9. Troubleshooting 54

9.1 Troubleshooting Chart 54

10. Transporting Machine 58

10.1 Truck Loading and Unloading 58
10.2 Lifting by Crane 59

< Guarantee Certificate >

Attached to the end of this manual.
* Receive the guarantee certificate together with a receipt after you have received instructions for handing this machine.

< Appendix >

"Instruction manual for engine"
* Be sure to read it together with this manual.

https://truckmanualshub.com/

1. Introduction

1.1 Purpose of This Manual

The purpose of this manual is to provide detailed information needed for the safe and effective use of this machine to those who operate or maintain the machine.

1.2 Structure of This Manual

This manual contains the following chapters.

1. **Introduction**

   This section explains the purpose and structure of the manual and the warnings used in the manual. It also describes the warning labels attached to the machine.

2. **Warranty and After-sales Service**

   This section covers items related to the warranty and after-sales service for this machine.

3. **Rules of Safe Operation and Maintenance**

   This section covers general safety items that must be followed when operating or using this machine.

4. **Component Names and Functions**

   This section explains the names and functions of the parts of the machine.

5. **Product Specifications**

   This section gives the specifications of this machine. It also gives details about the tool bag.

6. **Operation**

   This section explains the preparations before operating the machine, the order of operation, and the method of operation.

7. **Maintenance**

   This section gives information about periodic inspection, use of coolant, lubricants. and grease, and cleaning, replacing, adjusting, and maintenance of the machine after use.

8. **Storage (Long-term Storage)**

   This section gives information about storage (long-term storage) of the machine.

9. **Troubleshooting**

   This section describes the action to take if any problem occurs.

10. **Transporting Machine**

    This section explains the methods and precautions when transporting the machine.

https://truckmanualshub.com/

1 Introduction

1.3 Warning Labels Attached to This Machine

NOTICE

Replace these labels immediately if they have been removed, fallen off, or have become illegible. Use the part numbers on the label to order replacement labels from dealer.

One-way dump

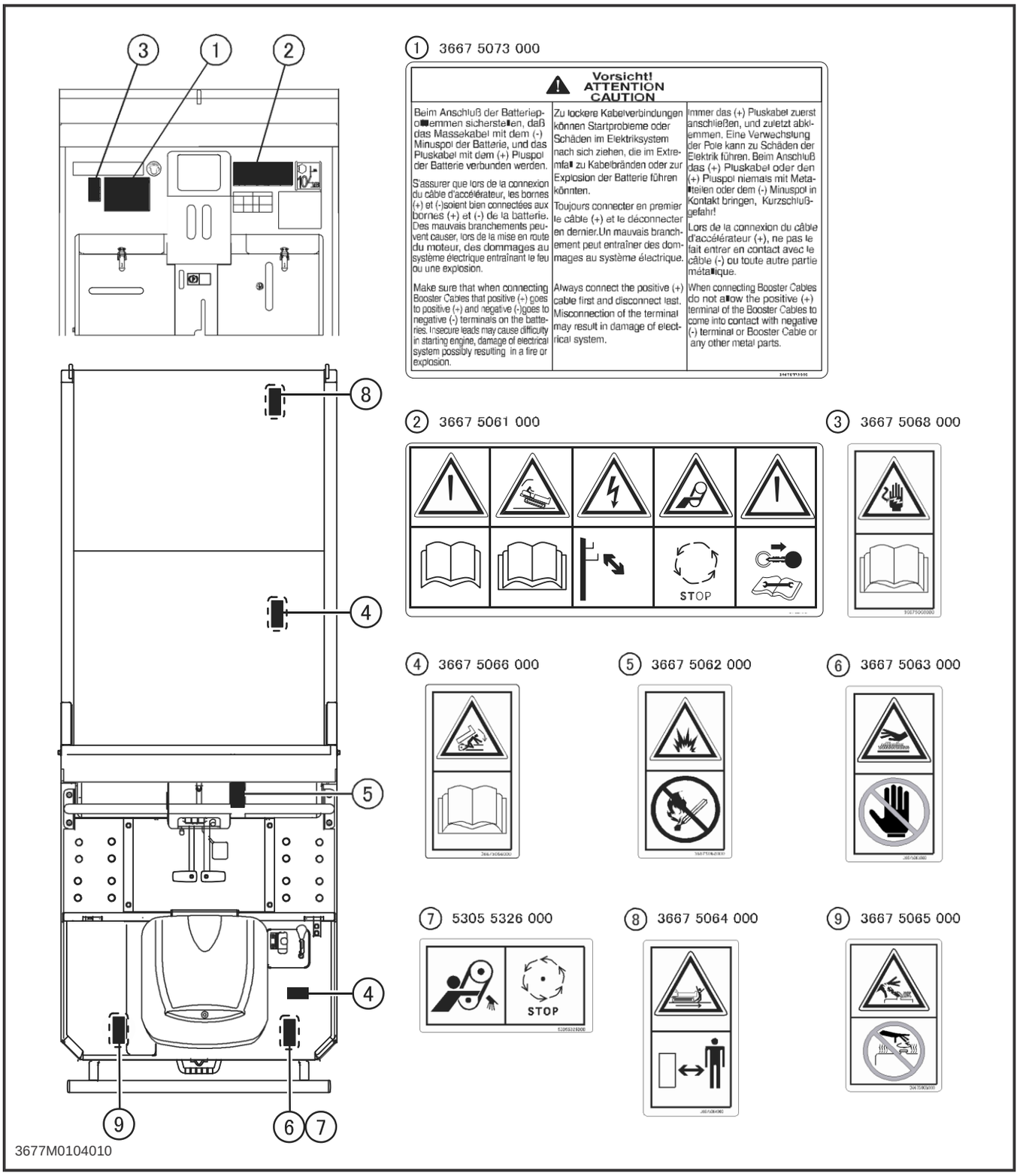

https://truckmanualshub.com/

Swivel dump

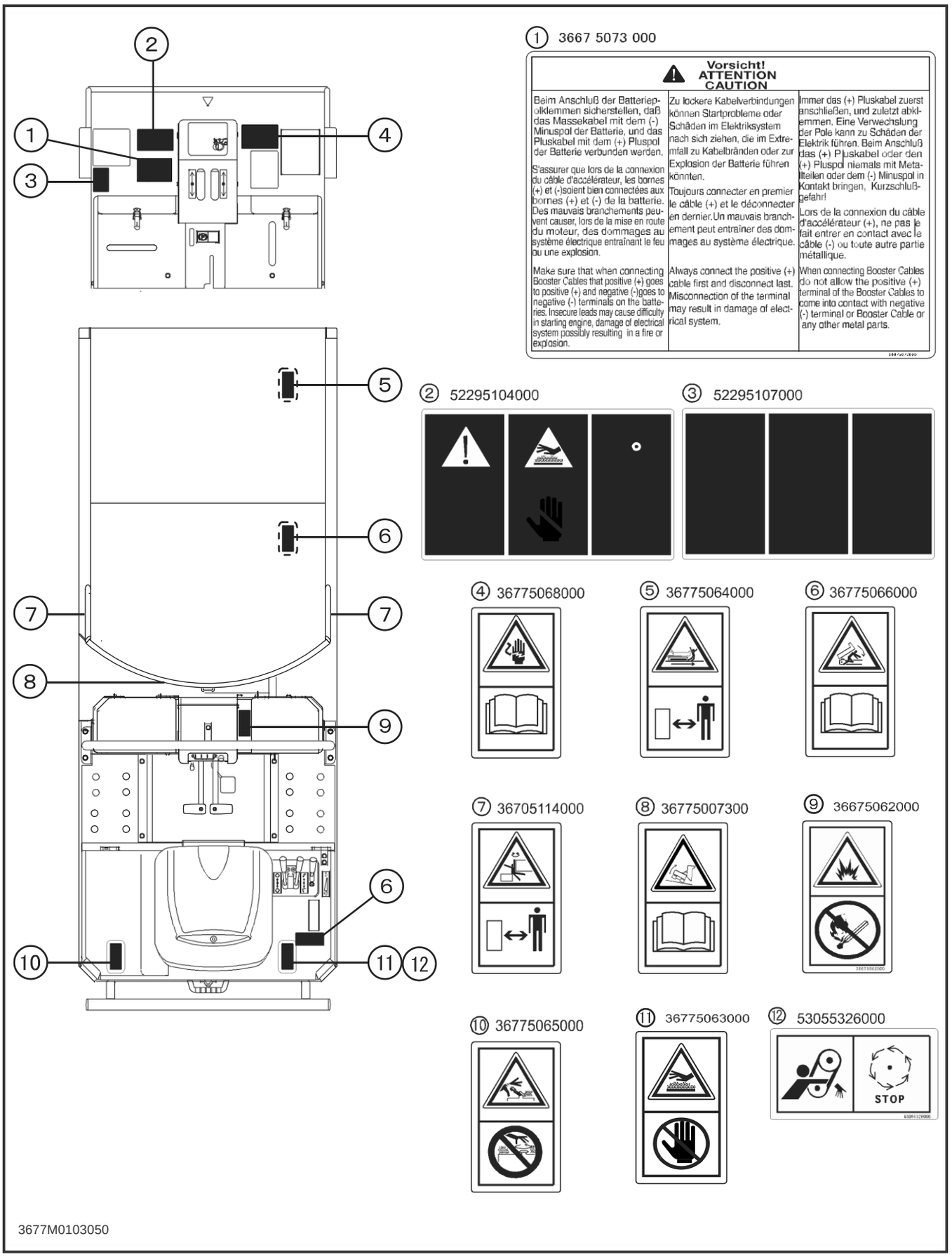

https://truckmanualshub.com/

2. Warranty and After-sales Service

Warranty

Chikusui Canycom, Inc. provides a warranty to you through their local dealers. Consult your local dealer regarding the details of warranty.

After-sales Service

Please contact your Canycom distributor from whom you purchased your machine or our Service Center regarding service orders or any questions or problems that may arise when using the Off-road Rubber Track Dumper.
Please inform us of the product model that you own or use and the product serial number specified on the model label (See illustration below for location of the label).
Please refer to the "Specifications" in Chapter 5 for the name of the manufacturer of the engine installed in your machine, as well as the engine model.

< Location of Model Label >

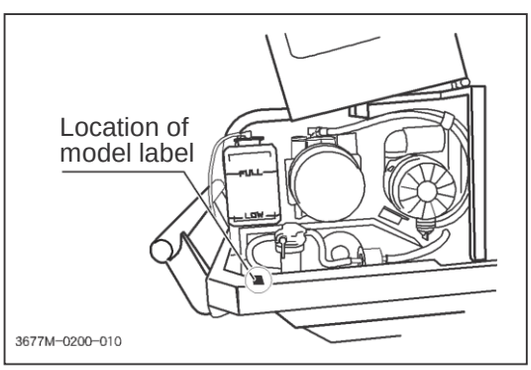

< Model Label >

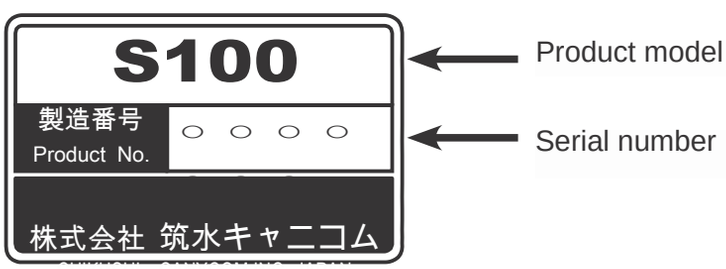

Availability of Repair Parts

Repair parts for this product will be available for seven years after manufacturing of this machine is discontinued.

https://truckmanualshub.com/

3. Rules for Safe Operation and Maintenance

This chapter describes general safety precautions that must be followed during operation and maintenance. Be sure that all users and maintenance personnel are familiar with these rules and that they follow them.

Safety Precautions before Operation

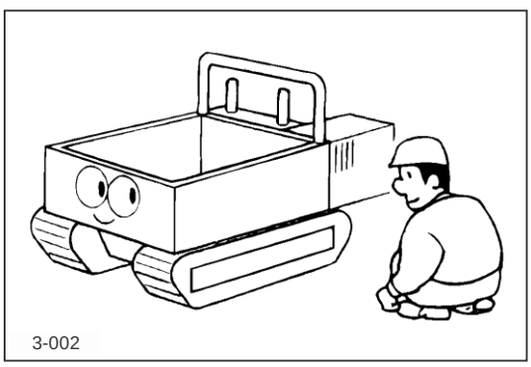
3-002

⚠ Pre-work Check

Perform the daily pre-operation check before starting the machine. Repair or replace damaged parts before starting the machine.

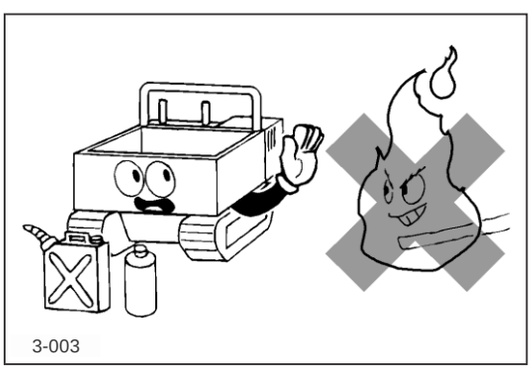
3-003

⚠ Fuel Handling

Do not handle fuel or grease, service the engine, or recharge the battery while smoking or when near an open flame.

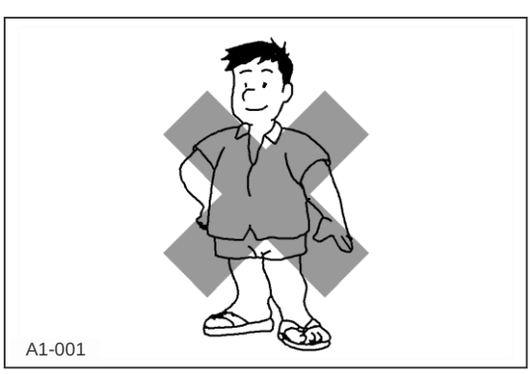
A1-001

⚠ Protective Clothing

Wear clothes suitable for the operation of heavy equipment. Protective footwear, long pants, and long-sleeved shirts are recommended.

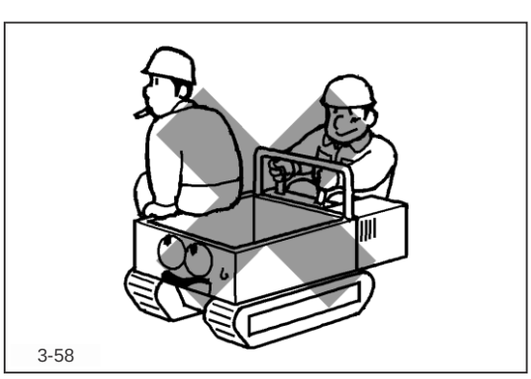
3-58

⚠ Do Not Carry Passengers on This Machine

Driving the Off-Road Rubber Track Dumper with a passenger or passengers can change the center of gravity and make the machine difficult to handle. This product was designed to be operated carrying only one person the driver. Driving with passenger is extremely dangerous.

https://truckmanualshub.com/

3 Rules for Safe Operation and Maintenance

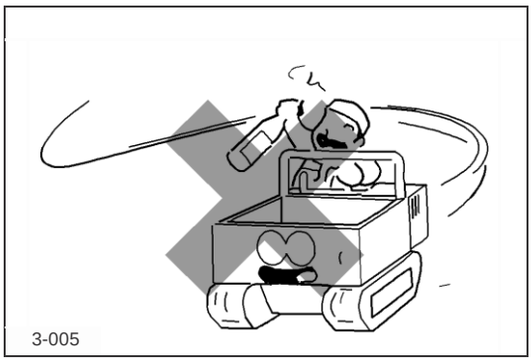

⚠ Do Not Drive Recklessly

Do not operate this machine when under the influence of alcohol or when fatigued. No one under age 18 should operate this machine.

Do Not Start, Accelerate, Turn, or Brake Quickly

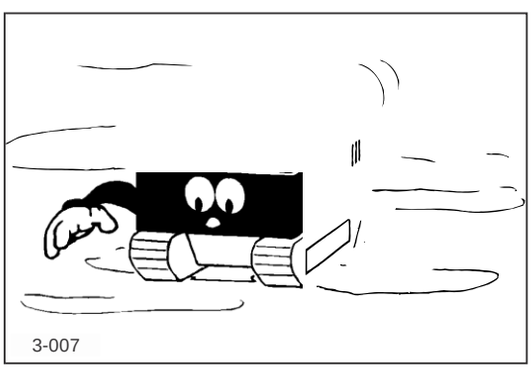

⚠ Maintain Safe Speed

When driving the machine, always drive at a safe speed suitable for the load in the dump body and the conditions of the road surface and grade of the road.

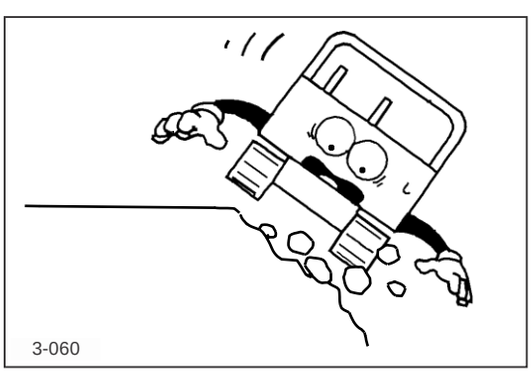

⚠ Precautions of Crumbling Ground

Beware of driving trenches and banks. There is a danger of the ground crumbling due to the machine weight. If travelling on soft ground, drive slowly and safely.

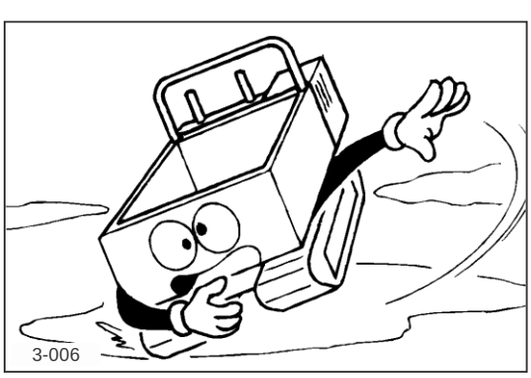

⚠ No Quick Starting Acceleration, Turning or Braking

Drive safely and avoid sudden changes of speed or direction. Make sure the area around the machine is safe for driving. Do not make sudden maneuvers or turn sharply when driving on soft or wet ground; this can cause the machine to lose traction or turn over.

https://truckmanualshub.com/

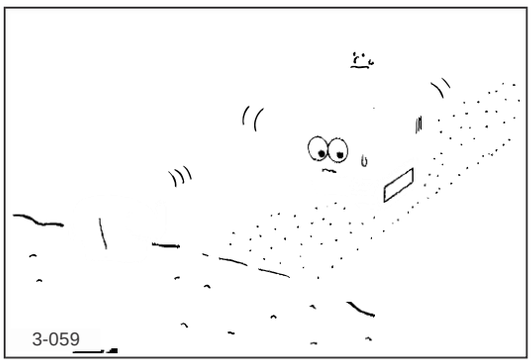

Work with an Observer in Dangerous Situations

When operating the machine where there is poor visibility, rugged terrain, hills, or limited maneuvering room, use an observer to help direct the machine 's movement. The observer should be able to see the machine and its immediate surroundings, and should use pre-arranged signals to direct the driver's actions.

Precautions on Slopes

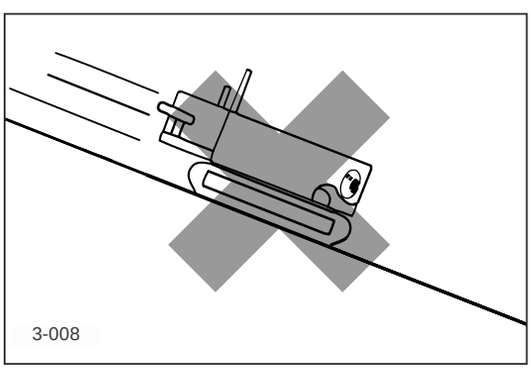

Use the Engine Speed to Help Brake when Driving Down a Slope

Before driving down a slope, stop the machine temporarily and lower the speed of the engine, and drive down the slope at a low speed. Let the engine speed help decelerate the machine. Travel at a low speed on wet steel plates and in muddy places. The machine may slip even on a gentle slope, causing a serious accident. Stopping suddenly when driving down a slope can throw the operator from the machine or make the machine turn over, causing serious injury or death.

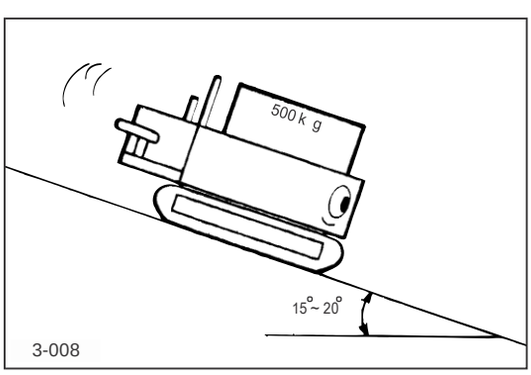

Observe the Machine’s Load Limit on a Slope

Driving on slopes can be dangerous. This is particularly true when you are driving with a load. Do not exceed 500kg, when traveling on slopes of 15° to 20°. If you must drive on slopes of more than 20°, the machine must not carry a load.

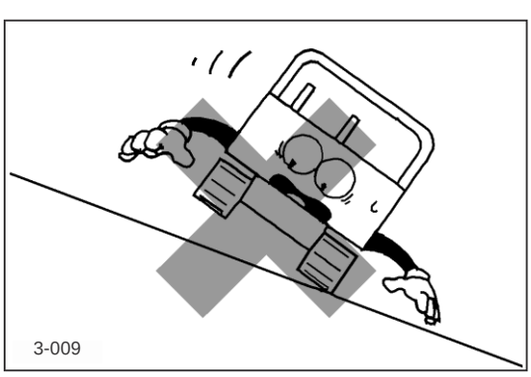

Do Not Drive Across a Slope to Drive on the Slope

Always travel straight up and down a slope. Never travel across a slope or along a contour line. Driving across a steep slope or along a contour line is dangerous and may cause the machine to tip over causing serious injury or death.
Never perform turning operation on a slope. If a route must be changed unavoidably, move the machine to level ground temporarily before turning.

https://truckmanualshub.com/

3 Rules for Safe Operation and Maintenance

Precautions When Carrying a Load

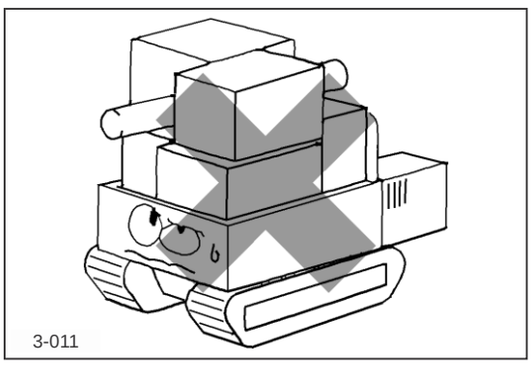

⚠ Never Overload

Do not load the machine in excess of the working capacity of 1000kg.

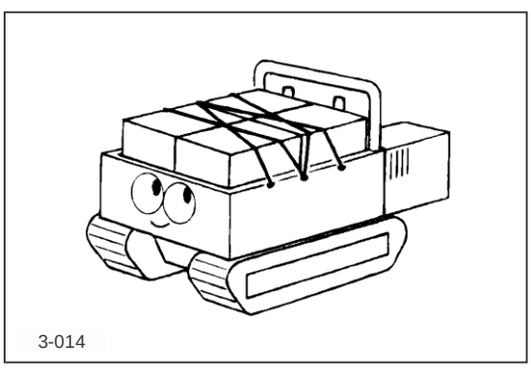

⚠ Load Vehicle Properly

Load cargo on the load deck so it is evenly distributed and strap the cargo to the load deck to avoid cargo weight imbalance and shifting. Do not load cargo on the load deck to a height that obstructs the operator's field of view.

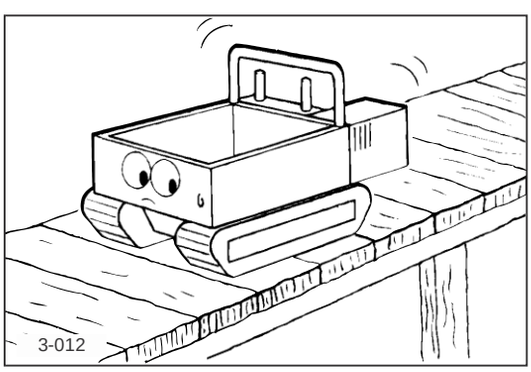

⚠ Observe Weight Limit of a Bridge or Overpass

Before crossing a bridge or overpass, be sure that the total combined weight of the machine and the load does not exceed the stated weight limit for the bridge or overpass. Then cross the bridge or overpass carefully at a constant speed.

Precautions When Parking

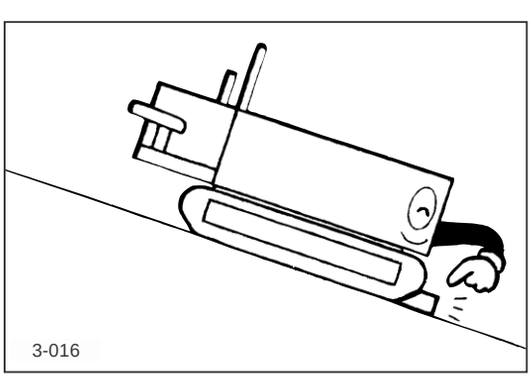

⚠ Do Not Park on Unstable or Inclined Surfaces

Do not park the machine on a slope. If it has to be parked on a slope, apply the parking brake securely and block the rubber tracks at the lower end .

https://truckmanualshub.com/

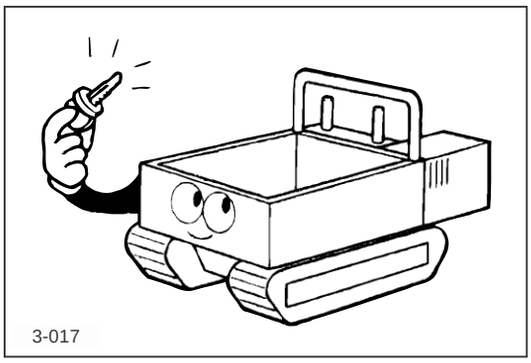

Safely Leaving the Machine Unattended

Whenever you park the machine, be sure to turn the parking brake switch to the [P] position to apply the parking brake, and stop the engine. Remove the key whenever you leave the machine unattended.

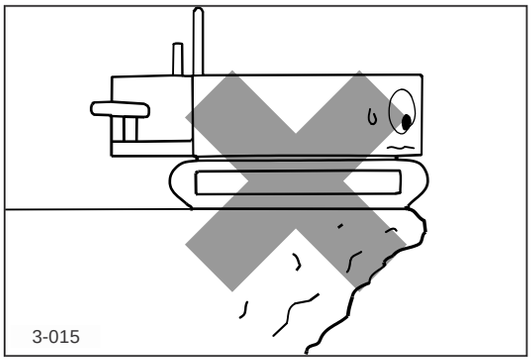

Do Not Park on Unstable or Inclined Surfaces

Park the machine on a stable, level, flat surface. If parking on a slope is unavoidable, apply the parking brake and block the rubber tracks at the lower end of the machine. Observe all precautions for driving and operating the machine and transporting a load on a slope.

Precautions When Performing Maintenance

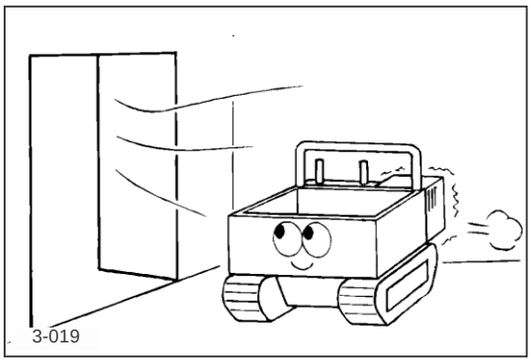

Ventilate Properly When Operating Indoors

When operating engine indoors, always ensure that there is adequate ventilation to prevent poisoning by exhaust gas.

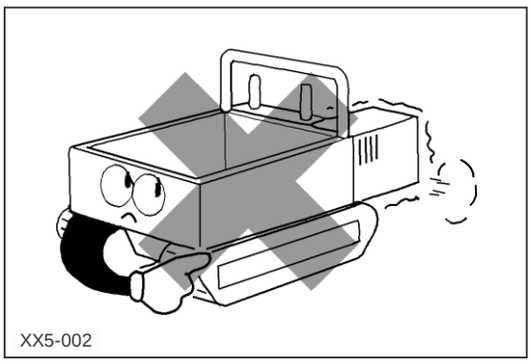

Never Carry Out Maintenance with Engine Running

Do not carry out maintenance with the engine running. Always stop the engine before starting maintenance.

https://truckmanualshub.com/

4. Component Names and Functions

Locations

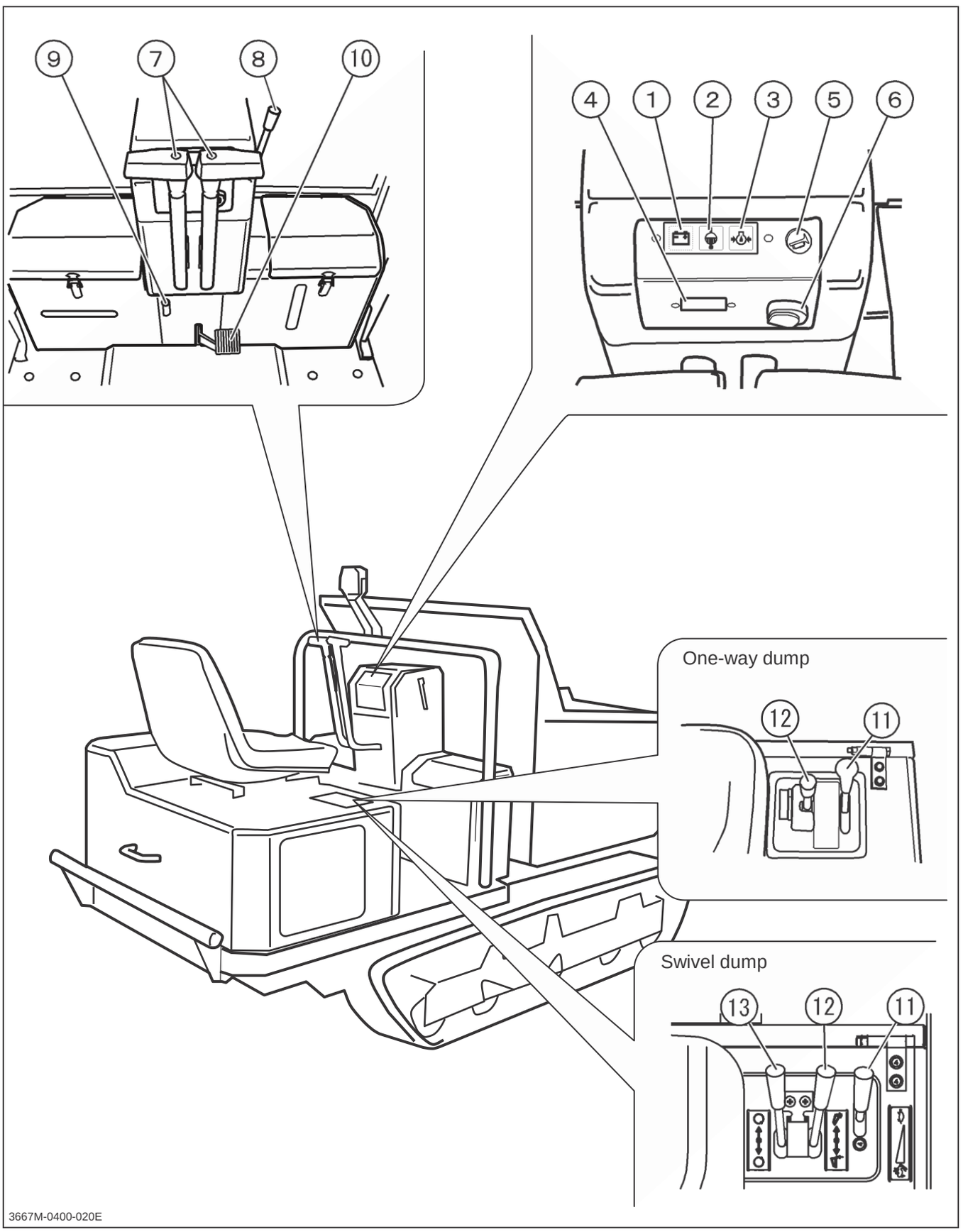

https://truckmanualshub.com/

Component Names and Functions

① Charge lamp	This displays the condition of the battery charge. When the ignition switch is turned to the [I] position, it lights up, and if the condition is normal, it will go out after the engine starts.
② Cooling water temperature lamp	This lights up when the engine cooling water temperature rises abnormally (overheats).
③ Oil lamp	This shows if the engine oil pressure is normal. When the engine-starting switch is turned to the [I] position, it lights up, and if the conditions are normal, it will go out after the engine starts.
④ Hour meter	This displays the total number of hours that the machine has been working in units of 0.1 hour.
⑤ Horn switch	Press this button to sound the horn. This is used when warning during traveling and signaling during operation.
⑥ Ignition switch	Turn this key to start and stop the engine.
⑦ Steering lever	This is used to switch the traveling direction of the machine (to forward or backward) and turns the machine.
⑧ Clutch lever	This is used when the stability of the engine is poor in winter or in cold areas.
⑨ Parking brake lock lever	To lock the brake pedal, pull this lever toward you with the brake pedal depressed when the machine is at a standstill.
⑩ Parking brake pedal	This is used to safely park the machine.
⑪ Throttle lever	This is used to increase or decrease the speed of the engine.
⑫ Dump lever	This is used to raise or lower the dump body.
⑬ Turn lever	This is used to rotate a bed.

https://truckmanualshub.com/

5. Product Specifications

5.1 Specifications of This Product

NOTICE

Read and understand the specifications of this machine to use maintain the machine properly.

Machine model, type				S100	
				One-way dump	Swivel ump
Weight			kg	835	910
Maximum payload capacity			kN(kg)	9.8 (1000)	
Dimensions	Overall lenght		mm	2570	2595
	Overall width		mm	1000	980
	Overall height		mm	1360 [1465]	1265 [1465]
	Ground contact lenghth of crawler		mm	1160	
	Crawler tread		mm	750	
	Minimum ground clearance		mm	145	
	Load deck floor height		mm	540	620
Load deck dimensions	Inside dimensions	Length	mm	1315	1340
		Width	mm	890	
		Height	mm	490	
	Payload	Struck	m^3 (kg)	0.42 (920)	0.39 (860)
		Heaped	m^3 (kg)	0.54 (1080)	0.50 (1000)
Engine	Model			Kubota D 722	
	Type			Water-cooled 4-cycle diesel	
	Cylinder (bore × stroke)		mm	67 × 68	
	Total displacement		cm^3 (cc)	719 (719)	
	Maximum output		kW/min^{1} (PS/rpm)	11.0 / 3000 (15.0 / 3000)	
	Maximum torque		N·m/min^{-1} (kg·m/rpm)	37.0 / 2200 (3.77 / 2200)	
	Starting system			Electric starter	
	Fuel used			Light oil	
	Fuel consumption		g/kW·h (g/PS·h)	312.7 (230)	
	Fuel tank capacity		liters	15.0	
	Lubricating oil capacity		liters	3.15	

*[ ] The bracketed figure above indicates that obtained when the working lamp is mounted.

https://truckmanualshub.com/

Machine model, type				S100	
				One-way dump	Swivel dump
Electrical equipment	Battery type			75D23R	
	Battery capacity		V/AH	12 / 52	
	Working lamp		[V/W]	[12 / 18.4]	
Travel Performance	Travel speed		km/h	0.0 ~ 5.4	
	Minimum turning radius		m	1.55	
	Gradeability		deg	25 (unloaded)	
HST fluid capacity			liters	20	
Power train	Main gearshifting method			Twin HST	
	Steering system			Twin HST two levers	
	Brake system			Internal expanding type brake	
	Crawler			230 × 48 × 72	
Dump system	Dump system			Front dump	Swivel dump
	Hydraulic pump	Type		Gear pump	
		Maximum rotational speed	rpm	2700	
		Maximum discharge	ℓ/min	11.0	
		Relief setting pressure	MPa(kg/cm²)	14.7 (150)	
	Cylinder (bore × stroke)		mm	60 × 400	
	Performance	Maximum lifting angle	deg	90	
		Lifting time	sec	About 6.0	About 6.3
		Lowering time	sec	About 4.0	About 5.1
	Hydraulic fluid capacity		liters	1.6	Combination with HST fluid
Rotating device	Rotating system			—	Hydraulic pressure (twin cylinder)
	Maximum rotating angle		deg	—	Right: 90 ~ Left: 90
	Rotating time		sec	—	About 3.0 (90°)
	Cylinder (bore × stroke)		mm	—	50 × 160

* These specifications are subject to change without notice, for product improvement.

5.2 Details of Tool Bag

No.	Part name	Quantity	Remarks
1	Operation and maintenance manual (This manual)	1	
2	Instruction manual for engine	1	
3	Grease fitting	1	M6

https://truckmanualshub.com/

6. Operation

- Before reading this section, be sure to read Section 3 "Rules for Safe Operation and Maintenance" (see pages 5 to 9).
- When operating the machine, always follow the instructions in this section. Do not operate the machine unless you are familiar with the operation of all controls and safety devices.

6.1 Preparation Before Operation

6.1.1 Adding Fuel

⚠ DANGER

- **When adding fuel, keep open flames (lighted cigarettes, etc.) away from fuel and engine. Flames will cause the fuel to ignite.**
- **Always stop the engine before adding fuel.**
- **Do not overfill so that fuel spills out of filler cap. Wipe up any spillt before starting engine.**

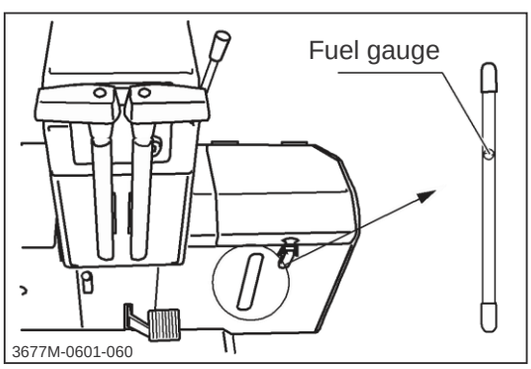

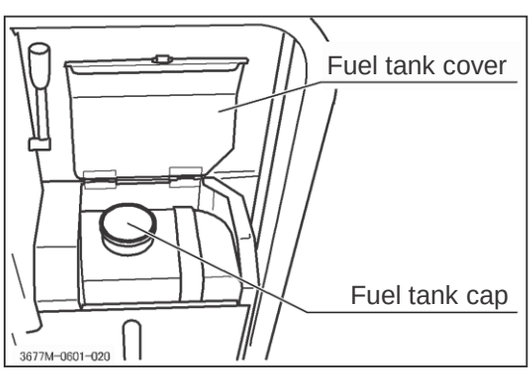

Checking fuel level

Visually check the fuel level gage. If fuel is low, open the fuel tank cap, and add fuel.

Adding fuel

1. Open the fuel tank cover.
2. Open the fuel tank cap, and add fuel.
3. Replace the fuel tank cap.
4. Replace the fuel tank cover.

Fuel to use: Light oil
Fuel tank capacity: 15.0 liters

⚠ CAUTION

Take extreme care so that a hand is not caught by the fuel tank cover.

https://truckmanualshub.com/

6.1.2 Checking Engine Oil Level and Adding Oil

⚠CAUTION

If the oil filler cap is opened during operation or immediately after stopping the engine, hot engine oil may spurt out and cause burns since the parts inside the engine cover are heated. Always wait for the engine oil to cool down before opening the cap (about 10 minutes after stopping the engine).

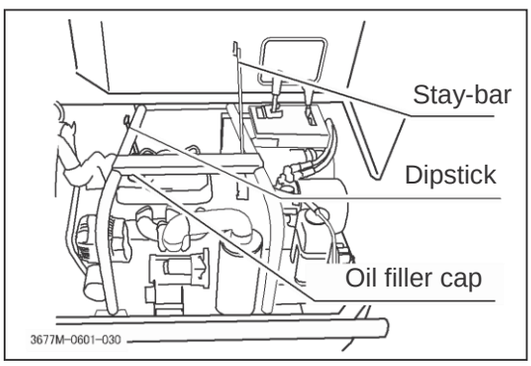

NOTICE

Inspect and replenish engine oil on a firm level ground at all times.

1. Open the engine cover manually using the handle.
2. Insert the stay-bar into the holding hole to hold open the engine cover.
3. Pull out the dipstick.

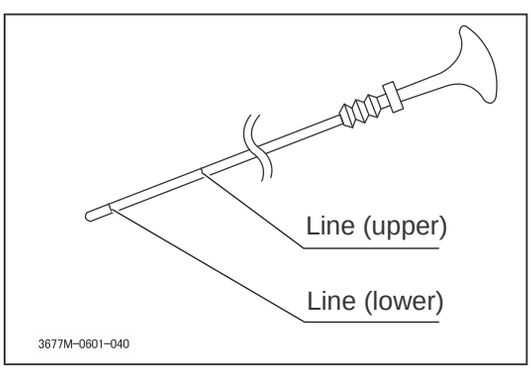

⚠CAUTION

- **Carefully insert the stay-bar in the holding hole. If the stay-bar comes out of the hole, the engine cover may close, causing serious personal injury.**
- **Carefully remove and replace dipstick. If it is pulled out too strongly, personal injury may result, or parts may be damaged.**

4. Check the engine oil level. If the engine oil is not at the specified level, open the oil filler cap, and add engine oil.

   Proper engine oil level: Between [UPPER] and [LOWER] lines on dipstick

6.1.3 Checking Engine Cooling Water Level and Adding Water

⚠CAUTION

If the radiator cap is opened during operation or immediately after stopping the engine, boiling water may spurt out and cause burns. Always wait for the cooling water to cool down before opening the cap (about 10 minutes after stopping the engine).

https://truckmanualshub.com/

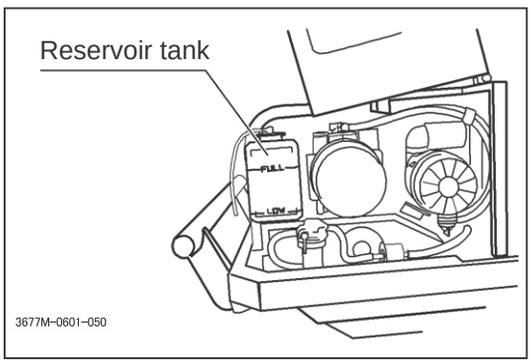

1. Open the engine cover, and fix it firmly with the stay-bar.
2. Check the level of the engine cooling water in the reservoir tank. It should be between the [FULL] and [LOW] lines. If the level is low, add water.

   Cooling water amount: 1.8 liters
   Reservoir tank capacity: 0.7 liters
   Mixing of antifreeze (See page 37)

6.2. Method of Starting

⚠ DANGER

Before starting the engine, check that there is no flammable material around the engine, and that the area around the engine has good ventilation.

6.2.1 Preparation for Starting

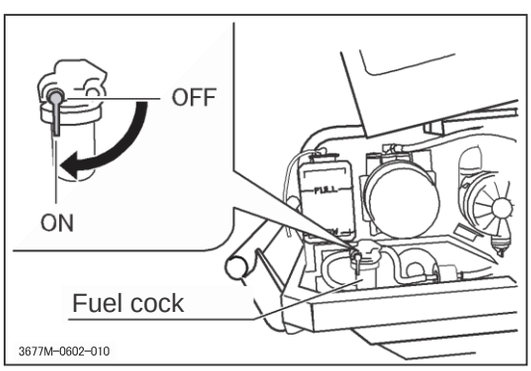

1. Open the engine cover, and lock it with the stay-bar. (See page 15)

2. Turn the fuel cock to ON.

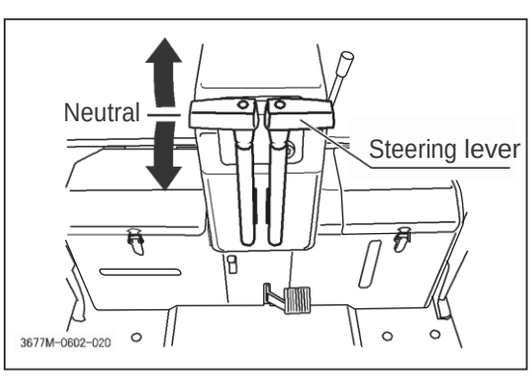

3. Check that the steering lever is in the [NEUTRAL] position.

https://truckmanualshub.com/

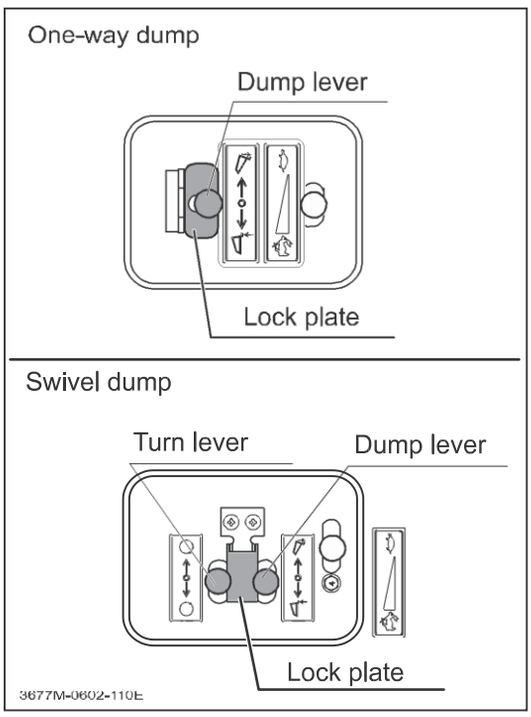

4. Check that the dump lever is in the [NEUTRAL] position, and lock it with the lock plate.

6.2.2 Normal Starting

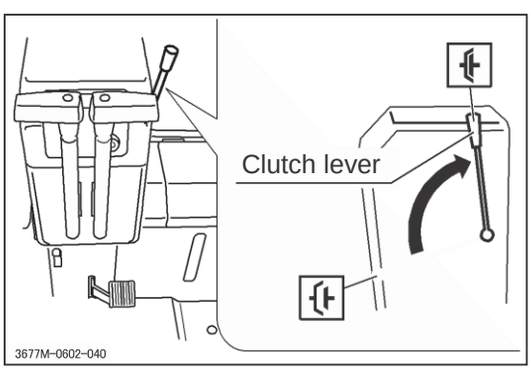

1. Push the clutch lever to the [(ON)] position.

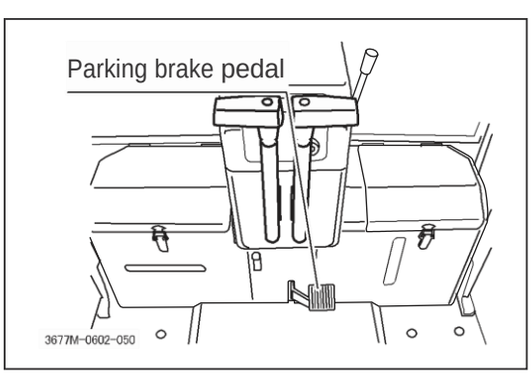

2. Depress the parking brake pedal.

NOTICE

When the steering lever is in the "NEUTRAL" position and the parking brake pedal is in lock, a safety switch is engaged and engine will not start.

https://truckmanualshub.com/

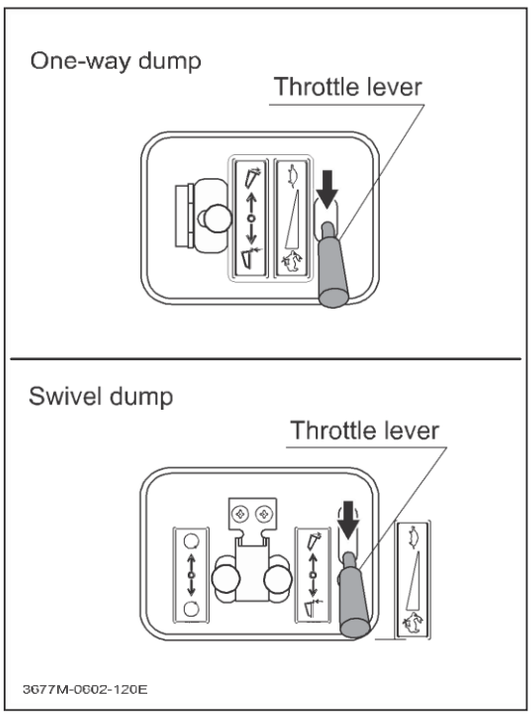

3. Push the throttle lever to the [(HIGH SPEED)] position.

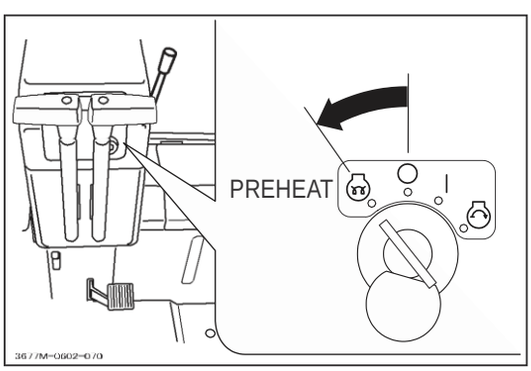

4. Turn the key in the ignition switch to the [(PREHEAT)] position and perform the warming-up operation.

NOTICE

- **Preheat engine for about 10 seconds when starting in normal temperature and for about 20 to 30 seconds when starting in cold weather (ambient temperature below -5°C).**
- **There is no need to preheat if the engine is already warm.**

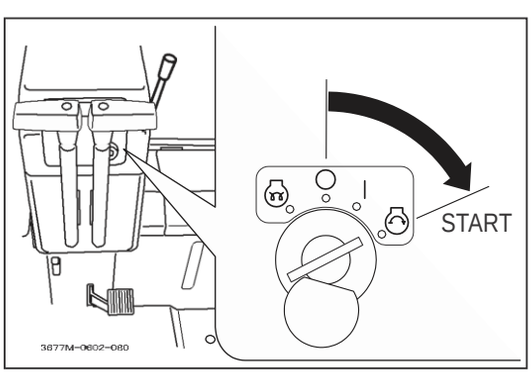

5. Turn the key in the ignition switch to the [(START)] position and start the engine. (When the engine starts, release the key immediately. The key will automatically return to the [| (ON)] position.)

NOTICE

- **If the engine does not start, do not crank the starting motor continuously for more than 15 seconds. Return the key to the ON position, wait for 30 seconds, then try to start the engine again.**
- **Avoid frequent starting of the starting motor. Once the starting motor starts, run it continuously for a short time to charge the battery.**

https://truckmanualshub.com/

⚠CAUTION

Never turn the ignition switch to the [START] position when the engine is running. This will damage the starting motor or cause failure of the engine.

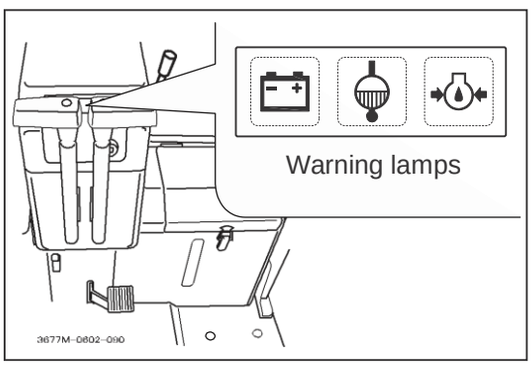

6. Check that the warning lamps (oil lamp, cooling water temperature lamp and charge lamp) are off.

NOTICE

If the conditions these warning lamps monitor are normal, lamps will go out when the engine starts. If they remain lit after the engine has started, go to Section 9 "Troubleshooting" and take the appropriate action.

(Reference: See pages 54 to 57)

7. Continue the warming-up operation for about 5 minutes under no load.

NOTICE

- **Always perform the warming-up operation in winter or in cold areas. If the machine is operated before the engine is properly warmed up, the life of the engine and hydraulic equipment will be reduced.**
- **The first week (about 40 to 50 hours use time) after purchasing the machine is the breaking in period. Do not apply excessive loads, to the machine when operating during this period.**

https://truckmanualshub.com/

6.2.3 Starting in Winter or in Cold Areas

NOTICE

If the engine is hard to start in winter or in cold areas (at an atmospheric temperature of 0°C or below), start the engine following the procedure below. The load on the battery will be reduced.

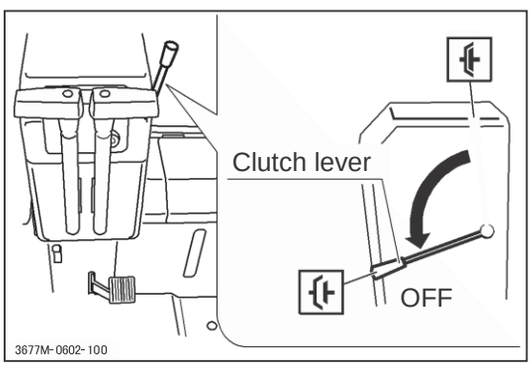

1. Push the clutch lever to the [(OFF)] position.
2. Depress the parking brake pedal.
3. Push the throttle lever to the [(HIGH SPEED)] position.
4. Insert the engine key in the ignition switch, and turn it to the [(PREHEAT)] position to warm-up the engine.
5. Turn the key in the ignition switch to the[(START)] position to start the engine. (When the engine starts, release the key immediately. The key will automatically return to the [(ON) position.]
6. Check that the warning lamps (oil lamp, charge lamp, and cooling water temperature lamp) are off.

(Reference: See page 19)

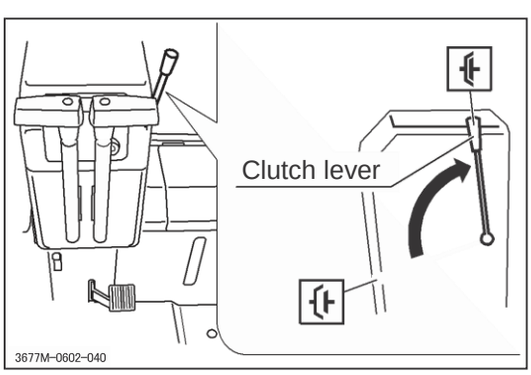

7. Push the clutch lever to the [(ON)] position.
8. Continue the warming-up operation for about 5 minutes under no load.

https://truckmanualshub.com/

6.3 Method of Operating

⚠ DANGER

- **Do not allow anyone to come near the machine.**
- **The front lower and rear areas of the machine are dead zones. Before operating the machine, remove all obstacles and personnel from these areas.**
- **Always check areas around the machine when turning.**
- **Do not make sudden turns when driving the machine. The operator may be thrown from the machine or the machine may also turn over, resulting in serious injury or death of the operator or bystanders.**

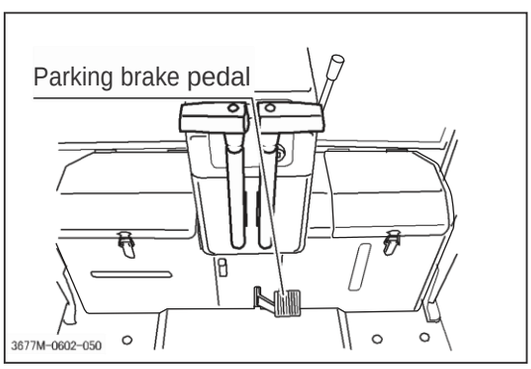

Preparation for Moving

1. Check that all areas around the machine are safe.

2. Check that parking brake is unlocked.

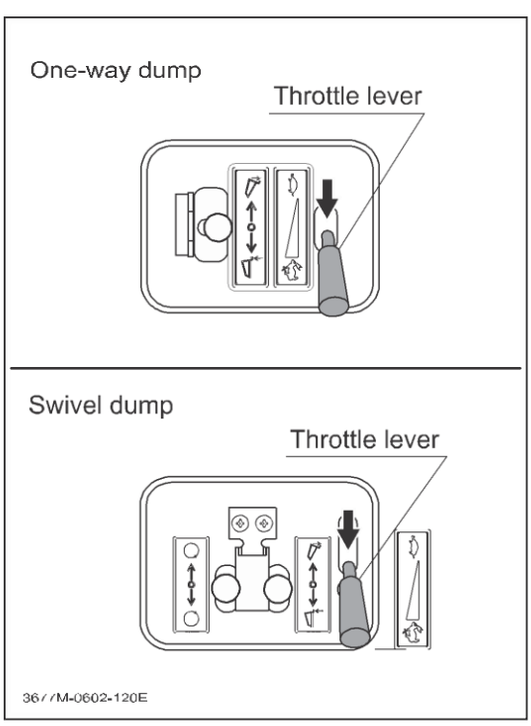

3. Push the throttle lever to the [🐇(HIGH SPEED)] position to increase the speed of the engine.

https://truckmanualshub.com/

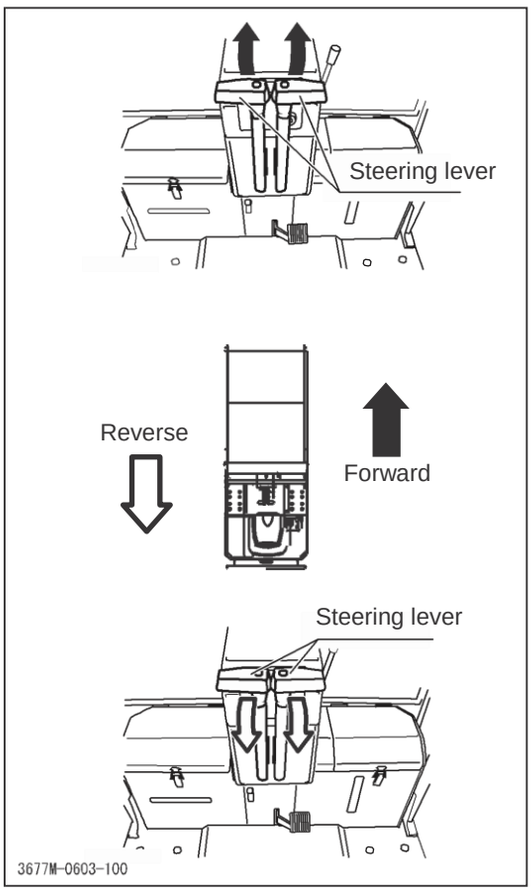

When Traveling Forward

- Push both steering levers gradually to the front to move the machine slowly forward. The machine travel speed can be adjusted by moving the steering levers.

When Traveling in Reverse

- Push both steering levers gradually to the rear to move the machine slowly in reverse. The machine travel speed can be adjusted by moving the steering levers.

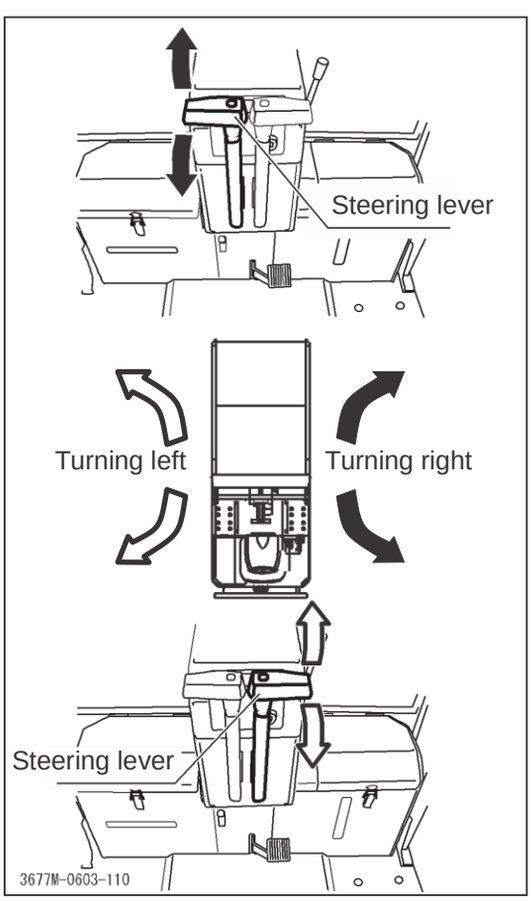

Normal Right Turn

- To turn right when traveling forward, push the left steering lever slowly to the front.
- To turn right when traveling backward, push the left steering lever slowly to the rear.

Normal Left Turn

- To turn left when traveling forward, push the right steering lever slowly to the front.
- To turn left when traveling backward, push the right steering lever slowly to the rear.

https://truckmanualshub.com/

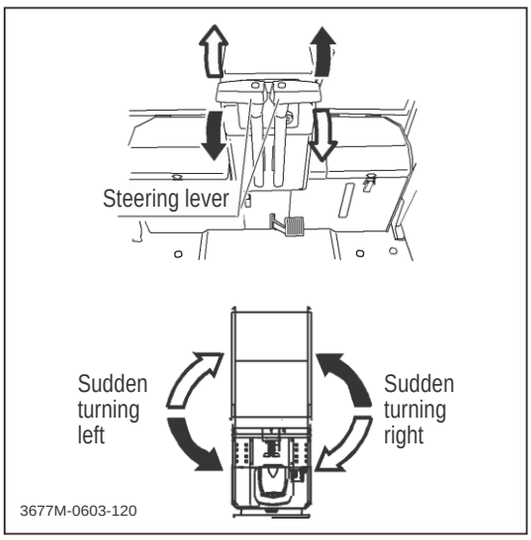

Sudden Turn

- To suddenly turn left, push the left steering lever to the rear and the right steering lever to the front.
- To suddenly turn right, push the right steering lever to the rear and the left steering lever to the front.

NOTICE

- **Do not operate the steering levers with the brake pedal depressed.**
- **Always release the steering levers at the neutral position.**
- **Do not turn the engine key to the [◯ (OFF)] position while moving. The balance of the machine may be upset, and the front or rear of the machine may rise.**

6.4 Stopping

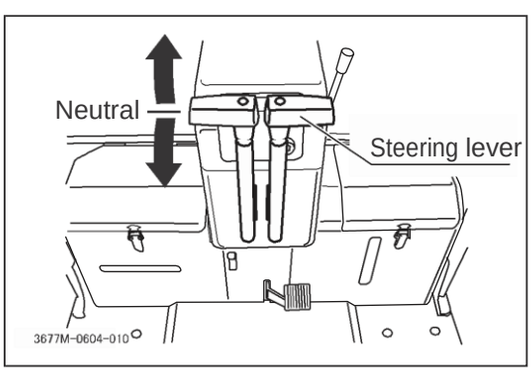

1. Return both steering levers to the neutral [N] position and stop the machine.
2. Depress the parking brake pedal.

https://truckmanualshub.com/

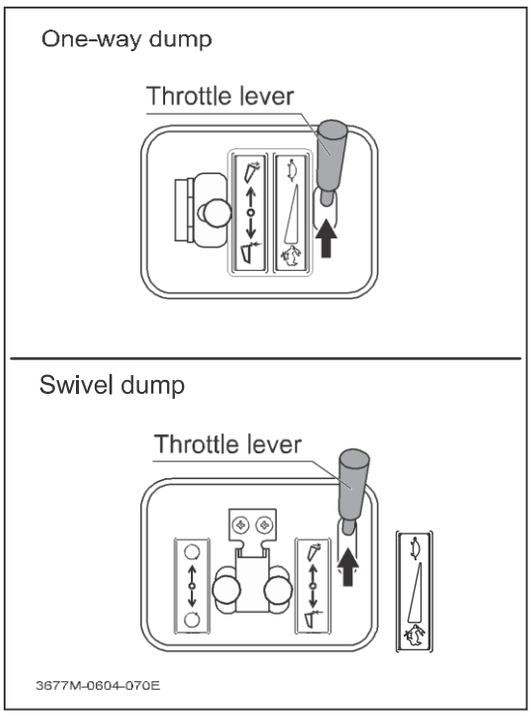

3. Push the throttle lever to the [🐢 (LOW SPEED)] to lower the speed of the engine.

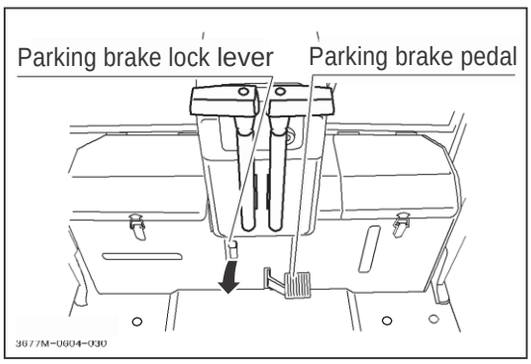

4. With the parking brake pedal depressed, pull out the parking brake lock lever to lock the brake.

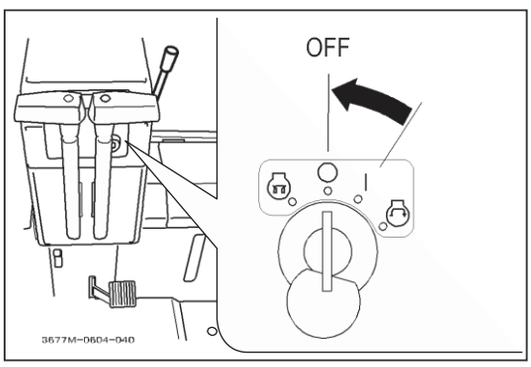

5. Turn the key in the ignition switch to the [◯ (OFF)] position, then remove the key.

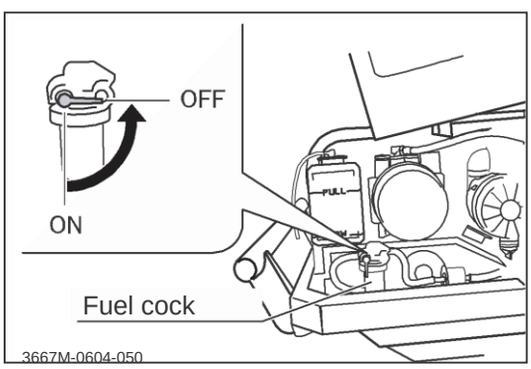

6. Open the engine cover, and lock it with the stay-bar. (See page 15)

7. Turn the fuel cock to the [OFF] position.

https://truckmanualshub.com/

6.5 Operating Dump

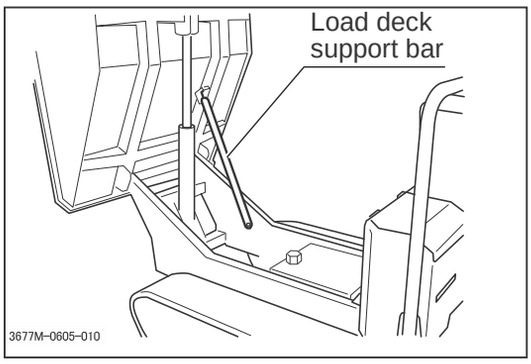

⚠ DANGER

- **Falling load deck can cause injury or death.**
- **Always fix load deck support bar before doing any work under the load deck.**
- **Do not raise or lower load deck or dump load when anybody is standing near load deck.**

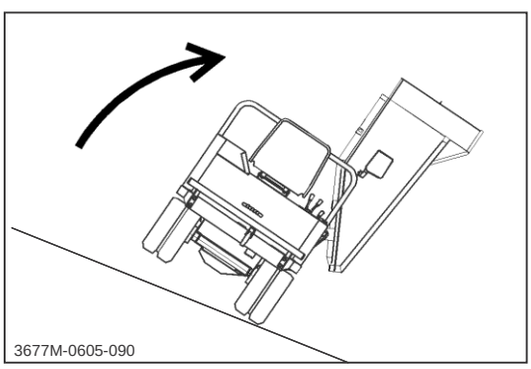

⚠ DANGER

Do not discharge load to the slope valley side by tilting the bed sideways. The vehicle may be turned over, resulting in a serious accident.

⚠ WARNING

- **Do not perform dumping operation on a sharp slope. The body becomes unstable, and it may cause a serious accident. If the dumping operation must be performed unavoidably on the slope, operate the vehicle carefully.**
- **Do not perform the tilting operation of the bed on a slope. The body becomes unstable, and it may cause a serious accident.**

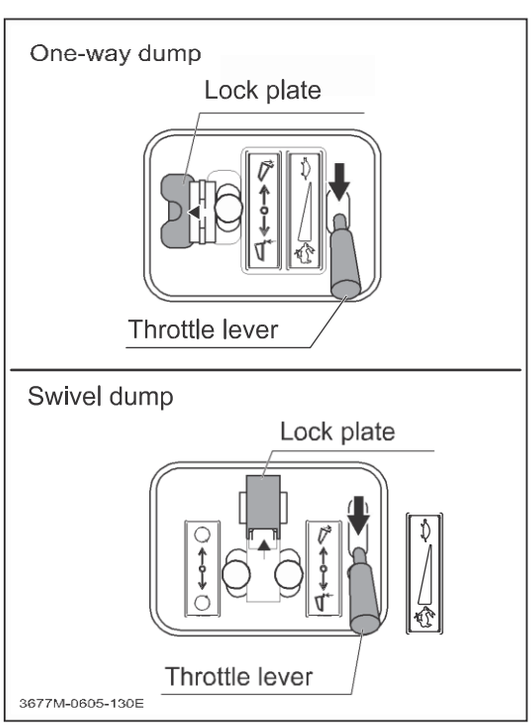

Raising Dump Body

1. Start the engine, move the throttle lever to the [(HI)] position, and increase the engine speed.
2. Remove the lock plate from the dump lever.

https://truckmanualshub.com/

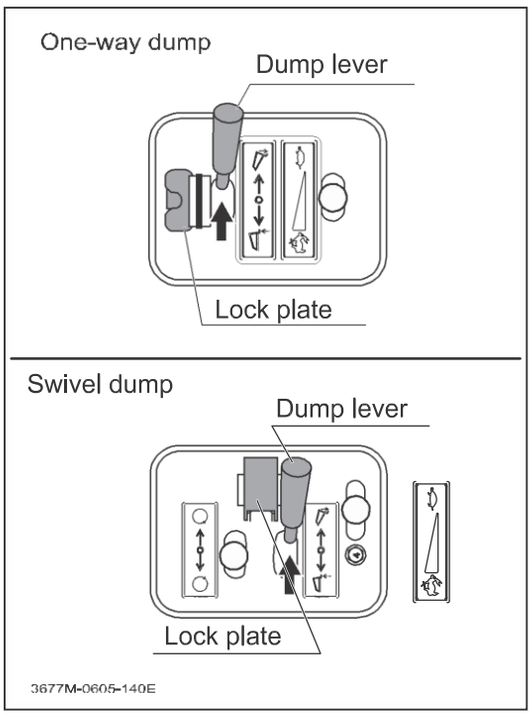

3. Move the dump lever slowly to the [(RAISE)] position.

4. When the dump body is raised to the upper limit, a"hiss" sound is heard. Quickly return the dump lever to the [○ (HOLD)] position.

⚠CAUTION

Lowering the load deck suddenly with a load can damage the machine chassis. Always lower the load deck slowly to prevent damage to the machine chassis.

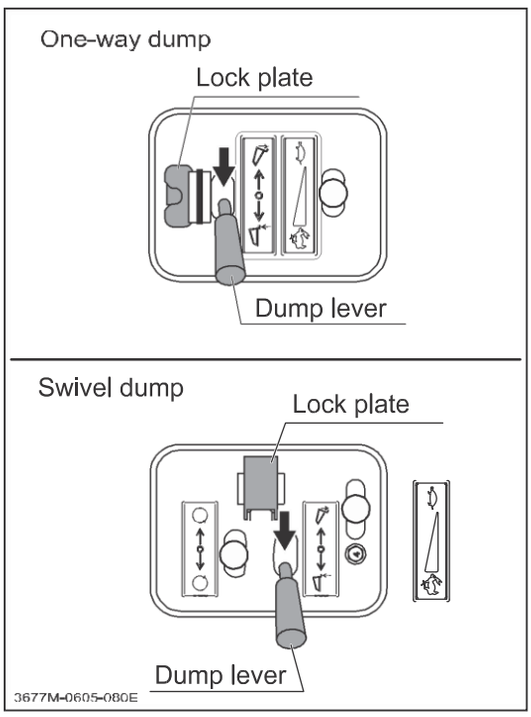

Lowering Dump Body

1. Remove the lock plate from the dump lever.

2. Move the dump lever gradually to the [(LOWER)] position.

3. When the dump body is lowered to the lower limit, a "hiss" sound is heard. Quickly return the dump lever to the [○ (HOLD)] position.

https://truckmanualshub.com/

Swivel Dump

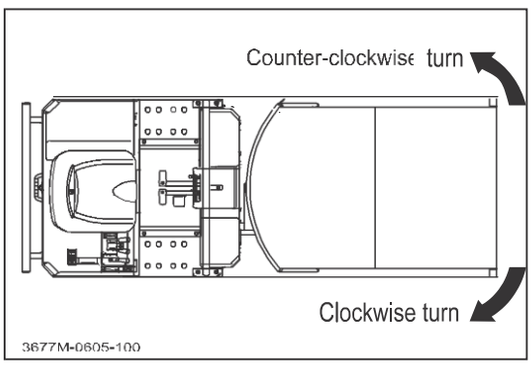

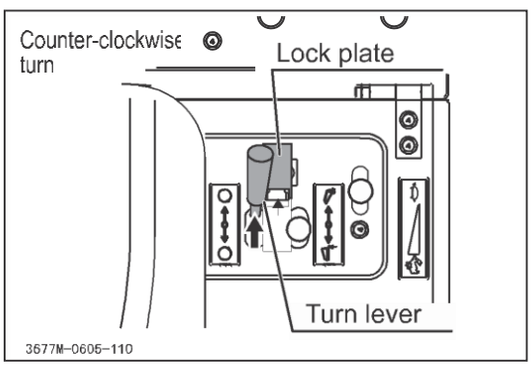

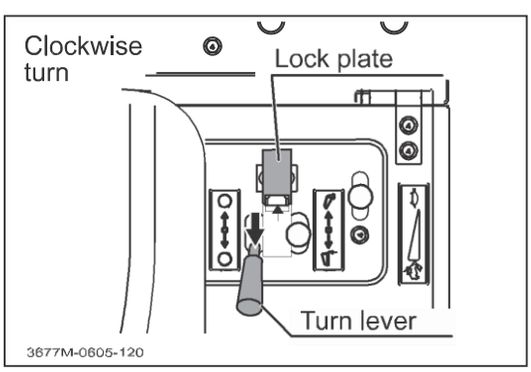

When turning the load deck body counter-clockwise

1. Unlock the lock plate.

2. Tilt the turn lever in the direction of forward [↺ (counter-clockwise turn)].
   Maximum angle of rotation: 90°

3. When the load deck body is turn to the maximum angle of rotation, a "hiss" sound is heard. Quickly return the turn lever to the [○ (HOLD)] position.

When turning the load deck clockwise

1. Unlock the lock plate.

2. Tilt the turn lever in the direction of reverse [↻ (clockwise turn)].
   Maximum angle of rotation: 90°

3. When the load deck body is turn to the maximum angle of rotation, a "hiss" sound is heard. Quickly return the turn lever to the [○ (HOLD)] position.

https://truckmanualshub.com/

7. Maintenance

7.1 Periodic Inspection Table

Failure to carry out inspection and maintenance properly will cause machine failure.
Refer to the following table for inspection procedures and frequency.

NOTICE

Some inspection and maintenance procedures in the table below require technical knowledge or specific tools and measuring instruments. If you have difficulty performing these procedures, or do not have the correct tools or instruments, contact your dealer or a Canycom service center.

Item			Content of inspection		Inspection interval: Checks before starting	Inspection interval: Monthly	Inspection interval: Annually	Remarks
Engine	Engine proper	Ease of starting	• Investigate starting condition of engine check for abnormal noise.	Check that engine starts smoothly and makes no abnormal noises.	○	○	○	
			• Check if glow plug works properly.	Must work properly.	○	○	○	
		Condition of rotation	• Check speed at low idling at high idling. • Check that rotation is smooth.	Must be at specified speed. Must rotate smoothly.		○	○	Please contact your Canycom distributor for inspection.
			• Check for catching of accelerator lever when accelerating engine, stall, or knocking.	There must be no catching, stalling of engine, or knocking.	○	○	○	
		Exhaust gas condition	• Warm up engine thoroughly, then check for abnormal exhaust gas color or exhaust sound, low idling to high idling.	Exhaust gas color and exhaust sound must be normal.	○	○	○	
			• Check for gas leakage from exhaust pipe or muffler.	There must be no gas leakage.		○	○	
		Air cleaner	• Check for cracks, deformation of case, looseness of cover or connecting piping.	There must be no cracks, deformation of case, looseness of cover or connecting piping.		○	○	
			• Check for dirty or damaged element.	There must be no noticeable dirt or damage.		○	○	Cleaning / replacement: See page 41
		Tightening	• Check for looseness of nuts and bolts at tightening portion of cylinder head and manifold. * If no leakage of gas or water is found from these portions, this check can be omitted.	If gas or water leaks have found, check cylinder head and manifold retaining nuts and bolts for looseness.			○	
		Valve clearance	• Check the valve clearance * When noise due to abnormal valve clearance is absent and the engine is running smoothly, this inspection may be omitted.	The valve clearance must be normal.			○	Please contact your Canycom distributor for inspection.

https://truckmanualshub.com/

Item			Content of inspection		Inspection interval: Checks before starting	Monthly	Annually	Remarks
Engine	Engine proper	Engine compression	• If the engine is operating abnormally, or if the exhaust condition at idle or at high RPM is abnormal, check the engine compression.	If you hear valve noise or the engine is not running smoothly, check valve clearance.			○	Please contact your Canycom distributor for inspection.
		Engine mount	• Check engine base for cracks or deformities.	No cracks or deformities.	○	○	○	
			• Check for loose or missing mounting bolts or nuts.	There must be no loose or missing mounting bolts or nuts.	○	○	○	
	Lubrication system		• Check oil level and dirt in oil.	Oil level must be correct. There must be no marked dirt.	○	○	○	Inspection / replacement: See page: 34
			• Check for oil leakage from head cover, oil pan, pipes, etc.	There must be no marked oil leakage.	○	○	○	
			• Check for dirty or clogged filter.	There must be no dirt or clogging.			○	Replacement: See page: 43
	Fuel system		• Check for fuel leakage from fuel tank, injection pump, hoses, pipes.	There must be no fuel leakage.	○	○	○	
			• Check for damage or deteriorated fuel hoses.	There must be no damage or deterioration.	○	○	○	
			• Check for dirty or clogged fuel filter cartridge.	There must be no dirt or clogging.		○	○	Cleaning: See page: 43
			• Check for any abnormality in injection pressure or spray condition of injection nozzle. * If there is no abnormality in the exhaust or rotation condition when idling or accelerating, this inspection can be omitted.	Must be specified injection pressure, and spray must be normal.			○	Please contact your Canycom distributor for inspection.
	Cooling system		• Check for cooling water level, dirty water.	Water level must be correct, there must be no marked dirt.	○	○	○	Inspection: See page: 38
			• Check for any water leakage from radiator, engine, water pump, hoses . Check for clogged radiator fins.	There must be no water leakage or clogging.	○	○	○	
			• Check for damage or deteriorated fuel hoses.	There must be no damage or deterioration.	○	○	○	
			• Check that radiator cap valve functions properly.	Must function properly.			○	
			• Check for damaged valve seat surface of radiator cap.	There must be no damage.			○	
			• Check the fan belt for tension.	Must be within a standard value.			○	Inspection / Adjustment: See page: 46
			• Check the belt for wear and damage.	Must not be worn remarkably nor damaged.			○	
			• Check for cracks, damage, or deformation of cooling fan, cover, duct.	There must be no cracks, damage, or deformation.			○	
			• Check for loose mounting bolts or nuts of cooling fan, cover.	There must be no loose outing bolts or nuts.			○	

https://truckmanualshub.com/

Item			Content of inspection		Inspection interval: Checks before starting	Monthly	Annually	Remarks
Engine	Electrical system	Charging system	• Use Ammeter to check for any abnormality in function.	Must work properly.			○	Please contact your Canycom distributor for inspection.
		Battery	• Check that electrolyte level is within specified range.	Must be within specified range.		○	○	Inspection / adding: See page: 39
			• Check for loose or corroded terminals.	There must be no looseness or marked corrosion.		○	○	
		Wiring	• Check for loose connections.	There must be no loose connections.		○	○	
			• Check for damaged wiring	There must be no damage.		○	○	
Power train	V-belt		• Check for damage and contamination visually.	There must be no damage nor abhorrence of lubricant.		○	○	
			• Check the V-belt for tension.	Must be tensed properly.		○	○	
	HST pump		• Drive machine in "FORWARD", "REVERS", and turn left and right using travel levers, check actuation, check for abnormal noise or abnormal generation of heat.	Must work normally, there must be no abnormal noise or abnormal generation of heat.	○	○	○	
			• Check oil level inside hydraulic tank.	Oil level must be correct.		○	○	Inspection / replacement: See page: 36
			• Check for dirty oil.	There must be no marked dirt.		○	○	Inspection / replacement: See page: 36
			• Check for oil leakage from around hydraulic tank.	There must be no oil leakage.		○	○	
Traction system	Sprocket, Idler, Roller, Upper roller		• Check for cracks, deformities, wear.	No cracks, deformities, or noticeable wear.	○	○	○	
			• Drive machine and check for abnormal noise or abnormal generation of heat from shaft area.	No abnormal noise or heat.	○	○	○	
			• Check for loose or missing mounting bolts and nuts.	There must be no loose or missing bolts and nuts.	○	○	○	
			• Check for oil leakage from around axle.	There must be no oil leakage.	○	○	○	
	Crawler		• Check for cuts or damage in steel cord.	There must be no cuts or marked damage.	○	○	○	
			• Check for cuts, deteriorated, or worn rubber.	There must be no marked cutting, deterioration, or wear.	○	○	○	
			• Check for missing or broken core.	There must be no missing core.	○	○	○	
			• Check track tension.	Tension must not be too loose or too tight.	○	○	○	Adjustment: See page: 46
	Crawler tension bolt		• Check for deformation and corrosion.	There must be no deformation and corrosion.		○	○	
	Body		• Check for cracks, deformation, and damage.	There must be no crack, deformation, or damage.		○	○	
Brake system	Parking brake		• With the brake pedal locked with the parking brake lock lever, check that machine does not move when stopped unloaded on a slope.	Must be proper parking effect.	○	○	○	
	Rods, link, and wires		• Check the rods, links, and wires for damage and the mounting parts for looseness.	There must be no damage or looseness.		○	○	

https://truckmanualshub.com/

Item		Content of inspection		Inspection interval: Checks before starting	Monthly	Annually	Remarks
Hydraulic system	Hydraurlic pump	• Check the pipe joint and hose joint parts and seal parts for oil leakage.	There must be no oil leakage.	○	○	○	
		• Operate the hydraulic pump, and check the pump for abnormal vibration and noise and abnormal heating in unload and loaded states.	Abnormal vibration and noise and abnormal heating must not occur.		○	○	
		• Apply a load onto the hydraulic pump. Then check the hydraulic pump under load for discharge and discharge pressure. This check may be eliminated when any abnormality does not occur in the inspections for abnormal vibration and noise and abnormal heating specified above.	Must be within a standard value specified by the manufacturer.			○	
	Piping (hoses, high-pressure pipes)	• Check the piping for cracking, damage, aging, and twist.	Cracking, damage, aging, and twist must not occur.	○	○	○	
		• Check the pipe joint sections for oil leakage.	There must be no oil leakage.	○	○	○	
		• Check the piping for mounting state, and bolts and nuts for looseness and falling.	Mounting state must be appropriate, and bolts and nuts must not be loosened nor fallen.	○	○	○	
	Hydraulic cylinder	• Check for operating condition.	Must operate smoothly.	○	○	○	
		• Operate the cylinder by extending and retracting several time. Then check the seal sections for oil leakage.	There must be no oil leakage.		○	○	
		• Stop the cylinder by applying a load. Then check the cylinder for extension amount.	Extension amount must be within a standard value specified by the manufacture.			○	
		• Check the cylinder tube and the cylinder rod for dents, cracking, bend, and scratch.	Any dent, crack bent, and scratch must not occur.		○	○	
		• Check the cylinder mounting pins for wear and damage.	Excessive wear and damage must not occur.	○	○	○	
	Control valve	• By moving the spool, check that the spool is operated smoothly.	Must operate smoothly.	○	○	○	
		• Check that the control valve is installed appropriately.	Must be installed appropriately.		○	○	
		• Apply a load to the control valve, for example, by operating the hydraulic cylinder. Then check the control valve for correct operation.	The hydraulic cylinder must be operated normally, and surely stopped.	○	○	○	
		• Check the body, piping, and joint sections for oil leakage.	There must be no oil leakage.	○	○	○	
Loading system	Bed of the truck	• Check that the bed of the truck can be raised and lowered smoothly.	Must operate smoothly.	○	○	○	
		• Check each part for cracks, deformation, and wear.	There must be no cracks, deformation, or wear.	○	○	○	
		• Check the mounting bolts for looseness and falling.	There must be no looseness or falling of the bolts.	○	○	○	
		• Check the frame to truck bed mounting pins and dump cylinder mounting pins for clearance by moving the bed of the truck vertically.	There must be no excessive play in the pin sections.		○	○	
		• Check for cracks, deformation, and corrosion.	There must be no cracks or excessive deformation.	○	○	○	

https://truckmanualshub.com/

Item		Content of inspection		Inspection interval: Checks before starting	Monthly	Annually	Remarks
Machine safety system	Machine frame and body	• Check for cracks, deformities, or corrosion.	No cracks, noticeable deformities, or corrosion.	○	○	○	
		• Check for missing or loose bolts or nuts.	There must be no loose or missing mounting bolts or nuts.	○	○	○	
	Cover	• Check for abnormality in lock opening or closing condition of covers.	There must be no abnormality in lock or opening.		○	○	
	Display plate (mark)	• Check that display plates specified for structural regulations and other precaution or instruction plates are installed without damage.	Must be installed without damage.		○	○	
	Horn	• Operate the switch to check that the horn operates correctly.	Must operate correctly.	○	○	○	
	Lubrication	• Check lubrication at all parts.	Must be properly lubricated.		○	○	Lubrication: See page: 37
	Load deck support bar	• Raise load deck and check condition of support bar when fixed.	Must be installed securely.	○	○	○	
		• Check for curvature or deformities.	No noticeable curvature or deformities.	○	○	○	
		• Check for cracks or damage in mount of load deck support bar. Use a flow detector to check for cracks.	There must be no cracks or damage.		○	○	
Overall test		• Operate travel and loading system and check function.	All system must work correctly, there must be no abnormal noise, abnormal vibration, or abnormal generation of heat.			○	

7.2 Fuel, Lubricant, and a Cooling Water Chart

Item	Interval	Recommended product	Capacity	Page
Fuel	Whenever needed	Light oil	15.0 liters	See page 14
Engine oil	**Filling:** Check every day, add when level is low. **Change:** 1st time: 50 hours. 2nd time on: every 100 hours.	API category: CD class or higher SAE category: 10W - 30	3.15 liters	See page 34
Transmission oil	1st time: 50 hours. 2nd time on: every 100 hours.	Gear oil API category: GL4 or 5 SAE category: # 80	2.0 liters	See page 35
HST fluid	1st time: 50 hours. 2nd time on: every 500 hours.	High viscosity index hydraulic fluid VG46	20.0 liters	See page 36
Oil filling points	Every 6 months. * For half a year after purchasing, filling is not required.	Gear oil API category: GL4 or 5 SAE category: # 80	—	See page 37
Greasing points	Every 6 months. * For half a year after purchasing, greasing is not required.	Chassis grease	—	See page 37
Engine cooling water	Check every day, add when level is low. Change: Every 2 years.	Antifreeze and water mix	1.8 liters	See page 38
Battery electrolyte	Check every day, add when level is low.	Distilled water	—	See page 39

https://truckmanualshub.com/

7.3 Consumable (Replacement Parts) Chart

Item			Part number	Replacement interval	Quantity	Page
Air cleaner element			—	Every year (or after cleaning 600 hours).	1	See page 41
Fuel filter			3714 0051 400	Check every 100 hours, replace if necessary.	1	See page 43
Engine oil filter cartridge			—	1st time: 50 hours 2nd time on: every 150 hours	1	See page 42
Suction filter	One-way dump		3663 6014 000	Every year (or every 500 hours).	1	See page 43
	Swivel dump		3663 6029 000		1	See page 43
Line filter			3676 6121 200		1	See page 43
V-belt	Traveling		0853 1500 060	Replace if defective.	1	See page 43
	One-way dump	Hydraulic	0852 1300 029	Replace if defective.	1	See page 45
	Swivel dump		0852 1300 028			
Brake lining			7301 4007 000	Replace if defective.	2 (Replace it with an assembly)	
Hydraulic hose	For HST		See the Parts List.	Every 2 years (Replace if a defect occurs)	1	Please contact your Canycom distributor for replacements.
	For oil cooler				1	
	For dump				1	
	For rotation				1	
Crawler	OHTSU-make		3677 2012 000	Replace if defective.	2	See page 46
	B.S.-make		3677 2013 000	Replace if defective.	2	See page 46
Battery			3673 0655 000	Replace if defective.	1	

* Special replacement parts ► Please contact your Canycom distributor (or our Service Center).

NOTICE

Rubber parts such as hydraulic hoses will deteriorate even when not used. Replace them every 2 years, or whenever damaged.

https://truckmanualshub.com/

7.4 Adding Oil

NOTICE

- **Insufficient or improper lubrication reduces performance and may cause the machine to break down, shortening the life of the machine. Always keep machine filled with the right amount of designated good quality oil.**
- **Always check remove and add oils on a horizontal surface after stopping the engine.**

7.4.1 Engine Oil

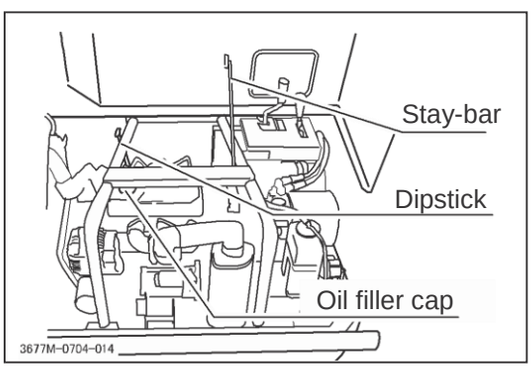

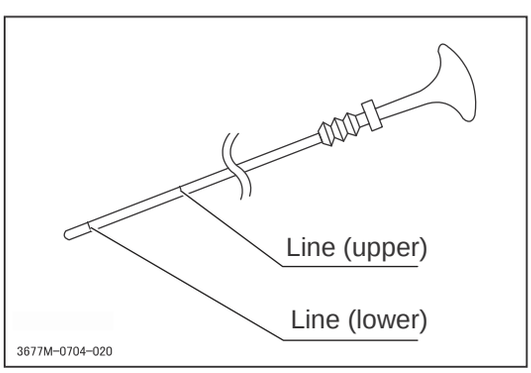

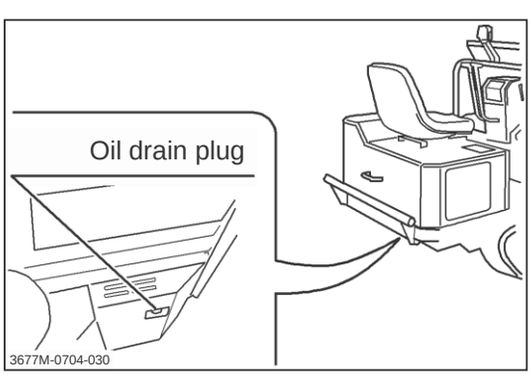

Inspection / Adding

1. Open the engine cover, and lock it with the stay-bar . (See page 15).
2. Extract the oil dipstick, and wipe off oil with clean cloth.
3. Insert the oil dipstick, and pull it again.
4. Check the oil level. If it is low, add oil to between the upper limit and lower limit positions on the oil dipstick.
5. Visually check oil for amount and dirt. If oil level is low or dirty, change all oil.

⚠ CAUTION

Avoid contact with high temperature oil to avoid burns.

NOTICE

Dispose of the drained oil properly.

Replacement

1. Prepare a suitable container to collect drain oil.
2. Remove oil drain plug and drain oil from crankcase.
3. Replace the drain plug firmly.
4. Open the oil cap and add proper amount of designated oil.
5. Replace the oil cap firmly.

https://truckmanualshub.com/

7.4.2 Transmission Fluid

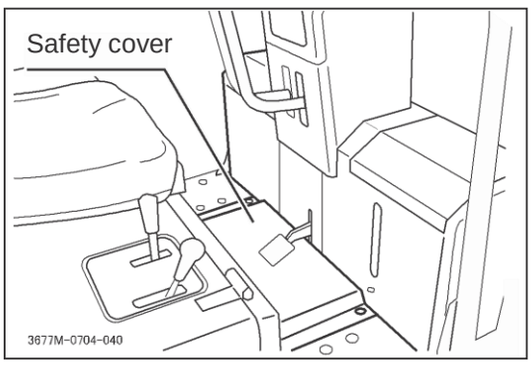

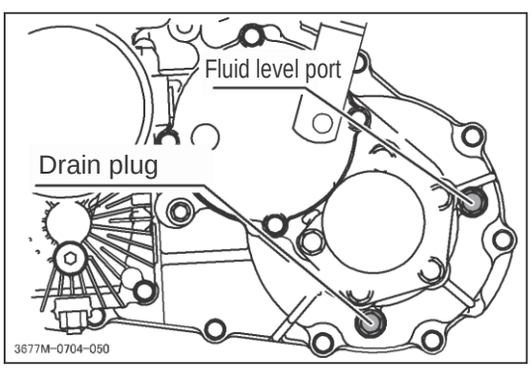

Inspection / Adding

1. Remove the safety cover.
2. Remove the fluid level port bolt, and check that the fluid level is at the fluid level port.
3. Visually check the transmission fluid level and the condition of dirt in the fluid. If the level is low (fluid level does not reach the fluid level port), add transmission fluid. If the fluid is extremely dirty, change the fluid.
4. Remove the fluid filler plug, and add the specified fluid.
5. Check the fluid level, and install the fluid filler plug.

   Fluid to use: See page 32.

6. Install the safety cover.

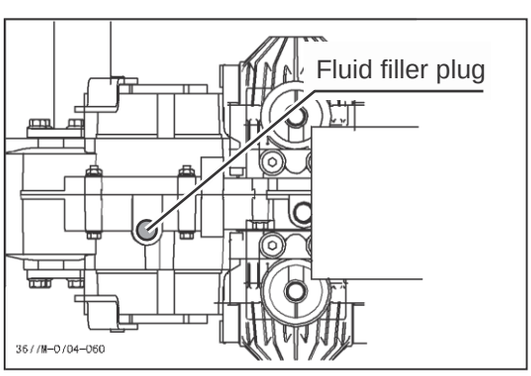

Replacement

1. Prepare a suitable container to collect drain fluid.
2. Remove the drain plug, and drain fluid from crankcase.

⚠CAUTION

Avoid contact with high temperature oil to avoid burns.

NOTICE

Dispose of the drained oil properly.

3. Replace the drain plug firmly.
4. Remove the fluid filler plug, and add proper amount of designated fluid.
5. Replace the fluid filler plug firmly.

https://truckmanualshub.com/

7.4.4 HST Fluid (Hydraulic Fluid)

NOTICE

- **Low fluid levels may decrease hydraulic performance, periodically check the fluid level and add fluid if the level is low.**
- **The HST fluid is also used as the hydraulic fluid. Add the fluid to the hydraulic tank.**

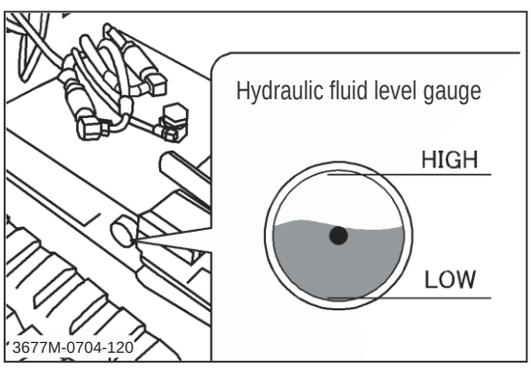

Inspection / Adding Fluid

1. Place the machine on level ground, and raise the load deck. Lock the dumper lever with the lock plate, and support the load deck with the support bar.
2. Check the hydraulic fluid level gauge. If the fluid level is low, add fluid.

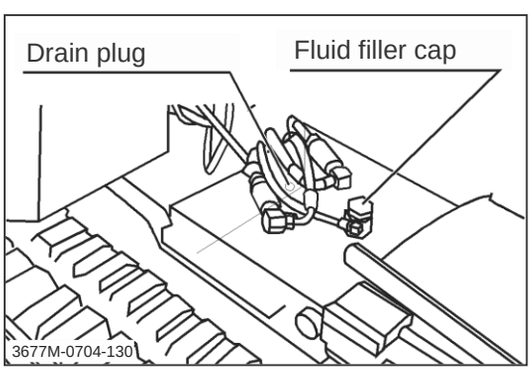

Replacement

1. Prepare a suitable container to catch the drained fluid.
2. Remove the drain plug to drain the fluid.

⚠CAUTION

Avoid contact with high temperature oil to avoid burns.

NOTICE

Dispose of the drained fluid properly.

3. Replace the drain plug.
4. Open a hydraulic fluid cap.
5. Add the specified fluid into the hydraulic fluid tank.
6. Replace the hydraulic fluid cap.
7. Start the engine to circulate the fluid.
8. Check the hydraulic fluid level gauge.

Fluid to use: See page 32.

https://truckmanualshub.com/

7.5 Lubricating

NOTICE

Proper lubrication will prevent seizures and rust, and ensure smooth operation. Lubricate every 6 mouths.

Lubricate the illustrated points.

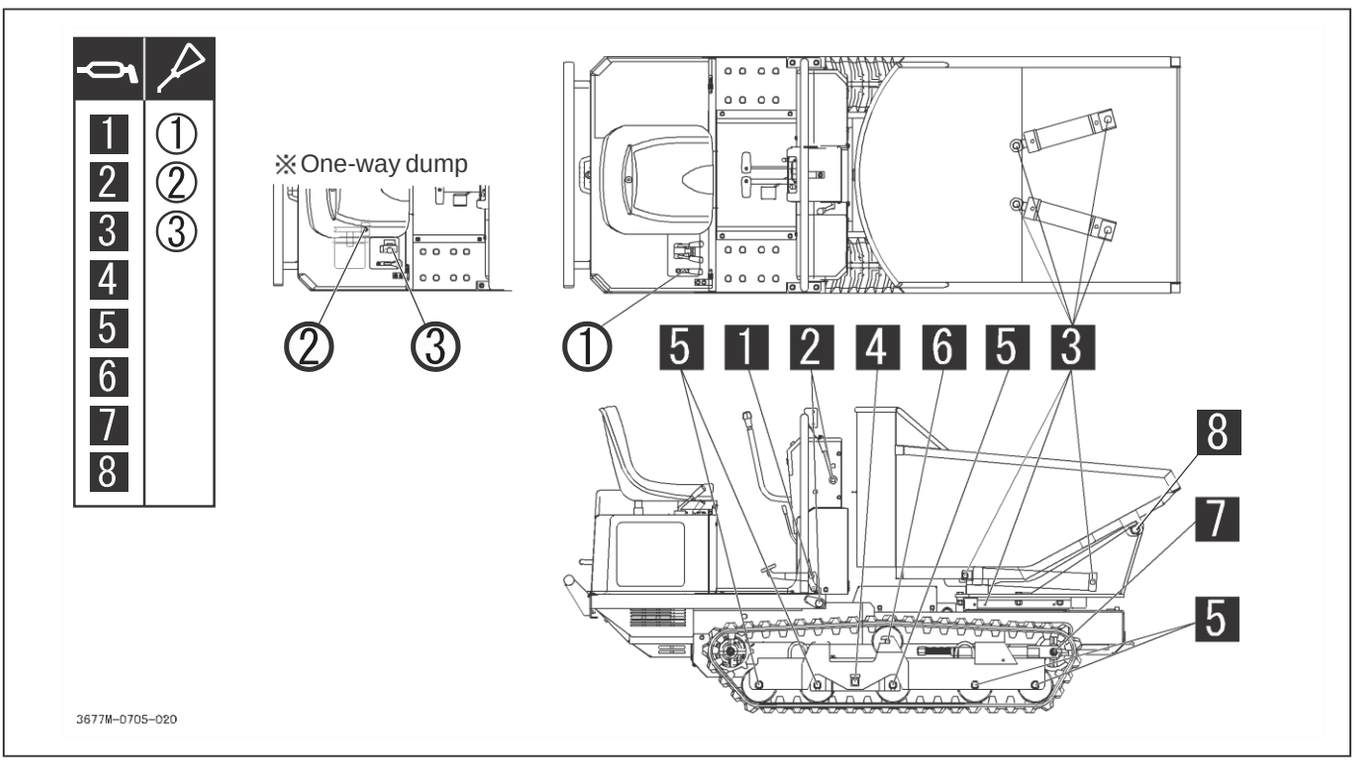

No.	Lubrication area	Lubrication points	Type of lubrication
1	Parking brake pedal link section	1	Grease
2	Clutch lever pivot	2	
3	Hydraulic cylinder pivot • (Slewing ring)	2 (7)	
4	Swing roller pivot	2	
5	Roller shaft*	10	
6	Upper roller	2	
7	Idler	2	
8	Bessel pivot	1	
①	Throttle lever pivot	1	Oil
②	Hydraulic V-belt tension arm	1	
③	Dumper lever pivot	1	

*Reference: To lubricate the roller shaft, remove the outside nut, tighten the furnished grease fitting with a spanner, and apply grease to the rollers through the grease fitting. After greasing, remove the grease fitting, and tighten the nut firmly to the shaft.

https://truckmanualshub.com/

7.6 Adding Water

7.6.1 Engine Cooling Water

⚠CAUTION

- **Wait for engine to cool after operation (about 10 minutes) before opening radiator cap. Opening cap too soon may release boiling water and cause burns.**
- **Take extreme care not to approach it to a fire because anti-freezing solution is inflammable. Also, take extreme care when handing it because anti freezing solution is toxic. If it is caught in eyes, wash clean the eyes with water and see a doctor.**

NOTICE

Engine cooling water is low when cooling water lamp is lit.
Immediately inspect and add water.

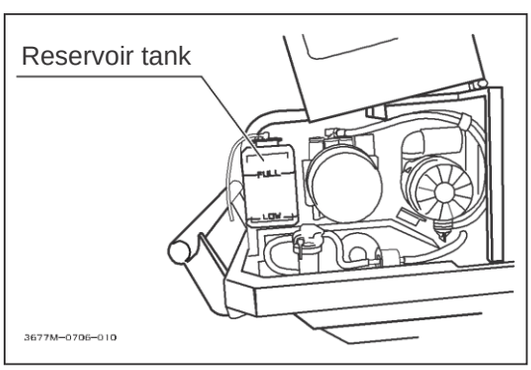

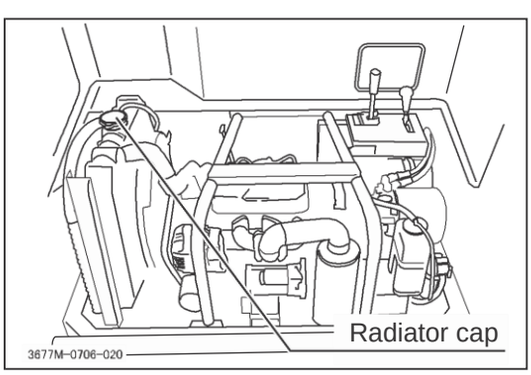

Inspection / Adding

1. Open the engine cover, and lock it firmly with the stay-bar.
   (See page 15)

2. When the engine is cold, check the engine cooling water level in the reservoir tank. If the level is below the [FULL] mark, add water.
   Reservoir tank capacity: 0.7 liters.

3. Open the radiator cap.

4. Check the engine cooling water level. If the level is low, add water.

   Cooling water amount: 1.8 liters.

Antifreeze Mixture (Reference)

When this machine is shipped from the factory, it is filled with a mixture of 40% antifreeze and 60% water. To prevent the cooling water from freezing, use a mixture of water and antifreeze determined by the minimum temperature in the operation area using the table below.

Ambient temperrature	Proportion antifreeze
−10°C	30%
−15°C	35%
−20°C	40%
−25°C	45%

* The value for the ambient temperature is 5°C lower than the actual minimum temperature.

https://truckmanualshub.com/

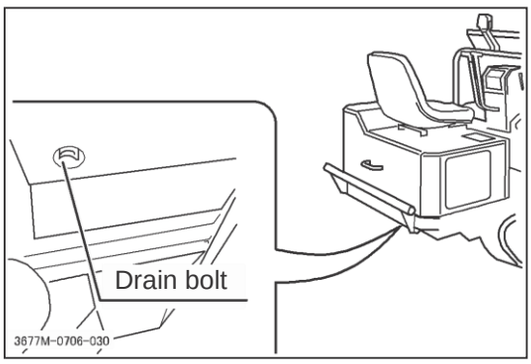

Replacement

1. Prepare a suitable container to catch drained cooling water.
2. Remove the drain bolt located at the bottom of the radiator.
3. Drain cooling water and clean the inside of the radiator.

   Reference: When the radiator cap is removed, cooling water can be drained more easily.

4. Replace the drain bolt and supply cooling water.

NOTICE

Treat the cooling water properly.

7.6.2 Battery Electrolyte

⚠ DANGER

Keep open flames away from battery. Battery gases can easily ignite.

⚠ CAUTION

- **Avoid skin or clothing contact with battery electrolyte to avoid burns.**
- **Always stop engine and turn the ignition switch to the [O (OFF)] position when inspecting or removing the battery.**

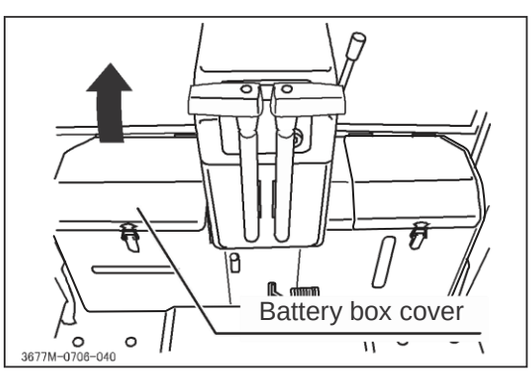

Inspection / Adding Electrolyte

1. Open the battery box cover.
2. Check the electrolyte level. If the level is low, add electrolyte.

   Proper battery electrolyte amount: Between UPPER LEVEL and LOWER LEVEL line

   Battery electrolyte: Distilled water

https://truckmanualshub.com/

Charging

⚠ CAUTION

- **Always remove the battery from the machine before charging it. Failure to do this will cause damage to electrical components and to the wiring.**
- **When connecting cables to the battery, use the correct (+) and (-) terminals. Reversing connections will blow the fuse and prevent charging.**
- **For safety, always disconnect the (-) terminal first, and connect the (+) terminal first. Disconnecting or connecting in the opposite order may cause a short circuit.**
- **When reinstalling the battery, connect the (+) and (-) to their original positions. Avoid contact between terminals and other surrounding parts.**

NOTICE

The rapid charging method is a method of charging with a large current in a short time to partially compensate for battery discharge. This method is used in emergencies. After completing operations, perform compensation charging quickly and correctly. If compensation charging is not performed, the battery life will be greatly reduced.

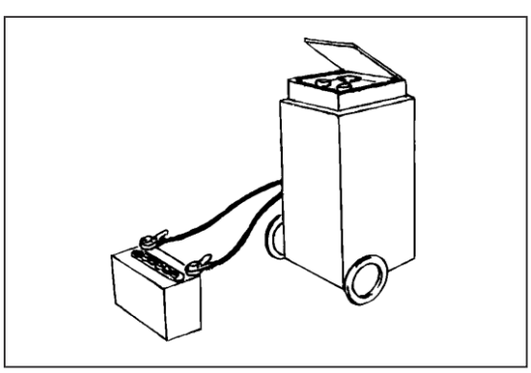

1. Remove the battery.
2. Charge the battery according to the instructions given in the operation manual for the charger.

https://truckmanualshub.com/

7.7 Cleaning and Replacement

7.7.1 Air Cleaner Element

NOTICE

- **Dirty air cleaner element will reduce engine performance and life. Clean every 100 hours of operation.**
- **Handle the air cleaner element taking care not to break or deform it.**

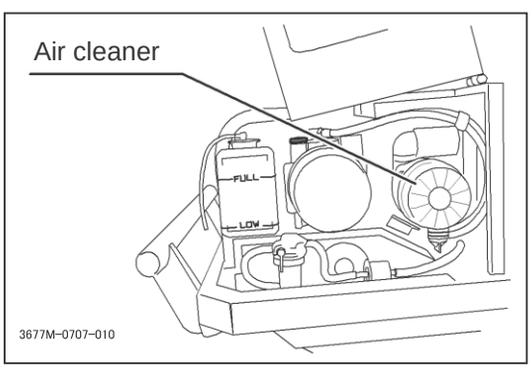

Cleaning

1. Open the engine cover, and lock it firmly with the stay-bar.
   (See page 15)
2. Remove the air cleaner element.
3. Hit the air cleaner element lightly to remove the dust, or blow the element with compressed air while rotating it.

NOTICE

- **If the air cleaner element is contaminated with carbon and oil, immerse it in water with solvent for about 30 minutes, and then wash it clean, rinse it with fresh water, and let it dry in the air.**
- **Replace the element every year or every 600 hours.**
- **If the element is damaged, replace it.**

https://truckmanualshub.com/

7.7.2 Engine Oil Filter Cartridge

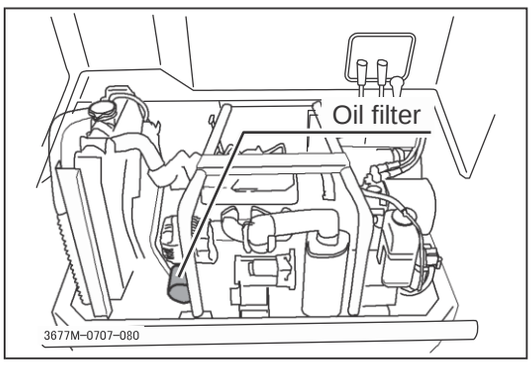

1. Prepare a suitable container to catch the drained oil.

2. Drain the engine oil. (See page 34)

3. Open the engine cover, and lock it with the stay-bar.
   (See page 15)

4. Using the oil filter wrench, turn the oil filter cartridge to the left and remove it.

5. Clean the filter housing base on the engine side.

6. Coat the seal portion of the new oil filter cartridge thinly with clean engine oil.

7. Install the new oil filter and tighten it fully.
   Do not use a filter wrench; tighten by hand only.

8. Add engine oil.
   (See page 34)

9. After starting the engine, check that there is no leakage of oil from the base of the filter.

https://truckmanualshub.com/

7.7.3 Suction Filter and Line Filter

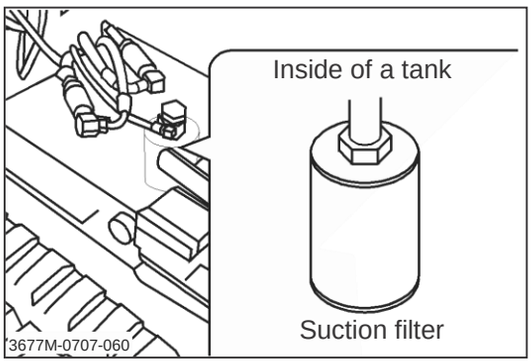

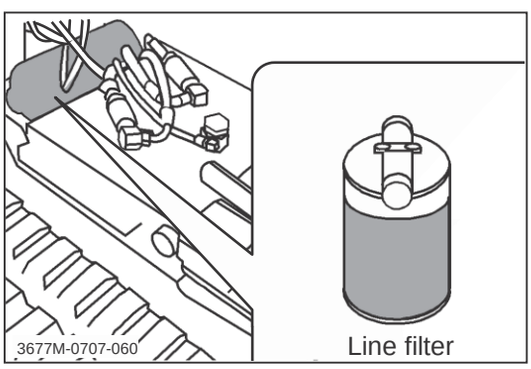

NOTICE

Replace suction filter and line filter element whenever changing hydraulic oil.

Replacement

1. Remove the suction filter (use a filter wrench to remove the line filter).

⚠CAUTION

Avoid contact with high temperature oil to avoid burns.

2. Install a new suction filter cartridge.

NOTICE

Coat the filter cartridge seal thinly with clean engine oil when installing.

7.7.4 Fuel Filter

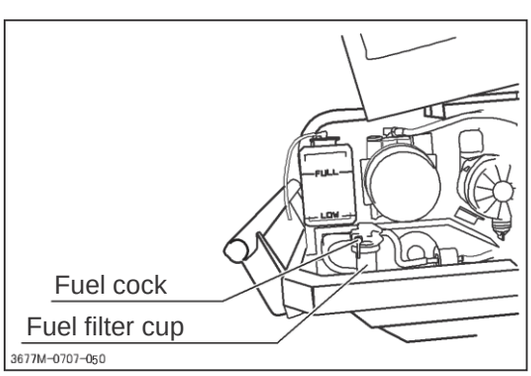

1. Open the engine cover, and lock it with the stay-bar. (See page 15)
2. Tune the fuel cock to the [OFF] position.
3. Remove the fuel filter cap.
4. Remove dirt and water accumulated at the bottom of the fuel filter cup.
5. Slowly pull down the fuel filter element to remove it.
6. Clean the fuel filter with new light oil.

NOTICE

If the fuel filter is damaged, replace it.

https://truckmanualshub.com/

7.8 Adjustments

7.8.1 Bleeding Air from Fuel System

NOTICE

To avoid engine starting malfunction, bleed air from fuel system after fuel filter or fuel pipe replacements, or after any operation when fuel tank was completely emptied.

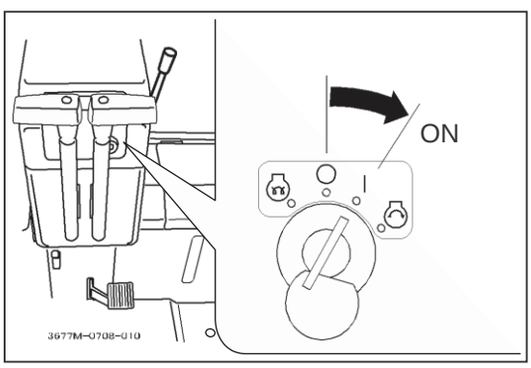

1. Fill the fuel tank with fuel.

2. Turn the starting switch to the [| (ON)] position to start the fuel pump for about 5 seconds (automatic air bleeding system).

7.8.2 Parking Brake

NOTICE

- **Proper brake performance is critical for safety. Always keep brake adjusted for maximum performance.**
- **Use the brake with the steering lever in the neutral position.**

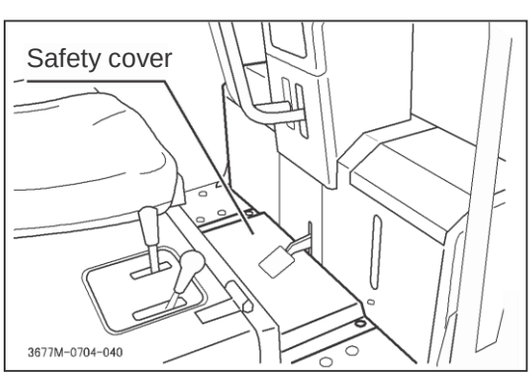

1. Remove the safety cover.

2. Surely lock the parking brake pedal.

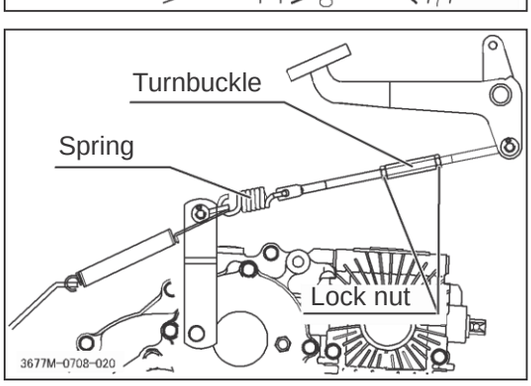

3. Loosen the lock nut, and adjust the spring hook inner dimension to 67 to 68 mm by turning the turnbuckle.

4. After adjustment, tighten the lock nut firmly.

https://truckmanualshub.com/

7.8.3 V-belt for Traveling

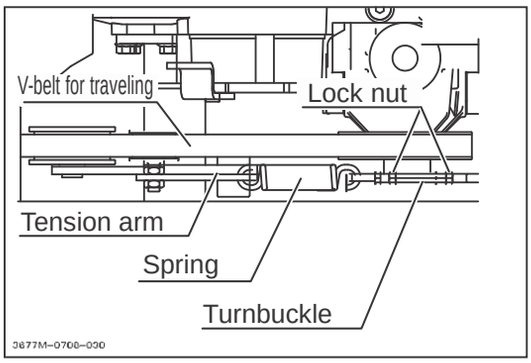

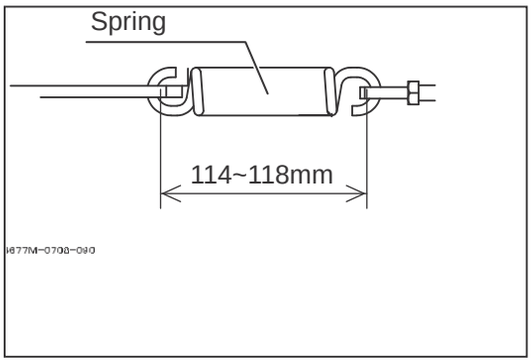

Inspection

1. Push the clutch lever to the [(ON)] position.
2. Remove the safety cover. (See page 42)
3. Visually check the traveling V-belt for damage.
   If it is damaged, replace.

Slippage of V-belt

After loosening the lock nut, and adjust the spring hook inner dimension to 114 to 118 mm by turning the turnbuckle.

Replacement

Contact your Canycom distributor.

7.8.4 hydraulic pressure V-belt

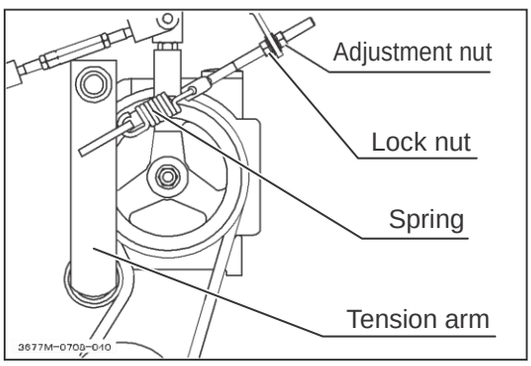

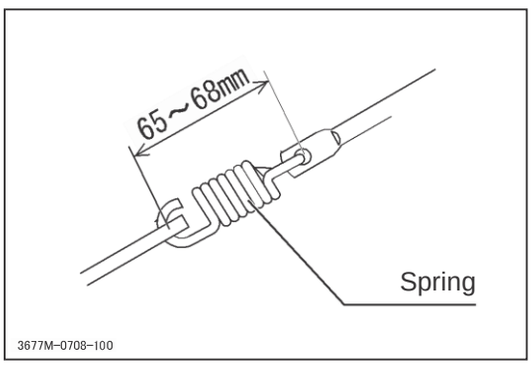

Inspection

1. Open the engine cover, and lock it with the stay-bar. (See page 15)
2. Visually check the hydraulic pressure V-belt for damage.
   If it is damaged, replace.

Slippage of V-belt

After loosening the lock nut, and adjust the spring hook inner dimension to 65 to 68 mm by turning the adjustment nut.

Replacement

Contact your Canycom distributor.

https://truckmanualshub.com/

7.8.5 Fun Belt Tension

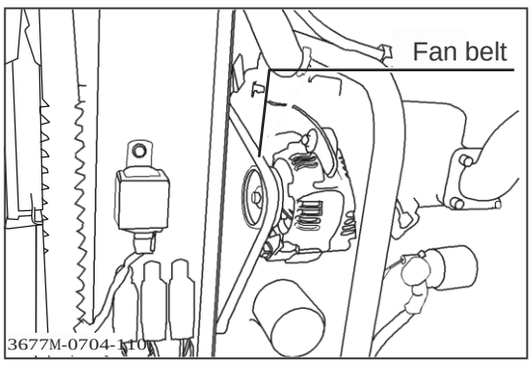

NOTICE

If the tension of the cooling fun belt is small, the belt is slipped and not only the cooling capacity of the engine is lowered but also the service life of it is shortened.

⚠CAUTION

Inspect the tension after the engine is stopped.

Inspection / Adjustment

1. Open the engine cover.
2. Press the center of the cooling fan belt by finger to check for the tension of the belt.

   Deflection: About 7 mm at force of about 5 kg
3. If the deflection does not come within a reference value specified above, loosen the mounting bolt, and move the alternator to adjust the tension of the belt.

7.8.5 Track Tension

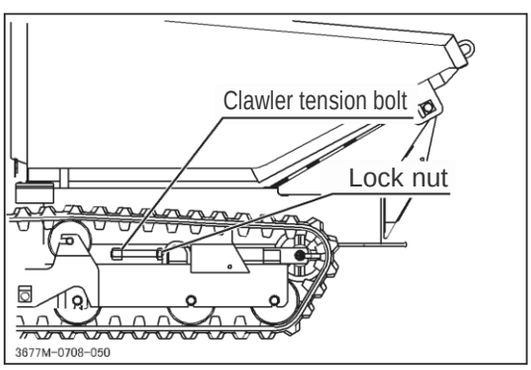

NOTICE

Loose track tension can cause the tracks to come off the machine, causing damage to the machine and possibly serious injury or death to the operator or bystanders. During the first 100 hours of use, the tracks stretch and the track tension loosens. Check track tension during the pre operation inspection and as part of monthly inspection, as specified in the Regular Inspection Chart.

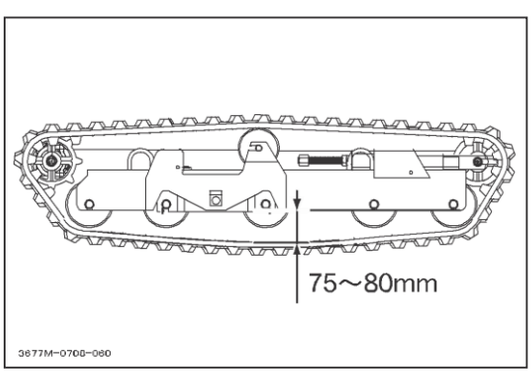

1. Stop the machine on level ground.
2. Jack up the front and rear of the chassis to raise the crawler on one side and make it horizontal to the ground surface.
3. Loosen the lock nut of the crawler tension bolt.
4. Rotate the crawler tension bolt to adjust the clearance between the crawler and the frame to 75 to 80 mm.

https://truckmanualshub.com/

7.8.6. Steering Lever

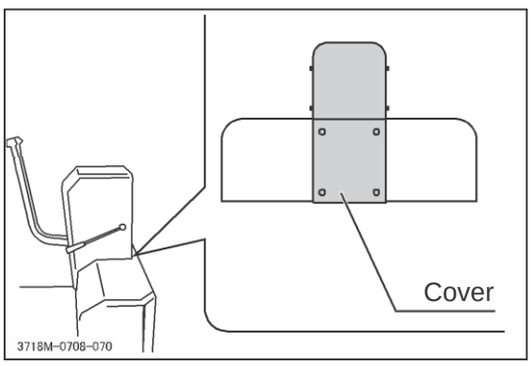

NOTICE

The steering lever is properly adjusted when the machine is properly shipped from the factory, so normally there is no need to adjust it. If the steering lever and links have been replaced, the steering lever must be adjusted.

1. Start the engine, and push the throttle lever to the [(HIGH SPEED)] position to increase the speed of the engine.

2. On level ground, tilt the steering lever for movement. If the right and left crawlers move forward or backward when the steering lever is released, the crawlers must be adjusted.

Before Adjustment

1. Raise the load deck of the truck, and lock the dump lever to the lock plate.

2. Secure the load deck with the support bar. (See page 25)

3. Remove the cover.

https://truckmanualshub.com/

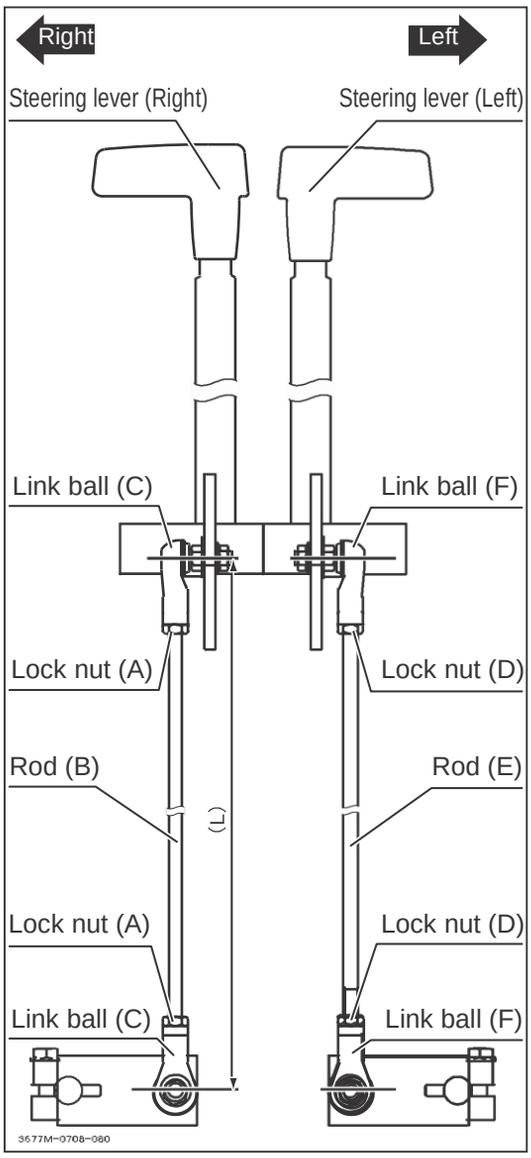

If Right Crawler Moves

1. Loosen two lock nuts (A).

2. Rotate rod (B) slowly until crawler does not move.
   - If the crawler moves forward, adjust the rod so the distance (L) between two link balls (C) becomes shorter.
   - If the crawler moves backward, adjust the rod so the distance (L) between two link balls (C) becomes longer.

3. Tighten two lock nuts (A).

If Left Crawler Moves

1. Loosen two link ball lock nuts (D).
2. Rotate rod (E) slowly until crawler does not move.
3. Tighten two lock nuts (D).

https://truckmanualshub.com/

7.9 Electrical System

7.9.1 Fuses

Inspection

NOTICE

Fuses in the wiring circuits will prevent damage to electrical systems. Check fuses whenever electrical problems occur.

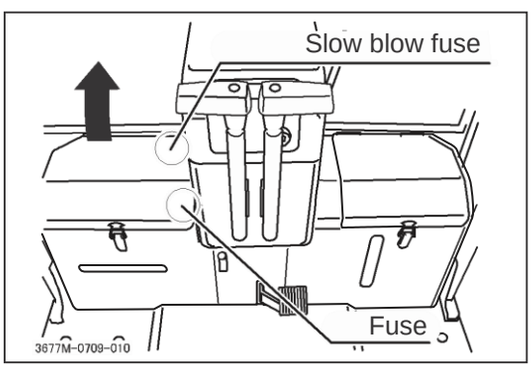

Open the battery box cover, and check that no fuse is blown.

Slow Blow Fuse

- 30A : Main glow
- 40A : Alternator

Fuse

- 5A : Hour meter, alarm monitor, fuel pump
- 5A : Horn

Replacement

⚠CAUTION

If a fuse is blown, investigate the cause, then replace the fuse with another correct capacity fuse. Correct capacity fuse must be used for warranty to apply.

https://truckmanualshub.com/

7.10 Maintenance After Use

Maintenance After Use in Normal Conditions

- After using the machine, remove any mud, water, or other foreign matter stuck to the machine. Do not wash the engine or control panel with water. This will allow water to enter and lead to rust.
- When leaving the machine outdoors, cover it with a waterproof cover.

Maintenance After Use in Cold Weather

- After using the machine, remove any mud, water, or other foreign matter stuck to the machine. Then park the machine on concrete or firm dry ground, or set it on blocks.
  If water or mud stuck to the machine freezes, it may cause failure. (In extremely cold areas, put wooden blocks under the crawlers at right angles to the machine.)
- When leaving the machine outdoors, cover it with a waterproof cover.

NOTICE

If the machine freezes and it is impossible to operate it, do not try to move it by force. Use warm or hot water to melt the frozen parts or wait for the ice to melt. Be careful when moving the machine. If the machine is moved by force, Canycom does not take responsibility for damage or failure.

https://truckmanualshub.com/

8. Storage (Long-term Storage)

When storing for a long time, it is necessary to take suitable action to prepare for the next time that the machine is used. When preparing for long-term storage, carry out "Maintenance after use" (see page 50), then do as follows.

⚠ DANGER

Do not store this machine, the battery, or fuel in a place where there is a flame or where the temperature is high. There is a danger of fire.

NOTICE

Avoid storing the machine in a place where there is high humidity or excessive dust. When storing, wait for the engine to cool down, then cover the machine with a waterproof sheet.

8.1 Machine

8.1.1 Crawler

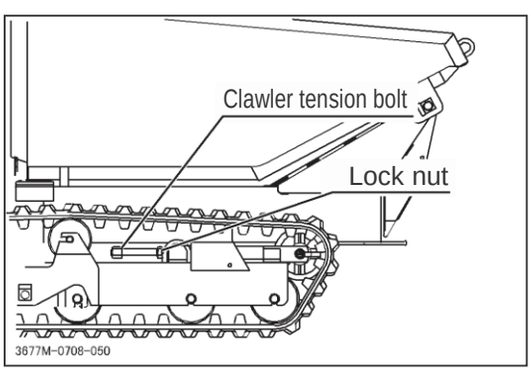

1. Loosen the lock nut of the crawler, and loosen the tension bolt. (See page 46)
2. Clean the outside surface of the machine with an oily cloth, then lubricate the rotating and sliding parts.
3. Place a board under the crawler.
4. Remove the engine starting key.

8.1.2 Clutch

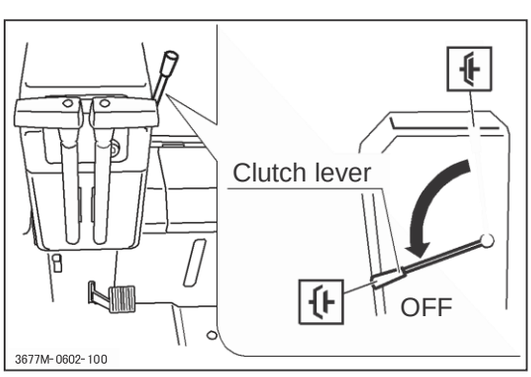

1. Operate the clutch lever to the [(OFF)] position.

https://truckmanualshub.com/

8.2 Battery

⚠CAUTION

When disconnecting the cables from the battery, disconnect the (-) terminal first, and the (+) terminal last; when connecting the cables, connect the (+) terminal first, and the (-) terminal last.

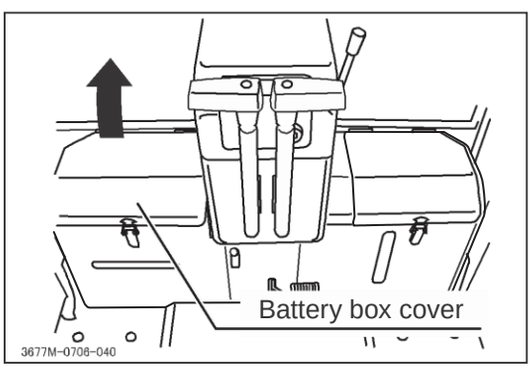

1. Remove the battery from the machine.
2. Check the battery electrolyte level. If the level is low, add electrolyte.
3. Store the battery in a cool, dry place.

Reference: When the battery is not being used, it will remain charged for about 6 months, but if it is charged before it has been removed, it is possible to extend the life of the battery.

8.3 Engine

NOTICE

Refer to the engine operation manual for more details about long term storage of the engine.

8.3.1 Cleaning Air Cleaner Element

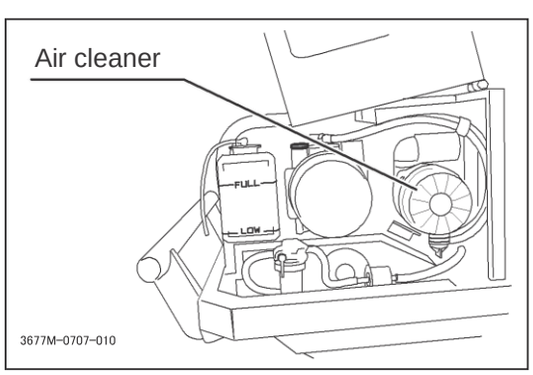

Remove the air cleaner element and clean it.
(See page 41)

https://truckmanualshub.com/

8.3.2 Changing Engine Oil

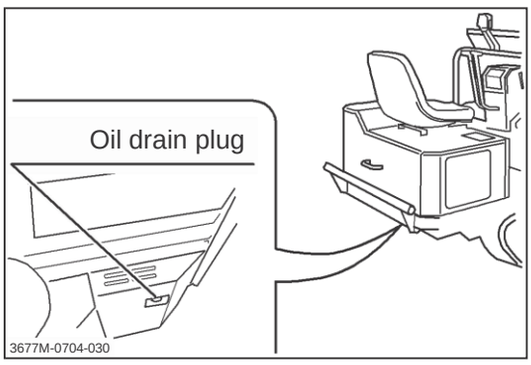

Drain the engine oil, then fill with fresh engine oil.
(See page 32)

8.3.3 Fuel Cock

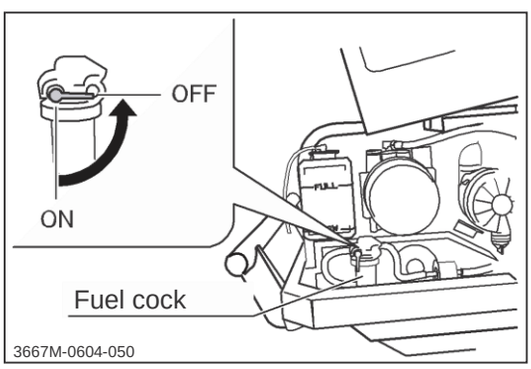

Turn the fuel cock to the [OFF] position to cut off the fuel supply.

https://truckmanualshub.com/

9. Troubleshooting

Some repairs require specialized service knowledge or equipment, as indicated in the Troubleshooting Chart. In these case, contact your dealer for repair, adjustment, or part replacement.

9.1 Troubleshooting Chart

Location	Problem	Main causes	Remedy
Engine related	Engine dose not start or is difficult to start	· Parking brake pedal not depressed (The safety device functions)	→ Depress the parking brake pedal
		· Battery over-discharged	→ Charge battery (See page 40) → Replace battery
		· Battery cable has separated	→ Connect cable
		· Fuse blown	→ Replace
		· Defective contact or disconnection in electric wiring	→ Repair (Please contact your Canycom distributor)
		· No fuel	→ Add fuel (See page 14)
		· Air leak in fuel system	→ Bleed air (See page 44)
		· Excessive intake of fuel	→ Wait for a while before re-starting
		· Defective oil quality or engine oil is low	→ Add or change oil (See page 31)
		· Low battery capacity (defective starting of motor)	→ Add battery electrolyte → Charge battery (See page 40)
		· Defective operation of starting switch, motor, relay	→ Please contact your Canycom distributor
		· Foreign matter trapped in fuel system	→ Clean the fuel stop valve
	Engine stops immediately	· No fuel	→ Add fuel (See page 14)
		· Air in fuel hose	→ Bleed air (See page 42)
		· Insufficient warming up	→ Warm up thoroughly
	Engine suddenly stopped	· Out of fuel	→ Add fuel (See page 14)
		· Seizure caused by lack of engine oil or by deterioration of oil	→ Inspect and add oil (See page 31)
	Engine dose not stop	· Defective electrical system	→ Close the fuel cock to stop the engine Please contact your Canycom distributor
	Defective idling (variation in engine speed)	· Defective function of injection pump	→ Please contact your Canycom distributor
		· Improper injection timing	→ Please contact your Canycom distributor
		· Insufficient compression pressure	→ Please contact your Canycom distributor
		· Insufficient air intake (clogged air cleaner)	→ Clean or replace (See page 39)

https://truckmanualshub.com/

Location	Problem	Main causes	Remedy
Engine related	Lack of output or acceleration	· Improper fuel · Improper viscosity of engine oil · Defective adjustment of accelerator · Insufficient air intake (clogged air cleaner) · Overload · Defective function of injection pump · Improper injection timing · Insufficient compression pressure	→ Change fuel → Change to suitable oil → Please contact your Canycom distributor → Clean or replace (See page 41) → Reduce load → Please contact your Canycom distributor → Please contact your Canycom distributor → Please contact your Canycom distributor
	Abnormal noise or vibration from engine or around engine	· Loose engine mounting bolt · Other	→ Tighten → Please contact your Canycom distributor
	Excessive consumption of engine oil	· Leakage of engine oil · Wear of cylinder, piston ring	→ Check and repair → Check and repair (Please contact your Canycom distributor)
	Engine overheats	· Lack of engine oil · Lack of engine cooling water · Leakage of engine cooling water · Clogged radiator	→ Add oil (See page 34) → Add water (See page 38) → Inspect and repair (Please contact your Canycom distributor) → Clean
	Excessive consumption of fuel	· leakage of fuel from fuel system · Clogged radiator · Defective function of injection pump · Improper injection timing · Insufficient engine compression	→ Check and repair (Please contact your Canycom distributor) → Clean or replace (See page 41) → Please contact your Canycom distributor → Please contact your Canycom distributor → Please contact your Canycom distributor
	Large amounts of black smoke is emitted (defective exhaust condition)	· Defective compression · Improper fuel · Clogged air cleaner	→ Check and repair (Please contact your Canycom distributor) → Change fuel → Clean or replace (See page 41)
	White smoke or blue smoke are emitted (defective exhaust condition)	· Engine oil level is too high · Viscosity of oil is too low · Worn cylinder, piston ring	→ After inspecting, adjust oil level (See page 34) → Change to suitable oil → Check and repair (Please contact your Canycom distributor)
	Accelerator lever is catching	· Deformed, rusty accelerator rod and wire	→ Replace (Please contact your Canycom distributor)

https://truckmanualshub.com/

Location	Problem	Main causes	Remedy
Power train related	Machine does not move even when steering levers are placed in FORWARD or REVERSE positions Defective turning	· Parking brake is applied · Problem in hydraulic system · Failure inside HST · Overloaded · Insufficient or deteriorated hydraulic circuit · Clogged oil cooler · Dirt in hydraulic circuit · Clogged filter element · Fluid leaks from hydraulic system · Insufficient discharge from hydraulic pump · Other	→ Release parking brake → See Hydraulic related (See page 56) → Please contact your Canycom distributor → Reduce load → Add or change fluid (See page 36) → Clean → Remove dirt → Replace (See page 41) → Check and repair → Please contact your Canycom distributor → Please contact your Canycom
Brake	Poor braking	· Adjustment nut loosened · Brake lining worn · Water in brake drum · Overload	→ Adjust (See page 44) → Replace the lining (Please contact your Canycom distributor) → Apply the brake several times to eliminate water → Reduce load
Crawler	Crawler does not rotate smoothly	· Improper adjustment	→ Adjust (See page 46)
Safety device related	Lamp does not light	· Defective wiring · Blown bulb · Blown fuse	→ Connect → Replace → Replace (See page 49)
	Warning lamp lights up after engine is started (1) Charge lamp (2) Oil lamp	· Disconnected coupler, wiring · Lack of engine oil or abnormality in lubricating system	→ Connect → Add oil (See page 34)
Safety device	Horn does not sound	· Disconnected terminal for horn wiring, broken wiring · Blown fuse	→ Connect or repair → Replace (See page 49)
Roller, Idler, Upper roller, Swing roller mounting pin	Discontinuous noise	—	→ Replace the defective part (Please contact your Canycom distributor)
	Abnormal heating	—	→ Replace the defective part (Please contact your Canycom distributor)
	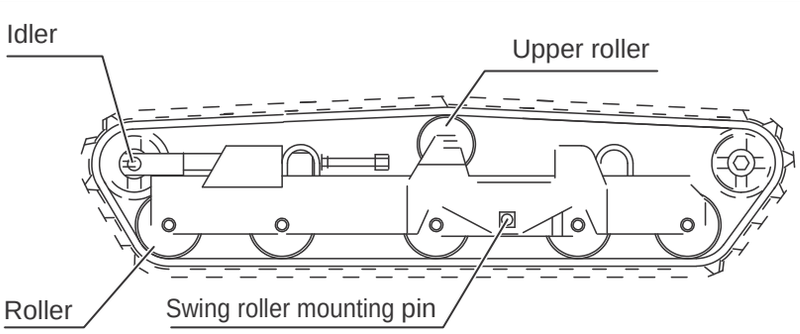		

https://truckmanualshub.com/

Location	Problem	Main causes	Remedy
Dump device	Dump device does not operate	· Oil leakage from hydraulic system · Foreign matter clogged in control valve	→ Inspect and repair → Inspect and repair
Rotating device	Rotating device does not operate	· Oil leakage from hydraulic system · Forein matter clogged in control valve	→ Inspect and repair → Inspect and repair

https://truckmanualshub.com/

10. Transporting Machine

When loading and unloading this machine onto a truck for transportation, follow these safety precautions.

10.1 Truck Loading and Unloading

1. Use ramps that have ample strength (that can hold the total weight of the machine and operator), width (at least 1.2 times the width of the crawler), and length (at least 3 times the height of the bed of the truck), and are fitted with no-slip pads. Choose a place where the ramps will not bend under the weight of the machine.
2. Fit the hooks of the ramps to the bed of the truck so that they do not slip and so that there is no height difference from the bed of the truck.
3. When unloading the machine, operate the machine from the outside of the machine.

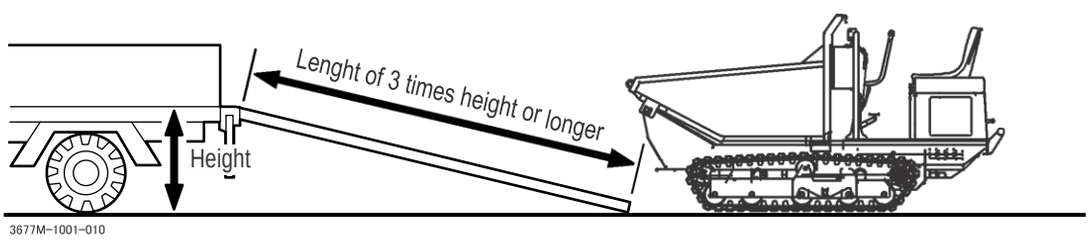

⚠ DANGER

- **When loading and unloading the machine, do not allow anyone to come near the machine or the ramps.**
- **Do not change direction on the ramps. There is a danger that the machine will fall off.**
- **When driving up the ramps, shift the gear shift lever to the forward 1st position, and when driving down, shift it to the reverse 1st position, then travel slowly.**

⚠ CAUTION

The gravity center of the machine may suddenly shift, when crossing from the ramps into the bed of the truck

https://truckmanualshub.com/

10.2 Lifting by Crane

⚠ WARNING

Always unload machine before lifting.

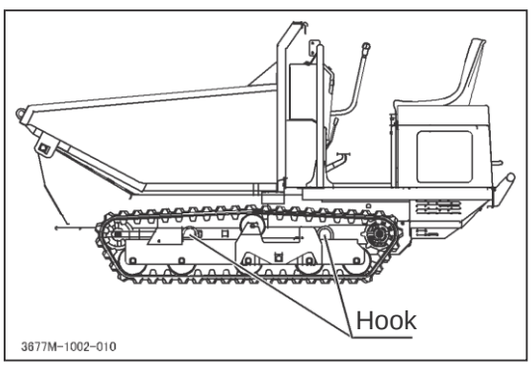

1. Hitch the wire rope to the lifting hooks (4 places) attached to the frame at right and left side front and rear positions, and lift the machine from the lateral center of the machine.

2. Slinging work attachments (wire rope, chain, etc.) should have sufficient strength and equal lengths.

https://truckmanualshub.com/

CHIKUSUI CANYCOM, INC.

- Sales Headquaters TEL 0943(75)2195 FAX (75)4396
- Foreign Trade Center TEL 03(3552)6277 FAX (3552)6288
- Tokyo Center TEL 03(3552)6255 FAX (3552)6288
- Sendai Center TEL 022(281)1255 FAX (281)3141
- Saitama Center TEL 0495(77)4511 FAX (77)1561
- Osaka Center TEL 0790(42)6031 FAX (42)6035
- Hiroshima Center TEL 0824(34)5996 FAX (34)5997
- Matsuyama Center TEL 089(983)2701 FAX (983)5749
- Fukuoka Center TEL 0943(76)2583 FAX (75)5126
- Kagoshima Center TEL 0995(58)3011 FAX (58)2344

Memo of address and telephone number
(Name of dealer)

We prohibit unauthorized reprinting and reproduction of this document.