https://truckmanualshub.com/

Ditch Witch®

7520

ISSUE NO. 04PL-06/95

For Replacement Copy Order **P/N 053-408**

ООО «Гастар» г.Минск
Производство работ ГНБ, поставка оборудования, запчастей, расходных материалов Ditch Witch
тел. +375 29 1958760, +375 29 7558760, +375 29 7762542
факс +375 17 2627866
www.gastar.by
e-mail: info@gastar.by

This manual contains information concerning the following models:
7520 Tractor

Copyright 1991, 1995 The Charles Machine Works, Inc.

AutoCrowd, Ditch Witch, Jet Trac, Modularmatic, Perma Soil, ProTech, Roto Witch, Sidekick, Subsite and ® are registered trademarks of The Charles Machine Works, Inc.

https://truckmanualshub.com/

FOREWORD

This book contains illustrated parts lists to help you select quality ProTech® replacement parts for your Ditch Witch® equipment. Using other replacement parts will lessen the productivity of your equipment.

There are several things to remember while using this book:

- Part numbers in a box are no longer available from The Charles Machine Works, Inc. Your local Ditch Witch dealer might be able to locate the part for you.
- Footnotes provide more information to help you identify parts shown in the book.
- Assembly instructions and Tech Bits articles referenced in footnotes are available through your local Ditch Witch dealer.
- Descriptions and specifications in this book were current at publication. However, The Charles Machine Works, Inc. reserves the right to improve equipment, so this book might not reflect the most current improvements.
- Instructions on recommended equipment use and maintenance are in the Operator's Manual that was shipped with your equipment.

Keep the following in mind when ordering ProTech replacement parts:

- Specify parts you need by part number and description, not by illustration reference numbers.
- Have equipment model and serial number on hand to help ensure you get the right parts for your machine whether it's old or new.

Thank you for buying and using Ditch Witch equipment and ProTech replacement parts.

https://truckmanualshub.com/

CONTENTS

Air Ducts 53
Air Filter 10
Air Shutoff Controls 11
Alternator 8-9
Att & Ground Drive Pump Hyd 72-73
Attachment Pump Controls 17
Backfill Blade 44-45
Backfill Blade Control 18-19
Backfill Blade Tilt 46
Battery Mount 54-55
Bolt & Nut Torque Chart 131
Brake Calipers 105
Brake System 41
Cab 60
Cab Heater 61
Cold Start Bypass 77
Console 49
Cylinders - Hydraulic 116-125
Cylinders - Reel Carrier Lift 126-127
Decal Kit 5
Differential Components 103-104
Drive Line 40
Electrical Diagram 66-67
Electrical Schematic 68-69
Engine - Deutz 6
Engine Mount 7
Fenders & Covers 52
Filters / Capacities / Publications 129
Front Differential Mount 26
Front Steering Differential 28-29
Fuel Line 12
Fuel Tank 56
Grille 47
Ground Drive Pedal 16
Ground Drive Pump Controls 14-15
Ground Drive Transmission 102
Ground Drive Trans Controls 24-25
Ground Drive Trans Mount 22-23
Hood 48
Hydraulic Control Valve 111-112
Hydraulic Double Pump 114
Hydraulic Motor 113
Hydraulic Reservoir 57
Hydraulic Schematic 70-71
Hydraulics - Auxiliary Manifold 79
Hydraulics - Auxiliary Pump 78
Hydraulics - Backfill Blade Lift 95
Hydraulics - Backfill Blade Supply 94
Hydraulics - Backfill Blade Swing 96
Hydraulics - Backfill Blade Tilt 97
Hydraulics - Check Valve 74-76
Hydraulics - Dump Valve 81-82
Hydraulics - Flushing Valve 83
Hydraulics - Front Steering 88-89
Hydraulics - Ground Drive 84-87
Hydraulics - Oil Cooler & Filter 80
Hydraulics - Rear Steering 90-93
Interlock System Light 63
O-ring Chart 130
Parking Brake 42
Power Steering Valve 108-109
Pump Drive 100-101
Rear Steer Differential 34-37
Rear Steering Indicator 38-39
Relief Cartridge 107
Remote Controls 20
Rigid Rear Differential 30-33
ROPS 58-59
Seat Mount 50-51
Solenoid Control Valve 110
Throttle 13
Tire - Wheel 43
Trick Quick Coupler 106
Warning / Working Lights 62
Warning System Light 64
Warranty Information 132-135

https://truckmanualshub.com/

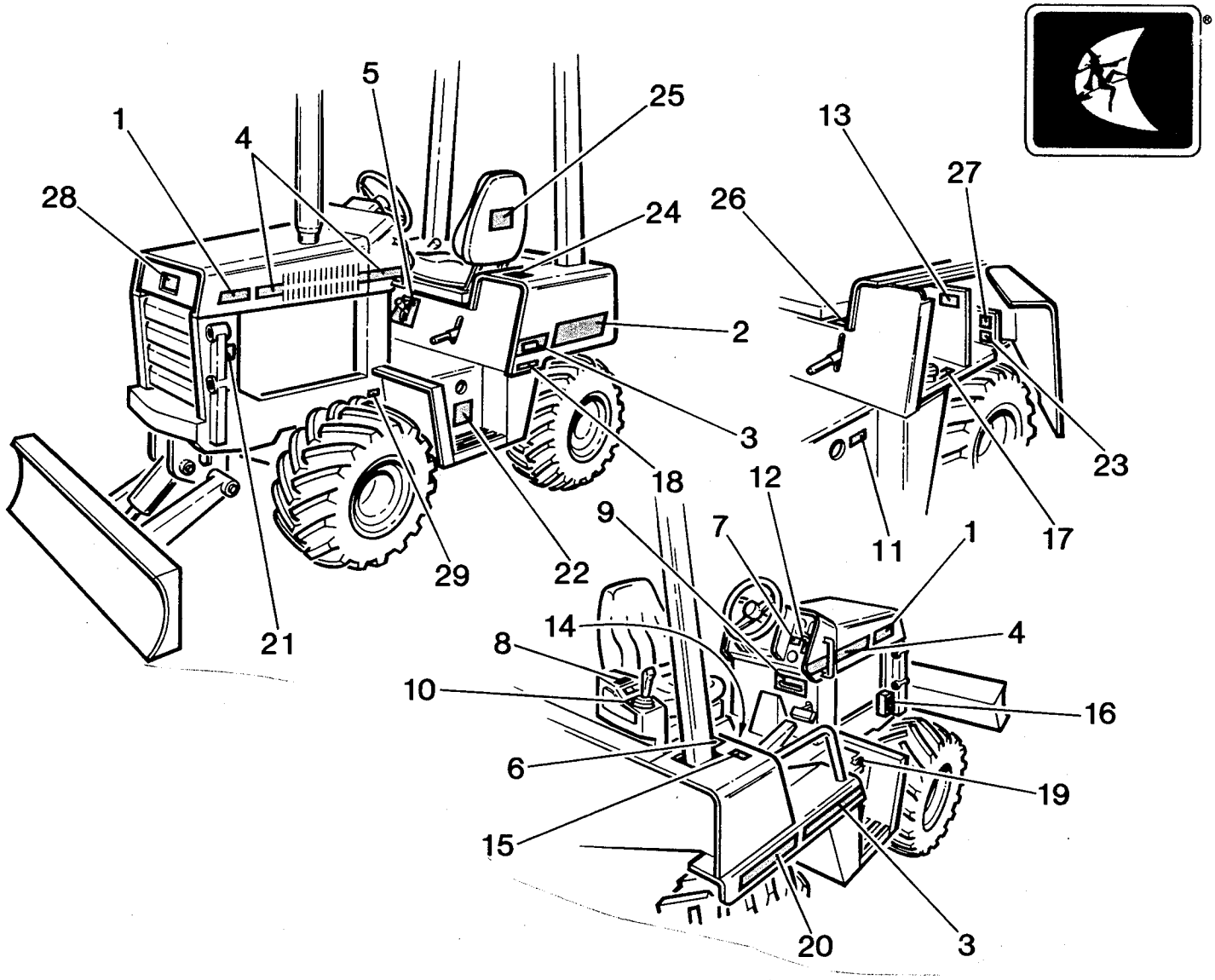

275–595 DECAL KIT

FOR MODELS 5020, 7520 & 8020

Ref. No.	Part Number	Qty.	Description
	050-395		Location Diagram
1.	274-023	2	5020 Model-ID
	274-059	2	7520 Model-ID
	274-071	2	8020 Model-ID
2.	274-024	1	Ditch Witch-ID
3.	274-025	2	Fender Accent Stripe
4.	274-026	2	Hood Accent Stripe
5.	274-027	1	Transmission & Operation
6.	274-028	1	Attachment Drive (5020)
	274-082	1	Attachment Drive (7520, 8020)
7.	274-029	1	Engine Stop (5020, 7520)
8.	274-030	1	Selector-Rear Steer
9.	274-031	1	Rear Steer Indicator
10.	274-032	1	Control Valve
11.	275-023	1	Oil Level
12.	275-032	1	Throttle
13.	275-033	1	Notice Alternator
14.	275-048	1	Important Safety Rules
15.	275-070	1	Warning Runaway
16.	275-100	1	Manifold
17.	275-120	1	Reservoir (THF)
18.	275-131	1	Modularmatic-ID
19.	275-148	1	Fuel Tank (Diesel)
20.	275-172	1	Ditch Witch-ID (5020)
	275-309	1	Ditch Witch-ID (7520, 8020)
21.	275-184	2	Warning Moving Parts
22.	275-185	2	Warning Single Operator
23.	275-245	1	Caution Battery Acid
24.	275-303	1	Warning Rollover
25.	275-307	1	Ditch Witch Emblem
26.	275-361	1	Parking Brake
27.	275-419	1	Warning Flammable
28.	275-449	1	Ditch Witch Emblem Plaque (8020)
	274-112	1	Ditch Witch Emblem Plaque (5020, 7520)
29.	275-497	1	Engine Oil Drain

Ditch Witch is a registered trademark of The Charles Machine Works, Inc.

https://truckmanualshub.com/

DEUTZ ENGINE

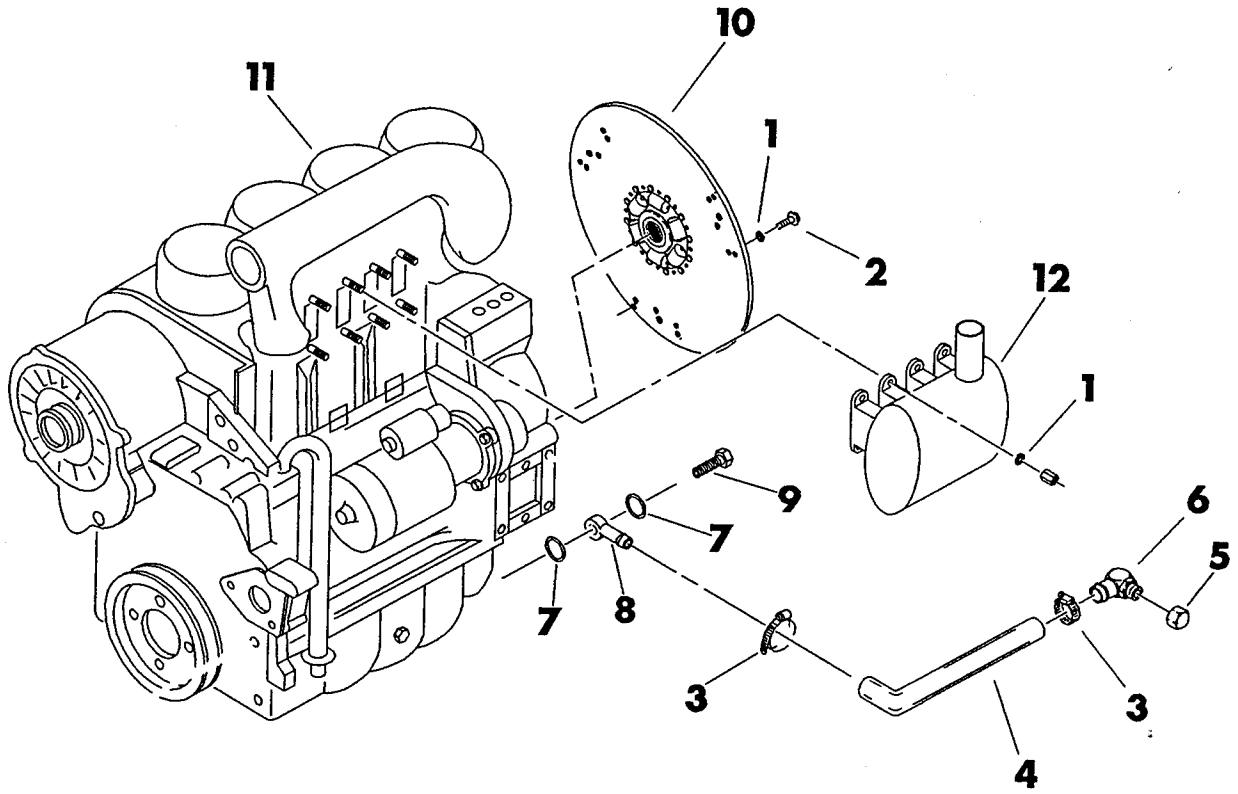

Ref. No.	Part Number	Qty.	Description
1.	105-091	14	Lock Washer (5/16")
2.	106-083	6	Bolt (M8-1.25 x 20mm)
3.	110-353	2	Clamp
4.	116-335	AR	Hose (1" ID)—use 20.5"
5.	154-329	1	Cap (-16 ORS FM)
6.	154-360	1	Bulkhead Connector (-16 ORS M x 1" OD M x 90°)
7.	155-748	2	O-Ring (-916)
8.	156-266	1	Banjo Fitting
9.	156-267	1	Banjo Bolt
10.	160-866	1	Drive Plate
11.	195-856	1	Deutz Engine
12.	196-143	1	Exhaust Muffler

NOT SHOWN:

195-877 Starter
197-752 Rebuilt Starter
195-814 Oil Filter

https://truckmanualshub.com/

ENGINE MOUNT

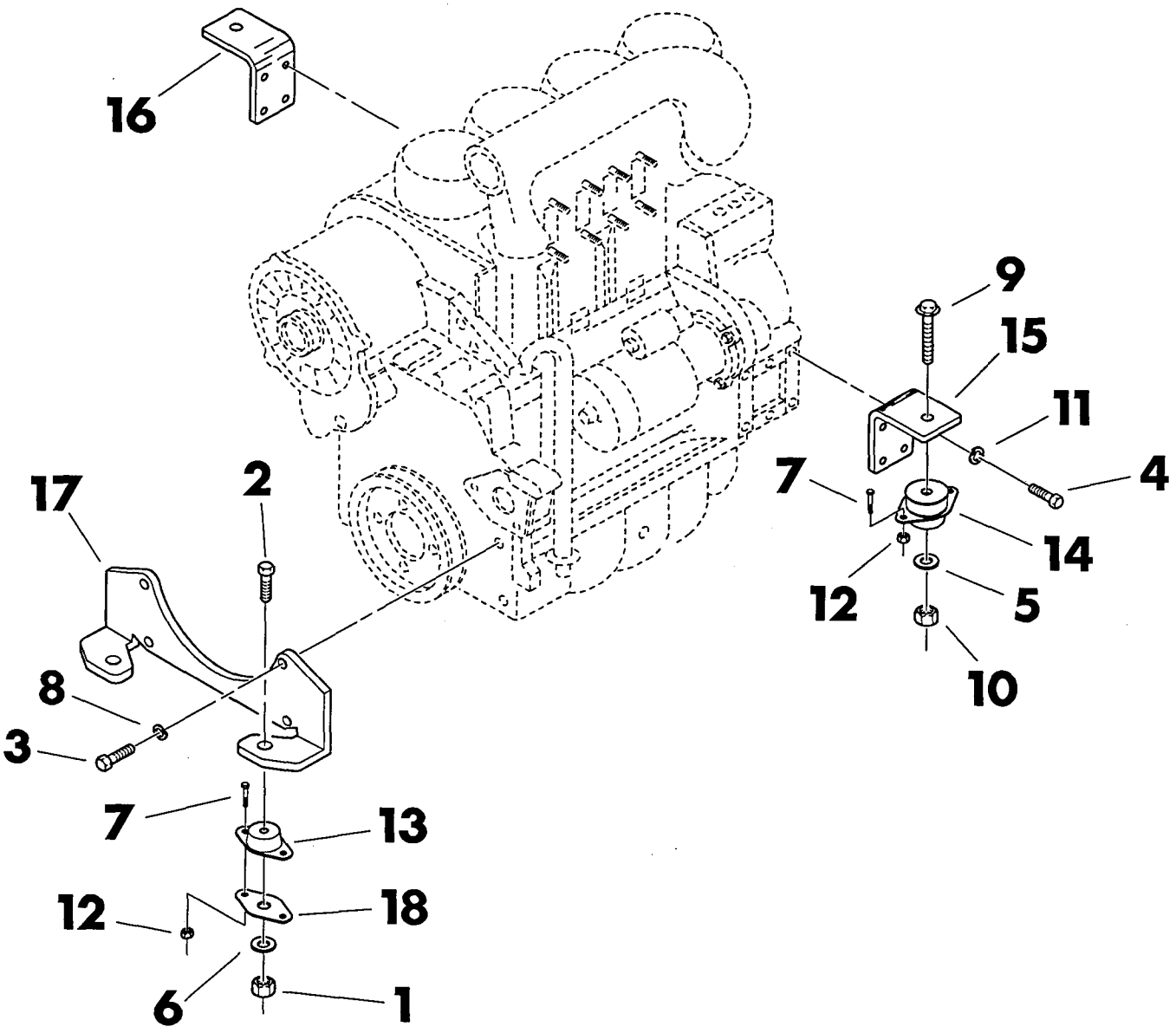

Ref. No.	Part Number	Qty.	Description
1.	105-065	2	Locknut (1/2-NC)
2.	105-076	2	Bolt (1/2-NC x 3")
3.	105-235	4	Bolt (M14-2.0 x 90mm)
4.	105-247	8	Bolt (M12-1.75 x 35mm)
5.	105-416	2	Washer (5/8")
6.	105-475	2	Washer (1/2")
7.	105-826	8	Bolt (3/8-NC x 1")
8.	105-990	4	Lock Washer (9/16")
9.	105-993	2	Flange Bolt (5/8-NC x 4")
10.	105-994	2	Flange Nut (5/8-NC)
11.	106-030	8	Lock Washer (M12)
12.	106-039	8	Nutsert (3/8-NC)
13.	116-386	2	Shock Mount (1.25" LG)
14.	116-387	2	Shock Mount (2.25" LG)
15.	315-046	1	Left Rear Engine Mount
16.	315-047	1	Right Rear Engine Mount
17.	315-048	1	Front Engine Mount
18.	315-049	2	Mount Plate

https://truckmanualshub.com/

ALTERNATOR

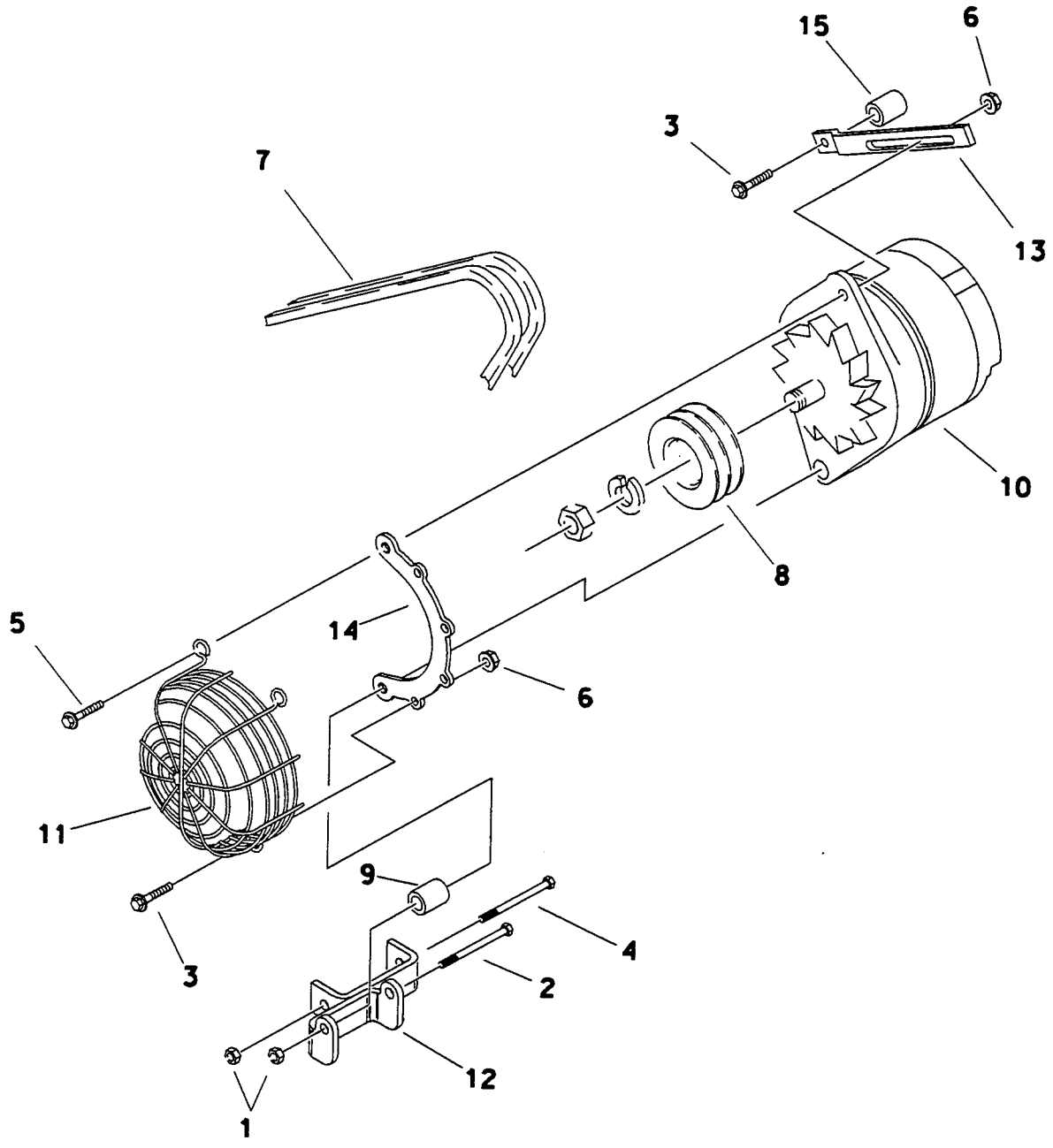

801-739

https://truckmanualshub.com/

ALTERNATOR

REF NO.	PART NUMBER	QTY	DESCRIPTION	REMARKS
1.	105-894	2	NUT (M10-1.5)	
2.	106-124	1	BOLT (M10-1.5 X 110mm)	
3.	106-162	3	FLANGE LOCK BOLT (M8-1.25 X 20mm)	
4.	106-165	1	BOLT (M10-1.5 X 120mm)	
5.	106-200	1	FLANGE BOLT (M8-1.25 X 45mm)	
6.	106-201	3	FLANGE NUT (M8-1.25)	
7.	170-089	1	BELT SET	2 BELTS
	170-094	1	BELT	1 BELT, 5110 ONLY
8.	170-267	1	SHEAVE	2 GROOVE
	170-266	1	SHEAVE	1 GROOVE, 5110 ONLY
9.	184-115	1	SPACER	
10.	215-159	1	ALTERNATOR	
11.	362-628	1	ALTERNATOR GUARD	
12.	363-097	1	LOWER ALTERNATOR BRACKET	
13.	363-100	1	UPPER ALTERNATOR BRACKET	
14.	363-101	1	FAN GUARD BRACKET	
15.	181-600	1	SPACER	

FOOTNOTES

https://truckmanualshub.com/

AIR FILTER

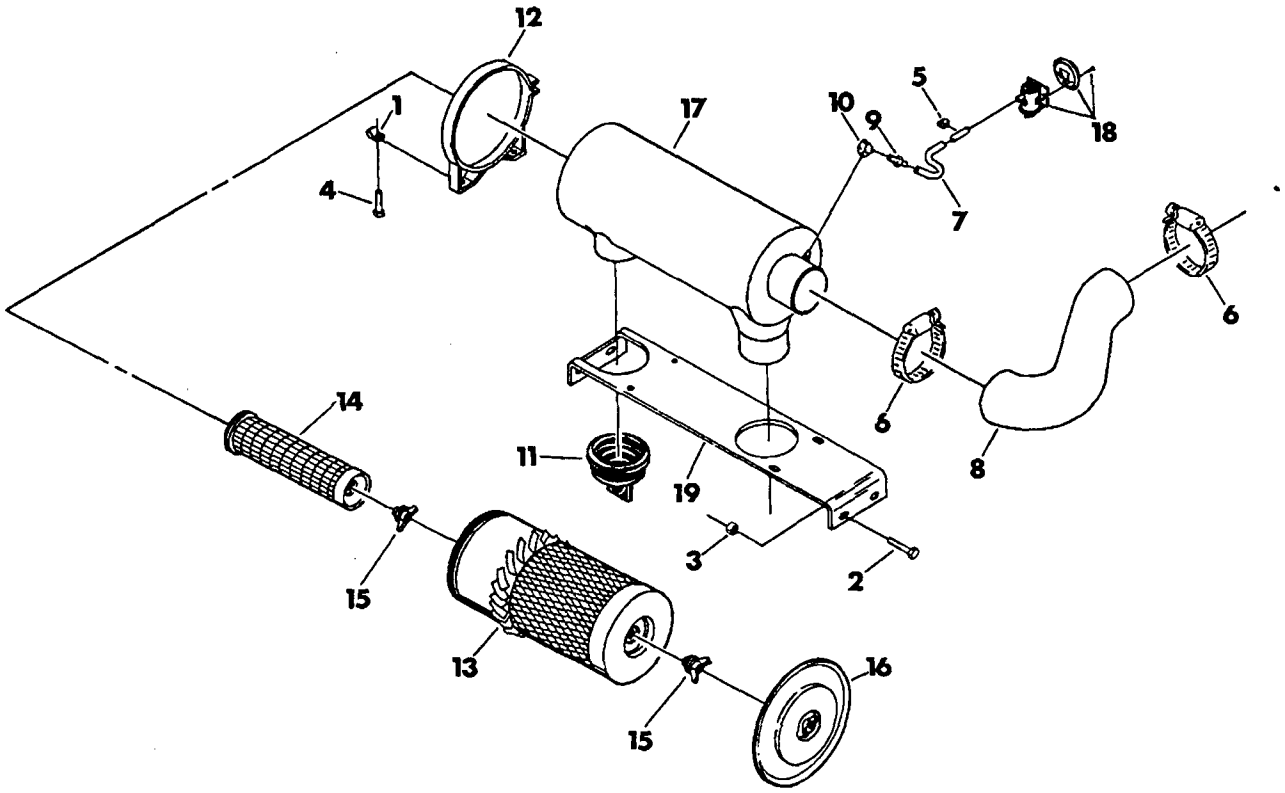

Ref. No.	Part Number	Qty.	Description
1.	105-137	4	Clipnut (5/16-NC)
2.	105-826	4	Bolt (3/8-NC x 1")
3.	105-834	4	Nut (3/8-NC)
4.	105-873	4	Bolt (5/16-NC x 1")
5.	110-155	1	Clip
6.	110-169	2	Clamp
7.	116-192	AR	Hose (7/64" ID)—use 54"
8.	116-388	1	Hose
9.	155-150	1	Slip-On Coupler
10.	156-228	1	Elbow
11.	195-428	1	Discharge Valve
12.	195-656	2	Mounting Band
13.	195-690	1	Primary Element
14.	195-809	1	Secondary Element
15.	195-815	2	Wing Nut
16.	195-823	1	Cover
17.	195-854	1	Air Filter (Incl. ref. no.'s 11 and 13 thru 16)
18.	215-150	1	Restriction Indicator
19.	363-122	1	Air Cleaner Plate

https://truckmanualshub.com/

AIR SHUTOFF CONTROLS
(Early Models)

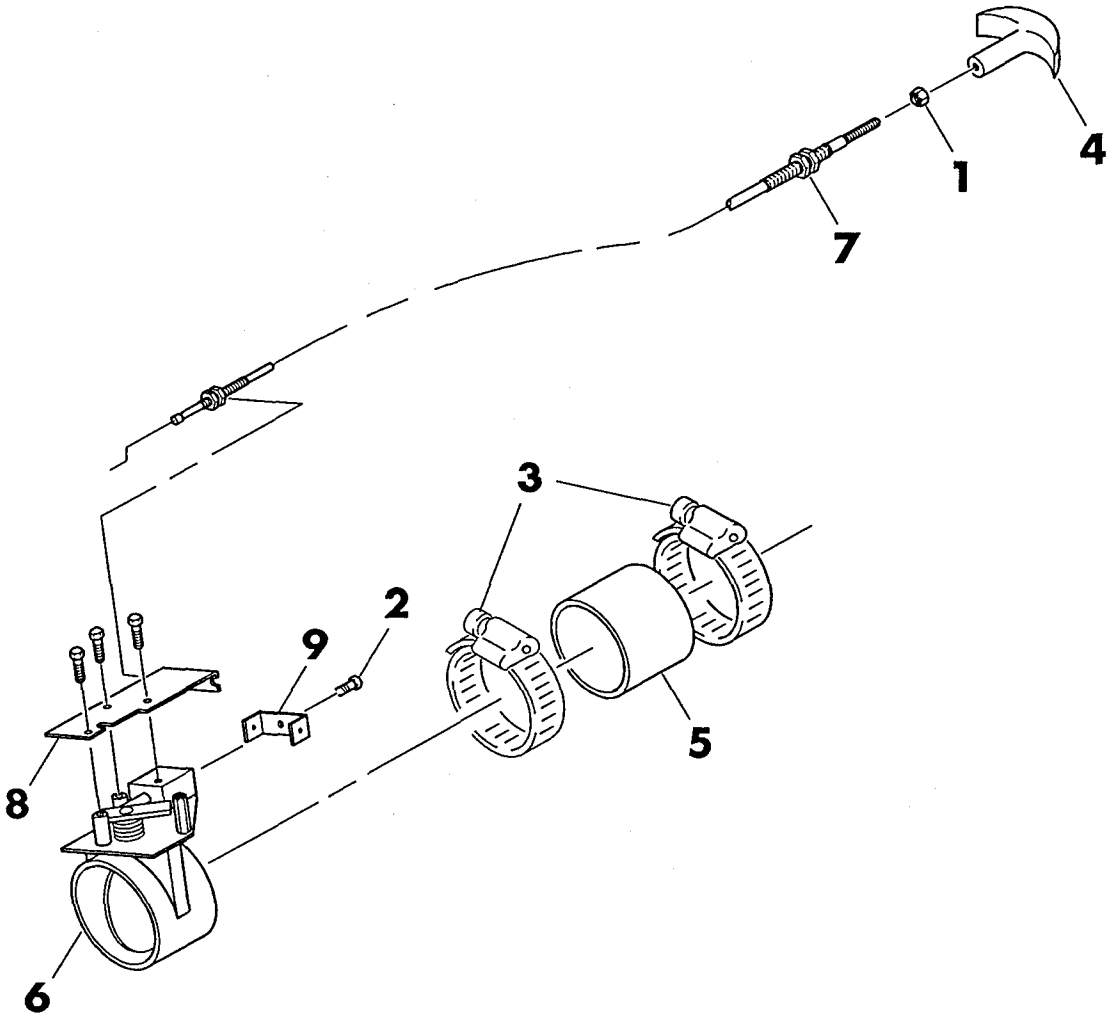

Ref. No.	Part Number	Qty.	Description
1.	105-078	1	Nut (1/4-NC)
2.	106-114	1	Bolt (1/4-NC x 1/2")
3.	110-169	2	Hose Clamp
4.	110-387	1	T-Handle
5.	116-248	1	Hose
6.	196-079	1	Air Shutoff Valve
7.	196-144	1	Cable
8.	314-114	1	Cable Bracket
9.	363-081	1	Actuator Bracket

https://truckmanualshub.com/

FUEL LINE

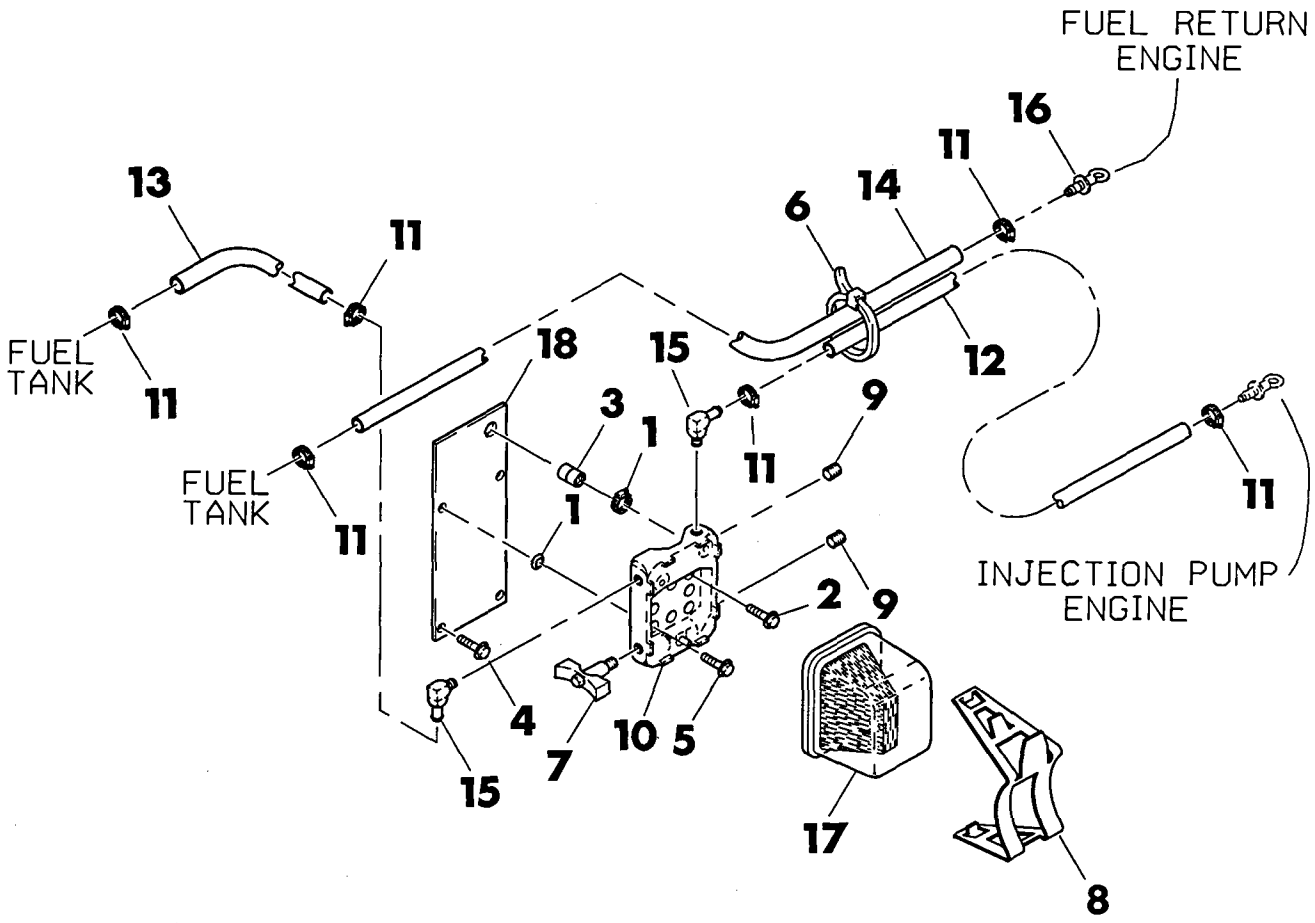

Ref. No.	Part Number	Qty.	Description
1.	105-267	2	Cup Washer (5/16")
2.	105-866	1	Flange Lock Bolt (5/16-NC x 1-1/4")
3.	106-038	1	Nutsert (5/16-NC)
4.	106-162	3	Flange Bolt (M8-1.25 x 20mm)
5.	106-163	1	Flange Bolt (M8-1.25 x 30mm)
6.	110-030	1	Cable Tie (15" LG)
7.	110-141	1	Drain Valve (-2 NPT M)
8.	110-255	1	Spring Clamp
9.	110-256	1	Plug Kit
10.	110-257	1	Separator Base
11.	110-528	6	Hose Clamp
12.	116-108	AR	Fuel Hose (.296" ID)—use 27"
13.	116-108	AR	Fuel Hose (.296" ID)—use 31"
14.	116-108	AR	Fuel Hose (.296" ID)—use 46"
15.	155-164	2	Slip On Coupler
16.	156-270	1	Banjo Fitting (1.42" LG)
17.	159-009	1	Separator Element
18.	314-117	1	Separator Mount Plate

https://truckmanualshub.com/

THROTTLE

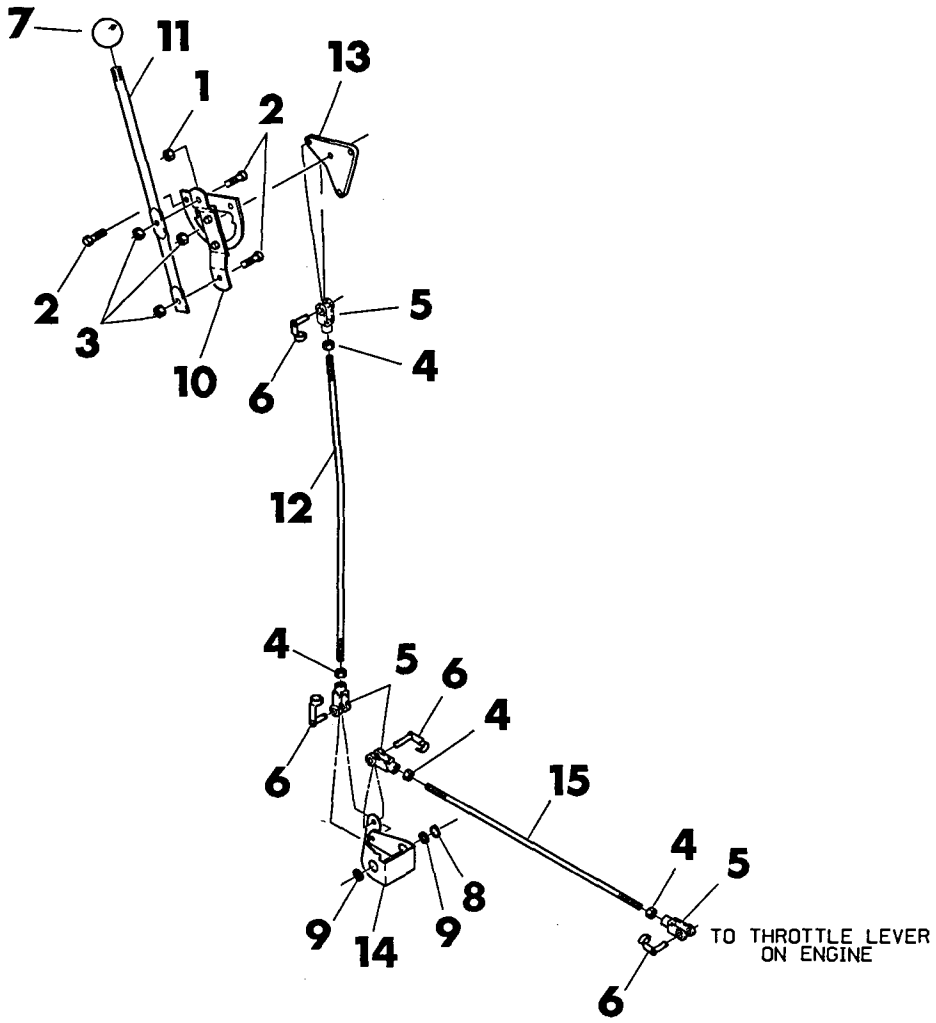

Ref. No.	Part Number	Qty.	Description
1.	105-078	2	Nut (1/4-NC)
2.	105-820	6	Flange Lock Bolt (1/4-NC x 3/4")
3.	105-832	4	FLange Locknut (1/4-NC)
4.	106-154	4	Nut (1/4-NF)
5.	110-067	4	Clevis (1/4")
6.	110-297	4	Spring Clevis Pin (1/4")
7.	110-519	1	Knob (1/2-NC, orange)
8.	115-482	1	External Grip Ring (for 1/2" shaft)
9.	125-779	2	Nyliner Bushing (.201" LG)
10.	196-130	1	Throttle Control
11.	365-128	1	Throttle Handle
12.	365-130	1	Primary Throttle Rod (17.28" LG, 1/4-NF)
13.	365-142	1	Throttle Output Lever
14.	365-146	1	Throttle Bellcrank
15.	365-159	1	Secondary Throttle Rod (21.74" LG, 1/4-NF)

https://truckmanualshub.com/

GROUND DRIVE PUMP CONTROLS

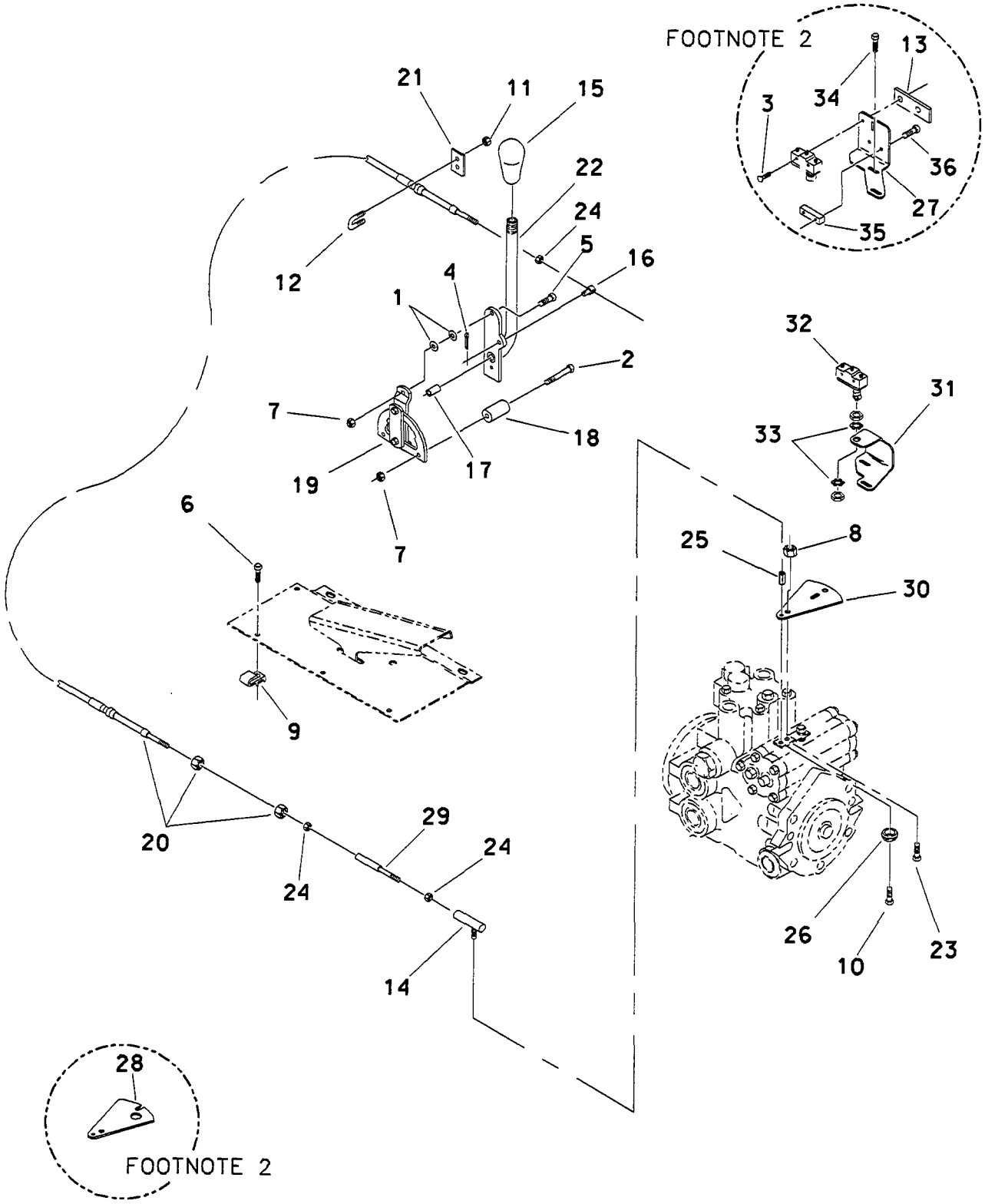

https://truckmanualshub.com/

GROUND DRIVE PUMP CONTROLS

REF NO.	PART NUMBER	QTY	DESCRIPTION	REMARKS
1.	105-095	4	WASHER (1/4")	
2.	105-106	2	BOLT (1/4-NC X 2")	
3.	105-216	2	BOLT (NO.6-32 X 1-1/4", BUT HD)	SEE FOOTNOTE 2
4.	105-512	1	COTTER PIN	
5.	105-820	4	FLANGE LOCK BOLT	
6.	105-823	6	FLANGE LOCK BOLT	
7.	105-832	4	FLANGE LOCKNUT	
8.	105-834	1	FLANGE LOCKNUT	
9.	105-841	4	CLIP NUT	
10.	106-114	1	BOLT (1/4-NF X 1/2")	
11.	106-154	3	FLANGE LOCKNUT	
12.	106-166	1	U-BOLT	
13.	106-169	1	SPEED NUT BAR	SEE FOOTNOTE 2
14.	110-318	1	BALL JOINT	
15.	110-495	1	KNOB (ORG)	
16.	110-521	1	CABLE SWIVEL	
17.	116-190	1	OPEN/CLOSE GROMMET	
18.	184-075	2	SPACER	
19.	196-131	1	FRICTION CONTROL	
20.	196-134	1	CONTROL CABLE	
21.	314-151	1	CABLE SPACER	
22.	365-125	1	PUMP CONTROL LEVER	
23.	501-153	1	FLANGE LOCK BOLT	
24.	506-021	2	NUT (NO. 10-32)	
25.	106-213	1	COUPLER NUT	
26.	184-131	1	SPACER	
27.	363-125	1	SWITCH MOUNT	SEE FOOTNOTE 2
28.	215-055	1	SWITCH ACTUATOR	SEE FOOTNOTE 2
29.	196-148	1	CABLE	
30.	365-239	1	SWITCH ACTUATOR	SEE FOOTNOTE 1
31.	363-292	1	SWITCH BRACKET	SEE FOOTNOTE 1
32.	215-046	1	SWITCH	SEE FOOTNOTE 1
	215-082	1	ROLLER PLUNGER BRACKET	
33.	106-409	2	STAR WASHER	SEE FOOTNOTE 1
34.	105-836	2	FLANGE LOCK BOLT	SEE FOOTNOTE 2
35.	315-085	1	TRIGGER SUPPORT (SWITCH)	SEE FOOTNOTE 2
36.	106-159	2	FLANGE SCREW (1/4-NC X 3/4")	SEE FOOTNOTE 2

FOOTNOTES

1- BEGINS WITH S/N
2- ENDS WITH S/N

https://truckmanualshub.com/

GROUND DRIVE PEDAL

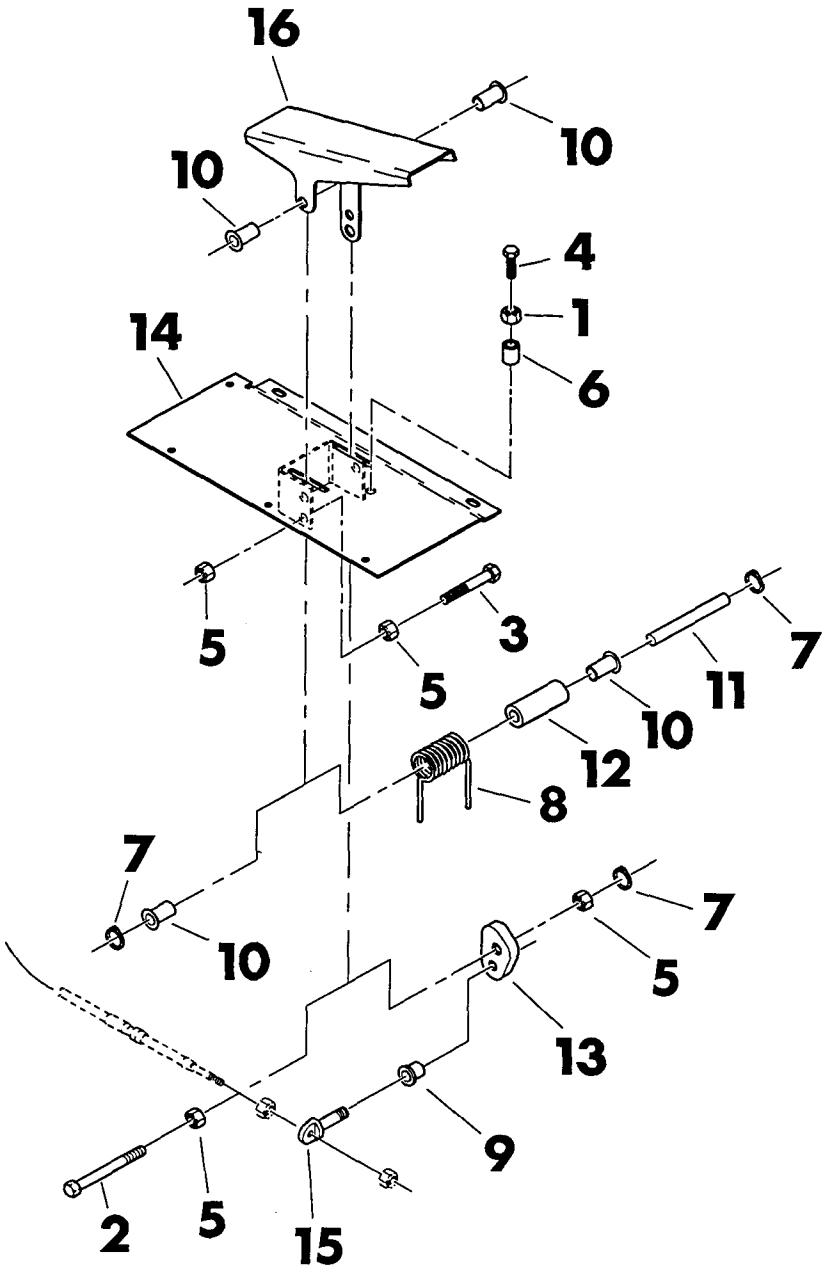

Ref. No.	Part Number	Qty.	Description
1.	105-003	1	Nut (5/16-NC)
2.	105-111	1	Bolt (1/2-NC x 4")
3.	105-136	1	Bolt (1/2-NC x 3-1/2")
4.	105-178	1	Bolt (5/16-NC x 2-1/2")
5.	105-833	4	Nut (1/2-NC)
6.	106-038	1	Nutsert (5/16-NC)
7.	115-482	3	External Grip Ring (for 1/2" shaft)
8.	115-650	1	Spring
9.	125-447	1	Bronze Bushing
10.	125-779	4	Nyliner Bushing
11.	183-653	1	Pin
12.	184-077	1	Spring Spacer
13.	314-141	1	Pivot Bushing Support
14.	315-074	1	Pedal Mount
15.	365-139	1	Cable Pivot
16.	365-167	1	Rocker Pedal

https://truckmanualshub.com/

ATTACHMENT PUMP CONTROLS

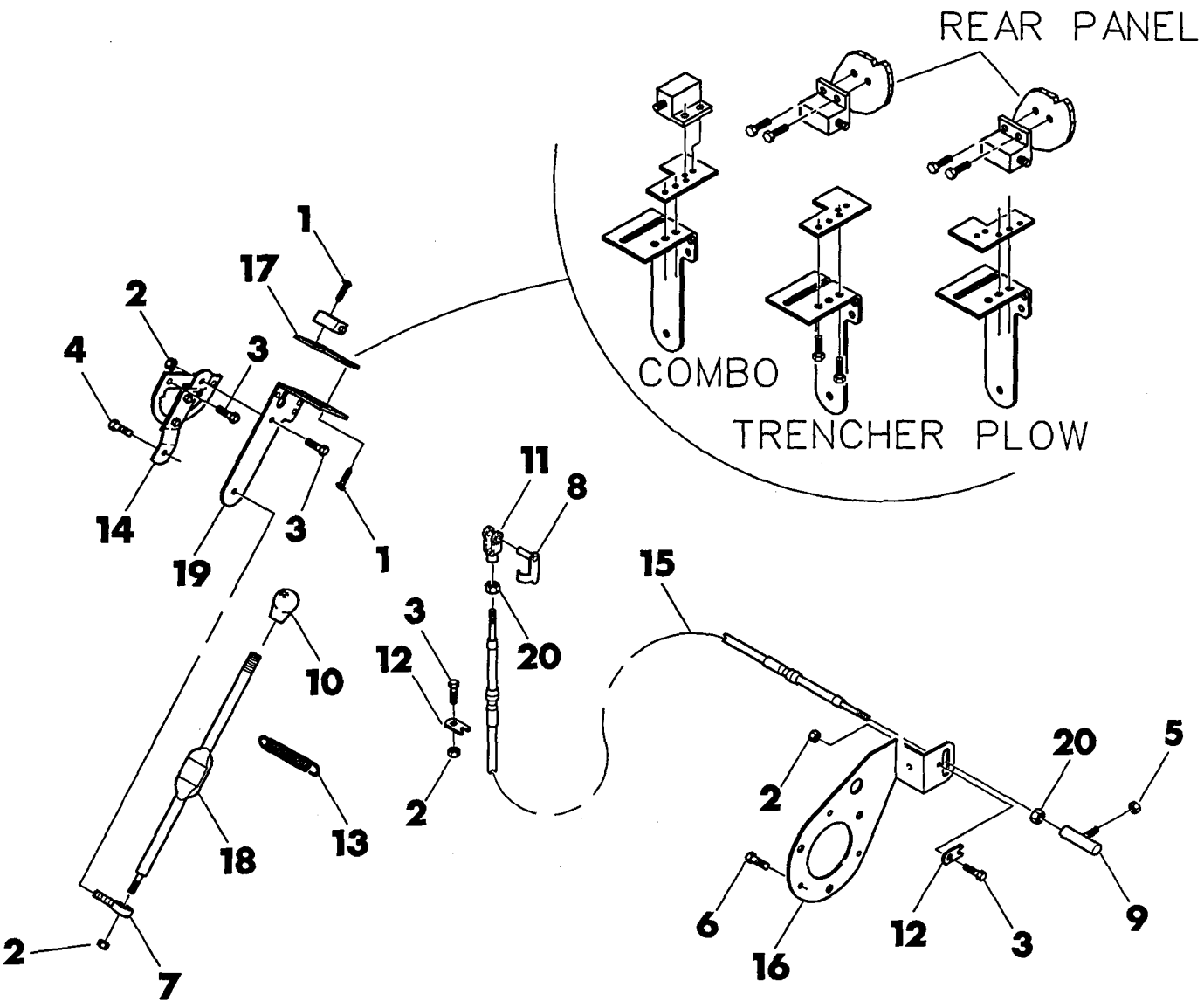

Ref. No.	Part Number	Qty.	Description
1.	105-214	4	Flange Screw (No. 10-24 x 1/2")
2.	105-832	6	Flange Locknut (No. 10-32)
3.	105-836	5	Flange Lock Bolt (1/4-NC x 1/2")
4.	106-114	1	Flange Lock Bolt (1/4-NF x 1/2")
5.	106-154	1	Flange Locknut (1/4-NF)
6.	106-161	4	Flange Bolt (M6-1.0 x 20mm)
7.	110-281	1	Rod End (1/4-NF)
8.	110-297	1	Spring Clevis Pin (1/4")
9.	110-318	1	Ball Joint (No. 10-32, RH THD)
10.	110-375	1	Knob (1/2-NC, yellow)

Ref. No.	Part Number	Qty.	Description
11.	110-517	1	Clevis (No. 10-32)
12.	110-522	2	Conduit Clamp
13.	115-649	1	Extension Spring (.313" OD x 3.4" LG)
14.	196-131	1	Friction Control
15.	196-145	1	Control Cable
16.	314-136	1	Cable Mount
17.	314-137	1	Switch Mount
18.	365-129	1	Pump Control Lever
19.	365-144	1	Pump Control Output Lever
20.	506-021	2	Nut (No. 10-32)

https://truckmanualshub.com/

BACKFILL BLADE CONTROL

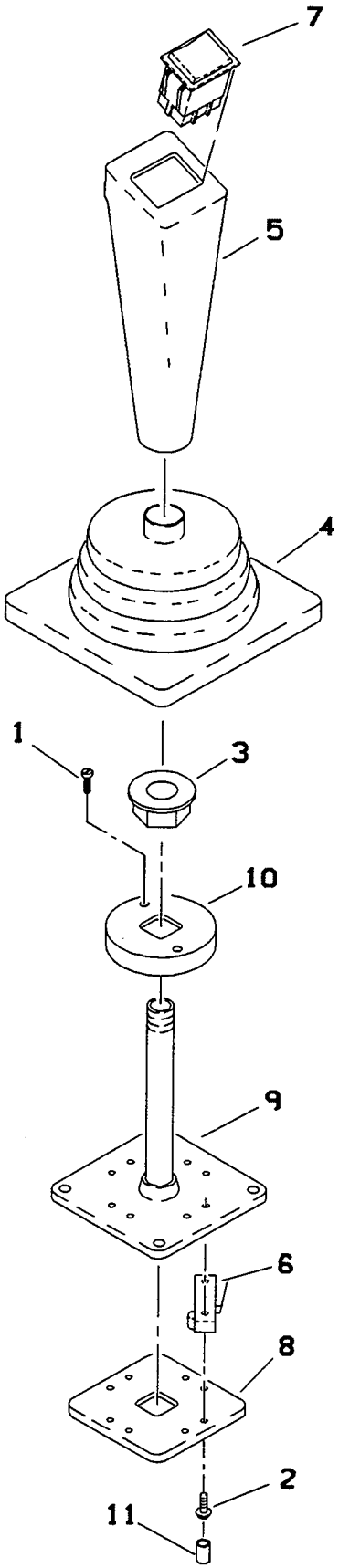

801-591

https://truckmanualshub.com/

BACKFILL BLADE CONTROL

REF NO.	PART NUMBER	QTY	DESCRIPTION	REMARKS
1.	105-184	2	SCREW (#10-24 X 3/4")	
2.	106-155	8	SCREW (#4-40 X 5/8")	
3.	105-833	1	FLANGE NUT	
	106-171	1	NUT	
4.	110-330	1	DUST BOOT	
5.	110-526	1	JOYSTICK HANDLE	
6.	215-081	4	SWITCH	
7.	217-708	1	ROCKER SWITCH	
8.	314-115	1	CONTROL STOP	
9.	365-133	1	CONTROL MOUNT	
10.	365-157	1	UPPER CONTROL STOP	
11.	110-397	4	SLEEVE CAP	

FOOTNOTES

https://truckmanualshub.com/

REMOTE CONTROLS

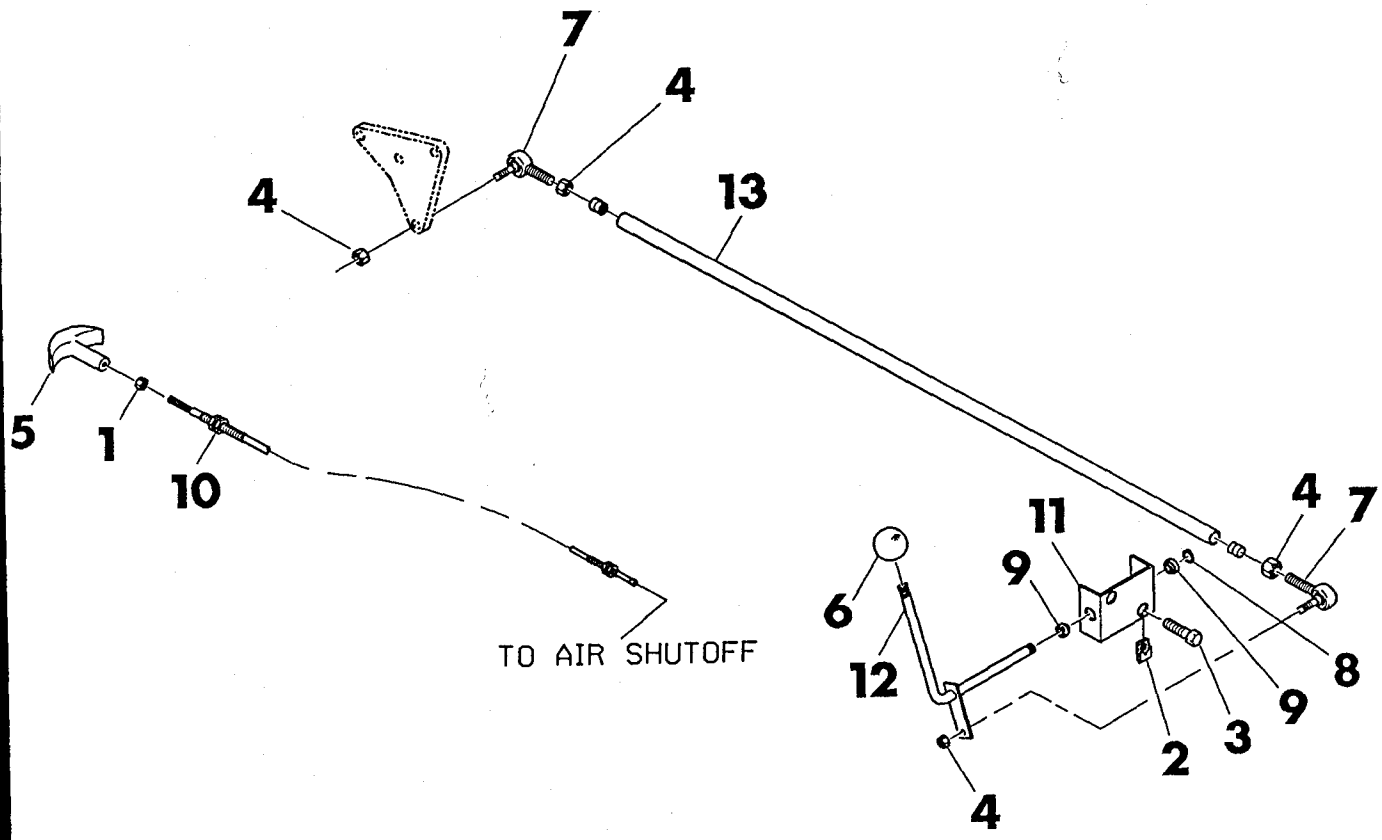

Ref. No.	Part Number	Qty.	Description
1.	105-078	1	[1]Nut (1/4-NC)
2.	105-137	2	Clip Nut (5/16-NC)
3.	105-873	2	Bolt (5/16-NC x 1")
4.	106-154	4	Flange Locknut (1/4-NF)
5.	110-387	1	[1]T-Handle
6.	110-519	1	Knob (1/2-NC, orange)
7.	110-565	2	Rod End
8.	115-482	1	External Grip Ring (for 1/2" shaft)
9.	125-779	2	Nyliner Bushing (.201" LG)
10.	196-144	1	[1]Cable
11.	314-149	1	Foot Throttle Bracket
12.	365-114	1	Remote Throttle Lever
13.	365-160	1	Remote Throttle Rod

[1]These parts were used with early models that had air shutoff valves.

https://truckmanualshub.com/

NOTES:

https://truckmanualshub.com/

GROUND DRIVE TRANSMISSION MOUNT

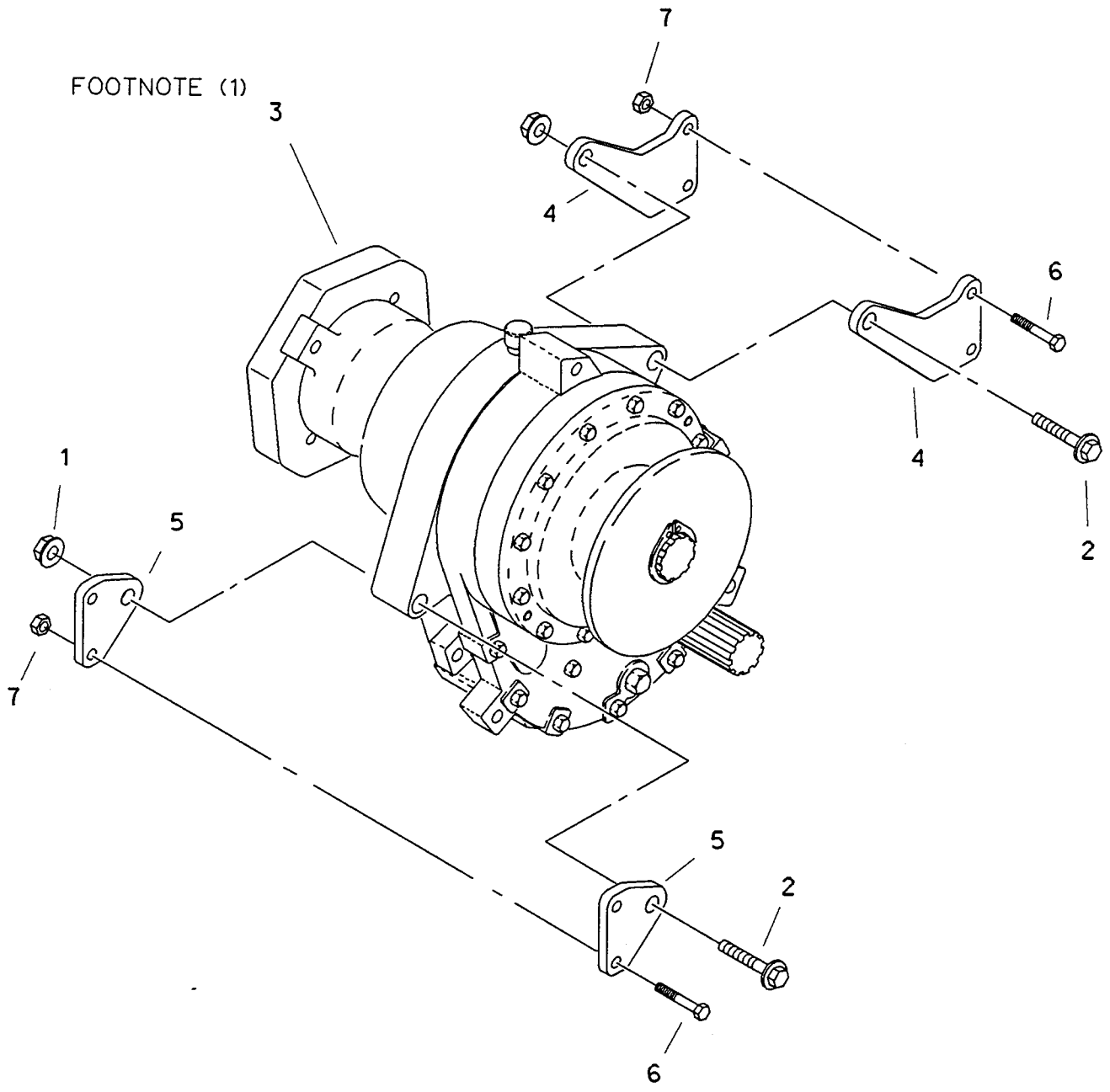

https://truckmanualshub.com/

GROUND DRIVE TRANSMISSION MOUNT

REF NO.	PART NUMBER	QTY	DESCRIPTION	REMARKS
1.	105-953	2	FLANGE LOCKNUT (3/4-NC)	
2.	106-157	2	FLANGE BOLT (3/4-NC X 5")	
3.	166-063	1	GROUND DRIVE TRANSMISSION	SEE FOOTNOTE 1
4.	315-090	2	LEFT TRANSMISSION MOUNT	EATON
	315-093	2	LEFT TRANSMISSION MOUNT	ROCKWELL
5.	315-091	2	RIGHT TRANSMISSION MOUNT	EATON
	315-092	2	RIGHT TRANSMISSION MOUNT	ROCKWELL
6.	105-111	4	BOLT (1/2-NC X 4")	
7.	105-065	4	LOCKNUT (1/2-NC)	

FOOTNOTES

1 FOR COMPONENT PARTS TO THE GROUND DRIVE TRANSMISSION REFER TO PAGE ENTITLED GROUND DRIVE TRANSMISSION.

https://truckmanualshub.com/

GROUND DRIVE TRANSMISSION CONTROLS

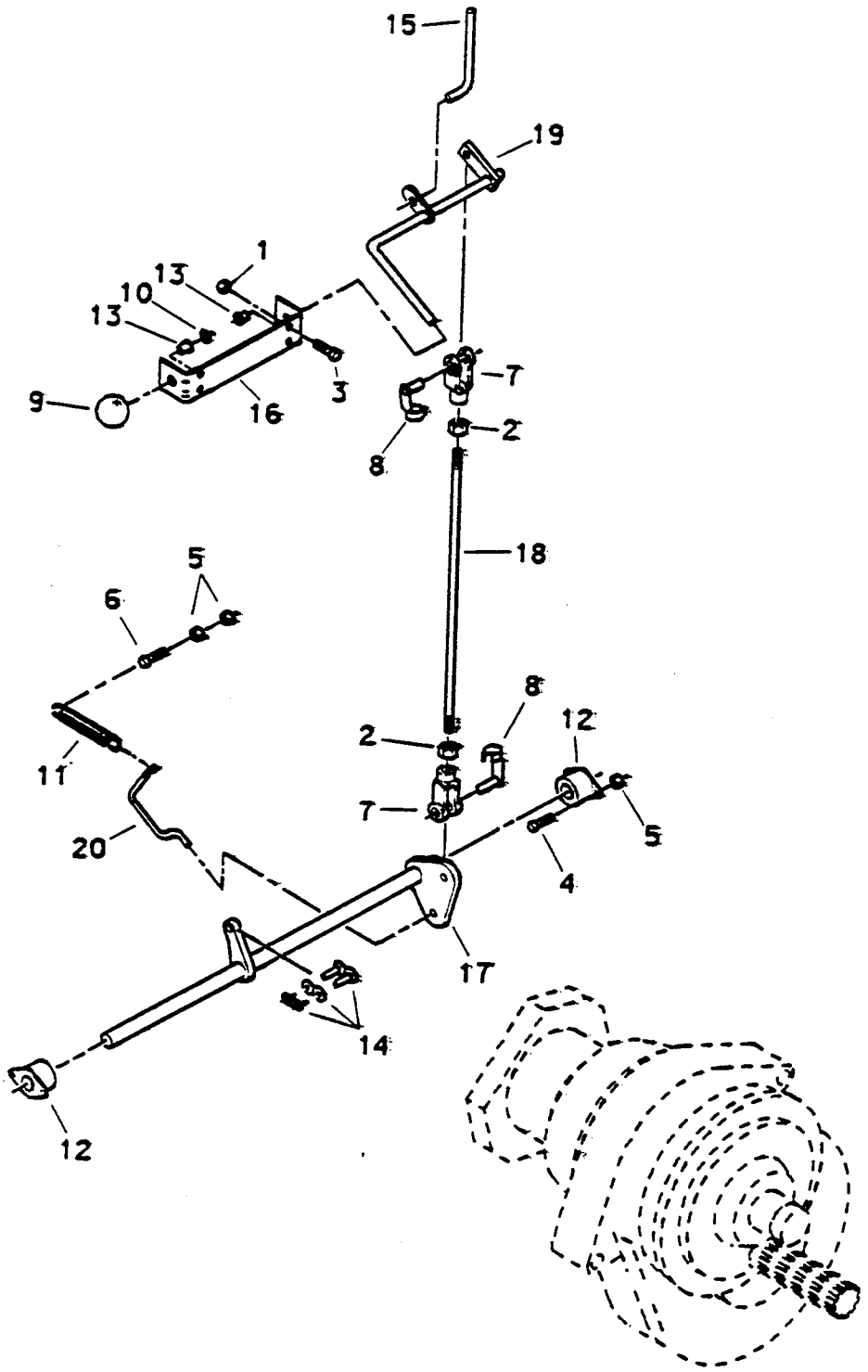

B

801-836

https://truckmanualshub.com/

GROUND DRIVE TRANSMISSION CONTROLS

REF NO.	PART NUMBER	QTY	DESCRIPTION	REMARKS
1.	105-003	2	FLANGE LOCKNUT (5/16-NC)	
2.	105-093	2	NUT (3/8-NF)	
3.	105-823	2	FLANGE LOCK BOLT (5/16-NC X 3/4")	
4.	105-826	4	FLANGE LOCK BOLT (3/8-NC X 1")	
5.	105-845	6	FLANGE LOCKNUT (3/8-NC)	
6.	105-874	1	FLANGE LOCK BOLT (3/8-NC X 1-1/2")	
7.	110-027	2	CLEVIS (3/8-NF)	
8.	110-286	2	SPRING CLEVIS PIN (3/8")	
9.	110-465	1	KNOB (1/2-NC. ORANGE)	
10.	115-482	2	EXTERNAL GRIP RING (FOR 1/2" SHAFT)	
11.	115-602	1	EXTENSION SPRING (5/8" OD X 6-3/4" LG)	
12.	125-609	2	FLANGE BRONZE BEARING (.75" ID X 3" LG)	
13.	125-779	1	NYLINER BUSHING (.501" ID)	
14.	130-304	1	CONNECTOR LINK (#80)	
15.	183-652	1	LOCK OUT PIN	
16.	315-054	1	SHIFT LEVER SUPPORT	
17.	365-121	1	SHIFT ROD LEVER	
18.	365-161	1	SHIFT ROD	
19.	365-164	1	SHIFT LEVER	
20.	365-166	1	SPRING LINK	

FOOTNOTES

https://truckmanualshub.com/

FRONT DIFFERENTIAL MOUNT

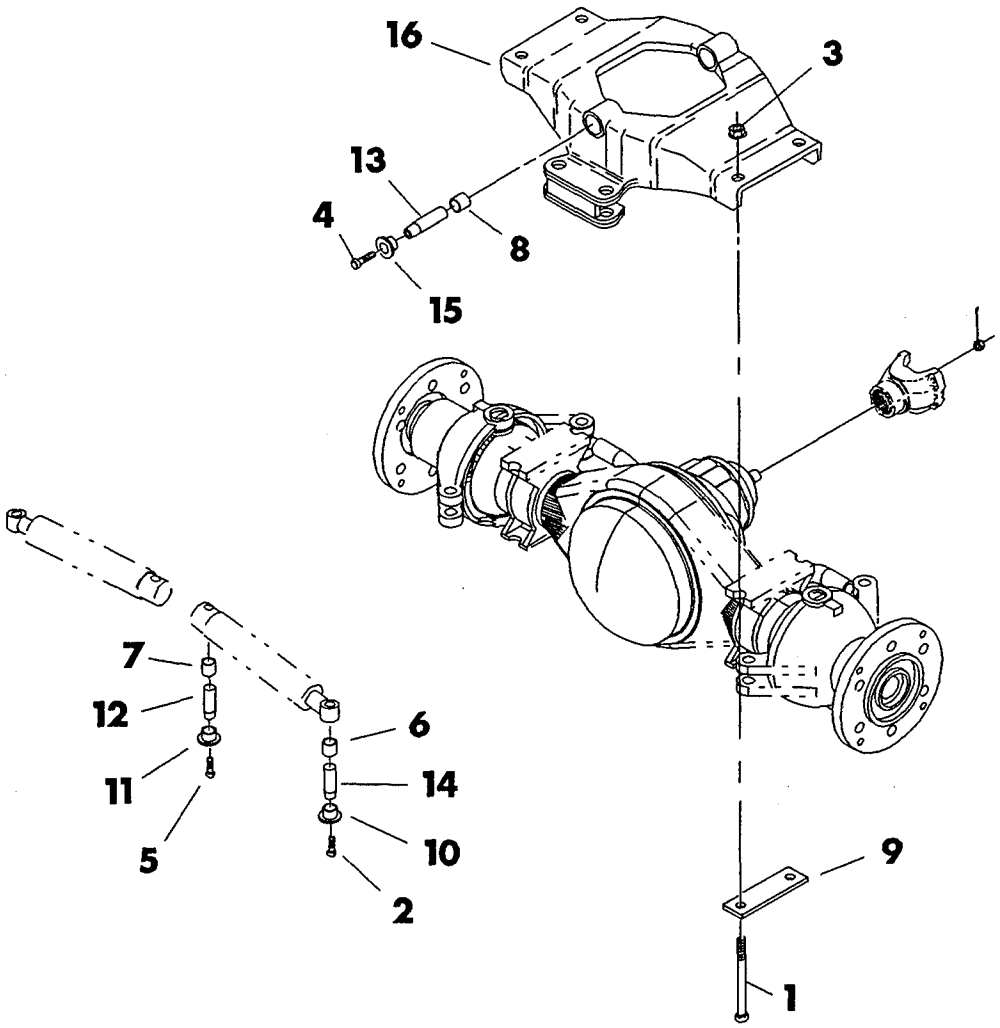

Ref. No.	Part Number	Qty.	Description
1.	105-492	4	Bolt (1-NC x 10")
2.	105-874	2	Bolt (3/8-NC x 1-1/2")
3.	105-919	4	Nut (1-NC)
4.	105-969	2	Flange Lock Bolt (5/8-NC x 1-1/2")
5.	106-096	2	Flange Lock Bolt (1/2-NC x 1-3/4")
6.	125-770	2	Fiber Bushing (1.25" OD x 1" LG)
7.	125-771	2	Fiber Bushing (1.5" OD x 1.25" LG)
8.	125-785	2	Fiber Bushing (1.625" OD x 1.5" LG)

Ref. No.	Part Number	Qty.	Description
9.	314-116	2	Axle Retainer Strap
10.	181-981	2	Tapered Insert (for 1" DIA pin)
11.	181-982	2	Tapered Insert (for 1.375" DIA pin)
12.	183-588	2	Tapered Pin (1.25" DIA x 3.94" LG, 1/2-NC)
13.	183-606	2	Tapered Pin (1.375" DIA x 5.5" LG, 5/8-NC)
14.	183-675	2	Tapered Pin (1" DIA x 3.5" LG, 3/8-NC)
15.	184-065	2	Tapered Insert (for 1.375" DIA pin)
16.	314-075	1	Differential Mount

https://truckmanualshub.com/

NOTES:

https://truckmanualshub.com/

FRONT STEERING DIFFERENTIAL
ROCKWELL

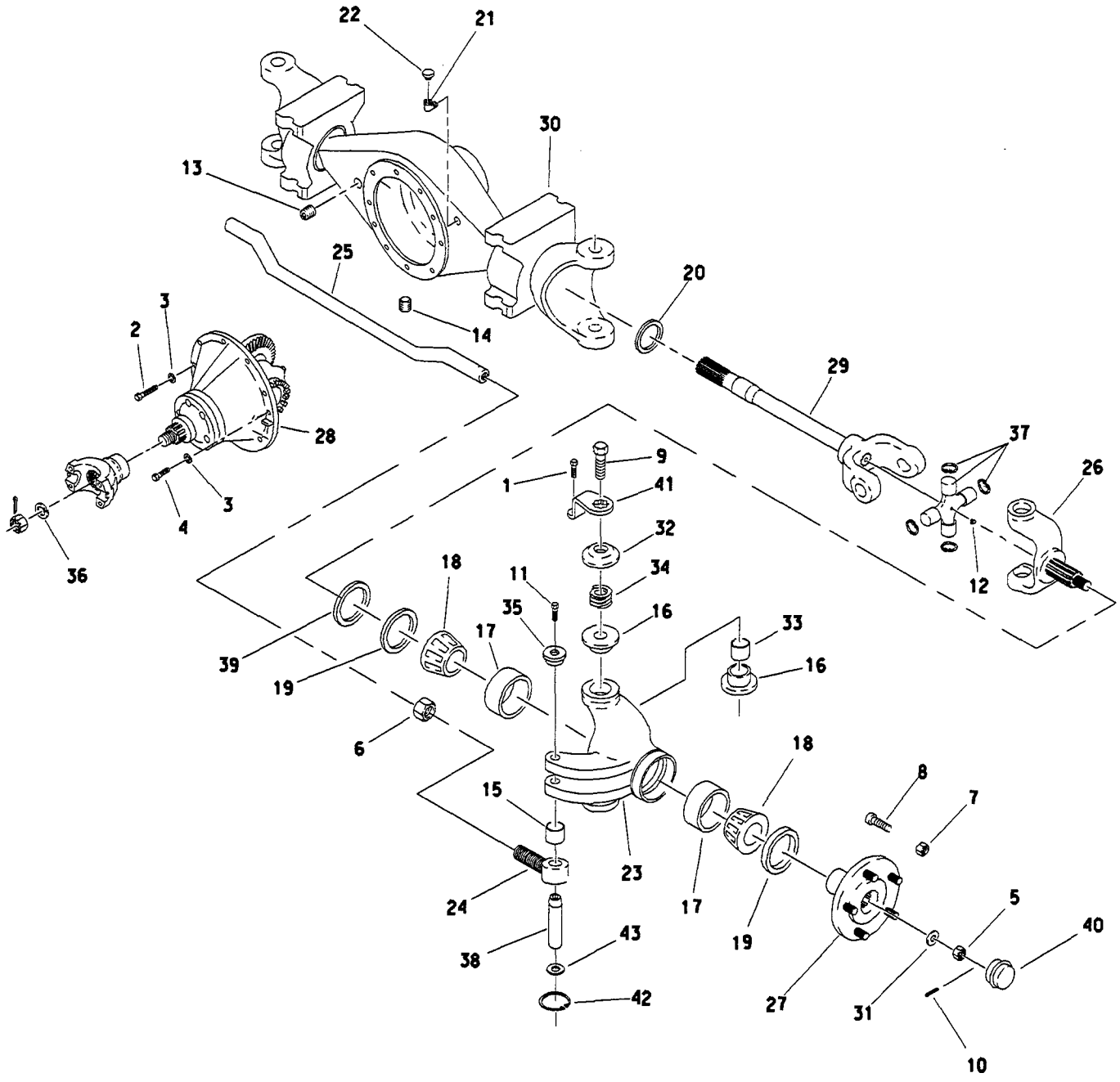

https://truckmanualshub.com/

FRONT STEERING DIFFERENTIAL
ROCKWELL

REF NO.	PART NUMBER	QTY	DESCRIPTION	REMARKS
1.	105-825	4	BOLT (3/8-NC X 3/4")	
2.	105-046	2	BOLT (7/16-NC X 2-1/4")	
3.	105-073	10	LOCK WASHER (7/16")	
4.	105-132	8	BOLT (7/16-NC X 1-1/2")	
5.	105-349	2	CASTLE NUT (1-NF)	
6.	105-378	2	JAM NUT (1-NF)	
7.	105-424	12	LUG NUT (3/4-NF)	
8.	105-426	12	LUG BOLT (3/4-NF X 1-13/16")	
9.	105-491	4	BOLT (1-NF X 3")	
10.	105-518	2	COTTER PIN	
11.	105-874	2	FLG LK BOLT (3/8-NC X 1-1/2")	SEE FOOTNOTE 1
	105-826	2	FLG LK BOLT (3/8-NC X 1")	SEE FOOTNOTE 2
12.	115-002	2	ZERK (02N90)	
13.	115-152	1	PLUG (12N, SQ HD)	
14.	115-165	1	PLUG (08N, ALN HD)	
15.	125-432	2	BUSHING	
16.	125-724	8	URETHANE FLANGE BUSHING	
17.	126-012	4	RACE	
18.	126-013	4	BEARING	
19.	155-864	4	INTERNAL SEAL	
20.	155-868	2	INTERNAL SEAL	
21.	156-241	1	ELBOW	
22.	159-003	1	VENT PLUG (02N)	
23.	160-404	2	SPINDLE HOUSING	
24.	160-413	2	ROD END	
25.	160-431	1	TIE ROD	
	160-419	1	TIE ROD	
26.	160-416	2	SPINDLE SHAFT YOKE	
27.	160-417	2	SPINDLE	
28.	161-125	1	CARRIER PARTS ASSEMBLY	
29.	161-141	2	AXLE SHAFT YOKE	
30.	161-146	1	DIFFERENTIAL HOUSING	
31.	181-204	2	WASHER (2-3/4")	
32.	181-208	4	WASHER (2-1/2")	
33.	181-213	4	BUSHING	
34.	181-253	AR	MACHINERY BUSHING	
35.	181-981	2	TAPERED INSERT	
36.	182-141	1	YOKE	
37.	182-149	2	CROSS AND BEARING	
38.	183-690	2	TAPERED PIN	
39.	184-134	2	BUSHING	
40.	205-744	2	HUB CAP	
41.	315-038	4	SPINDLE BOLT LOCK	
	190-447		SPINDLE BOLT CONVERSION KIT	SEE F/N #3 & INC REF #"S 1,9,16,32,33,34 & 41
42.	115-524	2	SNAP RING	
43.	110-078	2	MACHINERY BUSHING	

FOOTNOTES

1-EARLY STYLE PIN (REF #38) WAS TAPPED FOR 1-1/2" BOLT.
2-CURRENT PRODUCTION PIN USES 1" LONG BOLT.
3-REFER TO INSTALLATION DIAGRAM 050-946

https://truckmanualshub.com/

RIGID REAR DIFFERENTIAL

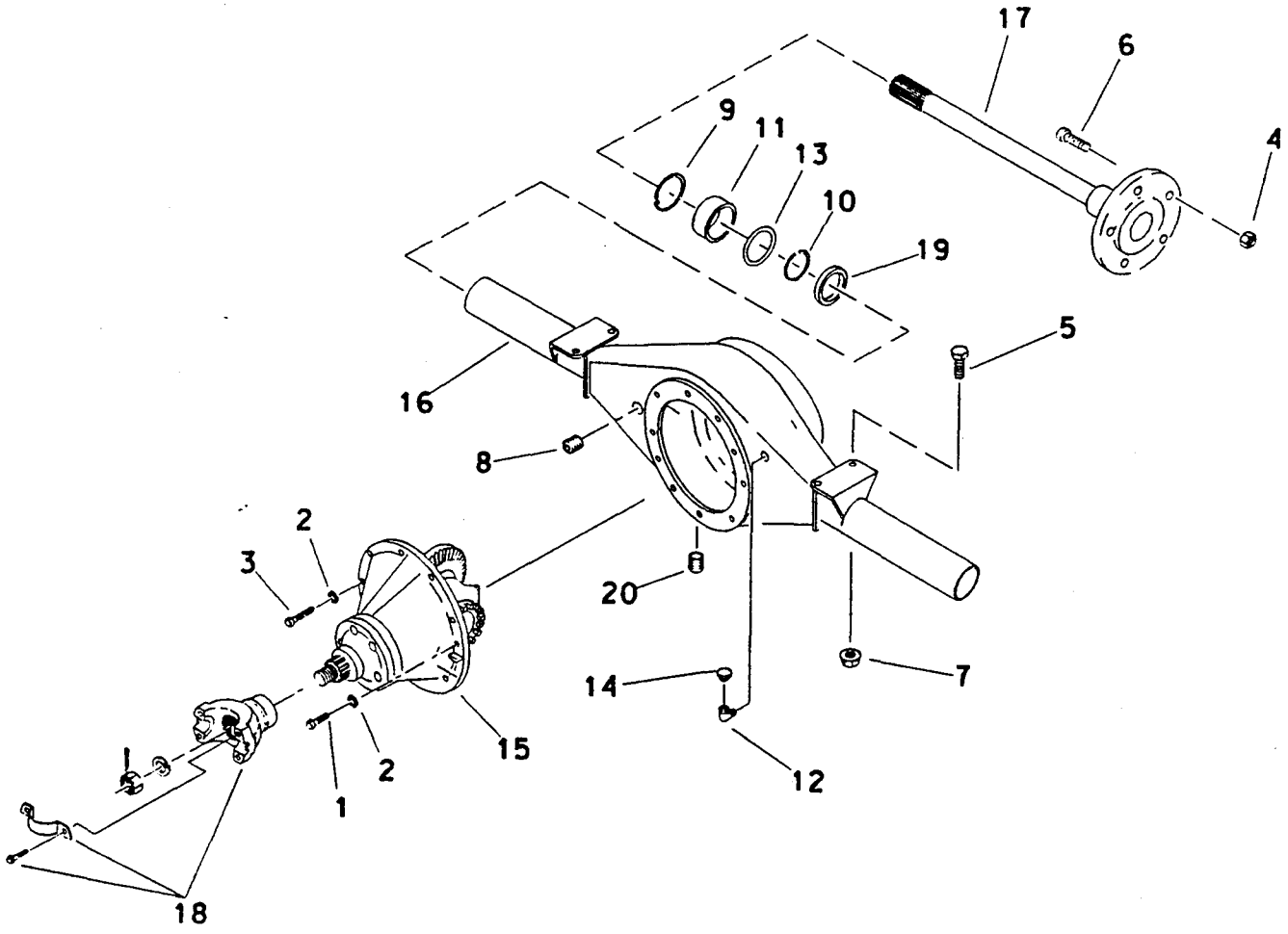

https://truckmanualshub.com/

RIGID REAR DIFFERENTIAL

REF NO.	PART NUMBER	QTY	DESCRIPTION	REMARKS
1.	105-046	2	BOLT (7/16-NC X 2-1/4")	
2.	105-073	10	LOCK WASHER (7/16")	
3.	105-132	8	BOLT (7/16-NC X 1-1/2")	
4.	105-424	10	LUG NUT (3/4-NF)	
5.	105-425	4	BOLT (1-NC X 2-1/2")	
6.	105-426	10	LUG BOLT (3/4-NF X 1-13/16")	
7.	105-919	4	FLANGE NUT (1-NC)	
8.	115-152	1	PIPE PLUG (12N. SQ HD)	
9.	115-488	2	INTERNAL SNAP RING	
10.	115-546	2	RETAINER RING	
11.	125-027	2	BALL BEARING	
12.	156-241	1	STREET ELL (02N-02NF90)	
13.	157-043	2	O-RING (347 D70)	
14.	159-003	1	VENT PLUG (02N)	
15.	161-125	1	CARRIER PARTS ASSEMBLY	
16.	161-128	1	DIFFERENTIAL HOUSING	
17.	161-132	2	AXLE	
18.	182-141	1	YOKE	
19.	184-083	2	RETAINER	
20.	115-165	1	PIPE PLUG (08N)	

FOOTNOTES

https://truckmanualshub.com/

RIGID REAR DIFFERENTIAL

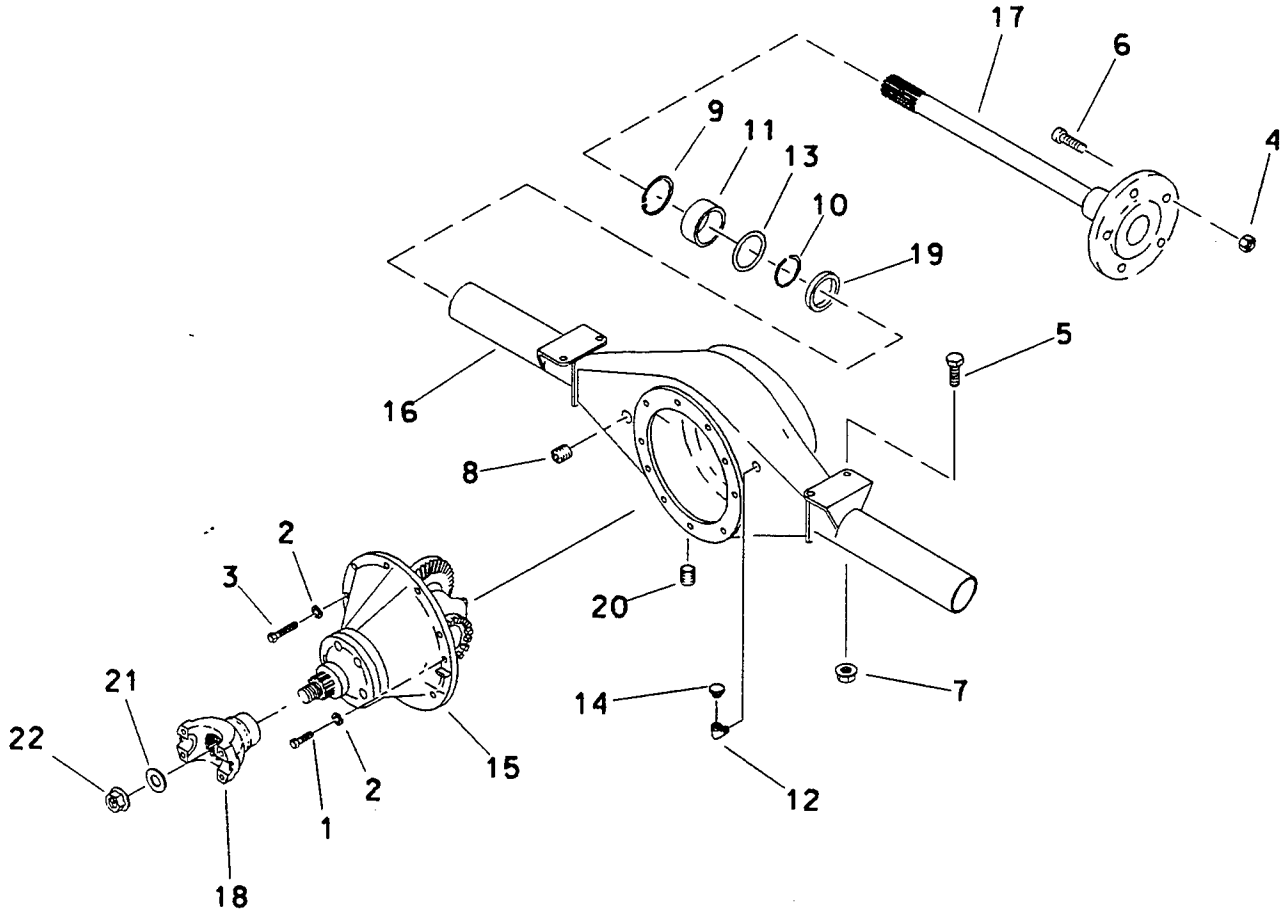

https://truckmanualshub.com/

RIGID REAR DIFFERENTIAL

REF NO.	PART NUMBER	QTY	DESCRIPTION	REMARKS
1.	105-046	2	BOLT (7/16-NC X 2-1/4")	
2.	105-073	10	LOCK WASHER (7/16")	
3.	105-132	8	BOLT (7/16-NC X 1-1/2")	
4.	105-424	10	LUG NUT (3/4-NF)	
5.	105-425	4	BOLT (1-NC X 2-1/2")	
6.	105-426	10	LUG BOLT (3/4-NF X 1-13/16")	
7.	105-919	4	FLANGE NUT (1-NC)	
8.	115-152	1	PIPE PLUG (12N, SQ HD)	
9.	115-488	2	INTERNAL SNAP RING	
10.	115-546	2	RETAINER RING	
11.	125-027	2	BALL BEARING	
12.	156-241	1	STREET ELL (02N-02NF90)	
13.	157-043	2	O-RING (347 D70)	
14.	159-003	1	VENT PLUG (02N)	
15.	161-125	1	CARRIER PARTS ASSEMBLY	
16.	161-128	1	DIFFERENTIAL HOUSING	
17.	161-132	2	AXLE (27.06 LG, 34 S)	
18.	182-141	1	YOKE (2.25" OD, 10 S)	
19.	184-083	2	RETAINER	
20.	115-165	1	PIPE PLUG (08N)	
21.	105-930	1	WASHER (1")	
22.	106-208	1	FLG LK NUT (1-UNEF)	

FOOTNOTES

https://truckmanualshub.com/

REAR STEER DIFFERENTIAL
ROCKWELL

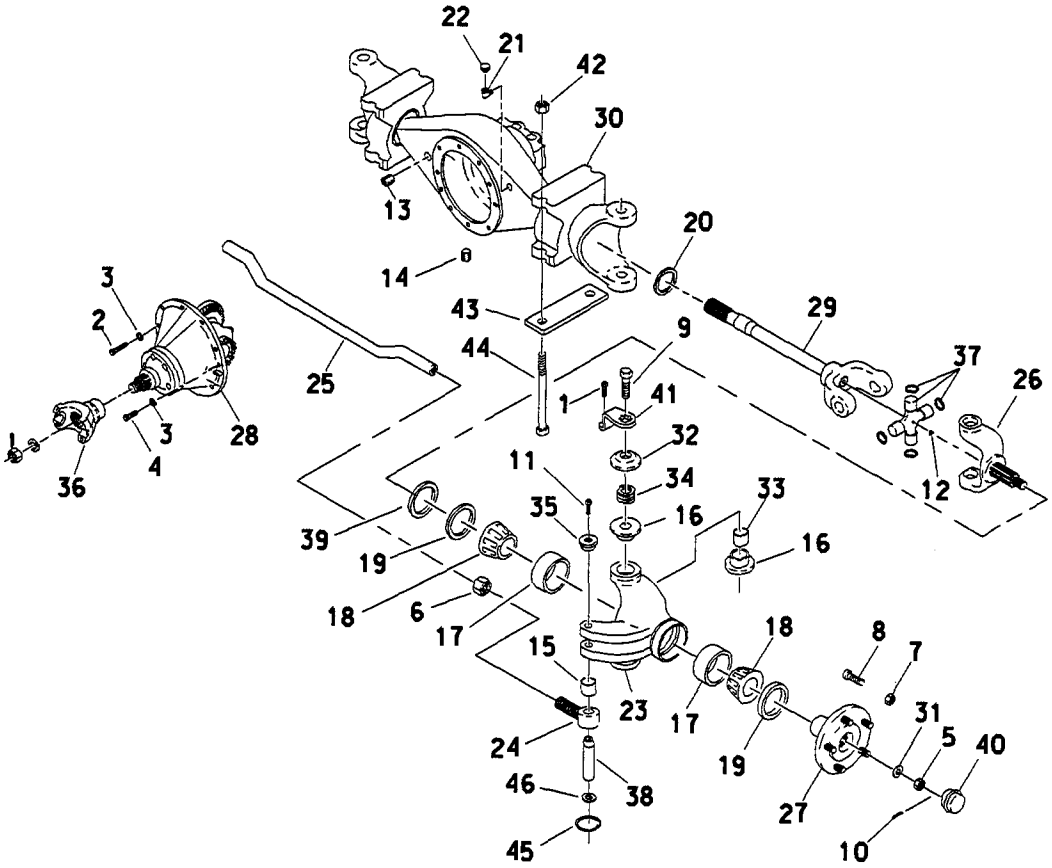

https://truckmanualshub.com/

REAR STEER DIFFERENTIAL
ROCKWELL

REF NO.	PART NUMBER	QTY	DESCRIPTION	REMARKS
1.	105-825	4	BOLT (3/8-NC X 3/4")	
2.	105-046	2	BOLT (7/16-NC X 2-1/4")	
3.	105-073	10	LOCK WASHER (7/16")	
4.	105-132	8	BOLT (7/16-NC X 1-1/2")	
5.	105-349	2	CASTLE NUT (1-NF)	
6.	105-378	2	JAM NUT (1-NF)	
7.	105-424	12	LUG NUT (3/4-NF)	
8.	105-481	12	LUG BOLT (3/4-NF X 2-9/16")	
9.	105-491	4	BOLT (1-NF X 3")	
10.	105-502	2	COTTER PIN (3/16 X 2")	
11.	105-874	2	FLG LOCK BOLT (3/8-NC X 1-1/2")	SEE FOOTNOTE 1
	105-826	2	FLG LOCK BOLT (3/8-NC X 1")	SEE FOOTNOTE 2
12.	115-002	2	ZERK (02N, 90)	
13.	115-152	1	PLUG (12N, SQ)	
14.	115-165	1	PLUG (08N, ALN)	
15.	125-432	2	BRONZE BUSHING (1")	
16.	125-724	8	URETHANE FLG BUSHING (1-1/4")	
17.	126-012	4	RACE	
18.	126-013	4	BEARING	
19.	155-864	4	INTERNAL SEAL	
20.	155-868	2	SEAL	
21.	156-241	1	STREET ELBOW (02N-02NF90)	
22.	159-003	1	VENT PLUG (02N)	
23.	160-404	2	SPINDLE HOUSING	
24.	160-413	2	ROD END	
25.	160-431	1	TIE ROD	
	160-419	1	TIE ROD	
26.	160-416	2	SPINDLE SHAFT	
27.	160-417	2	SPINDLE	
28.	161-125	1	DIFFERENTIAL CARRIER	
29.	161-141	2	AXLE SHAFT YOKE	
30.	161-147	1	DIFFERENTIAL HOUSING	
31.	181-204	2	WASHER	
32.	181-208	4	SPINDLE WASHER (1")	
33.	181-213	4	COMPOSITION BUSHING (1")	
34.	181-253	8	MACHINERY BUSHING (1")	
35.	181-981	2	TAPERED INSERT (1.000")	
36.	182-141	1	YOKE	
37.	182-149	2	CROSS AND BEARING KIT	INCL. REF. NO. 12
38.	183-690	2	TAPERED PIN (1.000 X 4.765)	
39.	184-134	2	SEAL RING	
40.	205-744	2	HUB CAP	
41.	315-038	4	SPINDLE BOLT LOCK	
	190-447		SPINDLE BOLT CONVERSION KIT	INC. REF. NO.'S 1,9,16,32,33,34,& 41. SEE F/N 3
42.	105-919	4	FLANGE NUT (1-NC)	
43.	314-116	2	AXLE RETAINER STRAP	
44.	105-492	4	BOLT (1-NC X 10")	
45.	115-524	2	EXTERNAL SNAP RING	
46.	110-078	2	MACHINERY BUSHING (1")	

FOOTNOTES

1. EARLY STYLE PIN (REF 38) WAS TAPPED FOT A 1-1/2" LONG BOLT.
2. CURRENT PRODUCTION PIN USES A 1" LONG BOLT.
3. REFER TO INSTALLATION DIAGRAM 050-946.

https://truckmanualshub.com/

REAR STEERING DIRRERENTIAL
EATON

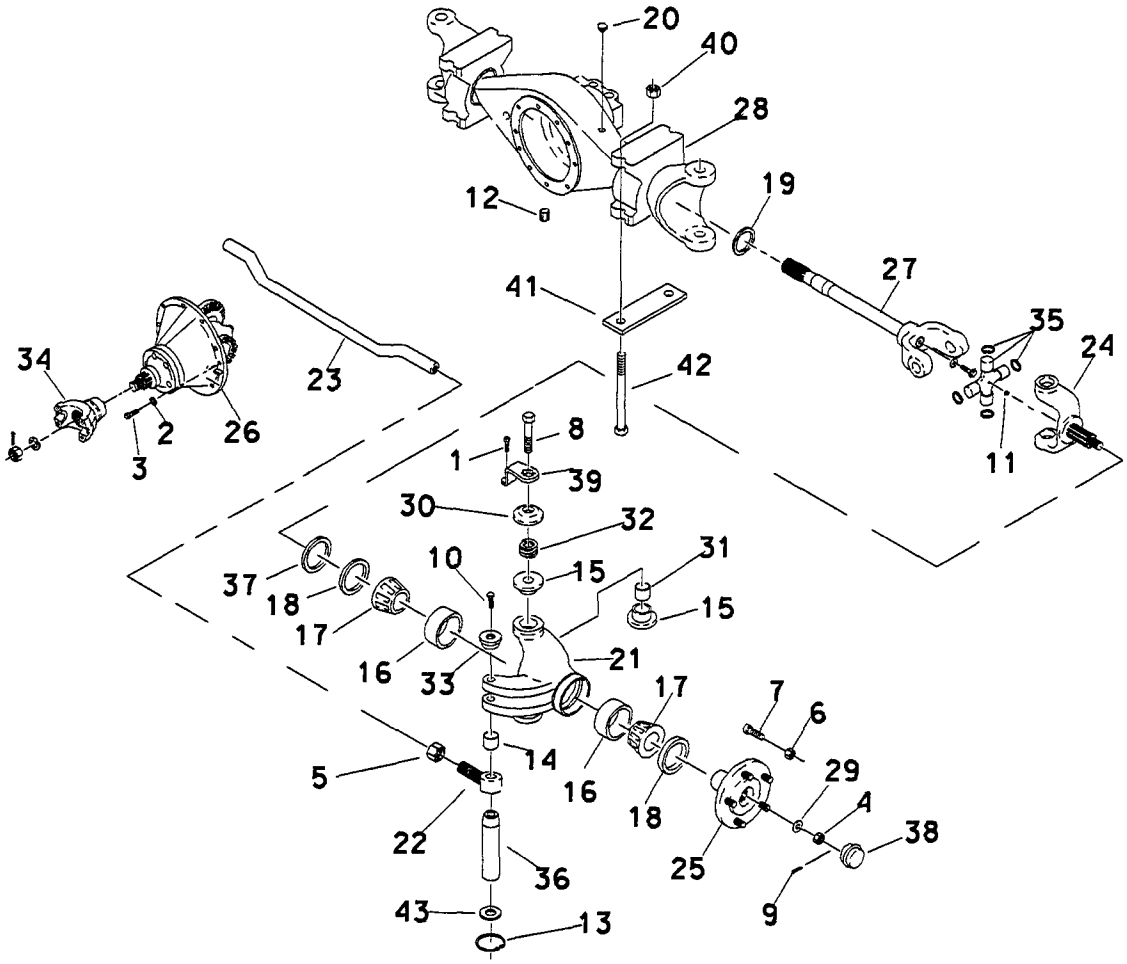

802-586

https://truckmanualshub.com/

REAR STEERING DIRRERENTIAL
EATON

REF NO.	PART NUMBER	QTY	DESCRIPTION	REMARKS
1.	105-825	4	BOLT (3/8-NC X 3/4")	
2.	105-073	10	LOCK WASHER (7/16")	
3.	105-222	2	BOLT (7/16-NC X 1-3/4")	
4.	105-349	2	CASTLE NUT (1-NF)	
5.	105-378	2	JAM NUT (1-NF)	
6.	105-424	12	LUG NUT (3/4-NF)	
7.	105-481	12	LUG BOLT (3/4-NF X 2-9/16")	
8.	105-491	4	BOLT (1-NF X 3")	
9.	105-502	2	COTTER PIN (3/16 X 2")	
10.	105-874	2	FLG LOCK BOLT (3/8-NC X 1-1/2")	SEE FOOTNOTE 1
	105-826	2	FLG LOCK BOLT (3/8-NC X 1")	SEE FOOTNOTE 2
11.	115-002	2	ZERK (02N, 90)	
12.	115-152	1	PLUG (12N, SQ)	
13.	115-524	2	EXTERNAL SNAP RING	
14.	125-432	2	BRONZE BUSHING (1")	
15.	125-724	8	URETHANE FLG BUSHING (1-1/4")	
16.	126-012	4	RACE	
17.	126-013	4	BEARING	
18.	155-864	4	INTERNAL SEAL	
19.	155-868	2	SEAL	
20.	159-003	1	VENT PLUG (02N)	
21.	160-404	2	SPINDLE HOUSING	
22.	160-413	2	ROD END	
23.	160-431	1	TIE ROD	
	160-419	1	TIE ROD	
24.	160-416	2	SPINDLE SHAFT	
25.	160-417	2	SPINDLE	
26.	160-288	1	DIFFERENTIAL CARRIER	
27.	161-148	2	AXLE SHAFT YOKE	
28.	161-158	1	DIFFERENTIAL HOUSING	
29.	181-204	2	WASHER	
30.	181-208	4	SPINDLE WASHER (1")	
31.	181-213	4	COMPOSITION BUSHING (1")	
32.	181-253	8	MACHINERY BUSHING (1")	
33.	181-981	2	TAPERED INSERT (1.000")	
34.	182-141	1	YOKE	
35.	182-149	2	CROSS AND BEARING KIT	
36.	183-690	2	TAPERED PIN (1.000 X 4.765)	
37.	184-134	2	SEAL RING	
38.	205-744	2	HUB CAP	
39.	315-038	4	SPINOLE BOLT LOCK	
	190-447		SPINOLE BOLT CONVERSION KIT	INC. REF. NO.'S 1,9,16,32-34,& 41. SEE FOOTNOTE 3
40.	105-919	4	FLANGE NUT (1-NC)	
41.	314-116	2	AXLE RETAINER STRAP	
42.	105-492	4	BOLT (1-NC X 10")	
43.	110-078	2	MACHINERY BUSHING (1")	

FOOTNOTES

1. EARLY STYLE PIN (REF 38) WAS TAPPED FOR A 1-1/2" LONG BOLT.
2. CURRENT PRODUCTION PIN USES A 1" LONG BOLT
3. REFER TO INSTALLATION DIAGRAM 050-946.

https://truckmanualshub.com/

REAR STEERING INDICATOR

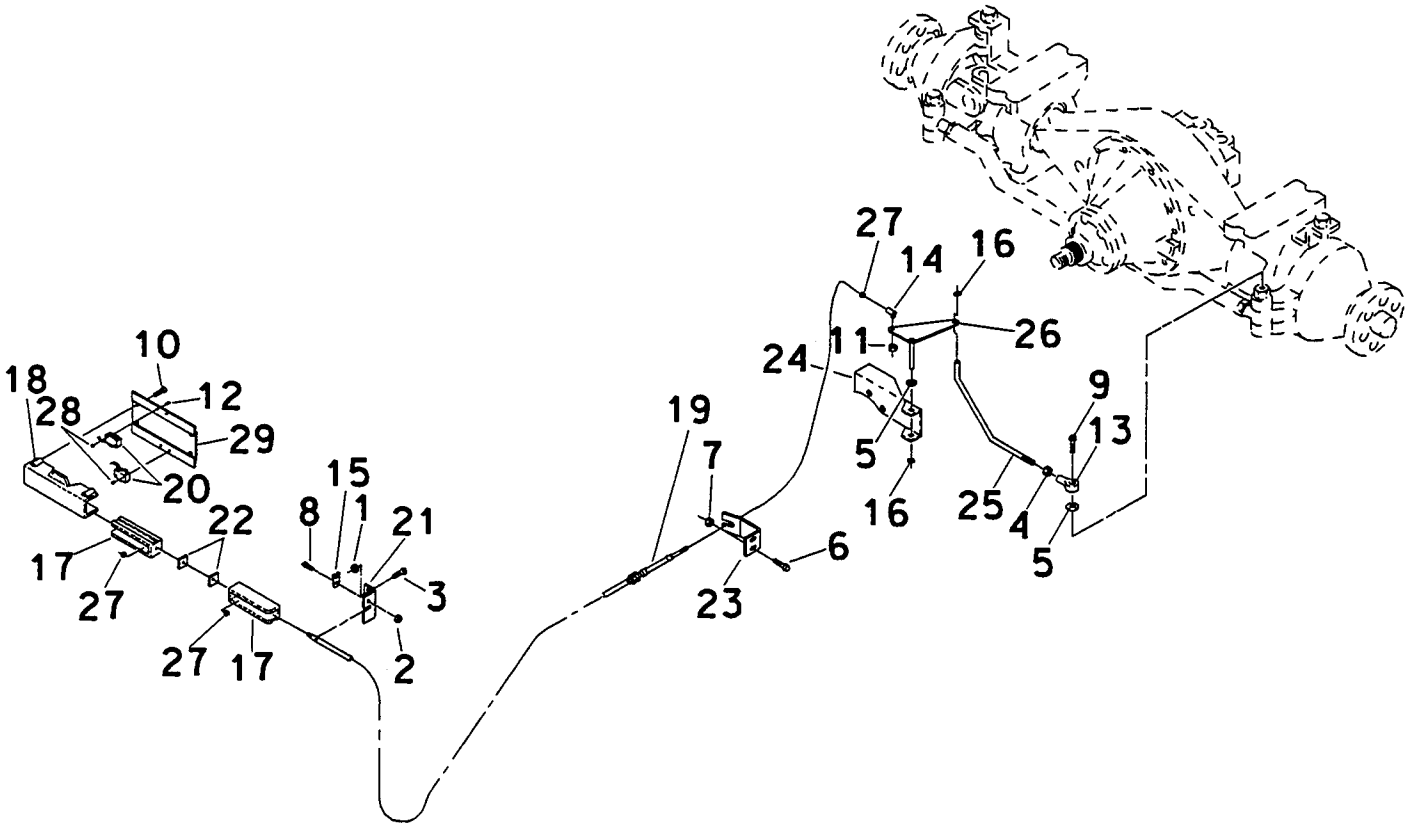

https://truckmanualshub.com/

REAR STEERING INDICATOR

REF NO.	PART NUMBER	QTY	DESCRIPTION	REMARKS
1.	105-003	2	FLANGE LOCKNUT	
2.	105-085	1	LOCKNUT (1/4-NC)	
3.	105-090	2	BOLT (5/16-NC X3/4")	
4.	105-093	1	NUT (3/8-NF)	
5.	105-264	2	WASHER (3/8")	
6.	105-827	2	FLANGE LOCK BOLT	
7.	105-834	2	FLANGE LOCKNUT	
8.	105-865	1	BOLT (1/4-NC X3/4")	
9.	105-874	1	FLANGE LOCK BOLT	
10.	106-010	4	FLANGE SCREW	
11.	106-154	1	FLANGE LOCKNUT	
12.	106-315	4	SCREW (NO. 4-40 X 1")	
	106-155		SCREW (NO. 4-40 X 5/8")	
13.	110-102	1	ROD END (3/8-NF)	
14.	110-318	1	BALL JOINT (NO. 10-32)	
15.	110-522	1	CONDUIT CLAMP	
16.	115-477	2	EXTERNAL GRIP RING	
17.	115-787	2	STEERING INDICATOR	
18.	115-788	1	STEERING INDICATOR HOUSING	
19.	196-146	1	CABLE	
20.	215-087	2	SWITCH	
	217-715		SWITCH	
21.	314-130	1	CABLE MOUNT	
22.	314-153	3	REAR STEERING INDICATOR	
23.	363-123	1	CABLE BRACKET	
24.	363-124	1	MOUNT BRACKET	
25.	365-141	1	LINK ROD (3/8-NF,11.1" LG)	
26.	365-162	1	PIVOT	
27.	506-021	3	NUT (NO. 10-32)	
28.	106-277	4	NUT (NO. 4-40)	
29.	362-735	1	PANEL	

FOOTNOTES

https://truckmanualshub.com/

DRIVE LINE

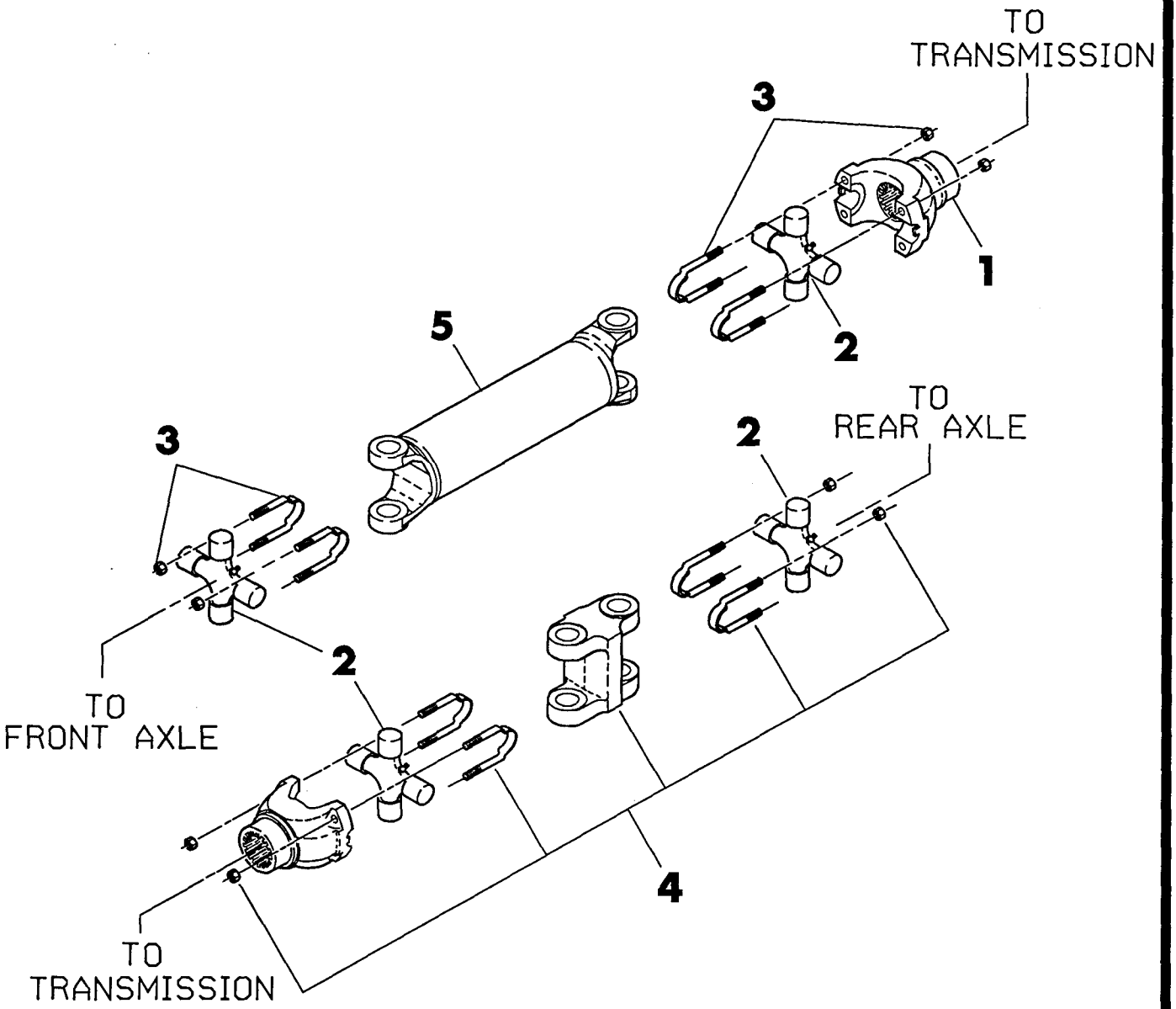

Ref. No.	Part Number	Qty.	Description
1.	182-140	1	Input Yoke (1.5" ID, 10S)
2.	182-145	2	Cross and Bearing
3.	182-146	2	U-Bolt Kit (Incl. lock washer and nut)
	105-072		Lock Washer (3/8")
	105-152		Nut (3/8-NF)

Ref. No.	Part Number	Qty.	Description
4.	182-147	1	Double Universal Joint (Incl. ref. no.'s 1, 2, 3 and 6)
5.	165-502	1	Drive Shaft
6.	182-142	1	Double Center Yoke

https://truckmanualshub.com/

BRAKE SYSTEM

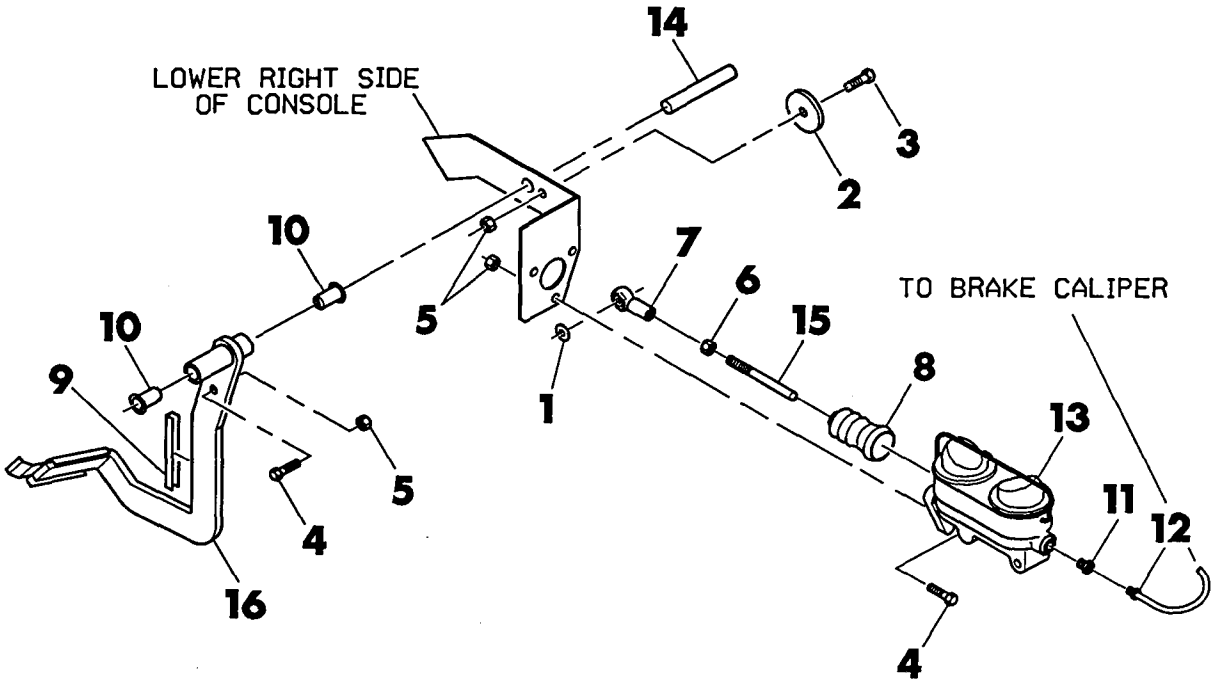

Ref. No.	Part Number	Qty.	Description
1.	105-117	1	Washer (5/16")
2.	105-223	1	Washer (3/8")
3.	105-826	1	Flange Lock Bolt (3/8-NC x 1")
4.	105-827	4	Flange Lock Bolt (3/8-NC x 1-1/4")
5.	105-834	5	Flange Locknut (3/8-NC)
6.	105-093	1	Nut (3/8-NF)
7.	110-102	1	Rod End (3/8-NF)
8.	115-329	1	Dust Cover
9.	115-704	4	Grommet Edging
10.	125-786	2	Bushing (1.125" LG)

Ref. No.	Part Number	Qty.	Description
11.	156-271	1	Adapter Fitting (3/8-SAE FM x 1/2-SAE M)
12.	160-650	1	Brake Line (3/16"T x 60")
13.	163-089	1	Master Cylinder
	163-095		Master Cylinder Cover
	163-096		Cylinder Cover Bellows
	190-180		Master Cylinder Repair Kit
14.	183-056	1	Pin (.625" DIA x 4" LG)
15.	361-887	1	Master Cylinder Rod (4" LG)
16.	365-112	1	Brake Pedal

https://truckmanualshub.com/

PARKING BRAKE

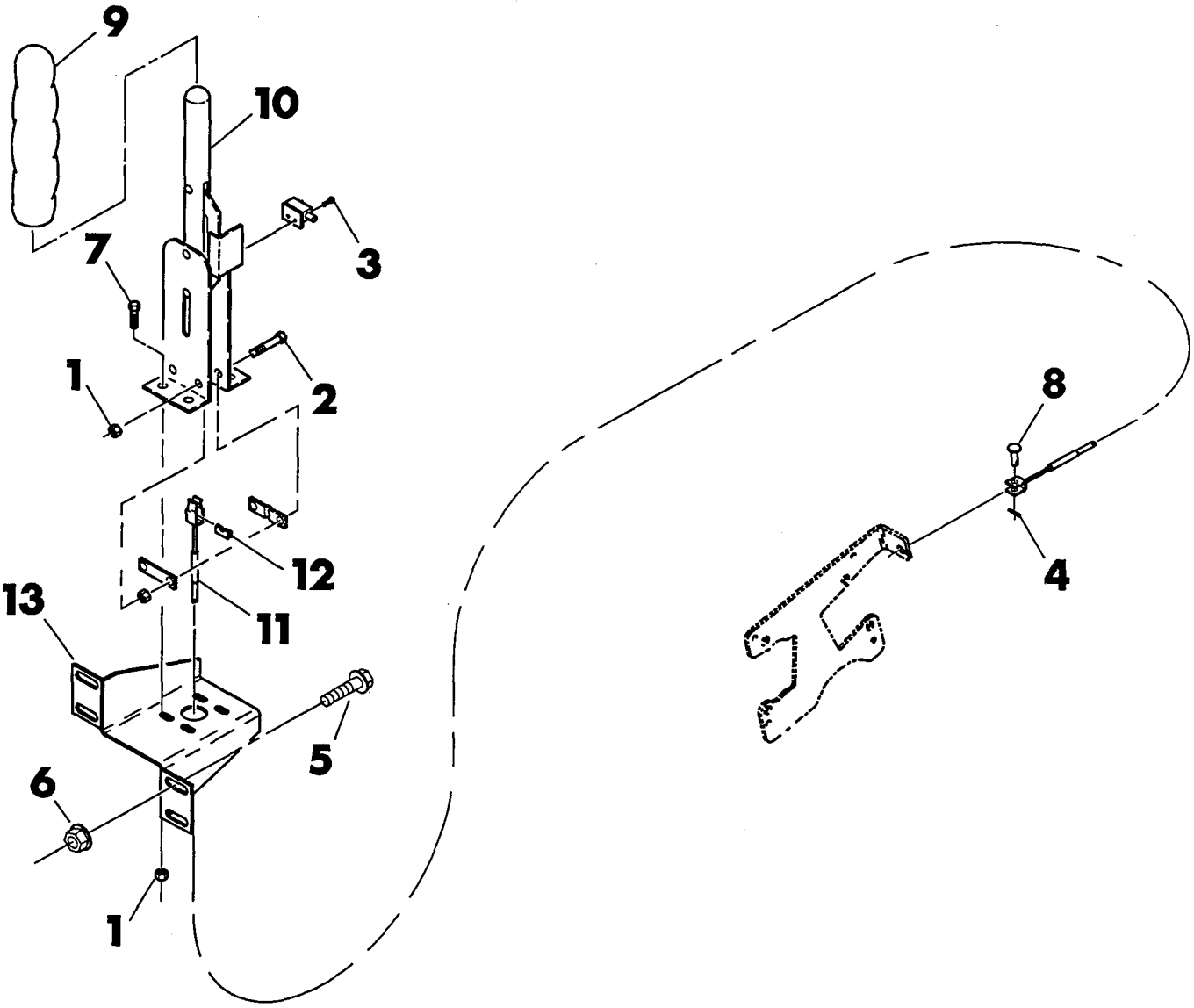

Ref. No.	Part Number	Qty.	Description
1.	105-003	8	Lock Nut (5/16-NC)
2.	105-109	2	Bolt (5/16-NC x 1-1/2")
3.	105-214	2	Flange Screw (No. 10-24 x 1/2")
4.	105-523	1	Cotter Pin (1/8" x 3/4")
5.	105-827	4	Flange Lock Bolt (3/8-NC x 1-1/4")
6.	105-845	4	Flange Locknut (3/8-NC)
7.	105-873	6	Flange Lock Bolt (5/16-NC x 1")

Ref. No.	Part Number	Qty.	Description
8.	110-306	1	Pin
9.	110-469	1	Handle Grip (4" LG)
10.	163-091	1	Parking Brake Lever
11.	163-097	1	Control Cable
12.	311-149	1	Cable End Clamp
13.	315-056	1	Brake Mount Plate

https://truckmanualshub.com/

TIRE—WHEEL

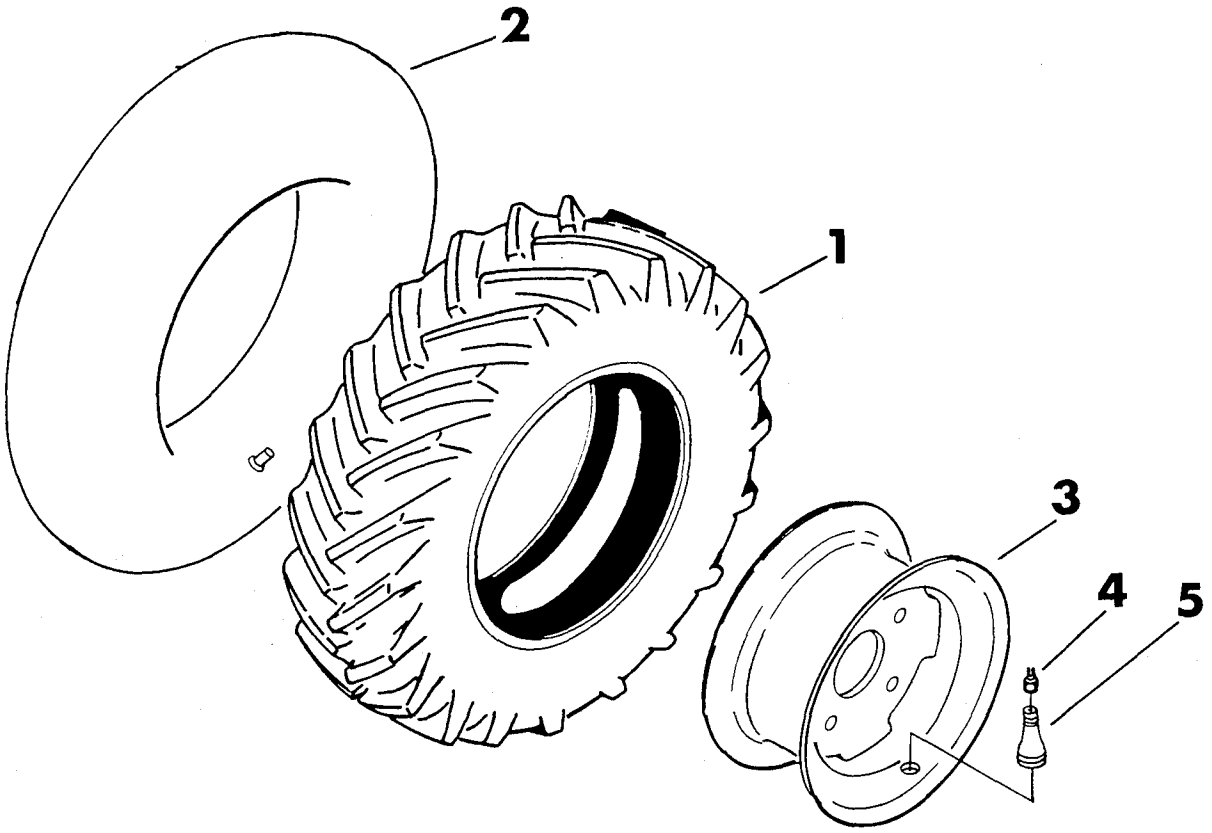

Ref. No.	Part Number	Qty.	Description
1.	205-109	4	Tire (31 x 15.5-15, 8-ply)
	205-857		Tire and Wheel (31 x 15.5-15)—Incl. ref. no.'s 1, 3, 4 and 5
	205-858		Tire, Tube and Wheel (31 x 15.5-15)—Incl. ref. no.'s 1, 2, 3 and 4
	205-119	4	Tire (41 x 16.5-16.1, 6-ply)
	205-812		Tire and Wheel (41 x 16.5-16.1)—Incl. ref. no.'s 1, 3, 4 and 5
	205-143	4	Tire (38 x 18.0-20.0, 8-ply)
	205-855		Tire and Wheel (38 x 18.0-20.0)—Incl. ref. no.'s 1, 3, 4 and 5

Ref. No.	Part Number	Qty.	Description
2.	205-160	4	Tube (31 x 15.5-15)—Incl. ref. no. 4
3.	205-288	4	Wheel (16.1" DIA, 6 holes on 8-3/4" B.C.)
	205-299	4	Wheel (20" DIA, 6 holes on 8-3/4" B.C.)
	205-300	4	Wheel (15" DIA, 6 holes on 8-3/4" B.C.)
4.	205-165		Valve Stem Cap
5.	205-168	4	Valve Stem (clamp-in, for 16.1" DIA wheel)—Incl. cap
	205-161	4	Valve Stem (snap-in, for 20" DIA wheel)—Incl. cap

https://truckmanualshub.com/

BACKFILL BLADE

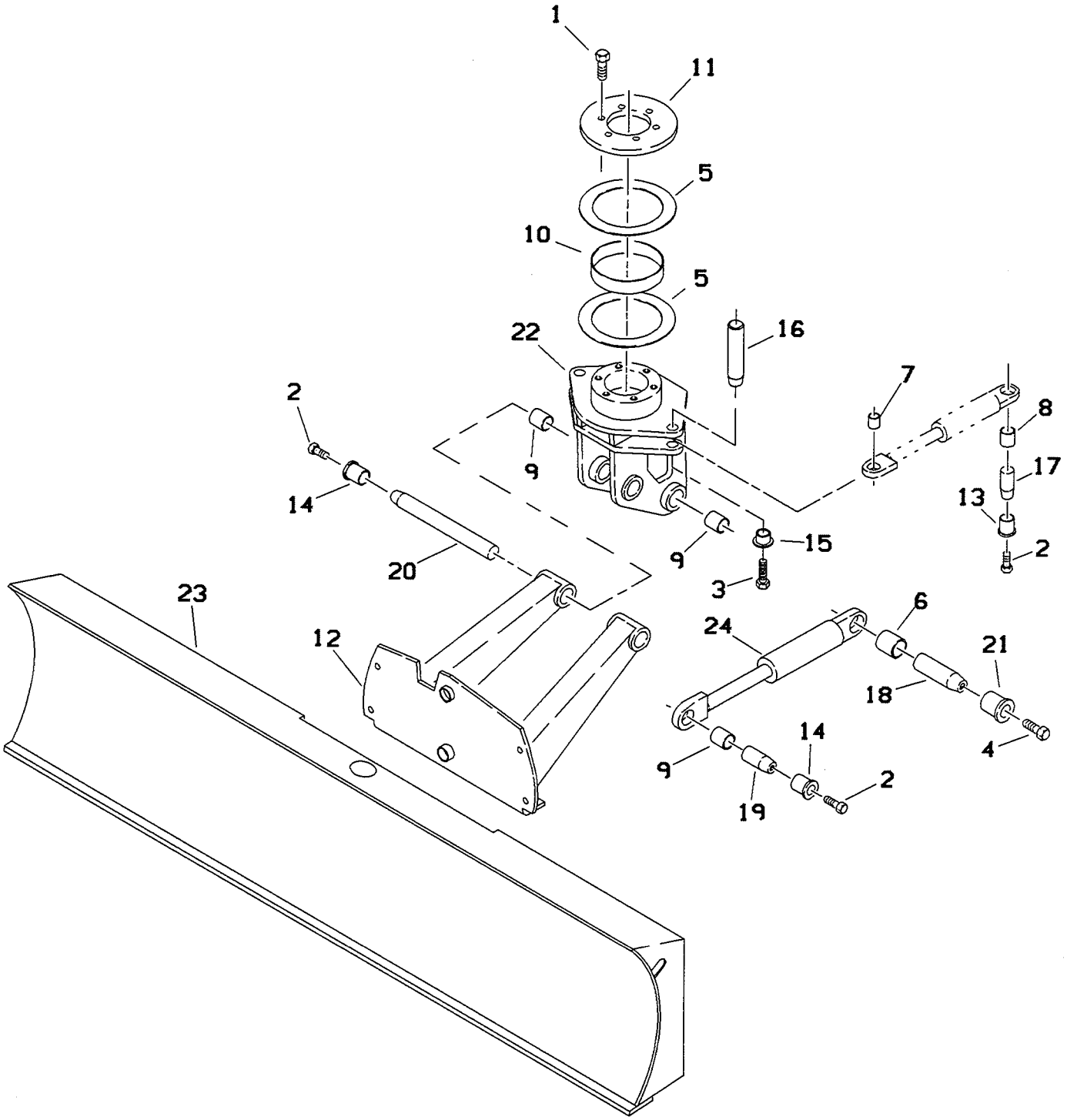

801-650

https://truckmanualshub.com/

BACKFILL BLADE

REF NO.	PART NUMBER	QTY	DESCRIPTION	REMARKS
1.	105-499	6	BOLT (3/4-NC X 1-3/4")	
2.	105-969	4	FLG BOLT (5/8-NC X 1-1/2",GD 8)	
3.	106-096	2	FLG BOLT (1/2-NC X 1-3/4",GD 8)	
4.	106-098	1	FLANGE BOLT (3/4-NC X 2",GD 8)	
5.	115-782	2	FRICTION WASHER (8.28")	
6.	125-754	1	COMPOSITION BUSHING	2" LG
	125-796	1	COMPOSITION BUSHING	1.75" LG AND SEE FOOTNOTE 1
7.	125-771	2	COMPOSITION BUSHING	
8.	125-772	2	COMPOSITION BUSHING	
9.	125-773	3	COMPOSITION BUSHING	
10.	125-780	1	COMPOSITION BUSHING	
11.	314-142	1	TOP BOLT PLATE	
12.	315-040	1	LIFT ARM	
	314-088	1	LIFT ARM	SEE FOOTNOTE 1
13.	181-974	2	TAPERED INSERT (1.5")	
14.	181-975	2	TAPERED INSERT (1.75")	
15.	181-982	2	TAPERED INSERT (1.25")	
16.	183-587	2	TAPERED PIN (1.25" X 3")	
17.	183-608	2	TAPERED PIN (1.5" X 3.75")	
18.	183-610	1	TAPERED PIN (2" X 6.9")	
19.	183-611	1	TAPERED PIN (1.75" X 4")	
20.	183-612	1	TAPERED PIN (1.75" X 16")	
21.	184-064	1	TAPERED INSERT (2")	
22.	314-076	1	BACKFILL BLADE PIVOT	
23.	314-081	1	BACKFILL BLADE	
24.	151-056	1	CYL (3.5" X 1.75" X 8.0")	
	151-058	1	CYL (3.0" X 1.75" X 6.0")	SEE FOOTNOTE 1

FOOTNOTES

1 -USE OF THESE PARTS PERMITS USE OF 31 X 15.5-15 TIRE OPTION. THE STANDARD 7520 BACKFILL BLADE PARTS WILL WORK WITH SMALLER TIRES.

https://truckmanualshub.com/

BACKFILL BLADE TILT

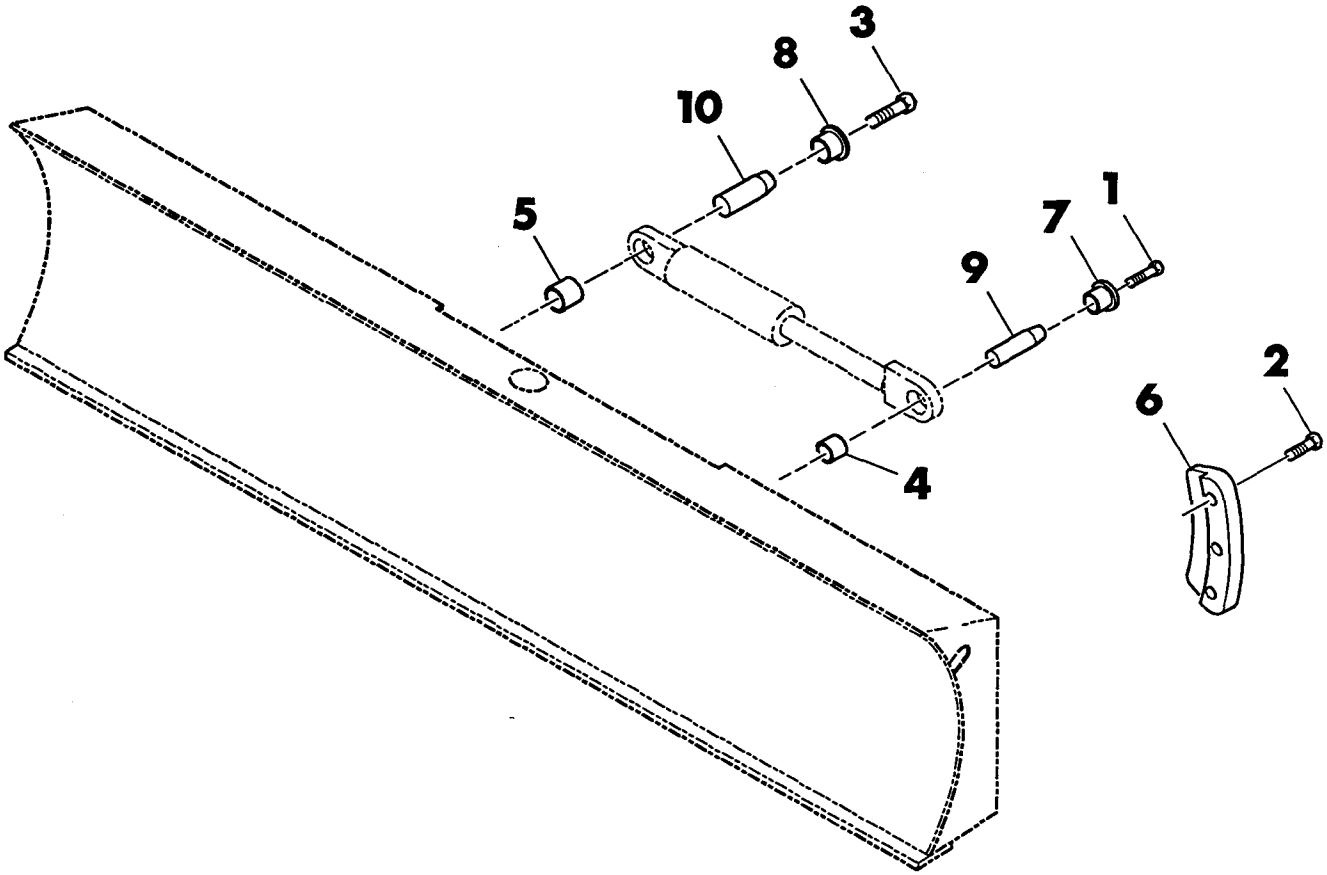

Ref. No.	Part Number	Qty.	Description
1.	105-874	1	Flange Lock Bolt (3/8-NC x 1-1/2")
2.	105-885	6	Bolt (1/2-NC x 2")
3.	106-096	1	Flange Bolt (1/2-NC x 1-3/4")
4.	125-770	1	Fiber Bushing (1" ID x 1" LG)
5.	125-771	1	Fiber Bushing (1.25" ID x 1.25" LG)
6.	314-104	2	Retainer
7.	181-981	1	Tapered Insert (.406" ID)—for 1" DIA pin
8.	181-982	1	Tapered Insert (.563" ID)— for 1-1/4" DIA pin
9.	183-584	1	Tapered Pin (1" DIA x 2.44" LG, 3/8-NC)
10.	183-613	1	Tapered Pin (1.25" DIA x 3.5" LG, 1/2-NC)

https://truckmanualshub.com/

GRILLE

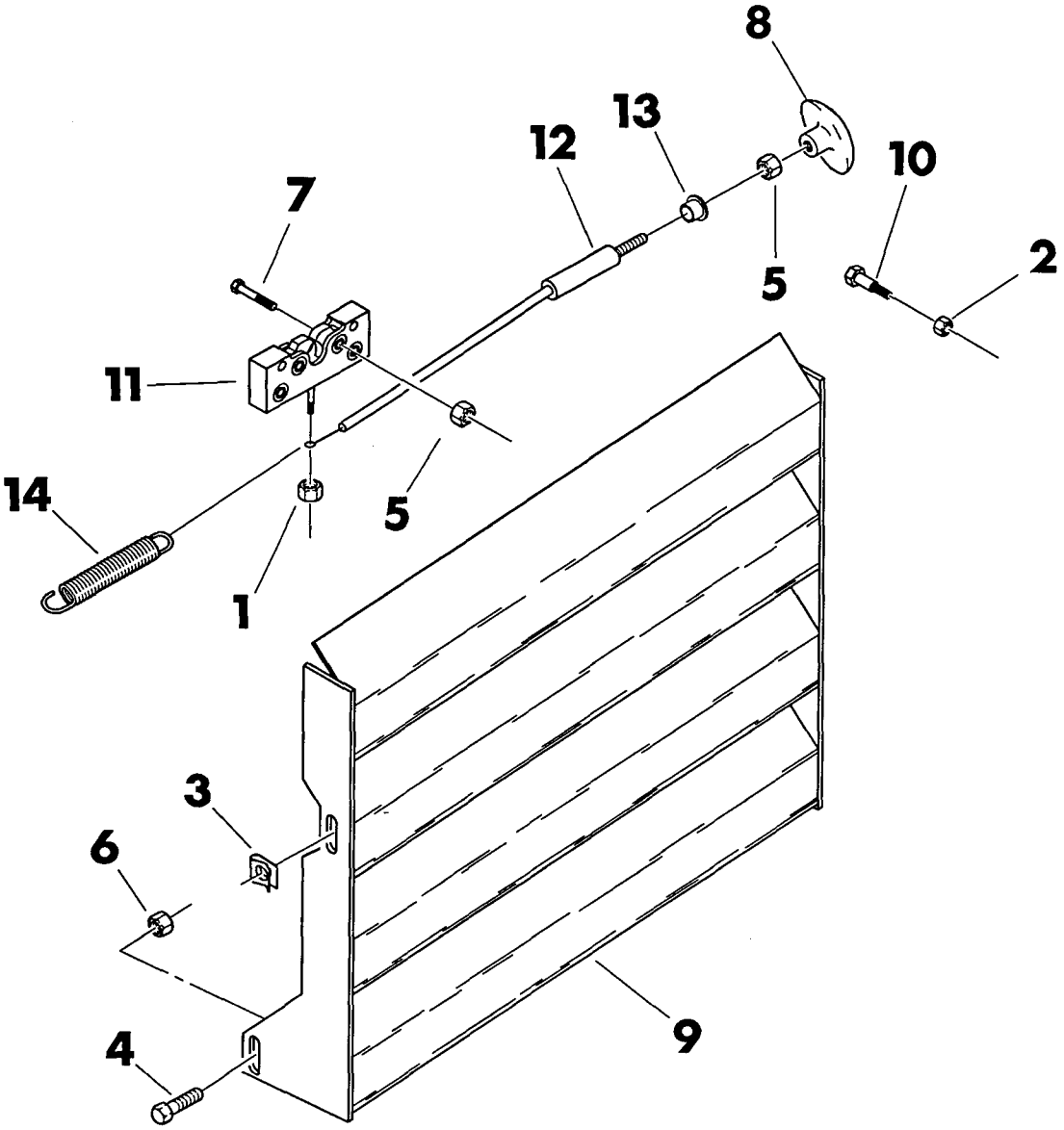

Ref. No.	Part Number	Qty.	Description
1.	105-085	1	Locknut (1/4-NC)
2.	105-103	1	Nut (7/16-NC)
3.	105-233	2	Clipnut (3/8-NC)
4.	105-827	4	Bolt (3/8-NC x 1-1/4")
5.	105-832	5	Nut (1/4-NC)
6.	105-834	2	Nut (3/8-NC)
7.	105-856	4	Bolt (1/4-NC x 1-1/4")

Ref. No.	Part Number	Qty.	Description
8.	110-518	1	T-Handle
9.	362-642	1	Grille
10.	106-223	1	Striker Bolt
11.	110-564	1	Latch
12.	365-168	1	Rod
13.	125-787	1	Bushing
14.	115-601	1	Spring

https://truckmanualshub.com/

HOOD

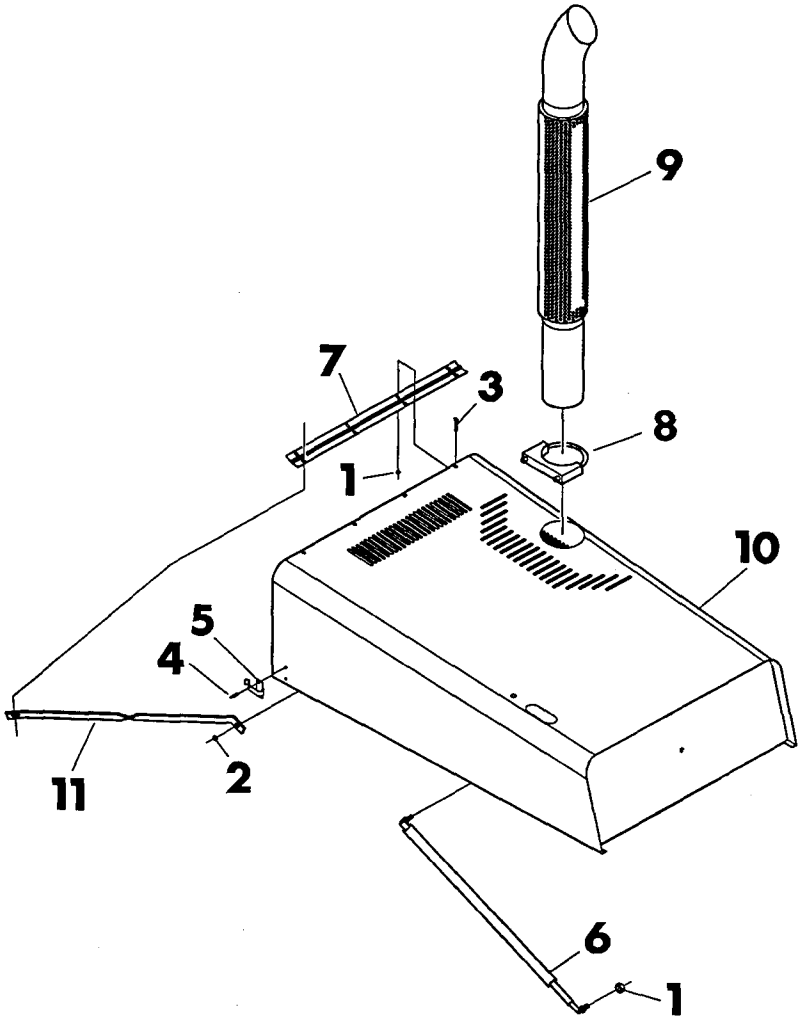

Ref. No.	Part Number	Qty.	Description
1.	105-003	10	Flange Locknut (5/16-NC)
2.	105-834	4	Flange Locknut (3/8-NC)
3.	106-297	8	Flange Lock Bolt (5/16-NC x 3/4")
4.	110-253	4	Pop Rivet (3/16" x 1/2")
5.	110-523	2	Retainer Clip
6.	110-534	1	Hood Support
7.	110-591	1	Hood Hinge
8.	195-993	2	Muffler Clamp (3-1/2")
9.	196-135	1	Exhaust Stack
10.	315-057	1	Hood
11.	315-062	1	Hood Brace

https://truckmanualshub.com/

CONSOLE

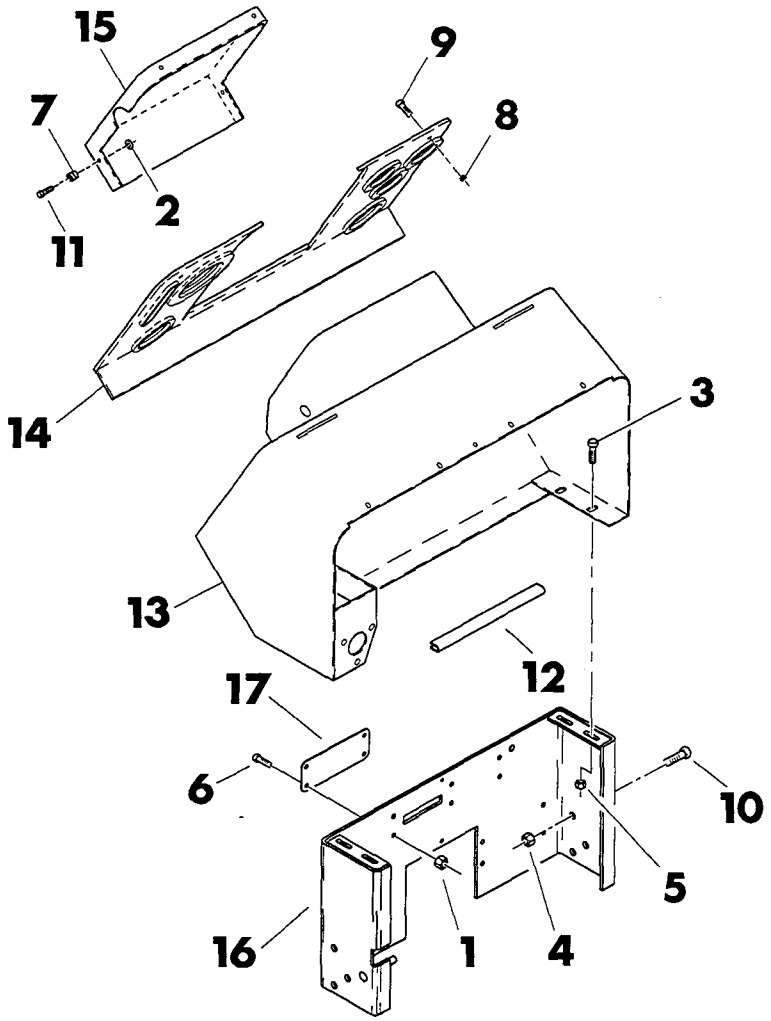

Ref. No.	Part Number	Qty.	Description
1.	105-003	4	[1]Nut (5/16-NC)
2.	105-805	4	Spring Washer (3/8")
3.	105-826	4	Flange Lock Bolt (3/8-NC x 1")
4.	105-833	6	Flange Locknut (1/2-NC)
5.	105-845	4	Flange Locknut (3/8-NC)
6.	105-873	4	[1]Bolt (5/16-NC x 1")
7.	106-015	4	Nutsert (1/4-NC)
8.	106-038	4	Nutsert (5/16-NC)
9.	106-042	4	Bolt (5/16-NC x 1/2", BUT HD)
10.	106-096	6	Flange Bolt (1/2-NC x 1-3/4")
11.	106-103	4	Bolt (1/4-NC x 1/2", BUT HD)
12.	115-686	AR	Edging (use 18")
13.	315-088	1	Console
14.	314-101	1	Console Panel
15.	314-102	1	Center Console Panel
16.	315-072	1	Console Support
17.	362-634	1	[1]Cover Plate

[1]This part is used with rigid rear differential only.

https://truckmanualshub.com/

SEAT MOUNT

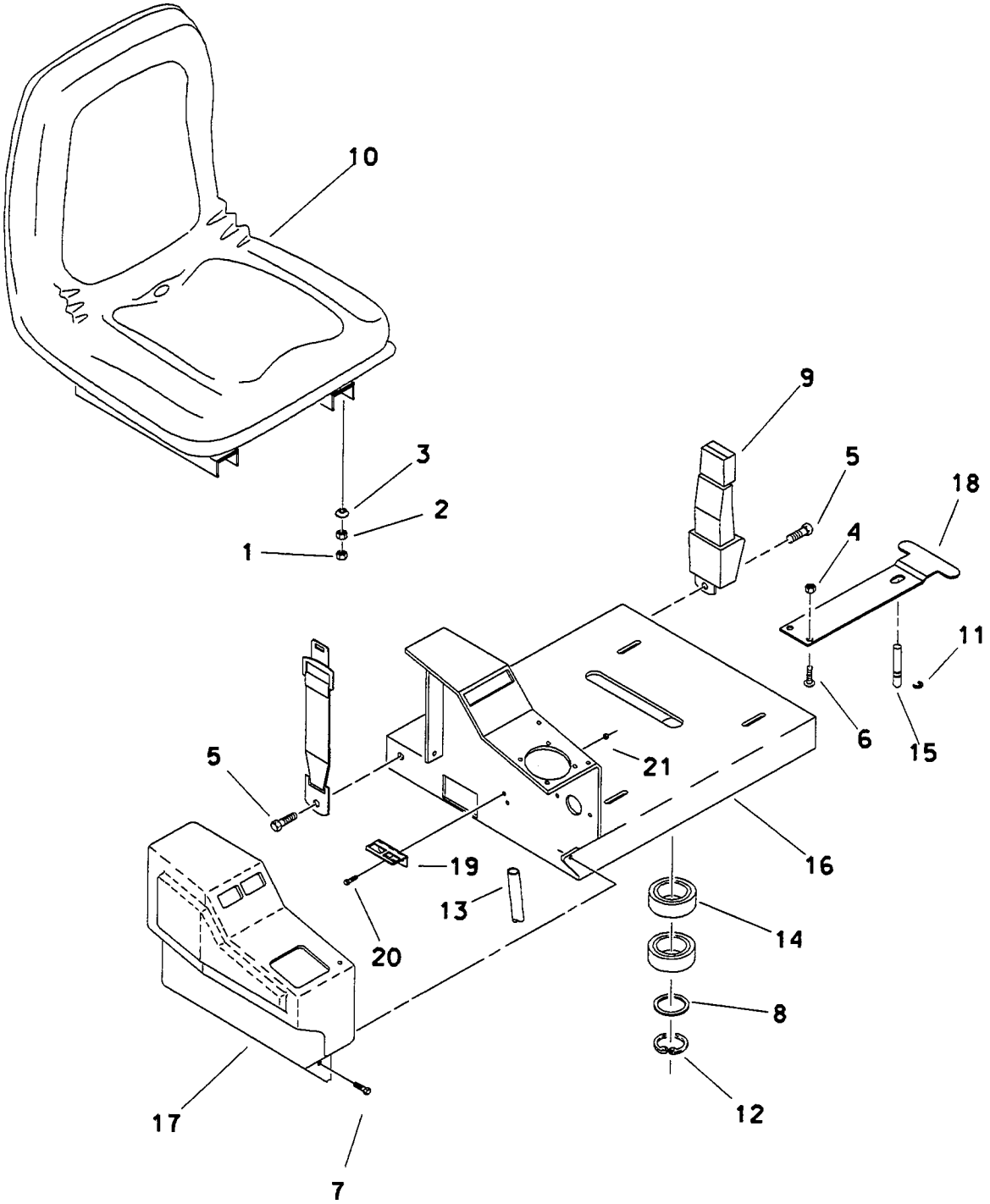

802-807

https://truckmanualshub.com/

SEAT MOUNT

REF NO.	PART NUMBER	QTY	DESCRIPTION	REMARKS
1.	105-003	4	FLG LOCKNUT (5/16-NC)	
2.	105-092	4	NUT (5/16-NC)	
3.	105-267	4	CUP WASHER (5/16")	
4.	105-814	2	FLG LOCKNUT (3/8-NC)	
5.	105-829	2	FLG LK BOLT (1/2-NC X 1")	
6.	106-029	2	BOLT (3/8-NC X 3/4", BUT HD)	
7.	106-159	5	FLG SCREW (1/4-NC X 3/4")	
8.	110-303	1	MACHINERY BUSHING	
9.	110-520	1	SEAT BELT KIT	
10.	115-425	1	SEAT	
11.	115-506	2	EXTERNAL CLIP RING	
12.	115-518	1	EXTERNAL SNAP RING	
13.	116-108	AR	HOSE (.296 ID)	USE 1"
14.	125-001	2	BEARING	
15.	183-609	1	LATCH PIN	
16.	314-070	1	SEAT BASE	
17.	314-103	1	SIDE CONSOLE COVER	
18.	314-135	1	SEAT LATCH	
19.	363-118	1	DIODE BLOCK BRACKET	
20.	105-836	1	FLG LK BOLT (1/4-NC X 1/2")	
21.	105-832	1	LOCKNUT (1/4-NC)	

FOOTNOTES

https://truckmanualshub.com/

FENDERS and COVERS

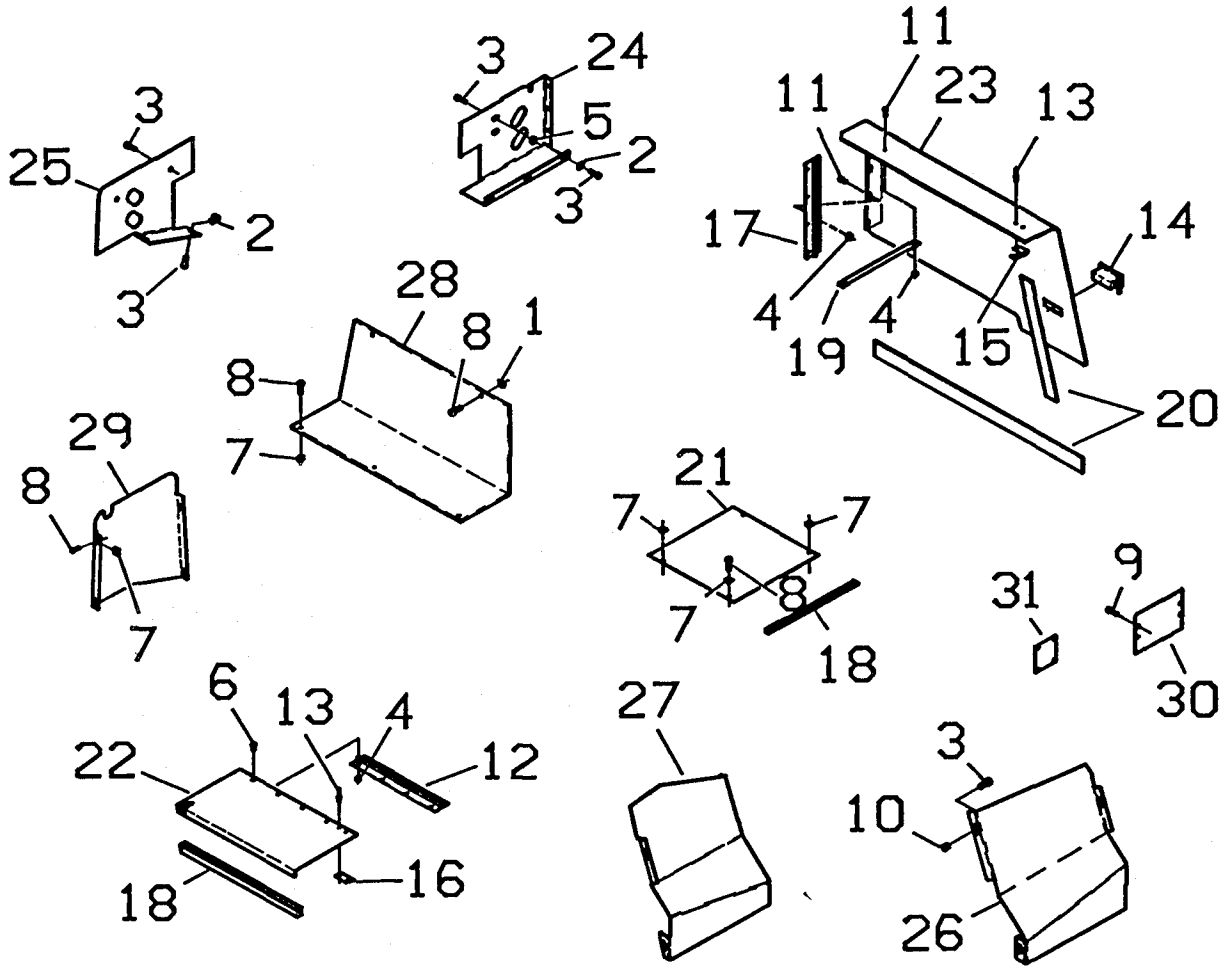

Ref. No.	Part Number	Qty.	Description
1.	105-137	2	Clip Nut (5/16-NC)
2.	105-233	13	Clip Nut (3/8-NC)
3.	105-826	17	Flange Lock Bolt (3/8-NC x 1")
4.	105-832	18	Flange Locknut (1/4-NC)
5.	105-834	2	Nut (3/8-NC)
6.	105-836	16	Flange Lock Bolt (1/4-NC x 1/2")
7.	105-841	13	Clip Nut (5/16-NC)
8.	105-873	13	Flange Lock Bolt (5/16-NC x 1")
9.	106-037	2	Flange Screw (5/16-NC x 1/2")
10.	106-039	4	Nutsert (3/8-NC)
11.	106-168	2	Bolt (1/4-NC x 3/4", BUT HD)
12.	110-218	1	Hinge
13.	110-253	6	Pop Rivet (3/16" x 1/2")
14.	110-515	1	Latch
15.	110-523	1	Retainer Clip
16.	110-524	1	Spring Retainer Clip
17.	110-568	1	Hinge
18.	115-686	AR	Grommet Edging (use 16")
19.	115-786	1	Limit Strap
20.	116-271	AR	Weather Stripping (use 42")
21.	315-063	1	Floor Plate
22.	315-064	1	Step Lid
23.	315-065	1	Left Fender
24.	315-068	1	Left Rear Fender Panel
25.	315-069	1	Right Rear Fender Panel
26.	315-070	1	Left Cover Panel
27.	315-071	1	Right Cover Panel
28.	362-639	1	Access Cover
29.	362-640	1	Attachment Pump Control Cover
30.	362-641	1	Pump Cover
31.	315-094	1	By-Pass Cover Plate

https://truckmanualshub.com/

AIR DUCTS

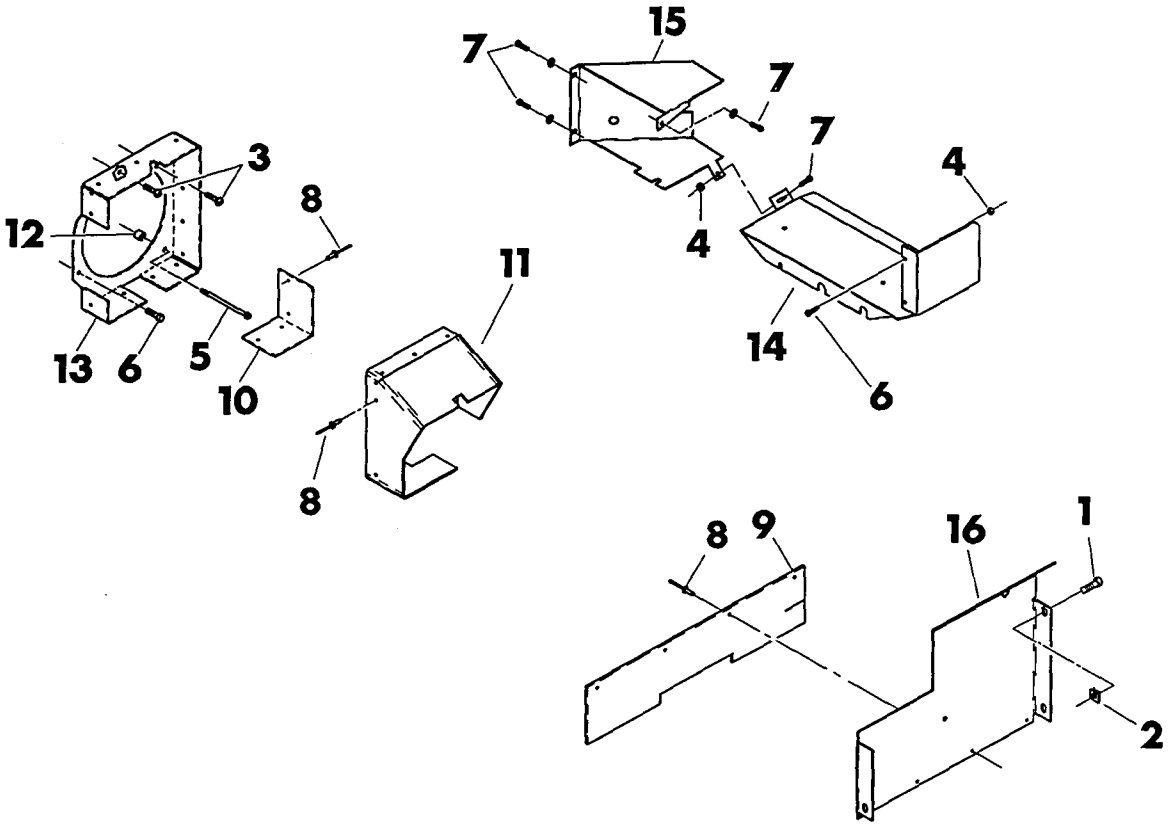

Ref. No.	Part Number	Qty.	Description
1.	105-827	3	Flange Lock Bolt (3/8-NC x 1-1/4")
2.	105-853	3	Clipnut (3/8-NC)
3.	106-010	2	Flange Lock Screw (5/16-NC x 3/4")
4.	106-106	5	Nut (M6-1.0)
5.	106-160	1	Flange Bolt (M8-1.25 x 120mm)
6.	106-161	1	Flange Bolt (M6-1.0 x 20mm)
7.	106-224	8	Flange Lock Bolt (M6-1.0 x 10mm)
8.	110-348	24	Pop Rivet (3/16" x .664")

Ref. No.	Part Number	Qty.	Description
9.	116-368	1	Air Duct Seal (20.95" LG)
10.	116-395	1	Air Duct Seal (7.79" LG)
11.	116-396	1	Air Duct Seal (32.57" LG)
12.	181-600	1	Retainer
13.	314-122	1	Air Duct Inlet
14.	315-076	1	Air Exhaust Duct
15.	315-077	1	Cooler Exhaust Duct
16.	315-078	1	Air Blockoff Plate

https://truckmanualshub.com/

BATTERY MOUNT
(Ends with S/N5H0178)

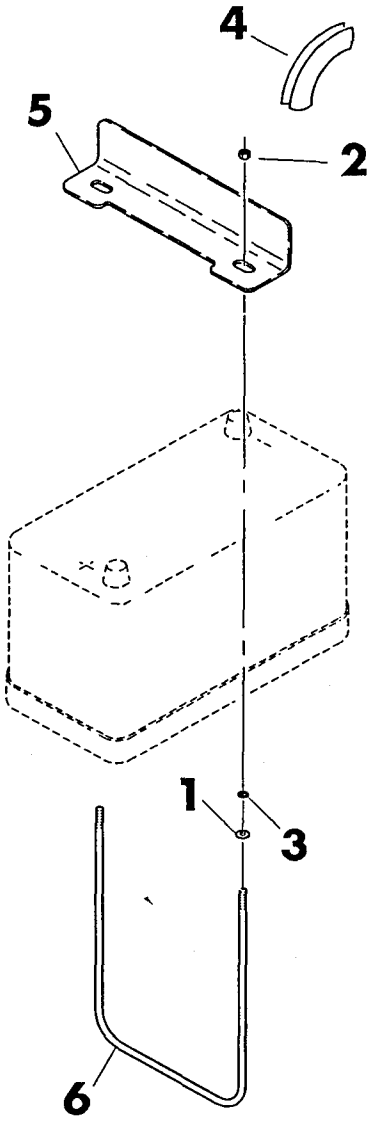

Ref. No.	Part Number	Qty.	Description
1.	105-095	2	Washer (1/4")
2.	105-832	2	Flange Locknut (1/4-NC)
3.	115-476	2	External Grip Ring
4.	115-686	AR	Grommet Edging (use 8")
5.	312-136	1	Battery Strap (8-1/4" LG)
6.	314-131	1	Battery Hold Down

https://truckmanualshub.com/

BATTERY MOUNT
BEGINS WITH S/N 5H0179

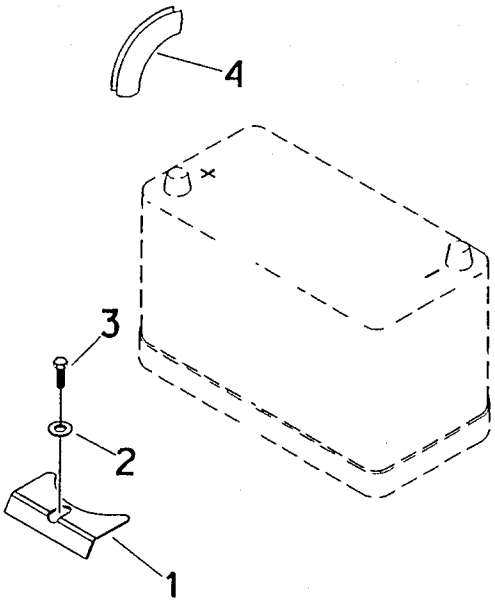

SINGLE BATTERY

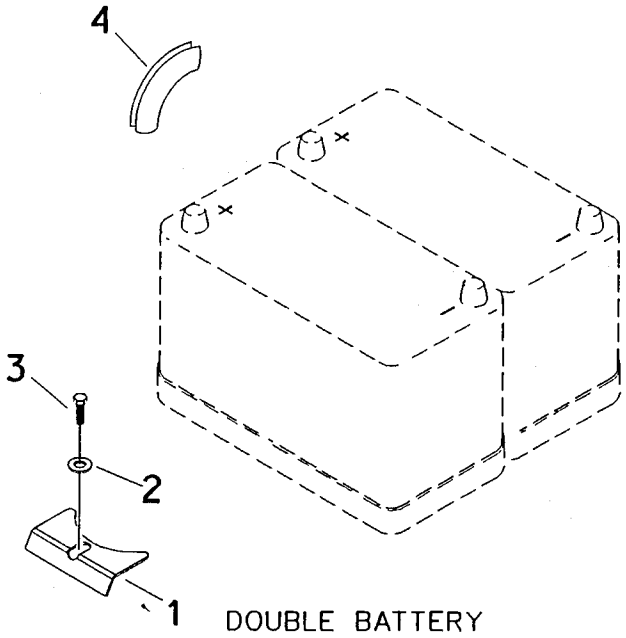

DOUBLE BATTERY

REF. NO.	PART NUMBER	QTY.	DESCRIPTION
	190-474		[1]DUAL BATTERY CONVERSION KIT
1.	315-101	1	BRACKET
2.	105-118	1	WASHER (3/8")
3.	105-052	1	BOLT (3/8-NC X 1-1/4")
4.	115-686	1	EDGING (7"LG)

[1]REFER TO INSTALLATION DIAGRAM 050-213.

https://truckmanualshub.com/

FUEL TANK

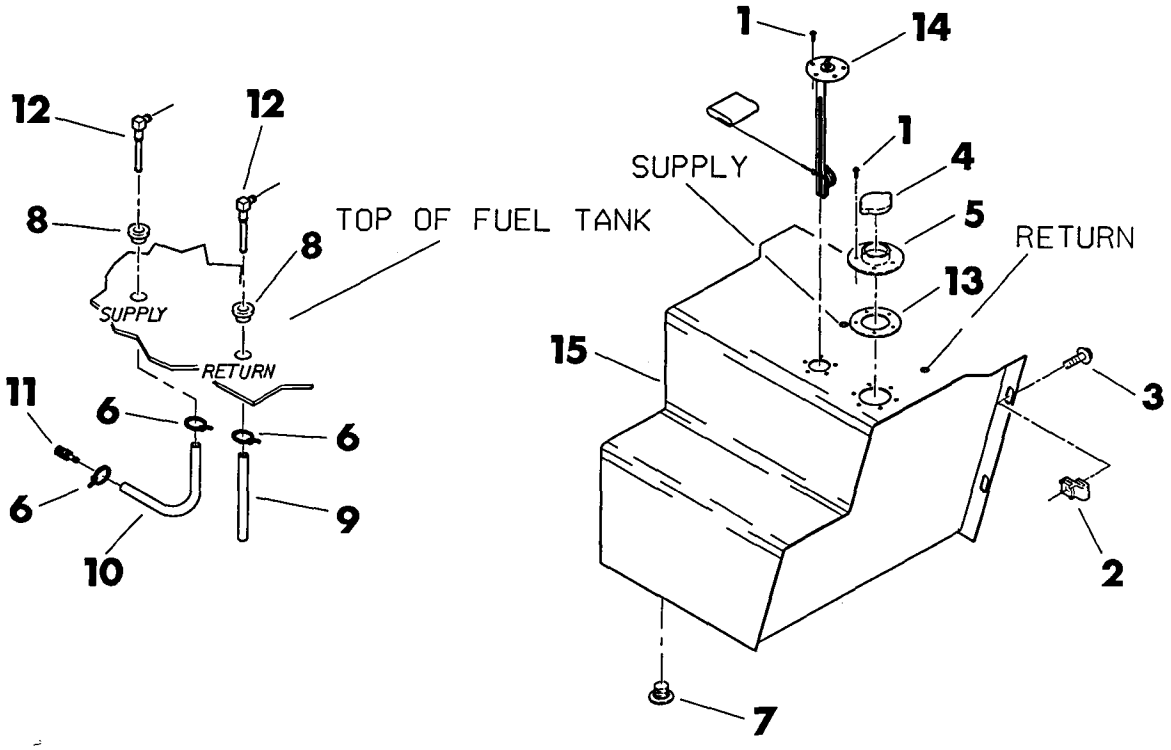

Ref. No.	Part Number	Qty.	Description
1.	105-214	11	Flange Screw (No. 10-24 x 1/2")
2.	105-233	4	Clip Nut (3/8-NC)
3.	105-827	4	Flange Lock Bolt (3/8-NC x 1-1/4")
4.	110-010	1	Fuel Cap
5.	110-132	1	Filler Neck
6.	110-563	3	Spring Band Clamp
7.	115-152	1	Pipe Plug (3/4-NPT M, SQ HD)
8.	116-325	2	Rubber Bushing
9.	116-356	AR	Hose (1/4" ID)—use 10"
10.	116-356	AR	Hose (1/4" ID)—use 24"
11.	156-268	1	Fuel Pickup Strainer
12.	156-269	2	Fuel Tank Fitting
13.	165-626	1	Filler Neck Gasket
14.	217-527	1	Fuel Sender
	165-704		Gasket
	506-021		Nut (No. 10-32)
15.	364-062	1	Fuel Tank

https://truckmanualshub.com/

HYDRAULIC RESERVOIR

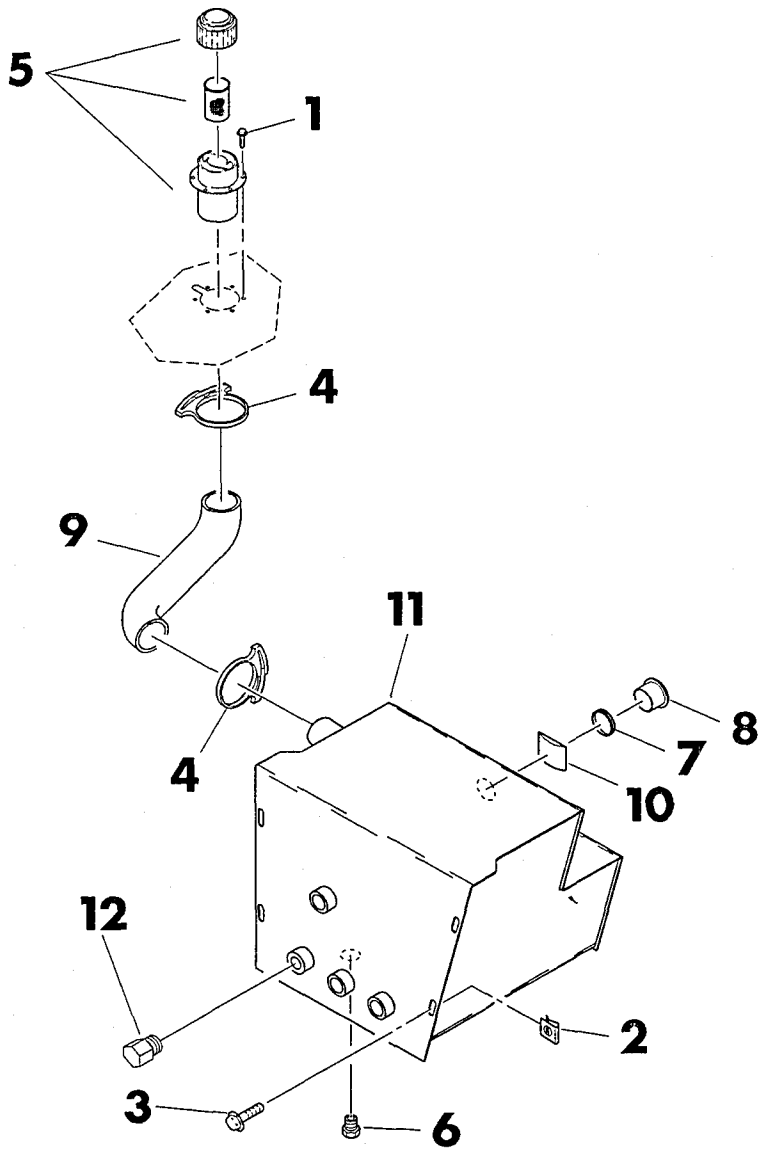

Ref. No.	Part Number	Qty.	Description
1.	105-214	6	Flange Screw (No. 10-24 x 1/2")
2.	105-233	4	Clip Nut (3/8-NC)
3.	105-827	4	Flange Lock Bolt (3/8-NC x 1-1/4")
4.	110-529	2	Snapper Clamp
5.	110-540	1	Filler Breather
6.	115-152	1	Pipe Plug (3/4-NPT M, SQ HD)
7.	115-320	1	Sight Glass Grommet
8.	116-218	1	Sight Glass (2" DIA)
9.	116-390	1	Inlet Hose
10.	360-849	1	Reflector
11.	364-058	1	Hydraulic Reservoir
12.	155-138	1	Plug
	155-748		O-Ring (-916, D90)
Not Shown:			
	110-130	1	Magnet

https://truckmanualshub.com/

2 POST R.O.P.S.

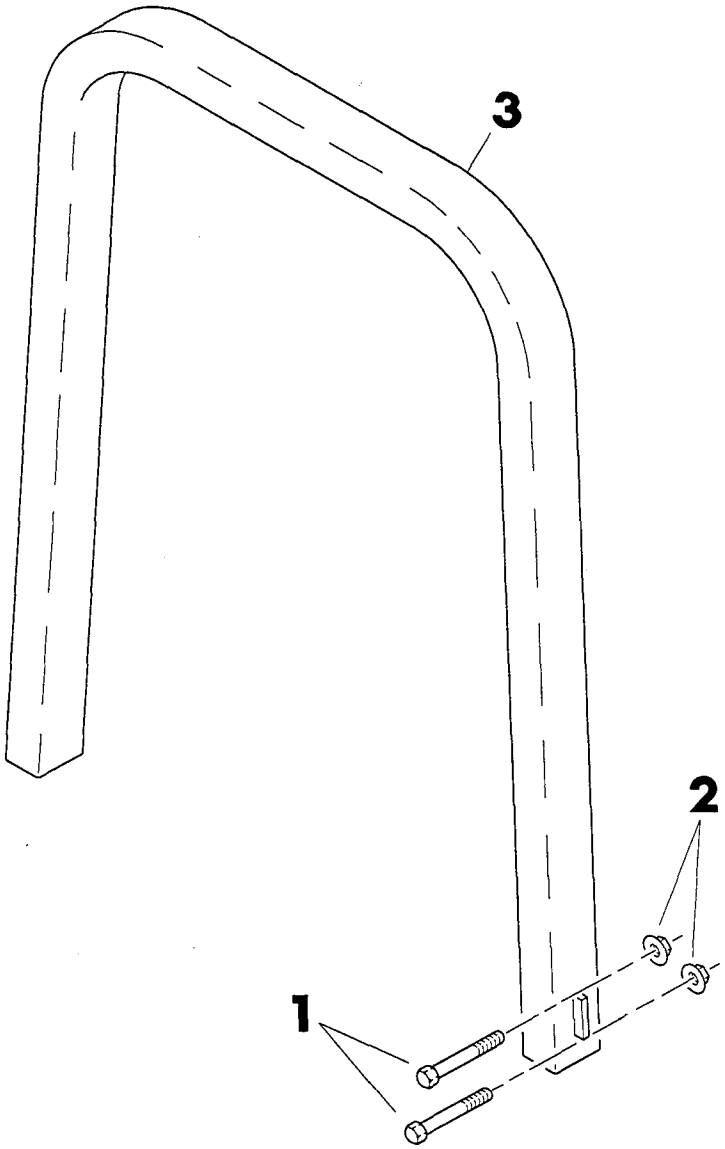

Ref. No.	Part Number	Qty.	Description
1.	105-383	4	Bolt (3/4-NC x 6", GD 8)
2.	105-340	4	Flange Locknut (3/4-NC)
3.	306-249	1	2 Post R.O.P.S.

https://truckmanualshub.com/

4 POST R. O. P. S.
7520/8020

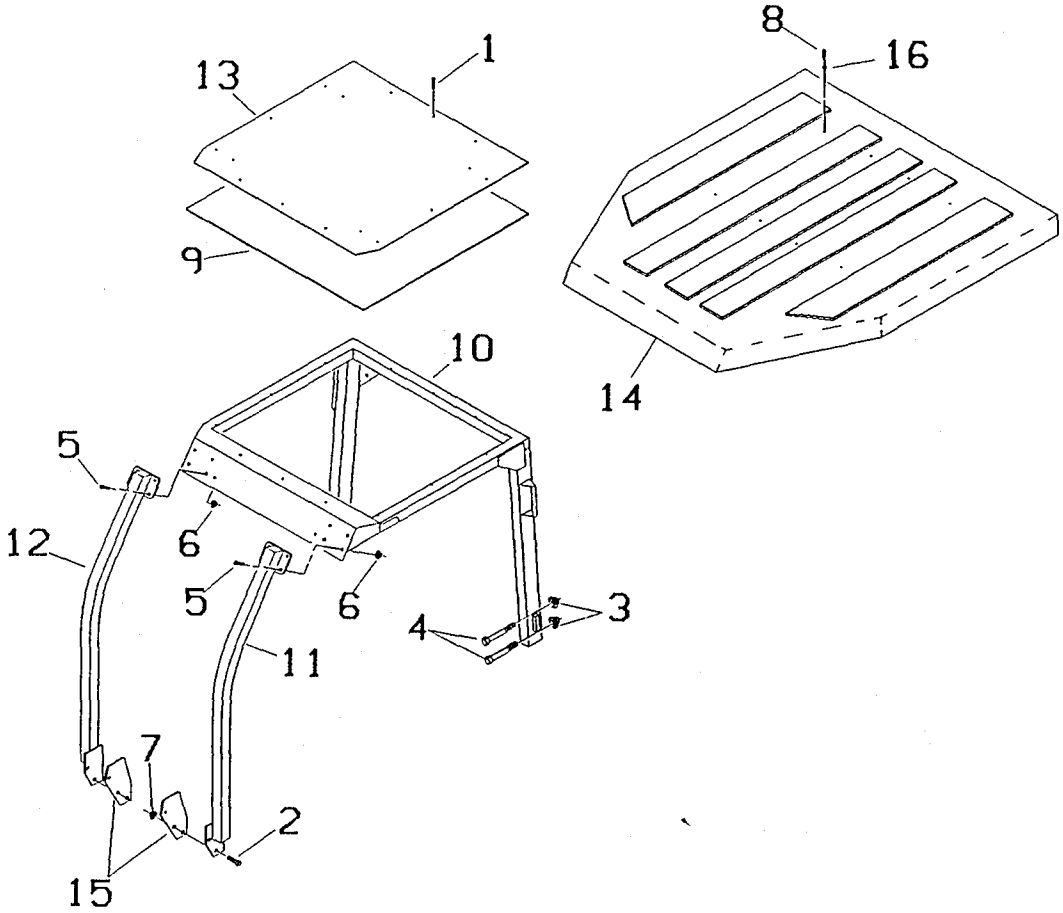

REF. NO.	PART NUMBER	QTY.	DESCRIPTION
	190-444		4-POST R.O.P.S. CONVERSION KIT (INCL. REF. NO.'S 1 THRU 16)
1.	105-221	12	SCREW (NO. 14-10 X 1-1/2")
2.	105-302	6	FLANGE BOLT
3.	105-340	4	FLANGE LOCKNUT
4.	105-383	4	BOLT (3/4-NC X 6", GD 8)
5.	105-830	8	BOLT (1/2-NC X 1-1/4")
6.	105-833	8	FLANGE LOCKNUT
7.	105-357	6	LOCKNUT
8.	106-010	8	FLANGE SCREW
9.	116-397	1	HEADLINER INSULATION
10.	306-267	1	REAR R.O.P.S.
11.	306-268	1	LEFT FRONT R.O.P.S. LEG
12.	306-269	1	RIGHT FRONT R.O.P.S. LEG
13.	306-271	1	FOPS PLATE
14.	306-266	1	CANOPY
15.	314-152	2	LOWER BOLT SPACER
16.	505-114	8	THRUST WASHER

https://truckmanualshub.com/

CAB
7520, 8020

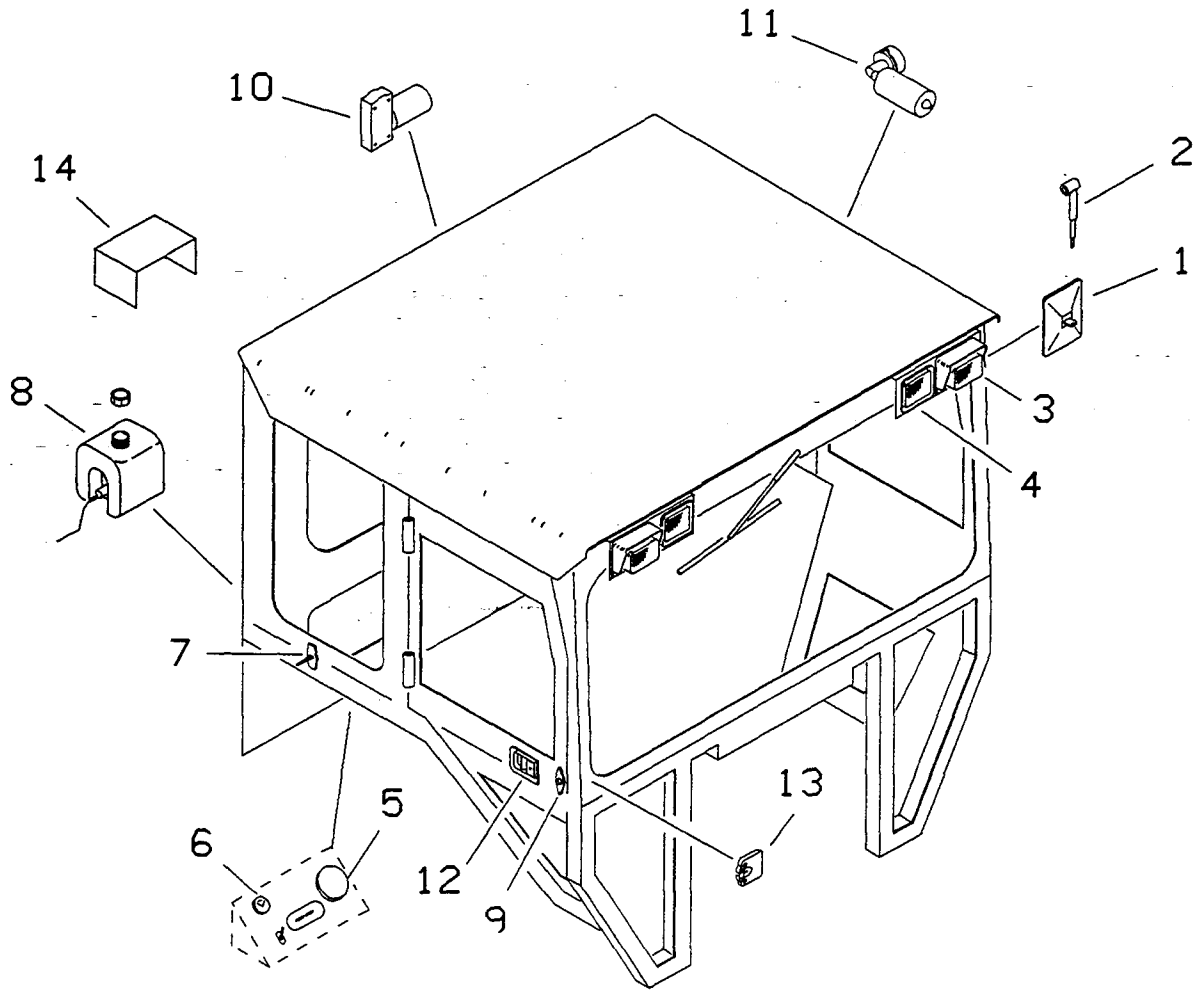

REF. NO.	PART NUMBER	QTY.	DESCRIPTION
	100-751		CAB (INCL REF NO.'S 1 THRU 13)
1.	110-603	2	MIRROR HEAD
2.	110-604	2	MIRROR ARM
3.	217-057	2	WORKING LIGHT
4.	217-058	2	WARNING LIGHT
5.	217-059	1	INTERIOR LIGHT
6.	217-733	1	WIPER/WASHER SWITCH
7.	502-047	1	DOOR HOLDER PLUNGER
8.	502-048	1	WASHER KIT
9.	502-056	1	DOOR HOLDER SOCKET
10.	502-050	1	WIPER MOTOR (2 SPEED)
11.	502-051	1	WIPER MOTOR (1 SPEED)
12.	502-052	1	LEFT OUTSIDE HANDLE
	502-054	1	RIGHT OUTSIDE HANDLE
	502-057		HANDLE GASKET
13.	502-053	1	LEFT LATCH ASSEMBLY
	502-055	1	RIGHT LATCH ASSEMBLY
	502-057		HANDLE GASKET
14.	502-058	1	4 SPOOL VALVE COVER
	502-059	1	1 SPOOL VALVE COVER

https://truckmanualshub.com/

CAB HEATER

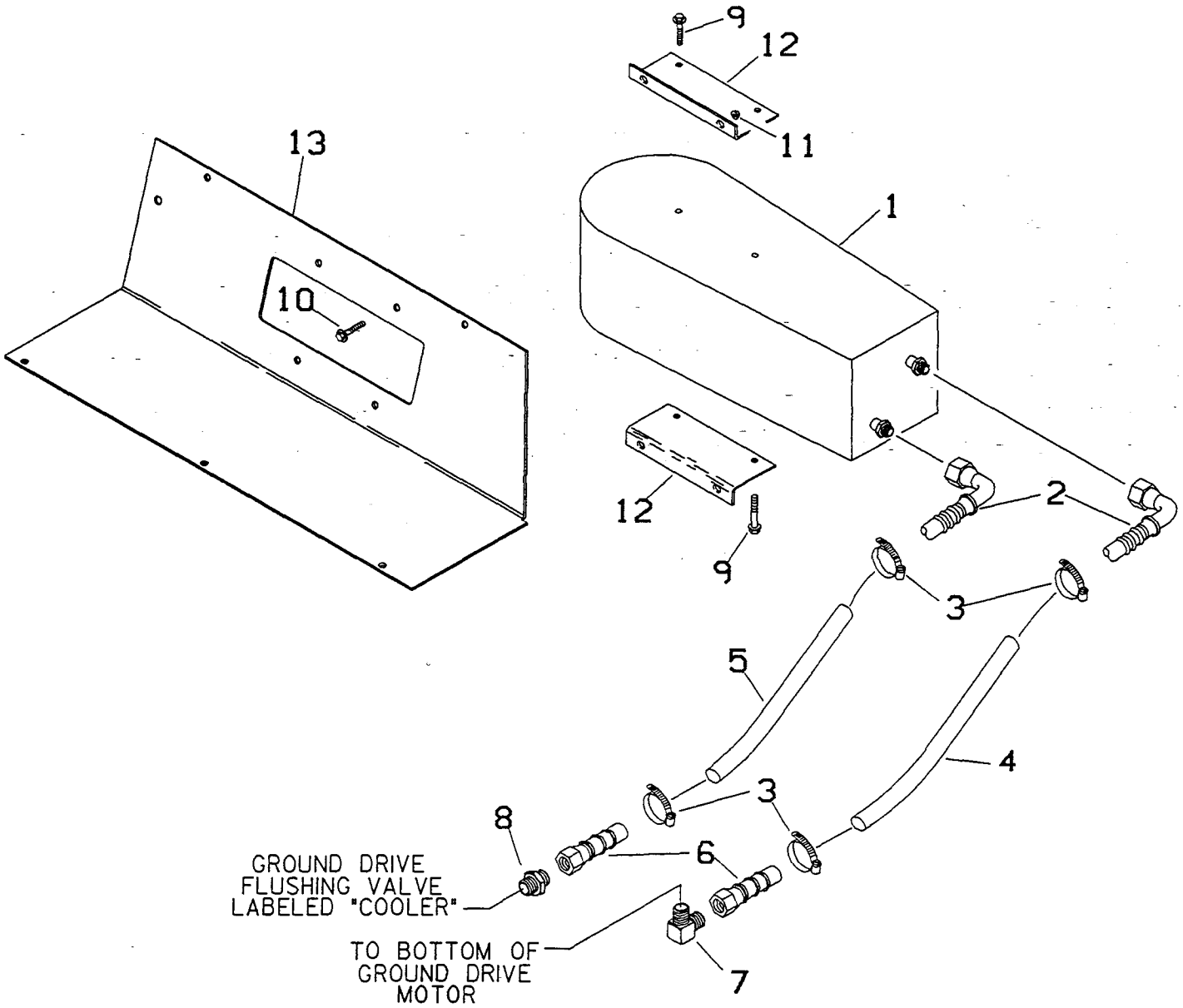

REF. NO.	PART NUMBER	QTY.	DESCRIPTION
	100-754		CAB HEATER CONVERSION KIT (INCL. REF. NO'S 1 THRU 7)
1.	215-204	1	HEATER
2.	154-208	2	COUPLER
3.	110-026	4	CLAMP
4.	116-044	AR	HOSE (5/8" X 30")
5.	116-044	AR	HOSE (5/8" X 20")
6.	510-301	2	COUPLER
7.	154-322	1	CONNECTOR
	157-040		O-RING (016 D90)
	155-709		O-RING (912 D90)

REF. NO.	PART NUMBER	QTY.	DESCRIPTION
8.	154-279	1	CONNECTOR
	157-039		O-RING (014 D90)
	157-040		O-RING (016 D90)
9.	105-820	4	FLANGE LOCK BOLT
10.	105-823	4	FLANGE LOCK BOLT
11.	105-003	4	FLANGE LOCK NUT
12.	363-208	2	HEATER BRACKET
13.	362-732	1	ACCESS COVER (REPLACES 362-639)

https://truckmanualshub.com/

WARNING/ WORKING LIGHTS

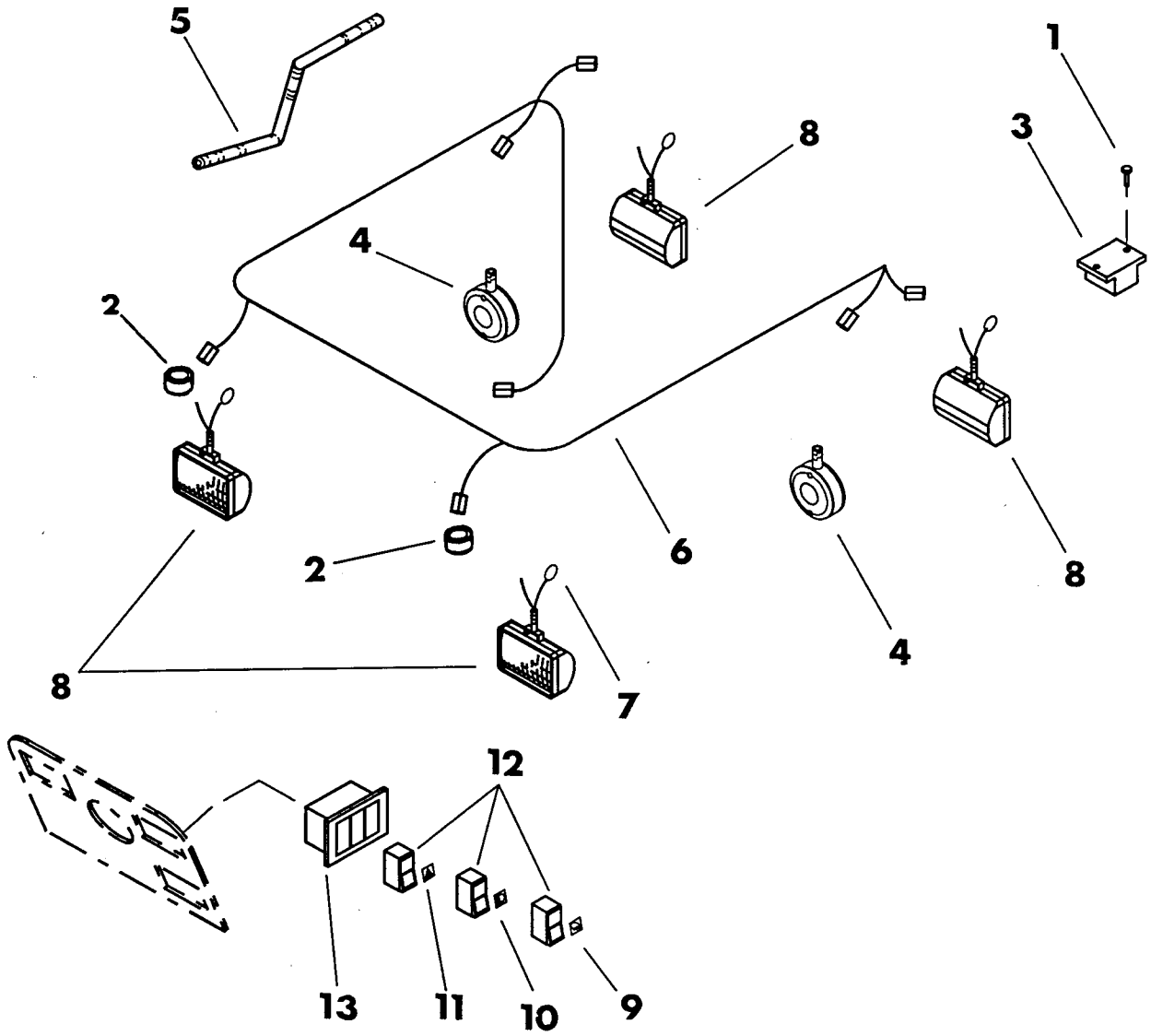

Ref. No.	Part Number	Qty.	Description
	190-432		[1]Working Light Conversion Kit (Incl. ref. no.'s 1 thru 13)
1.	110-527	2	Rivet (3/16" x 1/2")
2.	116-203	2	Grommet
3.	215-041	1	Flasher
4.	215-442	2	Warning Light (round amber)
5.	215-579	AR	Wire Guard (uses 2 of 45")
6.	215-803	1	4 Post R.O.P.S. Light Harness
7.	215-804	4	Ring Terminal (1/2")
8.	217-007	4	Working Light
9.	217-031	1	Black Insert (headlight)
10.	217-032	1	Black Insert (worklight)
11.	217-033	1	Orange Insert (warning)
12.	217-707	3	Rocker Switch
13.	217-712	1	Mounting Frame (3 bank)

[1]Refer to installation diagram 050-194.

https://truckmanualshub.com/

INTERLOCK SYSTEM LIGHT

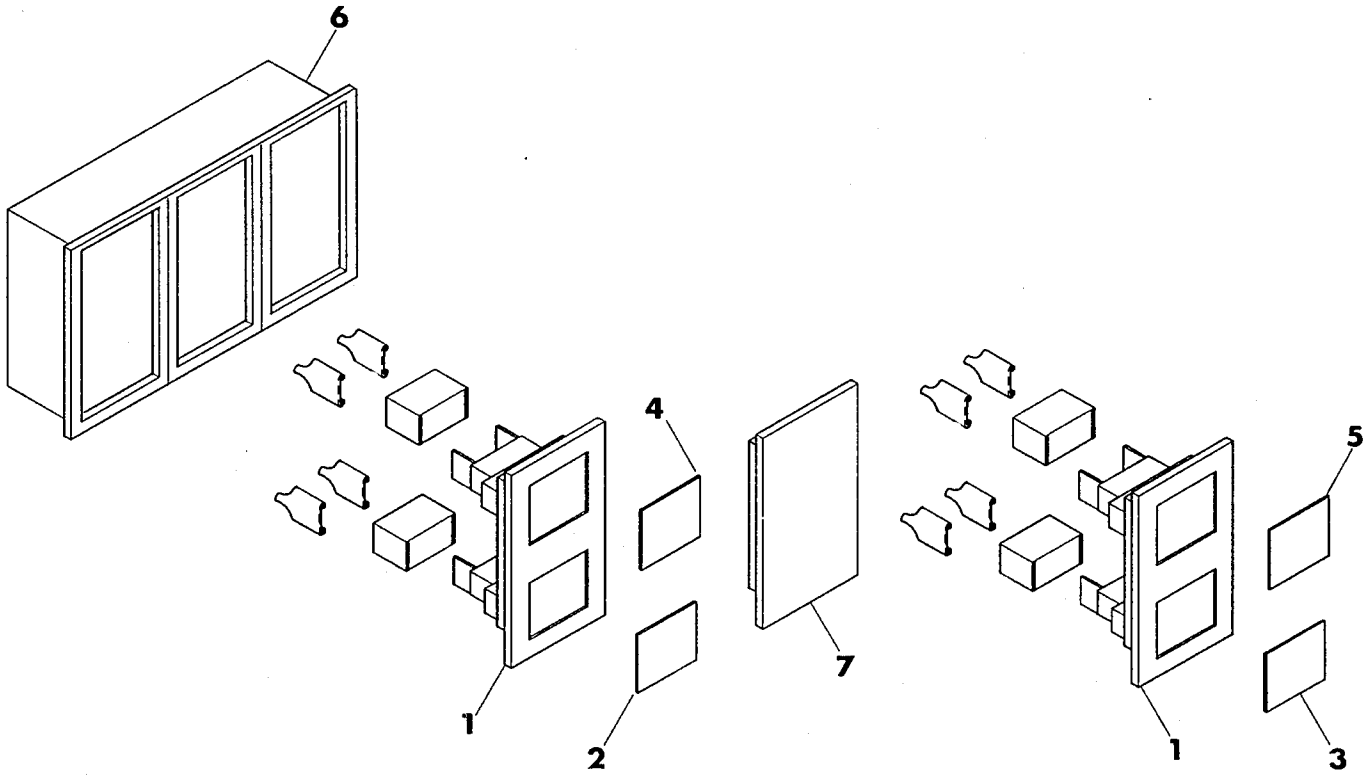

Ref. No.	Part Number	Qty.	Description
1.	217-020	2	Dual Pilot Lamp
2.	217-028	1	Black Insert (parking brake)
3.	217-030	1	Green Insert (attachment drive)
4.	217-035	1	Green Insert (operator seat)
5.	217-037	1	Green Insert (ground drive)
6.	217-712	1	Mounting Frame (3 position)
7.	217-713	1	Bracket Cover

https://truckmanualshub.com/

WARNING SYSTEM LIGHT

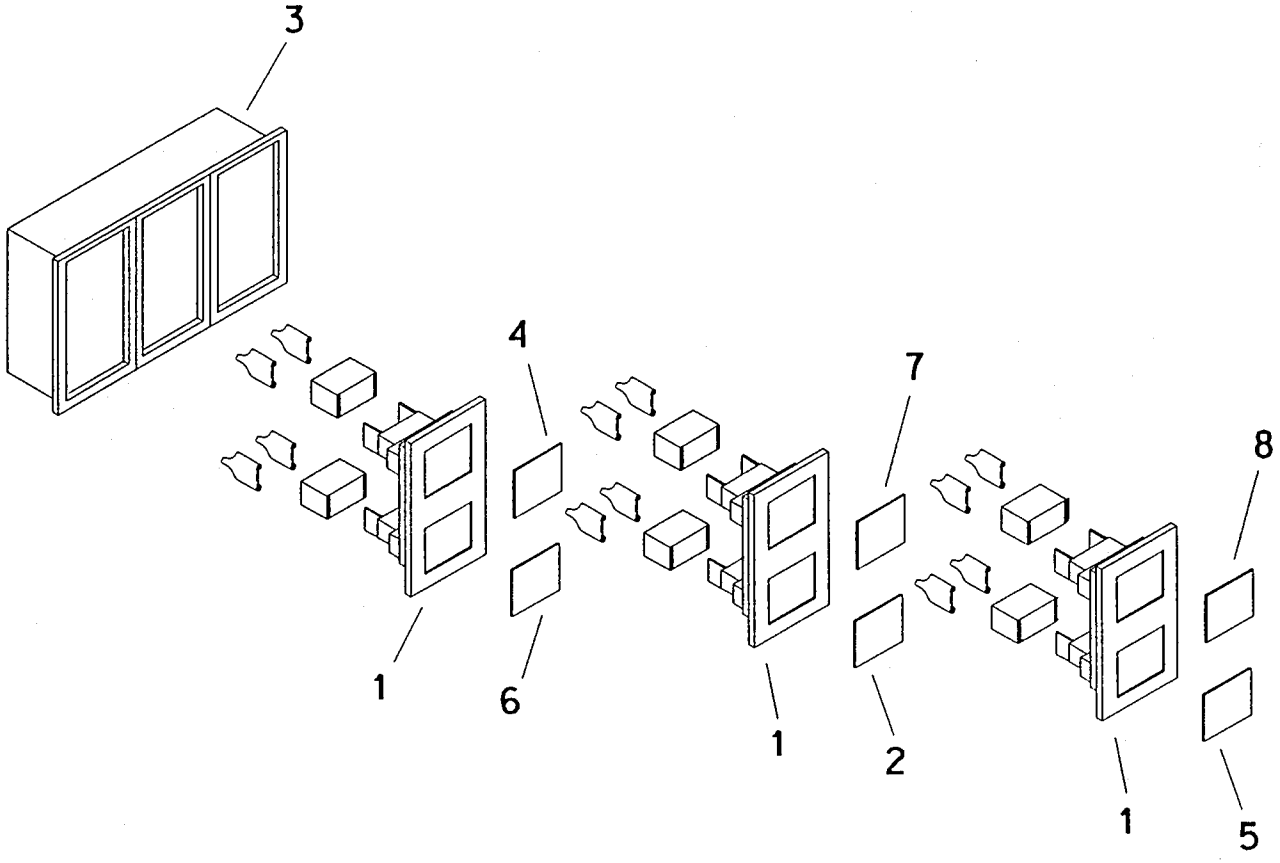

REF. NO.	PART NUMBER	QTY.	DESCRIPTION
1.	217-020	3	DUAL PILOT LIGHT
2.	217-036	1	AMBER LENS (HYD FILTER PRESSURE)
3.	217-712	1	MOUNTING FRAME
4.	217-051	1	RED LENS (ENGINE/WATER TEMP)
5.	217-029	1	RED LENS (PARKING BRAKE)
6.	217-021	1	RED LENS (ENGINE OIL PRESS)
7.	217-027	1	RED LENS (HYD PRESS)
8.	217-061	1	RED LENS (ALT)

https://truckmanualshub.com/

NOTES:

https://truckmanualshub.com/

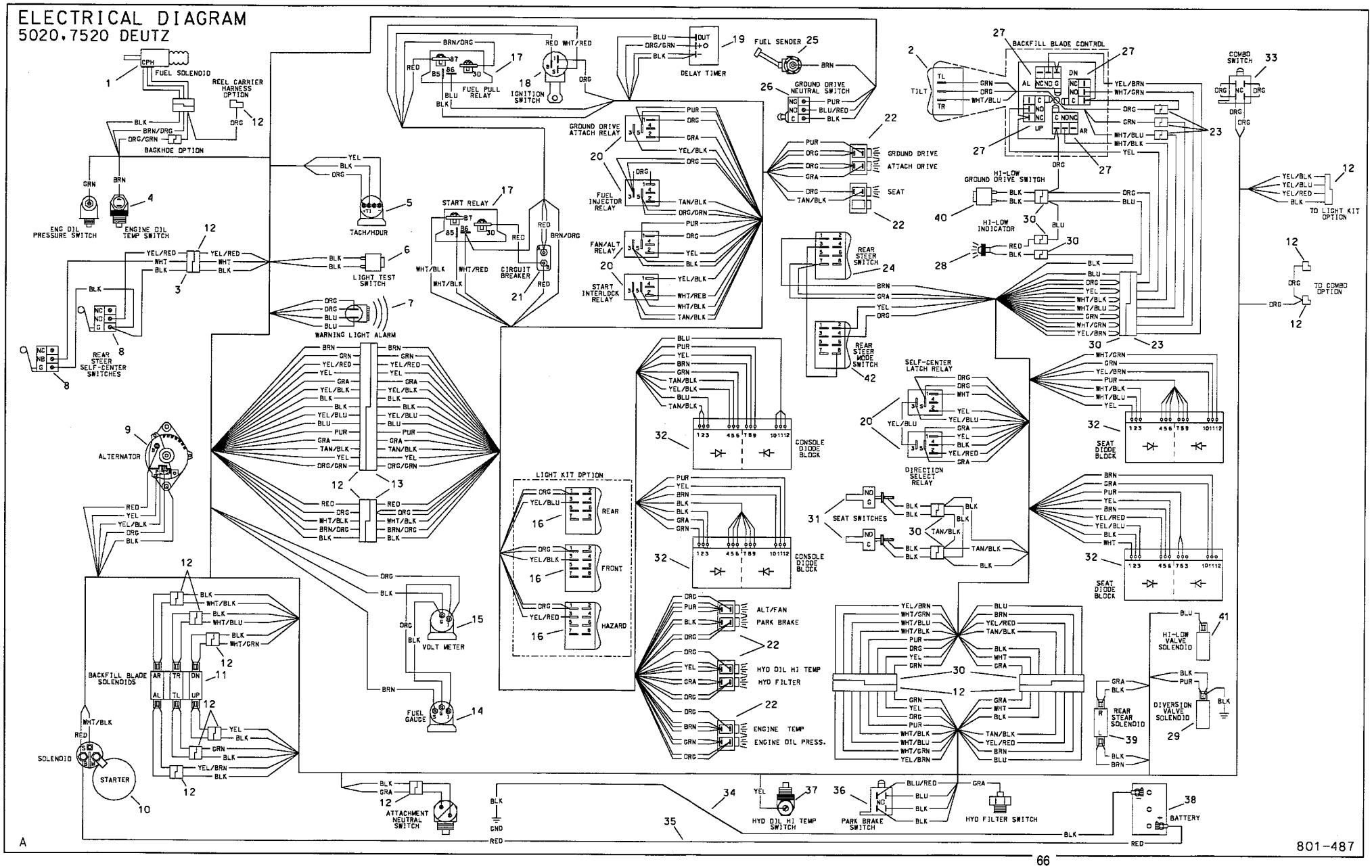

https://truckmanualshub.com/

ELECTRICAL DIAGRAM
5020,7520 DEUTZ

REF. NO.	PART NUMBER	QTY.	DESCRIPTION
1.	215-098	1	FUEL SHUT-OFF SOLENOID
2.	217-708	1	ROCKER SWITCH
	110-330	1	DUST BOOT
	105-214	4	FLANGE SCREW (#10-24 X 1/2")
	110-397	4	SLEEVE CAP
3.	215-765	1	[3] REAR STEER HARNESS
	215-931	1	REAR STEER HARNESS
4.	217-518	1	ENG OIL TEMP SWITCH
5.	215-118	1	TACHOMETER
	215-415	1	LIGHT KIT (OPTION)
6.	215-040	1	BUTTON SWITCH
7.	306-603	1	AUDIO ALARM
8.	215-087	2	ROLLER LEVER SWITCH
	106-315	4	SCREW (#4-40 X 1")
9.	215-159	1	ALTERNATOR
	106-005	4	BOLT (M8-1.25 X 16MM)
10.	195-877	1	STARTER (5 HP)
	197-752	1	REBUILT STARTER (4 HP)
11.	158-574	1	SOLENOID BFB VALVE
12.	215-761	1	FRAME HARNESS
HARNESS HARDWARE:			
	110-366	AR	VELCRO STRIP (25")
	110-431	AR	VELCRO STRIP,PLAIN (25")
	110-259	3	CLAMP (5/8")
	105-836	2	FLANGE LOCK BOLT
	105-832	2	FLANGE NUT (1/4-NC)
	110-332	1	CLAMP (1-5/8")
	105-873	1	FLANGE LOCK BOLT
	105-003	1	FLANGE NUT (5/16")
13.	215-764	1	CONSOLE HARNESS
14.	215-133	1	FUEL GAUGE
	215-415	1	LIGHT KIT (OPTION)
15.	215-129	1	VOLT METER
16.	217-707	3	ROCKER SWITCH
	217-028		INSERT-BLANK
17.	217-701	2	POWER RELAY (SPDT)
	105-820	2	FLANGE LOCK BOLT
	105-832	2	FLANGE LOCKNUT
18.	215-051	1	IGNITION SWITCH (INCL KEYS AND NUTS)
	215-052		KEYS (PAIR)
	105-909		JAM NUT
	216-008	1	JAM NUT (NYLOK)
	216-009	1	COVER (NYLOK)
19.	217-711	1	DELAY TIMER
	106-158	1	SCREW (10-16 X 1-1/4")
20.	217-710	6	RELAY (SPDT)
	110-253	6	POP RIVET
	106-205	6	WASHER
21.	215-065	1	CIRCUIT BREAKER
	110-253	2	POP RIVET
	110-397	2	SLEEVE CAP

REF. NO.	PART NUMBER	QTY.	DESCRIPTION
22.	217-020	5	PILOT LIGHT
	217-046		BULB (REPLACEMENT)
	217-712	2	MOUNT BEZEL (3-WAY)
	217-713	1	BLANK COVER
	217-021	1	INSERT-ENGINE OIL PRESS
	217-027	1	INSERT-HYD OIL HI TEMP
	217-028	1	INSERT-BLANK
	217-029	1	INSERT-PARK BRAKE
	217-030	1	INSERT-ATTACH DRIVE
	217-034	1	INSERT-ENGINE OIL TEMP
	217-035	1	INSERT-SEAT
	217-036	1	INSERT-HYD OIL PRESS
	217-037	1	INSERT-GROUND DRIVE
	217-038	1	INSERT-ALT/FAN
23.	215-763	1	JOYSTICK HARNESS
24.	217-706	1	ROCKER SWITCH
25.	217-523	1	FUEL SENDER (5020)
	217-527	1	FUEL SENDER (7520)
	165-704		GASKET
	105-214	6	FLANGE SCREW
26.	215-046	1	ROLLER LEVER SWITCH
	215-082	1	[3] ROLLER PLUNGER BRACKET
	217-703	1	[1] OMNI LEVER SWITCH
	215-047	1	[2] ACTUATOR BRACKET (INCL BOLTS AND NUTS)
	105-216	2	[2] BOLT (#6-32 X 1-1/4")
	105-215	2	[2] NUT (#6-32)
27.	215-081	4	PLUNGER SWITCH
28.	217-039	1	PILOT LIGHT (RED)
29.	158-569	1	SOLENOID DIVERSION VALVE
30.	215-762	1	SEAT HARNESS
31.	215-083	2	SLIDE SWITCH
32.	216-509	2	[2] DIODE BLOCK
	216-521	4	DIODE BLOCK
	363-118	1	DIODE BLOCK BRACKET
	105-820	1	FLANGE LOCK BOLT
	105-832	1	FLANGE LOCKNUT
33.	217-705	1	PLUNGER SWITCH
	105-214	2	SCREW
34.	215-338	1	BATTERY CABLE (70" 2/0 GA)
35.	215-339	1	BATTERY CABLE (96" 2/0 GA)
36.	217-704		PLUNGER SWITCH
37.	215-148	1	TEMPERATURE SWITCH
38.	215-266	1	BATTERY
39.	158-575	1	SOLENOID REAR STEER VALVE
40.	217-716	1	BUTTON SWITCH
	215-872	2	FMC TERMINAL
	215-753	1	FMC INSULATOR (2-TERMINAL)
41.	158-555	1	SOLENOID HI-LOW SHIFT VALVE
42.	217-714	1	ROCKER SWITCH
	217-028		INSERT-BLANK

Optional:
190-503 Backup Alarm Kit

[1] USED ON EARLIER MODELS (5020) & SEE FOOTNOTE 2.
[2] ENDS WITH S/N 5H0174 (5020) & ENDS WITH S/N (7520).
[3] BEGINS WITH S/N (5020) & BEGINS WITH S/N (7520).

https://truckmanualshub.com/

ELECTRICAL SCHEMATIC
5020, 7520 DEUTZ

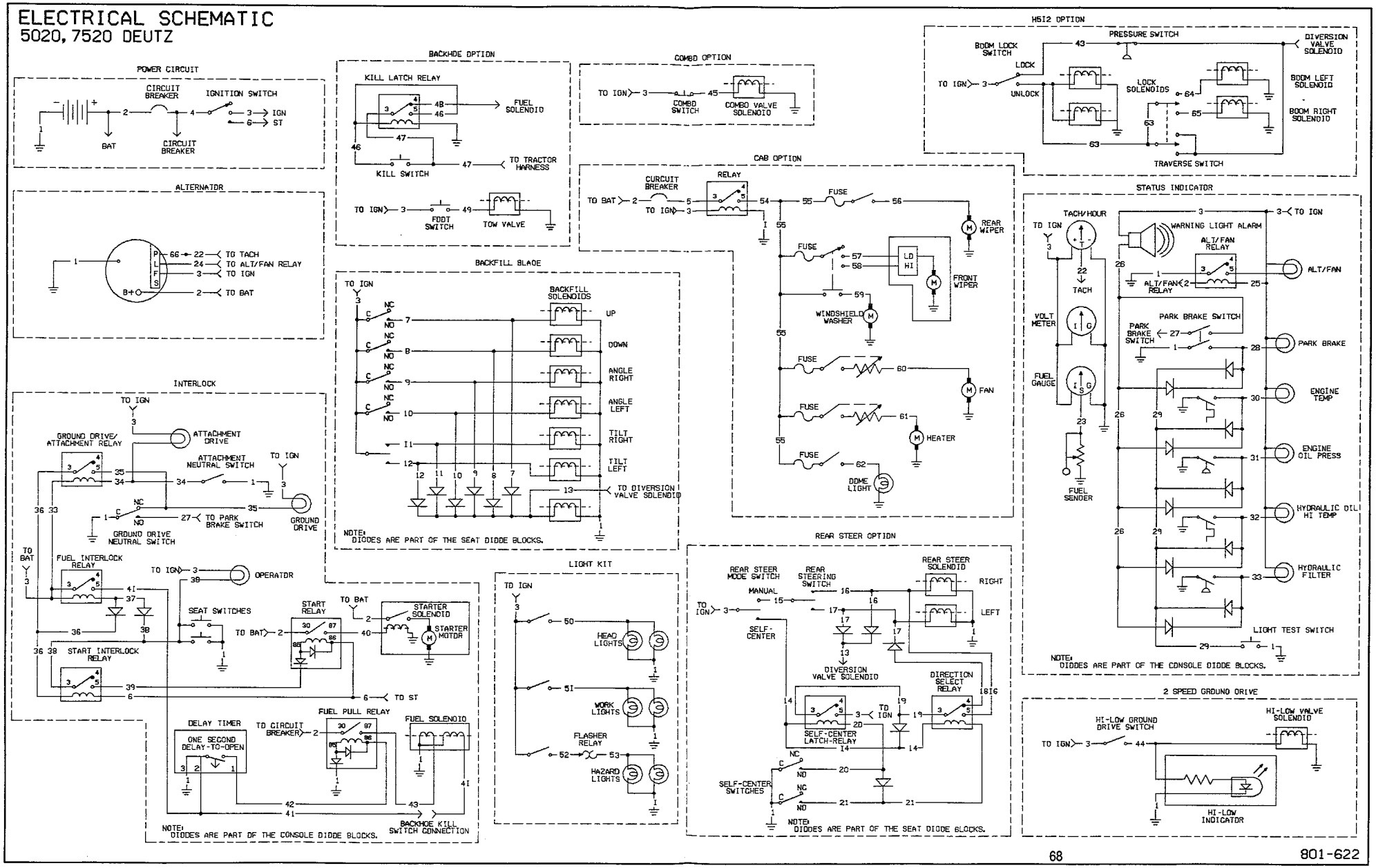

801-622

https://truckmanualshub.com/

ELECTRICAL SCHEMATIC (CONT'D)
5020, 7520 DEUTZ

CKT.	WIRE COLOR	FUNCTION
1	BLK	SYSTEM GROUND
2	RED	BATTERY CIRCUIT
3	ORG	IGNITION CIRCUIT
4	RED	BATTERY CIRCUIT (CIRCUIT BREAKER PROTECTED)
5	RED/BLK	BATTERY CIRCUIT (CIRCUIT BREAKER PROTECTED)
6	WHT/RED	IGNITION SWITCH START 'ST'
7	YEL	BACKFILL BLADE SWITCH TO SOLENOID (UP)
8	WHT/GRN	BACKFILL BLADE SWITCH TO SOLENOID (ON)
9	WHT/BLK	BACKFILL BLADE SWITCH TO SOLENOID (ANGLE R)
10	YEL/BRN	BACKFILL BLADE SWITCH TO SOLENOID (ANGLE L)
11	WHT/BLU	BACKFILL BLADE SWITCH TO SOLENOID (TILT R)
12	GRN	BACKFILL BLADE SWITCH TO SOLENOID (TILT L)
13	PUR	BACKFILL BLADE & REAR STEER TO DIV VALVE SOLENOID
14	YEL	SELECT SWITCH TO SELF-CENTER RELAYS
15	RED	SELECT SWITCH TO STEERING SWITCH
16	GRA	STEER SWITCH TO REAR STEER SOLENOID (L)
17	BRN	STEER SWITCH TO REAR STEER SOLENOID (R)
18	BLK	DIRECTION SELECT RELAY TO DIODE
19	YEL/BLU	SELF-CENTER LATCH RELAY TO DIRECTION SELECT RELAY
20	WHT	SELF-CENTER (L) TO SELF-CENTER LATCH RELAY
21	YEL/RED	SELF-CENTER (R) TO DIRECTION SELECT RELAY
22	YEL	TACH TO ALTERNATOR WIRE (66)
23	BRN	FUEL SENDER TO FUEL GAUGE
24	YEL/BLK	ALT/FAN RELAY TO ALTERNATOR
25	PUR	ALT/FAN RELAY TO LIGHT
26	BLU	DIODES AND PARK BRAKE SWITCH TO AUDIO ALARM
27	BLU/RED	PARK BRAKE SWITCH TO GROUND DRIVE NEUTRAL SWITCH
28	BLK	PARK BRAKE LIGHT TO PARK BRAKE SWITCH
29	BLK	DIODES TO PUSH BUTTON TEST SWITCH
30	BRN	ENGINE OIL TEMP LIGHT TO SWITCH
31	GRN	ENGINE OIL PRESSURE LIGHT TO SWITCH
32	YEL	HYDRAULIC OIL TEMP LIGHT TO SWITCH
33	GRA	HYDRAULIC FILTER LIGHT TO SWITCH
34	GRA	ATTACH NEUTRAL SW TO GND DR/ATTACH RELAY & LIGHT
35	PUR	GROUND DRIVE NEUTRAL SWITCH TO GO/A RELAY & LIGHT
36	YEL/BLK	GO/A RELAY TO START INTERLOCK RELAY
38	TAN/BLK	SEAT SWITCH TO LIGHT & START INTERLOCK RELAY
[1]39	WHT/BLK	START INTERLOCK RELAY TO START RELAY
[2]40	WHT/BLK	START RELAY TO START SOLENOID
41	ORG/GRN	FUEL INT RELAY TO DELAY TIMER & FUEL SOLENOID
42	BLU	DELAY TIMER TO FUEL PULL RELAY
43	BRN/ORG	FUEL PULL RELAY TO FUEL SOLENOID
44	BLU	TWO SPEED GND DRIVE SWITCH TO SOLENOID & LIGHT
45	ORG	COMBO SWITCH TO SOLENOID
46	ORG	KILL LATCH RELAY TO SWITCH
47	ORG/GRN	KILL SWITCH TO TRACTOR HARNESS
48	ORG/BLK	KILL LATCH RELAY TO FUEL SOLENOID
49	ORG	FOOT SWITCH TO TOW VALVE SOLENOID
50	YEL/BLK	SWITCH TO HEADLIGHTS
51	YEL/BLU	SWITCH TO WORK LIGHTS
52	YEL/RED	SWITCH TO FLASHER RELAY
53	YEL/RED	FLASHER RELAY TO HAZARD LIGHTS
54	RED/BLU	CAB RELAY TO CAB SWITCHES
55	BLK	POWER WIRE TO FUES BLOCK
56	GRA	SWITCH TO REAR WIPER
57	LT GRN	SWITCH TO FRONT WIPER (LO)
58	RED	SWITCH TO FRONT WIPER (HI)
59	YEL	SWITCH TO WINDSHIELD WASHER
60	YEL	SWITCH TO FAN
61	BLU	SWITCH TO HEATER FAN
62	BLK	SWITCH TO DOME LIGHT
63	BRN	BOOM UNLOCK CIRCUIT
65	GRA	TRAVERSE SWITCH TO LEFT SOLENOID
65	GRN	TRAVERSE SWITCH TO RIGHT SOLENOID
66	BLK	TACH CIRCUIT TO ALTERNATOR

Optional:
190-503 Backup Alarm Kit

[1] 18 GA WIRE
[2] 12 GA WIRE

https://truckmanualshub.com/

HYDRAULIC SCHEMATIC (CONT'D)
7520, 8020

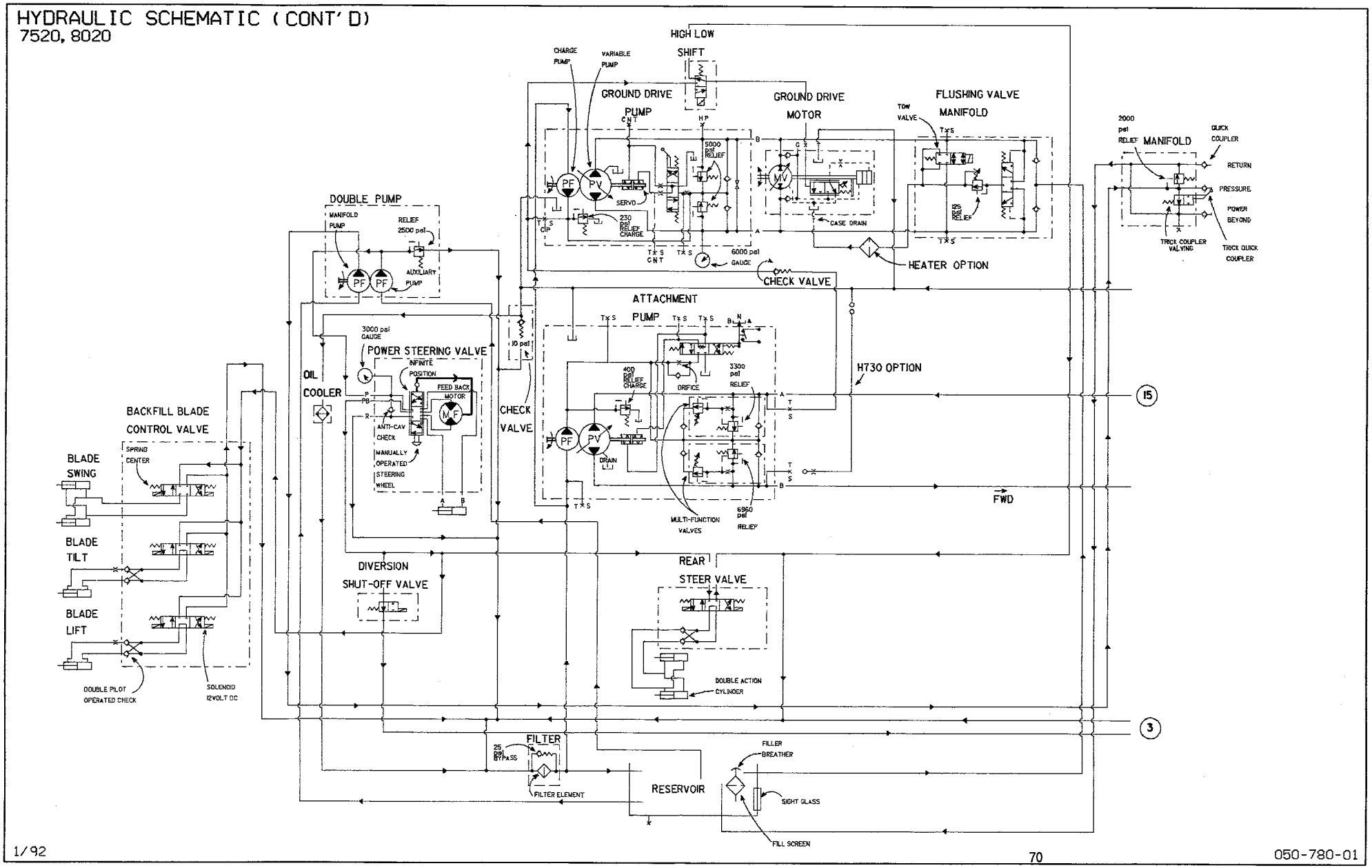

https://truckmanualshub.com/

HYDRAULIC SCHEMATIC
7520, 8020

SPECIFICATIONS

ENGINE		PUMP			MOTOR	
MFG (NO LOAD)	RPM	TYPE	GPM	DISPLACEMENT	TYPE	DISPLACEMENT
DEUTZ (DIESEL)	2500	GROUND DRIVE	30.3	2.80 IN^3	GROUND DRIVE	2.80 IN^3
		CHARGE	9.1	.85 IN^3	STEERING	11.88 IN^3
		ATTACHMENT	27.7	2.56 IN^3		
		CHARGE	9.3	.86 IN^3		
		AUXILLARY	7.1	.66 IN^3		
		MANIFOLD	14.8	1.37 IN^3		
DEERE (DIESEL)	2500	GROUND DRIVE	30.3	2.80 IN^3	GROUND DRIVE	2.80 IN^3
		CHARGE	9.1	.85 IN^3	STEERING	11.88 IN^3
		ATTACHMENT	27.7	2.56 IN^3		
		CHARGE	9.3	.86 IN^3		
		AUXILLARY	7.1	.66 IN^3		
		MANIFOLD	14.8	1.37 IN^3		

NOTE: REFERENCE NUMBERS IN BALLOONS REFER TO CONNECTIONS ON ATTACHMENT HYDRAULIC SCHEMATICS.

https://truckmanualshub.com/

ATTACHMENT AND GROUND DRIVE PUMP HYDRAULICS

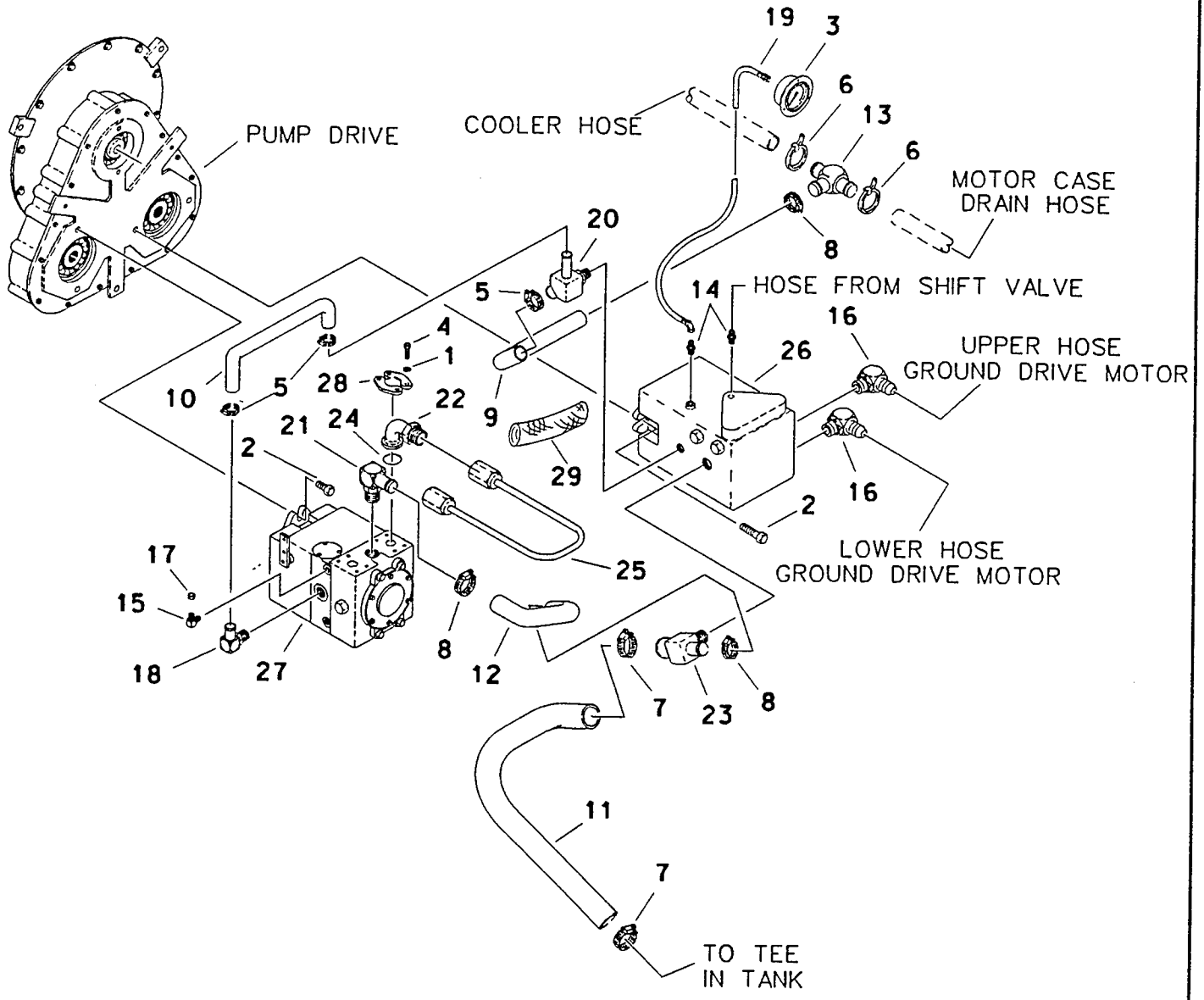

https://truckmanualshub.com/

ATTACHMENT AND GROUND DRIVE PUMP HYDRAULICS

REF NO.	PART NUMBER	QTY	DESCRIPTION	REMARKS
1.	105-072	8	LOCK WASHER (3/8")	
2.	106-202	4	FLANGE LOCK BOLT	
3.	217-519	1	PRESSURE GAUGE (6000 PSI)	
4.	106-004	8	BOLT (3/8-NC X 1-3/8")	
5.	110-026	2	HOSE CLAMP	
6.	110-030	1	CABLE TIE	
7.	110-133	2	HOSE CLAMP	
8.	110-353	4	HOSE CLAMP	
9.	116-364	AR	DRAIN HOSE (8")	
10.	116-362	AR	DRAIN HOSE (10-1/4")	
11.	116-363	AR	SUCTION HOSE (12-3/4")	
12.	116-361	AR	SUCTION HOSE (6")	
13.	154-192	1	SLIP ON TEE	
14.	154-220	2	CONNECTOR (04 O/06)	
15.	154-226	1	CONNECTOR (04 O/06 S 90)	5020
	154-387	1	CONNECTOR (04 S 90 ORF)	7520/8020
16.	154-287	2	CONNECTOR (16 O/16 S 90)	
17.	154-296	1	CAP	
18.	154-362	1	COUPLER (10 S 90)	
19.	154-728	1	HOSE (36" 3000 PSI)	
20.	155-214	1	BRANCH TEE (12 S)	
21.	155-146	1	SLIP ON COUPLER (12 S)	
22.	155-216	2	FITTING (16 O)	
23.	155-217	1	BRANCH TEE (12 S)	
24.	155-737	2	O-RING (214 D70)	
25.	156-455	1	HYDRAULIC LINE	
26.	158-337	1	HYDRAULIC PUMP	SEE FOOTNOTE 3
	158-336	1	HYDRAULIC PUMP	SEE FOOTNOTE 2
	158-316	1	HYDRAULIC PUMP	SEE FOOTNOTE 1
	126-014	1	INNER SHAFT BEARING	
	157-568	1	SHAFT SEAL	
	115-547	2	BEARING RETAINER	
	165-729	1	HOUSING GASKET	
	126-021	1	OUTER SHAFT BEARING	
	500-578	2	PISTON RING SET	
27.	158-320	1	DOUBLE HYDRAULIC PUMP	
	500-576		SEAL REPAIR KIT	
	500-639		NEUTRAL START SWITCH	
	500-763	1	MULTIFUNCTION VALVE - RELIEF	IDENTIFIED BY "7" ON A FLAT
	500-764	1	MULTIFUCTION VALVE - LIMIT	IDENTIFIED BY "1" ON A FLAT
28.	159-039	4	SPLIT FLANGE (3/4")	
29.	115-776	1	ABRASION SLEEVE	7520/8020

FOOTNOTES

1-5020 ENDS WITH S/N5J0360
7520 ENDS WITH S/N5J0287
8020 ENDS WTIH S/N5J0283

2-5020 S/N5J0361 THRU S/N
7520 S/N5J0288 THRU S/N
8020 S/N5J0284 THRU S/N

3-5020 BEGINS WITH S/N
7520 BEGINS WITH S/N
8020 BEGINS WITH S/N

NOTE:

REFER TO O-RING CHART (800-301) IN BACK OF THE BOOK FOR REPLACEMENT OF SAE AND ORS CONNECTOR O-RINGS.

https://truckmanualshub.com/

CHECK VALVE HYDRAULICS
ENDS WITH S/N 5H0178

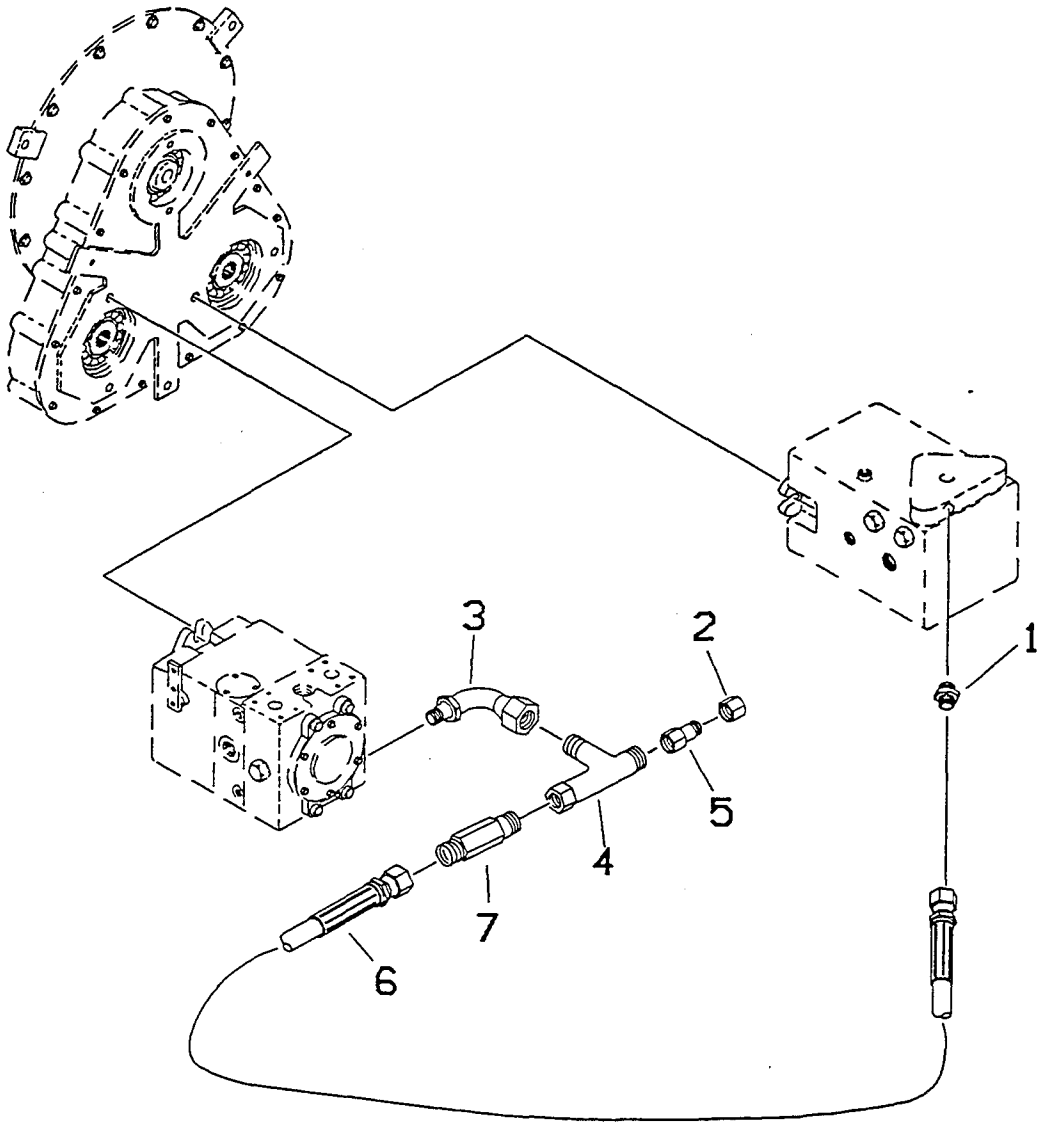

REF. NO.	PART NUMBER	QTY.	DESCRIPTION
1.	154-221	1	CONNECTOR
	155-705		O-RING (906 D90)
	155-038		O-RING (012 D90)
2.	154-296	1	CAP
3.	154-343	1	ADAPTER UNION
	155-705		O-RING (906 D90)
4.	154-344	1	RUN TEE
	155-038		O-RING (012 D90)
5.	154-373	1	REDUCER BUSHING
	157-037		O-RING (011 D90)
6.	154-707	1	HOSE (16" 3000 PSI)
7.	159-095	1	CHECK VALVE

https://truckmanualshub.com/

CHECK VALVE HYDRAULICS

ENDS WITH S/N 5J0057 (5020 & 7520), 5J0055 (8020)

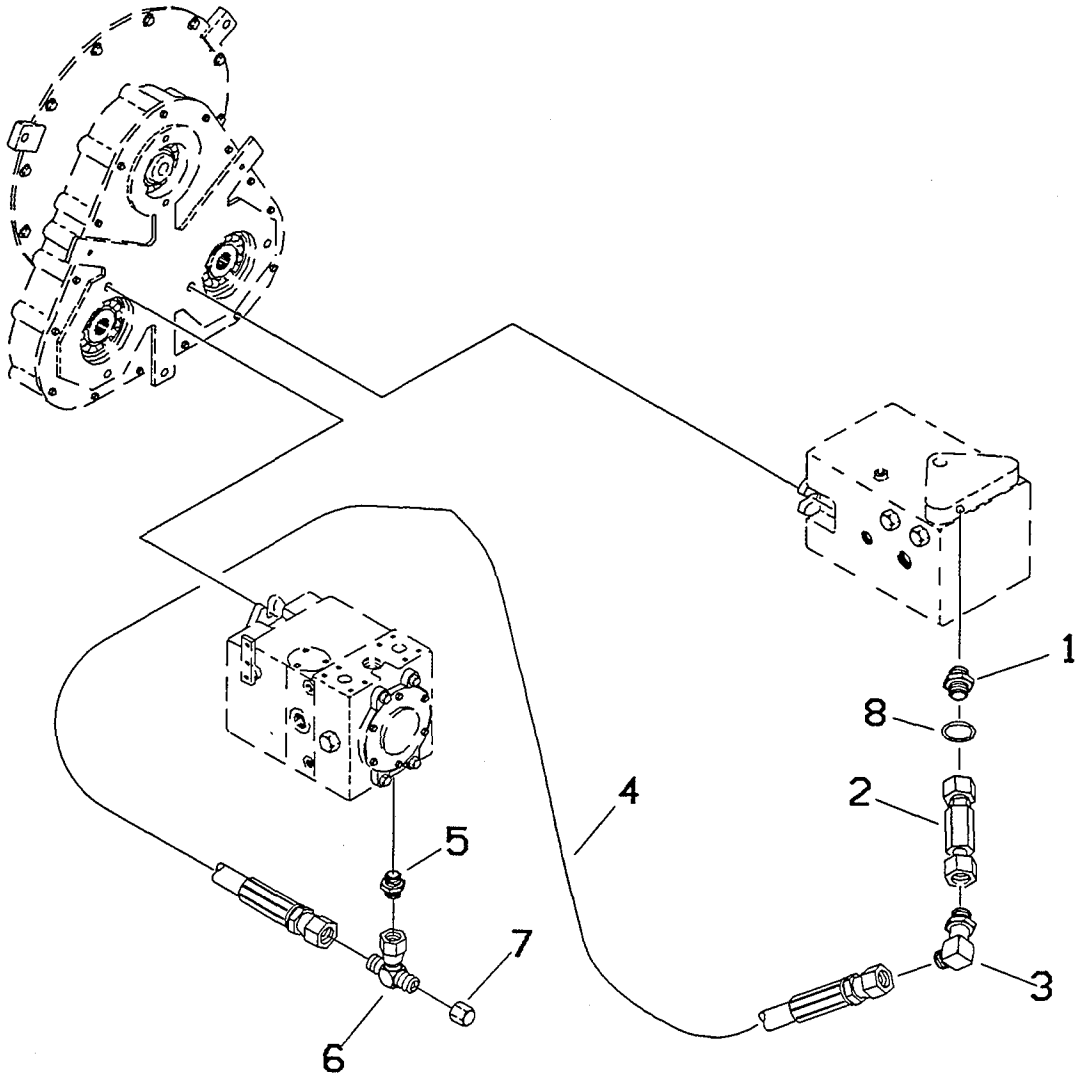

REF. NO.	PART NUMBER	QTY.	DESCRIPTION
1.	154-004	1	CONNECTOR
	155-705		O-RING (906 D90)
2.	159-112	1	CHECK VALVE
3.	154-235	1	CONNECTOR
	157-039		O-RING (014 D90)
	155-706		O-RING (908 D90)
4.	154-708	1	HOSE (34" 3000 PSI)

REF. NO.	PART NUMBER	QTY.	DESCRIPTION
5.	154-246	1	CONNECTOR
	157-039		O-RING (014 D90)
	155-705		O-RING (906 D90)
6.	154-257	1	BRANCH TEE
	157-039		O-RING (014 D90)
7.	154-327	1	CAP
8.	155-706	1	O-RING (908 D90)

https://truckmanualshub.com/

CHECK VALVE HYDRAULICS
BEGINS WITH S/N 5J0058 (5020 & 7520). 5J0056 (8020)

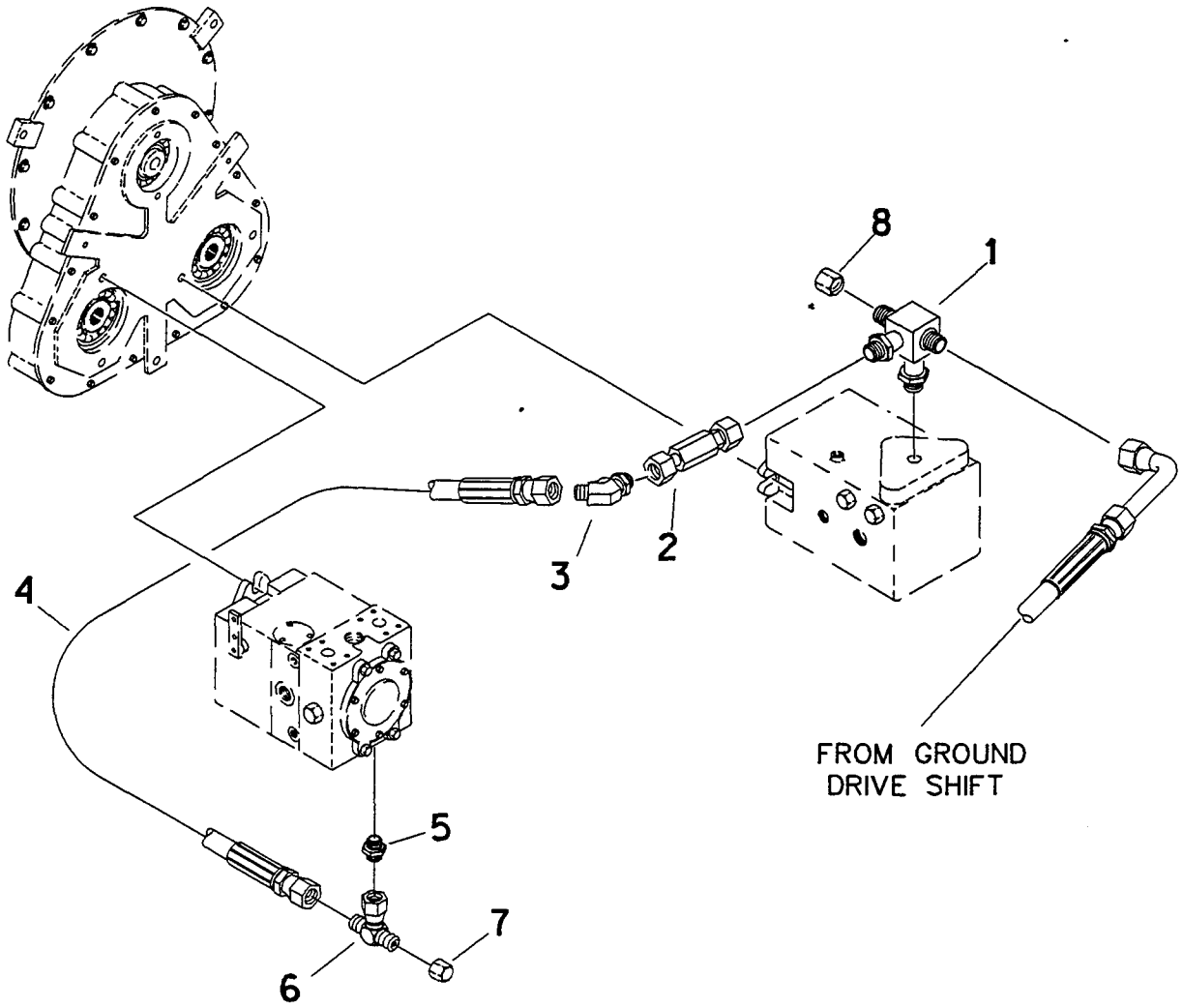

REF. NO.	PART NUMBER	QTY.	DESCRIPTION
1.	154-443	1	CONNECTOR
	155-705		O-RING (906 D90)
	155-706		O-RING (908 D90)
	157-037		O-RING (011 D90)
2.	159-112	1	CHECK VALVE
3.	154-284	1	[1] CONNECTOR
	157-039		O-RING (014 D90)
	155-706		O-RING (908 D90)
	154-235	1	[2] CONNECTOR
	157-039		O-RING (014 D90)
	155-706		O-RING (908 D90)

REF. NO.	PART NUMBER	QTY.	DESCRIPTION
4.	154-759	1	HOSE (36" 3000 PSI)
5.	154-246	1	CONNECTOR
	157-039		O-RING (014 D90)
	155-705		O-RING (906 D90)
6.	154-257	1	BRANCH TEE
	157-039		O-RING (014 D90)
7.	154-327	1	CAP
8.	154-296	1	CAP

[1] 5020 ONLY
[2] 7520/8020

https://truckmanualshub.com/

COLD START BYPASS

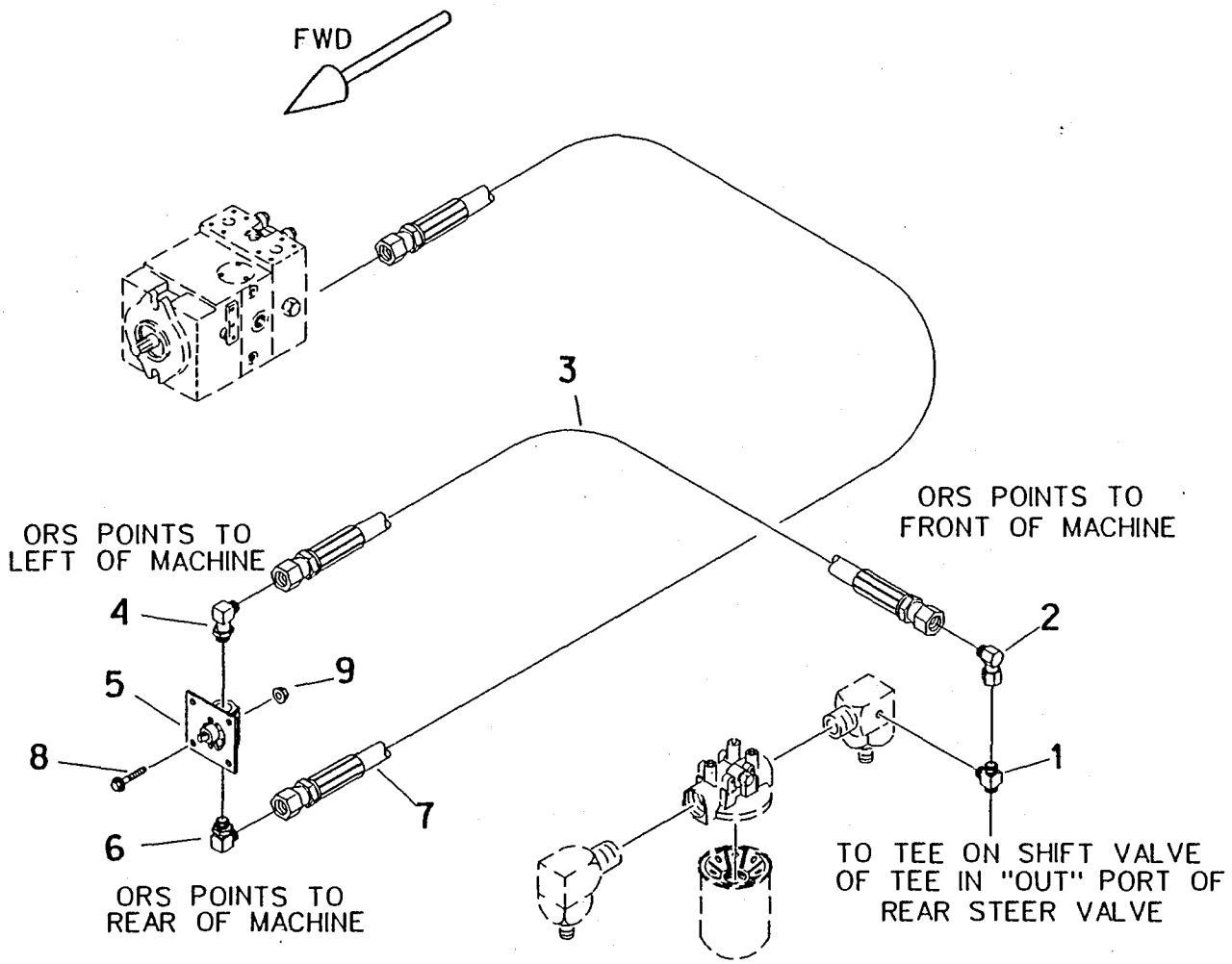

REF. NO.	PART NUMBER	QTY.	DESCRIPTION
1.	154-346	1	BRANCH TEE
	157-038		O-RING (012 D90)
	155-705		O-RING (906 D90)
2.	154-228	1	CONNECTOR
	157-038		O-RING (012 D90)
3.	154-732	1	HOSE (19" 3000 PSI)
4.	154-420	1	CONNECTOR
	157-038		O-RING (012 D90)

REF. NO.	PART NUMBER	QTY.	DESCRIPTION
5.	158-597	1	BYPASS VALVE
	110-538		VALVE LEVER
6.	154-352	1	CONNECTOR
	157-038		O-RING (012 D90)
7.	154-745	1	HOSE (50" 3000 PSI)
8.	105-820	4	FLANGE LOCK BOLT
9.	105-832	4	FLANGE LOCKNUT

https://truckmanualshub.com/

AUXILIARY PUMP HYDRAULICS

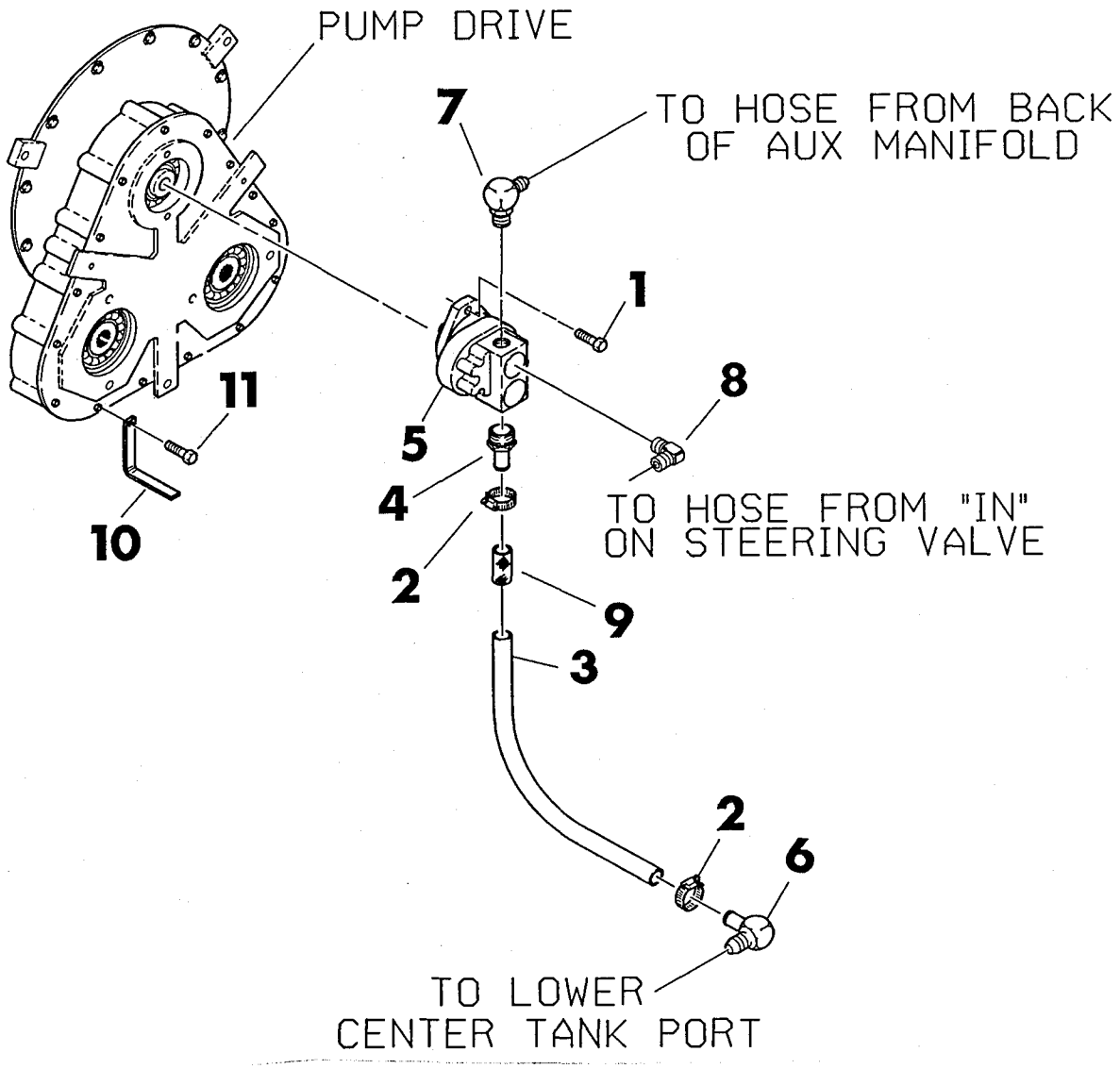

Ref. No.	Part Number	Qty.	Description
1.	105-826	2	Bolt (3/8-NC x 1")
2.	110-353	2	Hose Clamp
3.	116-080	AR	Hose (1-1/4" ID)—use 27"
4.	155-004	2	Slip On Coupler (-20 SAE M x -20 hub, STR)
	155-702		O-Ring (-920)
5.	158-324	1	Double Hydraulic Pump
6.	155-174	1	Slip On Coupler (-12 SAE M x -12 hub x 90°)
	155-709		O-Ring (-912)

Ref. No.	Part Number	Qty.	Description
7.	155-149	1	Slip On Coupler (-16 SAE M x -20 hub x 90°)
	155-748		O-Ring (-916)
8.	154-298	1	Connector (-10 ORS M x -10 SAE M x 90°)
	155-707		SAE O-Ring (-910)
	157-040		ORS O-Ring (2-016)
9.	115-687	AR	Abrasion Sleeve (1.5" LG, blue)—use 12"
10.	363-128	1	Hose Support
11.	105-873	1	Bolt (5/16-NC x 1")

https://truckmanualshub.com/

AUXILIARY MANIFOLD HYDRAULICS

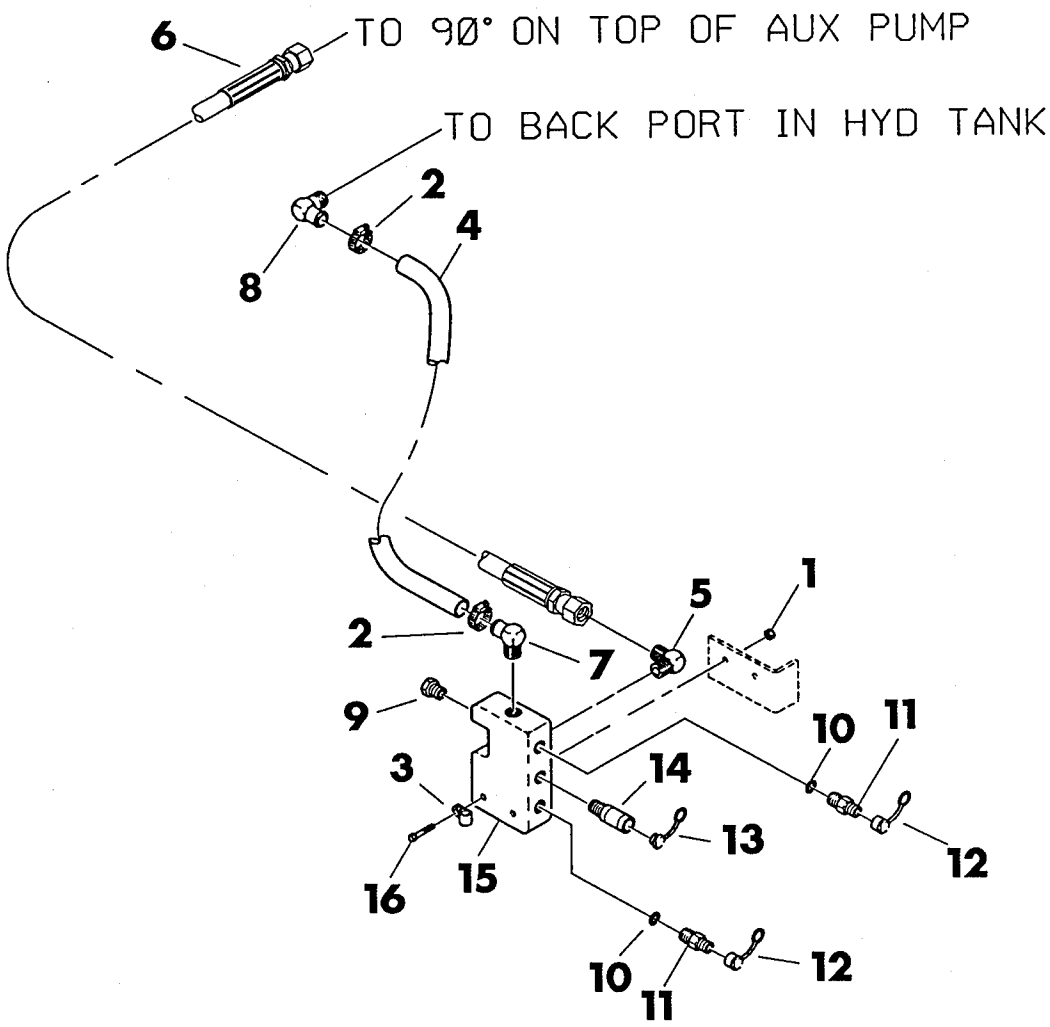

Ref. No.	Part Number	Qty.	Description
1.	105-845	2	Nut (3/8-NC)
2.	110-026	2	Hose Clamp (1/2" to 1-1/4")
3.	110-097	1	Clamp (1/2")
4.	115-374	AR	Hose (3/4" ID)—use 86"
5.	154-300	1	Connector (-10 ORS M x -12 SAE M x 90°)
	157-040		ORS O-Ring (2-016)
	155-709		SAE O-Ring (-912)
6.	154-710	1	Hose (-10 ORS x 54", 2750 PSI)
7.	155-174	1	Slip On Coupler (-12 SAE M x -12 hub x 90°)
	155-709		SAE O-Ring (-912)
8.	155-196	1	Slip On Coupler (-12 SAE M x -12 hub x 45°)
	155-709		SAE O-Ring (-912)

Ref. No.	Part Number	Qty.	Description
9.	155-630	1	Relief Cartridge (2000 PSI)
10.	155-709	2	O-Ring (-912)
11.	155-933	2	Quick Coupler Adapter (-12 SAE M)
	190-184		Seal Repair Kit
12.	155-935	2	Dust Cap
13.	155-936	1	Dust Plug
14.	155-958	1	Trick Quick Coupler (-14 SAE M)
	155-747		SAE O-Ring (-914)
15.	159-080	1	Hydraulic Manifold
16.	500-003	2	Bolt (3/8-NC x 2-3/4")

https://truckmanualshub.com/

OIL COOLER and FILTER HYDRAULICS

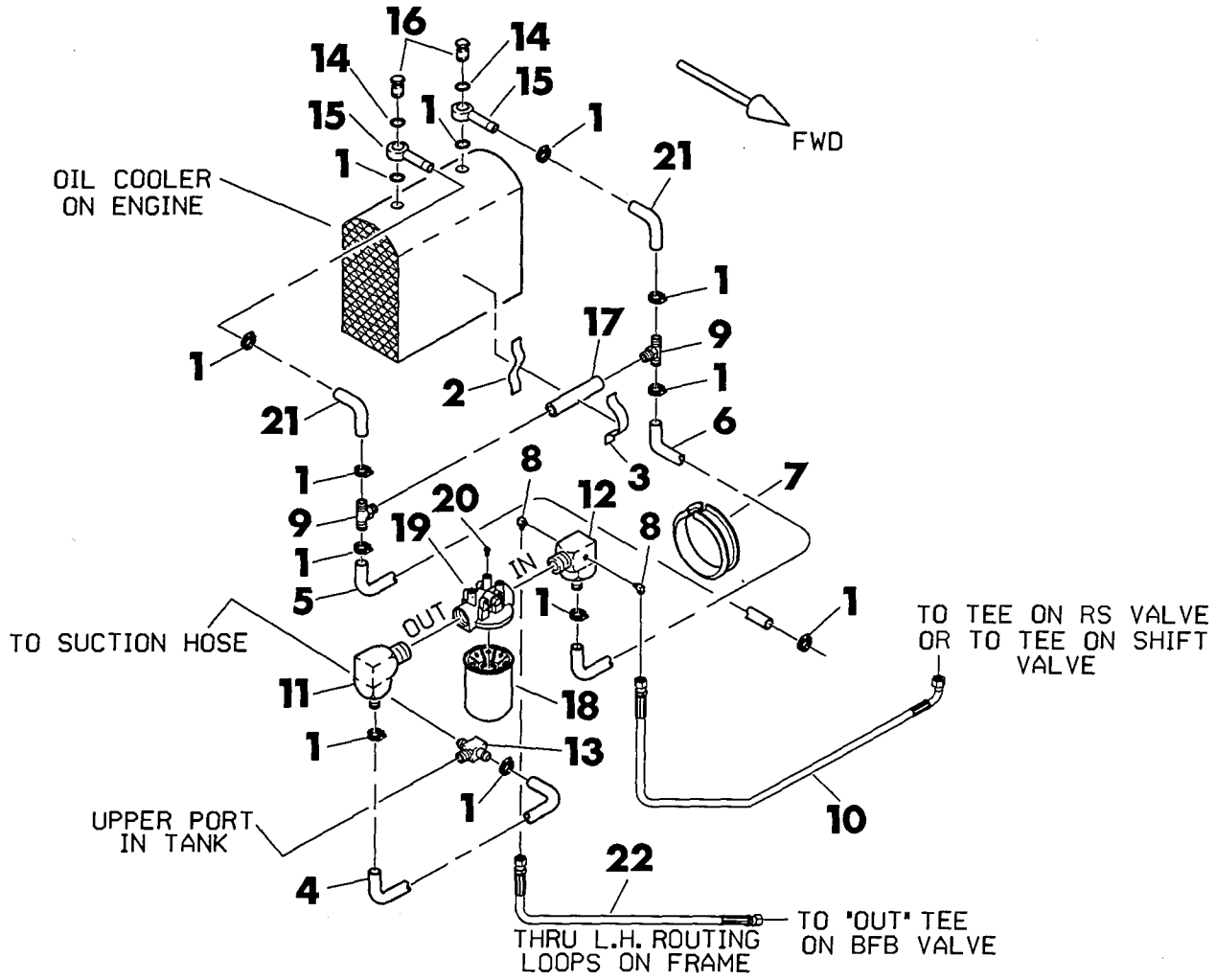

Ref. No.	Part Number	Qty.	Description
1.	110-353	10	Hose Clamp (3/4" to 1-1/2")
2.	110-366	1	Bottom Velcro Strip (1" WID)—use 8"
3.	110-431	1	Top Velcro Strip (1" WID)—use 8"
4.	116-094	AR	Hose (1" ID)—use 36"
5.	116-094	AR	Hose (1" ID)—use 34"
6.	116-094	AR	Hose (1" ID)—use 88"
7.	116-259	AR	Grommet Edging (use 16.5")
8.	154-342	2	Connector (-6 ORS M x -6 SAE M x 90°)
	155-705		SAE O-Ring (-906)
	157-038		ORS O-Ring (2-012)
9.	154-361	2	Branch Tee (-12 SAE M x -16 hub x -16 hub)
	155-709		SAE O-Ring (-912)
10.	154-734	1	Hose (-6 ORS FM x 46", 3000 PSI)
11.	155-195	1	Slip On Coupler (-20 SAE M x -12 hub x 90°)
	155-702		SAE O-Ring (-920)
12.	155-213	1	Adapter (-20 SAE M x -16 hub x -24 hub x -6 SAE FM x -6 SAE FM)
	155-702		SAE O-Ring (-920)
13.	155-215	1	Branch Tee (-16 SAE M x -16 hub x -24 hub x -8 SAE FM)
	155-748		SAE O-Ring (-916)
14.	155-748	4	O-Ring (-916)
15.	156-266	2	Banjo Fitting (.75" ID x 1" OD)
16.	156-267	2	Banjo Bolt (M30-1.5 x 1/2" LG)
17.	158-576	1	Check Valve (-12 SAE FM)
18.	159-079	1	Filter Element
19.	159-081	1	Hydraulic Filter (Incl. ref. no. 18)
20.	501-153	3	Flange Lock Bolt (3/8-NC x 5/8")
21.	116-392	2	Hose (1" ID x 1.375" OD x 8.14" LG)
22.	154-813	1	Hose (-6 ORS FM STR/45° x 62", 3000 PSI)

https://truckmanualshub.com/

DUMP VALVE HYDRAULICS
ENDS WITH S/N 5H0469

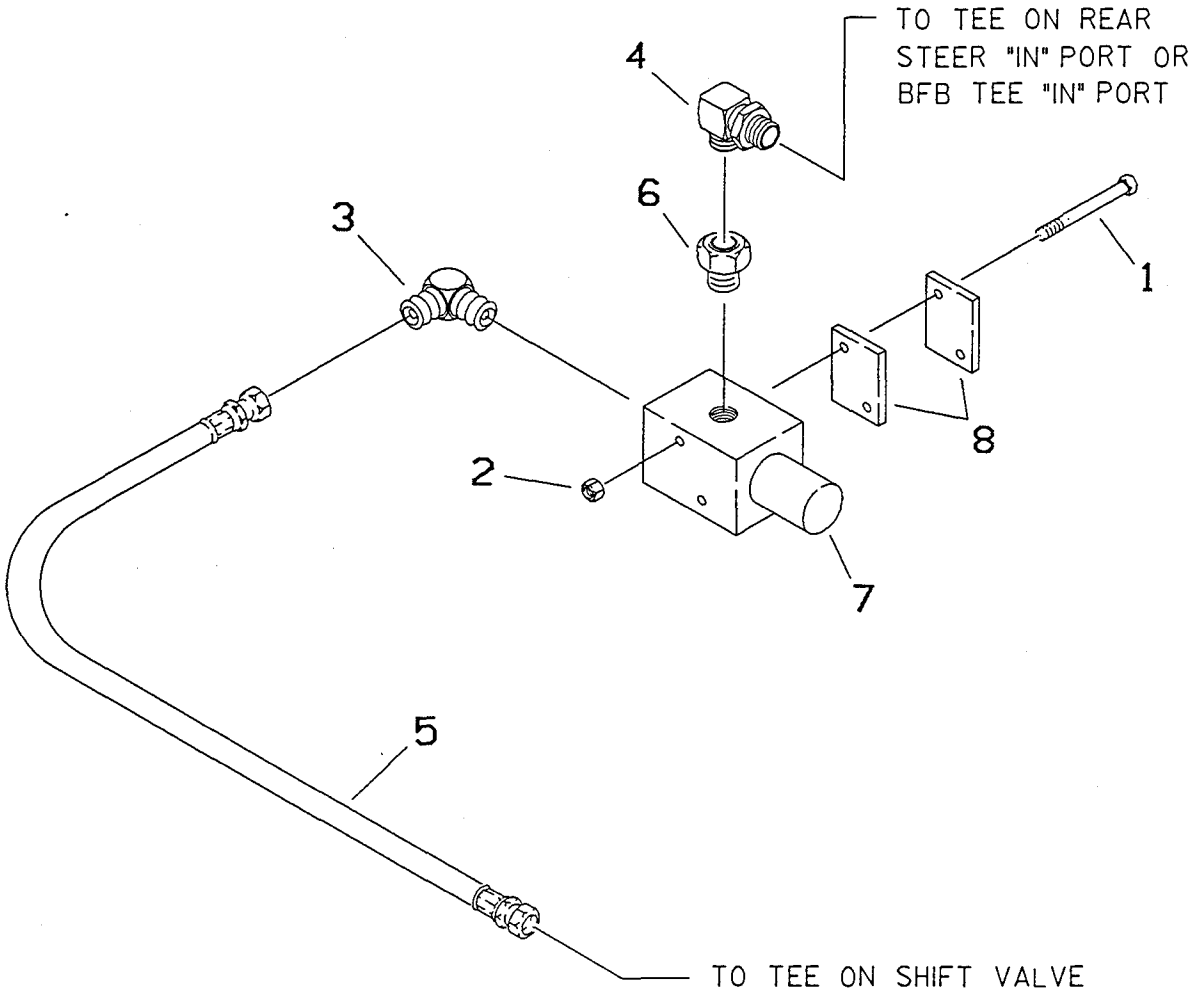

REF. NO.	PART NUMBER	QTY.	DESCRIPTION
1.	105-224	2	BOLT (1/4-NC X 2-1/2")
2.	105-832	2	FLANGE LOCKNUT
3.	154-227	1	CONNECTOR
	155-706		O-RING (908 D90)
	157-038		O-RING (012 D90)
4.	154-343	1	ADAPTER UNION
	155-705		O-RING (906 D90)

REF. NO.	PART NUMBER	QTY.	DESCRIPTION
5.	154-722	1	HOSE (32" 3000 PSI)
6.	155-163	1	ADAPTER BUSHING
	155-706		O-RING (908 D90)
7.	158-569	1	HYDRAULIC CONTROL VALVE
8.	324-127	2	VALVE SPACER

https://truckmanualshub.com/

DUMP VALVE HYDRAULICS
BEGINS WITH S/N 5H0470

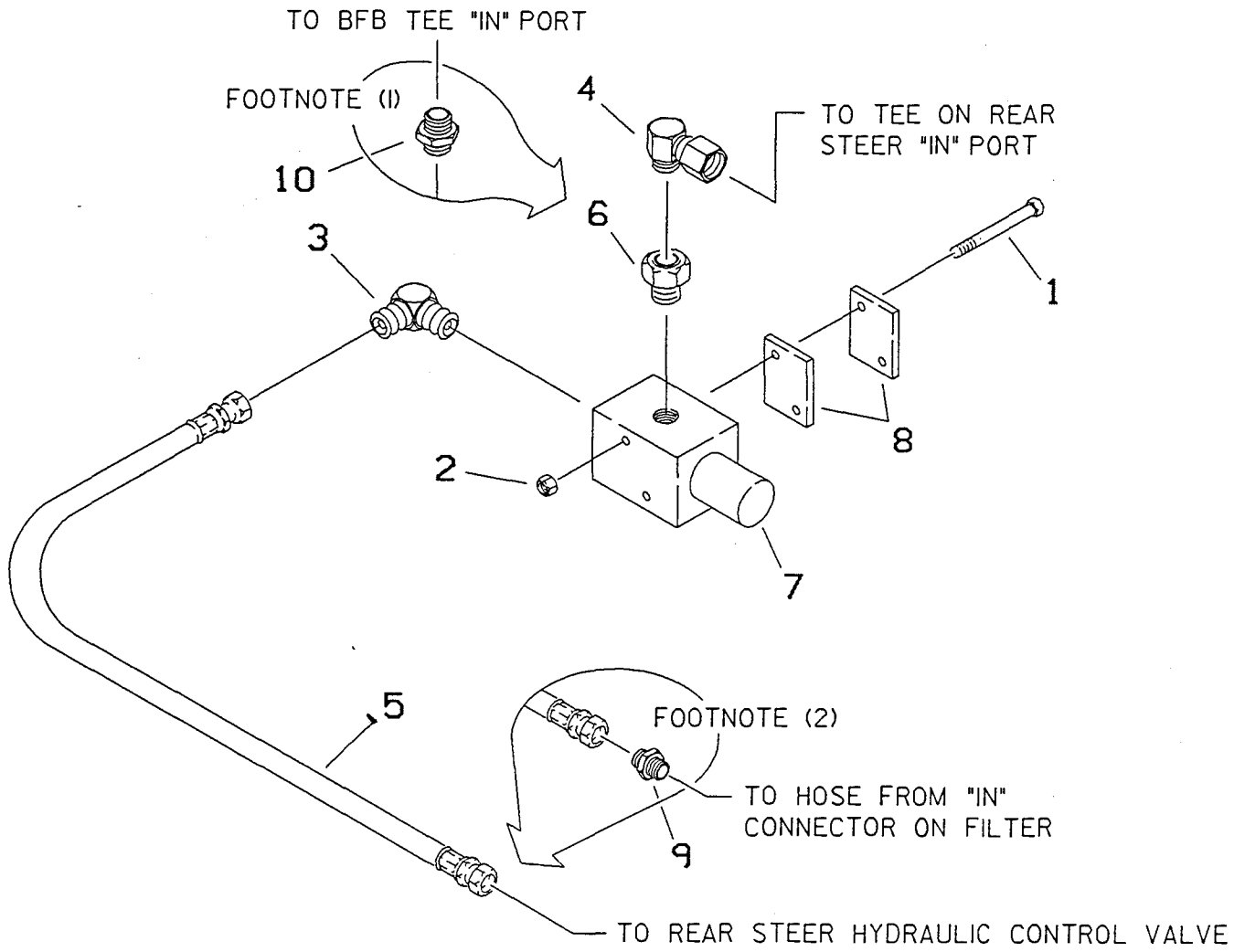

REF. NO.	PART NUMBER	QTY.	DESCRIPTION
1.	105-224	2	BOLT (1/4-NC X 2-1/2")
2.	105-832	2	FLANGE LOCKNUT
3.	154-227	1	CONNECTOR
	155-706		O-RING (908 D90)
	157-038		O-RING (012 D90)
4.	154-343	1	ADAPTER UNION
	155-705		O-RING (906 D90)
5.	154-722	1	HOSE (32" 3000 PSI)

REF. NO.	PART NUMBER	QTY.	DESCRIPTION
6.	155-163	1	ADAPTER BUSHING
	155-706		O-RING (908 D90)
7.	158-569	1	HYDRAULIC CONTROL VALVE
8.	324-127	2	VALVE SPACER
9.	154-413	1	[2]ADAPTER UNION
	157-038		O-RING (012 D90)
10.	154-222	1	[1]CONNECTOR
	155-706		O-RING (908 D90)
	157-038		O-RING (012 D90)

[1]USED IN PLACE OF REF NO.'S 4 & 6 ON MACHINES WITHOUT REAR STEER.

[2]USED ON MACHINES WITHOUT REAR STEER.

https://truckmanualshub.com/

FLUSHING VALVE HYDRAULICS

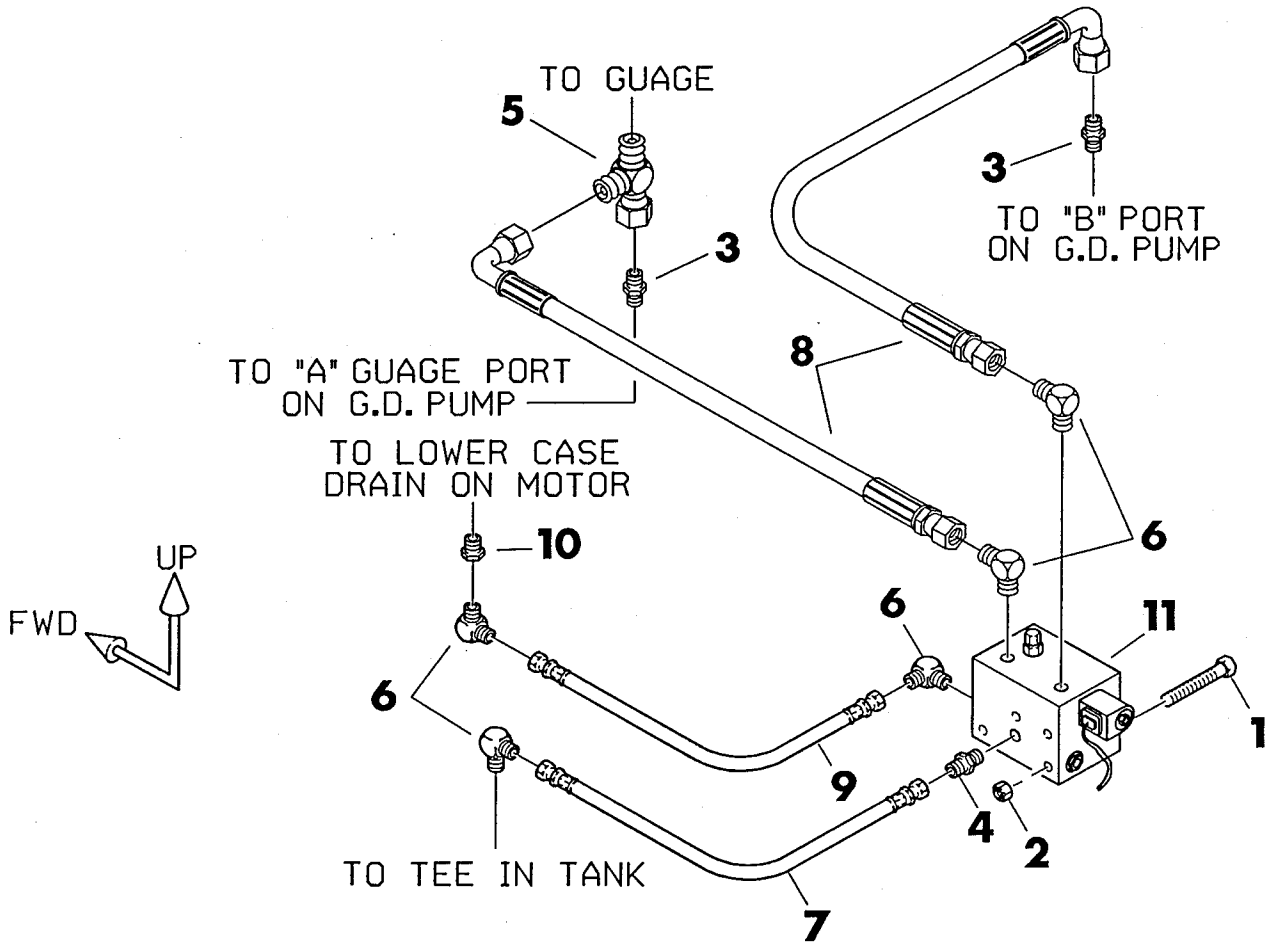

Ref. No.	Part Number	Qty.	Description
1.	105-217	3	Bolt (3/8-NC x 4-1/2")
2.	105-834	3	Nut (3/8-NC)
3.	154-220	2	Connector (-4 ORS M x -6 SAE M, STR)
	155-705		SAE O-Ring (-906)
	157-037		ORS O-Ring (2-011)
4.	154-261	2	Connector (-4 ORS M x -8 SAE M, STR)
	155-706		SAE O-Ring (-908)
	157-037		ORS O-Ring (2-011)
5.	154-265	1	Run Tee (-4 ORS FM x -4 ORS M x -4 ORS M)
	157-037		ORS O-Ring (2-011)

Ref. No.	Part Number	Qty.	Description
6.	154-276	4	Connector (-4 ORS M x -8 SAE M x 90°)
	155-706		SAE O-Ring (-908)
	157-037		ORS O-Ring (2-011)
7.	154-693	1	Hose (-4 ORS FM x 44", 3000 PSI)
8.	154-799	2	Hose (-4 ORS FM STR/90° x 44", 5000 PSI)
9.	154-743	1	Hose (-4 ORS FM STR/90° x 23", 3000 PSI)
10.	155-193	1	Adapter Bushing (-10 SAE M x -8 SAE FM)
	155-707		SAE O-Ring (-910)
11.	158-572	1	Solenoid Control Valve
	500-542		Check Valve
	500-594		Relief Valve
	500-595		Solenoid Valve
	500-596		Shuttle Valve

https://truckmanualshub.com/

GROUND DRIVE HYDRAULICS
ENDS WITH S/N 5H0469

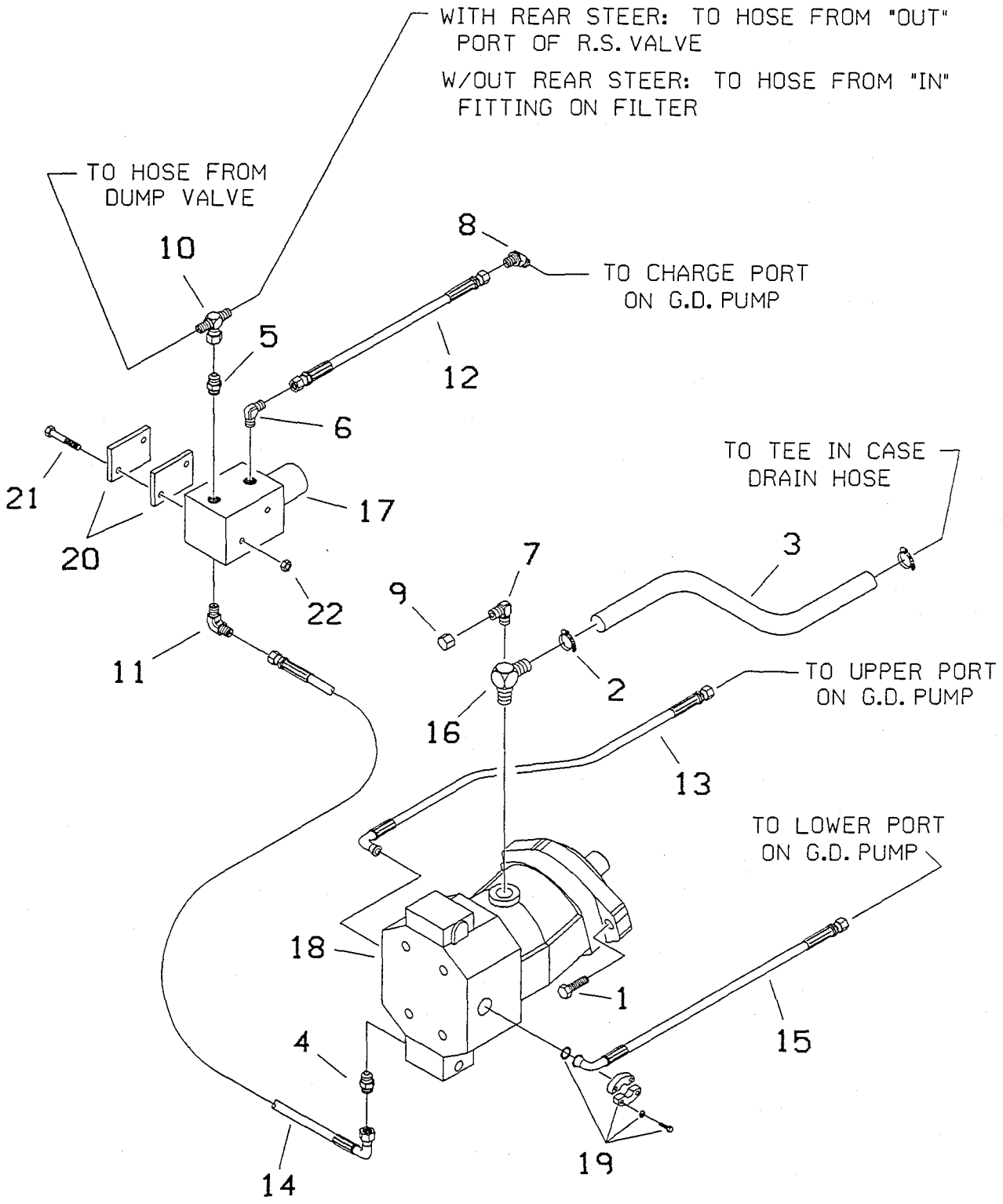

801-001

https://truckmanualshub.com/

GROUND DRIVE HYDRAULICS
ENDS WITH S/N 5H0469

REF NO.	PART NUMBER	QTY	DESCRIPTION	REMARKS
1.	105-969	2	FLANGE LOCK BOLT	
2.	110-353	2	CLAMP	
3.	116-094	AR	HOSE (1 @ 25')	
4.	154-220	1	CONNECTOR (04 O/06 S)	
5.	154-221	1	CONNECTOR (06 O/06 S)	
6.	154-226	1	CONNECTOR (04 O/06 S)	
7.	154-235	1	CONNECTOR (04 O/06 S)	
8.	154-250	1	CONNECTOR (04 O/06 S)	
9.	154-327	1	CAP	
10.	154-348	1	BRANCH TEE (06 O)	
11.	154-449	1	CONNECTOR (04 O/06 S)	
12.	154-692	1	HOSE (54" 3000 PSI)	
13.	154-801	1	HOSE (27.5" 5000 PSI)	7520
	154-803	1	HOSE (33.5" 5000 PSI)	8020
14.	154-802	1	HOSE (26" 3000 PSI)	
15.	154-803	1	HOSE (33.5" 5000 PSI)	7520
	154-875	1	HOSE (32" 5000 PSI)	8020
16.	155-225	1	SLIP ON COUPLER (06 O/08 S)	
17.	158-555	1	SOLENOID CONTROL VALVE	
18.	158-718	1	HYDRAULIC MOTOR	
19.	159-077	2	SPLIT FLANGE	
	105-222		BOLT (7/16-NC X 1-3/4")	
	105-073		LOCKWASHER	
	157-029		O-RING (219 D90)	
20.	314-132	2	VALVE SPACER PLATE	
21.	105-224	2	BOLT (1/4-NC X 2-1/2")	
22.	105-832	2	NUT (1/4-NC)	

NOTE:
REFER TO O-RING CHART (800-301) IN BACK OF THE BOOK FOR REPLACEMENT OF SAE AND ORS CONNECTOR O-RINGS.

https://truckmanualshub.com/

GROUND DRIVE HYDRAULICS
BEGINS WITH S/N 5H0470

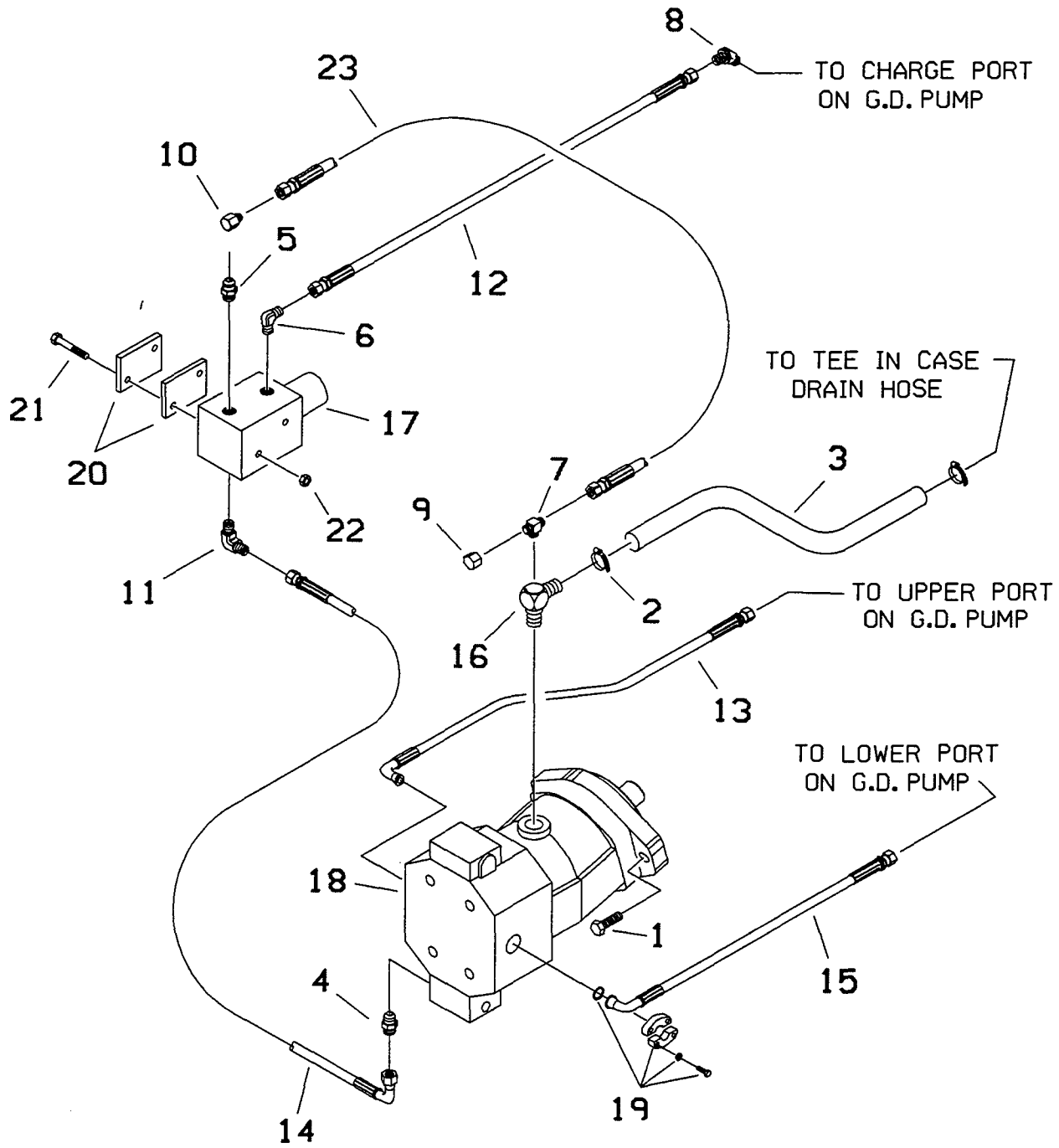

https://truckmanualshub.com/

GROUND DRIVE HYDRAULICS
BEGINS WITH S/N 5H0470

REF NO.	PART NUMBER	QTY	DESCRIPTION	REMARKS
1.	105-969	2	FLANGE LOCK BOLT	
2.	110-353	2	CLAMP	
3.	116-094	AR	HOSE (1 @ 25")	
4.	154-220	1	CONNECTOR (04 O/06 S)	
5.	154-246	1	CONNECTOR (08 O/06 S)	
6.	154-226	1	CONNECTOR (04 O/06 S)	
7.	154-337	1	BRANCH TEE (08 O/08 S)	
8.	154-250	1	CONNECTOR (04 O/06 S)	
9.	154-327	1	CAP	
10.	154-256	1	CONNECTOR (08 O)	
11.	154-449	1	CONNECTOR (04 O/06 S)	
12.	154-705	1	HOSE (60" 3000 PSI)	
13.	154-801	1	HOSE (27.5" 5000 PSI)	7520
	154-803	1	HOSE (33.5" 5000 PSI)	8020
14.	154-802	1	HOSE (26" 3000 PSI)	
15.	154-803	1	HOSE (33.5" 5000 PSI)	7520
	154-875	1	HOSE (32" 5000 PSI)	8020
16.	155-225	1	SLIP ON COUPLER (06 O/08 S)	
17.	158-555	1	SOLENOID CONTROL VALVE	
18.	158-718	1	HYDRAULIC MOTOR	
19.	159-077	2	SPLIT FLANGE	
	105-222		BOLT (7/16-NC X 1-3/4")	
	105-073		LOCKWASHER	
	157-029		O-RING (219 D90)	
20.	314-132	2	VALVE SPACER PLATE	
21.	105-224	2	BOLT (1/4-NC X 2-1/2")	
22.	105-832	2	NUT (1/4-NC)	
23.	154-812	1	HOSE (42" 3000 PSI)	

NOTE:

REFER TO O-RING CHART (800-301) IN BACK OF THE BOOK FOR REPLACEMENT OF SAE AND ORS CONNECTOR O-RINGS.

https://truckmanualshub.com/

FRONT STEERING HYDRAULICS
7520/8020

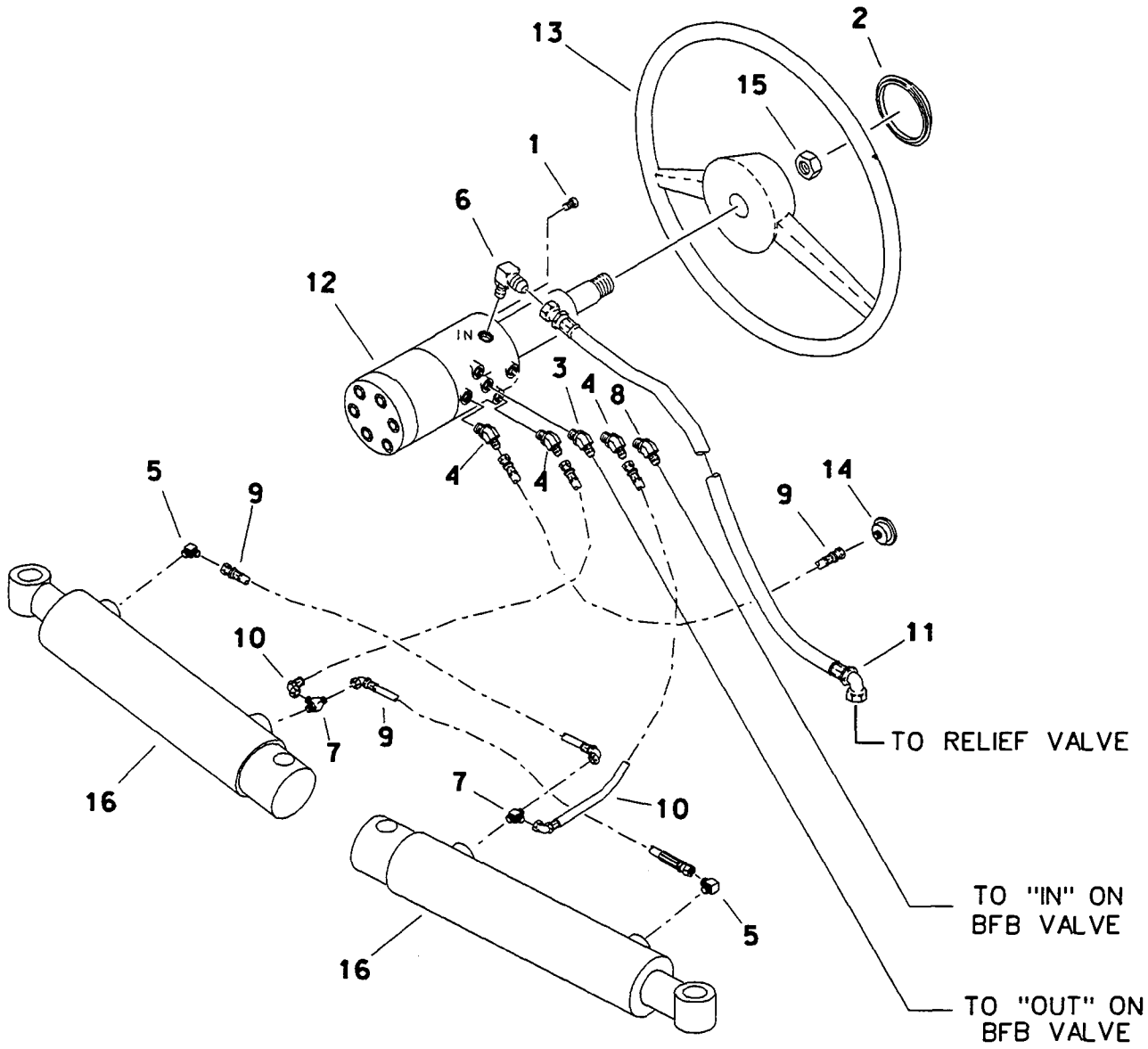

https://truckmanualshub.com/

FRONT STEERING HYDRAULICS
7520/8020

REF NO.	PART NUMBER	QTY	DESCRIPTION	REMARKS
1.	105-822	4	FLANGE LOCK BOLT (5/16-NC X 1/2")	
2.	110-663	1	STEERING WHEEL CAP	
3.	154-224	1	CONNECTOR (06D-06S45)	
4.	154-250	3	CONNECTOR (04D-06S45)	
5.	154-252	2	CONNECTOR (04S-04D90)	
6.	154-253	1	CONNECTOR (08D-06S90)	
7.	154-293	2	BRANCH TEE (04D-04D-04S)	
8.	154-342	1	CONNECTOR (06D-06S90)	
9.	154-701	1	HOSE (04OFX-14"-3000)	
10.	154-703	2	HOSE (04OF-04D90-74"-3000)	
11.	154-812	1	HOSE (08OF-42"-3000)	
12.	158-618	1	POWER STEERING VALVE	INCL REF NO. 15
13.	160-428	1	STEERING WHEEL	PRESENT PRODUCTION
	160-338	1	STEERING WHEEL	EARLY MODELS
	160-412	1	STEERING WHEEL	EARLY MODELS
14.	217-520	1	PRESSURE GAUGE	3000 PSI
15.	105-361		JAM NUT (13/16-NF)	
16.	151-044	2	CYL (2.0" X 1.00" X 6.0")	

FOOTNOTES

https://truckmanualshub.com/

REAR STEERING HYDRAULICS
BEGINS WITH S/N 5H0470

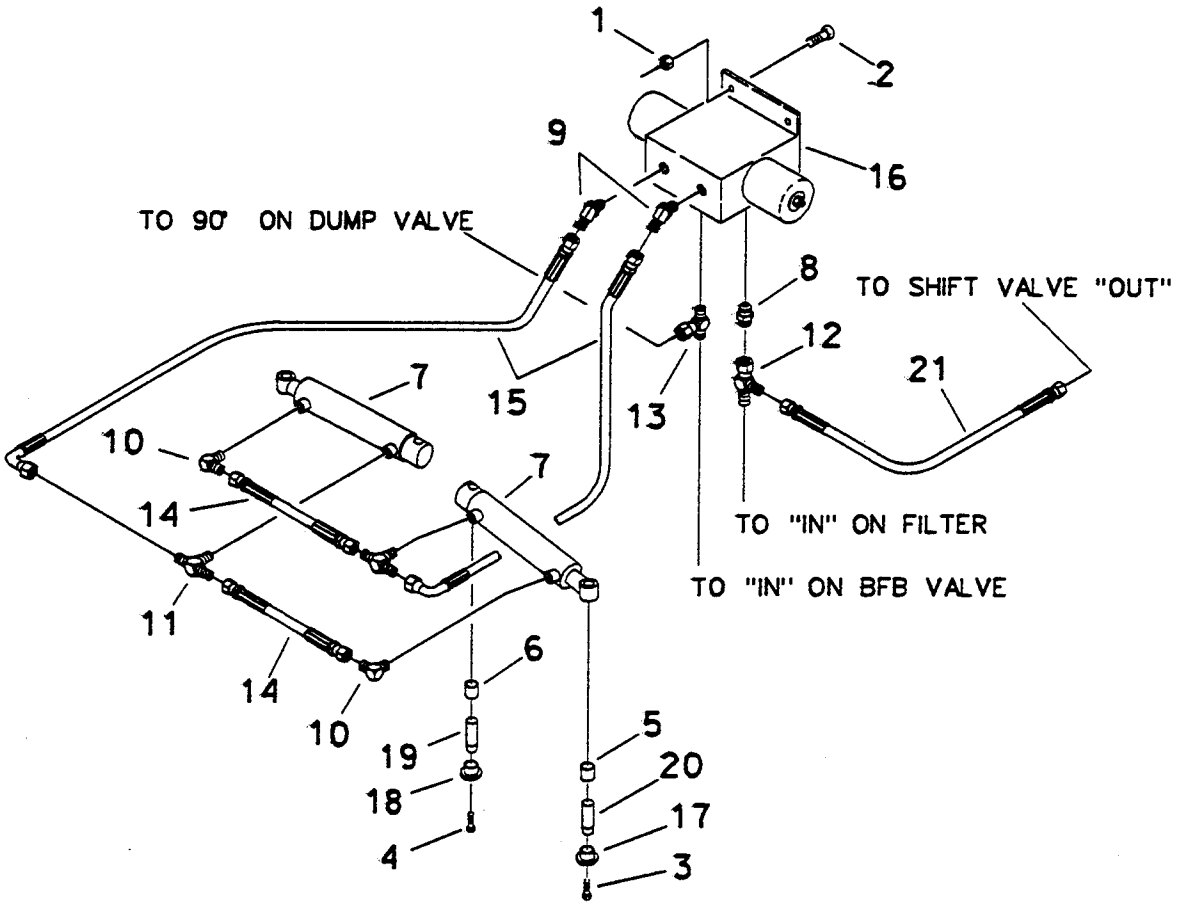

A

801-085

https://truckmanualshub.com/

REAR STEERING HYDRAULICS
BEGINS WITH S/N 5H0470

REF NO.	PART NUMBER	QTY	DESCRIPTION	REMARKS
1.	105-003	2	FLG LOCKNUT (5/16-NC)	
2.	105-873	4	FLG LOCK BOLT (5/16-NC X 1")	
3.	105-874	2	FLG LOCK BOLT (3/8-NC X 1-1/2")	
4.	106-096	2	FLG LOCK BOLT (1/2-NC X 1-3/4")	
5.	125-770	2	FIBER BUSHING	
6.	125-771	2	FIBER BUSHING	
7.	151-044	2	CYL (2.0" X 1.00" X 6")	
8.	154-221	2	CONNECTOR (06S-06O)	
9.	154-250	2	CONNECTOR (04O-06S45)	
10.	154-252	2	CONNECTOR (04O-04S90)	
11.	154-293	2	BRANCH TEE (04O-04O-04S)	
12.	154-344	1	RUN TEE (06OFX-06O-06O)	
13.	154-345	1	RUN TEE (06O-06O-06S)	
14.	154-701	2	HOSE (04OFS-14"- 3000)	
15.	154-727	2	HOSE (04O-04090-30"- 3000)	
16.	158-575	1	HYDRAULIC CONTROL VALVE	
17.	181-981	2	TAPERED INSERT	
18.	181-982	2	TAPERED INSERT	
19.	183-588	2	TAPERED PIN	
20.	183-675	2	TAPERED PIN	
21.	154-732	1	HOSE (06O-19"- 3000)	

FOOTNOTES

NOTE:

REFER TO O-RING CHART (800-301) IN BACK OF THE BOOK FOR REPLACEMENT OF SAE AND ORS O-RINGS.

https://truckmanualshub.com/

REAR STEERING HYDRAULICS
BEGINS WITH S/N 5H0470

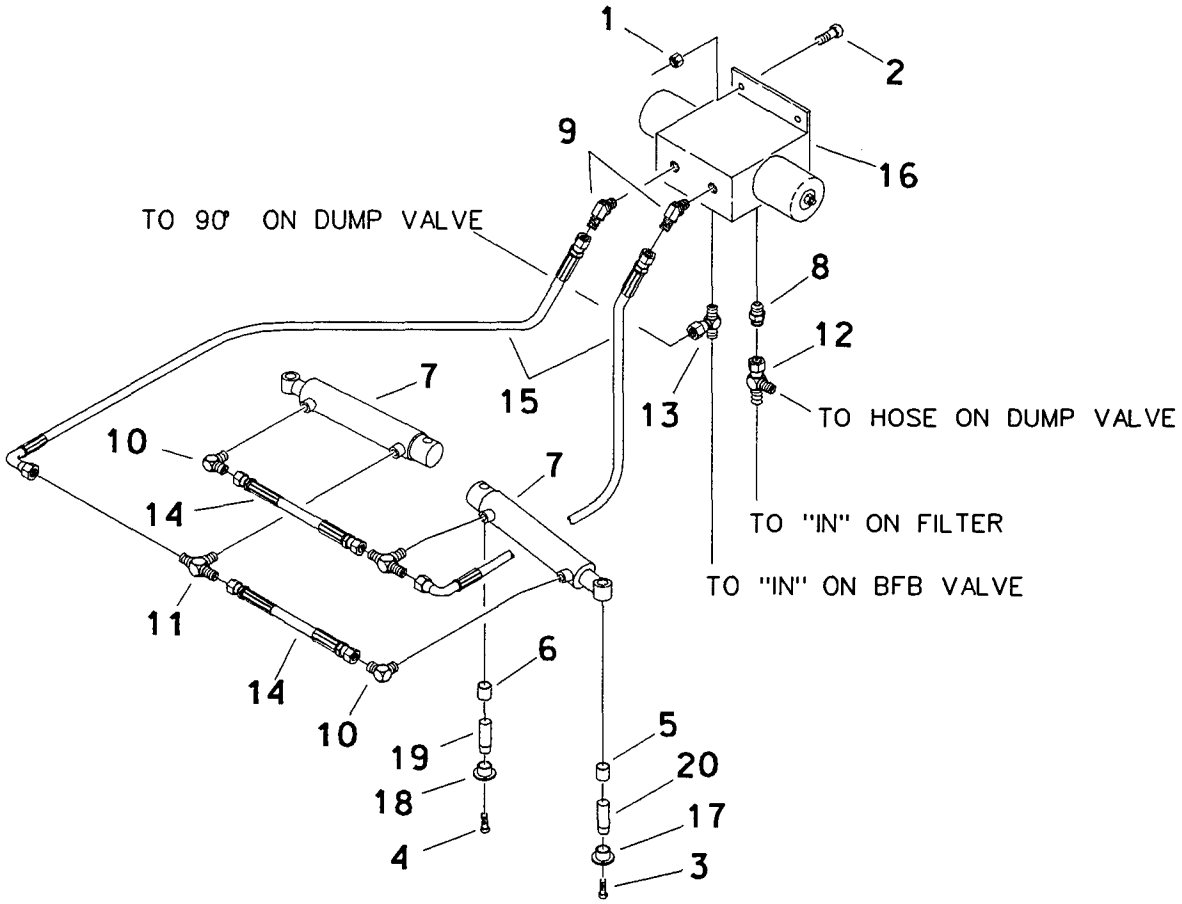

https://truckmanualshub.com/

REAR STEERING HYDRAULICS
BEGINS WITH S/N 5H0470

REF NO.	PART NUMBER	QTY	DESCRIPTION	REMARKS
1.	105-003	2	FLG LOCKNUT (5/16-NC)	
2.	105-873	4	FLG LOCK BOLT (5/16-NC X 1")	
3.	105-874	2	FLG LOCK BOLT (3/8-NC X 1-1/2")	
4.	106-096	2	FLG LOCK BOLT (1/2-NC X 1-3/4")	
5.	125-770	2	FIBER BUSHING	
6.	125-771	2	FIBER BUSHING	
7.	151-044	2	CYL (2.0" X 1.00" X 6")	ROCKWELL AXLE
	151-039	2	CYL (2.0" X 1.00" X 5")	EATON AXLE
8.	154-221	2	CONNECTOR (06S-060)	
9.	154-250	2	CONNECTOR (040-06S45)	
10.	154-252	2	CONNECTOR (040-04S90)	
11.	154-293	2	BRANCH TEE (040-040-04S)	
12.	154-344	1	RUN TEE (060FX-060-060)	
13.	154-345	1	RUN TEE (060-060-06S)	
14.	154-701	2	HOSE (040FS-14"-3000)	ROCKWELL AXLE
	154-682	2	HOSE (040FX-17"-3000)	EATON AXLE
15.	154-727	2	HOSE (040-04090-30"-3000)	
16.	158-575	1	HYDRAULIC CONTROL VALVE	
17.	181-981	2	TAPERED INSERT	
18.	181-982	2	TAPERED INSERT	
19.	183-588	2	TAPERED PIN	
20.	183-675	2	TAPERED PIN	

FOOTNOTES

NOTE:
REFER TO D-RING CHART (800-301) IN BACK OF THE BOOK FOR REPLACEMENT OF SAE AND ORS O-RINGS.

https://truckmanualshub.com/

BACKFILL BLADE SUPPLY HYDRAULICS

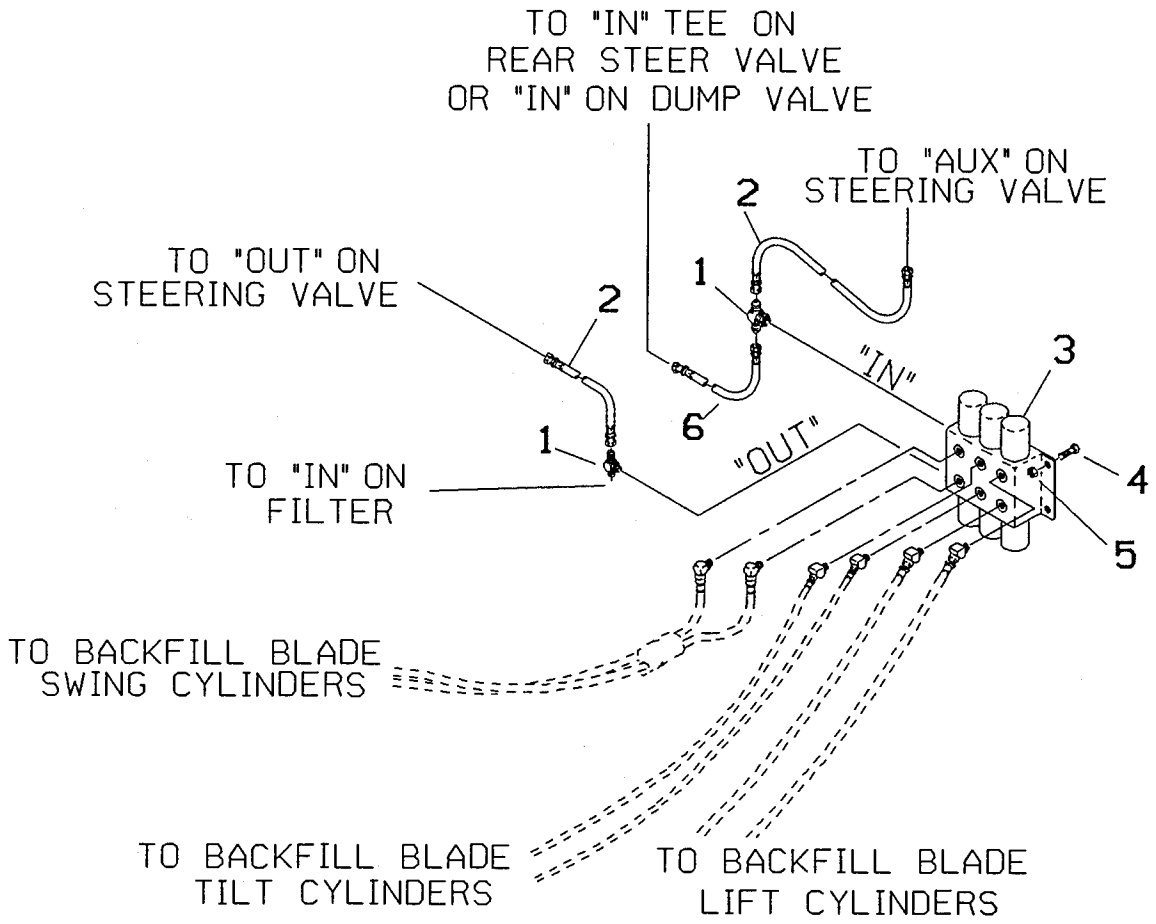

REF. NO.	PART NUMBER	QTY.	DESCRIPTION
1.	154-346	2	BRANCH TEE
	155-705		SAE O-RING (906 D90)
	157-038		ORS O-RING (012 D90)
2.	154-807	2	HOSE (24" 3000 PSI)

REF. NO.	PART NUMBER	QTY.	DESCRIPTION
3.	158-574	1	HYDRAULIC CONTROL VALVE
4.	105-823	4	BOLT (5/16 -NC X 3/4")
5.	105-003	2	NUT (5/16-NC)
6.	154-890	1	[1]HOSE (54" 3000 PSI)
	154-893	1	[2]HOSE (54" 3000 PSI)

[1]154-890 USED W/RIDGID AXLE
[2]154-893 USED W/STEERABLE AXLE

https://truckmanualshub.com/

BACKFILL BLADE LIFT HYDRAULICS

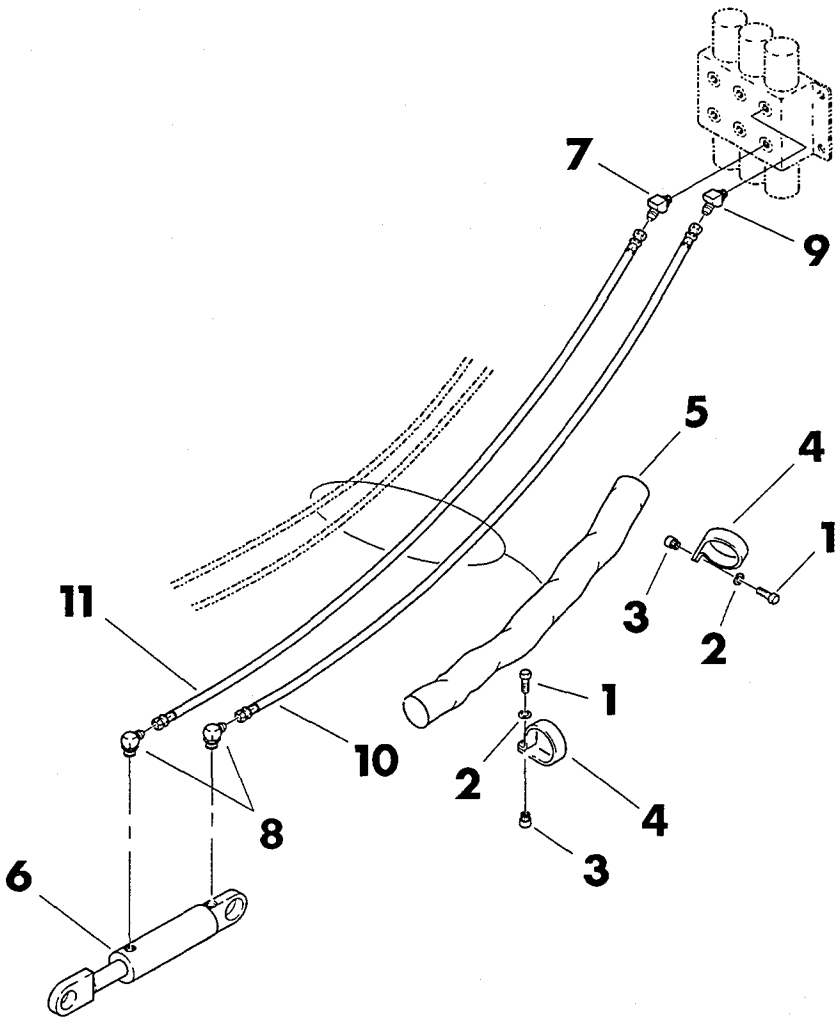

Ref. No.	Part Number	Qty.	Description
1.	105-090	2	Bolt (5/16-NC x 3/4")
2.	105-091	2	Lock Washer (5/16")
3.	106-038	2	Nutsert (5/16-NC)
4.	110-332	2	Clamp (1-5/8")
5.	115-755	1	Sleeve (60" LG, black)
6.	151-056	1	Cylinder (3.5" x 1.75" 8")
7.	154-224	1	Connector (-6 ORS M x -6 SAE M x 45°)
	155-705		SAE O-Ring (-906)
	157-038		ORS O-Ring (2-012)

Ref. No.	Part Number	Qty.	Description
8.	154-227	2	Connector (-6 ORS M x -8 SAE M x 90°)
	155-706		SAE O-Ring (-908)
	157-038		ORS O-Ring (2-012)
9.	154-382	1	Connector (-6 ORS M x -6 SAE M x 45°, w/.08 ORF)—all replacements
	155-705		SAE O-Ring (-906)
	157-038		ORS O-Ring (2-012)
10.	154-683	1	Hose (-6 ORS FM x 66", 3000 PSI)
11.	154-808	1	Hose (-6 ORS FM x 74", 3000 PSI)

https://truckmanualshub.com/

BACKFILL BLADE SWING HYDRAULICS

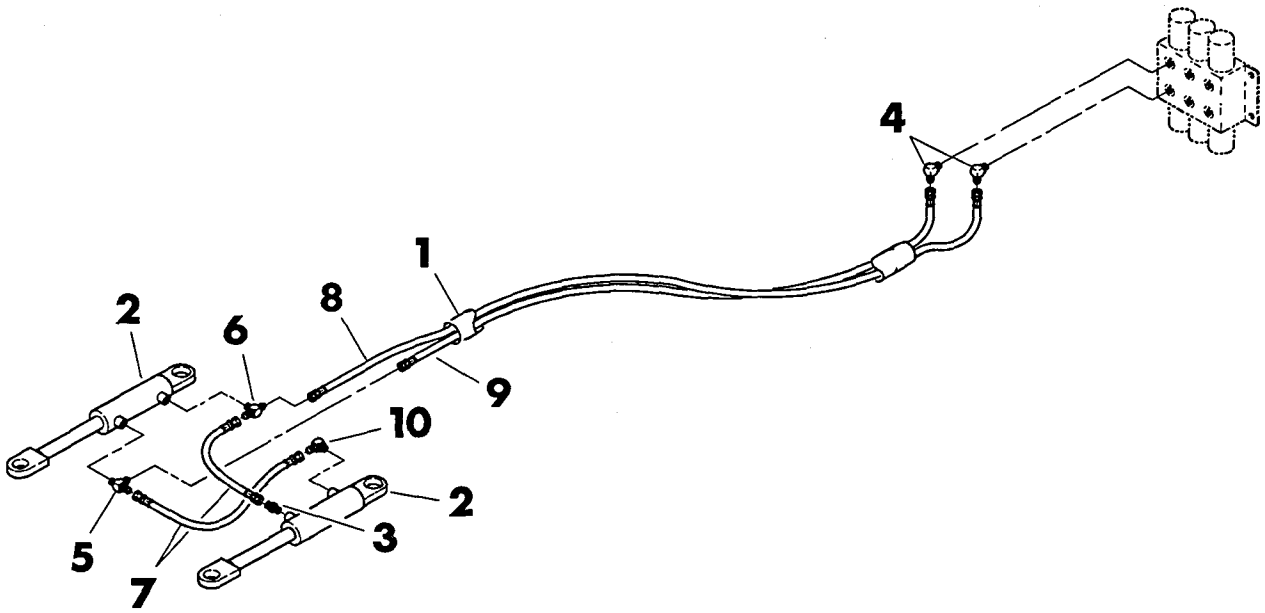

Ref. No.	Part Number	Qty.	Description
1.	115-813	1	Abrasion Sleeve (36" LG, olive drab)
2.	151-045	2	Backfill Blade Swing Cylinder
3.	154-221	1	Connector (-6 ORS M x -6 SAE M, STR)
	155-705		SAE O-Ring (-906)
	157-038		ORS O-Ring (2-012)
4.	154-342	3	Connector (-6 ORS M x -6 SAE M x 90°)
	155-705		SAE O-Ring (-906)
	157-038		ORS O-Ring (2-012)
5.	154-345	1	Run Tee (-6 ORS M x -6 ORS M x -6 SAE M)
	155-705		SAE O-Ring (-906)
	157-038		ORS O-Ring (2-012)
6.	154-346	1	Branch Tee (-6 ORS M x x -6 ORS M x -6 SAE M)
	155-705		SAE O-Ring (-906)
	157-038		ORS O-Ring (2-012)
7.	154-732	2	Hose (-6 ORS FM x 19", 3000 PSI)
8.	154-776	1	Hose (-6 ORS FM x 42", 3000 PSI)
9.	154-806	1	Hose (-6 ORS FM x 54", 3000 PSI)
10.	154-342	1	Connector (-6 SAE M x -6 ORS M x 90°)
	155-705		SAE O-Ring (-906)
	157-038		ORS O-Ring (2-012)

https://truckmanualshub.com/

BACKFILL BLADE TILT HYDRAULICS

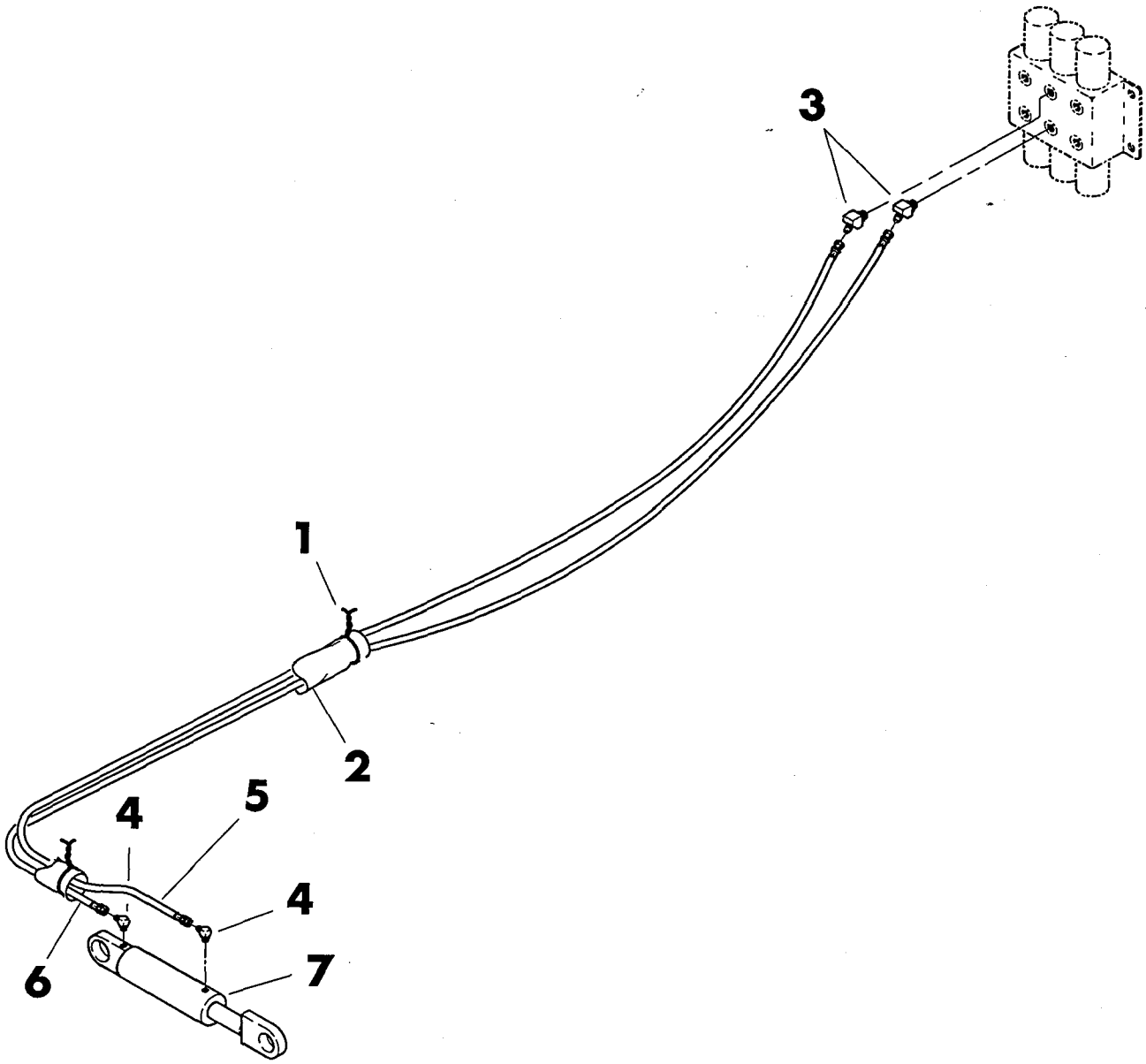

Ref. No.	Part Number	Qty.	Description
1.	110-030	2	Cable Tie
2.	115-713	1	Abrasion Sleeve (24", olive drab)
3.	154-250	2	Connector (-4 ORS M x -6 SAE M x 45°)
	155-705		SAE O-Ring (-906)
	157-037		ORS O-Ring (2-011)
4.	154-252	2	Connector (-4 ORS M x -4 SAE M x 90°)
	155-760		SAE O-Ring (-904)
	157-037		ORS O-Ring (2-011)
5.	154-694	1	Hose (-4 ORS FM x 98", 3000 PSI)
6.	154-725	1	Hose (-4 ORS FM x 90", 3000 PSI)
7.	151-039	1	Backfill Blade Tilt Cylinder

https://truckmanualshub.com/

NOTES:

https://truckmanualshub.com/

ASSEMBLY DRAWINGS

https://truckmanualshub.com/

PUMP DRIVE

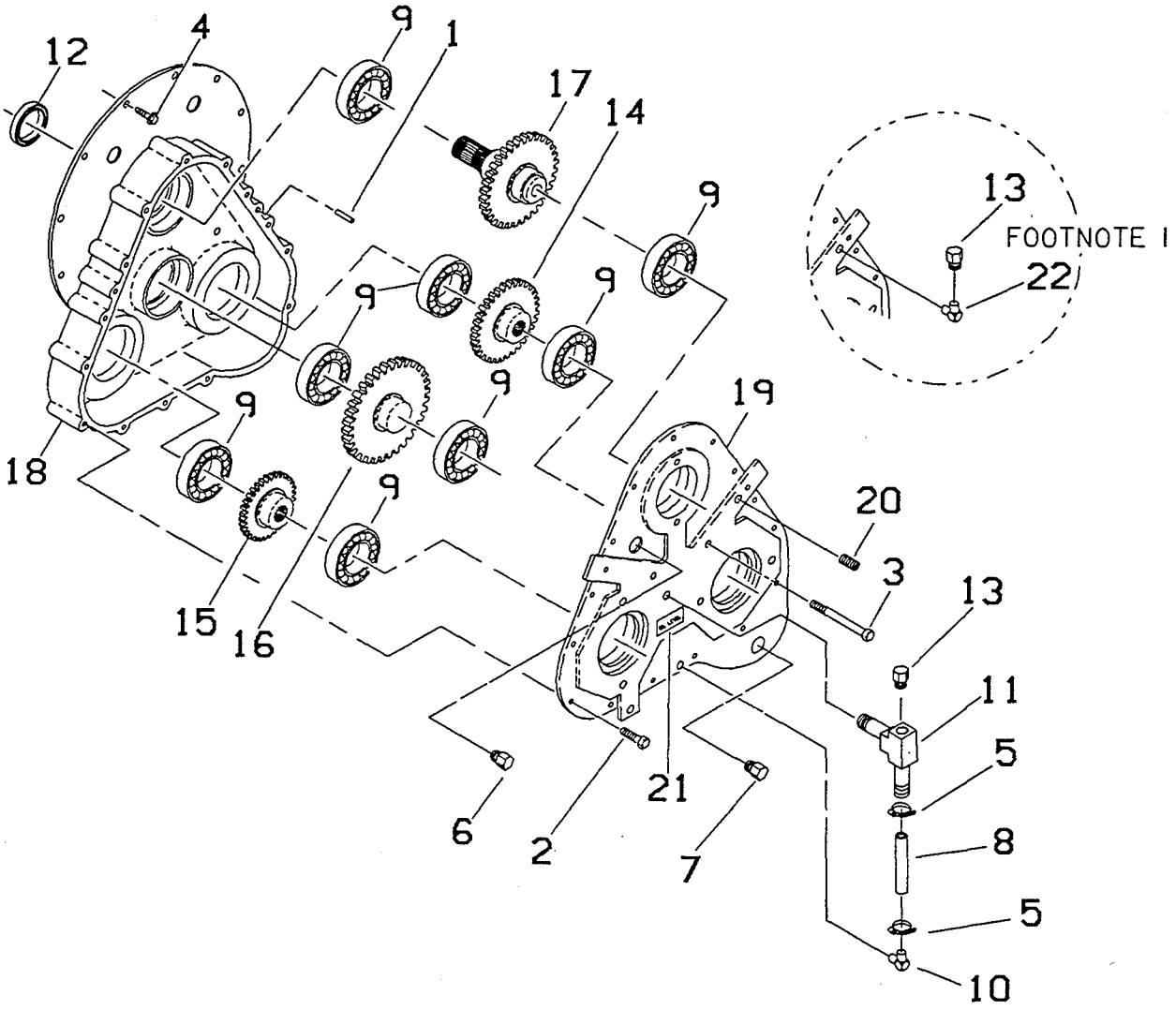

https://truckmanualshub.com/

PUMP DRIVE

REF NO.	PART NUMBER	QTY	DESCRIPTION	REMARKS
	166-060		PUMP DRIVE	INCL. REF. NO.'S 1,2 & 5 THRU 20
1.	105-542	2	DOWEL PIN (1/4" X 1-1/4")	
2.	105-B73	15	FLANGE LOCK BOLT	
3.	106-124	2	BOLT (M10-1.5 X 110mm)	
	105-022	2	BOLT (3/8-NC X 4")	8020 ONLY
4.	106-164	8	FLANGE BOLT (M10-1.5 X 30mm)	
	105-826	8	FLANGE LOCKBOLT	8020 ONLY
5.	110-491	2	CLAMP	
6.	115-165	1	PIPE PLUG	
7.	115-211	1	PIPE PLUG	
8.	116-166	AR	TUBING	USE 4.5"
9.	125-040	8	BEARING	
10.	155-158	1	SLIP ON COUPLER	SEE FOOTNOTE 2
11.	155-252	1	VENT TEE	
12.	157-552	1	INTERNAL SEAL	
13.	159-003	1	VENT PLUG	SEE FOOTNOTE 1
14.	165-111	1	GEAR	
15.	165-110	1	GEAR	
16.	165-109	1	GEAR	
17.	167-145	1	INPUT PINION SHAFT	
18.	169-022	1	PUMP HOUSING	
19.	169-023	1	PUMP COVER	
20.	115-157	1	PIPE PLUG	
21.	274-178	1	OIL LEVEL DECAL	
22.	156-241	1	STREET ELBOW	SEE FOOTNOTE 1

NOT SHOWN:

	256-603	AR	BLACK SILICONE

FOOTNOTES

1. -STREET ELBOW (REF. NO. 22) WAS USED IN EARLY STYLE MOUNTING OF VENT PLUG (#159-003) ON 5020 ONLY.

2. -EARLY STYLE USED AN ADDITIONAL COUPLER (REF. NO.10) AND SERVICE TEE (#156-237) FOR VENT PLUG (#159-003) INSTEAD OF (REF. NO.11).

https://truckmanualshub.com/

GROUND DRIVE TRANSMISSION

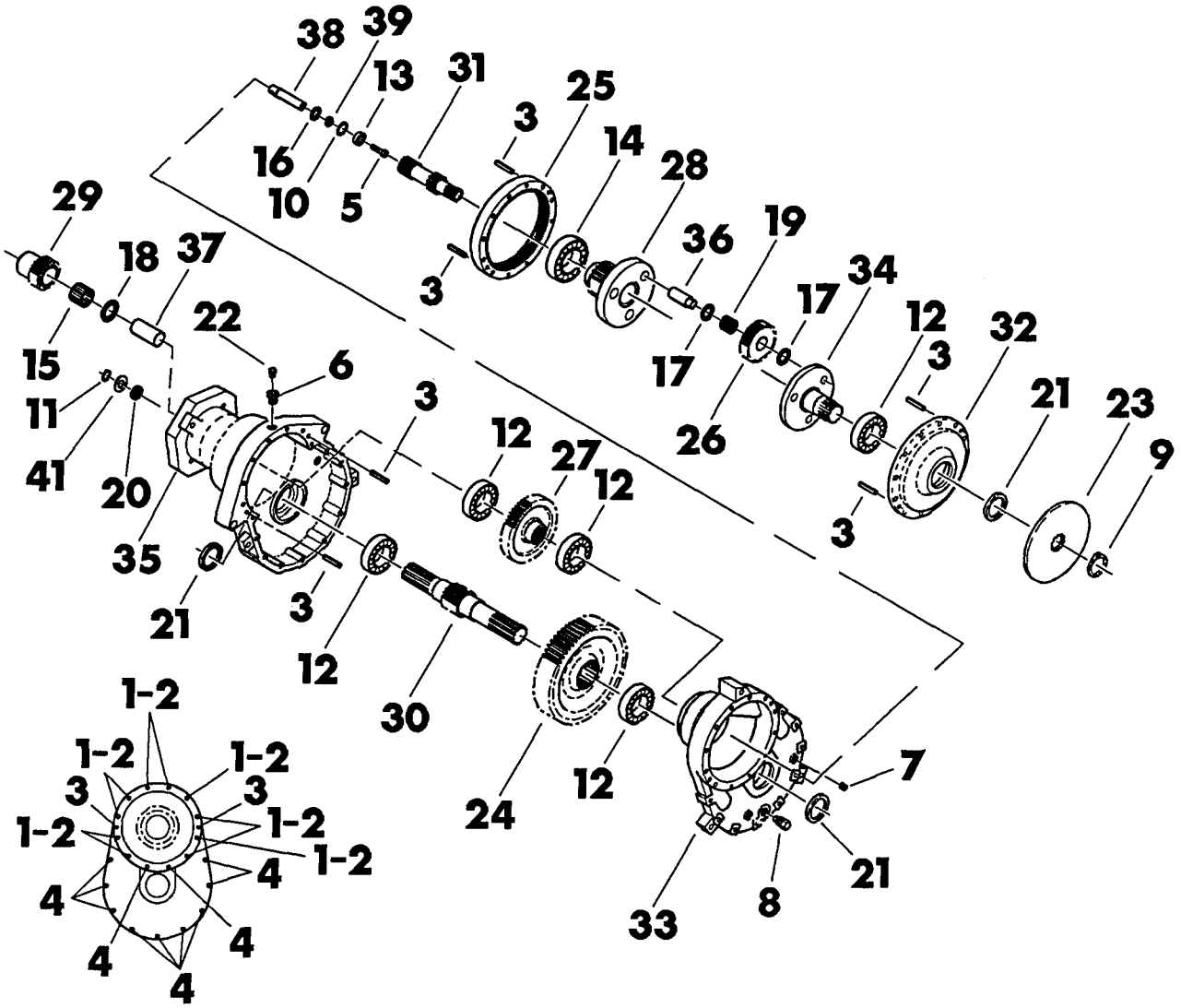

Ref. No.	Part Number	Qty.	Description
	166-063		Ground Drive Transmission (Incl. ref. no.'s 1 thru 40)
1.	105-022	4	Bolt (3/8-NC x 4")
2.	105-072	4	Lock Washer (3/8")
3.	105-546	6	Roll Pin (3/8" x 1")
4.	105-883	12	Flange Lock Bolt (3/8-NC x 2")
5.	106-156	1	Bolt (3/8-NF x 1.06")
6.	110-549	1	Sight Gauge
7.	115-127	1	Pipe Bushing (-8 NPT M to -1 NPT FM)
8.	115-243	1	Pipe Plug (-10 NPT M, magnetic)
9.	115-456	1	External Snap Ring (for 1.75" shaft)
10.	115-544	1	Internal Snap Ring (for 1.188" ID housing)
11.	115-545	1	External Snap Ring (for .75" shaft)
12.	125-040	5	Bearing (50mm ID x 90mm OD)
13.	125-072	1	Bearing (.3937" ID x 1.18" OD)
14.	125-073	1	Bearing (2.36" ID x 4.33" OD)
15.	125-366	1	Bearing (1.375" ID x 1/75" OD x 1.25" WID)
16.	125-375	1	Thrust Race (.75" ID x 1.25" OD)
17.	126-009	6	Thrust Race (1" ID x 1.56" OD)
18.	126-010	1	Thrust Race (1.375" ID x 2.06" OD)
19.	126-011	3	Needle Bearing (1" ID x 1.31" OD x 1" WID)
20.	155-878	1	Internal Seal (.75" ID x 1.25" OD)
21.	157-552	3	Internal Seal (1.969" ID x 2.63" OD)
22.	159-003	1	Vent Plug (-1 NPT M, STR)
23.	163-092	1	Brake Disc
24.	165-104	1	Lower Output Gear (58T OD x 19S ID)
25.	165-105	1	Ring Gear (96T ID)
26.	165-106	3	Planet Gear (42T OD)
27.	165-107	1	Lower Input Gear (49T OD x 18S ID)
28.	165-112	1	Output Gear (20T OD x 13S ID)
29.	165-129	1	Output Gear (20T OD x 13S ID)
30.	167-144	1	Output Shaft (10S x 19S x 10S, 14.28" LG)
31.	167-146	1	Input Shaft (12T x 13S x 18S)
32.	169-007	1	Front Housing
33.	169-015	1	Planetary Housing
34.	169-019	1	Output Flange (10 S)
35.	169-029	1	Motor Input Housing
36.	183-604	3	Planet Pin (1" DIA x 2.75" LG)
37.	183-605	1	Input Pin (1.375" DIA x 3" LG)
38.	183-643	1	Shifter Shaft (3/8-NF)
39.	184-069	1	Keeper
40.	326-060	1	Washer (3/4")
Not Shown:			
	256-603	AR	Black Silcone

https://truckmanualshub.com/

DIFFERENTIAL COMPONENTS
ROCKWELL — F-Series

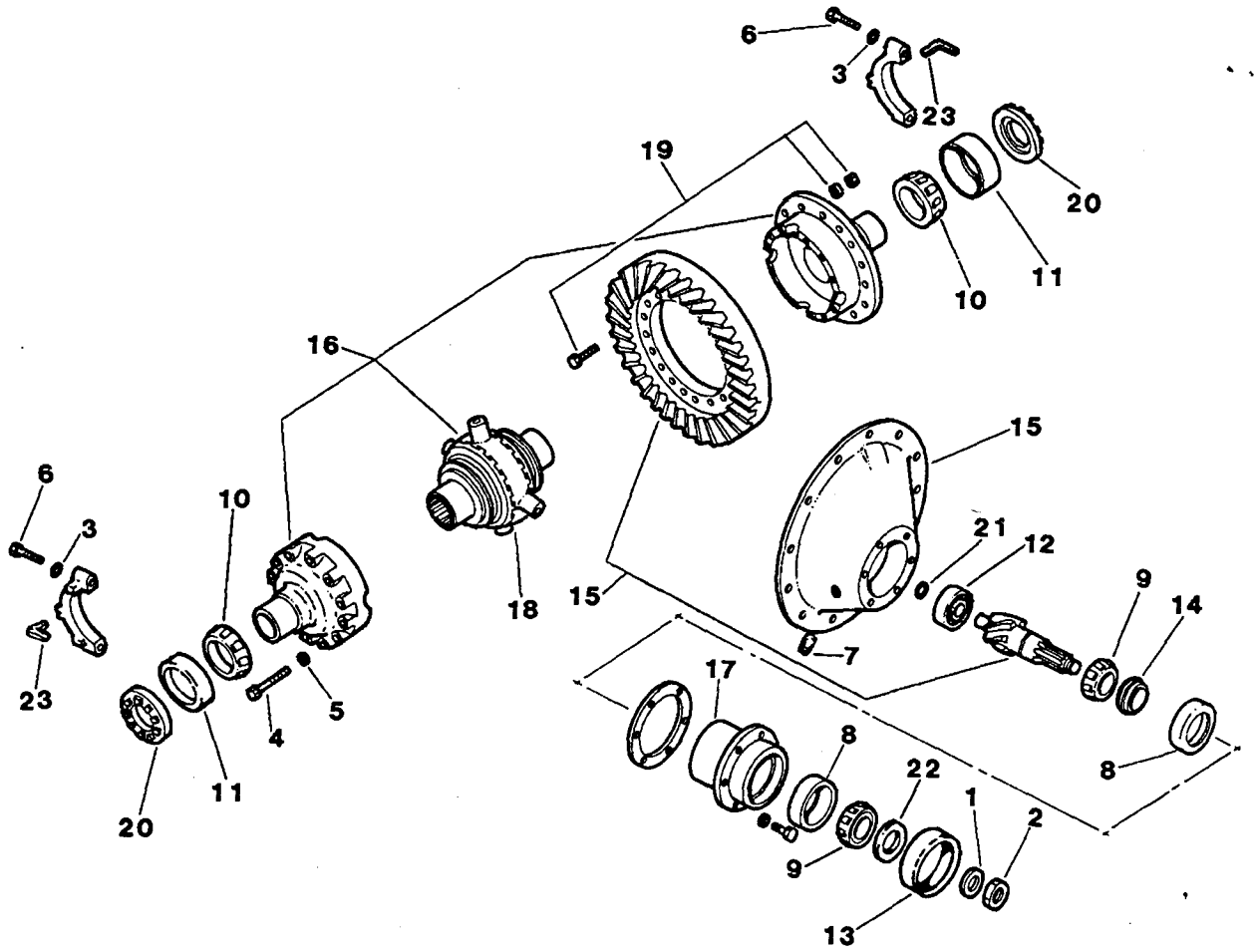

Ref. No.	Part Number	Qty.	Description
1.	105-930	1	Washer)1-1/32" ID)
2.	106-208	1	Pinion Nut (1-NEF)
3.	106-209	8	Washer (1-1/32" ID)
4.	106-210	8	Differential Case Bolt (1/2-NC x 3", GD 8)
5.	106-211	8	Washer (.531" ID)
6.	106-212	4	Bolt (5/8-NC x 3", GD 8)
7.	115-152	1	Plug (3/4-NPT M, 1/2" SQ FM HD)
8.	125-296	2	Race (3.5" OD)
9.	125-317	2	Bearing (1.75" ID)
10.	125-349	2	Carrier Bearing (2.625" ID)
11.	126-018	2	Race (4.33" OD)
12.	126-019	1	Pinion Pilot Bearing
13.	157-571	1	Internal Seal
14.	501-666	1	Pinion Bearing Shim Kit
15.	501-667	1	Ring Gear and Pinion Set
16.	501-668	1	Differential Case Parts Assembly
17.	501-669	1	Pinion Bearing Cage (Incl. ref. no. 8)
18.	501-670	1	No Spin Differential
19.	501-671	1	Ring Gear and Pinion Bolt Kit
20.	501-672	2	Bearing Adjuster
21.	501-673	1	Bearing Retainer
22.	501-674	1	Shim Washer
23.	501-675	2	Adjuster Lock

https://truckmanualshub.com/

DIFFERENTIAL COMPONENTS
Eaton

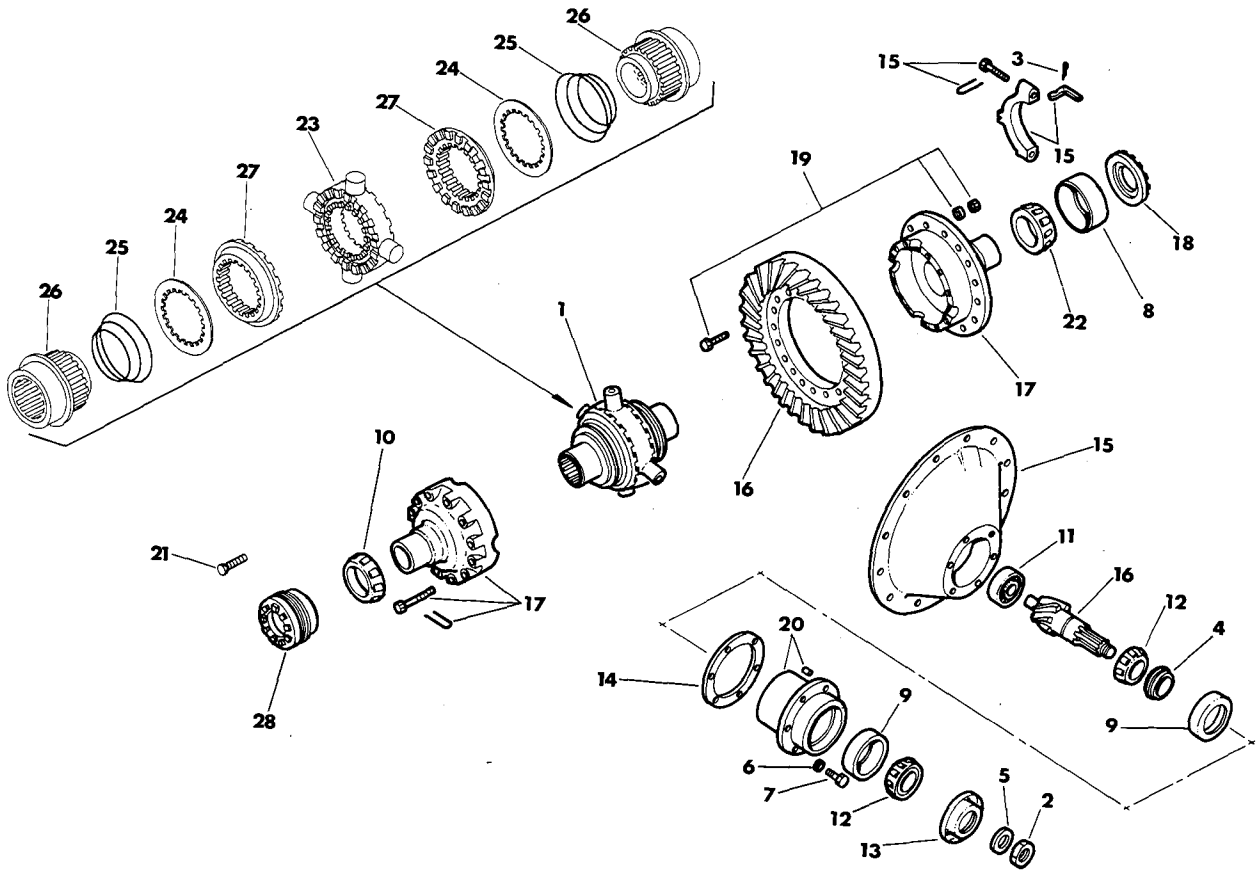

Ref. No.	Part Number	Qty.	Description
	160-288		Heavy Duty Differential (Incl. ref. no.'s 1 thru 28)
1.	N.A.	1	No-Spin Differential (Incl. ref. no.'s 23 thru 27)
2.	105-418	1	Locknut (1-NEF, Nylok)
3.	105-506	2	Cotter Pin (3/16" x 1-1/2")
4.	501-591	1	Pinion Bearing Spacer
5.	105-930	1	Pinion Washer
6.	N.A.	6	Lock Washer
7.	N.A.	6	Bolt (9/16-NC x 1-1/2")
8.	125-238	1	Race (4.725" OD)
9.	125-313	2	Race (4.937" OD)
10.	125-349	1	Bearing (2.625" ID x 1.183" THK)
11.	125-350	1	Bearing (.9843" ID x .6693" THK)
12.	125-351	2	Bearing (1-3/4" ID)
13.	155-888	1	Internal Seal
14.	165-663	AR	Bearing Cage Shim (.003" THK)
	165-664	AR	Bearing Cage Shim (.006" THK)
	165-665	AR	Bearing Cage Shim (.010" THK)
	165-666	AR	Bearing Cage Shim (.015: THK)
15.	501-584	1	Differential Housing (Incl. ref. no.'s 3 and 21)
16.	501-580	1	Ring Gear and Pinion (Incl. ref. no. 2)
17.	501-581	1	Differential Case
18.	501-578	1	Bearing Adjuster (4.813" OD x .688" THK)
19.	501-582	1	Bolt Kit (1/2-NF threads)
20.	501-589	1	Pinion Bearing Cage (Incl. ref. no. 9)
21.	105-048	1	Bolt (1/2-NC x 1-1/2")
22.	125-396	1	Bearing (2.625" ID x 1.1875" THK)
23.	501-573	1	Spider Assembly
24.	501-574	2	Spring Retainer
25.	501-577	2	Compression Spring
26.	501-576	2	Side Gear
27.	501-583	2	Cam and Clutch Assembly
28.	501-579	1	Bearing Adjuster (5.5: OD)

https://truckmanualshub.com/

BRAKE CALIPERS

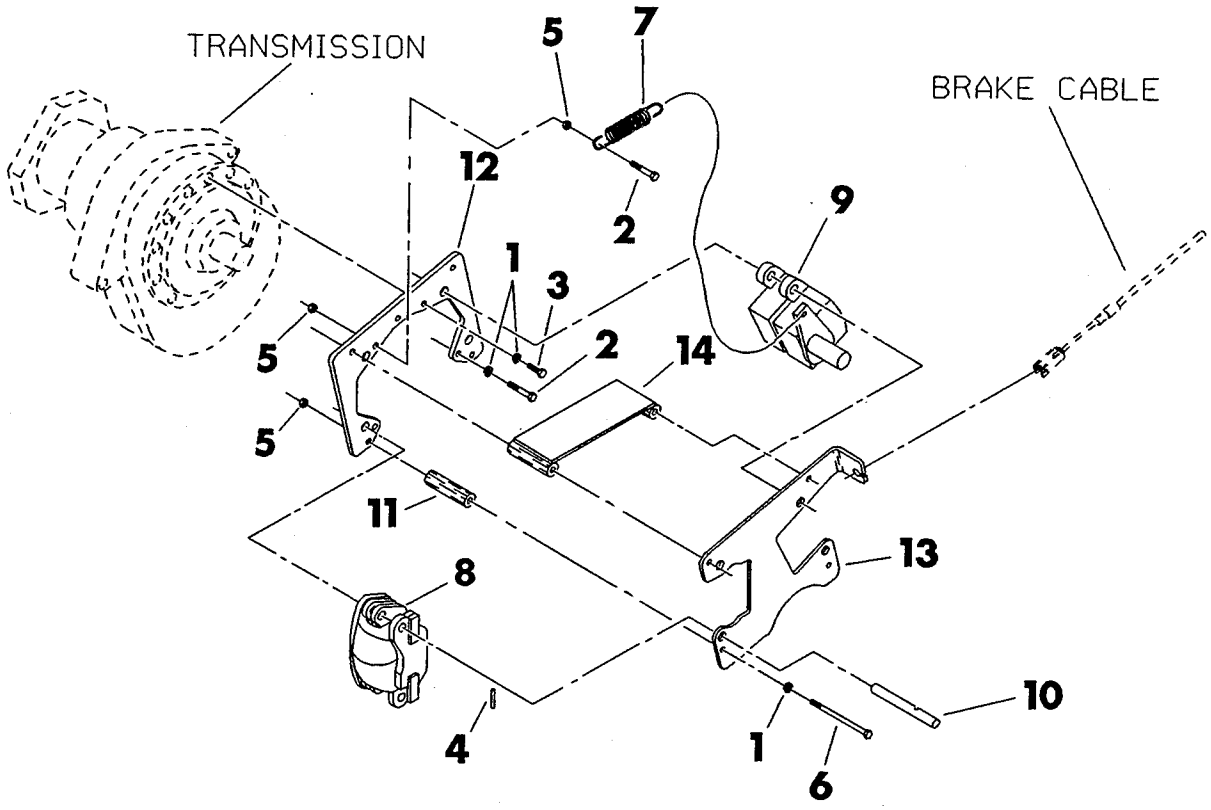

Ref. No.	Part Number	Qty.	Description
1.	105-072	9	Lock Washer (3/8")
2.	105-183	2	Bolt (3/8-NC x 2-1/2")
3.	105-217	4	Bolt (3/8-NC x 4-1/2")
4.	105-510	4	Roll Pin (1/4" x 1-1/2")
5.	105-834	6	Nut (3/8-NC)
6.	106-108	4	Bolt (3/8-NC x 4-3/4")
7.	115-593	1	Spring
8.	160-772	1	Brake Caliper (service)
9.	160-773	1	Brake Caliper (parking)
10.	183-678	4	Pin
11.	184-138	2	Spacer
12.	315-050	1	Front Caliper Mount Plate
13.	315-051	1	Rear Caliper Mount Plate
14.	315-052	1	Brake Spacer

https://truckmanualshub.com/

TRICK QUICK COUPLER
5110

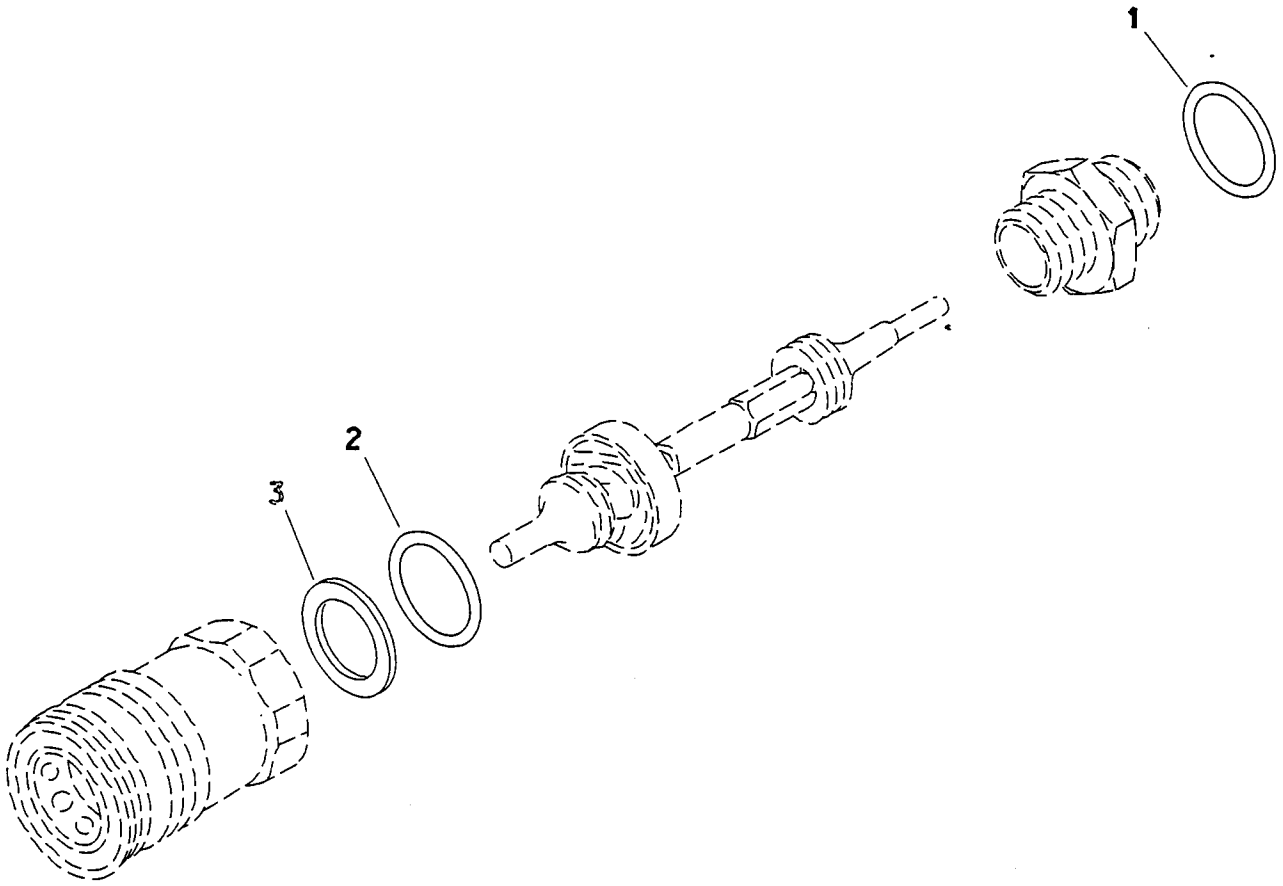

REF. NO.	PART NUMBER	QTY.	DESCRIPTION
	155-958		TRICK QUICK COUPLER (INCL. REF. NO'S 1 THRU 3)
1.	155-747	1	O-RING (-914)
2.	155-777	1	O-RING (-119)
3.	157-016	1	BACKUP RING (-119)

https://truckmanualshub.com/

RELIEF CARTRIDGE

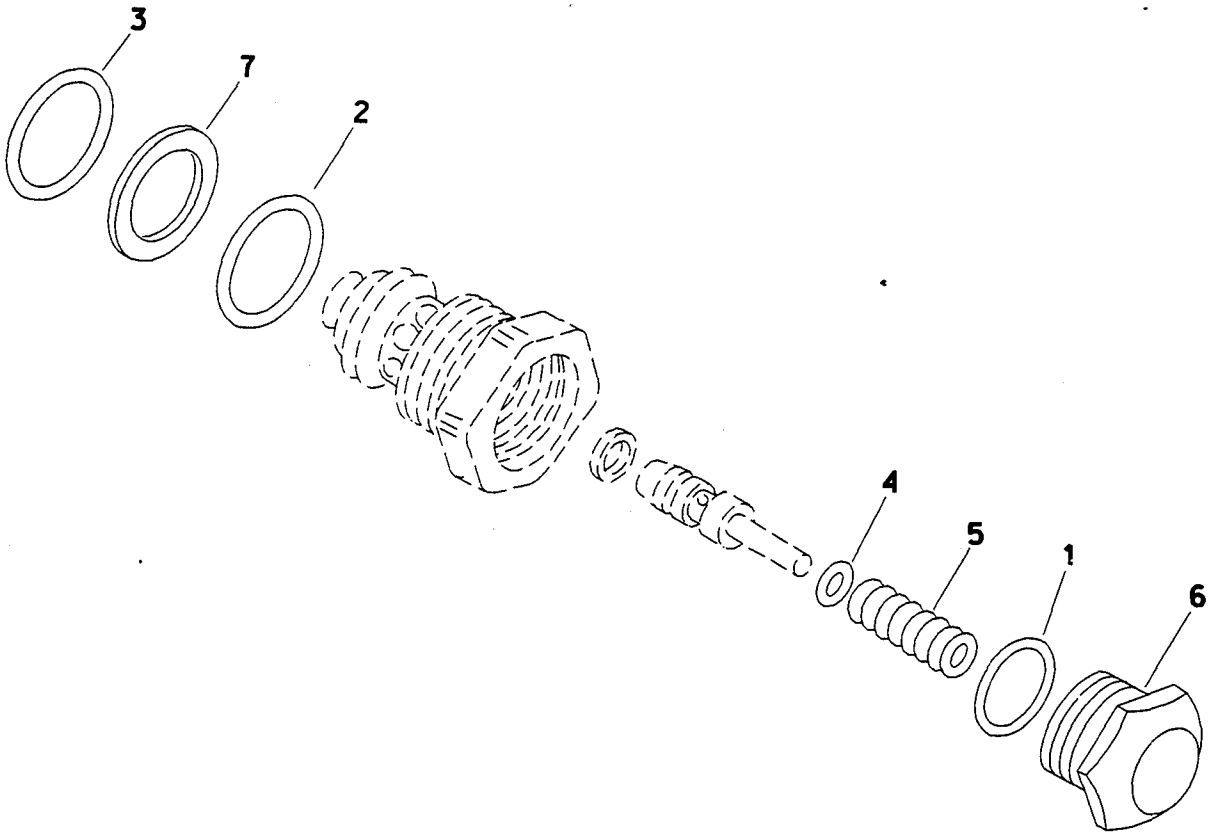

REF. NO.	PART NUMBER	QTY.	DESCRIPTION
	155-630		[1]RELIEF CARTRIDGE (INCL. REF. NO'S 1 THRU 7)
1.	155-707	1	O-RING (910 D90)
2.	155-749	1	O-RING (023 D70)
3.	155-750	1	O-RING (022 D90)
4.	500-025	AR	SHIM
5.	500-318	1	COMPRESSION SPRING
6.	500-408	1	CAP
7.	157-508	1	BACKUP RING

[1] REFER TO INSTALLATION DIAGRAM 052-139 FOR REPLACEMENT PROCEDURES

https://truckmanualshub.com/

POWER STEERING VALVE

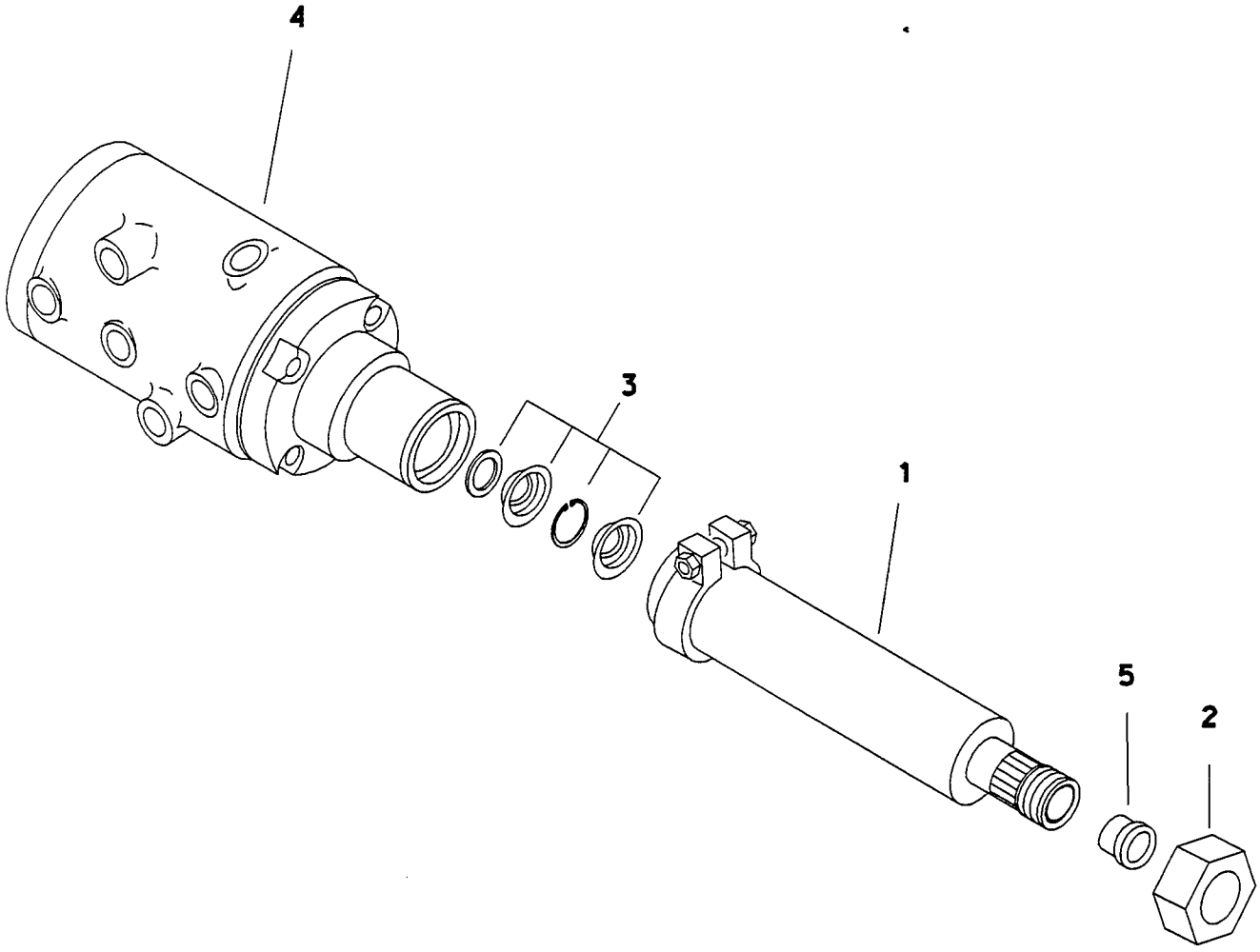

https://truckmanualshub.com/

POWER STEERING VALVE

REF NO.	PART NUMBER	QTY	DESCRIPTION	REMARKS
	155-698		POWER STEERING VALVE	ENDS WITH S/N & SEE FOOTNOTE 1
	158-618		POWER STEERING VALVE	INCLS REF NO.'S 1 THRU 5 & BEGINS WITH S/N
1.	155-696		ORBITROL COLUMN	ENDS WITH S/N & SEE FOOTNOTE 1
	158-623	1	ORBITROL COLUMN	INCLS REF NO.'S 3 & 5 & BEGINS WITH S/N
2.	105-361	1	JAM NUT (13/16-NEF)	
3.	500-424	1	SEAL REPAIR KIT	EITHER STEERING VALVE
4.	155-697		ORBITROL VALVE	ENDS WITH S/N & SEE FOOTNOTE 1
	158-619	1	ORBITROL VALVE	INCLS REF NO. 3 & BEGINS WITH S/N
	155-790		O-RING (032 D90)	
5.	500-459	1	SEAL	

FOOTNOTES

1-ORDER 158-618 IF REPLACING 155-696 OR 155-697.

https://truckmanualshub.com/

SOLENOID CONTROL VALVE

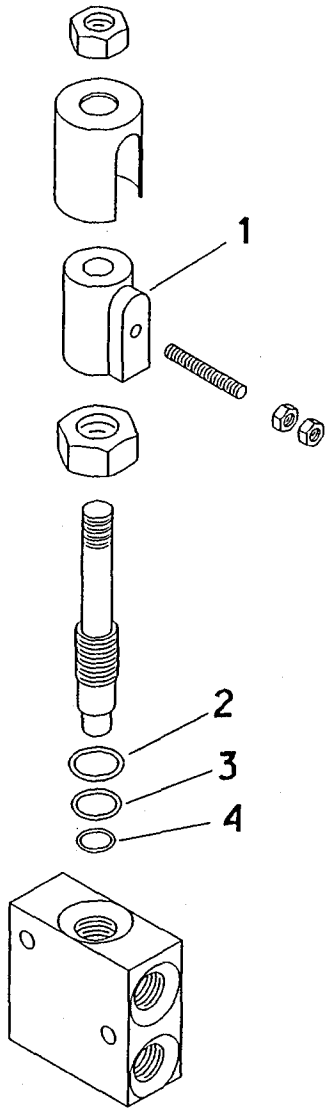

REF. NO.	PART NUMBER	QTY.	DESCRIPTION
	158-555		SOLENOID CONTROL VALVE (INCL REF NO.'S 1 THRU 4)
1.	217-746	1	SOLENOID COIL
2.	500-163	1	O-RING (114 D70)
3.	157-071	1	O-RING
4.	157-070	1	O-RING

https://truckmanualshub.com/

HYDRAULIC CONTROL VALVE
1 SPOOL

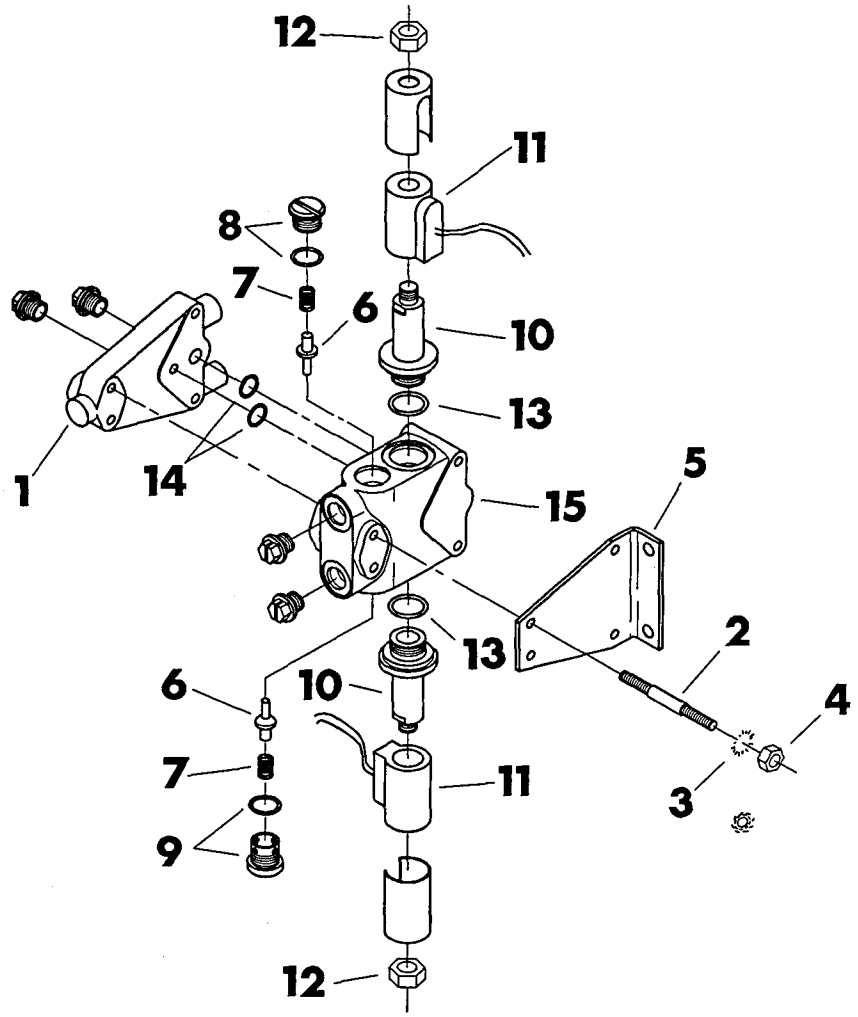

Ref. No.	Part Number	Qty.	Description
	158-575		Hydraulic Control Valve (Incl. ref. no.'s 1 thru 15)
1.	500-598	1	Port Plate (Inlet/ Outlet)
2.	106-288	4	Stud Bolt (1/4-NC x 3")
3.	105-079	4	Lock Washer (1/4")
4.	105-078	4	Nut (1/4-NC)
5.	500-599	1	Valve Mount Plate
6.	500-662	2	Lockout Poppet
7.	117-012	2	Poppet Spring
8.	500-665	1	Poppet Spring Retainer Plug
	155-706		O-Ring (-908)

Ref. No.	Part Number	Qty.	Description
9.	500-664	1	Plunger Seat Retainer Plug
	155-706		O-Ring (-908)
10.	500-661	2	Plunger Adapter
11.	216-015	2	Solenoid Coil
12.	105-206	2	Nut (1/2-NF)
13.	155-715	2	O-Ring (-019)
14.	155-778	2	O-Ring (-014 Viton)
15.	500-597	1	Valve Section (Incl. ref. no.'s 6 thru 14)
	500-663		Lockout Plunger

https://truckmanualshub.com/

HYDRAULIC CONTROL VALVE
3 SPOOL

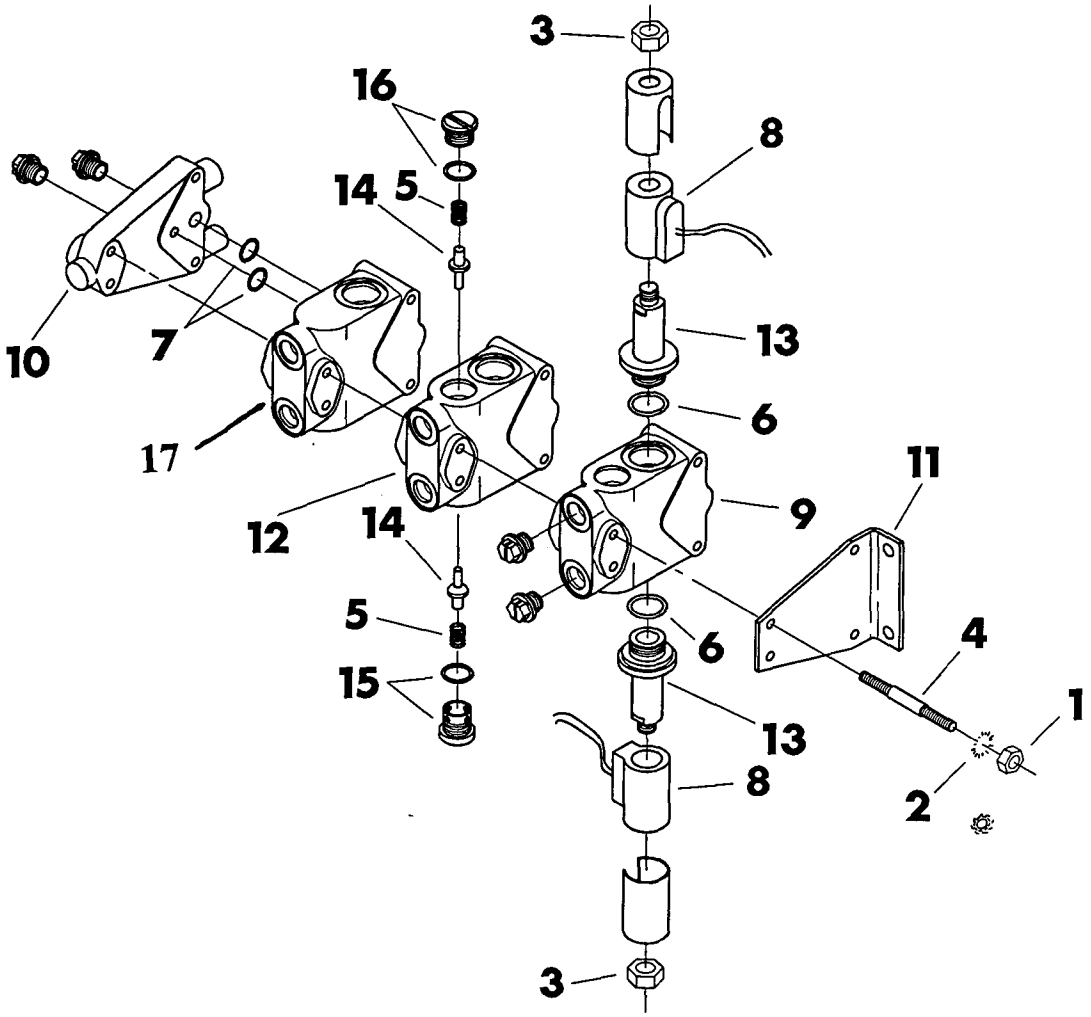

Ref. No.	Part Number	Qty.	Description
	158-574		Hydraulic Control Valve (Incl. ref. no.'s 1 thru 16)
1.	105-078	4	Nut (1/4-NC)
2.	105-079	4	Lock Washer (1/4")
3.	105-206	2	Nut (1/2-NF)
4.	106-289	4	Stud Bolt (1/4-NC x 6-1/2")
5.	117-012	2	Poppet Spring
6.	155-715	2	O-Ring (-019)
7.	155-778	2	O-Ring (-014 Viton)
8.	216-015	6	Solenoid Coil
9.	500-597	1	Valve Section (Incl. ref. no.'s 3, 5 thru 8 and 13 thru 16)
	500-663		Lockout Plunger

Ref. No.	Part Number	Qty.	Description
10.	500-598	1	Port Plate (Inlet/ Outlet)
11.	500-599	1	Valve Mount Plate
12.	500-600	2	Valve Section
13.	500-661	2	Plunger Adapter
14.	500-662	2	Lockout Poppet
15.	500-664	1	Plunger Seat Retainer Plug
	155-706		O-Ring (-908)
16.	500-665	1	Poppet Spring Retainer Plug
	155-706		O-Ring (-908)
17.	500-688	1	Valve Section

Not Shown:
500-689 Seal Repair Kit for 500-597 & 500-600

https://truckmanualshub.com/

HYDRAULIC MOTOR
14 Tooth

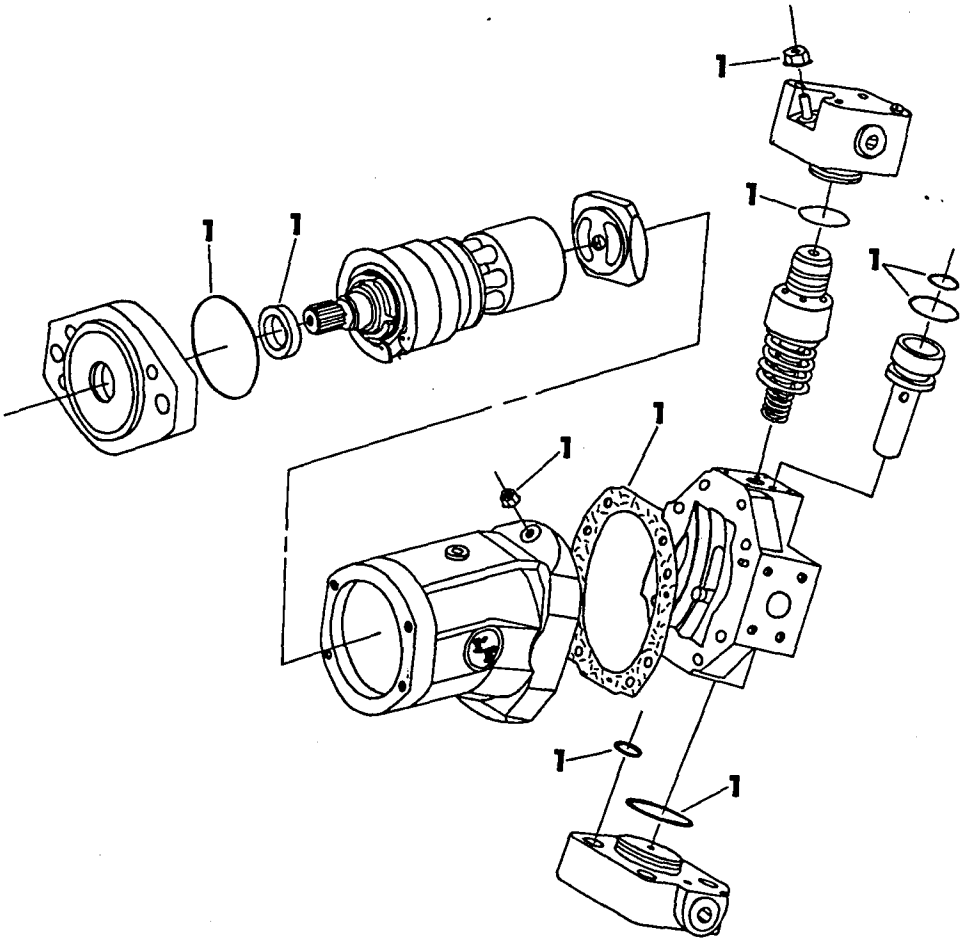

Ref. No.	Part Number	Qty.	Description
	158-718		Hydraulic Motor (Incl. ref. no. 1)
1.	500-644	1	Seal Repair Kit

https://truckmanualshub.com/

HYDRAULIC DOUBLE PUMP

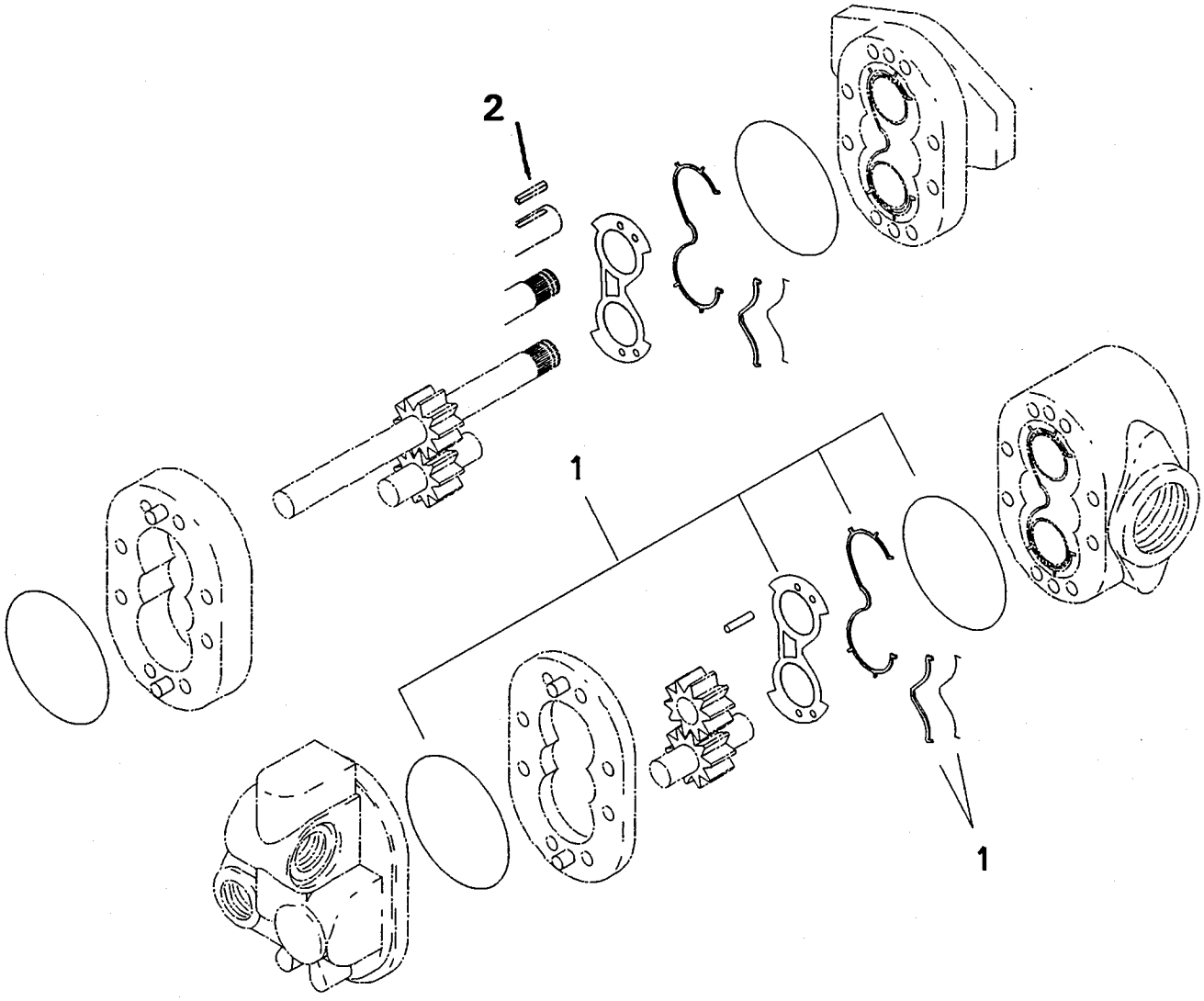

REF. NO.	PART NUMBER	QTY.	DESCRIPTION
	158-324		HYDRAULIC DOUBLE PUMP (INCL. REF. NO. 1)
1.	500-470	2	SEAL KIT
2.	**166-832**	**1**	**Key (3/16" x 1", HT)**

https://truckmanualshub.com/

NOTES:

https://truckmanualshub.com/

HYDRAULIC CYLINDER
2.0" ID BARREL X 1.00" OD ROD X 5.0" STROKE

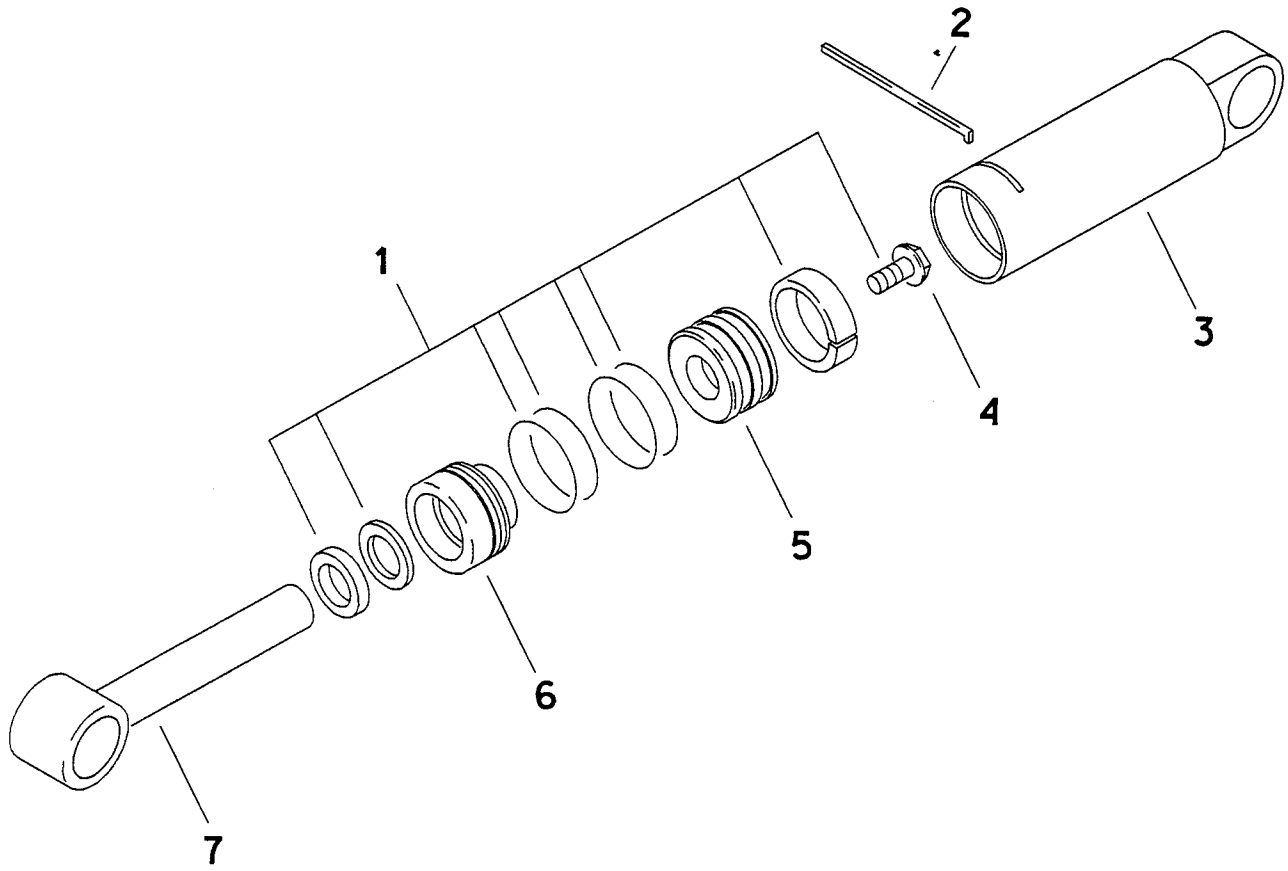

801-097

https://truckmanualshub.com/

HYDRAULIC CYLINDER
2.0" ID BARREL X 1.00" OD ROD X 5.0 STROKE

REF NO.	PART NUMBER	QTY	DESCRIPTION	REMARKS
	151-039		HYDRAULIC CYLINDER	INCLUDES REF NO.'S 1 THRU 7
1.	190-165	1	SEAL REPAIR KIT	
2.	150-778	1	LOCK RING	
3.	150-291	1	CYLINDER BARREL	
4.	106-096	1	FLG BOLT (1/2-NC X 1-3/4",GD 8)	SEE FOOTNOTE 1
5.	150-775	1	PISTON	
6.	150-772	1	CYLINDER HEAD	
7.	150-422	1	CYLINDER ROD	

NOT SHOWN:

259-100	ROD U-SEAL INSTALLER
259-235	ROD WIPER INSTALLER
259-239	ROD WIPER/PISTON SEAL INSTALLER
259-241	PISTON INSTALLER
259-188	CYLINDER HEAD SPANNER WRENCH

FOOTNOTES

1-LUBRICATE WITH WD-40 OR EQUAL.TORQUE TO 90-100 FT-LBS (120-135 N.M)

https://truckmanualshub.com/

HYDRAULIC CYLINDER
2.0" ID BARREL X 1.00" OD ROD X 6.0" STROKE

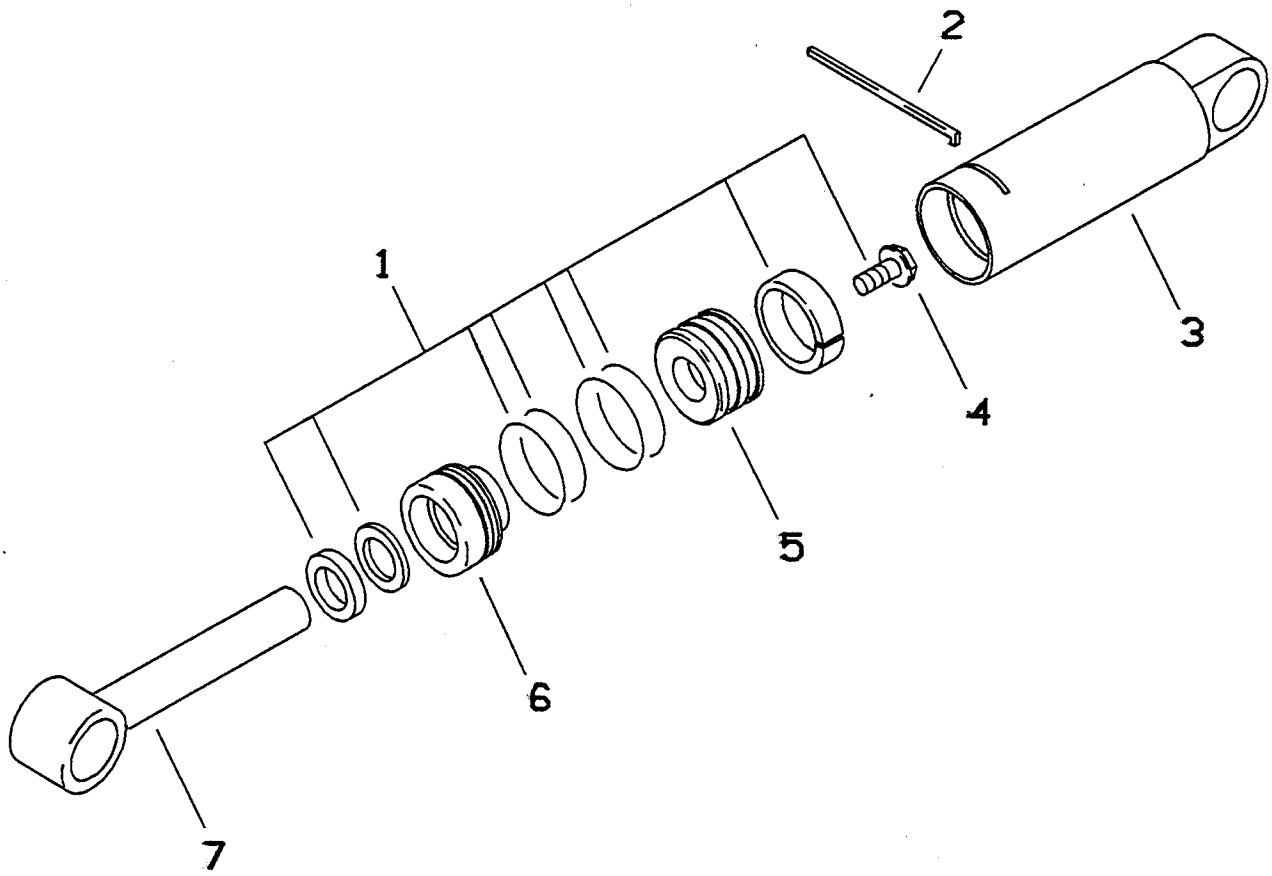

801-098

https://truckmanualshub.com/

HYDRAULIC CYLINDER
2.0" ID BARREL X 1.00" OD ROD X 6.0 STROKE

REF NO.	PART NUMBER	QTY	DESCRIPTION	REMARKS
	151-044		HYDRAULIC CYLINDER	INCLUDES REF NO.'S 1 THRU 7
1.	190-165	1	SEAL REPAIR KIT	
2.	150-778	1	LOCK RING	
3.	150-294	1	CYLINDER BARREL	
4.	106-096	1	FLG BOLT (1/2-NC X 1-3/4",GD 8)	SEE FOOTNOTE 1
5.	150-775	1	PISTON	
6.	150-772	1	CYLINDER HEAD	
7.	150-424	1	CYLINDER ROD	

NOT SHOWN:

259-100	ROD U-SEAL INSTALLER
259-235	ROD WIPER INSTALLER
259-239	ROD WIPER/PISTON SEAL INSTALLER
259-241	PISTON INSTALLER
259-188	CYLINDER HEAD SPANNER WRENCH

FOOTNOTES

1-LUBRICATE WITH WD-40 OR EQUAL. TORQUE TO 90-100 FT-LBS (120-135 N.M)

https://truckmanualshub.com/

HYDRAULIC CYLINDER
2.5" ID BARREL X 1.25" OD ROD X 8.0" STROKE

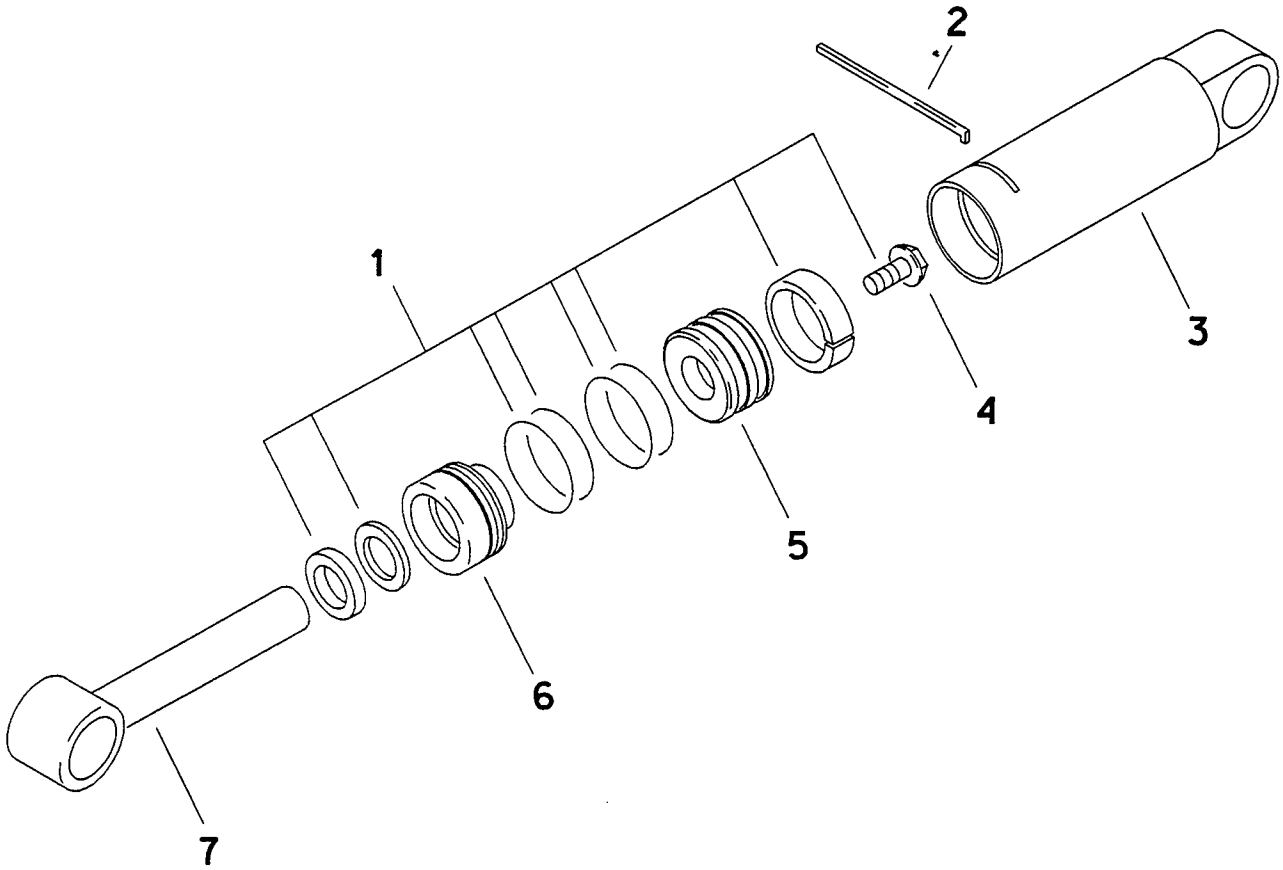

801-107

https://truckmanualshub.com/

HYDRAULIC CYLINDER
2.5" ID BARREL X 1.25" OD ROD X 8.0" STROKE

REF NO.	PART NUMBER	QTY	DESCRIPTION	REMARKS
	151-045		HYDRAULIC CYLINDER	INCLUDES REF NO.'S 1 THRU 7
1.	190-166	1	SEAL REPAIR KIT	
2.	150-779	1	LOCK RING	
3.	150-295	1	CYLINDER BARREL	
4.	106-097	1	FLG BOLT (5/8-NC X 1-3/4",GD 8)	SEE FOOTNOTE 1
5.	150-776	1	PISTON	
6.	150-773	1	CYLINDER HEAD	
7.	150-427	1	CYLINDER ROD	

NOT SHOWN:

259-100	ROD U-SEAL INSTALLER
259-236	ROD WIPER INSTALLER
259-242	PISTON SEAL INSTALLER
259-243	PISTON INSTALLER
259-188	CYLINDER HEAD SPANNER WRENCH

FOOTNOTES

1-LUBRICATE WITH WD-40 OR EQUAL.TORQUE TO 180-200 FT-LBS (245-270 N.M)

https://truckmanualshub.com/

HYDRAULIC CYLINDER
3.0" ID BARREL X 1.75" OD ROD X 6.0" STROKE

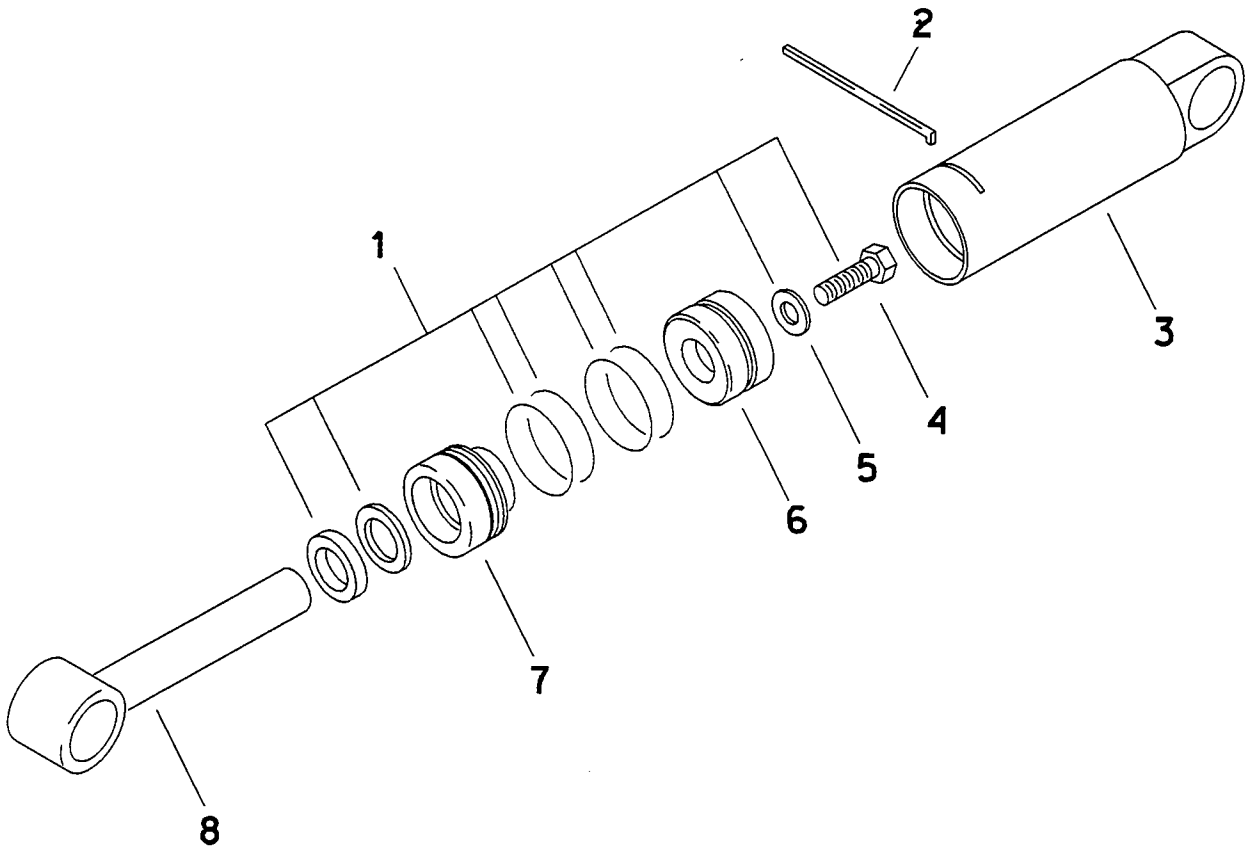

https://truckmanualshub.com/

HYDRAULIC CYLINDER
3.0" ID BARREL X 1.75" OD ROD X 6.0" STROKE

REF NO.	PART NUMBER	QTY	DESCRIPTION	REMARKS
	151-058		HYDRAULIC CYLINDER	INCLUDES REF NO.'S 1 THRU 7
1.	190-172	1	SEAL REPAIR KIT	
2.	150-911	1	LOCK RING	
3.	152-008	1	CYLINDER BARREL	
4.	106-122	1	BOLT (7/8-NC X 2-1/4",GD 8)	SEE FOOTNOTE 1
5.	105-363	1	WASHER (7/8")	
6.	150-765	1	PISTON	INCLUDES MOLDED-ON WEAR RING
7.	150-763	1	CYLINDER HEAD	
8.	150-428	1	CYLINDER ROD	

NOT SHOWN:

259-040	ROD U-SEAL INSTALLER
259-238	ROD WIPER INSTALLER
259-065	PISTON SEAL INSTALLER
259-066	PISTON INSTALLER
259-188	CYLINDER HEAD SPANNER WRENCH

FOOTNOTES

1-LUBRICATE WITH WD-40 OR EQUAL.TORQUE TO 410-460 FT-LBS (550-625 N.M)

https://truckmanualshub.com/

HYDRAULIC CYLINDER
3.5" ID BARREL X 1.75" OD ROD X 8.0" STROKE

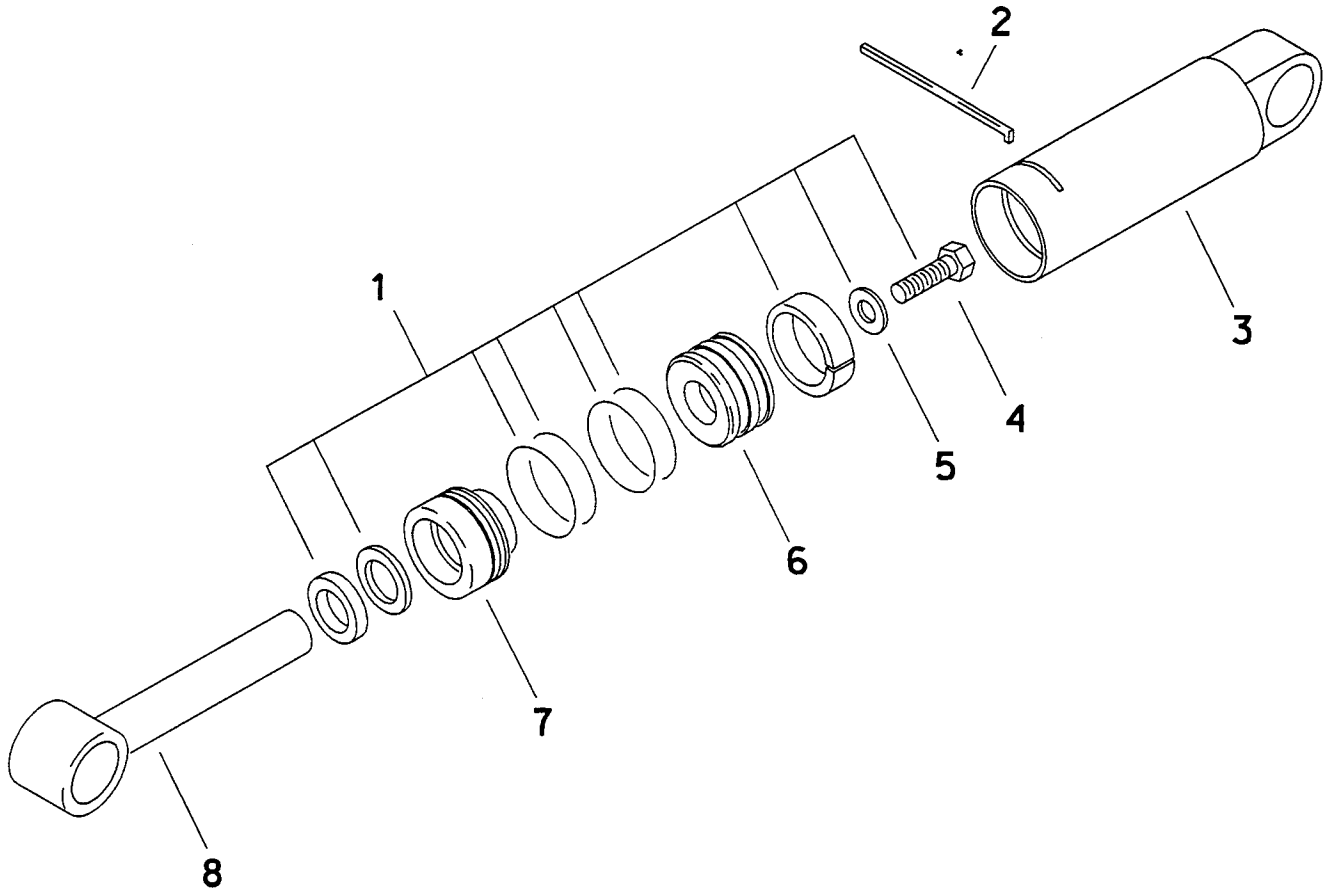

801-113

https://truckmanualshub.com/

HYDRAULIC CYLINDER
3.5" ID BARREL X 1.75" OD ROD X 8.0" STROKE

REF NO.	PART NUMBER	QTY	DESCRIPTION	REMARKS
	151-056		HYDRAULIC CYLINDER	INCLUDES REF ND.'S 1 THRU 7
1.	190-174	1	SEAL REPAIR KIT	
2.	149-302	1	LOCK RING	
3.	152-006	1	CYLINDER BARREL	
4.	106-122	1	BOLT (7/8-NC X 2-1/4",GD 8)	SEE FOOTNOTE 1
5.	105-363	1	WASHER (7/8")	
6.	149-301	1	PISTON	
7.	150-761	1	CYLINDER HEAD	
8.	150-436	1	CYLINDER ROD	

NOT SHOWN:

259-040	ROD U-SEAL INSTALLER
259-238	ROD WIPER INSTALLER
259-244	PISTON SEAL INSTALLER
259-245	PISTON INSTALLER
259-188	CYLINDER HEAD SPANNER WRENCH

FOOTNOTES

1-LUBRICATE WITH WD-40 OR EQUAL.TORQUE TO 410-460 FT-LBS (550-625 N.M)

https://truckmanualshub.com/

REEL CARRIER LIFT CYLINDER
RLCR 45/RLCR 50/RLCR 75

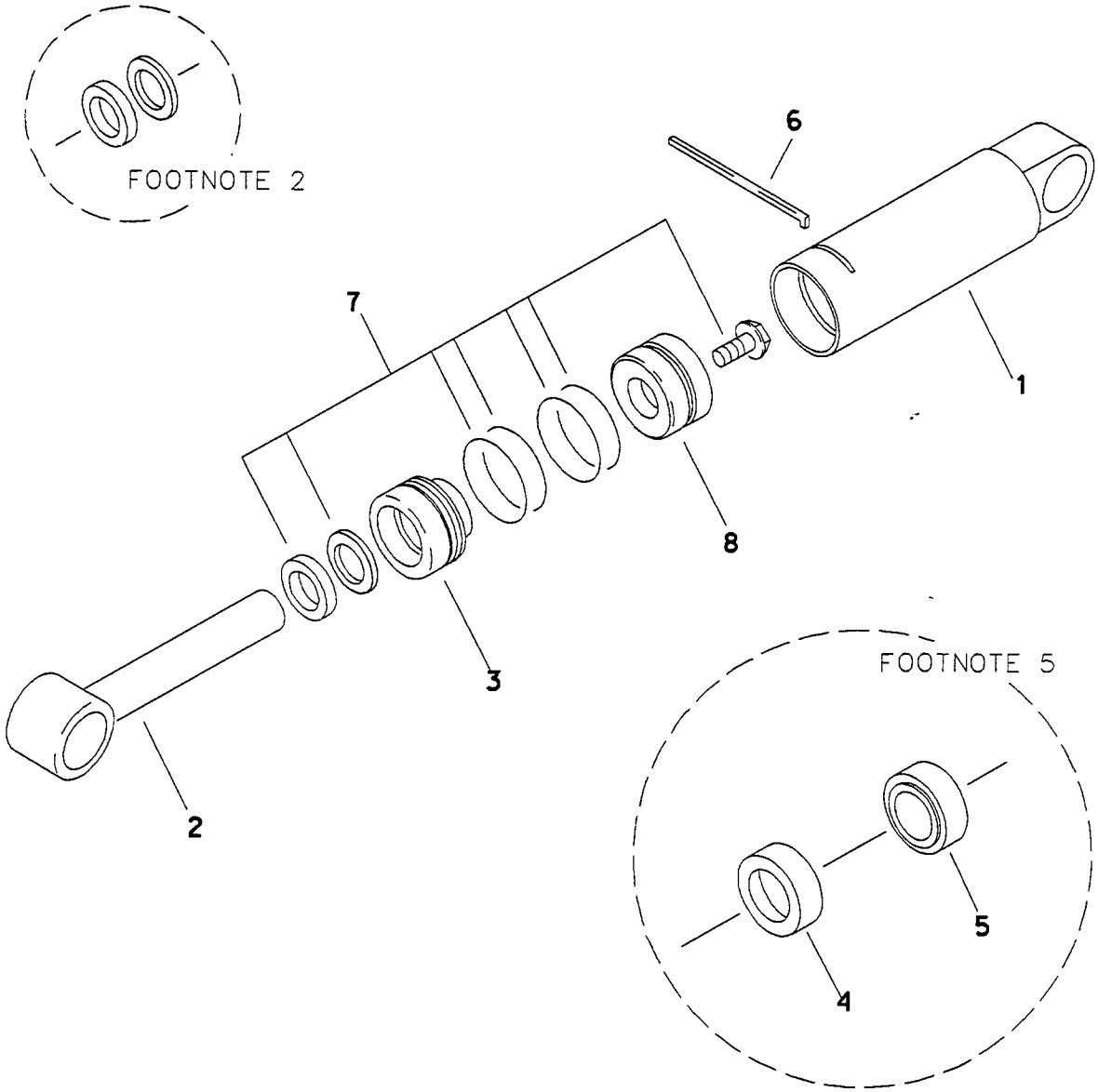

https://truckmanualshub.com/

REEL CARRIER LIFT CYLINDER
RLCR 45/RLCR 50/RLCR 75

REF NO.	PART NUMBER	QTY	DESCRIPTION	REMARKS
	150-122		CYL (2.0" X 1.18" X 12.18")	REEL CARRIER LIFT - INCL REF #'S 1-3 & 6-8
1.	150-235	1	CYLINDER BARREL	
2.	150-378	1	CYLINDER ROD	
3.	150-842	1	CYLINDER HEAD	SEE FOOTNOTE 3
	150-798	1	CYLINDER HEAD	SEE FOOTNOTE 4
4.	150-904	1	SMOOTH BACKUP PISTON	SEE FOOTNOTE 5
5.	150-906	1	GROOVED PISTON	SEE FOOTNOTE 5
6.	150-912	1	LOCK RING	
7.	190-101	1	SEAL REPAIR KIT	SEE FOOTNOTE 1
	190-158	1	SEAL REPAIR KIT	SEE FOOTNOTE 2
8.	150-999	1	PISTON	SEE FOOTNOTE 5

NOT SHOWN:

259-100	ROD U-SEAL INSTALLER
259-310	PISTON SEAL INSTALLATION TOOL

FOOTNOTES

1-THIS SEAL KIT IS NO LONGER AVAILABLE, USE KIT LISTED BELOW.

2-USE ROD O-RING AND BACKUP COMBINATION FOR CYLINDER HEADS WITH .208" THK INTERNAL GROOVE. USE ROD U-SEAL FOR HEADS WITH .28" THK INTERNAL GROOVE. REFER TO INSTALLATION DIAGRAM 050-023 AND PISTON REPLACEMENT DIAGRAM 052-144.

3-THIS HEAD HAS .208" THK INTERNAL GROOVE DESIGNED FOR USE WITH O-RING AND BACKUP RING COMBINATIONS. THIS HEAD IS REPLACED BY HEAD WITH .28" THK INTERNAL GROOVE AND ROD U-SEAL.

4-THIS HEAD HAS .28" THK INTERNAL GROOVE DESIGNED FOR USE WITH ROD U-SEAL.

5-SINGLE PIECE 2" PISTON (REF #8) REPLACES TWO PIECE 2" PISTON (REF #'S 4 & 5).

https://truckmanualshub.com/

MISCELLANEOUS

https://truckmanualshub.com/

RELATED PUBLICATIONS

7520 PARTS MANUAL	053-408
7520 OPERATOR'S MANUAL	054-469
SERVICE MANUAL	055-461
DEUTZ F4L912HO OPERATOR'S MANUAL	050-610
DEUTZ F4L912HO SERVICE MANUAL	050-575
DEUTZ PROBLEM DIAGNOSIS GUIDE	050-555
DEUTZ SALES/SERVICE DIRECTORY	050-556
EATON 15 SERIES SERVICE MANUAL	050-567
SUNDSTRAND 40 SERIES SERVICE MANUAL	055-017
SUNDSTRAND 90 SERIES SERVICE MANUAL	055-018
SUPPLEMENTARY MAINTENANCE GUIDE	050-633
SPECIAL TOOL GUIDE	052-901

FILTERS

ENGINE OIL FILTER	195-814
ENGINE FUEL FILTER	195-813
DIESEL FUEL WATER SEPARATOR	159-009
ENGINE AIR FILTER - PRIMARY	195-690
ENGINE AIR FILTER - SECONDARY	195-809
HYDRAULIC OIL FILTER	159-079

The Charles Machine Works, Inc., recommends replacing filters with only original equipment Ditch Witch° filters.

CAPACITIES

ENGINE OIL	12.0 QT	(10.4 l)	DEO
GROUND DRIVE TRANSMISSION	8.0 PT	(3.8 l)	MPL
PUMP DRIVE	1.5 QT	(1.4 L)	thf
DIFFERENTIALS			
ROCKWELL	10.0 PT	(4.7 l)	MPL
EATON	12.0 PT	(5.6 l)	MPL
HYDRAULIC OIL			
RESERVOIR	15.0 GAL	(56.7 l)	THF
SYSTEM	19.0 GAL	(71.9 l)	THF
FUEL TANK	19.0 GAL	(71.9 l)	

Engine oil capacity is assumed to include an oil filter change.

LUBRICANT SPECIFICATIONS

THF	TRACTOR HYDRAULIC FLUID
DEO	DIESEL ENGINE OIL, SAE 15W40, MEETING API CLASSIFICATION SF/CD OR CE
GEO	GASOLINE ENGINE OIL MEETING API CLASSIFICATION SD
MPL	GEAR OIL, 80W90, MEETING API CLASSIFICATION GL-5
MPG	MULTI PURPOSE GREASE
HYDO	HYDRAULIC OIL, SAE 10W OR 10W40, MEETING API CLASSIFICATION SD
ATF-F	AUTOMATIC TRANSMISSION FLUID, TYPE F
DEXRON II	AUTOMATIC TRANSMISSION FLUID MEETING ALLISON SPECIFICATION C-3.
AGMA 7	WORM GEAR LUBRICANT MATCHING AMERICAN GEAR MANUFACTURERS ASSOCIATION COMPOUND #7.

https://truckmanualshub.com/

DASH SIZE - THREAD SIZE - O-RING CHART

DASH SIZE	FRACTION SIZE	N P T THREAD	J I C THREAD	S A E THREAD	S A E O-RING	O R S THREAD	O R S O-RING
01	1/16	NA	NA	NA	NA	NA	NA
02	1/8	1/8-27	NA	5/16-24	NA	NA	NA
03	3/16	NA	NA	3/8-24	NA	NA	NA
04	1/4	1/4-18	7/16-20	7/16-20	155-760	9/16-18	157-037
05	5/16	NA	1/2-20	1/2-20	155-717	NA	NA
06	3/8	3/8-18	9/16-18	9/16-18	155-705	11/16-16	157-038
08	1/2	1/2-14	3/4-16	3/4-16	155-706	13/16-16	157-039
10	5/8	NA	7/8-14	7/8-14	155-707	1-14	157-040
12	3/4	3/4-14	1-1/16-12	1-1/16-12	155-709	1-3/16-12	157-017
14	7/8	NA	1-3/16-12	1-3/16-12	155-747	NA	NA
16	1	1-11.5	1-5/16-12	1-5/16-12	155-748	1-7/16-12	155-714
20	1-1/4	1-1/4-11.5	1-5/8-12	1-5/8-12	155-702	1-11/16-12	NA
24	1-1/2	1-1/2-11.5	1-7/8-12	1-7/8-12	157-001	2-12	NA
32	2	2-11.5	2-1/2-12	2-1/2-12	NA	NA	NA
40	2-1/2	2-1/2-8	NA	3/12	NA	NA	NA
48	3	3-8	NA	3-1/2-12	NA	NA	NA

https://truckmanualshub.com/

BOLT AND NUT TORQUE

SAE GR-5 BOLTS (FINE OR COARSE THREAD)

Bolt and Nut Details	Diameter (In Inches) 1/4	5/16	3/8	7/16	1/2	9/16	5/8	3/4	7/8	1	1-1/8	1-1/4
	(FT. LBS. TORQUE)											
Regular hex nuts or regular hex bolt heads torqued into regular nuts, flange nuts, or drilled and tapped holes.	12	25	40	65	100	150	200	350	560	840	1030	1460
Hex section top deflected locknuts	8	15	25	40	60	90	120	210	340	500	620	880
Flanged section with flange teeth nuts*, or flange teeth bolt heads* torqued into flange nuts or drilled and tapped holes.	20	45	75	125	190	270	370	650	1050	1580	1950	2760

SAE GR-8 BOLTS (FINE OR COARSE THREAD)

Bolt and Nut Details	Diameter (In Inches) 1/4	5/16	3/8	7/16	1/2	9/16	5/8	3/4	7/8	1	1-1/8	1-1/4
	(FT. LBS. TORQUE)											
Grade "C" regular hex nuts** or regular hex bolt heads torqued into grade "C" regular nuts**, flange nuts, or drilled and tapped holes.	14	30	55	85	130	190	260	450	730	1090	1550	2180
Grade "C" hex section top deflected locknuts**	10	18	35	50	80	110	160	270	440	650	930	1310
Flanged section with flange teeth nuts** or flange teeth bolt heads* torqued into flange nuts or drilled and tapped holes.	24	50	90	140	220	310	430	750	1210	1820	2580	3640

NOTES:

*For flange sections without flange teeth use values for regular nuts and bolt heads.

**For nuts that are not Grade "C" use values for grade 5.

https://truckmanualshub.com/

WARRANTY SUPPORT

SERIAL NUMBER RECORD

Record the serial number and date of purchase of your equipment in the space provided. Specify equipment serial number and part number to expedite processing of parts orders.

Date of Purchase: _____

Serial Number: _____

Model Number: _____

WARRANTY SUPPORT PROCEDURE

Notify your dealer immediately of any malfunction or failure of Ditch Witch equipment.

Always give model, serial number and approximate date of your equipment purchase.

Return damaged parts to dealer for inspection and warranty consideration.

Order genuine Ditch Witch replacement or repair parts from your authorized Ditch Witch dealer. Use of another manufacturer's parts may void Warranty Support consideration.

Ditch Witch® EQUIPMENT AND REPLACEMENT PARTS LIMITED WARRANTY POLICY

Effective 01/01/91

The following Major Component Limited Warranty covers only the serial numbered products ("Products") as listed that are manufactured and distributed by Charles Machine Works, Inc. ("CMW") Replacement parts, serial numbered Products, and non-major components listed under Major Component Limited Warranty are covered under Product Limited Warranty.

MAJOR COMPONENT LIMITED WARRANTY

Major Components of these Products and their attachments are warranted for a period of 1000 hours of use or one year, whichever occurs first, beginning on date of delivery of any such new Product to original purchaser.

Models 1010, 100SX, 1620, 2020, 520, and 255SX

Equipment and attachments for:

2310, 3500, 4500, 5110, 5020, 7520, 8020, Earth Augers, Jet Trac Guided Boring System, True Trac Guided Boring System, Pierce Airrow Tools, P40, P80, Trailers, Power Pacs, Subsite Surface Transmitters & Receivers

Major Components are defined as:

Subsite Surface Transmitters and Receivers.

Differentials and parts contained within.

Mechanical Transmissions.

Drive gear boxes and parts contained within.

Hydraulic, hydrostatic, and fluid pumps, motors and components that control or protect pumps and motors.

Auxiliary hydraulic control valves and electrical components used for controlling hydraulic components.

Hydraulic cylinders and components excluding repair kits.

Batteries, alternators, instruments, gauges, and protection components for electrical systems.

CMW will provide free replacement parts to original purchaser for any part of Major Components which has a defect in material or workmanship within warranty period. Defects will be determined by an inspection of Major Component or part by CMW or its authorized dealer. Original purchaser of the Product containing a Major Component must present Major Component or part to CMW or its authorized dealer for inspection within 30 days of the date Major Component or part fails. CMW will provide the location of its inspection facilities or its nearest authorized dealer upon inquiry. CMW reserves the right to supply remanufactured replacement parts as it deems appropriate.

https://truckmanualshub.com/

PRODUCT LIMITED WARRANTY

Products are warranted for * 90 days from date of delivery of any new Product to original purchaser. CMW will provide free replacement parts to original purchaser for any Product which has a defect in material or workmanship. Replacement parts are warranted for 90 days from date of delivery of any such replacement part to original purchaser. Any part of a Product subject to ground contact is warranted only for defects in material or workmanship and only for the period of operational life of such part, which period shall not in any event exceed the 90 day limited warranty above. Defects will be determined by an inspection of the Product or part by CMW or its authorized dealer. Original purchaser of the Product must present Product or part to CMW or its authorized dealer for inspection within 30 days of the date of failure. CMW will provide the location of its inspection facilities or its nearest authorized dealer upon inquiry. CMW reserves the right to supply remanufactured replacement parts as it deems appropriate.

***180 days for Ditch Witch DR52, DR65, and DP195.**

EXCLUSIONS FROM PRODUCT AND MAJOR COMPONENT LIMITED WARRANTY

SPECIFICALLY EXCLUDED FROM PRODUCT AND MAJOR COMPONENT LIMITED WARRANTY ARE:

Transportation and labor charges related to repair, replacement, or inspection of Products, Major Components, or parts.

All incidental or consequential damages.

All defects, damages, or injuries caused by misuse, abuse, improper installation, alteration, neglect or uses other than those for which Products were intended.

All defects, damages, or injuries caused by improper training, operation, or servicing of Products in a manner inconsistent with manufacturer's recommendations.

All engines and engine accessories (these are covered by original manufacturer's warranty).

Tires, belts, and other parts which may be subject to another manufacturer's warranty (such warranty will be available to purchaser).

ALL IMPLIED WARRANTIES NOT EXPRESSLY STATED HEREIN, INCLUDING ANY WARRANTY OF FITNESS FOR A PARTICULAR PURPOSE AND MERCHANTABILITY.

IF THE PRODUCTS ARE PURCHASED FOR COMMERCIAL PURPOSES AS DEFINED BY THE UNIFORM COMMERCIAL CODE, THEN THERE ARE NO WARRANTIES WHICH EXTEND BEYOND THE FACE HEREOF AND THERE ARE NO IMPLIED WARRANTIES OF ANY KIND WHICH EXTEND TO A COMMERCIAL BUYER. ALL OTHER PROVISIONS OF THIS LIMITED WARRANTY APPLY INCLUDING THE DUTIES IMPOSED.

Ditch Witch Products have been tested to deliver acceptable performance in most conditions. This does not imply they will deliver acceptable performance in all conditions. Therefore, to assure suitability, Products should be operated under anticipated working conditions prior to purchase.

This limited warranty applies to original purchasers only. Some states do not allow exclusion or limitation of incidental or consequential damages, so above limitation or exclusion may not apply. Further, some states do not allow exclusion of or limitation of how long an implied warranty lasts, so above limitation may not apply. This limited warranty gives original purchaser specific legal rights and the original purchaser may also have other rights which vary from state to state.

For information regarding this limited warranty, contact CMW's Technical Administration Department, P.O. Box 66, Perry, OK 73077-0066, or contact your local Ditch Witch dealer.

https://truckmanualshub.com/

A Note To Ditch Witch Equipment Owners:

If your equipment was purchased through a Ditch Witch dealer, there is no need to read further.

However, if you purchased from any other source, please fill out the form on the reverse side and return it to us.

This will enable you to receive updates on this equipment as well as information on new products of interest.

Thanks for using Ditch Witch equipment!

(Please Fold Along This Line And Seal At Bottom With Tape)

NO POSTAGE NECESSARY IF MAILED IN THE UNITED STATES

BUSINESS REPLY MAIL

FIRST CLASS PERMIT NO. 23 PERRY, OKLAHOMA

POSTAGE WILL BE PAID BY

The Charles Machine Works, Inc.
P.O. Box 66
Perry, Oklahoma 73077-9989

https://truckmanualshub.com/

Ditch Witch® Registration Card

Please Type Or Print All Information

Purchaser's Company Name

Attention

Street Address or P.O. Box

City | County

State | Zip | Nation

( )

Phone Number With Area Code

Machine Model | Serial Number

Attachments | Serial Number

Attachments | Serial Number

Attachments | Serial Number

Name of Ditch Witch Dealership

Your Signature

Thanks!

The Charles Machine Works, Inc.
Box 66
Perry, OK 73077-9989