https://truckmanualshub.com/

VERSATILE SIMPLE EFFICIENT

SERIE 4

SERIE 4

4-060 • 4-070 • 4-080

Landini®

Passion for Innovation.

https://truckmanualshub.com/

Landini®

https://truckmanualshub.com/

LANDINI SERIE 4: THE ALL-ROUNDER THAT DOES IT ALL

The aim was ambitious: to develop a multi-purpose tractor that was truly simple and efficient, a versatile workhorse capable of handling any job on the farm. Staying true to this idea, Landini engineers have designed and developed the new **Serie 4** light-utility tractors.

Available in both cab and ROPS versions, the Landini **Serie 4** is designed to meet the needs of farmers looking for a low-cost, do-it-all tractor. The **Serie 4** is an all-round tractor ideally suited for wide-row vineyards and orchards as well as for ploughing, tilling and harrowing small plots of land. Its great manoeuvrability makes it perfect for sowing and haymaking, while its excellent all-round visibility ensures safe and efficient loader operation. Its compact size also makes the **Serie 4** ideal for use inside stables as well as for safe operation on sloping terrain and for road transport. All this turns the Landini **Serie 4** into a true efficiency champion.

https://truckmanualshub.com/

HIGHLIGHTS

Cab

- Total View Slim cab: maximum visibility and transparent roof hatch, ergonomic controls and high-grade fit and finish
- Driver's seat with optional air suspension
- Flat-deck platform for maximum working comfort
- Low-profile cab roof for easy access to low-ceiling barns and sheds
- In-cab battery cut-off switch

Transmission

- 24/24 Speed Four transmission with mechanical Hi-Lo
- 12/12 Power Four transmission with power shuttle

Axles

- Rigid-mounted front axle with limited slip differential lock

Hydraulic system

- Open-centre hydraulic system with 52 l/min flow rate
- Rear hitch with up to 3000 kg lift capacity
- Rear 2-speed PTO plus ground speed PTO
- Up to 3 rear- and 2 mid-mounted remote valves
- Front loader and optional front hitch and PTO

Engine

- Kohler KDI 2504 TCR 2.5L turbo intercooled engine delivering up to 75 hp
- Exhaust gas after-treatment with DOC system to meet Stage V/Tier 4 Final emissions regulations

The **Serie 4** is equipped with the innovative Total View Slim cab. Designed according to automotive industry standards, this cab combines maximum safety and operator comfort. Cab key features include a low-profile roof with a transparent hatch for maximum visibility, a flat floor, an efficient climate control system and a high-grade fit and finish. All controls are ergonomically designed and logically arranged to allow simple and intuitive control of key tractor functions such as the new 12/12 Power Four transmission or the 24/24 Speed Four transmission with mechanical Hi-Lo. The **Serie 4** tractor range comprises three models delivering 61 hp, 68 hp and 75 hp, respectively.

Key features of the Landini **Serie 4** include:
- A specially-built transmission;
- A 4WD front axle with limited slip differential lock;
- A wheelbase of 2110 mm;
- A mechanically-operated rear hitch with 3000 kg lift capacity;
- An optional front hitch and PTO;
- A hydraulic system providing up to 52 l/min flow rate;
- A urea-free exhaust after-treatment system for greater simplicity, better fuel economy and increased reliability

The Landini name is traditionally associated with innovation. When you choose Landini, you are choosing a reliable partner that will offer advanced technology combined with simplicity of design and versatility of use.

https://truckmanualshub.com/

EXHAUST SYSTEM

Emissions under control
page 29

CAB

Perfect visibility
and first-class comfort
page 6

ENGINE

A new heart
page 26

FRONT AXLE

Unmatched manoeuvrability
page 12

HYDRAULIC SYSTEM

Innovative, for maximum
configuration flexibility
page 14

TRANSMISSION

Versatile, tailored
to suit every need
page 10

https://truckmanualshub.com/

landini

https://truckmanualshub.com/

*From the cab of my **Serie 4** the visibility is impressive… I can see it all! And everything inside is within easy reach… I can work for many hours straight without the slightest fatigue.*

George

THE TOTAL VIEW SLIM CAB SIMPLIFIES YOUR WORK AND REDUCES FATIGUE

Designed to offer the operator maximum comfort and ease of use, the Total View Slim cab provides a spacious environment with a flat-deck platform and efficient sound insulation that reduces operator fatigue during long working days in the field.

A high-quality automotive-grade fit and finish, ergonomically-arranged controls and a steering wheel that tilts with the instrument panel further enhance the operator comfort. The climate control system, conveniently built into the low-profile cab roof, maintains a comfortable working environment whatever the outdoor weather conditions. The climate control filters are fitted on the roof sides to allow for quick and easy cleaning. Featuring a large glazed area, the cab of the **Serie 4** tractor provides unobstructed all-round view for easy manoeuvring

https://truckmanualshub.com/

HIGHLIGHTS

- Total View Slim cab: transparent roof hatch for maximum visibility, ergonomic controls and high-grade fit and finish
- Driver's seat with optional air suspension
- Flat-deck platform for maximum working comfort
- Low-profile cab roof for easy access to low-ceiling barns and sheds
- In-cab battery cut-off switch

in tight spots, while the transparent roof hatch provides extra visibility for front loader operation. The Total View Slim cab meets FOPS (*Falling Objects Protecting Structure*) safety standards for the use of front-end loaders. Fitted with a suitable tire size, the Serie 4 tractor reaches a minimum width of only 1820 mm, making it ideal for working between wide vineyard and orchard rows.

DRIVER'S SEAT AND HIDE-AWAY BUDDY SEAT

Large and comfortable, the driver's seat is ergonomically designed and features either a mechanical or air suspension system that can be adjusted to suit the driver's weight. Passengers can also travel in comfort thanks to an upholstered buddy seat, which neatly folds away to allow easier access to the cab.

ACCESS TO DRIVING POSITION

Wide, sturdy access steps and handrails fitted to the cab posts and to the doors allow operators to safely climb up and down the tractor. Fully glazed rear-hinged doors provide easy access to the driving position.

https://truckmanualshub.com/

INSTRUMENT PANEL AND STEERING WHEEL

The **Serie 4** tractor features a telescopic, tilt-adjustable steering wheel. The instrument panel, which tilts with the steering column, features intuitive, easy-to-use digital and analog instruments for easy monitoring of tractor functions.

CLIMATE CONTROL SYSTEM

A highly-efficient heating, ventilation and air conditioning system integrated into the cab roof maintains the desired cab temperature whatever the outdoor weather conditions. The climate control system relies on rear air vents to distribute the conditioned air evenly throughout the cab without exposing the operator to direct air flow. Natural ventilation is ensured by the openable front and rear windscreens and by the tilting roof hatch.

PLAT

ROPS VERSION

Designed to offer a high level of comfort, the ROPS version of the **Serie 4** is isomounted to minimize vibrations. The driver's platform features a flat floor that provides easy access to the driving position and creates a more spacious feel reducing operator fatigue. All controls are ergonomically arranged and user-friendly. For added driver protection, the platform is equipped with a two-post ROPS that can be folded down to allow the tractor to work under low-hanging canopies or between narrow orchard and vineyard rows.

https://truckmanualshub.com/

HIGHLIGHTS

- 24/24 Speed Four transmission with mechanical Hi-Lo
- 12/12 Power Four transmission with power shuttle

RELIABLE, SIMPLE AND EFFICIENT TRANSMISSIONS

I already knew the excellent Landini synchro shuttle transmission, so I wanted to try the power shuttle transmission because it has a button-operated clutch… and I found it extremely convenient!"

Richard

True to its tradition of technological innovation, Landini manufactures a range of rugged transmissions designed to offer farmers efficiency and versatility.
For the **Serie 4** tractor range, Landini offers two transmission configurations:
- A Speed Four transmission with mechanical Hi-Lo providing 24 forward and 24 reverse speeds. This transmission offers precise, seamless gear changes for maximum comfort of operation.
- A Power Four transmission with power shuttle providing 12 forward and 12 reverse speeds. The power shuttle allows the operator to easily shift through all gears and change from forward to reverse. This reduces driver fatigue, making this transmission ideal for long working hours in the field and for tasks requiring frequent forward/reverse shifting.

https://truckmanualshub.com/

SYNCHRO SHUTTLE

The synchro shuttle is controlled by a lever adjacent to the steering wheel.

SPEED FOUR TRANSMISSION

The Speed Four transmission with mechanical Hi-Lo offers four synchronized speeds and three ranges providing up to 24 forward and 24 reverse gears. On the 4WD version, the Speed Four transmission allows a top speed of 40 km/h. Optimum spacing of gear ratios ensures that you always have the right speed for every job.

POWER FOUR ELECTROHYDRAULIC TRANSMISSION

Designed with reliability in mind, the Power Four transmission features a left-hand steering-column power shuttle and provides 12 forward and 12 reverse speeds.

https://truckmanualshub.com/

HIGHLIGHTS

- Rigid-mounted front axle with limited slip differential lock

LANDINI SERIE 4, YOUR DO-IT-ALL COMPANION

*My four-wheel drive **Serie 4** ensures optimum traction in any situation. And the differential lock works great on slippery or uneven terrain.*

Edward

The **Serie 4** offers excellent traction and manoeuvrability for optimum grip and stability both in the field and on the road. The rugged front axle is equipped with limited slip differential lock and electro-hydraulic four-wheel drive engagement. This ensures maximum efficiency and safety in any condition, including when working with a front hitch or a front loader. The rear axle is as sturdy and reliable as the front one. Combining a wide front axle oscillation and excellent ground clearance with a steering angle of 55 degrees, the **Serie 4** provides unmatched ease of handling in any situation. In addition, the hydrostatic drive delivers smooth steering control even at low engine rpm.

https://truckmanualshub.com/

https://truckmanualshub.com/

https://truckmanualshub.com/

*My dealer configured the hydraulic system of my **Serie 4** to suit my specific needs. I also purchased the new Landini front loader… All jobs seem to be much easier now."*

Matt

THE HYDRAULIC SYSTEM THAT TURNS VERSATILITY INTO PRODUCTIVITY

The **Serie 4** can be fully customized to suit each farmer's needs. Thanks to its outstanding versatility, this tractor can be simultaneously fitted with a mechanically-operated rear hitch and with either a front hitch and PTO or a front loader, resulting in enhanced productivity.

https://truckmanualshub.com/

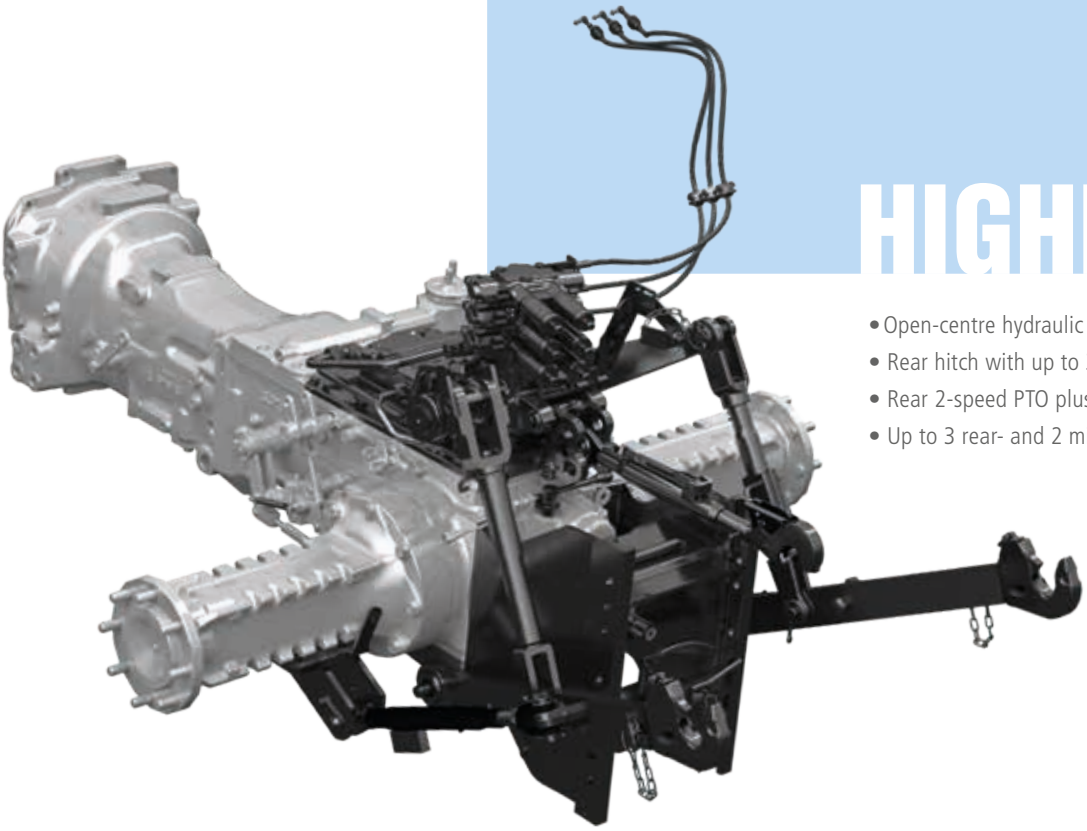

HIGHLIGHTS

- Open-centre hydraulic system with 52 l/min flow rate
- Rear hitch with up to 3000 kg lift capacity
- Rear 2-speed PTO plus ground speed PTO standard
- Up to 3 rear- and 2 mid-mounted remote valves

A MECHANICAL HITCH DESIGNED FOR HIGH EFFICIENCY

The **Serie 4** tractor range comes standard with a rugged mechanically-operated hydraulic rear hitch that guarantees precise implement operation. The hitch is equipped with drop rate control and transport lock for road travel. The tractor can be optionally equipped with external hitch controls on the rear fenders, making it easier to attach implements from the ground. Also available as an option is the Ergonomic Lift System (ELS) which allows the operator to raise and lower the hitch by the simple click of a button. This makes for faster headland turns, resulting in reduced working time and increased productivity. Highly reliable and extremely rugged, the rear hitch of the **Serie 4** features a three-point linkage Category II and can be optionally equipped with quick-release couplings.

https://truckmanualshub.com/

THREE-SPEED PTO

The **Serie 4** features a rear PTO with 540/540E rpm plus ground speed. The PTO is operated by a power-assisted mechanical control. A push button enables smooth and modulated engagement of the PTO clutch, ensuring soft implement start-up in any situation.

https://truckmanualshub.com/

CONFIGURABLE HYDRAULIC SYSTEM

The **Serie 4** tractor range features a dual-pump hydraulic system. One pump supplies up to 30 l/min to the steering system ensuring smooth and precise turning for increased operator comfort and productivity. The other pump provides a flow rate of 52 l/min to operate all hydraulic functions. To further enhance the tractor hydraulic performance, the **Serie 4** comes standard with a pressure-free return line to oil tank. This solution prevents oil overheating, doing away with the need for continuous flow rate adjustment, and eliminates backpressure, thereby optimising implement operation and enabling the use of latest-generation attachments.

https://truckmanualshub.com/

CUSTOM-BUILT REMOTE VALVES

The **Serie 4** can be equipped with up to five remote hydraulic valves, three rear-mounted and two mid-mounted. The mid-mount remotes, operated by a joystick, allow the use of either a front hitch or a front loader.
The **Serie 4** tractor range offers four types of remote valves that can be used in combination to suit different application needs:

- **Standard**: double-acting;
- **Kick-out**: with automatic detent release;
- **Float**: for implements that follow the ground contour;
- **Hydraulic motor**: for the use of implements equipped with one or more hydraulic motors.

Each option allows the tractor to work with a variety of implements for maximum efficiency and productivity. Ergonomically-arranged high-quality quick-release couplings allow quick connection/disconnection of hydraulic lines for fast operation.

https://truckmanualshub.com/

LANDINI FRONT LOADERS AND SERIE 4 TRACTORS: BORN TO STAY TOGETHER

Developed to be integrated into the **Serie 4** tractor range, Landini original front loaders are factory installed. Specially designed to enhance the performance and flexibility of the **Serie 4** tractors, the Landini front loaders will ensure:

> **Versatility:** They allow the use of a wide range of implements for a variety of applications. A new mounting frame makes mounting and removing the loader quick and easy.

> **Productivity:** Designed with optimal dimensions and weights, perfectly balanced and equipped with excellent connection points, Landini front-end loaders will perfectly fit the **Serie 4** tractors for maximum efficiency e productivity.

> **Design:** Landini front loaders perfectly match the specifications of the **Serie 4** tractor, without compromising on turning radius.

https://truckmanualshub.com/

Thanks to a conveniently placed joystick and a high-visibility transparent roof hatch, the operator can comfortably sit in the driving position while working with the loader fully raised. Designed to be the perfect match for the **Serie 4** tractor, the Landini front loader delivers maximum productivity in any application.

https://truckmanualshub.com/

EFFICIENCY

landini

https://truckmanualshub.com/

NEW-GENERATION KOHLER KDI ENGINE FOR TOP RELIABILITY

The Landini **Serie 4** is powered by a Kohler KDI 2504 TCR four-cylinder, turbo intercooled engine with multivalve technology and electronic common rail injection system. The Kohler engine offers enhanced performance in terms of power, torque backup and fuel economy. In addition, it features a urea-free after-treatment system, which simplifies electronics while improving fuel economy and reliability.

https://truckmanualshub.com/

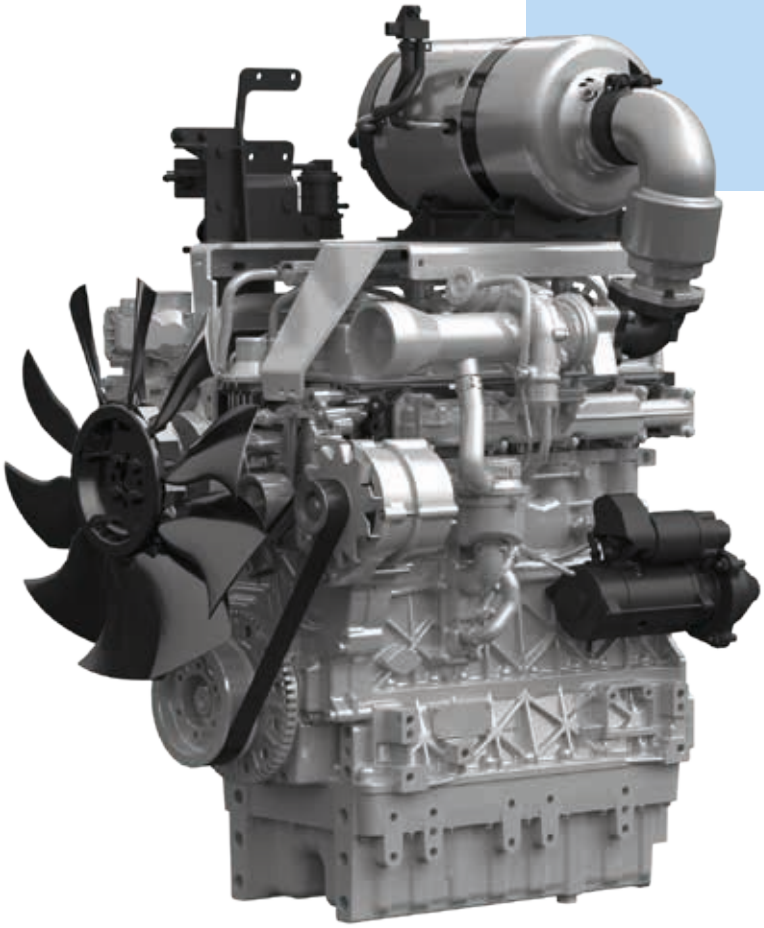

HIGHLIGHTS

- Kohler KDI 2504 TCR turbo intercooled engine delivering up to 75 hp
- Exhaust gas after-treatment with DOC system to meet Stage V/Tier 4 Final emissions regulations

The **Serie 4** is equipped with an 85-litre fuel tank which ensures many hours of operation without refuelling. Fuel efficiency is further enhanced with the Engine Memo switch, a device allowing the operator to store and recall the engine speed most suited to the implement attached. This automation simplifies and speeds up work and minimises the risk of error, thereby reducing operator's stress.

*With my new **Serie 4** I save time and fuel, because daily maintenance is quick and easy.*

Vincent

ENGINE PERFORMANCE	4-060	4-070	4-080
Max power (97/68 CE - ISO TR 14396)	61 / 45	68 / 50	75 / 55
Max torque at 1400 rpm - Stage V (Tier 4 Final)	285 (279)	310 (299)	310 (299)
Manufacturer	KOHLER		
Exhaust after-treatment - Stage V (Tier 4 Final)	DOC-DPF (DOC)		
Cylinders / Displacement / Valves	4 / 2.5L / 16		

https://truckmanualshub.com/

EGR + DOC SYSTEM TO MEET STAGE V EMISSIONS REGULATION

An innovative exhaust gas recirculation system (EGR) and a diesel oxidation catalyst (DOC) ensure full compliance with the Stage V/ Tier 4 Final emissions regulations.

https://truckmanualshub.com/

QUICK MAINTENANCE TO GET YOU BACK UP AND RUNNING

Designed to deliver maximum efficiency and reliability, the **Serie 4** tractor range offers a variety of solutions to simplify and expedite maintenance.

1. The tilt-up hood opens wide to provide easy access to the engine compartment, making maintenance and cleaning operations quicker.
2. The oil filler cap is placed in the lower part of the engine, so topping up of engine oil can be done without opening the hood.
3. The engine air cleaner is positioned in such a way as to speed up cleaning and replacement.
4. The cooling radiators, mounted in the engine front, and the laterally-removable dust cover allow for accurate, simple and fast cleaning.
5. The fuel tank is conveniently placed under the cab/driving platform to allow quick filling.
6. The air cleaners, fitted onto the cab roof, are easily accessible for maintenance.
7. The oil level in the transmission can be conveniently checked through the oil filler cap with dipstick located on the transmission case.

https://truckmanualshub.com/

CONVENIENCE

https://truckmanualshub.com/

LANDINI SPARE PARTS AND SERVICE, TO GIVE YOU THE BEST ALWAYS

Landini is worldwide recognized as a reliable supplier of high-quality spare parts and after-sales services. Developed by the same engineers who design and manufacture the Landini tractors, genuine Landini parts are designed and manufactured to the highest quality standards to ensure tractors reliable performance and maximum safety.

The pluses of Landini's after-sales service include following:

- Spare parts are delivered promptly and efficiently to Landini's dealers on the same day of order.
- Each part comes with a 12-month warranty and bears a non-falsifiable hologram which certifies its build quality and genuineness.
- Original Landini parts are reliable and convenient, as they enhance the working quality and efficiency of **Serie 4** tractors.

The after-sales service is handled by our dealers through a team of highly-skilled, solution-oriented technicians who avail themselves of the latest diagnostic techniques. Choosing Landini means choosing excellence.

https://truckmanualshub.com/

LANDINI, A LONG HISTORY OF SUCCESS

Giovanni Landini had a dream: to change forever the history of farming by bringing the power of machines into the fields. He pursued his goal with great determination and, in 1884, he finally realised his dream by founding the Landini company. Landini's long history is marked by continued innovation in design and production processes and by a strong commitment to customers. The simplicity and reliability that have always been the hallmarks of Landini tractors are perfectly combined in the company's utility range. In 1973, Landini launched the 5500, 6500, 7500 and 8500 series of utility tractors equipped with an innovative 12/4 transmission. In 1977, the company introduced the Large series, the first tractor range in Europe to be equipped with iso-mounted platform and to exceed 100 hp.

In 1994, Landini was acquired by the Argo Industrial Group. The acquisition enabled the company to expand its international presence by creating a worldwide network of subsidiaries and distributors. Giovanni Landini's dream was to make farm work less tiring and more productive. That dream is still alive today, since our quality of life is closely linked to the quality of agricultural production.

https://truckmanualshub.com/

TECHNICAL DATA

		4-060	4-070	4-080
ENGINE PERFORMANCE				
Rated power (97/68 CE - ISO TR 14396)	hp/kW	61 / 45	68 / 50	75 / 55
Max power (97/68 CE - ISO TR 14396)	hp/kW	61 / 45	68 / 50	75 / 55
Rated engine speed	rpm	2200		
Engine speed at max power	rpm	1400		
Max torque at 1400 rpm - Stage V (Tier 4 Final)	Nm	285 (279)	310 (299)	310 (299)
Torque backup - Stage V (Tier 4 Final)		46% (43%)	43% (38%)	30% (25%)
Manufacturer		KOHLER		
Engine type		KDI2504TCR		
Exhaust after-treatment - Stage V (Tier 4 Final)		DOC-DPF (DOC)		
Cylinders / Displacement / Valves		4 / 2.5 L / 16		
Air filter system		dry air filter		
Air intake system		turbo aftercooled		
Fuel injection system		electronically-controlled high-pressure common rail system		
Maintenance Interval		1000 hours		
Cooling system		matrix radiator package		
Cooling fan		● belt-driven fan - ○ viscous fan		
Engine Memo Switch		●		
CAPACITIES				
Fuel tank	l	85		
CLUTCH				
Type		● mechanical		
TRANSMISSION				
Type		● mechanical - ○ hydraulic		
No. of gears - std		● 24FWD + 24REV with synchro shuttle		
No. of gears - option 1		○ 12FWD + 12REV with RPS		
Minimum speed without creeper	km/h	0.43 with 24+24 Hi-Lo - 0.50 with RPS (IR 650mm)		
Minimum speed with creeper	km/h	-		
40 km/h - engine speed	rpm	2200 (IR 650mm)		
Transmission control		hand lever		
Shuttle		● synchro shuttle ○ Reverse Power Shuttle		
REAR PTO				
Type		● mechanical		
Speeds	rpm	● 540/540E		
Ground speed PTO		●		
Engine speeds at rated PTO speeds - 540/540E	rpm	1937 / 1648		
Rotation - type of spline shaft		clockwise (viewed from tractor rear) - • 1-3/8" PTO shaft with 6 splines		
FRONT AND REAR AXLES				
Front rigid axle		●		
Traction type		4WD		
Front differential lock		● limited slip - ○ w/o differential lock		
Rear differential lock		● mechanical		
Rear axle - flanged type		●		

https://truckmanualshub.com/

SERIE 4

		4-060	4-070	4-080
BRAKING SYSTEM				
Front braking system		● automatic 4WD engagement when braking		
Rear braking system		ramp brakes		
Trailer braking system		○ 2-line hydraulic brake as per MR - ○ single-line hydraulic brake or CUNA - ○ 2-line pneumatic brake*		
HYDRAULIC SYSTEM				
Hydraulic pump for rear hitch & remote valves + steering - flow rate		● 52 + 30 l/min		
Rear remote valves - type, number		mechanical, 2 - 3		
Free-flow return		●		
Mid-mounted remote valves - type, number		mechanical, 2		
REAR 3-POINT HITCH				
Rear hitch control		● mechanical		
Category - coupler type		II - ○ fixed ball ends - ○ quick-hitch hooks - ○ telescopic lower links		
Ergonomic Lift System (E.L.S.)		○		
Max lifting capacity at hitch points	kg	● 3000		
CAB				
Total View Slim cab mounted on silent blocks		●		
In-cab noise level	dB(A)	82		
Filtration category		2		
Heating / Climate control system		● heat and ventilation - ○ manual climate control		
Opening rear windshield		●		
Comfort pneumatic seat		○		
Platform version		○		
Trainer seat		○		
Radio ready		●		
Halogen work lights		● 2 rear - 2 front		
LED work lights		●		
Beacon lights		● left side - ○ left and right side - o without		
MISCELLANEOUS				
Landini Fleet Management - ready		●		
Landini Fleet Management - 3-year full plan subscription		○		
Landini Fleet Management - 5-year full plan subscription		○		
Landini Fleet & Diagnostic Remote Management - 3-year full plan subscription		○		
Landini Fleet & Diagnostic Remote Management - 5-year full plan subscription		○		
WEIGHTS AND DIMENSIONS				
Wheelbase	mm	2110		
Max height over cab without beacon lights	mm	2433 - measured with tires 320/70R20 - 420/70R28		
Height from cab roof to rear axle centre	mm	1783		
Max length with front weights - Track width min - max	mm	4073 - (1824-2335) measured with tires 320/70R20 - 420/70R28		
Standard weight measured with average specs	kg	3200		
Gross vehicle weight	kg	5100		
Max front and rear tire size - (Index Radius - IR)	mm	320/70R24 (IR 525mm) - 480/70R30 (IR 700mm)		
Front weight support / Front tow pin	kg	● - without front weight support with tow hitch		
Front weights - no. x weight	kg	○ 6x24 - ○ 8x28		
Rear weights - no. x weight	kg	○ 2x60 - ○ 4x60		

Key: ● standard ○ option * aftermarket

https://truckmanualshub.com/

Passion for Innovation.

Argo Tractors S.p.A.
via G. Matteotti, 7 | 42042 Fabbrico [RE] Italia
t. +39.0522.656.111 | f. +39.0522.656.476
webmaster@argotractors.com | www.argotractors.com

EN
6697623A1 07/2021
progetto grafico: **gruppo saldatori** | www.grupposaldatori.com
All data and illustrations provided in this brochure are for information purposes only and can be changed without notice.