https://truckmanualshub.com/

WEAM000402

# Operation & Maintenance Manual

# PC110R-1

## HYDRAULIC EXCAVATOR

SERIAL NUMBER

**PC110R-1 2265010001** and up

**WARNING**

Unsafe use of this machine may cause serious injury or death. Operators and maintenance personnel must read this manual before operating or maintaining this machine.
This manual should be kept inside the cab for reference and periodically reviewed by all personnel who will come into contact with the machine.

KOMATSU

Utility

https://truckmanualshub.com/

https://truckmanualshub.com/



# 1.1 FOREWORD

- This manual has been carried out by Komatsu Utility in order to supply their customers with all the necessary information on the machine and the safety regulations related to it, together with the use and maintenance instructions that enable the operator to exploit the capacity of the machine with optimal results and to keep the machine efficient over time.
- The operation manual, together with the spare parts catalogue, is an integral part of the machine and must accompany it, even when it is resold, until its final disposal.
- The manual must be handled with the greatest care and always kept on board the machine, so that it can be consulted at any moment; it must be placed in the appropriate compartment behind the seat, where also the ownership documents and the logbook are usually kept.
- This manual must be given to the persons who have to use the machine and carry out the routine maintenance operations; they must read the contents carefully more than once, in such a way as to clearly understand what are the correct operating conditions and the dangerous conditions that must be avoided.
  In case of loss or damage, request a new copy to Komatsu Utility or your Komatsu Utility Dealer.
- The illustrations contained in this manual may represent machine configurations available on request.
  The machines are constantly upgraded in order to increase their efficiency and reliability; this manual sums up all the information regarding the state of technical progress at the moment in which the machine is launched on the market.
  Consult your Komatsu Utility Dealer for any updated information.
- Punctual periodic annotations regarding the maintenance operations that have been carried out are important to have a clear prospect of the situation and to know exactly what has been done and what has to be done after the next maintenance interval. Therefore, it is advisable to consult either the Hour meter and the maintenance plan frequently.
- Over the years Komatsu Utility Dealers have gathered considerable experience in customer service.
  If more information is needed, do not hesitate to contact your Komatsu Utility Dealer: he always knows how to get the best performance from the machine, he can suggest the use of the equipment that is most suitable for specific needs and can provide the technical assistance necessary for any change that may be required to conform the machine to the safety standards and traffic rules.
  Furthermore, Komatsu Utility Dealers also ensure their assistance for the supply of Komatsu Utility genuine spare parts, which alone guarantee safety and interchangeability.
- The table included in this manual must be filled in with the machine data, which are the data that must always be indicated to the Dealer when requiring assistance and ordering spare parts.

**CAUTION**

- **Improper operation and maintenance of this machine may be hazardous and cause serious injuries and even death.**
- **Operators and maintenance personnel must carefully read this manual before using the machine or performing maintenance operations.**
- **Some actions involved in the operation and maintenance of the machine may cause serious injuries or even death, if they are not performed in compliance with the instructions given herein.**
- **The procedures and precautions described in this manual are valid for application to the machine only when it is used correctly.**
  **If the machine is used for any purpose or in any way other than those described herein, the operator shall be responsible for his own safety and for the safety of any other person involved.**

https://truckmanualshub.com/



# 1.2 INFORMATION ON SAFETY

Many accidents are caused by insufficient knowledge of and failure to comply with the safety regulations prescribed for the maintenance operations that must be performed on the machine.
In order to avoid accidents, before starting work and before carrying out any maintenance operation, carefully read and be sure to understand all the information and warnings contained in this manual and given on the plates applied onto the machine.
To identify the messages regarding safety that are included in this manual and written on the machine plates, the following words have been used.

**DANGER**

- **This word is used in the safety warnings in the manual and on the plates when the situation is dangerous and it may possibly result in serious injuries or even death.**
  **These messages describe the safety precautions to be taken in order to avoid any risk. Non-compliance with these instructions may also result in serious damage to the machine.**

**CAUTION**

- **This word is used in the safety warnings in the manual and on the plates to signal risks that may cause moderate damage or injuries.**
  **The message can be used even to indicate the risk of damage to the machine only.**

**IMPORTANT**

- **This word is used when precautions are indicated, which must be taken to avoid actions that may shorten the life of the machine.**

Komatsu Utility cannot reasonably predict every circumstance that might involve a potential hazard during the operation or maintenance of the machine; for this reason, the safety messages included in this manual and applied onto the machine may not include all possible safety precautions.
If all the procedures and operations prescribed for this machine are kept to, you can be sure that the operator and the persons in the vicinity will work in total safety, with no risk of damaging the machine. In case of doubt regarding the safety measures necessary for some procedures, contact Komatsu Utility or your local Dealer.

**DANGER**

- **Before starting any maintenance operation, position the machine on a firm and level surface, lower the equipment to the ground, engage the safety locks of the equipment and of the controls and stop the engine.**

**DANGER**

- **To make the information clearer, some illustrations in this manual represent the machine without safety guards. Do not use the machine without guards and do not start the engine when the engine protection casing is open, if this is not expressly prescribed for some specific maintenance operations.**

https://truckmanualshub.com/



**DANGER**

- **It is strictly forbidden to modify the setting of the hydraulic system safety valves; Komatsu Utility cannot be held liable for any damage to persons, property or the machine, if this has been tampered with by modifying the standard setting of the hydraulic system.**

---

**DANGER**

- **Before carrying out any electrical welding, disconnect the battery and the alternator (See “2.8.13 PRECAUTIONS CONCERNING THE BATTERY AND THE ALTERNATOR”).**

---

**DANGER**

- **Install only authorized additional equipment (See “6.1.3 CHARACTERISTICS OF THE OPTIONAL EQUIPMENT”).**

---

https://truckmanualshub.com/



# 1.3 INTRODUCTION

## 1.3.1 INTENDED USES

The Komatsu Utility MACHINES described in this manual have been designed and constructed to be used by duly trained personnel mainly for EXCAVATION and EARTH-MOVING OPERATIONS.

If provided with suitable safety devices, they can be used with authorized optional equipment having the characteristics illustrated at point “6.1 AUTHORIZED OPTIONAL EQUIPMENT”.

## 1.3.2 IMPROPER OR UNAUTHORIZED USE

**CAUTION**

- **This paragraph describes some of the improper or unauthorized uses of the machine; since it is impossible to predict all the possible improper uses, if the machine happens to be used for particular applications, contact your Komatsu Utility Dealer before carrying out the work.**

**IMPORTANT**

- **The instructions regarding the authorized optional equipment are given in the relevant operation and maintenance manuals; if the equipment is supplied by Komatsu Utility, these publications are enclosed to this manual.**
- **The instructions regarding the assembly of the authorized equipment, the controls requiring special arrangements on the machine and the hydraulic couplings necessary for the operation of the equipment are grouped in the final section of this manual.**

Komatsu Utility MACHINES are constructed exclusively for the handling, excavation and treatment of inert materials; therefore, the following uses are absolutely forbidden:

- USE OF THE MACHINE BY MINORS OR INEXPERIENCED PERSONS.
- USE OF THE MACHINE FOR LIFTING PERSONS OR OBJECTS.
- TRANSPORT OF CONTAINERS WITH FLAMMABLE OR DANGEROUS FLUIDS.
- USE OF THE BUCKET FOR DRIVING OR EXTRACTING PILES.
- USE OF THE MACHINE FOR TOWING DAMAGED VEHICLES.

https://truckmanualshub.com/



## 1.3.3 MAIN CHARACTERISTICS

- Simple and easy operation.
- Hydrostatic transmission obtained through two variable displacement motors that operate epicyclic reduction gears equipped with hydraulic brakes with negative control.
- Upper structure rotation achieved through an axial piston hydraulic motor acting on an epicyclic reduction gear.
- Lubrication of the ball-bearing ring toothing and of the pinion in grease bath.
- Main equipment servo levers ensuring also combined movements that can be modulated proportionally and continually.
- Boom swing and travel controls with servo assisted pedals that ensure proportional and continuous modulated movements.
- Travel speed increase by means of a button.
- Servo controls also for the two-piece boom and the blade.
- Complete series of instruments visible from the operating position.
- Lever accelerator.
- Easy maintenance with simplified intervals.

## 1.3.4 RUNNING-IN

Every machine is scrupulously adjusted and tested before delivery.
A new machine, however, must be used carefully for the first 100 hours, in order to ensure proper running-in of the various components.
If the machine is subjected to excessive work load at the beginning of operation, its potential yield and its functionality will be untimely reduced.
Every new machine must be used carefully, paying special attention to the following indications:

- After the start, let the engine idle for 5 minutes, in such a way as to warm it up gradually before actual operation.
- Avoid operating the machine with the limit loads allowed or at high speed.
- Avoid abrupt starts or accelerations, useless sudden decelerations and abrupt reversals.
- After the first 250 hours, carry out the following operations, in addition to those to be performed every 250 hours:
  1 - Change the oil in the travel reduction gears.
  2 - Change the oil in the swing reduction gear.
  3 - Change the hydraulic circuit oil filter.
  4 - Check and adjust the engine valve clearance.

**SYNTHETIC BIODEGRADABLE OIL TYPE HEES**

On machines in which the synthetic biodegradable oil type HEES is used, the following operations are to be performed besides the standard maintenance operations:

- After the first 50 hours of operation, change the hydraulic circuit drain filter.
- After the first 500 hours of operation, change the hydraulic circuit oil.

☞ **IMPORTANT**

- **When changing the oil filters (cartridges), check their innner part to make sure that there are no deposits.**
  **If considerable deposits are observed, find out what may have caused them before starting the machine.**
- **The number of operating hours is indicated by the Hour meter.**

https://truckmanualshub.com/



# 1.4 PRODUCT IDENTIFICATION

The Komatsu Utility EXCAVATOR and its main components are identified by serial numbers stamped on the identification plates.
The serial number and the identification numbers of the components are the only numbers that must be indicated to the Dealer when requiring assistance and ordering spare parts.

## 1.4.1 MACHINE SERIAL NUMBER

The machine serial number is stamped on the front right part of the main frame.

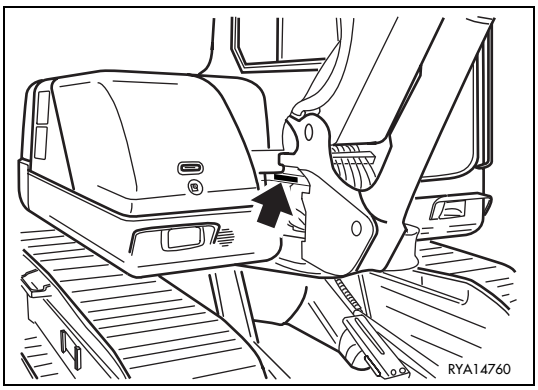


## 1.4.2 MACHINE IDENTIFICATION PLATE

The Komatsu Utility EXCAVATORS described in this manual are provided with the CE mark, which certifies that they are in compliance with the CE harmonized standards.
The plate with the mark is applied onto the front wall of the main frame, on the right side.

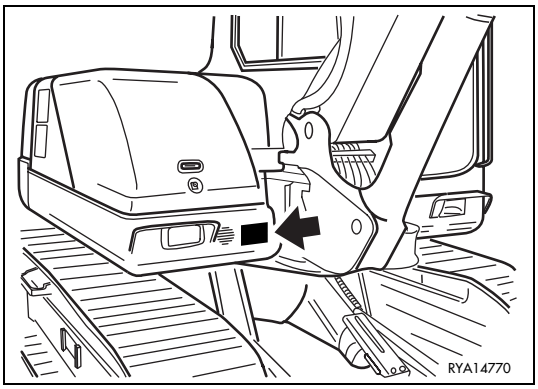

https://truckmanualshub.com/



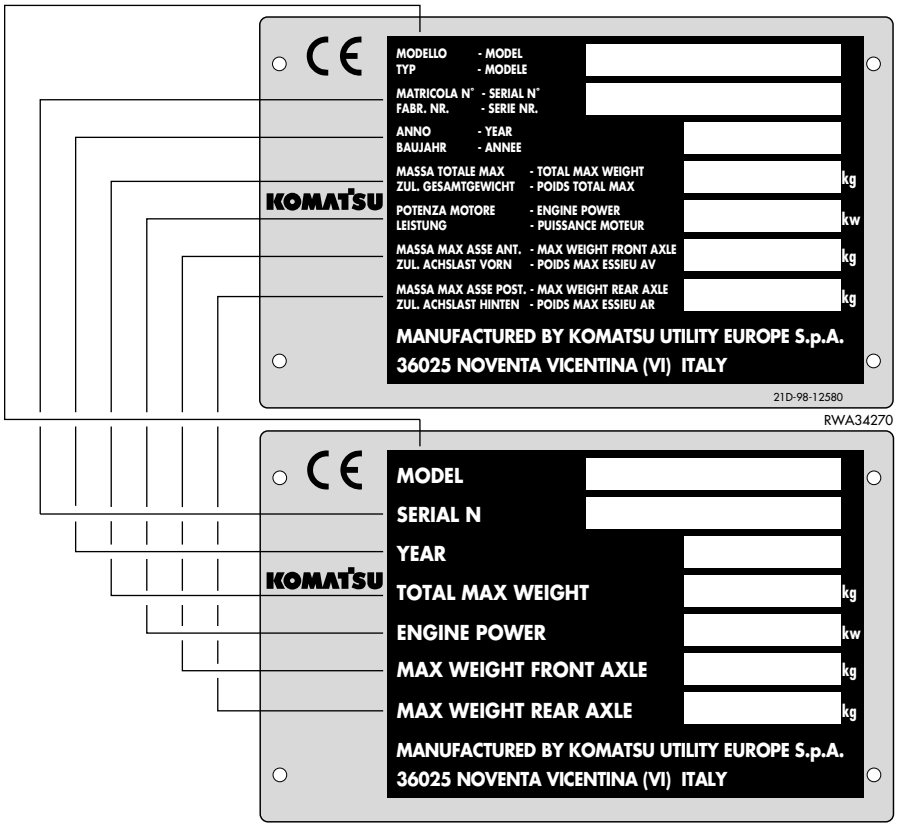


## 1.4.3 NGINE SERIAL NUMBER AND EXHAUST GAS EMISSION PLATE

The engine serial number is stamped on the plate positioned on the upper side of the tappet cover.

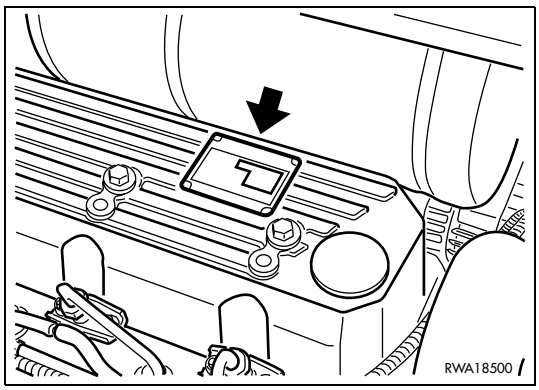


The exhaust gas emission plate is applied to the front side of the tappet cover.

https://truckmanualshub.com/



## 1.4.4 TRAVEL REDUCTION GEAR SERIAL NUMBER

The serial number of the travel reduction gear is stamped on the plate positioned on the outer side of the reduction gear cover.

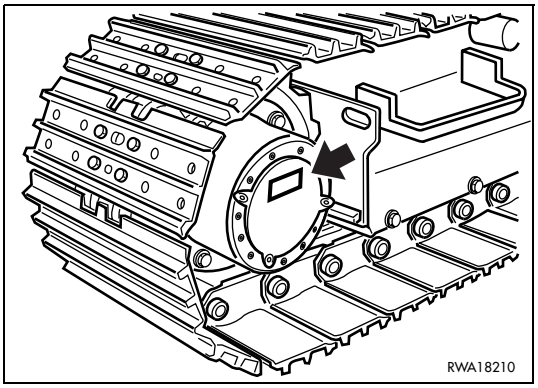


## 1.4.5 SWING REDUCTION GEAR SERIAL NUMBER

The serial number of the swing reduction gear is stamped on the plate positioned on the side of the reduction gear body.

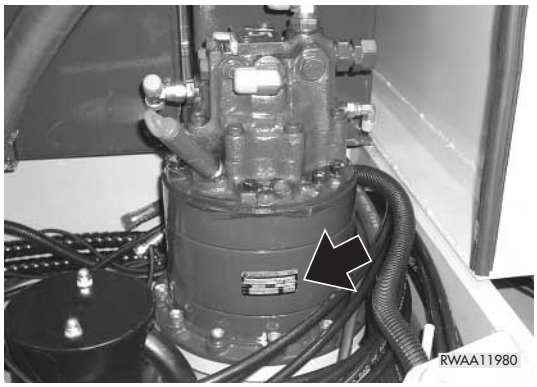


## 1.4.6 CAB SERIAL NUMBER

The cab serial number is stamped on the plate positioned on the right side of the front base cross member.

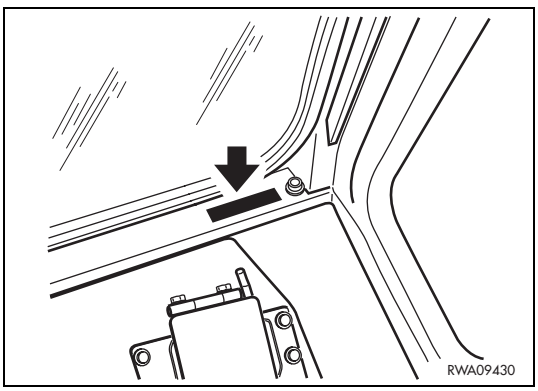

https://truckmanualshub.com/



## 1.4.7 SERIAL NUMBERS AND DEALER'S ADDRESS

Machine n. _____ Model _____

Engine n. _____

Travel reduction gear n. _____

Swing reduction gear n. _____

Cab n. _____

---

Dealer:

_____

_____

_____

_____

Address _____

_____

_____ Tel. _____

Person to contact: _____

---

NOTES: _____

https://truckmanualshub.com/



Page

# CONTENTS

**1.1 FOREWORD** . . . . . **1**
**1.2 INFORMATION ON SAFETY** . . . . . **2**
**1.3 INTRODUCTION** . . . . . **4**
1.3.1 INTENDED USES . . . . . 4
1.3.2 IMPROPER OR UNAUTHORIZED USE . . . . . 4
1.3.3 MAIN CHARACTERISTICS . . . . . 5
1.3.4 RUNNING-IN . . . . . 5
**1.4 PRODUCT IDENTIFICATION** . . . . . **6**
1.4.1 MACHINE SERIAL NUMBER . . . . . 6
1.4.2 MACHINE IDENTIFICATION PLATE . . . . . 6
1.4.3 NGINE SERIAL NUMBER AND EXHAUST GAS EMISSION PLATE . . . . . 7
1.4.4 TRAVEL REDUCTION GEAR SERIAL NUMBER . . . . . 8
1.4.5 SWING REDUCTION GEAR SERIAL NUMBER . . . . . 8
1.4.6 CAB SERIAL NUMBER . . . . . 8
1.4.7 SERIAL NUMBERS AND DEALER’S ADDRESS . . . . . 9

## SAFETY AND ACCIDENT PREVENTION

**2.1 SAFETY, NOISE AND VIBRATION PLATES** . . . . . **18**
2.1.1 POSITION OF THE SAFETY PLATES . . . . . 18
2.1.2 PICTOGRAMS AND RELEVANT MEANINGS . . . . . 19
2.1.3 POSITION OF THE NOISE PLATES . . . . . 23
2.1.4 VIBRATIONS TO WHICH THE OPERATOR IS SUBJECTED . . . . . 24
**2.2 GENERAL PRECAUTIONS** . . . . . **25**
2.2.1 GENERAL SAFETY RULES . . . . . 25
2.2.2 SAFETY DEVICES AND GUARDS . . . . . 25
2.2.3 CLOTHING AND PERSONAL PROTECTION ITEMS . . . . . 25
2.2.4 UNAUTHORIZED MODIFICATIONS . . . . . 26
2.2.5 LEAVING THE OPERATOR’S SEAT . . . . . 26
2.2.6 GETTING ON AND OFF THE MACHINE . . . . . 27
2.2.7 PREVENTING FIRES DUE TO FUEL AND OIL . . . . . 27
2.2.8 PREVENTING BURNS . . . . . 28
2.2.9 PREVENTING DAMAGE DUE TO ASBESTOS POWDER . . . . . 28
2.2.10 PREVENTING DAMAGE CAUSED BY THE WORK EQUIPMENT . . . . . 29
2.2.11 FIRE EXTINGUISHERS AND FIRST AID KIT . . . . . 29
2.2.12 PRECAUTIONS CONCERNING THE CAB STRUCTURE . . . . . 29
2.2.13 PRECAUTIONS CONCERNING THE EQUIPMENT . . . . . 29
**2.3 PRECAUTIONS TO BE TAKEN BEFORE STARTING THE ENGINE** . . . . . **30**
2.3.1 SAFETY ON THE WORK SITE . . . . . 30
2.3.2 FIRE PREVENTION . . . . . 30
2.3.3 PRECAUTIONS TO BE TAKEN FOR THE OPERATOR'S CAB . . . . . 30
2.3.4 ROOM VENTILATION . . . . . 31
2.3.5 PRECAUTIONS TO BE TAKEN FOR THE LIGHTS . . . . . 31
2.3.6 CLEANING THE WINDOWS AND THE REAR-VIEW MIRRORS - CHECKING THE WINDSHIELD WIPER BLADES . . . . . 31

https://truckmanualshub.com/



Page

**2.4 PRECAUTIONS TO BE TAKEN WHEN WORKING . . . . . 32**
2.4.1 STARTING THE ENGINE . . . . . 32
2.4.2 CHECK THE DIRECTION BEFORE STARTING THE MACHINE. . . . . 32
2.4.3 CHECKS FOR TRAVELLING IN REVERSE . . . . . 32
2.4.4 MOVING THE MACHINE. . . . . 33
2.4.5 MOVING ON SLOPES. . . . . 34
2.4.6 WORKING ON SLOPES . . . . . 35
2.4.7 UNAUTHORIZED OPERATIONSE . . . . . 35
2.4.8 PREVENTING ELECTROCUTION . . . . . 36
2.4.9 VISIBILITY . . . . . 37
2.4.10 WORKING ON ICY OR SNOW-COVERED SURFACES . . . . . 37
2.4.11 PREVENTING DAMAGE CAUSED BY THE WORK EQUIPMENT . . . . . 37
2.4.12 WORKING ON LOOSE GROUND. . . . . 37
2.4.13 PARKING THE MACHINE . . . . . 38
**2.5 TRANSPORTING THE MACHINE ON OTHER VEHICLES. . . . . 39**
2.5.1 LOADING AND UNLOADING THE MACHINE . . . . . 39
2.5.2 SHIPPING . . . . . 39
**2.6 BATTERY . . . . . 40**
2.6.1 SAFETY PRECAUTIONS FOR WORK ON BATTERIES . . . . . 40
2.6.2 STARTING WITH BOOSTER CABLES . . . . . 40
**2.7 PRECAUTIONS FOR EMERGENCY RECOVERY . . . . . 41**
**2.8 PRECAUTIONS TO BE TAKEN DURING MAINTENANCE . . . . . 42**
2.8.1 WARNING PLATES. . . . . 42
2.8.2 TOOLS. . . . . 42
2.8.3 PERSONNEL . . . . . 42
2.8.4 EQUIPMENT . . . . . 43
2.8.5 WORKING UNDER THE MACHINE . . . . . 43
2.8.6 KEEPING THE MACHINE CLEAN . . . . . 43
2.8.7 USE OF THE ENGINE DURING MAINTENANCE . . . . . 44
2.8.8 PERIODICAL CHANGE OF THE PARTS THAT ARE CRITICAL FOR SAFETY . . . . . 44
2.8.9 STOP THE ENGINE BEFORE CARRYING OUT ANY MAINTENANCE OPERATION OR INSPECTION. . . . . 44
2.8.10 RULES FOR REFUELLING AND ADDING OIL . . . . . 45
2.8.11 CHECKING THE COOLANT LEVEL IN THE RADIATOR. . . . . 45
2.8.12 USING LAMPS . . . . . 45
2.8.13 PRECAUTIONS CONCERNING THE BATTERY AND THE ALTERNATOR . . . . . 46
2.8.14 PRECAUTIONS CONCERNING THE STARTER . . . . . 46
2.8.15 PRECAUTIONS CONCERNING HIGH-PRESSURE HOSES . . . . . 47
2.8.16 PRECAUTIONS TO BE TAKEN WHEN WORKING ON HIGH-PRESSURE SYSTEMSE . . . 47
2.8.17 PRECAUTIONS FOR MAINTENANCE WORK INVOLVING HIGH TEMPERATURES AND PRESSURES . . . . . 47
2.8.18 COOLING FAN AND FAN BELT . . . . . 48
2.8.19 WASTE MATERIALS. . . . . 48
2.8.20 PRECAUTIONS FOR THE USE OF THE SYNTHETIC BIODEGRADABLE OIL TYPE HEES . . . . . 48

https://truckmanualshub.com/



Page

## DESCRIPTION AND USE OF THE MACHINE


**3.1 SAFETY LOCKS. . . . . 50**
3.1.1 MACHINE LOCKS . . . . . 50

**3.2 GENERAL VIEWS . . . . . 51**
3.2.1 FRONT GENERAL VIEW (MONOBOOM) . . . . . 51
3.2.2 FRONT GENERAL VIEW (TWO-PIECE BOOM) . . . . . 52
3.2.3 CAB INSIDE GENERAL VIEW . . . . . 53

**3.3 INSTRUMENTS AND CONTROLS . . . . . 55**
3.3.1 INSTRUMENTS . . . . . 55
3.3.2 WARNING LIGHTS . . . . . 57
3.3.3 SWITCHES AND PUSH BUTTONS . . . . . 59
3.3.4 ELECTRICAL ACCESSORIES . . . . . 67
3.3.5 MACHINE CONTROLS . . . . . 69

**3.4 FUSES AND RELAYS . . . . . 77**
3.4.1 CENTRAL UNIT FUSES AND RELAYS . . . . . 77
3.4.1.1 CENTRAL UNIT FUSES . . . . . 78
3.4.1.2 CENTRAL UNIT RELAYS . . . . . 79
3.4.2 ENGINE LINE FUSES AND RELAYS . . . . . 80
3.4.2.1 ENGINE LINE FUSES . . . . . 80
3.4.2.2 ENGINE LINE RELAYS . . . . . 81
3.4.3 FUSES AND RELAYS OF THE AIR CONDITIONING SYSTEM (if provided) . . . . . 82

**3.5 GUARDS AND DRIVER’S SEAT . . . . . 84**
3.5.1 ENGINE HOOD . . . . . 84
3.5.2 SIDE COVER . . . . . 84
3.5.3 CAB . . . . . 85
3.5.4 VENTILATION AND HEATING . . . . . 89
3.5.5 AIR CONDITIONER (if provided) . . . . . 90
3.5.6 SEAT . . . . . 92
3.5.7 SAFETY BELT . . . . . 93
3.5.8 EMERGENCY EXIT . . . . . 93
3.5.9 TECHNICAL DOCUMENTATION CASE . . . . . 94
3.5.10 FIRE EXTINGUISHER . . . . . 94
3.5.11 FIRST AID KIT . . . . . 94

**3.6 USE OF THE MACHINE . . . . . 95**
3.6.1 CHECKS BEFORE STARTING THE ENGINE . . . . . 95
3.6.1.1 VISUAL CHECKS . . . . . 95
3.6.1.2 DAILY CHECKS . . . . . 95
3.6.1.3 OPERATIONAL CHECKS . . . . . 96
3.6.2 STARTING THE ENGINE . . . . . 97
3.6.2.1 STARTING WITH WARM ENGINE OR IN TEMPERATE CLIMATES . . . . . 97
3.6.2.2 STARTING WITH COLD ENGINE OR IN COLD CLIMATES . . . . . 98
3.6.3 WARMING THE ENGINE . . . . . 99
3.6.4 HEATING THE HYDRAULIC OIL . . . . . 99
3.6.5 HOW TO MOVE THE MACHINE . . . . . 99
3.6.5.1 STEERING (CHANGING DIRECTION) . . . . . 101
3.6.5.2 MOVING ON SLOPES . . . . . 102
3.6.5.3 MAXIMUM IMMERSION DEPTH . . . . . 103

https://truckmanualshub.com/



**Page**

**3.7 PARKING THE MACHINE . . . . . 104**
3.7.1 PARKING ON LEVEL GROUND . . . . . 104
3.7.2 PARKING ON SLOPES . . . . . 105
**3.8 STOPPING THE ENGINE. . . . . 106**
**3.9 TRANSPORTING THE MACHINE ON OTHER VEHICLES. . . . . 107**
3.9.1 LOADING AND UNLOADING THE MACHINE . . . . . 107
3.9.2 TRANSPORT. . . . . 108
**3.10 PRECAUTIONS TO BE TAKEN IN THE COLD SEASON . . . . . 109**
3.10.1 FUEL AND LUBRICANTS . . . . . 109
3.10.2 COOLANT . . . . . 109
3.10.3 BATTERY . . . . . 110
3.10.4 OTHER PRECAUTIONS . . . . . 110
3.10.5 PRECAUTIONS TO BE TAKEN AT THE END OF WORK . . . . . 110
**3.11 PRECAUTIONS TO BE TAKEN IN THE WARM SEASON . . . . . 111**
**3.12 USING THE WORK EQUIPMENT . . . . . 112**
3.12.1 ORGANIZING THE WORK AREA . . . . . 112
3.12.2 POSITIONING THE BUCKET ACCORDING TO THE WORK TO BE CARRIED OUT. . . . . 112
3.12.3 POSITIONING THE MACHINE FOR DIGGING OPERATIONS . . . . . 113
3.12.4 DIGGING METHOD. . . . . 114
3.12.5 CHANGING THE BUCKET . . . . . 115
**3.13 LONG PERIODS OF INACTIVITY . . . . . 116**
3.13.1 BEFORE THE PERIOD OF INACTIVITY . . . . . 116
3.13.2 DURING THE PERIOD OF INACTIVITY . . . . . 117
3.13.3 AFTER THE PERIOD OF INACTIVITY . . . . . 117
**3.14 TROUBLESHOOTING . . . . . 118**
3.14.1 HOW TO REMOVE THE MACHINE . . . . . 118
3.14.2 IF THE FUEL HAS BEEN COMPLETELY DEPLETED . . . . . 118
3.14.3 IF THE BATTERY IS DEPLETED . . . . . 119
3.14.3.1 STARTING WITH BOOSTER CABLES . . . . . 120
3.14.4 OTHER TROUBLES . . . . . 121
3.14.4.1 ELECTRICAL CIRCUIT . . . . . 121
3.14.4.2 HYDRAULIC SYSTEM . . . . . 122
3.14.4.3 ENGINE . . . . . 123

https://truckmanualshub.com/



Page

## MAINTENANCE

**4.1 GUIDE TO MAINTENANCE . . . . . 126**
**4.2 MAINTENANCE NOTES . . . . . 128**
4.2.1 NOTES REGARDING THE ENGINE . . . . . 128
4.2.1.1 ENGINE OIL . . . . . 128
4.2.1.2 COOLANT . . . . . 128
4.2.1.3 FUEL . . . . . 129
4.2.2 NOTES REGARDING THE HYDRAULIC SYSTEM . . . . . 129
4.2.3 NOTES REGARDING THE ELECTRICAL SYSTEM. . . . . 130
4.2.4 NOTES REGARDING LUBRICATION. . . . . 130
4.2.5 PARTS SUBJECT TO WEAR THAT PERIODICALLY NEED CHANGING . . . . . 131
**4.3 FUEL, COOLANT AND LUBRICANTS . . . . . 132**
4.3.1 HOMOLOGATED HEES SYNTHETIC BIODEGRADABLE LUBRICANTS. . . . . 134
**4.4 DRIVING TORQUES FOR SCREWS AND NUTS . . . . . 135**
4.4.1 STANDARD DRIVING TORQUES . . . . . 135
4.4.2 SPECIFIC DRIVING TORQUES . . . . . 135
**4.5 LUBRICATION . . . . . 136**
4.5.1 LUBRICATION DIAGRAM . . . . . 136
**4.6 PERIODICAL CHANGE OF THE COMPONENTS CONNECTED WITH SAFETY . . . . . 137**
4.6.1 CRITICAL PARTS FOR SAFETY . . . . . 138
**4.7 MAINTENANCE PLAN. . . . . 141**
4.7.1 WHEN REQUIRED . . . . . 145
4.7.1.a CHECKING, CLEANING OR CHANGING THE AIR CLEANER CARTRIDGE . . . 145
4.7.1.b CHECKING AND CLEANING THE CAB AIR FILTER . . . . . 147
4.7.1.c CHECKING AND CLEANING THE AIR RECIRCULATION FILTER (only for machines equipped with air conditioner) . . . . . 148
4.7.1.d CLEANING THE WATER SEPARATOR . . . . . 149
4.7.1.e CHECKING THE STEEL TRACK TENSION . . . . . 150
4.7.1.f CHECKING THE SHOE FASTENING . . . . . 152
4.7.2 MAINTENANCE INTERVALS IN CASE OF USE OF THE DEMOLITION HAMMER . . . . . 153
4.7.2.a CHANGING THE HYDRAULIC OIL FILTER . . . . . 153
4.7.2.b CHANGING THE HYDRAULIC OIL . . . . . 153
4.7.3 CHECKS BEFORE STARTING . . . . . 154
4.7.3.a VARIOUS CHECKS . . . . . 154
4.7.3.b CHECKING THE COOLANT LEVEL . . . . . 154
4.7.3.c CHECKING THE FUEL LEVEL . . . . . 155
4.7.3.d CHECKING THE ENGINE OIL LEVEL . . . . . 155
4.7.3.e CHECKING THE OIL LEVEL IN THE HYDRAULIC CIRCUIT . . . . . 156
4.7.3.f DRAINING THE WATER SEPARATOR. . . . . 157
4.7.4 MAINTENANCE EVERY 10 HOURS OF OPERATION . . . . . 158
4.7.4.a LUBRICATING THE JOINTS . . . . . 158
4.7.5 MAINTENANCE AFTER THE FIRST 50 HOURS OF OPERATION (Only for machines in which the synthetic biodegradable oil type HEES is used) . . . . . 161

https://truckmanualshub.com/



**Page**


4.7.6 MAINTENANCE EVERY 50 HOURS OF OPERATION . . . . . 161
4.7.6.a CHECKING THE RADIATOR FLUID LEVEL . . . . . 161
4.7.6.b LUBRICATING THE SWING JOINT . . . . . 162
4.7.6.c CHECKING THE ELECTRICAL SYSTEM . . . . . 162
4.7.7 MAINTENANCE EVERY 100 HOURS OF OPERATION . . . . . 163
4.7.7.a LUBRICATING THE BALL-BEARING RING . . . . . 163
4.7.8 MAINTENANCE AFTER THE FIRST 250 HOURS OF OPERATION . . . . . 164
4.7.9 MAINTENANCE EVERY 250 HOURS OF OPERATION . . . . . 164
4.7.9.a ADJUSTING THE FAN BELT TENSION . . . . . 164
4.7.9.b ADJUSTING THE TENSION OF THE A/C COMPRESSOR BELT (only for machines equipped with air conditioner) . . . . . 165
4.7.9.c CHECKING THE BATTERY ELECTROLYTE LEVEL . . . . . 166
4.7.9.d CHECKING THE OIL LEVEL IN THE TRAVEL REDUCTION GEARS . . . . . 166
4.7.9.e CHECKING THE OIL LEVEL IN THE SWING REDUCTION GEAR . . . . . 167
4.7.10 MAINTENANCE AFTER THE FIRST 500 HOURS OF OPERATION (Only for machines in which the synthetic biodegradable oil type HEES is used) . . . . . 168
4.7.11 MAINTENANCE EVERY 500 HOURS OF OPERATION . . . . . 168
4.7.11.a CHANGING THE HYDRAULIC SYSTEM OIL FILTER . . . . . 168
4.7.11.b CHANGING THE SERVO CONTROL FILTER . . . . . 170
4.7.11.c CHANGING THE ENGINE OIL. . . . . 171
4.7.11.d CHANGING THE ENGINE OIL FILTER . . . . . 172
4.7.11.e CHANGING THE FUEL FILTER. . . . . 173
4.7.11.f DRAINING THE FUEL TANK . . . . . 174
4.7.11.g CLEANING THE OUTSIDE OF THE RADIATORS . . . . . 174
4.7.11.h CLEANING THE OUTSIDE OF THE A/C CONDENSER (only for machines equipped with air conditioner) . . . . . 175
4.7.11.j CHECKING THE BALL-BEARING RING PINION LUBRICANT LEVEL . . . . . 176
4.7.11.k DRAINING THE HYDRAULIC OIL TANK (Only for machines in which the synthetic biodegradable oil type HEES is used) . . . . . 176
4.7.12 MAINTENANCE EVERY 1000 HOURS OF OPERATION . . . . . 178
4.7.12.a CHECKING AND ADJUSTING THE ENGINE VALVE CLEARANCE . . . . . 178
4.7.13 MAINTENANCE EVERY 2000 HOURS OF OPERATION . . . . . 179
4.7.13.a CHANGING THE OIL IN THE TRAVEL REDUCTION GEARS . . . . . 179
4.7.13.b CHANGING THE OIL IN THE SWING REDUCTION GEAR . . . . . 180
4.7.13.c CHANGING THE HYDRAULIC SYSTEM OIL AND CLEANING THE SUCTION FILTER . . . . . 181
4.7.13.d CHANGING THE COOLANT . . . . . 184
4.7.13.e CHANGING THE BALL-BEARING RING PINION LUBRICANT . . . . . 185
4.7.13.f CHECKING THE ALTERNATOR AND THE STARTER . . . . . 185
4.7.13.g CHECKING THE A/C COOLING GAS QUANTITY (only for machines equipped with air conditioner) . . . . . 186
4.7.14 MAINTENANCE EVERY 4000 HOURS OF OPERATION . . . . . 187
4.7.14.a CHANGING THE A/C DEHYDRATOR FILTER (only for machines equipped with air conditioner) . . . . . 187
4.7.14.b CHECKING THE CORRECT OPERATION OF THE A/C COMPRESSOR (only for machines equipped with air conditioner) . . . . . 187

https://truckmanualshub.com/



Page

## TECHNICAL DATA

**5.1 TECHNICAL DATA. . . . . 190**
5.1.1 STANDARD OVERALL DIMENSIONS . . . . . 190
5.1.2 TECHNICAL CHARACTERISTICS . . . . . 191
5.1.3 LIFTING CAPACITIES
(Only for machines with overload alarm device) . . . . . 192
5.1.3.1 LIFTING CAPACITY TABLE . . . . . 192
5.1.3.2 LIFTING CAPACITY WITH MONOBOOM . . . . . 194
5.1.3.3 LIFTING CAPACITY WITH TWO-PIECE BOOM . . . . . 195

## AUTHORIZED OPTIONAL EQUIPMENT

**6.1 AUTHORIZED OPTIONAL EQUIPMENT. . . . . 198**
6.1.1 PRECAUTIONS REGARDING SAFETY . . . . . 198
6.1.2 PRECAUTIONS REGARDING THE INSTALLATION OF EQUIPMENT . . . . . 199
6.1.3 CHARACTERISTICS OF THE OPTIONAL EQUIPMENT . . . . . 200
**6.2 ARRANGEMENT FOR THE INSTALLATION OF THE DEMOLITION HAMMER . . . . . 201**
6.2.1 DESCRIPTION AND OPERATION . . . . . 201
6.2.2 USE OF THE DEMOLITION HAMMER AND RULES TO BE OBSERVED. . . . . 201
6.2.3 INSTALLING AND REMOVING THE DEMOLITION HAMMER . . . . . 205
6.2.3.1 INSTALLING THE HAMMER . . . . . 205
6.2.3.2 REMOVING THE HAMMER. . . . . 206
6.2.4 MAINTENANCE . . . . . 206
**6.3 CLAMSHELL BUCKET . . . . . 207**
6.3.1 DESCRIPTION AND OPERATION . . . . . 207
6.3.2 INSTALLING THE CLAMSHELL BUCKET . . . . . 208
6.3.3 MAINTENANCE. . . . . 210

https://truckmanualshub.com/

# SAFETY AND ACCIDENT PREVENTION

https://truckmanualshub.com/



# 2.1 SAFETY, NOISE AND VIBRATION PLATES

## 2.1.1 POSITION OF THE SAFETY PLATES

- The safety plates must always be legible and in good conditions; for this reason, if they are dirty with dust, oil or grease, it is necessary to clean them with a solution made of water and detergent.
  Do not use fuel, petrol or solvents.
- If the plates are damaged, ask for new ones to Komatsu Utility or to your Komatsu Utility Dealer.
- In case of replacement of a component provided with a safety plate, make sure that this plate is applied also on the new piece.
- The machine can be provided with other plates in addition to those indicated below; keep also to the instructions given in the additional plates, in any case.

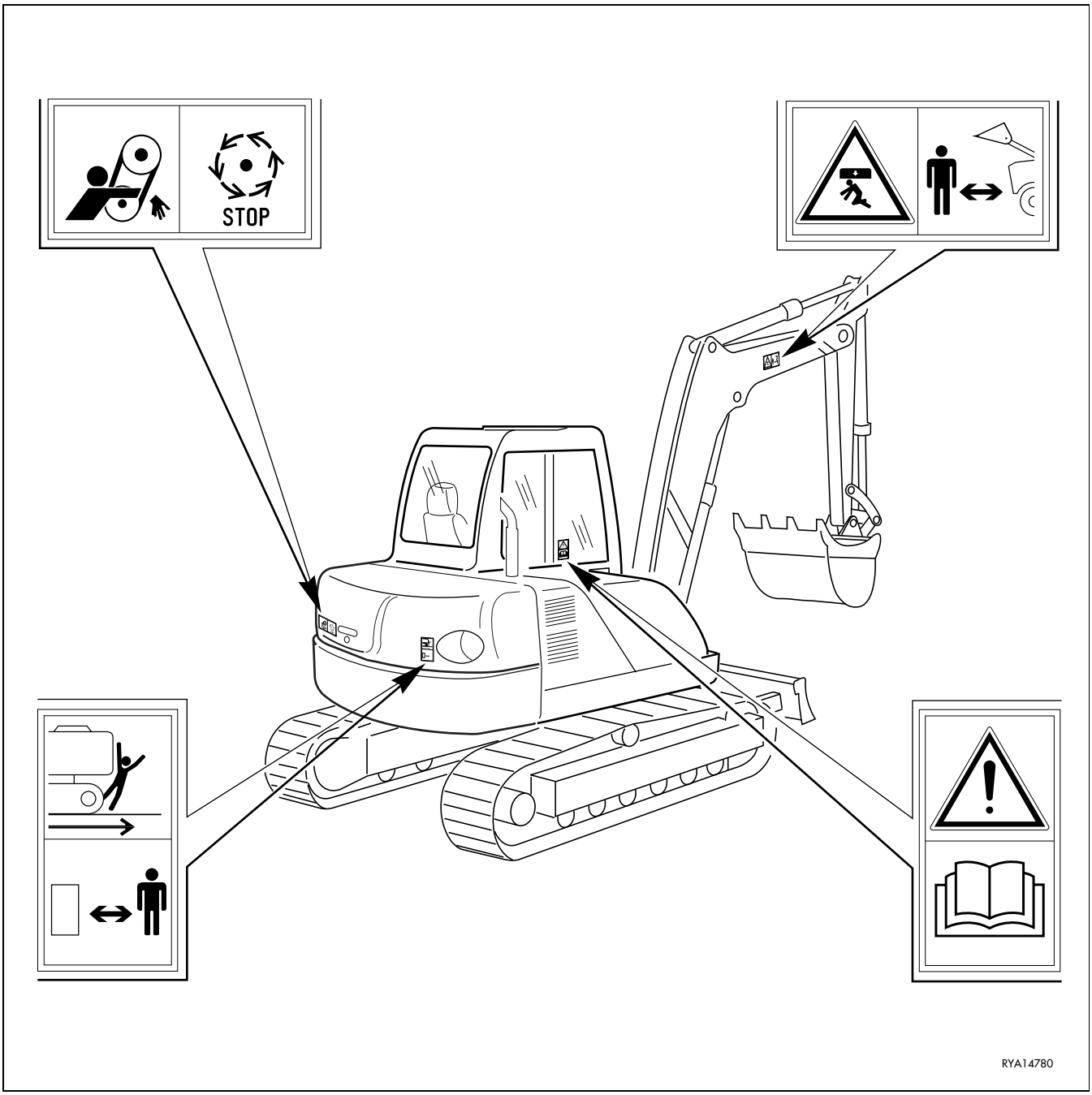

https://truckmanualshub.com/



## 2.1.2 PICTOGRAMS AND RELEVANT MEANINGS

The warning and danger plates applied onto the machine are accompanied or represented by pictograms.
The personnel in charge with the operation and maintenance of the machine must know the symbols contained in the pictograms perfectly; the following description illustrates what they look like and their respective meanings.

### DANGER IN THE WORK AREA

- Do not approach or stand within the equipment operating radius when the boom and the bucket are raised.

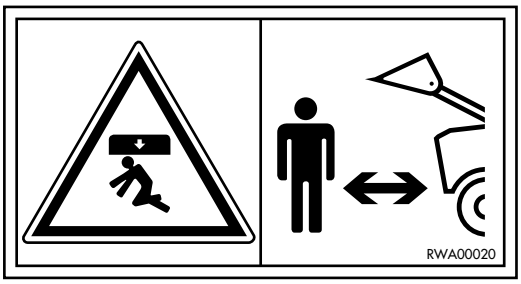


### DO NOT OPEN THE HOOD

- Do not open or remove the hood while the engine is running.

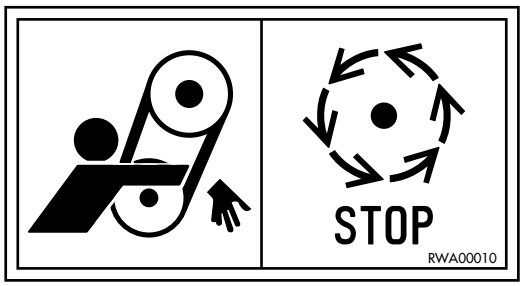


### CONSULT THE MANUAL

- Carefully read the contents of the manual before using the machine or performing maintenance operations.

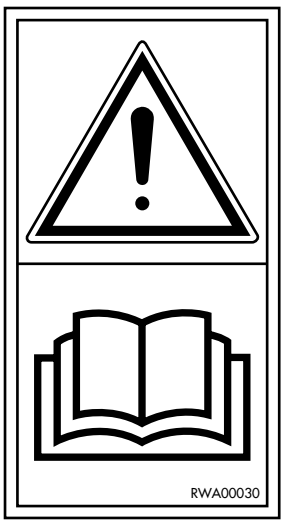

https://truckmanualshub.com/



## SAFETY DISTANCE

- Do not get near or stand within the machine working area.

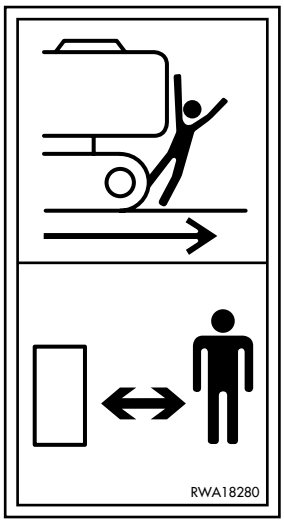


## FILLING THE HYDRAULIC SYSTEM WITH OIL

**(Only for machines in which the synthetic biodegradable oil type HEES is used)**

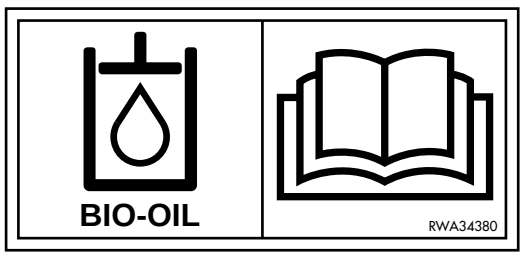


## HYDRAULIC OIL TOPPING UP

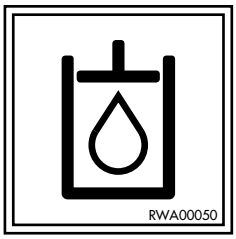


## REFUELLING

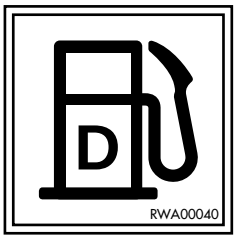


## ENGINE LUBRICATING OIL FILTER

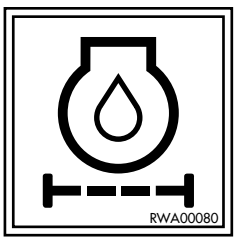

https://truckmanualshub.com/



## FUEL FILTER

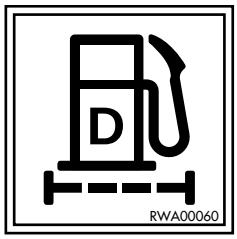


## ENGINE AIR SUCTION FILTER

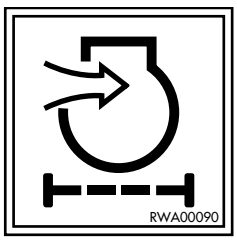


## ENGINE COOLANT PRESSURE

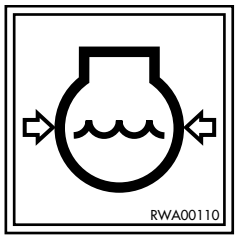


## HYDRAULIC  OIL LEVEL

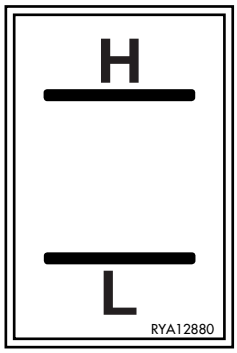


## HYDRAULIC OIL FILTER

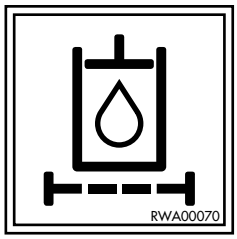


## ELECTRIC OUTLET

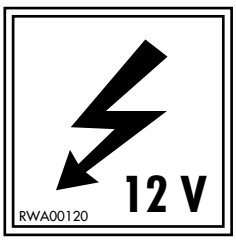

https://truckmanualshub.com/



## ANCHORAGE POINT

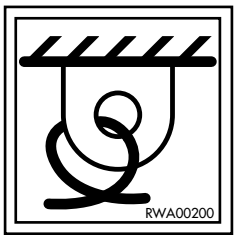


## EMERGENCY EXIT

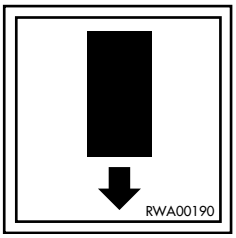


## DO NOT LIFT MORE THAN 1000 KG (Only for machine without overload warning device)

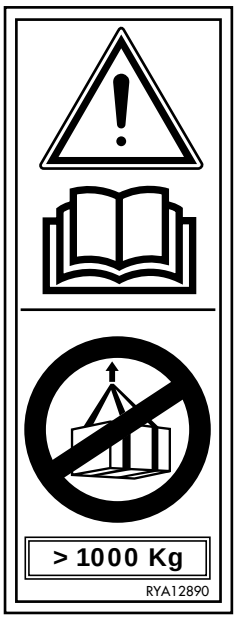

https://truckmanualshub.com/



## 2.1.3 POSITION OF THE NOISE PLATES

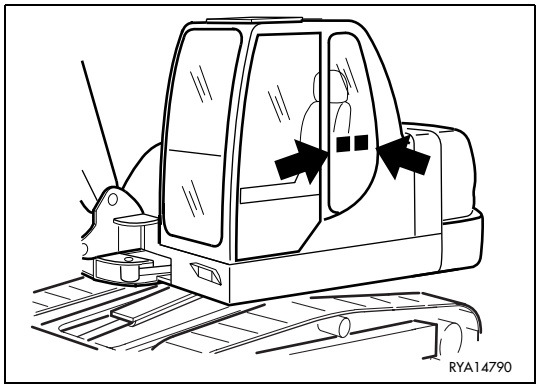


- The noise plates must always be legible and in good conditions; for this reason, if they are dirty with dust, oil or grease, it is necessary to clean them with a solution made of water and detergent.
  Do not use fuel, petrol or solvents.
- If the plates are damaged, ask for new ones to Komatsu Utility or to your Komatsu Utility Dealer.
- In case of replacement of a component provided with a noise plate, make sure that this plate is applied also on the new piece.

## NOISE OUTSIDE THE CAB

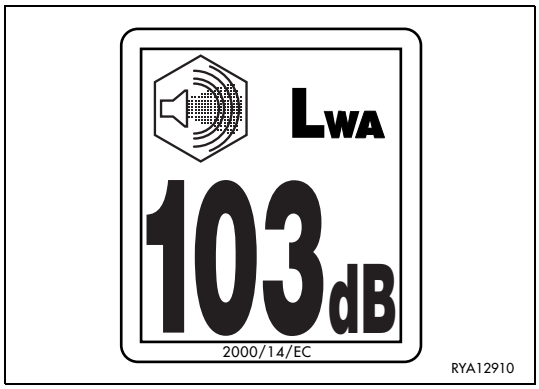


- This value indicates the noise level outside the machine and refers to the noise perceived by the persons who are in the vicinity of the work area.

## NOISE INSIDE THE CAB

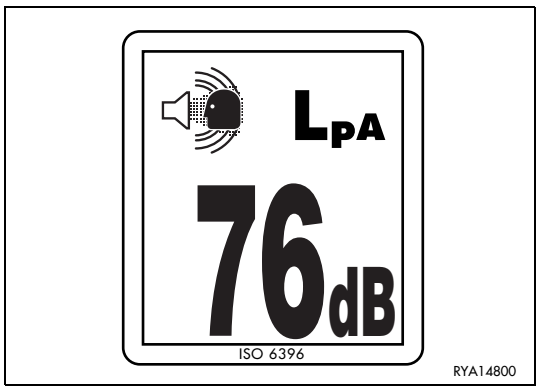


- This value indicates the maximum noise level perceived by the operator’s ears inside the cab when this is completely closed.

https://truckmanualshub.com/



## 2.1.4 VIBRATIONS TO WHICH THE OPERATOR IS SUBJECTED

- According to the results of the tests carried out to determine the vibrations transmitted to the operator by the machine, the upper limbs are subjected to vibrations lower than 2.5 m/sq.sec., while the seated part of the body is subjected to vibrations lower than 0.5 m/sq.sec.

https://truckmanualshub.com/



# 2.2 GENERAL PRECAUTIONS

## 2.2.1 GENERAL SAFETY RULES

- Only trained and authorized personnel can use the machine and perform maintenance operations.
- Follow all the safety rules, precautions and instructions when using the machine or performing maintenance operations.
- When working with other operators or when the work site is often occupied by other operators, make sure that everyone knows and understands all the agreed signals and, in any case, that everyone works in such a way as to be able to see the machine and to be visible to the operator.

## 2.2.2 SAFETY DEVICES AND GUARDS

- Make sure that all the guards and covers are in the correct position. Have guards and covers changed or repaired if damaged. Neither use the machine without guards, nor remove the guards when the engine is running.
- Always use the proper safety devices to lock the machine when parking and fasten the safety belt.
- For the safety devices, see “3.1 SAFETY LOCKS”.
- For the safety belt, see “3.5.6 SAFETY BELT”.
- Do not remove the safety devices and always keep them in good operating conditions.
- Improper use of the safety devices may result in serious injuries or even death.

## 2.2.3 CLOTHING AND PERSONAL PROTECTION ITEMS

- Do not wear large or loose clothes, rings and watches and do not approach the machine with loose long hair, since they can get entagled in the moving parts of the machine and cause serious injuries and damage.
  Avoid also wearing clothes dirty with oil or fuel, since they are flammable.
- Wear a hard hat, goggles, safety shoes, mask, gloves and headphones when operating the machine or performing maintenance operations.
- Always wear safety goggles, a hard hat and heavy gloves if your job involves scattering metal chips or minute materials; these precautions are particularly useful when driving the equipment connection pins with a hammer and when blowing compressed air into the air filter and the radiator to clean them.
  During these operations, make also sure that no one is standing or working near the machine without the necessary protections.
- When working for 8 hours with a noise level exceeding 90 dBA, it is necessary to use headphones or ear plugs and to be particularly careful, especially at the end of the work shift.

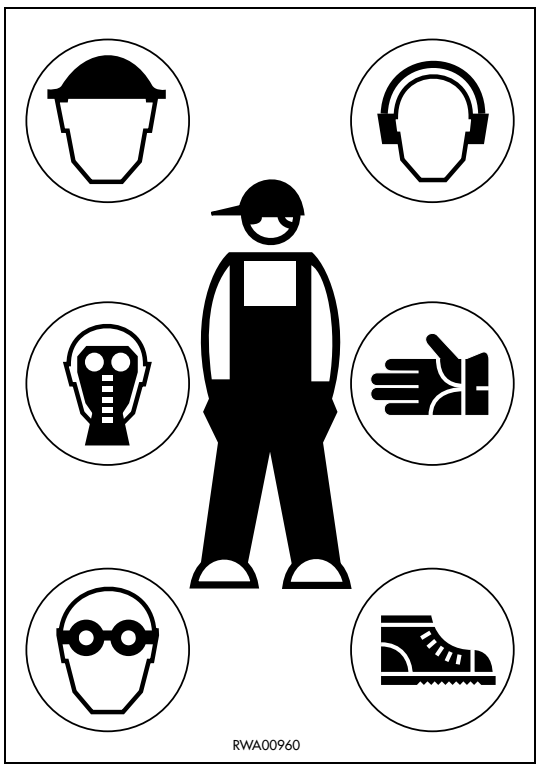

https://truckmanualshub.com/



## 2.2.4 UNAUTHORIZED MODIFICATIONS

- Any modification made without the authorization of Komatsu Utility can involve hazards.
- Before making a modification, consult your Komatsu Utility Dealer. Komatsu Utility declines any responsibility for injuries or damage caused by unauthorized modifications.

## 2.2.5 LEAVING THE OPERATOR'S SEAT

- When leaving the operator's seat, even if temporarily, make sure that the machine is in a safe position. (See "2.4.13 PARKING THE MACHINE").
- Before leaving the operator's seat, carry out the following operations in the sequence indicated below:
  1 - Rest the equipment onto the ground.
  2 - Connect the safety devices of the boom swing control and engage the upper structure rotation safety pin.
  3 - Lock the equipment control by shifting the safety device lever to the lock position.
  4 - Stop the engine (See "3.8 STOPPING THE ENGINE").

If you have to go so far away that you will not be able to see the machine, extract the ignition key.

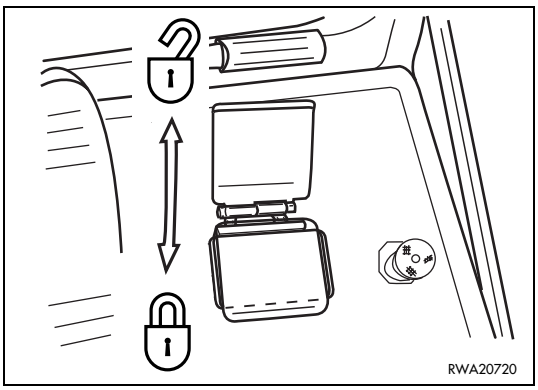


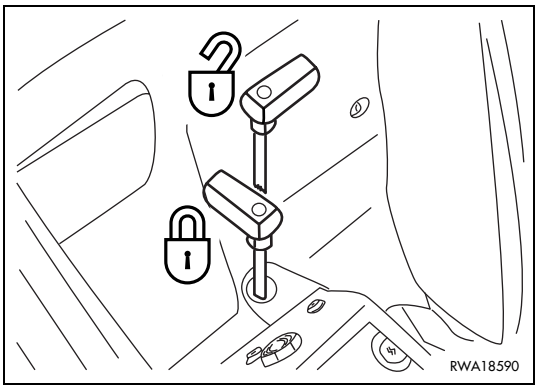


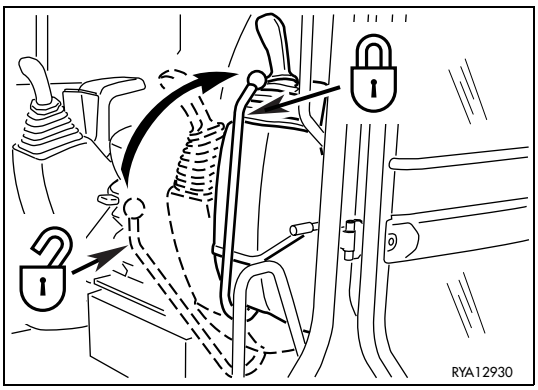

https://truckmanualshub.com/



## 2.2.6 GETTING ON AND OFF THE MACHINE

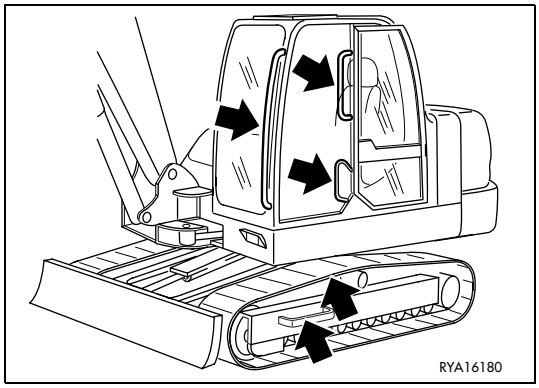


- Do not jump on or off the machine, either when it is at rest and when it is moving.
- When getting on or off the machine, always use the handles and the tracks; get on and off the machine very carefully.
- Never hold or rest on the control levers.
- Either when getting on and when getting off the machine, always maintain three points of contact (holding or resting points), in order to avoid losing your balance and falling down.
- Tighten the handle connection screws if they are loose and clean the handles and tracks if they are dirty with oil or grease. Carefully clean the cab floor if it is dirty with oil, grease, mud or rubble.

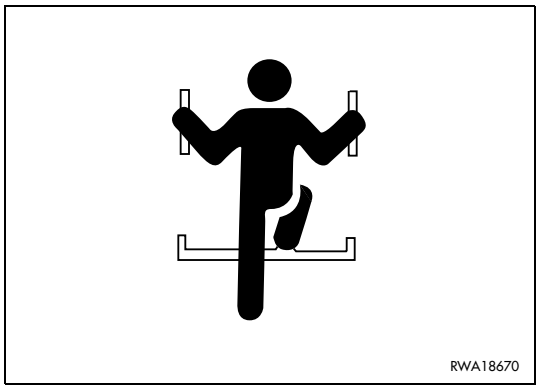


## 2.2.7 PREVENTING FIRES DUE TO FUEL AND OIL

Fuel, oil and some types of antifreeze can be easily ignited if they get in contact with a flame. Fuel is particularly flammable and therefore extremely hazardous.

- Keep any naked flame away from flammable fluids.
- Stop the engine and do not smoke when refuelling.
- Top up with fuel and oil only after stopping the engine and in well ventilated areas.
- Top up with fuel and oil in a well delimited area and do not allow unauthorized persons to approach.
- When refuelling, hold the fuel gun firmly and keep it constantly in contact with the filler until you have finished, in order to avoid sparks due to static electricity.
- After topping up, tighten the safety caps of the fuel and oil tanks securely.
- Do not fill the tank completely, in order to leave room for the fuel to expand.
- In case some fuel is spilled, wipe it up immediately.

https://truckmanualshub.com/



## 2.2.8 PREVENTING BURNS

- If the engine coolant, the engine oil and the hydraulic oil are hot, use heavy cloths and wear gloves, heavy clothing and safety goggles before carrying out any check or touching the hot parts.
- Before checking the coolant level, stop the engine and let the fluid cool down.
  If a check is necessary due to the overheating of the engine, slowly loosen the radiator cap to release any residual pressure before removing it. The hot fluid that spurts out may cause serious burns.
- Before checking the engine oil and hydraulic circuit oil levels, stop the engine and let the oil cool down. The hot oil that can be sprayed out of the tank may cause serious burns.

## 2.2.9 PREVENTING DAMAGE DUE TO ASBESTOS POWDER

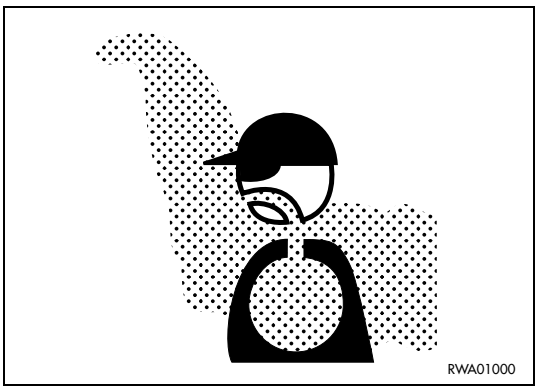


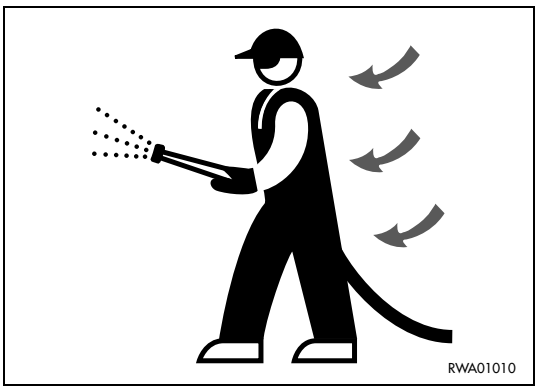


- Asbestos powder can be hazardous to your health if it is inhaled.
- If you handle materials containing asbestos fibers, keep to the instructions given below:
  1 - Do not use compressed air, but only aspirators to clean the machine and make sure that the room in which you are working is properly ventilated.
  2 - Use low-pressure water to keep down the dust when cleaning.
  3 - If there is danger that there may be asbestos powder in the air, operate the machine with the wind to your back whenever possible.
  4 - Even if the cab provides suitable protection, use an approved and homologated respirator.
  5 - The powder gathered during the cleaning operations must be dampened and put in a sealed and marked container, so that it can be safely disposed of according to the regulations in force.

https://truckmanualshub.com/



## 2.2.10 PREVENTING DAMAGE CAUSED BY THE WORK EQUIPMENT

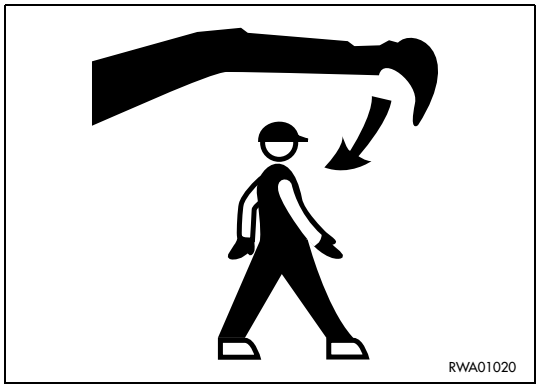


- Do not stand within or approach the operating radius of the work equipment, even when the operator is on board the machine and the engine is running.
- Do not stand or work under the arms or the articulations when the arms are lifted, if you are not sure that the safety locks have been duly engaged.
- Do not carry out any operation requiring the lifting of the arms, if you are not sure that the locks are correctly positioned and coupled to the arms.

## 2.2.11 FIRE EXTINGUISHERS AND FIRST AID KIT

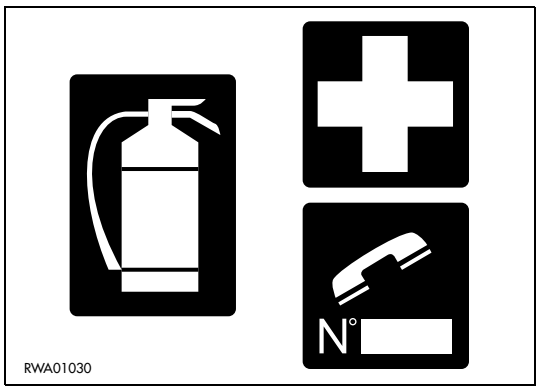


- Make sure that fire extinguishers have been provided and check their position.
- Periodically make sure that the fire extinguishers are loaded and that you know how to use them.
- Find out where the first aid kit has been located.
- Periodically make sure that the first aid kit contains the necessary disinfectants, bandages, medicins, etc.
- It is necessary to know what to do in case of fire.
- Make sure that you have the phone numbers of the persons or structures you may need to contact in case of an emergency at hand (either at the work site and where maintenance operations are performed).

## 2.2.12 PRECAUTIONS CONCERNING THE CAB STRUCTURE

- If the cab is inadvertently hit or the machine overturns during work, the cab may be damaged with consequent reduction of its stiffness and of the safety that must be guaranteed to the operator.
  Consult Komatsu Utility or your Komatsu Utility Dealer to have the cab structure and resistance checked in case of impact or damage.

## 2.2.13 PRECAUTIONS CONCERNING THE EQUIPMENT

- When installing and using optional equipment, carefully read the relevant instruction manual and keep to the indications given therein.
- Do not use optional or special equipment without the authorization of Komatsu Utility or the Komatsu Utility Dealer.
  The installation and use of unauthorized equipment may create safety problems and adversely affect the efficiency and life of the machine.
- Komatsu Utility cannot be held liable for any damage, accident, product failure resulting from the installation and use of unauthorized equipment.

https://truckmanualshub.com/



# 2.3 PRECAUTIONS TO BE TAKEN BEFORE STARTING THE ENGINE

## 2.3.1 SAFETY ON THE WORK SITE

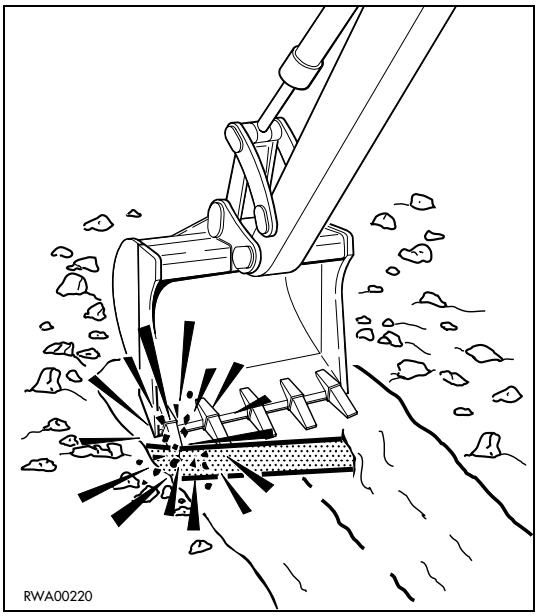


- Before starting the engine, thoroughly check the area for any unusual condition of the ground due to which work may be dangerous.
- Check the conditions of the ground at the work site and before starting the engine define the work plan and the best and safest operating procedure.
- Make the ground surface as level as possible before carrying out any operation.
- In case of work on the road, protect pedestrians and cars by designating a person for work site traffic duty and install fences around the work site.
- If water lines, gas lines, and telephone or high-voltage electrical lines are located under the work site, contact the relevant utility company in order to find out their exact positions or to make them inneffective until the end of the operations. Be careful not to sever or damage any of these lines.
- Check the depth and flow of water before operating in water or on river banks.

## 2.3.2 FIRE PREVENTION

- Carefully remove all wood chips, rubbish, paper and other flammable materials that may have accumulated inside the engine compartment, since they can cause fires.
- Check the fuel and hydraulic system pipes for leaks and if necessary repair them. Wipe up any leakage of oil, fuel or other flammable fluids.
- Make sure that fire extinguishers are available in the work area.

## 2.3.3 PRECAUTIONS TO BE TAKEN FOR THE OPERATOR'S CAB

- Do not keep objects or tools in the operator's cab. They may hinder the operation of the controls and cause serious accidents.
- Keep the cab floor and the controls (pedals and levers) clean, by removing any trace of oil and grease and, as far as the floor is concerned, remove any excess dirt (earth, stones, etc.).
- Check the safety belt and change it if it is broken or damaged.
  Replace any component only with homologated parts available at Komatsu Utility or its Dealers.

https://truckmanualshub.com/



## 2.3.4 ROOM VENTILATION

- Before starting the machine in confined or poorly ventilated places, provide for proper ventilation or connect the engine exhaust pipe to a suction duct. The engine exhaust gases can be deadly.

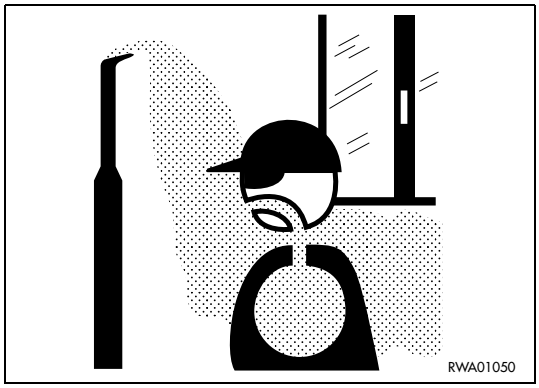


## 2.3.5 PRECAUTIONS TO BE TAKEN FOR THE LIGHTS

- Remove any trace of dirt from the lights, in such a way as to ensure perfect visibility on the work area.
- Make sure that all the working lights and bulbs are functioning properly. If necessary, replace faulty bulbs with new ones, making sure that the power is correct.

## 2.3.6 CLEANING THE WINDOWS AND THE REAR-VIEW MIRRORS - CHECKING THE WINDSHIELD WIPER BLADES

- Remove any trace of dirt from the cab windows and clean the rear-view mirrors, in order to ensure perfect visibility on the work area.
- Adjust the rear-view mirrors that may have moved, so that the operator seated in the driving position can clearly see the area behind the machine.
  If any glass is damaged, replace it with a new one.
- Check the conditions of the windshield wiper blades; the scraping wire must be smooth, with no indentations and attached to the rubber back of the blade.
  In case of doubts on the efficiency of the scraping wire, change the blades.

https://truckmanualshub.com/



# 2.4 PRECAUTIONS TO BE TAKEN WHEN WORKING

## 2.4.1 STARTING THE ENGINE

- Before getting on the machine, walk around it and check for people and objects that might be in the way.
- Do not start the engine if warning plates have been attached to the control levers.
- When starting the engine, sound the horn as an alert signal.
- Start the engine only when seated with fastened safety belt.
- Do not allow anyone to get on the machine.

## 2.4.2 CHECK THE DIRECTION BEFORE STARTING THE MACHINE

- Before operating the machine travel levers, check the position of the blade.
  If the blade is positioned on the back side of the machine, the travel levers must be operated in the opposite direction.
  In this condition, be careful not to confuse the travel movements while using the machine (See “3.6.5 HOW TO MOVE THE MACHINE”).

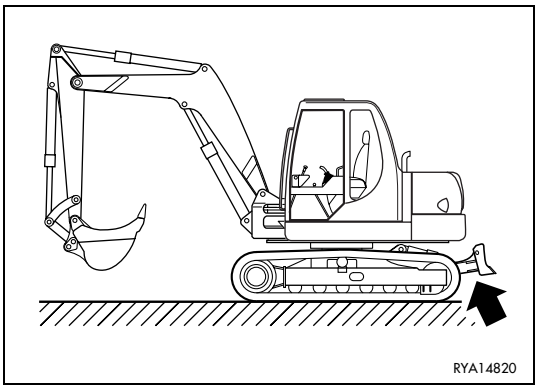


## 2.4.3 CHECKS FOR TRAVELLING IN REVERSE

- When operating in areas that may be hazardous or have poor visibility, designate a person to direct the movements of the machine and traffic on the work site.
- Make sure that no unauthorized person is within the machine operating radius or in its travel direction.
  If necessary, put up appropriate fences.
- Before moving the machine, sound the horn in order to warn the persons near the work area.
- There are blind spots behind the machine, which cannot be seen and where someone may be standing: therefore, it is necessary to make sure that there is no one behind the machine before travelling in reverse.

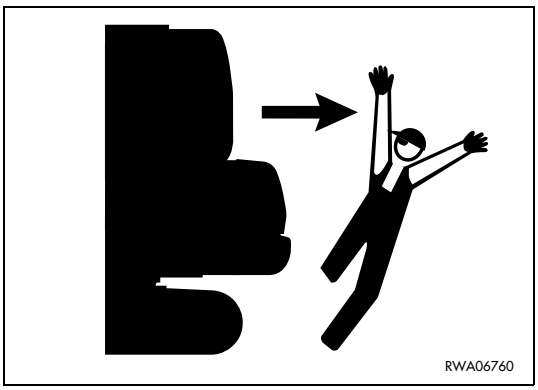


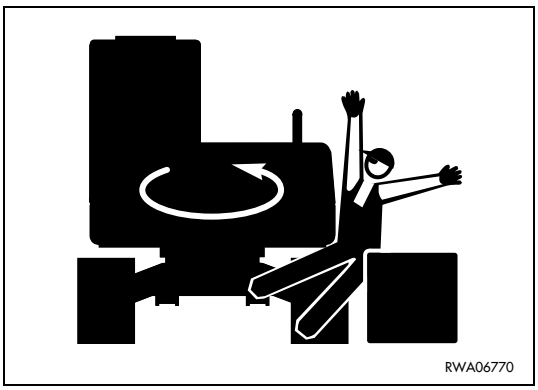

https://truckmanualshub.com/



## 2.4.4 MOVING THE MACHINE

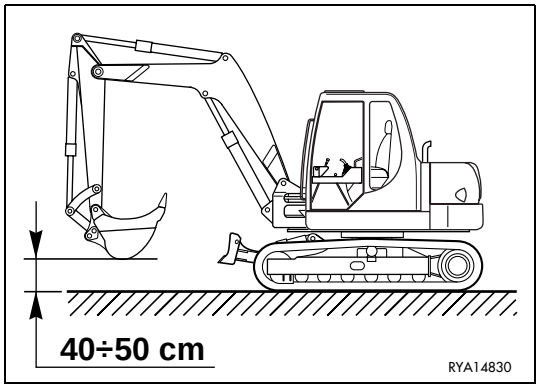


- When moving the machine, position the front bucket at about 40-50 cm from the ground; this position makes it possible to evaluate the space required for the movements more precisely and at the same time ensures the stability of the machine.
- Make sure that the cab on the upper structure is directed towards the blade.
  Otherwise, pay attention to the steering and advance manoeuvres, since they are inverted.
- If the equipment control levers must be used during travel, avoid moving them abruptly; sudden manoeuvres change the attitude of the machine and make driving difficult.
- When travelling on rough ground, keep the speed low and avoid sudden movements of the bucket arm.
- If possible, avoid moving on obstacles.
  If the machine has to travel over an obstacle, keep the equipment as close to the ground as possible and travel at low speed. Never move on obstacles that may incline the machine considerably (over 10°).
- If one of the two tracks moves on an obstacle or gets into a hole in the ground, the machine may overturn.
  In these cases, reduce the speed to minimum and be very careful to the balance of the machine.

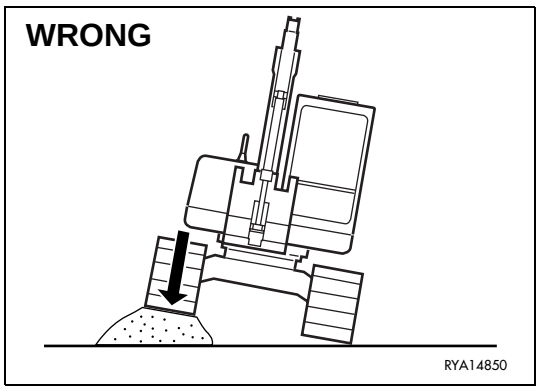

https://truckmanualshub.com/



## 2.4.5 MOVING ON SLOPES

- Operations on slopes and on river or lake banks with damp ground may result in the tipping over or slipping of the machine.
- On hills, banks or slopes, keep the bucket very close to the ground (20--30 cm from the ground) and in case of emergency quickly lower it to the ground to help the machine stop.
- Do not change direction and avoid travelling obliquely when working on slopes. It is advisable to go down or up to a flat place to perform these operations.
- Do not travel on wet grass or thick layers of leaves: if the machine moves obliquely in these conditions, it may slip.
- Do not move on slopes with inclination exceeding 30°, since the machine may overturn.
- When the fuel level indicator reaches the red reserve area during work on a slope, immediately provide for refuelling; due to the inclination of the machine, the engine may suck in air and suddenly stop, which represents a grave risk for the safety of the operator and of the persons before the machine.
- If the engine should stop all of a sudden, immediately lower the bucket to the ground.

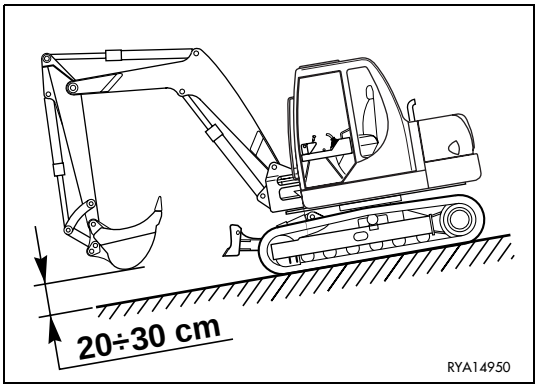


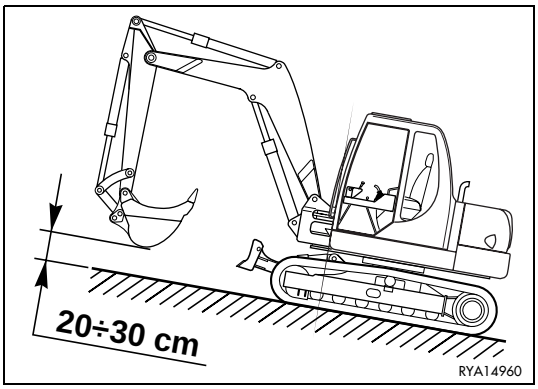


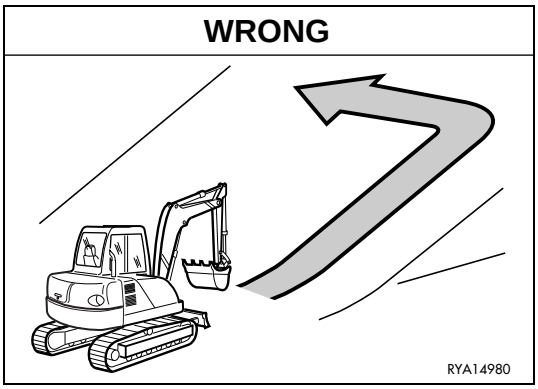


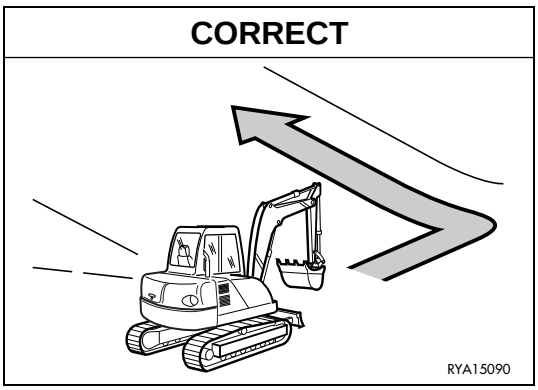

https://truckmanualshub.com/



## 2.4.6 WORKING ON SLOPES

- When working on slopes, if possible avoid rotating the upper structure, since the machine may lose balance and overturn.
  It is particularly dangerous to swing on slopes when the bucket is full.
  If these operations must be long, accumulate soil in such a way as to create a horizontal platform on which the machine can be positioned.

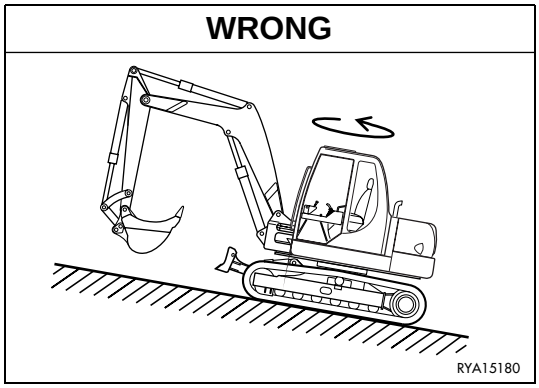


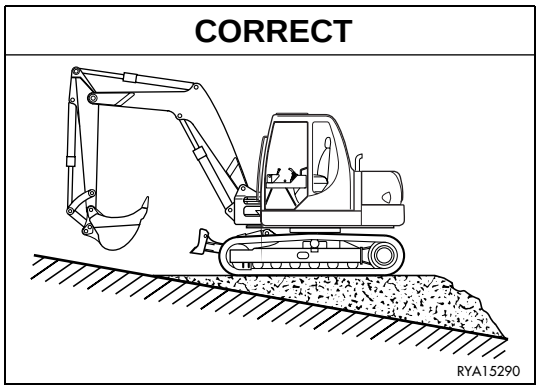


## 2.4.7 UNAUTHORIZED OPERATIONS

- Do not dig under overhangs.
  The protruding surface, in fact, may collapse on the machine.
- Do not dig too deeply under the front part of the machine, since the ground may collapse and cause the machine to fall down.

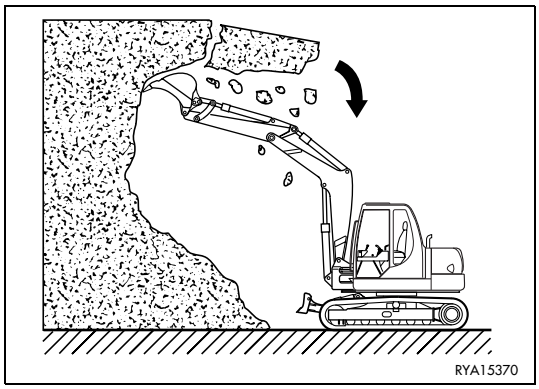


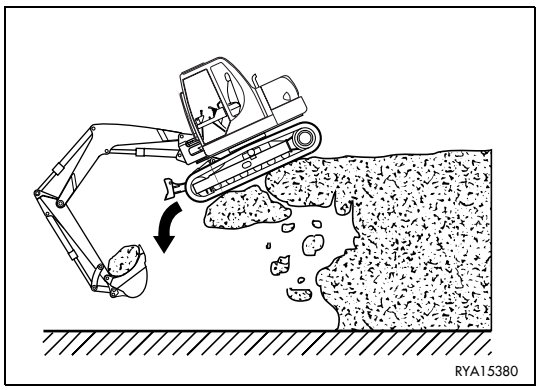

https://truckmanualshub.com/



## 2.4.8 PREVENTING ELECTROCUTION

- Digging operations near overhead electric lines are extremely dangerous and they may also cause death due to electrocution; for this reason, when working near overhead electrical lines always respect the minimum safety distances prescribed by the competent authorities and by the accident-prevention rules in force.
- As far as underground long-distance lines are concerned, the minimum distance depends on the covering of the ducts in which the cables are laid.
- The basic safety precautions to be taken to prevent this risk are the following:

  1 – Wear shoes with thick rubber or leather soles.

  2 – Request the aid of another person who can warn you if the machine gets too close to the electric line.

  3 – Operate at low speed.

  4 – Learn what is to be done first in case of electrocution.

  5 – Keep the phone number of the electricity company and of the nearest first aid station at hand.
- If the work equipment gets accidentally entangled in the cables, the operator must not leave the cab until the electricity company has insulated the line.
- When carrying out this kind of operations, warn everyone standing in the work area to keep at the minimum distance prescribed from the machine and the work equipment.
- Ask the electricity company what are the voltage of the cables and the minimum safety distance in advance.

**DANGER**

- **The minimum distances from overhead lines can vary in the different countries, according to the climate and to the percentage of humidity in the air.**
  **Indicatively, the distances indicated in the table should be respected.**

| Cable voltage | Min. safety distance |
|---|---|
| 1.0 kV (distribution line) | 5 m |
| 6.6 kV (2–3 insulators) | 5.2 m |
| 33 kV (min. 3 insulators) | 5.5 m |
| 66 kV (min. 6 insulators) | 6 m |
| 154 kV (min. 10 insulators) | 8 m |
| 275 kV (min. 19 insulators) | 10 m |

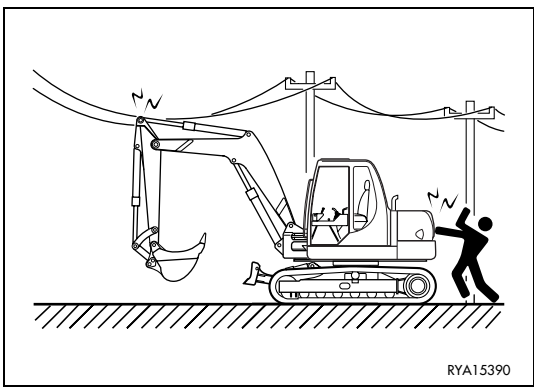

https://truckmanualshub.com/



## 2.4.9 VISIBILITY

- Switch on the working lights as soon as visibility decreases.
- If visibility decreases due to mist, smoke or heavy rain, stop the machine in a safe position and wait for the weather to improve until visibility becomes acceptable.

## 2.4.10 WORKING ON ICY OR SNOW-COVERED SURFACES

- If the ground is icy or covered with snow, even a slight slope may cause the machine to slip sidewards, therefore it is advisable to move at low speed and to avoid abrupt starts, stops or turns.
- When it has snowed heavily, the road shoulders and any obstacle are buried in the snow and are not visible, therefore proceed with care when clearing the snow.

## 2.4.11 PREVENTING DAMAGE CAUSED BY THE WORK EQUIPMENT

- When working in tunnels, galleries, under electric cables or other ducts (air, telephone lines) and wherever the height is limited, proceed with the greatest care to prevent the bucket or the arms from causing any damage.

## 2.4.12 WORKING ON LOOSE GROUND

- Avoid operating the machine too close to the edge of cliffs, overhangs and deep ditches.
  These areas may collapse, making the machine fall down or tip over and this could result in serious injuries or death.
  Remember that after heavy rain or earthquakes these dangerous conditions usually get worse.
- The earth laid near ditches is loose and can easily collapse due to the weight or vibrations of the machine.
  Be extremely careful: always fasten the safety belt and close the cab door.
- In case of work in areas where stones or other material may fall on the machine, install the FOPS protection device.

https://truckmanualshub.com/



## 2.4.13 PARKING THE MACHINE

- Park the machine on firm and level ground. If this is not possible and it is necessary to park on a slope, position the machine with the bucket directed downwards and carry out the following operations:
  1 - Rotate the bucket to the dumping position and lower the arms until thrusting the teeth into the ground.
  2 - Stop the engine.
  3 - Put wedges or safety blocks under the tracks.
- Always rest the work equipment on the ground; if it is necessary to park with raised arms, make sure that the safety locks are engaged.
- Lock the equipment control by shifting the safety device lever to the lock position.
- When leaving the machine, make sure that the cab windows are completely closed, remove the ignition key and lock the door.
- If it is necessary to park on public roads, provide for signalling the presence of the machine according to the local regulations in force (signalling fires, fences, road works ahead, alternated direction and direction signs, etc.).

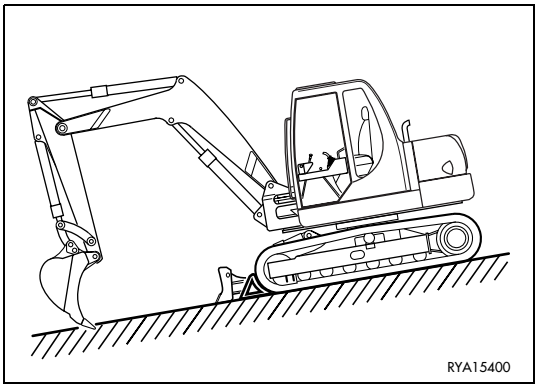


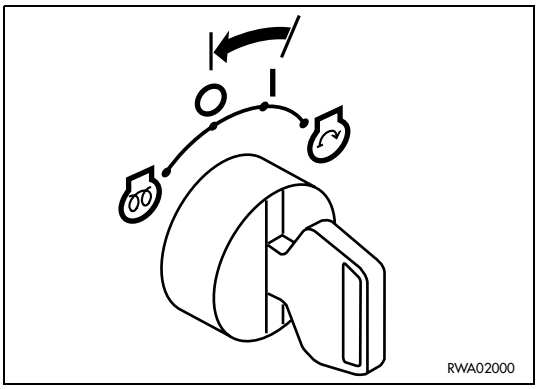


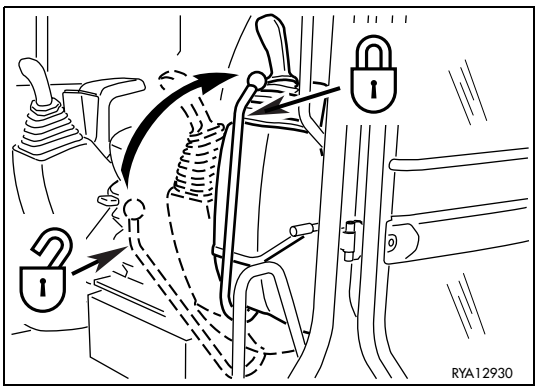

https://truckmanualshub.com/



# 2.5 TRANSPORTING THE MACHINE ON OTHER VEHICLES

## 2.5.1 LOADING AND UNLOADING THE MACHINE

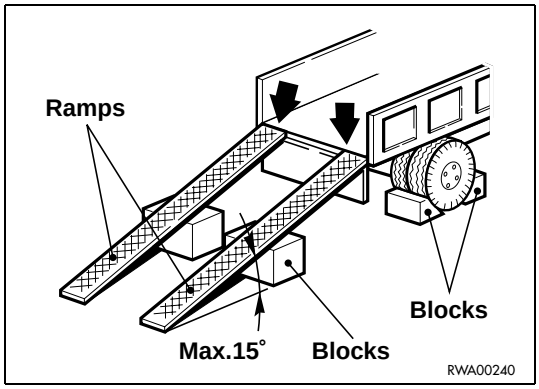


- Loading and unloading the machine on/from another vehicle always involve potential hazards. Proceed with extreme care.
- Perform loading and unloading on firm, level ground. Maintain a safety distance from the edges of ditches or from road sides.
- If the vehicles used have not been appositely equipped, put support blocks under the ramps, in order to avoid any bending.
- Always lock the wheels of the transporting vehicle with wedges.
- Always use ramps that are sufficiently wide and can support the weight of the machine. The longitudinal axes of the ramps must be parallel to each other and perpendicular to the loading side board and their distance must be suitable for the tread of the machine.
- Make sure that the ramps are securely positioned and anchored to the loading board and that they have the same length.
- Position the ramps with a maximum inclination of 15°.
- Make sure that the ramp surface is clean and there is no trace of grease, oil, soil and ice; remove dirt from the tracks before starting to load the machine on the vehicle.
- The machine must be loaded on the vehicle with the bucket directed forwards, that is, in the direction of advancement of the vehicle.
- Do not correct the trajectory of the machine on the ramps. If necessary, get down the ramps and start the operation again.
- After loading the machine, block the tracks with wedges and secure it with tie-downs or chains that prevent even any sideward shift (see “3.9 TRANSPORTING THE MACHINE ON OTHER VEHICLES”).

## 2.5.2 SHIPPING

- Define the route to be followed, taking into account the width, height and weight of the transporting vehicle plus the machine.
  Make sure that the overall dimensions of the vehicle and load are compatible with the roads and any tunnel, underpass, bridge, power and telephone line, etc. along the route.
- Keep to the regulations in force regarding the permissible width, height, weight and speed of heavy vehicles.

https://truckmanualshub.com/



# 2.6 BATTERY

## 2.6.1 SAFETY PRECAUTIONS FOR WORK ON BATTERIES

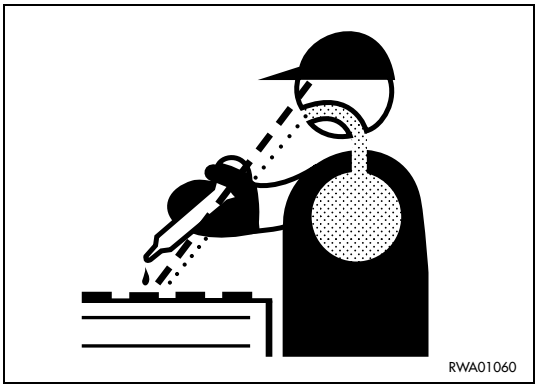


- Electrolytic batteries contain sulphuric acid which can cause burns. It can also corrode clothing and make holes in it. If you get splashed with battery acid, immediately wash the affected part with plenty of water.
- Battery acid may cause blindness if it comes into contact with the eyes.
  If acid accidentally gets into your eyes, wash them immediately with plenty of water and consult a doctor right away.
- If you accidentally swallow battery acid, drink a large quantity of water or milk, beaten egg white or vegetable oil and in any case antiacid substances like magnesia, bicarbonate, etc.;. call a doctor or a poison treatment center immediately.
- Always wear safety goggles when working on batteries.
- Batteries produce hydrogen, which is highly explosive and can be easily ignited with small sparks or naked flames.
- Before working with batteries, stop the engine and remove the ignition key.
- Avoid short-circuiting the battery terminals through accidental contact with metal objects or tools or through the inversion of the terminals.
- Tighten the battery terminals securely. Loose terminals may generate sparks and even cause the explosion of the battery.

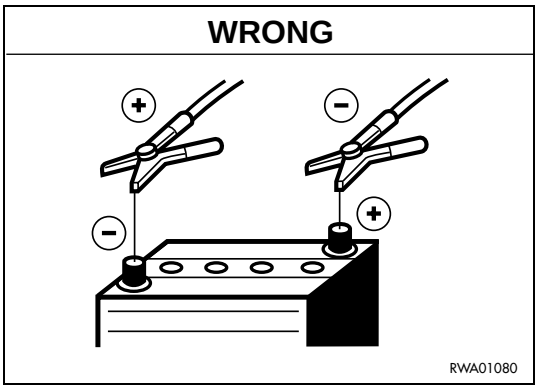


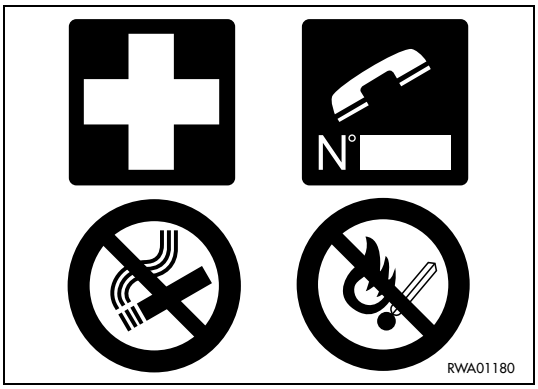


## 2.6.2 STARTING WITH BOOSTER CABLES

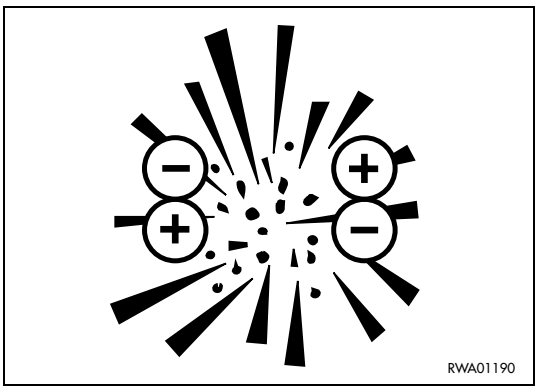


- When starting the machine with booster cables, always wear safety goggles.
- When starting the engine by means of another machine, avoid any contact between the two machines.
- Be sure to connect the positive cable (+) first and then the negative or earth cable (-) when connecting the booster cables. Disconnect first the negative or earth (–) cable and then the positive cable (+) after the start.
- Connect the batteries in parallel: positive to positive and negative to negative.
- When connecting the earth cable to the frame of the machine to be started, operate as far as possible from the battery.
  (See "3.14.3 IF THE BATTERY IS DEPLETED").

https://truckmanualshub.com/



# 2.7 PRECAUTIONS FOR EMERGENCY RECOVERY

- Before moving the machine, make sure that all the controls are in neutral.
- Incorrect manoeuvres may result in serious injuries or even death.
- To move the machine, use properly dimensioned steel cables; do not use worn cables or cables with broken strands (A), twisted cables (B), deformed cables (C).
- During the recovery operation, no one can be allowed to approach the machines or the cable.
- Do not stand astride the cable.
- Move the machine just far enough to permit the required repairs.
- Put wooden blocks between the towing cable and the machine body, in order to avoid wear or damage.
- Do not remove the machine in any way other than that indicated in paragraph “3.14.1 HOW TO REMOVE THE MACHINE”.

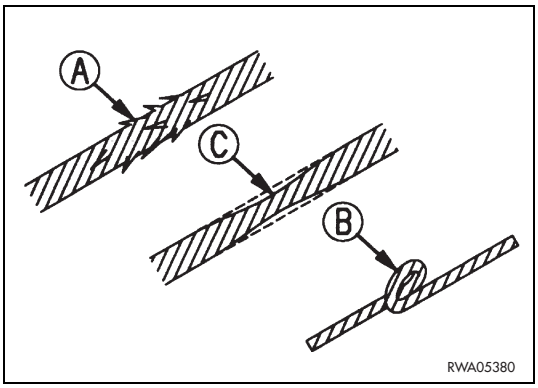


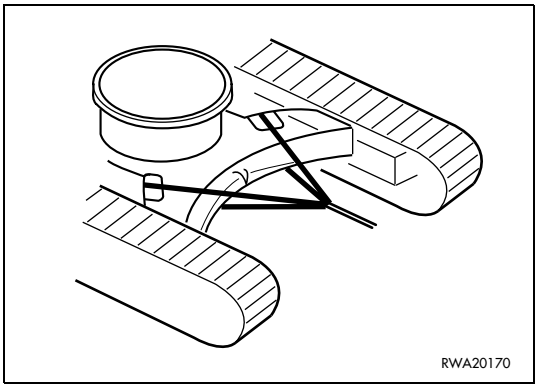


**CAUTION**

- **The maximum pulling force for the emergency recovery is the following:**
  **F = 7700 kg.**
- **Use cables having the same length and pull continuosly, without jerking movements.**
- **Arrange and couple the machine to be removed by positioning it on the same axis as the towing vehicle; the force must be parallel to the axis of movement of the machine.**

https://truckmanualshub.com/



# 2.8 PRECAUTIONS TO BE TAKEN DURING MAINTENANCE

## 2.8.1 WARNING PLATES

- Before starting any maintenance operation, position the machine on a firm and level surface, rest the equipment onto the ground, engage the safety locks of either the equipment and the controls and stop the engine.
- If another person starts the engine and operates the control levers while the operator is providing for service, this may result in serious injuries or even death.
- To avoid these risks, always attach warning plates to the control levers and to the ignition key before performing any maintenance operation; if necessary, attach additional warning tags also around the machine and in particular on the cab handles.

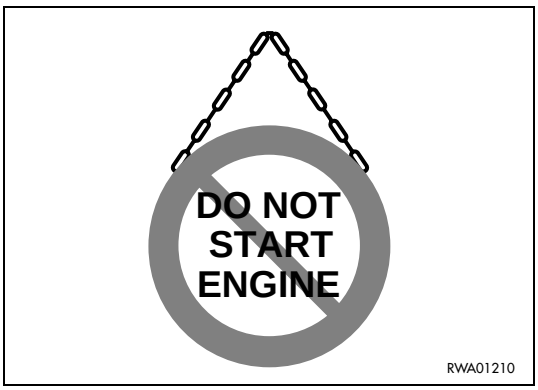


## 2.8.2 TOOLS

- Use only the tools provided with the machine and high-quality tools suitable for the tasks to be performed.
- Do not use worn, damaged, low-quality tools or tools that are not suitable for the tasks to be performed, in order to avoid any personal injury.
- After use, always clean the tools carefully and put them in the appropriate compartment (1) positioned inside the engine hood, on the left side.

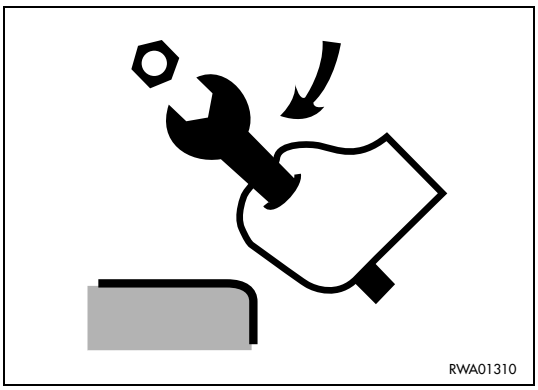


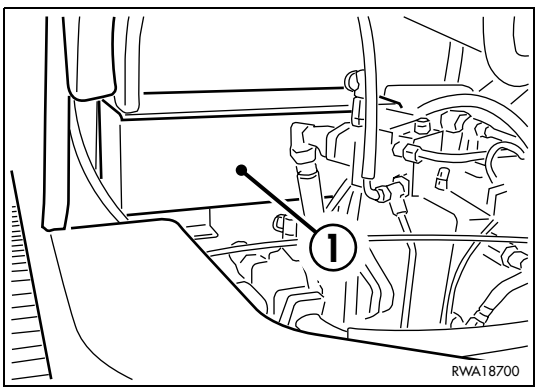


## 2.8.3 PERSONNEL

- Only authorized and duly trained personnel can service and repair the machine; additional precautions must be taken when grinding, welding and using a sledge hammer or heavy hammers.
- When assemblying the equipment or cylinder connection pins, use wooden, plastic or in any case not excessively hard tools to check the centering of the holes.
  Do not use your fingers, since you run the risk of cutting them.

https://truckmanualshub.com/



## 2.8.4 EQUIPMENT

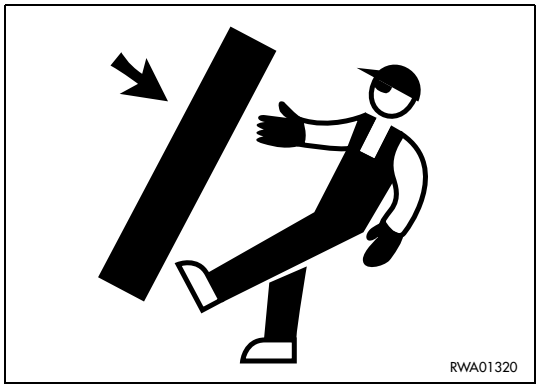


- The normal or special equipment that must be installed on the machine or that have been removed must be stored in safe places, preventing them from falling down. If they fall on someone, they can cause serious bodily harm.
- When assemblying or removing any equipment, make sure that the cables and the lifting hook are in good conditions and properly dimensioned for the load to be lifted.

## 2.8.5 WORKING UNDER THE MACHINE

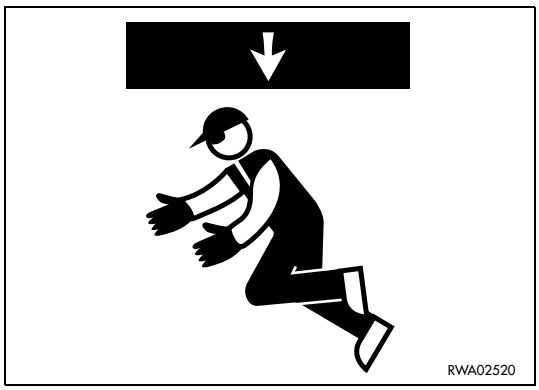


- Always lower the work equipment to the ground or in any case to its lowest position before performing service or repairs under the machine.
- Always lock the machine tracks securely.
- Do not work under the machine, if this is not sufficiently supported.

## 2.8.6 KEEPING THE MACHINE CLEAN

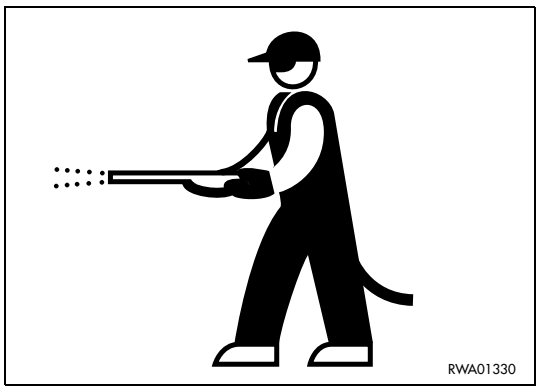


- Spilled oil or grease, scattered tools or broken pieces are dangerous, because they may cause someone to slip or trip. Always keep the machine and the work site clean and tidy.
- To clean the machine, use a pressurized jet of warm water or steam and the appropriate detergents available on the market. Do not use diesel oil, oil or solvents, since the former leave an oily coat that favours the sticking of dust, while the latter (even if weak) damage the painted surfaces and therefore facilitate rusting.
- While cleaning the machine, keep the pressurized jet at a minimum distance of approx. 60 cm in order not to damage the warning plates and the pictograms.
  If the plates are damaged, request Komatsu Utility or your Komatsu Utility Dealer to send you spare plates and change them.
- Water into the electrical system provokes the oxidation of the contacts and may hinder the start of the machine or even make it start suddenly and abruptly. For this reason, never use water or steam jets to clean sensors, connectors or the inside of the operator's cab.

https://truckmanualshub.com/



## 2.8.7 USE OF THE ENGINE DURING MAINTENANCE

- During maintenance operations, run the engine only when indispensable. If it is necessary to have the engine running (for example, to wash the cooling circuit or to check the functionality of the alternator), an operator should constantly remain in the cab, in order to be able to stop the engine whenever necessary.
- During maintenance operations with running engine, never disengage the safety lock on the control lever, or change the position of the travel levers.
  Service personnel must not move any control lever.
- When carrying out maintenance operations, do not touch the moving parts of the machine and avoid wearing large and loose clothes.

## 2.8.8 PERIODICAL CHANGE OF THE PARTS THAT ARE CRITICAL FOR SAFETY

- Periodically change the following parts, which are important to prevent fires.
  Fuel supply system: fuel delivery and return pipes.
  Hydraulic system: main delivery pipes of the hydraulic pump.
- Even if they seem to be in good conditions, these components must be periodically changed with new ones.
  In fact, these components tend to deteriorate over time.
- If one of these parts is defective, change or repair it even if the change interval has not elapsed yet. (See “4.6 PERIODICAL CHANGE OF THE COMPONENTS CONNECTED WITH SAFETY).

## 2.8.9 STOP THE ENGINE BEFORE CARRYING OUT ANY MAINTENANCE OPERATION OR INSPECTION

- Stop the machine only on firm and level ground and stop the engine before carrying out any maintenance operation or inspection.
- If the engine must be running during a maintenance operation, shift the safety device lever to the LOCK position and carry out the maintenance operation with the help of another person; one operator must remain on the machine and the words and signs to be used must be agreed upon in advance.
- The person who carries out the maintenance operation must be very careful not to touch any moving part of the engine.

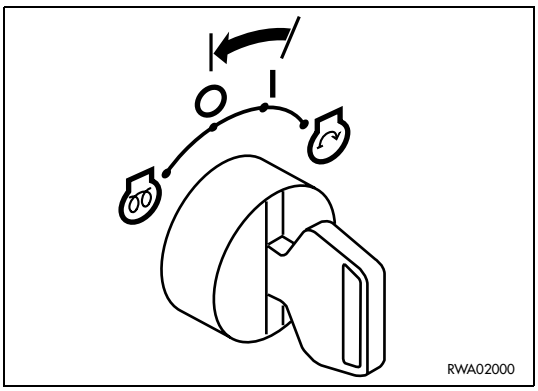


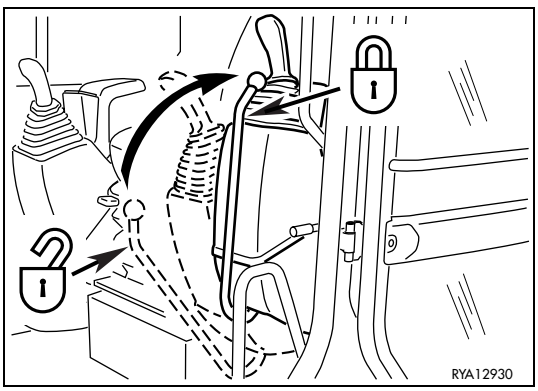

https://truckmanualshub.com/



## 2.8.10 RULES FOR REFUELLING AND ADDING OIL

- Keep away from naked flames while refuelling or adding oil.
- Spilled fuel or oil make the ground slippery and may cause accidents; clean any dirty area immediately and carefully.
- Always tighten the fuel tank and the hydraulic circuit oil safety caps securely.
- Do not use fuel to clean any part of the machine that is dirty with oil or dust.
- Always top up the fuel and oil tanks in properly ventilated areas and refrain from smoking.
- When refuelling, hold the fuel gun firmly and keep it constantly in contact with the filler until you have finished, in order to avoid sparks due to static electricity.
- Do not fill the tank completely, in order to leave room for the fuel to expand.

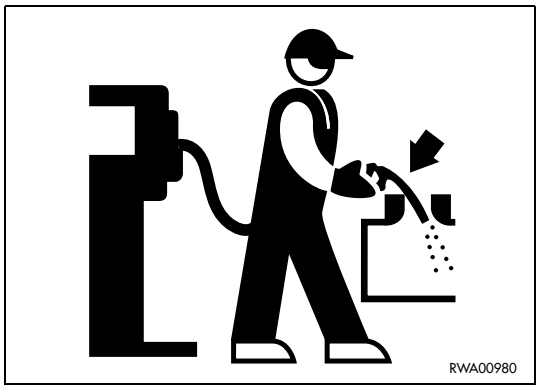


## 2.8.11 CHECKING THE COOLANT LEVEL IN THE RADIATOR

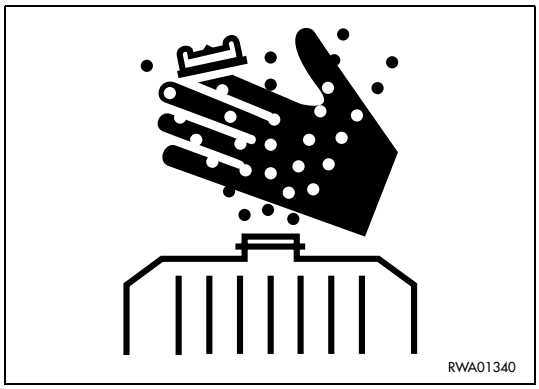


- Let the engine and the radiator cool down before checking the coolant level.
- If it is necessary to remove the cap with hot engine, wear suitable clothes and protections and loosen the cap slowly, in order to release the pressure gradually.

## 2.8.12 USING LAMPS

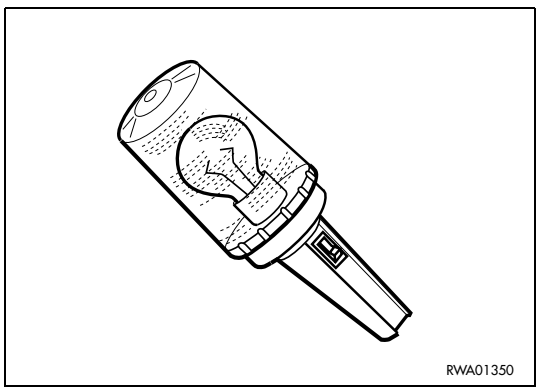


- Use only homologated explosion-proof lamps to check fuel, oil, coolant or battery electrolyte levels.
  Unsuitable lamps can cause fires or explosions.

https://truckmanualshub.com/



## 2.8.13 PRECAUTIONS CONCERNING THE BATTERY AND THE ALTERNATOR

- When repairing the electrical system, disconnet the battery in order to stop the flow of current.

**IMPORTANT**

- **Disconnect first the negative earth cable (-) and then the positive cable (+).**
  **At the end of the operation, reconnect first the positive cable (+) and then the negative cable (-).**

- If electrical welding operations are to be carried out on the machine, it is necessary to disconnect the battery and also the alternator.

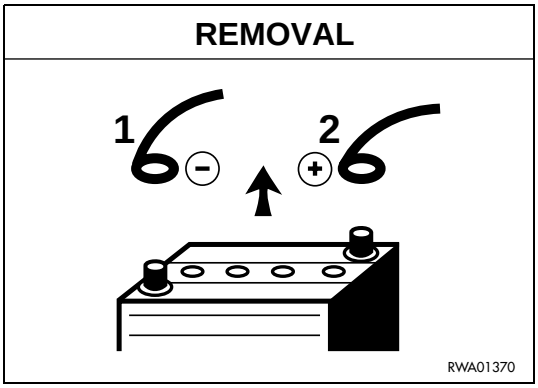


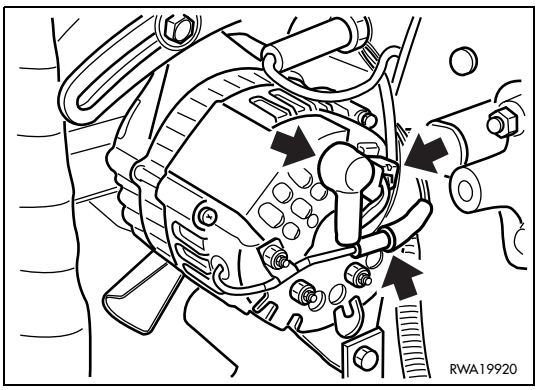


## 2.8.14 PRECAUTIONS CONCERNING THE STARTER

- Do not start the engine by tampering with the terminals of the starter, since the machine may move.
- Sudden or accidental movements of the machine may cause serious injuries or even death.

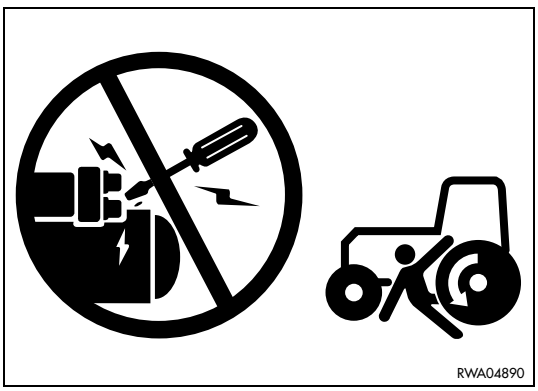


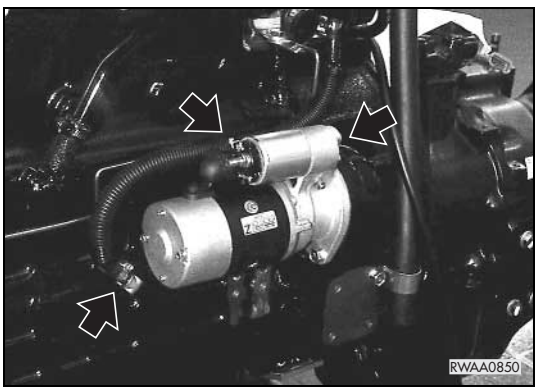

https://truckmanualshub.com/



## 2.8.15 PRECAUTIONS CONCERNING HIGH-PRESSURE HOSES

- Do not bend high-pressure hoses or rub them with sharp or abrasive objects.
  Do not use bent or cracked pipes or hoses that were previously rejected because of leaks or fastening defects, since they may burst during use.
- Always repair or replace any loose or faulty fuel or oil pipe. Any leakage of fuel or oil may cause fires.

## 2.8.16 PRECAUTIONS TO BE TAKEN WHEN WORKING ON HIGH-PRESSURE SYSTEMSE

- Do not forget that the work equipment circuits are always under pressure; for this reason, when it is necessary to add or drain hydraulic oil, or service or inspect the hydraulic circuit, it is advisable to lower the equipment to the ground and completely release the pressures and the residual pressure present in the tank.
  Small leakages from pipes under pressure and the resulting jets are extremely dangerous, since they can perforate the skin and penetrate in the blood circulation or injure the eyes.
  For this reason, always wear goggles and thick gloves during the inspections and use a piece of cardboard or a sheet of plywood to check for oil leakages.
  If you are struck by a jet of high-pressure oil or are injured, even if slightly, immediately consult a doctor.

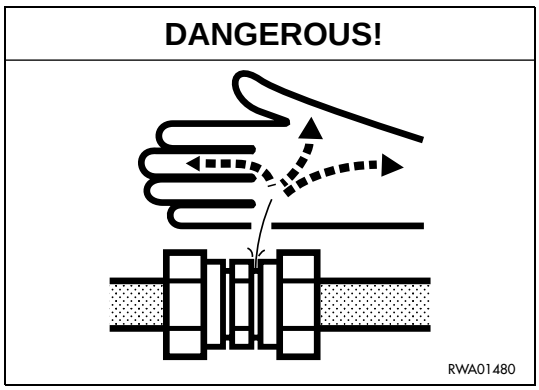


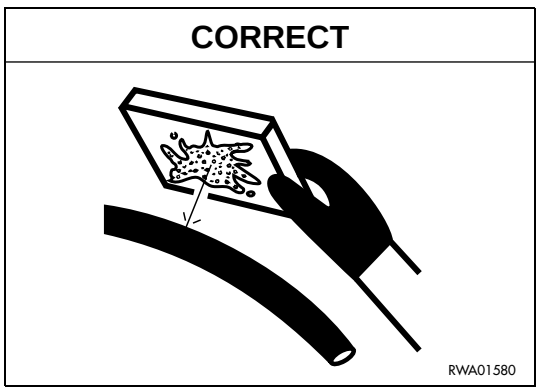


## 2.8.17 PRECAUTIONS FOR MAINTENANCE WORK INVOLVING HIGH TEMPERATURES AND PRESSURES

- When the machine is stopped at the end of operations, the engine coolant, the oil and all the components are hot and the hydralic circuits are under pressure.
  In these conditions, if the coolant, the hydraulic oil and the engine oil are to be drained in order to change them or the filters, there are serious risks of damage and burns.
  Wait for the temperature to lower within the normal operating range (40-45°C) before carrying out the maintenance operations in accordance with the procedures indicated in the relevant sections of this manual.

https://truckmanualshub.com/



## 2.8.18 COOLING FAN AND FAN BELT

- Be careful to the rotating parts and do not allow anyone to get too close to these parts, since clothes or parts of the body may get caught into them.
- If hands, clothes, or tools become entangled in the fan blades or the fan belt, they may be cut, torn or seriously damaged; for this reason, avoid touching the rotating parts.

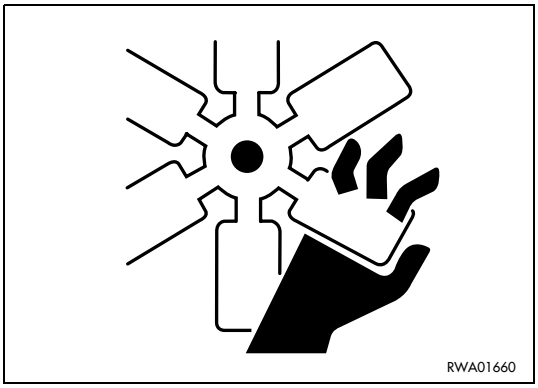


## 2.8.19 WASTE MATERIALS

- Do not dispose of used oil in the sewer system, rivers, etc.
- Always put used oil in containers. Never drain oil directly onto the ground.
- Keep to the laws and regulations in force when disposing of harmful substances such as oil, fuel, solvents, used filters and batteries.

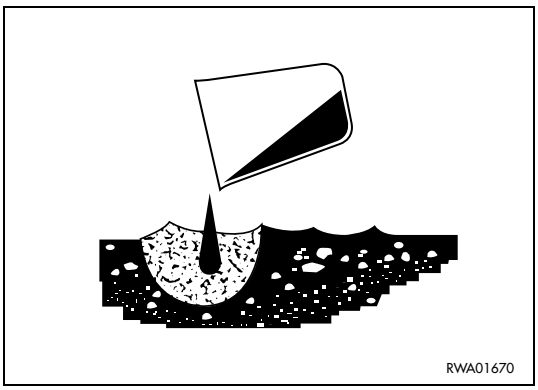


## 2.8.20 PRECAUTIONS FOR THE USE OF THE SYNTHETIC BIODEGRADABLE OIL TYPE HEES

- It is not possible to mix the synthetic biodegradable oil type HEES with ordinary hydraulic oils, since when the temperature increases insoluble compounds are generated, which are deposited on the filters and clog them (the maximum concentration of ordinary oil cannot exceed 1% of the total quantity of oil).
- The biodegradable oil can be used only in the hydraulic system; it cannot be used for the endothermic engine, the transmissions, the braking system, etc.
- Before introducing the synthetic biodegradable oil in the hydraulic system, empty the system completely, disconnecting the cylinders and all the parts that may contain ordinary oil, and replace the drain filter with a new one. Start the engine and let it idle without using the work equipment , wait until the oil reaches a temperature of at least 40°C, then start moving the equipment, so that all the parts of the system are filled with oil. Stop the engine and check the oil level (see “4.7.3.e CHECKING THE HYDRAULIC SYSTEM OIL LEVEL”).

https://truckmanualshub.com/

# THE MACHINE AND ITS OPERATIONS

https://truckmanualshub.com/



# 3.1 SAFETY LOCKS

**DANGER**

- **If it is necessary to stop the machine, lower the equipment to the ground and always engage the safety device by shifting the lever to the lock position. (See “3.3.5 pos. 1 MACHINE CONTROLS).**
- **If the operator expects that he may need to stop the machine with raised arms, he is responsible for preparing and installing locks or safety devices that must ensure safety.**
- **During travel, position the upper structure so that it is directed towards the blade before engaging the antirotation lock.**
- **Non-compliance with these rules may cause serious accidents.**

## 3.1.1 MACHINE LOCKS

- The machine is provided with an upper structure antirotation lock (1) that can be operated from the driving position; always lock the upper structure rotation before leaving and when transporting the machine.
- The other applications of the safety locks concern:
  a) the engagement of the lock (2) on the boom swing control pedal;
  b) the lock position of the safety device (3) for the locking of the equipment and travel controls.

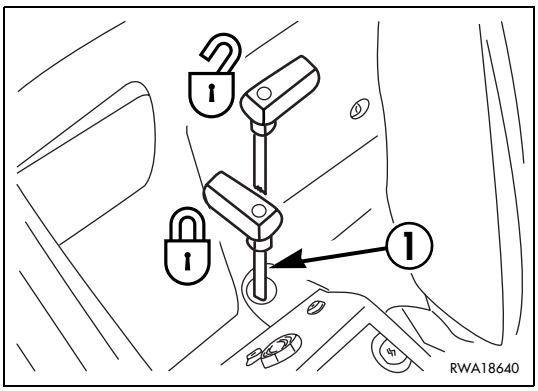


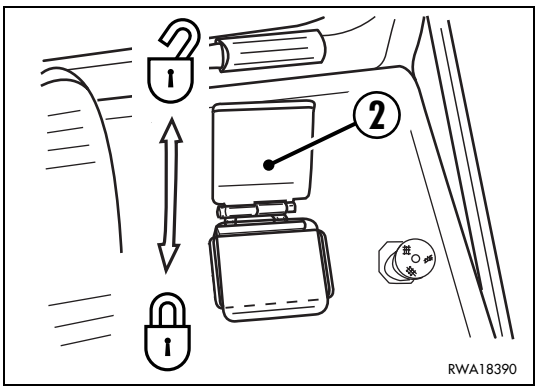


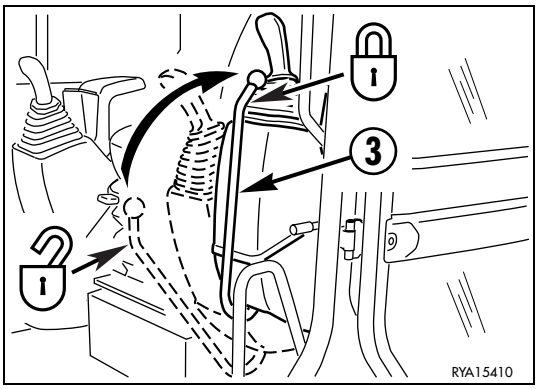

https://truckmanualshub.com/



# 3.2 GENERAL VIEWS

## 3.2.1 FRONT GENERAL VIEW (MONOBOOM)

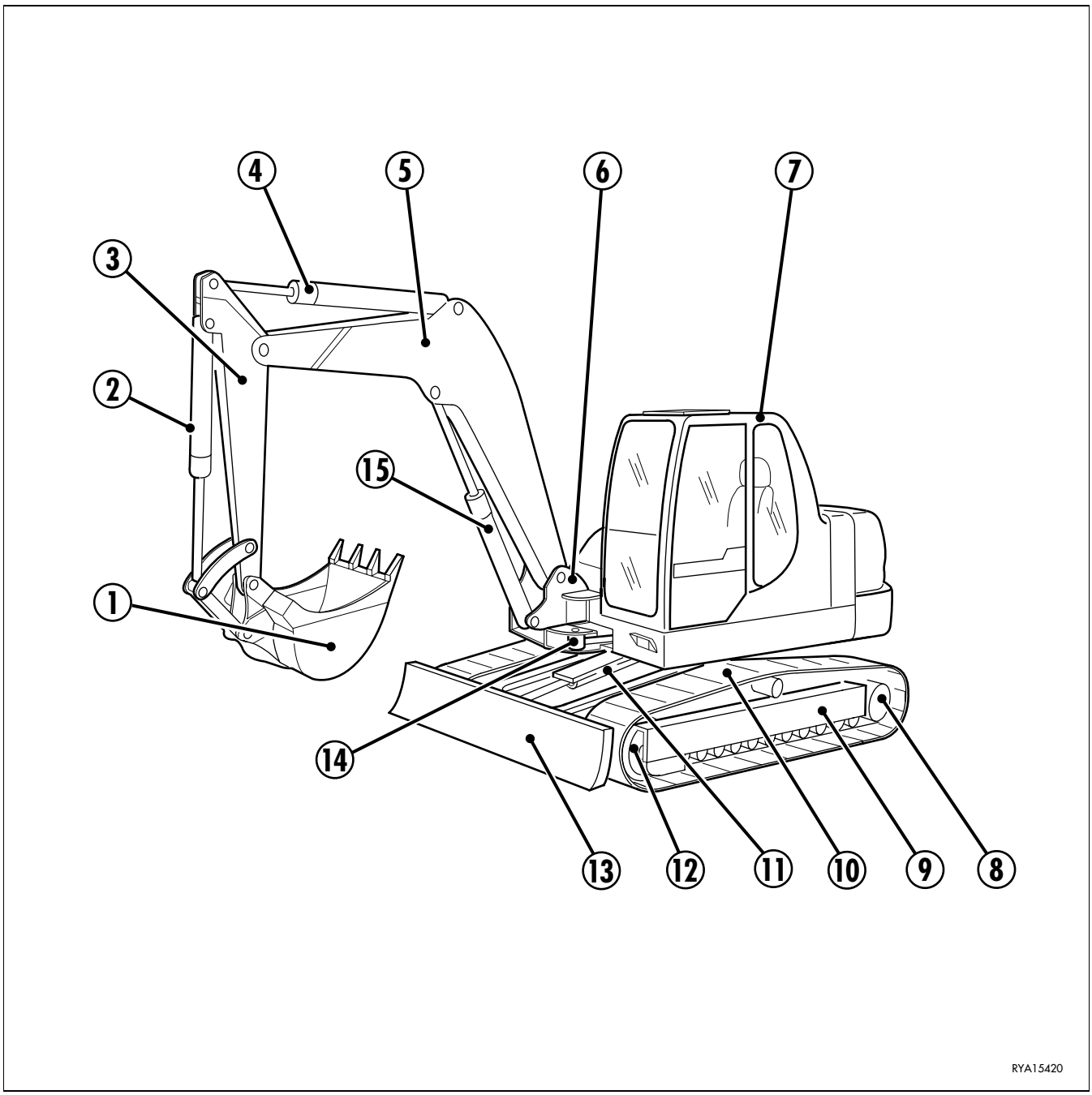


1 - Bucket
2 - Bucket cylinder
3 - Arm
4 - Arm cylinder
5 - Boom
6 - Revolving support
7 - Cab
8 - Sprocket
9 - Undercarriage
10 - Track
11 - Blade cylinder
12 - Idler roller
13 - Blade
14 - Boom swing cylinder
15 - Lifting cylinder

https://truckmanualshub.com/



## 3.2.2 FRONT GENERAL VIEW (TWO-PIECE BOOM)

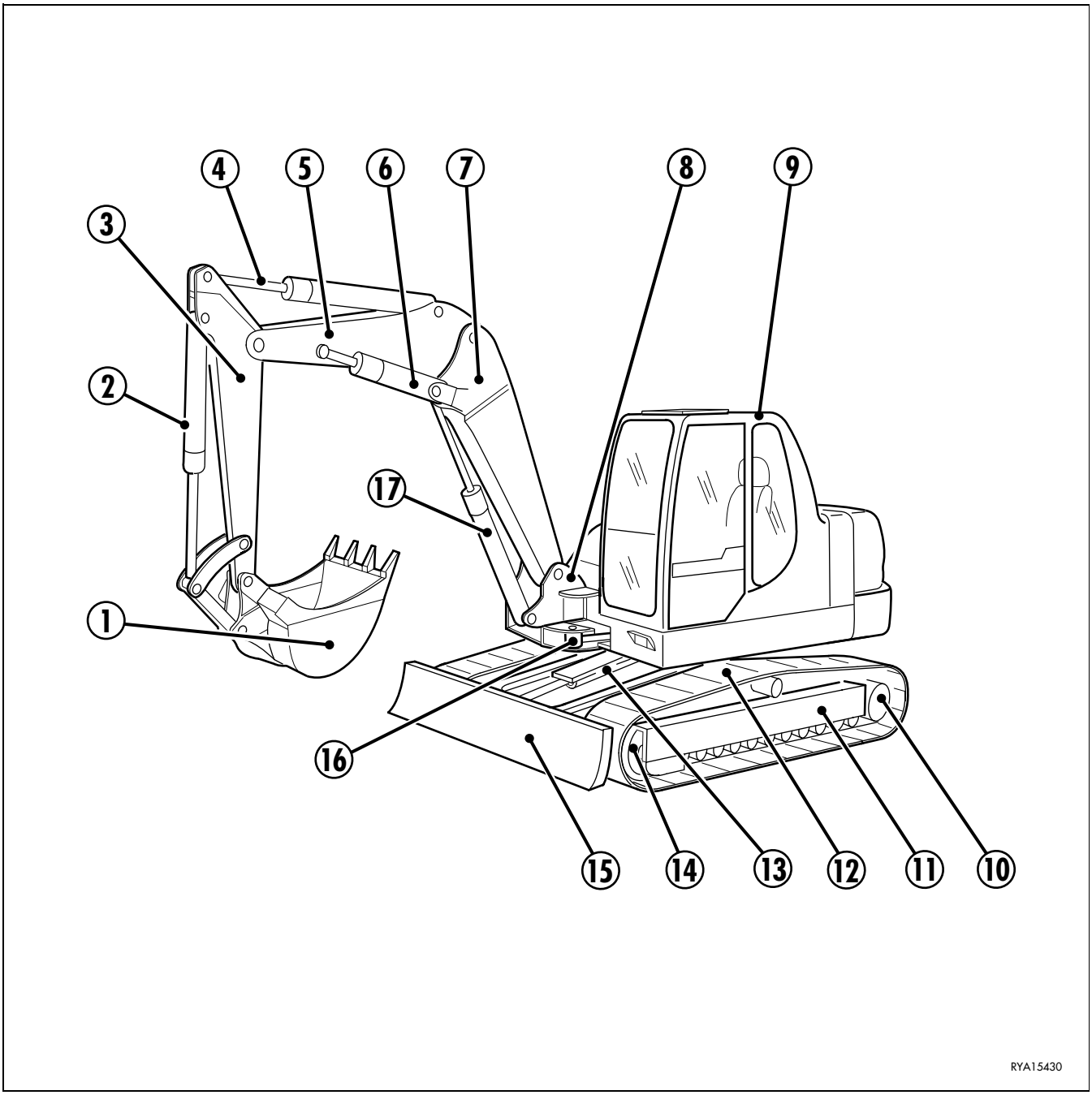


1 - Bucket
2 - Bucket cylinder
3 - Arm
4 - Arm cylinder
5 - Two-piece boom - upper part
6 - Two-piece boom cylinder
7 - Two-piece boom - lower part
8 - Revolving support
9 - Cab
10 - Sprocket
11 - Undercarriage
12 - Track
13 - Blade cylinder
14 - Idler roller
15 - Blade
16 - Boom swing cylinder
17 - Lifting cylinder

https://truckmanualshub.com/



## 3.2.3 CAB INSIDE GENERAL VIEW

1 - Safety lever
2 - Arm - rotation control
3 - Lifting - bucket control
4 - Left track control pedal
5 - Right track control pedal
6 - Boom swing control pedal
7 - Hydraulic hammer control
8 - Optional equipment control pedal

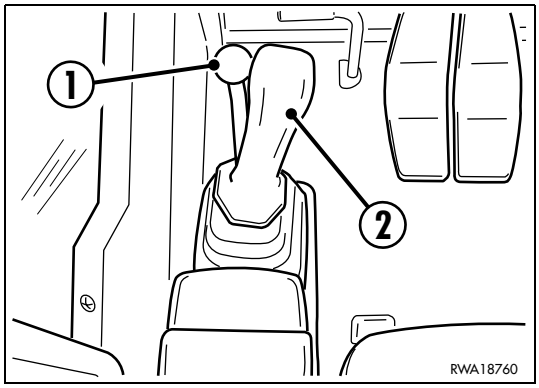


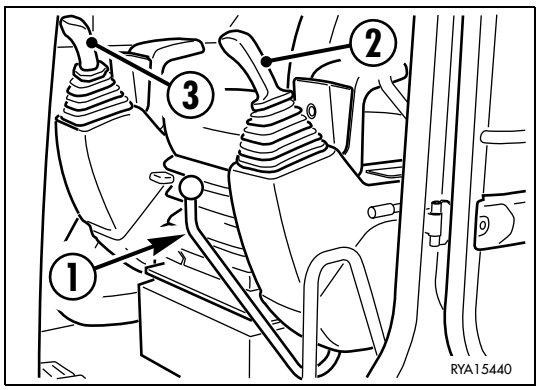


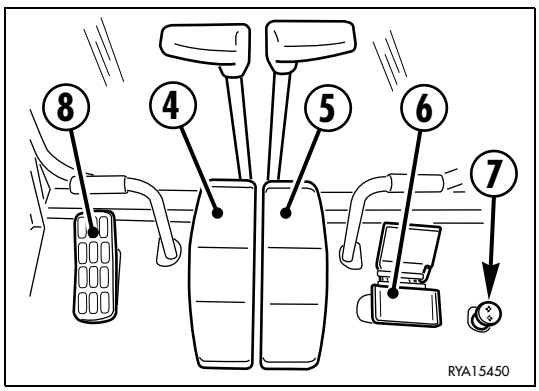

https://truckmanualshub.com/



9 - Instrument panel
10 - Switch panel
11 - Blade control
12 - Accelerator control
13 - Rotation locking pin

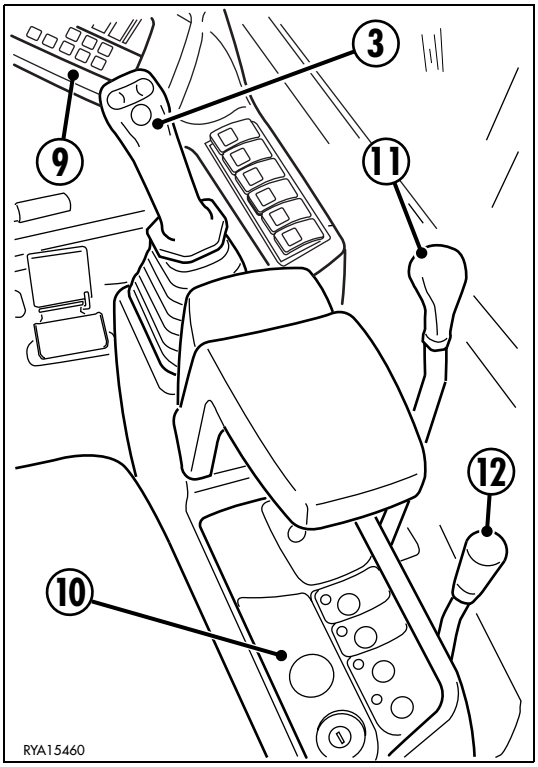


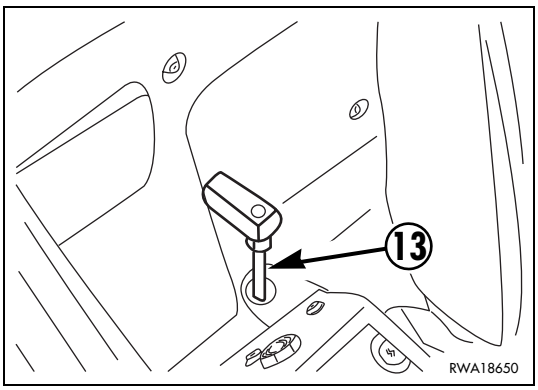

https://truckmanualshub.com/



# 3.3 INSTRUMENTS AND CONTROLS

## 3.3.1 INSTRUMENTS

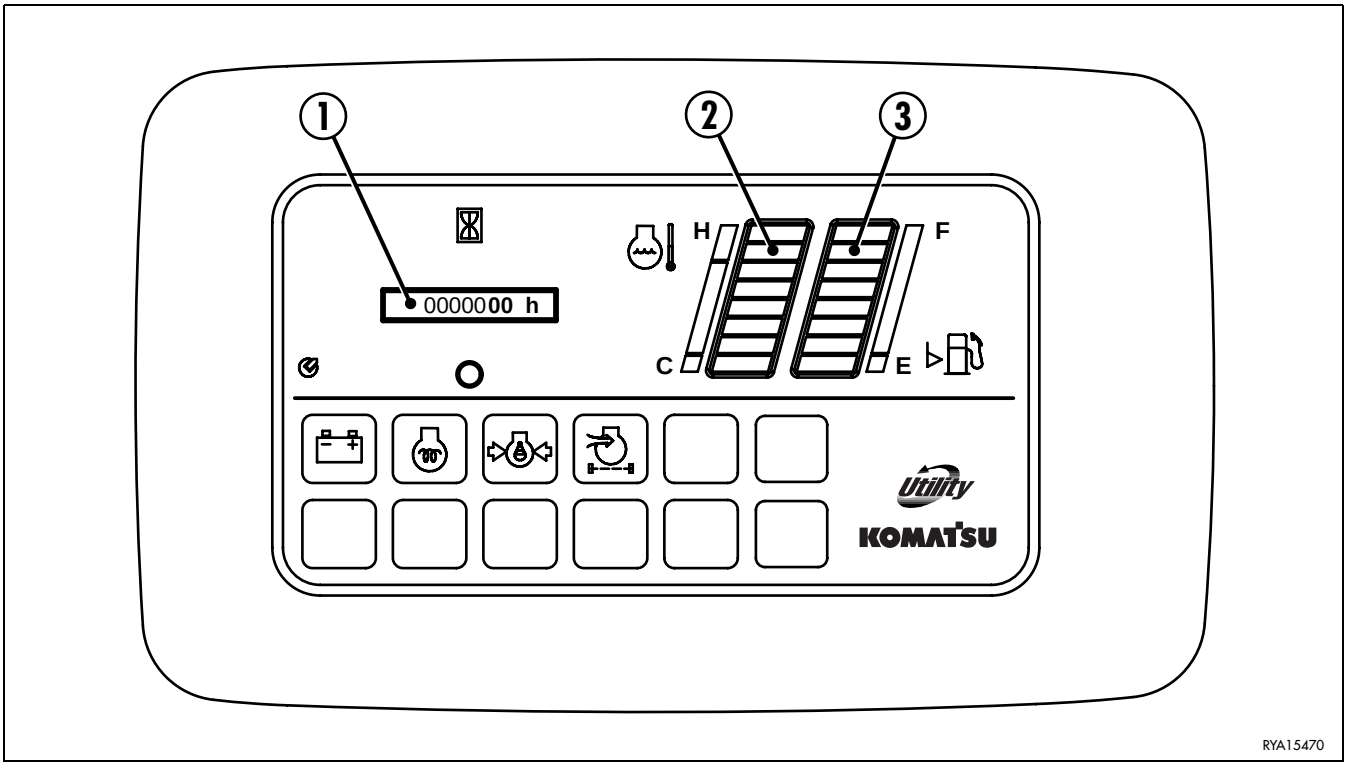


1 - Hour meter
2 - Engine coolant temperature indicator
3 - Fuel level indicator

### 1 - HOUR METER

This instrument indicates the total number of operating hours of the engine. The count is continuous and the number is increased by 1 when the engine has run for one hour, independently of its speed. When the engine is running, the led (A) positioned under the instrument flashes for the count of the seconds.
The hour meter keeps functioning even if the machine is not travelling or working.
The reading of the hour meter is to be considered valid for the calculation of the maintenance intervals.

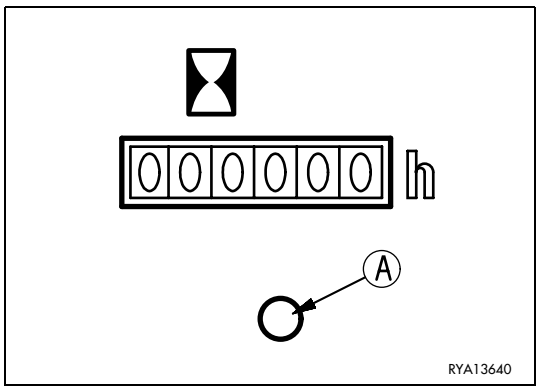

https://truckmanualshub.com/



## 2 - ENGINE COOLANT TEMPERATURE INDICATOR

This instrument indicates the temperature of the engine coolant, which in normal conditions should be 80-85°C.
After starting the engine and before starting work, let it warm up until the temperature indicator reaches the green range.
If the indicator exceeds the limit values while the engine is running and reaches the overheating red range, let the engine idle until the indicator returns to the normal temperature green range.

When the indicator reaches the overheating red range, the acoustic alarm sounds, too.
If this inconvenience occurs repeatedly, try to find out the cause (see “3.14.4.3 TROUBLESHOOTING – ENGINE”).

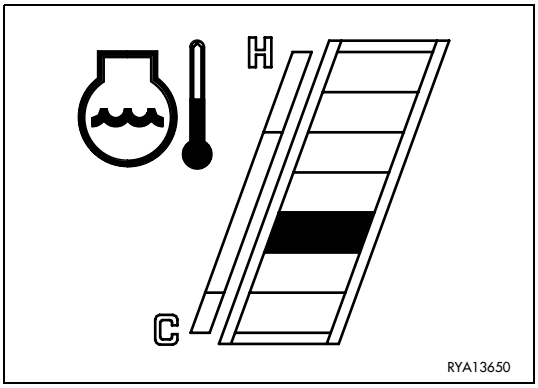


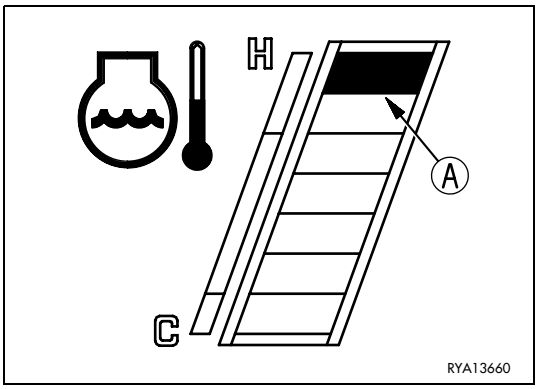


## 3 - FUEL LEVEL INDICATOR

This instrument indicates the fuel level in the tank; this information is available only with the ignition key in position «**I**» (see “3.3.3 pos. 12 START SWITCH”).
The green range indicates the normal fuel level, while the red range indicates that the fuel level is low.

**IMPORTANT**

- **If the indicator reaches the reserve red range while the machine is working, stop it and refuel it up to the correct level.**

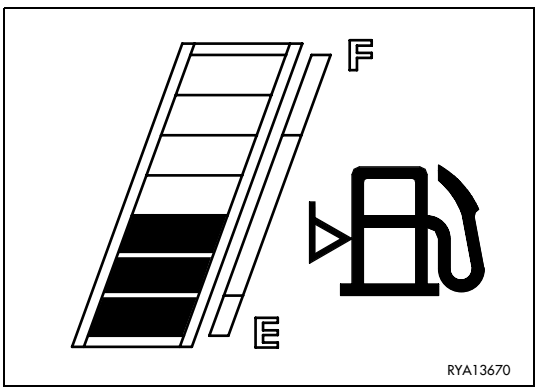

https://truckmanualshub.com/



## 3.3.2 WARNING LIGHTS

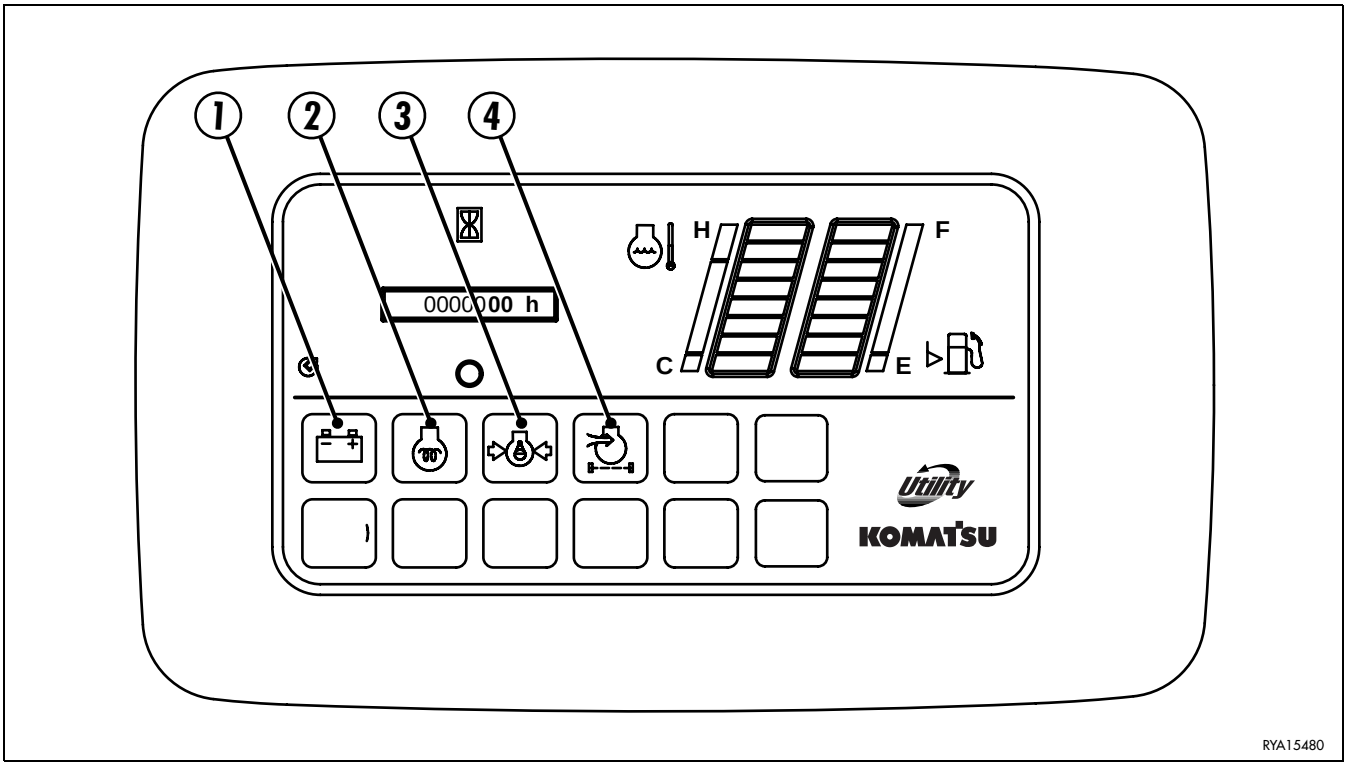


1 - Generator warning light
2 - Pre-heating warning light
3 - Engine oil pressure warning light
4 - Air cleaner clogging warning light

### 1 - GENERATOR WARNING LIGHT

This warning light comes on and activates the acoustic alarm when the starting circuit is energized and goes out when the engine exceeds the idling speed; if this warning light remains on even when the engine is running at the normal operating speed, this means that the alternator does not work and the battery is not charged correctly.

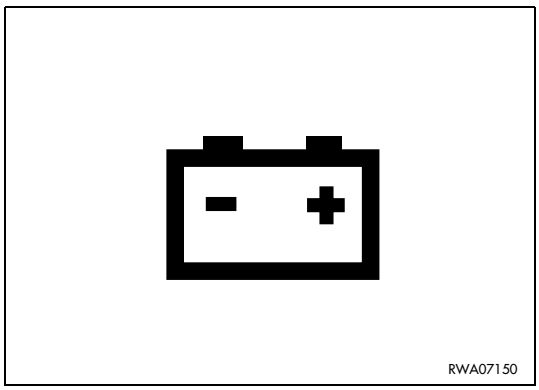


**IMPORTANT**

- **If the warning light remains off when the ignition key is turned to position «I», this means that the alternator is faulty or broken.**

https://truckmanualshub.com/



## 2 - PREHEATING WARNING LIGHT

This warning light comes on when the ignition key is turned to position « » to start the engine at low temperatures.
(See “3.6.2.2 Starting with cold engine or in cold climates”).

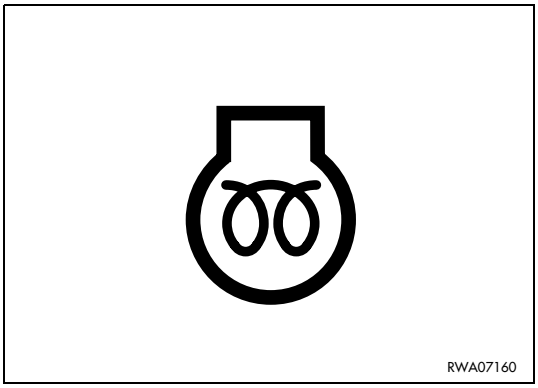


## 3 - ENGINE OIL PRESSURE WARNING LIGHT

This warning light comes on and activates the acoustic alarm with engine at rest when the starting circuit is energized and goes out as soon as the engine lubrication circuit is pressurized.
If this warning light remains on or comes on with the engine running, stop the machine immediately and try to locate the trouble.

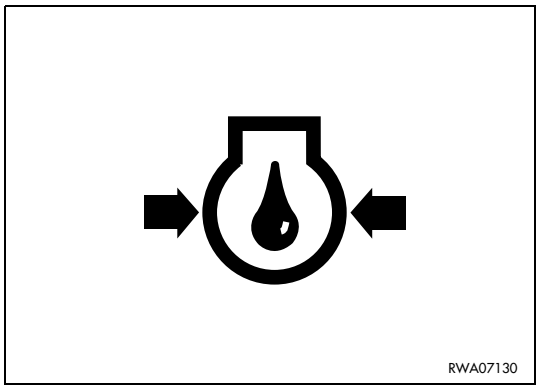


## 4 - AIR CLEANER CLOGGING WARNING LIGHT

This warning light comes on when the engine air filter needs cleaning.

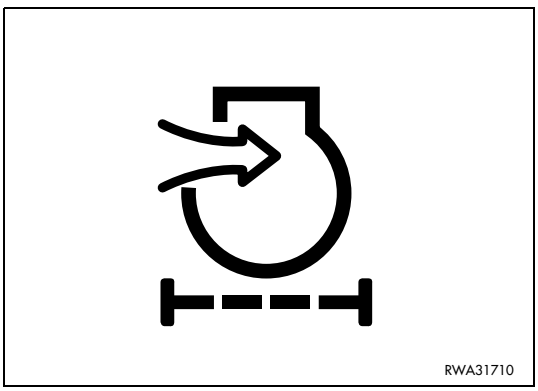

https://truckmanualshub.com/



## 3.3.3 SWITCHES AND PUSH BUTTONS

1 - Fan switch
2 - Air conditioner switch (if provided)
3 - Working light and instrument light switch
4 - Horn
5 - Clamshell bucket anticlockwise rotation control button
6 - Clamshell bucket clockwise rotation control button

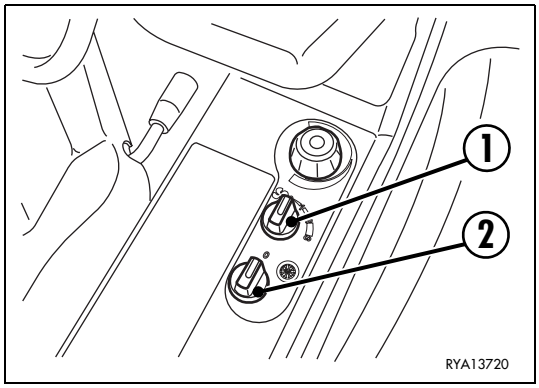


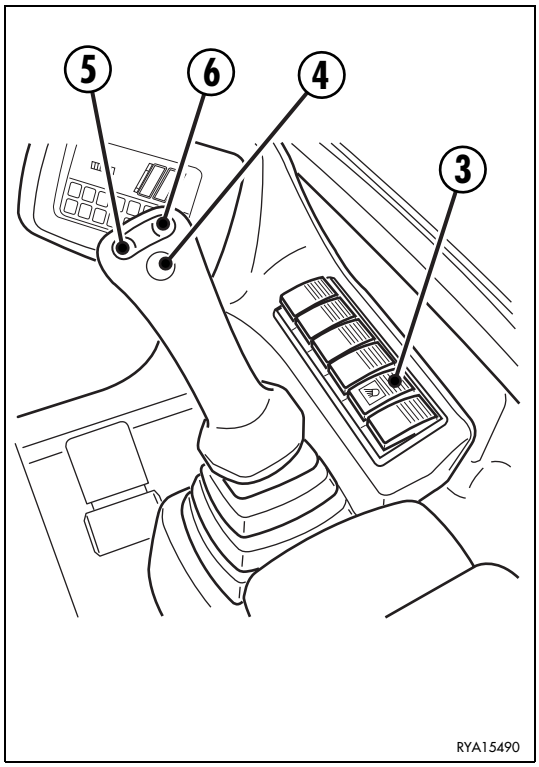

https://truckmanualshub.com/



7 - Starting switch
8 - Revolving light switch (if installed)
9 - Speed increase selection push-button
10 - WORKING MODE selector
11 - Boom overload alarm switch
12 - Optional equipment control selection switch
13 - Hydraulic pliers use enabling switch
14 - Demolition hammer control button
15 - Windshield wiper / washer switch

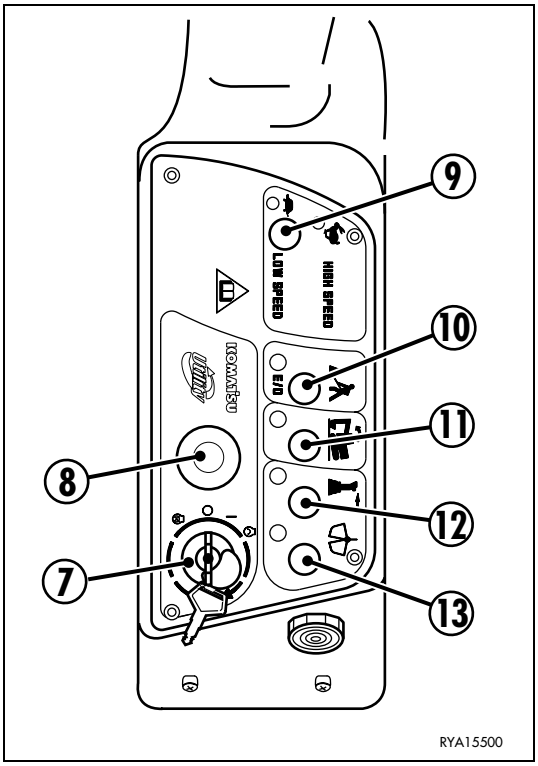


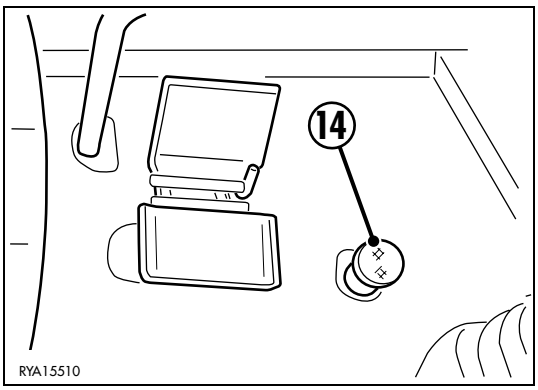


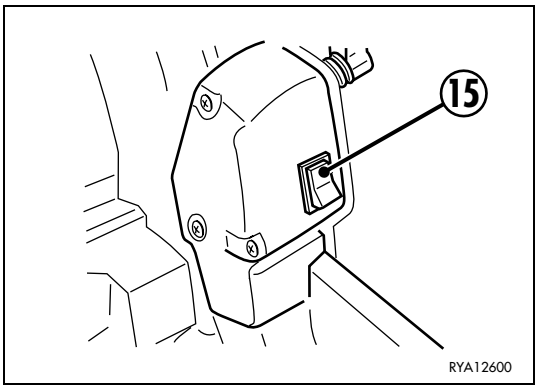

https://truckmanualshub.com/



## 1 - FAN SWITCH

This is a three-speed switch that operates the fan motor. Turn the switch clockwise to increase the ventilation intensity.
If operated after the tap installed on the heater has been opened, this switch ensures the circulation of warm air and serves as heating switch (see “3.5.4 VENTILATION AND HEATING”).
On machines provided with air conditioning system, the use of the fan ensures the circulation of cool air (see “3.5.5 AIR CONDITIONER”).

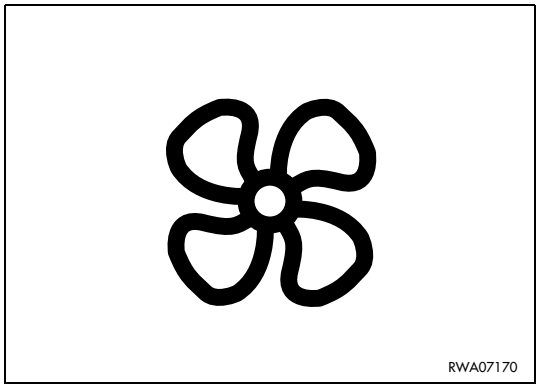


## 2 - AIR CONDITIONER SWITCH (if provided)

This is a two-position switch and if rotated clockwise (led on) it operates the air conditioner.
For further details on how to use it, see “3.5.5 AIR CONDITIONER”.
To disconnect the air conditioner, turn the switch anticlockwise (led off).

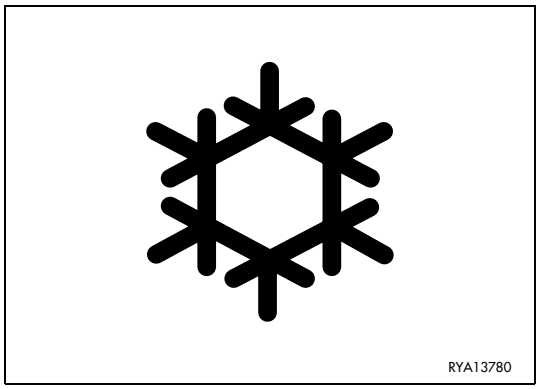


## 3 - WORKING LIGHT AND INSTRUMENT LIGHT SWITCH

This is a two-position switch. The first click enables the circuit operating the instrument lights and the working light low beam. The second click enables the high beam circuit.

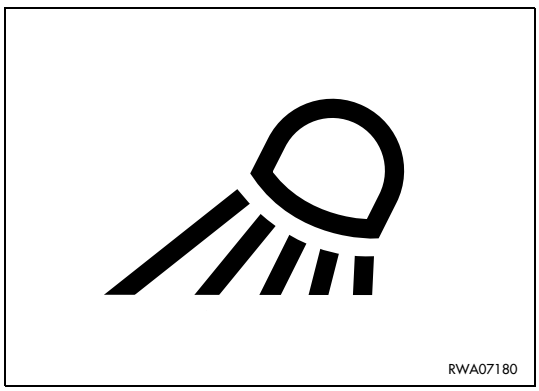


## 4 - HORN

This push button is positioned on the right lever grip and serves to warn the persons in the vicinity at the beginning of work and in case of danger.

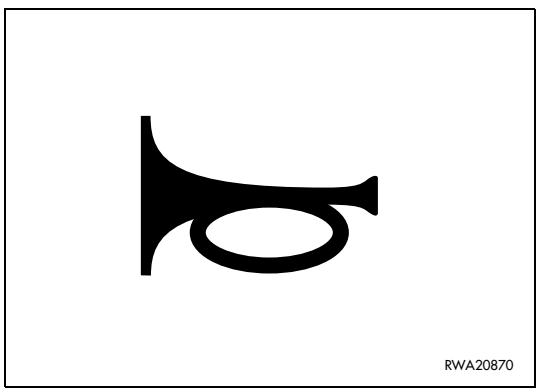

https://truckmanualshub.com/



## 5 - CLAMSHELL BUCKET ANTICLOCKWISE ROTATION CONTROL BUTTON

This is a single-function button and permits the anticlockwise rotation of the clamshell bucket.
When it is released, the bucket stops.
For further details on its use, see “6.3.1 CLAMSHELL BUCKET CONTROL”.

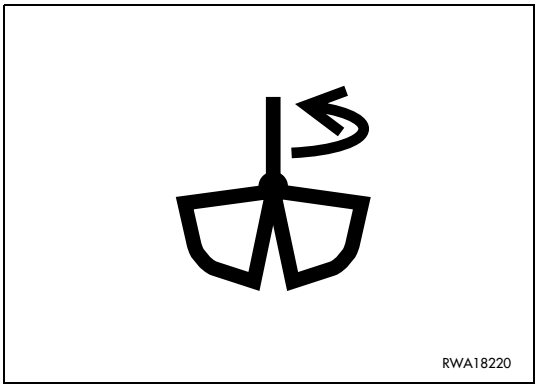


**IMPORTANT**

- **This button can be used also to control other optional equipment.**

## 6 - CLAMSHELL BUCKET CLOCKWISE ROTATION CONTROL BUTTON

This is a single-function button and permits the clockwise rotation of the clamshell bucket.
When it is released, the bucket stops.
For further details on its use, see “6.3.1 CLAMSHELL BUCKET CONTROL”.

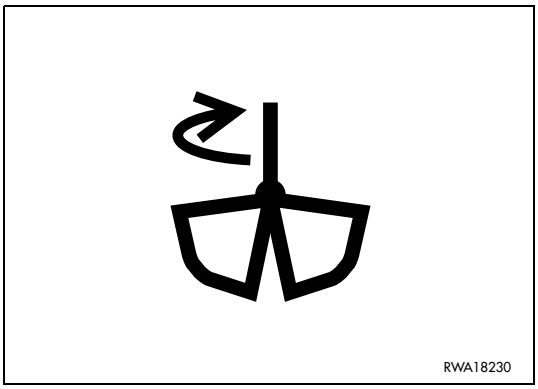


**IMPORTANT**

- **Before using this button, make sure that the LED positioned on the dahsboard is off (see “3.3.3 pos. 12 OPTIONAL EQUIPMENT CONTROL SELECTION SWITCH).**

**CAUTION**

- **For the use of optional equipment requiring continuous and prolonged operation (for example, the bush cutter), the push-button mode is changed over to switch mode through the control positioned on the dashboard (see “3.3.3 pos. 12 OPTIONAL EQUIPMENT CONTROL SELECTION SWITCH).**
  **This change is indicated by the coming on of the LED.**
  **Press the switch on the dashboard again (LED off) to return to the push-button mode.**

https://truckmanualshub.com/



## 7 - IGNITION SWITCH

This is a rotary key switch with four positions marked by the following symbols: « » - O (OFF) - I - « » (START).
For further details on the use of this switch, see “3.6.2 STARTING THE ENGINE”.

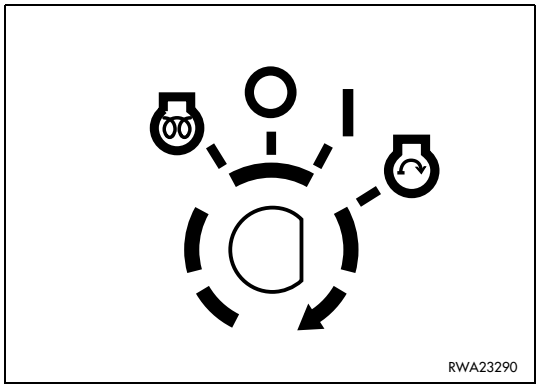


## 8 - REVOLVING LIGHT SWITCH (if installed)

If pressed, this switch comes on and operates the revolving light.

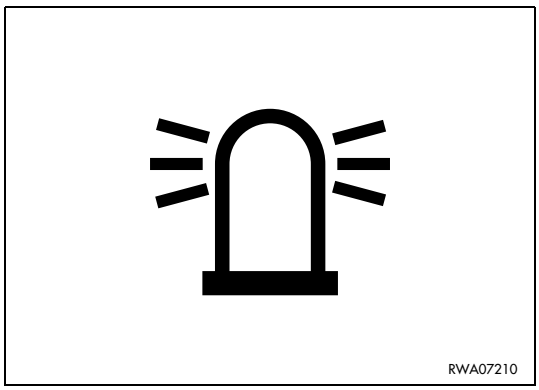


## 9 - SPEED INCREASE SELECTION PUSH-BUTTON

This is a single-function push-button and serves to select and disconnect the speed increase function. When the engine is started the normal speed is always selected (led A on), even if the machine was stopped while the speed increase function was selected. Press the push-button (led B on) to select the speed increase. Press the push-button again (led A on) to return to normal speed.

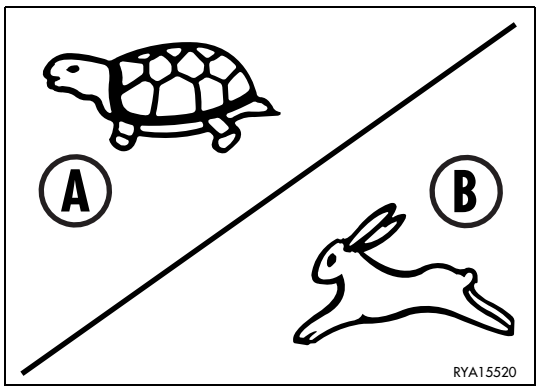


**IMPORTANT**

- **Do not use the speed increase function when performing steering or counterrotation manoeuvres.**
- **When the engine is stopped, the normal speed is always automatically selected.**

https://truckmanualshub.com/



## 10 - WORKING MODE SELECTOR

This switch is used to select the power of the work equipment and has two positions:
Position “**P**” (LED off) for normal applications.
Position “**E**” (LED on) for light-duty applications.

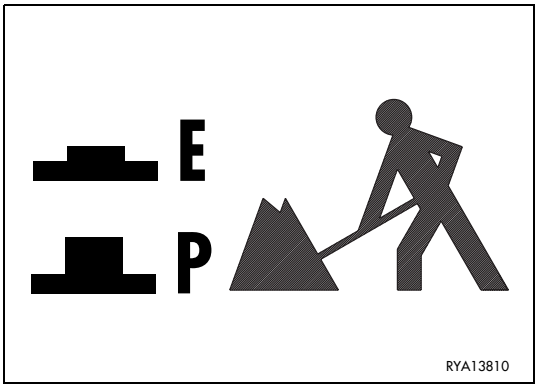


**IMPORTANT**

- **When the engine is stopped, the selector is always in position “P” (use of the machine for normal applications).**

## 11 - BOOM OVERLOAD ALARM SWITCH

When the switch is pressed, the LED comes on and allows the boom overload device to signal that the limit capacity has been reached.
When pressed again (LED off), it disables the function of the device.

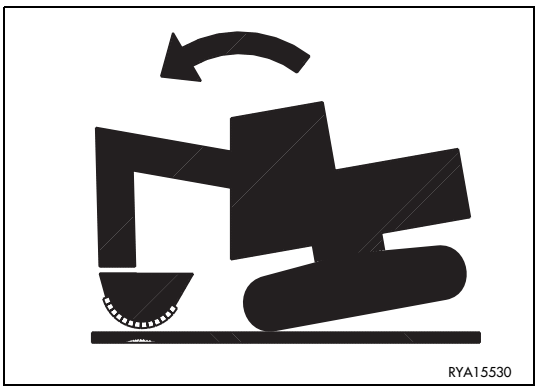

https://truckmanualshub.com/



## 12 - OPTIONAL EQUIPMENT CONTROL SELECTION SWITCH

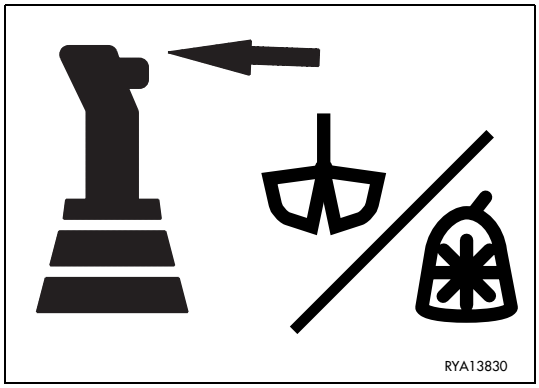


**CAUTION**

- **This switch must be used only for equipment that requires continuous and prolonged operation (for example, the bush cutter).**

This switch changes the function of the control positioned on the right joystick lever (see “3.3.3 pos. 6 CLAMSHELL BUCKET CLOCKWISE ROTATION BUTTON”) from push-button mode into switch mode.
With the LED off, the control on the right joystick is always in push-button mode, as required for the standard setting of the machine.
With the LED on, the control on the right joystick changes over to the switch mode.
This function is activated by pressing the switch once and disconnected by pressing it again.

**IMPORTANT**

- **If the machine is not fitted with optional equipment the operation of this switch is inhibited.**

## 13 - HYDRAULIC PLIERS USE ENABLING SWITCH

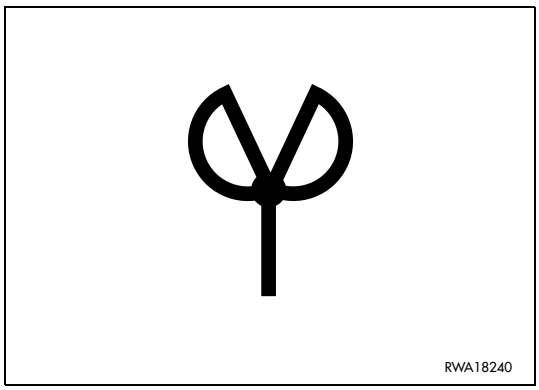


**IMPORTANT**

- **This device enables the operation of the hydraulic pliers control.**

When this switch is pressed, the LED comes on and activates the hydraulic pliers control circuit.
The hydraulic pliers control is operated through the pedal positioned near the driver’s seat, on the left side (see “3.3.5 pos. 4 POSITIONER OR HYDRAULIC PLIERS CONTROL PEDAL”).
When the switch is pressed again (LED off), the control is disconnected.

https://truckmanualshub.com/



## 14 - DEMOLITION HAMMER CONTROL BUTTON

When pressed, this button operates the demolition hammer; when the button is released, the hammer stops.
For further details on its use, see “6.2.1 DEMOLITION HAMMER CONTROL”.

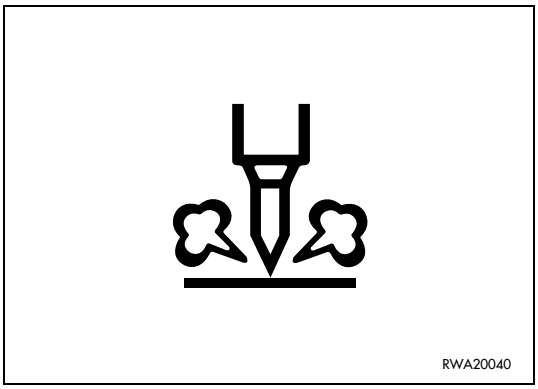


## 15 - WINDSHIELD WIPER / WASHER SWITCH

With the first click it operates the windshield wiper, while with the second click (with automatic return to the first) it operates the windshield washer.

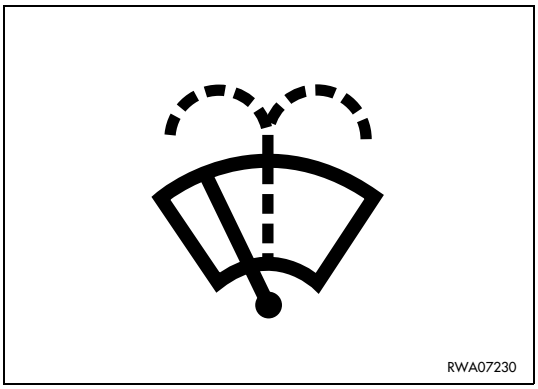

https://truckmanualshub.com/



## 3.3.4 ELECTRICAL ACCESSORIES

1 - Engine acoustic alarm
2 - Overhead lamp
3 - Electric outlet

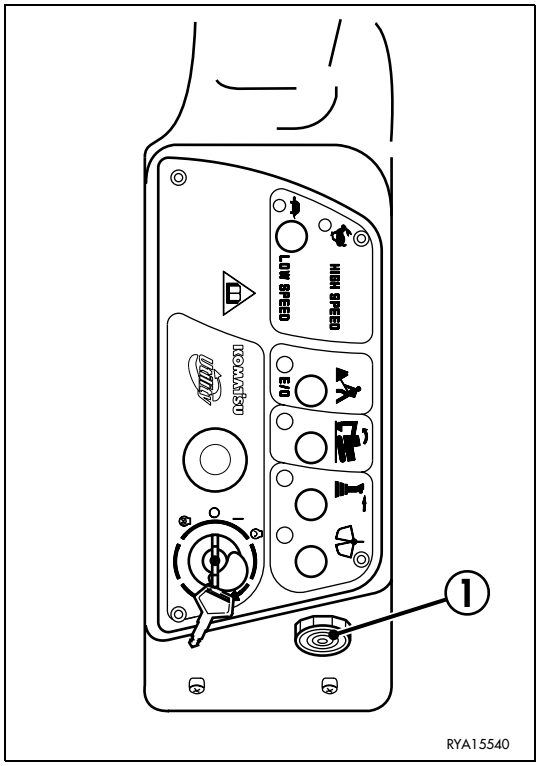


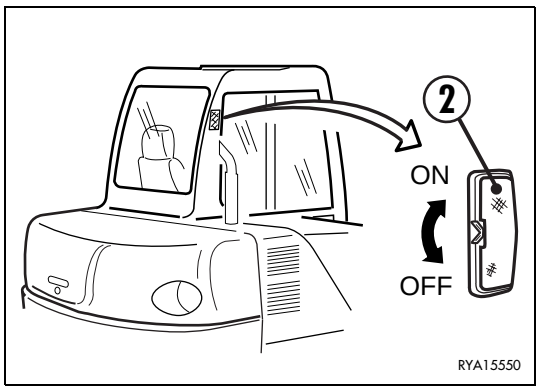


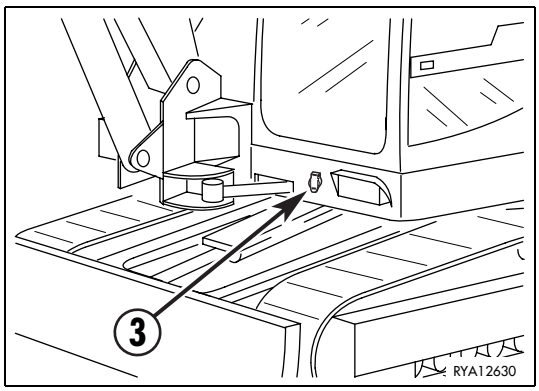

https://truckmanualshub.com/



## 1 - ENGINE ACOUSTIC ALARM

The acoustic alarm is operated when the circuits are energized with the ignition key (rotation to position «**I**») and is automatically disconnected after the automatic check on the warning lights.
The sounding of the alarm during operation signals:

- insufficient engine oil pressure;
- overheating of the engine cooling circuit;
- faulty alternator or worn belt.

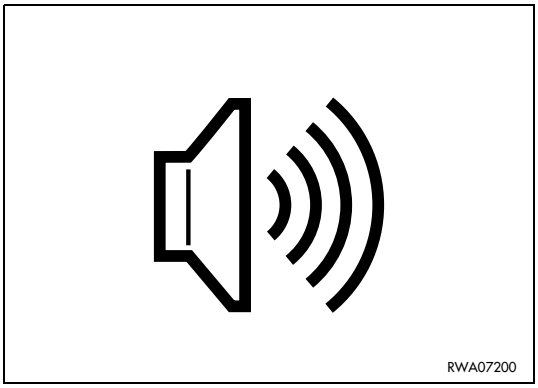


## 2 - OVERHEAD LAMP

It is used to check the instruments and the inside of the cab when visibility is poor.
To turn it on, press the switch to position ON.

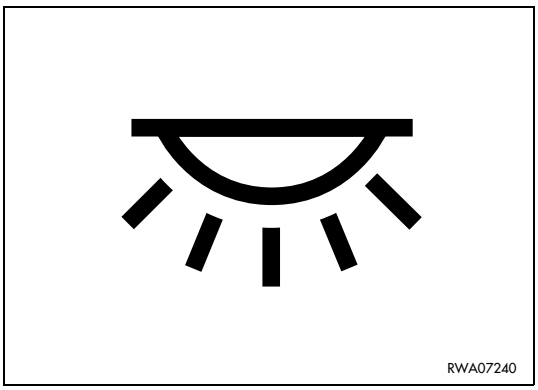


## 3 - ELECTRIC OUTLET

An electric outlet is positioned on the front part of the machine for the connection of a lighting device for routine and maintenance operations.
It is a two-pole outlet and is in compliance with the ISO 4165-1979 standard.
Power supply 12 V.

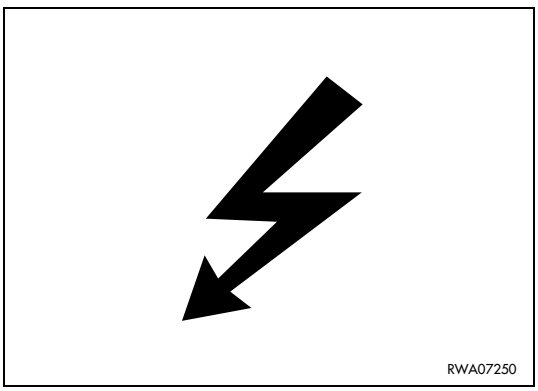

https://truckmanualshub.com/



## 3.3.5 MACHINE CONTROLS

1 - Safety device control lever
2 - Left equipment control lever
3 - Right equipment control lever
4 - Two-piece boom control pedal
5 - Left travel and steering control lever
6 - Right travel and steering control lever
7 - Boom swing control pedal

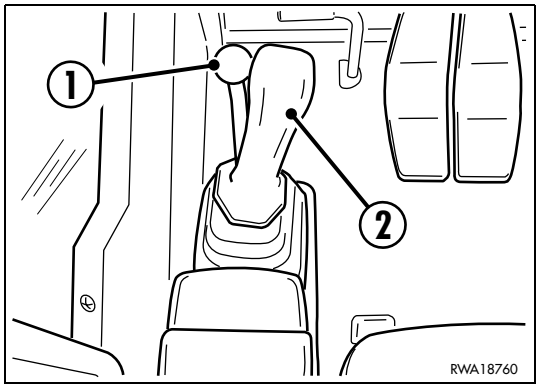


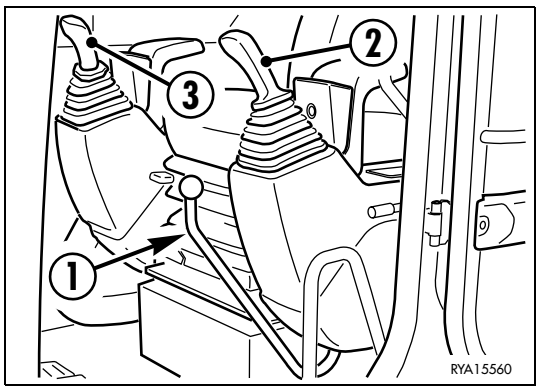


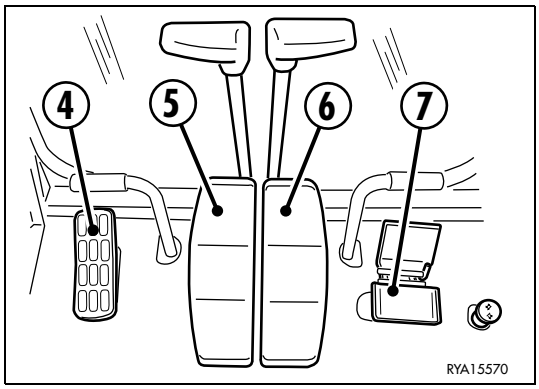

https://truckmanualshub.com/



8 - Blade control lever
9 - Hand accelerator
10 - Upper structure rotation locking lever

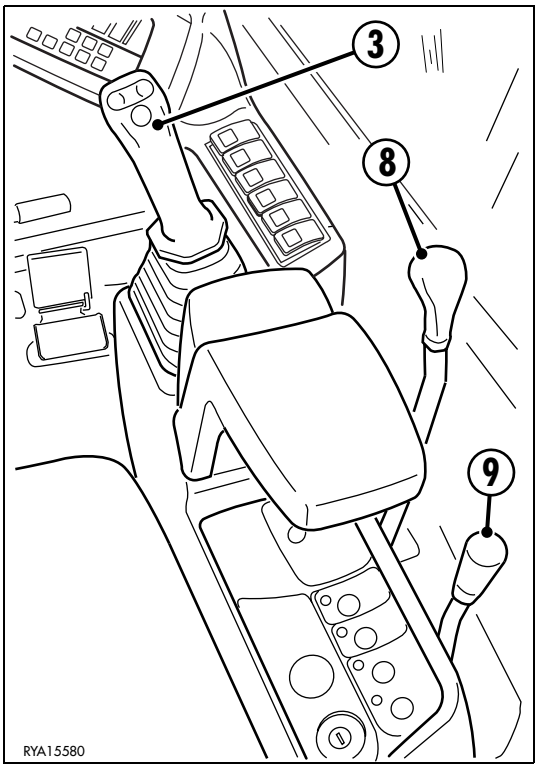


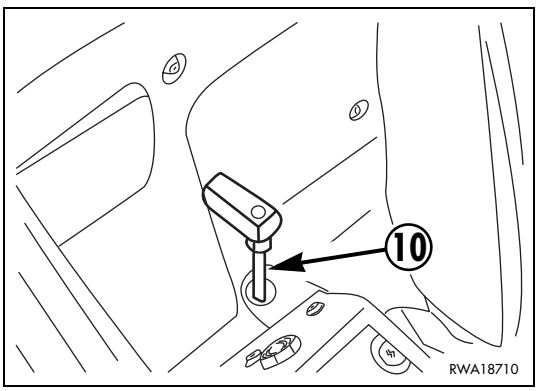

https://truckmanualshub.com/



## 1 - SAFETY DEVICE CONTROL LEVER

**DANGER**

- **Before leaving the operating position, lower the equipment to the ground and lock the safety device.**

To lock the safety device, raise the lever (8), which will automatically move to the lock position.

To release the safety device, push the lever (8) downwards until it engages the check coupling.

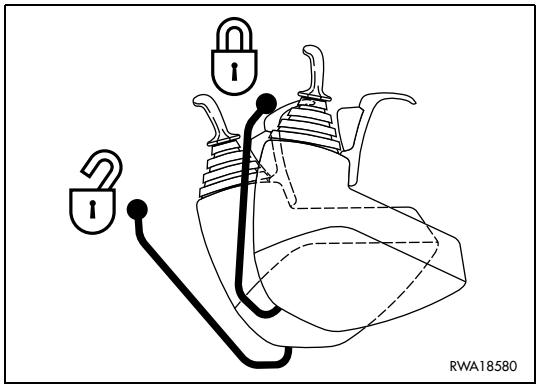


**IMPORTANT**

- **All the movements are locked when the safety device is engaged.**

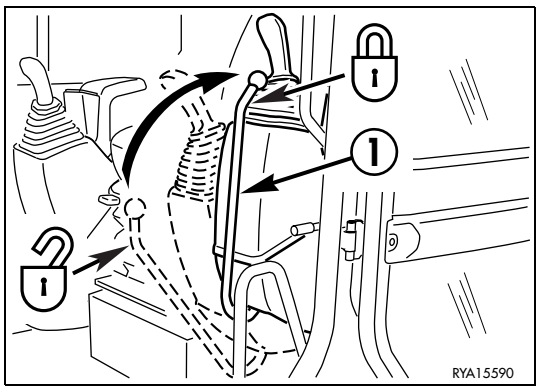


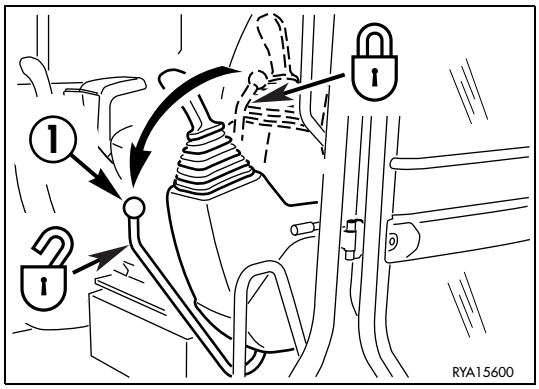

https://truckmanualshub.com/



## 2-3 - EQUIPMENT CONTROL LEVERS

**DANGER**

- **Before carrying out any manoeuvre with these levers, the operator must be seated in the work position with fastened safety belt; before any manoeuvre he must perform the operations described in “3.12 USING THE WORK EQUIPMENT”.**
- **Before leaving the operating position, lower the equipment to the ground and lock the safety device, then stop the engine.**

The control lever (2) is positioned at the operator’s left and controls the arm and the upper structure rotation, while the control lever (3) is positioned at the operator’s right and controls the boom and the bucket.
The following diagrams show the basic manoeuvres and the possible combined manoeuvres.

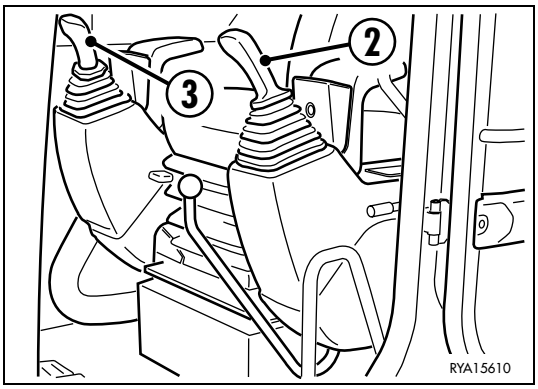


### LEVER 2 (BASIC MANOEUVRES)

**N** - Neutral
**A** - Arm opening
**B** - Rotation to the right
**C** - Arm folding
**D** - Rotation to the left

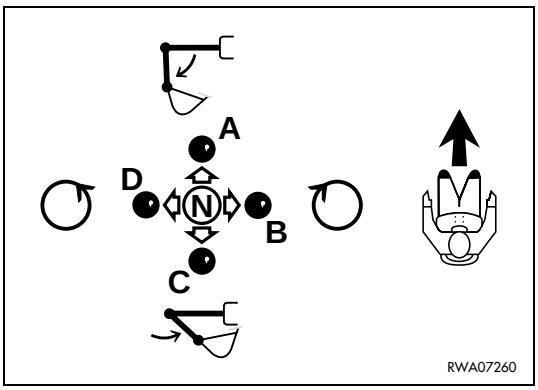


### LEVER 3 (BASIC MANOEUVRES)

**N** - Neutral
**A** - Boom lowering
**B** - Bucket opening
**C** - Boom lifting
**D** - Bucket curling

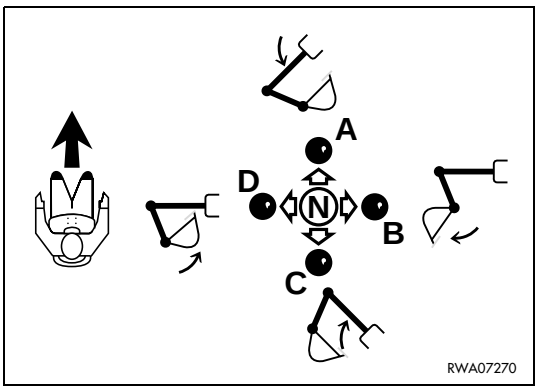

https://truckmanualshub.com/



If the levers are operated in directions that are inclined with respect to the machine axis, simultaneous movements proportional to the angle of inclination are obtained, since the two hydraulic distributors corresponding to each single function are engaged at the same time.

## LEVER 2 (COMBINED MANOEUVRES)

**N** - Neutral
**A** - Arm opening and rotation to the left
**B** - Arm opening and rotation to the right
**C** - Rotation to the right and arm folding
**D** - Rotation to the left and arm folding

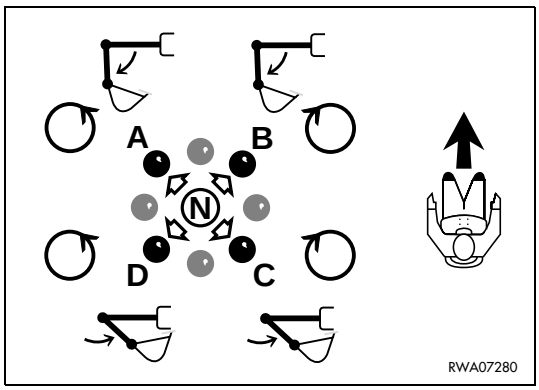


## LEVER 3 (COMBINED MANOEUVRES)

**N** - Neutral
**A** - Boom lowering and bucket curling
**B** - Boom lowering and bucket opening
**C** - Bucket opening and boom lifting
**D** - Bucket curling and boom lifting

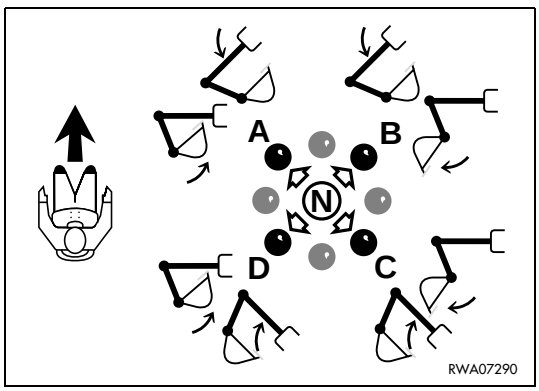


**IMPORTANT**

- **Before rotating the upper structure, make sure that the rotation locking pin is raised (release position).**
- **The horn is positioned on the right lever grip and must be used to warn the persons in the vicinity at the beginning of work and in case of danger.**
- **All movements are locked by shifting the safety device lever to the lock position (see pos. 1).**

https://truckmanualshub.com/



## 4 - TWO-PIECE BOOM CONTROL PEDAL (IF PROVIDED)

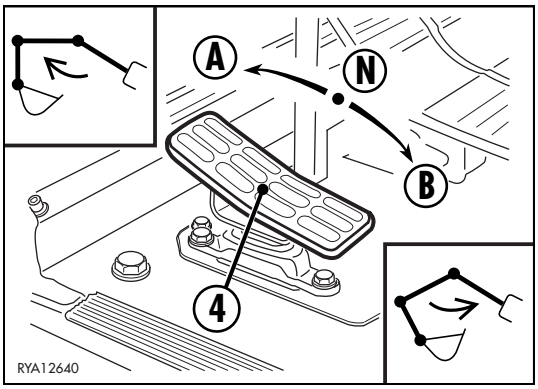


This pedal controls the opening and folding of the two-piece boom according to the movements indicated.

**N** - Neutral

**A** - Boom opening

**B** - Boom folding

**IMPORTANT**

- **All movements are locked by shifting the safety device lever to the lock position (see pos. 1).**
- **This pedal can be used also to control the hydraulic pliers and its utilization is enabled through the switch positioned on the dashboard (see "3.3.3 pos. 10 HYDRAULIC PLIERS USE ENABLING SWITCH").**
  **This position is indicated by the coming on of the LED.**

## 5-6 - TRAVEL AND STEERING CONTROL LEVERS

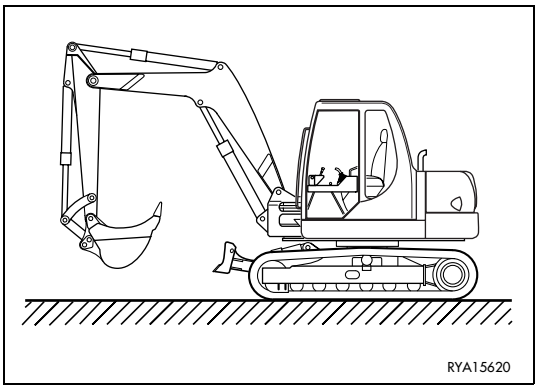


**DANGER**

- **Before carrying out any manoeuvre with these levers, the operator must be seated in the work position with fastened safety belt.**
- **Before moving, make sure that the upper structure is directed towards the blade and that all the safety devices are engaged; if the upper structure is turned by 180°, the controls are inverted.**
  **(See "3.6.5 HOW TO MOVE THE MACHINE").**
- **Failure to comply with these rules may cause serious accidents.**

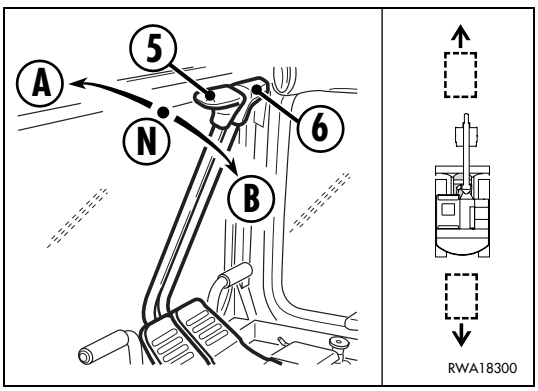


The levers (5) and (6) serve to operate the left and right travel motors, respectively, and control the forward and the reverse gear according to the movements indicated.

**N** - Neutral

**A** - Forward gear

**B** - Reverse gear

**IMPORTANT**

- **All movements are locked by shifting the safety device lever to the lock position (see pos. 1).**

https://truckmanualshub.com/



## 7 - BOOM SWING CONTROL PEDAL

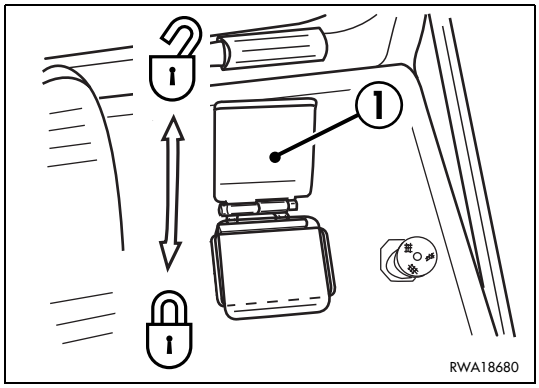


**DANGER**

- **Always engage the safety device (1) when the use of this control pedal is not required, during travel and when parking the machine.**
  **If this control pedal is inadvertently pressed, it may cause serious accidents.**

This pedal (7) controls the boom swing to the right and to the left according to the movements indicated.

**N** - Neutral

**A** - Swing to the left

**B** - Swing to the right

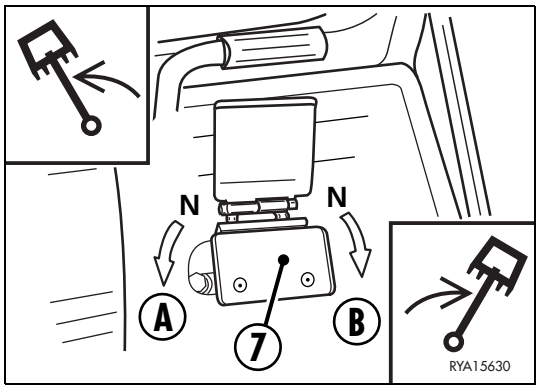


**IMPORTANT**

- **All movements are locked by shifting the safety device lever to the lock position (see pos. 1).**
- **The boom swing is useful when it is necessary to dig beyond the track outline; never use it during the work cycle.**

## 8 - BLADE CONTROL LEVER

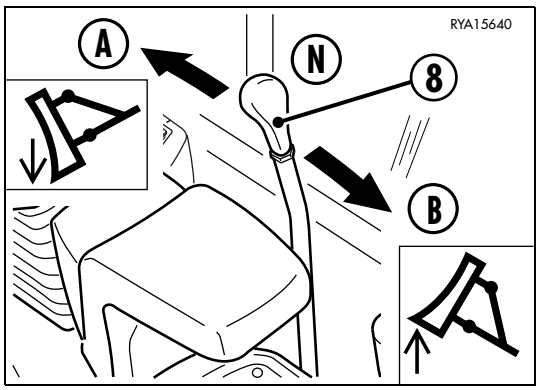


**DANGER**

- **Before moving the machine, make sure that the blade is completely raised.**

This lever (8) controls the raising and lowering of the blade according to the movements indicated.

**N** - Neutral

**A** - Blade lowering

**B** - Blade raising

**IMPORTANT**

- **All movements are locked by shifting the safety device lever to the lock position (see pos. 1).**

https://truckmanualshub.com/



## 9 - HAND ACCELERATOR

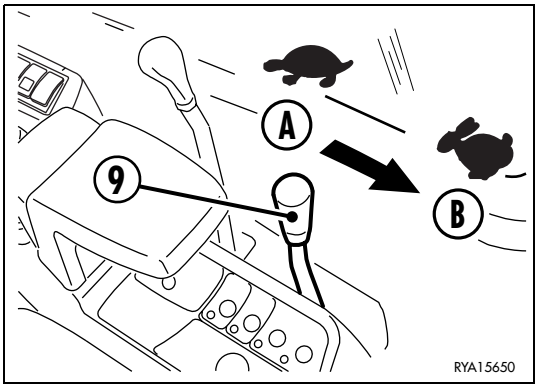


This lever serves to adjust the speed and power of the engine.

- Idling position (A):
  push the lever completely forward.
- Maximum speed position (B):
  pull the lever completely backward.

Use the accelerator lever with care, especially when the machine is under strain or is working in difficult conditions. Avoid useless accelerations, in order to reduce consumption and extend the life of both the engine and the machine.

## 10 - UPPER STRUCTURE ROTATION LOCKING LEVER

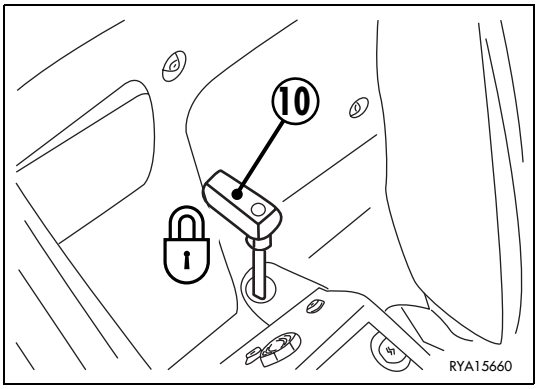


**DANGER**

- **During travel and transport of the machine the rotation locking lever must be shifted to the lock position; shift the lever to the lock position after rotating the upper structure so that it is parallel to the undercarriage.**
- **During travel, make sure that the upper structure is directed towards the blade; if the upper structure is rotated by 180°, the controls are inverted.**

When the lever (10) is in the lock position, it prevents the rotation of the upper structure.
To release the upper structure from the mechanical constraint, raise the lever and set it to the unlock position.

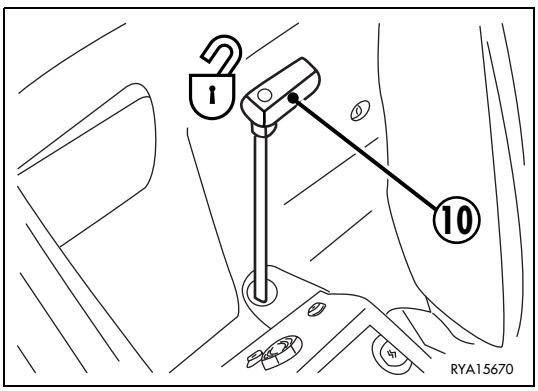


**IMPORTANT**

- **Do not rotate the upper structure when the lever is in the lock position.**

https://truckmanualshub.com/



# 3.4 FUSES AND RELAYS

**IMPORTANT**

- **When changing a fuse, make sure that the ignition key is in position «O».**
- **If the fuses are oxidized, corroded or do not fit perfectly in their seat, replace them only with new fuses having the same capacity.**
- **If the engine does not run when the ignition switch is turned to position «⏻» START, check the main fuse and if necessary change it.**

## 3.4.1 CENTRAL UNIT FUSES AND RELAYS

The fuses and relays are grouped on a single base positioned inside the seat support.
The central unit can be reached by opening the door (1).

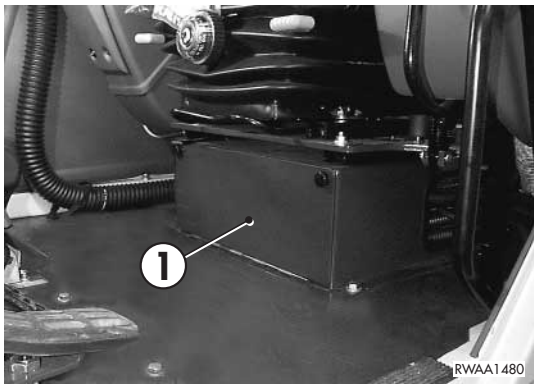


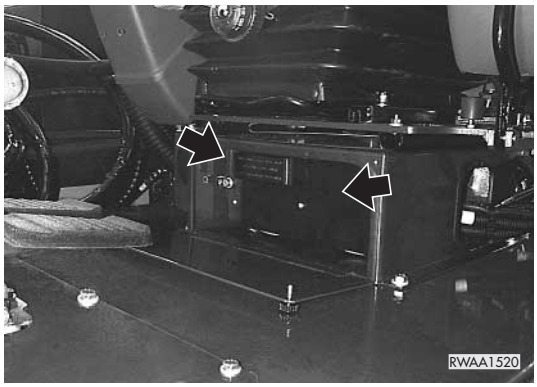

https://truckmanualshub.com/



### 3.4.1.1 CENTRAL UNIT FUSES

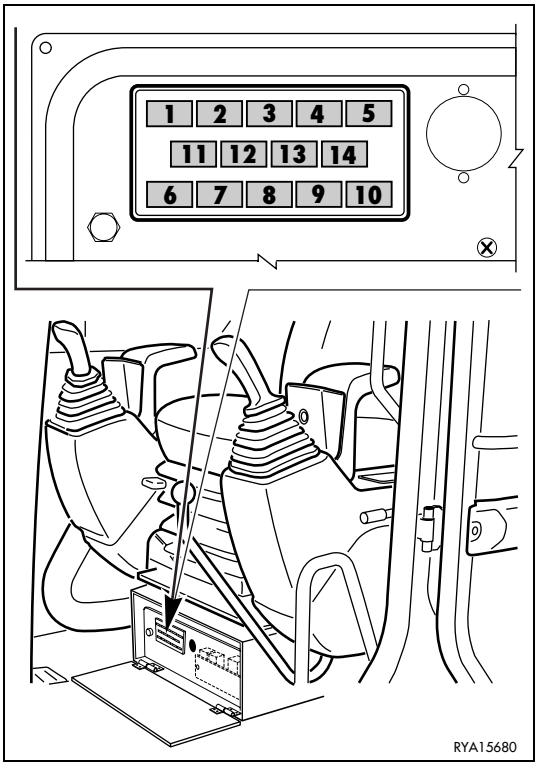


| POSITION | COLOUR | CAPACITY (A) | INVOLVED CIRCUIT |
|---|---|---|---|
| 1 | Red | 10 | Low beam (56B) |
| 2 | Light blue | 15 | High beam (56A) |
| 3 | Brown | 7,5 | Outlet, radio, overhead lamp |
| 4 | Brown | 7,5 | Revolving light |
| 5 | Brown | 7,5 | Working light |
| 6 | Light blue | 15 | Heating |
| 7 | Brown | 7,5 | Alternator |
| 8 | Orange | 5 | Instrument board power supply |
| 9 | Brown | 7,5 | Horn |
| 10 | Red | 10 | Push-button panel relay power supply |
| 11 | Brown | 7,5 | Cab power supply (+15) |
| 12 | Light blue | 15 | Fuel pump |
| 13 | Brown | 7,5 | Engine stop |
| 14 | Red | 10 | Servo control solenoid valve |

https://truckmanualshub.com/



## 3.4.1.2 CENTRAL UNIT RELAYS

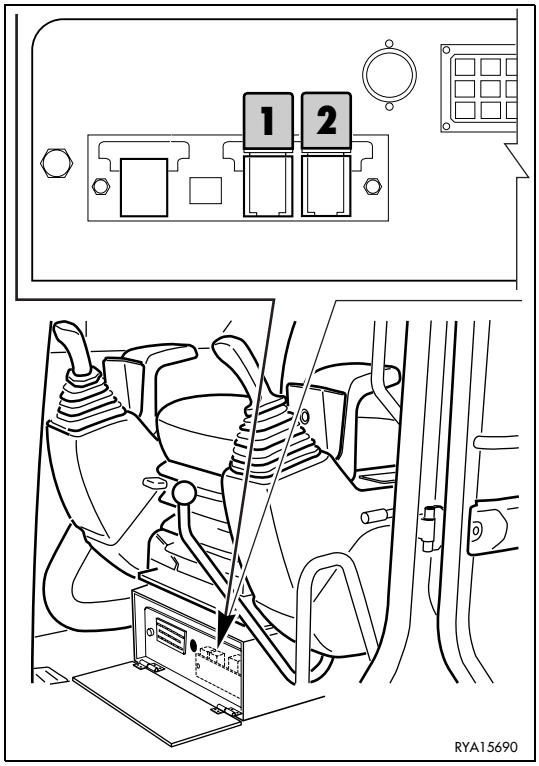


| POSITION | DESCRIPTION |
|---|---|
| **1** | (RL1) Horn relay |
| **2** | (RL2) Relay for working light on the boom |

https://truckmanualshub.com/



## 3.4.2 ENGINE LINE FUSES AND RELAYS

The fuses and relays are grouped on a single base positioned inside the engine compartment and can be reached by removing the cover (1).

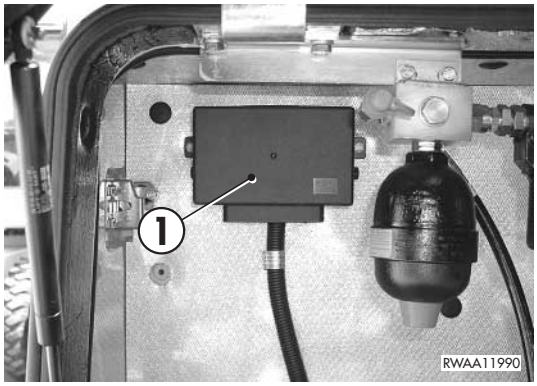


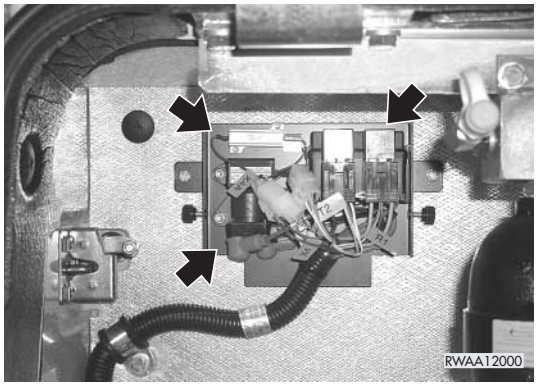


### 3.4.2.1 ENGINE LINE FUSES

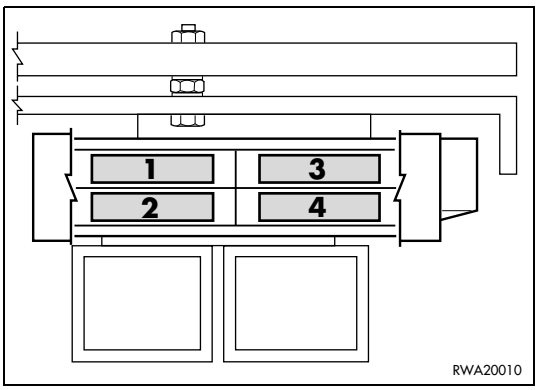


| POSITION | COLOUR | CAPACITY (A) | INVOLVED CIRCUIT |
|---|---|---|---|
| **1** | White | 80 | Plug preheating |
| **2** | Green | 30 | Injection pump solenoid pull |
| **3** | — | — | — |
| **4** | Red | 50 | System general fuse |

https://truckmanualshub.com/



## 3.4.2.2 ENGINE LINE RELAYS

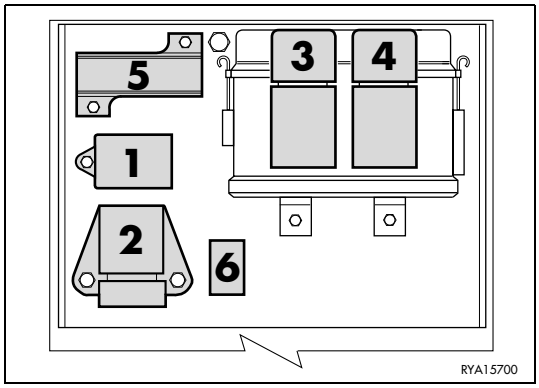


| POSITION | DESCRIPTION |
|---|---|
| **1** | Solenoid pull timer (1") |
| **2** | Plug preheating relay |
| **3** | Solenoid pull relay |
| **4** | Start consent relay, against repeated starting |
| **5** | POWER MODE resistance |
| **6** | Start consent diode |

https://truckmanualshub.com/



## 3.4.3 FUSES AND RELAYS OF THE AIR CONDITIONING SYSTEM (if provided)

The fuses and relays of the air conditioning electric system are fixed to the machine in two different positions. A first group is fixed inside the air recirculation filter casing and can be reached after removing the cover (1).

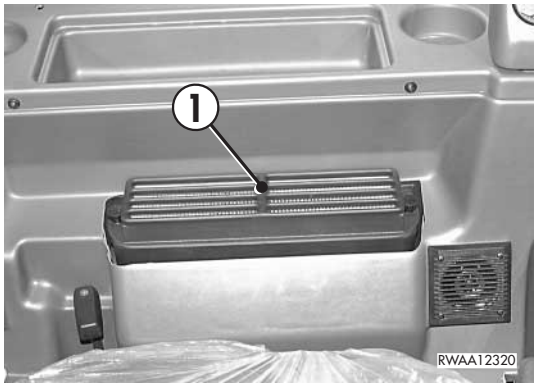


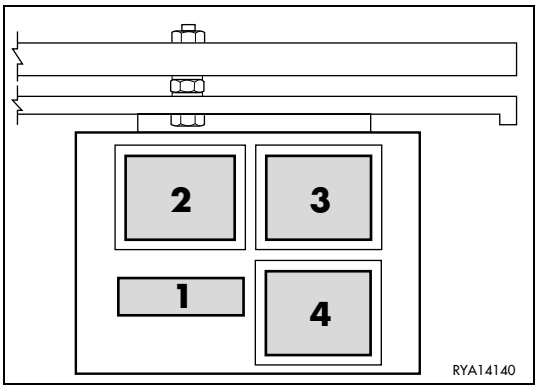


### FUSES

| POSITION | COLOUR | CAPACITY (A) | INVOLVED CIRCUIT |
|---|---|---|---|
| **1** | Light blue | 15 | 3rd speed electric fan |

### RELAYS

| POSITION | DESCRIPTION |
|---|---|
| **2** | 3rd speed electric fan switch relay |
| **3** | Load switch relay (all speeds) |
| **4** | Clutch coil diode |

https://truckmanualshub.com/



A second group is gathered in a container (2) positioned beside the battery and can be reached after opening the side cover (see “3.5.2 SIDE COVER”).

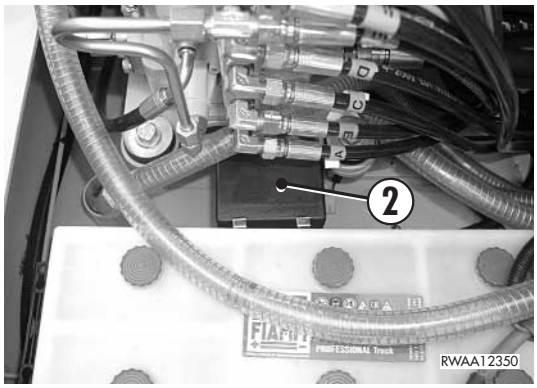


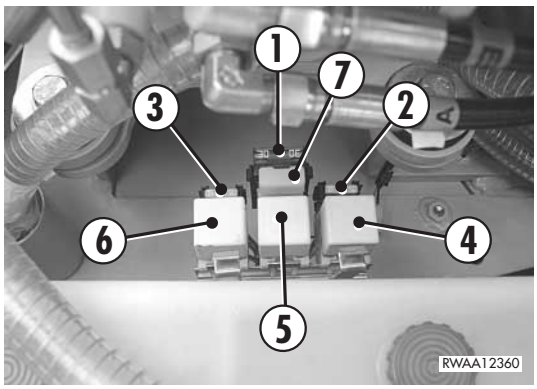


## FUSES

| POSITION | COLOUR | CAPACITY (A) | INVOLVED CIRCUIT |
|---|---|---|---|
| **1** | Green | 15 | System general fuse |
| **2** | Light blue | 15 | Electric fan (25) |
| **3** | Light blue | 15 | Electric fan (26) |

## RELAYS

| POSITION | DESCRIPTION |
|---|---|
| **4** | Electric fan switch relay |
| **5** | Electric fan 25 – 26 switch relay (1st speed) |
| **6** | Electric fan 26 switch relay (2nd speed) |
| **7** | Electric fan diode |

https://truckmanualshub.com/



# 3.5 GUARDS AND DRIVER'S SEAT

## 3.5.1 ENGINE HOOD

**DANGER**

- **Do not open the engine hood when the engine is running.**
- **Do not use the machine without engine hood and do not start the engine when the hood is open, unless this is expressly prescribed for certain maintenance operations.**
- **Non-compliance with these rules may cause serious accidents.**

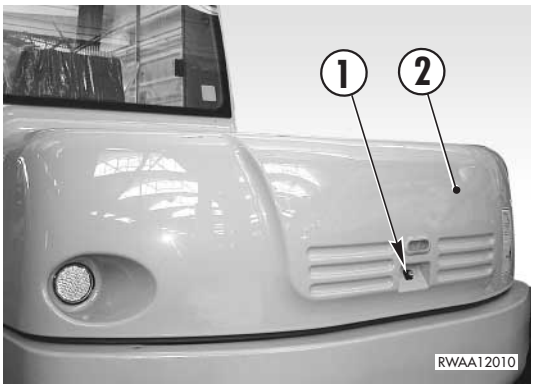


OPENING THE HOOD

After releasing the lock, press the push button (1) and raise the engine hood (2).

The maximum opening is ensured by the side pins (3).

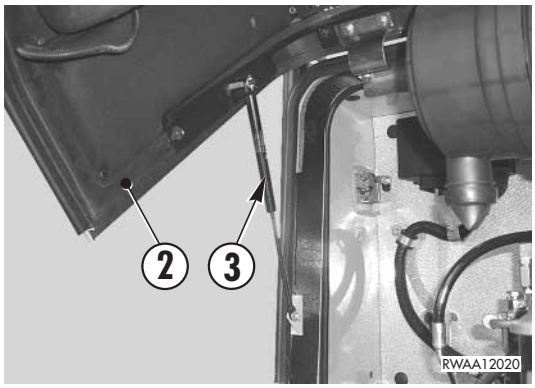


CLOSING THE HOOD

Lower the hood slowly and push it downwards until the lock snaps.

Lock the hood.

## 3.5.2 SIDE COVER

OPENING THE COVER

After releasing the lock, press the push button (1) and raise the cover (2).

The maximum opening is ensured by the pin (3) locked by the safety device (4).

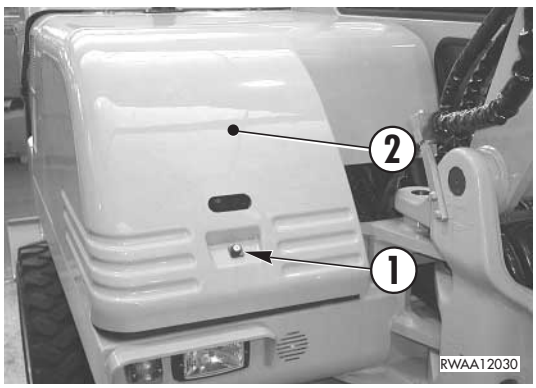


CLOSING THE COVER

Press the safety device (4) of the opening pin and lower the cover at the same time.

Push the cover downwards until the lock snaps.

Lock the cover.

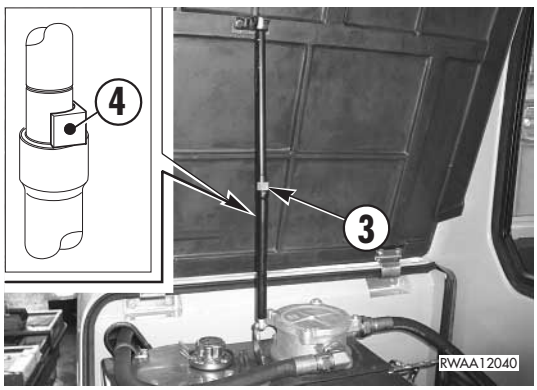

https://truckmanualshub.com/



## 3.5.3 CAB

**DANGER**

- **If the cab is subjected to an impact, or if the machine overturns, immediately contact your Komatsu Utility Dealer, who will check the stiffness of the cab and make sure that the operator's safety is guaranteed. If the cab is provided with upper safety guard, it complies with the FOPS standard – level II. The cab must also be provided with a front guard if required by the conditions of use.**

The door can be opened completely, while the front upper windshield can be opened by positioning and fixing it under the cab roof. The lower windshield can be removed, too, while the roof can be snapped open and the right windows can be partially opened by sliding them.
These solutions are particularly useful during the summer, since they ensure constant air circulation and therefore reduced stress for the operator.

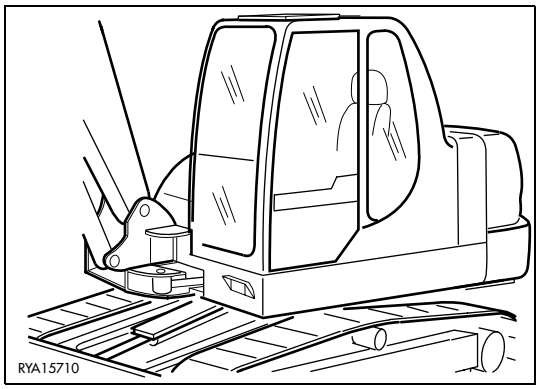


The small tank (1) positioned inside the engine compartment contains the detergent for the front windshield; make sure that this tank is always full.

**IMPORTANT**

- **If necessary, add non-flammable windshield detergent of the type used for cars.**

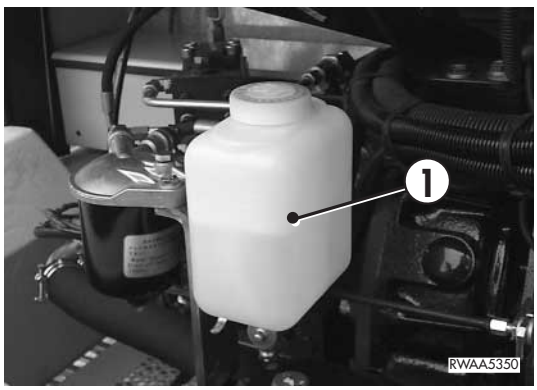

https://truckmanualshub.com/



- The cab door (2) can be opened completely and held in position by the coupling (3).
  The coupling is automatic and is engaged when the door (2) strikes against the retainer (4).
  To release the door from the coupling (3), pull the lever (5) positioned on the left post of the cab upwards.

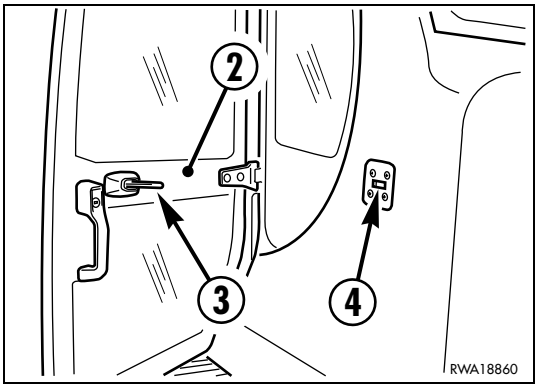


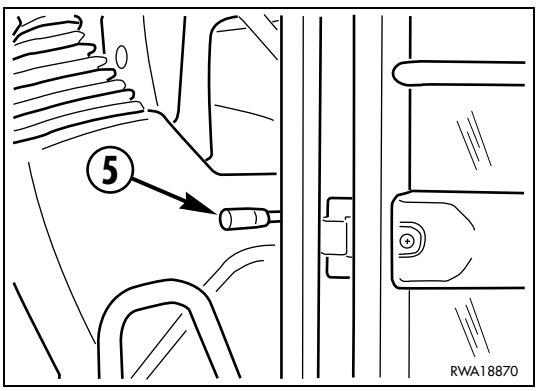


- The front windshield (6) can be opened only after disengaging the couplings (8), by pulling and lifting the window.
  Open the windshield (6) by means of the opening handles (7), after disengaging the couplings (8).
  Move the windshield to the correct position: it will automatically fit in the upper locking seats.
  To close the windshield, repeat the opening procedure in the reverse order.

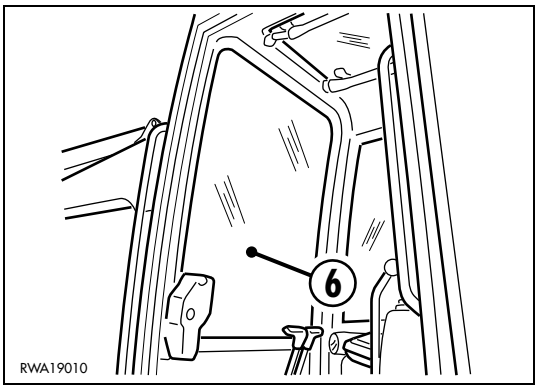


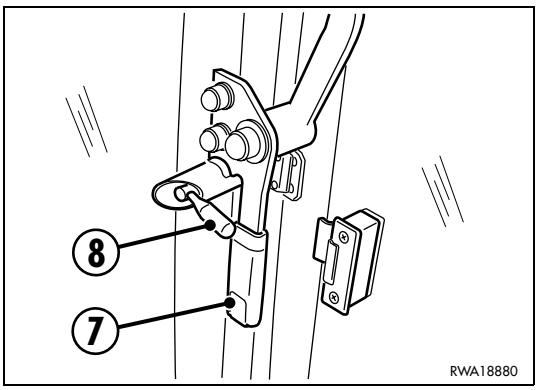

https://truckmanualshub.com/



- With open upper windshield, disengage the couplings (9) and remove the lower windshield (10).
  Position it behind the driver's seat and fasten it to the locking seats (11).

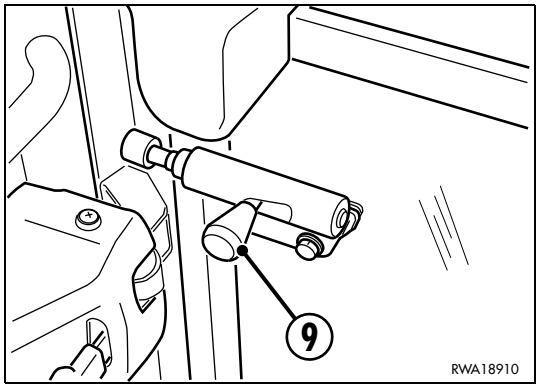


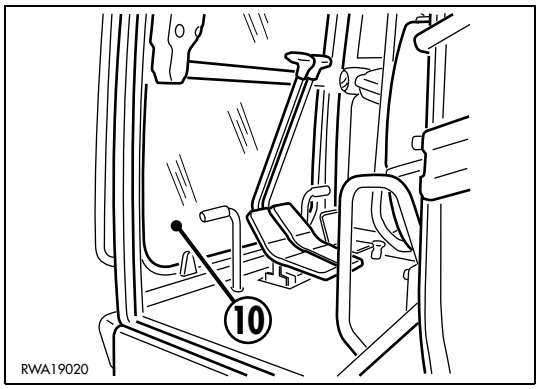


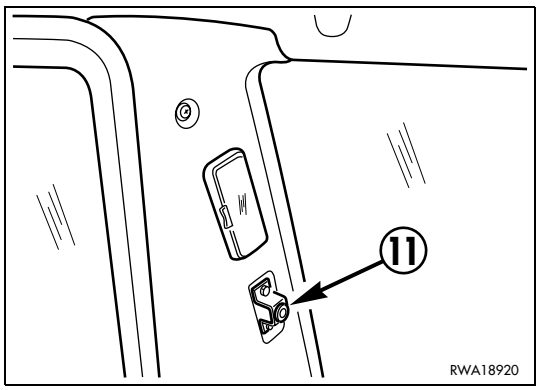


- The roof (12) can be snapped open partially or completely.
  In any case, force the pushing handles (13) upwards to open it.

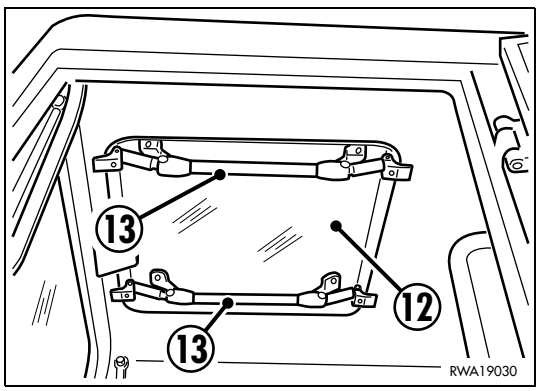

https://truckmanualshub.com/



- The side windows (14) and (15) positioned on the right side of the cab can be opened by sliding them; press the handle (16) and pull it.

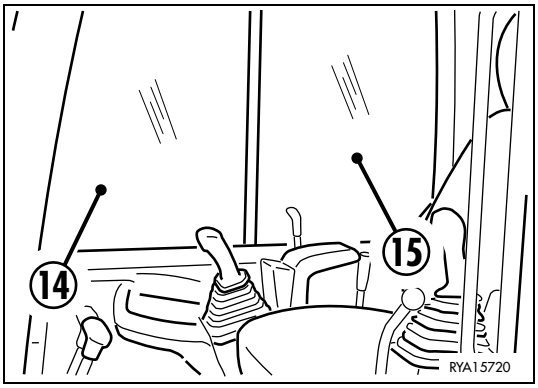


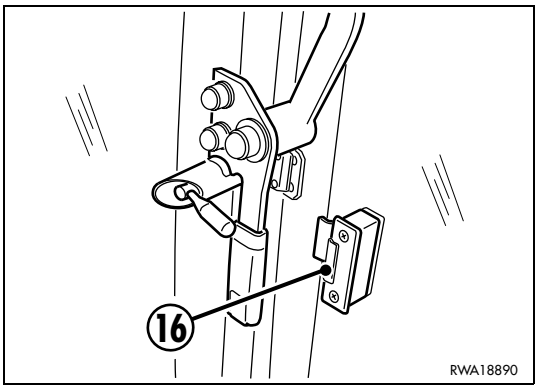

https://truckmanualshub.com/



## 3.5.4 VENTILATION AND HEATING

The ventilation and heating of the cab serve to reduce the operator's stress either in summer and in winter; these functions also serve to eliminate the condensate from the front window, thus ensuring visibility during both work and travel.
Ventilation and air change are achieved by means of a three-speed fan positioned inside the cab, under the seat support. The ventilation intensity is adjusted through the switch (2) positioned on the left console.
The ventilation and heating system requires air suction from both inside and outside the cab.
Air suction from the outside is protected by a filter positioned on the right side of the cab.
Air distribution is achieved by means of a series of orientable outlets (1) with adjustable capacity for the inner flow and for the flows that have the function to defrost and defog the front and rear windows.
A radiator having the function to heat the air conveyed into the cab is installed beside the fan; it is used in the cold season and receives the hot water necessary for the heat exchange directly from the engine cooling circuit.
The water supply flow is divided or excluded by means of a tap operated by the handwheel (2) positioned on the left console. The intensity of the flow is adjusted by turning the handwheel clockwise.
The ventilation and heating system includes also the inside air recirculation function. This function ensures more rapid heating and is very useful when the machine is operated in conditions of extreme pollution (tunnels, very dusty places, small or closed places, etc.). The recirculation of air is obtained by turning the handwheel (4) positioned on the rear right side of the cab console completely clockwise.

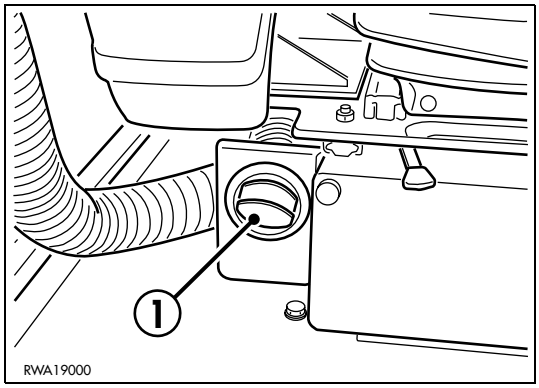


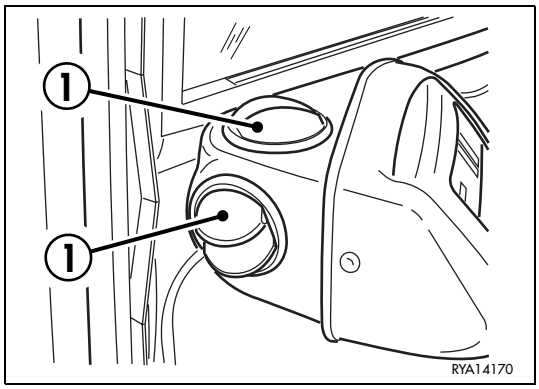


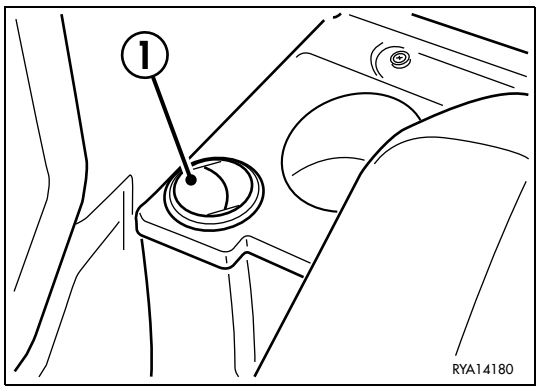


**CAUTION**

- **Do not use the air recirculation function continuously in rainy or cold days, since this would increase the fogging up of windows on the inside.**

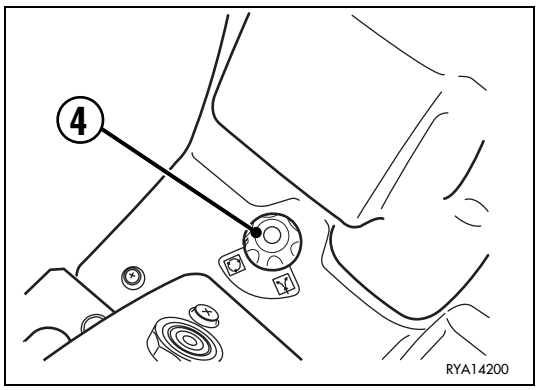


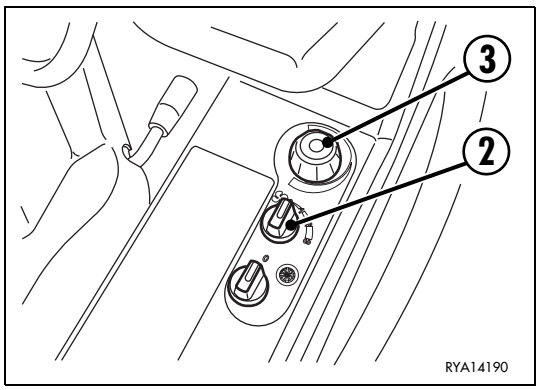

https://truckmanualshub.com/



## 3.5.5 AIR CONDITIONER (if provided)

**DANGER**

- **The coolant contained in the air conditioning system is very dangerous. If some sprays should get into the eyes or come in contact with the skin, immediately wash with plenty of water and consult a doctor. To avoid possible explosions, do not cause sparks and do not use naked flames near the system.**
- **The coolant contained in the air conditioning system is considered special waste and must be recovered and disposed of according to the antipollution regulations in force.**
- **For specific maintenance operations to be carried out on the air conditioning system, contact your Komatsu Utility Dealer. Non-compliance with this advice may cause serious damage and even death.**

The ventilation and cooling of the cab serve to reduce the operator's stress when the outside temperature is particularly high.
Ventilation and air change are achieved by means of a three-speed fan integrated in the air conditioning unit and installed inside the cab, behind the seat. The ventilation intensity is adjusted through the switch (2) positioned on the left console
The ventilation and cooling system requires air suction from both inside and outside the cab.
Air suction from the outside is protected by a filter positioned on the right side of the cab, while inside air suction (recirculation) is protected by a filter positioned on the air conditioning unit.
The recirculation of inside air ensures more rapid cooling and is very useful when the machine is operated in conditions of extreme pollution (tunnels, very dusty places, small or closed places, etc.). The recirculation of air is obtained by turning the handwheel (4) positioned on the rear right side of the cab console completely clockwise.

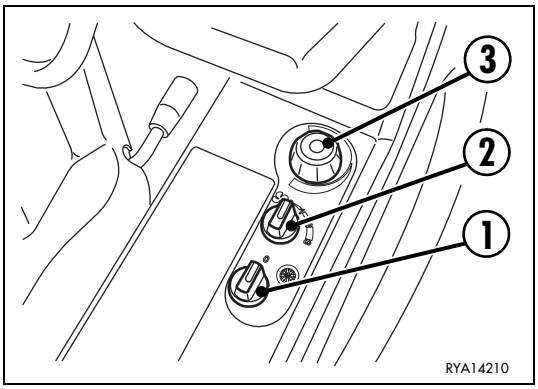


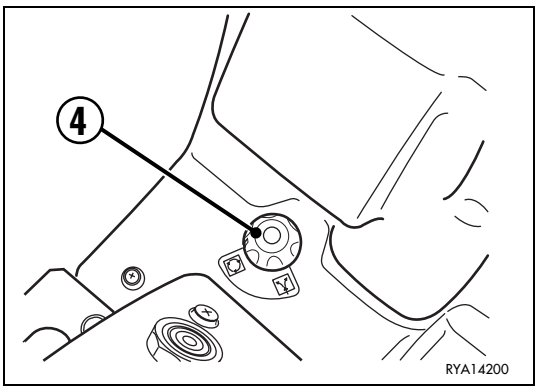

https://truckmanualshub.com/



Air distribution is achieved by means of a series of orientable outlets (5) with adjustable capacity for the inner flow and for the flow that has the function to defog the windows.

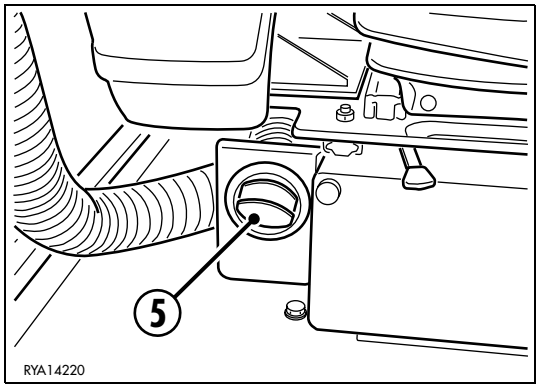


**IMPORTANT**

- **At the beginning of the hot season and before using the air conditioning, clean the suction filters (see "4.7.1.b CAB AIR FILTER" and "4.7.1.c RECIRCULATION FILTER").**
- **Before using the air conditioning, interrupt the circulation of hot water in the engine by rotating the tap (6) positioned in the engine compartment clockwise.**

The air conditioner is set in operation with the switch (1) positioned on the left console.
After starting the air conditioner (switch led on), turn the knob (3) completely anticlockwise and adjust the ventilation flow with the switch (2).

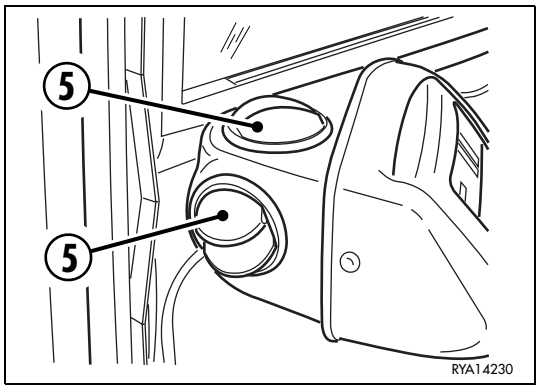


**CAUTION**

- **Even in the period during which the air conditioner is not used, operate the compressor at low speed for approximately 3-5 minutes at least once a month. This operation keeps all the moving parts of the compressor lubricated.**

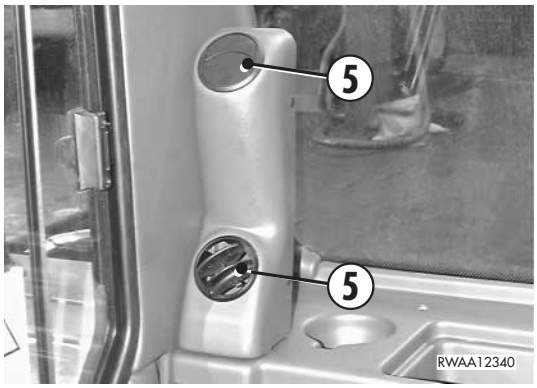


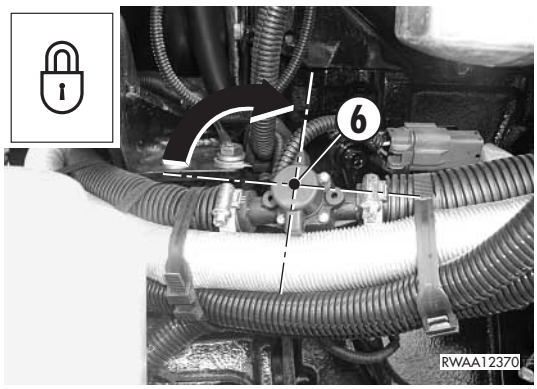

https://truckmanualshub.com/



## 3.5.6 SEAT

The seat is extremely comfortable, offering several adjustment options:

a - longitudinal adjustment;

b - back inclination adjustment;

c - adjustment of the suspension, aimed at dampening the inevitable vibrations and jerks as much as possible;

d - seat cushion inclination adjustment;

e - headrest adjustment.

The seat is assembled on a unit that slides longitudinally and can be moved forward or backward together with the control levers, the dashboard and the cutout boxes. The operator can thus choose the driving position that is most suitable for his physique.
The longitudinal adjustment of the seat is obtained by operating the lever (1) and making the seat slide on the guides; once the desired position has been found, release the lever and carry out slight movements, in order to make sure that the lock pin is engaged in its seat.
The back adjustment is achieved by operating the lever (2) while pushing with the back; the back will automatically adapt itself to the operator's body.
The adjustment of the degree of damping is carried out with the handwheel (3) and can be checked in the transparent band of the handhweel; optimal adjustment is obtained when the weight indicated in the handwheel corresponds to the operator's weight.
The suspension can be stiffened or lightened according to the operator's needs; adjust the seat suspension by rotating the handwheel (3) clockwise (+) to stiffen the suspension or anticlockwise to lighten it.
The inclination of the seat cushion is obtained by operating the lever (4) and positioning the front part of the cushion at the same time; it is possible to select 4 different positions.
The headrest height can be adjusted and the whole headrest can be inclined according to the needs of the operator.
The seat is fixed to the sliding control unit and the whole can be shifted forward or backward for 80 mm and can be locked in 6 different positions.
The longitudinal shift of the whole control-seat unit is obtained by operating the lever (5) and making the unit slide on the guides; once the desired position has been found, release the lever and carry out slight movements, in order to make sure that the lock pin is engaged in its seat.

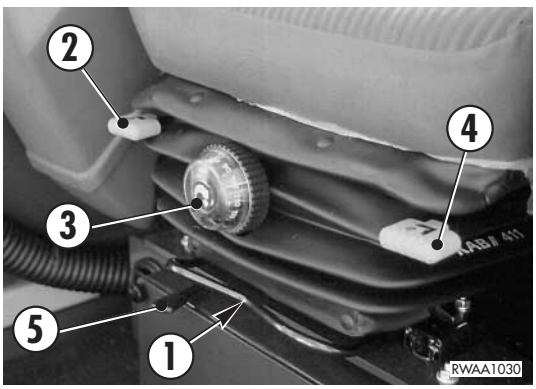

https://truckmanualshub.com/



## 3.5.7 SAFETY BELT

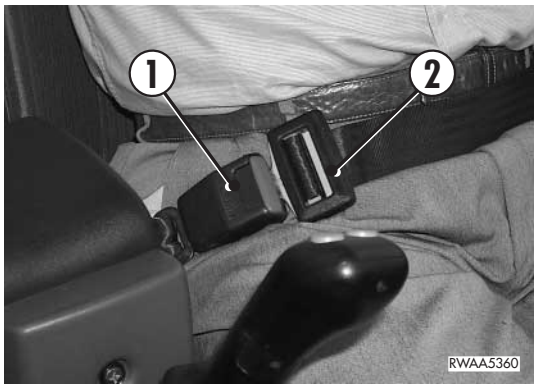


**DANGER**

- **Before starting the engine, fasten the safety belt.**
- **The safety belt must be changed when it is frayed, damaged or worn and in any case every 4 years.**

The safety belt (1) is of the type with two coupling points and adjustable length (2); it must be well tightened and hold the operator's hips, while leaving the upper part of the body completely free.

## 3.5.8 EMERGENCY EXIT

The machine is provided with an emergency exit located in the rear window (1).
Inside the cab you will find a hammer (2) to be used to break the window (1) in case of emergency.

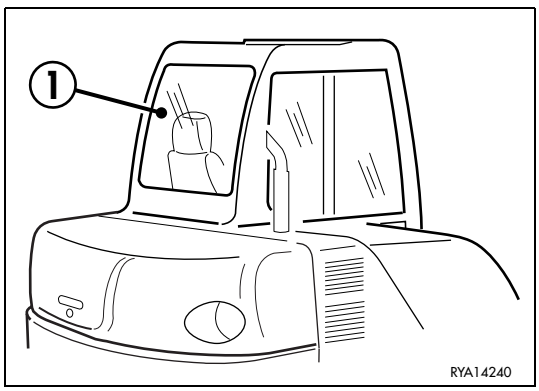


**IMPORTANT**

- **Make sure that the hammer is always available and in the correct position inside the cab.**

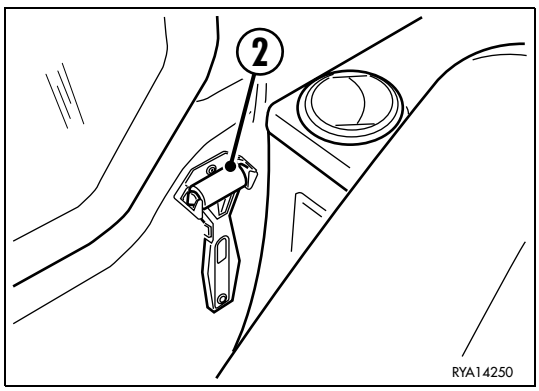


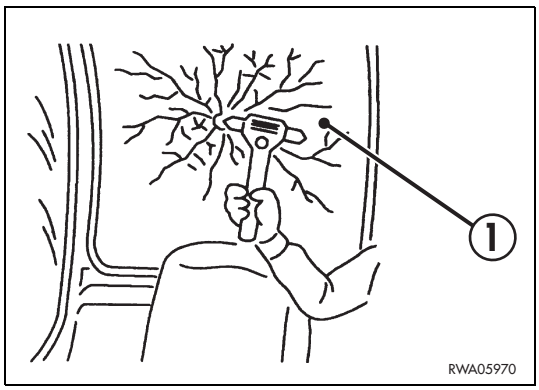

https://truckmanualshub.com/



## 3.5.9 TECHNICAL DOCUMENTATION CASE

**CAUTION**

- **The operation manual and the spare parts catalogue are integral parts of the machine and must accompany it even in case of resale.**

The technical documentation case is positioned behind the seat, and it usually contains also the ownership documents.
Keep the use and maintenance manual in this place, so that you can consult it at any moment.

## 3.5.10 FIRE EXTINGUISHER

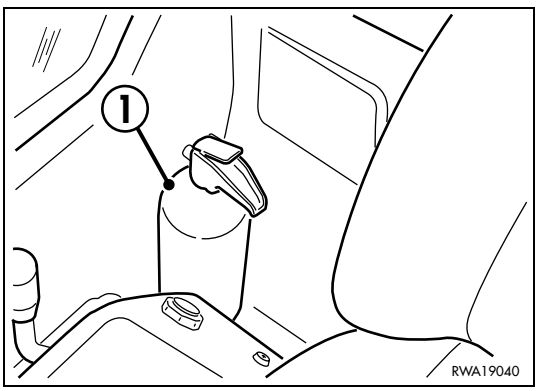


**CAUTION**

- **The machine's owner must provide for installing and fixing the fire extinguisher where prescribed.**
- **Periodically make sure that the fire extinguisher is full.**

If the operator expects that he may need a fire extinguisher (1) on the machine, he must install it by fixing it on the compartment positioned behind the seat.

## 3.5.11 FIRST AID KIT

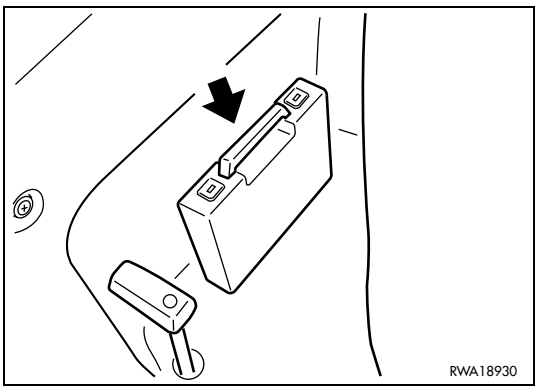


**CAUTION**

- **Periodically make sure that the first aid kit contains the necessary disinfectants, bandages, medicins, etc. and check their conditions and expiry date.**

The first aid kit must be installed by the owner of the machine and positioned inside the appropriate rear compartment.

https://truckmanualshub.com/



# 3.6 USE OF THE MACHINE

## 3.6.1 CHECKS BEFORE STARTING THE ENGINE

### 3.6.1.1 VISUAL CHECKS

**DANGER**

- **Dirt, oil and fuel in the engine compartment near its hot parts may damage the machine and even cause fires.**
  **Check frequently and eliminate any leakage; if leakages occur repeatedly, contact your Komatsu Utility Dealer.**

Before starting the engine, check around and under the machine to verify:

1 - if there are loose screws or nuts;
2 - if there are oil, fuel or coolant leakages;
3 - the wear of the work equipment;
4 - the fastening of the electrical connections;
5 - the fastening of the engine exhaust pipe and manifold;
6 - the track tension and the fastening of shoes and sprockets;
7 - if the safety and warning plates are sufficiently clean;
8 - if the handles of the operator’s cab are clean.

Any leak or anomaly must immediately be repaired/eliminated and any trace of oil or grease must be removed.
Further visual checks concern:

9 - the condition of the safety belt;
10 - the efficiency of the instruments and of the dashboard;
11 - the condition of the cab windows and the efficiency of the working lights.

### 3.6.1.2 DAILY CHECKS

**DANGER**

- **Do not smoke while refuelling or topping up the oils and do not use naked flames or non-homologated lighting means to check the fuel and oil levels, in order not to cause fires.**
- **If fuel, oil, or lubricant are spilled while filling the tanks, clean the dirty areas immediately.**

Before starting any operation, check the engine coolant, engine oil and hydraulic circuit oil levels.
At the end of work, provide for refuelling, in order to avoid the formation of condensate, always checking the fuel level on the indicator provided on the dashboard.

**IMPORTANT**

- **Avoid filling the tank completely, in order to leave room for the diesel oil to expand.**
- **After refuelling, put back the fillercap, making sure that the bleed hole is completely open.**
- **Check the engine oil level with the machine in horizontal position and the hydraulic circuit oil level with the arm and bucket cylinders retracted and the bucket teeth on the ground.**

https://truckmanualshub.com/



### 3.6.1.3 OPERATIONAL CHECKS

**DANGER**

- **All the checks must be carried out by the operator while seated, with fastened safety belt.**
- **If the machine has been stopped after use or in order to carry out maintenance operations, the safety devices may have been disconnected; when the operator gets on the cab, he must make sure that all the safety locks of the equipment controls are in the correct position and therefore that the equipment cannot move suddenly and cause accidents.**

The checks concern:

1 - the locking of the safety device;

2 - the accelerator idling position;

3 - the neutral position of the controls.

The following check is carried out by turning the ignition key to position “I” to apply voltage to the control panel and check the functionality of the acoustic alarm, fuel level indicator and the engine oil pressure, generator and preheating warning lights.

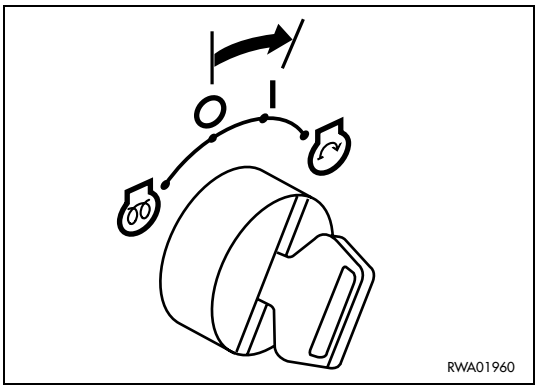

https://truckmanualshub.com/



## 3.6.2 STARTING THE ENGINE

**DANGER**

- **Before starting the engine, carefully read the instructions and information regarding safety given in this manual and make sure that you know the controls.**
  **From the moment in which the engine is started, the operator is directly responsible for any damage that may be caused by wrong manoeuvres and non-compliance with the safety regulations in force.**
- **Before starting the engine, make sure that there is no one within the operating radius of the machine and sound the horn.**

### 3.6.2.1 STARTING WITH WARM ENGINE OR IN TEMPERATE CLIMATES

1 - Turn the ignition key directly to position «⏻» (START).

2 - As soon as the engine starts, release the ignition key, which will automatically return to position «I».

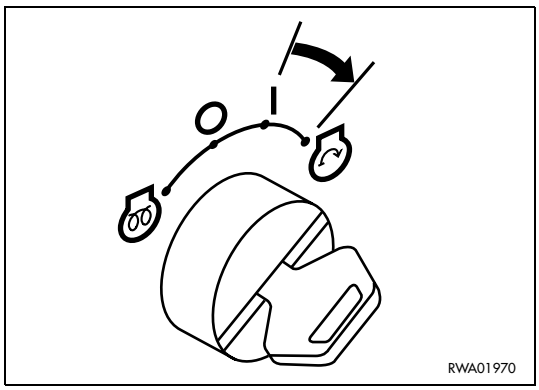


**IMPORTANT**

- **If the engine does not start within 15 seconds, release the key, which will automatically return to position «I» and wait for 30 seconds before trying again.**

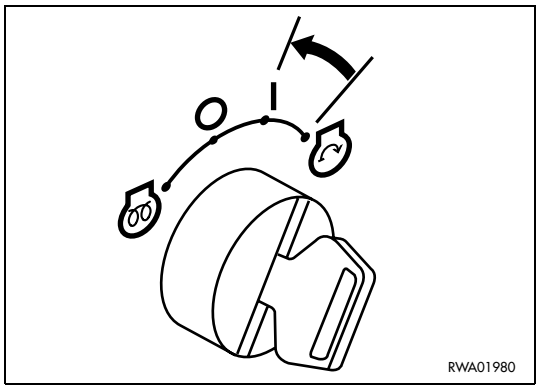

https://truckmanualshub.com/



### 3.6.2.2 STARTING WITH COLD ENGINE OR IN COLD CLIMATES

**DANGER**

- **Do not use any fluid or product that facilitate the cold starting of the engine, since these are ether-based and may cause explosions.**

1 - Pull the accelerator lever until reaching half of its stroke and turn the ignition key to the preheating positio «⏻» for maximum 15 seconds in the coldest weather.
The preheating time is determined according to the outside temperature and the recommended ratio is approximately 1 second for each degree below zero.
The preheating is signalled by the warning light positioned on the dashboard.

2 - Turn the ignition key to position «⏻» (START) until the engine starts and for maximum 15 seconds.

3 - As soon as the engine starts, release the ignition key, which will automatically return to position «**I**» and reduce the speed to idling.

**IMPORTANT**

- **If the engine does not start at the first attempt, repeat the operations 1 and 2 after waiting for at least 1 minute, in order not to overload the battery.**

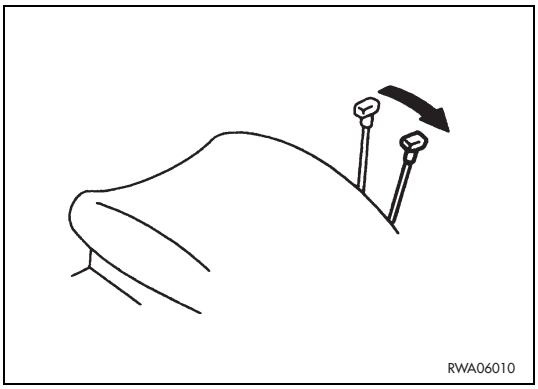


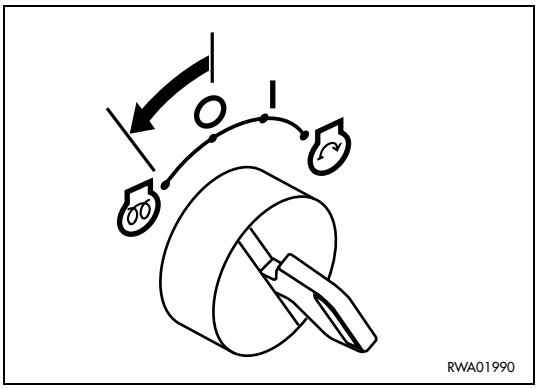


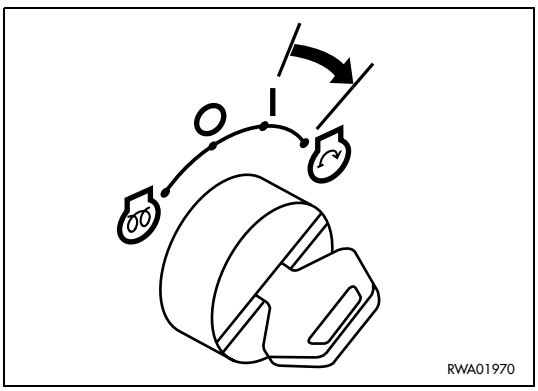


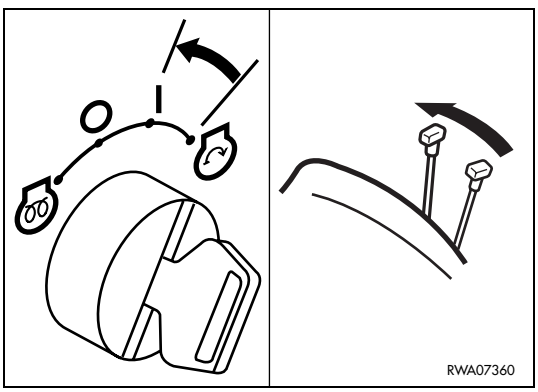

https://truckmanualshub.com/



## 3.6.3 WARMING THE ENGINE

1 - After starting the engine, let it warm up before starting work.

2 - The ideal warming up of the engine is achieved by making the engine run at idling speed by means of the hand accelerator.

**IMPORTANT**

- **Do not accelerate completely or abruptly until the coolant temperature has reached at least 60°C.**

3 - To reduce the time necessary to warm up the engine, accelerate now and then.

4 - During the warming up of the engine, check the colour of the exhaust gases and verify if abnormal noises or vibrations can be noticed; any anomaly must be verified and its cause must be eliminated.

## 3.6.4 HEATING THE HYDRAULIC OIL

When warming up the engine, especially in the cold season, it is advisable to heat also the hydraulic system oil. For this reason, when the coolant temperature has reached approximately 60°C, proceed as follows:

1 - Release the safety device of the controls (See “3.1 SAFETY LOCKS”).

2 - Slowly extend and retract the arm and the bucket completely for several times.

3 - Lower the bucket to the ground and lock the safety device again

## 3.6.5 HOW TO MOVE THE MACHINE

**DANGER**

- **Before moving the machine, make sure that you know the control functions and all the relevant safety regulations perfectly.**
- **Make sure that the upper structure is directed towards the blade and lock it in this position by means of the rotation lock.**
- **The operator must be seated in the driving position with fastened safety belt.**
- **Before moving the machine, make sure that there is no one within the operating radius of the machine and that there are no obstacles in the surrounding area.**
- **Be extremely careful when engaging the reverse and make sure that there are no persons, working means or obstacles in the way.**
- **Avoid manoeuvres or changes of direction when travelling at full speed, since the manoeuvres carried out in these conditions cause abrupt movements.**
- **Do not use the speed increase function when changing direction or carrying out a counter-rotation.**

https://truckmanualshub.com/



Before moving the machine, check the instruments, warm up the engine and the hydraulic system oil, make sure that the rotation lock is engaged, the safety device is released, the blade is raised and the work equipment is at least at 40÷50 cm from the ground; the control levers must be in neutral position.

1 - Pull the accelerator lever and set the engine running at idling speed.

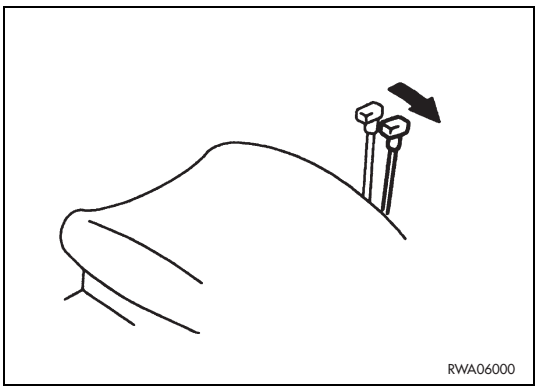


2 - Operate the levers (right and left) at the same time, shifting them forward to make the machine advance or backward to make it move in reverse.

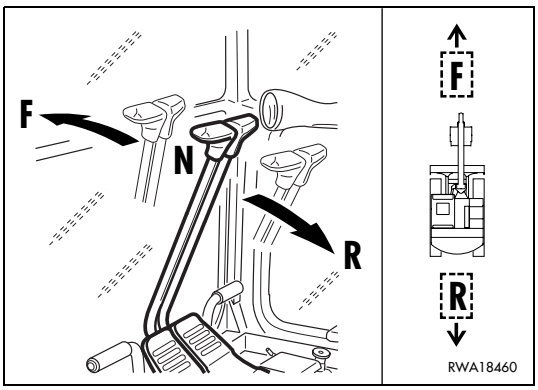


3 - The travel speed may be increased by pressing the push-button (1), (led 2 on). Press the push-button again (led 3 on) to return to normal speed.

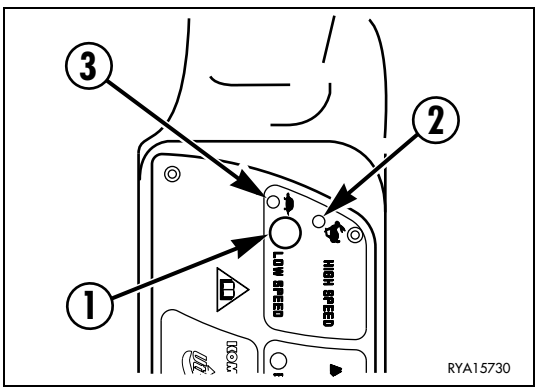


**IMPORTANT**

- **Do not use the speed increase function when performing steering or counterrotation manoeuvres.**

https://truckmanualshub.com/



### 3.6.5.1 STEERING (CHANGING DIRECTION)

**DANGER**

- **When the blade is directed backward, the operation of the travel levers is inverted; before operating the travel levers, check the position of the blade.**
- **If possible, avoid any abrupt change of direction. Counter-rotations should be carried out with the machine at rest.**
- **Due to the considerable friction created when changing direction, it is advisable not to use the speed increase function.**

#### CHANGING DIRECTION WHEN THE MACHINE IS NOT MOVING

To turn to the left, operate the RIGHT travel lever as indicated below. To move FORWARD, push the lever. To move BACKWARD, pull the lever.

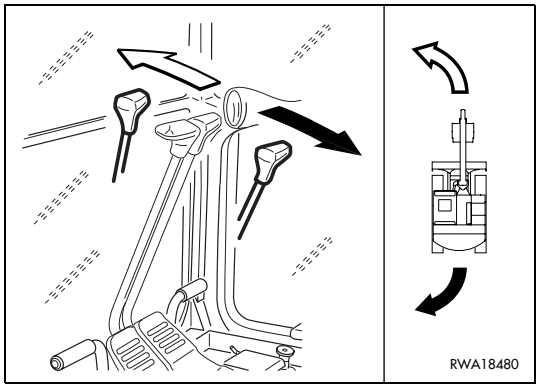


**IMPORTANT**

- **To turn to the right, operate the LEFT travel lever in the same way.**

#### CHANGING DIRECTION WHEN THE MACHINE IS MOVING (the left and right travel levers are in the same position)

To turn to the left, shift the LEFT travel lever back to the neutral position; the machine will turn to the left.

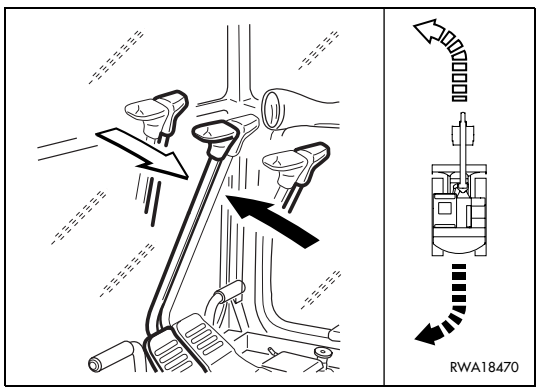


**IMPORTANT**

- **To turn to the right, operate the RIGHT travel lever in the same way.**

#### HOW TO CARRY OUT A COUNTER-ROTATION (with the machine not moving)

To turn to the left, pull the LEFT travel lever backward and push the RIGHT travel lever forward.

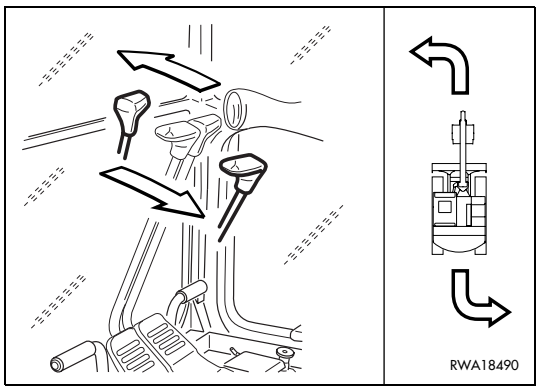


**IMPORTANT**

- **To carry out a counter-rotation to the right, pull the RIGHT travel lever backward and push the LEFT travel lever forward.**

https://truckmanualshub.com/



### 3.6.5.2 MOVING ON SLOPES

**DANGER**

- **Do not work on slopes with inclination exceeding 30°, since in these conditions the machine may overturn.**
- **When moving on slopes, do not use the travel speed increase function.**

When working on slopes some precautions should be taken to avoid risks for the operator and anyone in the vicinity; the checks and operations to be carried out are the following:

1 - Always check the work area for snow, landslips, gravel, loose ground and anything that may suddenly modify the work conditions and the stability of the machine.

2 - When it is necessary to travel downhill, the bucket must always be directed downwards, in the position indicated in the figure.

3 - When travelling uphill, the bucket must always be directed upward.

4 - When moving the machine during work, always lower the bucket.

5 - Carry out any lateral movement on a flat surface at the beginning or at the end of the slope; if this is not possible, move obliquely, keeping the machine axis as parallel to the slope direction as possible.
Do not move too obliquely or, even worse, with the machine axis rotated by 90° with respect to the slope direction.

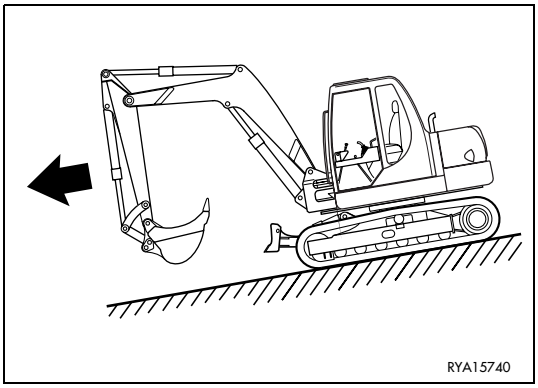


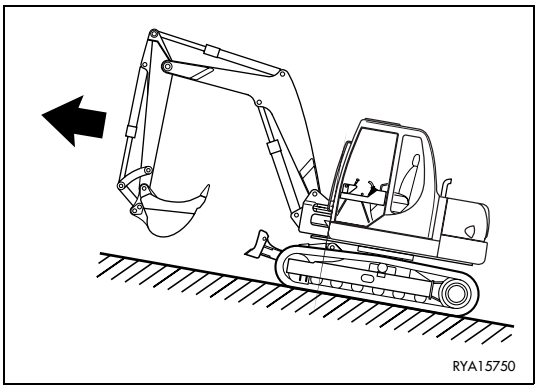

https://truckmanualshub.com/



### 3.6.5.3 MAXIMUM IMMERSION DEPTH

**DANGER**

- **If it is necessary to work with the machine immersed in water on on river banks or sea shores, always check the water depth and the current flow.**
- **Make sure that the surface on which you are working is sufficiently firm.**

If it is necessary to work with the machine immersed in water, make sure that the maximum depth does not exceed the center line of the upper roller and in any case that the engine cooling fan does not touch the water, since it may get damaged or even break

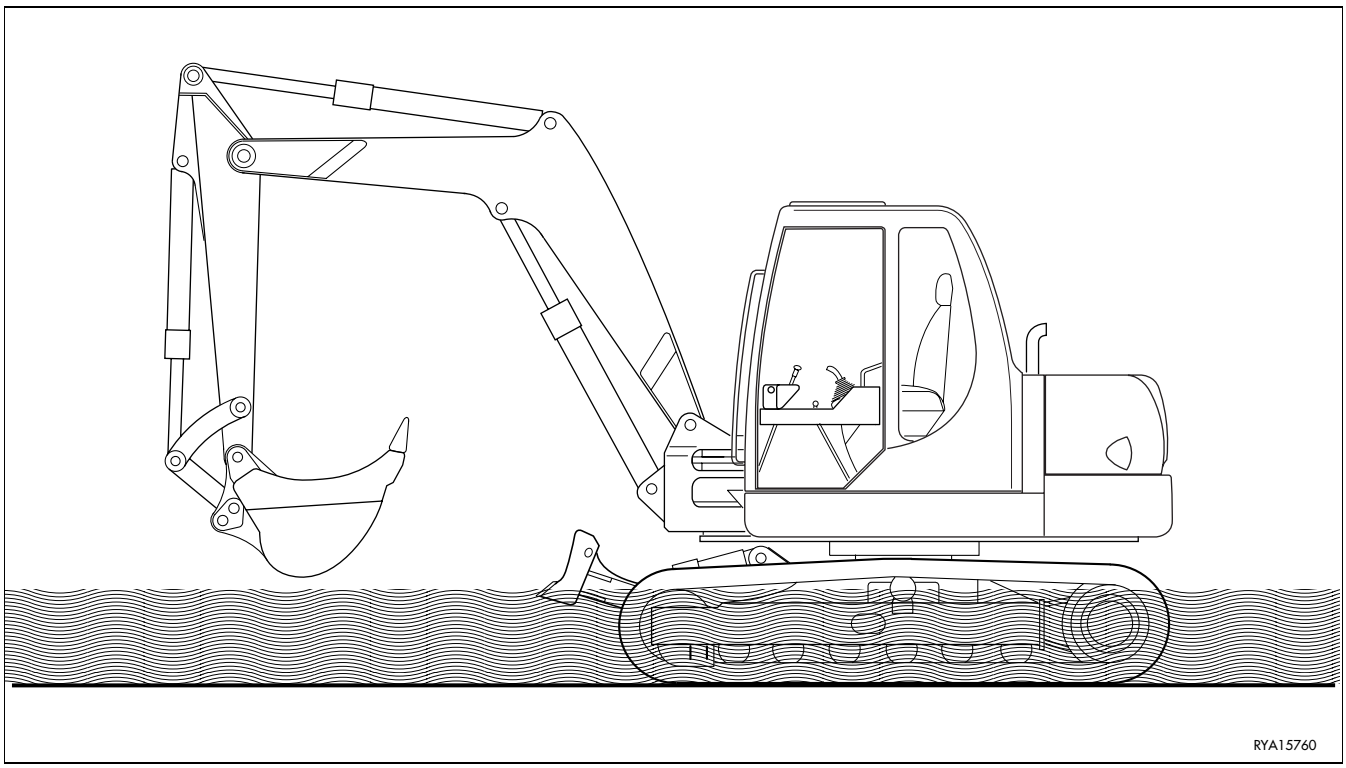


**CAUTION**

- **When working in water or on muddy ground, lubricate the articulations more frequently than usual.**
- **After work, remove any dirt or mud and lubricate the articulations.**

https://truckmanualshub.com/



# 3.7 PARKING THE MACHINE

## 3.7.1 PARKING ON LEVEL GROUND

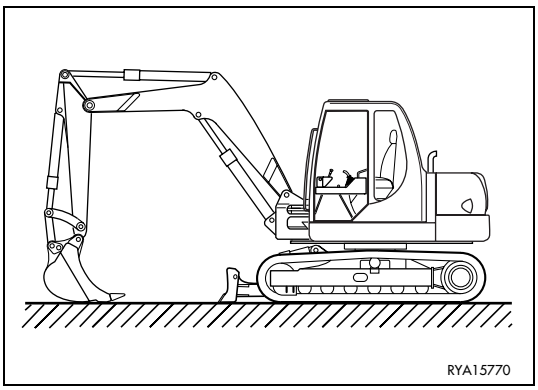


**DANGER**

- **Park the machine on firm and level ground, in a sufficiently wide space, so that the checks, the daily lubrication and the refuelling can be carried out without problems.**
- **Lower the blade and the work equipment to the ground.**
- **Keep to all the safety rules, in order to avoid any movement of the machine when the operator is absent.**
- **When leaving the machine, remove the ignition key and lock the cab.**

1 - Park the machine on firm and level ground, in a sufficiently wide space.

2 - Lower the blade and the bucket to the ground; if there is not enough space, the work equipment must be folded and secured with the appropriate locks.

3 - Engage the safety lock of the boom swing control and of the upper structure rotation and shift the safety device lever to the lock position.

4 - Stop the engine following the procedure indicated in paragraph “3.8 STOPPING THE ENGINE”.

5 - Leave the driving position using the tracks, the handles and the undercarriage.

6 - Refuel, taking the necessary precautions.

7 - Remove the ignition key and lock the cab.

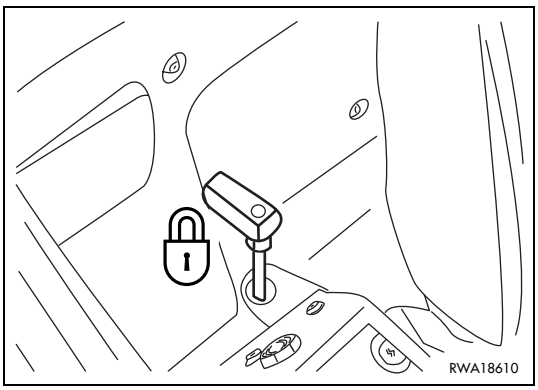


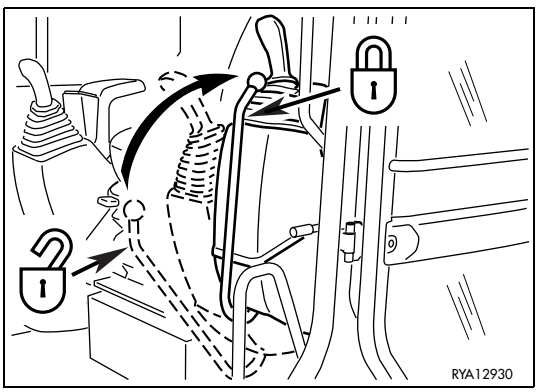


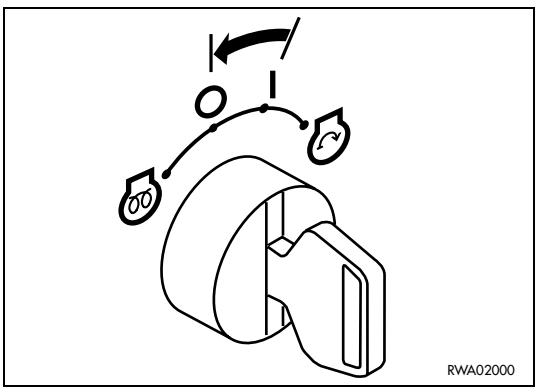

https://truckmanualshub.com/



## 3.7.2 PARKING ON SLOPES

**DANGER**

- **The movement of the machine when the operator is not on board may cause serious accidents and even death; to prevent this, carry out the operations described below.**
- **Park on slopes only when it is absolutely necessary.**
- **Park only with the bucket directed downwards.**

1 - Park the machine with the bucket directed downwards and resting against an obstacle.
If this is not possible due to the absence of natural obstacles, rotate the bucket in the dumping position and thrust the teeth into the ground.

2 - Lower the blade to the ground.

3 - Engage the safety lock of the boom swing control and of the upper structure rotation and shift the safety device lever to the lock position.

4 - Stop the engine following the procedure indicated in paragraph “3.8 STOPPING THE ENGINE”.

5 - Leave the driving position using the tracks, the handles and the undercarriage.

6 - Put wedges under the tracks.

7 - Refuel, taking the necessary precautions.

8 - Remove the ignition key and lock the cab.

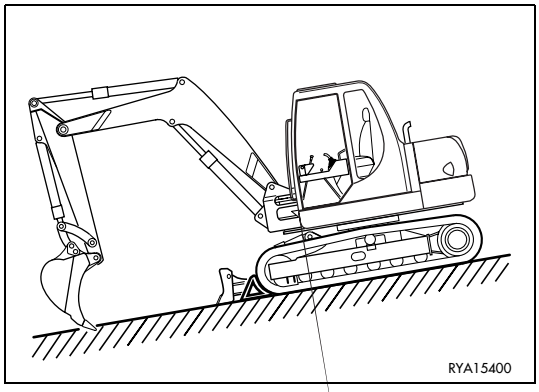


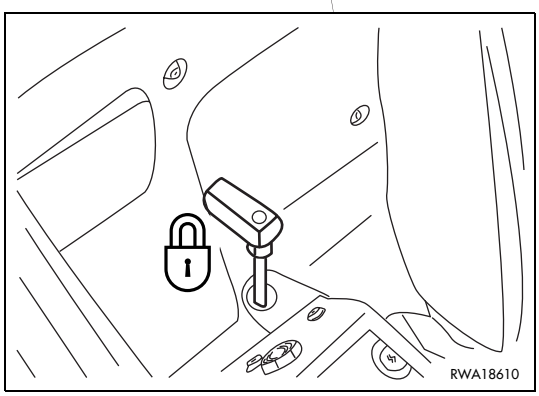


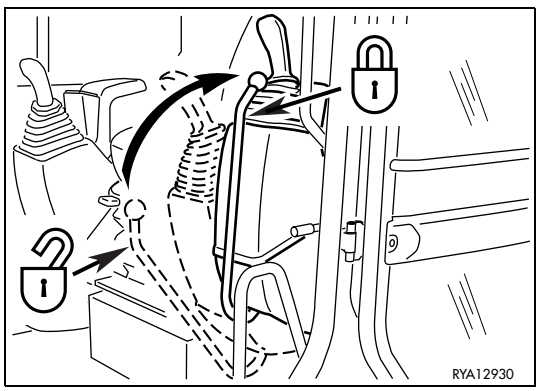


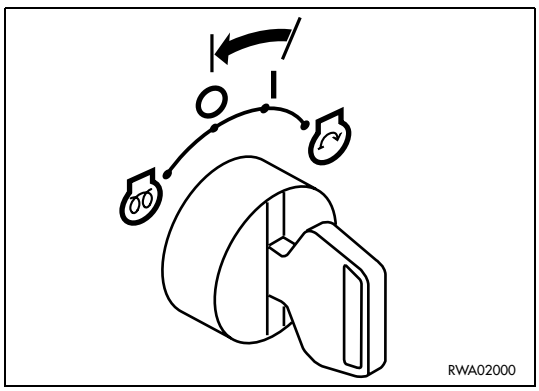

https://truckmanualshub.com/



# 3.8 STOPPING THE ENGINE

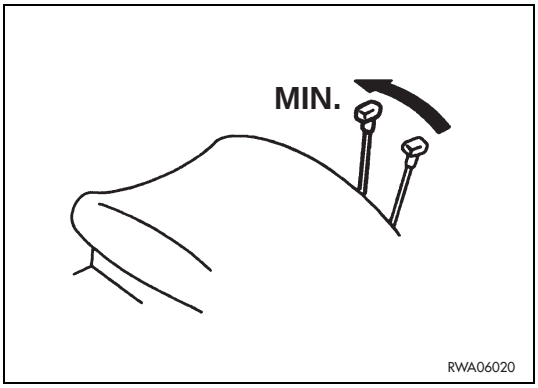


**IMPORTANT**

- **The sudden stop of the engine while it is running shortens its life. Do not stop the engine suddenly, except in case of emergency.**
- **It is likewise recommended not to stop the engine suddenly if it has been running for a long period and is still hot; in this case, let the engine idle for about 5 minutes, in order to allow it to cool down gradually before stopping it.**

Before stopping the engine, proceed as follows:

1 - Rest the work equipment onto the ground.

2 - Shift the levers to the neutral position and connect the safety devices.

3 - Shift the accelerator lever to the idling position.

Stop the engine by turning the ignition key to position «**O**» (OFF).

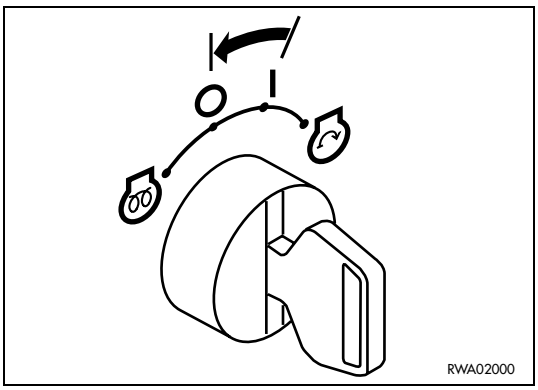

https://truckmanualshub.com/



# 3.9 TRANSPORTING THE MACHINE ON OTHER VEHICLES

## 3.9.1 LOADING AND UNLOADING THE MACHINE

**DANGER**

- **The loading and unloading of the machine on-off the means of transport must be carried out on a flat surface and at a safety distance from the edges of ditches or from the road side.**
- **Block the means of transport by positioning wedges before and behind each wheel.**
- **Make sure that the ramps are sufficiently strong; if necessary, reinforce them with blocks, in order to prevent any dangerous bending.**
- **Make sure that the ramps have the same length, are firmly anchored to the vehicle, are parallel to each other and perpendicular to the loading board; the distance between the ramps must be suitable for the machine gauge.**
- **Position the ramps with a maximum inclination of 15°.**
- **Remove any trace of oil, grease or ice from the ramps and the loading board.**
- **Do not change direction when the machine is already on the ramps; if necessary, go down and find the correct direction.**

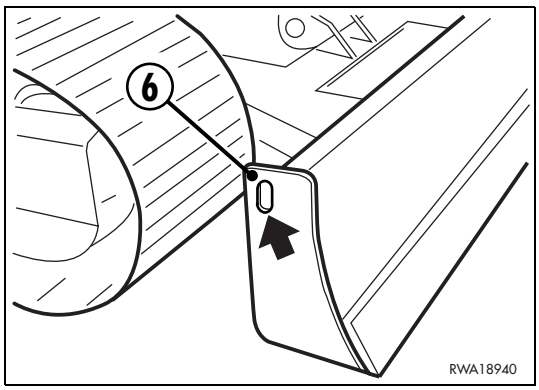


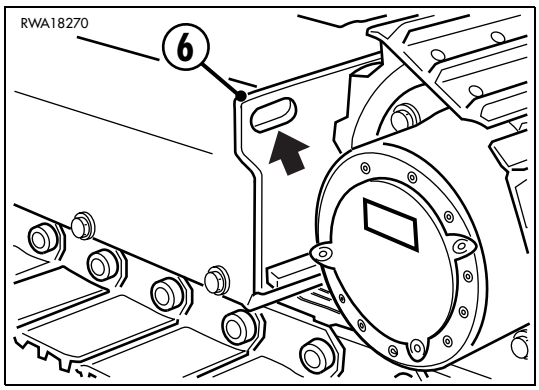


1 - The machine must get on the ramps with the bucket (1) directed forward and raised from the ground.

2 - Once the machine has been loaded, rotate the upper structure by 180° and engage the antirotation lock, lower the blade (2) and the work equipment to the ground and shift the safety device lever to the lock position.

3 - Stop the engine and remove the ignition key.

4 - Keep the machine in position by putting wedges (3) before and behind the tracks.

5 - Fix the machine with tie-downs or chains (4) in the anchorage points (6).

6 - Protect the end of the exhaust pipe (5).

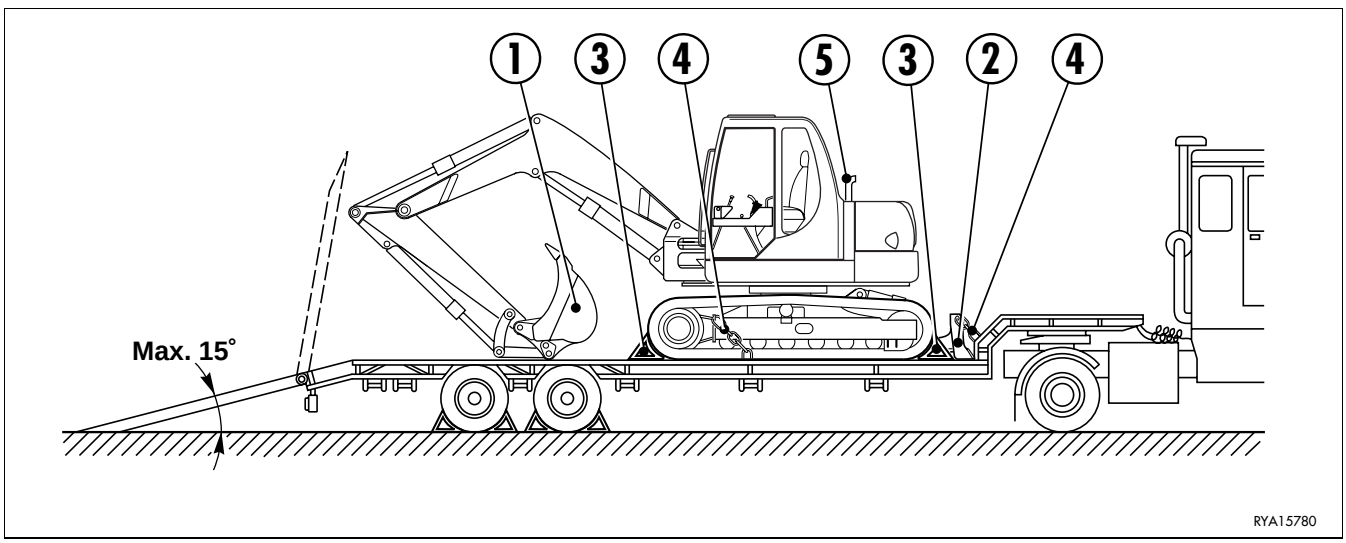

https://truckmanualshub.com/



## 3.9.2 TRANSPORT

1 - Check the overall dimensions; the height, width and weight of the means of transport - machine included - must be compatible with the road and any tunnel, underpass, bridge, electric or telephone line that may be found on the way.

2 - Keep to the regulations in force regarding signals, speed limits, road traffic, authorizations, etc

https://truckmanualshub.com/



# 3.10 PRECAUTIONS TO BE TAKEN IN THE COLD SEASON

During the cold season or in areas where the temperature is particularly low, especially during the night, it is necessary to take some countermeasures meant to limit the damage deriving from low temperatures.

## 3.10.1 FUEL AND LUBRICANTS

1 - Change the fuel and use the winter fuel ASTM D975 N. 1.

2 - Change the engine oil with an oil with suitable viscosity.
For the relevant specifications, see “4.3 FUEL, COOLANT AND LUBRICANTS”.

## 3.10.2 COOLANT

**DANGER**

- **The coolant containing antifreeze is flammable; do not smoke and do not use naked flames during the checks and when preparing the mixture.**
- **Do not use methanol-, ethanol- or propanol-based antifreezes.**

---

1 - Use only permanent ethylene glycol-based antifreeze with the addition of anticorrosion and antifoam products.

2 - The antifreeze-water ratio must be 50% (50% antifreeze and 50% water).

3 - Do not use plugging additives, either alone or added to the antifreeze, to eliminate leakages.

4 - Do not mix antifreeze of different brands.

5 - The use of permanent antifreeze requires only the level check and the routine change. It is not necessary to wash the cooling circuit.

6 - The required standards for permanent antifreeze are the following: SAE-J1034 and FEDERAL STANDARD O-A-548D.
In case of doubt regarding the compliance of the antifreeze used with the standards, contact the manufacturer and ask for precise information.

https://truckmanualshub.com/



## 3.10.3 BATTERY

**DANGER**

- **To avoid explosions due to the presence of gas, do not provoke sparks and do not use naked flames near the battery.**
- **The battery electrolyte is dangerous. If it comes in contact with the eyes or the skin, immediately rinse with plenty of water and consult a doctor immediately.**

1 - When the ambient temperature decreases, the battery capacity decreases accordingly and, if the battery charge is low, the electrolyte may freeze.
Keep the battery completely charged and insulate it to protect it from low temperatures, so that the machine can be started without problems the following day.

2 - Measure the specific weight of the fluid and check the battery charge percentage, making reference to the following table

| CHARGE PERCENTAGE | FLUID TEMPERATURE | | | |
|---|---|---|---|---|
| | 20°C | 0°C | -10°C | -20°C |
| 100% | 1.28 | 1.29 | 1.30 | 1.31 |
| 90% | 1,.26 | 1.27 | 1.28 | 1.29 |
| 80% | 1.24 | 1.25 | 1.26 | 1.27 |
| 75% | 1.23 | 1.24 | 1.25 | 1.26 |

3 - When the electrolyte level is low, add distilled water before starting work, rather than after work, in order to prevent the fluid from freezing during the night.

## 3.10.4 OTHER PRECAUTIONS

1 - Before using the machine in normal operating conditions, carry out some slow movements either forward and in reverse, and operate all the work equipment cylinders slowly more than once.
These operations serve to warm up and decrease the viscosity of the oil in the hydraulic circuit and the reduction gears.

## 3.10.5 PRECAUTIONS TO BE TAKEN AT THE END OF WORK

1 - Completely remove mud and water from the machine body.
Park the machine on firm ground; if the machine must be parked near banks or ditches, park it on wooden boards in order to distribute the weight of the machine on a larger surface.

2 - Be careful to water drops forming on the hydraulic cylinder rods: these drops must be completely removed, since if they freeze the cylinder gaskets may be damaged.
After removing the water drops, protect the rods with oil.

3 - Drain the condensate that may have formed in the tank and in the water separator, to prevent the water from freezing during the night.

4 - Since the battery capacity may decrease considerably at low temperatures, after work cover the battery or remove it and store it at a suitable temperature.

https://truckmanualshub.com/



# 3.11 PRECAUTIONS TO BE TAKEN IN THE WARM SEASON

1 - At the end of the cold season, change the lubricants, the coolant and the fuel.

**IMPORTANT**

- **The coolant must be changed only if it is not permanent.**
  **For the relevant specifications, see “4.3 FUEL, COOLANT AND LUBRICANTS”.**

2 - Make sure that the cooling fan belt is in good conditions.

3 - Make sure that the fins of the radiator and of the heat exchanger are clean.

4 - Check the radiator cap gasket and spring; in case of doubt regarding tightness and setting, change the cap.

https://truckmanualshub.com/



# 3.12 USING THE WORK EQUIPMENT

**DANGER**

- **Always fasten the safety belt before any manoeuvre.**
- **Before starting work, warn the persons in the vicinity by means of the horn positioned on the right lever.**
- **If due to a sudden failure the machine stops with raised equipment, turn the ignition key to position «I», release the safety device, gradually operate the boom lowering control lever until the bucket rests on the ground and release any residual pressure.**

**IMPORTANT**

- **The basic illustrations shown are those necessary for a correct use and exploitment of the machine; the operator must get to know the controls, the described operating method and learn how to organize work in a free area while seated in the driving position.**

## 3.12.1 ORGANIZING THE WORK AREA

If after a first inspection the area results to be uneven, encumbered with big obstacles or characterized by considerable height differences, before starting work it is advisable to level the ground as much as possible, both for the machine and for the vehicles to be loaded.
This preliminary operations will make work quicker, ensure better results and at the same time reduce the operator’s stress and the straining of the machine components; furthermore, this will considerably reduce the time necessary to carry out the excavation or to load the trucks destined to transport the material

## 3.12.2 POSITIONING THE BUCKET ACCORDING TO THE WORK TO BE CARRIED OUT

**DANGER**

- **When inserting the bucket connection pins in the arm and pushing arm couplings, be careful to the metal chips that may come off and hurt the operator.**
- **Always wear goggles, heavy gloves and helmet.**
- **Do not use your fingers to center the holes, since they may be injured or even cut in case of sudden or uncontrolled movements.**

BUCKET POSITIONS

The bucket can have two positions:

**Pos. 1**: suitable for normal digging operations, ensures greater power of the bucket.

**Pos. 2**: suitable for operations on vertical walls, ensures maximum rotation and maximum digging height along walls. In this condition, the breakout force is reduced.

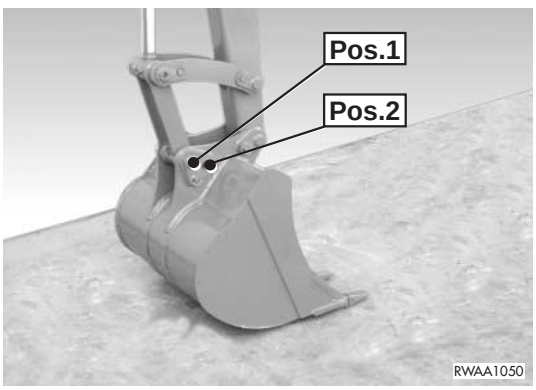

https://truckmanualshub.com/



## 3.12.3 POSITIONING THE MACHINE FOR DIGGING OPERATIONS

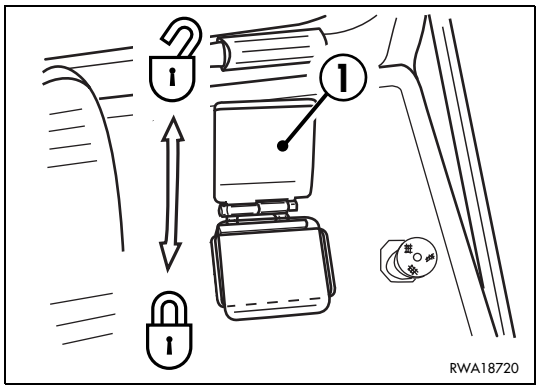


**DANGER**

- **Before moving the equipment, make sure that no one is standing in the work area.**
- **When working on a slope, position the machine horizontally on a firm and compact surface.**
- **Carry out all the possible movements and make sure that the control levers work properly.**
- **If visibility is not perfect or there are ducts or lines of any kind, work at reduced speed and ask the assistance of another operator.**

1 - Center the machine with respect to the digging line.

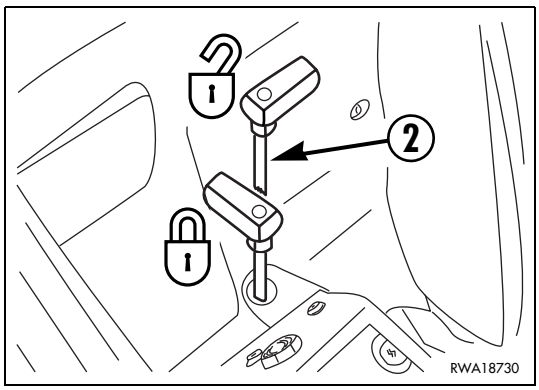


**IMPORTANT**

- **If this is not possible, because it is necessary to dig along walls or banks, swing the boom sidewards and position the machine beside the point where the excavation must be carried out.**

2 - Release the boom swing from the safety lock (1) and release the upper structure rotation by lifting the antirotation pin (2).

3 - Fasten the safety belt and accelerate until reaching a medium speed.

4 - Shift the safety device lever (3) to the release position and start work.

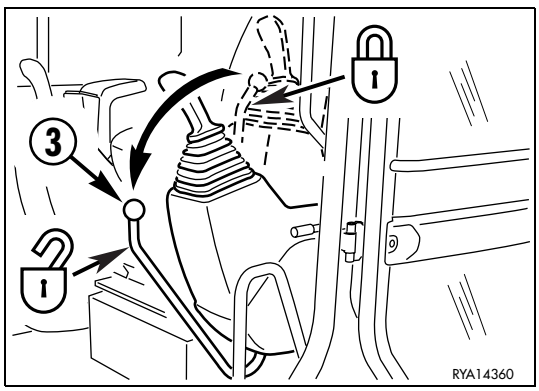

https://truckmanualshub.com/



## 3.12.4 DIGGING METHOD

**DANGER**

- **The geometry of the rotation fulcra of the arms and the bucket make it possible to dig even beyond the track line, which makes the ground give way. Never dig beyond the boom fulcrum line, since the ground may collapse and cause the machine to overturn.**

1 - At the beginning of work, keep the bucket at the correct penetration angle.

2 - Once the desired digging depth has been reached, position the bucket with its back parallel to bottom of the excavation and then start filling.

3 - During the collection phase, make the bucket, the boom and the arm move simultaneously; combined movements facilitate the filling of the bucket and therefore increase productivity.

4 - The removal depth must be correct and suitable for the type of ground; excessive depth may lock the movements, overload the engine and the pump and slow down the digging operations.

5 - To dump on heaps, dump the bucket as soon as it gets near the dumping area; the inertia resulting from the movement will ensure the compaction of the material with no need to use the bucket for this purpose, which avoids impacts and vibrations that facilitate the wear of pins and bushings.

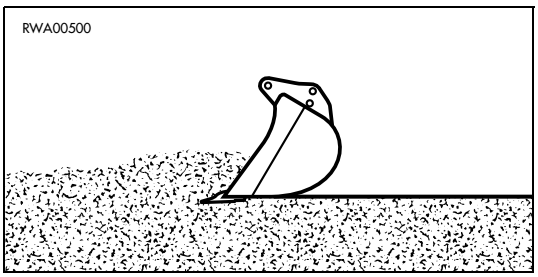


**CORRECT**
**The bucket works with its flat surface parallel to the ground.**

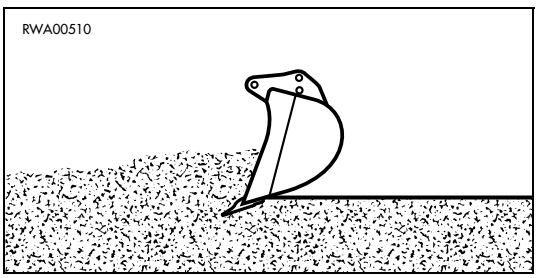


**INCORRECT**
**The bucket is thrusted downwards, slowing down the digging work.**

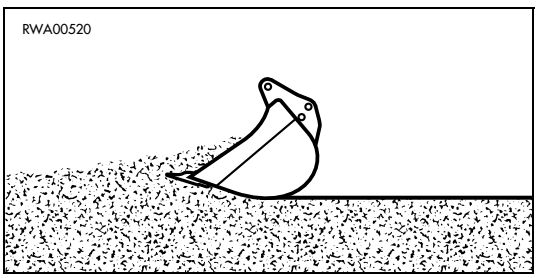


**INCORRECT**
**The bucket is pushed upwards and therefore is not filled completely.**

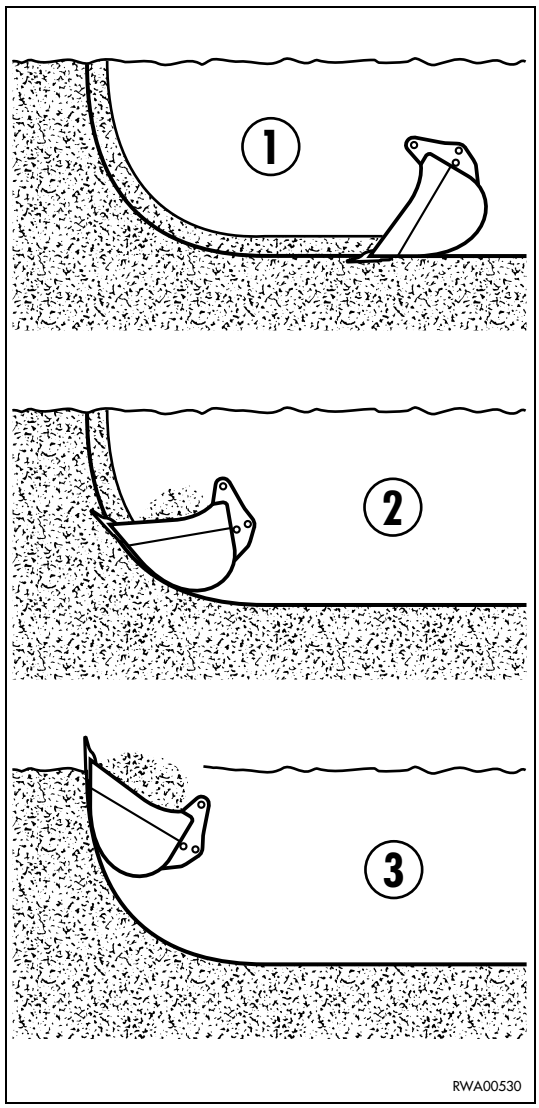


**CORRECT DIGGING METHOD**
**(Sequence 1 - 2 - 3)**

https://truckmanualshub.com/



## 3.12.5 CHANGING THE BUCKET

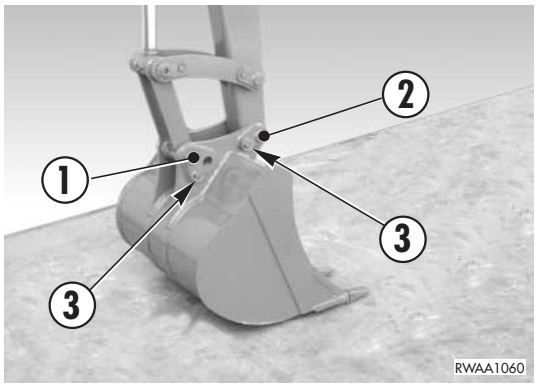


**DANGER**

- **When the coupling pins are removed or installed, chips may come off; always use gloves, goggles and helmet.**
- **The change of the equipment must be carried out by two persons, who must decide together the words and signals to use during operations.**
- **Do not use your fingers to center the holes, since they may be injured or even cut in case of sudden or uncontrolled movements.**
- **The described procedures are valid also for the coupling of the mechanical constraints of the optional equipment.**

1 - Position the bucket on a level surface, directing it so that the flat part of its back rests on the ground.

2 - Remove first the tie rod pin (1) and then the arm connection pin (2).

3 - Change the bucket, taking care to clean the pins, the bushings and the seals perfectly and to grease the pins slightly before reinstalling them.

**IMPORTANT**

- **Install first the arm connection pin, making sure that the seals are in good conditions.**

4 - Put back all the safety pins (3) and lubricate by means of the appropriate grease nipple.

https://truckmanualshub.com/



# 3.13 LONG PERIODS OF INACTIVITY

## 3.13.1 BEFORE THE PERIOD OF INACTIVITY

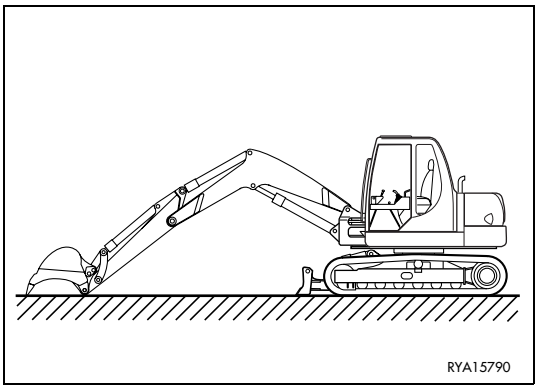


**DANGER**

- **When draining the fuel, do not smoke or bring naked flames near the machine.**
  **Place a container under the machine to gather the fuel and prevent it from spreading around.**
  **If some fuel is spilt, clean the dirty surface immediately.**

**IMPORTANT**

- **To protect the cylinder rods when the machine is not used, position the work equipment as shown in the figure.**
  **(This serves to prevent the cylinder rods from rusting).**

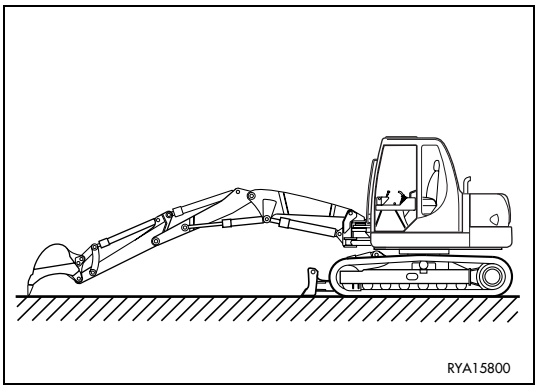


If the machine must be stored for a long period of inactivity, it is advisable to put it in a sheltered place and to take the following precautions, in order to keep all its components sound and efficient:

1 - Clean the machine thoroughly, repainting it where necessary in order to prevent oxidation.

2 - Drain and change all the fluids of the hydraulic circuits and the lubricants (engine and reduction gears), following the maintenance rules.

3 - Change all the filtering elements (air cleaner, engine oil filter, hydrulic circuit filters, diesel oil filter).

4 - Change the coolant (permanent type).

**CAUTION**

- **5 - Drain the normal fuel and fill the tank with at least 10 liters of special washing and protecting fuel.**

6 - Let the engine run for about 10 minutes, in such a way as to eliminate the residual normal fuel from the filters, the injection pump and the entire fuel supply system. This operation avoids the locking of the injection pump and the injectors.
Stop the engine and refuel with normal diesel oil.

7 - Remove the battery, check the electrolyte level and make sure that the battery charge is sufficient.
Store the battery in a room with suitable temperature and periodically recharge it.

8 - Grease the hydraulic cylinder rods and the equipment joints.

9 - Seal the end of the exhaust pipe and the fuel tank cap.

10 - Move the machine controls to the neutral position and engage all the safety locks.

11 - Hang a warning notice on the controls to indicate the condition of the machine.

12 - Lock the fuel tank cap, the engine hood, the side cover and the cab door.

https://truckmanualshub.com/



## 3.13.2 DURING THE PERIOD OF INACTIVITY

**DANGER**

- **If it is necessary to carry out a rust-prevention treatment while the machine is kept indoors, open doors and windows to increase ventilation and avoid poisoning by gas.**

Start the engine and move the machine for a short distance once a month, so that a new oil film covers all the moving parts and the surfaces of the components. Provide also for charging the battery

## 3.13.3 AFTER THE PERIOD OF INACTIVITY

**IMPORTANT**

- **If the machine is stored without carrying out the monthly rust-prevention treatment, have maintenance performed by your Komatsu Utility Dealer.**

When using the machine after a long period of inactivity, proceed as follows:

1 - Free the exhaust pipe and the fuel tank from the seals.
2 - Check all the levels (engine oil, coolant, fuel, hydraulic circuit oil).
3 - Make sure that the battery is charged and install it on the machine.
4 - Disconnect the engine stop solenoid.
5 - Turn the ignition key directly to the start position and keep it there until the engine oil pressure warning light goes out.
This operation serves to restore the lubricating oil circulation and to carry out a first lubrication cycle.
6 - Reconnect the engine stop solenoid and start the engine.
7 - Start the engine and let it idle for approximately 20 minutes.
8 - While warming up the engine, remove the protection grease from the hydraulic cylinder rods.
9 - Before moving the machine, make sure that the instruments, the warning lights and the working lights operate correctly.
10 - Warm up the hydraulic cylinders as soon as possible, by slowly moving all the equipment.

https://truckmanualshub.com/



# 3.14 TROUBLESHOOTING

## 3.14.1 HOW TO REMOVE THE MACHINE

**DANGER**

- **When removing the machine, use a wire rope suitable for the weight of the machine to be removed.**

If the machine gets stuck in mud and cannot get out using only its motive power, or in case of breakdown, use a wire rope as shown in the figure on the right.
Place wooden blocks between the wire rope and the machine body, in order to avoid damaging the rope and the machine

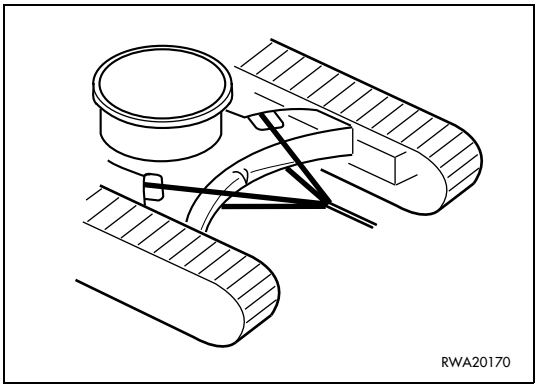


## 3.14.2 IF THE FUEL HAS BEEN COMPLETELY DEPLETED

Before starting the engine when the fuel has been completely depleted and therefore air has entered the fuel supply circuit, it is necessary to bleed the fuel supply circuit.
For the necessary operations, see “4.7.11 MAINTENANCE EVERY 500 HOURS OF OPERATION”.

https://truckmanualshub.com/



## 3.14.3 IF THE BATTERY IS DEPLETED

**DANGER**

- **When checking or carrying out any operation on the battery, stop the engine and make sure that the ignition key is in position «O»**
- **The battery produces hydrogen, which may explode. Do not use naked flames and do not smoke near the battery, and avoid producing sparks.**
- **The battery electrolyte is made of diluted sulphuric acid that may corrode the clothes and even the skin; in case of contact with this fluid, immediately rinse the involved part with plenty of water.**
  **If the acid gets into the eyes, immediately rinse with plenty of water and consult a doctor immediately.**
- **When working on the battery, always wear goggles and gloves.**
- **When removing the battery, disconnect first the earth cable (-); when installing the battery, connect first the positive cable (+).**
- **If a tool comes into contact with the positive terminal and with the machine structure at the same time, this may generate sparks with consequent risk of explosion.**
- **Carefully tighten the connection terminals, since false contacts may generate sparks with consequent risk of explosion.**

**REMOVAL**

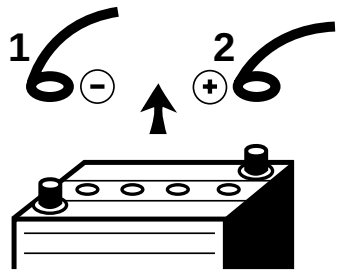


**INSTALLATION**

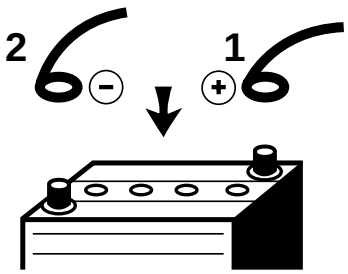


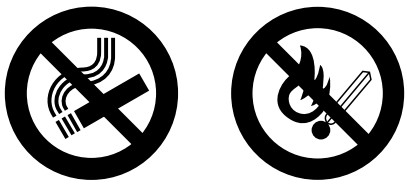

https://truckmanualshub.com/



## 3.14.3.1 STARTING WITH BOOSTER CABLES

**DANGER**

- **When starting the engine with the aid of another machine, connect the batteries in parallel.**
- **When connecting the cables, avoid any contact between the positive cable (+) and the negative cable (-).**
- **When starting the engine with booster cables, always wear safety goggles.**
- **Take care to avoid any contact between the machine to be started and the machine used as starting aid, in order to avoid sparks and therefore the explosion of the hydrogen produced by the batteries. The explosion of the battery causes serious damage and injuries.**
- **Take care not to invert the cables and connect the earth cable (-) last, as far from the battery as possible.**
- **Remove the cables with great care; prevent the cables disconnected from the battery from touching other parts of the machine, in order to avoid the explosion of the hydrogen.**

**IMPORTANT**

- **The cables and pliers must be suitable for the current load that must be transferred.**
- **The battery to be used for the starting must have greater capacity or at least the same capacity as the battery of the machine to be started.**
- **Make sure that the cables and pliers are neither corroded, nor damaged.**
- **Make sure that the pliers hold the terminals firmly.**

CONNECTING THE CABLES AND STARTING THE ENGINE

1 - Make sure that the ignition key is in position «O».

2 - Connect the positive poles (+) of the two batteries with each other (A).

3 - Connect the cable of the negative terminal (-) of the charged battery to the earth block of the machine to be started (B).

4 - Start the engine of the machine that supplies current and increase its speed.

5 - Start the engine of the machine that does not work. (See “3.6.2 STARTING THE ENGINE”).

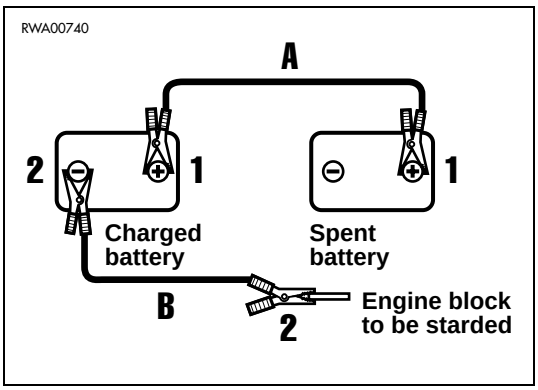


REMOVING THE CABLESI

When the engine has started, remove the cables in the reverse order with respect to their connection.

1 - Disconnect the negative cable (-) from the earth block of the engine that has been started and then from the battery (B).

2 - Disconnect the positive cable (+) first from the battery used for the starting and then from the depleted battery (A).

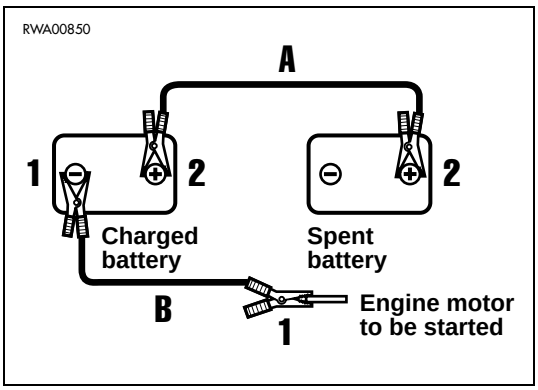

https://truckmanualshub.com/



## 3.14.4 OTHER TROUBLES

(•): Always contact your Komatsu Utility Dealer when you have to carry out this operation.

• : If the anomaly or its cause are not included in the failures indicated below, contact your Komatsu Utility Dealer for the necessary repair.

### 3.14.4.1 ELECTRICAL CIRCUIT

| TROUBLE | CAUSE | REMEDY |
|---|---|---|
| Lights do not work satisfactorily even with engine running at high speed: | • Faulty cables.<br>• Faulty fan belt tension. | (•) Check and repair any loose terminal and connection.<br>• Adjust fan tension (see “EVERY 250 HOURS”). |
| Lights come on intermittently with engine running: | | |
| Alternator charge warning light does not go out with engine running and increasing speed: | • Faulty alternator.<br>• Faulty cables. | (•) Change.<br>(•) Check and repair. |
| Alternator emits an abnormal noise: | • Faulty alternator. | (•) Change. |
| Starter does not turn with key in START position: | • Faulty cables.<br>• Battery charge insufficient.<br>• Faulty main fuse. | (•) Check and repair.<br>• Charge battery.<br>• Change. |
| Starter pinion engages and then disengages: | • Battery charge insufficient. | • Charge battery. |
| Starter makes engine run slowly: | • Battery charge insufficient.<br>• Faulty starter. | • Charge battery.<br>(•) Change. |
| Starter disengages before engine has started: | • Faulty cables.<br>• Battery charge insufficient. | (•) Check and repair.<br>• Charge battery. |
| Engine oil pressure warning light does not come on when engine is stopped (ignition key in position «I»): | • Faulty bulb.<br>• Faulty pressure sensor. | (•) Change.<br>(•) Change. |
| Alternator charge warning light does not come on when engine is stopped (ignition key in position «I»): | • Faulty bulb.<br>• Faulty cables. | (•) Change.<br>(•) Check and repair. |

https://truckmanualshub.com/



## 3.14.4.2 HYDRAULIC SYSTEM

| TROUBLE | CAUSE | REMEDY |
|---|---|---|
| Pump emits an abnormal noise: | • No oil in the tank.<br>• Faulty pump.<br>• Hydraulic oil unsuitable for the temperature. | • Repair or change.<br>(•) Repair or change.<br>• Change. |
| Equipment control levers do not return automatically to neutral position: | • Broken return spring or seized element | (•) Change spring or distributor elemen |
| Equipment moves only at low speed: | • Faulty pump.<br>• Max. pressure valve setting incorrect, or valves not closed due to impurities.<br>• Dirty drain filter. | (•) Repair or change.<br>(•) Set or change.<br>• Change |

https://truckmanualshub.com/



## 3.14.4.3 ENGINE

| TROUBLE | CAUSE | REMEDY |
|---|---|---|
| Oil pressure warning light remains on even with engine at high speed: | • Oil level in oil pan too low.<br>• Oil filter clogged.<br>• Oil unsuitable for the season | • Top up.<br>• Change filter.<br>• Change. |
| Steam comes out of radiator breather pipe<br><br><br><br>Engine coolant temperature indicator reaches overheating red range: | • Fluid level low, fluid leakages.<br>• Fan belt slackened.<br>• Radiator fins damaged or closed.<br>• Faulty thermostat.<br>• Radiator cap loose or broken. Working at considerable altitude | • Top up, repair.<br>• Check belt tension.<br>• Repair or clean.<br>(•) Change.<br>• Tighten cap or change unit. |
| Engine coolant temperature indicator always positioned at the bottom of the range (white range): | • Faulty instrument. | (•) Change. |
| Engine coolant temperature indicator always positioned within the red range: | • Faulty thermostat.<br>• Faulty instrument. | (•) Change.<br>(•) Change. |
| Engine does not start with starter running | • No fuel.<br>• Air in fuel system.<br>• Compression defect (valves with wrong clearance). | • Refuel.<br>• Bleed system.<br>(•) Adjust valve clearance. |
| Exhaust gases white or light blue: | • Too much oil in oil pan.<br>• Unsuitable fuel. | • Correct oil level.<br>• Change with suitable fuel. |
| Exhaust gases occasionally tend to be black: | • Air cleaner clogged.<br>• Faulty injectors.<br>• Faulty compression. | • Clean or change.<br>(•) Change.<br>(•) Adjust valve clearance. |
| Combustion noise occasionally resembles a blow: | • Faulty injectors. | (•) Change. |
| Abnormal noises (during combustion or in mechanical parts) | • Fuel with low cetane rating.<br><br>• Overheating.<br><br>• Exhaust silencer inside damaged.<br>• Excessive valve clearance. | • Change with fuel in compliance with standards<br>• See “defects of temperature indicator”.<br>(•) Change.<br>(•) Adjust valve clearance. |

https://truckmanualshub.com/

**PAGE INTENTIONALLY LEFT BLANK**

https://truckmanualshub.com/

# MAINTENANCE

https://truckmanualshub.com/



# 4.1 GUIDE TO MAINTENANCE

- Before opening the engine hood, engage all the safety locks and stop the engine.
- If it is necessary to check the hydraulic oil level, retract the bucket and arm cylinders, extend the two-piece boom cylinders and lower the bucket teeth to the ground.
- Carry out any operation on firm and level ground.
- Use Komatsu Utility genuine oils and greases; choose oils suitable for the ambient temperature.
- Use clean oils and greases. Keep the oil and grease containers clean. Keep any foreign matter away from oils and greases.
- Always keep the machine clean. This makes it easier to find out any part causing troubles.
  In particular, keep the grease nipples, the breathers and the areas near the openings for the level checks clean and prevent any impurities from getting into/on them.
- Draining hot oil or coolant immediately after stopping the engine is hazardous. Wait for the engine to cool down until reaching at least 40÷50° C.
- When changing the oils or the filters, check if metal particles are present. If you find large quantities of metal particles, contact your Komatsu Utility Dealer.
- Check and change the oil in a clean place and prevent any impurities from getting into the tank.
- Before carrying out any maintenance operation, hang the warning plates on the ignition switch, the control levers and the cab door, in order to prevent anyone from starting the engine by mistake.
- When performing maintenance operations, always take the precautions indicated on the safety plates applied onto the machine.
- Instructions for arc welding:
  1 - Turn the ignition key to position «O».
  2 - Disconnect the battery (first the negative pole and then the positive pole).
  3 - Disconnect the alternator.
  4 - Do not apply more than 200 V continuously.
  5 - Connect the earth cable within 1 m from the point in which the welding must be carried out.
  6 - Avoid placing gaskets and bearings between the welding area and the earth cable.
- Do not use flammable fluids to clean the machine parts. Keep naked flames or lit cigarettes away from these fluids.
- When O-rings and gaskets are removed, clean the sealing surfaces thoroughly and replace the O-rings and gaskets with new ones.
  Fit the O-rings and gaskets correctly when reassembling.
- Avoid keeping loose objects or tools in your pockets: they may fall out and drop into the machine when you work on the machine while bending over it.
- When washing the machine, do not direct the high-pressure water jet onto the radiator and the heat exchanger.
- When washing the machine, protect the electric system connectors and avoid wetting the ignition switch.
- Before starting work in mud, under the rain, on seashores or river banks, carry out a general lubrication.
  Wash the machine immediately after work to protect the components from rust. Lubricate the equipment joints more frequently than usual.
- When working at dusty work sites, proceed as follows:
  1 - Check the air cleaner for any clogging and clean it more frequently than usual.
  2 - Clean the radiator and the heat exchanger frequently, to avoid any clogging of the fins.
  3 - Change the diesel oil filter more frequently than usual.
  4 - Clean the electrical components, especially the starter and the alternator, to avoid any accumulation of dust

https://truckmanualshub.com/



- Never mix oils of different brands.
  Do not top up with any oil different from the oil used in the machine. If necessary, drain all the oil and fill the tank with the oil of the new brand.

**DANGER**

- **Oils, filters, coolants and batteries are considered special waste and must be collected and disposed of according to the regulations in force.**
- **The combustible material of some components may become extremely dangerous if it burns. For this reason, avoid any contact of burnt material with your skin or eyes and do not inhale the fumes.**

https://truckmanualshub.com/



# 4.2 MAINTENANCE NOTES

- Use only Komatsu Utility genuine spare parts.
- Do not mix different types of oil.
- Unless specified otherwise, the oils and the coolant used by Komatsu Utility to fill the tanks before the delivery of the machine are the following:

| ITEM | SPECIFICATIONS |
|---|---|
| • Engine oil | SAE 15W-30<br>API classification CD |
| • Hydraulic system oil | SAE 10W<br>API classification CD |
| • Biodegradable hydraulic system oil<br>(Only for machines in which the synthetic biodegradable oil type HEES not of plant origin is used) | SHELL NATURELLE HFX-32 |
| • Travel reduction gear oil | SAE 85W/90<br>API classification GL5 |
| • Swing reduction gear oil | SAE 85W/90<br>API classification GL5 |
| • Fuel | Ambient temperature above -10°C:<br>ASTM D975 no. 2 diesel oil |
| | Ambient temperature below -10°C:<br>ASTM D975 no. 1 diesel oil |
| • Radiator | Permanent, ethylene glycol-based antifreeze, with corrosion inhibitor for protection up to -36°C. |

## 4.2.1 NOTES REGARDING THE ENGINE

### 4.2.1.1 ENGINE OIL

- The engine oil must be selected very carefully, since it lubricates the engine, which is the machine’s heart; the main maintenance operations required for the engine oil are the following:

  1 - daily check of the oil level;

  2 - check of the oil pollution degree;

  3 - periodical change.

### 4.2.1.2 COOLANT

- The coolant serves to keep the engine at the correct temperature and therefore to ensure optimal operating conditions; check the coolant level in the expansion tank daily and top up if necessary.
- The coolant containing antifreeze is flammable; do not use naked flames near the coolant and do not smoke while topping up.

https://truckmanualshub.com/



- Use only permanent ethylene glycol-based antifreeze with the addition of anticorrosion and antifoam products. The antifreeze-water ratio must be 50% (50% antifreeze and 50% water).
- The use of permanent antifreeze requires only the routine change. It is not necessary to wash the cooling circuit.
- Use drinkable water and in any case soft water.
- Do not use corrosion inhibitors containing soluble oil, since they damage the rubber couplings.
- The required standards for permanent antifreeze are the following: SAE-J1034 and FEDERAL STANDARD O-A-548D.
  In case of doubt regarding the compliance of the antifreeze used with the standards, contact your Komatsu Utility Dealer and ask for precise information.

#### 4.2.1.3 FUEL

- Always use fuel suitable for the engine. Other fuels with different specifications may damage the engine or reduce its power.
- Always refuel at the end of the work day.
- When refuelling, make sure that there is no water on the fuel drum cover and take care not to draw the condensate from the drum bottom.
- If fuel runs out, or if the fuel filter has been replaced, it is necessary to bleed the pipes.

### 4.2.2 NOTES REGARDING THE HYDRAULIC SYSTEM

- Be extremely careful when performing maintenance operations on the hydraulic system, since soon after work the oil is very hot.
  The circuit is pressurized not only during work, but also at the end of work.
- The maintenance operations required for the hydraulic system are the following:
  1 - daily check of the oil level in the tank;
  2 - periodical change of the oil filter;
  3 - periodical change of the oil.
- Always bleed the circuit after changing the oil filter or the oil.
- When a component is removed from the circuit, check the gaskets and O-rings and change them if they are damaged.
- When a cylinder or a component of the hydraulic circuit is removed, after reassembly bleed the circuit by proceeding as follows:
  1 - start the engine and let it idle;
  2 - make all the cylinders perform 4-5 movements, stopping them at approx. 100 mm from the end of their stroke;
  3 - slowly make all the cylinders reach the end of their stroke for 3-4 times.

https://truckmanualshub.com/



## 4.2.3 NOTES REGARDING THE ELECTRICAL SYSTEM

- If the cables are wet or their insulating material is damaged, the electrical system leaks and this may result in malfunctions of the machine.
- The maintenance operations required for the electrical system are the following:
  1 - check of the alternator belt tension;
  2 - check of the alternator belt for damage or breakages;
  3 - check of the battery electrolyte level.
- Do not remove or eliminate any electric component installed on the machine and do not install any electric component with characteristics different from those specified and approved by Komatsu Utility.
- Be careful to keep the electric system dry.
- When working on seashores or river or lake banks, protect the jack plugs from corrosion.
- Do not connect any optional device to the fuses, ignition switch, battery, relays, etc.; for the installation of any optional equipment, contact your Komatsu Utility Dealer.
- If any electric welding operation has to be carried out, disconnect the battery and the alternator.

## 4.2.4 NOTES REGARDING LUBRICATION

- Lubrication makes the operations carried out with the machine and work equipment smoother, while preventing wear and the noise that may be produced if the articulations are dry.
  Lubrication is to be carried out with grease or oil.
- The maintenance operations required for the components that need lubricating are the following:
  1 - check of the levels;
  2 - oil change;
  3 - injection of grease through the grease nipples.
- Use only the specified lubricants, according to the ambient temperature.
- Always clean the grease nipples before injecting grease and remove any excess grease after lubrication; this cleaning operation must be performed with extreme care on the revolving parts.
- Keep the lubricants at the correct levels; excessive or insufficient quantities are to be avoided.

https://truckmanualshub.com/



## 4.2.5 PARTS SUBJECT TO WEAR THAT PERIODICALLY NEED CHANGING

The parts subject to wear such as filters, bucket teeth, etc. must be replaced according to the periodic maintenance intervals prescribed or when they reach the wear limit.
The timely change of these parts ensures an economic use of the machine.
Use only Komatsu Utility genuine parts, which alone can guarantee excellent quality and interchangeability.

| ITEM | CODE | DESCRIPTION | Q.TY | CHANGE INTERVAL |
|---|---|---|---|---|
| Hydraulic oil filter | 22E-60-11211 | Cartridge | 1 | EVERY 500 HOURS |
| Servo control oil filter | 21D-60-11220 | Cartridge | 1 | EVERY 500 HOURS |
| Engine oil filter | YM119005-35100 | Cartridge | 1 | EVERY 500 HOURS |
| Fuel filter | YM119000-55600 | Cartridge | 1 | EVERY 500 HOURS |
| Air cleaner | 226-02-11111<br>226-02-11121 | Main cartridge<br>Safety cartridge | 1<br>1 | WHEN REQUIRED<br>WHEN REQUIRED |
| Bucket | 226-70-11410<br>226-70-11420<br>226-70-11430<br>226-70-11440 | Tip holder<br>Tip<br>Pin<br>Ring | AR<br>AR<br>AR<br>AR | —<br>—<br>—<br>— |

https://truckmanualshub.com/



# 4.3 FUEL, COOLANT AND LUBRICANTS

## PROPER SELECTION ACCORDING TO THE AMBIENT TEMPERATURE

| RESERVOIR | FLUID | AMBIENT TEMPERATURE<br>-30 -20 -10 0 10 20 30 40 50°C<br>-22 -4 14 32 50 68 86 104 122°F | CAPACITY (l) | |
|---|---|---|---|---|
| | | | 1st filling | Change |
| Engine oil pan | OIL<br>API CD | SAE 10W<br>SAE 30<br>SAE 40<br>SAE 15W-30<br>SAE 5W-30 | 12.5 | 12.5 |
| Hydraulic system | OIL<br>API CD | SAE 10W<br>SAE 5W-30 | 160 | 84 |
| Hydraulic system with biodegradable oil | SEE “4.3.1” | | 160 | 84 |
| Travel reduction gears (ea.) | OIL<br>API GL5 | SAE 85W 90 | 2 | 2 |
| Swing reduction gear | OIL<br>API GL5 | SAE 85W 90 | 3.5 | 3.5 |
| Fuel tank | DIESEL OIL | ✶<br>ASTM D975 N. 2 | 150 | — |
| Engine cooling system | PERMANENT COOLANT | | 18 | — |

**✶ ASTM D975 N.1**

## LUBRICATION WITH GREASE

| LUBRICATION POINTS | CONSISTENCY | TYPE |
|---|---|---|
| Articulations | NLGI 2 | LITHIO EP +$MoS_2$ |
| Track tightener cylinder | NLGI 2 | LITHIO EP |
| Ball-bearing ring, ball-bearing ring pinion | NLGI 2 | CALCIUM-BASED |

https://truckmanualshub.com/



**IMPORTANT**

- **When the diesel oil sulphur content is less than 0,5%, change the engine oil according to the periodic maintenance intervals indicated in the operation and maintenance manual. If the diesel oil sulphur content exceeds 0,5%, change the engine oil according to the following table:**

| Sulphur content | Engine oil change interval |
|---|---|
| from 0,5 to 1,0% | 1/2 of regular interval |
| over 1,0% | 1/4 of regular interval |

- When starting the engine at temperatures below 0°C, use engine oil SAE 10W, 15W-30, 5W-30, even if during the day the temperature increases by 10°C.
- Use engine oil with CD classification; if oil with CC classification is used, reduce the engine oil change interval by a half.
- Use Komatsu Utility genuine products whose characteristics have been specifically formulated and approved for use in the engine, in the work equipment hydraulic circuit and in the reduction gears.

**First filling quantity:** total quantity of oil, including the oil for the components and pipes.

**Oil change quantity:** quantity of oil necessary to fill the system or unit during the normal inspection and maintenance operations.

ASTM: American Society of Testing and Materials
SAE: Society of Automotive Engineers
API: American Petroleum Institute

https://truckmanualshub.com/



## 4.3.1 HOMOLOGATED HEES SYNTHETIC BIODEGRADABLE LUBRICANTS

Our machines can be filled with synthetic biodegradable hydraulic oil type HEES not of plant origin and therefore the use of the oils indicated in the following table is authorized and recommended :

| SUPPLIER | HEES SYNTHETIC BIODEGRADABLE OIL |
|---|---|
| KOMATSU | BO 46 G4 (KES 07.872) |
| AGIP | — |
| ARAL | — |
| AVIA | — |
| BP | — |
| CONDAT | CONDAT D 46 K |
| ELF | — |
| ESSO | — |
| FINA | BIOYIDRAN SE 46 |
| FUCHS | — |
| KENDALL | — |
| KUWAIT PETROLEUM K8 | — |
| MOBIL | EAL SYNDRAULIC |
| MOBIL (USA) | — |
| PAKELO | — |
| PANOLIN | HLP SYNTH 46 |
| SHELL | NATURELLE HFX-32 |
| TAMOIL | — |
| TEXACO | — |
| TOTAL | HYDROBIO 46 |
| VALVOLINE | — |

**CAUTION**

- **It is not possible to mix the synthetic biodegradable oil type HEES with ordinary hydraulic oils, since when the temperature increases insoluble compounds are generated, which are deposited on the filters and clog them (the maximum concentration of ordinary oil cannot exceed 1% of the total quantity of oil).**
- **The synthetic biodegradable oil can be used only in the hydraulic system; it cannot be used for the endothermic motor, the transmissions, the braking system, etc.**
- **Before introducing the synthetic biodegradable oil in the hydraulic system, empty the system completely, disconnecting the cylinders and all the parts that may contain ordinary oil, and replace the drain filter with a new one.**
  **Start the engine and let it idle without using the work equipment , wait until the oil reaches a temperature of at least 40°C, then start moving the equipment, so that all the parts of the system are filled with oil. Stop the engine and check the oil level (see “4.7.3.e CHECKING THE HYDRAULIC SYSTEM OIL LEVEL”).**

https://truckmanualshub.com/



# 4.4 DRIVING TORQUES FOR SCREWS AND NUTS

## 4.4.1 STANDARD DRIVING TORQUES

**★ Nm (Newton metro): 1 Nm = 0.102 kgm**

| Thread diameter (mm) | Pitch (mm) | Spanner size (mm) | 8.8 | | 10.9 | |
|---|---|---|---|---|---|---|
| | | | kgm | Nm | kgm | Nm |
| 6 | 1 | 10 | 0.96 ± 0.1 | 9.5 ± 1 | 1.3 ± 0.15 | 13.5 ± 1.5 |
| 8 | 1.25 | 13 | 2.3 ± 0.2 | 23 ± 2 | 3.2 ± 0.3 | 32.2 ± 3.5 |
| 10 | 1.5 | 17 | 4.6 ± 0.5 | 45 ± 4.9 | 6.5 ± 0.6 | 63 ± 6.5 |
| 12 | 1.75 | 19 | 7.8 ± 0.8 | 77 ± 8 | 11 ± 1 | 108 ± 11 |
| 14 | 2 | 22 | 12.5 ± 1 | 122 ± 13 | 17.5 ± 2 | 172 ± 18 |
| 16 | 2 | 24 | 19.5 ± 2 | 191 ± 21 | 27 ± 3 | 268 ± 29 |
| 18 | 2.5 | 27 | 27 ± 3 | 262 ± 28 | 37 ± 4 | 366 ± 36 |
| 20 | 2.5 | 30 | 38 ± 4 | 372 ± 40 | 53 ± 6 | 524 ± 57 |
| 22 | 2.5 | 32 | 52 ± 6 | 511 ± 57 | 73 ± 8 | 719 ± 80 |
| 24 | 3 | 36 | 66 ± 7 | 644 ± 70 | 92 ± 10 | 905 ± 98 |
| 27 | 3 | 41 | 96 ± 10 | 945 ± 100 | 135 ± 15 | 1329 ± 140 |
| 30 | 3.5 | 46 | 131 ± 14 | 1287 ± 140 | 184 ± 20 | 1810 ± 190 |

**IMPORTANT**

- **This driving torque table is not valid for screws or nuts that must lock parts made of nylon or similar materials onto washers or components made of nylon or nonferrous materials.**

## 4.4.2 SPECIFIC DRIVING TORQUES

| ITEM | DESCRIPTION | kgm | Nm |
|---|---|---|---|
| Cab platform | Front support screws | 16 ± 1 | 157 ± 9.8 |
| | Rear support screws | 16 ± 1 | 157 ± 9.8 |
| Engine | Front support central screw | 16 ± 1 | 157 ± 9.8 |
| | Rear support central screw | 16 ± 1 | 157 ± 9.8 |
| Ball-bearing ring | Upper structure nuts | 32 ± 1 | 314 ± 9.8 |
| | Undercarriage screws | 32 ± 1 | 314 ± 9.8 |

https://truckmanualshub.com/



# 4.5 LUBRICATION

## 4.5.1 LUBRICATION DIAGRAM

**IMPORTANT**

- **For the lubrication procedures for the single points, see “4.7 MAINTENANCE PLAN”.**
- **The type of lubricant to be used is indicated in the lubricant table (See “4.3 FUEL, COOLANT AND LUBRICANTS”).**

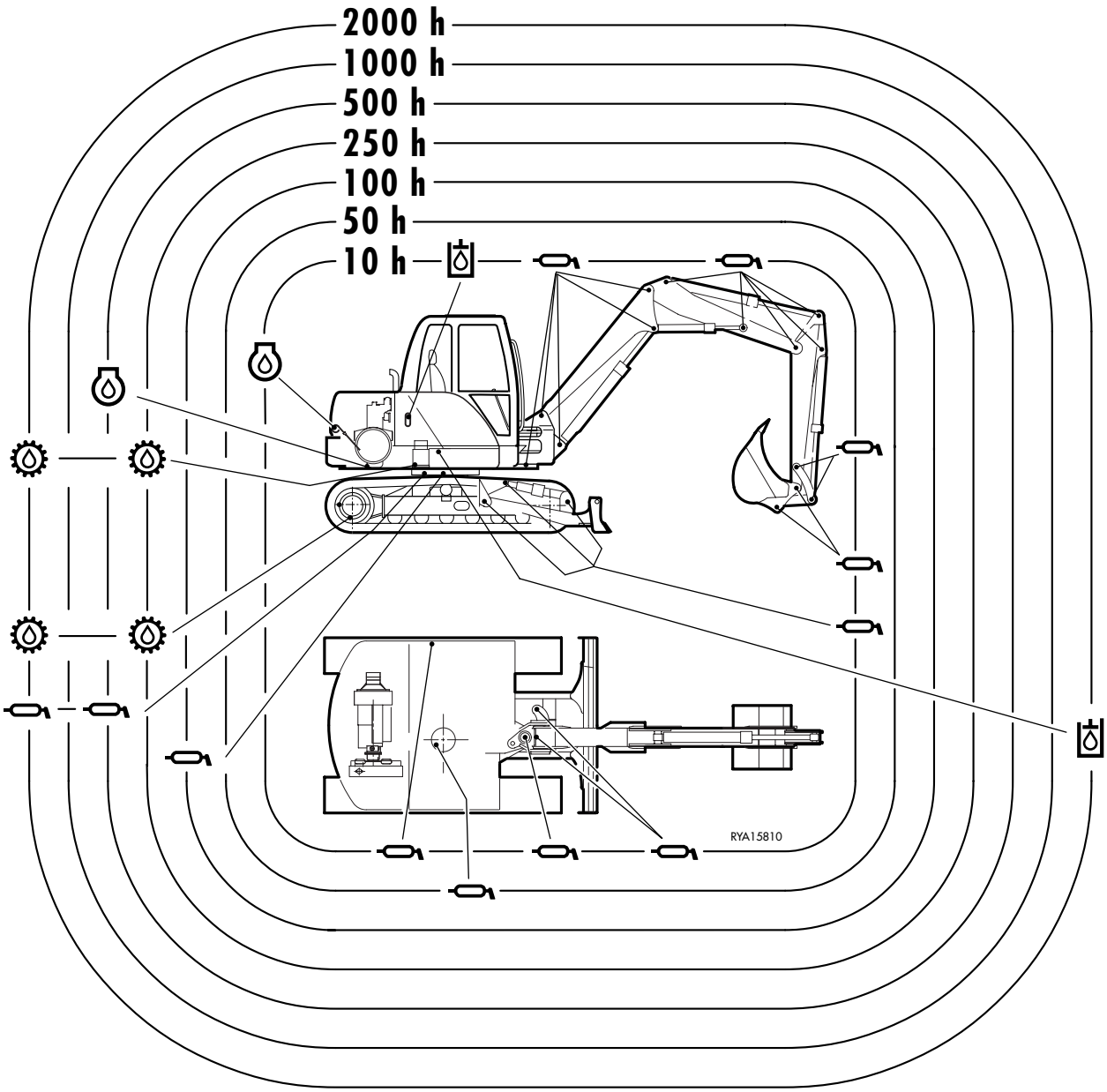


**Engine oil**

**Hydraulic oil**

**Transmission oil**

**Grease**

https://truckmanualshub.com/



# 4.6 PERIODICAL CHANGE OF THE COMPONENTS CONNECTED WITH SAFETY

To ensure safety at any moment while driving and using the machine, the operator must carry out all the periodic maintenance operations prescribed. Furthermore, the operator must periodically change the components indicated in the table in the following page, which are especially related to safety and fire-prevention rules. These components are subject to wear and since it is particularly difficult to evaluate their conditions through simple periodic maintenance, after a certain period it is advisable to change them independently of their state, in order to keep them efficient over time. Repair or replace these components immediately in case of failures or anomalies, even if the time interval prescribed for their change has not elapsed yet.

If the pipe clamps show signs of deterioration, like deformations or cracks, provide for changing them together with the pipes.

In addition to the periodical change of the components listed in the following page, the inspections described here below are to be carried out on the hydraulic pipes. In case of anomalies, carry out the necessary adjustments and changes, or adopt any other measure required.

| Type of check | Check item |
|---|---|
| Check before starting | Leakages from joints, hydraulic pipes or fuel pipes. |
| Periodical check (monthly check) | Leakages from joints, hydraulic pipes or fuel pipes. Damaged hydraulic or fuel pipes (cracks, wear and tear). |
| Periodical check (annual check) | Leakages from joints, hydraulic pipes or fuel pipes. Deteriorated, twisted, damaged hydraulic or fuel pipes (cracks, wear and tear) or pipes in contact with other parts of the machine. |

https://truckmanualshub.com/



## 4.6.1 CRITICAL PARTS FOR SAFETY

**FUEL SUPPLY SYSTEM**

| No. | Components related to safety that periodically need changing | Q.ty | Change interval |
|---|---|---|---|
| 1 | Fuel pipe (Fuel tank – precleaner) | 1 | Every 2 years or 4000 hours, whichever occurs first |
| 2 | Fuel pipe (Precleaner - fuel pump) | 1 | |
| 3 | Fuel pipe (Fuel pump - fuel filter) | 1 | |
| 4 | Fuel pipe (Fuel filter – injection pump) | 1 | |
| 5 | Fuel pipe (Fuel filter - fuel tank) | 1 | |
| 6 | Fuel recovery pipe (injection pump – fuel filter) | 1 | |
| 7 | Fuel recovery pipe (injector – fuel filter) | 1 | |
| 8 | Fuel recovery pipe (between the injectors) | 3 | |
| 9 | Fuel recovery plug | 1 | |

- For the serial numbers and the quantity of the components that periodically need changing, consult the spare parts catalogue section regarding the components connected with safety and the components that must be periodically changed.
- When changing pipes, always change O-rings, gaskets and analogous components.

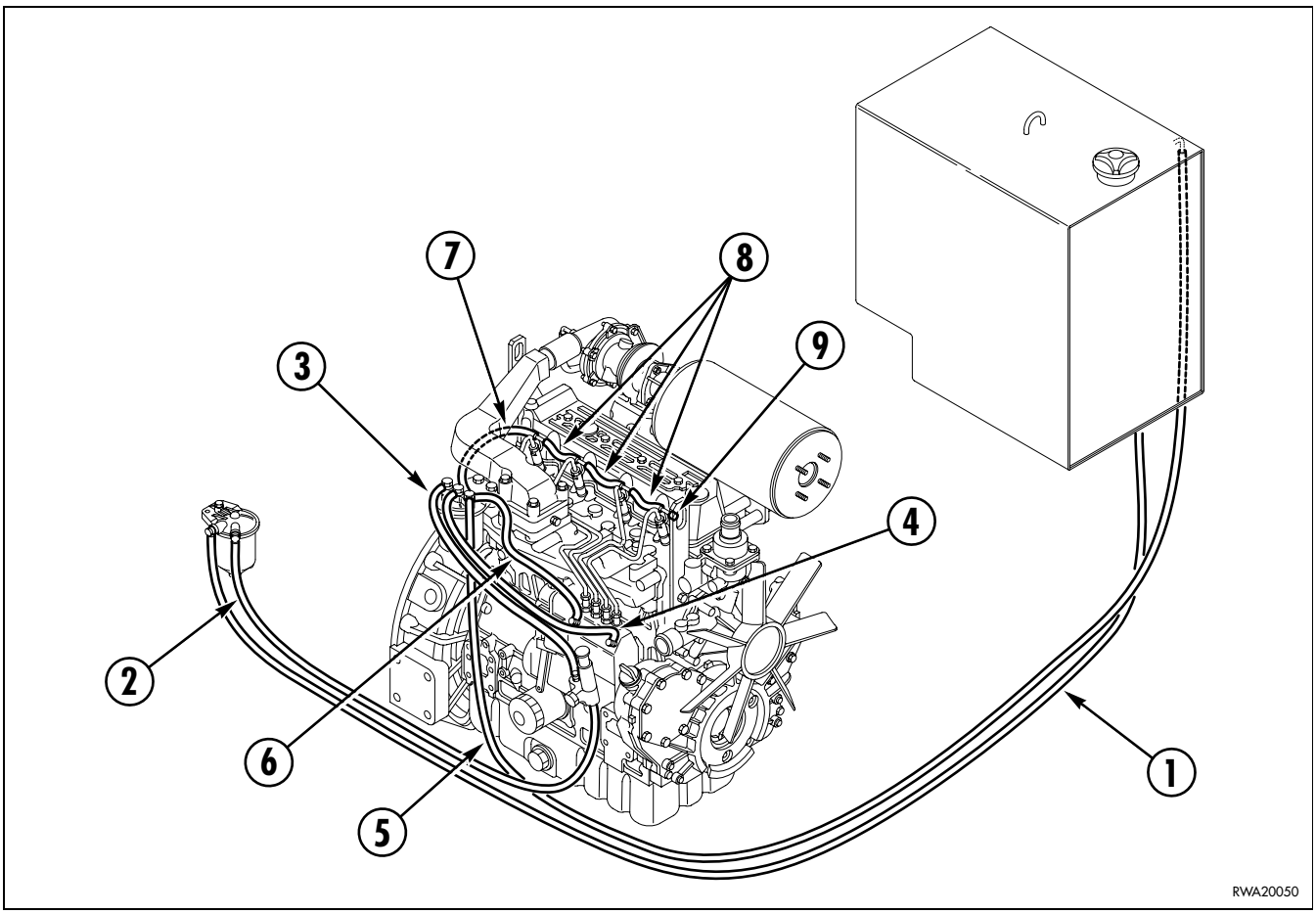

https://truckmanualshub.com/



**HYDRAULIC SYSTEM**

| No. | Components related to safety that periodically need changing | Q.ty | Change interval |
|---|---|---|---|
| 1 | Hydraulic pipe (Main pump delivery) | 1 | Every 2 years or 4000 hours, whichever occurs first |
| 2 | Hydraulic pipe (Secondary pump delivery) | 1 | |
| 3 | Hydraulic pipe (Boom cylinder) | 4 | |
| 4 | Hydraulic pipe (Arm cylinder) | 4 | |
| 5 | Hydraulic pipe (Bucket cylinder) | 4 | |

- For the serial numbers and the quantity of the components that periodically need changing, consult the spare parts catalogue section regarding the components connected with safety and the components that must be periodically changed.
- When changing pipes, always change O-rings, gaskets and analogous components.

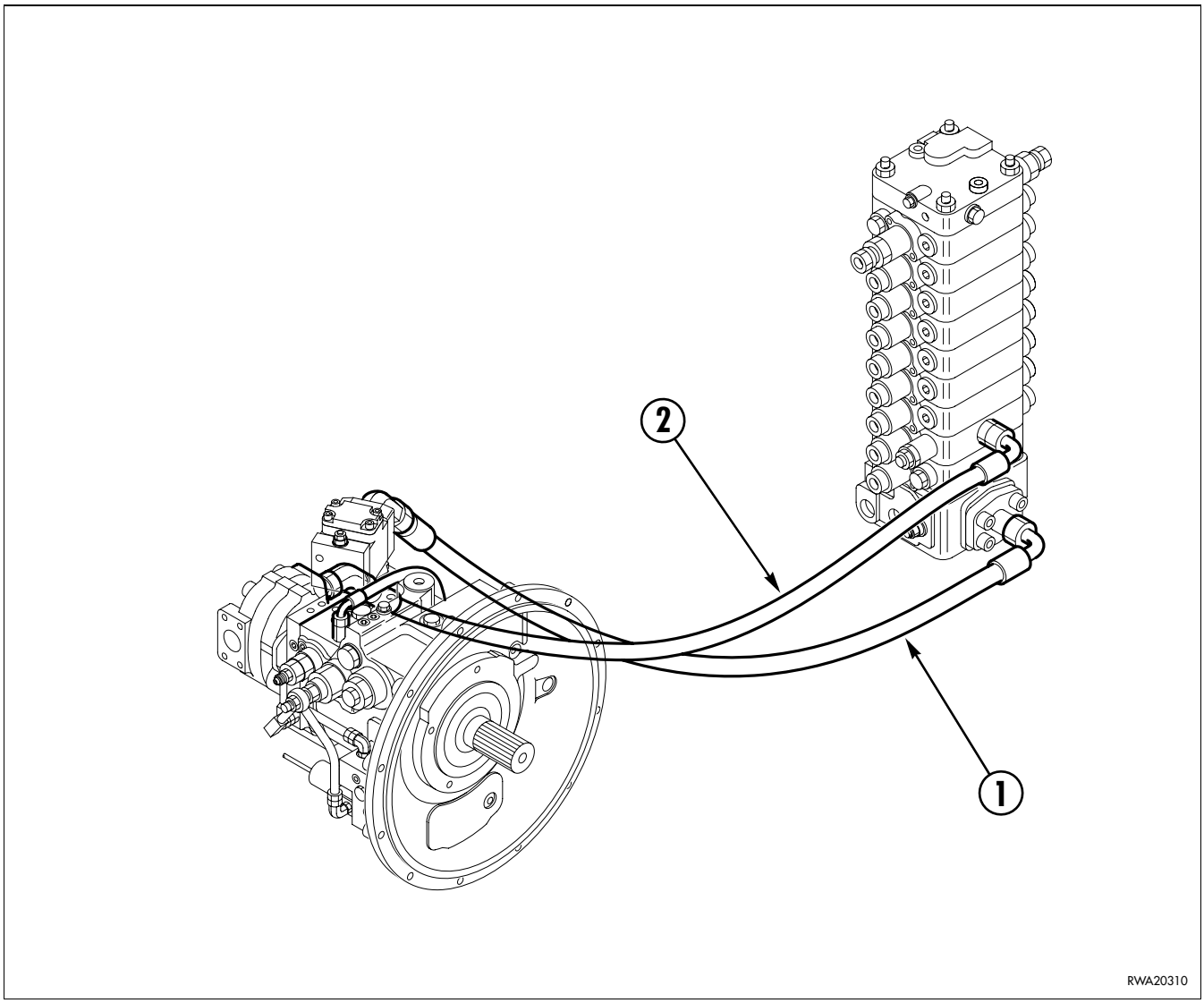

https://truckmanualshub.com/



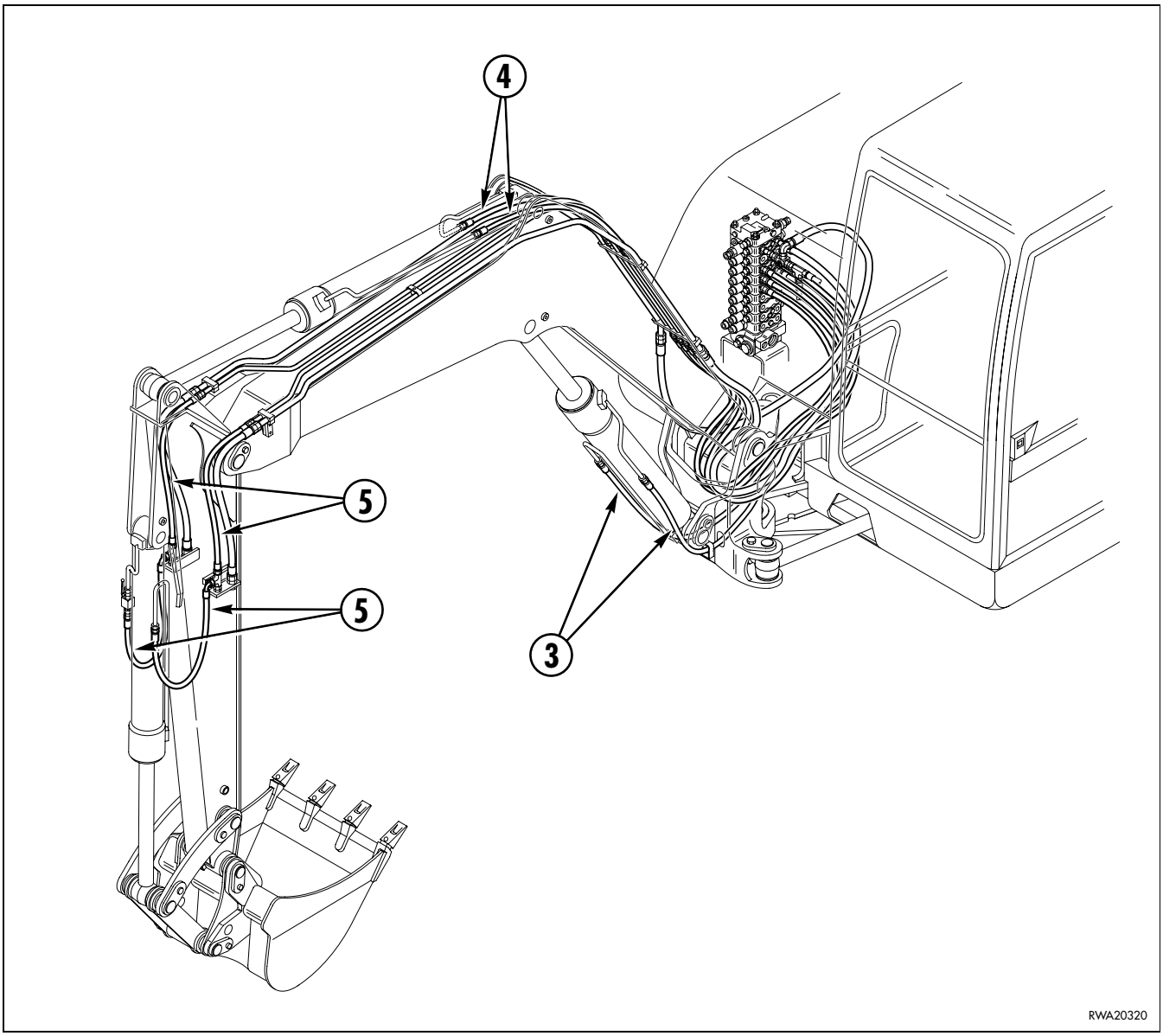


**OPERATOR'S SAFETY**

| No. | Components related to safety that periodically need changing | Q.ty | Change interval |
|---|---|---|---|
| 1 | Safety belt | 1 | Every 4 years |

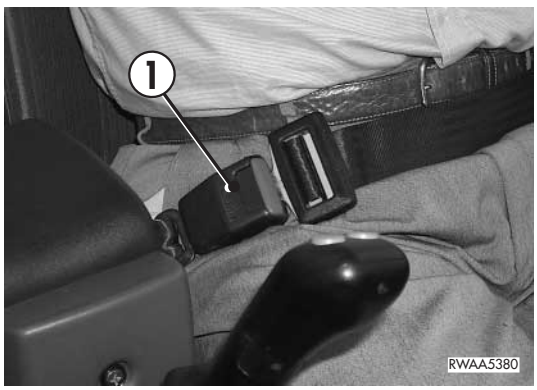

https://truckmanualshub.com/



# 4.7 MAINTENANCE PLAN

## 4.7.1 WHEN REQUIRED

| N. | PART | OPERATION | PAGE |
|---|---|---|---|
| a | Air cleaner | Check, clean or change | 145 |
| b | Cab filter | Check and clean | 147 |
| c | A/C air recirculation filter<br>(only for machines with air conditioner) | Check and clean | 148 |
| d | Water separator | Clean | 149 |
| e | Tracks | Check and adjust tension | 150 |
| f | Tracks | Check shoe fastening | 152 |

## 4.7.2 MAINTENANCE INTERVALS IN CASE OF USE OF THE DEMOLITION HAMMER

| N. | PART | OPERATION | PAGE |
|---|---|---|---|
| a | Hydraulic oil drain filter | Change cartridge | 153 |
| b | Hydraulic oil | Change | 153 |

## 4.7.3 CHECKS BEFORE STARTING

| N. | PART | OPERATION | PAGE |
|---|---|---|---|
| a | Various checks | — | 154 |
| b | Coolant | Check and top up | 154 |
| c | Fuel tank | Check and top up | 155 |
| d | Engine oil pan | Check and top up | 155 |
| e | Hydraulic oil tank | Check and top up | 156 |
| f | Water separator | Drain water | 157 |

## 4.7.4 MAINTENANCE EVERY 10 HOURS OF OPERATION

| N. | PART | OPERATION | PAGE |
|---|---|---|---|
| a | Joints | Lubricate | 158 |

https://truckmanualshub.com/



## 4.7.5 MAINTENANCE AFTER THE FIRST 50 HOURS OF OPERATION (Only for machines in which the synthetic biodegradable oil type HEES is used) (Operations to be carried out together with those prescribed at point“4.7.6 MAINTENANCE EVERY 50 HOURS OF OPERATION”)

| N. | PART | OPERATION | PAGE |
|---|---|---|---|
| a | Hydraulic oil drain filter<br>(Only for machines with synthetic biodegradable oil) | Change | 168 |

## 4.7.6 MAINTENANCE EVERY 50 HOURS OF OPERATION

| N. | PART | OPERATION | PAGE |
|---|---|---|---|
| a | Radiator | Check level | 161 |
| b | Swing joint | Lubricate (1 point) | 162 |
| c | Electrical system | Check | 162 |

## 4.7.7 MAINTENANCE EVERY 100 HOURS OF OPERATION

| N. | PART | OPERATION | PAGE |
|---|---|---|---|
| a | Ball-bearing ring | Lubricate (4 points) | 163 |

## 4.7.8 MAINTENANCE AFTER THE FIRST 250 HOURS OF OPERATION (Operations to be carried out together with those prescribed at point “4.7.9 MAINTENANCE EVERY 250 HOURS OF OPERATION”)

| N. | PART | OPERATION | PAGE |
|---|---|---|---|
| a | Travel reduction gears | Change oil | 179 |
| b | Swing reduction gear | Change oil | 180 |
| c | Hydraulic oil drain filter | Change cartridge | 168 |
| d | Engine valves | Check clearance | 178 |

https://truckmanualshub.com/



## 4.7.9 MAINTENANCE EVERY 250 HOURS OF OPERATION

| N. | PART | OPERATION | PAGE |
|---|---|---|---|
| a | Fan belt | Check fan belt condition and tension | 164 |
| b | A/C compressor belt<br>(only for machines with air conditioner) | Check fan belt condition and tension | 165 |
| c | Battery | Check electrolyte level | 166 |
| d | Travel reduction gears | Check levels (n. 2) | 166 |
| e | Swing reduction gear | Check level (n. 1) | 167 |

## 4.7.10 MAINTENANCE AFTER THE FIRST 500 HOURS OF OPERATION (Only for machines in which the synthetic biodegradable oil type HEES is used)

**(Carry out these operations together with those to be performed every 500 HOURS, see “4.7.11 MAINTENANCE EVERY 500 HOURS OF OPERATION”)**

| N. | PART | OPERATION | PAGE |
|---|---|---|---|
| a | Hydraulic oil and suction filter<br>(Only for machines with synthetic biodegradable oil) | Change oil and clean filter | 181 |

## 4.7.11 MAINTENANCE EVERY 500 HOURS OF OPERATION

| N. | PART | OPERATION | PAGE |
|---|---|---|---|
| a | Hydraulic oil drainage filter | Change cartridge | 168 |
| b | Servo control filter | Change cartridge | 170 |
| c | Engine oil | Change | 171 |
| d | Engine oil filter | Change | 172 |
| e | Fuel filter | Change cartridge | 173 |
| f | Fuel tank | Drain condensate | 174 |
| g | Radiators | Clean outside | 174 |
| h | A/C condenser<br>(only for machines with air conditioner) | Clean outside | 175 |
| j | Ball-bearing ring pinion | Check lubricant and top up | 176 |
| k | Hydraulic oil tank<br>(Only for machines with synthetic biodegradable oil) | Drain condensate | 176 |

https://truckmanualshub.com/



## 4.7.12 MAINTENANCE EVERY 1000 HOURS OF OPERATION

| N. | PART | OPERATION | PAGE |
|---|---|---|---|
| a | Engine valves | Check clearance | 178 |

## 4.7.13 MAINTENANCE EVERY 2000 HOURS OF OPERATION

| N. | PART | OPERATION | PAGE |
|---|---|---|---|
| a | Travel reduction gears | Change oil | 179 |
| b | Swing reduction gear | Change oil | 180 |
| c | Hydraulic oil and suction filter | Change oil and clean filter | 181 |
| d | Coolant | Change | 184 |
| e | Ball-bearing ring pinion | Change lubricant | 185 |
| f | Alternator and starter | Check | 185 |
| g | A/C system cooling gas<br>(only for machines with air conditioner) | Check quantity | 186 |

## 4.7.14 MAINTENANCE EVERY 4000 HOURS OF OPERATION

| N. | PART | OPERATION | PAGE |
|---|---|---|---|
| a | A/C system filter (dehydrator filter)<br>(only for machines with air conditioner) | Change | 187 |
| b | A/C system compressor<br>(only for machines with air conditioner) | Check | 187 |

https://truckmanualshub.com/



## 4.7.1 WHEN REQUIRED

### 4.7.1.a CHECKING, CLEANING OR CHANGING THE AIR CLEANER CARTRIDGE

**DANGER**

- **Remove the air cleaner only after stopping the engine and do not start the engine if the air cleaner is open.**
- **Always wear goggles while cleaning the filter.**

**IMPORTANT**

- **The air filtering system comprises a primary filtering element with great capacity and a secondary cartridge that provides additional safety protection.**
  **The primary element can be cleaned with compressed air, while the safety cartridge can only be changed.**
- **The filtering element must be cleaned when the clogging warning light (A) positioned on the instrument panel blinks or comes on completely.**
  **In any case, check the cartridge for any clogging every 50 hours of operation of the machine.**

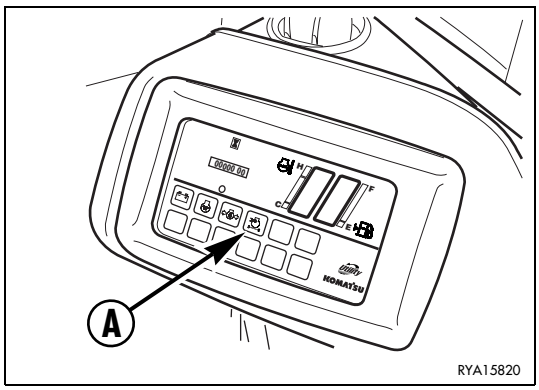


The air cleaner can be reached after opening the engine hood (see “3.5.1 ENGINE HOOD”).
To clean the primary element, proceed as follows:

1 - Pull the yellow safety device (1) to release the cover.

2 - Rotate the filter cover (2) anticlockwise and remove it.

3 - Extract the main filtering element (3).

4 - Slightly strike the element on the palm of your hand to eliminate the dust and blow compressed air on the inner surface, keeping the air jet at a distance of approximately 15 cm and making sure that the pressure does not exceed 4-5 bars.

5 - Carefully clean the inside of the filter casing (4), taking care to avoid the introduction of foreign matters in the suction duct.

6 - Reassemble the filtering element (3), making sure that it is correctly positioned in its seat.

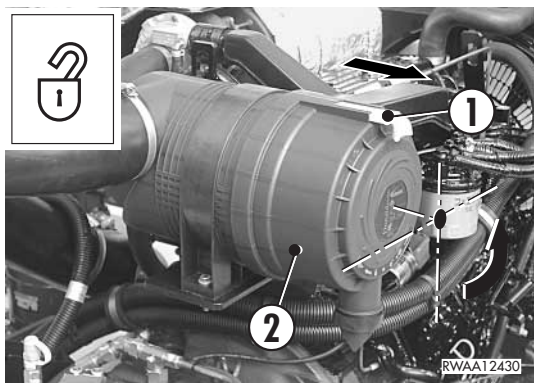


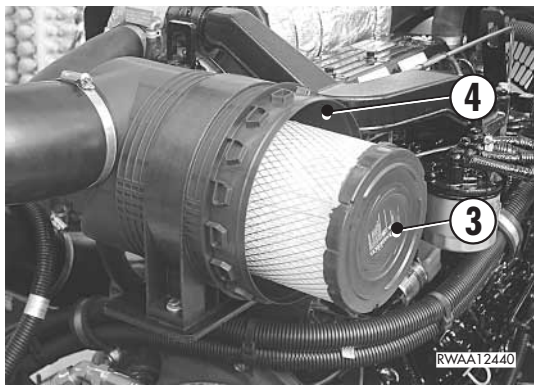

https://truckmanualshub.com/



7 - Put back the cover (2) and rotate it clockwise, making sure that the ejector (5) is positioned vertically and at the bottom.

8 - Lock the cover by means of the yellow safety device (1).

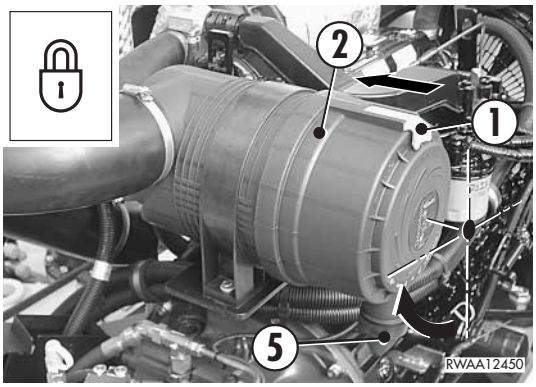


**IMPORTANT**

- **If the clogging warning light comes on after the engine has started, it is necessary to change the primary filtering element and the safety cartridge.**
- **Change the primary filtering element after 6 cleaning operations or after one year. The safety cartridge must always be changed together with the primary filtering element.**
  **To have a point of reference for the change interval, it is advisable to mark the primary filtering element on every cleaning operation.**

To change the safety cartridge, after removing the primary element proceed as follows:

1 - Remove the safety cartridge (6) and reject it.

2 - Carefully clean the inside of the filter casing (4), taking care to avoid the introduction of foreign matters in the suction duct.

3 - Install a new safety cartridge and a new main filtering element, making sure that they are correctly positioned in their seats.

4 - Put back the cover (2) and rotate it clockwise, making sure that the ejector (5) is positioned vertically and at the bottom.

5 - Lock the cover by pushing the yellow safety device (1).

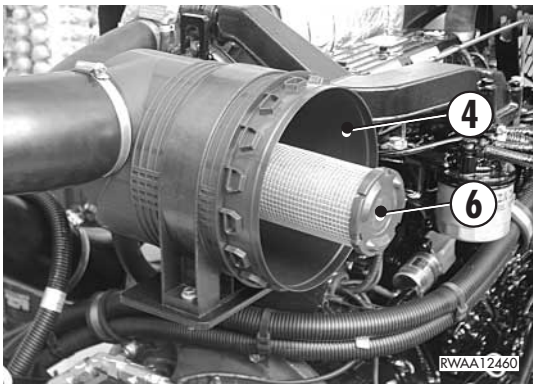

https://truckmanualshub.com/



## 4.7.1.b CHECKING AND CLEANING THE CAB AIR FILTER

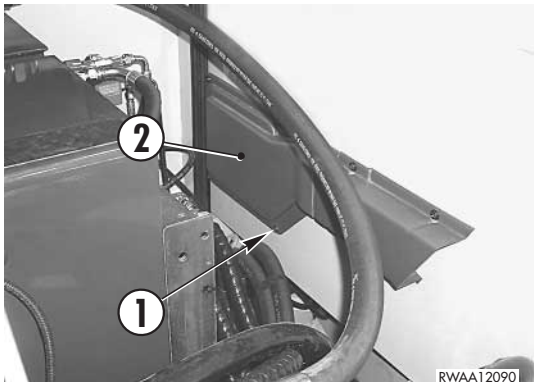


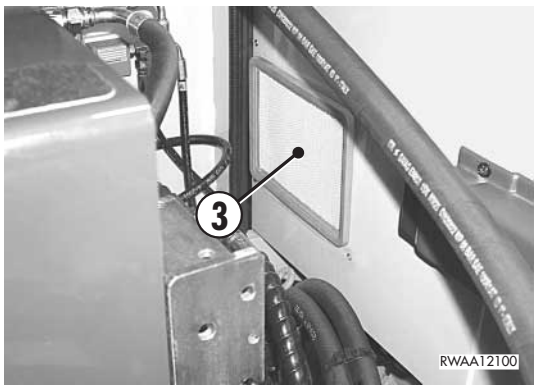


**DANGER**

- **Always wear goggles while cleaning the filter.**

Air suction for the ventilation of the cab is protected by means of a filter positioned on the right side of the cab.
This filter holds all the impurities contained in the air and must be cleaned whenever a decrease in the air circulation is noticed.
The filter can be reached from the outside of the cab. To clean the filtering element, proceed as follows:

1 - Remove the screws (1), remove the outer conveyor (2) and extract the filtering element (3).

2 - Slightly strike the element on the palm of your hand to eliminate the dust and blow compressed air on the inner surface, keeping the air jet at a distance of approximately 15 cm and making sure that the pressure does not exceed 4-5 bars.

3 - Carefully clean the filter casing, taking care to avoid the introduction of foreign matters in the suction duct.

4 - Put back the filtering element (3) and the outer conveyor (2).

**IMPORTANT**

- **If the filtering element is strongly clogged or damaged, replace it with a new one.**

https://truckmanualshub.com/



## 4.7.1.c CHECKING AND CLEANING THE AIR RECIRCULATION FILTER (only for machines equipped with air conditioner)

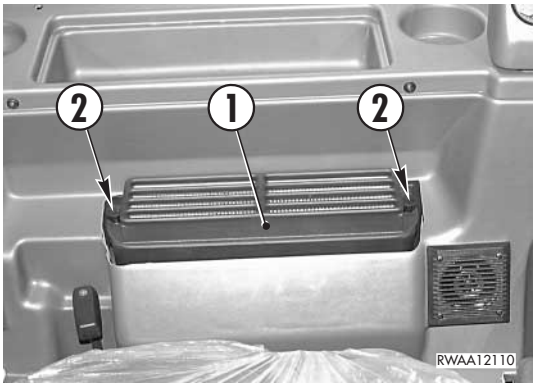


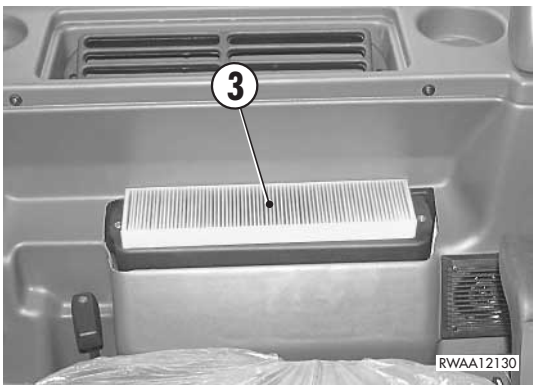


**DANGER**

- **Always wear goggles while cleaning the filter.**

On machines equipped with air conditioning system, the inner air recirculation is protected by means of a filter that holds all the impurities contained in the air and must be cleaned whenever a decrease in the air circulation is noticed.
The filter is positioned on the air conditioning unit, behind the driver's seat, and it can be reached after removing the protection (1).
To clean the filtering element, proceed as follows:

1 - Loosen the fastening screws (2), remove the protection (1) and extract the filtering element (3).

2 - Slightly strike the element on the palm of your hand to eliminate the dust and blow compressed air on the inner surface, keeping the air jet at a distance of approximately 15 cm and making sure that the pressure does not exceed 4-5 bars.

3 - Carefully clean the filter casing, taking care to avoid the introduction of foreign matters in the suction duct.

4 - Put back the filtering element (3) and the protection (1).

**IMPORTANT**

- **\If the filtering element is strongly clogged or damaged, replace it with a new one.**

https://truckmanualshub.com/



### 4.7.1.d CLEANING THE WATER SEPARATOR

The water separator can be reached after opening the engine hood (see “3.5.1 ENGINE HOOD”).
To clean the water separator, proceed as follows:

1 - Loosen the screw (1) and drain the fuel contained in the water separator, collecting it into a container with suitable capacity.
Use a 13 mm spanner.

2 - Loosen the central screw (2) and remove the cup (3) and the filtering element (4).
Use a 14 mm spanner.

3 - Clean the inside of the cup and the filter with diesel oil or oil.

4 - Put back the filter (4) and the cup (3), tighten the screws (2) and (1) and bleed the fuel supply circuit as recommended for the fuel filter.
(See “4.7.11.e CHANGING THE FUEL FILTER”).

5 - Close the hood and start the engine.

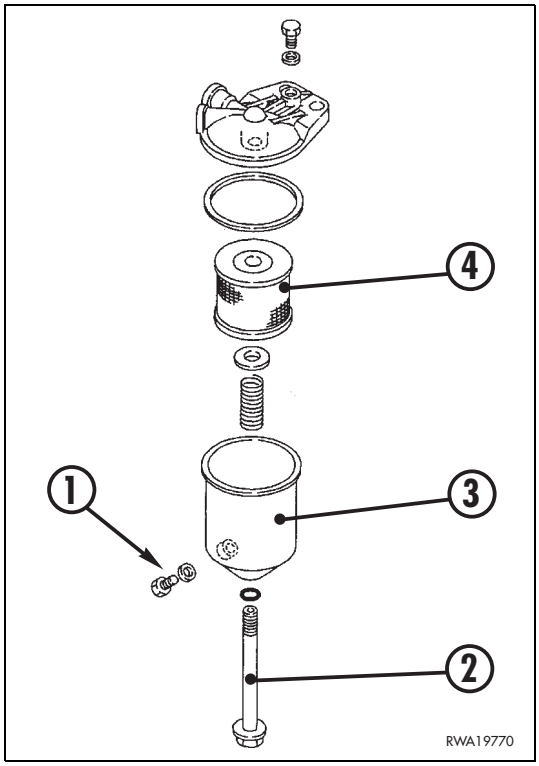


**IMPORTANT**

- **If the filtering element is clogged or damaged, change it.**

https://truckmanualshub.com/



## 4.7.1.e CHECKING THE STEEL TRACK TENSION

**DANGER**

- **This operation must be carried out by two operators. One operator must be seated in the cab and operate the machine according to the instructions of the operator who carries out the check and the adjustment.**
- **The shoe tension must be checked with the frame lifted from the ground; be careful not to move any control lever while the operator is carrying out the check.**

### CHECK

Check conditions:

Firm and level ground.

Work equipment resting on the ground.

1 - Rotate the upper structure by 90° on the side of the track to be checked.

2 - Fold the bucket, position the arm perpendicular to the ground and rest the bucket on the ground.

3 - Force with the boom until raising the track to be checked completely.

4 - Measure the distance between the track rolling surface and the lower central rollers.
Distance between roller and track: 20-25 mm.

If the track tension value is not included in the prescribed interval, adjust the track by proceeding as follows.

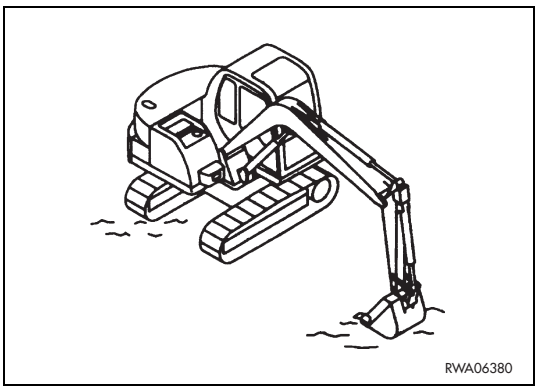


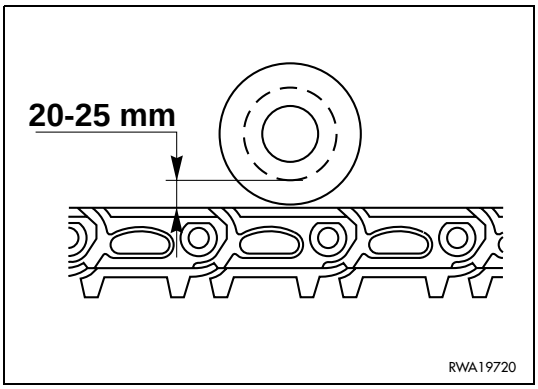

https://truckmanualshub.com/



## ADJUSTMENT

**DANGER**

- **The grease contained in the hydraulic cylinder is under pressure. For this reason, do not loosen the greasing valve (1) giving it more than one turn; if the valve is loosened excessively, it may be pushed out due to the grease pressure and this is very dangerous for the operator.**
  **Do not loosen any other component in addition to the valve (1).**
- **If you notice excessive resistance while injecting grease, slowly move the machine forward and backward for a short distance.**

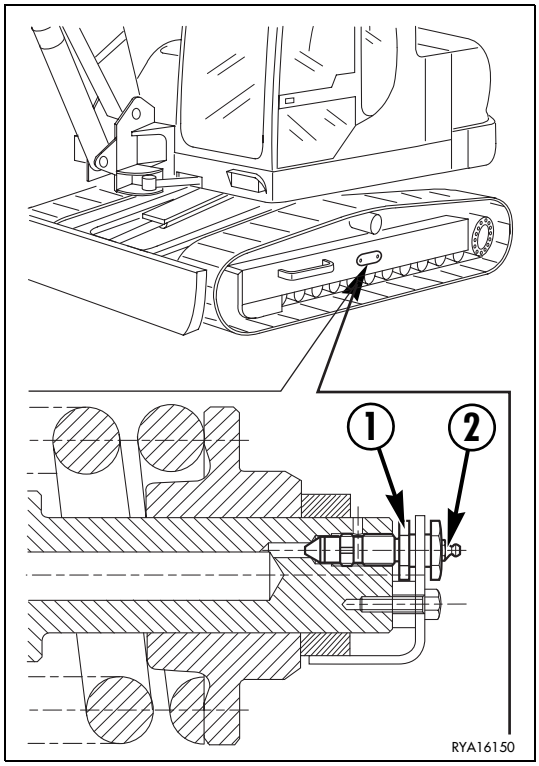


**To increase the tension**

1 - Loosen the screws and remove the cover to reach the adjustment point.
Use a 13 mm spanner.
If the injection of grease is difficult to carry out, slowly move the track for a short distance.

2 - Carefully clean the greasing valve (1) and inject grease through the greaser (2) until obtaining the desired tension.

**To reduce the tension**

1 - Gradually loosen the greasing valve (1) to let the grease out; do not give the valve more than one turn.
Use a 27 mm hexagon spanner.

2 - If the grease does not flow out freely, move the machine slowly forward and backward for a short distance.

3 - Tighten the valve and remove any trace of grease.

4 - Move the machine forward and backward and, after stopping it, check the track tension again.

**IMPORTANT**

- **The wear of pins and bushings varies according to the work conditions and the characteristics of the ground on which the machine operates.**
  **Therefore, it is necessary to check the track tension frequently.**
- **When working on rocky or extremely uneven ground, increase the track tension in order to prevent the introduction of stones or rubble between the tracks and the sprocket; when working on soft or muddy ground, decrease the track tension, since the soil penetrates between rollers, sprocket and tracks and tends to increase it.**

https://truckmanualshub.com/



## 4.7.1.f CHECKING THE SHOE FASTENING

**DANGER**

- **To make up for the inevitable settling movements, it is absolutely necessary to check the driving torque of the screws (1) after the first 30 hours of operation.**
  **A successive check must be carried out after the first 100 hours of running-in and repeated after 200 hours of operation if a considerable decrease in the screw fastening is observed.**
- **If the screws (1) loosen and the driving torque is not corrected, the duration of the tracks will certainly be shorter.**
- **After tightening the screws, make sure that nut and shoe are in contact with the surface of the link.**

The check must be carried out with the machine at rest on level ground.

**Tightening method**

Tighten the screws with an initial driving torque of 20±2 kgm, making sure that nut and shoe are in contact with the link surface. Successively give a further turn of 120°±10°.
Use a 24 mm spanner.

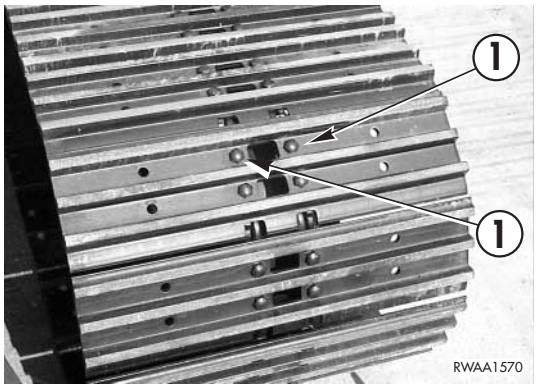


**Tightening sequence**

The screw tightening sequence for each element must respect the order 1-2-3-4 indicated in the figure.

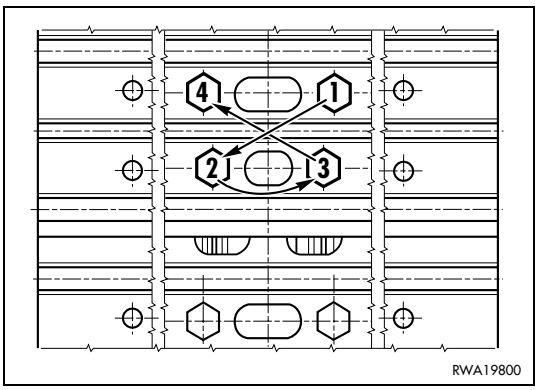

https://truckmanualshub.com/



## 4.7.2 MAINTENANCE INTERVALS IN CASE OF USE OF THE DEMOLITION HAMMER

The hydraulic oil used in the machines provided with demolition hammer deteriorates more quickly than the oil used in normal digging machines, therefore it is advisable to respect the following maintenance plan.

### 4.7.2.a CHANGING THE HYDRAULIC OIL FILTER

In new machines, change the filter after the first 100÷150 hours of operation and for the successive changes keep to the indications given in the table on the right.
If the machine contains synthetic biodegradable oil type HEES, the filter must be changed after the first 50 hours of operation.

### 4.7.2.b CHANGING THE HYDRAULIC OIL

Change the hydraulic oil in the tank according to the intervals indicated in the table on the right.
On machines containing synthetic biodegradable oil type HEES, change the oil after the first 500 hours of operation and for the successive changes keep to the indications given in the table on the right.

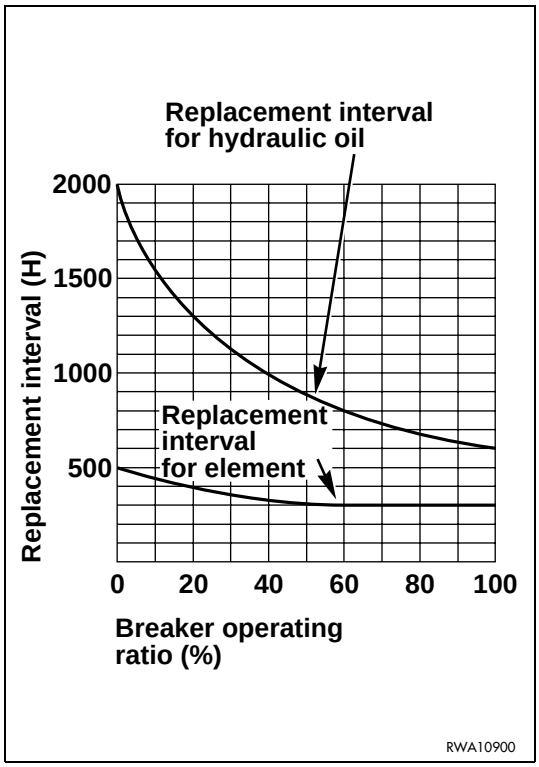

https://truckmanualshub.com/



# 4.7.3 CHECKS BEFORE STARTING

## 4.7.3.a VARIOUS CHECKS

**DANGER**

- **Dirt, oil and fuel spread in the engine compartment near the hot areas may cause fires and damage the machine.**
  **Check if there are leakages frequently and carry out the necessary repairs immediately; if this occurs repeatedly, contact your Komatsu Utility Dealer.**

Before starting the engine, check:

1. if there are loose screws or nuts;
2. if there are oil, fuel or coolant leakages;
3. if the work equipment is worn;
4. the track tension and wear;
5. the conditions and efficiency of: instruments and warning lights on the dashboard, acoustic alarm, working lights, windshield wiper and horn.

The other general checks concern safety, and precisely:

6. soundness of the safety belt;
7. soundness and legibility of the warning plates;
8. cleanliness of the handles used to reach the driver's seat, cleanliness inside the driver's cab.

## 4.7.3.b CHECKING THE COOLANT LEVEL

**DANGER**

- **Do not remove the radiator cap; the coolant must be checked with cold engine, through the expansion tank.**

The coolant tank (1) can be reached after opening the engine hood: the coolant level in the tank must be included between the MIN. and MAX. marks.
If necessary, add water or coolant and, if a constant and considerable decrease in the coolant level can be noticed, check the tightness of the radiator-engine unit and of the radiator casing.

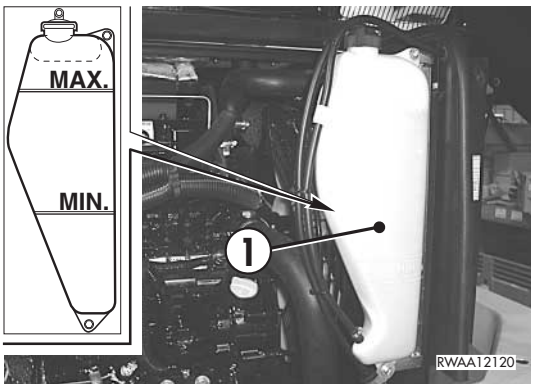

https://truckmanualshub.com/



## 4.7.3.c CHECKING THE FUEL LEVEL

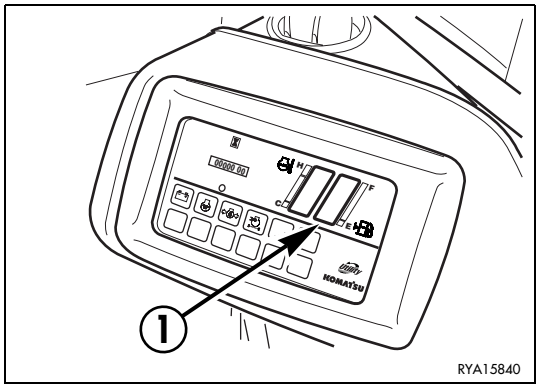


**DANGER**

- **When refuelling, avoid spilling fuel to prevent any risk of fire. If some fuel should inadvertently be spilled, clean the dirty area immediately.**
- **Fuel is flammable; neither use naked flames, nor smoke while refuelling.**
- **Thrust the filling gun into the filler.**

The fuel level can be checked by means of the indicator (1), after turning the ignition key to position «**I**».
Do not fill the tank completely, in order to leave space for the expansion of the fuel.

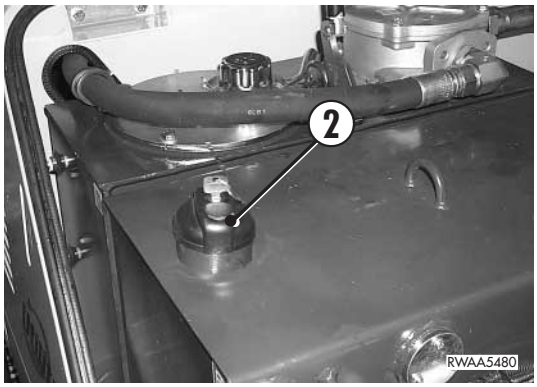


**IMPORTANT**

- **It is advisable to refuel after work, in order to avoid the formation of water condensate.**
- **After refuelling, tighten the filler cap (2) thoroughly and lock the tank.**

## 4.7.3.d CHECKING THE ENGINE OIL LEVEL

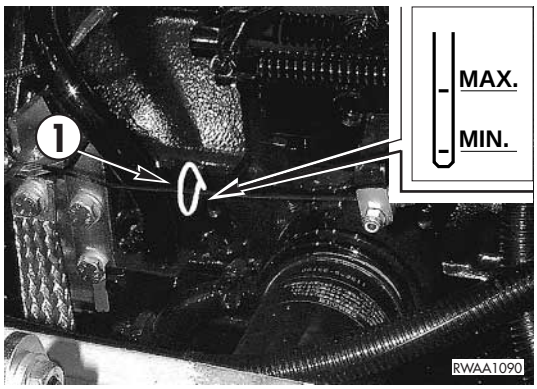


**DANGER**

- **Soon after the machine has been stopped the engine is very hot and may cause burns; let the engine cool down before carrying out any check.**

The dipstick can be reached by opening the engine hood (See “3.5.1 ENGINE HOOD”).
The check must be carried out with cold engine and the machine positioned on level ground.
The oil level must be checked on the graduated dipstick (1) and must be included between the MIN. and MAX. marks; if the level is near the MIN. mark, top up through the filler (2) with oil suitable for the ambient temperature, as prescribed in the lubricant chart. (See “4.3 FUEL, COOLANT AND LUBRICANTS”).

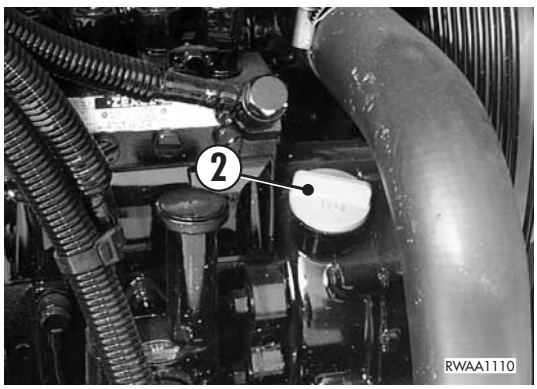


**IMPORTANT**

- **If it is necessary to check the oil level during or soon after work, stop the engine and wait for 15 minutes before carrying out the check.**

https://truckmanualshub.com/



## 4.7.3.e CHECKING THE OIL LEVEL IN THE HYDRAULIC CIRCUIT

**DANGER**

- **The oil level in the hydraulic circuit must be checked with cold oil and the machine positioned on level ground, with retracted bucket and arm cylinders, cylinders of the two-piece boom extended and bucket teeth resting on the ground.**
- **Top up after stopping the engine and eliminating the residual pressures from the equipment circuit (by moving the controls several times) and from the tank (by slowly loosening the filling cap).**

The oil level must be visible through the gauge (1) positioned on the tank and must be included between the MIN. and MAX. marks.
If the level is near the MIN. mark, top up through the filler (2) with suitable hydraulic oil (see “4.3 FUEL, COOLANT AND LUBRICANTS”).

**IMPORTANT**

- **When topping up, do not exceed the MAX. level.**
  **This would damage the hydraulic circuit and make the oil flow out.**
- **If a constant or abnormal decrease in the oil level is observed, thoroughly check the hydraulic circuit, the pistons and the pump for leaks.**

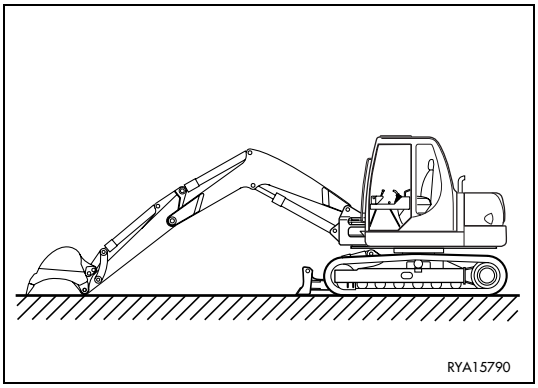


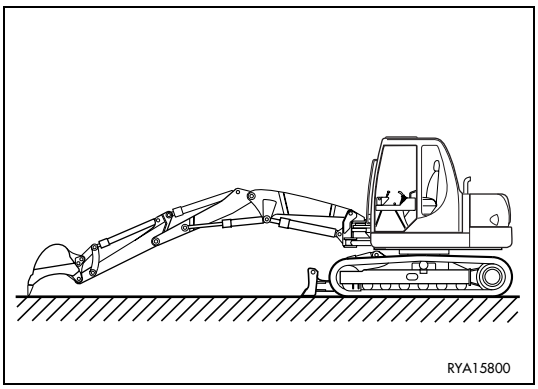


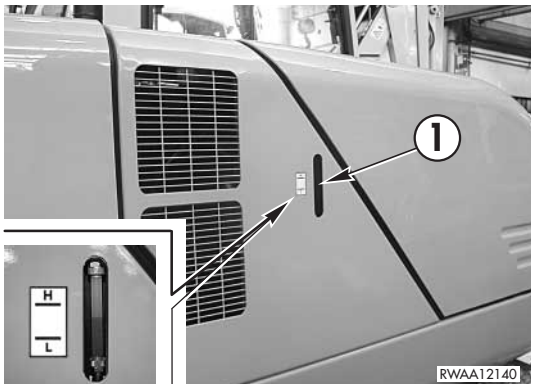


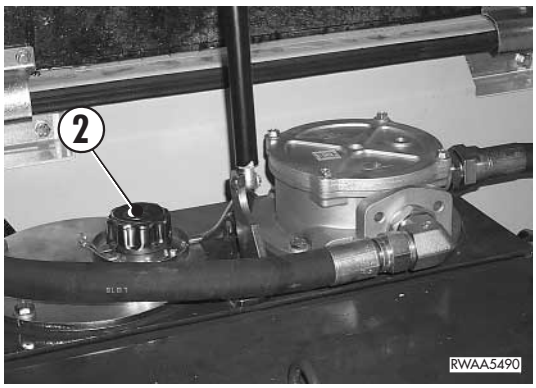

https://truckmanualshub.com/



### 4.7.3.f DRAINING THE WATER SEPARATOR

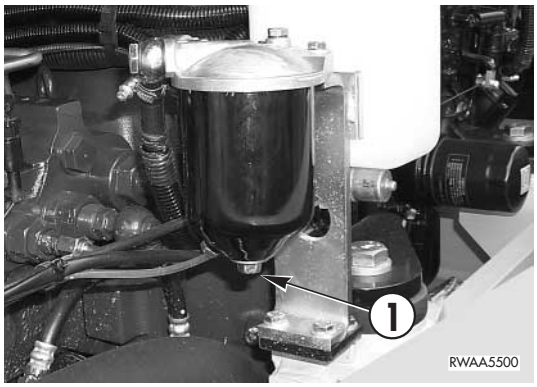


**DANGER**

- **Fuel is flammable; neither use naked flames, nor smoke while draining the water separator.**
- **If some fuel should inadvertently be spilled, clean the dirty area immediately.**

This operation serves to drain the condensate water and must be carried out with full tank, in order to prevent air from entering the fuel supply circuit.
The condensate must be drained at the end of work, before the engine has completely cooled down, in order to prevent freezing if the temperature gets very low.
The water separator can be reached by opening the engine hood (see “3.5.1 ENGINE HOOD”).
The condensate must be drained by loosening the plug (1) and waiting until only clear diesel oil flows out. (Use a 13 mm spanner).

https://truckmanualshub.com/



# 4.7.4 MAINTENANCE EVERY 10 HOURS OF OPERATION

## 4.7.4.a LUBRICATING THE JOINTS

**IMPORTANT**

- **Clean the grease nozzles before applying the greasing pump.**
- **After lubrication, remove any excess grease.**
- **If the machine is used in difficult conditions, perform these maintenance operations more frequently.**

These maintenance operations must be carried out with the equipment completely extended and resting on the ground. For the lubrication, use a syringe and the prescribed grease.
(See “4.3 FUEL, COOLANT AND LUBRICANTS”).

**IMPORTANT**

- **As a general rule, consider that each cylinder is provided with two grease nozzles positioned on the couplings and that each pin serving as fulcrum for a movement is provided with at least one grease nozzle.**

**BLADE LUBRICATION POINTS**

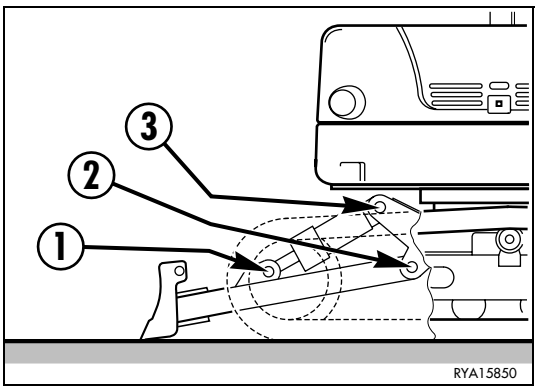


| | |
|---|---|
| 1 - Blade cylinder head pin | (1 point) |
| 2 - Blade fulcrum pin | (2 points) |
| 3 - Blade cylinder base pin | (1 point) |

https://truckmanualshub.com/



## EQUIPMENT LUBRICATION POINTS (MONOBOOM)

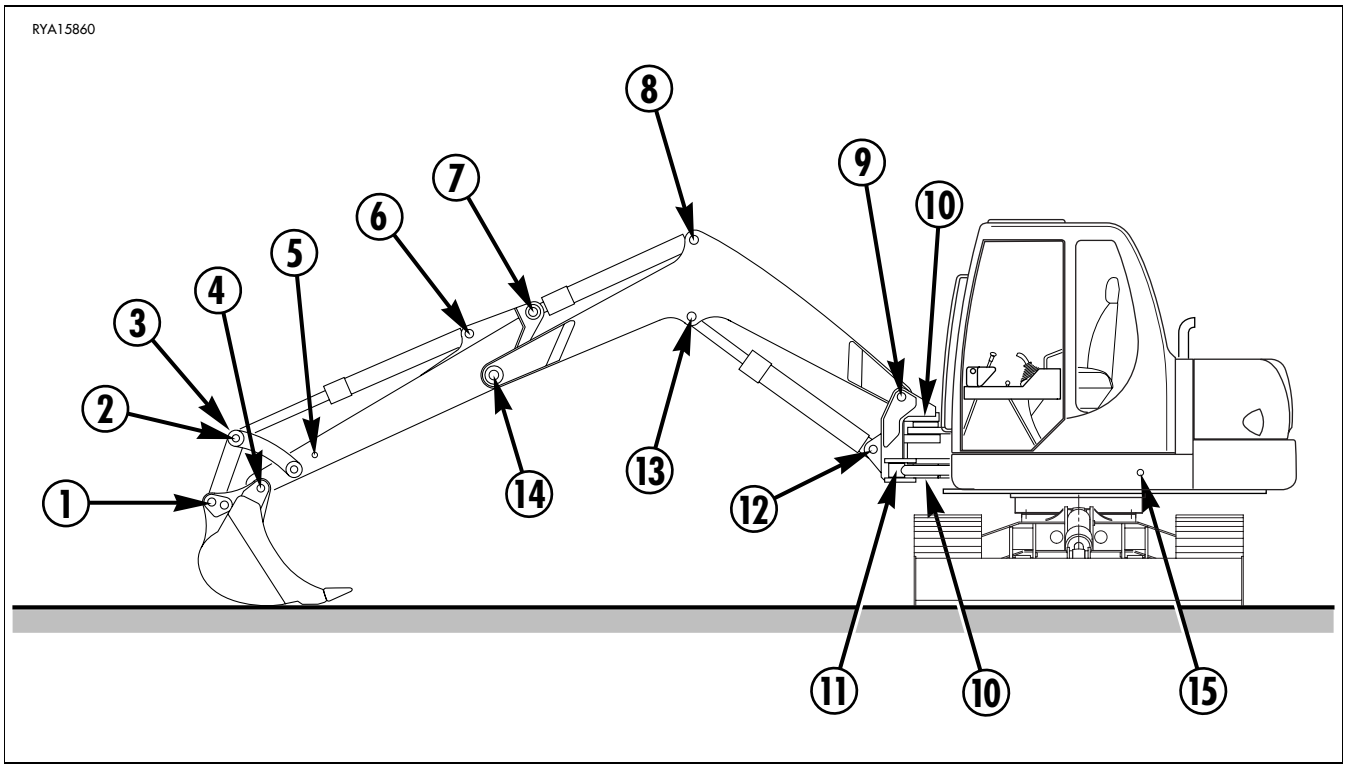


| | |
|---|---|
| 1 - Tie rod-bucket coupling pin | (1 point) |
| 2 - Tie rod-lever coupling pin | (1 point) |
| 3 - Bucket cylinder head pin | (1 point) |
| 4 - Bucket fulcrum pin | (1 point) |
| 5 - Lever fulcrum pin | (1 point) |
| 6 - Bucket cylinder base pin | (1 point) |
| 7 - Arm cylinder head pin | (1 point) |
| 8 - Arm cylinder base pin | (1 point) |
| 9 - Boom fulcrum pin | (1 point) |
| 10 - Boom swing fulcrum pin | (2 points) |
| 11 - Boom swing cylinder head pin | (1 point) |
| 12 - Lifting cylinder base pin | (1 point) |
| 13 - Lifting cylinder head pin | (1 point) |
| 14 - Arm fulcrum pin | (1 point) |
| 15 - Boom swing cylinder base pin | (1 point) |

https://truckmanualshub.com/



## EQUIPMENT LUBRICATION POINTS (TWO-PIECE BOOM)

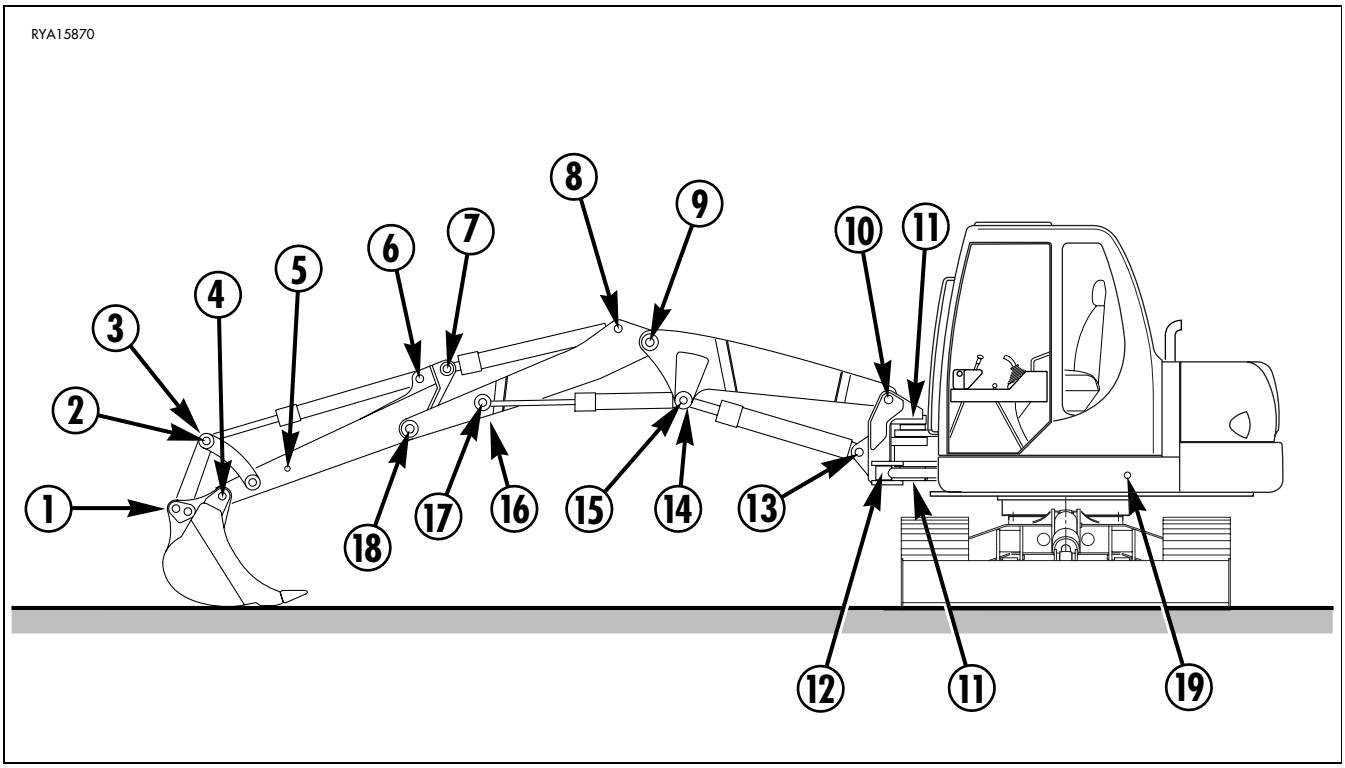


| | |
|---|---|
| 1- Tie rod-bucket coupling pin | (1 point) |
| 2 - Tie rod-lever coupling pin | (1 point) |
| 3 - Bucket cylinder head pin | (1 point) |
| 4 - Bucket fulcrum pin | (1 point) |
| 5 - Lever fulcrum pin | (1 point) |
| 6 - Bucket cylinder base pin | (1 point) |
| 7 - Arm cylinder head pin | (1 point) |
| 8 - Arm cylinder base pin | (1 point) |
| 9 - Two-piece boom fulcrum pin | (1 point) |
| 10 - Boom fulcrum pin | (1 point) |
| 11 - Boom swing fulcrum pin | (2 points) |
| 12 - Boom swing cylinder head pin | (1 point) |
| 13 - Lifting cylinder base pin | (1 point) |
| 14 - Lifting cylinder head pin | (1 point) |
| 15 - Two-piece boom cylinder base pin | (2 points) |
| 16 - Two-piece boom cylinder pin | (1 point) |
| 17 - Two-piece boom cylinder head pin | (2 points) |
| 18 - Arm fulcrum pin | (1 point) |
| 19 - Boom swing cylinder base pin | (1 point) |

https://truckmanualshub.com/



## 4.7.5 MAINTENANCE AFTER THE FIRST 50 HOURS OF OPERATION (Only for machines in which the synthetic biodegradable oil type HEES is used)

These maintenance operations must be carried out after the first 50 hours of operation, together with those to be carried out “EVERY 50 HOURS”.

- CHANGE THE HYDRAULIC OIL DRAIN FILTER

For details on maintenance operations, see the section 4.7.11 MAINTENANCE EVERY 500 HOURS”.

## 4.7.6 MAINTENANCE EVERY 50 HOURS OF OPERATION

### 4.7.6.a CHECKING THE RADIATOR FLUID LEVEL

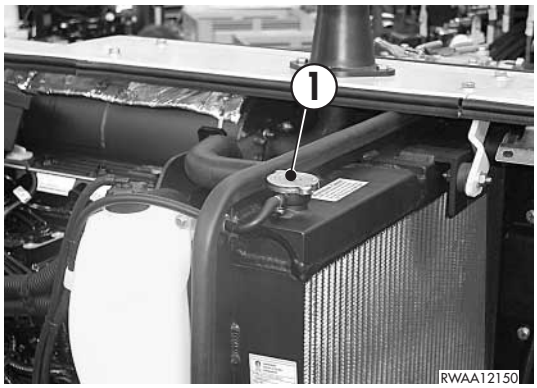


**DANGER**

- **Carry out this check with the machine parked on a level surface and the equipment resting on the ground.**
- **Do not remove the radiator cap when the fluid is hot, since the fluid may be sprayed out violently and cause burns.**
- **Loosen the cap slowly in order to release the pressure before removing it.**

The radiator cap can be reached by opening the engine hood (see “3.5.1 ENGINE HOOD”).
Remove the cap (1) and make sure that the fluid level reaches the filling hole.

**IMPORTANT**

- **If the fluid level in the radiator is low and the expansion tank is full of coolant, check the tightness and make sure that there are no air leaks from the coupling that connects the radiator and the expansion tank.**
  **If the problem persists, contact your Komatsu Utility Dealer.**

https://truckmanualshub.com/



## 4.7.6.b LUBRICATING THE SWING JOINT

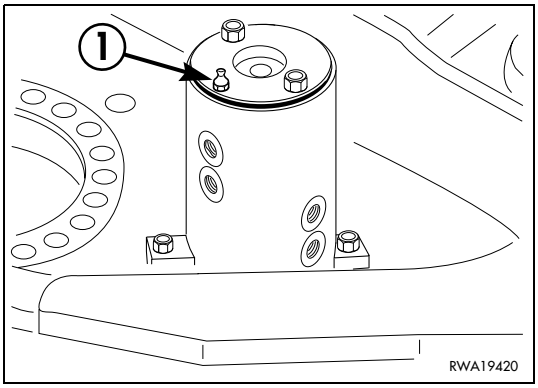


**IMPORTANT**

- **Clean the grease nozzle (1) before applying the greasing pump.**
- **After lubrication, remove any excess grease.**

Lubricate the swing joint cover with the recommended grease.
(See “4.3 FUEL, COOLANT AND LUBRICANTS”).

## 4.7.6.c CHECKING THE ELECTRICAL SYSTEM

**DANGER**

- **If the fuses are corroded, oxidized or not perfectly held in their seat, replace them only with fuses having the same capacity; before changing a fuse, make sure that the ignition key is in position “O”.**
- **If there are signs of short circuit on the cables, find out the cause and repair them; always contact your Komatsu Utility Dealer for the troubleshooting.**

Make sure that there are no disconnected cables or signs of short circuit in the electrical system.
Make sure that all the cables are well tightened in the relevant terminals; tighten any loose cables.
In particular, check:

1. Battery
2. Starter
3. Alternator

https://truckmanualshub.com/



## 4.7.7 MAINTENANCE EVERY 100 HOURS OF OPERATION

These operations must be carried out together with the operations to be performed EVERY 50 HOURS.

### 4.7.7.a LUBRICATING THE BALL-BEARING RING

The lubrication of the ball-bearing ring must be performed after carefully cleaning the grease nipples (1), applying the prescribed grease by means of the the greasing pump supplied with the machine. (See “4.3 FUEL, COOLANT AND LUBRICANTS”).
Once lubrication has been carried out, make sure that all the points have been duly greased and then remove any excess grease that may have come out of the ball-bearing ring.

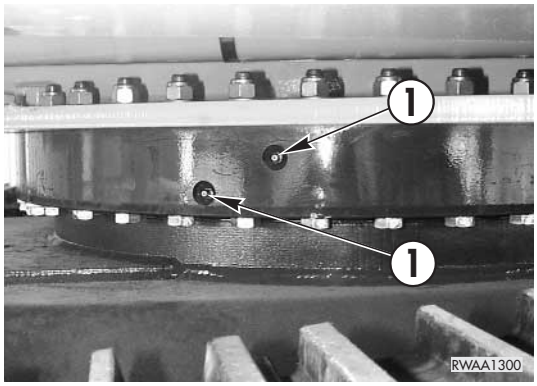


**IMPORTANT**

- **Inject grease in all the grease nipples (2 grease nipples positioned at 180° from each other), in order to have correct distribution and a sufficient quantity of new grease.**

https://truckmanualshub.com/



## 4.7.8 MAINTENANCE AFTER THE FIRST 250 HOURS OF OPERATION

These maintenance operations must be carried out after the first 250 hours of operation, together with those to be carried out “EVERY 250 HOURS”.

- CHANGE THE OIL IN THE TRAVEL REDUCTION GEARS
- CHANGE THE OIL IN THE SWING REDUCTION GEAR
- CHANGE THE HYDRAULIC OIL DRAIN FILTER
- CHECK AND ADJUST THE ENGINE VALVE CLEARANCE

For details on the various maintenance operations, see the sections “4.7.11 MAINTENANCE EVERY 500 HOURS” and “4.7.13 MAINTENANCE EVERY 2000 HOURS”.
For the inspection and adjustment, contact your Komatsu Utility Dealer.

## 4.7.9 MAINTENANCE EVERY 250 HOURS OF OPERATION

### 4.7.9.a ADJUSTING THE FAN BELT TENSION

The fan belt can be reached from the upper side of the fixed cover, after removing the panel (1).
Use 13 and 17 mm spanners.
The check is manual: press the belt (2) with your thumb on the indicated point with a force equal to approx. 10 kg; the resulting deflection must be approximately 10-15 mm.
If the deflection exceeds this value, loosen the screw (3) that fastens the alternator (4) and, with a lever inserted between the engine block and casing, make the alternator slide.
Lock the screw (3) and check again.
Use a 12 mm spanner.

**A** - Fan pulley

**B** - Driving shaft pulley

**C** - Alternator pulley

**IMPORTANT**

- **If the belt is worn, change it and check the tension again after a few hours of operation.**

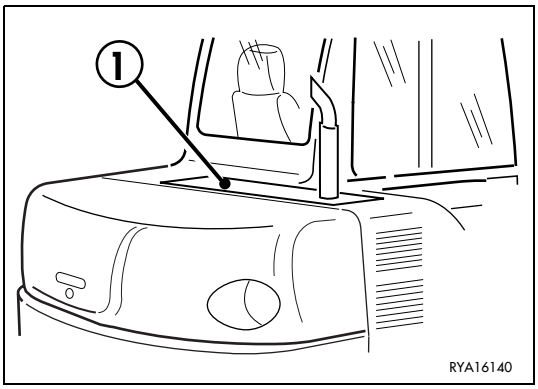


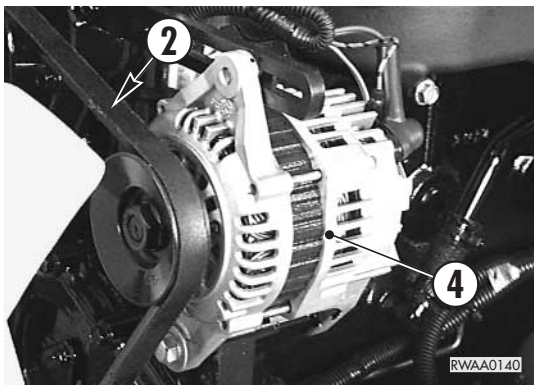


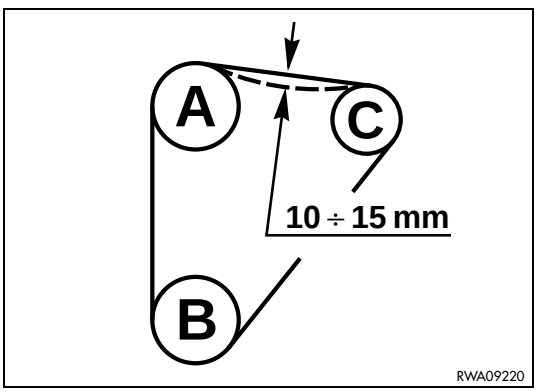


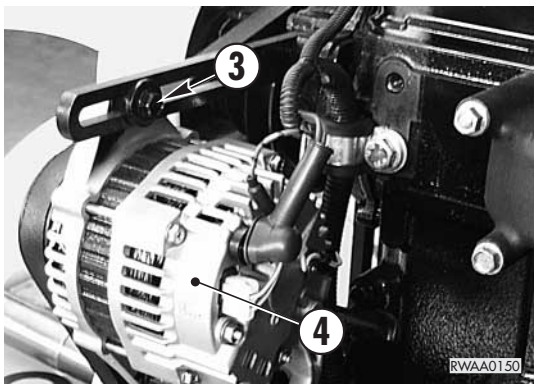

https://truckmanualshub.com/



## 4.7.9.b ADJUSTING THE TENSION OF THE A/C COMPRESSOR BELT (only for machines equipped with air conditioner)

**DANGER**

- **The coolant contained in the air conditioning system is very dangerous. If some sprays get into the eyes or come in contact with the skin, they may cause blindness or congelation. Furthermore, to avoid possible explosions, do not cause sparks and do not use naked flames near the system.**
- **The adjustment of the belt tension is a mechanical operation and must be carried out without intervening on the air conditioning system.**

The compressor belt can be reached after opening the engine hood (see “3.5.1. ENGINE HOOD”).
The check is manual and consists in pressing the belt (1) with the thumb at the centre of the section between the compressor (2) and the pulley (3).
With a pressure of 10 kg the resulting deflection must be approximately 7-10 mm.
When the belt is new the deflection must be approximately 4-6 mm.
If the deflection exceeds the values indicated, loosen the screws (4) that fasten the compressor (2) and make the compressor slide by using a lever that must be inserted between the casing and the support.
Fix the screws (4) and check again.
Use a 13 mm spanner.

**A** - Compressor pulley

**B** - Idle pulley

**C** - Motor pulley

**IMPORTANT**

- **If the belt is worn or in case of doubts on its conditions, change it and check the tension again after a few hours of operation.**

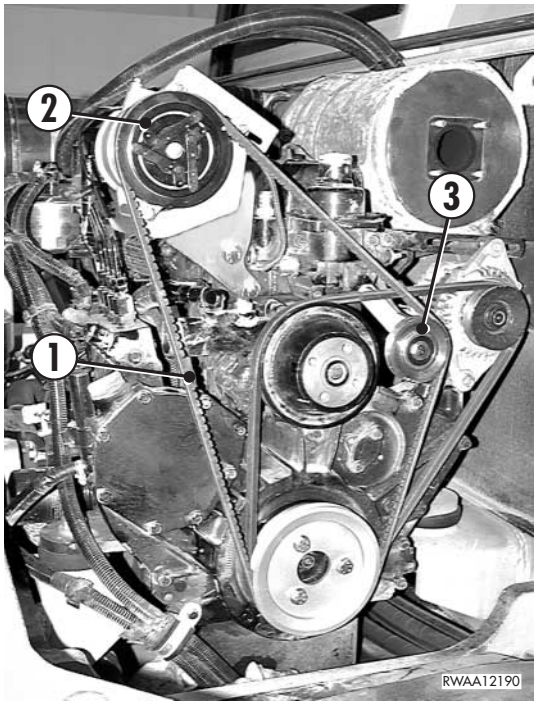


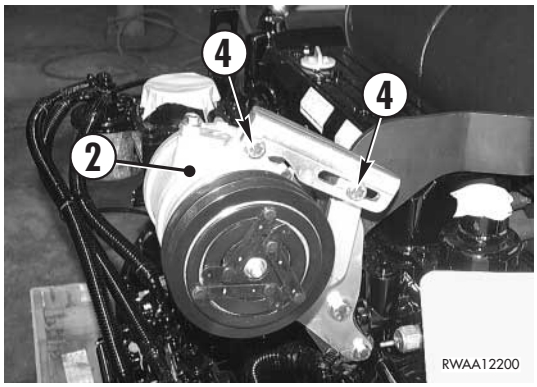


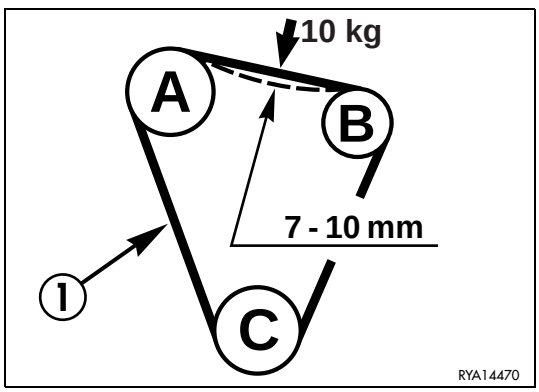

https://truckmanualshub.com/



## 4.7.9.c CHECKING THE BATTERY ELECTROLYTE LEVEL

**DANGER**

- **Check the level only after stopping the engine and if necessary add distilled water only before starting work.**
- **Always wear safety goggles and waterproof gloves.**
- **To prevent gas explosions, do not use naked flames, do not smoke and avoid producing sparks due to short circuits.**
- **The battery electrolyte is dangerous; if it comes in contact with the eyes or skin, rinse with plenty of water and consult a doctor immediately.**

The battery (1) can be reached by opening the right side cover. (See “3.5.2 SIDE COVER”).
The electrolyte level in each cell must be about 6 mm above the plate edge; if necessary, top up with distilled water only.
If, on the contrary, the level is low because some fluid has been spilled, add diluted sulphuric acid until reaching the concentration suitable for the ambient temperature.
(See “3.10.3 BATTERY”).

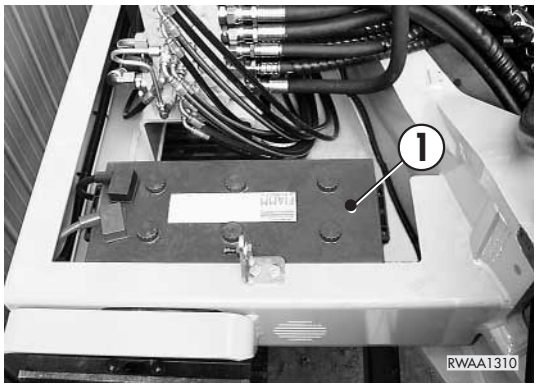


**IMPORTANT**

- **It is advisable to add distilled water before starting work, in order to prevent it from freezing.**
- **Before putting back the cell plugs, make sure that the breather holes are not clogged.**
- **Make sure that the connection terminals are not oxidized; if necessary, clean them and cover them with anti-oxidation grease.**

## 4.7.9.d CHECKING THE OIL LEVEL IN THE TRAVEL REDUCTION GEARS

**DANGER**

- **As soon as the machine has been stopped the oil is very hot; let it cool down until it reaches 40-45°C before carrying out the check.**

This check must be carried out on each reduction gear positioned with the plug (1) on the vertical axis.
If necessary, move the machine slightly until reaching the required position, which must absolutely be respected in order to carry out a precise check.
This check is visual: the oil must reach the hole (2); otherwise, top up using the prescribed oil.
(See “4.3 FUEL, COOLANT AND LUBRICANTS”).
Use a 8 mm spanner.

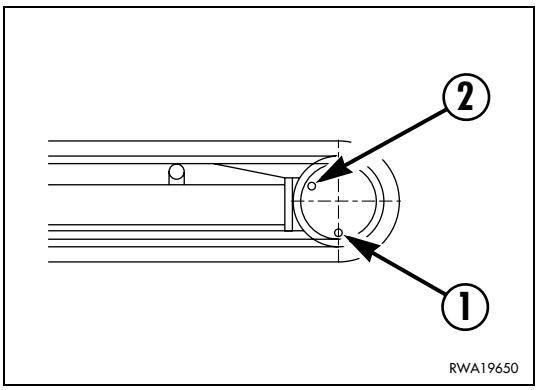

https://truckmanualshub.com/



## 4.7.9.e CHECKING THE OIL LEVEL IN THE SWING REDUCTION GEAR

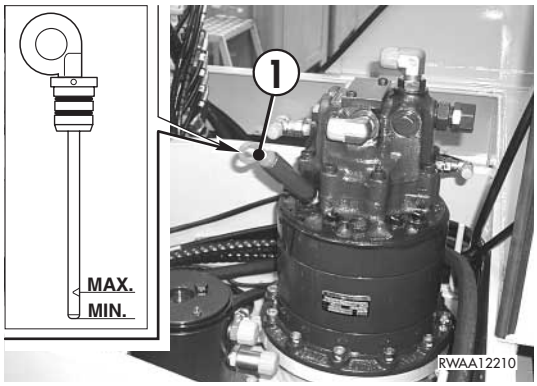


**DANGER**

- **As soon as the machine has been stopped the oil is very hot; let it cool down until it reaches 40-45°C before carrying out the check.**

The oil level must be checked on the graduated dipstick (1) and must be included between the MIN. and MAX. marks; if the level is too near the MIN. mark, top up using the oil prescribed in the lubricant chart. (See “4.3 FUEL, COOLANT AND LUBRICANTS”).

https://truckmanualshub.com/



## 4.7.10 MAINTENANCE AFTER THE FIRST 500 HOURS OF OPERATION (Only for machines in which the synthetic biodegradable oil type HEES is used)

The following maintenance operation must be carried out after the first 500 hours of operation, together with the maintenance operations to be carried out “EVERY 500 HOURS”.

- HYDRAULIC OIL CHANGE AND SUCTION FILTER CLEANING

For further details on the various maintenance operations, see section “EVERY 2000 HOURS”.

## 4.7.11 MAINTENANCE EVERY 500 HOURS OF OPERATION

These operations must be carried out together with those to be carried out EVERY 50, 100 and 250 HOURS.

### 4.7.11.a CHANGING THE HYDRAULIC SYSTEM OIL FILTER

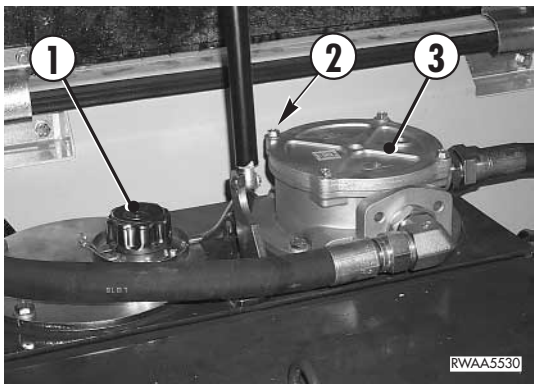


**DANGER**

- **Soon after the machine has been stopped the hydraulic oil is very hot; let it cool down until it reaches a temperature of 40-45°C before changing it.**
- **The hydraulic system is pressurized; loosen the filling cap slowly to release the residual pressure.**
- **Oils, filters, coolants and batteries are considered special waste and must be collected and disposed of according to the anti-pollution regulations in force.**

**CAUTION**

- **On new machines, change the hydraulic oil filter cartridge after the first 250 hours of operation and successively every 500 hours.**
- **On machines in which the synthetic biodegradable oil type HEES is used, the first change must be carried out after the first 50 hours of operations and the successive ones every 500 hours.**

The filter is positioned on the hydraulic system drain outlet and blocks the metal particles that come off the various components due to their wear. The filter can be reached by opening the right side cover (see “3.5.2 SIDE COVER”); to change it, proceed as follows:

1 - Slowly loosen the filling cap (1) in order to release the residual pressure from the tank and then remove it.

https://truckmanualshub.com/



2 - Remove the screws (2) that hold the filter cover (3), remove the cartridge (4) and the filter casing (5).
Use a 13 mm spanner.

3 - Carefully clean the filter casing (5), making sure that the filter gasket (7) and the container gasket (8) are in perfect conditions.

4 - Change the cartridge (4).

5 - Reassemble all the components proceeding in the reverse order and making sure that the gasket (6) of the cover (3) is sound and correctly positioned in the cover seat.

6 - Close the side cover.

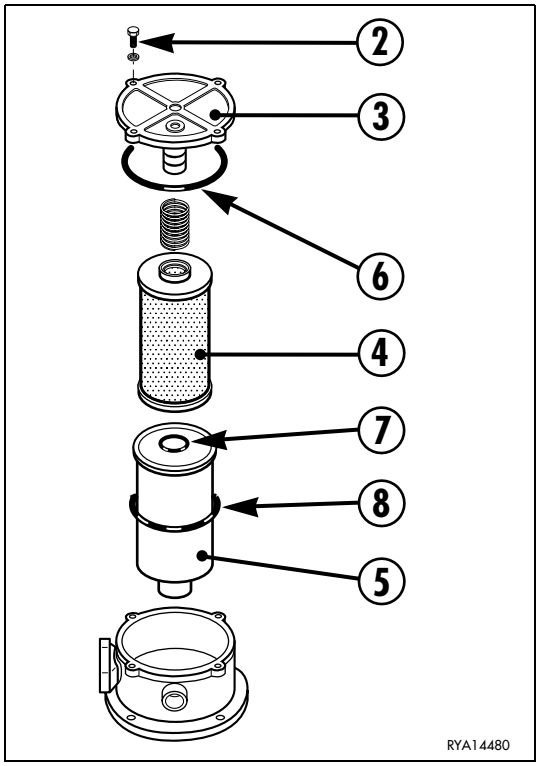


**IMPORTANT**

- **The hydraulic oil used in machines provided with demolition hammer deteriorates sooner than the oil used in machines that carry out only normal digging operations.**
  **On new machines the filter must be changed after the first 100-150 hours of operation, while the successive changes must be carried out according to the intervals indicated on table beside.**
- **If the machine contains synthetic biodegradable oil type HEES, the filter must be changed after the first 50 hours of operation.**

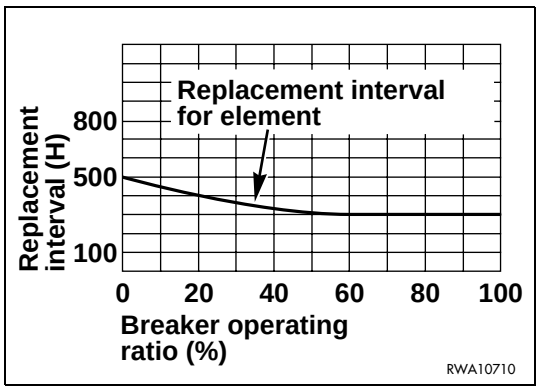

https://truckmanualshub.com/



## 4.7.11.b CHANGING THE SERVO CONTROL FILTER

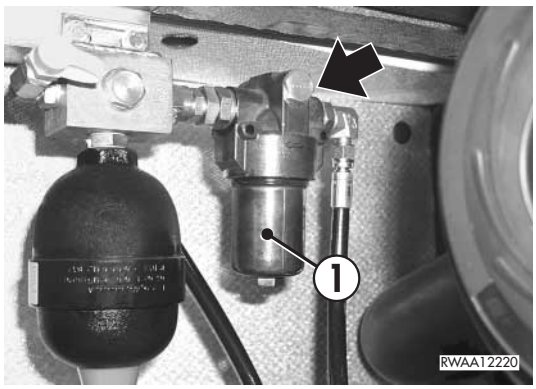


**DANGER**

- **Soon after the machine has been stopped the hydraulic oil is very hot; let it cool down until it reaches a temperature of 40-45°C before changing it.**
- **The hydraulic system is pressurized; after stopping the engine, move the control levers more than once in all directions to release the residual pressure.**
- **Oils, filters, coolants and batteries are considered special waste and must be collected and disposed of according to the anti-pollution regulations in force.**

This operation must be carried out every time the hydraulic system oil filter is changed.
The filter can be reached by opening the engine hood; to change it, proceed as follows:

1- Unscrew the filter holder (1) and remove the used filter. Use a 22 mm spanner.

2 - Install a new filter with the relevant gasket after cleaning the disassembled parts and the inside of the filter holder (1).

**IMPORTANT**

- **After changing the filter, let the engine idle for 2-3 minutes.**

https://truckmanualshub.com/



## 4.7.11.c CHANGING THE ENGINE OIL

**DANGER**

- **Soon after the machine has been stopped the engine oil is very hot and may cause burns; let the engine cool down until it reaches a temperature of 40-45°C before draining the oil.**
- **The oil that may be spilled during the change makes the ground slippery, therefore, use anti-slip shoes and immediately remove any trace of oil from the floor.**
- **Oils, filters, coolants and batteries are considered special waste and must be collected and disposed of according to the anti-pollution regulations in force.**

When changing the engine oil, change also the oil filter (See “4.7.11.d CHANGING THE ENGINE OIL FILTER”).
To change the engine oil, proceed as follows:

1 - Open the engine hood (See “3.5.1 ENGINE HOOD”).

2 - Remove the drain plug (1) of the oil pan, gathering the used oil that flows out into a container with suitable capacity. (Use a 19 mm spanner).
While the oil flows out, remove the filling cap (2), so that the oil can flow freely.

3 - Change the filter (See “4.7.11.d CHANGING THE ENGINE OIL FILTER”).

4 - Tighten the plug (1) onto the pan and pour the prescribed quantity of new oil, using the dipstick (3) to make sure that the oil reaches the MAX. level.

5 - Put back the filling cap (2), start the engine, let it run for 5 minutes and then stop it.
Check the level again and top up if necessary.

6 - Close the engine hood.

Use oil suitable for the ambient temperature (See “4.3 FUEL, COOLANT AND LUBRICANTS”).

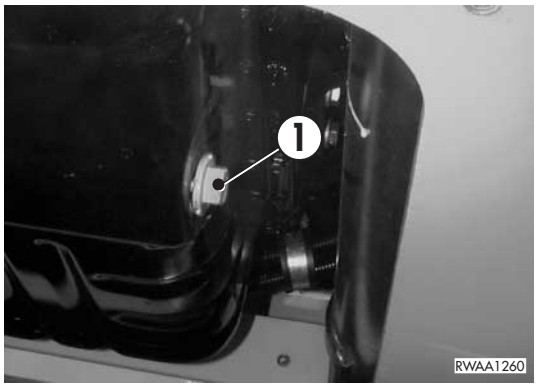


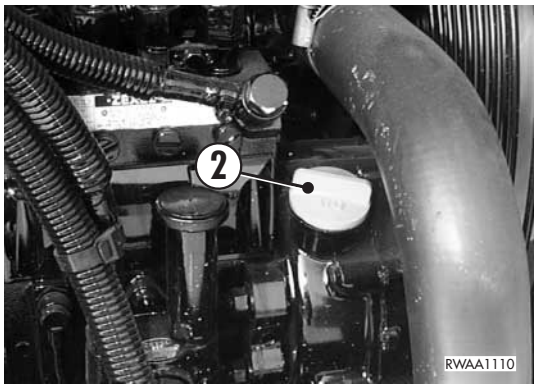


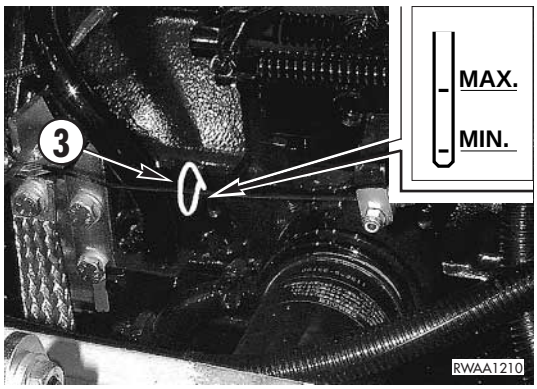

https://truckmanualshub.com/



## 4.7.11.d CHANGING THE ENGINE OIL FILTER

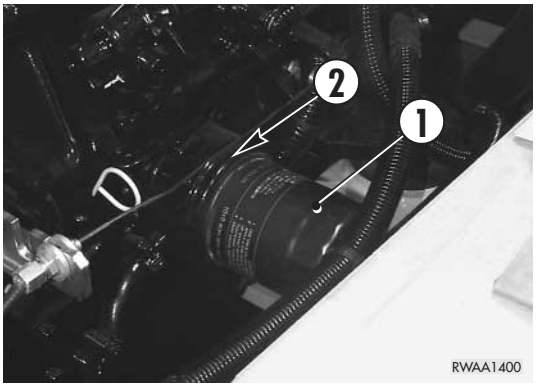


**DANGER**

- **Soon after the machine has been stopped the engine oil is very hot and may cause burns; let the engine cool down until it reaches a temperature of 40-45°C before draining the oil.**
- **The oil that may be spilled during the change makes the ground slippery, therefore, use anti-slip shoes and immediately remove any trace of oil from the floor.**
- **Oils, filters, coolants and batteries are considered special waste and must be collected and disposed of according to the anti-pollution regulations in force.**

This operation must be carried out on every oil change.
Proceed as follows:

1 - Unscrew the used filter (1) with the special spanner provided and throw it away.

2 - Clean the contact surface between the seal and the filter support (2).

3 - Lubricate the seal and screw thoroughly.

4 - Give another half turn by hand.

Start the engine, make sure that there are no leakages and that the oil pressure warning light goes out.

**IMPORTANT**

- **Do not use the spanner to lock the filter, since it may be damaged and cause oil leakages.**

https://truckmanualshub.com/



## 4.7.11.e CHANGING THE FUEL FILTER

**DANGER**

- **Change the filtering element after work, when the engine has cooled down to 40-45°C.**
- **When these operations are carried out, fuel may be spilled; clean the dirty areas immediately, in order to prevent any risk of slipping or fire.**
- **Oils, filters, coolants and batteries are considered special waste and must be collected and disposed of according to the anti-pollution regulations in force.**

The fuel filter and the fuel pump can be reached by opening the engine hood (See “3.5.1 ENGINE HOOD”).

FUEL FILTER

1 - Clean the outer surfaces of the unit and with the special spanner provided unscrew the used filter (1) and throw it away.

2 - Clean the inside of the head (2).

3 - Lubricate the seal of the new filter and screw thoroughly.

4 - Give another half turn by hand.

5 - Bleed the fuel supply circuit.

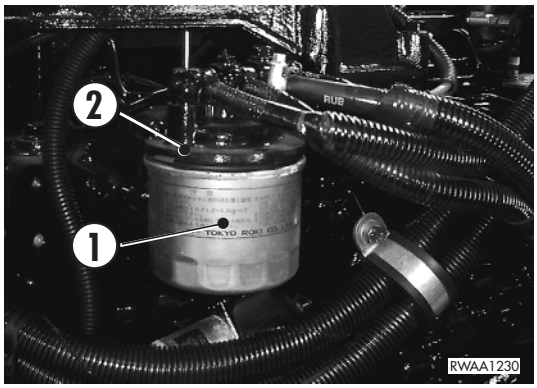


BLEEDING THE CIRCUIT

After filling the tank, proceed as follows:

1 - Loosen the drain screw (3) of the filter holder head (2). Use a 12 mm spanner.

2 - Unscrew the knob (4) of the fuel pump (5) completely.

3 - Act on the knob (4) until fuel without any trace of air flows out of the filter head. Tighten the drain screw (3).

4 - Press the knob (4) and tighten it completely.

5 - Start the engine.

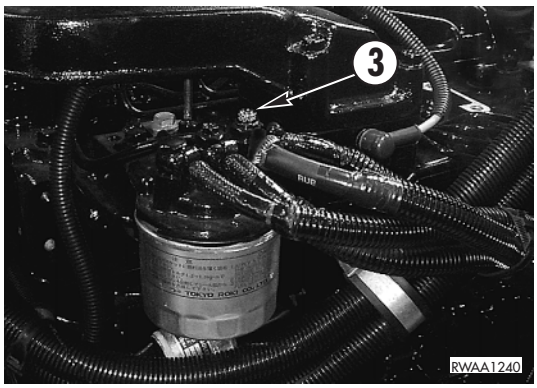


**IMPORTANT**

- **If the fuel does not flow when the fuel pump lever is operated, give one turn to the driving shaft.**
- **Do not let the starter run for more than 15 seconds. Wait at least 15 seconds before repeating the starting procedure.**
- **If the engine starts without problems and then stops or works irregularly, check if there is air in the circuit; if so, check the tightness of the fuel filter, the water separator and the fuel pump.**
- **After the fuel has run out, bleed the circuit by proceeding as described above.**

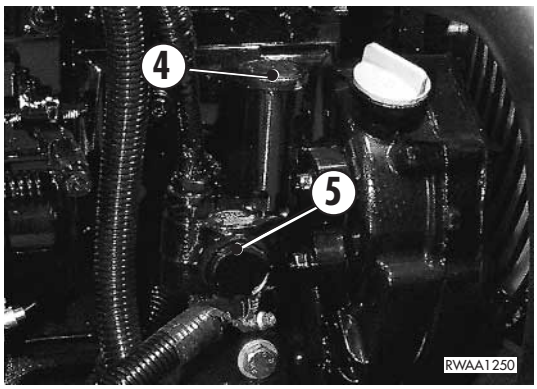

https://truckmanualshub.com/



## 4.7.11.f DRAINING THE FUEL TANK

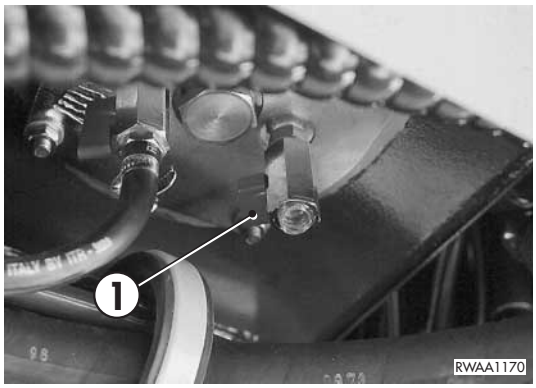


**DANGER**

- **When draining the fuel tank, avoid spilling fuel, since this may cause fires.**
- **If some fuel is accidentally spilled, clean the dirty area immediately, in order to prevent it from getting slippery and to avoid fires.**

This operation serves to let all the impurities and the condensate flow out of the tank; open the cock (1) at the base of the tank and wait until clean fuel flows out.

**IMPORTANT**

- **The tank must be drained before starting the engine, with temperatures exceeding 0°C; when the temperature is below 0°C, the tank must be drained at the end of work or in any case with the machine at operating temperature, to prevent the condensate from freezing.**
- **The condensate and the impurities that may have accumulated inside the tank must be eliminated before refuelling.**

## 4.7.11.g CLEANING THE OUTSIDE OF THE RADIATORS

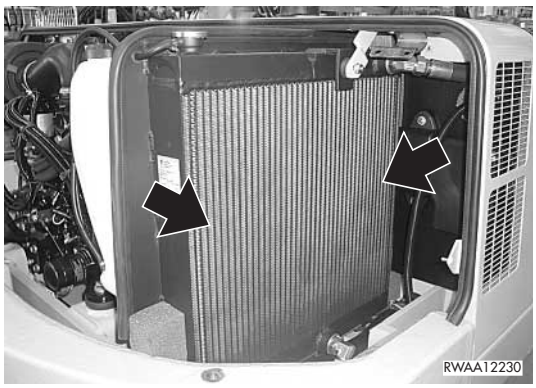


**DANGER**

- **If compressed air, steam or water are directed against a person, they may cause injuries.**
  **Always wear an eye shield, a dust mask and safety shoes.**

The radiators can be reached after opening the engine hood (see “3.5.1 ENGINE HOOD”). The outside of the radiators must be cleaned with a jet of compressed air and, if necessary, with a low-pressure water or steam washing cycle; the specific products available on the market can be certainly used, provided that the instructions given on the package are followed and that the washed parts are carefully dried at the end of the operations.

**IMPORTANT**

- **Do not use products containing oily substances, even if in slight quantities, since these facilitate the adhesion of dust, which affects the heat exchange adversely.**
- **Clean the outside of the radiators whenever the radiator and the heat exchanger are dirtied, even if accidentally, with oil, diesel oil, greasy or oily substances.**
- **If the machine is used in dusty places, clean the radiator and the exchanger more frequently, in order to avoid any clogging of the fins.**

https://truckmanualshub.com/



## 4.7.11.h CLEANING THE OUTSIDE OF THE A/C CONDENSER (only for machines equipped with air conditioner)

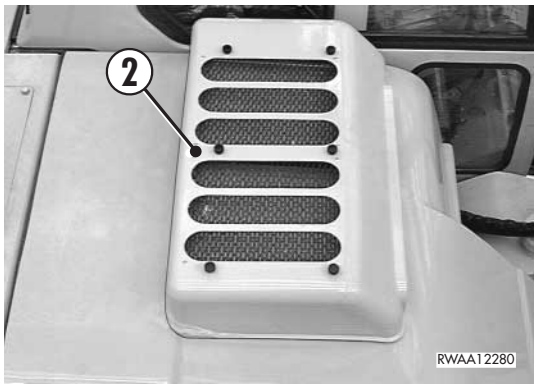


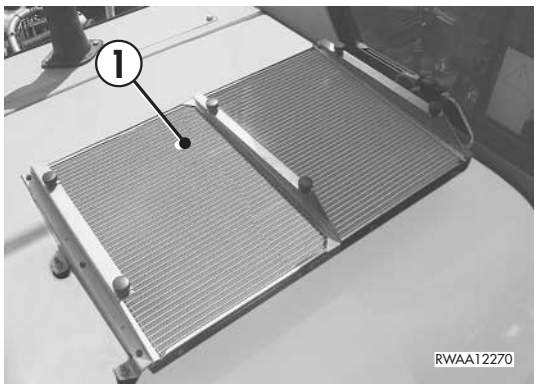


**DANGER**

- **If compressed air, steam or water are directed against a person, they may cause injuries.**
  **Always wear an eye shield, a dust mask and safety shoes.**

The condenser (1) can be reached after removing the cover (2). The outside of the condenser must be cleaned with a jet of compressed air and, if necessary, with a low-pressure water or steam washing cycle; the specific products available on the market can be certainly used, provided that the instructions given on the package are followed and that the washed parts are carefully dried at the end of the operations.

**IMPORTANT**

- **Do not use products containing oily substances, even if in slight quantities, since these facilitate the adhesion of dust, which affects the heat exchange adversely.**
- **Clean the outside of the condenser whenever it is dirtied, even if accidentally, with oil, diesel oil, greasy or oily substances.**
- **If the machine is operated in dusty places, clean the condenser more frequently, in order to prevent the clogging of the fins.**

https://truckmanualshub.com/



## 4.7.11.j CHECKING THE BALL-BEARING RING PINION LUBRICANT LEVEL

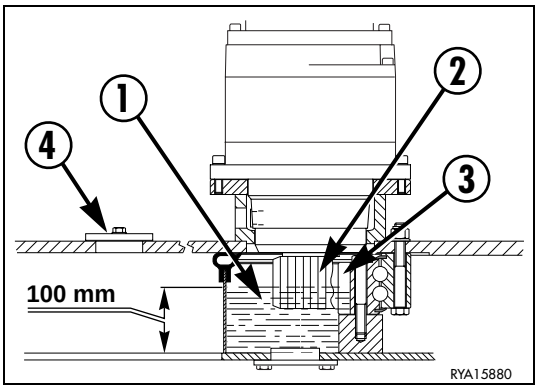


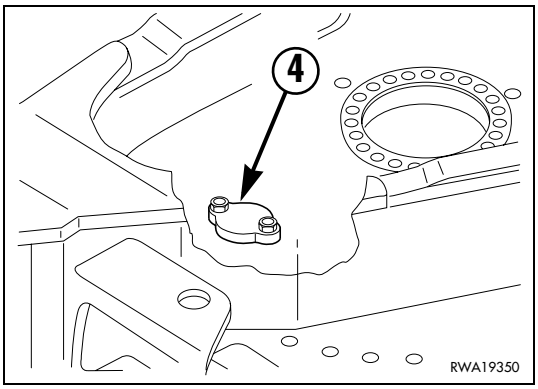


**IMPORTANT**

- **Carry out this check with the machine at rest and at the end of work, that is, with the machine at operating temperature.**

This check is visual and serves to verify the level of the grease contained in the tank (1) that encloses the pinion (2) and the ball-bearing ring (3). Remove the cover (4) from the upper structure and check the level with a graduated ruler; the grease level must reach half the height of the ball-bearing ring teeth (approx. 100 mm). Use a 17 mm spanner.
During this check, it is advisable to make sure that the grease is clean and to change it if any impurities are observed inside it. (See “4.7.13.e CHANGING THE BALL-BEARING RING PINION LUBRICANT”).

## 4.7.11.k DRAINING THE HYDRAULIC OIL TANK (Only for machines in which the synthetic biodegradable oil type HEES is used)

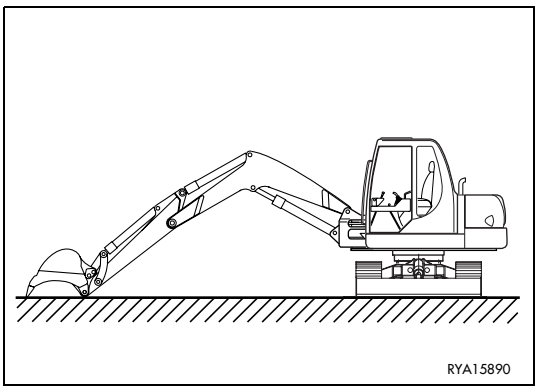


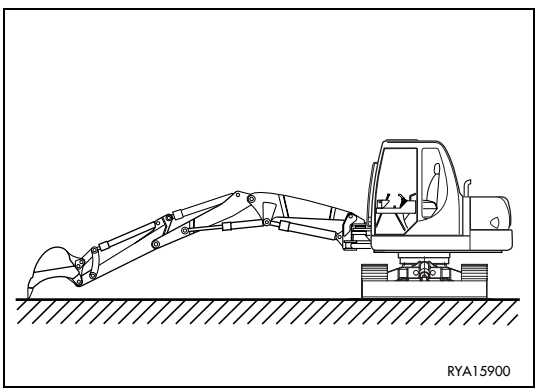


**DANGER**

- **Retract the bucket and arm cylinder completely, extend the cylinders of the two-piece boom completely, lower the bucket teeth to the ground and, after stopping the engine, release the residual pressures from the work equipment circuits (by operating the controls more than once) and from the tank (by slowly loosening the filling cap).**
- **Let the oil cool down until it reaches 40-45°C before carrying out any maintenance operation.**
- **Immediately clean any area dirty with oil.**

1 - Rotate the upper structure by 90°, in such a way as to leave the lower part of the hydraulic oil tank free from the tracks.

2 - Retract the bucket and arm cylinder completely, extend the cylinders of the two-piece boom completely, lower the boom until the bucket teeth touch the ground.

3 - Lower the blade to the ground.

4 - Stop the engine and release the residual pressures from the equipment circuits by shifting the controls more than once.

https://truckmanualshub.com/



5 - Open the right side cover (see “3.5.2 SIDE COVER”) and slowly loosen the filling cap (1) to release the residual pressure.

6 - Remove the lower cover and loosen the drain plug (2) until all the condensate has flown out.
Use 17 and 27 mm spanners.

7 - Put back the filling cap (1) and close the side cover.

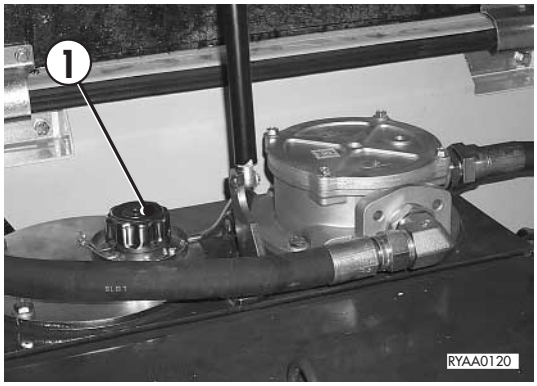


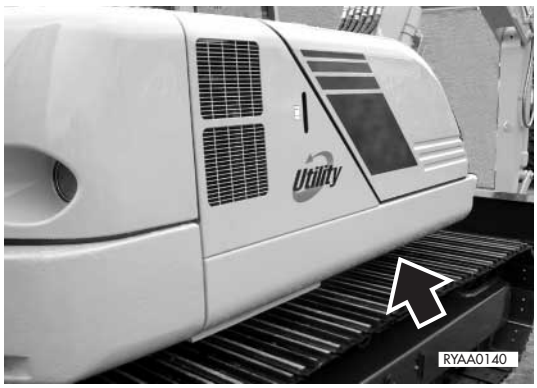


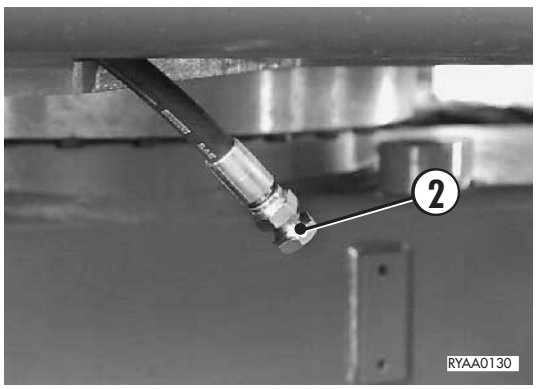


**IMPORTANT**

- **The draining of the tank must be carried out at temperatures exceeding 0°C, before starting the engine; when the temperature is below 0°C, the hydraulic oil tank must be drained at the end of work, or in any case when the temperature of the machine is sufficiently high to prevent the condensate from freezing and allow it to flow out of the tank without problems.**

https://truckmanualshub.com/



## 4.7.12 MAINTENANCE EVERY 1000 HOURS OF OPERATION

These operations must be carried out together with those to be carried out EVERY 50, 100, 250, 500 HOURS.

### 4.7.12.a CHECKING AND ADJUSTING THE ENGINE VALVE CLEARANCE

**CAUTION**

- **On new machines, adjust the engine valve clearance after the first 250 hours of operation and successively every 1000 hours.**

Since the check and adjustment of the engine valve clearance require the use of special tools, have these operations carried out by your Komatsu Utility Dealer.

https://truckmanualshub.com/



## 4.7.13 MAINTENANCE EVERY 2000 HOURS OF OPERATION

Carry out these operations together with those to be performed EVERY 50, 100, 250, 500 and 1000 HOURS.

### 4.7.13.a CHANGING THE OIL IN THE TRAVEL REDUCTION GEARS

**DANGER**

- **Soon after the machine has been stopped the oil is very hot; let the oil cool down until it reaches a temperature of 40-45°C before changing it.**
- **Oils, filters, coolants and batteries are considered special waste and must be collected and disposed of according to the anti-pollution regulations in force.**

**CAUTION**

- **On new machines, change the travel reduction gear oil after the first 250 hours of operation and successively every 2000 hours.**

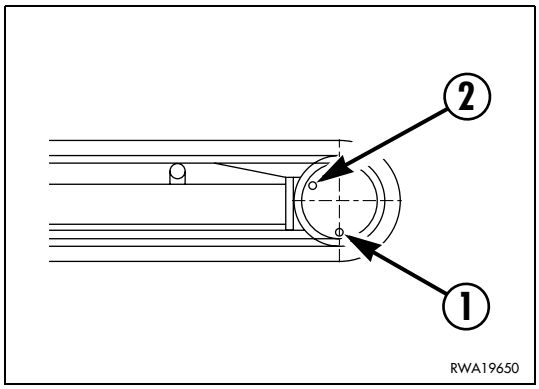


This operation must be carried out with the machine on level ground at a temperature of 40-45°C, so that the oil is more fluid and can be drained easily together with the suspended solid particles.

1 - Move the machine until the drain plug (1) is on the vertical axis in low position.

2 - Remove the drain plug (1) and let all the used oil flow into a container with suitable capacity.
While the oil flows out, remove the level plug (2).
Use a 8 mm hexagon spanner.

3 - After draining the oil, put back the plug (1) and pour new oil of the recommended type through the hole (2) until reaching the lower edge of the hole itself.

4 - Put back the plug (2).

Carry out some movements, stop the machine and check the levels again.
Use only the prescribed oil.
(See “4.3 FUEL, COOLANT AND LUBRICANTS”).

https://truckmanualshub.com/



## 4.7.13.b CHANGING THE OIL IN THE SWING REDUCTION GEAR

**DANGER**

- **Soon after the machine has been stopped the oil is very hot; let the oil cool down until it reaches a temperature of 40-45°C before changing it.**
- **Oils, filters, coolants and batteries are considered special waste and must be collected and disposed of according to the anti-pollution regulations in force.**

**CAUTION**

- **On new machines, change the rotation reduction gear oil after the first 250 hours of operation and successively every 2000 hours.**

This operation must be carried out with the machine on level ground at a temperature of 40-45°C, so that the oil is more fluid and can be drained easily together with the suspended solid particles.

1 - Rotate the upper structure by 90°, in such a way as free the lower right cover from the machine tracks.

2 - Open the side cover. (See “3.5.2 SIDE COVER”).

3 - Remove the lower right cover in order to create room for the drain pipe (1).
Use a 17 mm spanner.

4 - Remove the drain plug (2) and let the used oil flow out completely, collecting it into a container with suitable capacity.
While the oil flows out, remove the level plug (3).
Use 16 and 19 mm spanners.

5 - Once the oil has been drained, put back the plug (2), the lower right cover and fill with the prescribed oil through the hole (3), until reaching the MAX level indicated on the graduated dipstick (3).

6 - Put back the plug (3) and close the side cover.
Rotate the upper structure more than once and check the level again with the machine at rest.
Use only the prescribed type of oil. (See “4.3 FUEL, COOLANT AND LUBRICANTS”).

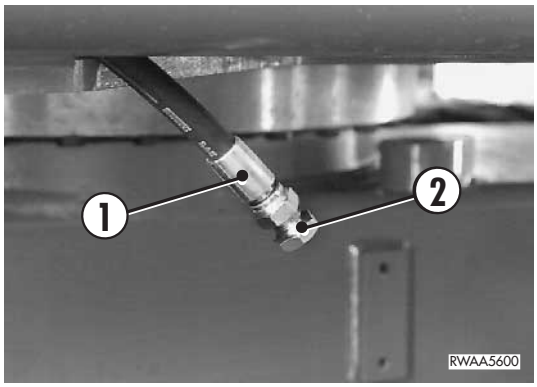


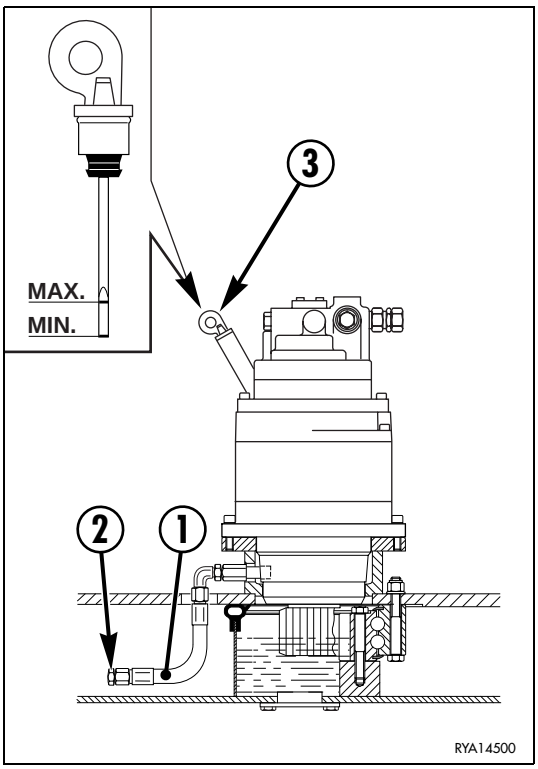

https://truckmanualshub.com/



## 4.7.13.c CHANGING THE HYDRAULIC SYSTEM OIL AND CLEANING THE SUCTION FILTER

**CAUTION**

- **On machines containing synthetic biodegradable hydraulic oil type HEES, carry out the change after the first 500 hours of operation and successively every 2000 hours, and in any case at least once a year.**

**DANGER**

- **Retract the bucket and arm cylinder completely, extend the cylinders of the two-piece boom completely, lower the bucket teeth to the ground and, after stopping the engine, release the residual pressures from the work equipment circuits (by operating the controls more than once) and from the tank (by slowly loosening the filling cap).**
- **Let the oil cool down until it reaches 40-45°C before carrying out any maintenance operation.**
- **Immediately clean any area dirty with oil.**
- **Oils, filters, coolants and batteries are considered special waste and must be collected and disposed of according to the anti-pollution regulations in force.**

1 - Rotate the upper structure by 90°, in such a way as to leave the lower part of the hydraulic oil tank free from the tracks.

2 - Retract the bucket and arm cylinder completely, extend the cylinders of the two-piece boom completely, lower the boom until the bucket teeth touch the ground.

3 - Lower the blade to the ground.

4 - Stop the engine and release the residual pressures from the equipment circuits by shifting the controls more than once.

5 - Open the right side cover (see “3.5.2 SIDE COVER”) and slowly loosen the filling cap (1) to release the residual pressure.

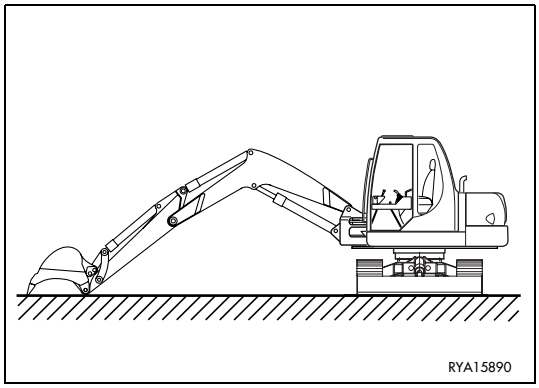


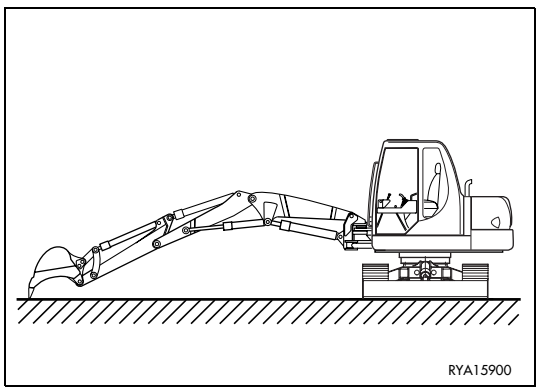


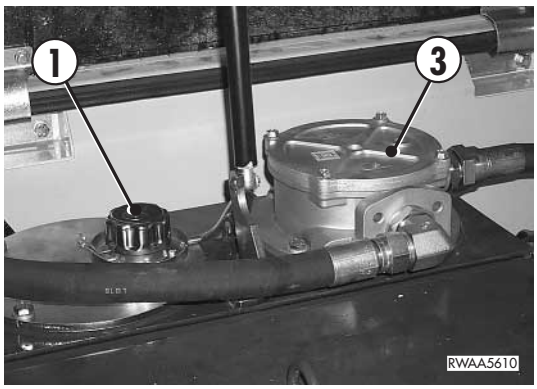

https://truckmanualshub.com/



6 - Remove the lower cover, remove the drain plug (2) and let the oil flow out, gathering it into a container with suitable capacity.
Use 17 and 27 mm spanners.

7 - Remove the upper flange (3) of the tank and change the filter (see “4.7.11.a CHANGING THE HYDRAULIC SYSTEM OIL FILTER”).
Use a 13 mm spanner.

8 - Remove the screws (4), remove the flange (5) and clean the suction filter (7).
Use a 17 mm hexagon spanner.

**IMPORTANT**

- **Carefully check the grid of the filtering element and if it is not in perfect conditions, change it.**

9 - Put back the drain plug (2), the suction filter (7), the upper flange (5), making sure that the gasket (6) is in good conditions.

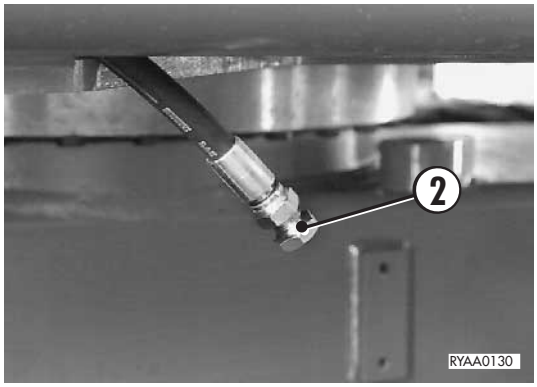


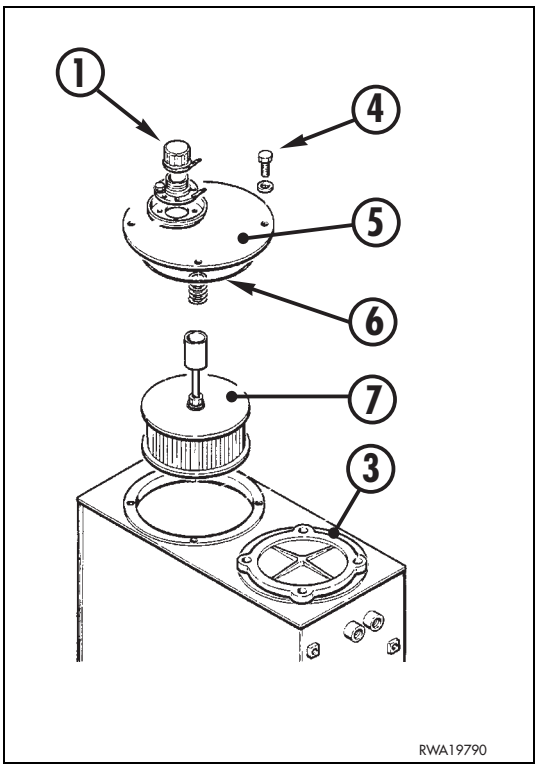

https://truckmanualshub.com/



10 - Fill with the prescribed oil until reaching the correct level (8). Use oil of the prescribed type only (see “4.3 FUEL, COOLANT AND LUBRICANTS”).

11 - Open the engine hood (see “3.5.1 ENGINE HOOD”) and loosen the drain screw (9) positioned on the hydraulic pump until no air bubbles can be noticed in the oil flowing out of the screw.
Use a 19 mm spanner.
After bleeding the oil, tighten the screw (9) and put back the filling cap (1).

12 - Make sure that all the control levers are in neutral, start the engine and let it idle for 2-3 minutes before operating the work equipment.
Move each piston more than once in order to deaerate the system; check the level again and top up if necessary.

13 - Close the engine hood and the side cover.

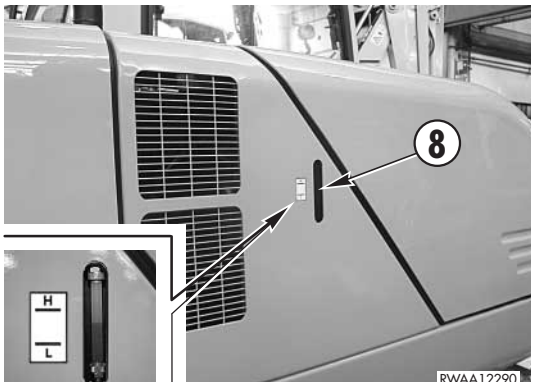


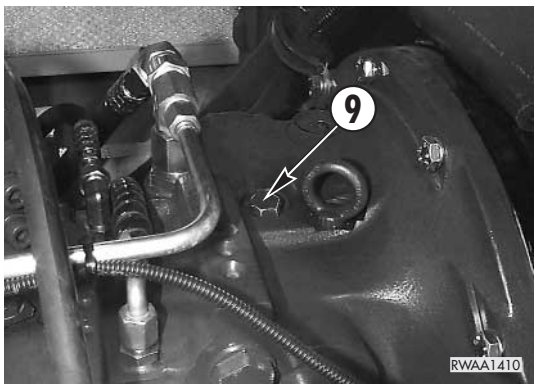


**CAUTION**

- **Never start the engine with empty tank, since this would certainly damage the pump.**

**IMPORTANT**

- **The hydraulic oil of the machines equipped with demolition hammer deteriorates more rapidly than the oil of the machines used for simple digging operations.**
  **Perform the oil changes according to the indications given in the table beside.**

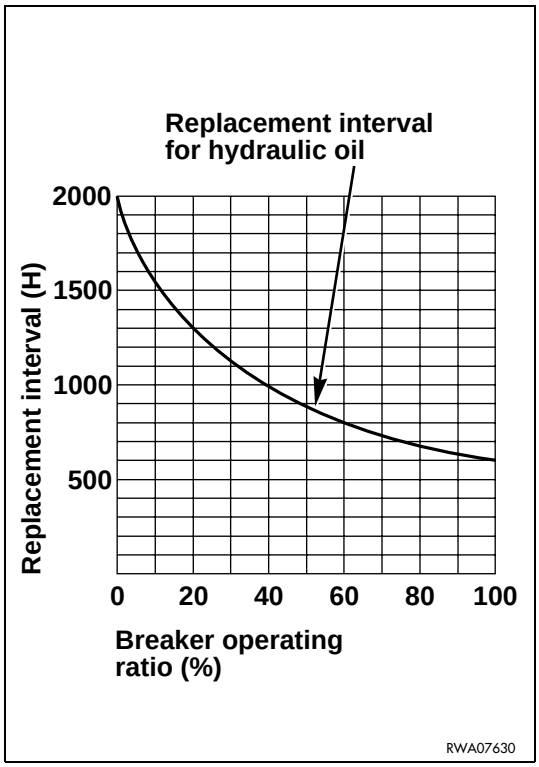

https://truckmanualshub.com/



## 4.7.13.d CHANGING THE COOLANT

**DANGER**

- **Soon after the machine has been stopped the coolant is very hot and under pressure and it may cause serious burns; let the engine cool down until it reaches approximately 40-45°C before changing the coolant.**
- **Slowly loosen the radiator cap, in order to release the residual pressure.**
- **Oils, filters, coolants and batteries are considered special waste and must be collected and disposed of according to the anti-pollution regulations in force.**

**IMPORTANT**

- **The change of the permanent coolant does not require the descaling of the circuit.**

1 - Open the engine hood (See “3.5.1 ENGINE HOOD”).

2 - Loosen and remove the upper cap (1) of the radiator.

3 - Loosen and remove the drain plug (2) of the radiator, loosen the drain valve (3) positioned on the engine block and let the fluid flow out.
Use 6 and 12 mm hexagon spanners.
While the fluid flows out, drain the coolant tank (4).

4 - Put back the drain plug (2), close the valve (3) on the engine block and fill the radiator with new fluid (see “4.3 FUEL, COOLANT AND LUBRICANTS”).

5 - Start the engine and let it idle for a few minutes; check the level again and if necessary top up before putting back the upper cap (1).

6 - Fill the tank (4) until reaching the maximum level.

7 - Close the engine hood.

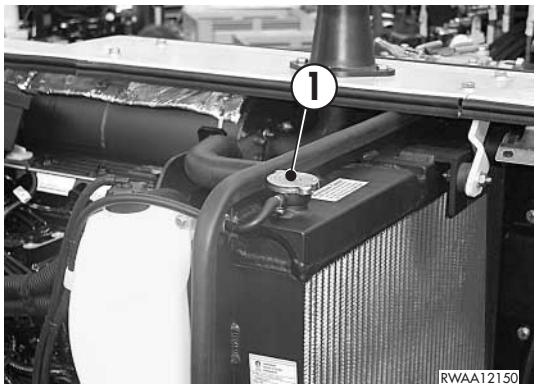

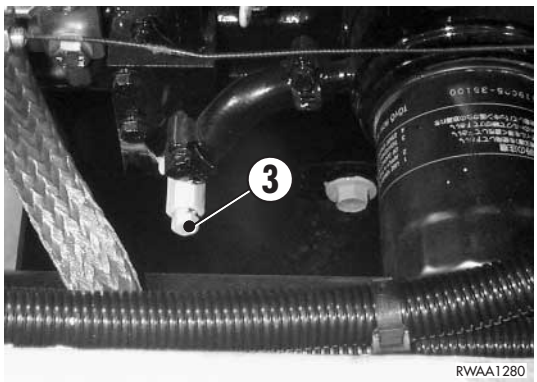


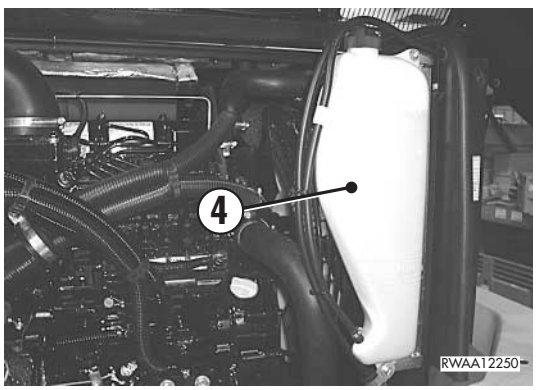

https://truckmanualshub.com/



## 4.7.13.e CHANGING THE BALL-BEARING RING PINION LUBRICANT

**DANGER**

- **Oils, filters, coolants and batteries are considered special waste and must be collected and disposed of according to the anti-pollution regulations in force.**

**IMPORTANT**

- **The lubricant must be changed with the machine at rest and at the end of work, that is, with the machine at operating temperature.**

To change the lubricant, proceed as follows:

1 - Remove the inlet and inspection cover (1) and the drain plug (2) after preparing a container suitable for collecting the used grease that flows out of the drain hole. Use a 17 mm spanner.

2 - Complete the removal of used grease by means of a suction pump.

3 - Put back the drain plug (2).

4 - Inject the prescribed grease (see “4.3 FUEL, COOLANT AND LUBRICANTS”) through the inlet hole (1) until reaching half the height of the ball-bearing ring teeth (approximately 100 mm).

5 - Put back the inlet and inspection cover (1) and after approximately two hours of operation make sure that the lubricant level is correct.

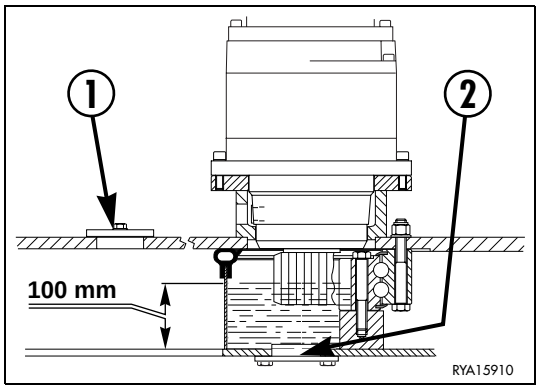


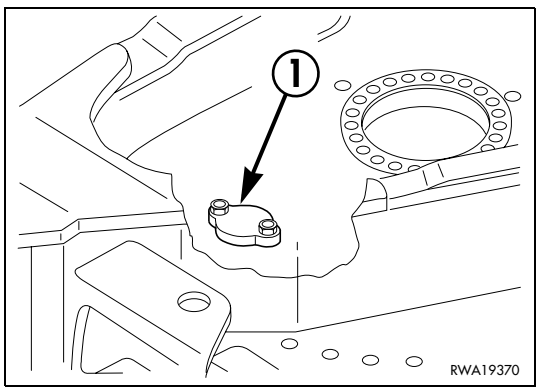


## 4.7.13.f CHECKING THE ALTERNATOR AND THE STARTER

For any inspection and/or repair, contact your Komatsu Utility Dealer.
If the engine is started frequently, the alternator and the starter should be inspected every 1000 hours of operation.

https://truckmanualshub.com/



### 4.7.13.g CHECKING THE A/C COOLING GAS QUANTITY (only for machines equipped with air conditioner)

**DANGER**

- **The coolant contained in the air conditioning system is very dangerous. If some sprays get into the eyes or come in contact with the skin, they may cause blindness or congelation. Furthermore, to avoid possible explosions, do not cause sparks and do not use naked flames near the system.**
- **The air conditioning system must be serviced only by qualified personnel.**

---

To check the cooling gas it is necessary to use specific equipment: have this operation carried out only by specialized personnel, contacting your Komatsu Utility Dealer.

https://truckmanualshub.com/



## 4.7.14 MAINTENANCE EVERY 4000 HOURS OF OPERATION

These operations must be carried out together with those to be carried out every 50, 100, 250, 500 and 2000 HOURS.

### 4.7.14.a CHANGING THE A/C DEHYDRATOR FILTER (only for machines equipped with air conditioner)

**DANGER**

- **The coolant contained in the air conditioning system is very dangerous. If some sprays get into the eyes or come in contact with the skin, they may cause blindness or congelation. Furthermore, to avoid possible explosions, do not cause sparks and do not use naked flames near the system.**
- **Have the dehydrator filter changed only by qualified personnel, contacting your Komatsu Utility Dealer.**

The filter (1) must be changed after 4000 hours of operation or every 2 years, whichever occurs first.
Furthermore, it must be changed every time the air conditioning system is opened.

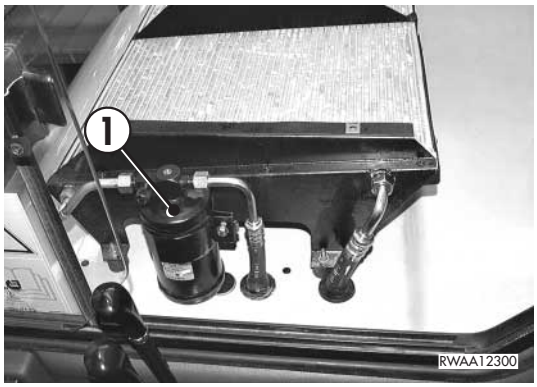


### 4.7.14.b CHECKING THE CORRECT OPERATION OF THE A/C COMPRESSOR (only for machines equipped with air conditioner)

To check the operating conditions of the compressor (1) it is necessary to use specific equipment; have this operation carried out only by specialized personnel, contacting your Komatsu Utility Dealer.

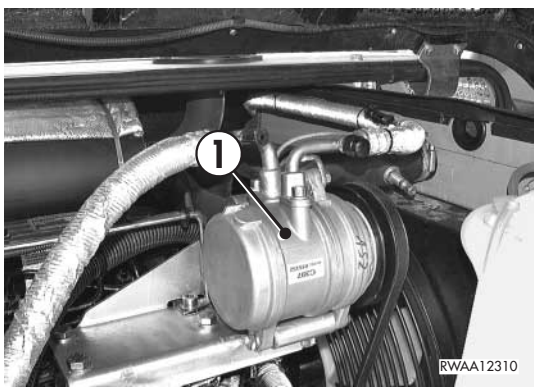

https://truckmanualshub.com/

**PAGE INTENTIONALLY LEFT BLANK**

https://truckmanualshub.com/

# TECHNICAL SPECIFICATIONS

https://truckmanualshub.com/



# 5.1 TECHNICAL DATA

## 5.1.1 STANDARD OVERALL DIMENSIONS

### OVERALL DIMENSIONS WITH MONOBOOM

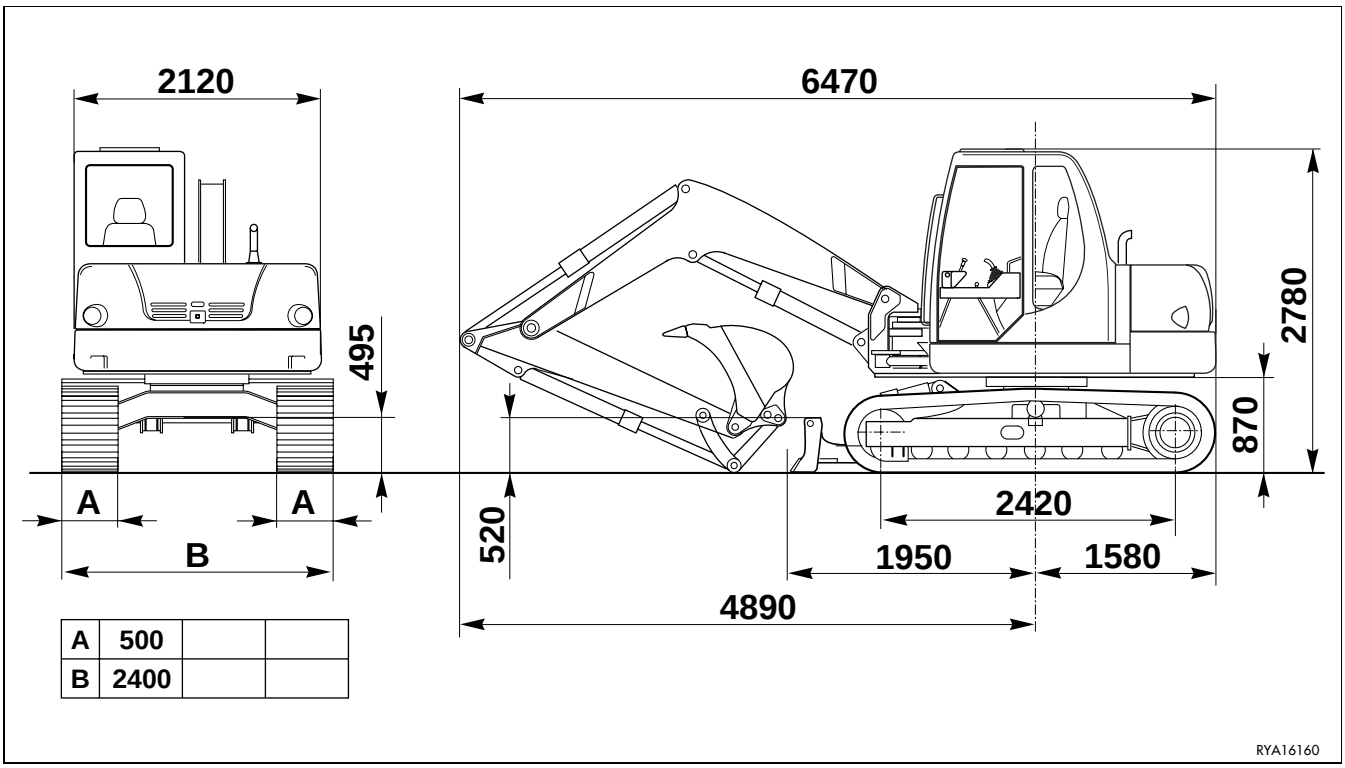


| | | | |
|---|---|---|---|
| A | 500 | | |
| B | 2400 | | |

### OVERALL DIMENSIONS WITH TWO-PIECE BOOM

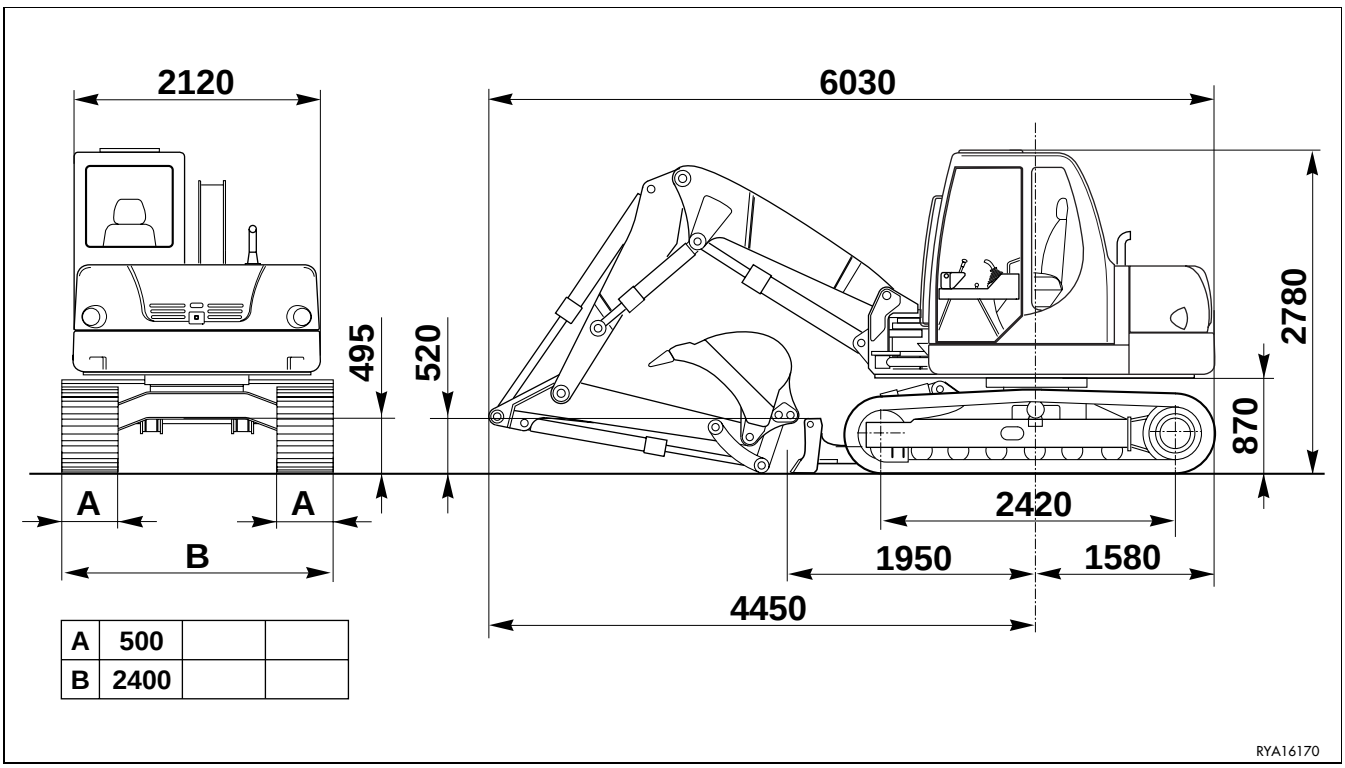


| | | | |
|---|---|---|---|
| A | 500 | | |
| B | 2400 | | |

https://truckmanualshub.com/



## 5.1.2 TECHNICAL CHARACTERISTICS

### TOTAL MASS

| | | |
|---|---|---|
| Max. total mass (with monoboom) | kg | 10560 |
| Max. total mass (with two-piece boom) | kg | 10980 |

### BUCKET CAPACITY

| | | |
|---|---|---|
| Standard bucket capacity (SAE) (with monoboom) | $m^3$ | 0,35 |
| Standard bucket capacity (SAE) (with two-piece boom) | $m^3$ | 0,32 |

### ENGINE

| | | |
|---|---|---|
| Komatsu diesel engine model | | S4D106E-1FB |
| Rated power (2000 rpm EEC 80/1269) | kW | 70,5 |
| Maximum torque (1500 rpm EEC 80/1269) | Nm | 437 |

### ELECTRICAL SYSTEM

| | | |
|---|---|---|
| Alternator | | 12 V |
| Electrical output | | 60 A |
| Earthing | | negative |
| Battery | | 155 Ah-12 V |
| Starter | kW | 3,0 |

### UPPER STRUCTURE ROTATION

| | | |
|---|---|---|
| Upper structure rotation speed | rpm | 8,4 |

### SPEEDS

| | | |
|---|---|---|
| Working speed | km/h | 2,8 |
| Travel speed | km/h | 4,1 |

https://truckmanualshub.com/



## 5.1.3 LIFTING CAPACITIES (Only for machines with overload alarm device)

**CAUTION**

- **According to the harmonized standard EN474-5 (§ 4.1.7.5), the machine cannot lift weights exceeding 1000 kg, unless it is provided with suitable devices.**

**DANGER**

- **Carry out lifting operations only with the machine positioned on firm and level ground.**
- **Before lifting the load, make sure that the overload alarm device has been connected (see “3.3.3 pos. 8 BOOM OVERLOAD ALARM SWITCH”).**

### 5.1.3.1 LIFTING CAPACITY TABLE

**A** - Arm length L= 1850 mm

**B** - Arm length L= 2000 mm

**C** - Arm length L= 2300 mm

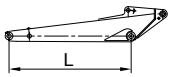


**D** - Monoboom length L= 3150 mm

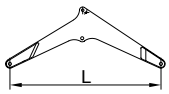


**D** - Two-piece boom length L= 3864 mm

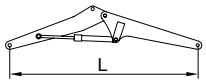


**E** - Standard counterweight mass kg 1450

**F** - Operating hydraulic pressure (30 MPa / 300 bar)

**G** - Standard bucket length and mass L= 900 / kg 300

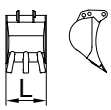


**H** - Machine positioned on firm and level ground

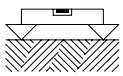

https://truckmanualshub.com/



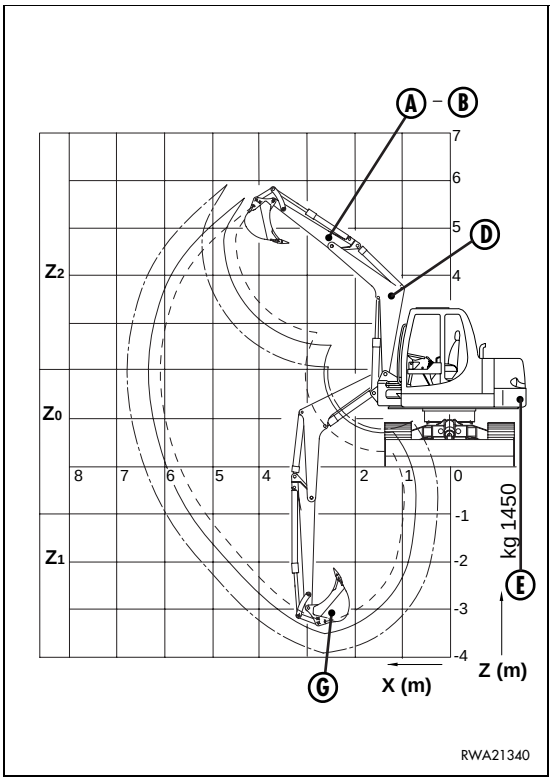


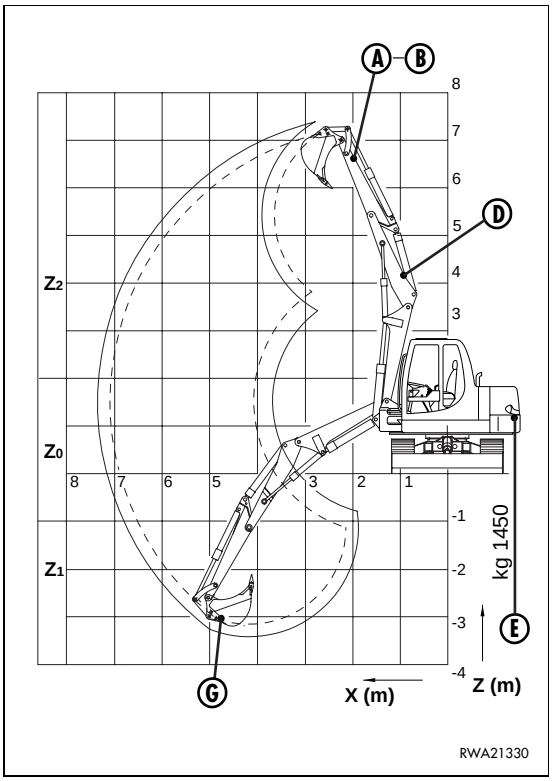


**I** - Side lifting

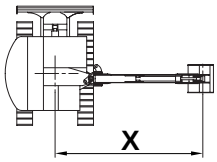


**L** - Standard operating mass

**P** - Lifting capacity

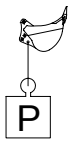


**Z** - Lifting point-ground distance

**X** - Distance between the upper structure rotation axis and the bucket lifting point

• Bucket cylinder completely extended

• Standard shoes L= 500 mm

• Raised blade

• Lowered blade

https://truckmanualshub.com/



## 5.1.3.2 LIFTING CAPACITY WITH MONOBOOM

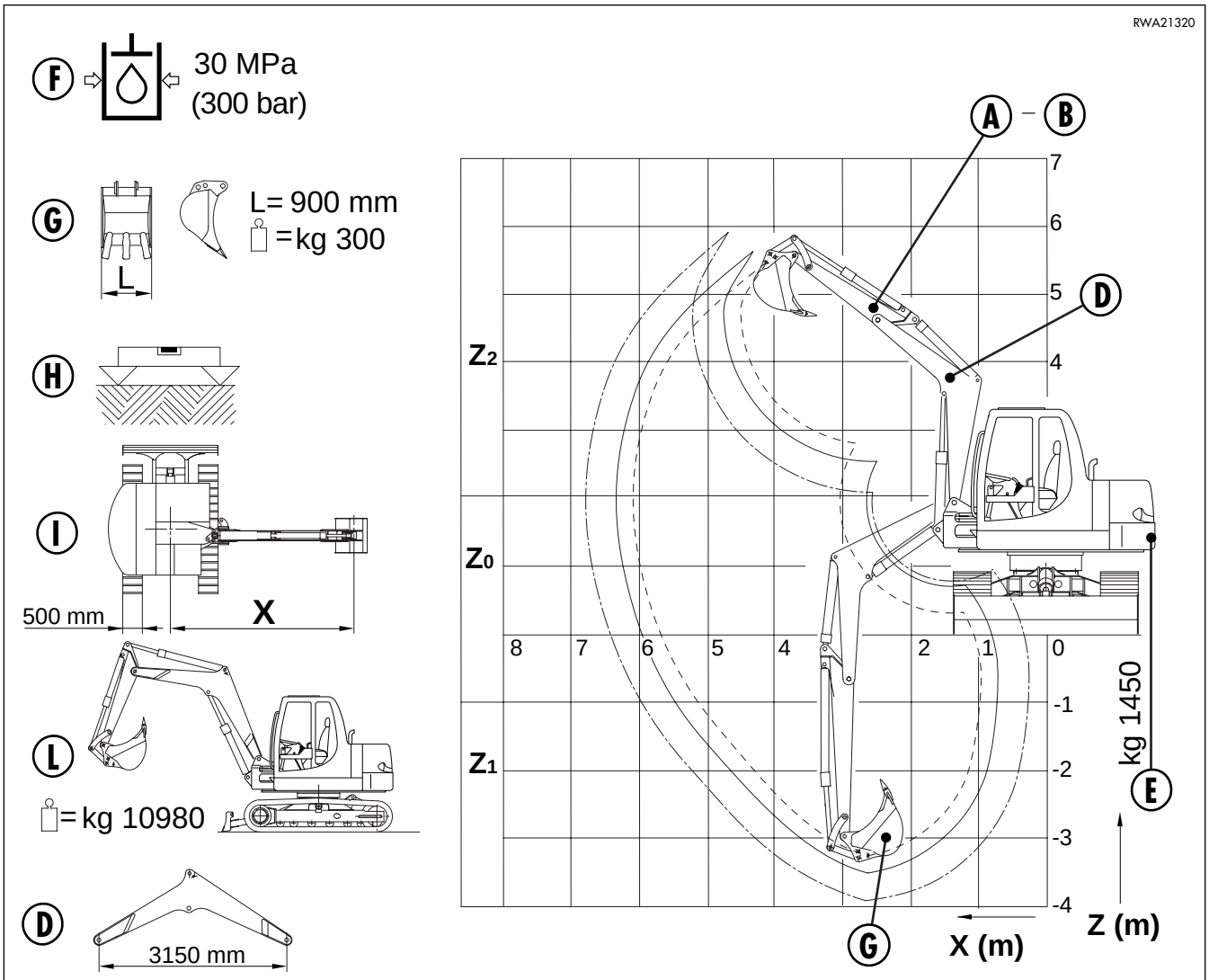


| | | | | | | | | | |
|---|---|---|---|---|---|---|---|---|---|
| | | | P | | | | P | | |
| | X | MAX | 6 m | 4,5 m | 3 m | MAX | 6 m | 4,5 m | 3 m |
| | | P(kg) | P(kg) | P(kg) | P(kg) | P(kg) | P(kg) | P(kg) | P(kg) |
| A (1850 mm) | Z2 | 1150 | — | 2300 | 3800 | 1150 | — | 2300 | 3800 |
| | Z0 | 1100 | 1250 | 2100 | 3600 | 1100 | 1250 | 2100 | 3600 |
| | Z1 | 1050 | — | 2200 | 3700 | 1050 | — | 2200 | 3700 |
| B (2000 mm) | Z2 | 900 | 1000 | 2000 | 3500 | 900 | 1000 | 2000 | 3500 |
| | Z0 | 800 | 900 | 1800 | 3800 | 800 | 900 | 1800 | 3800 |
| | Z1 | 900 | — | 1850 | 3750 | 900 | — | 1850 | 3750 |
| C (2300 mm) | Z2 | 800 | 900 | 1800 | 3300 | 800 | 900 | 1800 | 3300 |
| | Z0 | 700 | 850 | 1650 | 3600 | 700 | 850 | 1650 | 3600 |
| | Z1 | 800 | 900 | 1700 | 3500 | 800 | 900 | 1700 | 3500 |

https://truckmanualshub.com/



## 5.1.3.3 LIFTING CAPACITY WITH TWO-PIECE BOOM

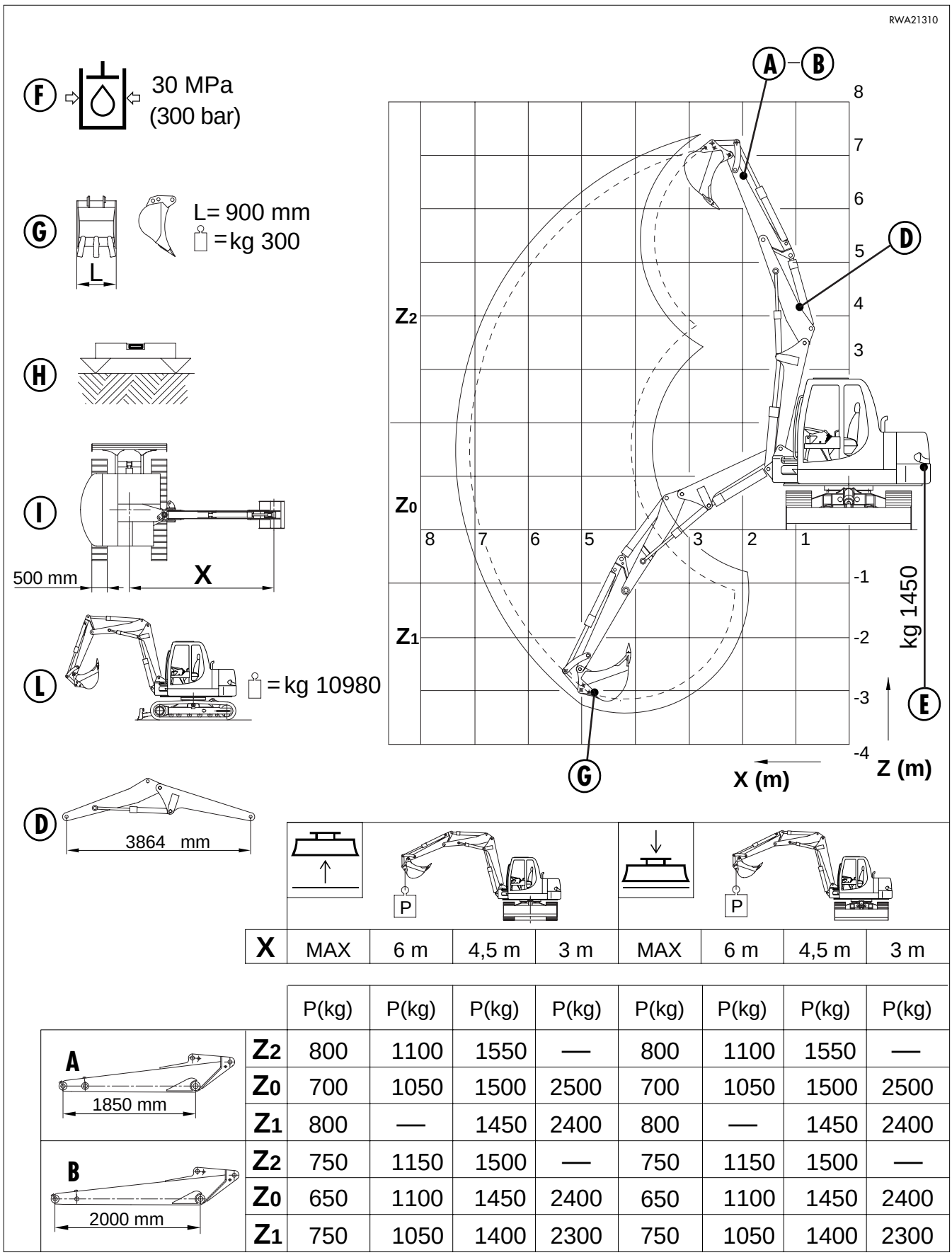


| | | | | | | | | | |
|---|---|---|---|---|---|---|---|---|---|
| | X | MAX | 6 m | 4,5 m | 3 m | MAX | 6 m | 4,5 m | 3 m |
| | | P(kg) | P(kg) | P(kg) | P(kg) | P(kg) | P(kg) | P(kg) | P(kg) |
| A (1850 mm) | Z2 | 800 | 1100 | 1550 | — | 800 | 1100 | 1550 | — |
| | Z0 | 700 | 1050 | 1500 | 2500 | 700 | 1050 | 1500 | 2500 |
| | Z1 | 800 | — | 1450 | 2400 | 800 | — | 1450 | 2400 |
| B (2000 mm) | Z2 | 750 | 1150 | 1500 | — | 750 | 1150 | 1500 | — |
| | Z0 | 650 | 1100 | 1450 | 2400 | 650 | 1100 | 1450 | 2400 |
| | Z1 | 750 | 1050 | 1400 | 2300 | 750 | 1050 | 1400 | 2300 |

https://truckmanualshub.com/

**PAGE INTENTIONALLY LEFT BLANK**

https://truckmanualshub.com/

# AUTHORISED OPTIONAL EQUIPMENT

https://truckmanualshub.com/



# 6.1 AUTHORIZED OPTIONAL EQUIPMENT

**CAUTION**

- **Komatsu Utility machines can be supplied with optional equipment in addition to the standard equipment; if optional equipment is installed and used, carefully read the relevant operation manual and keep to the instructions given therein.**
- **Use exclusively optional or special equipment recommended and approved by Komatsu Utility and complying with the requisites indicated in the table (See "6.1.3 CHARACTERISTICS OF THE OPTIONAL EQUIPMENT").**
- **Komatsu Utility cannot be held liable for any damage, accident, reduction of the machine efficiency due to the application and use of unauthorized equipment.**

## 6.1.1 PRECAUTIONS REGARDING SAFETY

The installation of optional accessories and equipment other than those authorized by Komatsu Utility shortens the life of the machine and may also cause problems concerning safety.
It is advisable to contact a Komatsu Utility Dealer before installing any accessory not indicated in this operation and maintenance manual.
In case of failure to comply with this rule, Komatsu Utility declines any responsibility for accidents or damage.

**DANGER**

- **When removing or installing any equipment, take the following precautions and be careful to the safety conditions.**
- **Carry out installation and removal on a firm and flat surface.**
- **When the operations are carried out by two or more operators, decide the communication signals in advance and respect them during the operations.**
- **Use a crane to handle objects weighing more than 25 kg.**
- **Always support any heavy part before removing it. When heavy parts are lifted, be always careful to the position of the center of gravity of the object being handled.**
- **It is very dangerous to carry out any operation with a suspended load; therefore, always position the load on a support and make sure that it is in a safe position.**
- **When installing or removing any equipment, make sure that it is stable and cannot fall down.**
- **Never stand under loads being lifted by a crane.**
  **Take care to choose a safe position, where you do not run any risk in case the load should fall down.**

**IMPORTANT**

- **Specialized personnel is required to operate cranes. Do not allow non-specialized personnel to use cranes.**

For further details regarding installation and removal operations, contact your Komatsu Utility Dealer.

https://truckmanualshub.com/



## 6.1.2 PRECAUTIONS REGARDING THE INSTALLATION OF EQUIPMENT

**DANGER**

- **The use of lengthened work equipment reduces the stability of the machine.**
  **If it is necessary to rotate the upper structure on a slope or to travel downhill, be particularly careful, since the machine may lose its balance and overturn.**
  **The following operations are particularly dangerous, therefore it is highly recommended not to perform them.**

**1 - Travelling downhill with raised work equipment.**

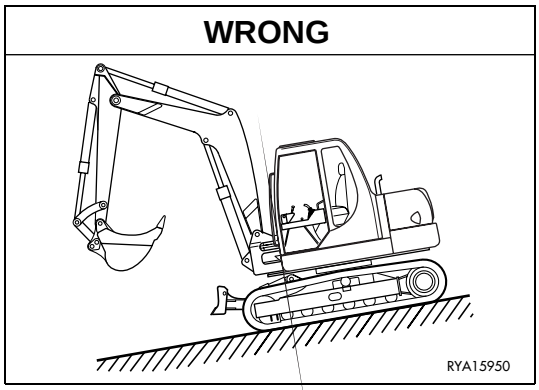


**2 - Transversal crossing of slopes.**

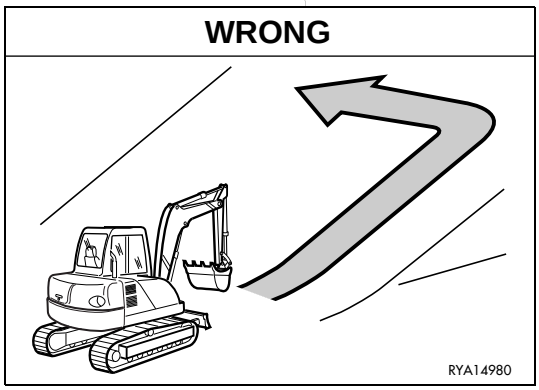


**3 - Rotation of the upper structure on slopes.**

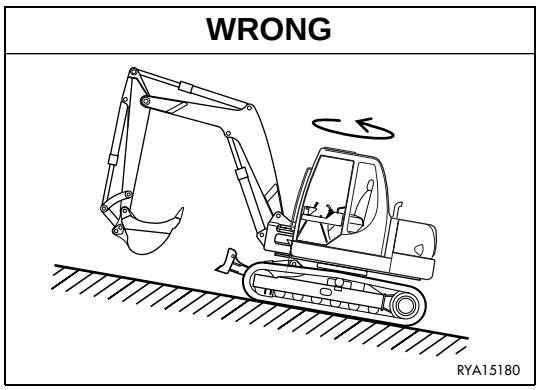


- **When installing work equipment with dimensions exceeding those of the standard equipment, be careful to the space necessary for the movements of the equipment and for the rotation of the upper structure.**
- **Always keep to the correct procedure when installing the boom and arm. Failure to carry out the correct procedure may result in grave risks, therefore it is advisable to contact a Komatsu Utility18 Dealer before installation.**

https://truckmanualshub.com/



## 6.1.3 CHARACTERISTICS OF THE OPTIONAL EQUIPMENT

**(Specific weight of the handled material = 1.8 t/m$^3$)**

| EQUIPMENT | MAX. WEIGHT (kg) | MAX. DIMENSIONS | | MAX. SAE CAPACITY (cu.m.) | MAX. OPERATING PRESSURE (bar) | MAX. FLOW RATE . (l/min.) |
|---|---|---|---|---|---|---|
| | | Width (mm) | Height (mm) | | | |
| Bucket | ▲ 260<br>● 250 | 1000<br>900 | —<br>— | 0.32<br>0.30 | —<br>— | —<br>— |
| Ditch-cleaning bucket | 200 | 1500 | — | 0.20 | — | — |
| Ditch-digging bucket | 250 | 1650 | 850 | 0.25 | — | — |
| Adjustable bucket | 300 | 1500 | 1000 | 0.20 | ❋ 300 | 20 |
| Clamshell bucket | ❑ 300 | 400 | 1000 | 0.20 | ❋ 300 | 30 |
| Hydraulic hammer | 500 | — | 1400 | — | ❋ 300 | 120 |

▲ Assembly on monoboom

● Assembly on two-piece boom

❑ Hydraulic rotor included

❋ Hydraulic system pressure

https://truckmanualshub.com/



# 6.2 ARRANGEMENT FOR THE INSTALLATION OF THE DEMOLITION HAMMER

**DANGER**

- **For the characteristics of the hammer, see “6.1.3 CHARACTERISTICS OF THE OPTIONAL EQUIPMENT”.**
- **The demolition hammer is very noisy, therefore always wear headphones when using it.**

## 6.2.1 DESCRIPTION AND OPERATION

The machine can be fitted for the application of a demolition hammer instead of the standard bucket on the arm.
The hammer is operated by means of a button (1) positioned on the driving platform beside the boom swing control pedal.
The hammer is operated by pressing the button (1), since pressurized oil is thus introduced in the delivery circuit (left side); the oil flow is interrupted and therefore the hammer is stopped by releasing the button.

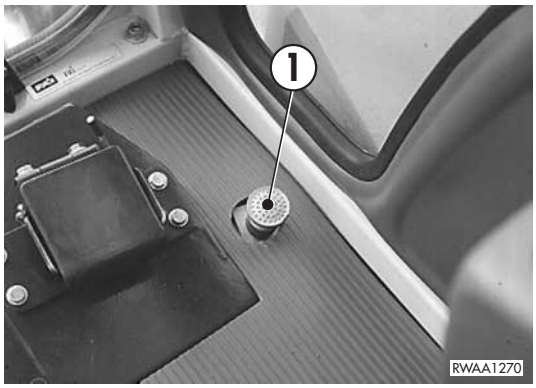


**CAUTION**

- **Always make sure that the selection valve lever (2) is rotated completely anticlockwise and resting against its retainer before using the demolition hammer.**

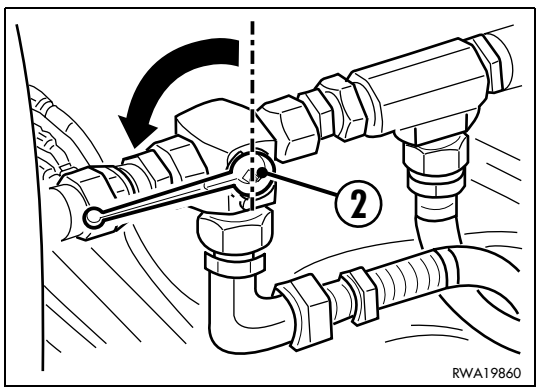


## 6.2.2 USE OF THE DEMOLITION HAMMER AND RULES TO BE OBSERVED

The choice of the suitable tool is a very important factor to obtain the maximum productivity from the demolition hammer.
The geometry of the tool must be defined according to the nature of the material to be broken and to the type of work to be carried out.
The hammer is used to break floors, cement structures, walls, small rocky surfaces, excavations with open section, asphalt, etc.
With the application of special tools it can also be used as asphalt-cutter or compactor.

### FOR A CORRECT USE, IT IS NECESSARY TO:

1 - Make sure that the position of the hammer with respect to the material to be broken is as perpendicular as possible and that the arm thrust is sufficient, so that all the power of the hammer can be exploited.

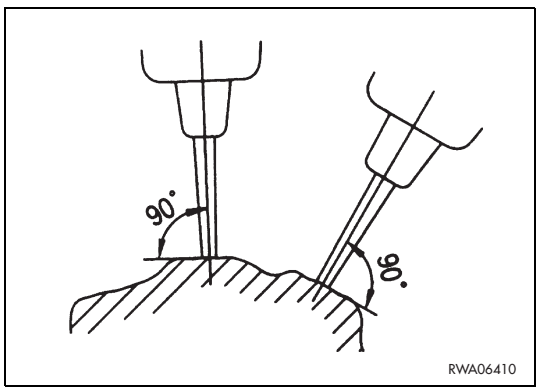

https://truckmanualshub.com/



2 - Keep the pressure of the excavator on the hammer constant as the bit penetrates in the material.
Always follow the hammer in the penetration phase and operate the excavator arms in order to obtain a pressure sufficient to keep the undercarriage raised at about 5 mm from the ground.
Do not raise the undercarriage more than necessary.

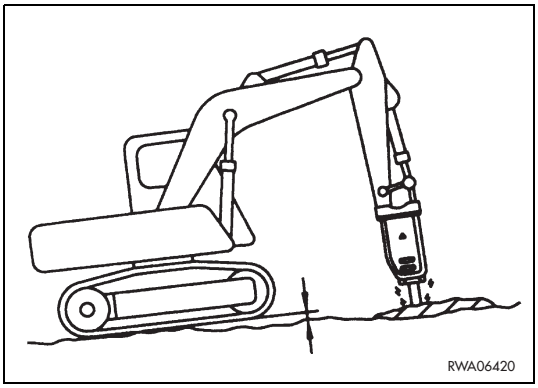


3 - When working on very hard materials, it is important not to keep hitting the same point for more than 30 seconds.
Hit the same point for a few seconds and change position very frequently, in order to facilitate the breaking of the material.

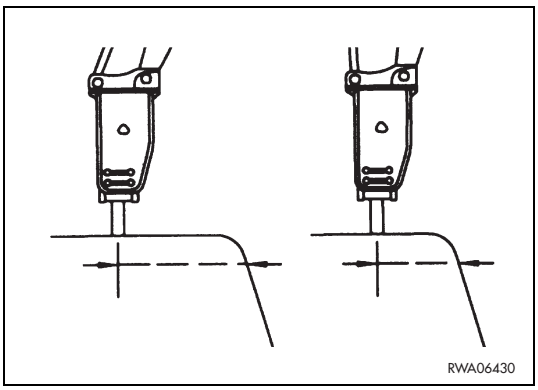


4 - To facilitate the sliding of the tool on its seat, check the thrust direction and always correct the hitting position of the hammer by means of the bucket and arm control.

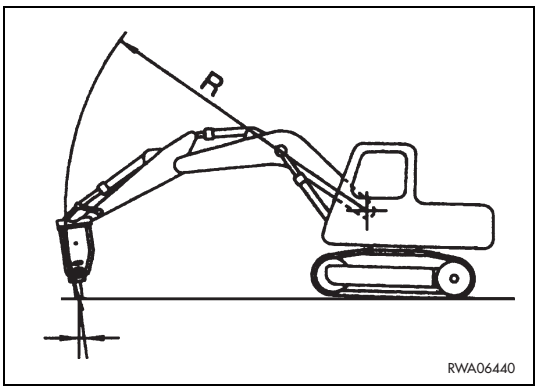


5 - Always check that the arm thrust is optimal, in order to avoid harmful and useless strokes.

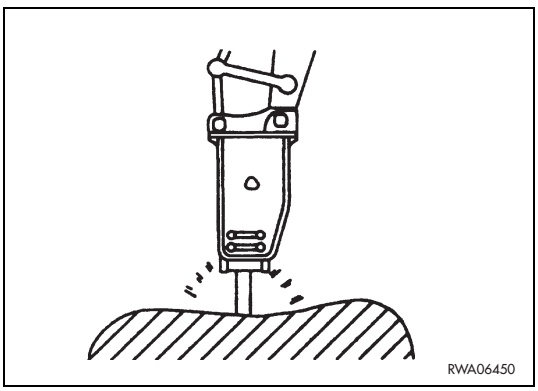

https://truckmanualshub.com/



**IMPORTANT**

- **During work, do not use the demolition hammer with the bucket cylinder at the end of its stroke, but always leave a minimum space of 5 cm.**

**ALWAYS AVOID THE FOLLOWING INCORRECT USES:**

1 - Gathering or moving stones with the demolition hammer.

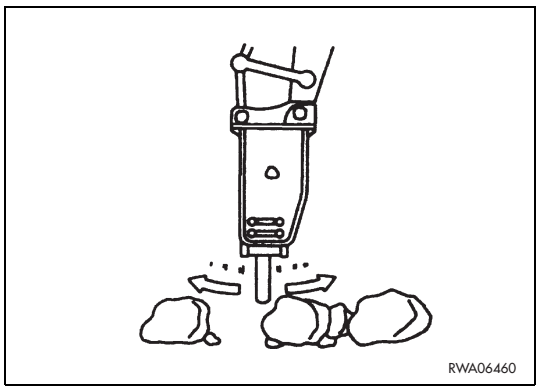


2 - Rotating the upper structure while using the hammer.

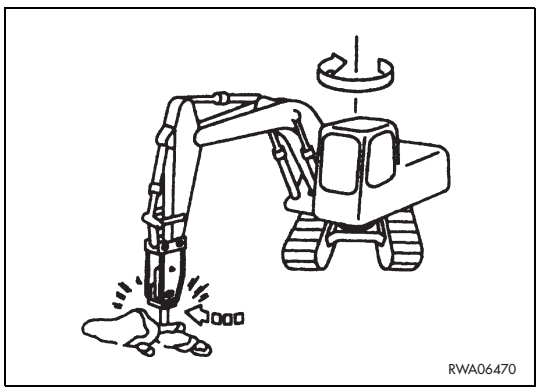


3 - Moving the tool while it is hitting the material to be broken.

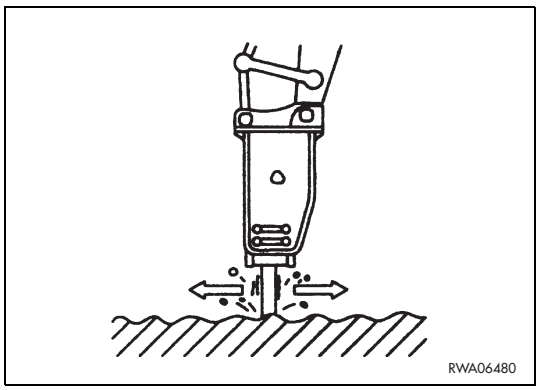

https://truckmanualshub.com/



4 - Working with the hammer in horizontal position or even with greater inclination.

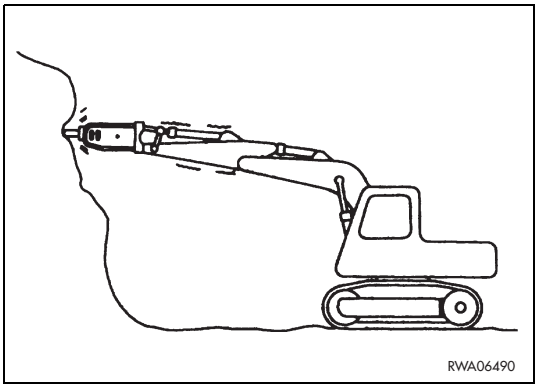


5 - Lever with the tool after thrusting it into the material to be broken.

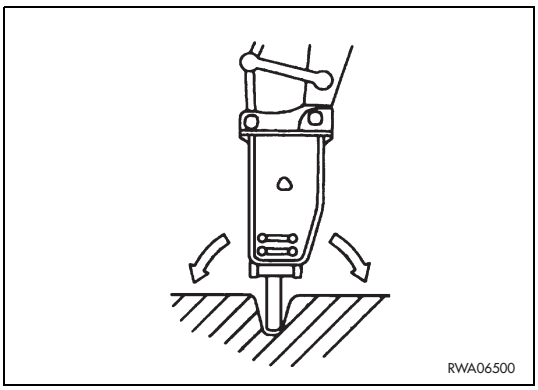


6 - Hitting the ground with the hammer bit.

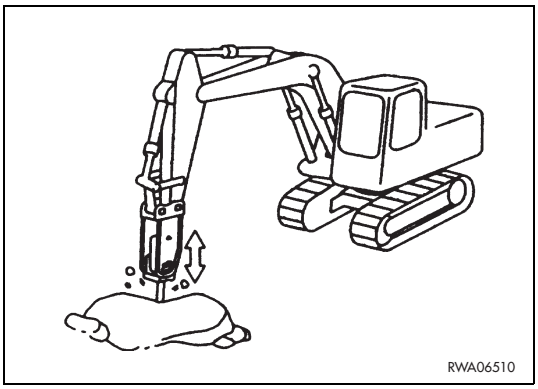


7 - Lifting the machine by levering on the hammer bit with the bucket cylinder extended to the end of its stroke.

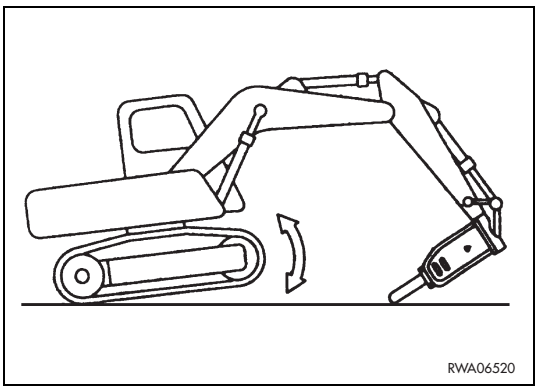

https://truckmanualshub.com/



## 6.2.3 INSTALLING AND REMOVING THE DEMOLITION HAMMER

### 6.2.3.1 INSTALLING THE HAMMER

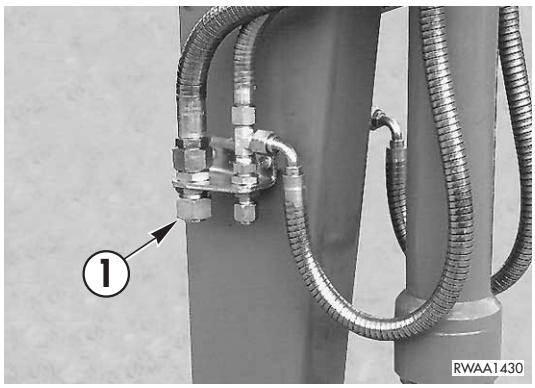


**DANGER**

- **The machine must be parked on a level surface, with the equipment resting on the ground.**
- **For the installation, the hammer must be positioned horizontally, with the bit directed towards the machine.**
- **When the coupling pins are removed or installed, chips may come off; always wear gloves, safety goggles and helmet.**
- **The change of the equipment must be carried out by two operators, who must decide together the words and signals to be used during operations.**
- **Do not use your fingers to center the holes, since they may be injured or even cut.**
- **Before carrying out any operation on the hydraulic circuit, release the residual pressure that may be present in the equipment circuits (by shifting the controls more than once) and in the tank (by slowly loosening the filling cap).**
- **Immediately clean any area dirty with oil.**

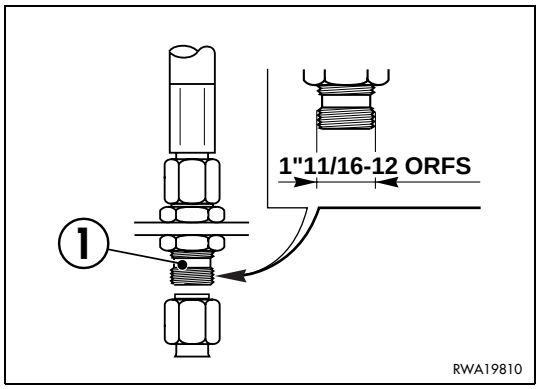


For the installation of the demolition hammer it is necessary to connect the mechanical constraints as described in “3.12.5 CHANGING THE BUCKET” and to carry out the hydraulic connections using the pipes provided.
After connecting the mechanical constraints, carry out the hydraulic connections by proceeding as follows:

1 - Stop the engine and move the equipment controls in all directions, in order to completely release the residual pressures present in the hydraulic circuits.

2 - Turn the ignition key to position “I” and press the hammer control button to release the residual pressure present in the hammer delivery pipe.

3 - Turn the ignition key to position “O” and remove it.

4 - Remove the sealing plugs of the machine pipes and of the hammer hoses.
Use 41 and 50 mm spanners.

5 - Connect the right pipe to the coupling (1) and the left pipe to the coupling (2), making sure that the characteristics and dimensions of the unions are as required.

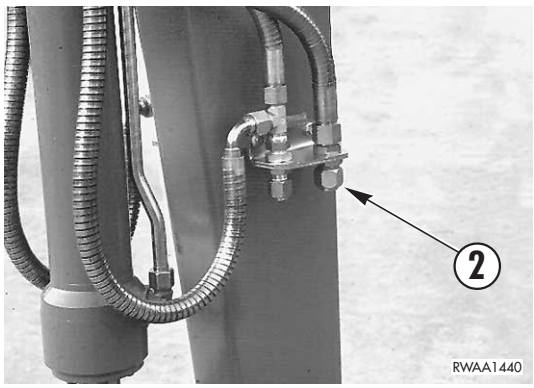


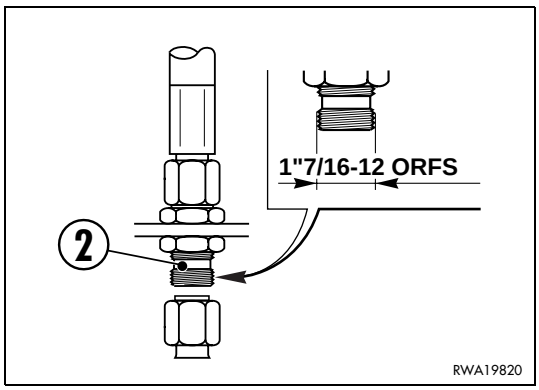


**CAUTION**

- **When connecting the pipes, take care to prevent any impurities from getting into them.**

https://truckmanualshub.com/



6 - Rotate the lever of the selection valve (3) completely anticlockwise.

7 - Start the machine and raise the demolition hammer positioning it vertically.

8 - Stop the machine again and lubricate the arm connection joints (See “4.7.4.a LUBRICATING THE JOINTS”) and the hammer (see the specific operation and maintenance manual).

9 - Before starting work, check the seals.

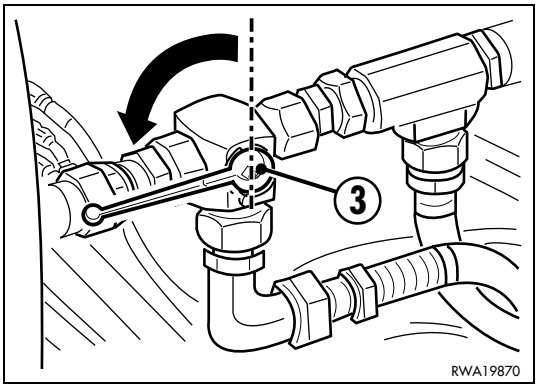


**DANGER**

- **Always wear thick gloves and safety goggles during this check.**
- **To check the system for leaks, use a piece of cardboard or a wooden board.**

### 6.2.3.2 REMOVING THE HAMMER

To remove the hammer, proceed as follows:

1 - Position the hammer on level ground, making sure that it will be firm and stable even after disconnection from the machine.

2 - Stop the engine and move the hydraulic controls in all directions, in order to completely release the residual pressures present in the hydraulic circuits.

3 - Turn the ignition key to position «**I**» and press the hammer control button to release the residual pressure present in the hammer delivery pipe.

4 -Turn the ignition key to position «**O**» and remove it.

5 - Disconnect the hammer feeding and draining pipes.
Use 41 and 50 mm spanners.

6 - Fit the sealing plugs of the pipes.

**DANGER**

- **Make sure that the sealing plugs are tightened correctly and that there are no leaks; if the circuit is inadvertently pressurized, small leaks could become thin jets that may hurt the skin or the eyes.**
- **Always wear thick gloves and safety goggles during this check.**
- **To check the system for leaks, use a piece of cardboard or a wooden board.**

7 - Disconnect the hammer from the mechanical constraints as described in paragraph “3.12.5 CHANGING THE BUCKET”.

## 6.2.4 MAINTENANCE

The hydraulic system does not require any maintenance operation and inspection other than those prescribed for the machine.
For the maintenance operations required for the hammer, see the specific operation manual.

https://truckmanualshub.com/



# 6.3 CLAMSHELL BUCKET

**DANGER**

- **For the characteristics of the clamshell bucket, see “6.1.3 CHARACTERISTICS OF THE OPTIONAL EQUIPMENT”.**
- **The bucket can oscillate on the arm coupling; during use, keep in consideration the increased overall dimensions due to the swinging.**
- **Before using the clamshell bucket, make sure that the LED positioned on the dashboard is off (see “3.3.3 pos. 12 OPTIONAL EQUIPMENT CONTROL SELECTION SWITCH”).**

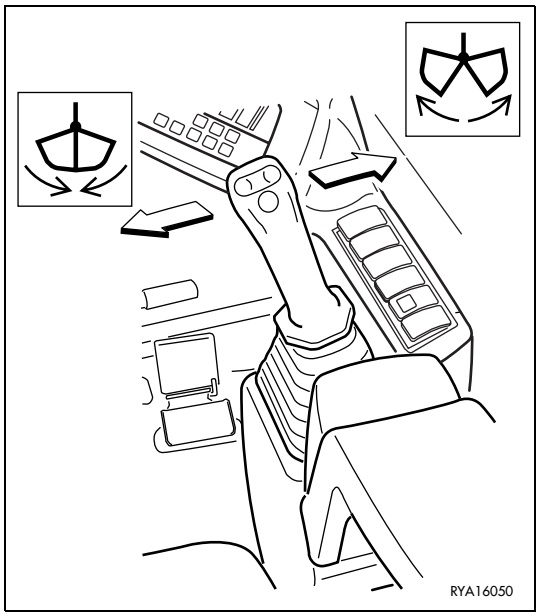


## 6.3.1 DESCRIPTION AND OPERATION

The machine is prearranged for the application of a clamshell bucket instead of the standard bucket on the arm.
For the rotation of the clamshell bucket, an independent hydraulic circuit is provided, while for the opening and curling of the bucket it is possible to use the standard bucket opening and curling circuit excluding the control cylinder (see “6.3.2 INSTALLING THE CLAMSHELL BUCKET”).
The other controls for the movements of the excavator (boom, arm and upper structure rotation) remain unchanged (see “3.3.5 MACHINE CONTROLS”).
The rotating movements of the clamshell bucket are obtained by means of the push buttons (1) and (2) positioned on the right joystick.
The movements that cause the rotation are the following:

1 - When the right button (2) is pressed, the bucket rotates clockwise.

2 - When the left button (1) is pressed, the bucket rotates anticlockwise.

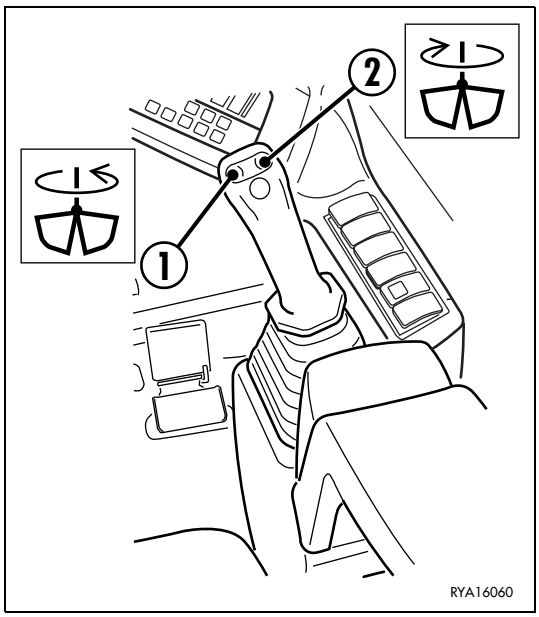


**CAUTION**

- **Before starting to use the clamshell bucket, make sure that the lever of the selection valve (2) is completely rotated clockwise and rests against its retainer.**

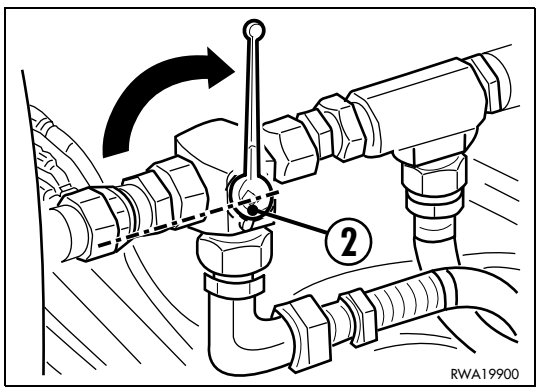

https://truckmanualshub.com/



## 6.3.2 INSTALLING THE CLAMSHELL BUCKET

**DANGER**

- **The machine must be parked on a level surface, with the equipment lowered to the ground.**
- **When the coupling pins are removed or installed, chips may come off; always use gloves, goggles and helmet.**
- **The change of the equipment must be carried out by two persons, who must decide together the words and signals to use during operations.**
- **Do not use your fingers to center the holes, since they may be injured or even cut.**
- **Before carrying out any operation on the hydraulic circuit, eliminate any residual pressure from the equipment circuits (by shifting the controls more than once) and from the tank (by slowly loosening the filling cap).**
- **Clean immediately any area dirty with oil.**

For the installation of the clamshell bucket, proceed as follows:

1 - Remove the standard bucket (see “3.12.5 CHANGING THE BUCKET”).

2 - Withdraw the bucket control piston completely.

3 - Connect the clamshell bucket to the arm.

4 - Stop the machine and move the controls in all directions to release the residual pressures.

5 - Turn the ignition key to position «**I**» and press the bucket swing control button to release the residual pressure of the clamshell bucket delivery pipes.

6 - Turn the ignition key to position «**O**» and remove it.

7 - Mechanically lock the standard bucket push lever, in such a way as to stop the piston at the end of its stroke.

8 - Rotate the tap lever (1) clockwise, until reaching the end of stroke.

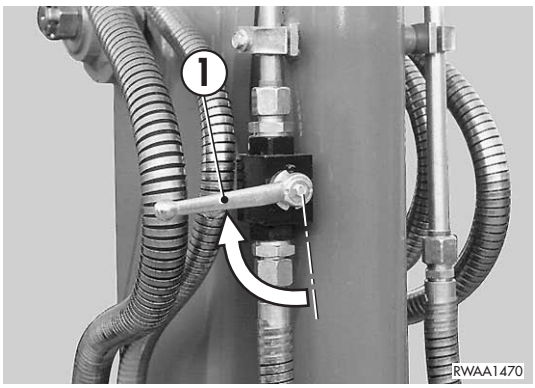


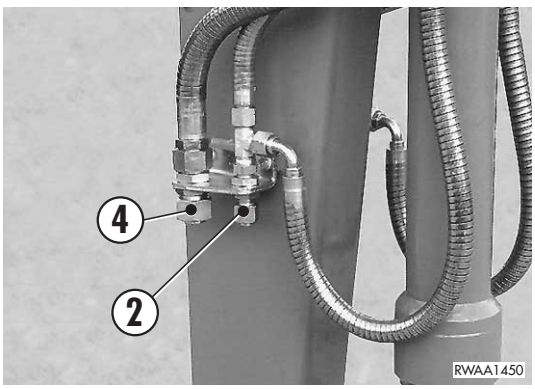

https://truckmanualshub.com/



**CAUTION**

- **During the following phases, take care to prevent any impurity from getting into the pipes.**

9 - Remove the sealing plugs of the machine pipes and of the clamshell bucket hoses.
Use 36, 41 and 50 mm spanners.

10 - Connect the pipes for the opening and curling of the clamshell bucket to the couplings (2 and 3) and the pipes for the rotation to the couplings (4 and 5), making sure that the characteristics and dimensions of the unions are as required.

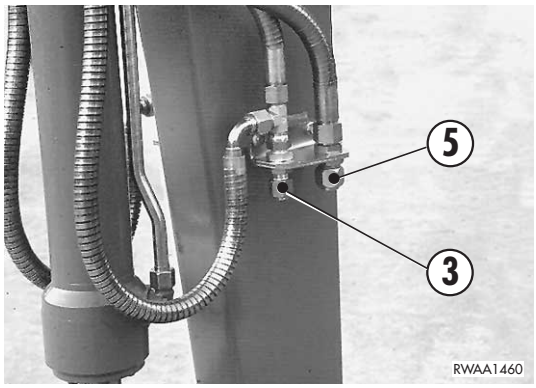


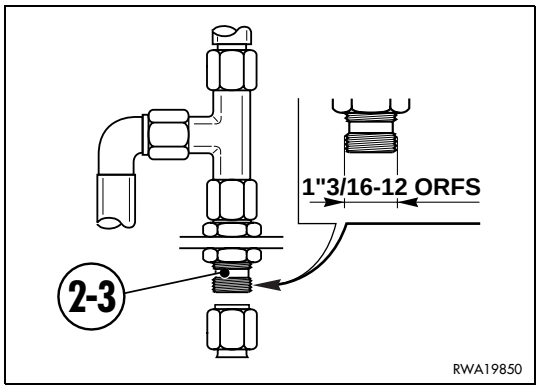


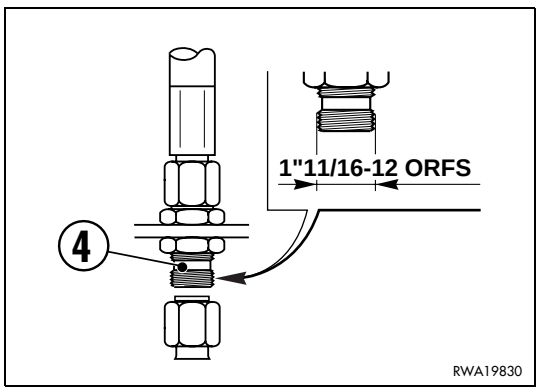


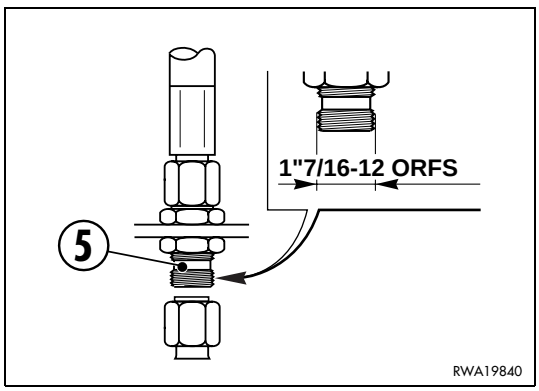

https://truckmanualshub.com/



11 - Rotate the lever of the selection valve (6) completely clockwise.

12 - Lubricate the arm connection joints (see “4.7.4.a LUBRICATING THE JOINTS”) and the clamshell bucket (see the specific use and maintenance manual).

13 - Start the machine and lift the clamshell bucket of a few centimetres.

14 - Open, curl and swing the bucket slowly more than once to check the tightness of the circuits.

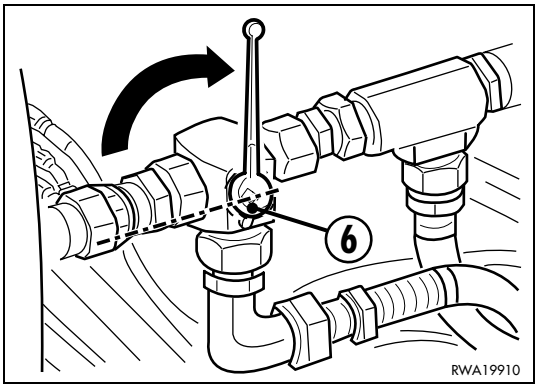


**DANGER**

- **Always wear thick gloves and safety goggles during this check.**
- **To check the system for leaks, use a piece of cardboard or a wooden board.**

## 6.3.3 MAINTENANCE

The hydraulic system does not require any maintenance operation and inspection other than those prescribed for the machine. For the maintenance operations required for the equipment, see the specific manuals.