FUEL SYSTEM

TABLE OF CONTENTS

	page
FUEL DELIVERY - GASOLINE	1
FUEL INJECTION - GASOLINE	28
FUEL DELIVERY - DIESEL	54
FUEL INJECTION - DIESEL	91

FUEL DELIVERY - GASOLINE

TABLE OF CONTENTS

	page
FUEL DELIVERY - GASOLINE	
DESCRIPTION - FUEL DELIVERY SYSTEM	2
OPERATION - FUEL DELIVERY SYSTEM	2
DIAGNOSIS AND TESTING - FUEL PRESSURE LEAK DOWN TEST	2
STANDARD PROCEDURE - FUEL SYSTEM PRESSURE RELEASE	3
SPECIFICATIONS	
SPECIFICATIONS - FUEL SYSTEM PRESSURE - GAS ENGINES	3
SPECIFICATIONS - TORQUE - FUEL DELIVERY	4
SPECIAL TOOLS	
FUEL SYSTEM	4
FUEL FILTER/PRESSURE REGULATOR	
DESCRIPTION	5
OPERATION	5
REMOVAL	5
INSTALLATION	7
FUEL LEVEL SENDING UNIT / SENSOR	
DESCRIPTION	7
OPERATION	7
DIAGNOSIS AND TESTING - FUEL GAUGE SENDING UNIT	7
REMOVAL	7
INSTALLATION	8
FUEL LINES	
DESCRIPTION	8
FUEL PUMP	
DESCRIPTION	9
OPERATION	9
DIAGNOSIS AND TESTING	
DIAGNOSIS AND TESTING - FUEL PUMP CAPACITY TEST	9
DIAGNOSIS AND TESTING - FUEL PUMP PRESSURE TEST	9
DIAGNOSIS AND TESTING - FUEL PUMP AMPERAGE TEST	10
FUEL PUMP MODULE	
DESCRIPTION	12
OPERATION	13
REMOVAL	13
INSTALLATION	13
FUEL RAIL	
DESCRIPTION	
DESCRIPTION - 5.9L	14
DESCRIPTION - 8.0L	14
OPERATION	
OPERATION - 5.9L	14
OPERATION - 8.0L	15
REMOVAL	
REMOVAL - 5.9L	15
REMOVAL - 8.0L	16
INSTALLATION	
INSTALLATION - 5.9L	17
INSTALLATION - 8.0L	18
FUEL TANK	
DESCRIPTION	18
OPERATION	18
REMOVAL	18
INSTALLATION	20
FUEL TANK CHECK VALVE	
DESCRIPTION	21
REMOVAL	22
INSTALLATION	23
INLET FILTER	
REMOVAL	23
INSTALLATION	23
QUICK CONNECT FITTING	
DESCRIPTION	24
STANDARD PROCEDURE - QUICK-CONNECT FITTINGS	24

FUEL DELIVERY - GASOLINE

DESCRIPTION - FUEL DELIVERY SYSTEM

The fuel delivery system consists of:

- the fuel pump module containing the electric fuel pump, fuel filter/fuel pressure regulator, rollover valve (certain modules), fuel gauge sending unit (fuel level sensor) and a separate fuel filter located at bottom of pump module
- fuel tubes/lines/hoses
- quick-connect fittings
- fuel injector rail
- fuel injectors
- fuel tank
- fuel tank filler/vent tube assembly
- fuel tank filler tube cap
- accelerator pedal
- throttle cable

OPERATION - FUEL DELIVERY SYSTEM

Fuel is returned through the fuel pump module and back into the fuel tank through the fuel filter/fuel pressure regulator. A separate fuel return line from the engine to the tank is not used with any gasoline powered engine.

The fuel tank assembly consists of: the fuel tank, fuel pump module assembly, fuel pump module locknut/gasket and fuel tank check valve(s) (refer to 25, Emission Control System for Fuel Tank Check Valve information).

A fuel filler/vent tube assembly using a pressure/vacuum, 1/4 turn fuel filler cap is used. The fuel filler tube contains a flap door located below the fuel fill cap.

Also to be considered part of the fuel system is the evaporation control system. This is designed to reduce the emission of fuel vapors into the atmosphere. The description and function of the Evaporative Control System is found in 25, Emission Control Systems.

Both fuel filters (at bottom of fuel pump module and within fuel pressure regulator) are designed for extended service. They do not require normal scheduled maintenance. Filters should only be replaced if a diagnostic procedure indicates to do so.

DIAGNOSIS AND TESTING - FUEL PRESSURE LEAK DOWN TEST

Use this test in conjunction with the Fuel Pump Pressure Test and Fuel Pump Capacity Test.

Check Valve Operation: The electric fuel pump outlet contains a one-way check valve to prevent fuel flow back into the tank and to maintain fuel supply line pressure (engine warm) when pump is not operational. It is also used to keep the fuel supply line full of gasoline when pump is not operational. After the vehicle has cooled down, fuel pressure may drop to 0 psi (cold fluid contracts), but liquid gasoline will remain in fuel supply line between the check valve and fuel injectors. **Fuel pressure that has dropped to 0 psi on a cooled down vehicle (engine off) is a normal condition.** When the electric fuel pump is activated, fuel pressure should **immediately** (1–2 seconds) rise to specification.

Abnormally long periods of cranking to restart a **hot** engine that has been shut down for a short period of time may be caused by:

- Fuel pressure bleeding past a fuel injector(s).
- Fuel pressure bleeding past the check valve in the fuel pump module.

(1) Disconnect the fuel inlet line at fuel rail. Refer to Fuel Tubes/Lines/Hoses and Clamps for procedures. On some engines, air cleaner housing removal may be necessary before fuel line disconnection.

(2) Obtain correct Fuel Line Pressure Test Adapter Tool Hose. Tool number 6539 is used for 5/16” fuel lines and tool number 6631 is used for 3/8” fuel lines.

(3) Connect correct Fuel Line Pressure Test Adapter Tool Hose between disconnected fuel line and fuel rail (Fig. 1).

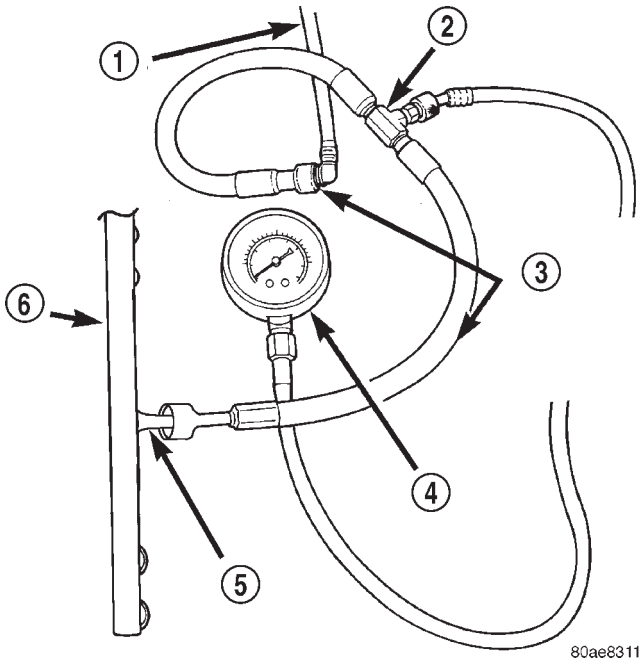

Fig. 1 CONNECTING ADAPTER TOOL—TYPICAL

1 - VEHICLE FUEL LINE
2 - TEST PORT “T”
3 - SPECIAL TOOL 6923, 6631, 6541 OR 6539
4 - FUEL PRESSURE TEST GAUGE
5 - FUEL LINE CONNECTION AT RAIL
6 - FUEL RAIL

FUEL DELIVERY - GASOLINE (Continued)

(4) Connect the 0-414 kPa (0-60 psi) fuel pressure test gauge (from Gauge Set 5069) to the test port on the appropriate Adaptor Tool. **The DRB® III Scan Tool along with the PEP module, the 500 psi pressure transducer, and the transducer-to-test port adapter may also be used in place of the fuel pressure gauge.**

The fittings on both tools must be in good condition and free from any small leaks before performing the proceeding test.

(5) Start engine and bring to normal operating temperature.

(6) Observe test gauge. Normal operating pressure should be 339 kPa +/–34 kPa (49.2 psi +/–5 psi).

(7) Shut engine off.

(8) Pressure should not fall below **30 psi for five minutes.**

(9) If pressure falls below 30 psi, it must be determined if a fuel injector, the check valve within the fuel pump module, or a fuel tube/line is leaking.

(10) Again, start engine and bring to normal operating temperature.

(11) Shut engine off.

(12) **Testing for fuel injector or fuel rail leakage:** Clamp off the rubber hose portion of Adaptor Tool between the fuel rail and the test port "T" on Adapter Tool. If pressure now holds at or above 30 psi, a fuel injector or the fuel rail is leaking.

(13) **Testing for fuel pump check valve, filter/regulator check valve or fuel tube/line leakage:** Clamp off the rubber hose portion of Adaptor Tool between the vehicle fuel line and test port "T" on Adapter Tool. If pressure now holds at or above 30 psi, a leak may be found at a fuel tube/line. If no leaks are found at fuel tubes or lines, one of the check valves in either the electric fuel pump or filter/regulator may be leaking.

Note: A quick loss of pressure usually indicates a defective check valve in the filter/regulator. A slow loss of pressure usually indicates a defective check valve in the electric fuel pump.

The electric fuel pump is not serviced separately. Replace the fuel pump module assembly. The filter/regulator may be replaced separately on certain applications. Refer to Fuel Filter/Fuel Pressure Regulator Removal/Installation for additional information.

STANDARD PROCEDURE - FUEL SYSTEM PRESSURE RELEASE

Use following procedure if the fuel injector rail is, or is not equipped with a fuel pressure test port.

(1) Remove fuel fill cap.

(2) Remove fuel pump relay from Power Distribution Center (PDC). For location of relay, refer to label on underside of PDC cover.

(3) Start and run engine until it stalls.

(4) Attempt restarting engine until it will no longer run.

(5) Turn ignition key to OFF position.

CAUTION: Steps 1, 2, 3 and 4 must be performed to relieve high pressure fuel from within fuel rail. Do not attempt to use following steps to relieve this pressure as excessive fuel will be forced into a cylinder chamber.

(6) Unplug connector from any fuel injector.

(7) Attach one end of a jumper wire with alligator clips (18 gauge or smaller) to either injector terminal.

(8) Connect other end of jumper wire to positive side of battery.

(9) Connect one end of a second jumper wire to remaining injector terminal.

CAUTION: Powering an injector for more than a few seconds will permanently damage the injector.

(10) Momentarily touch other end of jumper wire to negative terminal of battery for no more than a few seconds.

(11) Place a rag or towel below fuel line quick-connect fitting at fuel rail.

(12) Disconnect quick-connect fitting at fuel rail. Refer to Quick-Connect Fittings.

(13) Return fuel pump relay to PDC.

(14) One or more Diagnostic Trouble Codes (DTC's) may have been stored in PCM memory due to fuel pump relay removal. The DRB® scan tool must be used to erase a DTC.

SPECIFICATIONS

SPECIFICATIONS - FUEL SYSTEM PRESSURE - GAS ENGINES

All Gasoline Powered Engines: 339 kPa ± 34 kPa (49.2 psi ± 5 psi)

FUEL DELIVERY - GASOLINE (Continued)

SPECIFICATIONS - TORQUE - FUEL DELIVERY

DESCRIPTION	N·m	Ft. Lbs.	In. Lbs.
Fuel Pump Module Locknut	24-44	18-32	
Fuel Rail Mounting Bolts—5.9L Engines	23		200
Fuel Rail Mounting Bolts—8.0L Engine	15		136
Fuel Tank Mounting Nuts	41	30	
Fuel Hose Clamps	1		15

SPECIAL TOOLS

FUEL SYSTEM

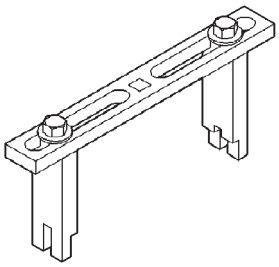

Spanner Wrench—6856

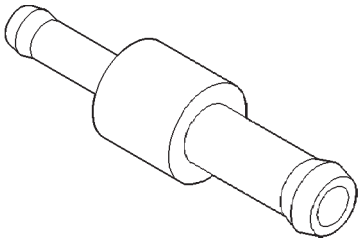

Fitting, Air Metering—6714

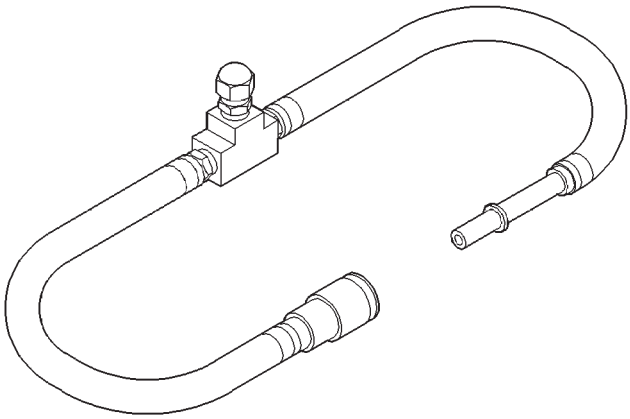

Adapters, Fuel Pressure Test—6539 and/or 6631

O2S (Oxygen Sensor) Remover/Installer—C-4907

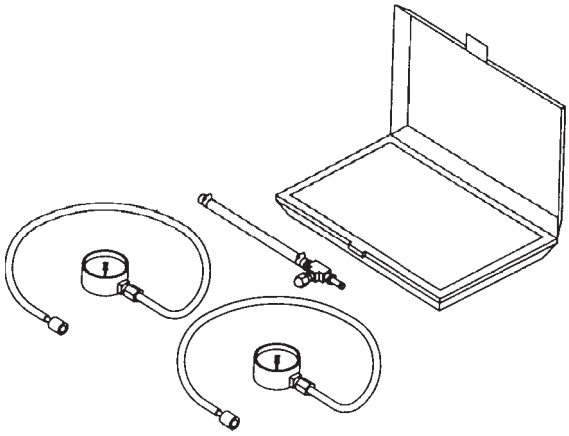

Test Kit, Fuel Pressure—5069

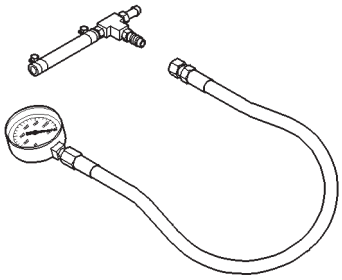

Test Kit, Fuel Pressure—C-4799-B

Fuel Line Removal Tool—6782

FUEL FILTER/PRESSURE REGULATOR

DESCRIPTION

A combination fuel filter and fuel pressure regulator (Fig. 2) is used on all engines. It is located on the top of the fuel pump module. A separate frame mounted fuel filter is not used with any engine.

Both fuel filters (at bottom of fuel pump module and within fuel pressure regulator) are designed for extended service. They do not require normal scheduled maintenance. Filters should only be replaced if a diagnostic procedure indicates to do so.

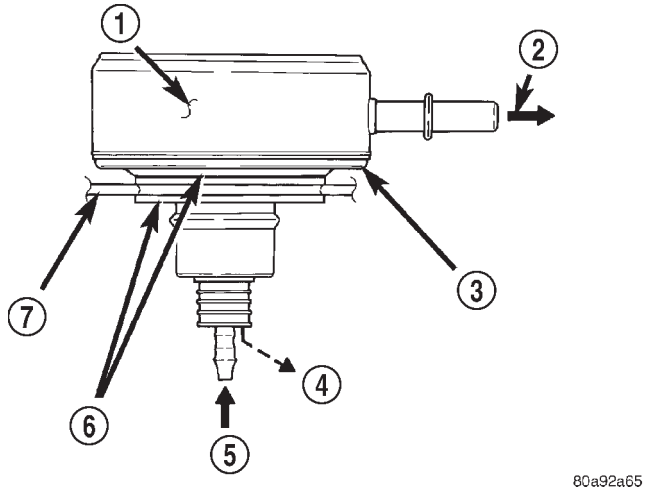

Fig. 2 Side View—Filter/Regulator

1 - INTERNAL FUEL FILTER
2 - FUEL FLOW TO FUEL INJECTORS
3 - FUEL FILTER/FUEL PRESSURE REGULATOR
4 - EXCESS FUEL BACK TO TANK
5 - FUEL INLET
6 - RUBBER GROMMET
7 - TOP OF PUMP MODULE

OPERATION

Fuel Pressure Regulator Operation: The pressure regulator is a mechanical device that is not controlled by engine vacuum or the powertrain control module (PCM).

The regulator is calibrated to maintain fuel system operating pressure of approximately 339 kPa ± 34 kPa (49.2 psi ± 5 psi) at the fuel injectors. It contains a diaphragm, calibrated springs and a fuel return valve. The internal fuel filter (Fig. 2) is also part of the assembly.

Fuel is supplied to the filter/regulator by the electric fuel pump through an opening tube at the bottom of filter/regulator (Fig. 2) .

The regulator acts as a check valve to maintain some fuel pressure when the engine is not operating. This will help to start the engine. A second check valve is located at the outlet end of the electric fuel pump. **Refer to Fuel Pump—Description and Operation for more information. Also refer to the Fuel Pressure Leak Down Test and the Fuel Pump Pressure Tests.**

If fuel pressure at the pressure regulator exceeds approximately 49.2 psi, an internal diaphragm opens and excess fuel pressure is routed back into the tank through the bottom of pressure regulator.

Both fuel filters (at bottom of fuel pump module and within fuel pressure regulator) are designed for extended service. They do not require normal scheduled maintenance. Filters should only be replaced if a diagnostic procedure indicates to do so.

REMOVAL

WARNING: THE FUEL SYSTEM IS UNDER A CONSTANT PRESSURE, EVEN WITH ENGINE OFF. BEFORE SERVICING FUEL FILTER/FUEL PRESSURE REGULATOR, FUEL SYSTEM PRESSURE MUST BE RELEASED.

Refer to Fuel System Pressure Release in Fuel Delivery System section of this group.

The fuel filter/fuel pressure regulator (Fig. 3) is located at top of fuel pump module (Fig. 4) or (Fig. 5).

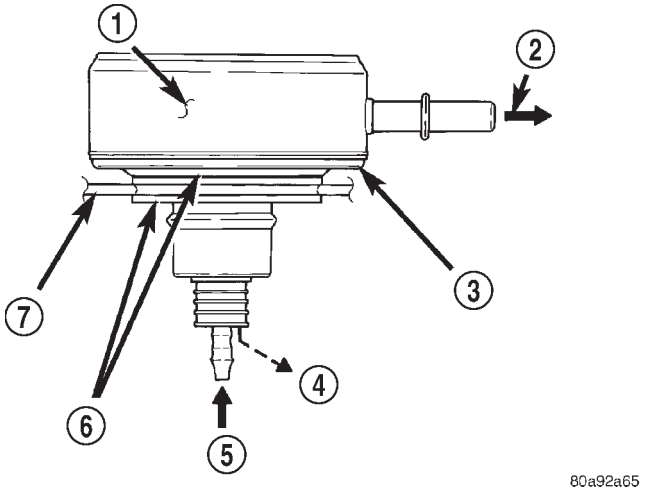

Fig. 3 Fuel Filter/Fuel Pressure Regulator

1 - INTERNAL FUEL FILTER
2 - FUEL FLOW TO FUEL INJECTORS
3 - FUEL FILTER/FUEL PRESSURE REGULATOR
4 - EXCESS FUEL BACK TO TANK
5 - FUEL INLET
6 - RUBBER GROMMET
7 - TOP OF PUMP MODULE

Fuel pump module removal is not necessary.

(1) Drain fuel tank and remove tank. Refer to Fuel Tank Removal/Installation.

FUEL FILTER/PRESSURE REGULATOR (Continued)

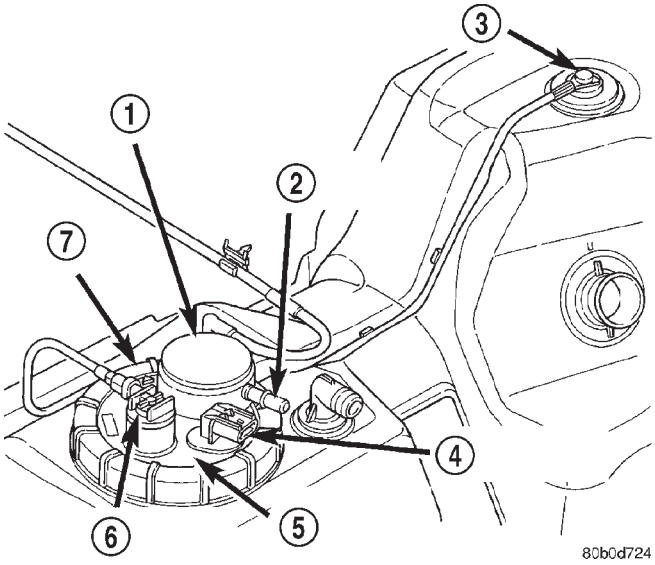

Fig. 4 Filter/Regulator Location—With 26 or 34 Gallon Fuel Tank

1 - FUEL FILTER/PRESSURE REGULATOR
2 - FUEL SUPPLY FITTING
3 - REAR FUEL TANK CHECK VALVE
4 - ELECTRICAL CONNECTOR
5 - FUEL PUMP MODULE
6 - FRONT FUEL TANK CHECK VALVE
7 - LOCKNUT

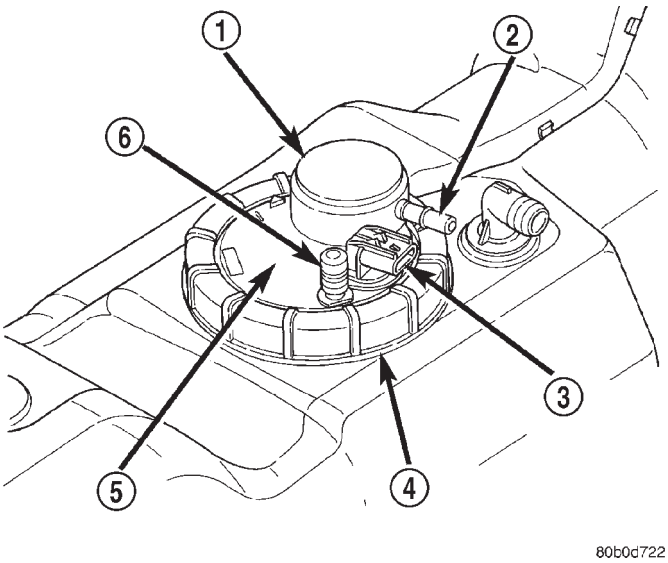

Fig. 5 Filter/Regulator Location—With 35 Gallon Fuel Tank

1 - FUEL FILTER/PRESSURE REGULATOR
2 - FUEL SUPPLY FITTING
3 - ELECTRICAL CONNECTOR
4 - LOCKNUT
5 - FUEL PUMP MODULE
6 - AUXILIARY CAPPED FITTING

(2) The fuel filter/regulator is pressed into a rubber grommet. Remove by twisting and pulling straight up (Fig. 6).

CAUTION: Do not pull filter/regulator more than three inches from fuel pump module. Damage to coiled fuel tube (line) may result.

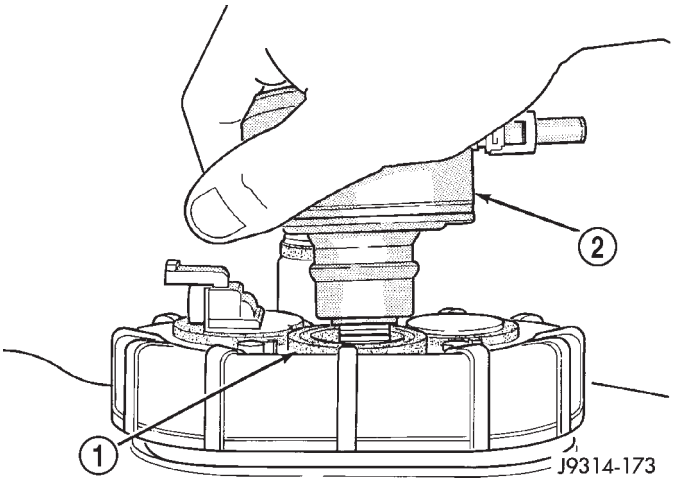

Fig. 6 Filter/Regulator Removal and Installation—TYPICAL

1 - RUBBER GROMMET
2 - FUEL FILTER/FUEL PRESSURE REGULATOR

(3) Gently cut old fuel tube (line) clamp (Fig. 7) taking care not to damage plastic fuel tube. Remove and discard old fuel tube clamp.

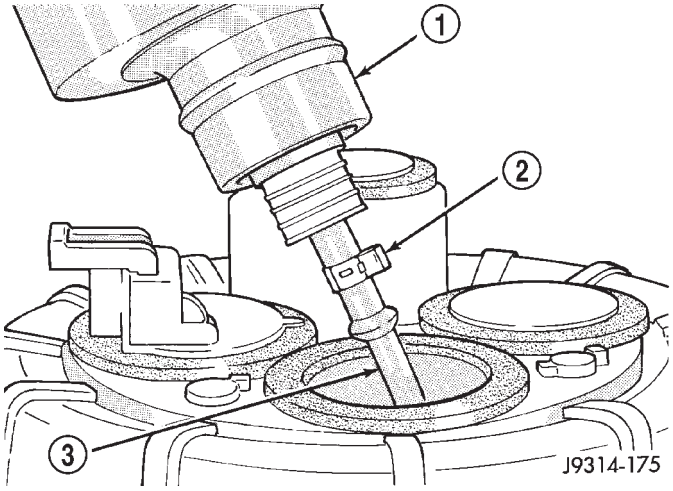

Fig. 7 Fuel Tube and Clamp—TYPICAL

1 - FUEL FILTER/FUEL PRESSURE REGULATOR
2 - TUBE CLAMP
3 - FUEL TUBE

(4) Remove plastic fuel tube from filter/regulator by gently pulling downward. Remove filter/regulator from fuel pump module.

FUEL FILTER/PRESSURE REGULATOR (Continued)

INSTALLATION

(1) Install a new clamp over plastic fuel tube.

(2) Install filter/regulator to fuel tube. Rotate filter/regulator in fuel tube (line) (Fig. 8) until it is pointed to drivers side of vehicle (Fig. 4) or (Fig. 5).

(3) Tighten line clamp to fuel line using special Hose Clamp Pliers number C-4124 or equivalent (Fig. 8) . **Do not use conventional side cutters to tighten this type of clamp.**

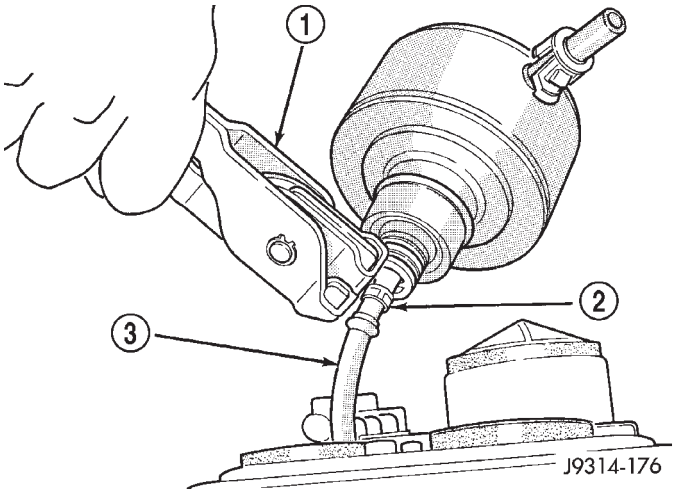

Fig. 8 Tightening Fuel Tube Clamp—TYPICAL

1 - TOOL C-4124
2 - TUBE CLAMP
3 - FUEL TUBE

(4) Press filter/regulator (by hand) into rubber grommet. The assembly should be pointed towards drivers side of vehicle (Fig. 4) or (Fig. 5) .

(5) Install fuel tank. Refer to Fuel Tank Removal/ Installation.

(6) Check for fuel leaks.

FUEL LEVEL SENDING UNIT / SENSOR

DESCRIPTION

The fuel gauge sending unit (fuel level sensor) is attached to the side of the fuel pump module. The sending unit consists of a float, an arm, and a variable resistor track (card).

OPERATION

The fuel pump module has 4 different circuits (wires). Two of these circuits are used for the fuel gauge sending unit for fuel gauge operation, and for certain OBD II emission requirements. The other 2 wires are used for electric fuel pump operation.

For Fuel Gauge Operation: A constant current source of about 32 mA is supplied to the resistor track on the fuel gauge sending unit. This is fed directly from the Powertrain Control Module (PCM). The resistor track is used to vary the voltage depending on fuel tank float level. As fuel level increases, the float and arm move up, which decreases voltage. As fuel level decreases, the float and arm move down, which increases voltage. The varied voltage signal is returned back to the PCM through the sensor return circuit. Output voltages will vary from about .6 volts at FULL, to about 8.6 volts at EMPTY (Jeep models), or, about 7.0 volts at EMPTY (Dodge Truck models). **NOTE: For diagnostic purposes, this voltage can only be verified with the fuel gauge sending unit circuit closed (i.e. having all of the sending units electrical connectors connected).**

Both of the electrical circuits between the fuel gauge sending unit and the PCM are hard-wired (not multi-plexed). After the voltage signal is sent from the resistor track, and back to the PCM, the PCM will interpret the resistance (voltage) data and send a message across the multi-plex bus circuits to the instrument panel cluster. Here it is translated into the appropriate fuel gauge level reading. Refer to Instrument Panel for additional information.

For OBD II Emission Monitor Requirements: The PCM will monitor the voltage output sent from the resistor track on the sending unit to indicate fuel level. The purpose of this feature is to prevent the OBD II system from recording/setting false misfire and fuel system monitor diagnostic trouble codes. The feature is activated if the fuel level in the tank is less than approximately 15 percent of its rated capacity. If equipped with a Leak Detection Pump (EVAP system monitor), this feature will also be activated if the fuel level in the tank is more than approximately 85 percent of its rated capacity.

DIAGNOSIS AND TESTING - FUEL GAUGE SENDING UNIT

The fuel gauge sending unit contains a variable resistor (track). As the float moves up or down, electrical resistance will change. Refer to Instrument Panel and Gauges under Electrical for Fuel Gauge testing. To test the gauge sending unit only, it must be removed from vehicle. The unit is part of the fuel pump module. Refer to Fuel Pump Module Removal/ Installation for procedures. Measure the resistance across the sending unit terminals. With float in up position, resistance should be 20 ohms ±6 ohms. With float in down position, resistance should be 220 ohms ±6 ohms.

REMOVAL

The fuel gauge sending unit (fuel level sensor) and float assembly is located on the side of fuel pump

FUEL LEVEL SENDING UNIT / SENSOR (Continued)

module (Fig. 9). The fuel pump module is located inside of fuel tank.

(1) Remove fuel tank. Refer to Fuel Tank–All Engines in the Removal/Installation section.

(2) Remove fuel pump module. Refer to Fuel Pump Module Removal/Installation.

(3) Unplug 4–way electrical connector (Fig. 9).

(4) Disconnect 2 sending unit wires at 4–way connector. The locking collar of connector must be removed before wires can be released from connector. Note location of wires within 4–way connector.

(5) The sending unit is retained to pump module with a small lock tab and notch (Fig. 10). Carefully push lock tab to the side and away from notch while sliding sending unit downward on tracks for removal. Note wire routing while removing unit from module.

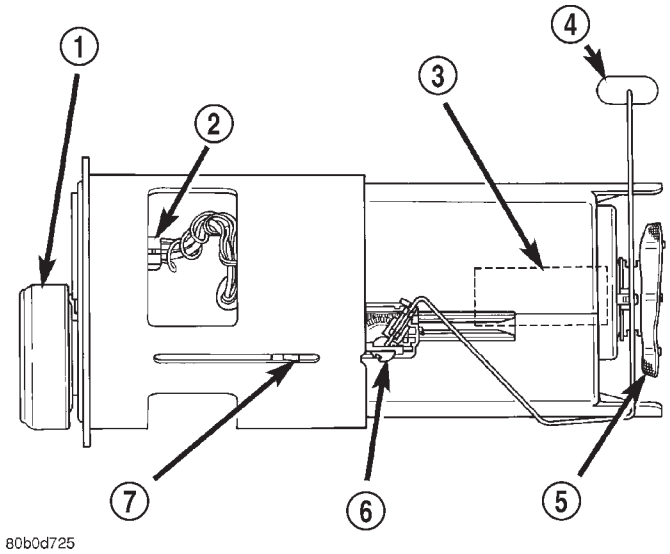

Fig. 9 Fuel Gauge Sending Unit Location—TYPICAL Module

1 - FUEL FILTER/PRESSURE REGULATOR
2 - ELECTRICAL CONNECTOR
3 - ELECTRIC FUEL PUMP
4 - FUEL GAUGE FLOAT
5 - FUEL PUMP INLET FILTER
6 - FUEL GAUGE SENDING UNIT
7 - MODULE LOCK TABS (3)

INSTALLATION

The fuel gauge sending unit (fuel level sensor) and float assembly is located on the side of fuel pump module (Fig. 9) . The fuel pump module is located inside of fuel tank.

(1) Position sending unit into tracks. Note wire routing.

(2) Push unit on tracks until lock tab snaps into notch.

(3) Connect 2 sending unit wires into 4–way connector and install locking collar.

(4) Connect 4–way electrical connector to module.

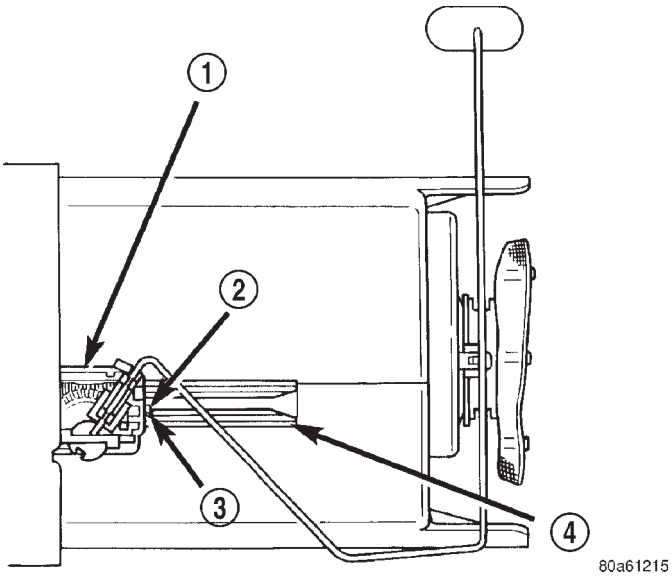

Fig. 10 Fuel Gauge Sending Unit Lock Tab/Tracks

1 - FUEL GAUGE SENDING UNIT
2 - LOCK TAB
3 - NOTCH
4 - TRACKS

(5) Install fuel pump module. Refer to Fuel Pump Module Removal/Installation.

(6) Install fuel tank. Refer to Fuel Tank–All Engines in the Removal/Installation section.

FUEL LINES

DESCRIPTION

Also refer to Quick-Connect Fittings.

WARNING: THE FUEL SYSTEM IS UNDER A CONSTANT PRESSURE (EVEN WITH THE ENGINE OFF). BEFORE SERVICING ANY FUEL SYSTEM HOSES, FITTINGS OR LINES, THE FUEL SYSTEM PRESSURE MUST BE RELEASED. REFER TO THE FUEL SYSTEM PRESSURE RELEASE PROCEDURE IN THIS GROUP.

The lines/tubes/hoses used on fuel injected vehicles are of a special construction. This is due to the higher fuel pressures and the possibility of contaminated fuel in this system. If it is necessary to replace these lines/tubes/hoses, only those marked EFM/EFI may be used.

If equipped: The hose clamps used to secure rubber hoses on fuel injected vehicles are of a special rolled edge construction. This construction is used to prevent the edge of the clamp from cutting into the hose. Only these rolled edge type clamps may be used in this system. All other types of clamps may cut into the hoses and cause high-pressure fuel leaks.

Use new original equipment type hose clamps.

FUEL PUMP

DESCRIPTION

The electric fuel pump is located inside of the fuel pump module. A 12 volt, permanent magnet, electric motor powers the fuel pump. The electric fuel pump is not a separate, serviceable component.

OPERATION

Voltage to operate the electric pump is supplied through the fuel pump relay.

Fuel is drawn in through a filter at the bottom of the module and pushed through the electric motor gearset to the pump outlet.

Check Valve Operation: The pump outlet contains a one-way check valve to prevent fuel flow back into the tank and to maintain fuel supply line pressure (engine warm) when pump is not operational. It is also used to keep the fuel supply line full of gasoline when pump is not operational. After the vehicle has cooled down, fuel pressure may drop to 0 psi (cold fluid contracts), but liquid gasoline will remain in fuel supply line between the check valve and fuel injectors. **Fuel pressure that has dropped to 0 psi on a cooled down vehicle (engine off) is a normal condition.** Refer to the Fuel Pressure Leak Down Test for more information.

The electric fuel pump is not a separate, serviceable component.

DIAGNOSIS AND TESTING

DIAGNOSIS AND TESTING - FUEL PUMP CAPACITY TEST

Before performing this test, verify fuel pump pressure. Refer to Fuel Pump Pressure Test. Use this test in conjunction with the Fuel Pressure Leak Down Test.

(1) Release fuel system pressure. Refer to Fuel Pressure Release Procedure.

(2) Disconnect fuel supply line at fuel rail. Refer to Quick-Connect Fittings. Some engines may require air cleaner housing removal before line disconnection.

(3) Obtain correct Fuel Line Pressure Test Adapter Tool Hose. Tool number 6539 is used for 5/16” fuel lines and tool number 6631 is used for 3/8” fuel lines.

(4) Connect correct Fuel Line Pressure Test Adapter Tool Hose into disconnected fuel supply line. Insert other end of Adaptor Tool Hose into a graduated container.

(5) Remove fuel fill cap.

(6) To activate fuel pump and pressurize system, obtain DRB® scan tool and actuate ASD Fuel System Test.

(7) A good fuel pump will deliver at least 1/4 liter of fuel in 7 seconds. Do not operate fuel pump for longer than 7 seconds with fuel line disconnected as fuel pump module reservoir may run empty.

(a) If capacity is lower than specification, but fuel pump can be heard operating through fuel fill cap opening, check for a kinked/damaged fuel supply line somewhere between fuel rail and fuel pump module.

(b) If line is not kinked/damaged, and fuel pressure is OK, but capacity is low, replace fuel filter/fuel pressure regulator. The filter/regulator may be serviced separately on certain applications. Refer to Fuel Filter/Fuel Pressure Regulator Removal/Installation for additional information.

(c) If both fuel pressure and capacity are low, replace fuel pump module assembly. Refer to Fuel Pump Module Removal/Installation.

DIAGNOSIS AND TESTING - FUEL PUMP PRESSURE TEST

Use this test in conjunction with the Fuel Pump Capacity Test, Fuel Pressure Leak Down Test and Fuel Pump Amperage Test found elsewhere in this group.

Check Valve Operation: The electric fuel pump outlet contains a one-way check valve to prevent fuel flow back into the tank and to maintain fuel supply line pressure (engine warm) when pump is not operational. It is also used to keep the fuel supply line full of gasoline when pump is not operational. After the vehicle has cooled down, fuel pressure may drop to 0 psi (cold fluid contracts), but liquid gasoline will remain in fuel supply line between the check valve and fuel injectors. **Fuel pressure that has dropped to 0 psi on a cooled down vehicle (engine off) is a normal condition.** When the electric fuel pump is activated, fuel pressure should **immediately** (1–2 seconds) rise to specification.

All fuel systems are equipped with a fuel tank module mounted, combination fuel filter/fuel pressure regulator. The fuel pressure regulator is not controlled by engine vacuum.

WARNING: THE FUEL SYSTEM IS UNDER CONSTANT FUEL PRESSURE EVEN WITH THE ENGINE OFF. BEFORE DISCONNECTING FUEL LINE AT FUEL RAIL, THIS PRESSURE MUST BE RELEASED. REFER TO THE FUEL SYSTEM PRESSURE RELEASE PROCEDURE.

(1) Remove protective cap at fuel rail test port. Connect the 0–414 kPa (0-60 psi) fuel pressure gauge (from gauge set 5069) to test port pressure fitting on fuel rail (Fig. 11). **The DRB® III Scan Tool along with the PEP module, the 500 psi pressure**

FUEL PUMP (Continued)

transducer, and the transducer-to-test port adapter may also be used in place of the fuel pressure gauge.

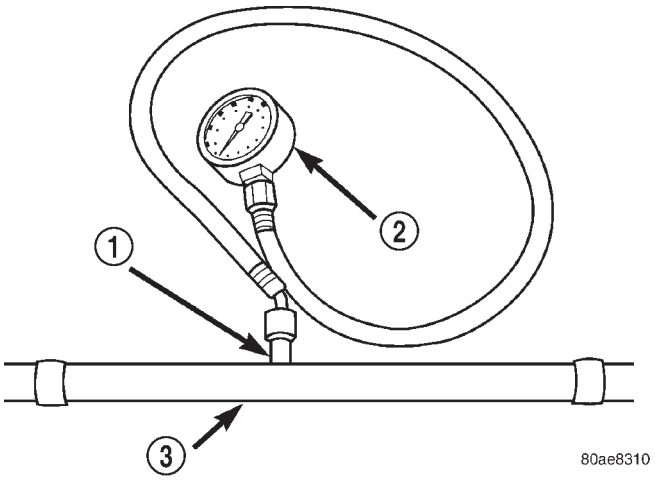

Fig. 11 FUEL PRESSURE TEST GAUGE (TYPICAL GAUGE INSTALLATION AT TEST PORT)

1 - SERVICE (TEST) PORT
2 - FUEL PRESSURE TEST GAUGE
3 - FUEL RAIL

(2) Start and warm engine and note pressure gauge reading. Fuel pressure should be 339 kPa ± 34 kPa (49.2 psi ± 5 psi) at idle.

(3) If engine runs, but pressure is below 44.2 psi, check for a kinked fuel supply line somewhere between fuel rail and fuel pump module. If line is not kinked, but specifications for either the Fuel Pump Capacity, Fuel Pump Amperage or Fuel Pressure Leak Down Tests were not met, replace fuel pump module assembly. Refer to Fuel Pump Module Removal/Installation.

(4) If operating pressure is above 54.2 psi, electric fuel pump is OK, but fuel pressure regulator is defective. Replace fuel filter/fuel pressure regulator. Refer to Fuel Filter/Fuel Pressure Regulator Removal/Installation for more information.

(5) Install protective cap to fuel rail test port.

DIAGNOSIS AND TESTING - FUEL PUMP AMPERAGE TEST

This amperage (current draw) test is to be done in conjunction with the Fuel Pump Pressure Test, Fuel Pump Capacity Test and Fuel Pressure Leak Down Test. Before performing the amperage test, be sure the temperature of the fuel tank is above 50° F (10° C).

The DRB® Scan Tool along with the DRB Low Current Shunt (LCS) adapter (Fig. 12) and its test leads will be used to check fuel pump amperage specifications.

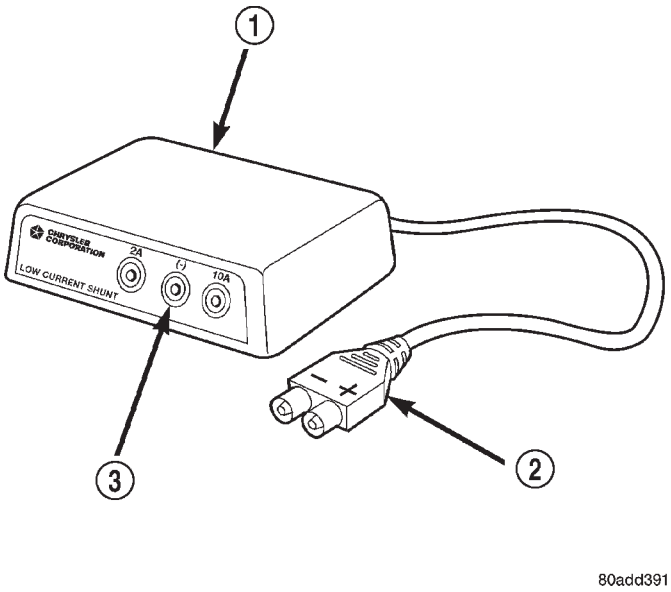

Fig. 12 LOW CURRENT SHUNT

1 - LOW CURRENT SHUNT ADAPTER
2 - PLUG TO DRB
3 - TEST LEAD RECEPTACLES

(1) Be sure fuel tank contains fuel before starting test. If tank is empty or near empty, amperage readings will be incorrect.

(2) Obtain LCS adapter.

(3) Plug cable from LCS adapter into DRB scan tool at SET 1 receptacle.

(4) Plug DRB into vehicle 16–way connector (data link connector).

(5) Connect (-) and (+) test cable leads into LCS adapter receptacles. Use **10 amp (10A +)** receptacle and common (-) receptacles.

(6) Gain access to MAIN MENU on DRB screen.

(7) Press DVOM button on DRB.

(8) Using left/right arrow keys, highlight CHANNEL 1 function on DRB screen.

(9) Press ENTER three times.

(10) Using up/down arrow keys, highlight RANGE on DRB screen (screen will default to 2 amp scale).

(11) Press ENTER to change 2 amp scale to 10 amp scale. **This step must be done to prevent damage to DRB scan tool or LCS adapter (blown fuse).**

(12) Remove cover from Power Distribution Center (PDC).

(13) Remove fuel pump relay from PDC. Refer to label on PDC cover for relay location.

FUEL PUMP (Continued)

WARNING: BEFORE PROCEEDING TO NEXT STEP, NOTE THE FUEL PUMP WILL BE ACTIVATED AND SYSTEM PRESSURE WILL BE PRESENT. THIS WILL OCCUR AFTER CONNECTING TEST LEADS FROM LCS ADAPTER INTO FUEL PUMP RELAY CAVITIES. THE FUEL PUMP WILL OPERATE EVEN WITH IGNITION KEY IN OFF POSITION. BEFORE ATTACHING TEST LEADS, BE SURE ALL FUEL LINES AND FUEL SYSTEM COMPONENTS ARE CONNECTED.

CAUTION: To prevent possible damage to the vehicle electrical system and LCS adapter, the test leads must be connected into relay cavities exactly as shown in following steps.

Depending upon vehicle model, year or engine configuration, three different types of relays may be used: Type-1, type-2 and type–3.

(14) If equipped with **type–1 relay** (Fig. 13), attach test leads from LCS adapter into PDC relay cavities number 30 and 87. For location of these cavities, refer to numbers stamped to bottom of relay (Fig. 13).

(15) If equipped with **type–2 relay** (Fig. 14), attach test leads from LCS adapter into PDC relay cavities number 30 and 87. For location of these cavities, refer to numbers stamped to bottom of relay (Fig. 14).

(16) If equipped with **type–3 relay** (Fig. 15), attach test leads from LCS adapter into PDC relay cavities number 3 and 5. For location of these cavities, refer to numbers stamped to bottom of relay (Fig. 15).

(17) When LCS adapter test leads are attached into relay cavities, fuel pump **will be activated.** Determine fuel pump amperage on DRB screen. Amperage should be below 10.0 amps. If amperage is below 10.0 amps, and specifications for the Fuel Pump Pressure, Fuel Pump Capacity and Fuel Pressure Leak Down tests were met, the fuel pump module is OK.

(18) If amperage is more than 10.0 amps, replace fuel pump module assembly. The electric fuel pump is not serviced separately.

(19) Disconnect test leads from relay cavities immediately after testing.

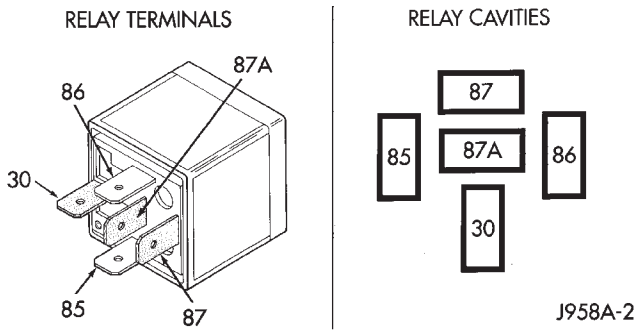

Fig. 13 FUEL PUMP RELAY - TYPE 1

TERMINAL LEGEND

NUMBER	IDENTIFICATION
30	COMMON FEED
85	COIL GROUND
86	COIL BATTERY
87	NORMALLY OPEN
87A	NORMALLY CLOSED

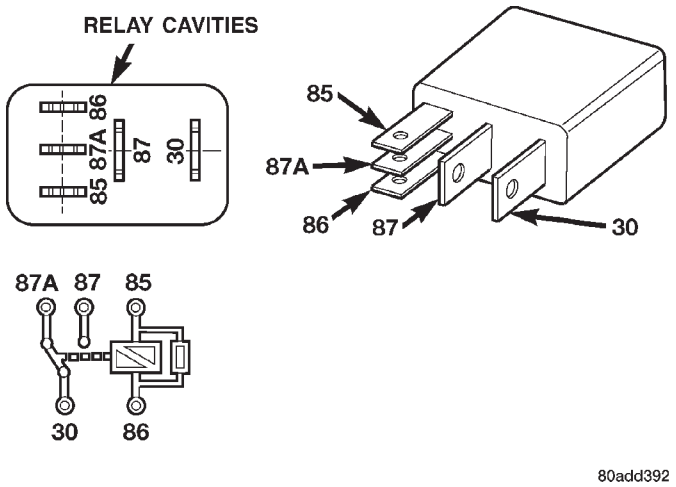

Fig. 14 FUEL PUMP RELAY - TYPE 2

TERMINAL LEGEND

NUMBER	IDENTIFICATION
30	COMMON FEED
85	COIL GROUND
86	COIL BATTERY
87	NORMALLY OPEN
87A	NORMALLY CLOSED

FUEL PUMP (Continued)

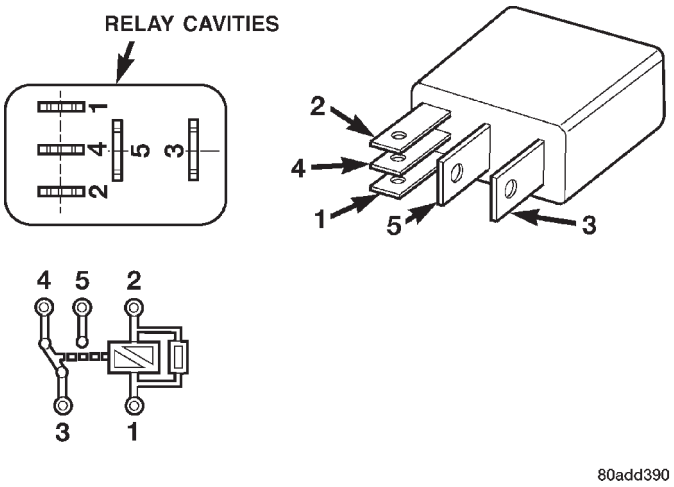

Fig. 15 FUEL PUMP RELAY - TYPE 3

TERMINAL LEGEND

NUMBER	IDENTIFICATION
1	COIL BATTERY
2	COIL GROUND
3	COMMON FEED
4	NORMALLY CLOSED
5	NORMALLY OPEN

FUEL PUMP MODULE

DESCRIPTION

The fuel pump module on all gas powered engines is installed in the top of the fuel tank (Fig. 16) or (Fig. 17). The fuel pump module (Fig. 16), (Fig. 17)or (Fig. 18)contains the following:

- A combination fuel filter/fuel pressure regulator
- Electric fuel pump
- Fuel pump reservoir
- A separate in-tank fuel filter (at bottom of module)
- Check valve (certain modules)
- Fuel gauge sending unit (fuel level sensor)
- Fuel supply line connection at filter/regulator
- A threaded locknut retaining pump module to fuel tank
- A gasket between tank flange and module
- Auxiliary non-pressurized fuel supply fitting (not all engines)

The fuel gauge sending unit (fuel level sensor), and pick-up filter (at bottom of module) may be serviced separately. If the electrical fuel pump requires service, the entire fuel pump module must be replaced. The fuel filter/fuel pressure regulator may be serviced separately. Refer to Fuel Filter/Fuel Pressure Regulator Removal/Installation for additional information.

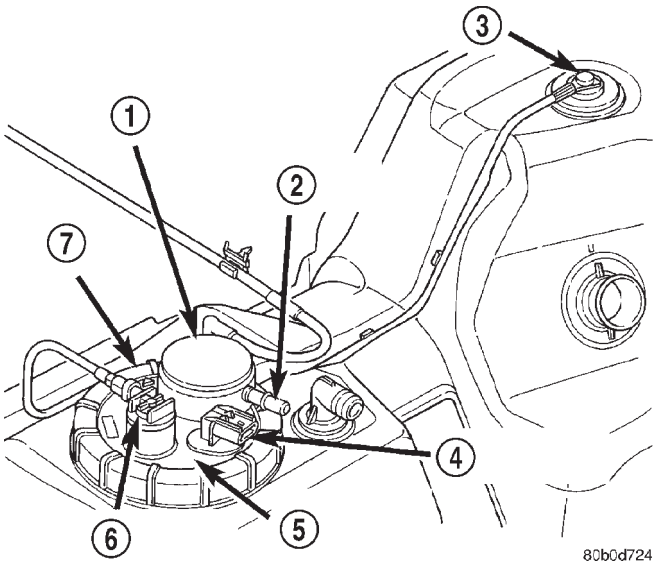

Fig. 16 Fuel Pump Module - Gas Powered With 26 or 34 Gallon Tank–Typical

1 - FUEL FILTER/PRESSURE REGULATOR
2 - FUEL SUPPLY FITTING
3 - REAR FUEL TANK CHECK VALVE
4 - ELECTRICAL CONNECTOR
5 - FUEL PUMP MODULE
6 - FRONT FUEL TANK CHECK VALVE
7 - LOCKNUT

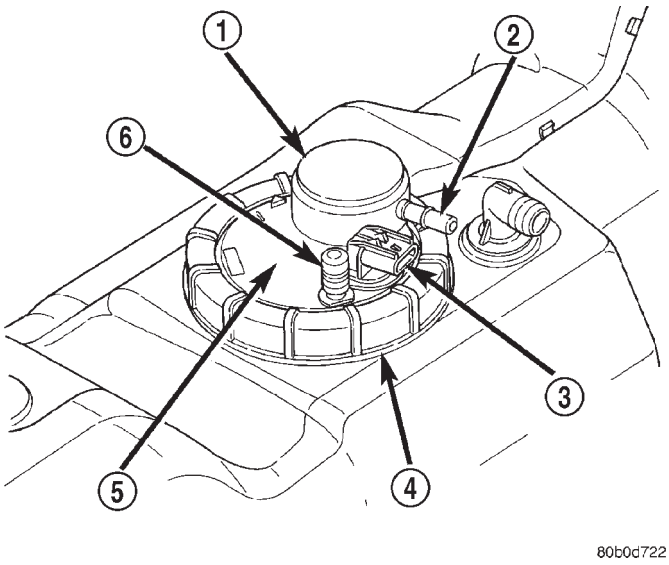

Fig. 17 Fuel Pump Module - Gas Powered with 35 Gal. Tank

1 - FUEL FILTER/PRESSURE REGULATOR
2 - FUEL SUPPLY FITTING
3 - ELECTRICAL CONNECTOR
4 - LOCKNUT
5 - FUEL PUMP MODULE
6 - AUXILIARY CAPPED FITTING

FUEL PUMP MODULE (Continued)

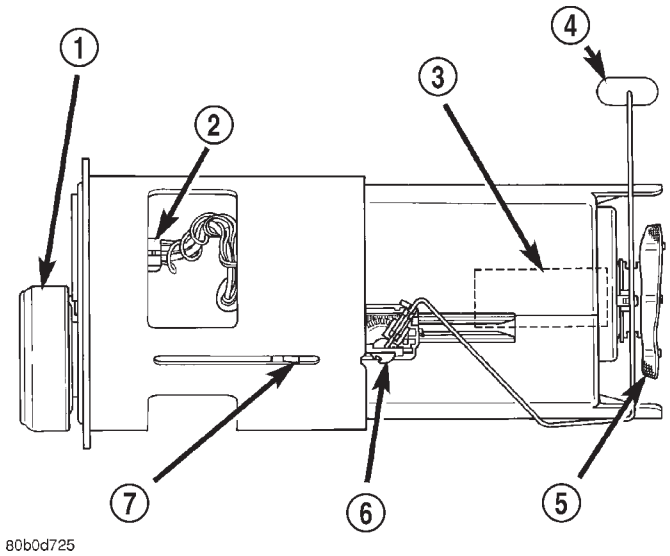

Fig. 18 Fuel Pump Module Components - Gas Powered Engines - Typical

1 - FUEL FILTER/PRESSURE REGULATOR
2 - ELECTRICAL CONNECTOR
3 - ELECTRIC FUEL PUMP
4 - FUEL GAUGE FLOAT
5 - FUEL PUMP INLET FILTER
6 - FUEL GAUGE SENDING UNIT
7 - MODULE LOCK TABS (3)

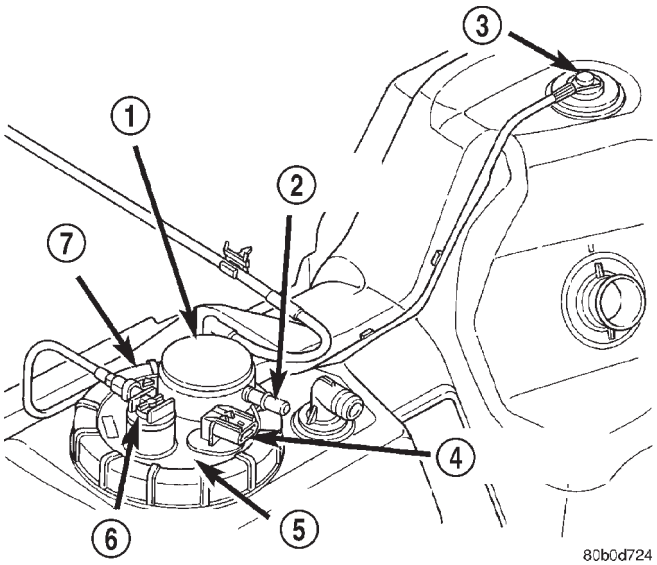

Fig. 19 Fuel Pump Module—26 or 34 Gallon Fuel Tank

1 - FUEL FILTER/PRESSURE REGULATOR
2 - FUEL SUPPLY FITTING
3 - REAR FUEL TANK CHECK VALVE
4 - ELECTRICAL CONNECTOR
5 - FUEL PUMP MODULE
6 - FRONT FUEL TANK CHECK VALVE
7 - LOCKNUT

OPERATION

Refer to Fuel Pump, Fuel Filter/Fuel Pressure Regulator and Fuel Gauge Sending Unit.

REMOVAL

WARNING: THE FUEL SYSTEM IS UNDER A CONSTANT PRESSURE (EVEN WITH THE ENGINE OFF). BEFORE SERVICING THE FUEL PUMP MODULE, THE FUEL SYSTEM PRESSURE MUST BE RELEASED.

(1) Drain and remove fuel tank. Refer to Fuel Tank - All Engines in the Removal/Installation section.

(2) The plastic fuel pump module locknut is threaded onto fuel tank (Fig. 19) or (Fig. 20). Install Special Tool 6856 to locknut and remove locknut (Fig. 21). The fuel pump module will spring up when locknut is removed.

(3) Remove module from fuel tank.

INSTALLATION

CAUTION: Whenever the fuel pump module is serviced, the rubber gasket must be replaced.

(1) Using a new gasket, position fuel pump module into opening in fuel tank.

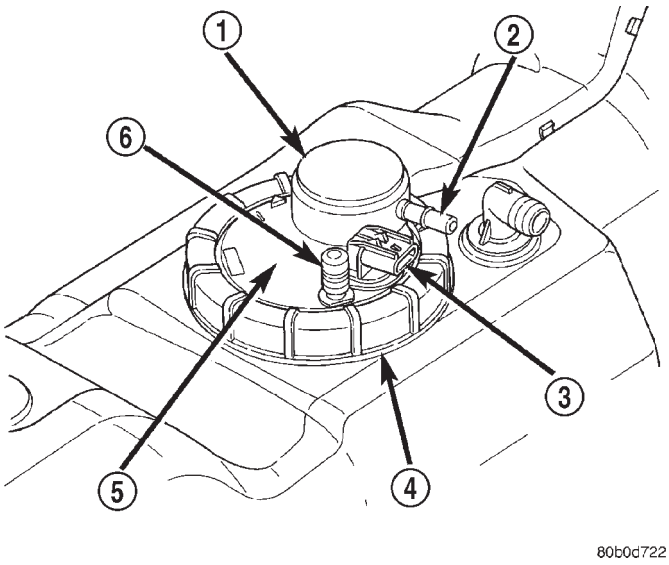

Fig. 20 Fuel Pump Module—35 Gallon Fuel Tank

1 - FUEL FILTER/PRESSURE REGULATOR
2 - FUEL SUPPLY FITTING
3 - ELECTRICAL CONNECTOR
4 - LOCKNUT
5 - FUEL PUMP MODULE
6 - AUXILIARY CAPPED FITTING

(2) Position locknut over top of fuel pump module. Install locknut finger tight.

FUEL PUMP MODULE (Continued)

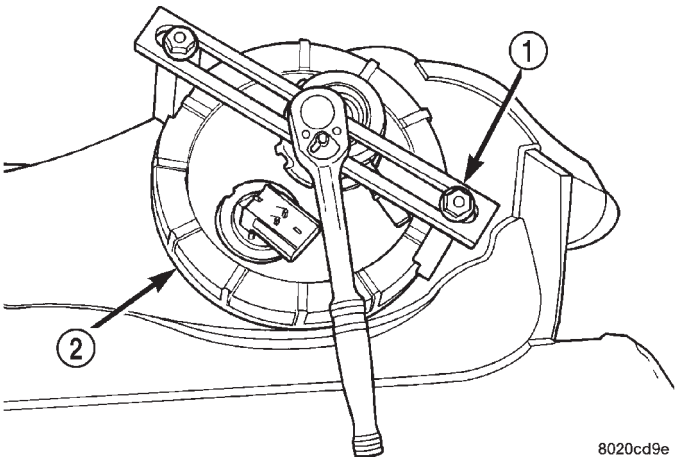

Fig. 21 Locknut Removal/Installation—TYPICAL

1 - SPECIAL TOOL 6856
2 - LOCKNUT

(3) Rotate module until positioned as shown in (Fig. 19) or (Fig. 20). This step must be performed to prevent float from contacting side of fuel tank. Be sure fuel filter/fuel pressure regulator is pointed to drivers side of vehicle.

(4) Install Special Tool 6856 (Fig. 21) to locknut.

(5) Tighten locknut to 24– 44 N·m (18–32 ft. lbs.) torque.

(6) Install fuel tank. Refer to Fuel Tank - All Engines in the Removal/Installation section.

FUEL RAIL

DESCRIPTION

DESCRIPTION - 5.9L

The fuel injector rail is used to attach the fuel injectors to the engine. It is mounted to the engine (Fig. 22).

DESCRIPTION - 8.0L

The fuel injector rail is used to attach the fuel injectors to the engine. The fuel rail supplies the necessary fuel to each individual fuel injector and is mounted to the lower half of the two-piece intake manifold (Fig. 23). The metal, one-piece fuel rail is not repairable.

OPERATION

OPERATION - 5.9L

High pressure from the fuel pump is routed to the fuel rail. The fuel rail then supplies the necessary fuel to each individual fuel injector.

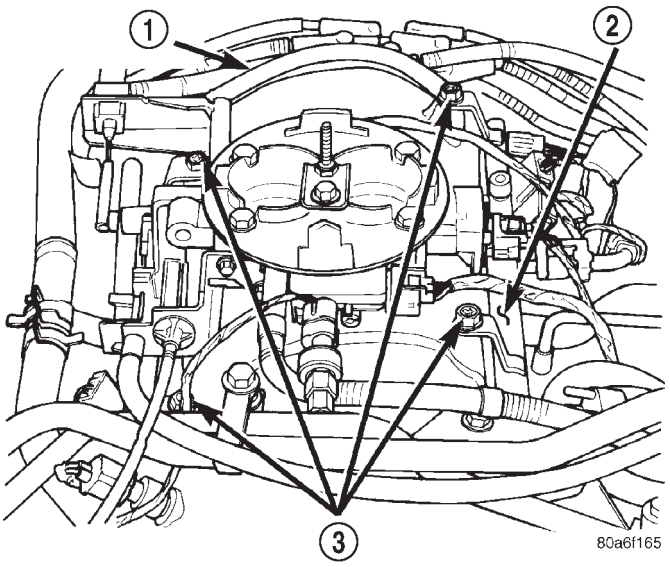

Fig. 22 Fuel Rail—5.9L Engine—Typical

1 - FUEL RAIL CONNECTING HOSE
2 - FUEL RAIL
3 - MOUNTING BOLTS (4)

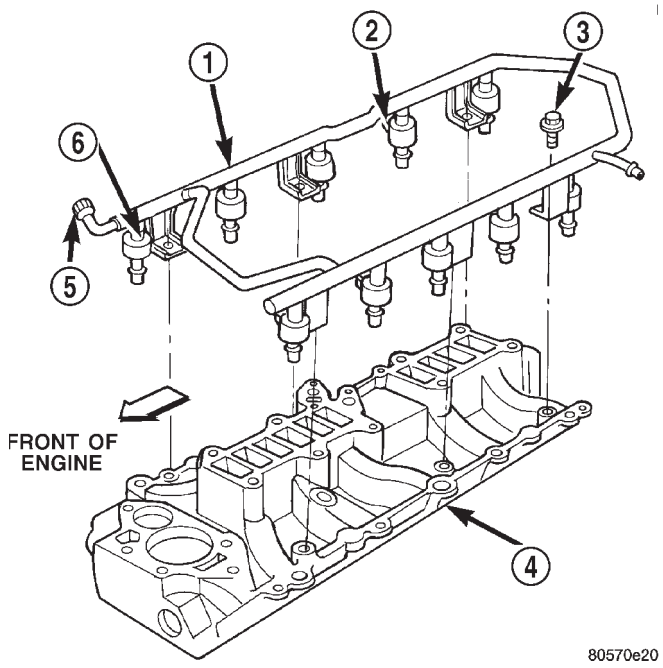

Fig. 23 Fuel Rail—8.0L Engine

1 - FUEL RAIL
2 - ELECTRICAL CONNECTOR
3 - MOUNTING BOLTS (6)
4 - INTAKE MANIFOLD LOWER HALF
5 - FUEL PRESSURE TEST PORT
6 - FUEL INJECTORS (10)

A fuel pressure test port is located on the fuel rail. A quick-connect fitting with a safety latch clip is used to attach the fuel line to the fuel rail.

FUEL RAIL (Continued)

The fuel rail is not repairable.

CAUTION: The left and right sections of the fuel rail are connected with a flexible connecting hose. Do not attempt to separate the rail halves at this connecting hose. Due to the design of this connecting hose, it does not use any clamps. Never attempt to install a clamping device of any kind to the hose. When removing the fuel rail assembly for any reason, be careful not to bend or kink the connecting hose.

OPERATION - 8.0L

High pressure from the fuel pump is routed to the fuel rail. The fuel rail then supplies the necessary fuel to each individual fuel injector.

A fuel pressure test port is located on the fuel rail. A quick-connect fitting with a safety latch clip is used to attach the fuel line to the fuel rail.

The fuel rail is not repairable.

REMOVAL

REMOVAL - 5.9L

WARNING: THE FUEL SYSTEM IS UNDER A CONSTANT PRESSURE (EVEN WITH ENGINE TURNED OFF). BEFORE SERVICING FUEL RAIL ASSEMBLY, FUEL SYSTEM PRESSURE MUST BE RELEASED.

To release fuel pressure, refer to Fuel System Pressure Release Procedure found in this group.

CAUTION: The left and right fuel rails are replaced as an assembly. Do not attempt to separate the rail halves at the connecting hose (Fig. 24). Due to the design of this connecting hose, it does use any clamps. Never attempt to install a clamping device of any kind to the hose. When removing the fuel rail assembly for any reason, be careful not to bend or kink the connecting hose.

(1) Remove negative battery cable at battery.

(2) Remove air cleaner.

(3) Perform fuel pressure release procedure.

(4) Remove throttle body from intake manifold. Refer to Throttle Body removal in this group.

(5) If equipped with air conditioning, remove the A-shaped A/C compressor-to-intake manifold support bracket (three bolts) (Fig. 25).

(6) Disconnect electrical connectors at all fuel injectors. To remove connector refer to (Fig. 26). Push red colored slider away from injector (1). While pushing slider, depress tab (2) and remove connector (3) from injector. The factory fuel injection wiring harness is numerically tagged (INJ 1, INJ 2, etc.) for injector position identification. If harness is not tagged, note wiring location before removal.

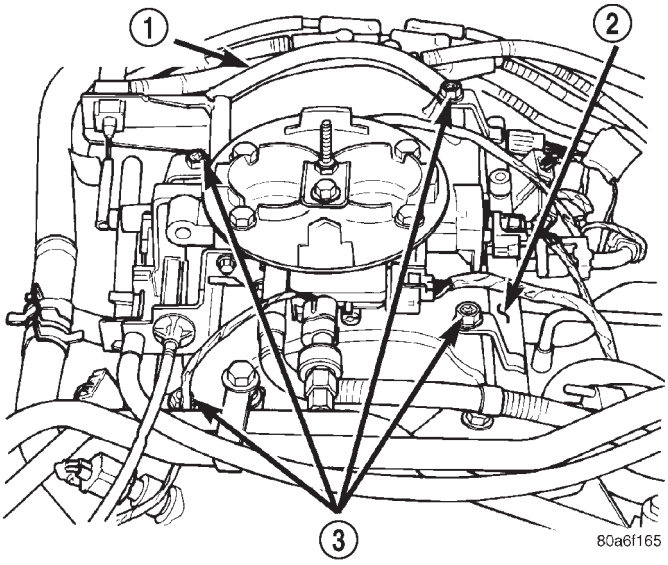

Fig. 24 Fuel Rail Assembly—Typical

1 - FUEL RAIL CONNECTING HOSE
2 - FUEL RAIL
3 - MOUNTING BOLTS (4)

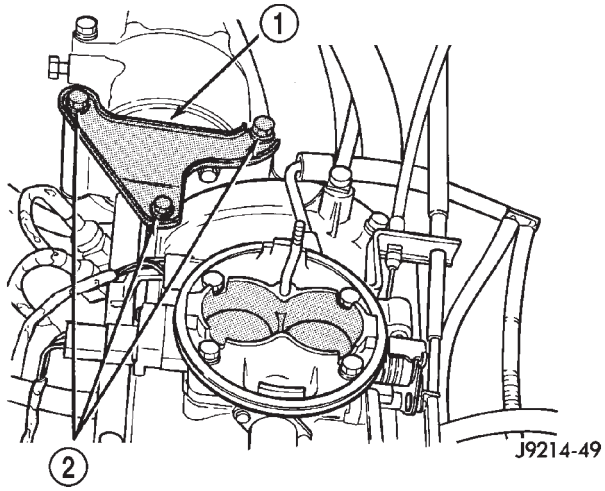

Fig. 25 A/C Compressor Support Bracket—Typical

1 - AIR CONDITIONING COMPRESSOR SUPPORT BRACKET
2 - MOUNTING BOLTS

(7) Disconnect fuel tube (line) at side of fuel rail. Refer to Quick-Connect Fittings for procedures,

(8) Remove the remaining fuel rail mounting bolts.

(9) Gently rock and pull the **left** fuel rail until the fuel injectors just start to clear the intake manifold. Gently rock and pull the **right** fuel rail until the fuel injectors just start to clear the intake manifold. Repeat this procedure (left/right) until all fuel injectors have cleared the intake manifold.

FUEL RAIL (Continued)

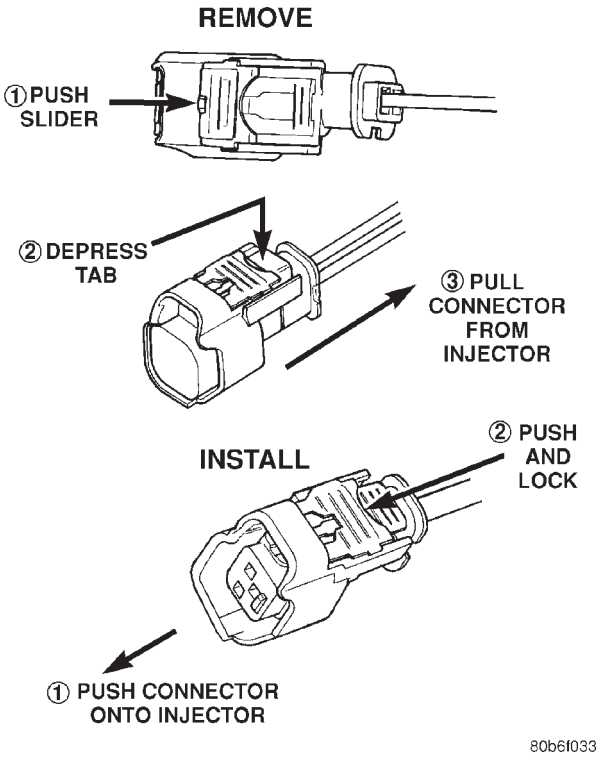

Fig. 26 Remove/Install Fuel Injector Connector

(10) Remove fuel rail (with injectors attached) from engine.

(11) Remove the clip(s) retaining the injector(s) to fuel rail (Fig. 27) or (Fig. 28).

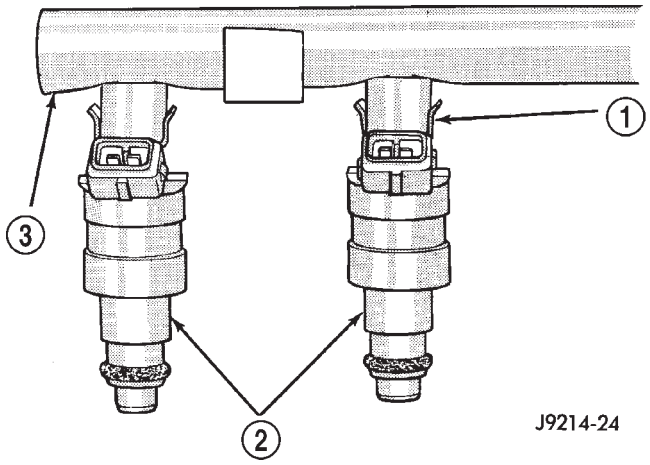

Fig. 27 Fuel Injector Mounting—Typical

1 - CLIP
2 - INJECTOR
3 - FUEL RAIL

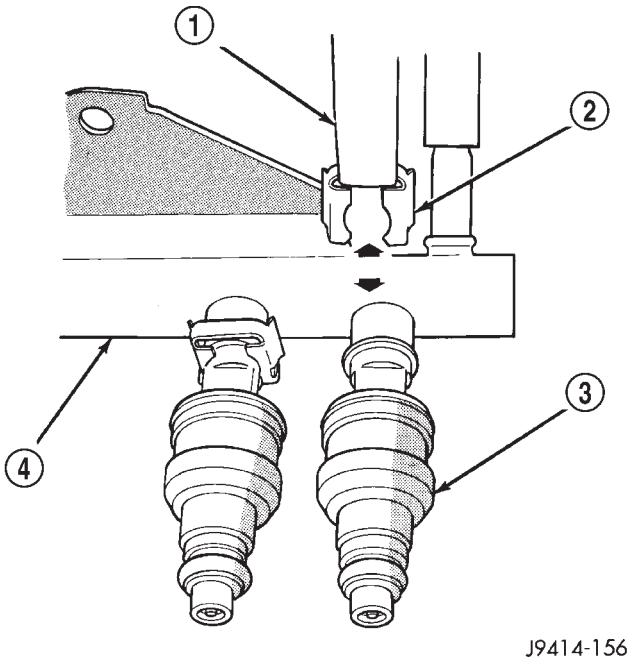

Fig. 28 Injector Retaining Clips—Typical Injector

1 - PLIERS
2 - INJECTOR CLIP
3 - FUEL INJECTOR
4 - FUEL RAIL

REMOVAL - 8.0L

WARNING: THE FUEL SYSTEM IS UNDER A CONSTANT PRESSURE EVEN WITH THE ENGINE OFF. BEFORE SERVICING FUEL RAIL, FUEL SYSTEM PRESSURE MUST BE RELEASED.

(1) Remove negative battery cable at battery.

(2) Remove air cleaner housing and tube.

(3) Perform fuel pressure release procedure. Refer to Fuel Delivery System section of this group.

(4) Disconnect throttle body linkage and remove throttle body from intake manifold. Refer to Throttle Body removal in this group.

(5) Remove ignition coil pack and bracket assembly (Fig. 29) at intake manifold and right engine valve cover (four bolts).

(6) Remove upper half of intake manifold. Refer to Engines for procedures.

(7) Disconnect electrical connectors at all fuel injectors. To remove connector refer to (Fig. 30). Push red colored slider away from injector (1). While pushing slider, depress tab (2) and remove connector (3) from injector. The factory fuel injection wiring harness is numerically tagged (INJ 1, INJ 2, etc.) for injector position identification.

(8) Disconnect fuel line quick-connect fitting at left-rear end of fuel rail. A special 3/8 inch fuel line disconnection tool will be necessary.

FUEL RAIL (Continued)

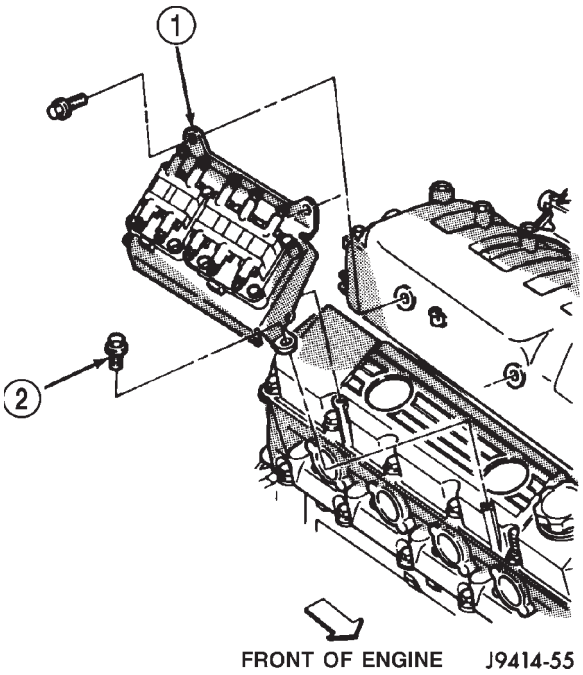

Fig. 29 Ignition Coil Pack and Mounting Bracket—8.0L V-10 Engine

1 - COIL PACKS AND BRACKET
2 - MOUNTING BOLTS (4)

(9) Remove the six fuel rail mounting bolts from the lower half of intake manifold (Fig. 31).

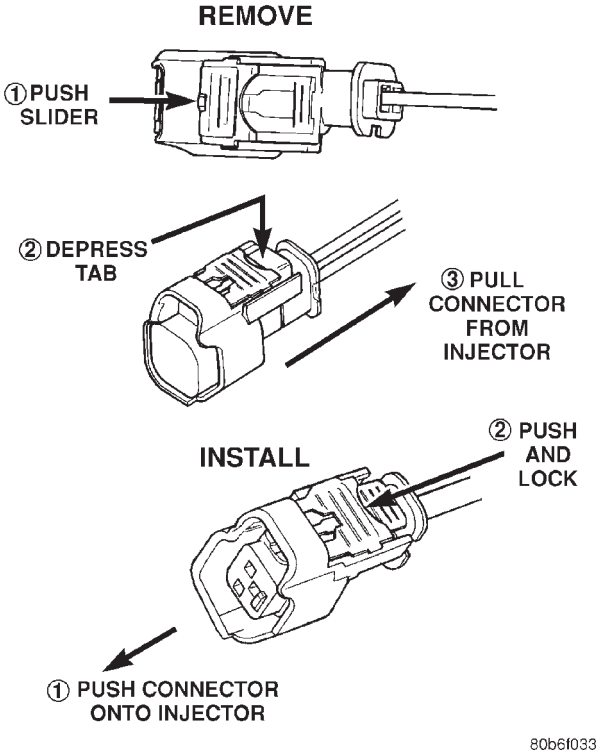

Fig. 30 Remove/Install Fuel Injector Connector

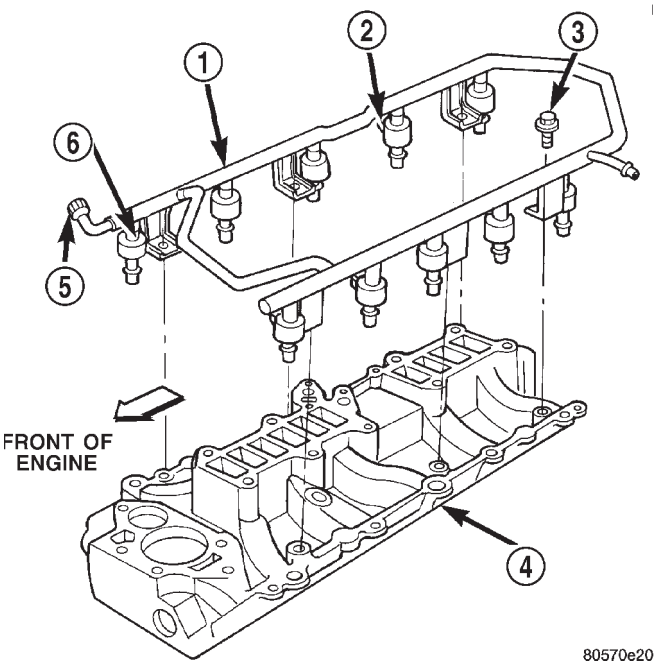

Fig. 31 Fuel Rail Mounting Bolts—8.0L V-10 Engine—Typical

1 - FUEL RAIL
2 - ELECTRICAL CONNECTOR
3 - MOUNTING BOLTS (6)
4 - INTAKE MANIFOLD LOWER HALF
5 - FUEL PRESSURE TEST PORT
6 - FUEL INJECTORS (10)

(10) Gently rock and pull the **left** fuel rail until the fuel injectors just start to clear the intake manifold. Gently rock and pull the **right** fuel rail until the fuel injectors just start to clear the intake manifold. Repeat this procedure (left/right) until all fuel injectors have cleared the intake manifold.

(11) Remove fuel rail (with injectors attached) from engine.

(12) Remove the clip(s) retaining the injector(s) to fuel rail (Fig. 27) or (Fig. 28).

INSTALLATION

INSTALLATION - 5.9L

(1) Apply a small amount of engine oil to each fuel injector o-ring. This will help in fuel rail installation.

(2) Install injector(s) and injector clip(s) to fuel rail.

(3) Position the fuel rail/fuel injector assembly to the injector openings on the intake manifold.

(4) Guide each injector into the intake manifold. Be careful not to tear the injector o-ring.

FUEL RAIL (Continued)

(5) Push the **right** fuel rail down until fuel injectors have bottomed on injector shoulder. Push the **left** fuel rail down until fuel injectors have bottomed on injector shoulder.

(6) Install fuel rail mounting bolts.

(7) Connect electrical connector to intake manifold air temperature sensor.

(8) Connect electrical connectors at all fuel injectors. To install connector, refer to (Fig. 26). Push connector onto injector (1) and then push and lock red colored slider (2). Verify connector is locked to injector by lightly tugging on connector.

(9) Install the A/C support bracket (if equipped).

(10) Install throttle body to intake manifold. Refer to Throttle Body installation in this section of the group.

(11) Install fuel tube (line) at side of fuel rail. Refer to Quick-Connect Fittings for procedures.

(12) Install air cleaner.

(13) Connect battery cable to battery.

(14) Start engine and check for leaks.

INSTALLATION - 8.0L

(1) Apply a small amount of engine oil to each fuel injector o-ring. This will help in fuel rail installation.

(2) Install injector(s) and injector clip(s) to fuel rail.

NOTE: The fuel injector electrical connectors on all 10 injectors should be facing to the right (passenger) side of the vehicle (Fig. 31).

(3) Position the fuel rail/fuel injector assembly to the injector openings on the intake manifold.

(4) Guide each injector into the intake manifold. Be careful not to tear the injector o-ring.

(5) Push the **right** fuel rail down until fuel injectors have bottomed on injector shoulder. Push the **left** fuel rail down until fuel injectors have bottomed on injector shoulder.

(6) Install the six fuel rail mounting bolts into the lower half of intake manifold. Tighten bolts to 15 N·m (136 in. lbs.) torque.

(7) Connect electrical connectors at all fuel injectors. To install connector, refer to (Fig. 30). Push connector onto injector (1) and then push and lock red colored slider (2). Verify connector is locked to injector by lightly tugging on connector. The injector wiring harness is numerically tagged.

(8) Install upper half of intake manifold. Refer to Engines for procedures.

(9) Connect main fuel line at fuel rail. Refer to Quick-Connect Fittings for procedures.

(10) Install ignition coil pack and bracket assembly at intake manifold and right engine valve cover (four bolts).

(11) Install throttle body to intake manifold. Refer to Throttle Body removal in this group.

(12) Install throttle body linkage to throttle body.

(13) Install air cleaner tube and housing.

(14) Install negative battery cable at battery.

(15) Start engine and check for leaks.

FUEL TANK

DESCRIPTION

The fuel tank is constructed of a plastic material. Its main functions are for fuel storage and for placement of the fuel pump module.

OPERATION

All models pass a full 360 degree rollover test without fuel leakage. To accomplish this, fuel and vapor flow controls are required for all fuel tank connections.

A fuel tank check valve(s) is mounted into the top of the fuel tank (or pump module). Refer to Emission Control System for fuel tank check valve information.

An evaporation control system is connected to the rollover valve(s) to reduce emissions of fuel vapors into the atmosphere. When fuel evaporates from the fuel tank, vapors pass through vent hoses or tubes to a charcoal canister where they are temporarily held. When the engine is running, the vapors are drawn into the intake manifold. Certain models are also equipped with a self-diagnosing system using a Leak Detection Pump (LDP). Refer to Emission Control System for additional information.

REMOVAL

WARNING: GASOLINE POWERED ENGINES: THE FUEL SYSTEM IS UNDER A CONSTANT PRESSURE EVEN WITH THE ENGINE OFF. BEFORE SERVICING THE FUEL TANK, FUEL SYSTEM PRESSURE MUST BE RELEASED. REFER TO THE FUEL SYSTEM PRESSURE RELEASE PROCEDURE BEFORE SERVICING THE FUEL TANK.

Two different procedures may be used to drain fuel tank (lowering tank or using DRB scan tool). When equipped with a diesel engine, the DRB scan tool cannot be used (no electric fuel pump).

The quickest draining procedure involves lowering the fuel tank.

Gasoline Powered Engines: As an alternative procedure, the electric fuel pump may be activated allowing tank to be drained at fuel rail connection. Refer to DRB scan tool for fuel pump activation procedures. Before disconnecting fuel line at fuel rail, release fuel pressure. Refer to the Fuel System Pressure Release Procedure in this group for procedures.

FUEL TANK (Continued)

Attach end of special test hose tool number 6541, 6539, 6631 or 6923 at fuel rail disconnection (tool number will depend on model and/or engine application). Position opposite end of this hose tool to an approved gasoline draining station. Activate fuel pump and drain tank until empty.

If electric fuel pump is not operating, tank must be lowered for fuel draining. Refer to following procedures.

(1) Remove fuel tank filler tube cap.

(2) Perform Fuel System Pressure Release procedure as described in this group.

(3) Gasoline Engines: Disconnect negative battery cable at battery. Diesel Engines: Disconnect both negative battery cables at both batteries.

(4) Raise vehicle on hoist.

(5) Certain models are equipped with a separate grounding wire (strap) connecting the fuel fill tube assembly to the body. Disconnect wire by removing screw.

(6) Open fuel fill door and remove screws mounting fuel filler tube assembly to body. Do not disconnect rubber fuel fill or vent hoses from tank at this time.

(7) Place a transmission jack under center of fuel tank. Apply a slight amount of pressure to fuel tank with transmission jack.

(8) Remove fuel tank mounting strap nuts from mounting strap studs (Fig. 32). If equipped, remove fuel tank shield bolts.

(9) Lower fuel tank only enough to allow access to top of tank. The 2 tank fittings (where rubber fuel fill and vent hose connections are made) must be positioned above tank level. Rotate tank slightly to allow these fittings to be above tank level.

WARNING: WRAP SHOP TOWELS AROUND HOSES TO CATCH ANY GASOLINE SPILLAGE.

(10) While working over left rear tire/wheel, disconnect rubber fuel vent hose at fuel tank (Fig. 32) (vent hose is the smallest of 2 hoses). Position fuel siphoning/drain hose into this fitting at tank. Drain fuel into an approved portable holding tank or a properly labeled gasoline (or diesel fuel) safety container.

(11) Disconnect rubber fuel fill hose at fuel tank (Fig. 32).

(12) **Gas Powered Engines:**

(a) While working over left rear tire/wheel, disconnect wiring harness connector from electrical connector at top of fuel pump module (Fig. 33) or (Fig. 34).

(b) If equipped with 26 or 34 gallon fuel tank, two EVAP lines are connected to the fuel tank check valves. Disconnect EVAP line from check valve at top of module (Fig. 33). Disconnect other EVAP line from check valve near rear of tank (Fig. 33).

(c) If equipped with 35 gallon fuel tank, two EVAP lines are connected to the fuel tank check valves. Disconnect EVAP lines from check valves at top-front and top-rear of fuel tank (Fig. 35).

(d) Disconnect fuel supply line at fuel filter/fuel pressure regulator supply fitting (Fig. 33) or (Fig. 34). Refer to Quick-Connect Fittings for procedures.

(13) **Diesel Powered Engines:**

(a) While working over left rear tire/wheel, disconnect wiring harness connector from electrical connector at top of fuel tank module (Fig. 36).

(b) Disconnect fuel supply and fuel return lines at the fuel tank module fittings (Fig. 36). Refer to Quick-Connect Fittings for procedures.

(14) Gasoline Engines: If fuel pump module removal is necessary, refer to Fuel Pump Module Removal/Installation in this group. Diesel Engines: If fuel tank module removal is necessary, refer to Fuel Tank Module Removal/Installation in this group.

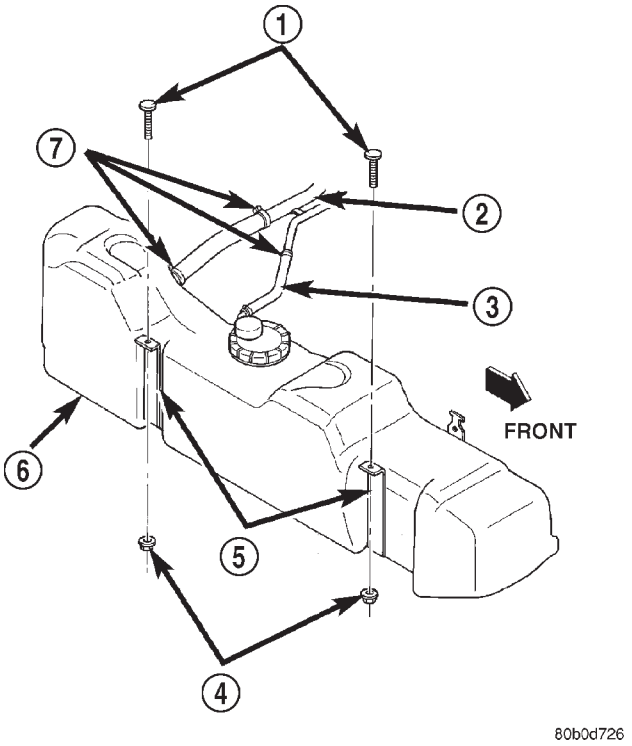

Fig. 32 Fuel Tank Mounting—Typical

1 - STRAP MOUNTING STUDS (AT FRAME)
2 - FUEL FILL HOSE
3 - FUEL VENT HOSE
4 - STRAP MOUNTING NUTS (2)
5 - FUEL TANK STRAPS (2)
6 - FUEL TANK
7 - CLAMPS

FUEL TANK (Continued)

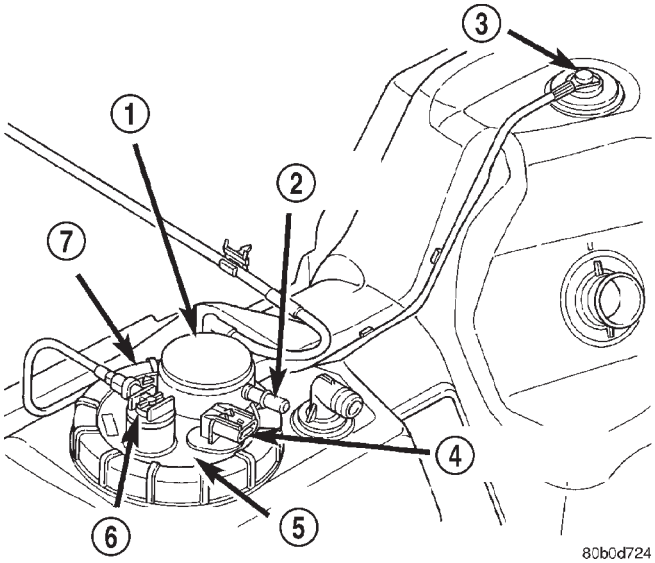

Fig. 33 Fuel Pump Module—Gas Engine With 26 or 34 Gallon Tank

1 - FUEL FILTER/PRESSURE REGULATOR
2 - FUEL SUPPLY FITTING
3 - REAR FUEL TANK CHECK VALVE
4 - ELECTRICAL CONNECTOR
5 - FUEL PUMP MODULE
6 - FRONT FUEL TANK CHECK VALVE
7 - LOCKNUT

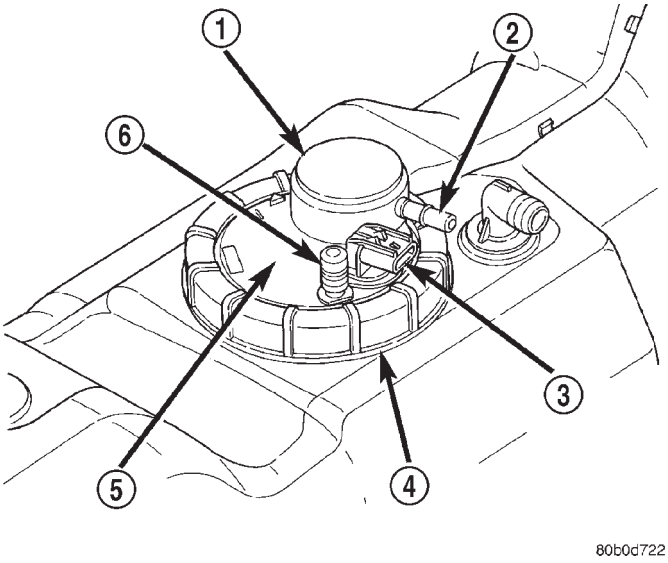

Fig. 34 Fuel Pump Module—Gas Engine With 35 Gallon Tank

1 - FUEL FILTER/PRESSURE REGULATOR
2 - FUEL SUPPLY FITTING
3 - ELECTRICAL CONNECTOR
4 - LOCKNUT
5 - FUEL PUMP MODULE
6 - AUXILIARY CAPPED FITTING

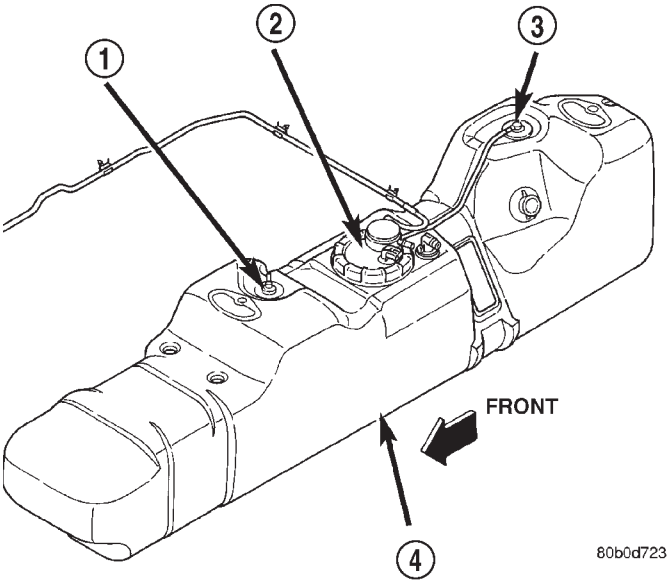

Fig. 35 Check Valve Locations—Gas Engine With 35 Gallon Tank

1 - FRONT FUEL TANK CHECK VALVE
2 - FUEL PUMP MODULE
3 - REAR FUEL TANK CHECK VALVE
4 - FUEL TANK

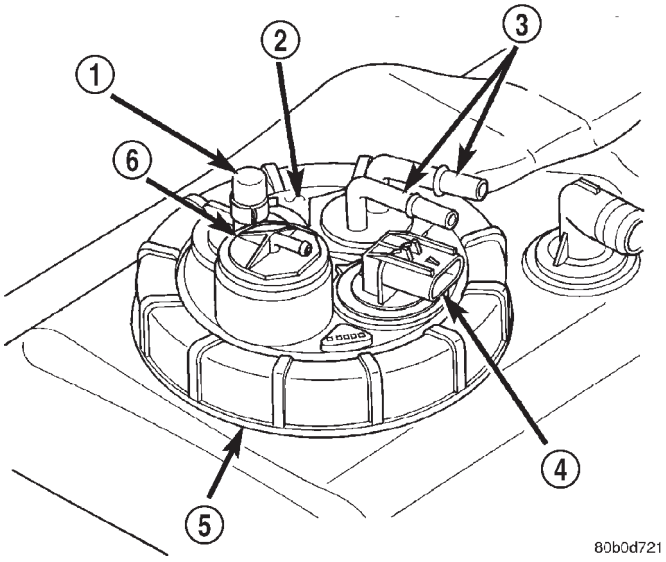

Fig. 36 Fuel Tank

1 - AUXILIARY CAPPED FITTING
2 - FUEL PUMP MODULE
3 - FUEL SUPPLY/RETURN FITTINGS
4 - ELECTRICAL CONNECTOR
5 - LOCKNUT
6 - ROLLOVER VALVE

INSTALLATION

(1) Gasoline Engines: If fuel pump module is being installed, refer to Fuel Pump Module Removal/Installation in this group. Diesel Engines: If fuel tank mod-

FUEL TANK (Continued)

ule is being installed, refer to Fuel Tank Module Removal/Installation in this group.

(2) Place fuel tank on top of transmission jack.

(3) Install rubber fill and vent lines to tank. Tighten hose clamps to 2.3 N·m (20 in. lbs.) torque.

(4) Raise tank into position while guiding fill and vent hoses to body. Raise tank only enough to allow access to top of tank.

(5) **Gas Powered Engines:**

(a) Connect electrical connector to fuel pump module.

(b) Connect EVAP hoses at rollover valves.

(c) Connect fuel supply line at fuel filter/fuel pressure regulator. Refer to Quick-Connect Fittings for procedures.

(6) **Diesel Powered Engines:**

(a) Connect electrical connector to fuel tank module.

(b) Connect fuel supply and fuel return lines to fuel tank module fittings. Refer to Quick-Connect Fittings in this group.

(7) Connect two mounting straps and mounting strap nuts.

(8) Tighten strap nuts to 41 N·m (30 ft. lbs.) torque. Do not over tighten retaining strap nuts.

(9) Remove transmission jack.

(10) Connect fuel filler tube assembly to body.

(11) If equipped, connect grounding wire (strap) and screw.

(12) Refill fuel tank and inspect all hoses and lines for leaks.

(13) Connect negative battery cable(s) to battery(s).

FUEL TANK CHECK VALVE

DESCRIPTION

Diesel Powered Engine: One fuel tank check valve is used. The check valve is located on the top of the fuel tank module (Fig. 37). The valve may be serviced separately.

Gasoline Powered Engines: If equipped with a 26 or 34 gallon fuel tank, two check valves are used. One of the valves is permanently mounted to the top of fuel tank (Fig. 38). If replacement of this particular valve is necessary, the fuel tank must be replaced. The other check valve is located on the top of the fuel pump module (Fig. 38). This valve may be serviced separately. If replacement is necessary, refer to the Removal/Installation section of this group.

If equipped with a 35 gallon fuel tank, two check valves are used. Both valves are permanently mounted to the top of fuel tank (Fig. 39). If replacement is necessary, the fuel tank must be replaced.

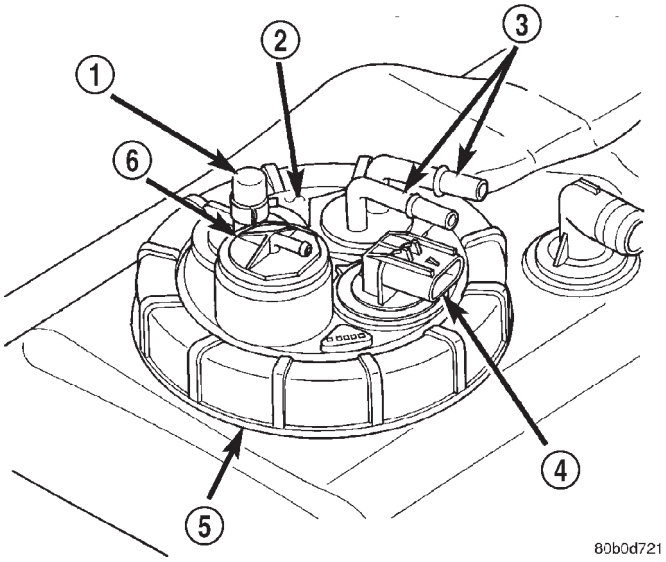

Fig. 37 Check Valve Location—Diesel Powered

1 - AUXILIARY CAPPED FITTING
2 - FUEL PUMP MODULE
3 - FUEL SUPPLY/RETURN FITTINGS
4 - ELECTRICAL CONNECTOR
5 - LOCKNUT
6 - FUEL TANK CHECK VALVE

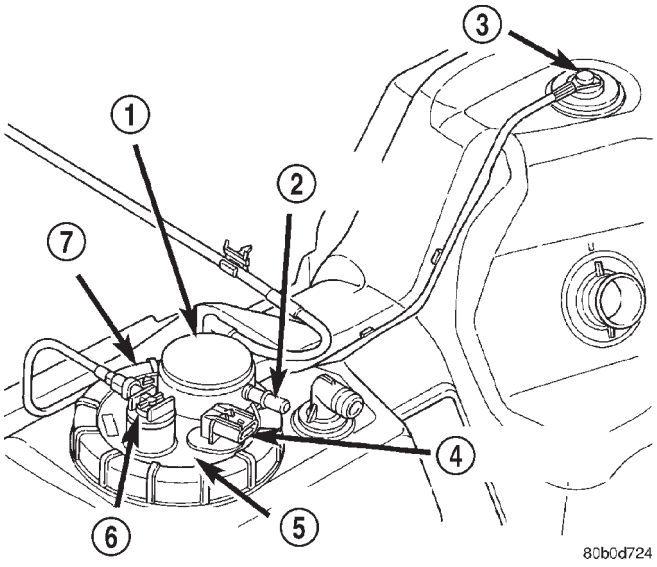

Fig. 38 Check Valve Locations—Gas

1 - FUEL FILTER/PRESSURE REGULATOR
2 - FUEL SUPPLY FITTING
3 - REAR FUEL TANK CHECK VALVE
4 - ELECTRICAL CONNECTOR
5 - FUEL PUMP MODULE
6 - FRONT FUEL TANK CHECK VALVE
7 - LOCKNUT

FUEL TANK CHECK VALVE (Continued)

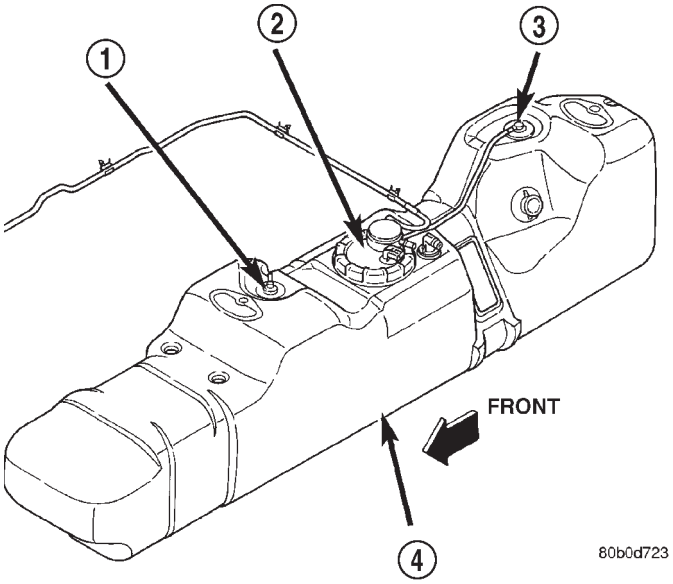

Fig. 39 Check Valve Locations—Gas Powered with 35 Gallon Tank

1 - FRONT FUEL TANK CHECK VALVE
2 - FUEL PUMP MODULE
3 - REAR FUEL TANK CHECK VALVE
4 - FUEL TANK

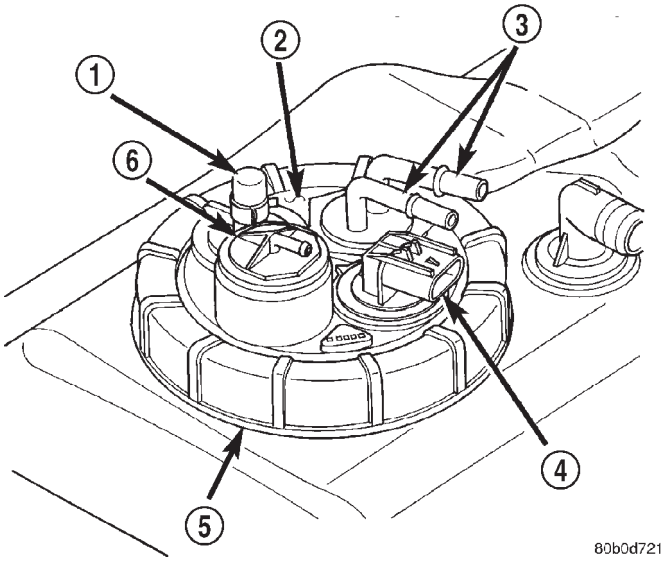

Fig. 40 Check Valve Location - Diesel Powered

1 - AUXILIARY CAPPED FITTING
2 - FUEL PUMP MODULE
3 - FUEL SUPPLY/RETURN FITTINGS
4 - ELECTRICAL CONNECTOR
5 - LOCKNUT
6 - FUEL TANK CHECK VALVE

REMOVAL

WARNING: THE FUEL SYSTEM IS UNDER A CONSTANT PRESSURE (EVEN WITH THE ENGINE OFF). BEFORE SERVICING THE CHECK VALVE, FUEL SYSTEM PRESSURE MUST BE RELEASED (GASOLINE POWERED ENGINES ONLY). REFER TO THE FUEL PRESSURE RELEASE PROCEDURE IN GROUP 14, FUEL SYSTEM.

(1) **Diesel Powered Engine:** One checkr valve is used. The valve is located on top of fuel tank module (Fig. 40) and may be serviced separately.

(a) Disconnect both negative battery cables at both batteries.

(b) Remove fuel filler cap and drain fuel tank.

(c) Remove fuel tank. Refer to Fuel Tank Removal/Installation in Fuel System.

(d) The check valve is seated into a rubber grommet. Remove valve by prying one side upward and then roll valve out of grommet.

(e) Discard old grommet.

(2) **Gasoline Powered Engines:** If equipped with a 26 or 34 gallon fuel tank, two check valves are used. One of the valves is permanently mounted to top of fuel tank (Fig. 41). If replacement of this particular valve is necessary, fuel tank must be replaced. Refer to Fuel Tank Removal/Installation in Group 14, Fuel System. The other check valve is located on top of fuel pump module (Fig. 41). This valve may be serviced separately. Refer to following steps for procedures.

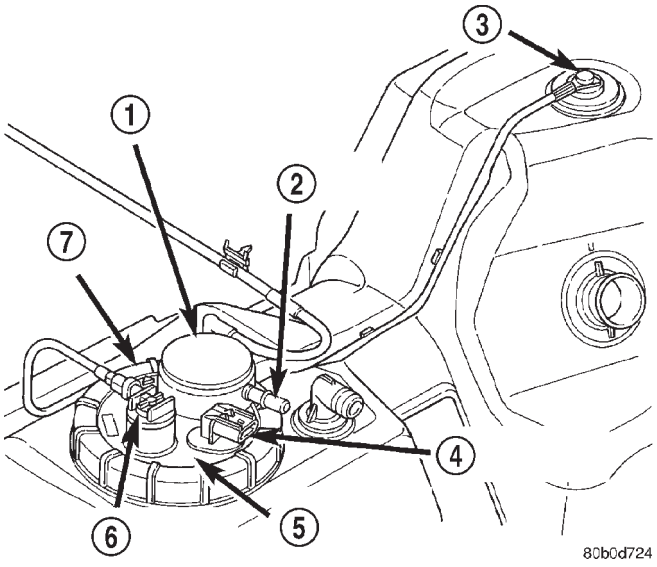

Fig. 41 Check Valve Locations - Gas Powered - 26/34 Gallon Tank

1 - FUEL FILTER/PRESSURE REGULATOR
2 - FUEL SUPPLY FITTING
3 - REAR FUEL TANK CHECK VALVE
4 - ELECTRICAL CONNECTOR
5 - FUEL PUMP MODULE
6 - FRONT FUEL TANK CHECK VALVE
7 - LOCKNUT

FUEL TANK CHECK VALVE (Continued)

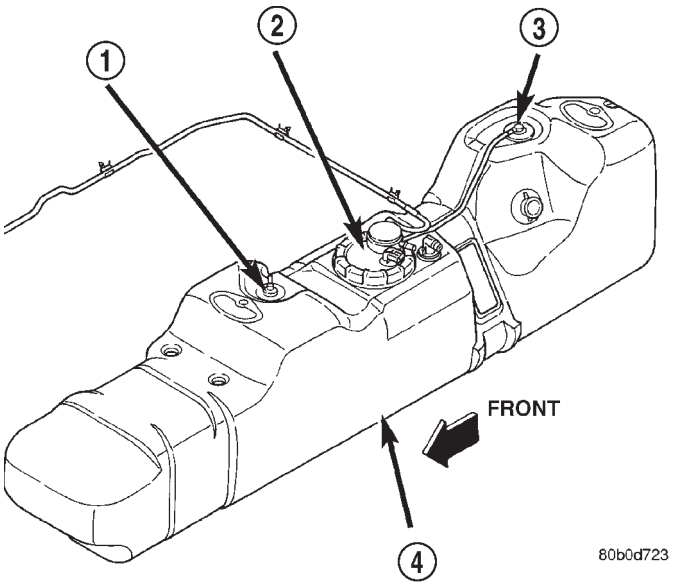

Fig. 42 Check Valve Locations - Gas Powered with 35 Gallon Tank

1 - FRONT FUEL TANK CHECK VALVE
2 - FUEL PUMP MODULE
3 - REAR FUEL TANK CHECK VALVE
4 - FUEL TANK

If equipped with a 35 gallon fuel tank, two check valves are also used, but both valves are permanently mounted to top of fuel tank (Fig. 42). If replacement is necessary, fuel tank must be replaced. Refer to Fuel Tank Removal/Installation in Group 14, Fuel System.

(a) Disconnect negative battery cable at battery.
(b) Remove fuel filler cap and drain fuel tank.
(c) Remove fuel tank. Refer to Fuel Tank Removal/Installation in Fuel System.
(d) Disconnect tube (line) at valve.
(e) The check valve is seated into a rubber grommet. Remove valve by prying one side upward and then roll valve out of grommet.
(f) Discard old grommet.

INSTALLATION

(1) Install new grommet into fuel pump (or fuel tank) module.
(2) Using finger pressure only, press valve into place.
(3) Install fuel tank. Refer to Fuel Tank Installation.
(4) Fill fuel tank. Install fuel tank filler cap.
(5) Connect negative battery cable(s).
(6) Start vehicle and check for leaks.

INLET FILTER

REMOVAL

The fuel pump inlet filter (strainer) is located on the bottom of the fuel pump module (Fig. 43). The fuel pump module is located inside of fuel tank.

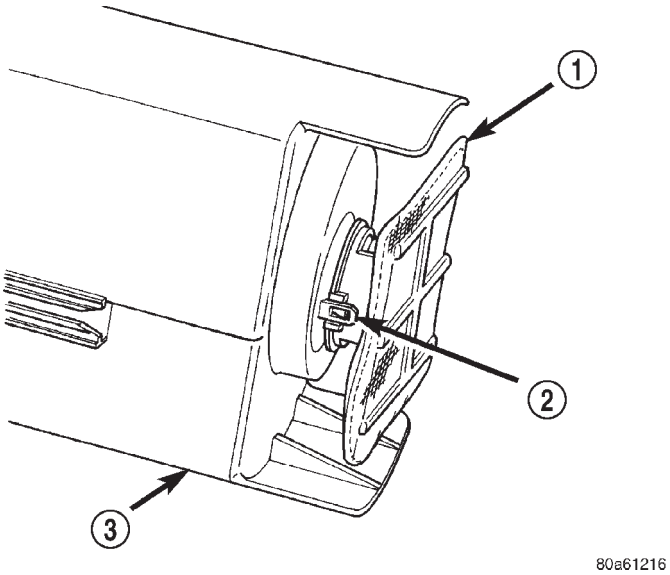

Fig. 43 Fuel Pump Inlet Filter

1 - FUEL PUMP INLET FILTER
2 - LOCK TABS (2)
3 - FUEL PUMP MODULE (BOTTOM)

(1) Remove fuel tank. Refer to Fuel Tank Removal/Installation.
(2) Remove fuel pump module. Refer to Fuel Pump Module Removal/Installation.
(3) Remove filter by carefully prying 2 lock tabs at bottom of module with 2 screwdrivers. Filter is snapped to module.
(4) Clean bottom of pump module.

INSTALLATION

The fuel pump inlet filter (strainer) is located on the bottom of the fuel pump module (Fig. 43) . The fuel pump module is located inside of fuel tank.

(1) Snap new filter to bottom of module. Be sure o-ring is in correct position.
(2) Install fuel pump module. Refer to Fuel Pump Module Removal/Installation.
(3) Install fuel tank. Refer to Fuel Tank Removal/Installation.

QUICK CONNECT FITTING

DESCRIPTION

Different types of quick-connect fittings are used to attach various fuel system components, lines and tubes. These are: a single-tab type, a two-tab type or a plastic retainer ring type. Some are equipped with safety latch clips. Some may require the use of a special tool for disconnection and removal. Refer to Quick-Connect Fittings Removal/Installation for more information.

CAUTION: The interior components (o-rings, clips) of quick-connect fittings are not serviced separately, but new plastic spacers are available for some types. If service parts are not available, do not attempt to repair the damaged fitting or fuel line (tube). If repair is necessary, replace the complete fuel line (tube) assembly.

STANDARD PROCEDURE - QUICK-CONNECT FITTINGS

Also refer to Fuel Tubes/Lines/Hoses and Clamps.

Different types of quick-connect fittings are used to attach various fuel system components, lines and tubes. These are: a single-tab type, a two-tab type or a plastic retainer ring type. Safety latch clips are used on certain components/lines. Certain fittings may require use of a special tool for disconnection.

DISCONNECTING

WARNING: THE FUEL SYSTEM IS UNDER A CONSTANT PRESSURE (EVEN WITH ENGINE OFF). BEFORE SERVICING ANY FUEL SYSTEM HOSE, FITTING OR LINE, FUEL SYSTEM PRESSURE MUST BE RELEASED. REFER TO FUEL SYSTEM PRESSURE RELEASE PROCEDURE.

CAUTION: The interior components (o-rings, spacers) of some types of quick-connect fitting are not serviced separately. If service parts are not available, do not attempt to repair a damaged fitting or fuel line. If repair is necessary, replace complete fuel line assembly.

(1) Perform fuel pressure release procedure. Refer to Fuel Pressure Release Procedure.

(2) Disconnect negative battery cable from battery.

(3) Clean fitting of any foreign material before disassembly.

(4) **2–Button Type Fitting:** This type of fitting is equipped with a push-button located on each side of quick-connect fitting (Fig. 44). Press on both buttons simultaneously for removal.

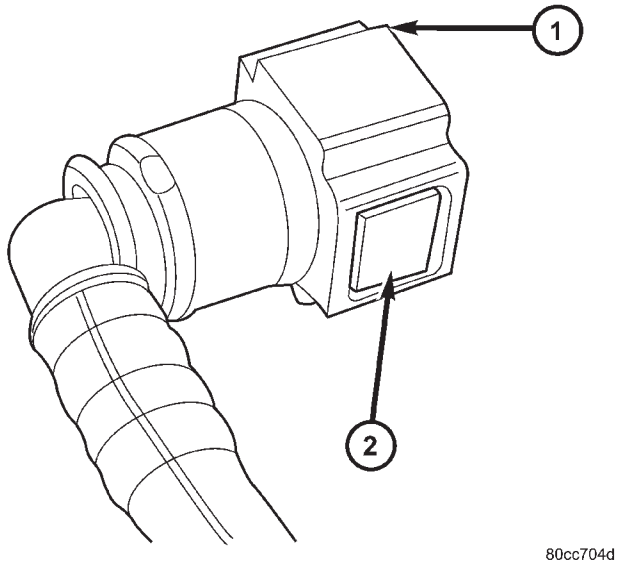

Fig. 44 2-BUTTON TYPE FITTING

1 - QUICK-CONNECT FITTING
2 - PUSH-BUTTONS (2)

(5) **Single-Tab Type Fitting:** This type of fitting is equipped with a single pull tab (Fig. 45). The tab is removable. After tab is removed, quick-connect fitting can be separated from fuel system component.

(a) Press release tab on side of fitting to release pull tab (Fig. 46). **If release tab is not pressed prior to releasing pull tab, pull tab will be damaged.**

(b) While pressing release tab on side of fitting, use screwdriver to pry up pull tab (Fig. 46).

(c) Raise pull tab until it separates from quick-connect fitting (Fig. 47).

(6) **Two-Tab Type Fitting:** This type of fitting is equipped with tabs located on both sides of fitting (Fig. 48). The tabs are supplied for disconnecting quick-connect fitting from component being serviced.

QUICK CONNECT FITTING (Continued)

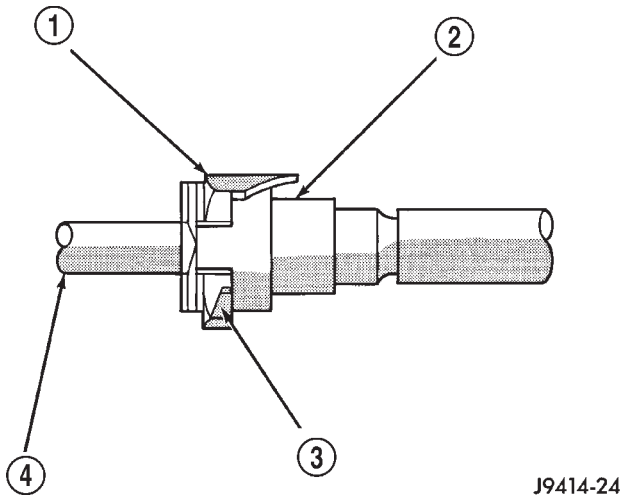

Fig. 45 SINGLE-TAB TYPE FITTING

1 - PULL TAB
2 - QUICK-CONNECT FITTING
3 - PRESS HERE TO REMOVE PULL TAB
4 - INSERTED TUBE END

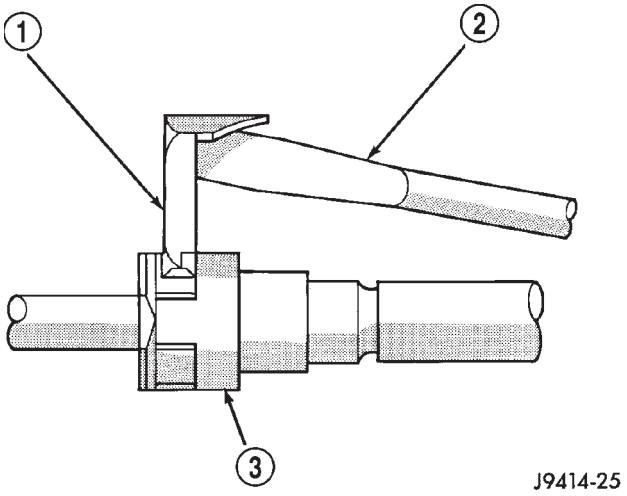

Fig. 46 DISCONNECTING SINGLE-TAB TYPE FITTING

1 - PULL TAB
2 - SCREWDRIVER
3 - QUICK-CONNECT FITTING

(a) To disconnect quick-connect fitting, squeeze plastic retainer tabs (Fig. 48) against sides of quick-connect fitting with your fingers. Tool use is not required for removal and may damage plastic retainer.

(b) Pull fitting from fuel system component being serviced.

(c) The plastic retainer will remain on component being serviced after fitting is disconnected. The o-rings and spacer will remain in quick-connect fitting connector body.

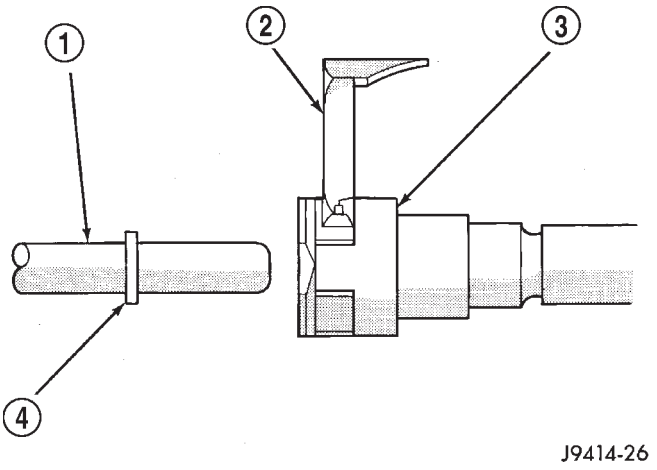

Fig. 47 REMOVING PULL TAB

1 - FUEL TUBE OR FUEL SYSTEM COMPONENT
2 - PULL TAB
3 - QUICK-CONNECT FITTING
4 - FUEL TUBE STOP

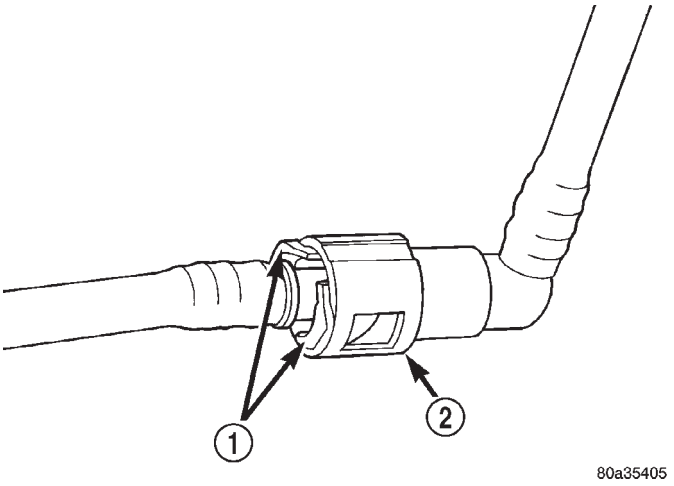

Fig. 48 TYPICAL 2–TAB TYPE FITTING

1 - TAB(S)
2 - QUICK-CONNECT FITTING

(7) **Plastic Retainer Ring Type Fitting:** This type of fitting can be identified by the use of a full-round plastic retainer ring (Fig. 49) usually black in color.

(a) To release fuel system component from quick-connect fitting, firmly push fitting towards component being serviced while firmly pushing plastic retainer ring into fitting (Fig. 49). With plastic ring depressed, pull fitting from component. **The plastic retainer ring must be pressed squarely into fitting body. If this retainer is cocked during removal, it may be difficult to disconnect fitting. Use an open-end wrench on shoulder of plastic retainer ring to aid in disconnection.**

QUICK CONNECT FITTING (Continued)

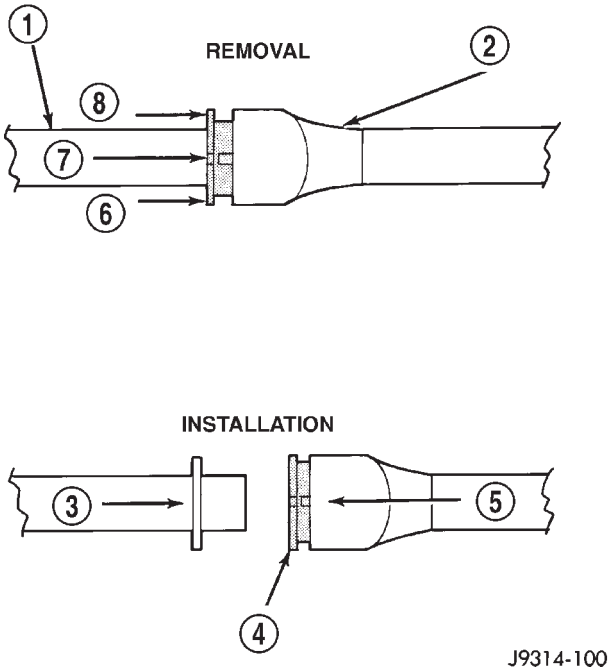

Fig. 49 PLASTIC RETAINER RING TYPE FITTING

1 - FUEL TUBE
2 - QUICK CONNECT FITTING
3 - PUSH
4 - PLASTIC RETAINER
5 - PUSH
6 - PUSH
7 - PUSH
8 - PUSH

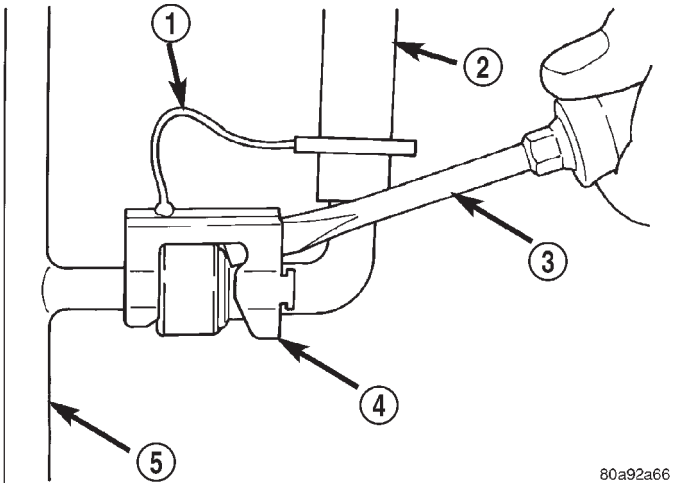

Fig. 50 LATCH CLIP-TYPE 1

1 - TETHER STRAP
2 - FUEL LINE
3 - SCREWDRIVER
4 - LATCH CLIP
5 - FUEL RAIL

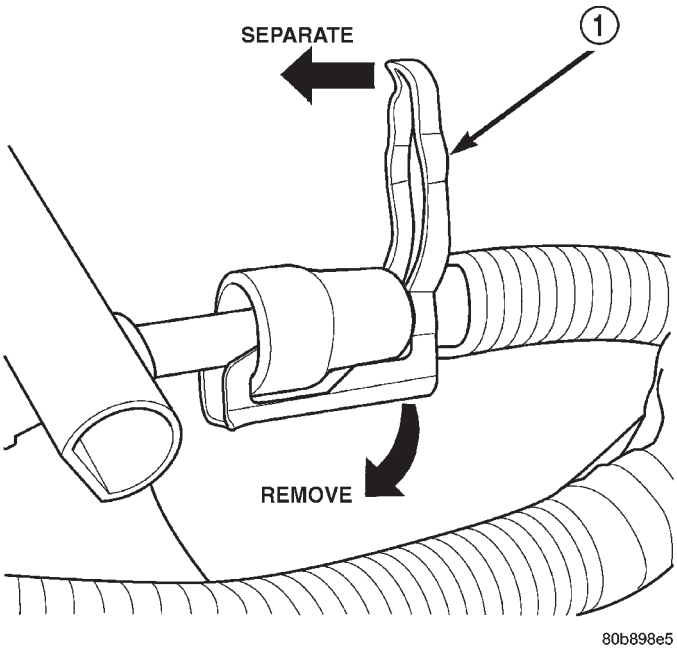

Fig. 51 LATCH CLIP-TYPE 2

1 - LATCH CLIP

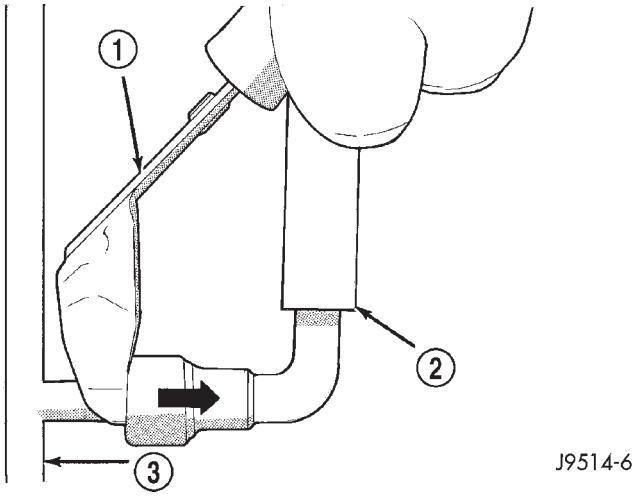

Fig. 52 FUEL LINE DISCONNECTION USING SPECIAL TOOL

1 - SPECIAL FUEL LINE TOOL
2 - FUEL LINE
3 - FUEL RAIL

(b) After disconnection, plastic retainer ring will remain with quick-connect fitting connector body.

(c) Inspect fitting connector body, plastic retainer ring and fuel system component for damage. Replace as necessary.

QUICK CONNECT FITTING (Continued)

(8) **Latch Clips:** Depending on vehicle model and engine, 2 different types of safety latch clips are used (Fig. 50) or (Fig. 51). Type-1 is tethered to fuel line and type-2 is not. A special tool will be necessary to disconnect fuel line after latch clip is removed. The latch clip may be used on certain fuel line/fuel rail connection, or to join fuel lines together.

(a) Type 1: Pry up on latch clip with a screwdriver (Fig. 50).

(b) Type 2: Separate and unlatch 2 small arms on end of clip (Fig. 51) and swing away from fuel line.

(c) Slide latch clip toward fuel rail while lifting with screwdriver.

(d) Insert special fuel line removal tool (Snap-On number FIH 9055-1 or equivalent) into fuel line (Fig. 52). Use tool to release locking fingers in end of line.

(e) With special tool still inserted, pull fuel line from fuel rail.

(f) After disconnection, locking fingers will remain within quick-connect fitting at end of fuel line.

(9) Disconnect quick-connect fitting from fuel system component being serviced.

CONNECTING

(1) Inspect quick-connect fitting body and fuel system component for damage. Replace as necessary.

(2) Prior to connecting quick-connect fitting to component being serviced, check condition of fitting and component. Clean parts with a lint-free cloth. Lubricate with clean engine oil.

(3) Insert quick-connect fitting into fuel tube or fuel system component until built-on stop on fuel tube or component rests against back of fitting.

(4) Continue pushing until a click is felt.

(5) Single-tab type fitting: Push new tab down until it locks into place in quick-connect fitting.

(6) Verify a locked condition by firmly pulling on fuel tube and fitting (15-30 lbs.).

(7) Latch Clip Equipped: Install latch clip (snaps into position). **If latch clip will not fit, this indicates fuel line is not properly installed to fuel rail (or other fuel line). Recheck fuel line connection.**

(8) Connect negative cable to battery.

(9) Start engine and check for leaks.

FUEL INJECTION - GASOLINE

TABLE OF CONTENTS

page

FUEL INJECTION - GASOLINE
DIAGNOSIS AND TESTING
VISUAL INSPECTION—5.9L ENGINES 29
VISUAL INSPECTION—8.0L ENGINE 32
SPECIFICATIONS - TORQUE - GAS FUEL INJECTION 35
SPECIAL TOOLS
FUEL SYSTEM 35
ACCELERATOR PEDAL
REMOVAL 36
INSTALLATION 37
CRANKSHAFT POSITION SENSOR
DESCRIPTION
DESCRIPTION - 5.9L 37
DESCRIPTION - 8.0L 37
OPERATION
OPERATION - 5.9L 37
OPERATION - 8.0L 38
REMOVAL
REMOVAL - 5.9L 38
REMOVAL - 8.0L 39
INSTALLATION
INSTALLATION - 5.9L 39
INSTALLATION - 8.0L 39
FUEL PUMP RELAY
DESCRIPTION 40
OPERATION 40
REMOVAL 40
INSTALLATION 40
IDLE AIR CONTROL MOTOR
DESCRIPTION 40
OPERATION 40
REMOVAL
REMOVAL - 5.9L 41
REMOVAL - 8.0L 41
INSTALLATION
INSTALLATION - 5.9L 42
INSTALLATION - 8.0L 42
INTAKE AIR TEMPERATURE SENSOR
DESCRIPTION - 5.9L/8.0L 42
OPERATION - 5.9L/8.0L 42
REMOVAL
REMOVAL - 5.9L 42
REMOVAL - 8.0L 43
INSTALLATION
INSTALLATION - 5.9L 43
INSTALLATION - 8.0L 43

page

MANIFOLD ABSOLUTE PRESSURE SENSOR
DESCRIPTION - 5.9L/8.0L 43
OPERATION - 5.9L/8.0L 43
REMOVAL
REMOVAL - 5.9L 44
REMOVAL - 8.0L 44
INSTALLATION
INSTALLATION - 5.9L 45
INSTALLATION - 8.0L 45
O2 SENSOR
DESCRIPTION 45
OPERATION 45
REMOVAL 46
INSTALLATION 47
PTO SWITCH
DESCRIPTION 47
OPERATION 47
THROTTLE BODY
DESCRIPTION 47
OPERATION 47
REMOVAL
REMOVAL - 5.9L 47
REMOVAL - 8.0L 47
INSTALLATION
INSTALLATION - 5.9L 48
INSTALLATION - 8.0L 49
THROTTLE CONTROL CABLE
REMOVAL 49
INSTALLATION 50
THROTTLE POSITION SENSOR
DESCRIPTION 50
OPERATION 50
REMOVAL
REMOVAL - 5.9L 50
REMOVAL - 8.0L 50
INSTALLATION
INSTALLATION - 5.9L 51
INSTALLATION - 8.0L 51
FUEL INJECTOR
DESCRIPTION 52
OPERATION
OPERATION 52
OPERATION - PCM OUTPUT 52
DIAGNOSIS AND TESTING - FUEL INJECTOR . 53
REMOVAL 53
INSTALLATION 53

FUEL INJECTION - GASOLINE

DIAGNOSIS AND TESTING

VISUAL INSPECTION—5.9L ENGINES

A visual inspection for loose, disconnected or incorrectly routed wires and hoses should be made. This should be done before attempting to diagnose or service the fuel injection system. A visual check will help spot these faults and save unnecessary test and diagnostic time. A thorough visual inspection will include the following checks:

(1) Verify that the three 32–way electrical connectors are fully inserted into the connector of the powertrain control module (PCM) (Fig. 1).

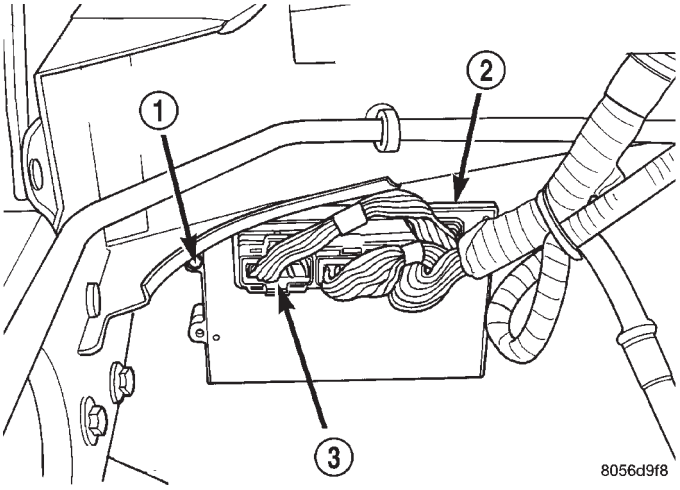

Fig. 1 Powertrain Control Module (PCM)

1 - PCM MOUNTING BOLTS (3)
2 - POWERTRAIN CONTROL MODULE (PCM)
3 - (3) 32–WAY CONNECTORS

(2) Inspect the battery cable connections. Be sure that they are clean and tight.

(3) Inspect fuel pump relay and air conditioning compressor clutch relay (if equipped). Inspect the ASD relay connections. Inspect starter motor relay connections. Inspect relays for signs of physical damage and corrosion. The relays are located in the Power Distribution Center (PDC) (Fig. 2). Refer to label on PDC cover for relay location.

(4) Inspect ignition coil connections. Verify that coil secondary cable is firmly connected to coil (Fig. 3).

(5) Verify that distributor cap is correctly attached to distributor. Be sure that spark plug cables are firmly connected to the distributor cap and the spark plugs are in their correct firing order. Be sure that coil cable is firmly connected to distributor cap and coil. Be sure that camshaft position sensor wire connector (at the distributor) is firmly connected to harness connector. Inspect spark plug condition. Refer to 8, Ignition. Connect vehicle to an oscilloscope and inspect spark events for fouled or damaged spark plugs or cables.

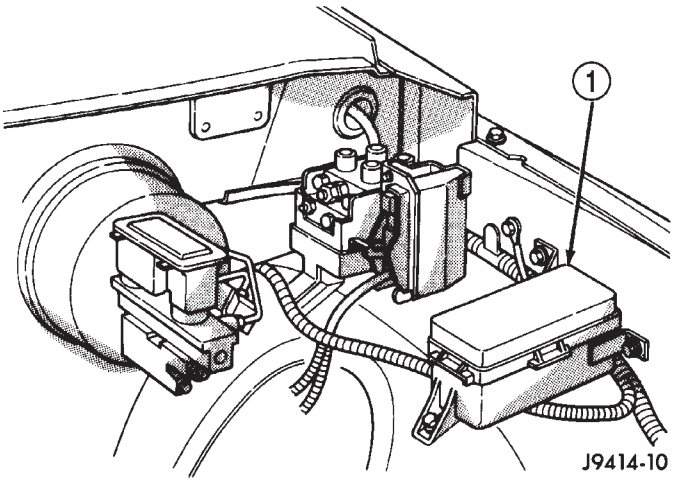

Fig. 2 Power Distribution Center (PDC)

1 - POWER DISTRIBUTION CENTER (PDC)

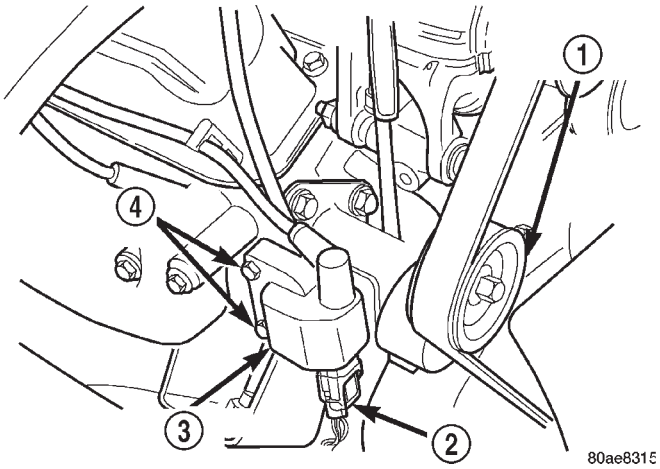

Fig. 3 Ignition Coil—5.9L Engines—Typical

1 - ACCESSORY DRIVE BELT TENSIONER
2 - COIL CONNECTOR
3 - IGNITION COIL
4 - COIL MOUNTING BOLTS

(6) Verify that generator output wire, generator connector and ground wire are firmly connected to the generator.

(7) Inspect the system body grounds for loose or dirty connections. Refer to 8, Wiring for ground locations.

(8) Verify positive crankcase ventilation (PCV) valve operation. Refer to 25, Emission Control System for additional information. Verify PCV valve hose is firmly connected to PCV valve and manifold (Fig. 4).

FUEL INJECTION - GASOLINE (Continued)

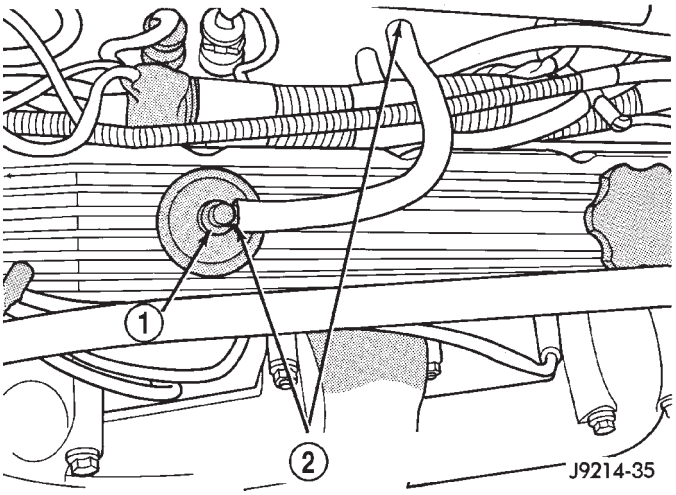

Fig. 4 PCV Valve

1 - PCV VALVE
2 - PCV VALVE HOSE CONNECTIONS

(9) Inspect fuel tube quick-connect fitting-to-fuel rail connections.

(10) Verify that hose connections to all ports of vacuum fittings on intake manifold are tight and not leaking.

(11) Inspect accelerator cable, transmission throttle cable (if equipped) and cruise control cable connections (if equipped). Check their connections to the throttle arm of throttle body for any binding or restrictions.

(12) If equipped with vacuum brake booster, verify that vacuum booster hose is firmly connected to fitting on intake manifold. Also check connection to brake vacuum booster.

(13) Inspect the air cleaner inlet and air cleaner element for dirt or restrictions.

(14) Inspect radiator grille area, radiator fins and air conditioning condenser for restrictions.

(15) Verify that the intake manifold air temperature sensor wire connector is firmly connected to harness connector (Fig. 5).

(16) Verify that MAP sensor electrical connector is firmly connected to MAP sensor (Fig. 6). Also verify that rubber L-shaped fitting from MAP sensor to the throttle body is firmly connected (Fig. 7).

(17) Verify that fuel injector wire harness connectors are firmly connected to injectors in the correct order. Each harness connector is numerically tagged with the injector number (INJ 1, INJ 2 etc.) of its corresponding fuel injector and cylinder number.

(18) Verify harness connectors are firmly connected to idle air control (IAC) motor, throttle position sensor (TPS) and manifold absolute pressure (MAP) sensor (Fig. 6).

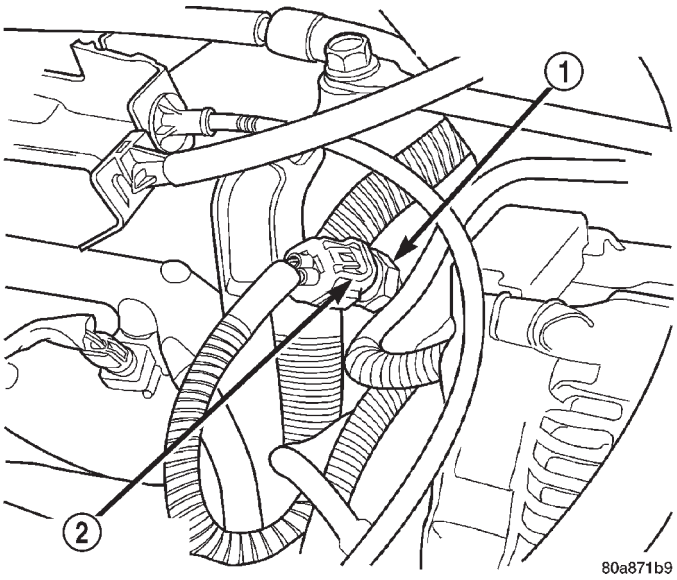

Fig. 5 Air Temperature

1 - INTAKE MANIFOLD AIR TEMPERATURE SENSOR
2 - ELECTRICAL CONNECTOR

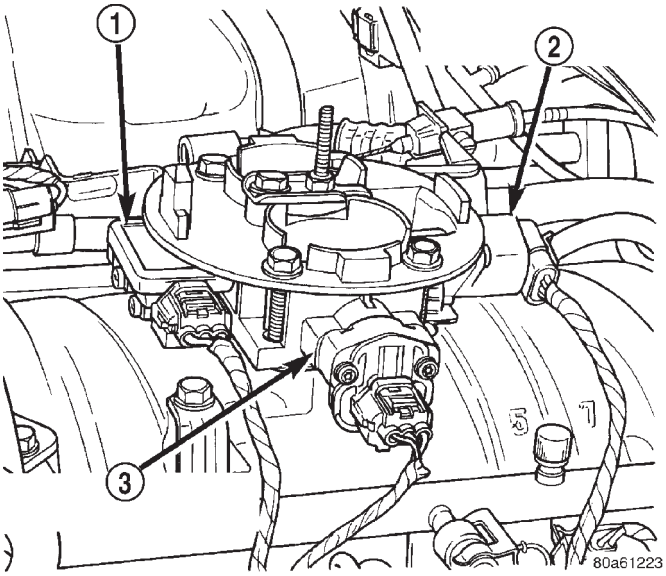

Fig. 6 Sensor and IAC Motor Location—Typical (V-8 Shown)

1 - MAP SENSOR
2 - IDLE AIR CONTROL MOTOR
3 - THROTTLE POSITION SENSOR

(19) Verify that wire harness connector is firmly connected to the engine coolant temperature sensor (Fig. 8).

(20) Raise and support the vehicle.

(21) Verify oxygen sensor wire connectors are firmly connected to the sensors. Inspect sensors and connectors for damage (Fig. 9), (Fig. 10) or (Fig. 11).

FUEL INJECTION - GASOLINE (Continued)

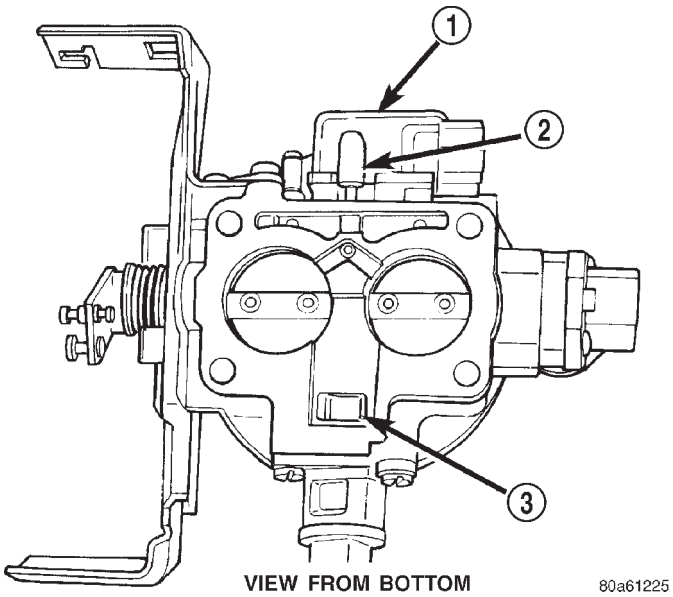

Fig. 7 Rubber L-Shaped Fitting—MAP Sensor-to-Throttle Body—5.9L Engines

1 - MAP SENSOR
2 - RUBBER FITTING
3 - IDLE AIR PASSAGE

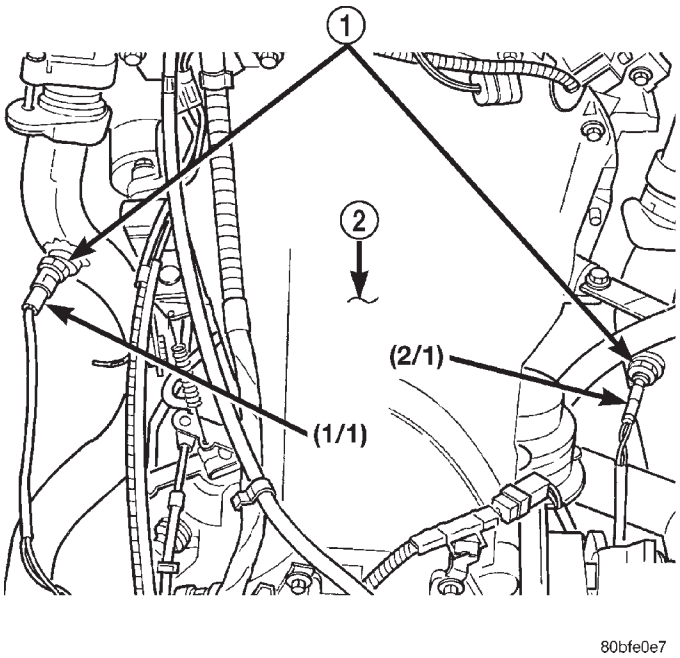

Fig. 9 Left/Right Oxygen Sensors—HDC Engines

1 - DUAL OXYGEN SENSORS
2 - TOP OF TRANSMISSION

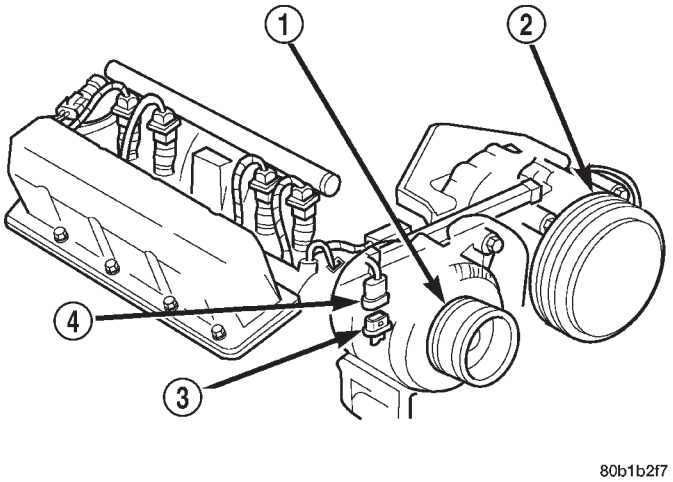

Fig. 8 Engine Coolant Temperature

1 - GENERATOR
2 - A/C COMPRESSOR
3 - ENGINE COOLANT TEMPERATURE SENSOR
4 - ELEC. CONN.

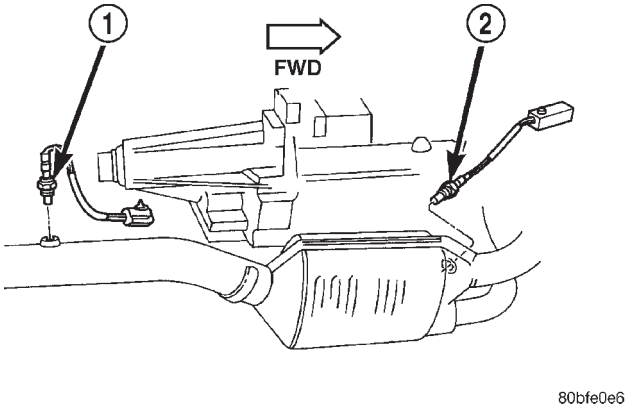

Fig. 10 Pre-Catalyst/Post-Catalyst Sensors

1 - POST CATALYST OXYGEN SENSOR (1/3)
2 - PRE-CATALYST OXYGEN SENSOR (1/2)

(22) Inspect for pinched or leaking fuel tubes. Inspect for pinched, cracked or leaking fuel hoses.

(23) Inspect for exhaust system restrictions such as pinched exhaust pipes, collapsed muffler or plugged catalytic convertor.

(24) If equipped with automatic transmission, verify that electrical harness is firmly connected to park/neutral switch. Refer to 21, Automatic Transmission.

(25) Verify electrical harness is firmly connected to rear wheel speed sensor. Verify rear wheel speed sensor is firmly attached to rear axle with proper air gap. Refer to 5, Brakes for information.

(26) If equipped with 4–wheel antilock brake system, verify electrical harness is firmly connected to each front wheel speed sensor. Verify both front wheel speed sensors are firmly attached. Refer to 5, Brakes for information.

(27) Verify that fuel pump/gauge sender unit wire connector is firmly connected to harness connector.

(28) Inspect fuel hoses at fuel pump/gauge sender unit for cracks or leaks.

FUEL INJECTION - GASOLINE (Continued)

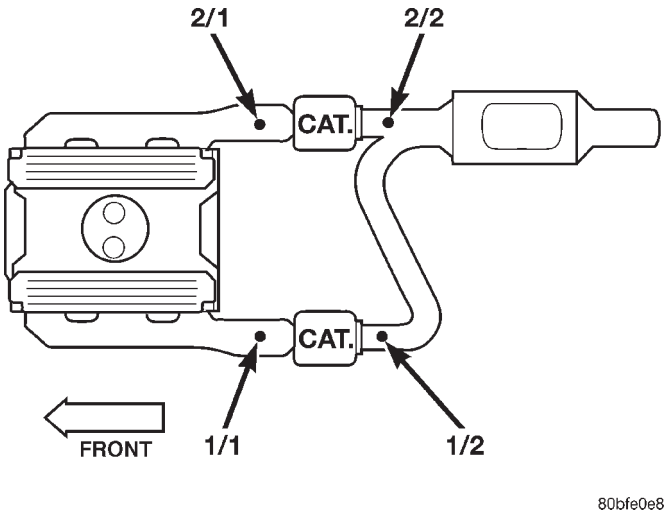

Fig. 11 Oxygen Sensors

(29) Inspect transmission torque convertor housing (automatic transmission) or clutch housing (manual transmission) for damage to timing ring on drive plate/flywheel.

(30) Verify that battery cable and solenoid feed wire connections to the starter solenoid are tight and clean. Inspect for chaffed wires or wires rubbing up against other components.

VISUAL INSPECTION—8.0L ENGINE

A visual inspection for loose, disconnected or incorrectly routed wires and hoses should be made. This should be done before attempting to diagnose or service the fuel injection system. A visual check will help spot these faults and save unnecessary test and diagnostic time. A thorough visual inspection will include the following checks:

(1) Verify that the three 32–way electrical connectors are fully inserted into the connector of the powertrain control module (PCM) (Fig. 12).

(2) Inspect the battery cable connections. Be sure that they are clean and tight.

(3) Inspect fuel pump relay and air conditioning compressor clutch relay (if equipped). Inspect the ASD relay connections. Inspect starter motor relay connections. Inspect relays for signs of physical damage and corrosion. The relays are located in the Power Distribution Center (PDC) (Fig. 13). Refer to label on PDC cover for relay location.

(4) Inspect ignition coil pack primary connections. Verify that secondary cables are firmly connected to coils (Fig. 14).

(5) Be sure that spark plug cables are firmly connected and the spark plugs are in their correct firing order. Be sure that camshaft position sensor wire connector is firmly connected to harness connector. Inspect spark plug condition. Refer to 8, Ignition.

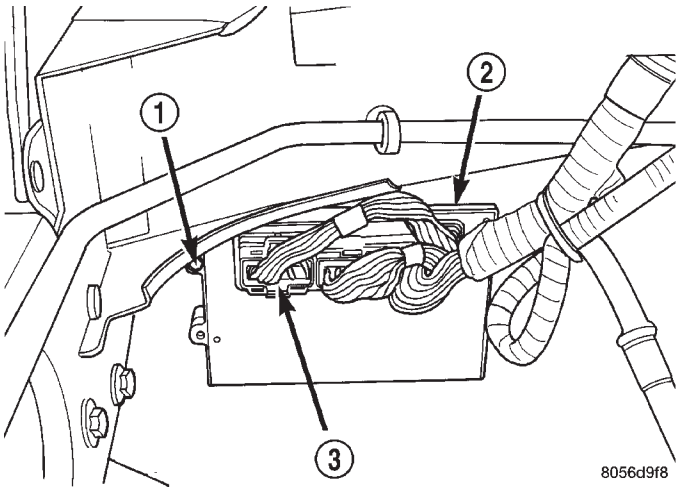

Fig. 12 Powertrain Control Module (PCM)

1 - PCM MOUNTING BOLTS (3)
2 - POWERTRAIN CONTROL MODULE (PCM)
3 - (3) 32–WAY CONNECTORS

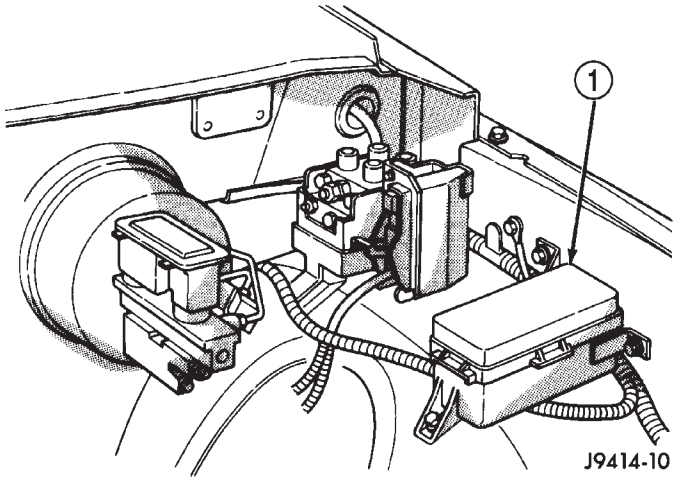

Fig. 13 Power Distribution Center (PDC)

1 - POWER DISTRIBUTION CENTER (PDC)

Connect vehicle to an oscilloscope and inspect spark events for fouled or damaged spark plugs or cables.

(6) Verify that generator output wire, generator connector and ground wire are firmly connected to the generator.

(7) Inspect the system body grounds for loose or dirty connections. Refer to 8, Wiring for ground locations.

(8) Verify crankcase ventilation (CCV) operation. Refer to 25, Emission Control System for additional information.

(9) Inspect fuel tube quick-connect fitting-to-fuel rail connections.

(10) Verify that hose connections to all ports of vacuum fittings on intake manifold are tight and not leaking.

FUEL INJECTION - GASOLINE (Continued)

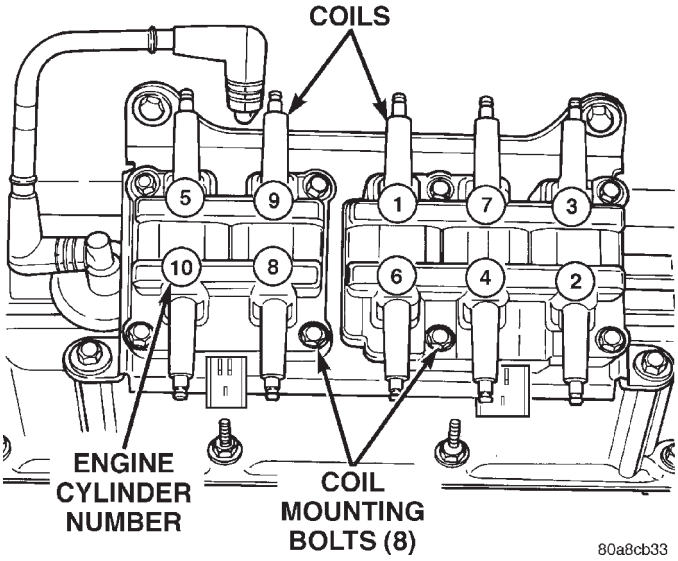

Fig. 14 Ignition Coil Pack—8.0L Engine

(11) Inspect accelerator cable, transmission throttle cable (if equipped) and cruise control cable connections (if equipped). Check their connections to the throttle arm of throttle body for any binding or restrictions.

(12) If equipped with vacuum brake booster, verify that vacuum booster hose is firmly connected to fitting on intake manifold. Also check connection to brake vacuum booster.

(13) Inspect the air cleaner inlet and air cleaner element for dirt or restrictions.

(14) Inspect radiator grille area, radiator fins and air conditioning condenser for restrictions.

(15) Verify that the intake manifold air temperature sensor wire connector is firmly connected to harness connector (Fig. 15).

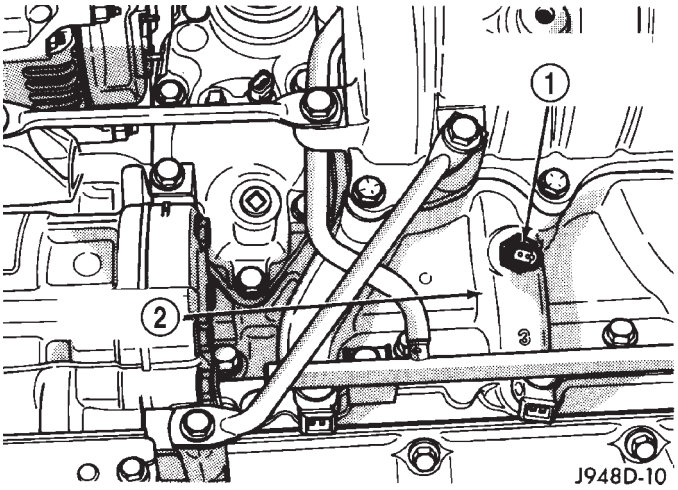

Fig. 15 Air Temperature Sensor—8.0L Engine

1 - INTAKE MANIFOLD AIR TEMP. SENSOR
2 - INTAKE MANIFOLD

(16) Verify that MAP sensor electrical connector is firmly connected to MAP sensor (Fig. 16).

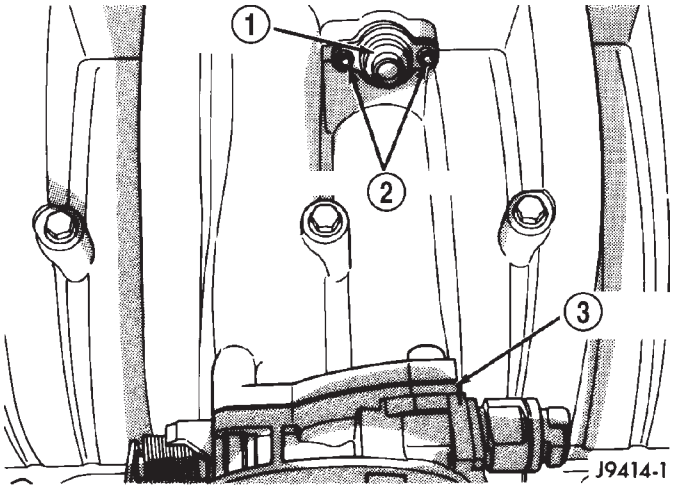

Fig. 16 Map Sensor —8.0L Engine

1 - MAP SENSOR
2 - MOUNTING BOLTS
3 - THROTTLE BODY

(17) Verify that fuel injector wire harness connectors are firmly connected to injectors in the correct order. Each harness connector is numerically tagged with the injector number (INJ 1, INJ 2 etc.) of its corresponding fuel injector and cylinder number.

(18) Verify harness connectors are firmly connected to idle air control (IAC) motor and throttle position sensor (TPS).

(19) Verify that wire harness connector is firmly connected to the engine coolant temperature sensor (Fig. 17).

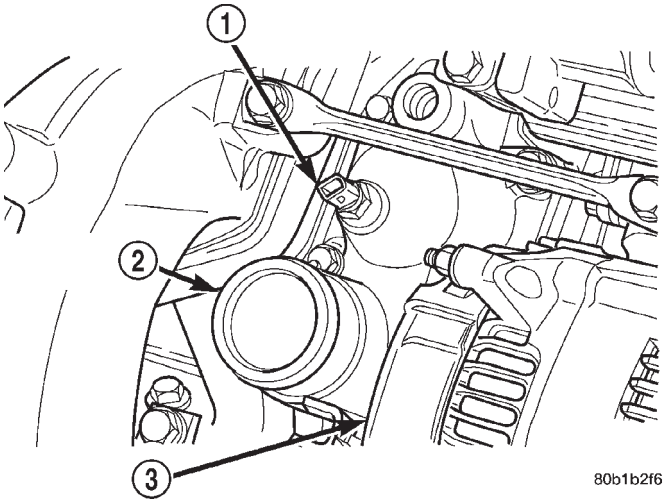

Fig. 17 Engine Coolant Temperature Sensor—8.0L Engine

1 - ENGINE COOLANT TEMP. SENSOR
2 - THERMOSTAT HOUSING
3 - GENERATOR

FUEL INJECTION - GASOLINE (Continued)

(20) Raise and support the vehicle.

(21) Verify that all oxygen sensor wire connectors are firmly connected to the sensors. Inspect sensors and connectors for damage (Fig. 18), (Fig. 19) or (Fig. 20).

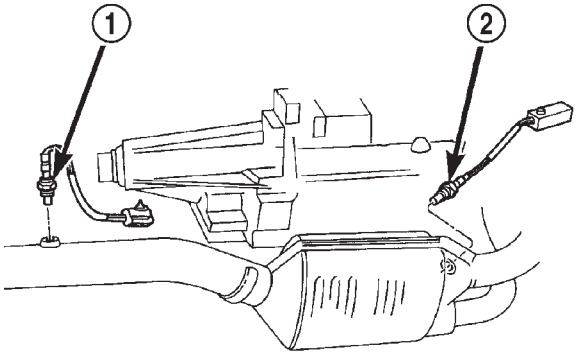

Fig. 18 Upstream/Downstream Oxygen Sensors

1 - DOWN STREAM OXYGEN SENSOR (1/2)
2 - UP STREAM OXYGEN SENSOR (1/1)

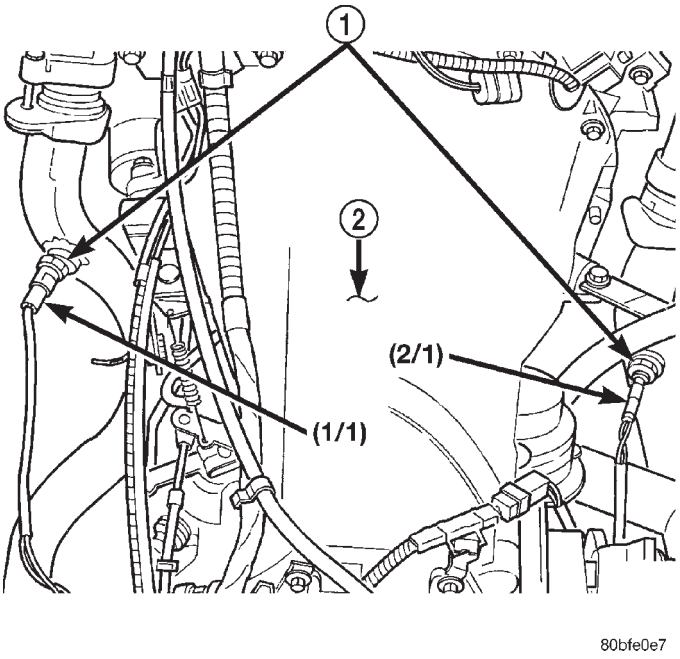

Fig. 19 Left/Right

1 - DUAL OXYGEN SENSORS
2 - TOP OF TRANSMISSION

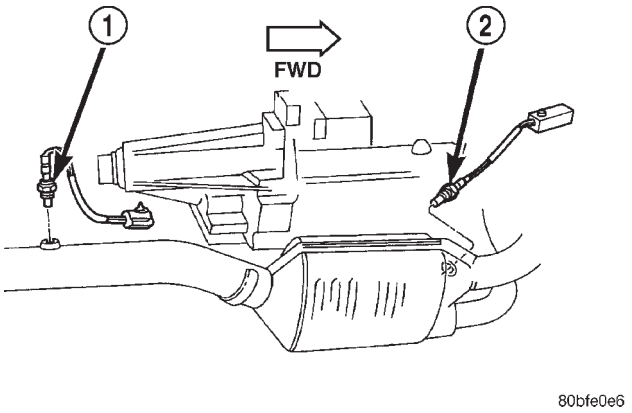

Fig. 20 Pre-Catalyst/Post Catalyst Oxygen Sensors

1 - POST CATALYST OXYGEN SENSOR (1/3)
2 - PRE-CATALYST OXYGEN SENSOR (1/2)

(22) Inspect for pinched or leaking fuel tubes. Inspect for pinched, cracked or leaking fuel hoses.

(23) Inspect for exhaust system restrictions such as pinched exhaust pipes, collapsed muffler or plugged catalytic convertor.

(24) If equipped with automatic transmission, verify that electrical harness is firmly connected to park/neutral switch. Refer to 21, Automatic Transmission.

(25) Verify electrical harness is firmly connected to rear wheel speed sensor. Verify rear wheel speed sensor is firmly attached to rear axle with proper air gap. Refer to 5, Brakes for information.

(26) If equipped with 4–wheel antilock brake system, verify electrical harness is firmly connected to each front wheel speed sensor. Verify both front wheel speed sensors are firmly attached. Refer to 5, Brakes for information.

(27) Verify that fuel pump/gauge sender unit wire connector is firmly connected to harness connector.

(28) Inspect fuel hoses at fuel pump/gauge sender unit for cracks or leaks.

(29) Inspect transmission torque convertor housing (automatic transmission) or clutch housing (manual transmission) for damage to timing ring on drive plate/flywheel.

(30) Verify that battery cable and solenoid feed wire connections to the starter solenoid are tight and clean. Inspect for chaffed wires or wires rubbing up against other components.

FUEL INJECTION - GASOLINE (Continued)

SPECIFICATIONS - TORQUE - GAS FUEL INJECTION

DESCRIPTION	N·m	Ft. Lbs.	In. Lbs.
Air Cleaner Housing Mount. Nuts—8.0L Engine	11		96
Air Cleaner Housing Metal Clamp—5.9L Engines	4		35
Crankshaft Position Sensor Mounting Bolts—All Engines	8		70
Camshaft Position Sensor Mounting—8.0L Engine	6		50
Engine Coolant Temperature Sensor—All Engines	6-8		55-75
Fuel Tank Mounting Nuts	41	30	
Fuel Hose Clamps	1		10
IAC Motor-To-Throttle Body Bolts	7		60
Intake Manifold Air Temp. Sensor—All Engines	12-15		110-130
MAP Sensor Mounting Screws—5.9L Engines	3		25
MAP Sensor Mounting Screws—8.0L Engine	2		20
Oxygen Sensor—All Engines	30	22	
Powertrain Control Module Mounting Screws	4		35
Throttle Body Mounting Bolts—5.9L Engines	23		200
Throttle Body Mounting Bolts—8.0L Engine	22		192
Throttle Position Sensor Mounting Screws—All Engines	7		60

SPECIAL TOOLS

FUEL SYSTEM

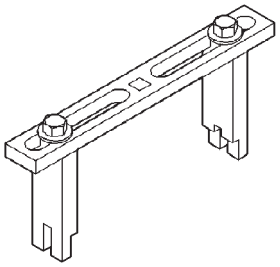

Spanner Wrench—6856

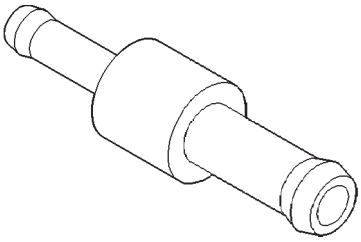

Fitting, Air Metering—6714

FUEL INJECTION - GASOLINE (Continued)

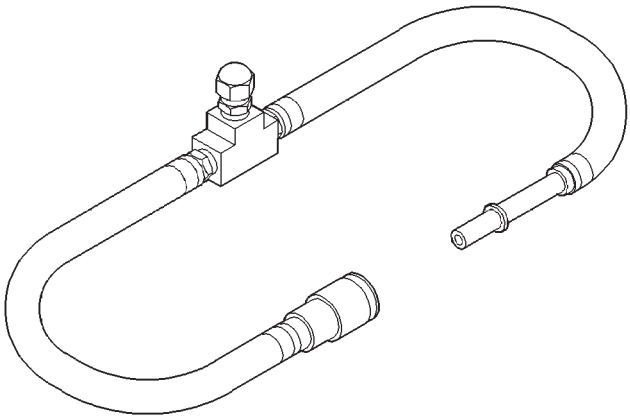

Adapters, Fuel Pressure Test—6539 and/or 6631

O2S (Oxygen Sensor) Remover/Installer—C-4907

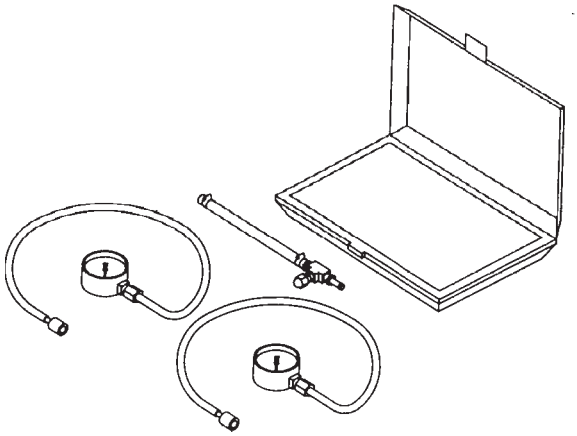

Test Kit, Fuel Pressure—5069

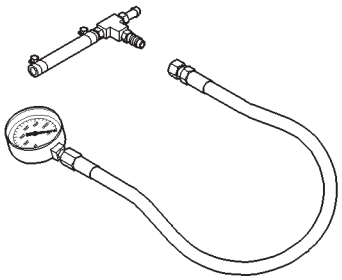

Test Kit, Fuel Pressure—C-4799-B

Fuel Line Removal Tool—6782

ACCELERATOR PEDAL

REMOVAL

CAUTION: Be careful not to damage or kink the cable core wire (within the cable sheathing) while servicing accelerator pedal or cables.

(1) From inside vehicle, hold up accelerator pedal. Remove plastic cable retainer and throttle cable core wire from upper end of pedal arm (Fig. 21) . The plastic cable retainer snaps into pedal arm.

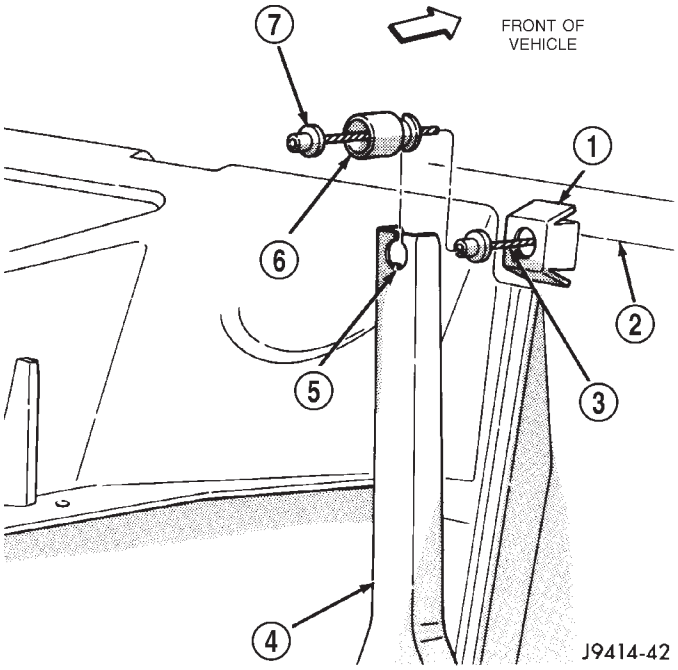

Fig. 21 Cable Removal/Installation at Pedal

1 - PINCH TWO TABS FOR CABLE REMOVAL
2 - DASH PANEL
3 - CABLE CORE WIRE
4 - THROTTLE PEDAL ARM
5 - INDEX TAB
6 - CABLE RETAINER
7 - CABLE STOP

(2) Insert a small screwdriver into square holes located on pivots/bushings (Fig. 22) . Twist screwdriver to disengage pivot locks from pivot pin. Pivots will be damaged when removing. Discard old pivots.

(3) Remove pedal/bracket assembly from vehicle.

ACCELERATOR PEDAL (Continued)

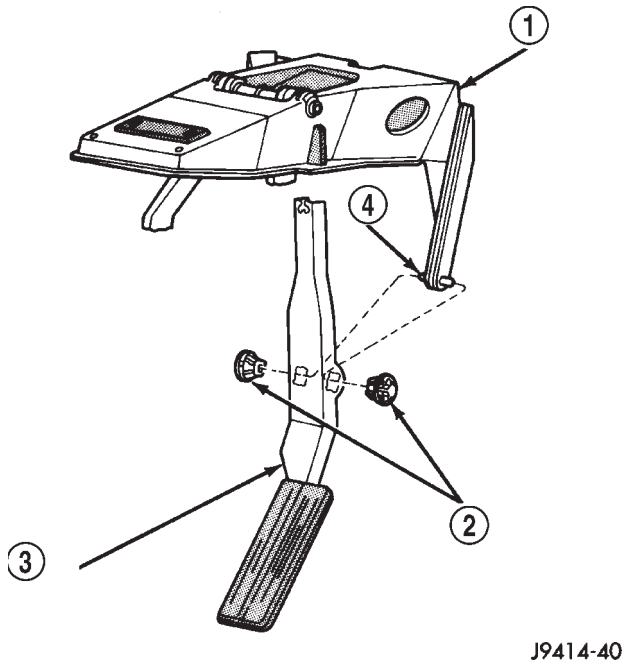

Fig. 22 Accelerator Pedal—Removal or Installation

1 - PEDAL MOUNTING BRACKET
2 - PIVOTS/BUSHINGS
3 - PEDAL/BRACKET
4 - PIVOT PIN

INSTALLATION

(1) Position pedal/bracket assembly over pivot pin (Fig. 22) .

(2) Install two new pivots/bushings. Using large pliers, press both bushings together until they bottom on sides of pedal/bracket assembly. Bushing retaining ears will snap into position when properly installed.

(3) From inside vehicle, hold up accelerator pedal. Install throttle cable core wire and plastic cable retainer into and through upper end of pedal arm (the plastic retainer is snapped into pedal arm). When installing plastic retainer to accelerator pedal arm, note index tab on pedal arm (Fig. 21) . Align index slot on plastic cable retainer to this index tab.

CRANKSHAFT POSITION SENSOR

DESCRIPTION

DESCRIPTION - 5.9L

The Crankshaft Position (CKP) sensor is located near the outer edge of the flywheel (starter ringear).

DESCRIPTION - 8.0L

The Crankshaft Position (CKP) sensor is located on the right-lower side of the cylinder block, forward of the right engine mount, just above the oil pan rail (Fig. 23).

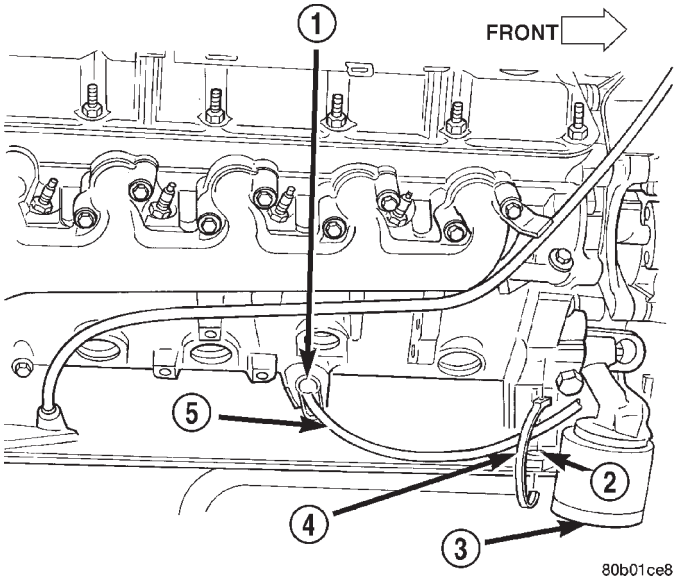

Fig. 23 CKP Sensor Location—8.0L V-10 Engine

1 - CRANKSHAFT POSITION SENSOR
2 - HOLE
3 - OIL FILTER
4 - PLASTIC TIE STRAP
5 - PIGTAIL HARNESS

OPERATION

OPERATION - 5.9L

Engine speed and crankshaft position are provided through the CKP sensor. The sensor generates pulses that are the input sent to the Powertrain Control Module (PCM). The PCM interprets the sensor input to determine the crankshaft position. The PCM then uses this position, along with other inputs, to determine injector sequence and ignition timing.

The sensor is a hall effect device combined with an internal magnet. It is also sensitive to steel within a certain distance from it.

On 5.9L V-8 engines, the flywheel/drive plate has 8 single notches, spaced every 45 degrees, at its outer edge (Fig. 24).

The notches cause a pulse to be generated when they pass under the sensor. The pulses are the input to the PCM. For each engine revolution, there are 8 pulses generated on V-8 engines.

The engine will not operate if the PCM does not receive a CKP sensor input.

CRANKSHAFT POSITION SENSOR (Continued)

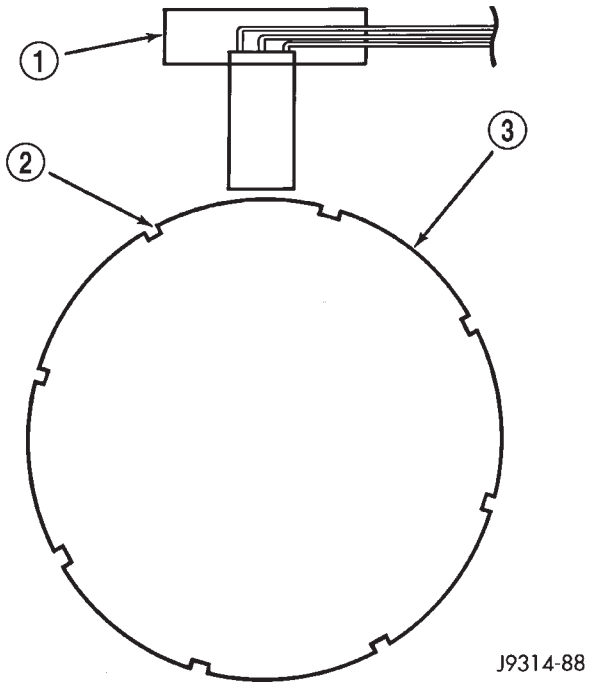

Fig. 24 CKP Sensor Operation—5.9L Engine

1 - CRANKSHAFT POSITION SENSOR
2 - NOTCHES
3 - FLYWHEEL

OPERATION - 8.0L

The Crankshaft Position (CKP) sensor detects notches machined into the middle of the crankshaft (Fig. 25).

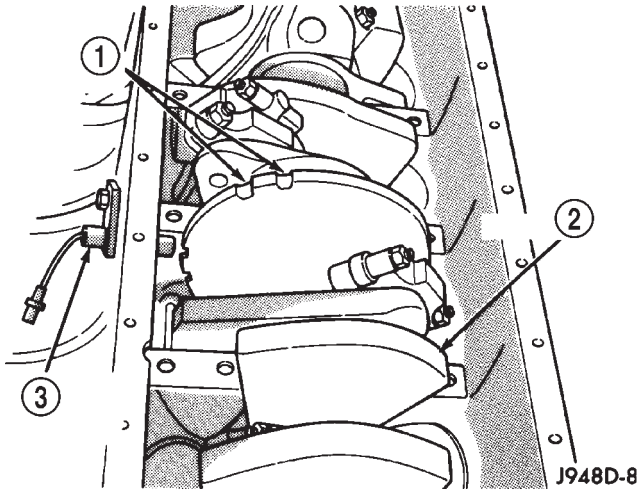

Fig. 25 CKP Sensor Operation—8.0L V-10 Engine

1 - CRANKSHAFT NOTCHES
2 - CRANKSHAFT
3 - CRANKSHAFT POSITION SENSOR

There are five sets of notches. Each set contains two notches. Basic ignition timing is determined by the position of the last notch in each set of notches. Once the Powertrain Control Module (PCM) senses the last notch, it will determine crankshaft position (which piston will next be at Top Dead Center). An input from the camshaft position sensor is also needed. It may take the module up to one complete engine revolution to determine crankshaft position during engine cranking.

The PCM uses the signal from the camshaft position sensor to determine fuel injector sequence. Once crankshaft position has been determined, the PCM begins energizing a ground circuit to each fuel injector to provide injector operation.

REMOVAL

REMOVAL - 5.9L

The sensor is bolted to the top of the cylinder block near the rear of right cylinder head (Fig. 26).

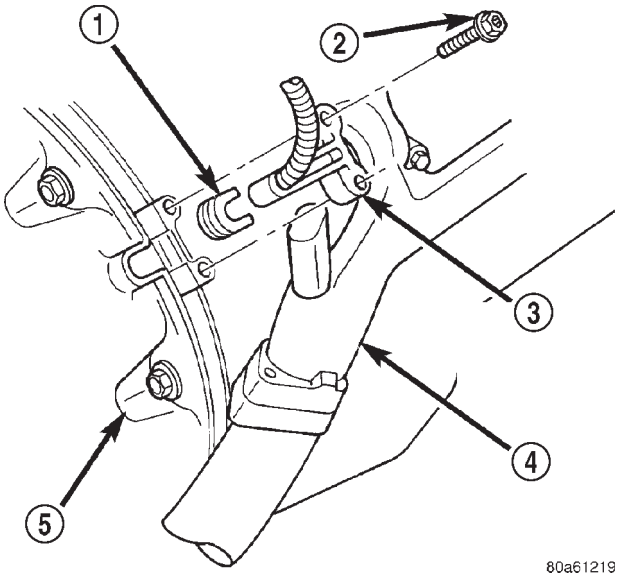

Fig. 26 Crankshaft Position Sensor

1 - GROMMET
2 - MOUNTING BOLTS (2)
3 - CRANKSHAFT POSITION SENSOR
4 - RIGHT EXHAUST MANIFOLD
5 - TRANSMISSION BELL HOUSING

(1) Remove the air cleaner intake tube.

(2) Disconnect crankshaft position sensor pigtail harness from main wiring harness.

(3) Remove two sensor (recessed hex head) mounting bolts (Fig. 26).

(4) Remove sensor from engine.

CRANKSHAFT POSITION SENSOR (Continued)

REMOVAL - 8.0L

The crankshaft position sensor is located on the right-lower side of the cylinder block, forward of the right engine mount, just above the oil pan rail (Fig. 27).

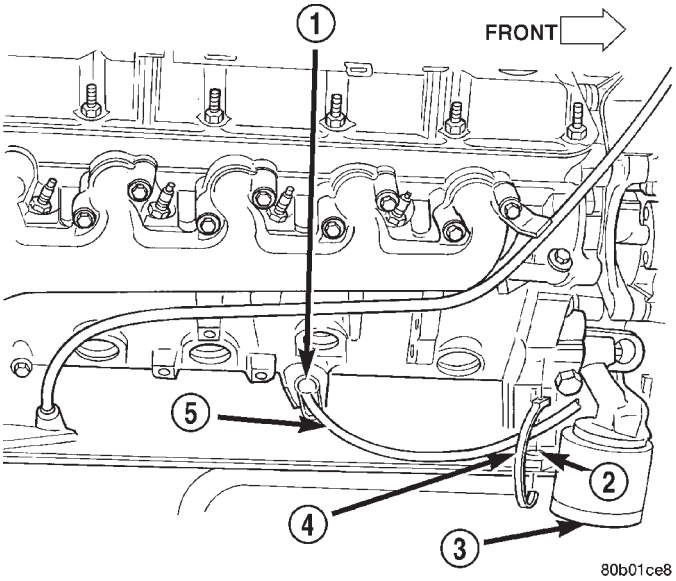

Fig. 27 Crankshaft Position Sensor Location—8.0L V-10 Engine

1 - CRANKSHAFT POSITION SENSOR
2 - HOLE
3 - OIL FILTER
4 - PLASTIC TIE STRAP
5 - PIGTAIL HARNESS

(1) Raise and support vehicle.
(2) Disconnect sensor pigtail harness from main engine wiring harness.
(3) Remove sensor mounting bolt (Fig. 28).
(4) Cut plastic tie strap (Fig. 27) securing sensor pigtail harness to side of engine block.
(5) Carefully pry sensor from cylinder block in a rocking action with two small screwdrivers.
(6) Remove sensor from vehicle.
(7) Check condition of sensor o-ring (Fig. 29).

INSTALLATION

INSTALLATION - 5.9L

(1) Position crankshaft position sensor to engine.
(2) Install mounting bolts and tighten to 8 N·m (70 in. lbs.) torque.
(3) Connect main harness electrical connector to sensor.
(4) Install air cleaner tube.

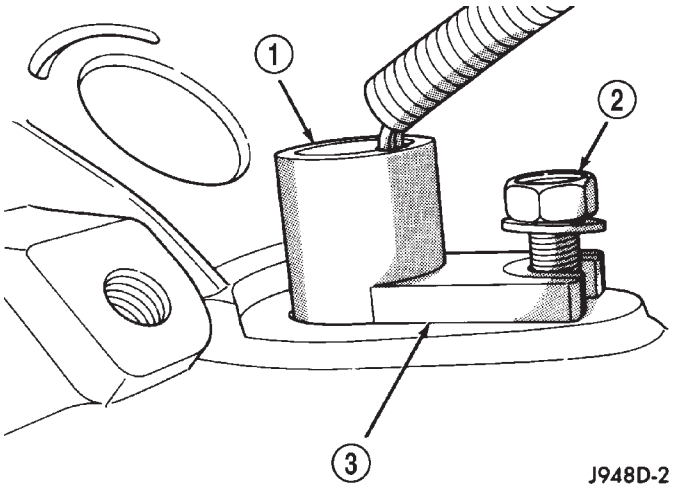

Fig. 28 Sensor Removal/Installation—8.0L V-10 Engine

1 - CRANKSHAFT POSITION SENSOR
2 - MOUNTING BOLT
3 - SENSOR POSITIONED FLUSH TO CYLINDER BLOCK

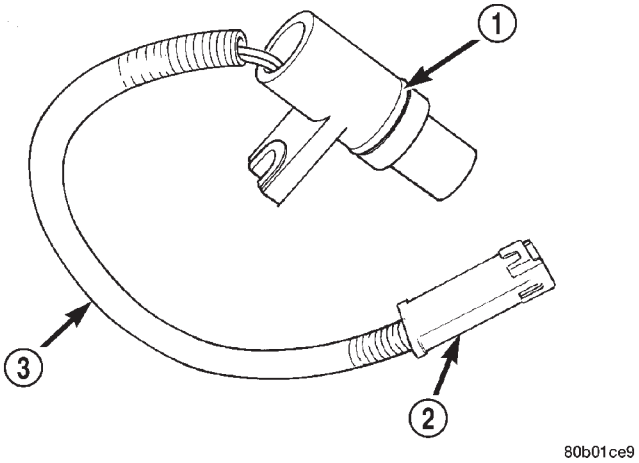

Fig. 29 Sensor O-Ring—8.0L V-10 Engine

1 - CRANKSHAFT POSITION SENSOR O-RING
2 - ELECTRICAL CONNECTOR
3 - PIGTAIL HARNESS

INSTALLATION - 8.0L

The crankshaft position sensor is located on the right-lower side of the cylinder block, forward of the right engine mount, just above the oil pan rail (Fig. 27).

(1) Apply a small amount of engine oil to sensor o-ring (Fig. 29).
(2) Install sensor into cylinder block with a slight rocking action. Do not twist sensor into position as damage to o-ring may result.

CRANKSHAFT POSITION SENSOR (Continued)

CAUTION: Before tightening sensor mounting bolt, be sure sensor is completely flush to cylinder block (Fig. 28). If sensor is not flush, damage to sensor mounting tang may result.

(3) Install mounting bolt and tighten to 8 N·m (70 in. lbs.) torque.

(4) Connect sensor pigtail harness to main engine wiring harness

(5) Install new plastic tie strap (Fig. 27) to secure sensor pigtail harness to side of engine block. Thread tie strap through casting hole on cylinder block.

FUEL PUMP RELAY

DESCRIPTION

The 5–pin, 12–volt, fuel pump relay is located in the Power Distribution Center (PDC). Refer to the label on the PDC cover for relay location.

OPERATION

The Powertrain Control Module (PCM) energizes the electric fuel pump through the fuel pump relay. The fuel pump relay is energized by first applying battery voltage to it when the ignition key is turned ON, and then applying a ground signal to the relay from the PCM.

Whenever the ignition key is turned ON, the electric fuel pump will operate. But, the PCM will shutdown the ground circuit to the fuel pump relay in approximately 1–3 seconds unless the engine is operating or the starter motor is engaged.

REMOVAL

The fuel pump relay is located in the Power Distribution Center (PDC) (Fig. 30). Refer to label on PDC cover for relay location.

(1) Remove PDC cover.

(2) Remove relay from PDC.

(3) Check condition of relay terminals and PDC connector terminals for damage or corrosion. Repair if necessary before installing relay.

(4) Check for pin height (pin height should be the same for all terminals within the PDC connector). Repair if necessary before installing relay.

INSTALLATION

The fuel pump relay is located in the Power Distribution Center (PDC) (Fig. 30) . Refer to label on PDC cover for relay location.

(1) Install relay to PDC.

(2) Install cover to PDC.

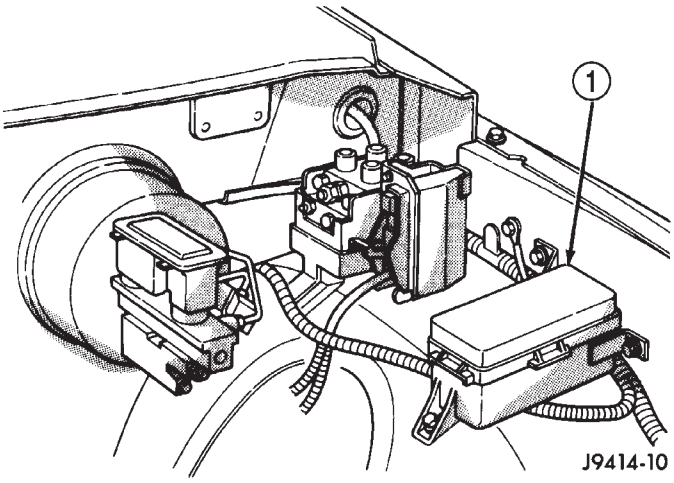

Fig. 30 Power Distribution Center (PDC)

1 - POWER DISTRIBUTION CENTER (PDC)

IDLE AIR CONTROL MOTOR

DESCRIPTION

The IAC stepper motor is mounted to the throttle body, and regulates the amount of air bypassing the control of the throttle plate. As engine loads and ambient temperatures change, engine rpm changes. A pintle on the IAC stepper motor protrudes into a passage in the throttle body, controlling air flow through the passage. The IAC is controlled by the Powertrain Control Module (PCM) to maintain the target engine idle speed.

OPERATION

At idle, engine speed can be increased by retracting the IAC motor pintle and allowing more air to pass through the port, or it can be decreased by restricting the passage with the pintle and diminishing the amount of air bypassing the throttle plate.

The IAC is called a stepper motor because it is moved (rotated) in steps, or increments. Opening the IAC opens an air passage around the throttle blade which increases RPM.

The PCM uses the IAC motor to control idle speed (along with timing) and to reach a desired MAP during decel (keep engine from stalling).

The IAC motor has 4 wires with 4 circuits. Two of the wires are for 12 volts and ground to supply electrical current to the motor windings to operate the stepper motor in one direction. The other 2 wires are also for 12 volts and ground to supply electrical current to operate the stepper motor in the opposite direction.

IDLE AIR CONTROL MOTOR (Continued)

To make the IAC go in the opposite direction, the PCM just reverses polarity on both windings. If only 1 wire is open, the IAC can only be moved 1 step (increment) in either direction. To keep the IAC motor in position when no movement is needed, the PCM will energize both windings at the same time. This locks the IAC motor in place.

In the IAC motor system, the PCM will count every step that the motor is moved. This allows the PCM to determine the motor pintle position. If the memory is cleared, the PCM no longer knows the position of the pintle. So at the first key ON, the PCM drives the IAC motor closed, regardless of where it was before. This zeros the counter. From this point the PCM will back out the IAC motor and keep track of its position again.

When engine rpm is above idle speed, the IAC is used for the following:

- Off-idle dashpot (throttle blade will close quickly but idle speed will not stop quickly)
- Deceleration air flow control
- A/C compressor load control (also opens the passage slightly before the compressor is engaged so that the engine rpm does not dip down when the compressor engages)
- Power steering load control

The PCM can control polarity of the circuit to control direction of the stepper motor.

IAC Stepper Motor Program: The PCM is also equipped with a memory program that records the number of steps the IAC stepper motor most recently advanced to during a certain set of parameters. For example: The PCM was attempting to maintain a 1000 rpm target during a cold start-up cycle. The last recorded number of steps for that may have been 125. That value would be recorded in the memory cell so that the next time the PCM recognizes the identical conditions, the PCM recalls that 125 steps were required to maintain the target. This program allows for greater customer satisfaction due to greater control of engine idle.

Another function of the memory program, which occurs when the power steering switch (if equipped), or the A/C request circuit, requires that the IAC stepper motor control engine rpm, is the recording of the last targeted steps into the memory cell. The PCM can anticipate A/C compressor loads. This is accomplished by delaying compressor operation for approximately 0.5 seconds until the PCM moves the IAC stepper motor to the recorded steps that were loaded into the memory cell. Using this program helps eliminate idle-quality changes as loads change. Finally, the PCM incorporates a "No-Load" engine speed limiter of approximately 1800 - 2000 rpm, when it recognizes that the TPS is indicating an idle signal and IAC motor cannot maintain engine idle.

A (factory adjusted) set screw is used to mechanically limit the position of the throttle body throttle plate. **Never attempt to adjust the engine idle speed using this screw.** All idle speed functions are controlled by the IAC motor through the PCM.

REMOVAL

REMOVAL - 5.9L

The IAC motor is located on the back of the throttle body (Fig. 31).

(1) Remove air cleaner assembly.
(2) Disconnect electrical connector from IAC motor.
(3) Remove two mounting bolts (screws) (Fig. 31).

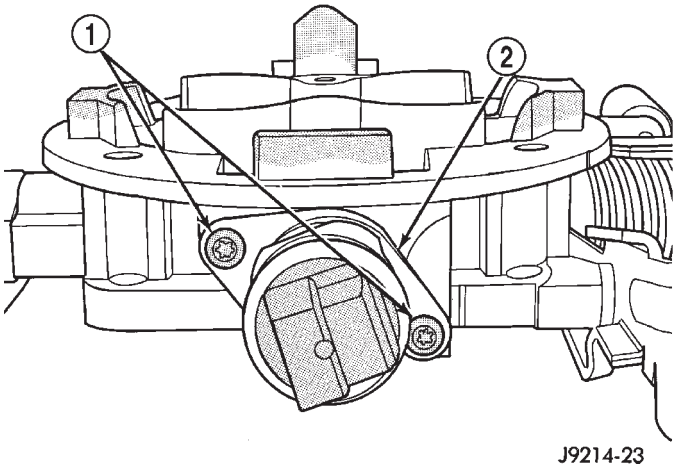

Fig. 31 Mounting Bolts (Screws)—IAC Motor—5.9L Engines

1 - MOUNTING SCREWS
2 - IDLE SPEED MOTOR

(4) Remove IAC motor from throttle body.

REMOVAL - 8.0L

The IAC motor is located on the back of the throttle body (Fig. 32).

(1) Remove the air cleaner cover.
(2) Remove the 4 air cleaner housing mounting nuts and remove housing from throttle body.
(3) Disconnect electrical connector from IAC motor.
(4) Remove two mounting bolts (screw).
(5) Remove IAC motor from throttle body.

IDLE AIR CONTROL MOTOR (Continued)

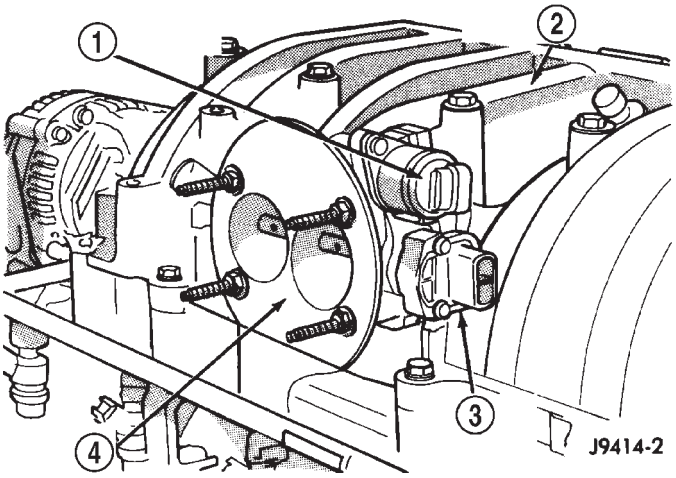

Fig. 32 IAC Motor—8.0L Engine

1 - IDLE AIR CONTROL MOTOR
2 - INTAKE MANIFOLD (UPPER HALF)
3 - THROTTLE POSITION SENSOR
4 - THROTTLE BODY

INSTALLATION

INSTALLATION - 5.9L

The IAC motor is located on the back of the throttle body (Fig. 31).

(1) Install IAC motor to throttle body.

(2) Install and tighten two mounting bolts (screws) to 7 N·m (60 in. lbs.) torque.

(3) Install electrical connector.

(4) Install air cleaner assembly.

INSTALLATION - 8.0L

The IAC motor is located on the back of the throttle body (Fig. 32).

(1) Install IAC motor to throttle body.

(2) Install and tighten two mounting bolts (screws) to 7 N·m (60 in. lbs.) torque.

(3) Install electrical connector.

(4) Install air cleaner housing to throttle body.

(5) Install 4 air cleaner housing mounting nuts. Tighten nuts to 11 N·m (96 in. lbs.) torque.

(6) Install air cleaner housing cover.

INTAKE AIR TEMPERATURE SENSOR

DESCRIPTION - 5.9L/8.0L

The 2–wire Intake Manifold Air Temperature (IAT) sensor is installed in the intake manifold with the sensor element extending into the air stream.

The IAT sensor is a two-wire Negative Thermal Coefficient (NTC) sensor. Meaning, as intake manifold temperature increases, resistance (voltage) in the sensor decreases. As temperature decreases, resistance (voltage) in the sensor increases.

OPERATION - 5.9L/8.0L

The IAT sensor provides an input voltage to the Powertrain Control Module (PCM) indicating the density of the air entering the intake manifold based upon intake manifold temperature. At key-on, a 5–volt power circuit is supplied to the sensor from the PCM. The sensor is grounded at the PCM through a low-noise, sensor-return circuit.

The PCM uses this input to calculate the following:

- Injector pulse-width
- Adjustment of spark timing (to help prevent spark knock with high intake manifold air-charge temperatures)

The resistance values of the IAT sensor is the same as for the Engine Coolant Temperature (ECT) sensor.

REMOVAL

REMOVAL - 5.9L

The intake manifold air temperature sensor is located in the front/side of the intake manifold (Fig. 33).

(1) Remove air cleaner assembly.

(2) Disconnect electrical connector at sensor (Fig. 33).

(3) Remove sensor from intake manifold.

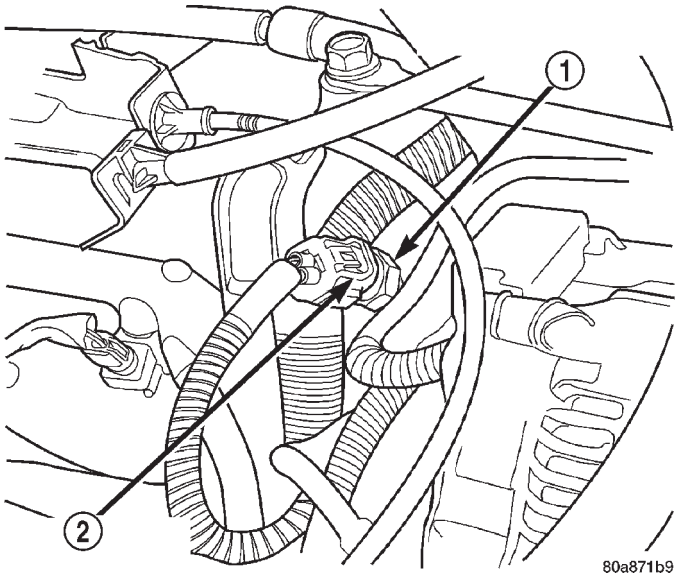

Fig. 33 Air Temperature Sensor—5.9L

1 - INTAKE MANIFOLD AIR TEMPERATURE SENSOR
2 - ELECTRICAL CONNECTOR

INTAKE AIR TEMPERATURE SENSOR (Continued)

REMOVAL - 8.0L

The intake manifold air temperature sensor is located in the side of the intake manifold near the front of throttle body (Fig. 34).

(1) Disconnect electrical connector at sensor.
(2) Remove sensor from intake manifold.

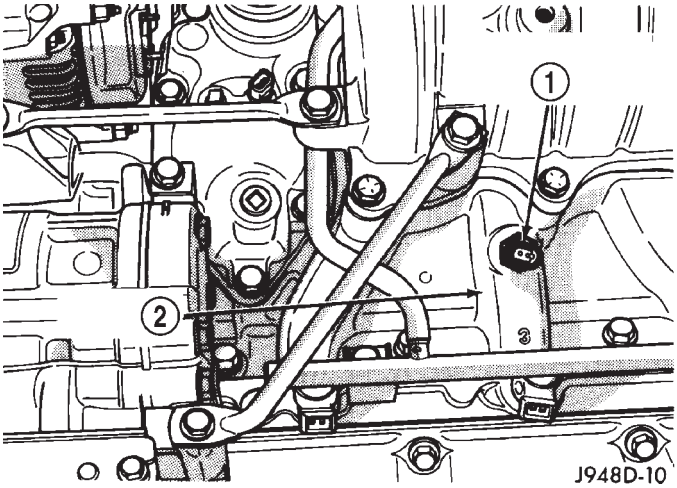

Fig. 34 Air Temperature Sensor—8.0L Engine

1 - INTAKE MANIFOLD AIR TEMP. SENSOR
2 - INTAKE MANIFOLD

INSTALLATION

INSTALLATION - 5.9L

The intake manifold air temperature sensor is located in the front/side of the intake manifold (Fig. 33).

(1) Install sensor to intake manifold. Tighten to 12–15 N·m (110–130 in. lbs.) torque.
(2) Install electrical connector.
(3) Install air cleaner.

INSTALLATION - 8.0L

The intake manifold air temperature sensor is located in the side of the intake manifold near the front of throttle body (Fig. 34).

(1) Install sensor to intake manifold. Tighten to 12–15 N·m (110–130 in. lbs.) torque.
(2) Install electrical connector.

MANIFOLD ABSOLUTE PRESSURE SENSOR

DESCRIPTION - 5.9L/8.0L

On 5.9L engines, the MAP sensor is mounted on the side of the engine throttle body. The sensor is connected to the throttle body with a rubber L-shaped fitting.

On the 8.0L 10–cylinder engine, the MAP sensor is mounted into the right side of the intake manifold.

OPERATION - 5.9L/8.0L

The MAP sensor is used as an input to the Powertrain Control Module (PCM). It contains a silicon based sensing unit to provide data on the manifold vacuum that draws the air/fuel mixture into the combustion chamber. The PCM requires this information to determine injector pulse width and spark advance. When manifold absolute pressure (MAP) equals Barometric pressure, the pulse width will be at maximum.

A 5 volt reference is supplied from the PCM and returns a voltage signal to the PCM that reflects manifold pressure. The zero pressure reading is 0.5V and full scale is 4.5V. For a pressure swing of 0–15 psi, the voltage changes 4.0V. To operate the sensor, it is supplied a regulated 4.8 to 5.1 volts. Ground is provided through the low-noise, sensor return circuit at the PCM.

The MAP sensor input is the number one contributor to fuel injector pulse width. The most important function of the MAP sensor is to determine barometric pressure. The PCM needs to know if the vehicle is at sea level or at a higher altitude, because the air density changes with altitude. It will also help to correct for varying barometric pressure. Barometric pressure and altitude have a direct inverse correlation; as altitude goes up, barometric goes down. At key-on, the PCM powers up and looks at MAP voltage, and based upon the voltage it sees, it knows the current barometric pressure (relative to altitude). Once the engine starts, the PCM looks at the voltage again, continuously every 12 milliseconds, and compares the current voltage to what it was at key-on. The difference between current voltage and what it was at key-on, is manifold vacuum.

During key-on (engine not running) the sensor reads (updates) barometric pressure. A normal range can be obtained by monitoring a known good sensor.

As the altitude increases, the air becomes thinner (less oxygen). If a vehicle is started and driven to a very different altitude than where it was at key-on, the barometric pressure needs to be updated. Any time the PCM sees Wide Open Throttle (WOT), based upon Throttle Position Sensor (TPS) angle and RPM, it will update barometric pressure in the MAP memory cell. With periodic updates, the PCM can make its calculations more effectively.

The PCM uses the MAP sensor input to aid in calculating the following:

- Manifold pressure
- Barometric pressure
- Engine load
- Injector pulse-width

MANIFOLD ABSOLUTE PRESSURE SENSOR (Continued)

- Spark-advance programs
- Shift-point strategies (certain automatic transmissions only)
- Idle speed
- Decel fuel shutoff

The MAP sensor signal is provided from a single piezoresistive element located in the center of a diaphragm. The element and diaphragm are both made of silicone. As manifold pressure changes, the diaphragm moves causing the element to deflect, which stresses the silicone. When silicone is exposed to stress, its resistance changes. As manifold vacuum increases, the MAP sensor input voltage decreases proportionally. The sensor also contains electronics that condition the signal and provide temperature compensation.

The PCM recognizes a decrease in manifold pressure by monitoring a decrease in voltage from the reading stored in the barometric pressure memory cell. The MAP sensor is a linear sensor; meaning as pressure changes, voltage changes proportionately. The range of voltage output from the sensor is usually between 4.6 volts at sea level to as low as 0.3 volts at 26 in. of Hg. Barometric pressure is the pressure exerted by the atmosphere upon an object. At sea level on a standard day, no storm, barometric pressure is approximately 29.92 in Hg. For every 100 feet of altitude, barometric pressure drops .10 in. Hg. If a storm goes through it can change barometric pressure from what should be present for that altitude. You should know what the average pressure and corresponding barometric pressure is for your area.

REMOVAL

REMOVAL - 5.9L

The MAP sensor is located on the front of the throttle body (Fig. 35). An L-shaped rubber fitting is used to connect the MAP sensor to throttle body (Fig. 36).

The MAP sensor is located on the front of the throttle body (Fig. 35). An L-shaped rubber fitting is used to connect the MAP sensor to throttle body (Fig. 36).

(1) Remove air cleaner assembly.

(2) Remove two MAP sensor mounting bolts (screws) (Fig. 35).

(3) While removing MAP sensor, slide the vacuum rubber L-shaped fitting (Fig. 36) from the throttle body.

(4) Remove rubber L-shaped fitting from MAP sensor.

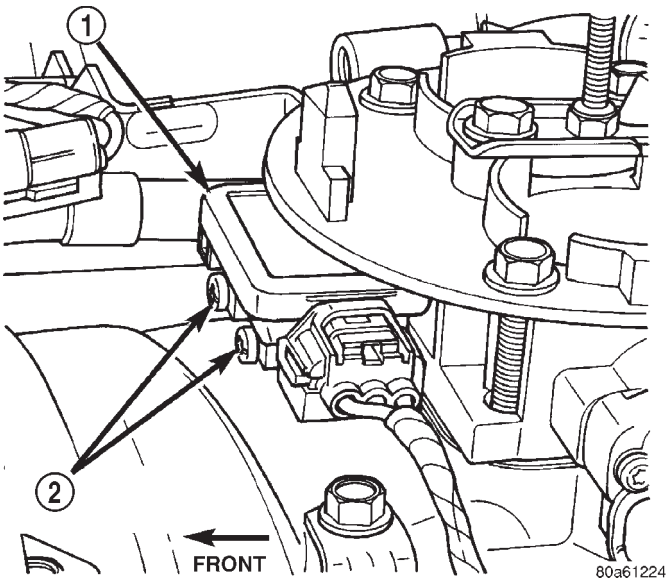

Fig. 35 MAP Sensor Location—5.9L Engines

1 - MAP SENSOR
2 - MOUNTING SCREWS (2)

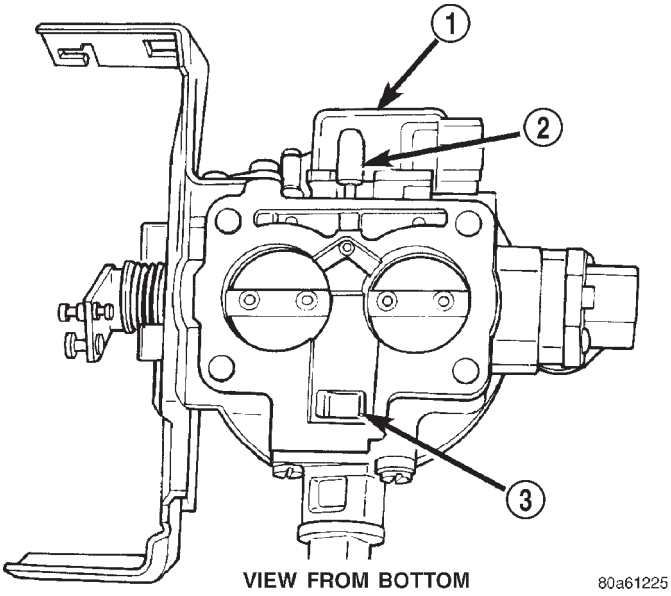

Fig. 36 MAP Sensor L-Shaped Rubber Fitting—5.9L Engines

1 - MAP SENSOR
2 - RUBBER FITTING
3 - IDLE AIR PASSAGE

REMOVAL - 8.0L

The MAP sensor is mounted into the right upper side of the intake manifold (Fig. 37). A rubber gasket is used to seal the sensor to the intake manifold. The rubber gasket is part of the sensor and is not serviced separately.

(1) Remove the electrical connector at the sensor.

MANIFOLD ABSOLUTE PRESSURE SENSOR (Continued)

(2) Clean the area around the sensor before removal.

(3) Remove the two sensor mounting bolts.

(4) Remove the sensor from the intake manifold.

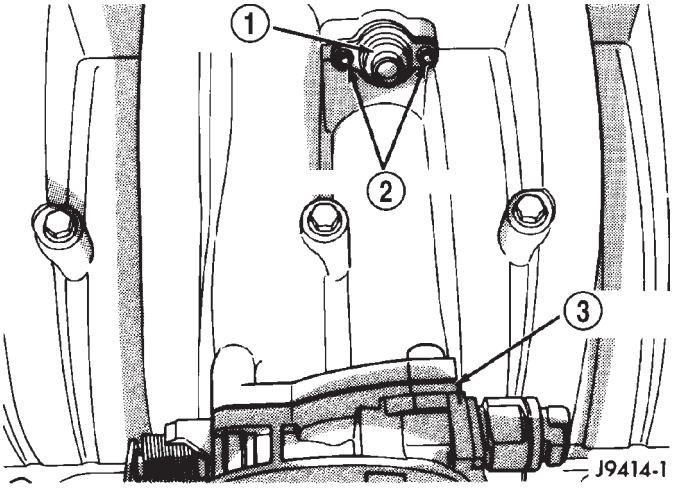

Fig. 37 MAP Sensor Location—8.0L V-10 Engine—Typical

1 - MAP SENSOR
2 - MOUNTING BOLTS
3 - THROTTLE BODY

INSTALLATION

INSTALLATION - 5.9L

The MAP sensor is located on the front of the throttle body (Fig. 35). An L-shaped rubber fitting is used to connect the MAP sensor to throttle body (Fig. 36).

(1) Install rubber L-shaped fitting to MAP sensor.

(2) Position sensor to throttle body while guiding rubber fitting over throttle body vacuum nipple.

(3) Install MAP sensor mounting bolts (screws). Tighten screws to 3 N·m (25 in. lbs.) torque.

(4) Install air cleaner.

INSTALLATION - 8.0L

The MAP sensor is mounted into the right upper side of the intake manifold (Fig. 37). A rubber gasket is used to seal the sensor to the intake manifold. The rubber gasket is part of the sensor and is not serviced separately.

(1) Check the condition of the sensor seal. Clean the sensor and lubricate the rubber gasket with clean engine oil.

(2) Clean the sensor opening in the intake manifold.

(3) Install the sensor into the intake manifold.

(4) Install sensor mounting bolts. Tighten bolts to 2 N·m (20 in. lbs.) torque.

(5) Install the electrical connector to sensor.

O2 SENSOR

DESCRIPTION

The Oxygen Sensors (O2S) are attached to, and protrude into the vehicle exhaust system. Depending on the emission package, the vehicle may use a total of either 2 or 4 sensors.

Medium and Heavy Duty 8.0L V-10 Engine: Four sensors are used (2 upstream, 1 pre-catalyst and 1 post-catalyst). With this emission package, the 1/1 upstream sensor (left side) is located in the left exhaust downpipe before both the pre-catalyst sensor (1/2), and the main catalytic convertor. The 2/1 upstream sensor (right side) is located in the right exhaust downpipe before both the pre-catalyst sensor (1/2), and the main catalytic convertor. The pre-catalyst sensor (1/2) is located after the 1/1 and 2/1 sensors, and just before the main catalytic convertor. The post-catalyst sensor (1/3) is located just after the main catalytic convertor.

Heavy Duty 5.9L Engine: Two sensors are used. They are **both** referred to as upstream sensors (left side is referred to as 1/1 and right side is referred to as 2/1). With this emission package, a sensor is located in each of the exhaust downpipes before the main catalytic convertor.

OPERATION

An O2 sensor is a galvanic battery that provides the PCM with a voltage signal (0-1 volt) inversely proportional to the amount of oxygen in the exhaust. In other words, if the oxygen content is low, the voltage output is high; if the oxygen content is high the output voltage is low. The PCM uses this information to adjust injector pulse-width to achieve the 14.7–to–1 air/fuel ratio necessary for proper engine operation and to control emissions.

The O2 sensor must have a source of oxygen from outside of the exhaust stream for comparison. Current O2 sensors receive their fresh oxygen (outside air) supply through the O2 sensor case housing.

Four wires (circuits) are used on each O2 sensor: a 12–volt feed circuit for the sensor heating element; a ground circuit for the heater element; a low-noise sensor return circuit to the PCM, and an input circuit from the sensor back to the PCM to detect sensor operation.

Oxygen Sensor Heaters/Heater Relays: Depending on the emissions package, the heating elements within the sensors will be supplied voltage from either the ASD relay, or 2 separate oxygen sensor relays. Refer to 8, Wiring Diagrams to determine which relays are used.

The O2 sensor uses a Positive Thermal Co-efficient (PTC) heater element. As temperature increases, resistance increases. At ambient temperatures

O2 SENSOR (Continued)

around 70°F, the resistance of the heating element is approximately 4.5 ohms. As the sensor's temperature increases, resistance in the heater element increases. This allows the heater to maintain the optimum operating temperature of approximately 930°-1100°F (500°-600° C). Although the sensors operate the same, there are physical differences, due to the environment that they operate in, that keep them from being interchangeable.

Maintaining correct sensor temperature at all times allows the system to enter into closed loop operation sooner. Also, it allows the system to remain in closed loop operation during periods of extended idle.

In Closed Loop operation, the PCM monitors certain O2 sensor input(s) along with other inputs, and adjusts the injector pulse width accordingly. During Open Loop operation, the PCM ignores the O2 sensor input. The PCM adjusts injector pulse width based on preprogrammed (fixed) values and inputs from other sensors.

Upstream Sensors: Two upstream sensors are used (1/1 and 2/1). The 1/1 sensor is the first sensor to receive exhaust gases from the #1 cylinder. They provide an input voltage to the PCM. The input tells the PCM the oxygen content of the exhaust gas. The PCM uses this information to fine tune fuel delivery to maintain the correct oxygen content at the downstream oxygen sensors. The PCM will change the air/fuel ratio until the upstream sensors input a voltage that the PCM has determined will make the downstream sensors output (oxygen content) correct.

The upstream oxygen sensors also provide an input to determine mini-catalyst efficiency. Main catalytic convertor efficiency is not calculated with this package.

Downstream Sensors: Two downstream sensors are used (1/2 and 2/2). The downstream sensors are used to determine the correct air-fuel ratio. As the oxygen content changes at the downstream sensor, the PCM calculates how much air-fuel ratio change is required. The PCM then looks at the upstream oxygen sensor voltage, and changes fuel delivery until the upstream sensor voltage changes enough to correct the downstream sensor voltage (oxygen content).

The downstream oxygen sensors also provide an input to determine mini-catalyst efficiency. Main catalytic convertor efficiency is not calculated with this package.

Medium and Heavy Duty 8.0L V-10 Engine: Four oxygen sensors are used (2 upstream, 1 pre-catalyst and 1 post-catalyst). The upstream sensors (1/1 and 2/1) will fine-tune the air-fuel ratio through the Powertrain Control Module (PCM). The pre-catalyst (1/2) and post-catalyst (1/3) sensors will determine catalytic convertor efficiency (efficiency of the main catalytic convertor). This is also done through the PCM.

Heavy Duty 5.9L Engine: Downstream sensors are not used with this emissions package, meaning catalytic convertor efficiency is not calculated with this package. Two upstream sensors are used. The left upstream sensor (1/1) will monitor cylinders 1, 3, 5 and 7. The right upstream sensor (2/1) will monitor cylinders 2, 4, 6 and 8. The PCM monitors the oxygen content of the sensors, and will fine-tune the air-fuel ratio.

Engines equipped with either a downstream sensor(s), or a post-catalytic sensor, will monitor catalytic convertor efficiency. If efficiency is below emission standards, the Malfunction Indicator Lamp (MIL) will be illuminated and a Diagnostic Trouble Code (DTC) will be set. Refer to Monitored Systems in Emission Control Systems for additional information.

REMOVAL

Never apply any type of grease to the oxygen sensor electrical connector, or attempt any soldering of the sensor wiring harness.

The O2S (oxygen sensors) are numbered 1/1, 1/2, 1/3, 2/1 and 2/2.

On HDC engines, the pre-catalyst/post catalyst O2S sensors are located at the inlet and outlet ends of the catalytic converter (Fig. 38).

The 1/1 and 2/1 sensors are located before the mini-cats (Fig. 39). The 1/2 and 2/2 sensors are located after the mini-cats (Fig. 39).

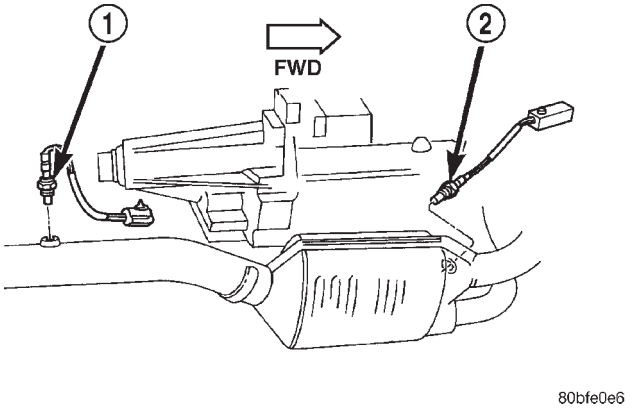

Fig. 38 Pre-catalyst/Post catalyst Oxygen Sensors—HDC Engines

1 - POST CATALYST OXYGEN SENSOR (1/3)
2 - PRE-CATALYST OXYGEN SENSOR (1/2)

WARNING: THE EXHAUST MANIFOLD, EXHAUST PIPES AND CATALYTIC CONVERTER BECOME VERY HOT DURING ENGINE OPERATION. ALLOW ENGINE TO COOL BEFORE REMOVING OXYGEN SENSOR.

O2 SENSOR (Continued)

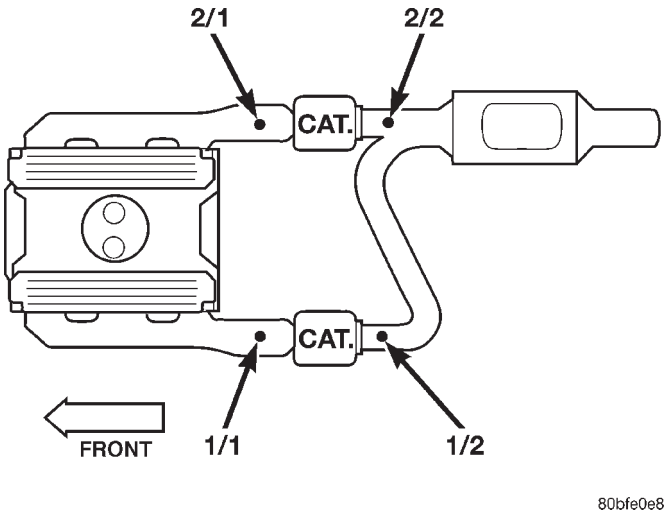

Fig. 39 Oxygen Sensors—5.9L California Engines

(1) Raise and support the vehicle.

(2) Disconnect the wire connector from the O2S sensor.

CAUTION: When disconnecting the sensor electrical connector, do not pull directly on wire going into sensor.

(3) Remove the O2S sensor with an oxygen sensor removal and installation tool.

INSTALLATION

Threads of new oxygen sensors are factory coated with anti-seize compound to aid in removal. **DO NOT add any additional anti-seize compound to the threads of a new oxygen sensor.**

(1) Install the O2S sensor. Tighten to 30 N·m (22 ft. lbs.) torque.

(2) Connect the O2S sensor wire connector.

(3) Lower the vehicle.

PTO SWITCH

DESCRIPTION

This Powertrain Control Module (PCM) input is used only on models equipped with aftermarket Power Take Off (PTO) units.

OPERATION

The input is used only to tell the PCM that the PTO has been engaged. The PCM will disable (temporarily shut down) certain OBD II diagnostic trouble codes when the PTO is engaged.

When the aftermarket PTO switch has been engaged, a 12V + signal is sent through circuit G113 to PCM pin A13. The PCM will then sense and determine that the PTO has been activated.

THROTTLE BODY

DESCRIPTION

The throttle body is located on the intake manifold. Fuel does not enter the intake manifold through the throttle body. Fuel is sprayed into the manifold by the fuel injectors.

OPERATION

Filtered air from the air cleaner enters the intake manifold through the throttle body. The throttle body contains an air control passage controlled by an Idle Air Control (IAC) motor. The air control passage is used to supply air for idle conditions. A throttle valve (plate) is used to supply air for above idle conditions.

Certain sensors are attached to the throttle body. The accelerator pedal cable, speed control cable and transmission control cable (when equipped) are connected to the throttle body linkage arm.

A (factory adjusted) set screw is used to mechanically limit the position of the throttle body throttle plate. **Never attempt to adjust the engine idle speed using this screw.** All idle speed functions are controlled by the PCM.

REMOVAL

REMOVAL - 5.9L

A (factory adjusted) set screw is used to mechanically limit the position of the throttle body throttle plate. **Never attempt to adjust the engine idle speed using this screw.** All idle speed functions are controlled by the powertrain control module (PCM).

(1) Remove the air cleaner.

(2) Disconnect throttle body electrical connectors at MAP sensor, IAC motor and TPS (Fig. 40).

(3) Remove vacuum line at throttle body.

(4) Remove all control cables from throttle body (lever) arm. Refer to the Accelerator Pedal and Throttle Cable section of this group for additional information.

(5) Remove four throttle body mounting bolts (Fig. 41).

(6) Remove throttle body from intake manifold.

(7) Discard old throttle body-to-intake manifold gasket.

REMOVAL - 8.0L

A (factory adjusted) set screw is used to mechanically limit the position of the throttle body throttle plate. **Never attempt to adjust the engine idle speed using this screw.** All idle speed functions are controlled by the powertrain control module (PCM).

(1) Remove the air cleaner cover.

THROTTLE BODY (Continued)

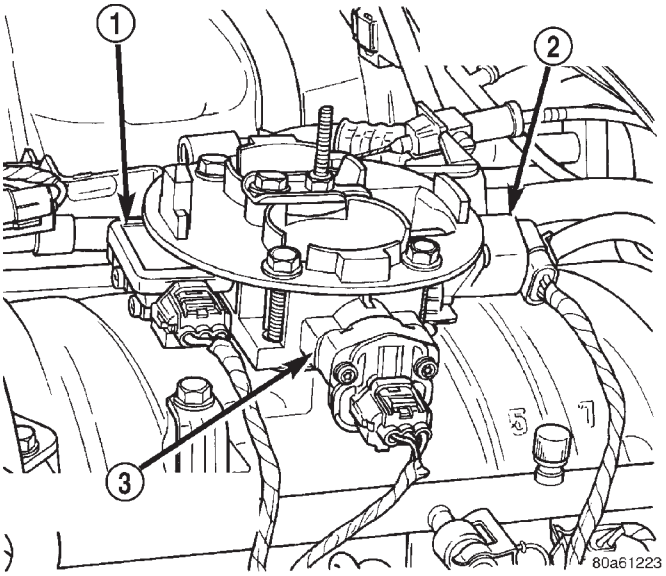

Fig. 40 Sensor Electrical Connectors—5.9L Engines—Typical

1 - MAP SENSOR
2 - IDLE AIR CONTROL MOTOR
3 - THROTTLE POSITION SENSOR

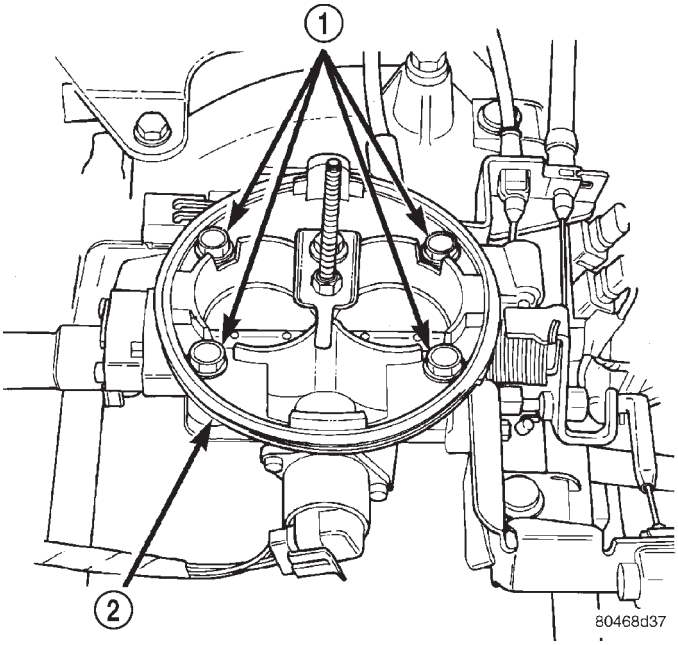

Fig. 41 Throttle Body

1 - THROTTLE BODY MOUNTING BOLTS (4)
2 - THROTTLE BODY

(2) Remove the 4 air cleaner housing mounting nuts and remove housing from throttle body.

(3) Disconnect throttle body electrical connectors at the IAC motor and TPS.

(4) Remove all control cables from throttle body (lever) arm. Refer to the Accelerator Pedal and Throttle Cable section of this group for additional information.

(5) Remove four throttle body mounting nuts (Fig. 42).

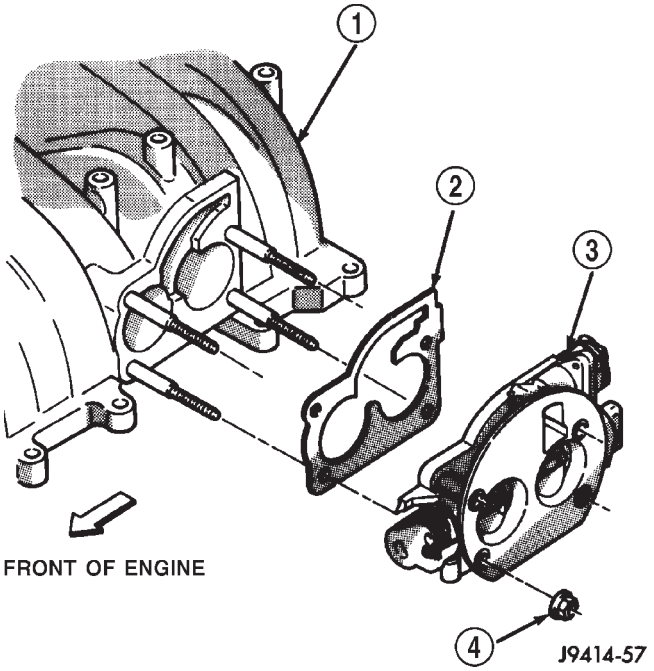

Fig. 42 Throttle Body Mounting Nuts—8.0L Engine

1 - INTAKE MANIFOLD UPPER HALF
2 - GASKET
3 - THROTTLE BODY
4 - MOUNTING NUTS (4)

(6) Remove throttle body from intake manifold.

(7) Discard old throttle body-to-intake manifold gasket.

INSTALLATION

INSTALLATION - 5.9L

A (factory adjusted) set screw is used to mechanically limit the position of the throttle body throttle plate. **Never attempt to adjust the engine idle speed using this screw.** All idle speed functions are controlled by the powertrain control module (PCM).

(1) Clean the mating surfaces of the throttle body and the intake manifold.

(2) Install new throttle body-to-intake manifold gasket.

(3) Install throttle body to intake manifold.

(4) Install four mounting bolts. Tighten bolts to 23 N·m (200 in. lbs.) torque.

(5) Install control cables.

(6) Install vacuum line to throttle body.

(7) Install electrical connectors.

(8) Install air cleaner.

THROTTLE BODY (Continued)

INSTALLATION - 8.0L

A (factory adjusted) set screw is used to mechanically limit the position of the throttle body throttle plate. **Never attempt to adjust the engine idle speed using this screw.** All idle speed functions are controlled by the powertrain control module (PCM).

(1) Clean the mating surfaces of the throttle body and the intake manifold.

(2) Install new throttle body-to-intake manifold gasket.

(3) Install throttle body to intake manifold.

(4) Install four mounting nuts. Tighten nuts to 22 N·m (192 in. lbs.) torque.

(5) Install control cables.

(6) Install electrical connectors.

(7) Install air cleaner housing to throttle body.

(8) Install 4 air cleaner housing mounting nuts. Tighten nuts to 11 N·m (96 in. lbs.) torque.

(9) Install air cleaner housing cover.

THROTTLE CONTROL CABLE

REMOVAL

CAUTION: Be careful not to damage or kink the cable core wire (within the cable sheathing) while servicing accelerator pedal or cables.

(1) From inside the vehicle, hold up the accelerator pedal. Remove the plastic cable retainer and throttle cable core wire from upper end of pedal arm (Fig. 21). The plastic cable retainer snaps into pedal the arm.

(2) Remove the cable core wire at the pedal arm.

(3) Remove the air cleaner housing.

(4) From inside the vehicle, pinch both sides of the plastic cable housing retainer tabs at the dash panel (Fig. 21).

(5) Remove cable housing from dash panel and pull the cable into the engine compartment.

(6) **5.9L Engines:** Disconnect the cable from the routing/holddown clip at the radiator fan shroud.

(7) **8.0L V-10 Engine:** Remove the throttle cable socket at throttle lever ball. (Fig. 44) (snaps off).

(8) **5.9L Engines:** Slip the cable end rearward from pin on throttle body (Fig. 43).

(9) Remove cable housing at throttle body mounting bracket by pressing on release tab with a small screwdriver (Fig. 45) or (Fig. 44). **To prevent cable housing breakage, press on the tab only enough to release the cable from the bracket.** Lift the cable housing straight up from bracket while pressing on release tab. Remove throttle cable from vehicle.

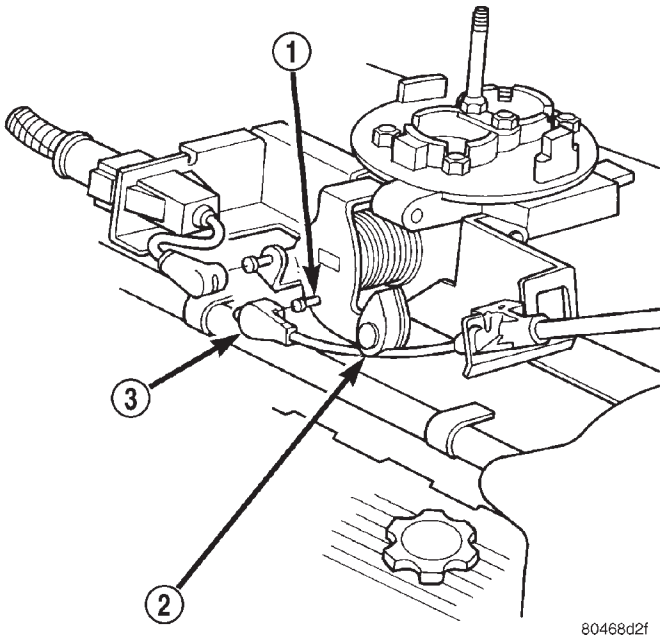

Fig. 43 Throttle Cable at Throttle Body—5.9L Engines—Typical

1 - THROTTLE LEVER PIN
2 - CAM (V-8 ENGINE ONLY)
3 - THROTTLE CABLE END

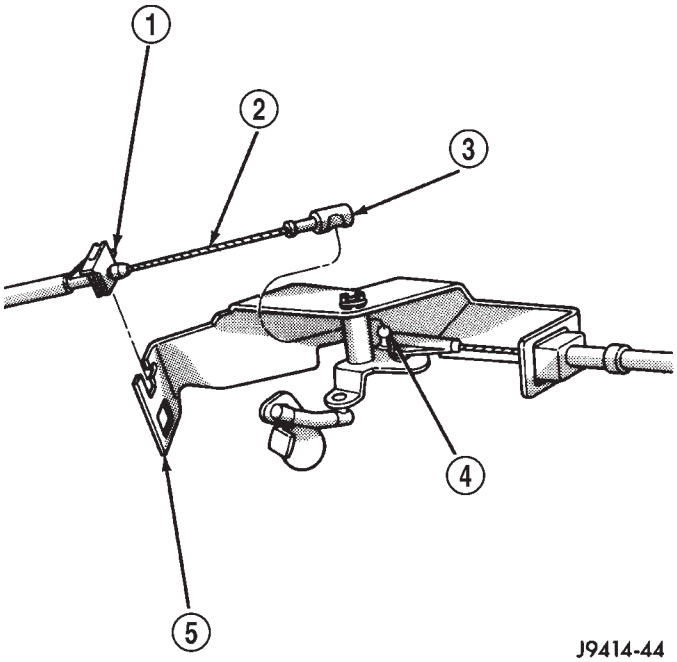

Fig. 44 Throttle Cable at Throttle Body—8.0L V-10 Engine

1 - PRESS TAB FOR CABLE REMOVAL
2 - THROTTLE CABLE
3 - CABLE SOCKET
4 - LEVER BALL
5 - MOUNTING BRACKET

THROTTLE CONTROL CABLE (Continued)

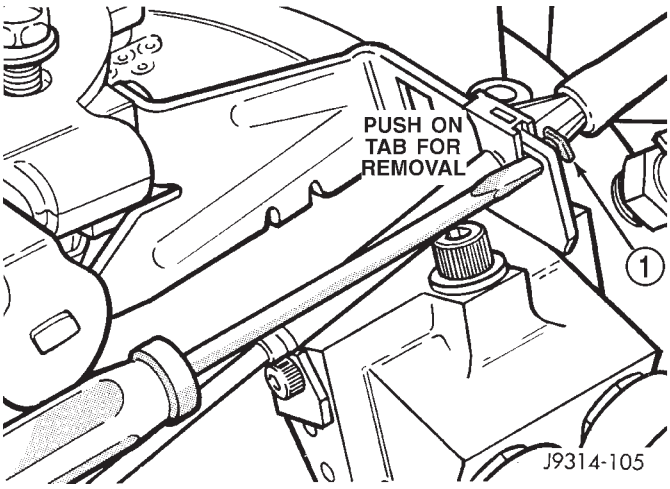

Fig. 45 Cable Release

1 - TAB

INSTALLATION

(1) **5.9L Engines:**

(a) Rotate and hold the throttle cam in the full wide open position. Snap the cable end onto lever pin (Fig. 43).

(b) Connect cable to throttle body mounting bracket (push down and lock).

(c) Connect cable to fan shroud routing clip.

(2) **8.0L V-10 Engine:**

(a) Connect cable end socket to throttle body lever ball (snaps on) (Fig. 44).

(b) Connect cable to throttle body mounting bracket (push down and lock).

(3) Install the remaining cable housing end into and through the dash panel opening (snaps into position). The two plastic pinch tabs (Fig. 21) should lock the cable to dash panel.

(4) From inside the vehicle, hold up the accelerator pedal. Install the throttle cable core wire and plastic cable retainer into and through the upper end of the pedal arm (the plastic retainer is snapped into the pedal arm). When installing the plastic retainer to the accelerator pedal arm, note the index tab on the pedal arm (Fig. 21). Align the index slot on the plastic cable retainer to this index tab.

THROTTLE POSITION SENSOR

DESCRIPTION

The 3–wire Throttle Position Sensor (TPS) is mounted on the throttle body and is connected to the throttle blade.

OPERATION

The TPS is a 3–wire variable resistor that provides the Powertrain Control Module (PCM) with an input signal (voltage) that represents the throttle blade position of the throttle body. The sensor is connected to the throttle blade shaft. As the position of the throttle blade changes, the resistance (output voltage) of the TPS changes.

The PCM supplies approximately 5 volts to the TPS. The TPS output voltage (input signal to the PCM) represents the throttle blade position. The PCM receives an input signal voltage from the TPS. This will vary in an approximate range of from .26 volts at minimum throttle opening (idle), to 4.49 volts at wide open throttle. Along with inputs from other sensors, the PCM uses the TPS input to determine current engine operating conditions. In response to engine operating conditions, the PCM will adjust fuel injector pulse width and ignition timing.

The PCM needs to identify the actions and position of the throttle blade at all times. This information is needed to assist in performing the following calculations:

- Ignition timing advance
- Fuel injection pulse-width
- Idle (learned value or minimum TPS)
- Off-idle (0.06 volt)
- Wide Open Throttle (WOT) open loop (2.608 volts above learned idle voltage)
- Deceleration fuel lean out
- Fuel cutoff during cranking at WOT (2.608 volts above learned idle voltage)
- A/C WOT cutoff (certain automatic transmissions only)

REMOVAL

REMOVAL - 5.9L

The TPS is located on the side of the throttle body.

(1) Remove air intake tube at throttle body.

(2) Disconnect TPS electrical connector.

(3) Remove two TPS mounting bolts (Fig. 46).

(4) Remove TPS from throttle body.

REMOVAL - 8.0L

The TPS is located on the side of the throttle body (Fig. 47).

(1) Remove air intake tube at air cleaner housing.

(2) Remove the air cleaner cover.

(3) Remove the 4 air cleaner housing mounting nuts and remove housing from throttle body.

(4) Disconnect TPS electrical connector.

(5) Remove two TPS mounting bolts (Fig. 47).

(6) Remove TPS from throttle body.

THROTTLE POSITION SENSOR (Continued)

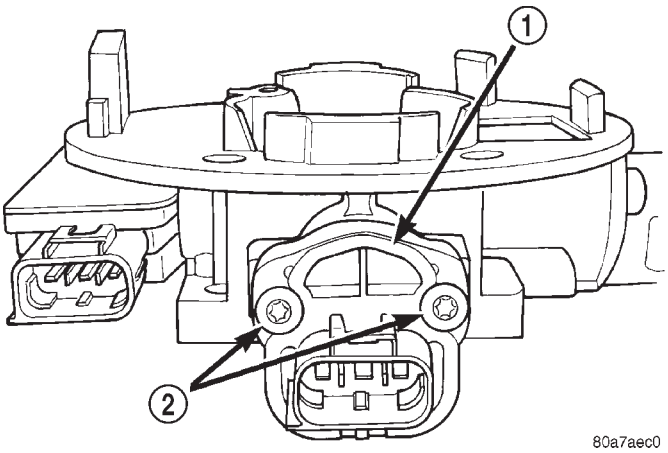

Fig. 46 TPS Mounting Bolts—5.9L Engines

1 - THROTTLE POSITION SENSOR
2 - MOUNTING SCREWS

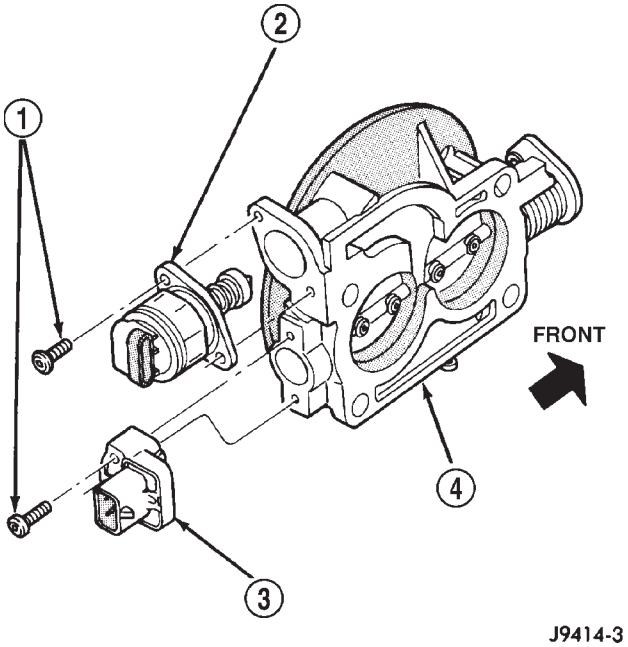

Fig. 47 TPS Mounting Bolts—8.0L Engine

1 - MOUNTING BOLTS (2)
2 - IDLE AIR CONTROL MOTOR
3 - THROTTLE POSITION SENSOR
4 - THROTTLE BODY

INSTALLATION

INSTALLATION - 5.9L

The throttle shaft end of the throttle body slides into a socket in the TPS (Fig. 48). The TPS must be installed so that it can be rotated a few degrees. If the sensor will not rotate, install the sensor with the throttle shaft on the other side of the socket tangs. The TPS will be under slight tension when rotated.

(1) Install the TPS and two retaining bolts.

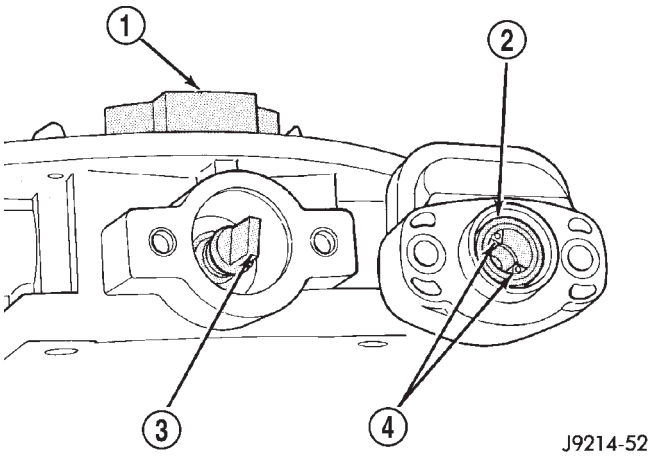

Fig. 48 Installation—5.9L Engines—Typical

1 - THROTTLE BODY
2 - THROTTLE POSITION SENSOR
3 - THROTTLE SHAFT
4 - SOCKET LOCATING TANGS

(2) Tighten bolts to 7 N·m (60 in. lbs.) torque.

(3) Manually operate the throttle control lever by hand to check for any binding of the TPS.

(4) Connect TPS electrical connector to TPS.

(5) Install air intake tube.

INSTALLATION - 8.0L

The throttle shaft end of the throttle body slides into a socket in the TPS (Fig. 49). The TPS must be installed so that it can be rotated a few degrees. If the sensor will not rotate, install the sensor with the throttle shaft on the other side of the socket tangs. The TPS will be under slight tension when rotated.

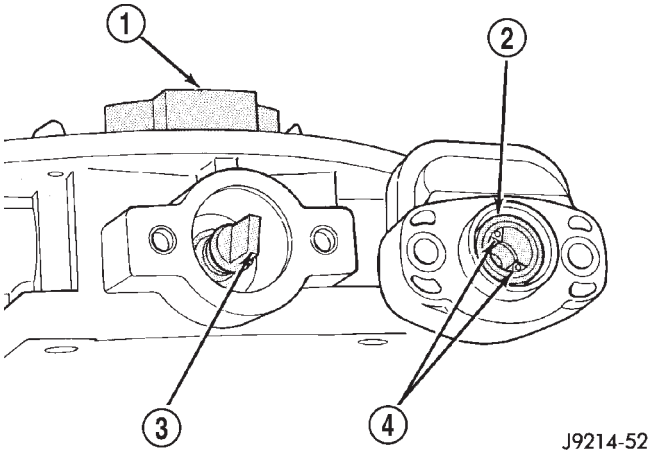

Fig. 49 Installation—Typical Mounting

1 - THROTTLE BODY
2 - THROTTLE POSITION SENSOR
3 - THROTTLE SHAFT
4 - SOCKET LOCATING TANGS

(1) Install the TPS and two retaining bolts.

THROTTLE POSITION SENSOR (Continued)

(2) Tighten bolts to 7 N·m (60 in. lbs.) torque.
(3) Manually operate the throttle control lever by hand to check for any binding of the TPS.
(4) Connect TPS electrical connector to TPS.
(5) Install air cleaner housing to throttle body.
(6) Install 4 air cleaner housing mounting nuts. Tighten nuts to 11 N·m (96 in. lbs.) torque.
(7) Install air cleaner housing cover.
(8) Install air intake tube to cover.

FUEL INJECTOR

DESCRIPTION

A separate fuel injector (Fig. 50) is used for each individual cylinder.

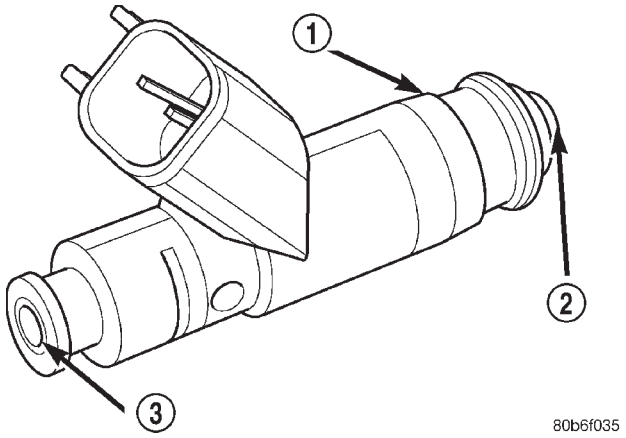

Fig. 50 Fuel Injector

1 - FUEL INJECTOR
2 - NOZZLE
3 - TOP (FUEL ENTRY)

OPERATION

OPERATION

The fuel injectors are electrical solenoids. The injector contains a pintle that closes off an orifice at the nozzle end. When electric current is supplied to the injector, the armature and needle move a short distance against a spring, allowing fuel to flow out the orifice. Because the fuel is under high pressure, a fine spray is developed in the shape of a pencil stream. The spraying action atomizes the fuel, adding it to the air entering the combustion chamber.

An individual fuel injector is used for each individual cylinder. The top (fuel entry) end of the injector is attached into an opening on the fuel rail.

The nozzle (outlet) ends of the injectors are positioned into openings in the intake manifold just above the intake valve ports of the cylinder head. The engine wiring harness connector for each fuel injector is equipped with an attached numerical tag (INJ 1, INJ 2 etc.). This is used to identify each fuel injector.

The injectors are energized individually in a sequential order by the Powertrain Control Module (PCM). The PCM will adjust injector pulse width by switching the ground path to each individual injector on and off. Injector pulse width is the period of time that the injector is energized. The PCM will adjust injector pulse width based on various inputs it receives.

Battery voltage is supplied to the injectors through the ASD relay.

The PCM determines injector pulse width based on various inputs.

OPERATION - PCM OUTPUT

The nozzle ends of the injectors are positioned into openings in the intake manifold just above the intake valve ports of the cylinder head. The engine wiring harness connector for each fuel injector is equipped with an attached numerical tag (INJ 1, INJ 2 etc.). This is used to identify each fuel injector with its respective cylinder number.

The injectors are energized individually in a sequential order by the Powertrain Control Module (PCM). The PCM will adjust injector pulse width by switching the ground path to each individual injector on and off. Injector pulse width is the period of time that the injector is energized. The PCM will adjust injector pulse width based on various inputs it receives.

Battery voltage (12 volts +) is supplied to the injectors through the ASD relay. The ASD relay will shutdown the 12 volt power source to the fuel injectors if the PCM senses the ignition is on, but the engine is not running. This occurs after the engine has not been running for approximately 1.8 seconds.

The PCM determines injector on-time (pulse width) based on various inputs.

FUEL INJECTOR (Continued)

DIAGNOSIS AND TESTING - FUEL INJECTOR

To perform a complete test of the fuel injectors and their circuitry, use the DRB scan tool and refer to the appropriate Powertrain Diagnostics Procedures manual. To test the injector only, refer to the following:

Disconnect the fuel injector wire harness connector from the injector. The injector is equipped with 2 electrical terminals (pins). Place an ohmmeter across the terminals. Resistance reading should be approximately 12 ohms ±1.2 ohms at 20°C (68°F).

REMOVAL

(1) Remove air cleaner assembly.

(2) Remove fuel injector rail assembly. Refer to Fuel Injector Rail removal in this section.

(3) Remove the clip(s) retaining the injector(s) to fuel rail (Fig. 51) or (Fig. 52).

(4) Remove injector(s) from fuel rail.

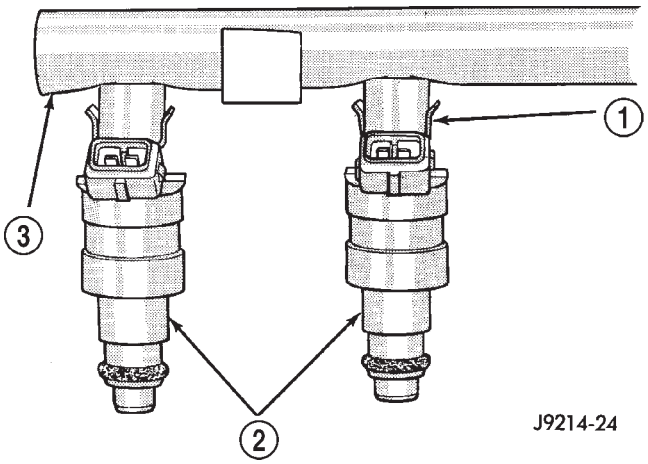

Fig. 51 Fuel Injector Mounting—Typical

1 - CLIP
2 - INJECTOR
3 - FUEL RAIL

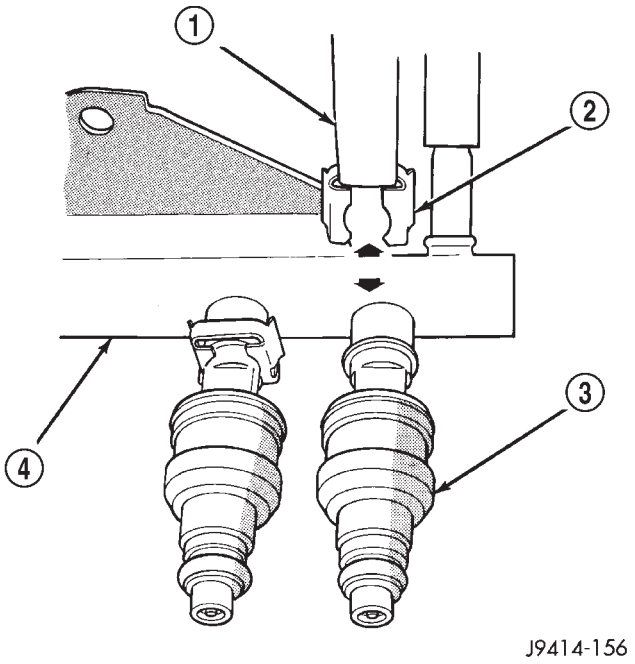

Fig. 52 Injector Retaining Clips—Typical Injector

1 - PLIERS
2 - INJECTOR CLIP
3 - FUEL INJECTOR
4 - FUEL RAIL

INSTALLATION

(1) Apply a small amount of engine oil to each fuel injector o-ring. This will help in fuel rail installation.

(2) Install injector(s) and injector clip(s) to fuel rail.

(3) Install fuel rail assembly. Refer to Fuel Injector Rail installation.

(4) Install air cleaner.

(5) Start engine and check for leaks.

FUEL DELIVERY - DIESEL

TABLE OF CONTENTS

page

FUEL DELIVERY - DIESEL
DESCRIPTION
DESCRIPTION - DIESEL FUEL DELIVERY SYSTEM . . . 55
OPERATION . . . 55
DIAGNOSIS AND TESTING
DIAGNOSIS AND TESTING - FUEL SYSTEM AIR LEAK VACUUM TEST . . . 57
DIAGNOSIS AND TESTING - AIR IN FUEL SYSTEM . . . 60
DIAGNOSIS AND TESTING - FUEL SUPPLY RESTRICTIONS . . . 60
STANDARD PROCEDURE
STANDARD PROCEDURES - WATER DRAINING AT FUEL FILTER . . . 61
STANDARD PROCEDURES - CLEANING FUEL SYSTEM PARTS . . . 61
STANDARD PROCEDURE - AIR BLEED . . . 61
SPECIFICATIONS
FUEL SYSTEM PRESSURES—DIESEL ENGINES . . . 62
FUEL INJECTOR FIRING ORDER—DIESEL . 62
SPECIAL TOOLS
DIESEL FUEL SYSTEM . . . 63
FUEL FILTER / WATER SEPARATOR
DESCRIPTION . . . 63
OPERATION . . . 63
REMOVAL . . . 64
INSTALLATION . . . 65
FUEL HEATER
DESCRIPTION . . . 66
OPERATION . . . 66
DIAGNOSIS AND TESTING - FUEL HEATER . . . 66
REMOVAL/INSTALLATION . . . 67
FUEL HEATER RELAY
DESCRIPTION . . . 67
OPERATION . . . 67
DIAGNOSIS AND TESTING - FUEL HEATER RELAY . . . 68
REMOVAL . . . 69
INSTALLATION . . . 69
FUEL INJECTION PUMP
DESCRIPTION
DESCRIPTION—FUEL PUMP 245 H.P. . . . 69
DESCRIPTION—FUEL PUMP 235 H.P. . . . 69
OPERATION . . . 70
DIAGNOSIS AND TESTING—FUEL INJECTION PUMP TIMING . . . 70
REMOVAL . . . 72
INSTALLATION . . . 75
FUEL INJECTION PUMP DATA PLATE
SPECIFICATIONS
FUEL INJECTION PUMP DATA PLATE . . . 77
FUEL LEVEL SENDING UNIT / SENSOR
DESCRIPTION . . . 77
OPERATION . . . 77
FUEL LINES
DESCRIPTION
DESCRIPTION . . . 77
DESCRIPTION—HIGH PRESSURE FUEL LINES . . . 78
OPERATION—HIGH PRESSURE FUEL LINES . 78
DIAGNOSIS AND TESTING - HIGH-PRESSURE FUEL LINE LEAKS . . . 78
REMOVAL . . . 79
INSTALLATION . . . 81
FUEL TANK
DESCRIPTION - DIESEL FUEL TANK . . . 82
FUEL TANK MODULE
DESCRIPTION . . . 82
OPERATION . . . 82
REMOVAL . . . 83
INSTALLATION . . . 83
FUEL TRANSFER PUMP
DESCRIPTION . . . 83
OPERATION . . . 83
DIAGNOSIS AND TESTING - FUEL TRANSFER PUMP PRESSURE . . . 84
REMOVAL . . . 86
INSTALLATION . . . 87
OVERFLOW VALVE
DESCRIPTION . . . 87
OPERATION . . . 87
DIAGNOSIS AND TESTING - OVERFLOW VALVE . . . 87
REMOVAL . . . 88
INSTALLATION . . . 88
WATER IN FUEL SENSOR
DESCRIPTION . . . 89
OPERATION . . . 89
REMOVAL . . . 89
FUEL DRAIN MANIFOLD
DESCRIPTION . . . 89
OPERATION . . . 89
REMOVAL . . . 90
INSTALLATION . . . 90

FUEL DELIVERY - DIESEL

DESCRIPTION

DESCRIPTION - DIESEL FUEL DELIVERY SYSTEM

The fuel system on the Cummins 24 valve—Turbo Diesel Engine uses an **electronically controlled** fuel injection pump with three control modules.

Also refer to the Powertrain Control Module (PCM) or Engine Control Module sections.

Some fuel system components are shown in (Fig. 1).

The fuel delivery system consists of the:

- Accelerator pedal
- Air cleaner housing/element
- Fuel drain manifold (passage)
- Fuel filter/water separator
- Fuel heater
- Fuel heater relay
- Fuel transfer (lift) pump
- Fuel injection pump
- Fuel injectors
- Fuel heater temperature sensor
- Fuel tank
- Fuel tank filler/vent tube assembly
- Fuel tank filler tube cap
- Fuel tank module containing the rollover valve, fuel gauge sending unit (fuel level sensor) and a separate fuel filter located at bottom of tank module
- Fuel tubes/lines/hoses
- High-pressure fuel injector lines
- In-tank fuel filter (at bottom of fuel tank module)
- Low-pressure fuel supply lines
- Low-pressure fuel return line
- Overflow valve
- Quick-connect fittings
- Throttle cable
- Water draining

OPERATION

WARNING: HIGH-PRESSURE FUEL LINES DELIVER DIESEL FUEL UNDER EXTREME PRESSURE FROM THE INJECTION PUMP TO THE FUEL INJECTORS. THIS MAY BE AS HIGH AS 120,000 KPA (17,405 PSI). USE EXTREME CAUTION WHEN INSPECTING FOR HIGH-PRESSURE FUEL LEAKS. INSPECT FOR HIGH-PRESSURE FUEL LEAKS WITH A SHEET OF CARDBOARD. HIGH FUEL INJECTION PRESSURE CAN CAUSE PERSONAL INJURY IF CONTACT IS MADE WITH THE SKIN.

FUEL DELIVERY - DIESEL (Continued)

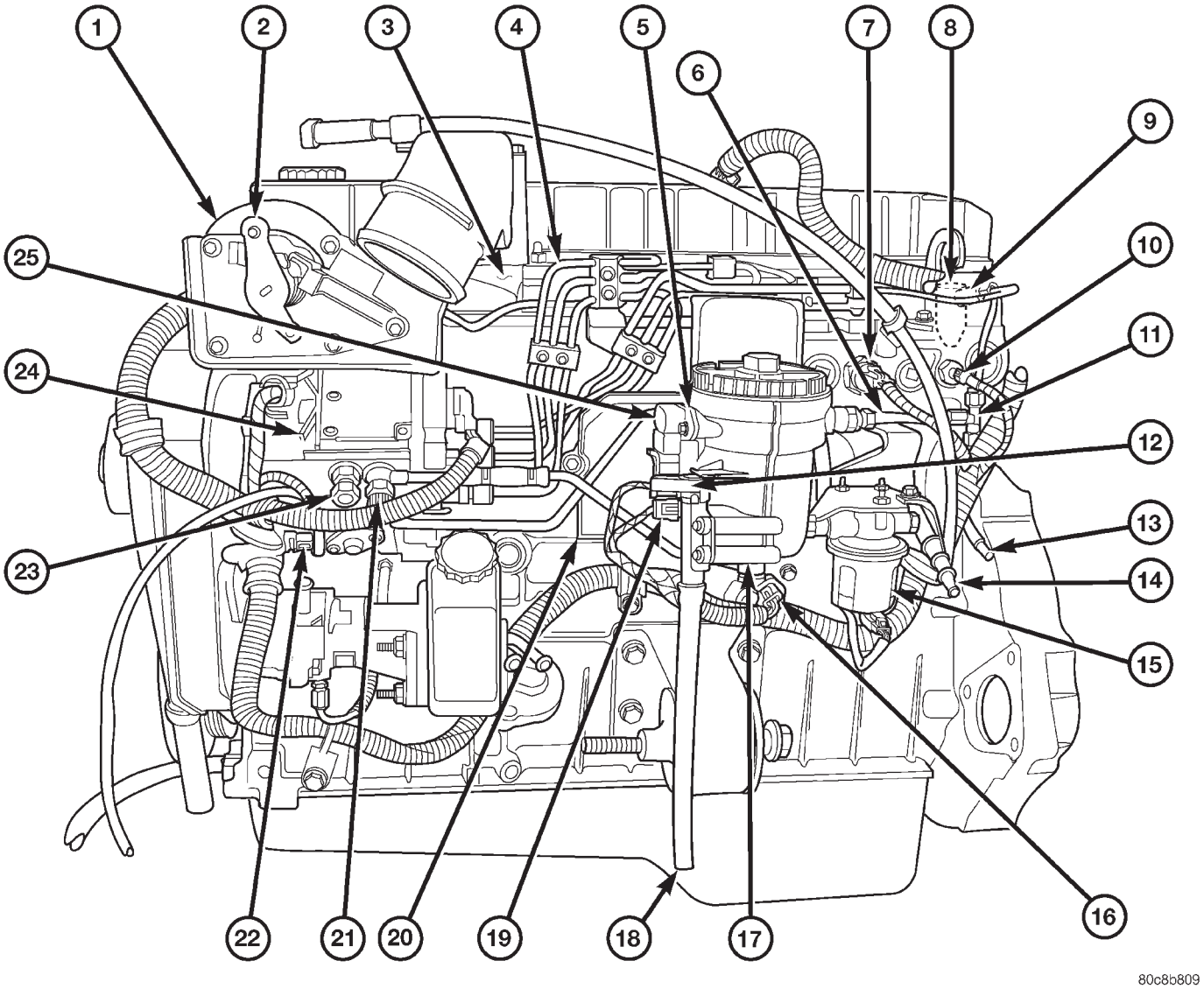

Fig. 1 FUEL SYSTEM COMPONENTS - DIESEL

1 - ENGINE COOLANT TEMPERATURE (ECT) SENSOR
2 - THROTTLE LEVER BELLCRANK AND APPS (ACCELERATOR PEDAL POSITION SENSOR)
3 - INTAKE MANIFOLD AIR HEATER/ELEMENTS
4 - HIGH-PRESSURE FUEL LINES
5 - FUEL HEATER
6 - FUEL PRESSURE TEST PORT
7 - MAP (BOOST) SENSOR
8 - FUEL INJECTORS
9 - FUEL INJECTOR CONNECTOR
10 - INTAKE AIR TEMPERATURE (IAT) SENSOR
11 - FUEL DRAIN MANIFOLD
12 - DRAIN VALVE
13 - FUEL RETURN LINE (TO FUEL TANK)
14 - FUEL SUPPLY LINE (LOW-PRESSURE, TO ENGINE)
15 - FUEL TRANSFER (LIFT) PUMP
16 - OIL PRESSURE SENSOR
17 - FUEL FILTER/WATER SEPARATOR
18 - DRAIN TUBE
19 - WATER-IN-FUEL (WIF) SENSOR
20 - ENGINE CONTROL MODULE (ECM)
21 - FUEL PRESSURE TEST PORT
22 - CAMSHAFT POSITION SENSOR (CMP)
23 - OVERFLOW VALVE
24 - FUEL INJECTION PUMP
25 - FUEL HEATER TEMPERATURE SENSOR (THERMOSTAT)

DIAGNOSIS AND TESTING

DIAGNOSIS AND TESTING - FUEL SYSTEM AIR LEAK VACUUM TEST

The proceeding test will determine if a fuel system air leak exists at the engine. Air leaks will cause hard starting and/or poor performance.

A hand-operated vacuum pump/gauge equipped with a remote or built-on fluid container will be used. A typical hand-operated pump is shown in (Fig. 2). The use of a hand-operated pump **with** a fluid container will prevent fuel oil from entering and possibly damaging pump. Two rubber caps (one 5/16” and one 3/8”) will also be used to temporarily plug / seal fuel system.

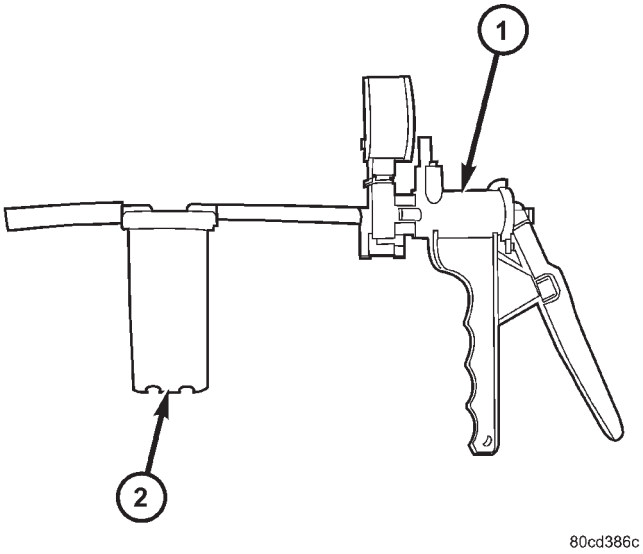

Fig. 2 HAND-OPERATED VACUUM PUMP (TYPICAL)

1 - PUMP
2 - CONTAINER

Vacuum Test Set-Up, Specifications and Conditions

- Examine all engine fuel system components, fittings, lines and hoses for visual evidence of fuel leakage. Repair as necessary before proceeding.
- Be sure gauge on your hand-operated pump is accurate and pump does not leak. Perform a simple test on pump. Add a 3 foot section (minimum) of clear plastic hose to the pump.
- Apply maximum 15-20 inches of vacuum for tests.
- System should hold 15-20 inches of vacuum for 5 continuous minutes. After 5 minutes, vacuum should not drop more than 0.1 inch Hg for 1 minute.
- Disconnect fuel supply and return lines (quick-connects) at rear of engine (Fig. 3).
- Drain as much fuel as possible from engine fuel lines. Also, completely drain fuel filter/water separator housing. Refer to Fuel Filter/Water Separator Removal and Installation for fuel draining procedures. This step must be done to prevent liquid fuel from entering and possibly damaging your hand-operated pump.

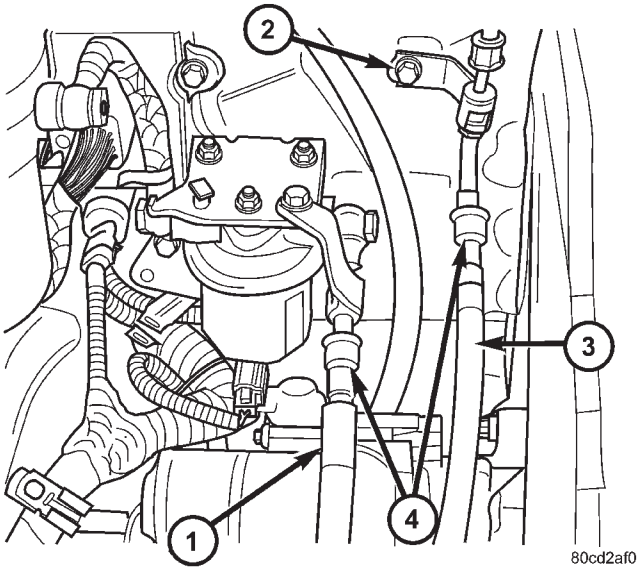

Fig. 3 QUICK-CONNECT FITTINGS LOCATION

1 - FUEL SUPPLY LINE
2 - SUPPORT BRACKET BOLT
3 - FUEL RETURN LINE
4 - QUICK-CONNECT FITTINGS (2)

Testing All Engine Fuel System Components Together

This test will indicate an air leak is present somewhere on the engine.

(1) Be sure water drain valve is securely closed.

(2) Examine all engine fuel system components, fittings, lines and hoses for visual evidence of fuel leakage. Repair as necessary.

(3) Install 5/16” rubber cap to fuel return line on engine (Fig. 4).

(4) Install hand-operated vacuum pump to fuel supply line on engine (Fig. 4).

(5) Perform vacuum test. Be careful not to allow liquid fuel to get into your hand-operated vacuum pump.

(6) Vacuum holds ? End of test; no leaks found on engine.

(7) Vacuum leak ? Proceed. The following tests will isolate the component that is leaking.

FUEL DELIVERY - DIESEL (Continued)

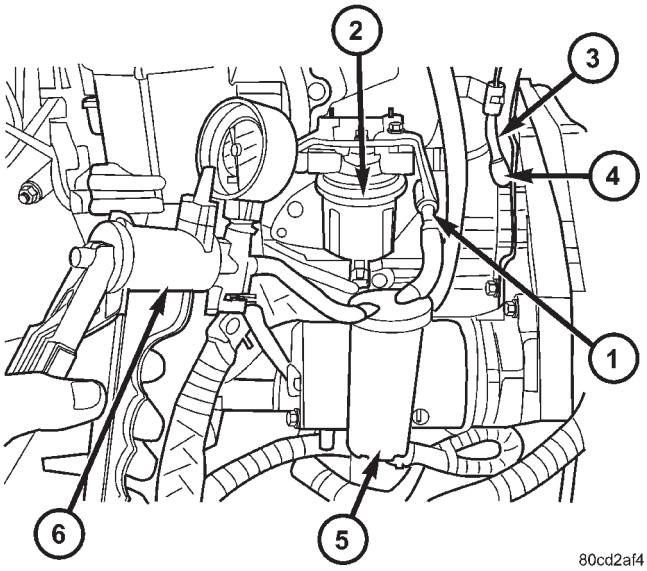

Fig. 4 VACUUM PUMP INSTALLED TO FUEL LINE

1 - FUEL SUPPLY LINE
2 - FUEL TRANSFER PUMP
3 - FUEL RETURN LINE
4 - RUBBER CAP
5 - FLUID CONTAINER
6 - HAND-OPERATED PUMP

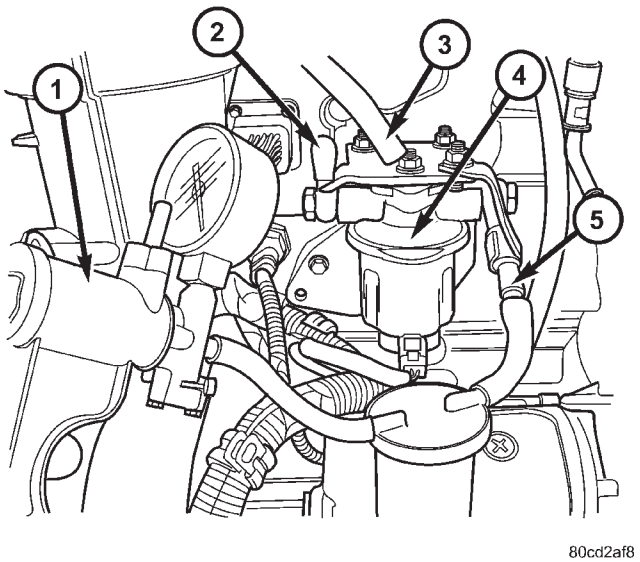

Fig. 5 FUEL HOSE AT TRANSFER PUMP

1 - HAND-OPERATED PUMP
2 - RUBBER CAP TO FUEL TRANSFER PUMP OUTLET FITTING
3 - DISCONNECTED FUEL OUTLET HOSE
4 - FUEL TRANSFER PUMP
5 - TRANSFER PUMP INLET FITTING

Testing Fuel Transfer Pump

(1) Leave vacuum pump attached to fuel supply line (Fig. 5).

(2) Disconnect rubber fuel hose from fitting at outlet side of fuel transfer pump (Fig. 5). To plug / seal system, install 3/8” rubber cap to this fitting (Fig. 5).

(3) Perform vacuum test. Be careful not to allow liquid fuel to get into your hand-operated vacuum pump.

(4) Vacuum leak ? Check/repair all transfer pump fittings and sealing washers for leaks. Check/repair rubber hose and clamps at sides of transfer pump for leaks. Perform another vacuum test. If leak still present, replace fuel transfer pump.

(5) Vacuum holds ? Proceed.

Testing Fuel Filter / Water Separator

(1) Leave vacuum pump attached to fuel supply line (Fig. 4).

(2) Disconnect rubber fuel hose located between VP-44 pump and fuel filter/water separator (Fig. 6). To allow easier hose removal, remove test port fitting and fuel inlet line at VP-44 pump (Fig. 6). To plug / seal system, install 3/8” rubber cap to this outline line (Fig. 7).

(3) Reconnect rubber fuel hose to fitting at outlet side of fuel transfer pump (Fig. 5).

(4) Perform vacuum test. Be careful not to allow liquid fuel to get into hand-operated vacuum pump.

(5) Vacuum leak ? Check/repair all fittings and sealing washers for leaks. Check/repair rubber hose and clamps for leaks. Check fuel heater and water-in-fuel sensor o-rings for leaks. Check filter canister seal at top of canister for leaks. Repair as necessary.

(6) Vacuum holds ? Proceed.

Testing VP-44 Pump and Fuel Return / Drain System Within Cylinder Head

(1) Leave vacuum pump attached to fuel supply line (Fig. 4).

(2) Position rubber hose and 2 clamps to VP-44 drain line. Install test port fitting and fuel drain line to VP-44 pump. Tighten test port fitting to 24 N·m (18 ft. lbs. or 212 in. lbs.) torque. Position 2 hose clamps to rubber hose.

(3) Loosen, but do not remove, fuel line support bracket bolt (Fig. 8).

(4) Disconnect and separate fuel drain line at top of “T” fitting (Fig. 8). To plug / seal system, install 3/8” rubber cap to this disconnected line (Fig. 8).

(5) Perform vacuum test. Be careful not to allow liquid fuel to get into your hand-operated vacuum pump.

(6) Vacuum leak ?

(a) Check return line banjo bolt and sealing washers at rear of cylinder head for leaks. Repair as necessary.

FUEL DELIVERY - DIESEL (Continued)

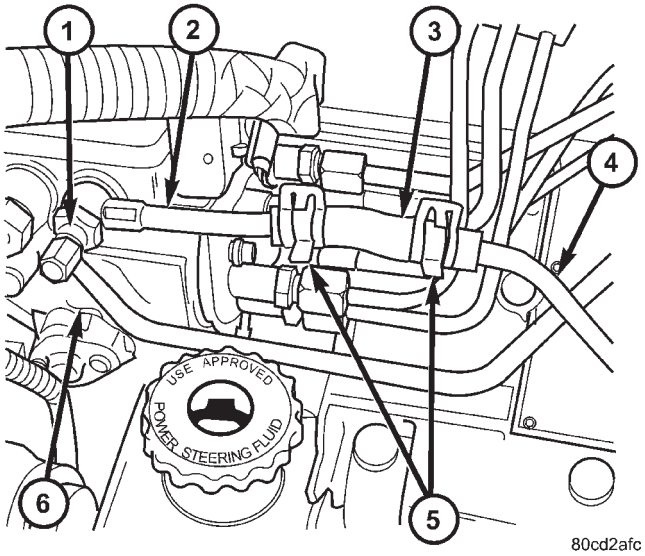

Fig. 6 FUEL HOSE AT FUEL FILTER

1 - TEST PORT FITTING
2 - VP-44 FUEL INLET LINE
3 - RUBBER FUEL HOSE
4 - FUEL FILTER OUTLET LINE
5 - HOSE CLAMPS (2)
6 - VP-44 INJECTION PUMP

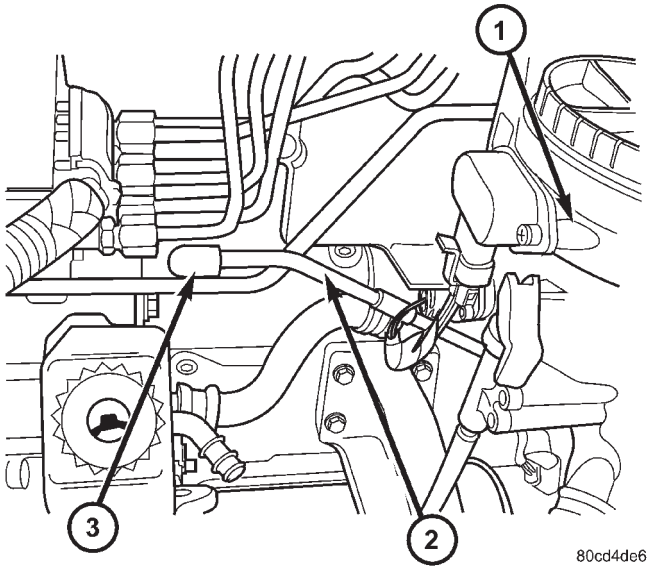

Fig. 7 CAPPING OFF FUEL FILTER OUTLET LINE

1 - FUEL FILTER / WATER SEPARATOR
2 - OUTLET LINE
3 - RUBBER CAP

(b) Remove all high-pressure fuel lines at injector high-pressure connectors. Examine all injector connector o-rings. If any damage to o-ring exists, replace connector.

(c) If no damage is found at connectors, remove all 6 fuel injectors to inspect o-rings and sealing washers. Also inspect cylinder head bores where these sealing washers make contact. The bore contact area should be smooth and uniform.

(7) Vacuum holds ? Proceed.

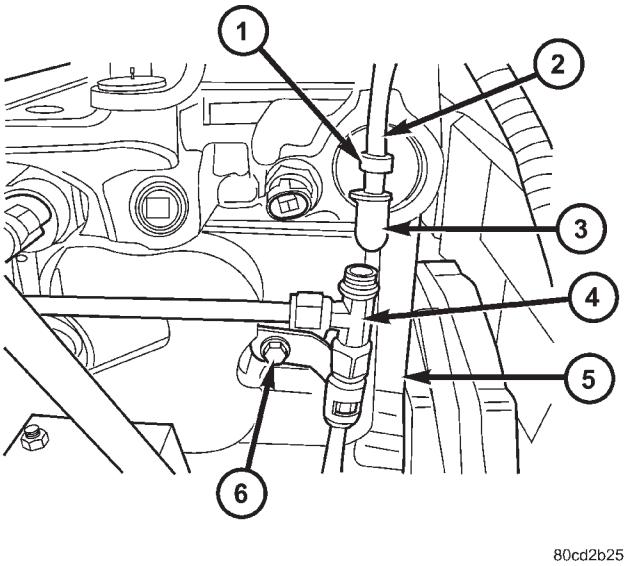

Fig. 8 ″T″ FITTING - TOP DISCONNECTED

1 - RUBBER SEAL/GASKET
2 - FUEL DRAIN LINE AT TOP OF ″T″ FITTING (FROM REAR OF CYLINDER HEAD)
3 - RUBBER CAP
4 - ″T″ FITTING
5 - LEFT REAR CORNER OF ENGINE
6 - SUPPORT BRACKET BOLT

Testing VP-44 Pump and its Return Line

(1) Remove rubber 3/8” sealing cap and reconnect / tighten fuel drain line to top of “T” fitting (Fig. 8).

(2) Disconnect and separate VP-44 drain line at front of “T” fitting (Fig. 9). To plug / seal system, install 3/8” rubber cap to this disconnected line (Fig. 9).

(3) Disconnect rubber fuel hose at VP-44 inlet (Fig. 10). Connect your hand-operated vacuum pump at this inlet point.

(4) Perform vacuum test. Be careful not to allow liquid fuel to get into your hand-operated vacuum pump.

FUEL DELIVERY - DIESEL (Continued)

(5) Vacuum leak ? Check condition of banjo fittings, banjo bolts, and sealing washers. If leaks are not present, a leak exists within VP-44 pump. Replacement of VP-44 requires authorization.

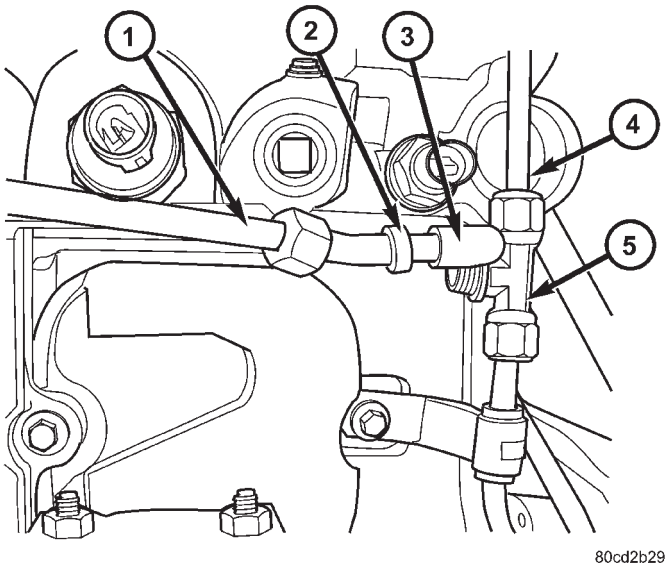

Fig. 9 "T" FITTING - FRONT DISCONNECTED

1 - FUEL DRAIN LINE (TO VP-44 PUMP)
2 - RUBBER SEAL/GASKET
3 - RUBBER CAP
4 - FUEL DRAIN LINE
5 - "T" FITTING

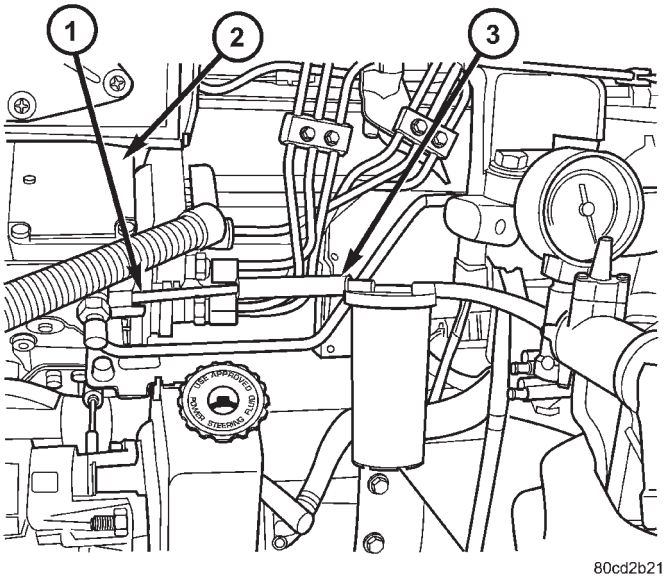

Fig. 10 VACUUM PUMP AT VP-44 PUMP

1 - VP-44 DRAIN LINE
2 - VP-44 INJECTION PUMP
3 - HAND-OPERATED PUMP

DIAGNOSIS AND TESTING - AIR IN FUEL SYSTEM

Air will enter the fuel system whenever fuel supply lines, separator filters, injection pump, high-pressure lines or injectors are removed or disconnected. Air trapped in the fuel system can result in hard starting, a rough running engine, engine misfire, low power, excessive smoke and fuel knock. After service is performed, air must be bled from the system before starting the engine.

Inspect the fuel system from the fuel transfer pump to the injectors for loose connections. Leaking fuel is an indicator of loose connections or defective seals. Air can also enter the fuel system between the fuel tank and the transfer pump. Inspect the fuel tank and fuel lines for damage that might allow air into the system.

For air bleeding, refer to the Air Bleed Procedure.

DIAGNOSIS AND TESTING - FUEL SUPPLY RESTRICTIONS

LOW-PRESSURE LINES

Fuel supply line restrictions or a defective fuel transfer pump can cause starting problems and prevent engine from accelerating. The starting problems include; low power and/or white fog like exhaust.

Test all fuel supply lines for restrictions or blockage. Flush or replace as necessary. Bleed fuel system of air once a fuel supply line has been replaced. Refer to Air Bleed Procedure for procedures.

To test for fuel line restrictions, a vacuum restriction test may be performed. Refer to Fuel Transfer Pump Pressure Test.

HIGH-PRESSURE LINES

Restricted (kinked or bent) high-pressure lines can cause starting problems, poor engine performance, engine mis-fire and white smoke from exhaust.

Examine all high-pressure lines for any damage. Each radius on each high-pressure line must be smooth and free of any bends or kinks.

Replace damaged, restricted or leaking high-pressure fuel lines with correct replacement line.

CAUTION: All high-pressure fuel lines must be clamped securely in place in holders. Lines cannot contact each other or other components. Do not attempt to weld high-pressure fuel lines or to repair lines that are damaged. If line is kinked or bent, it must be replaced. Use only recommended lines when replacement of high-pressure fuel line is necessary.

FUEL DELIVERY - DIESEL (Continued)

STANDARD PROCEDURE

STANDARD PROCEDURES - WATER DRAINING AT FUEL FILTER

Refer to Fuel Filter/Water Separator removal/installation for procedures.

STANDARD PROCEDURES - CLEANING FUEL SYSTEM PARTS

CAUTION: Cleanliness cannot be overemphasized when handling or replacing diesel fuel system components. This especially includes the fuel injectors, high-pressure fuel lines and fuel injection pump. Very tight tolerances are used with these parts. Dirt contamination could cause rapid part wear and possible plugging of fuel injector nozzle tip holes. This in turn could lead to possible engine misfire. Always wash/clean any fuel system component thoroughly before disassembly and then air dry. Cap or cover any open part after disassembly. Before assembly, examine each part for dirt, grease or other contaminants and clean if necessary. When installing new parts, lubricate them with clean engine oil or clean diesel fuel only.

STANDARD PROCEDURE - AIR BLEED

A certain amount of air becomes trapped in the fuel system when fuel system components on the supply and/or high-pressure side are serviced or replaced. Primary air bleeding is accomplished using the electric fuel transfer (lift) pump. If the vehicle has been allowed to run completely out of fuel, the fuel injectors must also be bled as the fuel injection pump **is not** self-bleeding (priming).

Servicing or replacing components on the fuel return side will not require air bleeding.

WARNING: DO NOT BLEED AIR FROM THE FUEL SYSTEM OF A HOT ENGINE.

(1) Loosen, but do not remove, banjo bolt (test port fitting) holding low-pressure fuel supply line to side of fuel injection pump (Fig. 11). Place a shop towel around banjo fitting to catch excess fuel.

The fuel transfer (lift) pump is self-priming: When the key is first turned on (without cranking engine), the pump operates for approximately 2 seconds and then shuts off. The pump will also operate for up to 25 seconds after the starter is quickly engaged, and then disengaged without allowing the engine to start. The pump shuts off immediately if the key is on and the engine stops running.

(2) Turn key to CRANK position and quickly release key to ON position before engine starts. This will operate fuel transfer pump for approximately 25 seconds.

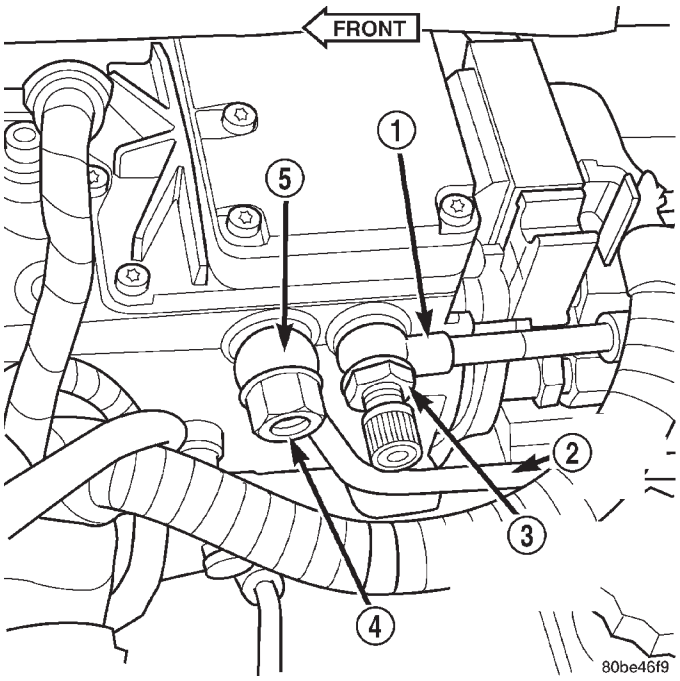

Fig. 11 Fuel Supply Line Banjo Bolt

1 - FUEL SUPPLY LINE
2 - FUEL RETURN LINE
3 - BANJO BOLT (TEST PORT FITTING)
4 - OVERFLOW VALVE
5 - BANJO FITTING

(3) If fuel is not present at fuel supply line after 25 seconds, turn key OFF. Repeat previous step until fuel is exiting at fuel supply line.

(4) Tighten banjo bolt at fuel supply line to 24 N·m (18 ft. lbs.) torque. Primary air bleeding is now completed.

(5) Attempt to start engine. If engine will not start, proceed to following steps. **If engine does start, it may run erratically and be very noisy for a few minutes. This is a normal condition.**

(6) **Continue to next step if:**

- The vehicle fuel tank has been allowed to run empty
- The fuel injection pump has been replaced
- High-pressure fuel lines have been replaced
- Vehicle has not been operated after an extended period

CAUTION: Do not engage the starter motor for more than 30 seconds at a time. Allow two minutes between cranking intervals.

(7) Perform previous air bleeding procedure steps using fuel transfer pump. Be sure fuel is present at fuel supply line (Fig. 11) before proceeding.

FUEL DELIVERY - DIESEL (Continued)

(8) Crank the engine for 30 seconds at a time to allow air trapped in the injection pump to vent out the drain manifold.

WARNING: THE FUEL INJECTION PUMP SUPPLIES EXTREMELY HIGH FUEL PRESSURE TO EACH INDIVIDUAL INJECTOR THROUGH THE HIGH-PRESSURE LINES. FUEL UNDER THIS AMOUNT OF PRESSURE CAN PENETRATE THE SKIN AND CAUSE PERSONAL INJURY. WEAR SAFETY GOGGLES AND ADEQUATE PROTECTIVE CLOTHING AND AVOID CONTACT WITH FUEL SPRAY WHEN BLEEDING HIGH-PRESSURE FUEL LINES.

WARNING: ENGINE MAY START WHILE CRANKING STARTER MOTOR.

Engine may start, may run erratically and be very noisy for a few minutes. This is a normal condition.

(9) Thoroughly clean area around injector fittings where they join injector connector tubes.

(10) Bleed air by loosening high-pressure fuel line fittings (Fig. 12) at cylinders number 3, 4 and 5.

(11) Continue bleeding injectors until engine runs smoothly. It may take a few minutes for engine to run smooth.

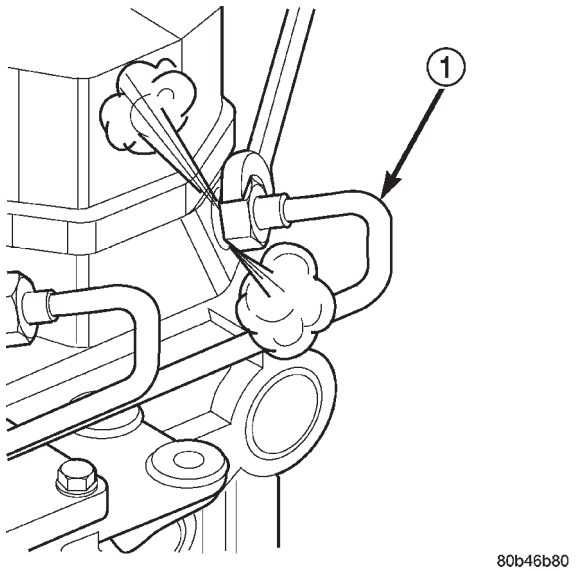

Fig. 12 Bleeding High-Pressure Fuel Lines at Injectors

1 - HIGH-PRESSURE FUEL LINE

(12) Tighten fuel line(s) at injector(s) to 38 N·m (28 ft. lbs.) torque.

SPECIFICATIONS

FUEL SYSTEM PRESSURES—DIESEL ENGINES

DESCRIPTION	PRESSURE
Fuel Transfer (Lift) Pump Pressure With Engine Running	Minimum 69 kPa (10 psi)
Fuel Transfer (Lift) Pump Pressure With Engine Cranking	Minimum 48 kPa (7 psi)
Fuel Injector “Pop Off” Pressure	31,026 kPa (310 bars) or (4500 psi ± 250 psi)
Fuel Injector Leak-Down Pressure	Approximately 20 bars (291 psi) lower than pop pressure
Fuel Pressure Drop Across Fuel Filter Test Ports	34 kPa max. (5 psi. max.) at 2500 rpm (rated rpm)
Overflow Valve Release Pressure	97 kPa max. (14 psi.) at 2500 rpm (rated rpm)

FUEL INJECTOR FIRING ORDER—DIESEL

1–5–3–6–2–4

FUEL DELIVERY - DIESEL (Continued)

SPECIAL TOOLS

DIESEL FUEL SYSTEM

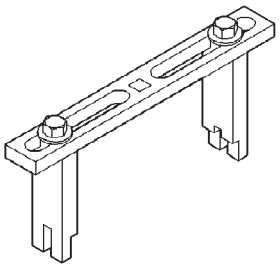

Spanner Wrench (Fuel Tank Module Removal/ Installation)—6856

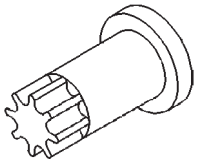

Engine Barring (Rotating) Tool—7471B (also part of Kit #6860)

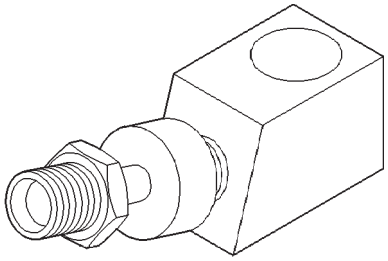

Fuel Injector Pop Pressure Adaptor—8301

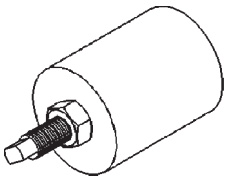

Fuel Injector Remover—8318

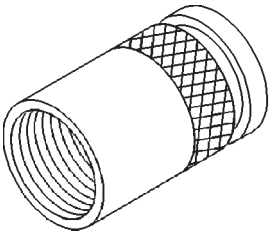

Fuel Injector Tube (Connector) Remover—8324

FUEL FILTER / WATER SEPARATOR

DESCRIPTION

The fuel filter/water separator assembly is located on left side of engine above starter motor (Fig. 13). The assembly also includes the fuel heater and Water-In-Fuel (WIF) sensor.

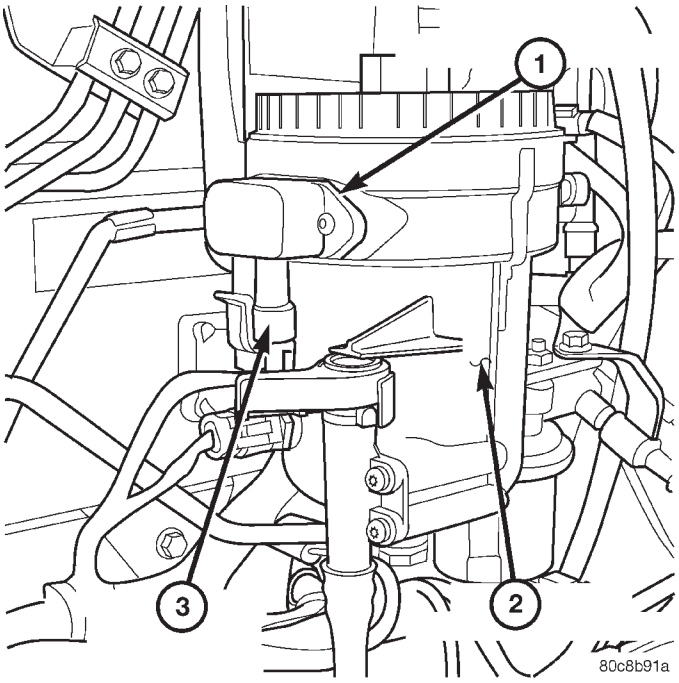

Fig. 13 FUEL HEATER LOCATION

1 - FUEL HEATER AND TEMP. SENSOR
2 - FUEL FILTER/WATER SEPARATOR
3 - FUEL HEATER ELECTRICAL CONNECTOR

OPERATION

The fuel filter/water separator protects the fuel injection pump by removing water and contaminants from the fuel. The construction of the filter/separator allows fuel to pass through it, but helps prevent moisture (water) from doing so. Moisture collects at the bottom of the canister.

Refer to the maintenance schedules for the recommended fuel filter replacement intervals.

For draining of water from canister, refer to Fuel Filter/Water Separator Removal/Installation section.

A Water-In-Fuel (WIF) sensor is attached to side of canister. Refer to Water-In-Fuel Sensor Description/ Operation.

The fuel heater is installed into the top of the filter/separator housing. Refer to Fuel Heater Description/Operation.

FUEL FILTER / WATER SEPARATOR (Continued)

REMOVAL

Refer to maintenance schedules in this manual for recommended fuel filter replacement intervals.

Draining water from fuel filter/water separator housing:

The housing drain valve (Fig. 14) serves two purposes. One is to **partially** drain filter housing of excess water. The other is to **completely** drain housing for fuel filter, drain valve, heater element or water-in-fuel sensor replacement.

The filter housing should be partially drained whenever water-in-fuel warning lamp remains illuminated. (Note that lamp will be illuminated for approximately two seconds when ignition key is initially placed in ON position for a bulb check).

(1) A drain hose is located at bottom of drain valve (Fig. 14). Place drain pan under drain hose.

(2) **With engine not running,** pull drain valve handle upward to OPEN (DRAIN) position (Fig. 14). Hold drain valve open until all water and contaminants have been removed and clean fuel exits drain hose.

(3) If drain valve, fuel heater element or Water-In-Fuel (WIF) sensor is being replaced, drain housing completely. Dispose of mixture in drain pan according to applicable regulations.

(4) After draining operation, push valve handle downward to CLOSE position (Fig. 14).

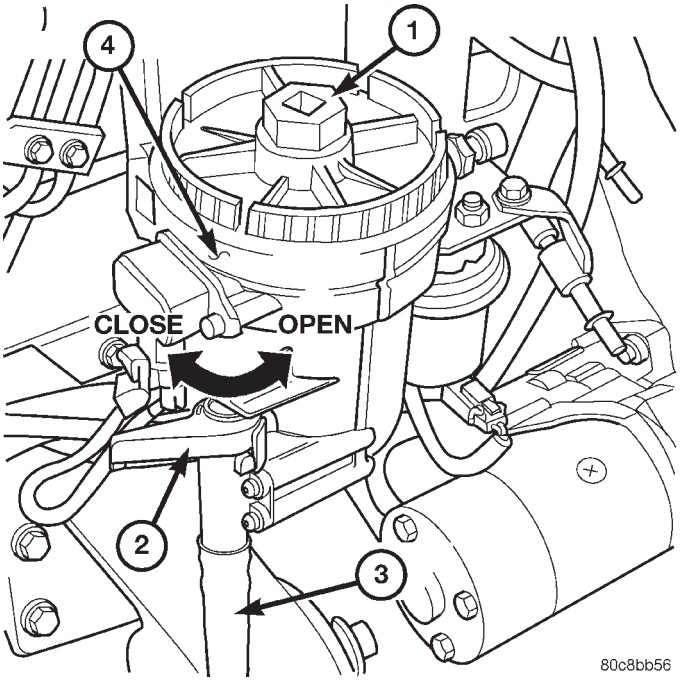

Fig. 14 Water Drain Valve and Drain Hose

1 - FUEL FILTER CAP
2 - DRAIN VALVE HANDLE
3 - DRAIN HOSE
4 - FUEL FILTER/WATER SEPARATOR

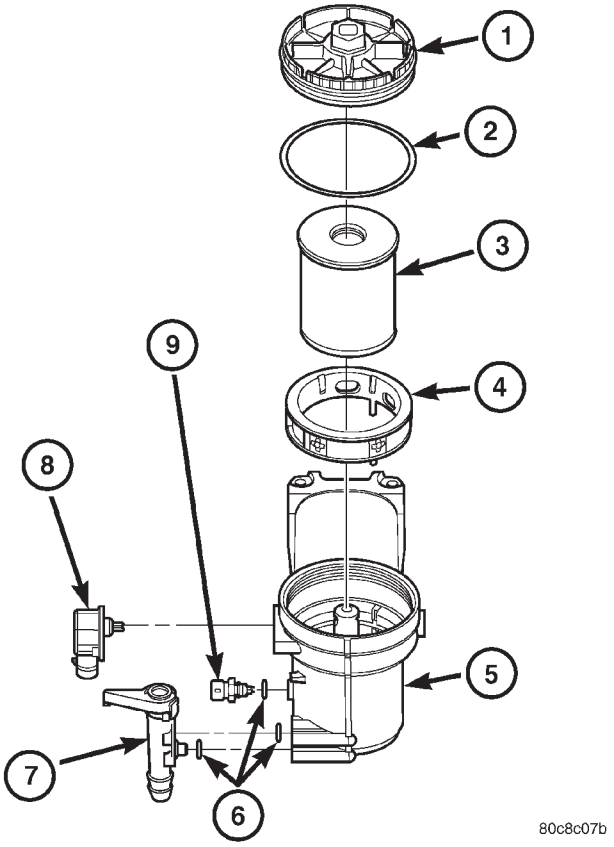

Fig. 15 Fuel Filter/Water Separator Components

1 - CAP
2 - O-RING
3 - FUEL FILTER
4 - FUEL HEATER ELEMENT
5 - HOUSING
6 - O-RINGS
7 - DRAIN VALVE
8 - FUEL HEATER THERMOSTAT
9 - WATER-IN-FUEL SENSOR

(5) **Fuel Filter Replacement:** The fuel filter is located inside of the fuel filter housing (Fig. 15).

(a) Unscrew and remove fuel filter cap at top of fuel filter housing (Fig. 14). To unscrew, attach tool to 6–sided hex center of cap. Do not attempt to loosen cap at outer edge. The fuel filter cap is designed to remove filter while pulling up on cap.

(b) Remove o-ring (Fig. 15) from filter cap and discard.

(c) The filter is retained to the cap with a series of locking fingers. Carefully pry back a few of the fingers to unlock filter from cap.

(6) **Water-In-Fuel (WIF) Sensor Replacement:** The WIF sensor is located on the side of the fuel filter housing (Fig. 15).

(a) Disconnect electrical connector at sensor (Fig. 16).

(b) Unscrew sensor from filter housing.

FUEL FILTER / WATER SEPARATOR (Continued)

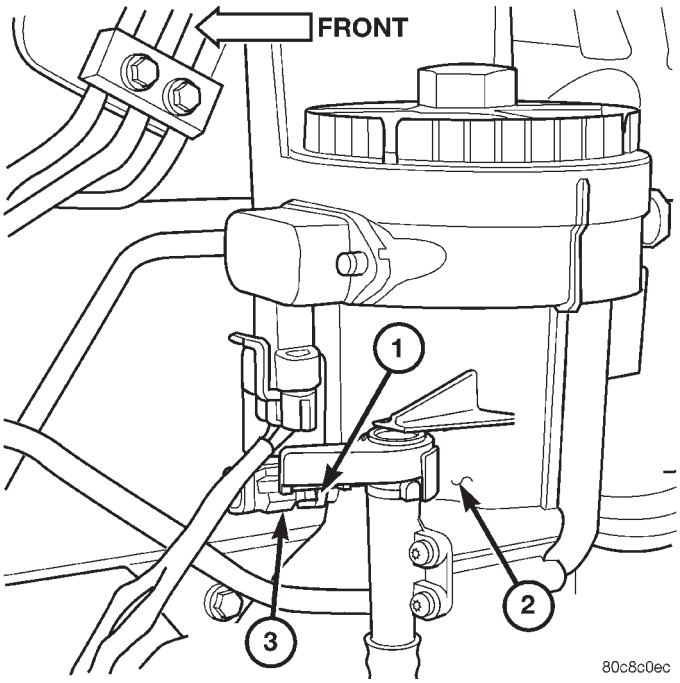

Fig. 16 Water-In-Fuel Sensor

1 - WATER-IN-FUEL (WIF) SENSOR
2 - FUEL FILTER/WATER SEPARATOR
3 - WIF SENSOR CONNECTOR

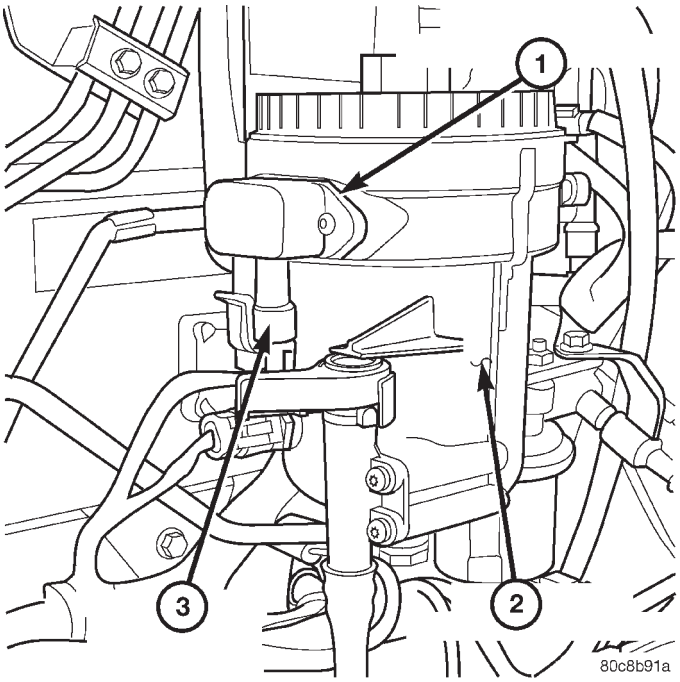

Fig. 17 Fuel Heater/Filter/Water Separator Location

1 - FUEL HEATER AND TEMP. SENSOR
2 - FUEL FILTER/WATER SEPARATOR
3 - FUEL HEATER ELECTRICAL CONNECTOR

(c) Check condition of o-ring.

(d) Inspect the 2 WIF sensor probes. Carefully clean contaminants from sensor probes with a cloth if necessary. Replace sensor if probes are covered with contaminants and will not clean up.

(7) **Fuel Heater Element Replacement:** The heater element is located in the fuel filter housing (Fig. 15).

(a) Remove fuel filter. See previous steps.

(b) Disconnect electrical connector from fuel temperature sensor housing at side of fuel filter housing (Fig. 17).

(c) Remove 2 temperature sensor housing mounting screws and carefully remove sensor housing from fuel filter housing.

(d) Pry round wiring connector from fuel filter housing and heater element. This connector passes through the fuel filter housing and is plugged directly into the heater element.

(e) Unlock heater element fingers and pry heater element from filter housing.

(8) **Drain Valve Replacement:** The drain valve is located on the side of the fuel filter housing (Fig. 15).

(a) Disconnect drain hose (Fig. 14) at bottom of drain valve.

(b) Remove 4 drain valve mounting screws.

(c) Remove drain valve from filter housing.

(d) Remove 2 drain valve o-rings from filter housing.

INSTALLATION

Refer to maintenance schedules in this manual for recommended fuel filter replacement intervals.

(1) Thoroughly clean inside of filter housing, filter cap and all related components.

(2) **Fuel Filter:**

(a) Fill fuel filter housing with clean diesel fuel. **If filter housing (canister) is not filled with clean diesel fuel before installation, manual air bleeding of fuel system may be necessary (temporary rough engine running may occur). If necessary, refer to Air Bleed Procedures.**

(b) Snap new filter into locking fingers on cap. Hole in filter should face downward.

(c) Install new o-ring to cap.

(d) Apply a light film of clean diesel oil to cap o-ring seal.

(e) Load filter and cap into housing.

(f) Tighten cap to 25 ft. lbs. torque. Do not overtighten cap.

(3) **Water-In-Fuel (WIF) Sensor:**

(a) Install new o-ring seal to WIF sensor.

(b) Apply a light film of clean diesel oil to o-ring seal.

(c) Install sensor into housing.

FUEL FILTER / WATER SEPARATOR (Continued)

(d) Tighten sensor to 2–3 N·m (15–20 in. lbs.) torque.

(e) Connect electrical connector to WIF sensor.

(f) Install fuel filter. Refer to previous steps.

(4) **Fuel Heater Element:**

(a) Do not install fuel filter until heater element is installed.

(b) Position heater element into filter housing (fingers downward). Lock fingers into housing.

(c) Install new o-ring to electrical connector (where connector passes through filter housing). Apply a light film of clean diesel oil to o-ring seal. Press this connector into filter housing until it snaps into heater element.

(d) Install temperature sensor housing and 2 mounting screws to fuel filter housing.

(e) Connect electrical connector.

(f) Install fuel filter. Refer to previous steps.

(5) **Drain Valve:**

(a) Install 2 new o-rings to valve and filter housing.

(b) Apply a light film of clean diesel oil to both seals.

(c) Position valve to filter housing.

(d) Install 4 mounting screws and tighten to 3–5 N·m (30–40 in. lbs.) torque.

(e) Connect drain hose to drain valve.

(f) Install fuel filter. Refer to previous steps.

(6) Start engine and check for leaks.

FUEL HEATER

DESCRIPTION

The fuel heater assembly is located on the side of the fuel filter housing (Fig. 18).

The heater/element assembly is equipped with a temperature sensor (thermostat) that senses fuel temperature. This sensor is attached to the fuel heater/element assembly.

OPERATION

The fuel heater is used to prevent diesel fuel from waxing during cold weather operation.

When the temperature is below 45 ±8 degrees F, the temperature sensor allows current to flow to the heater element warming the fuel. When the temperature is above 75 ±8 degrees F, the sensor stops current flow to the heater element.

Battery voltage to operate the fuel heater element is supplied from the ignition switch and through the fuel heater relay. Also refer to Fuel Heater Relay. **The fuel heater element and fuel heater relay are not computer controlled.**

The heater element operates on 12 volts, 300 watts at 0 degrees F.

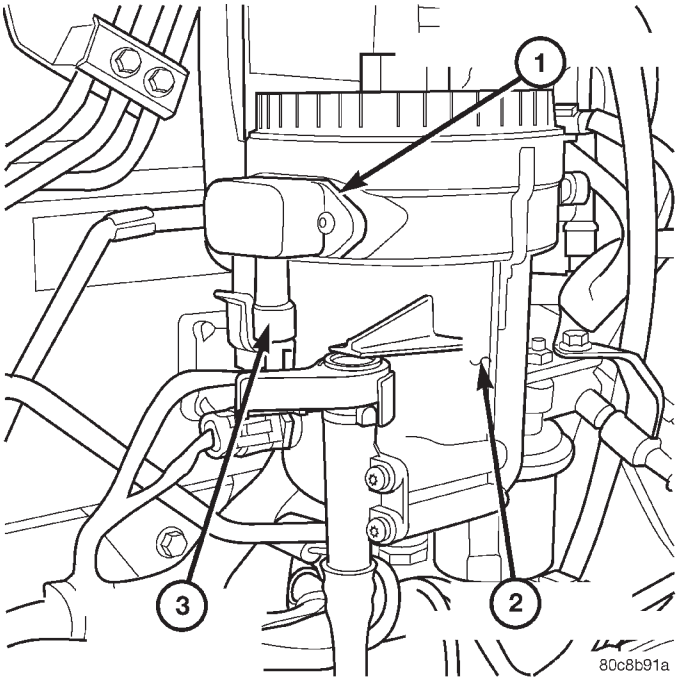

Fig. 18 Fuel Heater Location

1 - FUEL HEATER AND TEMP. SENSOR
2 - FUEL FILTER/WATER SEPARATOR
3 - FUEL HEATER ELECTRICAL CONNECTOR

DIAGNOSIS AND TESTING - FUEL HEATER

The fuel heater is used to prevent diesel fuel from waxing during cold weather operation.

NOTE: The fuel heater element, fuel heater relay and fuel heater temperature sensor are not controlled by the Powertrain Control Module (PCM).

A malfunctioning fuel heater can cause a wax build-up in the fuel filter/water separator. Wax build-up in the filter/separator can cause engine starting problems and prevent the engine from revving up. It can also cause blue or white fog-like exhaust. If the heater is not operating in cold temperatures, the engine may not operate due to fuel waxing.

The fuel heater assembly is located on the side of the fuel filter housing (Fig. 19).

The heater assembly is equipped with a built-in fuel temperature sensor (thermostat) that senses fuel temperature. When fuel temperature drops below 45 degrees ± 8 degrees F, the sensor allows current to flow to the built-in heater element to warm the fuel. When fuel temperature rises above 75 degrees ± 8 degrees F, the sensor stops current flow to the heater element (circuit is open).

FUEL HEATER (Continued)

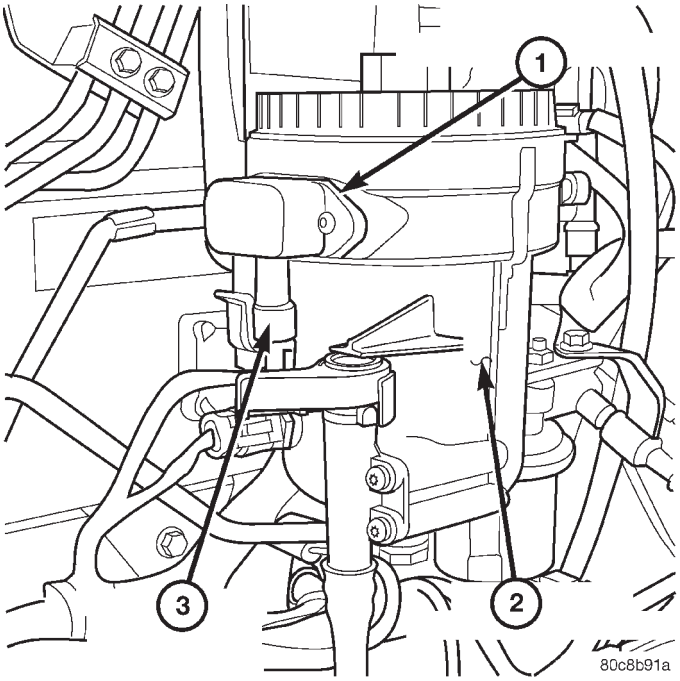

Fig. 19 Fuel Heater Location

1 - FUEL HEATER AND TEMP. SENSOR
2 - FUEL FILTER/WATER SEPARATOR
3 - FUEL HEATER ELECTRICAL CONNECTOR

Voltage to operate the fuel heater element is supplied from the ignition switch, through the fuel heater relay (also refer to Fuel Heater Relay), to the fuel temperature sensor and on to the fuel heater element.

The heater element operates on 12 volts, 300 watts at 0 degrees F. As temperature increases, power requirements decrease.

A minimum of 7 volts is required to operate the fuel heater. The resistance value of the heater element is less than 1 ohm (cold) and up to 1000 ohms warm.

TESTING

(1) Disconnect electrical connector at sensor (Fig. 19).

Turn key to ON position. 12 volts should be present at red wire. If not, check fuel heater relay and related wiring. Refer to Relay Test—Fuel Heater. If OK, proceed.

Turn key OFF. Check black wire in connector for ground continuity with an ohmmeter. If continuity is not present, correct open ground circuit. This test can also be performed with a voltmeter by backprobing black wire with it connected to sensor. Reconnect electrical connector and turn key ON. Voltage drop should not exceed 2 volts (2 volts lower than checked at 12V+ connector). If voltage is lower, check for dirty or corroded ground connection and repair. If OK, proceed.

(2) With electrical connector disconnected at sensor and key OFF, check electrical/mechanical operation of fuel temperature sensor. Proceed to next step:

(3) Using an ohmmeter, check for continuity across two terminals in electrical connector at side of sensor. Sensor circuit should be open if fuel temperature has risen above 75 degrees ± 8 degrees F. Sensor circuit should be closed if fuel temperature has dropped below 45 degrees ± 8 degrees F. If not, replace fuel heater assembly. This same test can also be performed using a voltmeter, with key ON, and by backprobing connector.

REMOVAL/INSTALLATION

The fuel heater/element/sensor assembly is located inside of the fuel filter housing. Refer to Fuel Filter/Water Separator Removal/Installation for procedures.

FUEL HEATER RELAY

DESCRIPTION

The fuel heater relay is located in Power Distribution Center (PDC) (Fig. 20). Refer to label on inside of PDC cover for relay location.

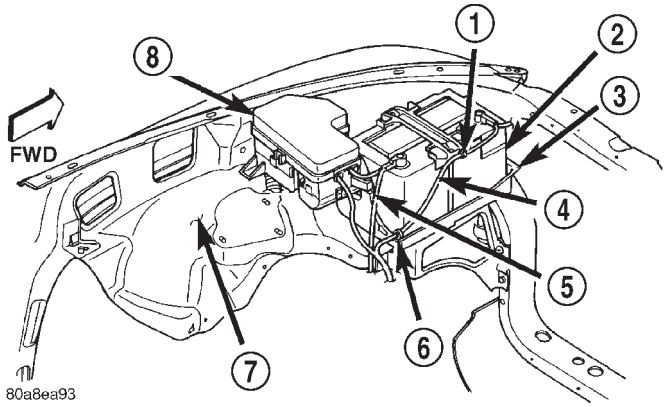

Fig. 20 Power Distribution Center Location

1 - CLIP
2 - BATTERY
3 - TRAY
4 - NEGATIVE CABLE
5 - POSITIVE CABLE
6 - CLIP
7 - FENDER INNER SHIELD
8 - POWER DISTRIBUTION CENTER

OPERATION

Battery voltage to operate the fuel heater element is supplied from the ignition switch through the fuel heater relay. **The fuel heater element and fuel heater relay are not computer controlled.**

FUEL HEATER RELAY (Continued)

DIAGNOSIS AND TESTING - FUEL HEATER RELAY

The fuel heater relay is located in the Power Distribution Center (PDC). Refer to label under PDC cover for relay location.

To test the fuel heater, refer to Fuel Heater Test.

To test the heater relay only, refer to following:

The relay terminal numbers from (Fig. 21) can be found on the bottom of the relay.

- Terminal number 30 is connected to battery voltage and can be switched or B+ (hot) at all times.
- The center terminal number 87A is connected (a circuit is formed) to terminal 30 in the de-energized (normally OFF) position.
- Terminal number 87 is connected (a circuit is formed) to terminal 30 in the energized (ON) position. Terminal number 87 then supplies battery voltage to the component being operated.
- Terminal number 86 is connected to a switched (+) power source.
- Terminal number 85 is grounded by the powertrain control module (PCM).

TESTING

(1) Remove relay before testing.

(2) Using an ohmmeter, perform a resistance test between terminals 85 and 86. Resistance value (ohms) should be 75 ±5 ohms for resistor equipped relays.

(3) Connect the ohmmeter between terminals number 87A and 30. Continuity should be present at this time.

(4) Connect the ohmmeter between terminals number 87 and 30. Continuity should not be present at this time.

(5) Use a set of jumper wires (16 gauge or smaller). Connect one jumper wire between terminal number 85 (on the relay) to the ground side (-) of a 12 Volt power source.

(6) Attach the other jumper wire to the positive side (+) of a 12V power source. Do not connect this jumper wire to relay at this time.

CAUTION: Do not allow the ohmmeter to contact terminals 85 or 86 during these tests. Damage to ohmmeter may result.

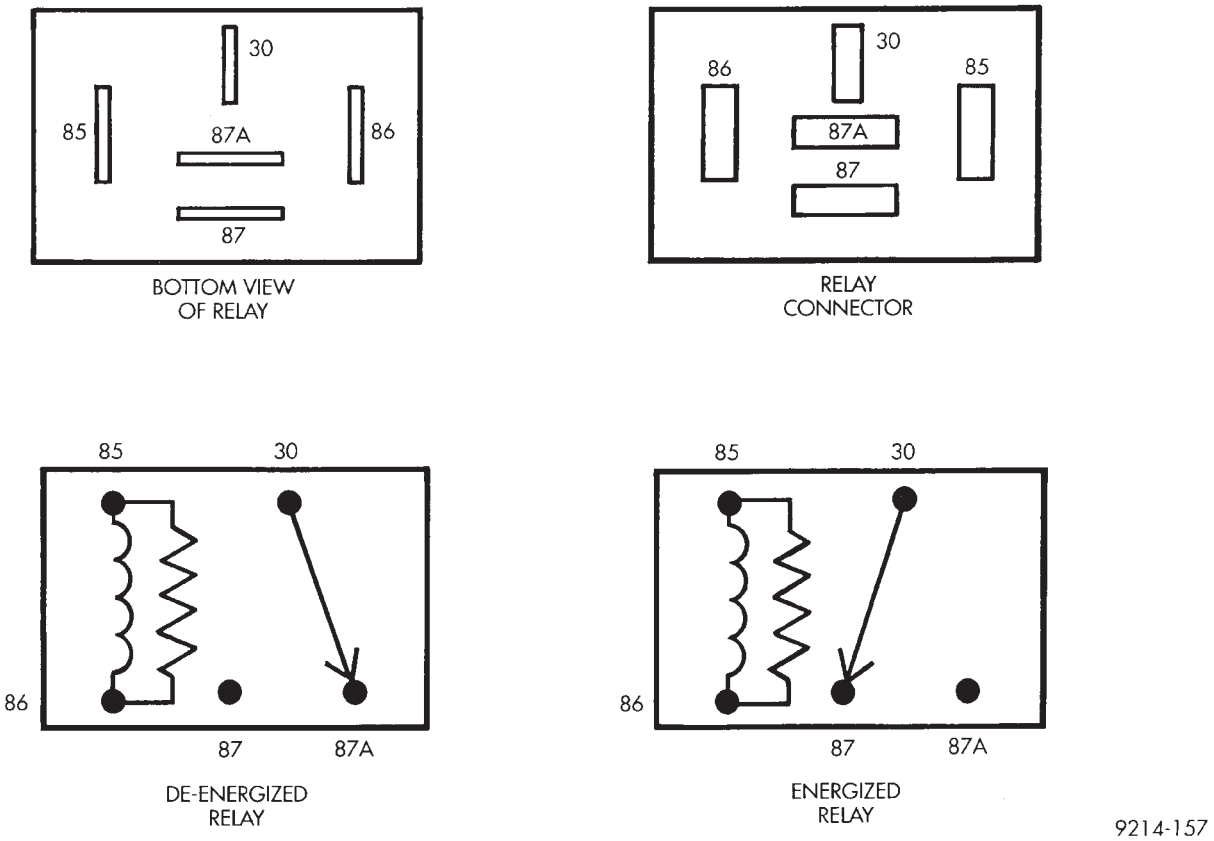

Fig. 21 Relay Terminals

FUEL HEATER RELAY (Continued)

(7) Attach the other jumper wire (12V +) to terminal number 86. This will activate the relay. Continuity should now be present between terminals number 87 and 30. Continuity should not be present between terminals number 87A and 30.

(8) Disconnect jumper wires from relay and 12 Volt power source.

(9) If continuity or resistance tests did not pass, replace relay. If tests passed, refer to 8, Wiring Diagrams for (fuel system) relay wiring schematics and for additional circuit information.

REMOVAL

The fuel heater relay is located in the Power Distribution Center (PDC) (Fig. 22). Refer to label under PDC cover for relay location.

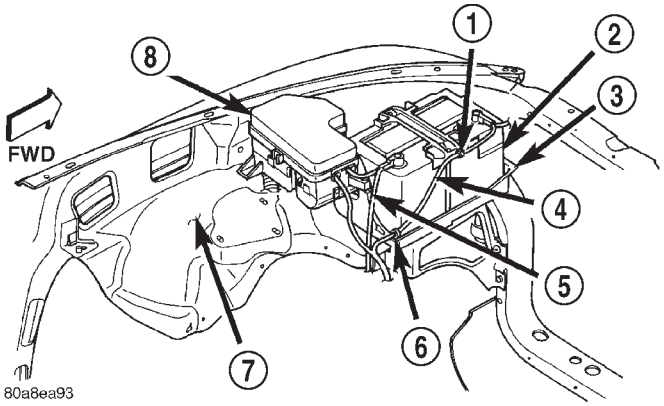

Fig. 22 Power Distribution Center (PDC) Location

1 - CLIP
2 - BATTERY
3 - TRAY
4 - NEGATIVE CABLE
5 - POSITIVE CABLE
6 - CLIP
7 - FENDER INNER SHIELD
8 - POWER DISTRIBUTION CENTER

(1) Remove PDC cover.

(2) Remove relay from PDC.

(3) Check condition of relay terminals and PDC connector terminals for damage or corrosion. Repair if necessary before installing relay.

(4) Check for pin height (pin height should be the same for all terminals within the PDC connector). Repair if necessary before installing relay.

INSTALLATION

The fuel heater relay is located in the Power Distribution Center (PDC) (Fig. 22). Refer to label under PDC cover for relay location.

(1) Install relay to PDC.

(2) Install cover to PDC.

FUEL INJECTION PUMP

DESCRIPTION

DESCRIPTION—FUEL PUMP 245 H.P.

Although the fuel injection pump on the 245 horsepower engine appears similar to other VP 44 injection pumps, there are internal differences that make it unique. If pump replacement is necessary, be sure to verify pump number. The pump number can be found on the Fuel Injection Pump Data Plate (Fig. 23).

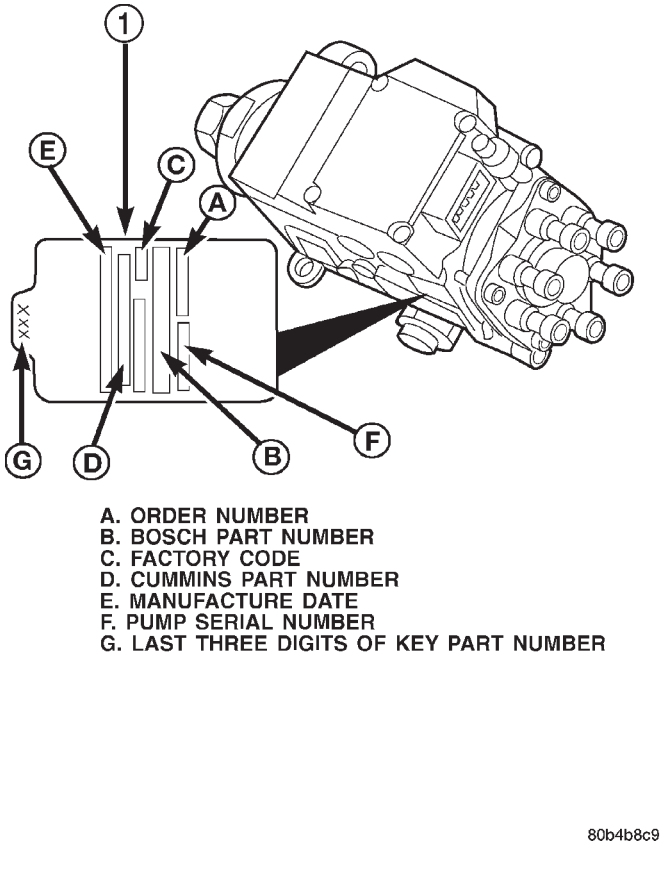

Fig. 23 Fuel Injection Pump Data Plate Location

1 - PUMP DATA PLATE

DESCRIPTION—FUEL PUMP 235 H.P.

The fuel injection pump is mounted to the rear of the timing gear housing on the left side of engine (Fig. 24).

FUEL INJECTION PUMP (Continued)

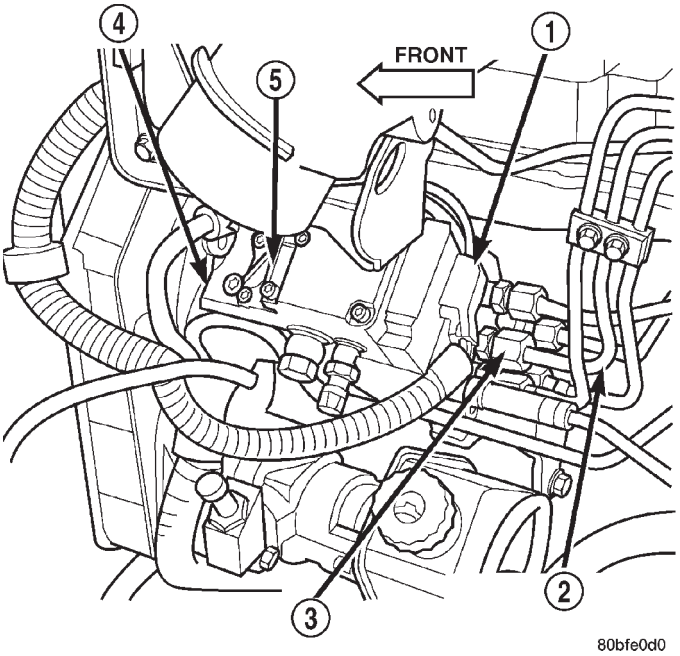

Fig. 24 Fuel Injection Pump Location

1 - FPCM ELECTRICAL CONNECTOR
2 - HIGH-PRESSURE FUEL LINES
3 - FITTINGS
4 - FUEL INJECTION PUMP
5 - FPCM

OPERATION

The Bosch VP44 fuel injection pump (Fig. 25) is a solenoid-valve controlled-radial-piston-distributor type pump.

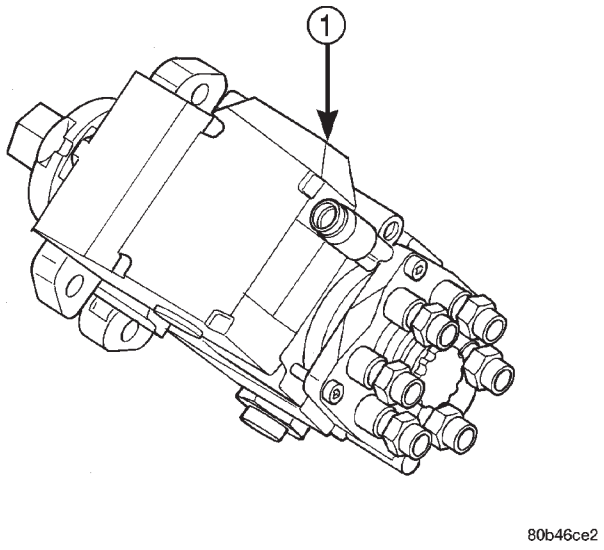

Fig. 25 Bosch VP44 Fuel Injection Pump

1 - BOSCH VP44 PUMP

The injection pump is driven by the engine camshaft. A gear on the end of the pump shaft meshes with the camshaft gear. The pump is timed to the engine. The VP44 is controlled by an integral (and non-serviceable) Fuel Pump Control Module (FPCM) (Fig. 24). The FPCM can operate the engine as an engine controller if a Crankshaft Position Sensor (CKP) signal is not present.

Fuel from the transfer (lift) pump enters the VP44 where it is pressurized and then distributed through high-pressure lines to the fuel injectors. The VP44 is cooled by the fuel that flows through it. A greater quantity of fuel is required for cooling the VP44 than what is necessary for engine operation. Because of this, approximately 70 percent of fuel entering the pump is returned to the fuel tank through the overflow valve and fuel return line. Refer to Overflow Valve Description/Operation for additional information.

The VP44 is not self-priming. At least two fuel injectors must be bled to remove air from the system. When servicing the fuel system, disconnecting components up to the pump will usually not require air bleeding from the fuel system. However, removal of the high-pressure lines, removal of the VP44 pump, or allowing the vehicle to completely run out of fuel, will require bleeding air from the high-pressure lines at the fuel injectors.

VP44 timing is matched to engine timing by an offset keyway that fits into the pump shaft. This keyway has a stamped number on it that is matched to a number on the VP44 pump (each keyway is calibrated to each pump).

When removing/installing the VP44, the same numbered keyway must always be installed. Also, the arrow on the top of the keyway should be installed pointed rearward towards the pump.

Because of electrical control, the injection pump high and low idle speeds are not adjustable. Also, adjustment of fuel pump timing is not required and is not necessary.

DIAGNOSIS AND TESTING—FUEL INJECTION PUMP TIMING

With the Bosch VP44 injection pump, there are no mechanical adjustments needed for fuel injection timing. All timing and fuel adjustments are made by the Engine Control Module (ECM). However, if a Diagnostic Trouble Code (DTC) has been stored indicating an “engine sync error” or a “static timing error”, perform the following.

FUEL INJECTION PUMP (Continued)

Note: If this DTC appears after installation of a new or rebuilt injection pump, the pump keyway has probably been installed backwards. Refer to Fuel Injection Pump Removal/Installation for keyway information.

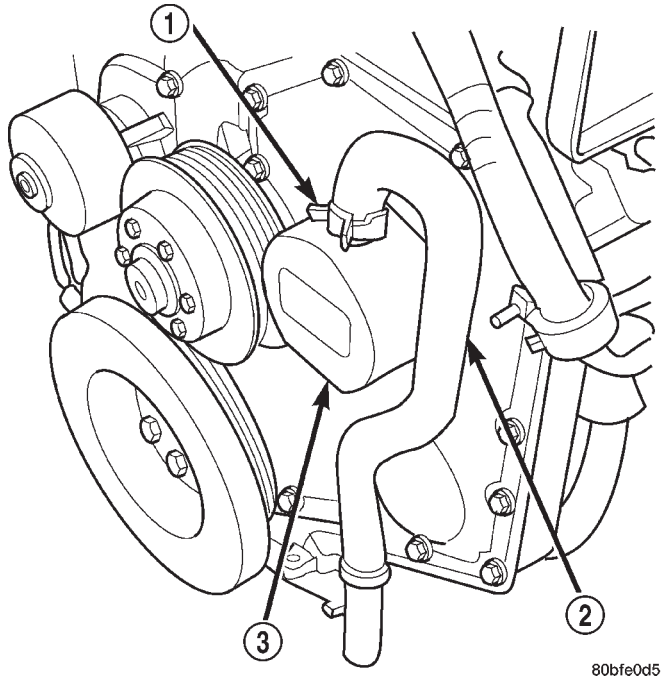

Fig. 26 Crankcase Vent Hose

1 - HOSE CLAMP
2 - CRANKCASE VENT HOSE
3 - CRANKCASE BREATHER

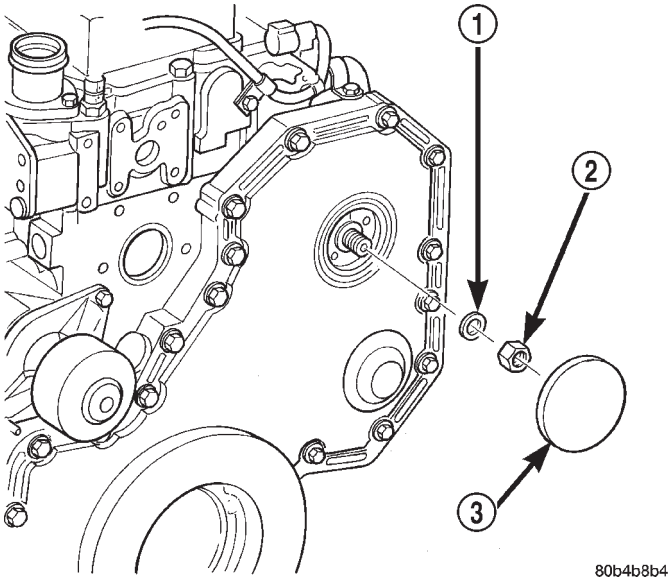

Fig. 27 Injection Pump Gear Nut/Washer

1 - WASHER
2 - PUMP NUT
3 - ACCESS CAP

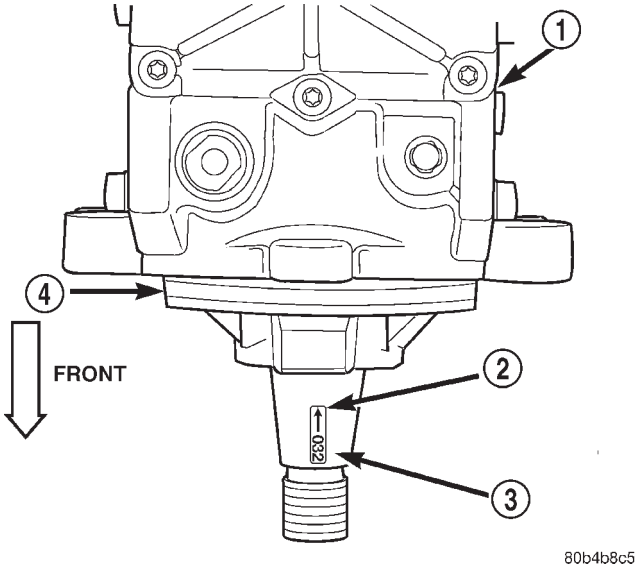

Fig. 28 Pump Keyway, Keyway Arrow and Keyway Number

1 - INJECTION PUMP
2 - DIRECTIONAL ARROW
3 - 3–DIGIT KEYWAY NUMBER
4 - O-RING

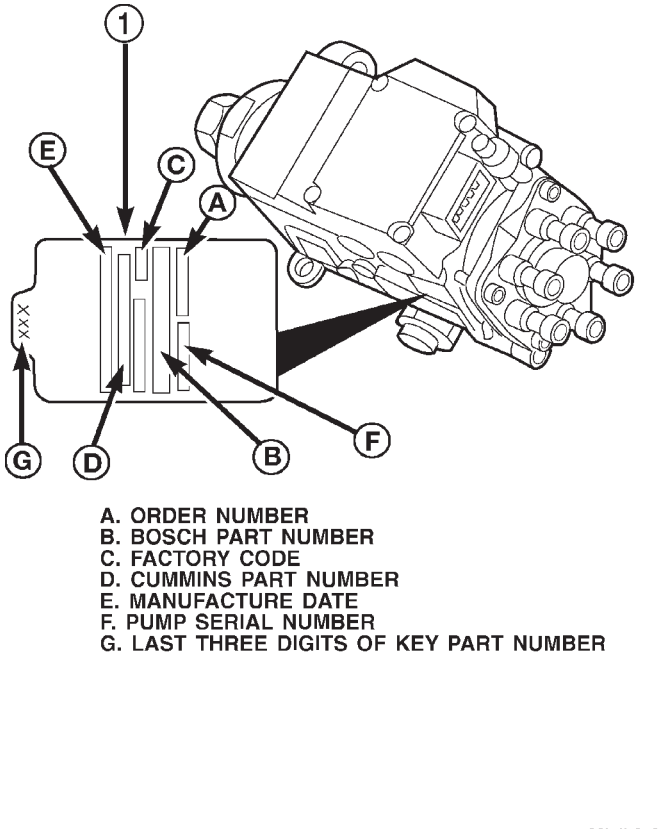

Fig. 29 Pump Data Plate Location

1 - PUMP DATA PLATE

FUEL INJECTION PUMP (Continued)

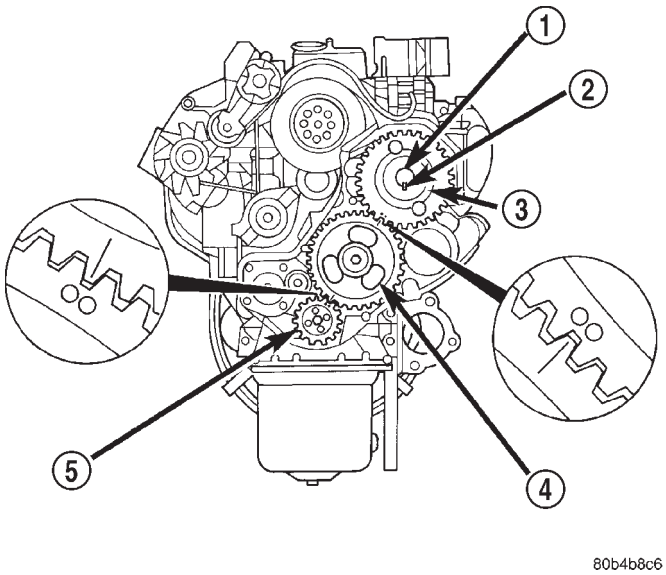

Fig. 30 Checking Fuel Injection Pump Gear Timing

1 - PUMP SHAFT
2 - KEYWAY
3 - PUMP GEAR
4 - CAM GEAR
5 - CRANKSHAFT GEAR

(1) Remove hose clamp and crankcase vent hose at crankcase breather (Fig. 26). Remove crankcase breather from gear cover. Breather threads into cover.

(2) Remove injection pump nut and washer (Fig. 27). Locate keyway behind washer.

(3) Be sure keyway aligning fuel injection pump shaft to injection pump gear is in proper position and pump gear has not slipped on pump shaft.

The following steps will require removing timing gear cover to gain access to timing gears. Refer to Group 9, Engines for procedures.

(4) Use a T-type puller to separate injection pump gear from pump shaft.

(5) Be sure keyway has been installed with arrow pointed to **rear** of pump (Fig. 28).

(6) **Pump timing has been calibrated to pump keyway. Be sure 3–digit number on pump keyway (Fig. 28) matches 3–digit number on fuel injection pump data plate. Plate is located on side of injection pump (Fig. 29). Twenty–one different calibrated keyways/pumps are available.**

(7) Verify timing marks on crank, cam and pump are aligned (Fig. 30).

(8) Perform necessary gear alignment/repairs as needed.

(9) Install crankcase breather to gear cover. Install hose clamp and crankcase vent hose to breather (Fig. 26).

(10) After repairs are completed, erase DTC using DRB Scan Tool.

REMOVAL

CAUTION: Refer to Cleaning Fuel System Parts.

(1) Disconnect both negative battery cables at both batteries. Cover and isolate ends of cables.

(2) Thoroughly clean fuel lines at cylinder head and injection pump ends. Thoroughly clean fuel injection pump and supply/return lines at side of pump.

(3) Disconnect 9–way electrical connector at Fuel Pump Control Module (FPCM) (Fig. 31).

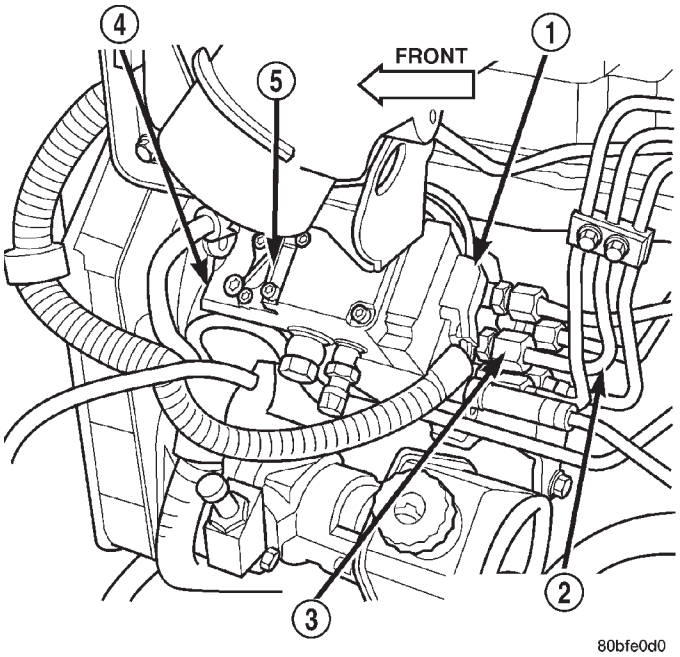

Fig. 31 FPCM 9–Way Connector

1 - FPCM ELECTRICAL CONNECTOR
2 - HIGH-PRESSURE FUEL LINES
3 - FITTINGS
4 - FUEL INJECTION PUMP
5 - FPCM

(4) Remove fuel return line at side of injection pump by removing overflow valve (Fig. 32). Place rag beneath overflow valve to catch excess fuel.

(5) Remove fuel supply line at side of injection pump by removing banjo bolt (Fig. 32). Also remove same line at top of fuel filter housing (banjo bolt).

(6) Remove all high-pressure fuel lines, intake air tube, accelerator pedal position sensor, air intake housing, engine oil dipstick tube, wiring clips, electrical cables at intake heaters and engine lifting bracket. Refer to High-Pressure Fuel Line Removal/Installation. All of these items are covered in this procedure.

(7) Remove hose clamp at crankcase vent hose (Fig. 33) and remove hose from canister.

(8) Remove (unscrew) canister (Fig. 33) from gear cover.

FUEL INJECTION PUMP (Continued)

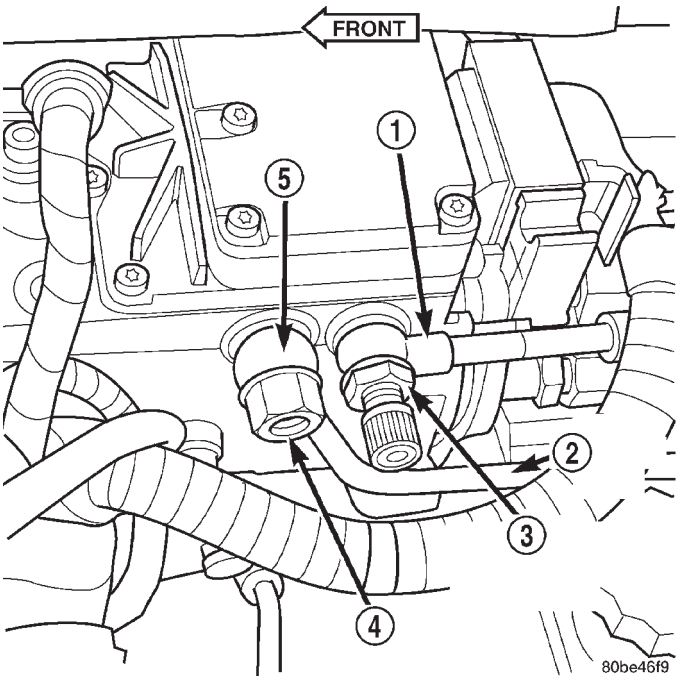

Fig. 32 Fuel Supply and Return Lines at Pump

1 - FUEL SUPPLY LINE
2 - FUEL RETURN LINE
3 - BANJO BOLT (TEST PORT FITTING)
4 - OVERFLOW VALVE
5 - BANJO FITTING

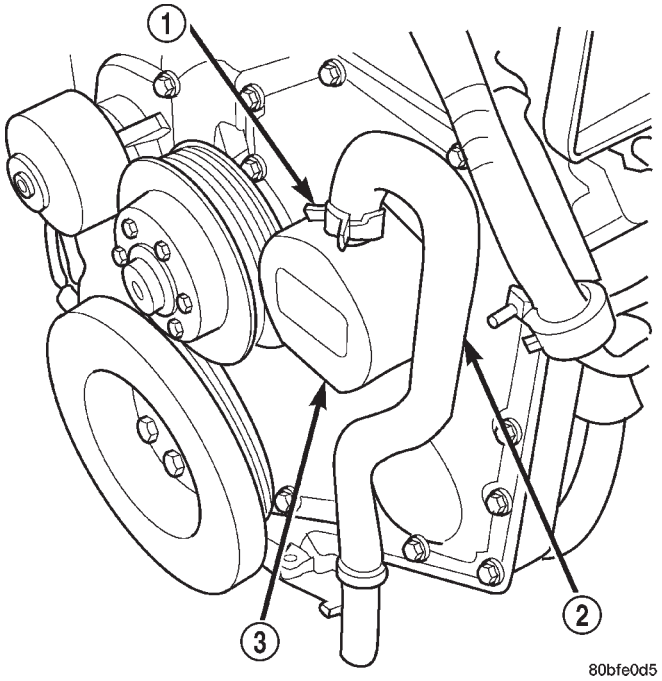

Fig. 33 Crankcase Vent Hose

1 - HOSE CLAMP
2 - CRANKCASE VENT HOSE
3 - CRANKCASE BREATHER

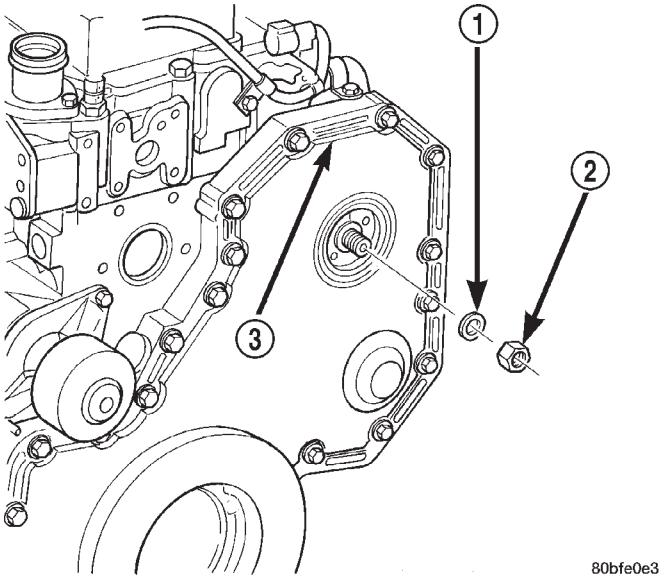

Fig. 34 Pump Shaft Nut/Washer

1 - WASHER
2 - PUMP NUT
3 - GEAR COVER

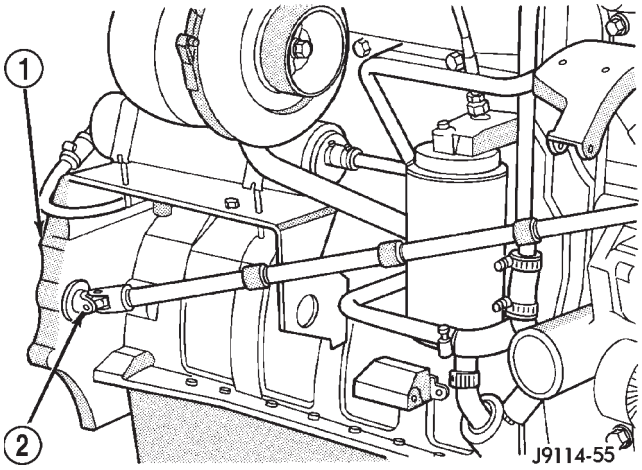

Fig. 35 Rotating Engine with Barring Tool

1 - REAR FLANGE
2 - BARRING TOOL

CAUTION: To prevent pump/gear keyway from falling into gear housing, engine must be rotated until keyway is at 12 o'clock position (Fig. 36). If gear retainer nut, washer or key drops into gear housing, cover may have to be removed to retrieve them before engine is started.

(9) Remove nut and washer retaining injection pump gear to injection pump shaft (Fig. 34).

FUEL INJECTION PUMP (Continued)

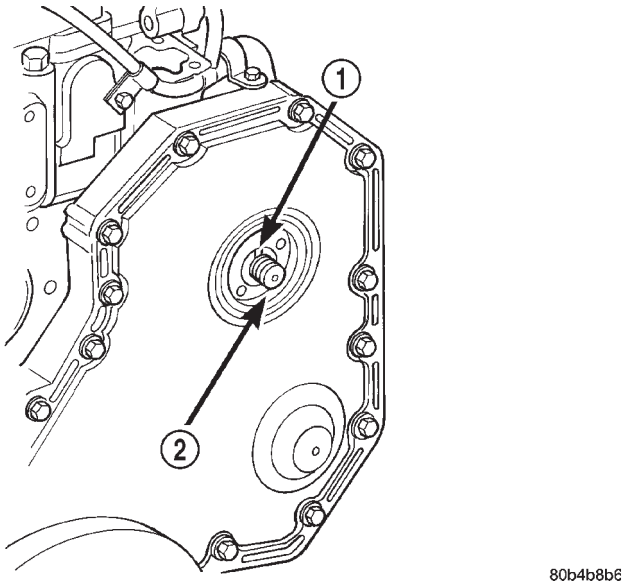

Fig. 36 Placing Keyway at 12 O'clock Position

1 - KEYWAY AT 12 O'CLOCK POSITION
2 - PUMP GEAR

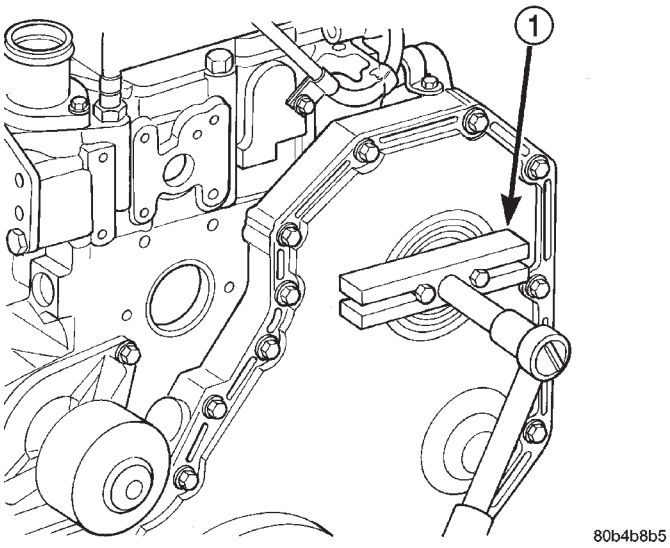

Fig. 37 Separating Injection Pump Gear from Pump Shaft

1 - T-BAR PULLER

(10) The engine can be rotated with a barring tool such as Snap-On No. SP371, MTE No. 3377371 (Cummins Tool Division), or an equivalent. The opening for barring tool is located in rear flange of engine on exhaust manifold side (Fig. 35). Remove rubber access plug covering this opening.

(11) Insert barring tool into flywheel housing opening (Fig. 35).

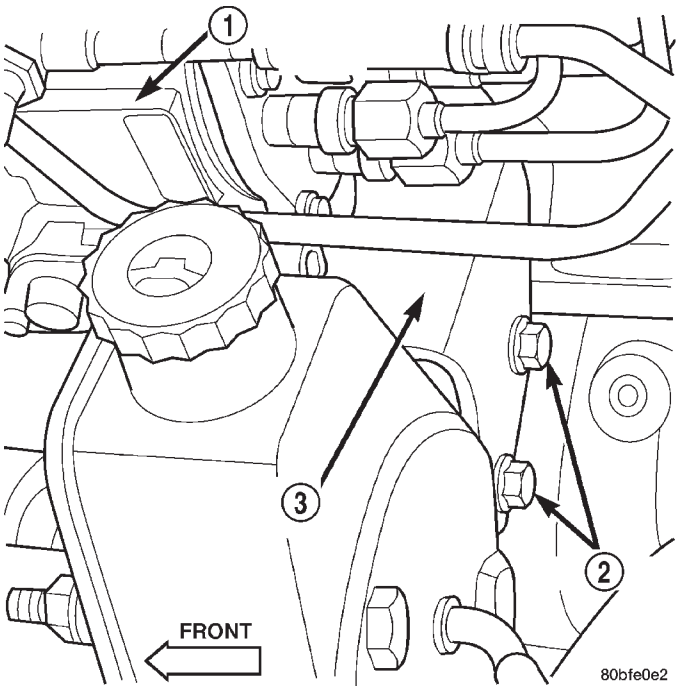

Fig. 38 Rear/Lower Pump Bracket and Mounting Bolts

1 - FUEL INJECTION PUMP
2 - BOLTS (2)
3 - REAR/LOWER BRACKET

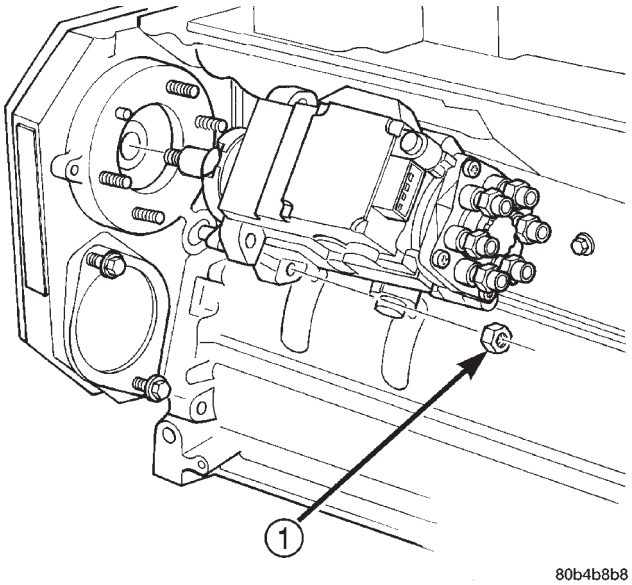

Fig. 39 Injection Pump Mounting Nuts

1 - PUMP MOUNTING NUTS (4)

(12) Rotate engine until keyway is at 12 o'clock position (Fig. 36).

FUEL INJECTION PUMP (Continued)

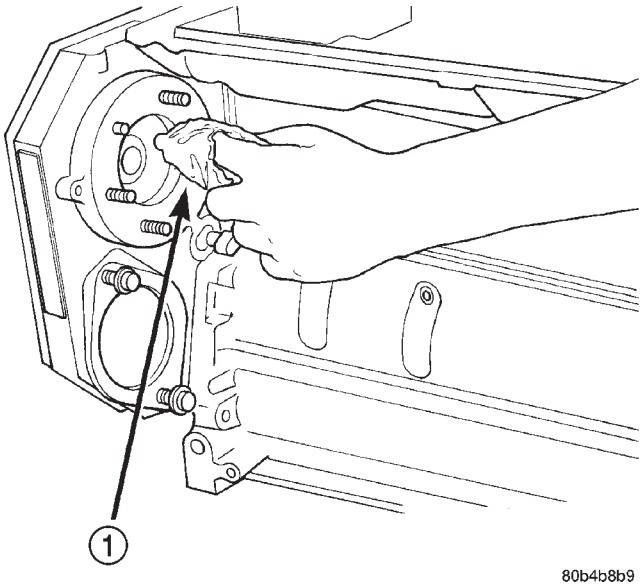

Fig. 40 Cleaning Pump Mounting Flange

1 - PUMP MOUNTING FLANGE

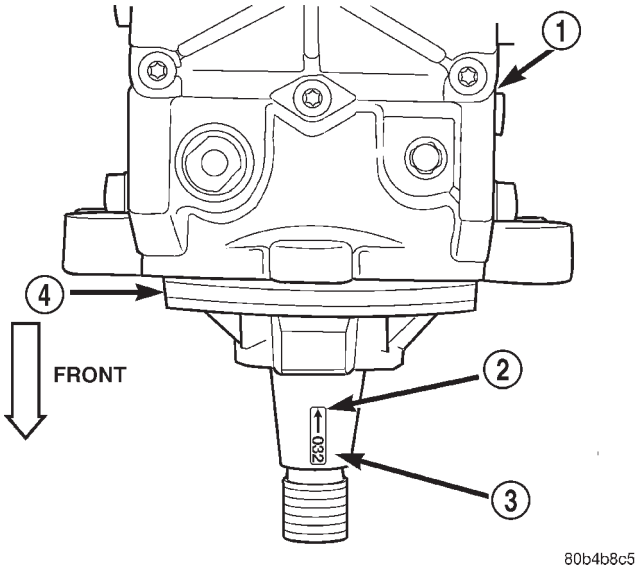

Fig. 41 Keyway, Keyway Arrow and Keyway Number

1 - INJECTION PUMP
2 - DIRECTIONAL ARROW
3 - 3–DIGIT KEYWAY NUMBER
4 - O-RING

(13) Use T-bar type puller (Fig. 37) to separate injection pump gear from injection pump shaft. Attach two M8 X 1.24 MM (metric) screws through puller and into two threaded holes supplied in pump gear. Pull injection pump gear forward until it loosens from injection pump shaft. **Pull on gear only enough to loosen it from injection pump shaft. Pulling gear too far may cause damage or breakage to gear cover.**

(14) Remove 2 rear/lower pump bracket bolts (Fig. 38).

(15) Remove 4 injection pump-to-gear housing mounting nuts (Fig. 39).

(16) Remove injection pump from gear housing. **Take care not to nick injection pump shaft on aluminum gear housing when removing pump. Also be very careful not to drop pump keyway (Fig. 41) into gear housing.**

CAUTION: Whenever the fuel injection pump is removed from the engine, the pump drive gear is laying loose on the camshaft drive gear. Never attempt to crank or rotate the engine with the pump removed from the engine. Serious damage will occur.

INSTALLATION

(1) Inspect pump mounting surfaces at pump and mounting flange for nicks, cuts or damage. Inspect o-ring surfaces for nicks, cuts or damage.

(2) Clean injection pump mounting flange (Fig. 40) at gear housing. Also clean front of injection pump.

(3) Install new rubber o-ring (Fig. 41) at pump mounting area.

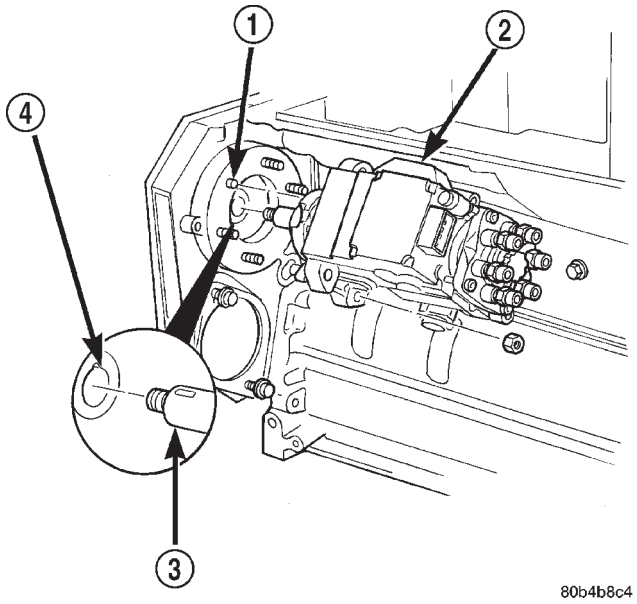

Fig. 42 Injection Pump Installation

1 - DOWEL
2 - PUMP
3 - PUMP SHAFT TAPER
4 - INJECTION PUMP GEAR TAPER

(4) Apply clean engine oil **to injection pump o-ring only.**

FUEL INJECTION PUMP (Continued)

The machined tapers on both injection pump shaft and injection pump gear (Fig. 42) must be absolutely dry, clean and free of any dirt or oil film. This will ensure proper gear-to-shaft tightening.

(5) Clean pump gear and pump shaft at machined tapers (Fig. 42) with an evaporative type cleaner such as brake cleaner.

Keyway Installation:

(6) The pump/gear keyway has an arrow and a 3–digit number stamped at top edge (Fig. 41). Position keyway into pump shaft with **arrow pointed to rear of pump.** Also be sure 3–digit number stamped to top of keyway is same as 3–digit number stamped to injection pump data plate (Fig. 43). If wrong keyway is installed, a diagnostic trouble code may be set.

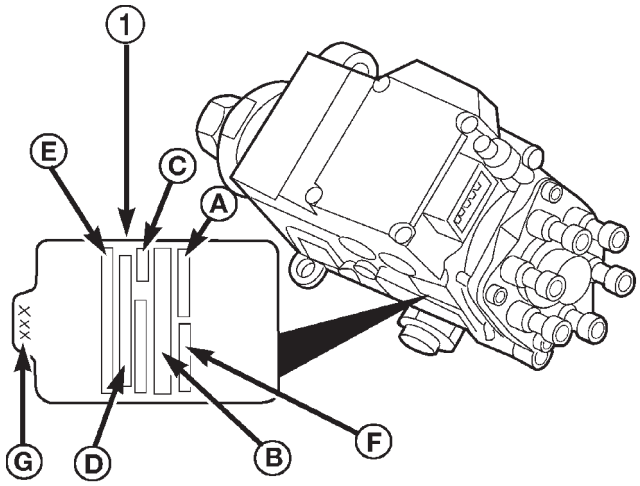

A. ORDER NUMBER
B. BOSCH PART NUMBER
C. FACTORY CODE
D. CUMMINS PART NUMBER
E. MANUFACTURE DATE
F. PUMP SERIAL NUMBER
G. LAST THREE DIGITS OF KEY PART NUMBER

80b4b8c9

Fig. 43 Injection Pump Data Plate Location

1 - PUMP DATA PLATE

(7) Position pump assembly to mounting flange on gear cover while aligning injection pump shaft through back of injection pump gear. When installing pump, dowel (Fig. 42) on mounting flange must align to hole in front of pump.

(8) After pump is positioned flat to mounting flange, install four pump mounting nuts and tighten finger tight only. Do not attempt a final tightening at this time. **Do not attempt to tighten (pull) pump to gear cover using mounting nuts. Damage to pump or gear cover may occur. The pump must be positioned flat to its mounting flange before attempting to tighten mounting nuts.**

(9) To prevent damage or cracking of components, tighten nuts/bolts in the following sequence:

(a) Install injection pump shaft washer and nut to pump shaft. Tighten nut **finger tight only.**

(b) Install 2 rear/lower pump mounting bolts **finger tight only.**

(c) Do preliminary tightening of injection pump shaft nut to 30 N·m (15–22 ft. lbs.) torque. **This is not the final torque.**

(d) Tighten 4 pump mounting nuts to 43 N·m (32 ft. lbs.) torque.

(e) Tighten 2 rear/lower pump bracket-to-pump bolts 24 N·m (18 ft. lbs.) torque.

(f) Do final tightening of injection pump shaft nut to 170 N·m (125 ft. lbs.) torque. Use barring tool to prevent engine from rotating when tightening gear.

(10) Install canister (Fig. 33) to gear cover.

(11) Install crankcase vent hose (Fig. 33) to canister and install hose clamp.

(12) Using new gaskets, install fuel return line and overflow valve to side of injection pump (Fig. 32). Tighten overflow valve to 24 N·m (18 ft. lbs.) torque.

(13) Using new gaskets, install fuel supply line to side of injection pump and top of fuel filter housing (Fig. 32). Tighten banjo bolts to 24 N·m (18 ft. lbs.) torque.

(14) Install all high-pressure fuel lines, intake air tube, accelerator pedal position sensor, air intake housing, engine oil dipstick tube, wiring clips, electrical cables at intake heaters and engine lifting bracket. Refer to High-Pressure Fuel Line Removal/Installation. All of these items are covered in this procedure.

(15) Connect 9–way electrical connector to Fuel Pump Control Module (FPCM) (Fig. 31).

(16) Connect both negative battery cables to both batteries.

(17) Bleed air from fuel system.(Refer to 14 - FUEL SYSTEM/FUEL DELIVERY - STANDARD PROCEDURE).

(18) Check system for fuel or engine oil leaks.

FUEL INJECTION PUMP DATA PLATE

SPECIFICATIONS

FUEL INJECTION PUMP DATA PLATE

Pertinent information about the fuel injection pump is machined into a boss on the drivers side of the fuel injection pump (Fig. 44).

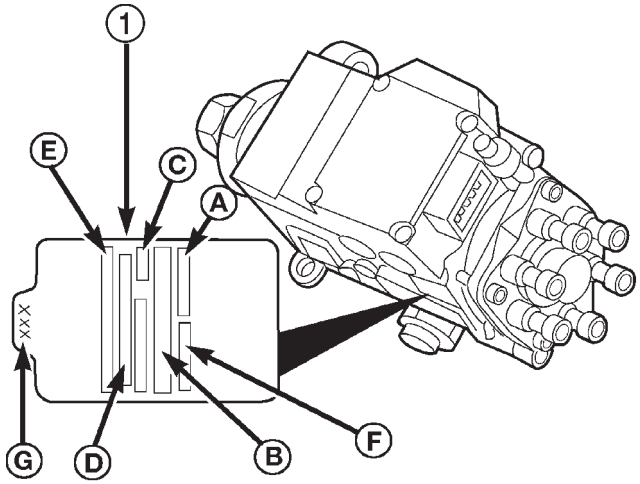

A. ORDER NUMBER
B. BOSCH PART NUMBER
C. FACTORY CODE
D. CUMMINS PART NUMBER
E. MANUFACTURE DATE
F. PUMP SERIAL NUMBER
G. LAST THREE DIGITS OF KEY PART NUMBER

80b4b8c9

Fig. 44 Fuel Injection Pump Data Plate Location

1 - PUMP DATA PLATE

FUEL LEVEL SENDING UNIT / SENSOR

DESCRIPTION

The fuel gauge sending unit (fuel level sensor) is attached to the side of the fuel tank module. The sending unit consists of a float, an arm, and a variable resistor track (card).

OPERATION

The fuel tank module on diesel powered models has 3 different circuits (wires). Two of these circuits are used at the fuel gauge sending unit for fuel gauge operation. The other wire is used for a ground. The diesel engine does not have a fuel tank module mounted electric fuel pump. The electric fuel pump (fuel transfer pump) is mounted to the engine.

For Fuel Gauge Operation: A constant input voltage source of about 12 volts (battery voltage) is supplied to the resistor track on the fuel gauge sending unit. This is fed directly from the Powertrain Control Module (PCM). **NOTE: For diagnostic purposes, this 12V power source can only be verified with the circuit opened (fuel tank module electrical connector unplugged). With the connectors plugged, output voltages will vary from about .6 volts at FULL, to about 7.0 volts at EMPTY.** The resistor track is used to vary the voltage (resistance) depending on fuel tank float level. As fuel level increases, the float and arm move up, which decreases voltage. As fuel level decreases, the float and arm move down, which increases voltage. The varied voltage signal is returned back to the PCM through the sensor return circuit.

Both of the electrical circuits between the fuel gauge sending unit and the PCM are hard-wired (not multi-plexed). After the voltage signal is sent from the resistor track, and back to the PCM, the PCM will interpret the resistance (voltage) data and send a message across the multi-plex bus circuits to the instrument panel cluster. Here it is translated into the appropriate fuel gauge level reading. Refer to Instrument Panel for additional information.

FUEL LINES

DESCRIPTION

DESCRIPTION

All fuel lines up to the fuel injection pump are considered low-pressure. This includes the fuel lines from: the fuel tank to the fuel transfer pump, and the fuel transfer pump to the fuel injection pump. The fuel return lines, the fuel drain manifold and the fuel drain manifold lines are also considered low-pressure lines. High-pressure lines are used between the fuel injection pump and the fuel injectors. Also refer to High-Pressure Fuel Lines Description/Operation.

FUEL LINES (Continued)

DESCRIPTION—HIGH PRESSURE FUEL LINES

The high-pressure fuel lines are the 6 lines located between the fuel injection pump and the fuel injector connector tubes (Fig. 45). All other fuel lines are considered low-pressure lines.

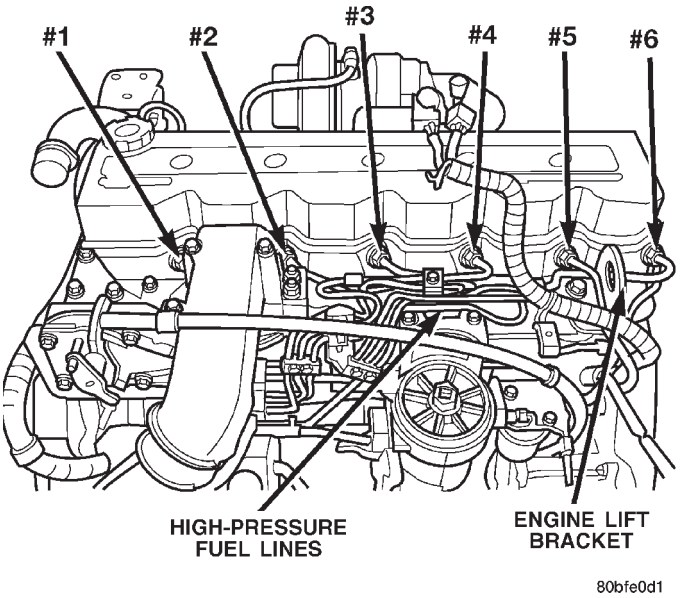

Fig. 45 High-Pressure Fuel Lines

OPERATION—HIGH PRESSURE FUEL LINES

CAUTION: The high-pressure fuel lines must be held securely in place in their holders. The lines cannot contact each other or other components. Do not attempt to weld high-pressure fuel lines or to repair lines that are damaged. If lines are ever kinked or bent, they must be replaced. Use only the recommended lines when replacement of high-pressure fuel line is necessary.

High-pressure fuel lines deliver fuel under pressure of up to approximately 120,000 kPa (17,405 PSI) from the injection pump to the fuel injectors. The lines expand and contract from the high-pressure fuel pulses generated during the injection process. All high-pressure fuel lines are of the same length and inside diameter. Correct high-pressure fuel line usage and installation is critical to smooth engine operation.

WARNING: USE EXTREME CAUTION WHEN INSPECTING FOR HIGH-PRESSURE FUEL LEAKS. INSPECT FOR HIGH-PRESSURE FUEL LEAKS WITH A SHEET OF CARDBOARD. HIGH FUEL INJECTION PRESSURE CAN CAUSE PERSONAL INJURY IF CONTACT IS MADE WITH THE SKIN.

DIAGNOSIS AND TESTING - HIGH-PRESSURE FUEL LINE LEAKS

High-pressure fuel line leaks can cause starting problems and poor engine performance.

WARNING: DUE TO EXTREME FUEL PRESSURES OF UP TO 120,000 kPa (17,400 PSI), USE EXTREME CAUTION WHEN INSPECTING FOR HIGH-PRESSURE FUEL LEAKS. DO NOT GET YOUR HAND NEAR A SUSPECTED LEAK. INSPECT FOR HIGH-PRESSURE FUEL LEAKS WITH A SHEET OF CARDBOARD. HIGH FUEL INJECTION PRESSURE CAN CAUSE PERSONAL INJURY IF CONTACT IS MADE WITH THE SKIN.

Start the engine. Move the cardboard over the high-pressure fuel lines and check for fuel spray onto the cardboard (Fig. 46). If a high-pressure line connection is leaking, bleed the system and tighten the connection. Refer to the Air Bleed Procedure in this group for procedures. Replace damaged, restricted or leaking high-pressure fuel lines with the correct replacement line.

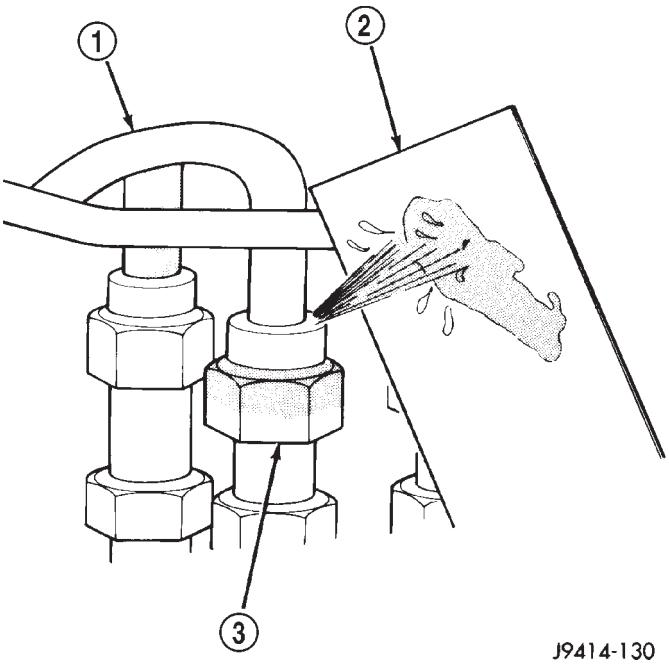

Fig. 46 Typical Test for Leaks with Cardboard

1 - HIGH-PRESSURE LINE
2 - CARDBOARD
3 - FITTING

FUEL LINES (Continued)

CAUTION: The high-pressure fuel lines must be clamped securely in place in the holders. The lines cannot contact each other or other components. Do not attempt to weld high-pressure fuel lines or to repair lines that are damaged. Only use the recommended lines when replacement of high-pressure fuel line is necessary.

REMOVAL

High-pressure lines are used between the fuel injection pump and the fuel injectors only. All high-pressure fuel lines are of the same length and inside diameter. Correct high-pressure fuel line usage and installation is critical to smooth engine operation.

CAUTION: Refer to Cleaning Fuel System Parts.

(1) Disconnect both negative battery cables from both batteries. Cover and isolate ends of cables.

(2) Thoroughly clean fuel lines at cylinder head and injection pump ends.

(3) Remove cable cover (Fig. 47). Cable cover is attached with 2 Phillips screws, 2 plastic retention clips and 2 push tabs (Fig. 47). Remove 2 Phillips screws and carefully pry out 2 retention clips. After clip removal, push rearward on front tab, and upward on lower tab for cover removal. **Do not remove any cables at lever.**

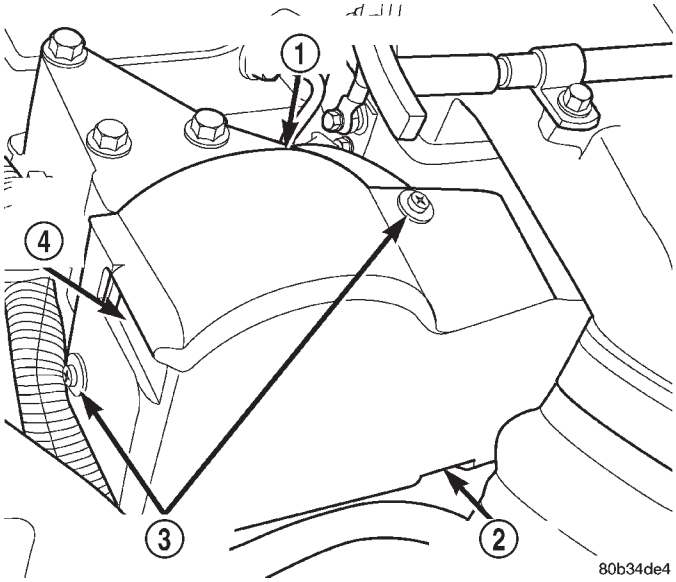

Fig. 47 Cable/Lever/Throttle Linkage Cover

1 - CABLE/LEVER/LINKAGE COVER
2 - PUSH UP LOWER TAB
3 - SCREWS/CLIPS (2)
4 - TAB PUSH HERE

(4) Disconnect wiring harness (clip) at bottom of Accelerator Pedal Position Sensor (APPS) mounting bracket (Fig. 48).

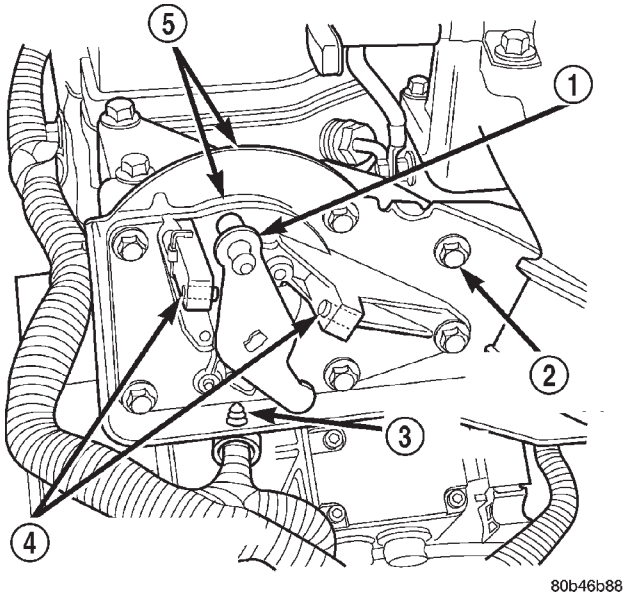

Fig. 48 Wiring Clip at APPS

1 - LEVER
2 - MOUNTING BOLTS (6)
3 - WIRE HARNESS CLIP
4 - CALIBRATION SCREWS (NO ADJUSTMENT)
5 - APPS ASSEMBLY

(5) Using 2 small screwdrivers, pry front wiring clip (Fig. 49) from cable bracket housing. Position wiring harness towards front of engine.

(6) Remove electrical connector from APPS by pushing connector tab rearward while pulling down on connector (Fig. 50).

(7) Disconnect 2 electrical cables from cable mounting studs (Fig. 51) at intake air heater on top of intake manifold.

(8) Remove engine oil dipstick from engine.

(9) Remove engine oil dipstick tube support mounting bolt (Fig. 51) and position tube to side.

(10) Disconnect clamps and remove air tube (intake manifold-to-intercooler) (Fig. 49).

(11) Remove 4 air intake housing mounting bolts and remove housing (Fig. 52) and (Fig. 51). Position ground cable at top of air intake housing to front of engine.

(12) Remove intake manifold air heater element block from engine (Fig. 53). Discard old upper and lower gaskets

(13) Remove 3 cable bracket housing mounting bolts (Fig. 52). Carefully position cable bracket and cable assembly to side of engine. **Leave cables connected to lever.**

FUEL LINES (Continued)

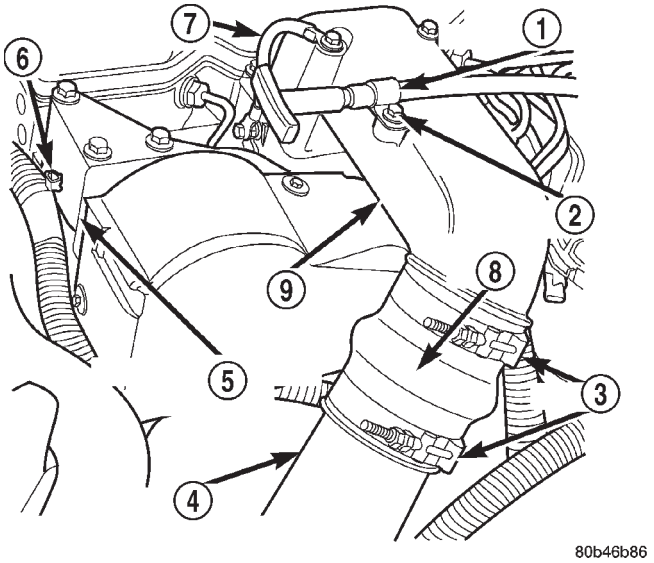

Fig. 49 Air Tube (Typical)

1 - ENGINE OIL DIPSTICK TUBE
2 - TUBE BOLT
3 - CLAMPS
4 - AIR TUBE (INTAKE MANIFOLD TO CHARGE AIR COOLER
5 - CABLE BRACKET HOUSING
6 - FRONT WIRING CLIP
7 - GROUND CABLE
8 - RUBBER HOSE
9 - AIR INTAKE HOUSING

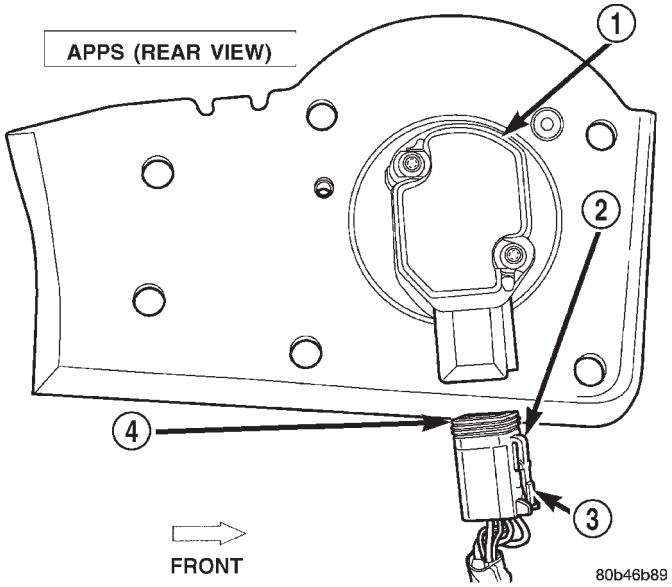

Fig. 50 Rear View of APPS

1 - APPS
2 - TAB
3 - PUSH FOR REMOVAL
4 - APPS CONNECTOR

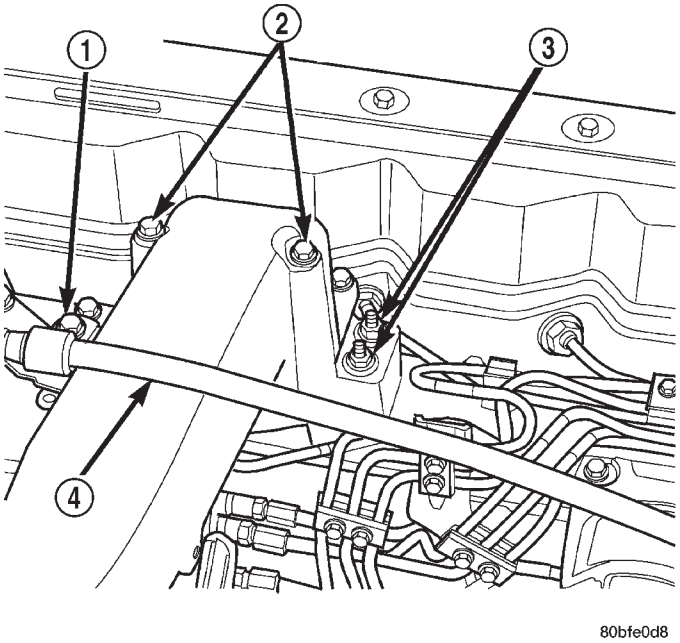

Fig. 51 Air Intake Housing (Rear View)

1 - TUBE MOUNTING BOLT
2 - HOUSING BOLTS (2)
3 - INTAKE HEATER CABLE MOUNTING STUDS (2)
4 - DIPSTICK TUBE

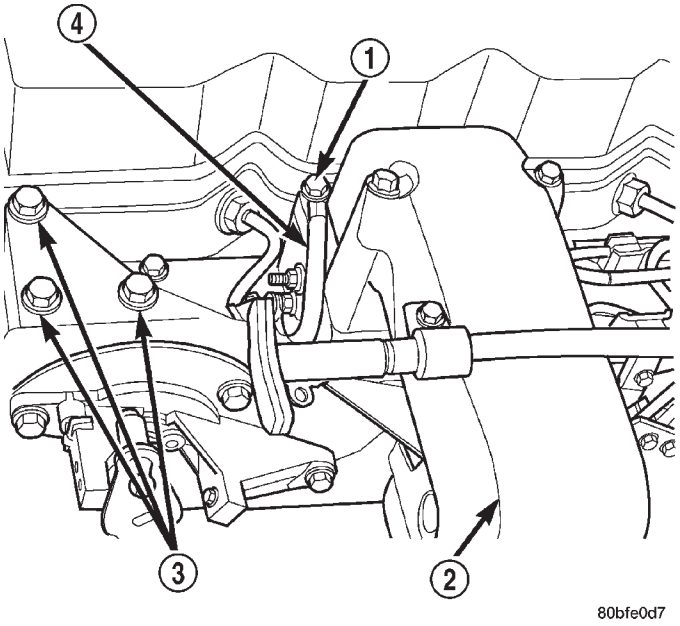

Fig. 52 Air Intake Housing (Front View)

1 - GROUND CABLE BOLT
2 - INTAKE AIR HOUSING
3 - CABLE BRACKET HOUSING BOLTS (3)
4 - GROUND CABLE

FUEL LINES (Continued)

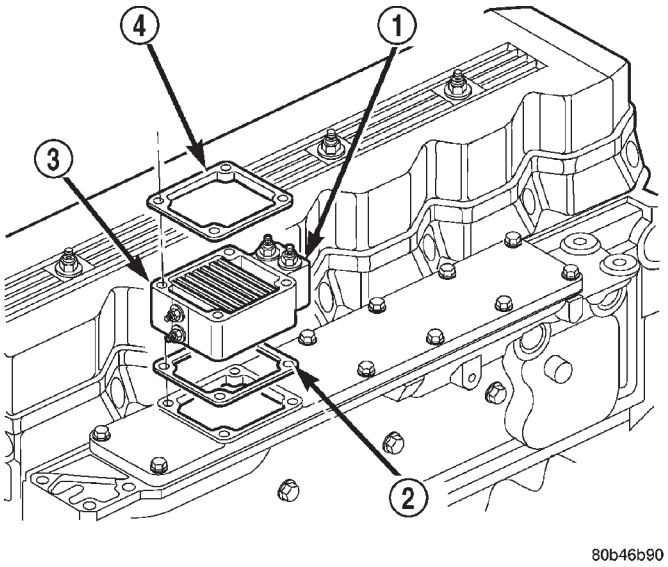

Fig. 53 Intake Manifold Air Heater (Elements)

1 - AIR HEATER ELEMENTS
2 - LOWER GASKET
3 - BLOCK
4 - UPPER GASKET

(14) Remove engine lifting bracket at rear of intake manifold (2 bolts) (Fig. 54).

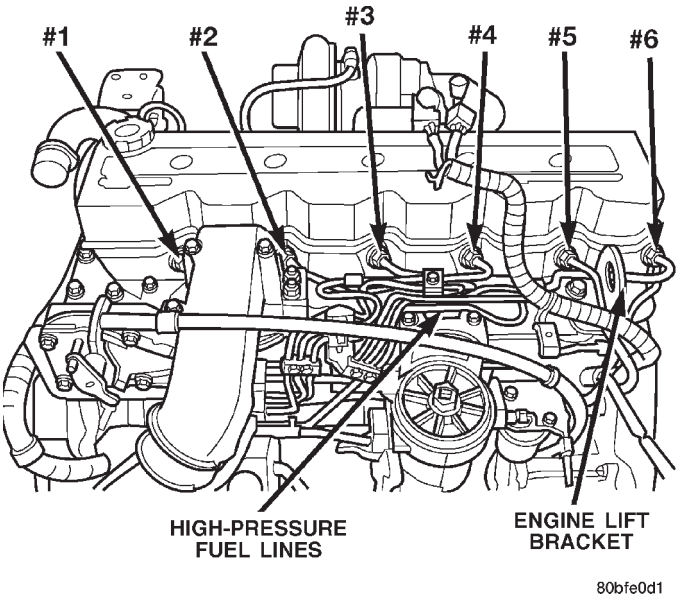

Fig. 54 High-Pressure Fuel Lines

(15) Remove bolts from all fuel injection line support brackets at intake manifold.

(16) Place shop towels around fuel lines at fuel injectors. Do not allow fuel to drip down side of engine.

CAUTION: WHEN LOOSENING OR TIGHTENING HIGH-PRESSURE FITTINGS AT INJECTION PUMP, USE A BACK-UP WRENCH ON DELIVERY VALVE AT PUMP. DO NOT ALLOW DELIVERY VALVE TO ROTATE.

(17) Loosen high-pressure line fittings at injection pump (Fig. 55) beginning with cylinders 1, 2 and 4.

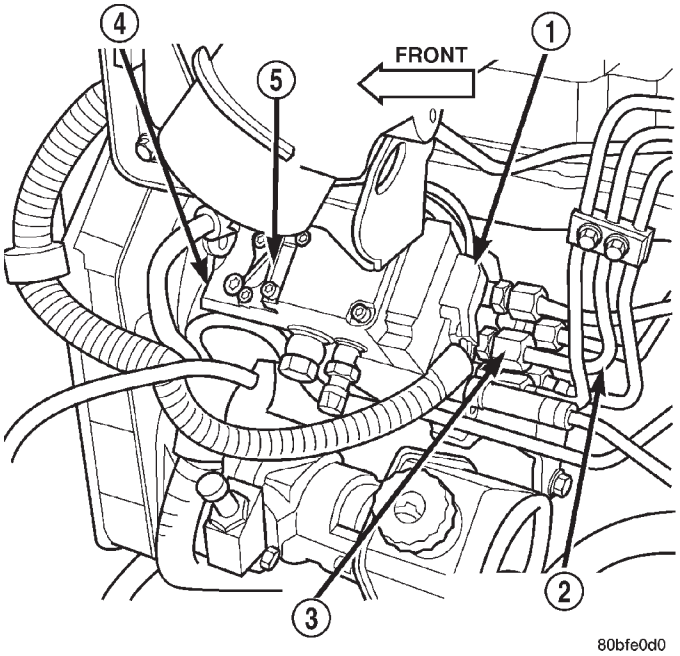

Fig. 55 High Pressure Lines at Fuel Injection Pump

1 - FPCM ELECTRICAL CONNECTOR
2 - HIGH-PRESSURE FUEL LINES
3 - FITTINGS
4 - FUEL INJECTION PUMP
5 - FPCM

(18) Loosen high-pressure lines at cylinder head for cylinders 1, 2 and 4 (Fig. 54).

(19) Carefully remove front line bundle from engine. **Do not bend lines while removing.** While removing front line bundle, note line position.

(20) Loosen high-pressure lines at injection pump beginning with cylinders 3, 5 and 6.

(21) Loosen high-pressure lines at cylinder head for cylinders 3, 5 and 6 (Fig. 54).

(22) Carefully remove rear line bundle from engine. **Do not bend lines while removing.** While removing rear line bundle, note line position.

INSTALLATION

High-pressure lines are used between the fuel injection pump and the fuel injectors only. All high-pressure fuel lines are of the same length and inside diameter. Correct high-pressure fuel line usage and installation is critical to smooth engine operation.

FUEL LINES (Continued)

CAUTION: Be sure that the high-pressure fuel lines are installed in the same order that they were removed.

(1) Lubricate threads of injector line fittings with clean engine oil.

(2) Loosen, but do not remove, all fuel line support bracket bolts.

(3) Install **rear** injection line bundle beginning with cylinder head (fuel injector) connections, followed by injection pump connections. Tighten all fittings finger tight.

(4) Tighten fittings at fuel injector ends for cylinders number 6 and 5 to 38 N·m (28 ft. lbs.) torque. **Do not tighten number 3 line at this time. It will be tightened during bleeding procedure.**

(5) Tighten 3 fittings at fuel injection pump ends to 24 N·m (18 ft. lbs.) torque.

(6) Install **front** injection line bundle beginning with cylinder head (fuel injector) connections, followed by injection pump connections. Tighten all fittings finger tight.

(7) Tighten fitting at fuel injector end for cylinder number 2 to 38 N·m (28 ft. lbs.) torque. **Do not tighten lines number 1 or 4 at this time. They will be tightened during bleeding procedure.**

(8) Tighten remaining 3 fittings at fuel injection pump ends to 24 N·m (18 ft. lbs.) torque.

(9) Install fuel line support bracket bolts to intake manifold and tighten to 24 N·m (18 ft. lbs.) torque.

CAUTION: Be sure fuel lines are not contacting each other or any other component. Noise will result.

(10) Install engine lifting bracket at rear of intake manifold. Tighten 2 bolts to 77 N·m (57 ft. lbs.) torque.

(11) Install cable bracket housing/cable assembly and tighten 3 mounting bolts to 24 N·m (18 ft. lbs.) torque.

(12) Clean any old gasket material below and above intake manifold air heater element block. Also clean mating areas at intake manifold and air intake housing.

(13) Using new gaskets, position intake manifold air heater element block to engine.

(14) Install air intake housing and position ground cable. Install 4 mounting bolts and tighten to 24 N·m (18 ft. lbs.) torque.

(15) Install air tube (intake manifold-to-charge air cooler) (Fig. 49). Tighten clamps to 8 N·m (72 in. lbs.) torque.

(16) Install engine oil dipstick tube support mounting bolt and tighten to 24 N·m (18 ft. lbs.) torque.

(17) Install engine oil dipstick to engine.

(18) Connect 2 electrical cables to cable mounting studs.

(19) Connect electrical connector to bottom of APPS by pushing connector upward until it snaps into position.

(20) Connect wiring harness (clip) at bottom of Accelerator Pedal Position Sensor (APPS) mounting bracket (Fig. 48).

(21) Connect front wiring clip (Fig. 49) to cable bracket housing.

(22) Install cable cover (Fig. 47).

(23) Connect both negative battery cables to both batteries.

(24) Bleed air from fuel system. Do this at fuel injector ends of lines. Use cylinders numbers 1, 3 and 4 for bleeding. (Refer to 14 - FUEL SYSTEM/FUEL DELIVERY - STANDARD PROCEDURE). After bleeding, tighten fittings to 38 N·m (28 ft. lbs.) torque.

(25) Check lines/fittings for leaks.

FUEL TANK

DESCRIPTION - DIESEL FUEL TANK

The fuel tank is similar to the tank used with gasoline powered models. The tank is equipped with a separate fuel return line and a different fuel tank module for diesel powered models. A fuel tank mounted, electric fuel pump is not used with diesel powered models. Refer to Fuel Tank Module for additional information.

For removal and installation procedures, refer to Fuel Tank - Gasoline Engines.

FUEL TANK MODULE

DESCRIPTION

An electric fuel pump is **not used** in the fuel tank module for diesel powered engines. Fuel is supplied by the engine mounted fuel transfer pump and the fuel injection pump.

The fuel tank module is installed in the top of the fuel tank (Fig. 56). The fuel tank module (Fig. 56) contains the following components:

- Fuel reservoir
- A separate in-tank fuel filter
- Rollover valve
- Fuel gauge sending unit (fuel level sensor)
- Fuel supply line connection
- Fuel return line connection
- Auxiliary non-pressurized fuel supply fitting

OPERATION

Refer to Fuel Gauge Sending Unit.

FUEL TANK MODULE (Continued)

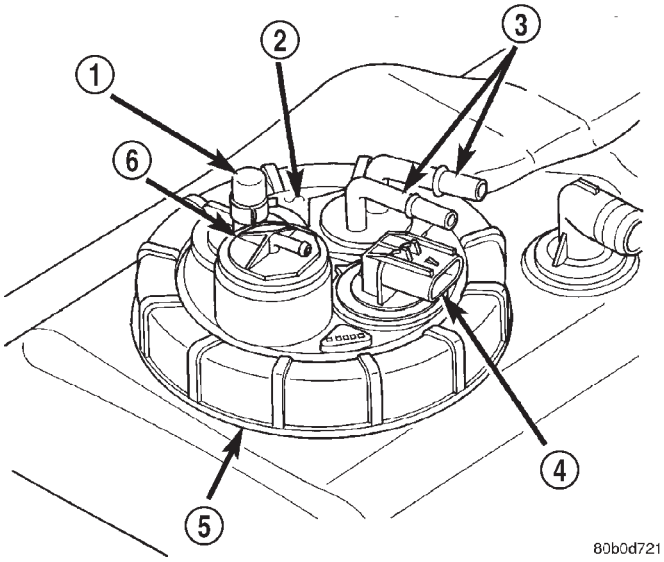

Fig. 56 Top View of Fuel Tank Module—Diesel

1 - AUXILIARY CAPPED FITTING
2 - FUEL PUMP MODULE
3 - FUEL SUPPLY/RETURN FITTINGS
4 - ELECTRICAL CONNECTOR
5 - LOCKNUT
6 - ROLLOVER VALVE

REMOVAL

(1) Drain and remove fuel tank. Refer to Fuel Tank Removal/Installation.

(2) Thoroughly clean area around tank module at top of tank.

(3) The plastic fuel tank module locknut is threaded onto fuel tank. Install Special Tool 6856 to locknut and remove locknut (Fig. 57). The fuel tank module will spring up when locknut is removed.

(4) Remove module from fuel tank.

INSTALLATION

CAUTION: Whenever the fuel tank module is serviced, the rubber gasket must be replaced.

(1) Thoroughly clean locknut and locknut threads at top of tank.

(2) Using new gasket, carefully position fuel tank module into opening in fuel tank.

(3) Position locknut over top of fuel tank module. Install locknut finger tight.

(4) When looking down at tank from drivers side of tank, the arrow at top of module should be aligned between two marks stamped into tank (approximately 2 o'clock position). The fuel line connectors, roll over valve and fuel gauge electrical connector should all be pointed to drivers side of vehicle. Rotate and align module/tank marks if necessary before tightening locknut. **This step must be performed to prevent the module's float from contacting side of fuel tank.**

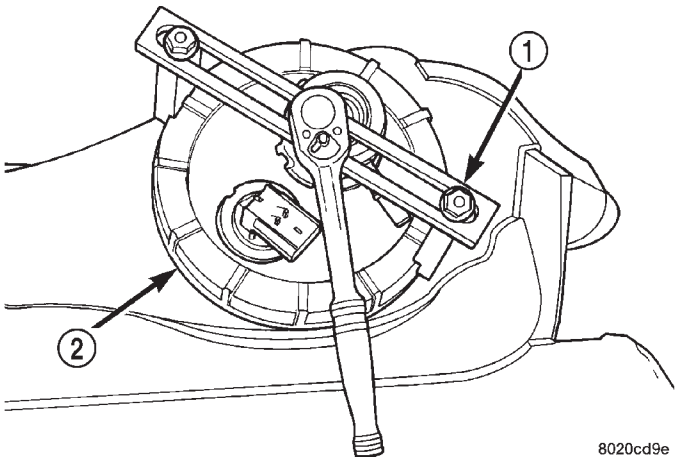

Fig. 57 Locknut Removal/Installation—TYPICAL MODULE

1 - SPECIAL TOOL 6856
2 - LOCKNUT

(5) Tighten locknut to 24–44 N·m (18–32 ft. lbs.) torque.

(6) Install fuel tank. Refer to Fuel Tank Removal/Installation.

FUEL TRANSFER PUMP

DESCRIPTION

The fuel transfer pump (fuel lift pump) is located on the left-rear side of the engine cylinder block above the starter motor (Fig. 58). The 12–volt electric vane-type pump is operated and controlled by the Engine Control Module (ECM) (Fig. 59).

OPERATION

The purpose of the fuel transfer pump is to supply (transfer) a low-pressure fuel source: **from** the fuel tank, **through** the fuel filter/water separator and **to** the fuel injection pump. Here, the low-pressure is raised to a high-pressure by the fuel injection pump for operation of the high-pressure fuel injectors. Check valves within the pump, control direction of fuel flow and prevent fuel bleed-back during engine shut down.

Normal current flow to the pump is 12 amperes.

With the engine running, the pump has **2** modes of operation: Mode 1: 100 percent duty-cycle with a minimum pressure of 10 psi **except when the engine is cranking.** Mode 2: 15 percent duty-cycle with maximum pressure of 7 psi **with the engine cranking**

The 15 percent duty-cycle is used to limit injection pump inlet pressure until the engine is running.

FUEL TRANSFER PUMP (Continued)

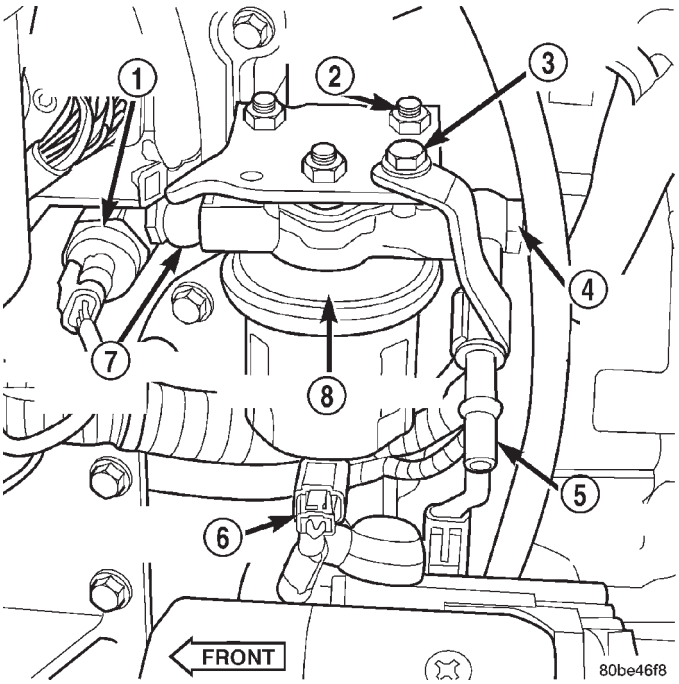

Fig. 58 Fuel Transfer Pump Location

1 - OIL PRESSURE SENSOR
2 - PUMP BRACKET NUTS (3)
3 - SUPPORT BRACKET BOLT
4 - BANJO BOLT (REAR)
5 - FUEL SUPPLY LINE
6 - ELECTRICAL CONNECTOR
7 - BANJO BOLT (FRONT)
8 - FUEL TRANSFER PUMP

The transfer pump is self-priming: When the key is first turned on (without cranking engine), the pump will operate for approximately 1/4 second and then shut off. The pump will also operate for up to 25 seconds after the starter is engaged, and then disengaged and the engine is not running. The pump shuts off immediately if the key is on and the engine stops running.

The fuel volume of the transfer pump will always provide more fuel than the fuel injection pump requires. Excess fuel is returned from the injection pump through an overflow valve. The valve is located on the side of the injection pump (Fig. 60). It is also used to connect the fuel return line to the side of the injection pump. This valve opens at approximately 97 kPa (14 psi) and returns fuel to the fuel tank through the fuel return line.

DIAGNOSIS AND TESTING - FUEL TRANSFER PUMP PRESSURE

The following tests will include: pressures tests of fuel transfer pump (engine running and engine cranking), a test for supply side restrictions, and a test for air in fuel supply side.

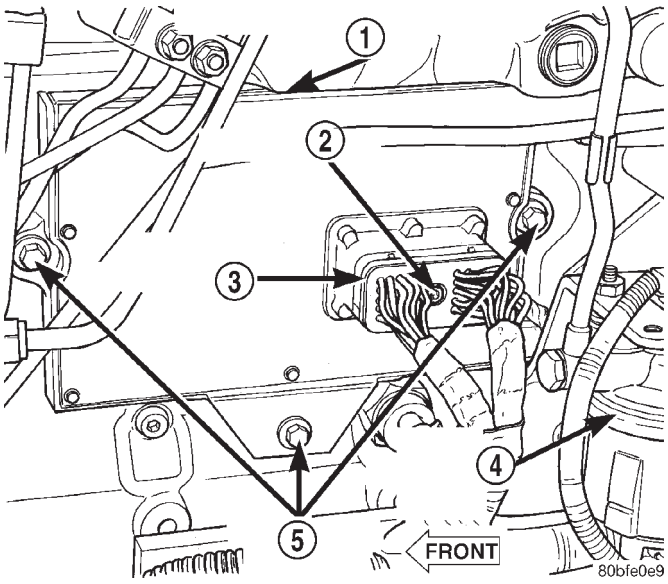

Fig. 59 Engine Control Module (ECM) Location

1 - ENGINE CONTROL MODULE (ECM)
2 - HEX HEADED BOLT
3 - 50-WAY CONNECTOR
4 - FUEL TRANSFER PUMP
5 - MOUNTING BOLTS (3)

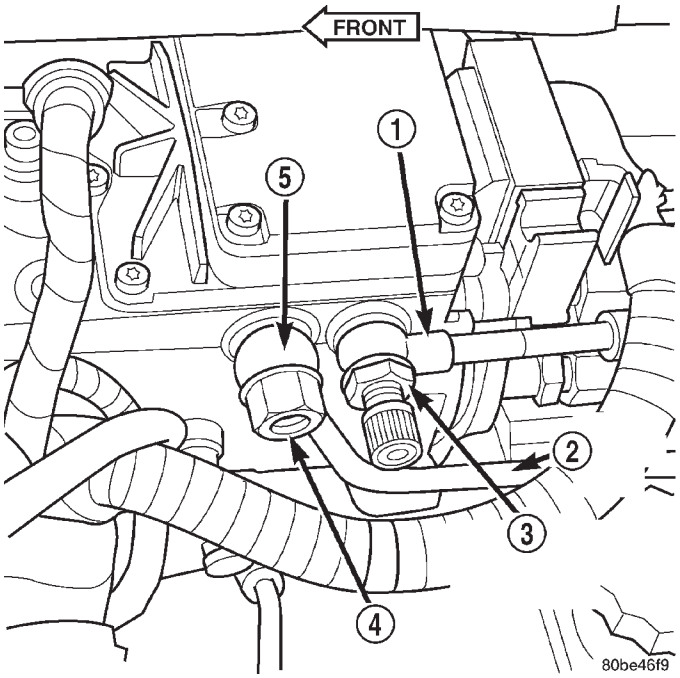

Fig. 60 Injection Pump Overflow Valve Location

1 - FUEL SUPPLY LINE
2 - FUEL RETURN LINE
3 - BANJO BOLT (TEST PORT FITTING)
4 - OVERFLOW VALVE
5 - BANJO FITTING

FUEL TRANSFER PUMP (Continued)

Refer to Fuel Transfer Pump Description/Operation for an operational description of transfer pump.

The fuel transfer (lift) pump is located on left side of engine and above starter motor (Fig. 61).

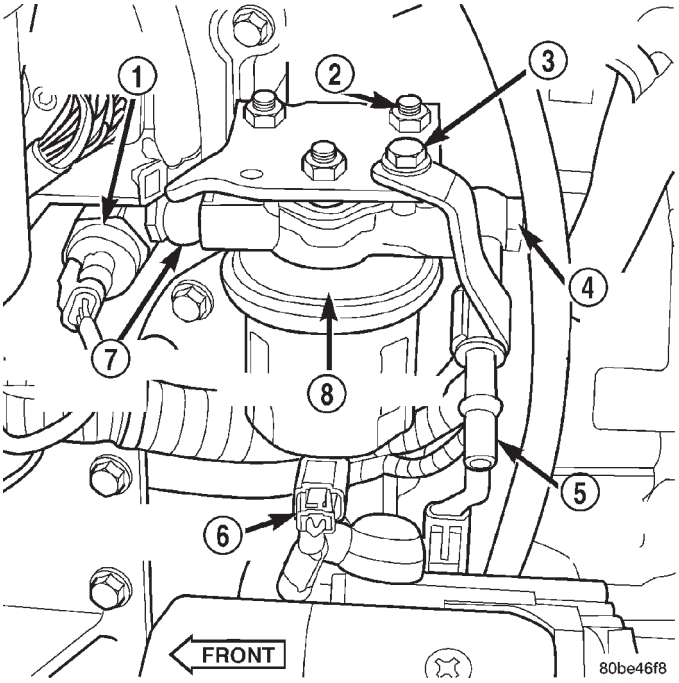

Fig. 61 Fuel Transfer Pump Location

1 - OIL PRESSURE SENSOR
2 - PUMP BRACKET NUTS (3)
3 - SUPPORT BRACKET BOLT
4 - BANJO BOLT (REAR)
5 - FUEL SUPPLY LINE
6 - ELECTRICAL CONNECTOR
7 - BANJO BOLT (FRONT)
8 - FUEL TRANSFER PUMP

An improperly operating fuel transfer pump, a plugged or dirty fuel filter, or a defective overflow valve can cause low engine power, excessive white smoke and/or hard engine starting.

Before performing following tests, inspect fuel supply and return lines for restrictions, kinks or leaks.

Fuel leaking from pump casing indicates a leaking pump which must be replaced.

Pressure Test: Because the transfer pump is operating at two different pressure cycles (engine running and engine cranking), two different pressure tests will be performed.

(1) Remove protective cap at test port (Fig. 62). Clean area around cap/fitting before cap removal.

(2) Install Special Fuel Pressure Test Gauge 6828 (or equivalent) to fitting at test port (Fig. 62).

(3) To prevent engine from starting, remove fuel system relay (fuel injection pump relay). Relay is located in Power Distribution Center (PDC). Refer to label under PDC cover for relay location.

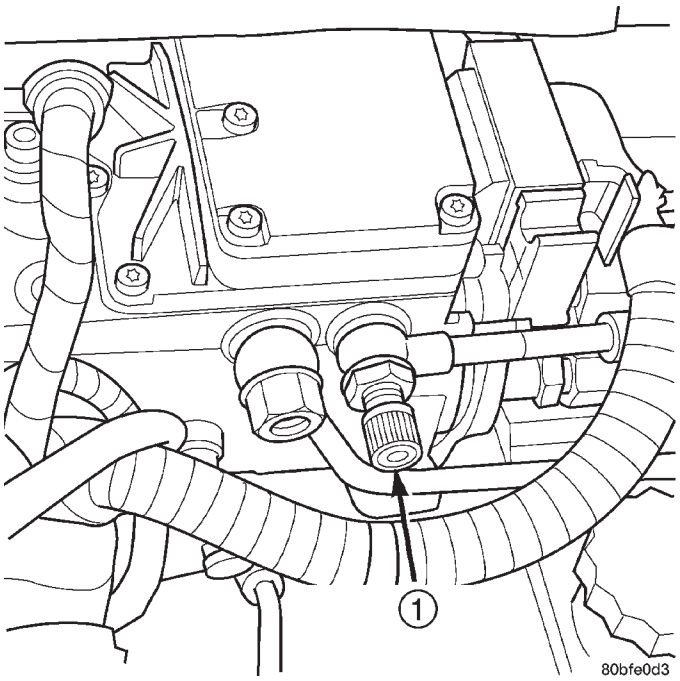

Fig. 62 Fuel Pressure Test Port Fitting

1 - FUEL PRESSURE TEST PORT

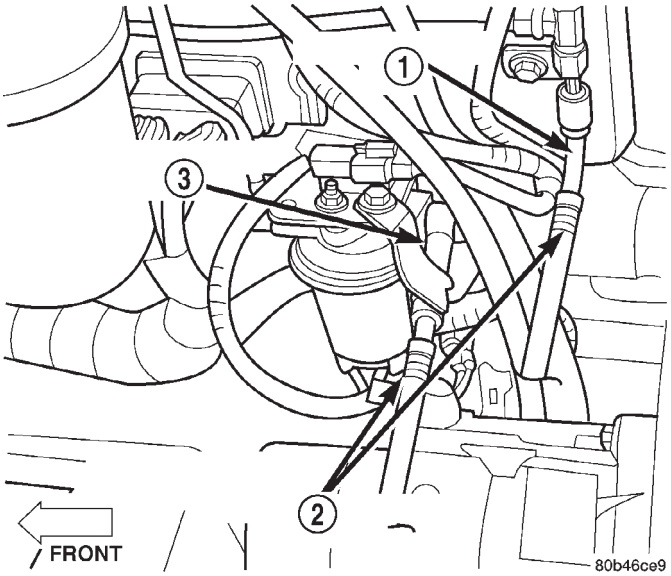

Fig. 63 Fuel Return and Supply Line Quick-Connect Locations

1 - FUEL RETURN LINE
2 - QUICK-CONNECT FITTINGS
3 - FUEL SUPPLY LINE

(4) Using key, crank engine over while observing gauge. Pressure should be 5–7 psi.

(5) Re-install fuel system relay to PDC.

(6) Start engine and record fuel pressure. Pressure should be a **minimum** of 69 kPa (10 psi) at idle speed.

FUEL TRANSFER PUMP (Continued)

(7) Because fuel pump relay was removed, a Diagnostic Trouble Code (DTC) may have been set. After testing is completed, and relay has been installed, use DRB scan tool to remove DTC.

Fuel Supply Restriction Test:

Due to very small vacuum specifications, the DRB scan tool along with the Periphal Expansion Port (PEP) Module and 0–15 psi transducer must be used.

(8) Verify transfer pump pressure is OK before performing restriction test.

(9) Locate and disconnect fuel supply line quick-connect fitting at left-rear of engine (Fig. 63). After disconnecting line, plastic clip will remain attached to metal fuel line at engine. Carefully remove clip from metal line. Snap same clip into fuel supply hose.

(10) Install Special Rubber Adapter Hose Tool 6631 (3/8”) into ends of disconnected fuel supply line.

(11) Install transducer from PEP module to brass “T” fitting on tool 6631.

(12) Hook up DRB scan tool to transducer.

WARNING: DO NOT STAND IN LINE WITH THE COOLING FAN FOR THE FOLLOWING STEPS.

(13) Start engine and record vacuum reading with engine speed at high-idle (high-idle means engine speed is at 100 percent throttle and no load). The fuel restriction test **MUST** be done with engine speed at high-idle.

(14) If vacuum reading is **less** than 6 in/hg. (0–152 mm hg.), test is OK. If vacuum reading is **higher** than 6 in/hg. (152 mm hg.), restriction exists in fuel supply line or in fuel tank module. Check fuel supply line for damage, dents or kinking. If OK, remove module and check module and lines for blockage. Also check fuel pump inlet filter at bottom of module for obstructions.

Testing For Air Leaks in Fuel Supply Side:

(15) A 3–foot section of 3/8” I.D. clear tubing is required for this test.

(16) Using a tire core valve removal tool, carefully remove core valve from inlet fitting test port.

(17) Attach and clamp the 3/8”clear hose to fitting nipple.

(18) Place other end of hose into a large clear container. Allow hose to loop as high as possible **above** test port.

(19) The fuel transfer pump can be put into a 25 second run (test) mode if key is quickly turned to crank position and released back to run position without starting engine.

To prevent engine from starting in this test, first remove fuel system relay (fuel injection pump relay). Relay is located in Power Distribution Center (PDC). Refer to label under PDC cover for relay location.

Because fuel pump relay was removed, a Diagnostic Trouble Code (DTC) may have been set. After testing is completed, and relay has been installed, use DRB scan tool to remove DTC.

(20) Allow air to purge from empty hose before examining for air bubbles. Air bubbles should not be present.

(21) If bubbles are present, check for leaks in supply line to fuel tank.

(22) If supply line is not leaking, remove fuel tank module and remove filter at bottom of module (filter snaps to module). Check for leaks between supply nipple at top of module, and filter opening at bottom of module. Replace module if necessary.

(23) After performing test, install core back into test fitting. Before installing protective cap, be sure fitting is not leaking.

REMOVAL

The fuel transfer pump (fuel lift pump) is located on left side of engine, below and rearward of fuel filter (Fig. 64).

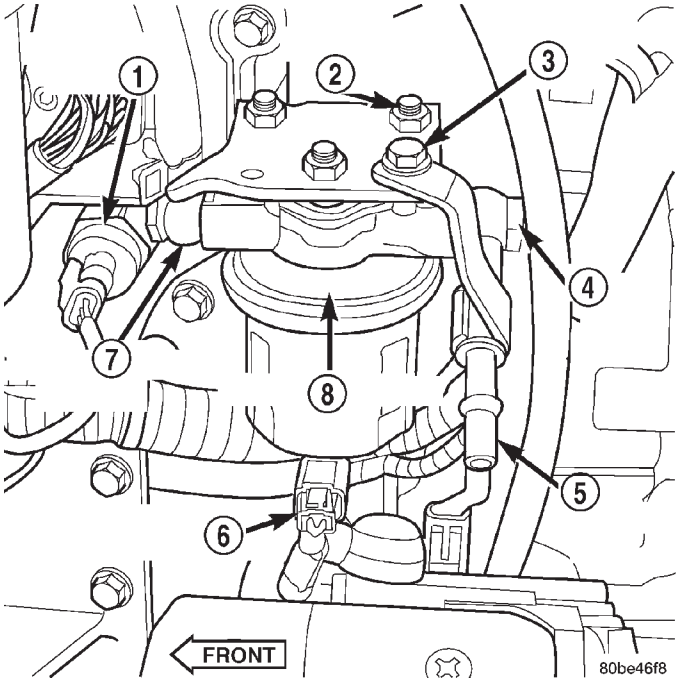

Fig. 64 Fuel Transfer Pump Location

1 - OIL PRESSURE SENSOR
2 - PUMP BRACKET NUTS (3)
3 - SUPPORT BRACKET BOLT
4 - BANJO BOLT (REAR)
5 - FUEL SUPPLY LINE
6 - ELECTRICAL CONNECTOR
7 - BANJO BOLT (FRONT)
8 - FUEL TRANSFER PUMP

(1) Disconnect both negative battery cables at both batteries.

FUEL TRANSFER PUMP (Continued)

(2) Thoroughly clean area around transfer pump and fuel lines of any contamination.

(3) Remove starter motor. Refer to Starter Removal/Installation in 8, Starting System for procedures.

(4) Place a drain pan below the pump.

(5) Disconnect fuel line quick-connect fitting at fuel supply line (Fig. 64) at rear of pump.

(6) Remove support bracket bolt at top of pump (Fig. 64).

(7) Remove front and rear banjo bolts at pump (Fig. 64).

(8) Disconnect electrical connector at side of pump (Fig. 64).

(9) Remove three pump bracket nuts (Fig. 64) and remove pump from vehicle.

INSTALLATION

The fuel transfer pump (fuel lift pump) is located on left side of engine, below and rearward of fuel filter (Fig. 64).

(1) Install new gaskets to fuel supply line/support bracket and banjo bolt at rear of pump. Install line and banjo bolt to pump. **Do not** tighten banjo bolt at this time.

(2) Install new gaskets to fuel line and banjo bolt at front of pump.

(3) Position 3 pump studs into pump mounting bracket and install 3 nuts. **Do not** tighten nuts at this time.

(4) Install support bracket bolt (Fig. 64). **Do not** tighten bolt at this time.

(5) Tighten 3 pump nuts to 12 N·m (9 ft. lbs.) torque.

(6) Tighten both banjo bolts to 24 N·m (18 ft. lbs.) torque.

(7) Tighten support bracket bolt 12 N·m (9 ft. lbs.) torque.

(8) Connect electrical connector to pump (Fig. 64).

(9) Connect fuel line quick-connect fitting to fuel supply line at rear of pump.

(10) Install starter motor. Refer to Starter Removal/Installation in 8, Starting for procedures.

(11) Connect both negative battery cables at both batteries.

(12) Bleed air at fuel supply line at side of fuel injection pump. Refer to the Air Bleed Procedure.

(13) Start engine and check for leaks.

OVERFLOW VALVE

DESCRIPTION

The overflow valve is located on the side of the injection pump (Fig. 65). It is also used to connect the fuel return line (banjo fitting) to the fuel injection pump.

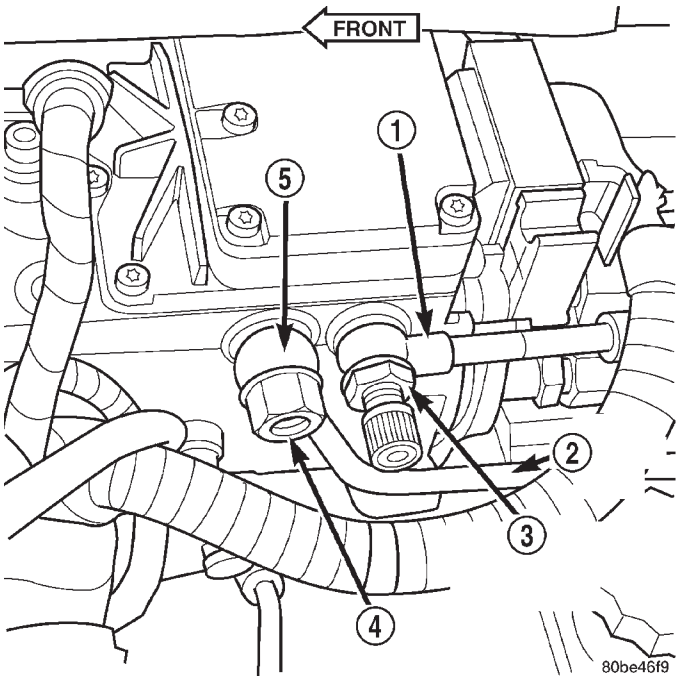

Fig. 65 Overflow Valve Location

1 - FUEL SUPPLY LINE
2 - FUEL RETURN LINE
3 - BANJO BOLT (TEST PORT FITTING)
4 - OVERFLOW VALVE
5 - BANJO FITTING

OPERATION

Fuel volume from the fuel transfer (lift) pump will always provide more fuel than the fuel injection pump requires. The overflow valve (a check valve) is used to route excess fuel through the fuel return line and back to the fuel tank. Approximately 70% of supplied fuel is returned to the fuel tank. The valve opens at approximately 97 kPa (14 psi). If the check valve within the assembly is sticking open, fuel drainage of the injection pump could cause hard starting.

If a Diagnostic Trouble Code (DTC) has been stored for “decreased engine performance due to high injection pump fuel temperature”, the overflow valve may be stuck in closed position.

DIAGNOSIS AND TESTING - OVERFLOW VALVE

Fuel volume from the fuel transfer (lift) pump will always provide more fuel than the fuel injection pump requires. The overflow valve (a check valve) is used to route excess fuel through the fuel return line and back to the fuel tank. Approximately 70% of supplied fuel is returned to the fuel tank. The valve is located on the side of the injection pump (Fig. 66). It is also used to connect the fuel return line (banjo fitting) to the fuel injection pump. The valve opens at approximately 97 kPa (14 psi). If the check valve

OVERFLOW VALVE (Continued)

within the assembly is sticking, low engine power or hard starting may result.

If a Diagnostic Trouble Code (DTC) has been stored for “decreased engine performance due to high injection pump fuel temperature”, the overflow valve may be stuck in closed position.

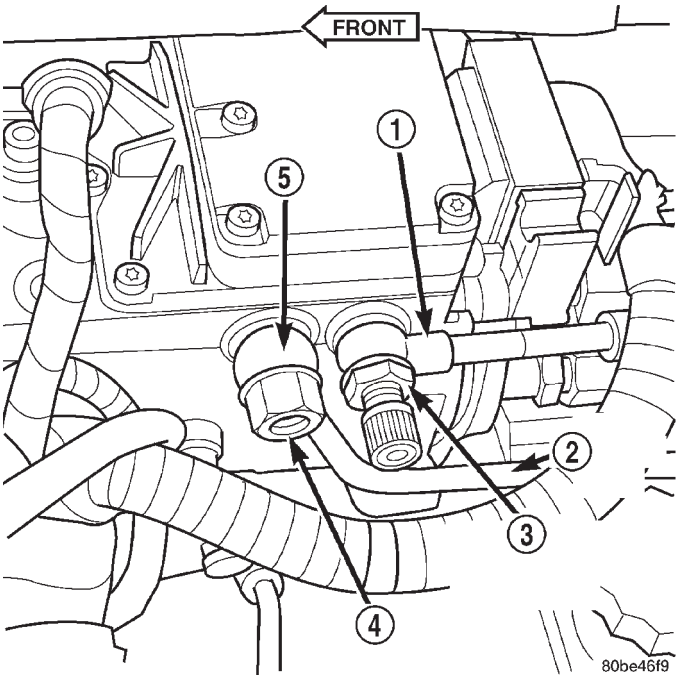

Fig. 66 Overflow Valve Location

1 - FUEL SUPPLY LINE
2 - FUEL RETURN LINE
3 - BANJO BOLT (TEST PORT FITTING)
4 - OVERFLOW VALVE
5 - BANJO FITTING

A rubber tipped blow gun with regulated air line pressure is needed for this test.

(1) Clean area around overflow valve and fuel return line at injection pump before removal.

(2) Remove valve from pump and banjo fitting.

(3) Discard old sealing gaskets.

(4) Set regulated air pressure to approximately 97 kPa (14–16 psi).

(5) Using blow gun, apply pressure to overflow valve inlet end (end that goes into injection pump).

(6) Internal check valve should release, and air should pass through valve at 97 kPa (14–16 psi). If not, replace valve.

(7) Reduce regulated air pressure to 10 psi and observe valve. Valve should stay shut. If not, replace valve.

(8) Install new sealing gaskets to valve.

(9) Install valve through banjo fitting and into pump.

(10) Tighten to 30 N·m (24 ft. lbs.) torque.

REMOVAL

The overflow valve (pressure relief valve) is located at the outside of fuel injection pump (Fig. 67). It connects the fuel return line (banjo fitting) to the pump. The valve has no internal serviceable parts and must be replaced as an assembly. Two sealing gaskets are used. One gasket is located between pump and banjo fitting. The other is located between the banjo fitting and end of valve.

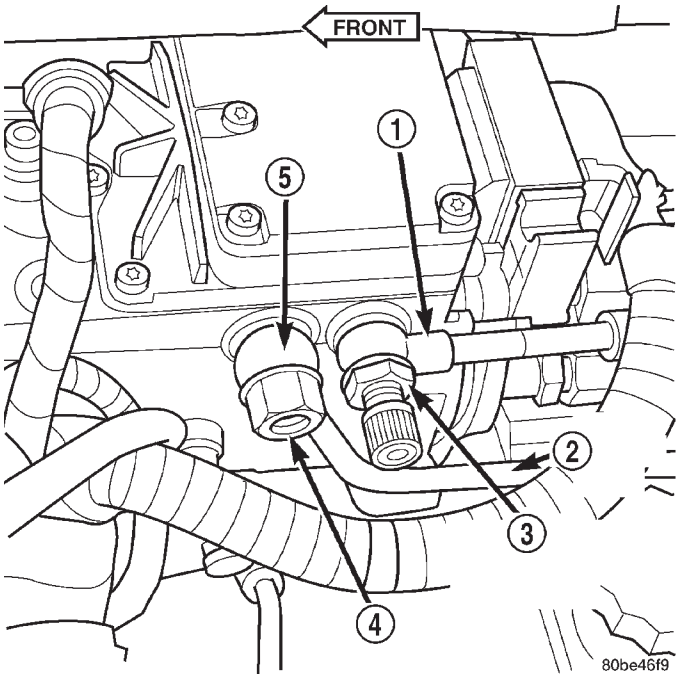

Fig. 67 Overflow Valve Location

1 - FUEL SUPPLY LINE
2 - FUEL RETURN LINE
3 - BANJO BOLT (TEST PORT FITTING)
4 - OVERFLOW VALVE
5 - BANJO FITTING

(1) Clean area around overflow valve and fuel return line at injection pump before removal.

(2) Remove valve from pump and banjo fitting.

(3) Discard old sealing gaskets.

INSTALLATION

The overflow valve (pressure relief valve) is located at the outside of fuel injection pump (Fig. 67). It connects the fuel return line (banjo fitting) to the pump. The valve has no internal serviceable parts and must be replaced as an assembly. Two sealing gaskets are used. One gasket is located between pump and banjo fitting. The other is located between the banjo fitting and end of valve.

(1) Install new sealing gaskets to valve.

(2) Install valve through banjo fitting and into pump.

(3) Tighten to 30 N·m (24 ft. lbs.) torque.

WATER IN FUEL SENSOR

DESCRIPTION

The WIF sensor is located on the side of the fuel filter/water separator canister (Fig. 68).

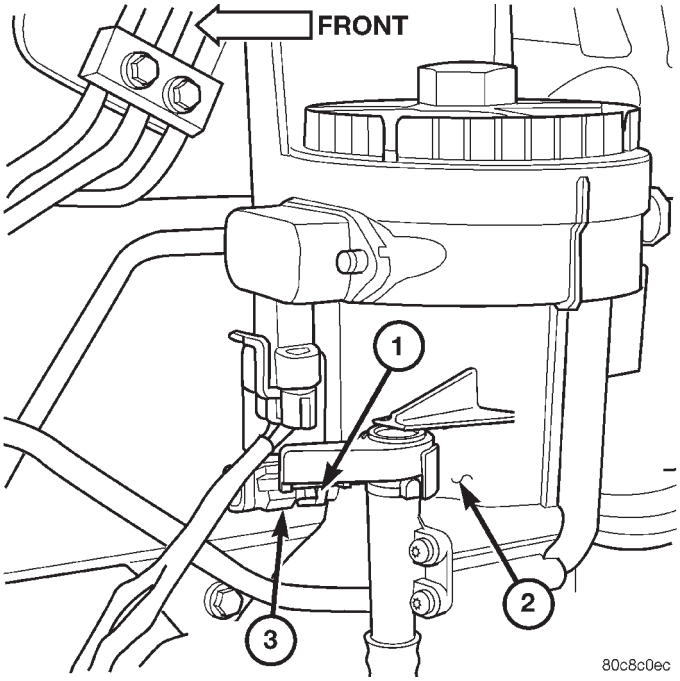

Fig. 68 Water-in-Fuel Sensor Location

1 - WATER-IN-FUEL (WIF) SENSOR
2 - FUEL FILTER/WATER SEPARATOR
3 - WIF SENSOR CONNECTOR

OPERATION

The sensor sends an input to the Engine Control Module (ECM) when it senses water in the fuel filter/water separator. As the water level in the filter/separator increases, the resistance across the WIF sensor decreases. This decrease in resistance is sent as a signal to the ECM and compared to a high water standard value. Once the value reaches 30 to 40 kilohms, the ECM will activate the water-in-fuel warning lamp through CCD bus circuits. This all takes place when the ignition key is initially put in the ON position. The ECM continues to monitor the input at the end of the intake manifold air heater post-heat cycle.

REMOVAL

The Water-In-Fuel (WIF) sensor is located at the side of fuel filter/water separator canister. Refer to Fuel Filter/Water Separator Removal/Installation for WIF sensor removal/installation procedures.

FUEL DRAIN MANIFOLD

DESCRIPTION

The fuel drain manifold is actually a rifled passage within the cylinder head (Fig. 69).

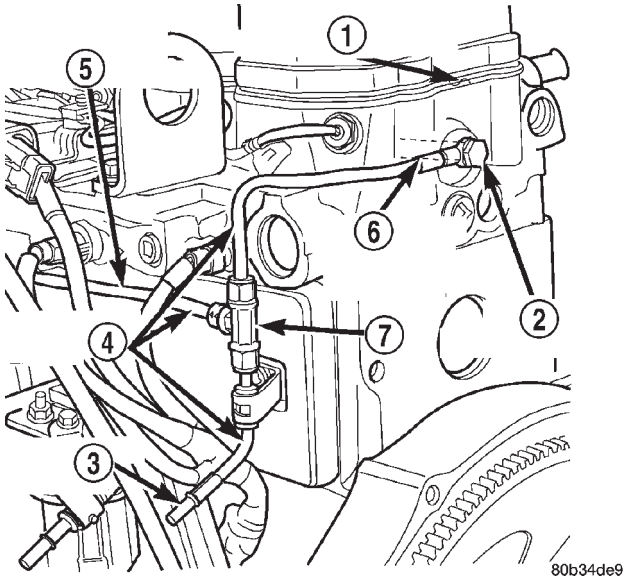

Fig. 69 Fuel Drain Manifold Passage

1 - REAR OF CYLINDER HEAD
2 - BANJO FITTING/BOLT
3 - FUEL RETURN TO TANK
4 - FUEL RETURN LINES
5 - FUEL RETURN LINE FROM PUMP OVERFLOW VALVE
6 - FUEL DRAIN MANIFOLD PASSAGE
7 - “T”

OPERATION

When the engine is running, and during injection, a small amount of fuel flows past the injector nozzle and is not injected into the combustion chamber. This fuel is used to lubricate the fuel injectors. Excess fuel drains into the fuel drain manifold (or passage). Fuel is drained from this passage into a line at the rear of the cylinder head (Fig. 69). After exiting the cylinder head, fuel is routed (returned) back to the fuel tank. A “T” is installed into the fuel return line (Fig. 69). This “T” is used to allow excess fuel from the injection pump to be returned into the fuel tank. A one-way check valve within the overflow valve prevents fuel (from the fuel drain manifold) from entering the fuel injection pump.

A **small** amount of fuel is returned from the fuel injectors, while a **large** amount (about 70% of supplied fuel) is returned from the fuel injection pump.

FUEL DRAIN MANIFOLD (Continued)

REMOVAL

The fuel drain manifold (line) connects a fuel return passage within the cylinder head to a “T” fitting on the fuel return line. It is located at the rear of the cylinder head.

(1) Disconnect both negative battery cables at both batteries.

(2) Remove starter motor. Refer to Group 8B for procedures.

(3) Disconnect fitting at “T” (Fig. 70).

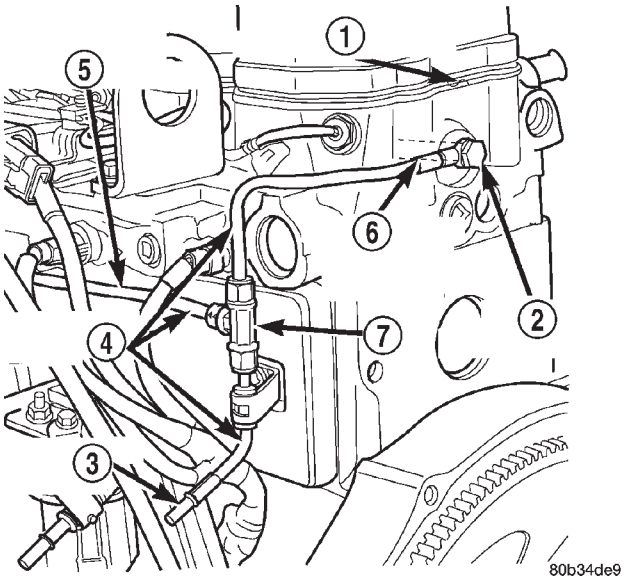

Fig. 70 Fuel Return Line at Rear of Cylinder Head

1 - REAR OF CYLINDER HEAD
2 - BANJO FITTING/BOLT
3 - FUEL RETURN TO TANK
4 - FUEL RETURN LINES
5 - FUEL RETURN LINE FROM PUMP OVERFLOW VALVE
6 - FUEL DRAIN MANIFOLD PASSAGE
7 - “T”

(4) Remove banjo bolt at rear of cylinder head. Discard old sealing washers.

(5) Remove fuel line from vehicle.

(6) Clean connection at rear of cylinder head before line installation.

INSTALLATION

The fuel drain manifold (line) connects a fuel return passage within the cylinder head to a “T” fitting on the fuel return line. It is located at the rear of the cylinder head.

Servicing fuel return components will not require air bleeding.

(1) Using new sealing washers, assemble banjo bolt to fuel line.

(2) Position line to engine and loosely tighten fasteners.

(3) Tighten banjo bolt to 24 N·m (18 ft. lbs.) torque.

(4) Tighten fitting at “T” to 12 N·m (106 in. lbs.) torque.

(5) Install starter motor. Refer to 8, Starter for procedures.

(6) Connect both negative battery cables at both batteries.

FUEL INJECTION - DIESEL

TABLE OF CONTENTS

page

FUEL INJECTION - DIESEL
DESCRIPTION - DIESEL FUEL INJECTION SYSTEM . . . 91
DIAGNOSIS AND TESTING - BOOST PRESSURE . . . 93
SPECIFICATIONS
TORQUE - DIESEL ENGINE . . . 94
ACCELERATOR PEDAL POSITION SENSOR
DESCRIPTION . . . 95
OPERATION . . . 95
REMOVAL . . . 95
INSTALLATION . . . 97
FUEL INJECTOR
DESCRIPTION . . . 97
OPERATION . . . 98
DIAGNOSIS AND TESTING—FUEL INJECTOR TEST . . . 99
REMOVAL . . . 101
INSTALLATION . . . 102
FUEL INJECTION PUMP RELAY
DESCRIPTION . . . 103
OPERATION . . . 103
FUEL TEMPERATURE SENSOR
DESCRIPTION . . . 104
OPERATION . . . 104
INTAKE AIR HEATER
DESCRIPTION . . . 104
OPERATION . . . 104
REMOVAL . . . 104
INSTALLATION . . . 105
INTAKE AIR HEATER RELAY
DESCRIPTION . . . 105
OPERATION . . . 105
REMOVAL . . . 106
INSTALLATION . . . 106
INTAKE AIR TEMPERATURE SENSOR
DESCRIPTION - DIESEL . . . 106
OPERATION - DIESEL . . . 106
REMOVAL - DIESEL . . . 107
INSTALLATION - DIESEL . . . 107
MAP SENSOR
DESCRIPTION - DIESEL . . . 108
OPERATION - DIESEL . . . 108
REMOVAL - DIESEL . . . 108
INSTALLATION . . . 108
PTO SWITCH
DESCRIPTION
OPERATION . . . 108
THROTTLE CONTROL CABLE
REMOVAL . . . 109
INSTALLATION . . . 110

FUEL INJECTION - DIESEL

DESCRIPTION - DIESEL FUEL INJECTION SYSTEM

The Engine Control Module (ECM) and Fuel Injection Pump Control Module (FPCM) are used primarily for fuel system control. The ECM is a separate replaceable component, while the FPCM is internal to the fuel injection pump and is a non-serviceable part. The ECM and FPCM are interconnected (wired together) for fuel injection control.

The Powertrain Control Module (PCM) is used to regulate or control the A/C, charging and speed control systems. It is also used to partially control certain electronic automatic transmission components. The PCM also has control over certain instrument panel components.

Refer to either Powertrain Control Module (PCM) or Engine Control Module (ECM) for additional information. Refer to (Fig. 1) for a partial list of fuel system components.

FUEL INJECTION - DIESEL (Continued)

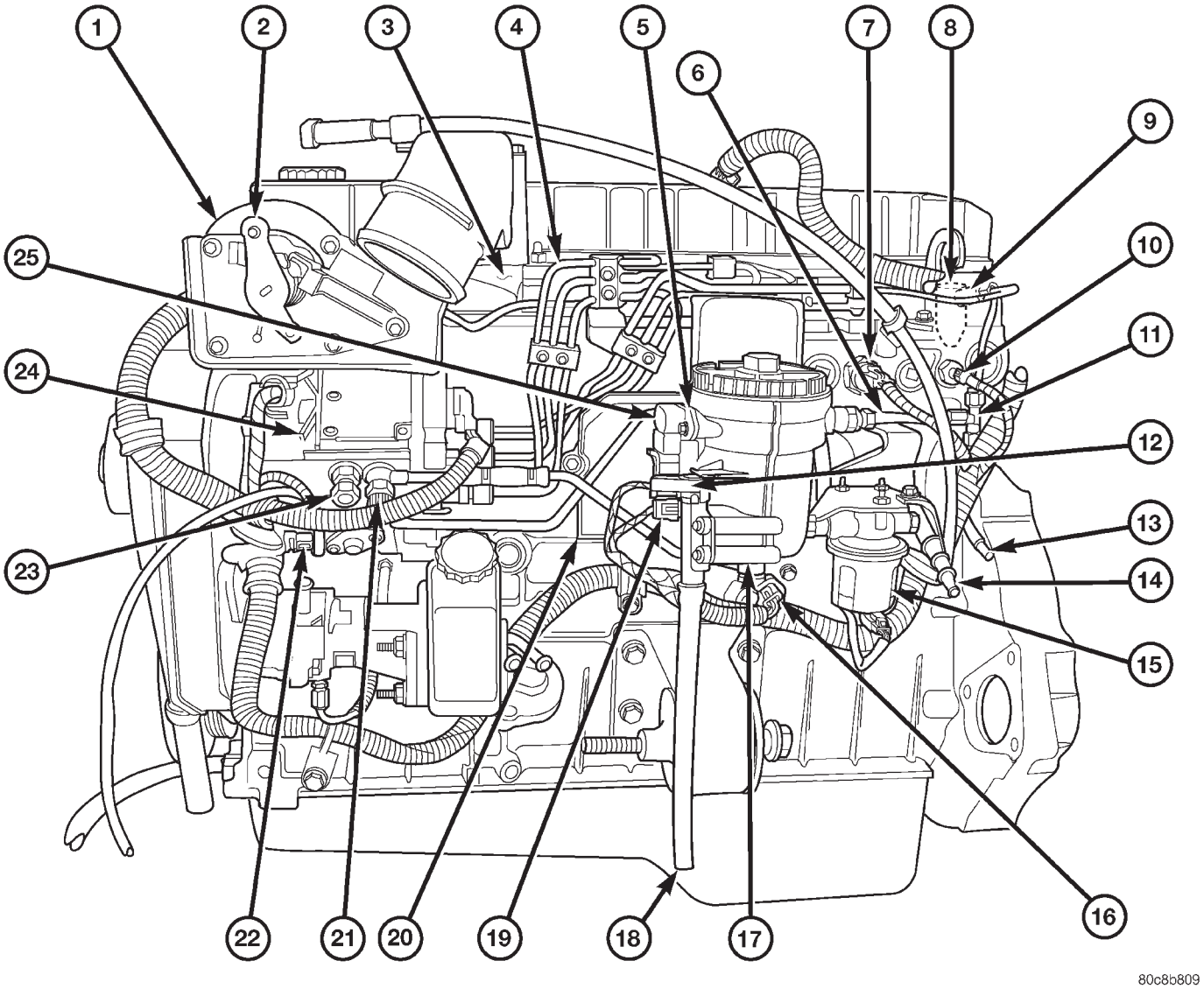

Fig. 1 FUEL SYSTEM COMPONENTS - DIESEL

1 - ENGINE COOLANT TEMPERATURE (ECT) SENSOR
2 - THROTTLE LEVER BELLCRANK AND APPS (ACCELERATOR PEDAL POSITION SENSOR)
3 - INTAKE MANIFOLD AIR HEATER/ELEMENTS
4 - HIGH-PRESSURE FUEL LINES
5 - FUEL HEATER
6 - FUEL PRESSURE TEST PORT
7 - MAP (BOOST) SENSOR
8 - FUEL INJECTORS
9 - FUEL INJECTOR CONNECTOR
10 - INTAKE AIR TEMPERATURE (IAT) SENSOR
11 - FUEL DRAIN MANIFOLD
12 - DRAIN VALVE
13 - FUEL RETURN LINE (TO FUEL TANK)
14 - FUEL SUPPLY LINE (LOW-PRESSURE, TO ENGINE)
15 - FUEL TRANSFER (LIFT) PUMP
16 - OIL PRESSURE SENSOR
17 - FUEL FILTER/WATER SEPARATOR
18 - DRAIN TUBE
19 - WATER-IN-FUEL (WIF) SENSOR
20 - ENGINE CONTROL MODULE (ECM)
21 - FUEL PRESSURE TEST PORT
22 - CAMSHAFT POSITION SENSOR (CMP)
23 - OVERFLOW VALVE
24 - FUEL INJECTION PUMP
25 - FUEL HEATER TEMPERATURE SENSOR (THERMOSTAT)

FUEL INJECTION - DIESEL (Continued)

DIAGNOSIS AND TESTING - BOOST PRESSURE

Two pressure gauges attached at two different points are required for this test.

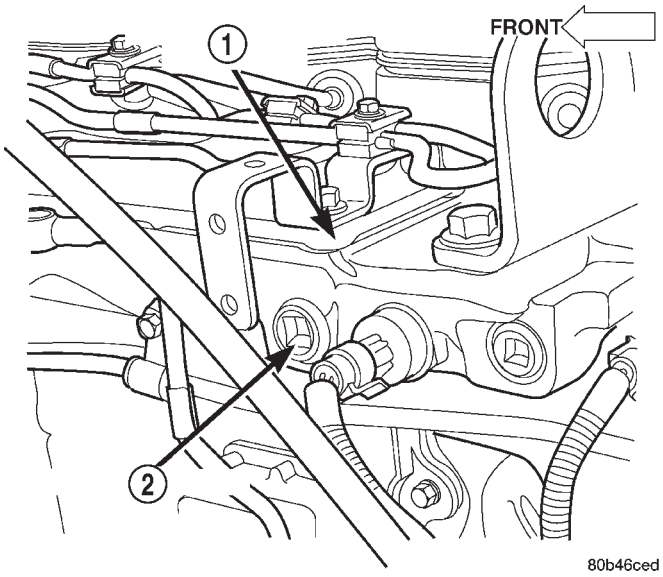

Fig. 2 Boost Pressure Test at Intake Manifold

1 - REAR OF INTAKE MANIFOLD
2 - 3/4″ PIPE PLUG

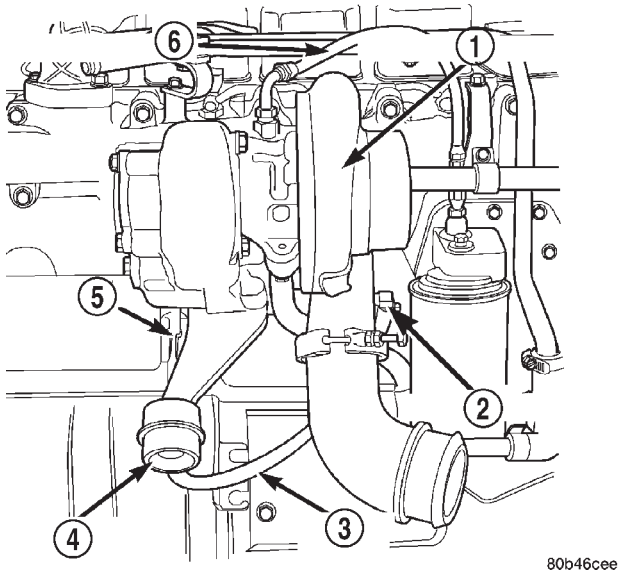

Fig. 3 Boost Pressure Test at Turbocharger

1 - TURBOCHARGER
2 - 1/8″ FITTING
3 - SIGNAL LINE
4 - WASTEGATE ACTUATOR
5 - CONTROL ROD
6 - OIL SUPPLY LINE

(1) Obtain two 6828 fuel pressure test gauges (equivalent gauges are OK). **Gauge Consistency Test:** Connect the gauges together to a common pressure source and verify pressure consistency of both gauges. Do this consistency test at approximately 206 kPa (30 psi). If pressures are different, they can still be used for test. Note and record differences in pressures before testing. Make adjustments as necessary.

(2) Remove 3/4” pipe plug fitting at rear of intake manifold (Fig. 2). Temporarily replace this fitting with fitting reducer to adapt to pressure gauge. **Note: This pipe plug is located to front of MAP sensor. Do not remove plug to rear of MAP sensor. This is a COOLANT passage plug.**

(3) Loosen hose clamp and disconnect rubber signal line (Fig. 3) from 1/8” brass fitting at front of turbocharger.

(4) Remove 1/8” brass fitting (Fig. 3) from turbocharger. Temporarily replace this fitting with a 1/8” “T” fitting to adapt to pressure gauge.

(5) Reattach signal line to temporary “T”.

(6) Attach first pressure gauge to intake manifold fitting.

(7) Attach second pressure gauge to “T” fitting at turbocharger.

Engine must be at rated RPM and full load for the test.

If gauge pressure differential is greater than 3 psi (6 in. Hg), check intercooler and associated piping for restrictions, plugging or damage.

Maximum pressure at intake manifold (rated rpm and load) is 36–37 in/hg ± 3 in/hg (17.7–18.2 psi ± 1.5 psi).

Wastegate should open at no higher than 38.7 in/hg (19 psi) at wide open throttle, full load. If wastegate is out of adjustment, a DTC may have been set. Refer to Wastegate Adjustment in Engines for adjustment procedures.

FUEL INJECTION - DIESEL (Continued)

SPECIFICATIONS

TORQUE - DIESEL ENGINE

DESCRIPTION	N m	Ft. Lbs.	In. Lbs.
Accelerator Pedal Position Sensor Bracket Bolts	12	9	105
Air Intake Housing Bolts	24	18	212
Banjo Fittings at top of Filter/Separator	24	18	212
Banjo Fittings at Fuel Return Lines	24	18	212
Banjo Fitting At Fuel Supply Line (Injector Pump)	24	18	212
Camshaft Position Sensor (CMP) Bolt	20	15	177
ECM Mounting Bolts	24	18	212
Engine Coolant Temperature (ECT) Sensor	14	10	124
Engine Lifting Bracket Bolts	77	57	681
Fuel Drain Manifold “T” Fitting	12	9	106
Fuel Filter Canister Bracket Bolts	24	18	212
Fuel Filter Canister Mounting Nut	14	10	124
Fuel Filter Drain Valve Mounting Screws	3-5	2-4	30-40
Fuel Heater Screws	2-3	1-2	15-20
Fuel Injector Clamp Bolts	10	7	89
Fuel Pump Module Locknut	24-44	18-32	212-389
Fuel Tank Mounting Nuts	41	30	363
Fuel Transfer Pump Mounting Nuts	12	9	106
High-Pressure Fuel Line Fittings (at Injectors)	38	28	336
High-Pressure Fuel Line Fittings (at Pump)	24	18	212
High-Pressure Fuel Line Clamps-to-Intake Manifold	24	18	212
Hose Clamps at Intercooler Tube	8	6	72
Injection Pump-to-Injection Pump Gear Nut	170	125	
Injection Pump Mounting Nuts	43	32	380
Intake Manifold Air Temperature (IAT) Sensor	14	10	
Intake Manifold Air Heater Relay Bolts	4.5		40
Manifold Air Pressure (MAP) Sensor	14	10	
PCM Mounting Bolts	4		35
Overflow Valve-to-Fuel Injection Pump	24	18	
Water-In-Fuel (WIF) Sensor	2-3		15-20

ACCELERATOR PEDAL POSITION SENSOR

DESCRIPTION

The APPS assembly is located at the top-left-front of the engine (Fig. 4). A plastic cover is used to cover the assembly. The actual sensor is located behind its mounting bracket (Fig. 5).

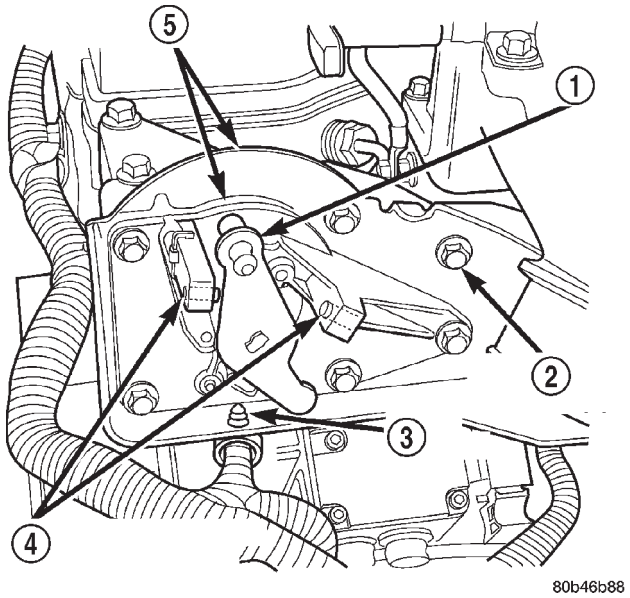

Fig. 4 APPS Assembly Location

1 - LEVER
2 - MOUNTING BOLTS (6)
3 - WIRE HARNESS CLIP
4 - CALIBRATION SCREWS (NO ADJUSTMENT)
5 - APPS ASSEMBLY

OPERATION

The Accelerator Pedal Position Sensor (APPS) is a linear potentiometer. It provides the Engine Control Module (ECM) with a DC voltage signal proportional to the angle, or position of the accelerator pedal. In previous model years, this part was known as the Throttle Position Sensor (TPS).

Diesel engines used in previous model years used a mechanical cable between the accelerator pedal and the TPS lever. Linkage and bellcranks between the TPS cable lever and the fuel injection pump were also used. Although the cable has been retained with the APPS, the linkage and bellcranks between the cable lever and the fuel injection pump are no longer used.

The APPS is serviced (replaced) as one assembly including the lever, brackets and sensor. The APPS is calibrated and permanently positioned to its mounting bracket.

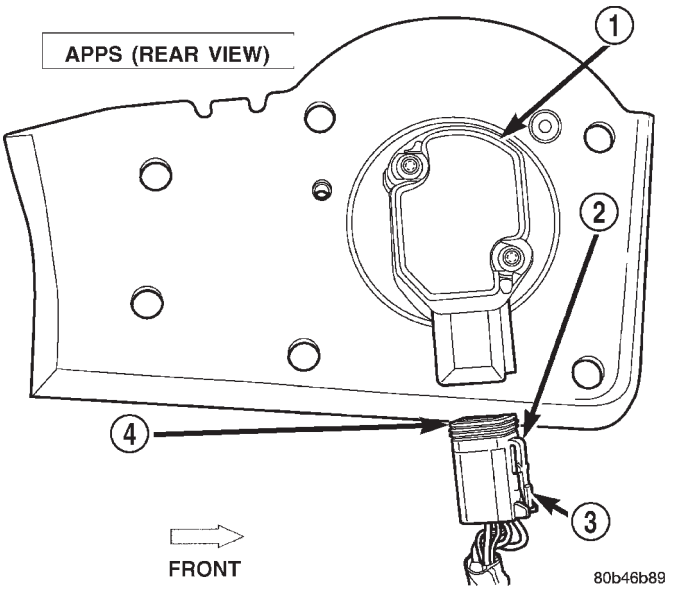

Fig. 5 APPS Sensor Location (Rear View)

1 - APPS
2 - TAB
3 - PUSH FOR REMOVAL
4 - APPS CONNECTOR

CAUTION: Do not attempt to remove sensor from its mounting bracket as electronic calibration will be destroyed (sensor-to-bracket mounting screws are permanently attached). Two accelerator lever set screws (Fig. 4) are used to position lever. Do not attempt to alter positions of these set screws as electronic calibration will be destroyed.

REMOVAL

The APPS is serviced (replaced) as one assembly including the lever, brackets and sensor. The APPS is calibrated to its mounting bracket. The APPS assembly is located at left-front of engine below plastic cable/lever/linkage cover (Fig. 6).

CAUTION: Do not attempt to remove sensor from its mounting bracket as electronic calibration will be destroyed (sensor-to-bracket mounting screws are permanently attached). Two accelerator lever set screws (Fig. 8) are used to position lever. Do not attempt to alter positions of these set screws as electronic calibration will be destroyed.

ACCELERATOR PEDAL POSITION SENSOR (Continued)

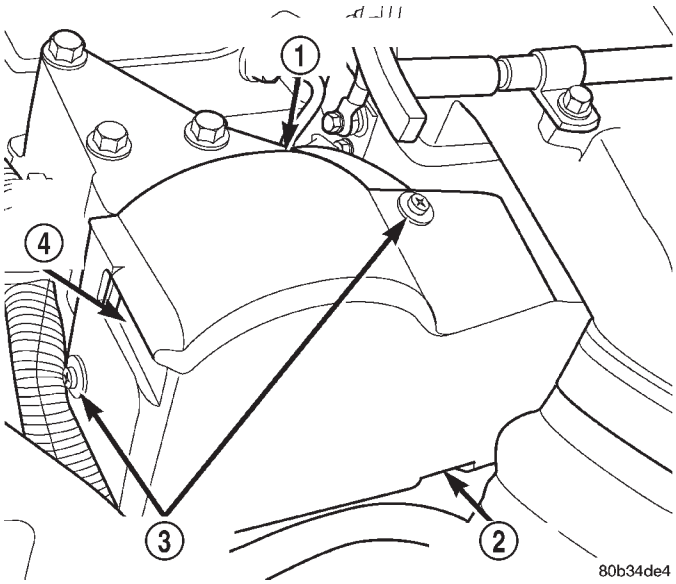

Fig. 6 Cable/Lever/Linkage/Cover

1 - CABLE/LEVER/LINKAGE COVER
2 - PUSH UP LOWER TAB
3 - SCREWS/CLIPS (2)
4 - TAB PUSH HERE

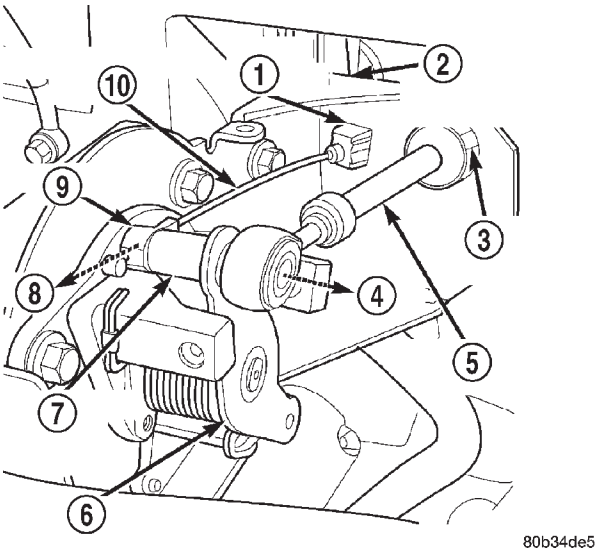

Fig. 7 Cables at Throttle Lever

1 - PINCH (2) TABS
2 - CABLE MOUNTING BRACKET
3 - PINCH TABS (2)
4 - OFF
5 - THROTTLE CABLE
6 - THROTTLE LEVER
7 - THROTTLE LEVER PIN
8 - OFF
9 - CONNECTOR
10 - SPEED CONTROL CABLE

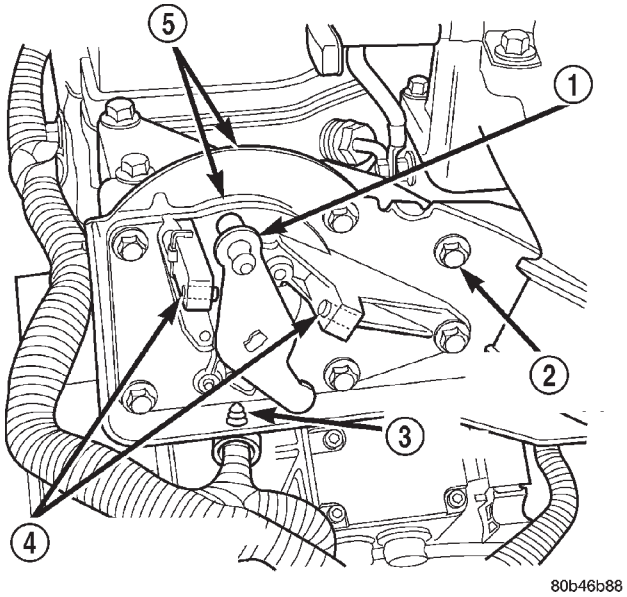

Fig. 8 APPS Assembly

1 - LEVER
2 - MOUNTING BOLTS (6)
3 - WIRE HARNESS CLIP
4 - CALIBRATION SCREWS (NO ADJUSTMENT)
5 - APPS ASSEMBLY

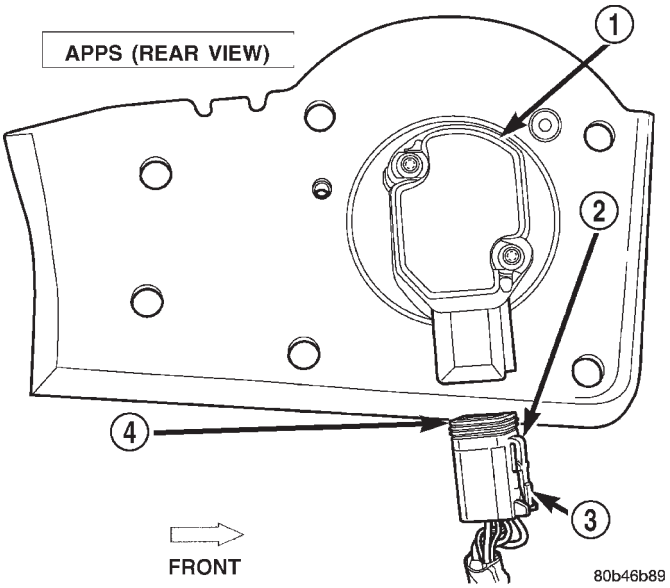

Fig. 9 Electrical Connector at Bottom of APPS

1 - APPS
2 - TAB
3 - PUSH FOR REMOVAL
4 - APPS CONNECTOR

ACCELERATOR PEDAL POSITION SENSOR (Continued)

(1) Disconnect both negative battery cables at both batteries.

(2) Remove cable cover (Fig. 6). Cable cover is attached with 2 Phillips screws, 2 plastic retention clips and 2 push tabs (Fig. 6). Remove 2 Phillips screws and carefully pry out 2 retention clips. After clip removal, push rearward on front tab, and upward on lower tab for cover removal.

(3) Using finger pressure only, disconnect end of speed control servo cable from throttle lever pin by pulling forward on connector while holding lever rearward (Fig. 7).**DO NOT try to pull connector off perpendicular to lever pin. Connector will be broken.**

(4) Using two small screwdrivers, pry throttle cable connector socket from throttle lever ball (Fig. 7). **Be very careful not to bend throttle lever arm.**

(5) Disconnect transmission control cable at lever arm (if equipped). Refer to 21, Transmission.

(6) Squeeze pinch tabs on speed control cable (Fig. 7) and pull cable rearward to remove from cable mounting bracket.

(7) Squeeze pinch tabs on throttle cable (Fig. 7) and pull cable rearward to remove from cable mounting bracket.

(8) If equipped with an automatic transmission, refer to 21, Transmission for transmission control cable removal procedures.

(9) Disconnect wiring harness clip (Fig. 8) at bottom of bracket.

(10) Remove 6 mounting bolts (Fig. 8) and partially remove APPS assembly from engine. After assembly is partially removed, disconnect electrical connector from bottom of sensor by pushing on connector tab (Fig. 9).

(11) Remove APPS assembly from engine.

INSTALLATION

The APPS is serviced (replaced) as one assembly including the lever, brackets and sensor. The APPS is calibrated to its mounting bracket. The APPS assembly is located at left-front of engine below plastic cable/lever/linkage cover (Fig. 6) .

(1) Snap electrical connector into bottom of sensor.

(2) Position APPS assembly to engine and install 6 bolts. Tighten bolts to 12 N·m (105 in. lbs.) torque.

(3) Connect wiring harness clip (Fig. 8) at bottom of bracket.

(4) If equipped with an automatic transmission, refer to Group 21, Transmission for transmission control cable installation procedures.

(5) Install speed control cable into mounting bracket. Be sure pinch tabs (Fig. 7) have secured cable.

(6) Install throttle cable into mounting bracket. Be sure pinch tabs (Fig. 7) have secured cable.

(7) Connect throttle cable at lever (snaps on).

(8) Connect speed control cable to lever by pushing cable connector rearward onto lever pin while holding lever forward.

(9) Install cable cover.

(10) Connect both negative battery cables to both batteries.

(11) **ECM Calibration:** Turn key to ON position. Without starting engine, slowly press throttle pedal to floor and then slowly release. This step must be done (one time) to ensure accelerator pedal position sensor calibration has been learned by ECM. If not done, possible DTC's may be set.

(12) Use DRB scan tool to erase any DTC's from ECM/PCM.

FUEL INJECTOR

DESCRIPTION

Six individual, high-pressure fuel injectors are used. The injectors are vertically mounted (Fig. 10) into a bored hole in the top of the cylinder head. This bored hole is located between the intake/exhaust valves.

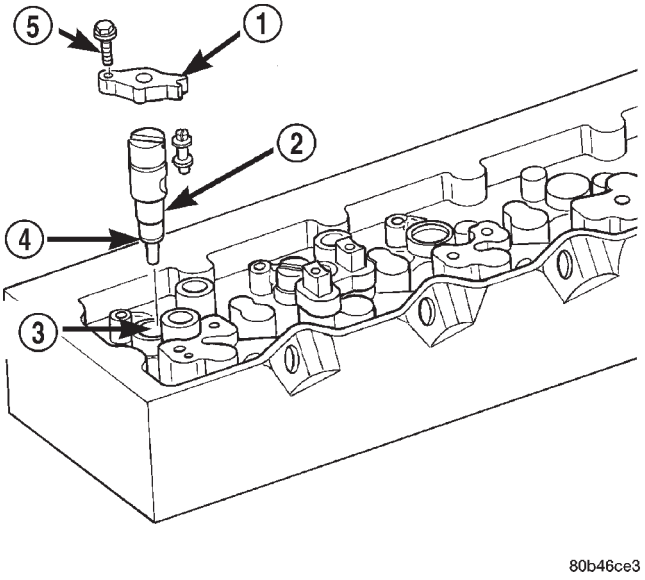

Fig. 10 Fuel Injector Location

1 - CLAMP
2 - FUEL INJECTOR
3 - BORED HOLE
4 - SHIM
5 - BOLTS

FUEL INJECTOR (Continued)

OPERATION

High-pressure fuel is supplied from the injection pump, through a high-pressure fuel line, through a steel connector and into the fuel injector. When fuel pressure rises to approximately 31,026 kPa (4,500 psi), the needle valve spring tension is overcome. The needle valve rises and fuel flows through the spray holes in the nozzle tip into the combustion chamber. The pressure required to lift the needle valve is the nozzle opening pressure. This is sometimes referred to as the “pop” pressure setting.

Each fuel injector is connected to each high-pressure fuel line with a steel connector (Fig. 11). This steel connector is positioned into the cylinder head and sealed with an o-ring. The connectors are sealed to the high-pressure fuel lines with fittings (Fig. 11). The ferrule (Fig. 11) on the end of the high-pressure fuel line pushes against the steel connector when the fuel line fitting is torqued into the cylinder head. This torquing force provides a sealing pressure between both the fuel line-to-connector and the fuel connector-to-fuel injector. **The fitting torque is very critical.** If the fitting is under torqued, the mating surfaces will not seal and a high-pressure fuel leak will result. If the fitting is over torqued, the connector and injector will deform and also cause a high-pressure fuel leak. This leak will be inside the cylinder head and will not be visible. The result will be a possible fuel injector miss-fire and low power.

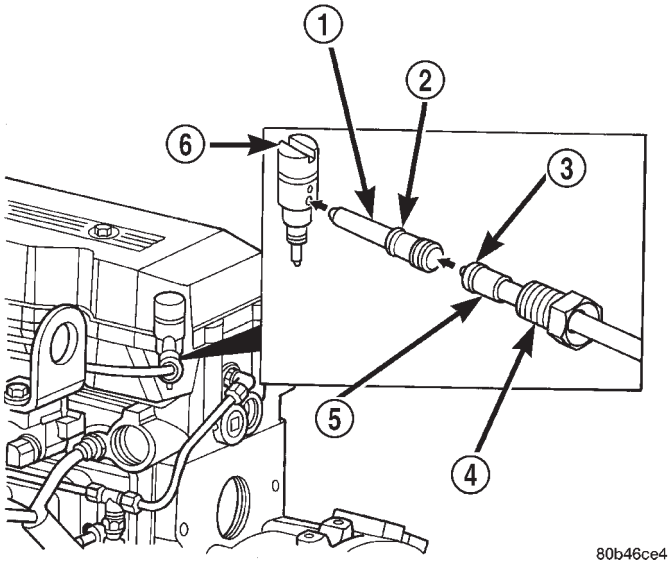

Fig. 11 Fuel Injector Connections

1 - CONNECTOR
2 - O-RING
3 - FERRULE
4 - FITTING
5 - FUEL LINE
6 - INJECTOR

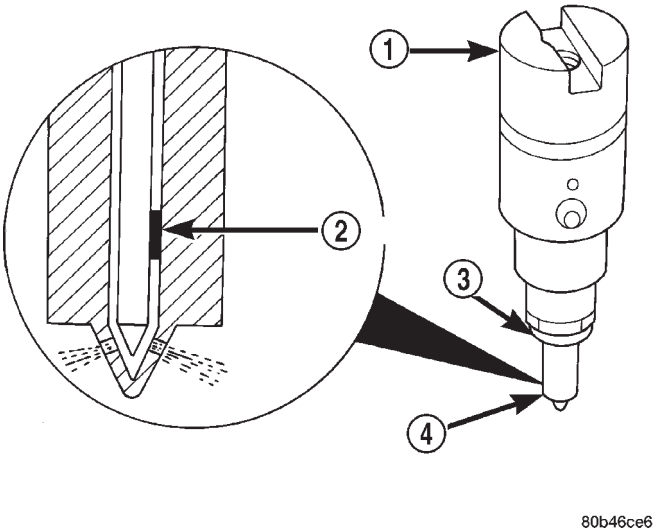

Fig. 12 Fuel Injector Spray Pattern

1 - INJECTOR
2 - CLEARANCE
3 - SHIM
4 - NOZZLE

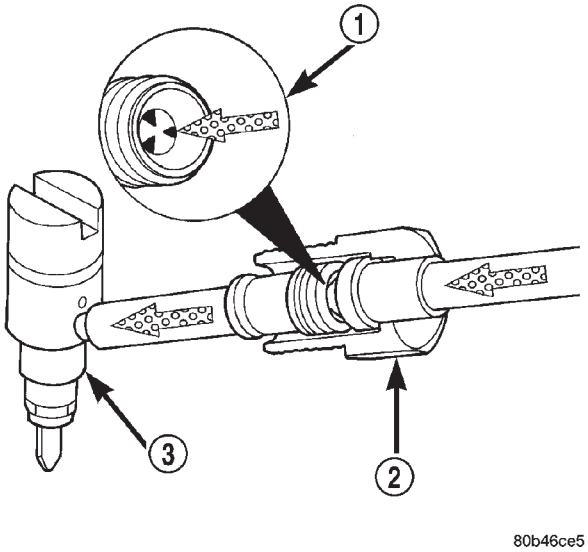

Fig. 13 Fuel Injector Edge Filter

1 - EDGE FILTER
2 - FITTING
3 - FUEL INJECTOR

The fuel injectors use hole type nozzles (Fig. 12). High-pressure flows into the side of the injector and causes the injector needle to lift and fuel to be injected. The clearances in the nozzle bore (Fig. 12) are extremely small and any sort of dirt or contaminants will cause the injector to stick. Because of this, it is very important to do a thorough cleaning of any

FUEL INJECTOR (Continued)

lines before opening up any fuel system component. Always cover or cap any open fuel connections before a fuel system repair is performed.

Each fuel injector connector tube contains an edge filter (Fig. 13) that breaks up small contaminants that enter the injector. The edge filter uses the injectors pulsating high-pressure to break up most particles so they are small enough to pass through the injector. **The edge filters are not a substitute for proper cleaning and covering of all fuel system components during repair.**

The bottom of each fuel injector is sealed to the cylinder head with a **1.5mm** thick copper shim (gasket) (Fig. 12). The correct thickness shim must always be re-installed after removing an injector.

Fuel pressure in the injector circuit decreases after injection. The injector needle valve is immediately closed by the needle valve spring and fuel flow into the combustion chamber is stopped. Exhaust gases are prevented from entering the injector nozzle by the needle valve.

DIAGNOSIS AND TESTING—FUEL INJECTOR TEST

The fuel injectors are located in the top of the cylinder head between the intake/exhaust valves (Fig. 14).

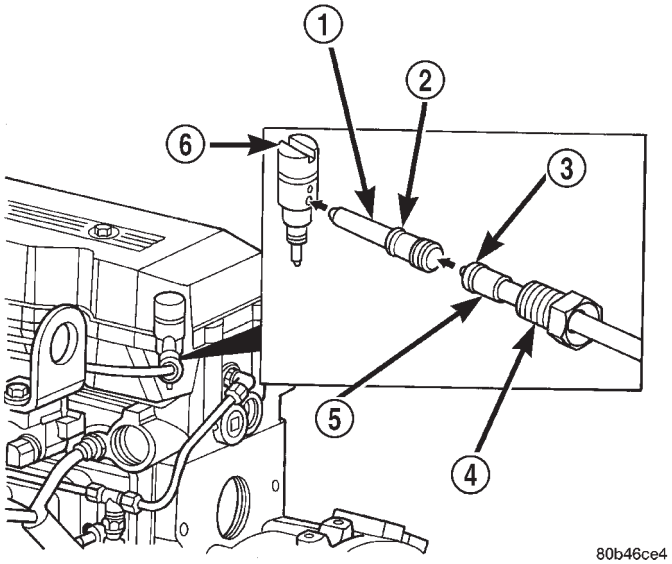

Fig. 14 Fuel Injector Connections

1 - CONNECTOR
2 - O-RING
3 - FERRULE
4 - FITTING
5 - FUEL LINE
6 - INJECTOR

A leaking fuel injector can cause fuel knock, poor performance, black smoke, poor fuel economy and rough engine idle. If fuel injector needle valve does not operate properly, engine may misfire and produce low power.

A leak in injection pump-to-injector high-pressure fuel line can cause many of same symptoms as malfunctioning injector. Inspect for leaks in high-pressure lines before checking for malfunctioning fuel injector.

WARNING: THE INJECTION PUMP SUPPLIES HIGH-PRESSURE FUEL OF UP TO APPROXIMATELY 120,000 kPa (17,400 psi) TO EACH INDIVIDUAL INJECTOR THROUGH HIGH-PRESSURE LINES. FUEL UNDER THIS AMOUNT OF PRESSURE CAN PENETRATE SKIN AND CAUSE PERSONAL INJURY. WEAR SAFETY GOGGLES AND ADEQUATE PROTECTIVE CLOTHING. AVOID CONTACT WITH FUEL SPRAY WHEN BLEEDING HIGH-PRESSURE FUEL LINES.

WARNING: DO NOT BLEED AIR FROM FUEL SYSTEM OF A HOT ENGINE. DO NOT ALLOW FUEL TO SPRAY ONTO EXHAUST MANIFOLD WHEN BLEEDING AIR FROM FUEL SYSTEM.

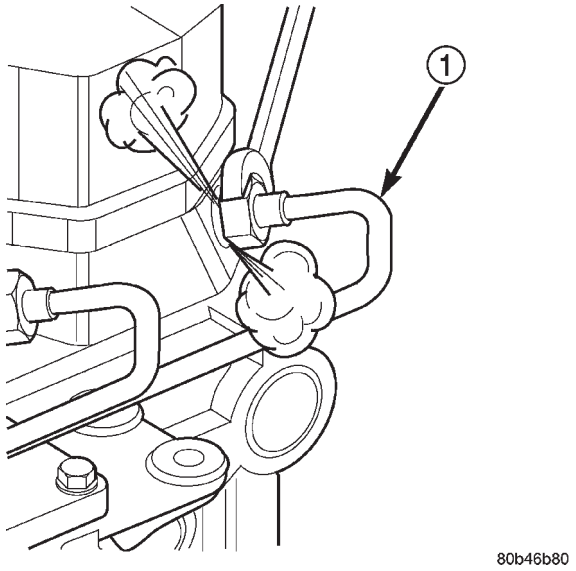

Fig. 15 Inspecting Injector Operation

1 - HIGH-PRESSURE FUEL LINE

(1) To determine which fuel injector is malfunctioning, run engine and isolate each cylinder using DRB scan tool. **The DRB scan tool lists the injector firing order in both cylinder numerical order (1–2–3–4–5–6), and actual firing order (1–5–3–6–2–4).**

FUEL INJECTOR (Continued)

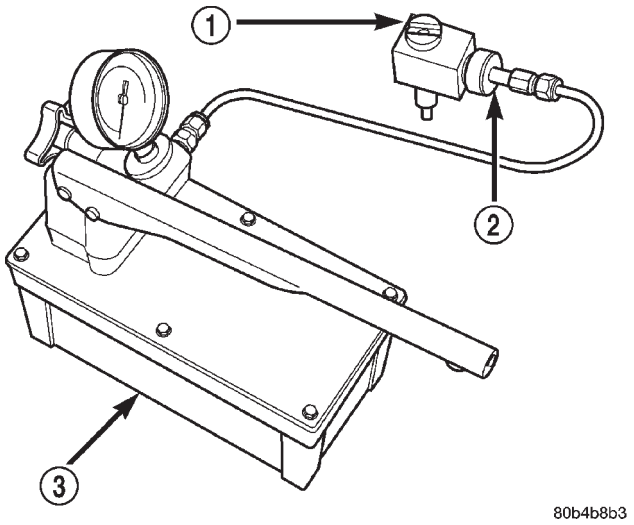

Fig. 16 Fuel

1 - FUEL INJECTOR
2 - ADAPTOR TOOL 8301
3 - POP PRESSURE TESTER

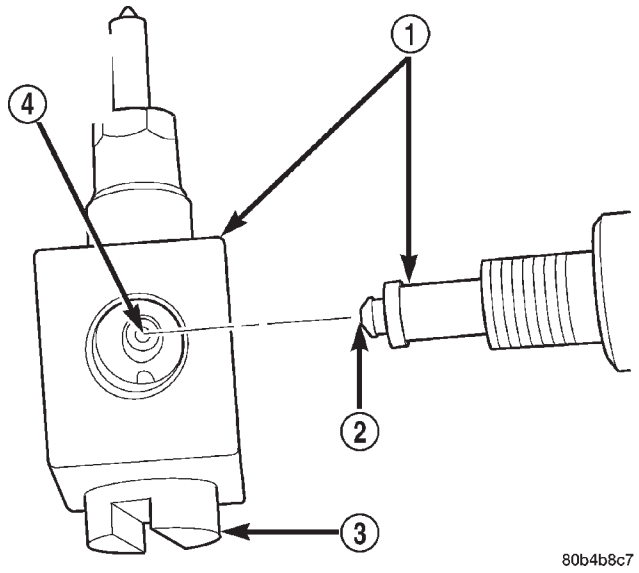

Fig. 17 Installing Injector to Adaptor Tool 8301

1 - ADAPTOR TOOL 8301
2 - TIP
3 - FUEL INJECTOR
4 - INLET AT SIDE OF INJECTOR

(2) Note RPM drop for each cylinder. As an alternative, loosen high-pressure fuel line fitting at fuel injector connector tube (Fig. 15). Listen for a change in engine speed. After testing, tighten line fitting to 40 N·m (30 ft. lbs.) torque. If engine speed drops, injector was operating normally. If engine speed remains same, injector may be malfunctioning. Test all injectors in same manner one at a time.

(3) Once injector has been found to be malfunctioning, remove it from engine and test it. Refer to Fuel Injector Removal/Installation.

WARNING: FUEL INJECTOR TESTERS CAN DEVELOP EXTREMELY HIGH PRESSURES. FUEL UNDER THIS AMOUNT OF PRESSURE CAN PENETRATE SKIN AND CAUSE PERSONAL INJURY. WEAR SAFETY GOGGLES AND ADEQUATE PROTECTIVE CLOTHING. AVOID CONTACT WITH FUEL SPRAY WHEN OPERATING INJECTOR TESTOR.

(4) After injector has been removed, obtain bench-mount fuel injector tester OTC® (SPX®) part number 4210 (Fig. 16) (or equivalent). Install Special Tool number 8301 (Fuel Injector Adapter) to 4210 tester. Install fuel injector into 8301 adapter. Be sure tip of adapter tool 8301 is aligned to inlet hole at side of injector (Fig. 17) before tightening tool. Tighten tool 8301 to injector. Position container below injector before testing.

(5) Refer to operating instructions supplied with pressure tester for procedures.

(a) Check opening pressure or “pop” pressure. Pressure should be approximately 31,026 kPa (310 bars) or (4500 psi ± 250 psi). If fuel injector needle valve is opening (popping) too early or too late, replace injector.

(b) Perform a leak-down test on injector. Apply pressure with injector tester. The injector should not leak (drip) fuel with pressure at approximately 20 bars (291 psi) lower than pop pressure.

(c) Operate tester lever quickly several times to check injector spray pattern. Verify fuel is spraying from each injector nozzle hole. Injector should also spray evenly from each nozzle hole.

(d) Pay attention to size and shape of spray plumes. They should all be equal. If possible, compare spray pattern to that of a new fuel injector with same part number. Checking each plume for consistency is an excellent indicator of injector performance. Even if only one nozzle hole is plugged, significant performance problems could result.

(e) Look for burrs on injector inlet.

(f) Check nozzle holes for hole erosion or plugging.

(g) Inspect end of nozzle for burrs or rough machine marks.

(h) Look for cracks at nozzle end.

(i) Check nozzle color for signs of overheating. Overheating will cause nozzle to turn a dark yellow/tan or blue (depending on overheating temperature).

(j) Look at end of injector tube where it meets injector. A small, shiny band should be seen at this point. The band should have a consistent thickness. If not, injector could be leaking into fuel return.

(k) If any of these conditions occur, replace injector.

FUEL INJECTOR (Continued)

REMOVAL

The fuel injectors are located in the top of the cylinder head between the intake/exhaust valves (Fig. 18).

CAUTION: Refer to Cleaning Fuel System Parts.

(1) Disconnect both negative battery cables from both batteries. Cover and isolate ends of cables.

Each fuel injector is connected to each high-pressure fuel line with a steel connector tube (Fig. 19). This steel connector is positioned into cylinder head and sealed with an o-ring. The connectors are connected to high-pressure fuel lines with fittings (Fig. 19).

(2) If injector at #1 or #2 cylinder is being removed, intake manifold air heater assembly must be removed. Refer to Intake Manifold Air Heater Removal/Installation.

(3) If injector at #5 cylinder is being removed, remove engine lifting bracket (2 bolts).

(4) Thoroughly clean area around injector and injector high-pressure lines before removal.

(5) Remove necessary high-pressure fuel lines. (Refer to 14 - FUEL SYSTEM/FUEL DELIVERY/ FUEL LINES - REMOVAL). **Do not bend any high-pressure fuel line to gain access to fuel injector.** Cover or cap any open fuel connections.

(6) Remove valve cover (Refer to 9 - ENGINE/CYLINDER HEAD/CYLINDER HEAD COVER(S) - REMOVAL).

(7) Thread Special Tool 8324 (Fuel Injector Connector Tube Remover) onto end of injector connector tube (Fig. 20).

(8) Pull injector connector tube from cylinder head. **The injector connector tube must be removed before attempting to remove fuel injector or serious damage to fuel injector and tube will result.**

(9) Remove and discard old o-ring (Fig. 19) from injector connector tube.

(10) Remove fuel injector hold down clamp bolt at front end of clamp (Fig. 18). **Do not loosen or remove special (2 shouldered) bolt at rear end of clamp.** Remove injector clamp by sliding it from shoulders on rear clamp bolt.

(11) Thread rod from Special Tool number 8318 (Fuel Injector Remover) into top of fuel injector (Fig. 21).

(12) Tighten nut on 8318 tool to pull (remove) fuel injector from cylinder head.

(13) Remove and discard old o-ring from fuel injector.

(14) Remove and discard copper sealing washer (shim) (Fig. 22) from bottom of injector. **If copper sealing washer has remained in cylinder head, it must be removed.**

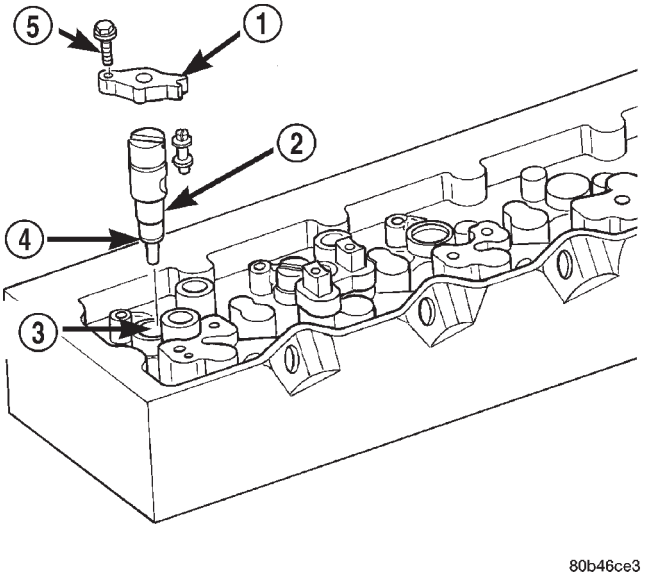

Fig. 18 Fuel Injector Location

1 - CLAMP
2 - FUEL INJECTOR
3 - BORED HOLE
4 - SHIM
5 - BOLTS

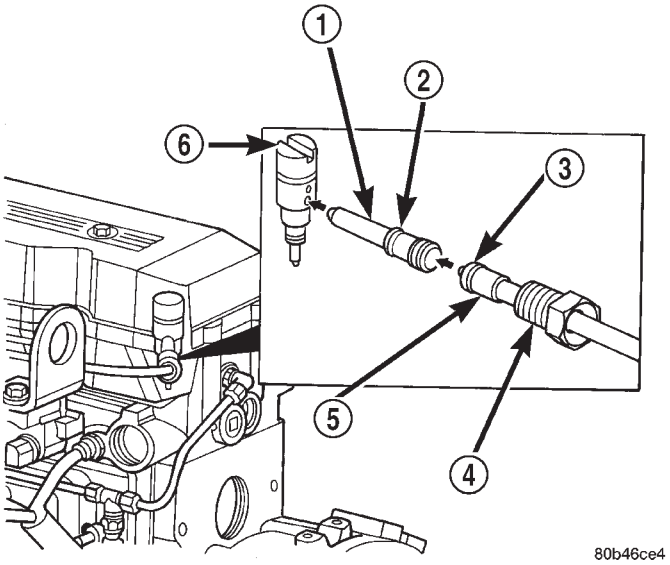

Fig. 19 Fuel Injector Connections

1 - CONNECTOR
2 - O-RING
3 - FERRULE
4 - FITTING
5 - FUEL LINE
6 - INJECTOR

FUEL INJECTOR (Continued)

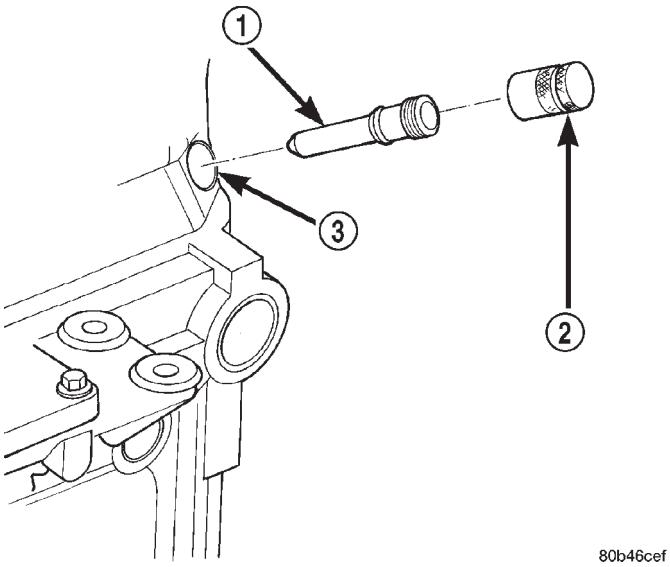

Fig. 20 Fuel Injector Connector Tube Removal

1 - FUEL INJECTOR CONNECTOR TUBE
2 - SPECIAL TOOL 8324
3 - CYLINDER HEAD

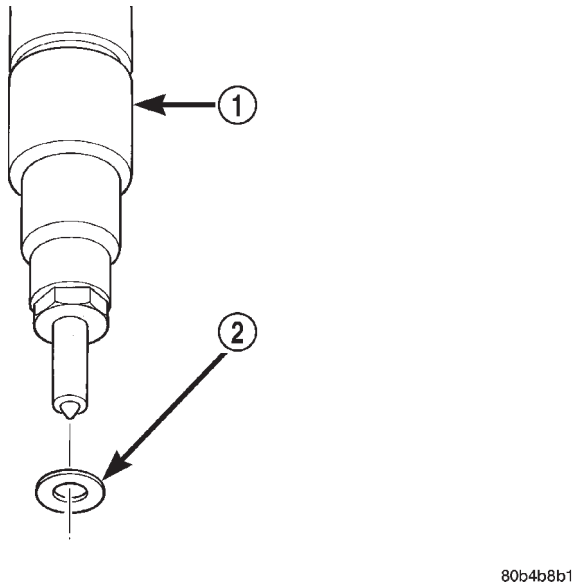

Fig. 22 Fuel Injector Sealing Washer (Shim) Location

1 - FUEL INJECTOR
2 - COPPER SEALING WASHER (SHIM)

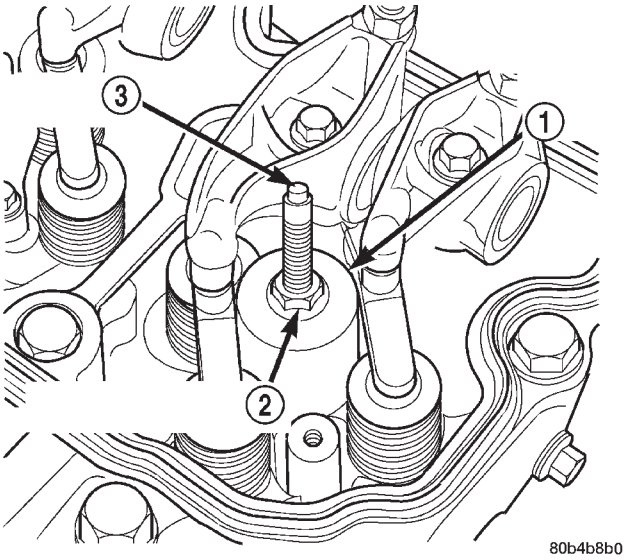

Fig. 21 Fuel Injector Removal

1 - FUEL INJECTOR REMOVAL TOOL 8318
2 - TIGHTEN NUT FOR INJECTOR TERMINAL
3 - THREAD INTO INJECTOR

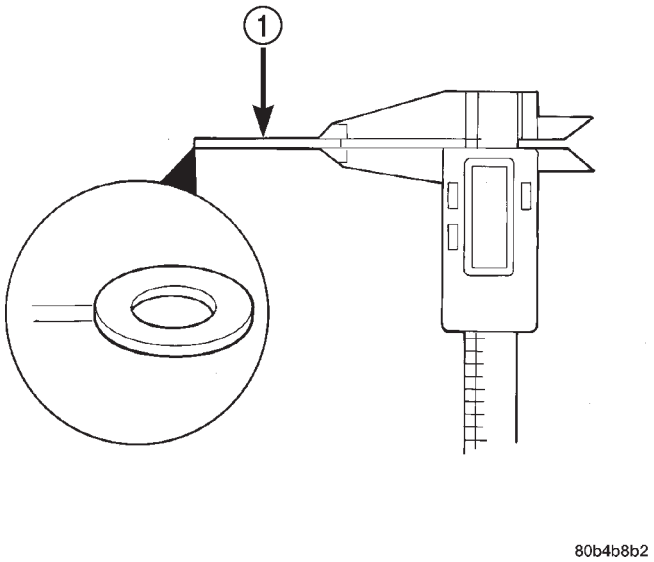

Fig. 23 Measuring Injector Sealing Washer (Shim)

1 - SHIM

INSTALLATION

The fuel injectors are located in the top of the cylinder head between the intake/exhaust valves (Fig. 18).

(1) Inspect fuel injector.

(a) If necessary, perform pressure test of injector. Refer to Fuel Injector Testing.

(b) Look for burrs on injector inlet.

(c) Check nozzle holes for hole erosion or plugging.

(d) Inspect end of nozzle for burrs or rough machine marks.

(e) Look for cracks at nozzle end.

(f) Check nozzle color for signs of overheating. Overheating will cause nozzle to turn a dark yellow/tan or blue (depending on overheating temperature).

FUEL INJECTOR (Continued)

(g) If any of these conditions occur, replace injector.

(2) Thoroughly clean fuel injector cylinder head bore with special Cummins wire brush tool or equivalent (Fig. 24). Blow out bore hole with compressed air.

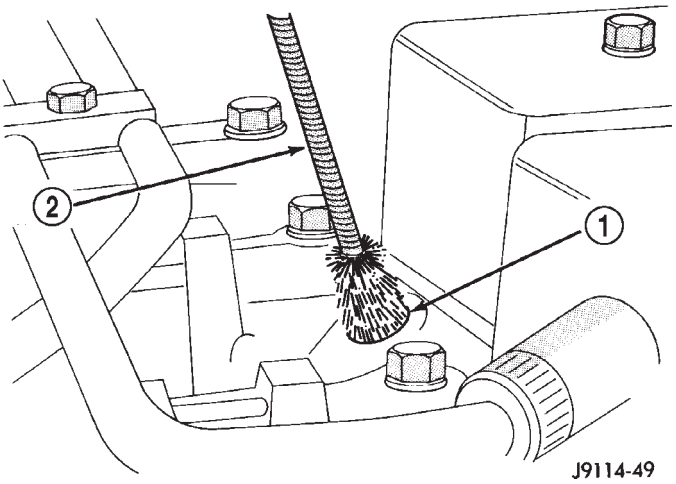

Fig. 24 Cleaning Cylinder Head Injector Bore— TYPICAL BORE

1 - INJECTOR BORE
2 - WIRE BRUSH

(3) The bottom of fuel injector is sealed to cylinder head bore with a copper sealing washer (shim) of a certain thickness. A new shim with correct thickness must always be re-installed after removing injector. Measure thickness of injector shim (Fig. 23). **Shim Thickness: 1.5 mm (.060”)**

(4) Install new shim (washer) to bottom of injector (Fig. 22). Apply light coating of clean engine oil to washer. This will keep washer in place during installation.

(5) Install new o-ring to fuel injector. Apply small amount of clean engine oil to o-ring.

(6) Note fuel inlet hole on side of fuel injector. This hole must be positioned towards injector connector tube. Position injector into cylinder head bore being extremely careful not to allow injector tip to touch sides of bore. Press fuel injector into cylinder head with finger pressure only. **Do not use any tools to press fuel injector into position. Damage to machined surfaces may result.**

(7) Position fuel injector hold down clamp into shouldered bolt while aligning slot in top of injector into groove in bottom of clamp. Tighten opposite clamp bolt (Fig. 18) to 10 N·m (89 in. lbs.) torque.

(8) Install new o-ring to fuel injector connector tube. Apply small amount of clean engine oil to o-ring.

(9) Press injector connector tube into cylinder head with finger pressure only. **Do not use any tools to press tube into position. Damage to machined surfaces may result.**

(10) Connect high-pressure fuel lines. Refer to High-Pressure Fuel Lines Removal/Installation. **The fuel line fitting torque is very critical.** If fitting is under torqued, the mating surfaces will not seal and a high-pressure fuel leak will result. If fitting is over torqued, the connector and injector will deform and also cause a high-pressure fuel leak. This leak will be inside cylinder head and will not be visible resulting in a possible fuel injector miss and low power.

(11) Install valve cover. (Refer to 9 - ENGINE/ CYLINDER HEAD/CYLINDER HEAD COVER(S) - INSTALLATION).

(12) (If necessary) install intake manifold air heater assembly. Refer to Intake Manifold Air Heater Removal/Installation.

(13) (If necessary) install engine lifting bracket. Tighten 2 bolts to 77 N·m (57 ft. lbs.) torque.

(14) Connect negative battery cables to both batteries.

(15) Bleed air from high-pressure lines (Refer to 14 - FUEL SYSTEM/FUEL DELIVERY - STANDARD PROCEDURE).

FUEL INJECTION PUMP RELAY

DESCRIPTION

The fuel injection pump relay is located in the Power Distribution Center (PDC). Refer to label under PDC cover for relay location.

OPERATION

The Engine Control Module (ECM) energizes the electric fuel injection pump through the fuel injection pump relay. Battery voltage is applied to the fuel injection pump relay at all times. When the key is turned ON, the relay is energized when a 12–volt signal is provided by the ECM. When energized, 12–volts is supplied to the Fuel Pump Control Module. The Fuel Pump Control Module is located on the top of the fuel injection pump and is non-servicable.

FUEL TEMPERATURE SENSOR

DESCRIPTION

Two different fuel temperature sensors are used. One of the sensors is located inside of the Bosch VP44 fuel injection pump and is a non-serviceable part. The other fuel temperature sensor is located in the top of the fuel filter housing and is serviceable (serviceable if replacing the fuel heater).

OPERATION

The sensor located in the Bosch VP44 fuel injection pump is used to check fuel temperature within the injection pump and to set a Diagnostic Trouble Code (DTC) if a specific high fuel temperature has been reached. If high temperature has been reached, engine power will be de-rated by the Engine Control Module (ECM).

The sensor located in the top of the fuel filter housing is used to control the fuel heater element. Refer to Fuel Heater Description and Operation for additional information.

INTAKE AIR HEATER

DESCRIPTION

The intake manifold air heater element assembly is located in the top of the intake manifold (Fig. 25).

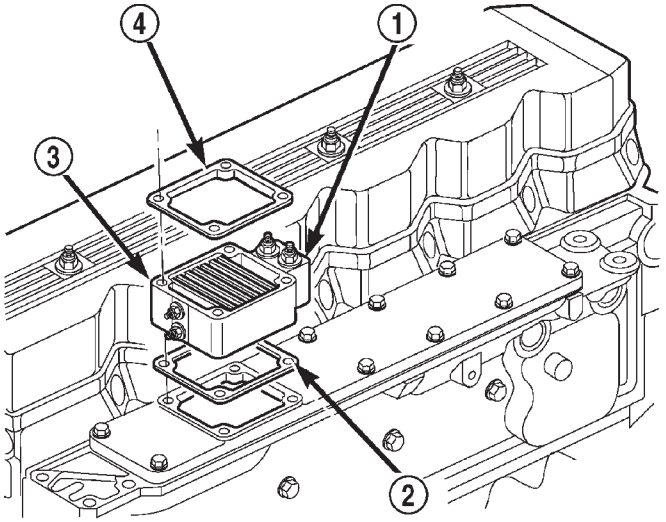

Fig. 25 Air Heater Elements Location

1 - AIR HEATER ELEMENTS
2 - LOWER GASKET
3 - BLOCK
4 - UPPER GASKET

OPERATION

The air heater elements are used to heat incoming air to the intake manifold. This is done to help engine starting and improve driveability with cool or cold outside temperatures.

Electrical supply for the 2 air heater elements is controlled by the Engine Control Module (ECM) through the 2 air heater relays. Refer to Intake Manifold Air Heater Relays for more information.

Two heavy-duty cables connect the 2 air heater elements to the 2 air heater relays. Each of these cables will supply approximately 95 amps at 12 volts to an individual heating element within the heater block assembly.

Refer to the Powertrain Diagnostic Procedures manual for an electrical operation and complete description of the intake heaters, including pre-heat and post-heat cycles.

REMOVAL

The 2 intake manifold air heater elements are attached to a metal block located at the top of the intake manifold (Fig. 26). If servicing either of the heater elements, the entire block/element assembly must be replaced.

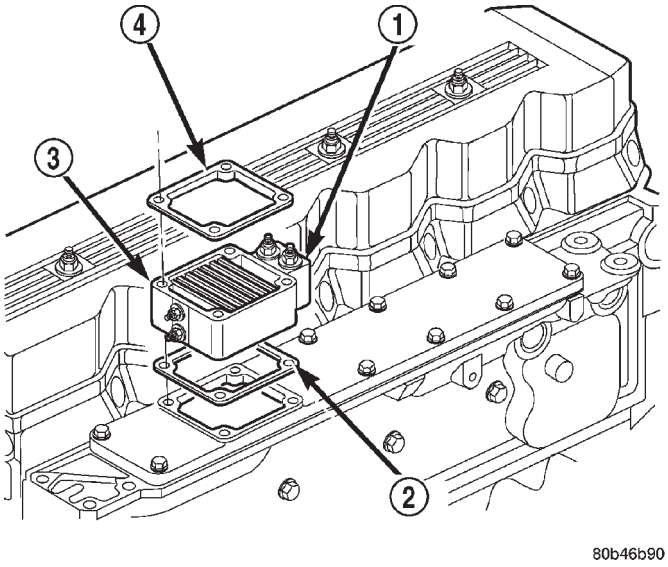

Fig. 26 Intake Manifold Air Heater Element Location

1 - AIR HEATER ELEMENTS
2 - LOWER GASKET
3 - BLOCK
4 - UPPER GASKET

(1) Disconnect both negative battery cables at both batteries.

(2) Disconnect clamp from rubber hose at air intake housing.

(3) Disconnect rubber hose at air intake housing.

INTAKE AIR HEATER (Continued)

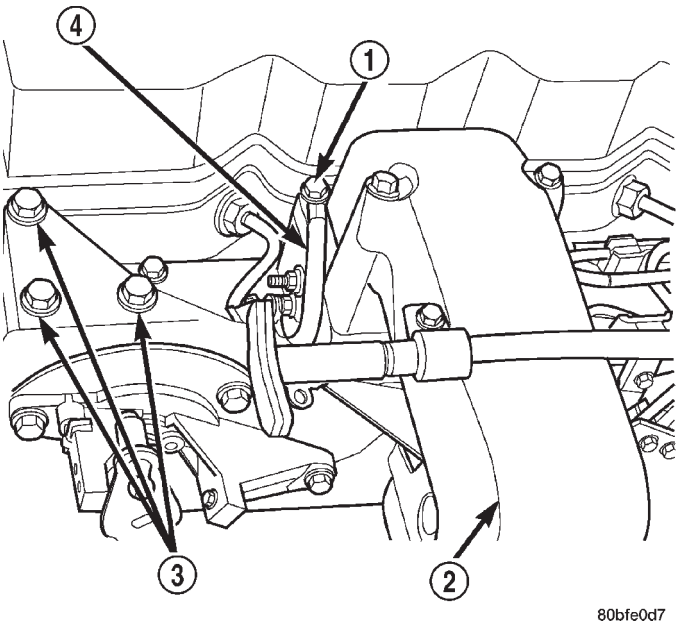

Fig. 27 Air Intake Housing (Front View)

1 - GROUND CABLE BOLT
2 - INTAKE AIR HOUSING
3 - CABLE BRACKET HOUSING BOLTS (3)
4 - GROUND CABLE

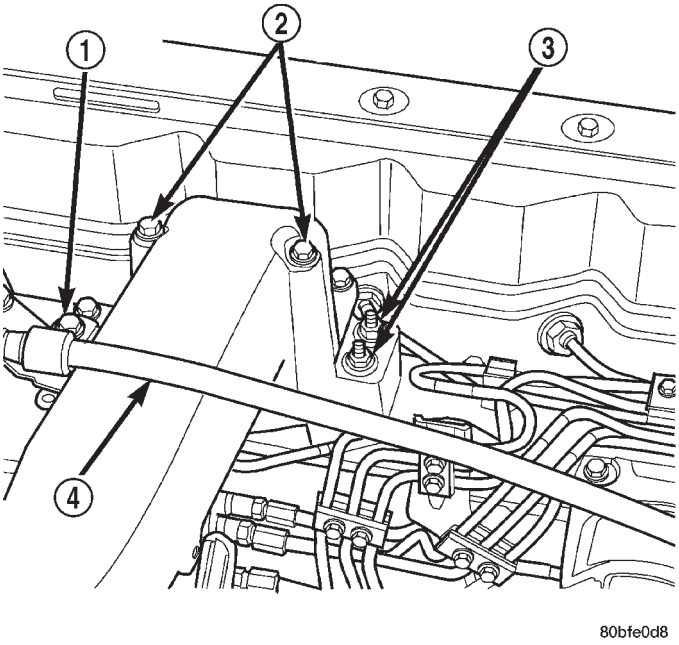

Fig. 28 Air Intake Housing (Rear View)

1 - TUBE MOUNTING BOLT
2 - HOUSING BOLTS (2)
3 - INTAKE HEATER CABLE MOUNTING STUDS (2)
4 - DIPSTICK TUBE

(4) Remove engine oil dipstick tube mounting bolt (Fig. 28). Position dipstick tube to the side.

(5) Disconnect heater electrical cables at cable mounting studs (Fig. 28).

(6) Disconnect ground cable bolt and ground cable from housing (Fig. 27).

(7) Remove 4 housing bolts (Fig. 28).

(8) Remove air intake housing from top of heater elements.

(9) Remove heater element assembly from intake manifold.

(10) Clean old gasket material from air intake housing and intake manifold.

(11) Clean old gasket material from both ends of heater block (Fig. 26).

INSTALLATION

The 2 intake manifold air heater elements are attached to a metal block located at the top of the intake manifold (Fig. 26). If servicing either of the heater elements, the entire block/element assembly must be replaced.

(1) Using 2 new gaskets, position element assembly and air housing to intake manifold.

(2) Position ground cable (Fig. 27) to air housing.

(3) Install 4 housing bolts and tighten to 24 N·m (18 ft. lbs.) torque.

(4) Connect heater cables at cable mounting studs (Fig. 28). **Do not allow the cable eyelets to contact any other metal source other than the cable nuts/studs.**

(5) Install engine oil dipstick tube and mounting bolt.

(6) Connect rubber hose to air intake housing.

(7) Connect clamp to rubber hose at air intake housing.

(8) Connect both negative battery cables at both batteries.

INTAKE AIR HEATER RELAY

DESCRIPTION

The 2 intake manifold air heater relays are located in the engine compartment, attached to the left inner fender below the left battery (Fig. 29).

OPERATION

The Engine Control Module (ECM) operates the 2 heating elements through the 2 intake manifold air heater relays.

Refer to Powertrain Diagnostic Procedures for an electrical operation and complete description of the intake heaters, including pre-heat and post-heat cycles.

INTAKE AIR HEATER RELAY (Continued)

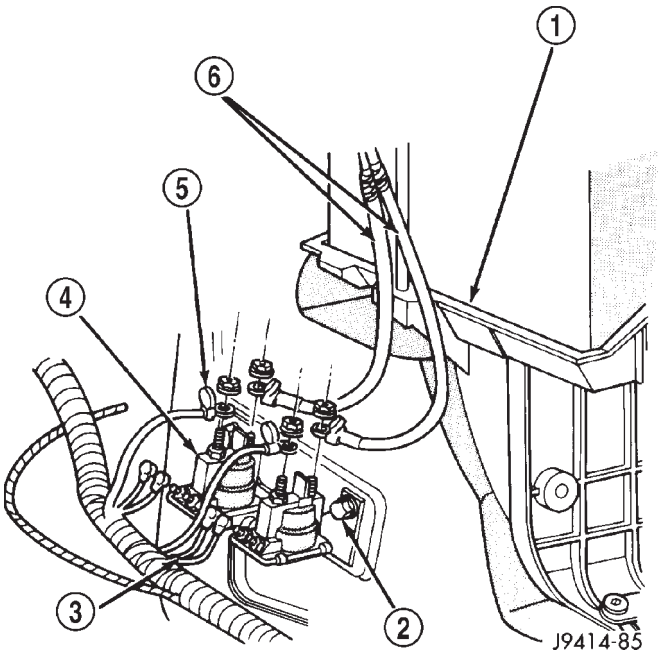

Fig. 29 Intake Manifold Air Heater Relays Location

1 - BATTERY (LEFT SIDE)
2 - RELAY MOUNTING BOLTS (3)
3 - RELAY TRIGGER WIRES (4)
4 - INTAKE AIR HEATER RELAYS (2)
5 - RUBBER SHIELDS (4)
6 - CABLES TO BATTERY (+)

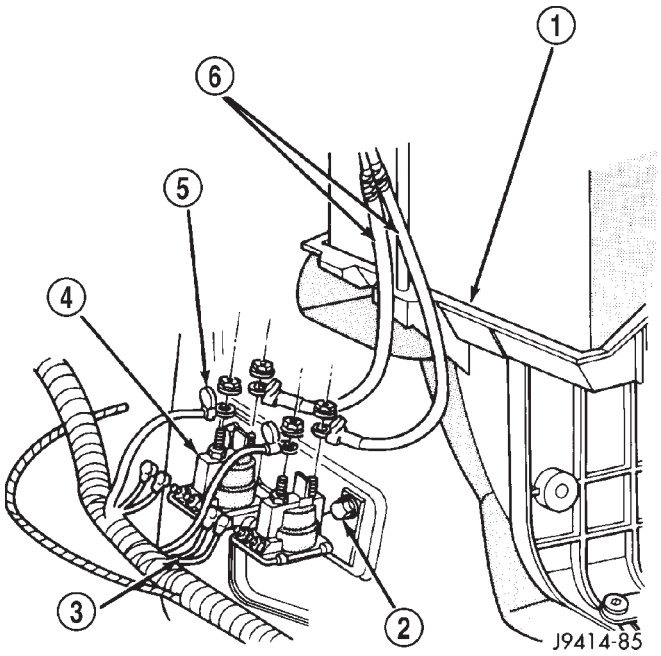

Fig. 30 Intake Manifold Air Heater Relays

1 - BATTERY (LEFT SIDE)
2 - RELAY MOUNTING BOLTS (3)
3 - RELAY TRIGGER WIRES (4)
4 - INTAKE AIR HEATER RELAYS (2)
5 - RUBBER SHIELDS (4)
6 - CABLES TO BATTERY (+)

REMOVAL

The relays are located in engine compartment, bolted to left inner fender below left battery (Fig. 30).

The mounting bracket and both relays are replaced as an assembly.

(1) Disconnect both negative battery cables at both batteries.

(2) Disconnect four relay trigger wires at both relays (Fig. 30). Note position of wiring before removing.

(3) Lift four rubber shields from all 4 cables (Fig. 30).

(4) Remove four nuts at cable connectors (Fig. 30). Note position of wiring before removing.

(5) Remove three relay mounting bracket bolts (Fig. 30) and remove relay assembly.

INSTALLATION

The relays are located in engine compartment, bolted to left inner fender below left battery (Fig. 30).

(1) Install relay assembly to inner fender. Tighten mounting bolts to 4.5 N·m (40 in. lbs.) torque.

(2) Connect eight electrical connectors to relays.

(3) Connect battery cables to both batteries.

INTAKE AIR TEMPERATURE SENSOR

DESCRIPTION - DIESEL

The intake manifold air temperature sensor is installed into the rear of the intake manifold (Fig. 31) with the sensor element extending into the air stream.

OPERATION - DIESEL

The IAT provides an input voltage to the Engine Control Module (ECM) indicating intake manifold air temperature. The input is used along with inputs from other sensors for intake air heater element operation, for engine protection, fuel timing and fuel control. As the temperature of the air-fuel stream in the manifold varies, the sensor resistance changes. This results in a different input voltage to the ECM.

INTAKE AIR TEMPERATURE SENSOR (Continued)

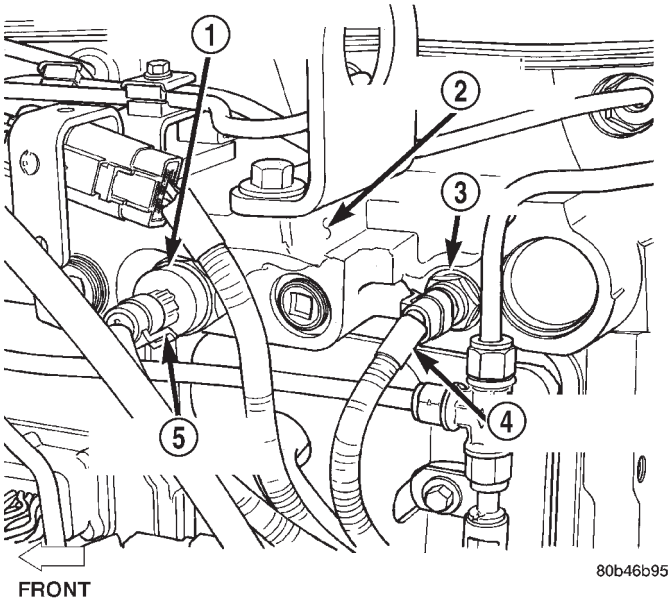

Fig. 31 Intake Manifold Air Temperature (IAT) Sensor Location

1 - MANIFOLD AIR PRESSURE (MAP) SENSOR
2 - REAR OF CYLINDER HEAD
3 - IAT SENSOR
4 - ELECTRICAL CONNECTOR
5 - ELECTRICAL CONNECTOR

REMOVAL - DIESEL

The IAT sensor is located in the left/rear side of the intake manifold (Fig. 32).

The IAT sensor is located in the left/rear side of the intake manifold (Fig. 32).

(1) Disconnect electrical connector from IAT sensor (Fig. 32).

(2) Remove IAT sensor from intake manifold (Fig. 33).

(3) Discard sensor o-ring (Fig. 33).

INSTALLATION - DIESEL

The IAT sensor is located in the left/rear side of the intake manifold (Fig. 32).

(1) Clean sensor mounting hole (Fig. 33) of rust or contaminants.

(2) Install new o-ring to sensor. Apply clean engine oil to sensor o-ring and sensor threads.

(3) Install IAT sensor into intake manifold. Tighten to 14 N·m (10 ft. lbs.) torque.

(4) Connect sensor electrical connector.

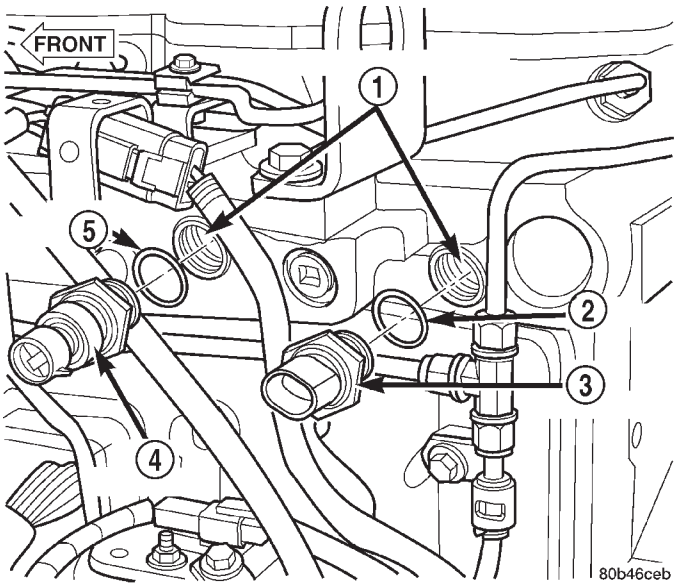

Fig. 32 IAT Sensor

1 - SENSOR MOUNTING HOLES
2 - O-RING
3 - IAT SENSOR
4 - MAP SENSOR
5 - O-RING

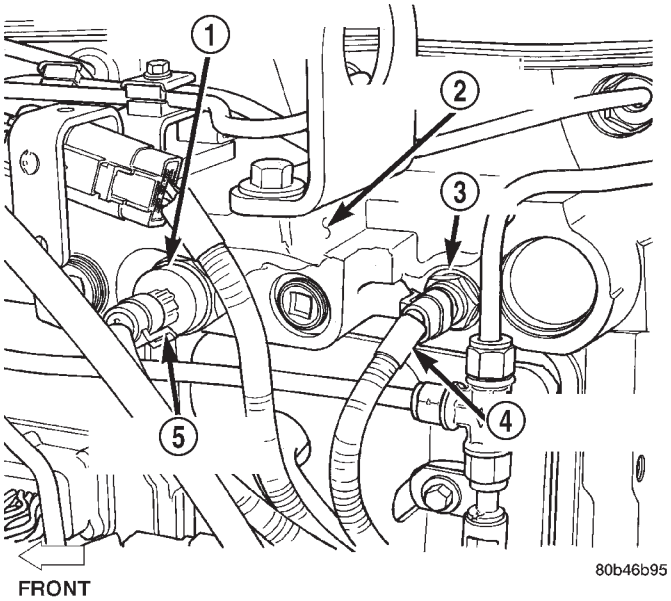

Fig. 33 Intake Manifold Air Temperature (IAT) Sensor Location

1 - MANIFOLD AIR PRESSURE (MAP) SENSOR
2 - REAR OF CYLINDER HEAD
3 - IAT SENSOR
4 - ELECTRICAL CONNECTOR
5 - ELECTRICAL CONNECTOR

MAP SENSOR

DESCRIPTION - DIESEL

The MAP sensor is installed into the rear of the intake manifold (Fig. 31).

OPERATION - DIESEL

The MAP sensor reacts to air pressure changes in the intake manifold. It provides an input voltage to the Engine Control Module (ECM). As pressure changes, MAP sensor voltage will change. The change in MAP sensor voltage results in a different input voltage to the ECM. The ECM uses this input, along with inputs from other sensors to provide fuel timing, fuel control and engine protection. Engine protection is used to derate (drop power off) the engine if turbocharger pressure becomes to high.

REMOVAL - DIESEL

The MAP sensor is located in the left/rear side of the intake manifold (Fig. 34).

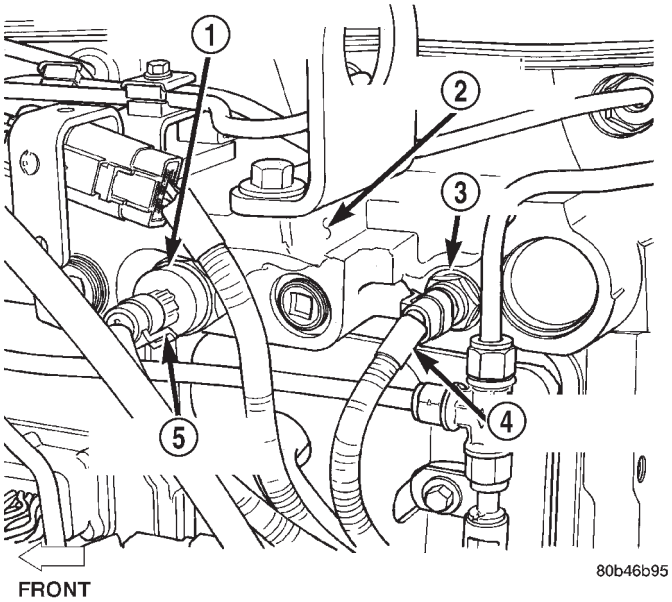

Fig. 34 MAP Sensor Location

1 - MANIFOLD AIR PRESSURE (MAP) SENSOR
2 - REAR OF CYLINDER HEAD
3 - IAT SENSOR
4 - ELECTRICAL CONNECTOR
5 - ELECTRICAL CONNECTOR

The MAP sensor is located in the left/rear side of the intake manifold (Fig. 34).

(1) Disconnect electrical connector from MAP sensor (Fig. 34).

(2) Remove MAP sensor from intake manifold (Fig. 35).

(3) Discard sensor o-ring (Fig. 35).

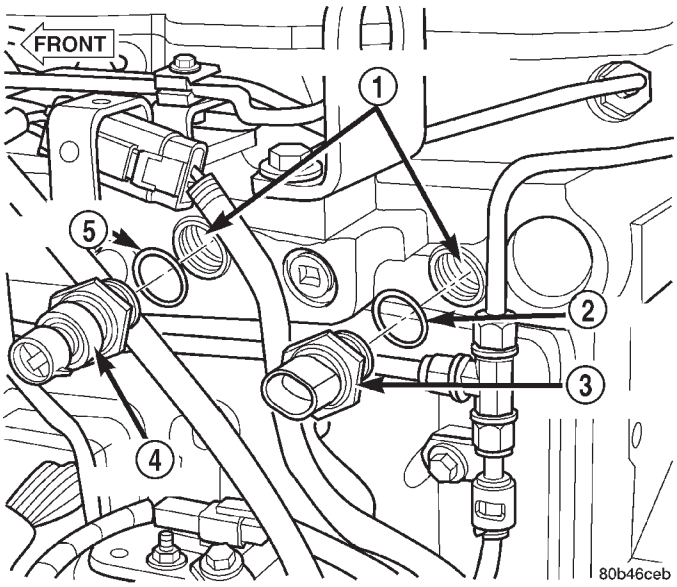

Fig. 35 MAP Sensor Removal/Installation

1 - SENSOR MOUNTING HOLES
2 - O-RING
3 - IAT SENSOR
4 - MAP SENSOR
5 - O-RING

INSTALLATION

The MAP sensor is located in the left/rear side of the intake manifold (Fig. 34).

(1) Clean sensor mounting hole (Fig. 35) of rust or contaminants.

(2) Install new o-ring to sensor. Apply clean engine oil to sensor o-ring and sensor threads.

(3) Install MAP sensor into intake manifold. Tighten to 14 N·m (10 ft. lbs.) torque.

(4) Connect sensor electrical connector.

PTO SWITCH

DESCRIPTION

OPERATION

This Engine Control Module (ECM) input is used only on models equipped with aftermarket Power Take Off (PTO) units.

The input is used to tell the ECM that the PTO has been engaged. When engaged, the ECM will disable certain OBD II functions until the PTO has been turned off.

THROTTLE CONTROL CABLE

REMOVAL

(1) Disconnect both negative battery cables at both batteries.

(2) From inside vehicle, hold up accelerator pedal. Remove plastic cable retainer and throttle cable core wire from upper end of pedal arm (Fig. 39). The plastic cable retainer snaps into pedal arm.

(3) Remove cable core wire at pedal arm.

(4) From inside vehicle, pinch both sides of plastic cable housing retainer tabs at dash panel.

(5) Remove cable housing from dash panel and pull cable into engine compartment.

(6) Remove cable cover (Fig. 36). Cable cover is attached with 2 Phillips screws, 2 plastic retention clips and 2 push tabs (Fig. 36). Remove 2 Phillips screws and carefully pry out 2 retention clips. After clip removal, push rearward on front tab, and upward on lower tab for cover removal.

(7) Using 2 screwdrivers, pry cable connector socket from throttle lever ball (Fig. 37). **Be very careful not to bend throttle lever arm.**

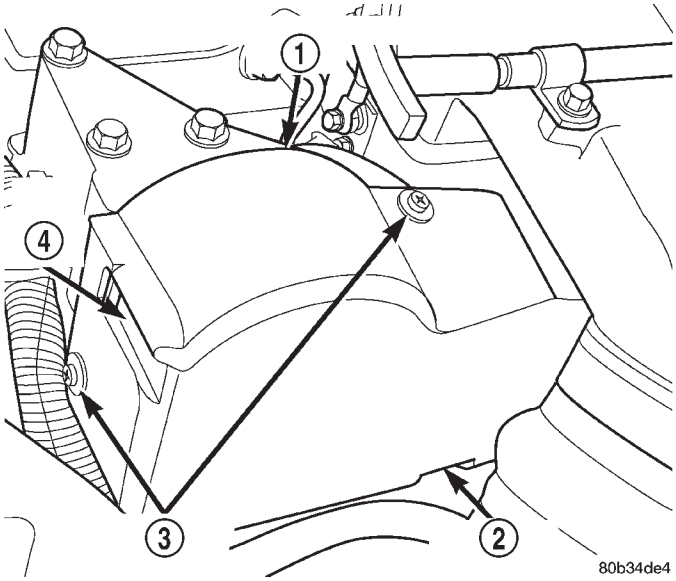

Fig. 36 Cable/Lever/Throttle Linkage Cover

1 - CABLE/LEVER/LINKAGE COVER
2 - PUSH UP LOWER TAB
3 - SCREWS/CLIPS (2)
4 - TAB PUSH HERE

(8) Squeeze 2 pinch tabs on sides of throttle cable at mounting bracket (Fig. 38) and push cable rearward out of bracket.

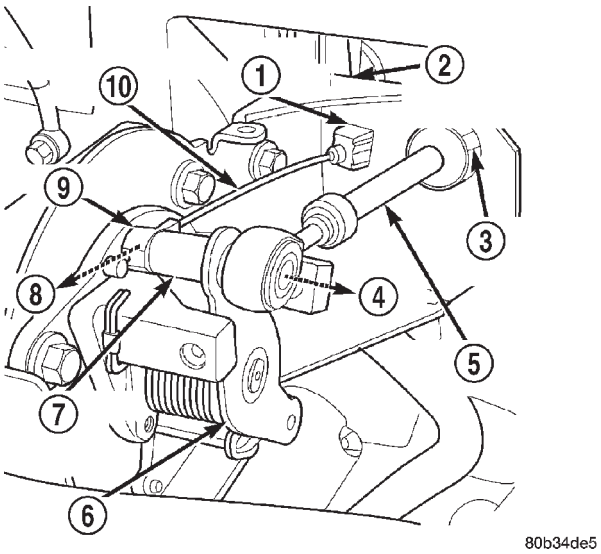

Fig. 37 Throttle Cable at Throttle Lever

1 - PINCH (2) TABS
2 - CABLE MOUNTING BRACKET
3 - PINCH TABS (2)
4 - OFF
5 - THROTTLE CABLE
6 - THROTTLE LEVER
7 - THROTTLE LEVER PIN
8 - OFF
9 - CONNECTOR
10 - SPEED CONTROL CABLE

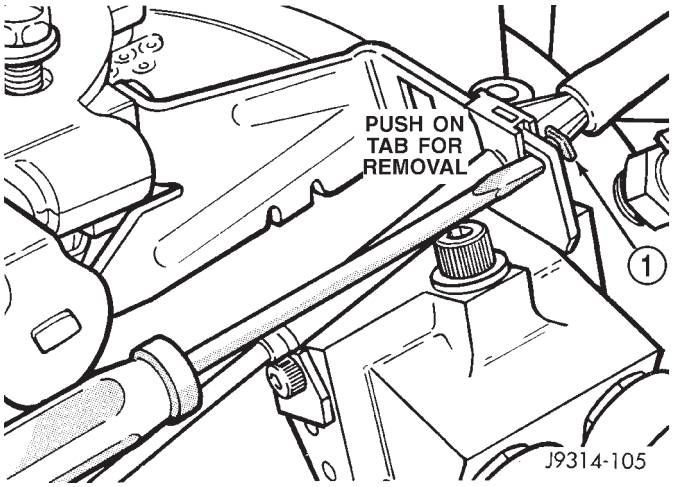

Fig. 38 Cable Release

1 - TAB

THROTTLE CONTROL CABLE (Continued)

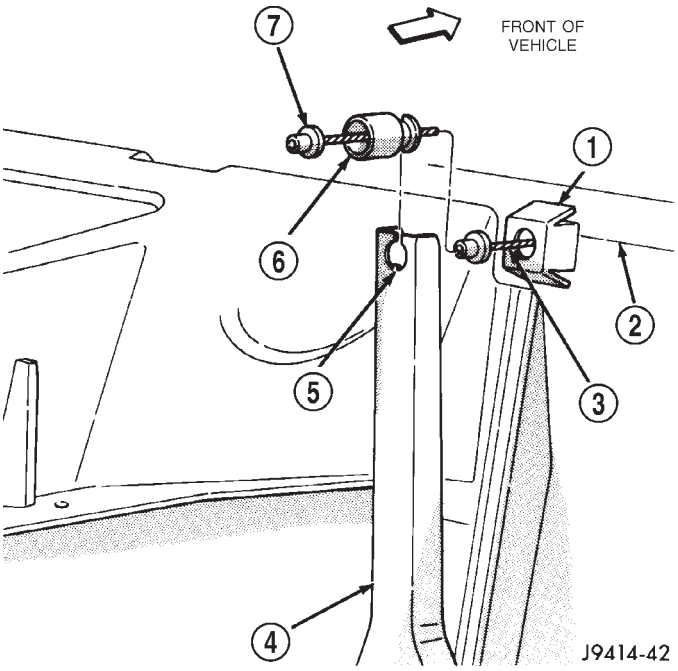

Fig. 39 Cable Removal/Installation at Pedal

1 - PINCH TWO TABS FOR CABLE REMOVAL
2 - DASH PANEL
3 - CABLE CORE WIRE
4 - THROTTLE PEDAL ARM
5 - INDEX TAB
6 - CABLE RETAINER
7 - CABLE STOP

INSTALLATION

(1) Install cable through mounting hole on cable mounting bracket (Fig. 37). Cable snaps into bracket. Be sure 2 pinch tabs are secure.

(2) Using large pliers, connect cable end socket to throttle lever ball (snaps on).

(3) Install remaining cable housing end into and through dash panel opening (snaps into position). The two plastic pinch tabs should lock cable to dash panel.

(4) From inside vehicle, hold up accelerator pedal. Install throttle cable core wire and plastic cable retainer into and through upper end of pedal arm (the plastic retainer is snapped into pedal arm). When installing plastic retainer to accelerator pedal arm, note index tab on pedal arm (Fig. 39). Align index slot on plastic cable retainer to this index tab.

(5) Connect negative battery cables to both batteries.

(6) Before starting engine, operate accelerator pedal to check for any binding.

(7) Install cable/lever cover.