https://truckmanualshub.com/

DIRECT SUPPORT AND GENERAL SUPPORT MAINTENACE MANUAL (INCLUDING REPAIR PARTS AND SPECIAL TOOLS LIST)

ENGINE, DIESEL: 8-CYLINDER TURBOCHARGED, DETROIT DIESEL CORPORATION MODEL 8V92TA NSN 2815-01-257-3879

TABLE OF CONTENTS PAGE i

INTRODUCTION PAGE vi

EQUIPMENT DESCRIPTION PAGE 1-1

MAINTENANCE INSTRUCTIONS PAGE 2-1

TROUBLESHOOTING PAGE 2-7

APPENDIX A REFERENCES PAGE A-1

APPENDIX C EXPENDABLE SUPPLIES AND MATERIALS LIST PAGE C-1

APPENDIX D ILLUSTRATED LIST OF MANUFACTURED ITEMS PAGE D-1

APPENDIX E TORQUE LIMITS PAGE E-1

ALPHABETICAL INDEX PAGE INDEX 1

Approved for public release; distribution is unlimited.

HEADQUARTERS, DEPARTMENT OF THE ARMY

JANUARY 1988

https://truckmanualshub.com/

https://truckmanualshub.com/

WARNING

CARBON MONOXIDE (EXHAUST GAS) CAN CAUSE DEATH.

Carbon monoxide is without color or smell, but can cause death, Breathing air with carbon monoxide produces symptoms of headache, dizziness, loss of muscular control, a sleepy feeling, and coma. Brain damage or death can result from heavy exposure. Carbon monoxide occurs in the exhaust fumes of fuel-burning heaters and internal combustion engines. Carbon monoxide can become dangerously concentrated under conditions of no ventilation. Precautions must be followed to ensure crew safety when the personnel heater or engine of any vehicle is operated for any purpose.

1. DO NOT operate personnel heater or engine of vehicle in a closed place without proper ventilation.

2. DO NOT drive any vehicle with inspection plates, cover plates, or engine compartment covers removed unless necessary for maintenance purposes.

3. BE ALERT at all times during vehicle operation for exhaust odors and exposure symptoms, If either are present, IMMEDIATELY VENTILATE personnel compartments. If symptoms persist, remove affected crew to fresh air and keep warm. DO NOT PERMIT PHYSICAL EXERCISE. If necessary, give artificial respiration and get immediate medical attention. For artificial respiration, refer to FM 21-11.

4. BE AWARE that the gas particulate filter unit or the field protection mask for nuclear-biological-chemical protection WILL NOT offer safety from carbon monoxide poisoning.

THE BEST DEFENSE AGAINST CARBON MONOXIDE POISONING IS GOOD VENTILATION.

WARNING

Adhesives, solvents, and sealing compounds can burn easily, can give off harmful vapors, and are harmful to skin and clothing. To avoid injury or death, keep away from open fire and use in well-ventilated area. If adhesive, solvent, or sealing compound gets on skin or clothing, wash immediately with soap and water.

WARNING

Never use the parking brake for normal braking or wheels will lock up causing severe skid. Skidding vehicle could result in serious injury or death.

WARNING

Fuel is very flammable and can explode easily. TO avoid serious irjury or death, keep fuel away from open fire and keep fire extinguisher within easy reach when working with fuel. Do not work on fuel system when engine is hot. Fuel can be ignited by hot engine. When working with fuel, post signs that read NO SMOKING WITHIN 50 FEET of vehicle.

WARNING

Remove rings, bracelets, wristwatches, neck chains, and any other jewelry before working around vehicle. Jewelry can catch on equipment and cause Injury, or may short across an electrical circuit and cause severe burns or electrical shock.

https://truckmanualshub.com/

WARNING

The radiator is very hot and pressurized during vehicle operation. Let radiator cool before removing cap. Failure to do so can result in serious burns.

WARNING

The exhaust pipe and muffler can become very hot during vehicle operation. Be careful not to touch these parts with bare hands, or allow body to come in contact with pipe or muffler. Exhaust system parts can become hot enough to cause serious burns.

WARNING

Always use seatbelts when operating vehicle. Failure to use seatbelt can result in serious injury in case of accident.

WARNING

When working inside the vehicle with power off, be sure to ground every capacitor likely to hold a dangerous voltage potential.

WARNING

Be careful when working on or with electrical equipment. Do not be misled by the term "low voltage". Voltages as low as 50 volts may cause death. For artificial respiration, refer to FM 21-11.

WARNING

Be careful not to short out battery terminals. Do not smoke or use open flame near batteries. Batteries may explode from a spark. Battery acid is harmful to skin and eyes.

WARNING

Starting fluid is toxic and flammable. Do not store in cab and do not breathe fumes. Do not puncture or burn containers. Dispose of container following manufacturer's recommendations on the container.

WARNING

Compressed air used for cleaning purposes will not exceed 30 psi (207 kPa). Use only with effective chip guarding and personal protective equipment, goggles, shield, and gloves.

WARNING

After Nuclear, Biological, or Chemical (NBC) exposure of vehicle, all air filters shall be handled with extreme caution. Unprotected personnel can experience injury or death if residual toxic agents or radioactive material are present. If vehicle is exposed to chemical or biological agents, servicing personnel shall wear protective mask, hood, protective overgarments, and chemical protective gloves and boots in accordance with TM 10-277. All contaminated air filters shall be placed in double-lined plastic bags and moved swiftly to a segregation area away from the worksite. The same procedure applies for radioactive dust contamination. The Company NBC team should measure the radiation prior to filter removal to determine the extent of safety procedures required per the NBC Annex to the unit Standard Operating Procedures (SOP). The segregation area in which the contaminated air filters are temporarily stored shall be marked with appropriate NBC placards. Final disposal of contaminated air filters shall be in accordance with local SOP. Decontamination operation shall be in accordance with TM 3-220 and local SOP.

https://truckmanualshub.com/

CHANGE

NO. 4

HEADQUARTERS
DEPARTMENT OF THE ARMY
WASHINGTON, D.C., 1 October, 2004

DIRECT SUPPORT AND GENERAL SUPPORT

MAINTENANCE MANUAL

(INCLUDING REPAIR PARTS AND SPECIAL TOOLS LIST)

ENGINE, DIESEL: 8-CYLINDER, TURBOCHARGED, DETROIT DIESEL CORPORATION

MODEL 8V92TA NSN 2815-01-257-3879

Approved for public release; distribution is unlimited.

TM 9-2815-224-34&P, January 1988, is changed as follows:

1. Remove old pages and insert new pages as indicated below.
2. New or changed material is indicated by a vertical bar in the margin of the page.
3. Minor changes to illustrations are indicated by a miniature pointing hand.
4. Illustrations that are new or that have major revisions are indicated by a vertical bar adjacent to the illustration.

Remove Pages	Insert Pages
A and B	A and B
C/(D blank)	C/(D blank)
iii/(iv blank)	iii/(iv blank)
2-1 and 2-2	2-1 and 2-2
3-41 and 3-42	3-41 and 3-42
5-3 and 5-4	5-3 and 5-4
15-32.1 and 15-32.2	15-32.1 and 15-32.2
A-1 and A2/(B1 thru I-65 deleted)	A-1 and A2/(B1 thru B-65 deleted)
C-3 and C-4	C-3 and C-4

File this change sheet in front of the publication for reference purposes.

https://truckmanualshub.com/

By Order of the Secretary of the Army:

PETER J. SCHOOMAKER
General, United States Army
Chief of Staff

Official:

JOEL B. HUDSON
Administrative Assistant to the
Secretary of the Army
0422213

DISTRIBUTION: To be distributed in accordance with the Initial Distribution Number (IDN) 380415, requirements for TM 9-2815-224-34&P.

https://truckmanualshub.com/

CHANGE

NO. 3

HEADQUARTERS
DEPARTMENT OF THE ARMY
WASHINGTON, D.C., 15 Febrary 2002

DIRECT SUPPORT AND GENERAL SUPPORT

MAINTENANCE MANUAL

(INCLUDING REPAIR PARTS AND SPECIAL TOOLS LIST)

ENGINE, DIESEL: 8-CYLINDER, TURBOCHARGED, DETROIT DIESEL CORPORATION

MODEL 8V92TA NSN 2815-01-257-3879

Approved for public release; distribution is unlimited.

TM 9-2815-224-34&P, January 1988, is changed as follows:

1. Remove old pages and insert new pages as indicated below.
2. New or changed material is indicated by a vertical bar in the margin of the page.
3. Minor changes to illustrations are indicated by a miniature pointing hand.
4. Illustrations that are new or that have major revisions are indicated by a vertical bar adjacent to the illustration.
5. Changes on cover are: Deleted destruction notice, changed distribution statement, deleted Appendix B tab, changed title, and changed NSN.

Remove Pages	Insert Pages
i – ii	i – ii
19-5 – 19-8	19-5 – 19-8

File this change sheet in front of the publication for reference purposes.

https://truckmanualshub.com/

By Order of the Secretary of the Army:

ERIC K. SHINSEKI
General, United States Army
Chief of Staff

Official:

JOEL B. HUDSON
Administrative Assistant to the
Secretary of the Army
0118704

DISTRIBUTION: To be distributed in accordance with the Initial Distribution Number (IDN) 380415, requirements for TM 9-2815-224-34&P.

https://truckmanualshub.com/

CHANGE

NO. 2

HEADQUARTERS
DEPARTMENT OF THE ARMY
Washington, D. C., *15 December 1998*

DIRECT SUPPORT AND GENERAL SUPPORT

MAINTENANCE MANUAL

(INCLUDING REPAIR PARTS AND SPECIAL TOOLS LIST)

ENGINE, DIESEL: 8-CYLINDER, TURBOCHARGED, DETROIT DIESEL CORPORATION

MODEL 8V92TA NSN 2815-01-257-3879

Approved for public release; distribution is unlimited.

TM 9-2815-22434&P, 20 January 1988, is changed as follows:

1. Remove old pages and insert new pages as indicated below.
2. New or changed material is indicated by a vertical bar in the margin of the page.
3. Minor changes to illustrations are indicated by a miniature pointing hand.
4. Illustrations that are new or that have major revisions are indicated by a vertical bar adjacent to the illustration,
5. Changes on cover are: Deleted destruction notice, changed distribution statement, deleted Appendix B tab, changed title, and changed NSN.

Remove Pages	Insert Pages
i thru iv	i thru iii/iv blank)
1-7 and 1-8	1-7 and 1-8
2-7 and 2-8	2-7 and 2-8
2-13 and 2-14	2-13 and 2-14
2-15/(2-16 blank)	2-15/(2-16 blank)
3-3 and 3-4	3-3 and 3-4
3-11 and 3-12	3-11 and 3-12
3-23 thru 3-28	3-23 thru 3-28
3-33 thru 3-54	3-33 thru 3-54
4-3 thru 4-12	4-3 thru 4-12
none	4-26.1/(4-26.2 blank)
4-27 and 4-28	4-27 and 4-28
5-3 and 5-4	5-3 and 5-4
5-9 and 5-10	5-9 and 5-10
5-17 and 5-18	5-17 and 5-18
none	5-18.1 thru 5-18.4
7-7 and 7-12	7-7 and 7-12
11-1 and 11-14	11-1 and 11-14
12-9 and 12-10	12-9 and 12-10

https://truckmanualshub.com/

Remove Pages	Insert Pages
12-15 thru 12-22	12-15 thru 12-22
12-29 and 12-30	12-29 and 12-30
none	12-30.1/(12-30.2 blank)
13-37/(12-38 blank)	12-37 and 12-38
14-1 and 14-2	14-1 and 14-2
none	14-14.1/(14.2 blank)
14-15 and 14-16	14-15 and 14-16
14-19 thru 14-24	14-19 thru 14-23/(14-24 blank)
14-25 and 14-26	14-25 and 14-26
none	14-34.1/(14.34.2 blank)
14-35 and 14-36	14-35 and 14-36
none	14-36.1/(14.36.2 blank)
14-37 thru 14-55/(14-56 blank)	14-37 thru 14-55/(14-56 blank)
15-1 and 15-2	15-1 and 15-2
15-21 and 15-22	15-21 and 15-22
none	15-22.1 thru 15-22.5/(15-22.6 blank)
15-27 thru 15-32	15-27 thru 15-32
none	15-32.1 and 15-32.2
15-35 thru 15-38	15-35 thru 15-41/(15-42 blank)
16-1 thru 16-4	16-1 thru 16-4
17-1 and 17-2	17-1 and 17-2
17-7 and 17-8	17-7 and 17-8
18-1 thru 18-4	18-1 thru 18-4
none	18-6.1/(18-6.2 blank)
18-7 and 18-8	18-7 and 18-8
18-11 and 18-12	18-11 and 18-12
19-1 thru 19-10	19-1 thru 19-10
19-13 and 19-14	19-13 and 19-14
19-19 thru 19-22	19-19 thru 19-22
none	19-22.1 thru 19-22.4
19-23 thru 19-26	19-23 thru 19-26
19-31 and 19-32	19-31 and 19-32
C-3 and C-4	C-3 and C-4
A-1 and A-2	A-1 and A-2/(B-1 thru I-65 deleted)
D-1 and D-2	D-1 and D-2
none	D-7 and D-8
DA 2028 sample F & B	DA 2028 sample F & B
DA 2028 F & B	DA 2028 F & B
DA 2028 F & B	DA 2028 F & B
DA 2028 F & B	DA 2028 F & B
Cover	Cover

File this change sheet in front of the publication for reference purposes.

https://truckmanualshub.com/

By Order of the Secretary of the Army:

DENNIS J. REIMER
General, United States Army
Chief of Staff

Official:

JOEL B. HUDSON
Administrative Assistant to the Secretary of the Army
05633

DISTRIBUTION: To be distributed in accordance with the Initial Distribution Number (IDN) 380415, requirements for TM 9-2815-224-34&P.

https://truckmanualshub.com/

https://truckmanualshub.com/

TM 9-2815-224-34&P
C1

CHANGE

NO.1

HEADQUARTERS
DEPARTMENT OF THE ARMY
WASHINGTON, D.C., 15 April 1989

DIRECT SUPPORT AND GENERAL SUPPORT

MAINTENANCE MANUAL

(INCLUDING REPAIR PARTS AND SPECIAL TOOLS LIST)

ENGINE, DIESEL: 8-CYLINDER, TURBOCHARGED, DETROIT DIESEL ALLISON MODEL 8V92TA NSN 2815-01-132-1417

TM 9-2815-224-34&P, 20 January 1988, is changed as follows:

1. Remove old pages and insert new pages as indicated below.

2. New or changed material is indicated by a vertical bar in the margin of the page.

3. Minor changes to illustrations are indicated by a miniature pointing hand,.

4. Illustrations that are new or that have major revisions are indicated by a vertical bar adjacent to the illustration identification number.

Remove Pages	Insert Pages
iii and iv	iii and iv
7-45 and 7-46	7-45 and 7-46
7-49 and 7-50	7-49 and 7-50
19-5 and 19-6	19-5 and 19-6
19-23 and 19-24	19-23 and 19-24
19-29 and 19-30	19-29 and 19-30
D-1 and D-2	D-1 and D-2
D-5/(D-6 blank)	D-5 and D-6

File this change sheet in front of the publication for reference purposes.

https://truckmanualshub.com/

By Order of the Secretary of the Army:

CARL E. VUONO
General, United States Army
Chief of Staff

Official:

R.L. DILWORTH
Brigadier General, United States Army
The Adjutant General

Distribution:

To be distributed in accordance with DA Form 12-38-R, Direct Support and General Support maintenance requirements for Engine, Diesel, 8-Cylinder, Turbocharged, Detroit Allison Model 8V92T.

INSERT LATEST UPDATED PAGES/WORK PACKAGES, DESTROY SUPERSEDED DATE

LIST OF EFFECTIVE PAGES/WORK PACKAGES

NOTE: The portion of text affected by the updates is indicated by a vertical line in the outer margins of the page. Updates to illustrations are indicated by miniature pointing hands. Updates to wiring diagrams are indicated by shaded areas.

Dates of issue for original and updated pages/work packages are:

Original . . . 0 . . . . . 20 January 1988
Change . . . 1 . . . . . 15 April 1989
Change . . . 2 . . . . . 15 December 1998
Change . . . 3 . . . . . 15 February 2002
Change . . . 4 . . . . . 1 October 2004

TOTAL NUMBER OF PAGES IN THIS PUBLICATION IS 554
CONSISTING OF THE FOLLOWING:

Page/WP No.	*Change No.	Page/WP No.	*Change No.	Page/WP No.	*Change No.
Cover	0	3-13 – 3-22	0	4-4 – 4-5	0
Blank	0	3-23	2	4-6 – 4-7	2
a – b	0	3-24	0	4-8	0
i	3	3-25 – 3-28	2	4-9	2
ii	0	3-29 – 3-33	0	4-10	0
iii	4	3-34 – 3-35	2	4-11	2
iv Blank	4	3-36	0	4-12 – 4-26	0
v	0	3-37 – 3-38	2	4-26.1	2
vi Blank	0	3-39	0	4-26.2 Blank	2
1-1 – 1-6	0	3-40	2	4-27	2
1-7 – 1-8	2	3-41	4	4-28 – 4-32	0
2-1	0	3-42	0	5-1 – 5-2	0
2-2	4	3-43 – 3-45	2	5-3	4
2-3 – 2-6	0	3-46 – 3-47	0	5-4	2
2-7	2	3-48	2	5-5 – 5-8	0
2-8 – 2-13	0	3-49	0	5-9 – 5-10	2
2-14 – 2-15	2	3-50 – 3-51	2	5-11 – 5-17	0
2-16 Blank	2	3-52	0	5-18	2
3-1 – 3-2	0	3-53	2	5-18.1 – 5-18.4	2
3-3	2	3-54 – 3-62	0	6-1 – 6-12	0
3-4 – 3-11	0	4-1 – 4-2	0	7-1 – 7-7	0
3-12	2	4-3	3	7-8 – 7-9	2
				7-10	0

* Zero in this column indicates an original page.

https://truckmanualshub.com/

INSERT LATEST UPDATED PAGES/WORK PACKAGES, DESTROY SUPERSEDED DATE

Page/WP No.	*Change No.	Page/WP No.	*Change No.	Page/WP No.	*Change No.
7-11	2	14-14.2 Blank	2	15-35 – 15-41	2
7-12 – 7-44	0	14-15	2	15-42 Blank	2
7-45	1	14-16 – 14-19	0	16-1	0
7-46 – 7-48	0	14-20 – 14-23	2	16-2	2
7-49	0	14-24 Blank	2	16-3	0
7-50	0	14-25	2	16-4	2
8-1 – 8-21	0	14-26 – 14-34	0	17-1	0
8-22 Blank	0	14-34.1	2	17-2	2
9-1 – 9-3	0	14-34.2 Blank	2	17-3 – 17-6	0
9-4 Blank	0	14-35	2	17-7	2
10-1 – 10-14	0	14-36	0	17-8	0
11-1	0	14-36.1	2	18-1	2
11-2	2	14-36.2 Blank	2	18-2 – 18-3	0
11-3	0	14-37	2	18-4	2
11-4 – 11-7	2	14-38 – 14-39	0	18-5 – 18-6	0
11-8 – 11-9	0	14-40	2	18-6.1	2
11-10 – 11-14	2	14-41	0	18-6.2 Blank	2
12-1 – 12-8	0	14-42 – 14-47	2	18-7	2
12-9	2	14-48 – 14-49	0	18-8 – 18-10	0
12-10 – 12-15	0	14-50 – 14-53	2	18-11	2
12-16 – 12-17	2	14-54	0	18-12 – 18-19	0
12-18	0	14-55	2	18-20 Blank	0
12-19	2	14-56 Blank	2	19-1	2
12-20	0	15-1	2	19-2	0
12-21	2	15-2 – 15-21	0	19-3	2
12-22 – 12-29	0	15-22	2	19-4 – 19-5	0
12-30	2	15-22.1 – 15-22.5	2	19-6 – 19-7	3
12-30.1	2	15-22.6 Blank	2	19-8	0
12-30.2 Blank	2	15-23 – 15-26	0	19-9	2
12-31 – 12-36	0	15-27 – 15-30	2	19-10 – 19-12	0
12-37 – 12-38	2	15-31	0	19-13	2
13-1 – 13-7	0	15-32	2	19-14 – 19-18	0
13-8 Blank	0	15-32.1	2	19-19	2
14-1	2	15-32.2	4	19-20	0
14-2 – 14-14	0	15-33 – 15-34	0	19-21 – 19-22	2
14-14.1	2				

* Zero in this column indicates an original page.

INSERT LATEST UPDATED PAGES/WORK PACKAGES, DESTROY SUPERSEDED DATE

Page/WP No.	*Change No.	Page/WP No.	*Change No.	Page/WP No.	*Change No.
19-22.1 – 19-22.4	2	A-2	4	D-1	2
19-23	0	B-1 thru B-65 Deleted	2	D-2 – D-5	0
19-24 – 19-26	2	C-1	0	D-6 Blank	0
19-27 – 19-31	0	C-2	0	D-7 – D-8	2
19-32	2	C-3	4	E-1 – E-3	0
19-33	0	C-4	0	E-4 Blank	0
19-34 Blank	0	C-5	2	Index 1 – Index 6	0
A-1	0	C-6 Blank	2		

* Zero in this column indicates an original page.

https://truckmanualshub.com/

https://truckmanualshub.com/

TECHNICAL MANUAL

No. 9-2815-224-34&P

HEADQUARTERS
DEPARTMENT OF THE ARMY

Washington, DC, *20 January 1988*

DIRECT SUPPORT AND GENERAL SUPPORT MAINTENANCE MANUAL

ENGINE, DIESEL: 8-CYLINDER, TURBOCHARGED
DETROIT DIESEL CORPORATION MODEL 8V92TA
NSN 2815-01-257-3879

Approved for public release; distribution is unlimited.

REPORTING ERRORS AND RECOMMENDING IMPROVEMENTS

You can help improve this publication. If you find any mistakes or if you know of a way to improve the procedures, please let us know. Submit your DA Form 2028 (Recommended Changes to Equipment Technical Publications), through the Internet, on the Army Electronic Product Support (AEPS) Web site. The Internet address is http://aeps.ria.army.mil. If you need a password, scroll down and click on "ACCESS REQUEST FORM." The DA Form 2028 is located in the ONLINE FORMS PROCESSING section of the AEPS. Fill out the form and click on SUBMIT. Using this form on the AEPS will enable us to respond quicker to your comments and better manage the DA Form 2028 program. You may also mail, fax, or e-mail your letter or DA Form 2028 direct to: AMSTA-LC-CI/TECH PUBS, TACOM-RI, 1Rock Island Arsenal, Rock Island, IL 61299-7630. The e-mail address is TACOM-TECH-PUBS@ria.army.mil. The fax number is DSN 793-0726 or Commercial (309) 782-0726.

M983 with crane and M985E1 without winch are no longer in the fleet. Ignore all references to these vehicles. The M984E1 and M984A1 are the same vehicle. All references to M984E1 shall be interpreted as the M984A1 model.

Repair Parts and Special Tools List for the engine, Diesel: 8-Cylinder, Turbocharged Detroit Diesel Corporation Model 8V92TA (NSN 2815-01-257-3879) can be found in TM 9-2320-279-24P.

TABLE OF CONTENTS

		Page
	HOW TO USE THIS MANUAL	vii
CHAPTER 1	INTRODUCTION	1-1
Section I	Equipment and Maintenance Reports	1-1
Section II	Equipment Description	1-3
Section III	Principles of Operation	1-7
CHAPTER 2	MAINTENANCE INSTRUCTIONS	2-1
Section I	General Information	2-1
Section II	Repair Parts and Special Tools	2-1
Section III	General Maintenance Practices	2-1
Section IV	Organization of Maintenance Procedures	2-4
Section V	Troubleshooting	2-7
CHAPTER 3	ENGINE BLOCK AND CYLINDER HEAD MAINTENANCE	3-1
Section I	Information	3-1
Section II	Engine Block Assembly	3-2
Section III	Cylinder Head Assembly	3-38

https://truckmanualshub.com/

Page

CHAPTER 4 CRANKSHAFT MAINTENANCE 4-1
Section I Introduction 4-1
Section II Crankshaft Assembly 4-1

CHAPTER 5 FLEXPLATE AND FLYWHEEL HOUSING MAINTENANCE 5-1
Section I Introduction 5-1
Section II Flexplate and Flywheel Housing Assembly 5-1

CHAPTER 6 PISTON AND CONNECTING ROD MAINTENANCE. 6-1
Section I Introduction 6-1
Section II Piston and Connecting Rod 6-1

CHAPTER 7 VALVE MECHANISM MAINTENANCE 7-1
Section I Introduction 7-1
Section II Valve Mechanisms. 7-1

CHAPTER 8 0IL SYSTEM MAINTENANCE 8-1
Section I Introduction 8-1
Section II Oil System 8-1

CHAPTER 9 EXHAUST MANIFOLD MAINTENANCE 9-1
Section I Introduction 9-1
Section II Exhaust Manifold Assembly. 9-1

CHAPTER 10 BLOWER AND WATER PUMP DRIVES MAINTENANCE 10-1
Section I Introduction 10-1
Section II Blower Drive Assembly 10-1
Section III Water Pump Drive Assembly 10-12

CHAPTER 11 ENGINE BRAKE RETARDER MAINTENANCE 11-1
Section I Introduction 11-1
Section II Engine Brake Retarder Assembly 11-1

CHAPTER 12 FUEL INJECTOR MAINTENANCE 12-1
Section I Introduction 12-1
Section II Fuel Injector Assembly. 12-1

CHAPTER 13 FUEL SYSTEM MAINTENANCE 13-1
Section I Introduction 13-1
Section II Fuel System. 13-1

CHAPTER 14 BLOWER AND TURBOCHARGER MAINTENANCE. 14-1
Section I Introduction 14-1
Section II Blower Assembly. 14-1
Section III Turbocharger Assembly 14-36

CHAPTER 15 ENGINE GOVERNOR MAINTENANCE 15-1
Section I Introduction 15-1
Section II Engine Governor. 15-1

https://truckmanualshub.com/

CHAPTER 16 AFTERCOOLER MAINTENANCE 16-1
Section I Introduction 16-1
Section II Aftercooler Assembly 16-1
CHAPTER 17 WATER PUMP MAINTENANCE 17-1
Section I Introduction 17-1
Section II Water Pump Assembly 17-1
CHAPTER 18 FAN CLUTCH MAINTENANCE 18-1
Section I Introduction 18-1
Section II Fan Clutch Assembly 18-1
CHAPTER 19 ENGINE TUNE-UP 19-1
Section I Introduction 19-1
Section II Engine Tune-Up Adjustments 19-1
APPENDIXES
A REFERENCES A-1
B ..... Deleted
C EXPENDABLE SUPPLIES AND MATERIALS C-1
Section I Introduction C-1
Section II Expendable Supplies and Materials List C-2
D ILLUSTRATED LIST OF MANUFACTURED ITEMS D-1
Section I Introduction D-1
Section II Manufactured Items Part Number Index D-1
Section III Manufactured Items Illustrations D-2
E TORQUE LIMITS E-1
Index ..... Index 1

LIST OF ILLUSTRATIONS

Figure	Title	Page
1-1	Engine Components	1-4
D-1	Bearing Shell Remover (P/N 2BG623)	D-2
D-2	Lifting Eyes (P/N 2BH944)	D-3
D-3	Retaining Ring Pliers (P/N 2BH945)	D-4
D-4	Turbocharger Holding Fixture (P/N 2SK742)	D-5
D-5	Hose (P/N 21021FX24)	D-6
D-6	Wire Assembly (P/N 25351FX7W)	D-6
D-7	Wear Sleeve Installation Tool	D-7
D-8	Feeler Gage [0.004 in.(0.102 mm), 0.005 in. (0.127 mm), 0.017 in. (0.432 mm)]	D-9

https://truckmanualshub.com/

https://truckmanualshub.com/

HOW TO USE THIS MANUAL

This manual is designed to help maintain the M977 series 8V92TA Diesel Engine. Listed below are some of the special features which have been put in to help locate and use needed information.

- The front cover index provides a quick reference to chapters and sections that will be used often.
- The appendixes are located at the end of the manual. They contain a reference guide to other manuals, a list of expendable supplies and materials, a manufactured items list, and tables for torque values.
- Subject headings and certain other essential information are printed in bold type throughout the manual to make them more visible.
- The maintenance tasks describe what has to be done to the vehicle before starting the task, and what must be done to return the vehicle to operating condition after the task is finished.
- Instructions are provided in paragraph 2-8 for a complete teardown/buildup of the engine in disassembly/reassembly sequence.
- Certain parts with wear limitations may be checked by referring to the Cleaning/Inspection portion of the task If the measurement falls within wear limits, it may ‘not be necessary to remove/replace.

The manual is divided into chapters containing direct support and general support maintenance procedures. These procedures describe a number of things such as:

What will be needed to do the job.
If any assistance will be needed.
Important safety y precautions.

In addition to the text, there will be an exploded-view illustration of most steps. This illustration is keyed to the text and shows how to take the part off and put it on. Cleaning and inspection procedures are also included when required.

FOLLOW THESE GUIDELINES WHEN USING THIS MANUAL:

- Become familiar with the entire maintenance procedure before beginning a maintenance task.
- Read all WARNINGS and CAUTIONS before performing any procedures.

https://truckmanualshub.com/

https://truckmanualshub.com/

CHAPTER 1
INTRODUCTION

Contents

	Para	Page
Scope	1-1	1-1
Maintenance Forms, Records, and Reports	1-2	1-1
Destruction of Army Material to Prevent Enemy Use	1-3	1-1
Preparation for Storage or Shipment	1-4	1-2
Nomenclature Cross-Reference	1-5	1-2
Reporting Equipment Improvement Recommendations (EAR)	1-6	1-2
Equipment Improvement Report and Maintenance Digest (EIR MD) and Equipment Improvement Report and Maintenance Summary (EIR MS)	1-7	1-2
Warranty Information	1-8	1-2
Metric System	1-9	1-2
Equipment Characteristics, Capabilities, and Features	1-10	1-3
Location and Description of Components	1-11	1-3
Equipment Data	1-12	1-7
Principles of Operation	1-13	1-7

Section 1. EQUIPMENT AND MAINTENANCE REPORTS

Maintenance Information

11-1. SCOPE.]The purpose of this chapter is to provide general information, equipment description, and principles of operation for the M977 series 8V92TA diesel engine.

a. Type of Manual. Direct Support and General Support Maintenance Manual with Repair Partsand Special Tools List (RPSTL) for the M977 series Heavy Expanded Mobility Tactical Truck (HEMTT) 8V92TA diesel engine.

b. Model Number and Equipment Name. 8V92TA Diesel Engine.

c. Purpose of Equipnent. The 8V92TA engine powers the M977 series vehicles used bythe U.S. Army.

d. Manual Content. Thismanual provides Direct Support and General Support Maintenance instructions for the M977 series 8V92TA engine. These instructions include procedures for disassembly, cleaning, repair, test, and adjustment as authorized by the Maintenance Allocation Chart. The procedures covered are beyond the scope of tools, equipment, and supplies normally available to operators and organizational maintenance personnel.

This manual also includes the Repair Parts and Special Tools List (RPSTL) for the M977 series 8V92TA engine. Direct Support and General Support Maintenance personnel will request repair parts as necessary from this RPSTL. The Source, Maintenance , and Recoverability (SMR) codes assigned to each part govern the requisition and disposition of the part. In addition to repair parts, all special tools used in engine maintenance are listed. These special tools are all tools required by the maintenance instructions which are not in U.S. Army supply catalogs for shop equipment and tool sets.

1-2. MAINTENANCE FORMS, RECORDS, AND REPORTS. Department of Army forms and procedures used for equipment maintenance will be as specified in the latest edition of DA PAM 738-750, The Army Maintenance Management System (TAMMS),

[1-3. DESTRUCTION OF ARMY MATERIAL TO PREVENT ENEMY USE.]Command decision, according to the tactical situation, will determine when the destruction of the M977 series 8V92TA engine will be accomplished. A destruction plan will be prepared by the using organization unless one has been prepared by a higher authority. For general destruction procedures for this equipment, refer to TM 750-244-6, Procedures for Destruction of Tank-Automotive Equipment to Prevent Enemy Use (U.S. Army Tank-Automotive Command).

https://truckmanualshub.com/

1-4. PREPARATION FOR STORAGE OR SHIPMENT. Instructions for preparation for storage or shipment are provided in TM 9-2320-279-20.

1-5. NOMENCLATURE CROSS-REFERENCE.] Table 1-1 lists the nomenclature cross-references used in this manual.

Table 1-1. Nomenclature Cross-Reference

Common Name	Official Nomenclature
Snap ring	Retaining ring
Engine coolant	Antifreeze, ethylene glycol mixture
Cold start system	Ether quick-start system
Jake brake, Jacobs® brake	Engine retarder

1-6. REPORTING EQUIPMENT IMPROVEMENT RECOMMENDATIONS EIR. If any M977 series 8V92TA engine needs improvement, let us know. Send us an EIR. The user is the only one who can tell us how the equipment might be improved. Let us know what is not liked about the design. Put it on an SF 368 (Quality Deficiency Report). Mail it to: Commander, U.S. Army TAnk-Automotive Command, ATTN: AMSTA-QRT, Warren, MI 48397-5000. We'll send a reply.

1-7. EQUIPMENT IMPROVEMENT REPORT AND MAINTENANCE DIGEST (EIR MD) AND] , EQUIPMENT IMPROVEMENT REPORT AND MAINTENANCE SUMMARY (EIR MS).] The quarterly Equipment Improvement Report and Maintenance Digest, TB 43-0001-39 series, contains valuable field information on the equipment covered in this manual. The information in the TB 43-0001-39 series is compiled from some of the Quality Deficiency Reports that have been prepared on the vehicles covered in this manual. Many of these articles result from comments, suggestions, and improvement recommendations that you submitted to the EIR program. The TB 43-0001-39 series contains information on equipment improvements, minor alterations, proposed Modification Work Orders (MWO'S), warranties (if applicable), actions taken on some of the DA Form 2028's (Recommended Changes to Publications), and advance information on proposed changes that may affect this manual. In addition, the more maintenance significant articles, including minor alterations, field-fixes, etc., that have a more permanent and continuing need in the field are republished in the Equipment Improvement Report and Maintenance Summary (EIR MS) for TACOM Equipment (TM 43-1043). Refer to both of these publications (TB 43-0001-39 series and TM 43-1043) periodically, especially the TB 43-0001-39 series, for the most current and authoritative information on this equipment. The information will help to do a better job and will advise to the latest changes to this manual. Also refer to DA Pam 310-1, Consolidated Index of Army Publications and Blank Forms, and Appendix A, References, of this manual.

1-8. WARRANTY INFORMATION. The M977 series 8V92TA engine is warranted by Oshkosh Truck Corporation, for 18 months or 12,000 miles, (19 308 km), whichever comes first. For complete information covering this warranty, refer to Warranty Technical Bulletin, TB 9-2300-295-15/19. Warranty starts on the date found in block 23, DA form 2408-9, in the logbook. Report all defects in material or workmanship to your supervisor who will take appropriate action.

1-9. METRIC SYSTEM. The equipment described herein contains metric components and requires metric common and special tools; therefore, metric units in addition to English units will be used throughout this manual. An English to metric conversion table is included as the last page of this manual inside the back cover.

https://truckmanualshub.com/

Section II. EQUIPMENT DESCRIPTION

Equipment Information

1-10. EQUIPMENT CHARACTERISTICS, CAPABILITIES, AND FEATURES. The M977 series 8V92TA engine is an eight-cylinder, V-Type, two-cycle, turbocharged diesel engine. Refer to TM 9-2320-279-10 for equipment characteristics, capabilities, and features.

1-11. LOCATION AND DESCRIPTION OF COMPONENTS.

a. Turbocharger. (See fig. 1-1) Mounted on top of blower. Designed to increase overall efficiency of engine by delivering high pressure air through engine blower to engine cylinders.

b. Governor. (See fig. l-l) Mounted on front end of blower and driven by one of blower rotors. Used to control engine idle speed and limit maximum operating speed of engine.

e. Fan Clutch. (See fig. 1-1) Mounted on front of engine behind fan. Is controlled by temperature valve and automatically engages fan to lower engine temperature.

d. Water Pump. (See fig. l-l) Mounted on front engine cover and driven by camshaft gear. It circulates engine coolant through cylinder block, cylinder heads, radiator and oil cooler.

e. Oil Pan. (See fig. 1-1) Mounted on bottom of cylinder block. It provides a reservoir for engine oil,

f. Oil Filter. (See fig. 1-1) Mounted on lower right-hand side of cylinder block just behind oil cooler. Filters out impurities as oil is forced through element.

g. Exhaust Manifold. (See fig. 1-1) Screwed to cylinder head. Routes by-product gases expelled from engine to attached exhaust piping.

h. Valve Rocker Covers. (See fig. 1-1) Completely encloses valve and injector rocker arm compartment at the top of cylinder head.

i. Fuel Pump. (See fig. 1-1) Attached to governor housing and driven off right-hand blower rotor. It transfers fuel (diesel) from supply tank to fuel injectors.

j. Blower. (See fig. 1-1) Screwed to top of cylinder block. Provides continuous and uniform supply of air to engine.

k. Engine Brake. (See fig. 1-1) Located on top of cylinder head, under valve rocker cover. Works to slow engine speed to help slow truck.

I. cylinder Head. (See fig. 1-1) One screwed on each cylinder bank and contains exhaust valves, fuel injectors and valve and injector operating mechanism.

m. Cylinder Block. (See fig. 1-1) Main structural part of engine. Provides rigidity and strength and ensures alinement of block bores and bearings under load.

n. Oil Pump. (See fig. 1-1) Mounted on bottom of cylinder block, inside oil pan. Pumps oil from oil pan into filter and various cavities and passages of engine to provide lubrication and cooling.

https://truckmanualshub.com/

1-11. LOCATION AND DESCRIPTION OF COMPONENTS (CONT).

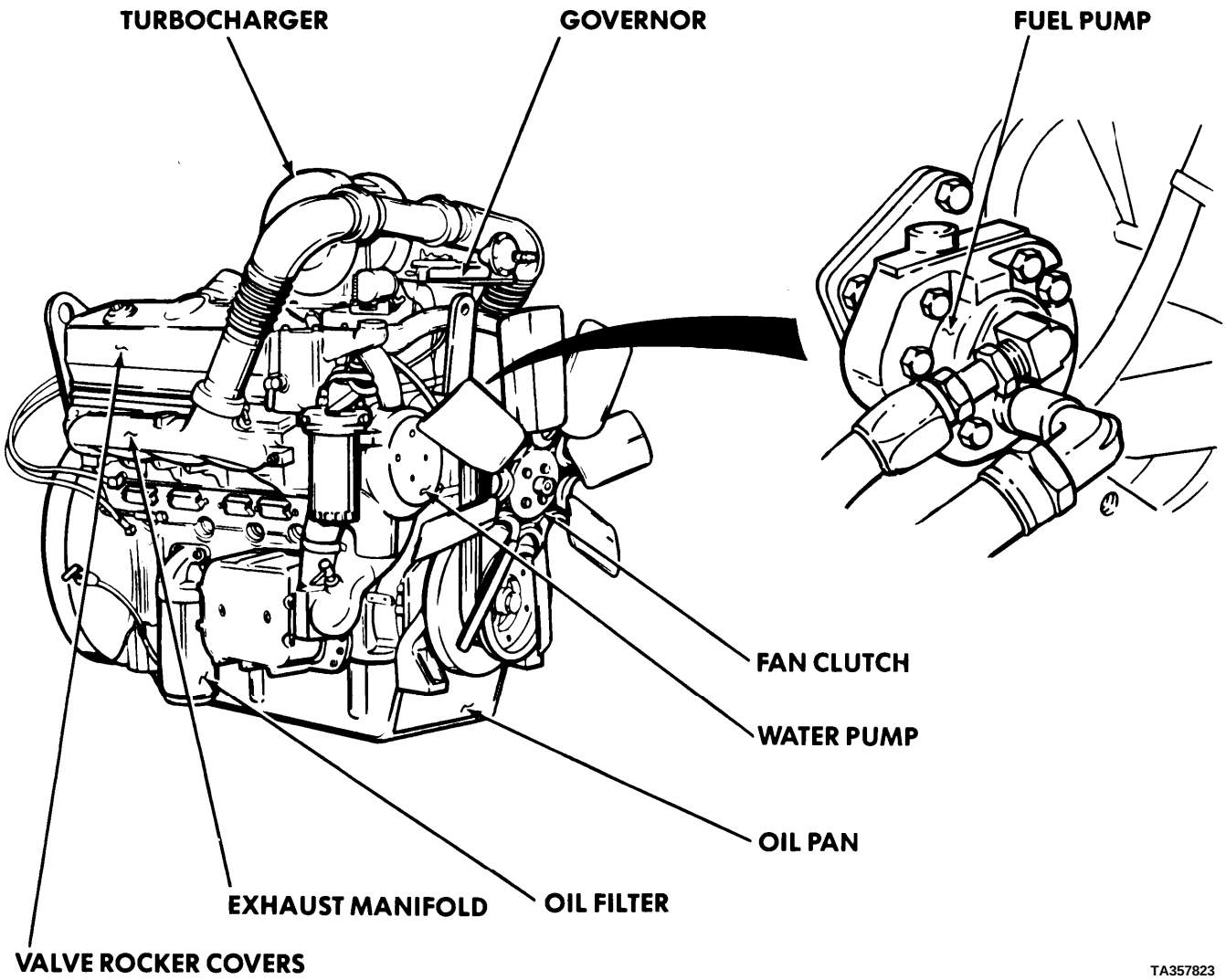

Figure 1-1. Engine Components.
(Sheet 1 of 3)

https://truckmanualshub.com/

Equipment Information (Cont)

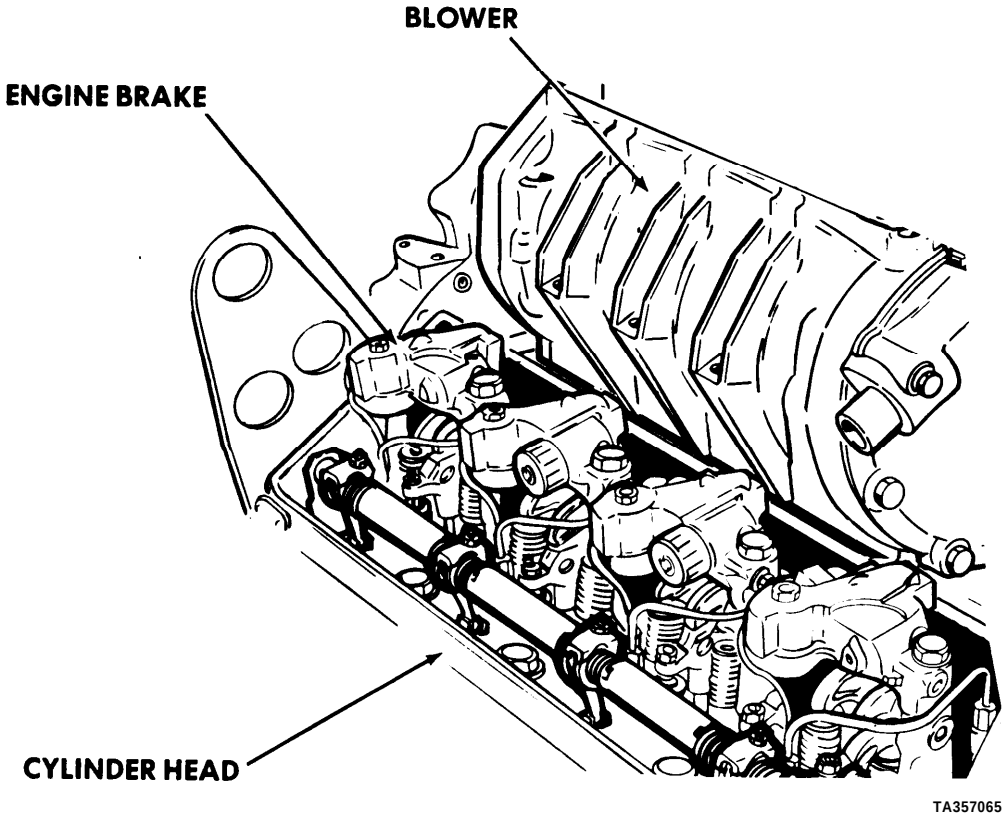

Figure 1-1. En ine Components (Cent).
sheet 2 of 3)

https://truckmanualshub.com/

1-11. LOCATION AND DESCRIPTION OF COMPONENTS (CONT).

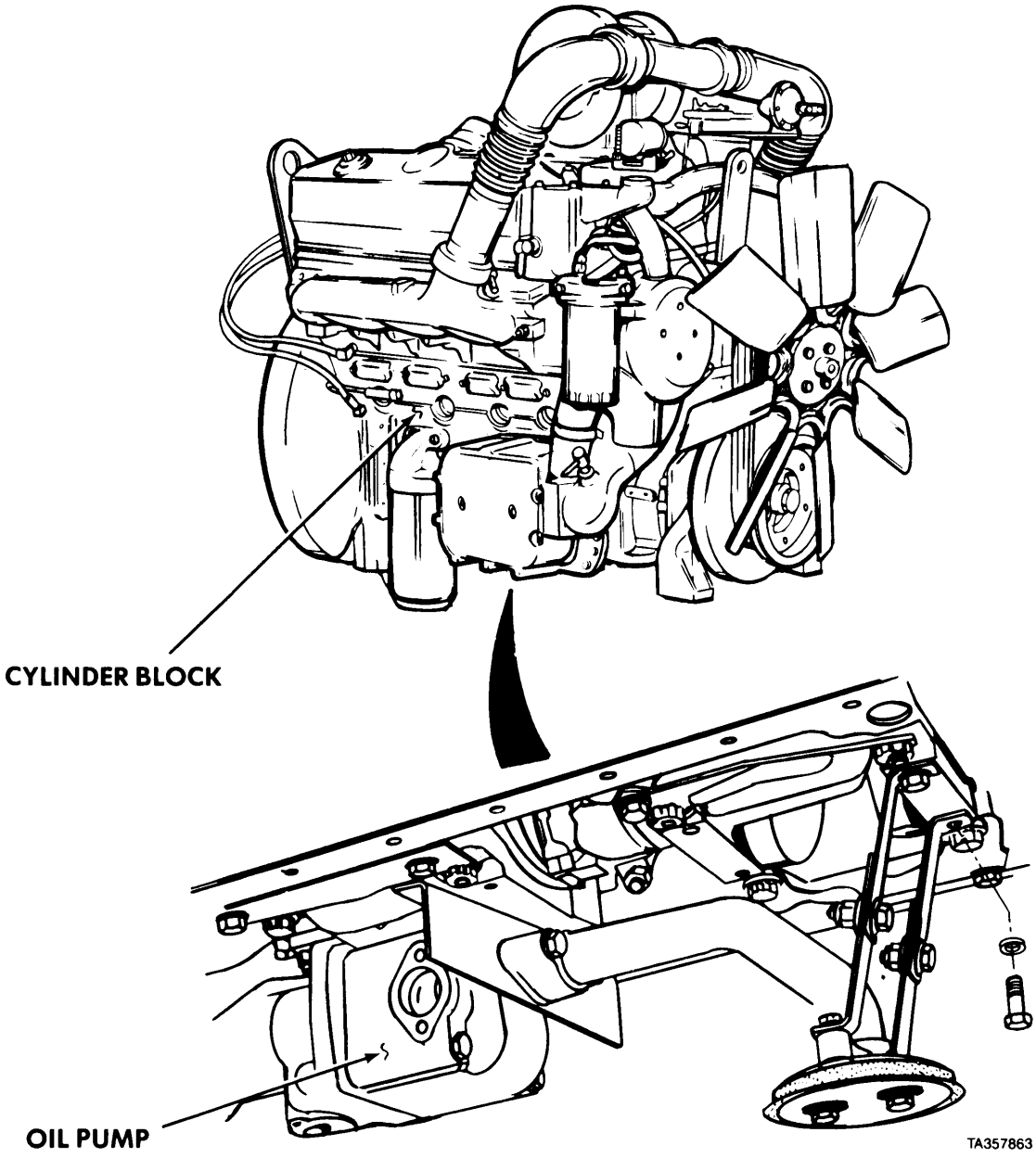

Figure 1-1. Engine Components (Cent).
(Sheet 3 of 3)

https://truckmanualshub.com/

Equipment Information (Cont)

1-12. EQUIPMENT DATA.

GENERAL SPECIFICATIONS

Type	Diesel, two-cycle
Manufacturer	Detroit Diesel Corporation
Model	8V92TA
Model Number	8087-7899 (P/N 1768110) or 8083-7493 (P/N 3041219)
Number of Cylinders	8
Firing Order (RH Rotation)	1L-3R-3L-4R-4.L-2R-2L-1R
Total Displacement	736 CU. m. (12.07 L)
Bore	4.84in.(123mm)
Stroke	5.0in.(127mm)
Number of Main Bearings	5
CompressionRatio	17.0 to 1
Maximum Brake Horsepower (at 2100 rpm)	
Model No. 8087-7899	SAE 445 (332 kw)
Model No, 8083-7493	SAE 450 (336 kw)
Maximum Torque	
Model No.8087-7899	1250 lb-ft (1695 N•m)
Model No.8083-7493	1330 lb-ft (1803 N•m)

ENGINE SPEED RATINGS

Maximum Governed Speed, Full-Load	2100 + 50 rpm
Minimum Idle Speed	700 ± 25 rpm
No-Load Governed Speed	2250 ± 25 rpm

INTAKE

Turbocharger	Airesearch TV8101 with aftercooler
Blower	Large bearing, gear driven, helical rotor blower with optional turbocharger mounting
Air Cleaner	Dry element type

PISTONS AND CONNECTING RODS

Piston Type	Cross-head piston with crown and skirt
Number of Compression Rings	2
Number of Fire Rings	1
Number of Oil Rings	2
Type Piston Pin	Solid core type with oil hole
Type Bearing	Solid core type bushing
Type Cylinder Liner	Replaceable wet type, alloy cast iron

ENGINE LUBRICATING SYSTEM

Crankcase Capacity	28 qt (26.5 L)
with Filter Change	30 qt (28.4 L)
OilPressure	50 to 70 psi (344.7 to 482.6 kPa 1, 800 rpm)
Type System	Pressure and spray circulation
Oil Pump	Gear type
Oil Filter	Full-flow, bolt-on type with by-pass valve
Oil Cooler	Plate-type, with by-pass valve

FUEL SYSTEM

Fuel Pump	Positive displacement, gear-type
Limiting Speed Governor	Variable speed, single-weight mechanical type
Fuel Injectors	Model No. 9A90, needle valve type, valve opening pressure: 2200 to 3300 psi (15 169 to 22 753.5 kPa)
Fuel Water Separator	Fuel strainer, density-type element
Secondary Fuel Filter	Fuel filter, paper-type element

COOLING SYSTEM

Radiator Working Pressure	7 psi (48 kPa)
Operating Temperature	160°F to 185°F

https://truckmanualshub.com/

Section III. PRINCIPLES OF OPERATION

1-13. PRINCIPLES OF OPERATION. For principles of engine and related systems operation, refer to TM 9-2320-279-20.

https://truckmanualshub.com/

CHAPTER 2
MAINTENANCE INSTRUCTIONS

Contents

	Para	Page
General	2-1	2-1
Common Tools and Equipment	2-2	2-1
Special Tools	2-3	2-1
Repair Parts	2-4	2-1
General Maintenance Instructions	2-5	2-1
Left and Right Sides of Engine	2-6	2-4
Organization of Removal, Installation, and Repair Procedures	2-7	2-4
Engine Disassembly/Reassembly Sequence	2-8	2-4
Troubleshooting Introduction	2-9	2-7
Troubleshooting Instructions	2-10	2-7

Section 1. GENERAL INFORMATION

Parts and Tools

2-1. GENERAL. This chapter provides information on tools, general maintenance, and troubleshooting required to maintain the engine.

Section II. REPAIR PARTS AND SPECIAL TOOLS

2-2. COMMON TOOLS AND EQUIPMENT. These are common tools and general mechanics tool sets required for maintenance of the engine. For authorized common tools and equipment, refer to the Modified Table of Organization and Equipment (MTOE) applicable to your unit.

2-3. SPECIAL TOOLS. special tools for Direct Support/General Support Maintenance are listed in Appendix B.

2-4. REPAIR PARTS Repair Repair parts authorized for use at Direct Support/General Support are listed in Appendix B.

Section III. GENERAL MAINTENANCE PRACTICES

2-5. GENERAL MAINTENANCE INSTRUCTIONS.

a. Follow these maintenance practices when working on engine.
   (1) When unpacking items, remove all packing material, barrier paper, tape, plastic bags, protective caps, and protective grease coating.
   (2) Cap or tape over engine inlets and exhaust ducts to prevent foreign objects from getting inside engine. Keep dust, dirt and other objects out of internal parts of engine.
   (3) Cap or tape over all open tubes, hoses, fittings, and engine component openings as soon as parts are removed.

CAUTION

Do not use tape to close off fuel or oil openings. Sticky surface of tape can mix with fuel and oil and cause engine malfunctions.

   (4) Use suitable containers to catch oil, fuel, or coolant when removing hoses and fittings.

https://truckmanualshub.com/

2-5. GENERAL MAINTENANCE INSTRUCTIONS (CONT).

(5) Handle and store removed engine components carefully.

(6) Inspect parts as removed for breaks, dents, cracks, surface defects or other obvious damage. Turn in bad parts. Set aside good parts for later use.

(6.1) When fastener tightening requirements are not given in maintenance task, tighten screws and nuts in accordance with Appendix E, TORQUE LIMITS.

(7) Replace all gaskets, packings, and seals removed during repair work. Replace all lockwires, lockwashers, cotter pins, etc., at time of reassembly.

(8) Remove burrs from gear teeth with a fine-cut file.

(9) Remove residue from bearing races with crocus cloth.

(10) Welding and brazing processes may be used to repair cracks in external steel parts, such as brackets, panels, and light framework. Because of time required and the chance of subsequent failure, such repairs should be attempted only when replacement parts are not available. Welding and brazing of castings and running parts or parts under great stress will only be done in emergencies.

(11) When installing studs in engine block use a proper driver. A worn stud driver may damage the end thread. Then a chasing die must be used before a nut can be screwed on. This procedure will remove cadmium plating and allow corrosion. Before installing a stud, inspect hole for chips. Blow out foreign matter, and start stud by hand. Before final insertion, coat thread with a film of antiseize compound. Install stud to proper “setting height”, which is the total projection length.

(12) Replace all broken, worn, or burned electrical wiring. Wires with broken strands must be replaced.

(13) Replace all broken, frayed, crimped, or soft flexible hoses. Replace stripped or damaged fittings. Replace entire flexible hose if fittings are damaged. Hose clamp should not crimp hoses.

(14) Replace any screw, nut, or fitting with damaged threads. Inspect tapped holes for thread damage. If cross-threading is evident retap the hole for the next oversize screw or stud. If retapping will weaken the part, or if the cost of the part makes retapping impractical, replace the part. Chasing the threads with proper size tap or die may be adequate.

(15) Reshape elongated mounting holes to round and drill to receive bushing with required inner diameter. Stake bushing in place with center punch.

(16) Remove protective grease coatings from new parts before installation.

(17) To replace a preformed packing, first clean groove, then stretch packing,and place into position. Place component on flat surface and uniformly press packing into position.

(18) Use nonhardening pipe-joint compound or Teflon tape to join piping.

(19) Coat both sides of gasket with sealant. Remove all traces of previous gasket and sealant before installing new gasket.

(20) Coat oil seals evenly with oil or grease before installing. Install oil seals with seal lip facing in, applying an even force to outer edge of seal. If oil seals are to be installed over keyed or splined shafts, use a guide to prevent sharp edge of the keyway of splines from cutting the leather or neoprene seal. Construct guides of very thin gage sheet metal and shape to the required diameter. Make certain guide edges are not sharp and are bent slightly inward so they do not cut the seal.

(21) When mounting bearings on shafts always apply force to the inner races. When mounting bearings into housing always apply the force to the outer race.

(22) Lubricate all preformed packings with a thin coat of light mineral oil before installation.

(23) Lubricate bearings before assembly with lubricant used in the related housing or container to provide the first run-in until lubricant from the system can reach the bearings.

(24) To ease assembly and installation, tag and mark shims, connectors, wires, and mating ends of lines before disconnecting them. Identify similar parts to ensure correct assembly.

(25) Use a chain hoist, jack, or other aid when lifting the heavier components.

https://truckmanualshub.com/

b. Follow these cleaning instructions when working on the engine.

WARNING

- Dry cleaning solvent, PD-680 Type II is flammable and toxic. Skin and eye protection is required. Good ventilation is required. Keep away from open flame or sparks.
- Compressed air used for cleaning and drying purposes will be reduced to 30 psi (207 kPa) and used only with adequate chip guarding and personal protection equipment.

(1) Soak parts in dry cleaning solvent, and wash away deposits by sloshing or spraying. When necessary, brush with a soft bristle brush (not wire) moistened in dry cleaning solvent. Use a jet of dry compressed air to dry parts, except bearings, after cleaning. Bearings must drip and air dry.

(2) Do not use wire brushes, abrasive wheels, or compounds to clean parts, unless specifically approved in the detailed instructions. Dimensional characteristics 'of machined surfaces can be altered, and may weaken a highly stressed part.

(3) Do not clean rubber parts in dry cleaning solvent. Wipe clean with a clean, dry, lint-free cloth.

WARNING

Trichloroethylene is toxic to skin, eyes, and respiratory tract. Avoid all exposure. Skin and eye protection, and exhaust hood are required. Contact safety officer for local procedure regulations concerning the use of trichloroethylene before using.

(4) A decreasing tub may be used to remove heavy grease and oil from metal parts. Trichloroethylene is used as a decreasing agent.

CAUTION

To prevent corrosion, parts should be dipped in rust preventive (Item 24, Appendix C) within two hours of decreasing.

(5) Remove parts from decreasing machine, and check all oil passages and cavities for cleanliness and freedom from obstructions before coating with rust preventive. Run a thin, flexible wire through oil passages to make sure they are not clogged. Use a pressure spray gun and dry cleaning solvent to clean dirty passages.

(6) Parts soaked in carbon removal solution should be rinsed with dry cleaning solvent. Rinse in a solvent spray booth equipped with a filter and hand spray gun, then use a soft bristle brush to remove carbon deposits. A cloth buffing wheel may also be used.

(7) Electrical parts, such as coils, junction blocks, and switches, should not be soaked or sprayed with cleaning solutions. Clean-these parts with a clean lint-free cloth moistened with dry cleaning solvent.

c. Follow these inspection instructions when working on the engine.

(1) Inspect all surfaces in contact with gaskets, packings, or seals for nicks and burrs which might damage the new seal upon assembly. If any defect is found, remove it before assembly.

NOTE

Defects which may cause bearing binding or misalinement are cause for rejection. Nicks or gouges outside race load areas are not cause for rejection.

(2) Inspect bearings for rusted or pitted balls, races, or separators. Inspect balls and races for abrasion and serious discoloration.

2-5. GENERAL MAINTENANCE INSTRUCTIONS (CONT).

(3) Cuts or grooves parallel to ball or roller rotation, fatigue pits (not minor machine marks or scratches and cracks found during magnetic part icle inspection) are causes for bearing rejection.
(4) Remove drain plugs from engine system components and inspect the sediment sticking to the plug. Grit or fine metal particles may indicate actual or potential component failure. A few fine particles are normal. This inspect ion will help to show defective parts before internal inspection of the component.
(5) Guidelines for rejection of gears by visual inspection are not listed because of varying conditions for gear application. The following descriptions of wear conditions may help to determine when parts are defective.
(a) Initial pitting may occur when gears are first started in service. When pitting reduces local high spots so there is still enough contact area to carry load without further impairment, initial pitting is not serious.
(b) Destructive pitting continues to progress after initial pitting. If there is not enough contact area remaining to carry the load, rapid destruction may occur from continued operation.
(c) Abrasive wear is surface damage caused by fine particles carried in lubricant or particles imbedded in tooth surfaces. Particles may be metal, sand or scale, or other impurities in oil or surrounding atmosphere.
(6) Inspect all hose surfaces for broken or frayed fabric. Check for breaks caused by sharp kinks or contact with other parts of the truck. Inspect the fitting threads for damage. Replace any defective part. After assembly and during initial vehicle operation period, check for leaks.
(7) Inspect all wiring harnesses for chafed or burned insulation. Inspect all terminal connectors for loose connections and broken parts.
(8) Visually inspect all castings and weldments for cracks.

2-6. LEFT AND RIGHT SIDES OF ENGINE. The left and right sides of the engine are determined by standing at the rear of the engine.

Section IV. ORGANIZATION OF MAINTENANCE PROCEDURES

Maintenance Procedures

2-7. ORGANIZATION OF REMOVAL, INSTALLATION, AND REPAIR PROCEDURES. Some procedures have repair procedures combined with the removal and installation, while others have a separate paragraph for repair of components. Components that are removed, repaired, and installed at the same level of maintenance, DS or GS, will have the repair procedure integrated into the same primary paragraph.

Components which are removed and installed at one level of maintenance but are repaired at a different level of maintenance, will have the removal and installation in one primary paragraph and the repair in another. Components which are removed and installed (but not repaired) at one level of maintenance will be sent to the next designated level of maintenance.

2-8. ENGINE DISASSEMBLY/REASSEMBLY SEQUENCE. The procedures in this manual are organized in accordance with the functional group codes (FGC) used in the Maintenance Allocation Chart (MAC). However, should you have to disassemble the engine completely, table 2-1 is provided as a guide to help you do so. The table gives the paragraphs (tasks), the technical manuals in which they are found, and the recommended sequence in which the tasks should be performed in order to completely disassemble the engine. Table 2-1 can also be used as a guide to reassemble an engine by following the sequence numbers and tasks in the reverse order.

https://truckmanualshub.com/

Maintenance Procedures (Cont)

Table 2-1. Engine Diaassembly/Reassembly Sequence Guide

NOTE

Steps 1 through 9 must be done before mounting engine on engine stand,

Sequence No.	TM No.	Para No.	Description
1	TM 9-2815-224-34&P	9-2	Exhaust Manifold
2	TM 9-2815-224-34&P	3-5	Air Box Covers
3	TM 9-2815-224-34&P	3-6	Air Box Drains
4	TM 9-2320-279-20	7-8	Starting Motor
5	TM 9-2320-279-34	6-4	Starter Motor Repair
6	TM 9-2320-279-20	3-2	Engine Block Coolant System Draincock
7	TM 9-2320-279-20	7-17	Sender Mounting Bracket
8	TM 9-2320-279-20	6-13	Fan Clutch to Engine Block Hose
9	TM 9-2320-279-34	3-4	Dipstick Tube
10	TM 9-2320-279-20	6-11	Fan
11	TM 9-2320-279-20	6-15	Alternator Belts
12	TM 9-2320-279-20	6-17	Fan Belts
13	TM 9-2320-279-20	6-12	Fan Clutch
14	TM 9-2815-224-34&P	18-2	Fan Clutch Repair
15	TM 9-2320-279-20	4-6	Fuel Lines
16	TM 9-2320-279-20	4-11	Secondary Fuel Filter
17	TM 9-2815-224-34&P	15-10	Engine Stop Solenoid
18	TM 9-2320-279-20	6-8	Left Thermostat Housing
19	TM 9-2320-279-20	6-9	Right Thermostat Housing
20	TM 9-2815-224-34&P	17-2	Water Pump
21	TM 9-2815-224-34&P	7-12	Front Balance Cover
22	TM 9-2815-224-34&P	10-5	Water Pump Drive Gear
23	TM 9-2320-279-20	7-2	Alternator
24	TM 9-2320-279-34	6-2	Alternator Repair
25	TM 9-2320-279-20	7-4	Alternator Support and Adjusting Strap
26	TM 9-2815-224-34&P	4-2	Crankshaft Pulley
27	TM 9-2815-224-34&P	4-3	Vibration Damper
28	TM 9-2815-224-34&P	8-3	Oil Pan
29	TM 9-2815-224-34&P	8-7	oil Pressure Regulator Valve
30	TM 9-2815-224-34&P	8-6	Oil Pressure Relief Valve
31	TM 9-2815-224-34&P	8-4	Oil Pump
32	TM 9-2815-224-34&P	8-5	Oil Pump Repair
33	TM 9-2815-224-34&P	4-6	Crankshaft Cover
34	TM 9-2815-224-34&P	4-4	Oil Pump Drive Gear
35	TM 9-2815-224-34&P	14-6	Turbocharger
36	TM 9-2815-224-34&P	14-7	Turbocharger Repair
37	TM 9-281 5-224-34&P	14-5	Air Inlet Adapter
38	TM 9-2320-279-20	3-3	Rocker Covers
39	TM 9-2815-224-34&P	15-6	Variable Low Speed Limiting Governor
40	TM 9-2815-224-34&P	15-8	Throttle Air Cylinder
41	TM 9-28 15-224-34&P	15-4	Governor Cover
42	TM 9-281 5-224-34&P	15-7	Buffer Screw Switch
43	TM 9-2815-224-34&P	14-2	Tachometer Drive
44	TM 9-2815-224-34&P	14-3	Blower
45	TM 9-2815-224-34&P	14-4	Blower Repair
46	TM 9-2815-224-34&P	16-2	Aftercooler
47	TM 9-2815-224-34&P	15-2	Governor Housing
48	TM 9-281 5-224-34&P	15-3	Governor Repair
49	TM 9-2815-224-34&P	13-2	Fuel Pump

https://truckmanualshub.com/

2-8. ENGINE DISASSEMBLY/REASSEMBLY SEQUENCE (CONT).

Table 2-1. Engine Disassembly/Reassembly Sequence Guide (Cent]

Sequence No.	TM No.	Para No.	Description
50	TM 9-2815-224-34&P	13-2	Fuel Pump Repair
51	TM 9-2815-224-34&P	12-5	Injector Control Tube
52	TM 9-2815-224-34&P	3-7	Cylinder Head
53	TM 9-2815-224-34&P	11-4	Engine Brake Wire Harness
54	TM 9-2815-224-34&P	11-2	Engine Brake Retarder
55	TM 9-2815-224 -348&P	11-3	Engine Brake Retarder Repair
56	TM 9-2815-224-34&P	15-5	Throttle Delay
57	TM 9-2815-224-34&P	7-5	Rocker Arm
58	TM 9-2815-224-34&P	7-8	Exhaust Valve Bridge
59	TM 9-2815-224-34&P	7-6	Cam Follower
60	TM 9-2815-224-34&P	7-7	Cam Follower Repair
61	TM 9-2815-224-34&P	12-2	Fuel Injector
62	TM 9-2815-224-34&P	12-4	Fuel Injector Testing
63	TM 9-2815-224-34&P	12-3	Fuel Injector Repair
64	TM 9-2815-224-34&P	7-4	Exhaust Valves
65	TM 9-28 15-224-34&P	7-3	Valve Guide
66	TM 9-2815-224-34&P	3-10	Valve Seat Insert
67	TM 9-2815-224-34&P	3-9	Injector Tube
68	TM 9-2815-224-34&P	3-11	Water Nozzle
69	TM 9-2815-224-34&P	7-2	Valve Bridge Guides
70	TM 9-2815-224-34&P	3-8	Cylinder Head Repair
71	TM 9-2815-224-34&P	15-9	Throttle Control Solenoid
72	TM 9-2320-279-20	11-37	Air Governor
73	TM 9-2320-279-20	11-38	Air Compressor
74	TM 9-2320-279-34	11-9	Air Compressor Repair
75	TM 9-2320-279-34	12-8	Steering Pump
76	TM 9-2815-224-34&P	5-2	Flexplate
77	TM 9-2815-224-34&P	5-3	Flywheel Housing & Rear Oil Seal
78	TM 9-2815 -224-34&P	10-2	Blower Drive Support
79	TM 9-2815-224-34&P	7-9	Camshaft
80	TM 9-2815-224-34&P	7-10	Camshaft End Bearing and Bushing
81	TM 9-2815-224-34&P	7-11	Idler Gear
82	TM 9-2815-224-34&P	3-4	Rear End Plate
83	TM 9-2815-224-34&P	3-3	Front End Plate
84	TM 9-2320-279-20	3-6	Oil Cooler Inlet Elbow & Flange Elbow
85	TM 9-2320-279-20	3-4	Oil Filter
86	TM 9-2320-279-20	3-7	Oil Cooler Housing
87	TM 9-2815-224-34&P	6-2	Piston Connecting Rod & Liner
88	TM 9-2815-224-34&P	6-3	Piston Repair
89	TM 9-2815-224-34&P	4-5	Main Bearing and Crankshaft
90	TM 9-2815-224-34&P	8-2	Engine Block Breather Tube
91	TM 9-2815-224-34&P	3-2	Engine Block Repair

https://truckmanualshub.com/

Section V. TROUBLESHOOTING

2-9. TROUBLESHOOTING INTRODUCTION This section contains step by step procedures for identifying, locating, isolating, and repairing equipment malfunctions.

2-10. TROUBLESHOOTING INSTRUCTIONS The troubleshooting system symptom index Table 2-2 lists common malfunctions which could be found during maintenance of the M977 series engine or its components. Each malfunction is followed by a list of tests or inspections which will help to determine corrective action to be taken (Table 2-3).

a. This manual cannot list all malfunctions that may occur, nor all tests or inspections and corrective actions. If a malfunction is not listed or is not corrected by listed corrective actions, notify your supervisor.

b. Table 2-3 lists malfunctions which can occur during operation or maintenance of the M977 series engine or its components. Perform tests, inspections, and corrective actions in the order listed. Operation of a deadline vehicle without a preliminary examination can cause further damage to a disabled component and possible injury to personnel. By careful inspection and troubleshooting, such damage and injury can be avoided. In addition, cause of faulty operation of a vehicle or component can often be determined without extensive disassembly.

Table 2-2. System Symptom Index

		Troubleshooting Procedure Page
	ENGINE	
1.	Fails to crank	2-8
2.	Cranks - will not start	2-9
3.	Hard to start/stalls at idle speed/does not run smoothly	2-11
4.	Fails to develop full power	2-12
5.	Overheats	2-12
6.	Low oil pressure	2-13
7.	High oil consumption	2-14
8.	High crankcase pressure	2-15

https://truckmanualshub.com/

2-10. TROUBLESHOOTING INSTRUCTIONS (CONT).

Table 2-3. Troubleshooting

Malfunction Test or Inspection Corrective Action
ENGINE
1. FAILS TO CRANK.

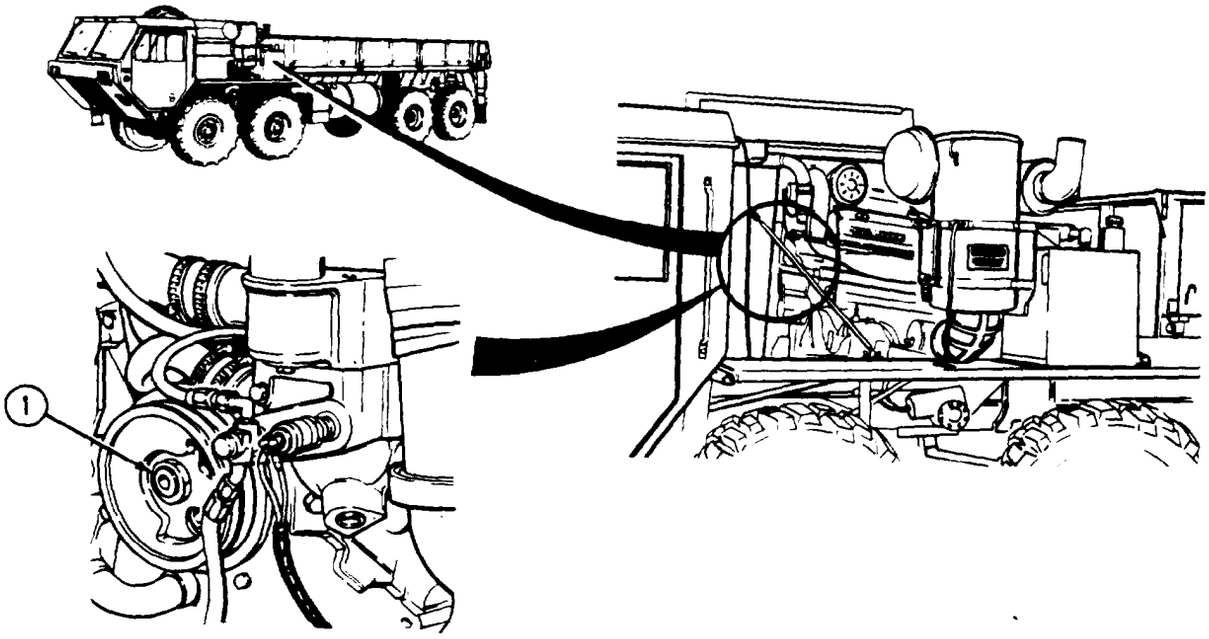

TA357651

Step 1. Check if engine is internally seized. Try to rotate crankshaft by turning pulley (1) clockwise. If engine does not turn. engine is seized.

Remove engine (TM 9-2320-279-34), and repair (para 3-3).

https://truckmanualshub.com/

Table 2-3. Troubleshooting (Cont)

Malfunction Test or Inspection	Corrective Action

ENGINE (CONT)

2. CRANKS - WILL NOT START.

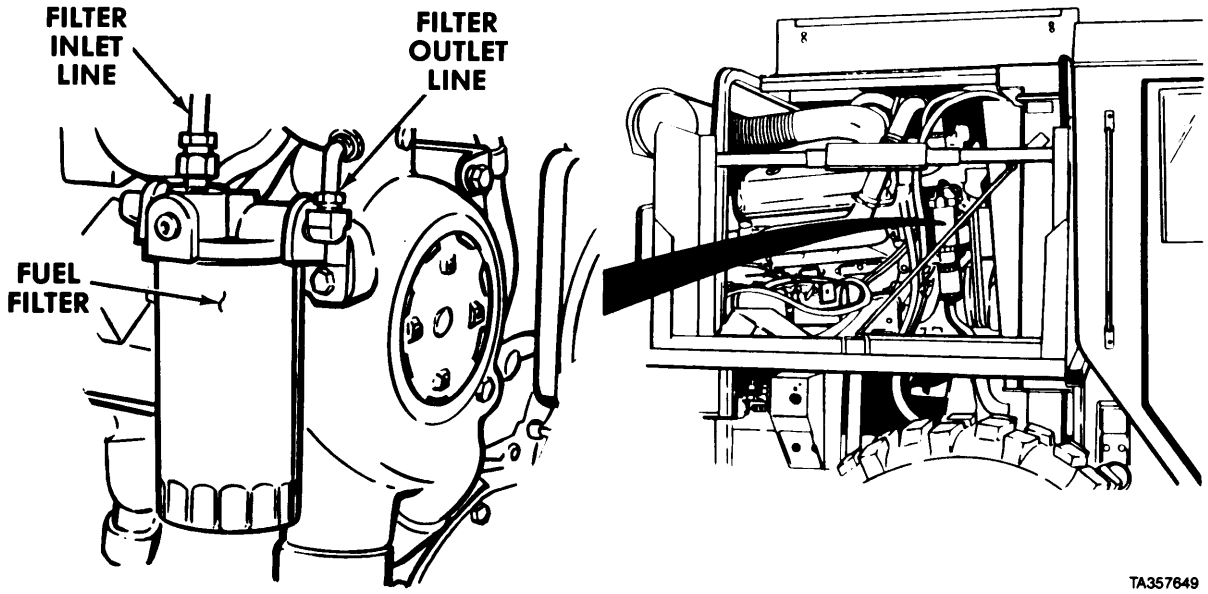

Step 1. Check fuel pump operation. Disconnect fuel line at inlet side of fuel filter and crank engine. If no fuel flows from fuel line, remove fuel pump (para 13-2),

Step 2. Check injectors for free fuel flow. Remove fuel pipe (1) between return manifold connector (2) and injector (3). Crank engine to pump fuel through injector. If fuel does not flow freely, tag injector (3), replace fuel pipe (l), and check each injector same way.

Remove tagged injectors (para 12-2).

Test and repair injectors (paras 12-3 and 12-4).

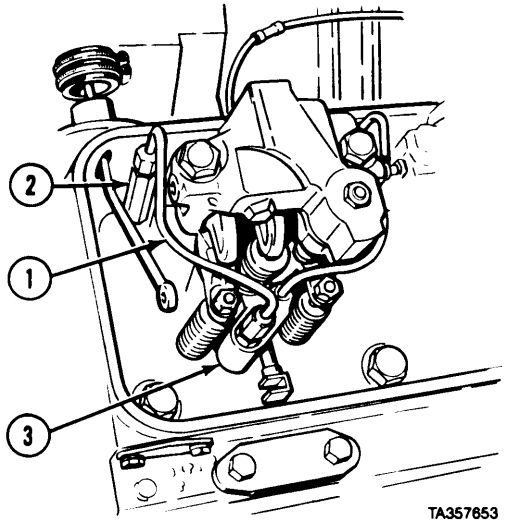

https://truckmanualshub.com/

2-1O. TROUBLESHOOTING INSTRUCTIONS (CONT)

Table "2-3. Troubleshooting (Cont)

Malfunction Test or Inspection	Corrective Action
ENGINE (CONT)	
2. CRANKS – WILL NOT START (CONT).	

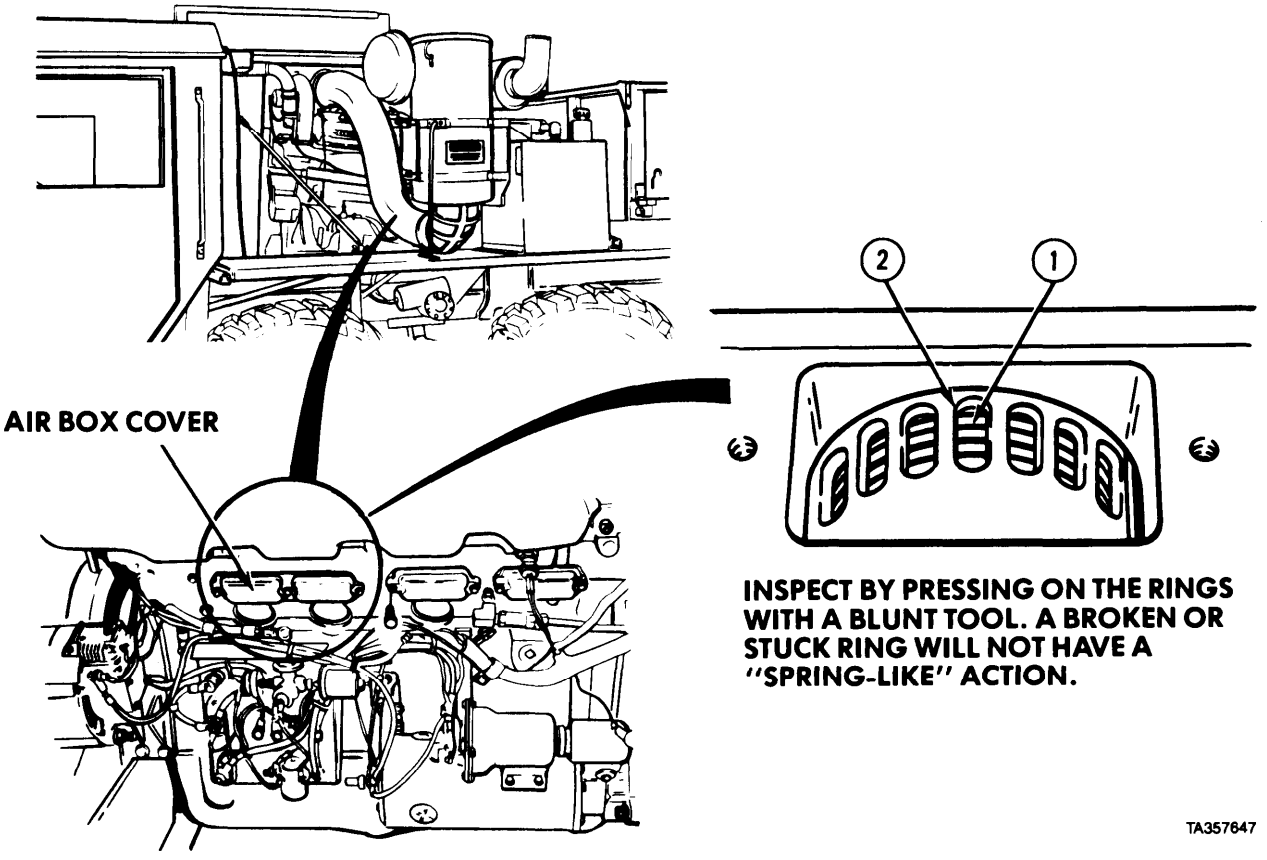

Step 3. Check for damaged or broken compression rings. Remove air box covers (para 3-5). Inspect three compression rings (1) through ports in cylinder liners (2).

Replace damaged or broken compression rings (para 6-3).

https://truckmanualshub.com/

Troubleshooting Malfunctions (Cent)

Table 2-3. Troubleshoothg (Cont)

Malfunction Test or Inspection Corrective Action
ENGINE (CONT)
3. HARD TO START/STALLS AT IDLE SPEED/DOES NOT RUN SMOOTHLY.
Step 1. Check adjustment of exhaust valve clearances (para 19-2). Adjust exhaust valve clearances (para 19-2).
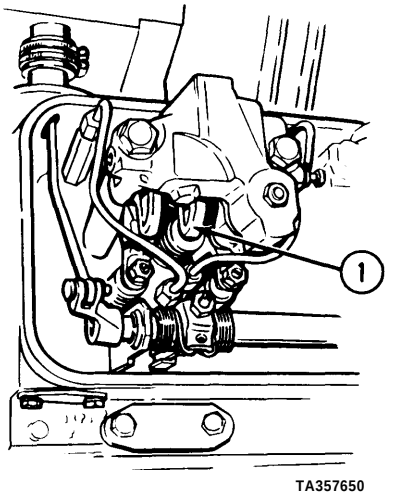
Step 2. Check for misfiring cylinders. Start engine. Hold injector follower (1) down with a screwdriver to prevent operation of injector. If cylinder has been firing properly, cylinder will miss with a noticeable change in sound and engine operation. If cylinder has been misfiring, there will be no noticeable change. Check all cylinders and tag misfiring ones. Remove tagged injectors (para 12-2). Test and repair injectors (paras 12-3 and 12-4).
Step 3. Repeat check for misfiring cylinder(s). If cylinder(s) still misfire, perform engine tune-up (para 19-2 through 19-9).
Step 4. Check engine compression (para 19-1 1). If compression values are not within allowable limits, remove air box covers (para 3-5). Inspect compression rings through ports of cylinder liners. Replace damaged or broken compression rings (para 6-2 and 6-3).

https://truckmanualshub.com/

12-10. TROUBLESHOOTING INSTRUCTIONS (CONT).

Table 2-3. Troubleshooting (Cont)

Malfunction Test or Inspection	Corrective Action
ENGINE (CONT)	
4. FAILS TO DEVELOP FULL POWER.	
Step 1. Perform engine tune-up (para 19-2 through 19-9).	
Step 2. Check exhaust manifold for leaks.	Tighten loose connections (para 9-2). Replace damaged exhaust manifold gaskets (para 9-2). Replace damaged exhaust manifolds (para 9-2).
Step 3. Check if cylinder liner ports are clogged. Remove air box covers (para 3-5).	Check and clean cylinder ports if clogged (para 6-2).
Step 4. Inspect turbocharger for free movement.	Replace defective turbocharger (para 14-6).
5. OVERHEATS.	
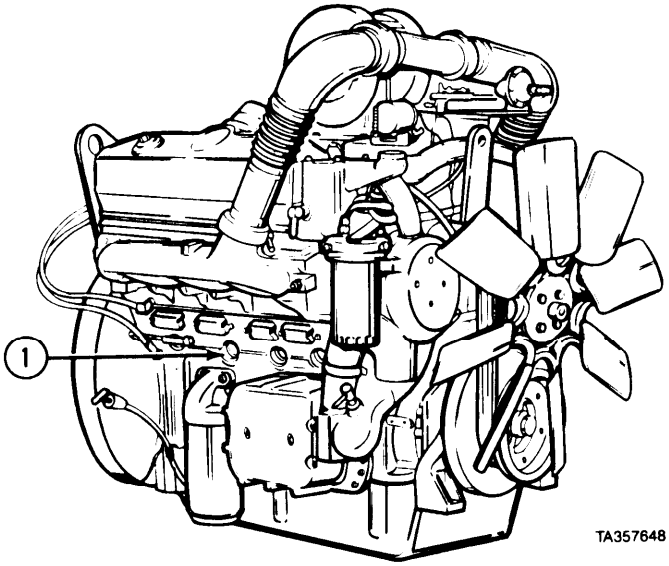	
Step 1, Check freeze plugs (1) (four on each side of engine) for coolant leaks.	Replace defective freeze plugs (cup plugs) (para 3-2).

https://truckmanualshub.com/

Troubleshooting Malfunctions (Cont)

Table 2-3. Troubleshooting (Cont)

Malfunction Test or Inspection	Corrective Action

ENGINE (CONT)

5. **OVERHEATS (CONT)**

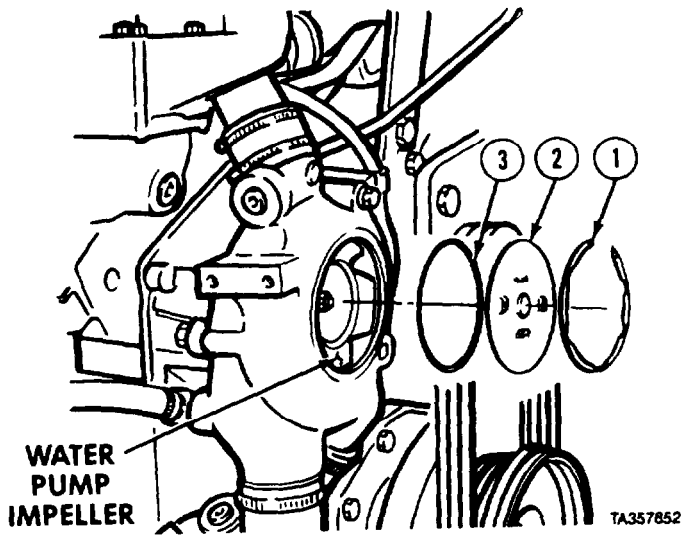

Step 2. Check water pump impeller for looseness. Drain coolant below level of water pump (TM 9-2320-279-20), remove retaining ring (1), pump cover (2) and preformed packing (3). Try to move impeller in and out to detect play indicating worn bearings, gears, or seal.

Remove damaged water pump (para 17-2).

Repair water pump (para 17-2).

Step 3. Inspect engine aftercooler for leaks.

Remove aftercooler from engine (para 16-2).

Replace aftercooler if leaks are detected (para 16-2).

6. **LOW OIL PRESSURE.**

Step 1. Check for clogging of oil pump inlet screens. Remove oil pan (para 8-3).

Remove and clean oil pump inlet screens (para 8-4).

Replace damaged screens (para 8-4).

Step 2. Inspect oil pressure regulator valve for clogging or damage.

Remove and clean oil pressure regulator valve (para 8-7).

Inspect valve, valve seat, and valve spring for damage.

Replace damaged parts (para 8-7).

https://truckmanualshub.com/

2-10. TROUBLESHOOTING INSTRUCTIONS (CONT).

Table 2-3. Troubleshooting (Cont)

Malfunction Test or Inspection	Corrective Action
ENGINE SYSTEM	
6. LOW OIL PRESSURE (CONT).	
Step 3. Inspect oil pressure relief valve for clogging or damage.	Remove and clean oil pressure relief valve (para 8-6). Inspect valve, valve seat, and valve spring for damage. Replace damaged parts (para 8-6).
Step 4. Inspect oil pump for damaged parts.	Remove and clean oil pump (para 8-4). Inspect oil pump for worn, scored, or damaged parts. Replace worn or damaged parts (para 8-5).
7. HIGH OIL CONSUMPTION.	
Step 1. Check if oil breather tube assemblies are clogged or damaged.	Remove and clean breather tube assembly (para 8-2).
Step 2. Check for low air box pressure (para 3-6).	If pressure is low, do steps 3 and 4.
Step 3. Check if blower-to-block gasket is damaged (para 14-3).	Replace damaged gasket (para 14-3).
Step 4. Check if front end plate gasket is leaking (para 3-3).	Replace leaking front end plate gasket (para 3-3).
Step 5. Check for head gasket leaks by performing engine compression check (para 19-11).	Replace leaking gaskets (para 3-7).
Step 6. Check turborcharger oil seals for wear or damage (para 14-7).	Replace defective seals (para 14-7).
Step 7. Remove air inlet adapter (para 14-5), start engine (TM 9-2320-279-10), and check if blower oil senl leaks.	Repair blower (para 14-4).
Step 8. Check for damaged or broken piston rings and pistons or liners (para 6-2).	Replace damaged or broken piston rings, pistons, or liners (para 6-2).

https://truckmanualshub.com/

Troubleshooting Malfunctions (Cont)

Tab/e 2-3. Troubleshooting (Cont)

Malfunction Test or Inspection	Corrective Action
ENGINE SYSTEM (CONT)	
7. HIGH OIL CONSUMPTION (CONT).	
Step 9. Check crankcase pressure. Place manometer (J7333-6) on vehicle so that meter is visible during test. Remove oil dipstick and place hose (J8639-2) of manometer at dipstick tube. Open bleeder valve on manometer to level out manometer fluid. Adjust manometer so that zero is placed along top position of fluid line. Start engine and check crankcase pressure. Crankcase pressure shall be 3.1 in. of water at 1800 rpm, 3.3 in. at 1950 rpm, and 3.5 inat 2100 rpm.	If crankcase pressure is high, refer to Malfunction 8.**HIGH CRANKCASE PRESSURE**
8. HIGH CRANKCASE PRESSURE.	
Step 1. Check for head gasket leaks by performing engine compression check (para 19-11).	Replace leaking gaskets (para 3-7).
Step 2. Check for damaged or broken piston rings and pistons or liners (para 6-2).	Replace damaged or broken piston rings, pistons, or liners (para 6-2).
Step 3. Check for damaged blower-to-block gasket (para 14-3).	Replace damaged gasket (para 14-3).
Step 4. Check for damaged cylinder block and plate gaskets (para 3-3 or 3-4).	Replace damaged gasket (para 3-3 or 3-4).

https://truckmanualshub.com/

https://truckmanualshub.com/

CHAPTER 3
ENGINE BLOCK AND CYLINDER HEAD MAINTENANCE

'Contents

	Para	Page
General	3-1	3-1
Engine Block Repair	3-2	3-2
Front End Plate Removal/Installation	3-3	3-23
Rear End Plate Removal/Installation	3-4	3-26
Air Box Covers Removal/Installation	3-5	3-29
Air Box Drains Removal/Installation	3-6	3-31
Cylinder Head Removal/Installation	3-7	3-34
Cylinder Head Repair	3-8	3-44
Injector Tube Removal/Installation	3-9	3-53
Valve Seat Insert Removal/Installation	3-10	3-58
Water Nozzle Removal/Installation	3-11	3-60

Section 1. INTRODUCTION

3-1. GENERAL. This chapter covers repair and replacement of the engine block, end plates, air box drains, front covers, and cylinder head assemblies. The subassemblies and parts which must be removed before these items can be removed will be referenced to other paragraphs or chapters of this manual, TM 9-2320-279-10, TM 9-2320-279-20, or TM 9-2320-279-34.

https://truckmanualshub.com/

Section II. ENGINE BLOCK ASSEMBLY

Engine Block Maintenance Instructions

3-2. ENGINE BLOCK REPAIR.

This task covers:

a. Disassembly
b. Cleaning/Inspection
c. Assembly
d. Testing
e. Follow-on Maintenance

INITIAL SETUP

Models
All

Test Equipment
None

Special Tools
Remover/installer, core plug J23019
Remover/installer, water inlet adapter, aftercooler J25275
Gage, cylinder checking J5347-01
Gage, cylinder liner depth J24898
Engine block pressure testing kit 2SK737

supplies
Oil, lubricating, Item 48, Appendix C
Compound, sealing, lubricating, Item 31, Appendix C
Compound, sealing, pipe thread, Item 32, Appendix C
Antifreeze, permanent, Item 7, Appendix C
Compound, International, No. 2, Item 26, Appendix C

Personnel Required
MOS 63W, Wheel vehicle repairer

References
None

Equipment Condition

TM or Para	***Condition Description***
TM 9-2320-279-20	Engine circuit breaker bracket removed.
TM 9-2320-279-20	Flange elbow removed.
TM 9-2320-279-20	Starter removed.
TM 9-2320-279-20	Oil cooler removed.
TM 9-2320-279-34	Engine mounted on engine stand.
Para 16-2	Aftercooler removed.
Para 3-3	Front end plate removed.
Para 3-4	Rear end plate removed.
Para 3-5	Air box covers removed.
Para 3-6	Air box drains removed.
Para 8-2	Engine block breather pipe removed.
Para 4-5	Crankshaft removed.
Para 3-7	Cylinder head removed.

Special Environmental Conditions
None

General Safety Instructions
None

Level of Maintenance
General Support

https://truckmanualshub.com/

Engine Block Maintenance Instructions (Cont)

a. ***Removal.***

(1) Remove oil galley plugs (1, 2, and 3) from front of engine block (4).

(2) Remove drain cock (5).

(3) Remove plugs (6 and 7).

NOTE

Some engines have a connector. Others have an elbow.

(4) Remove connector (8) or elbow (8.1).

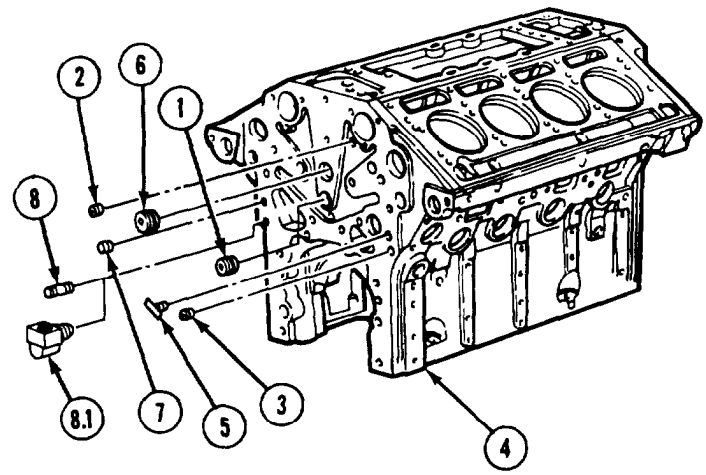

(5) Remove oil galley plug (9) from rear end of engine block (4).

(6) Remove oil galley plug (10).

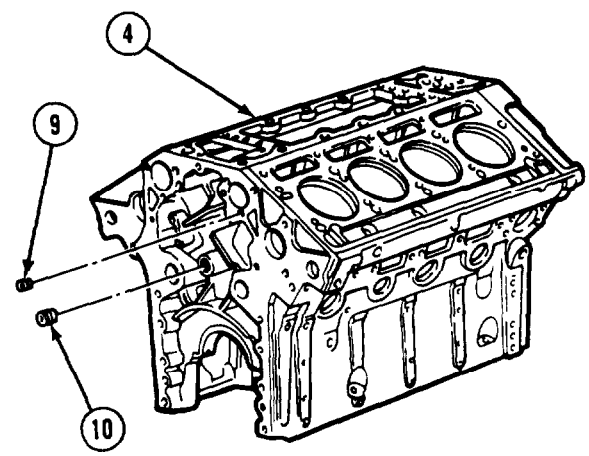

(7) Remove two plugs (11) from right side of engine block (4).

(8) Remove drain cock (12).

(9) Remove compressor oil supply elbow (13) and fitting (14).

(10) Remove oil galley plugs (15 and 16).

(11) Remove elbow (17), fitting (18), and reducer bushing (19).

(12) Remove plug (20).

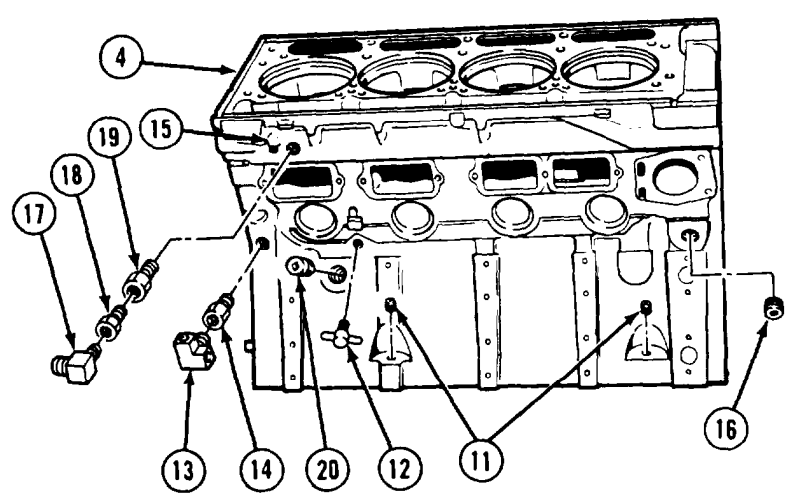

https://truckmanualshub.com/

Engine Block Maintenance Instructions (Cont)

13-2. ENGINE BLOCK REPAIR (CONT).

(13) Remove two plugs (21) from left side of engine block (4).
(14) Remove reducer bushing (22) and ether starting aid thermostat (23).
(15) Remove two plugs (24).
(16) Remove reducing bushing (25 and elbow (26) from engine block (4).
(17) Remove oil plug (27).
(18) Remove drain cock (28).
(19) Remove elbow (29). reducing bushing (30), and fitting (31).
(20) Remove two screws (32) lockwashers (33), washers (34), and starter motor bracket (35).

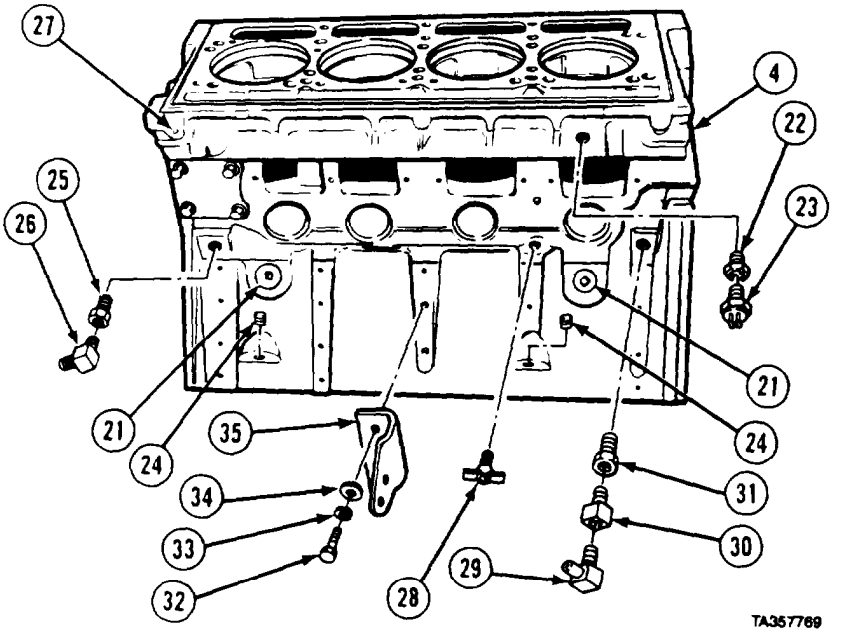

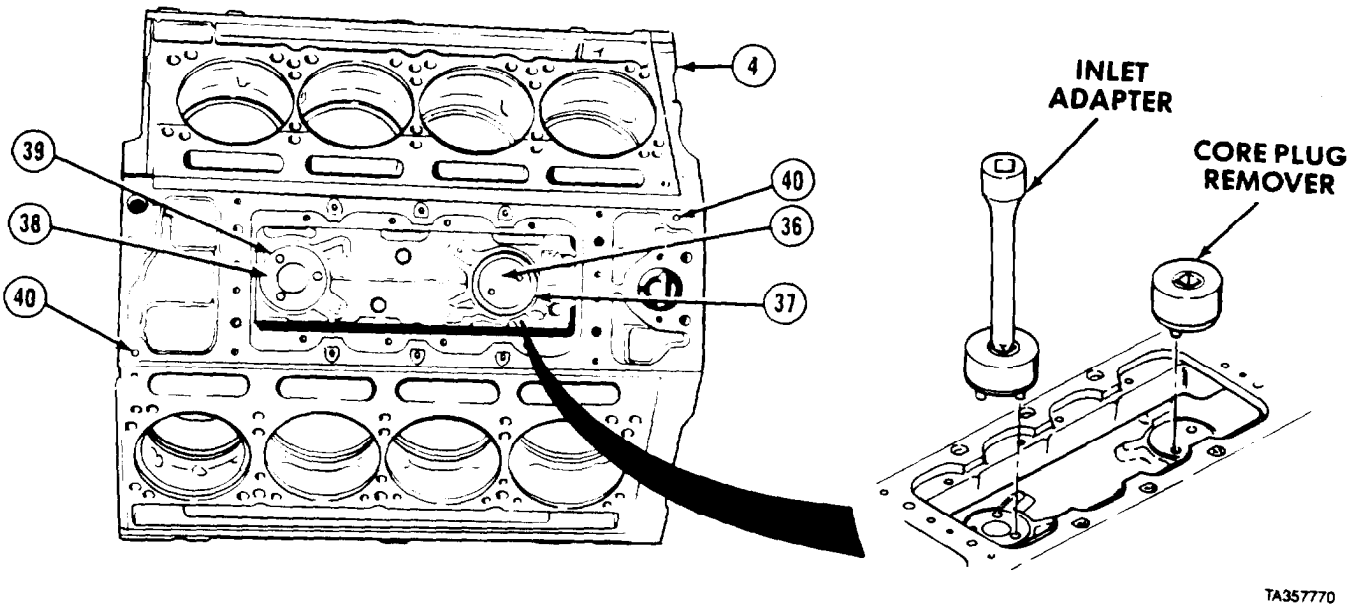

(21) Remove core plug (36) and gasket (37) from top of engine block (4) using core plug remover.
(22) Remove aftercooler water inlet adapter (38) and gasket (39), using aftercooler water inlet adapter remover.
(23) Remove oil galley plugs (40).

https://truckmanualshub.com/

(24) Remove four screws (4 1), washers (42), cover plate (43), and gasket (44) from left side of engine block (4).

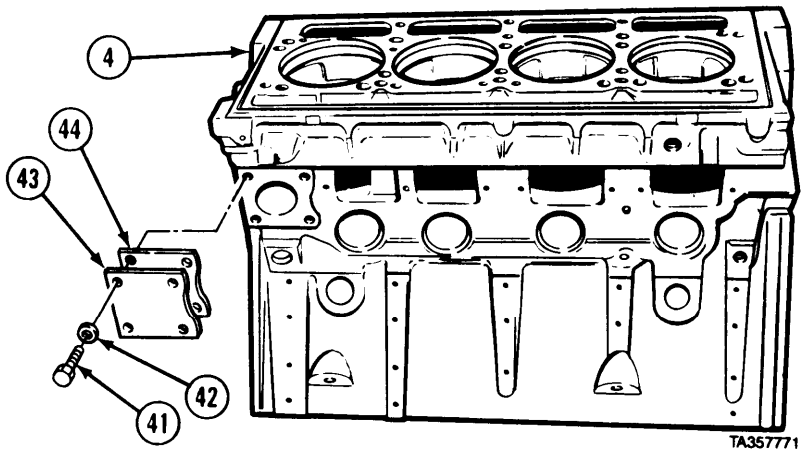

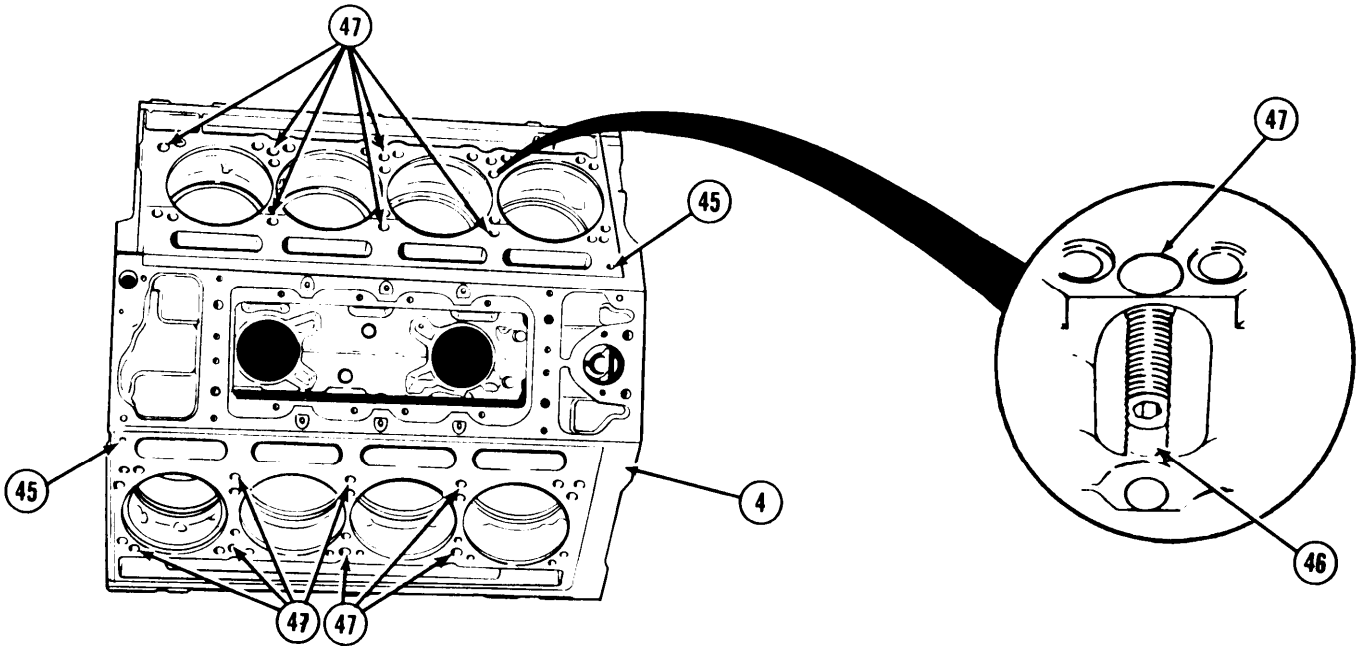

NOTE

Remove the following plugs and dowels only if damaged. Do not remove just to clean engine block.

(25) Remove two dowels (45) from top of engine block (4).
(26) Remove 14 plugs (46) from bottom of cylinder head screw holes (47).

https://truckmanualshub.com/

3-2. ENGINE BLOCK REPAIR (CONT).

(27) Remove two dowels (48) from front engine block (4).

(28) Remove three plugs (49) and two plugs (50).

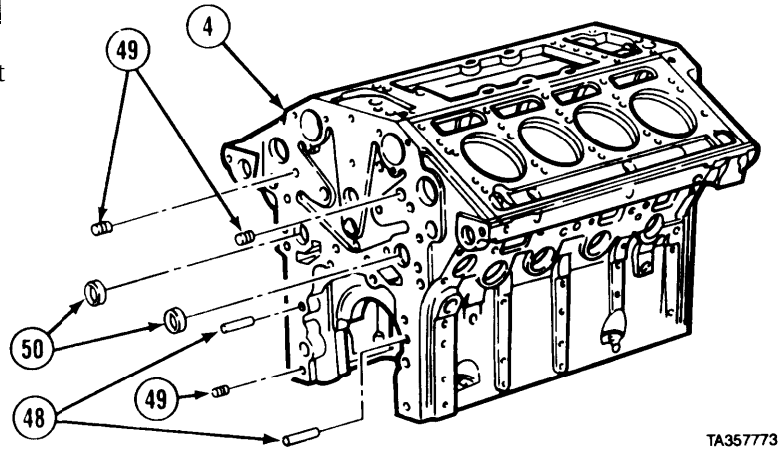

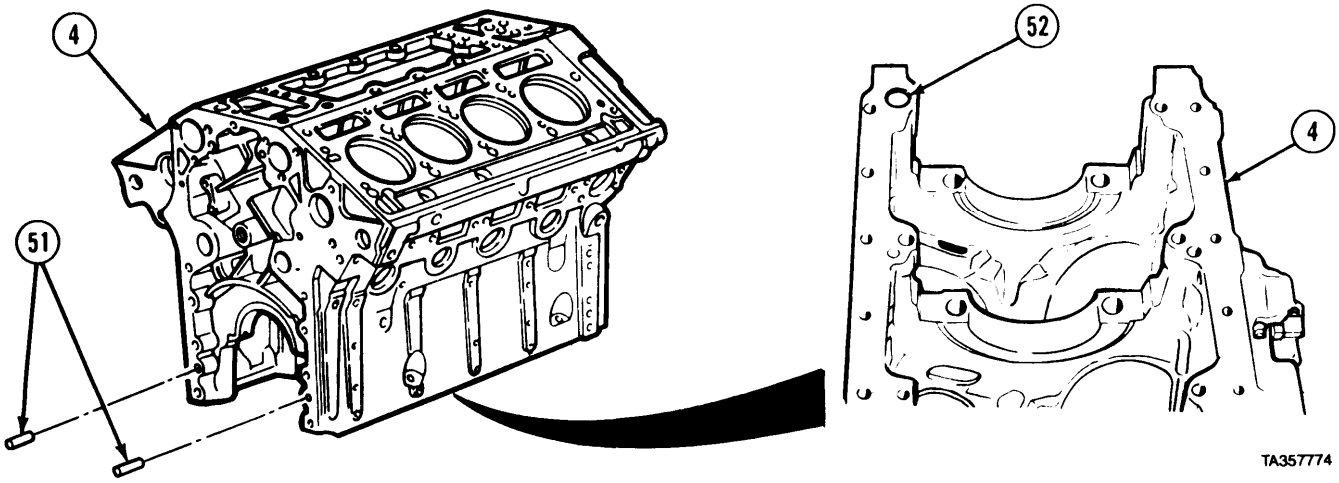

(29) Remove two dowels (5)) from rear of engine block (4).

(30) Remove cup plug (52) from bottom of engine block (4).

(31) Remove four cup plugs (53) from both right and left sides of engine block (4).

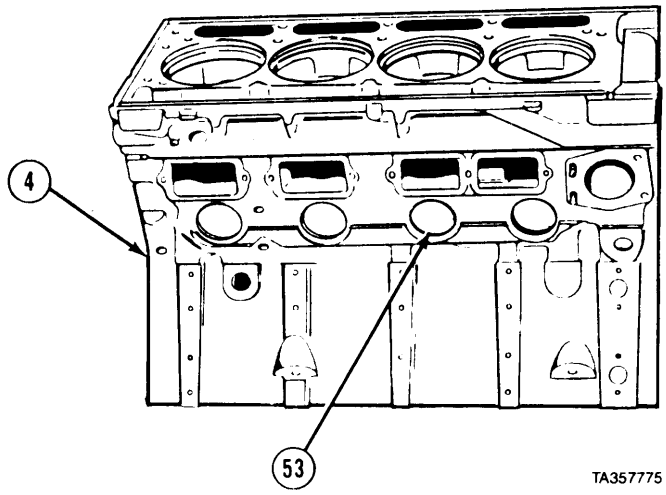

https://truckmanualshub.com/

b. Cleaning/Inspection.

(1) Scrape gasket material and sealant off engine block (1) surfaces.

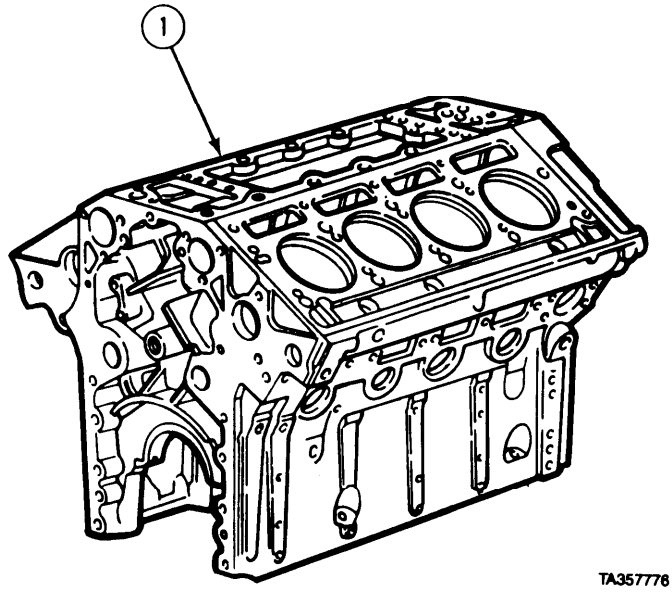

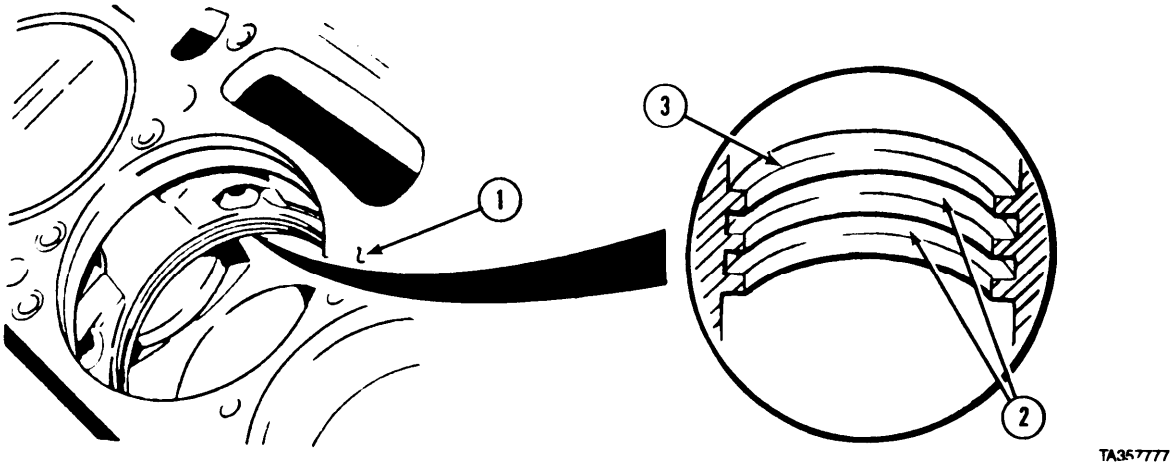

WARNING

High pressure steam can blow particles into eyes, can cause severe burns, and creates hazardous noise levels. Eye, skin, and hearing protection is required.

(2) Steam clean engine block (1). Make sure oil and water galleries are cleaned thoroughly.

WARNING

Compressed air used for cleaning purposes will not exceed 30 psi (207 kPa). Use only with effective chip guarding and persona] protective equipment (goggles/shield, gloves, etc.).

(3) Dry engine block (1) with compressed air.
(4) Inspect grooves (2) and lands (3) for pitting and erosion.

https://truckmanualshub.com/

3-2. ENGINE BLOCK REPAIR (CONT).

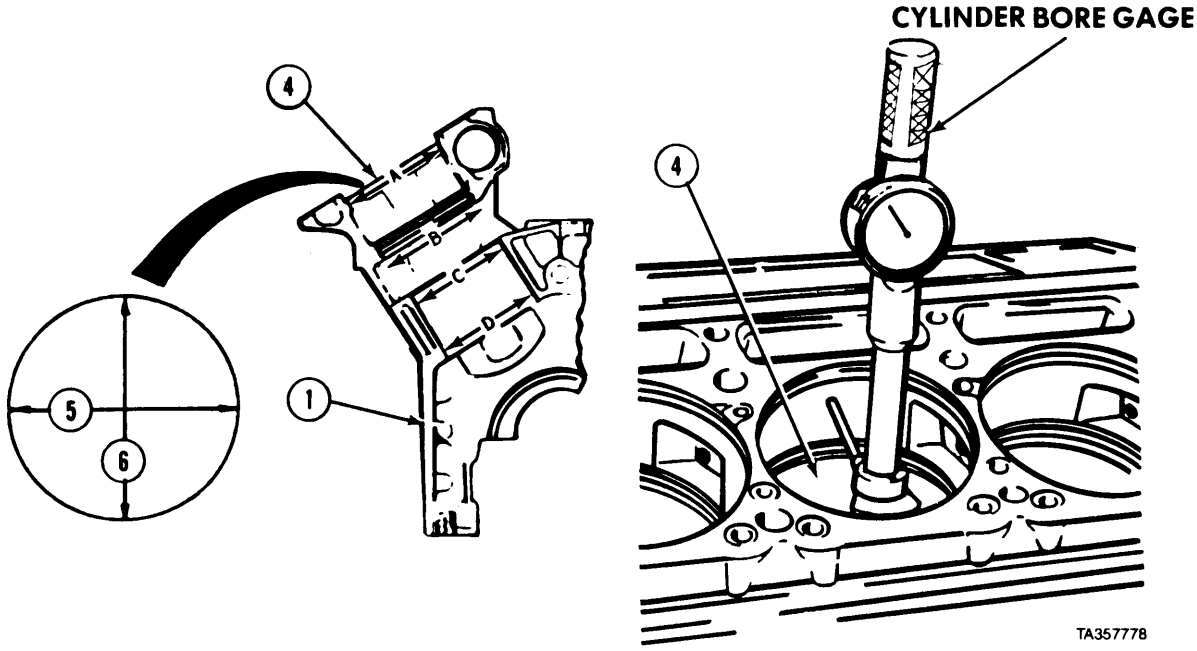

NOTE

All eight cylinders are measured the same. Follow steps (5) through (9).

(5) Make two cylinder bore (4) measurements (5 and 6) with cylinder bore gage in steps (6) to (9).
(6) Measure cylinder bore (4) at position A. Measurement cannot be greater than 5.3625-in. (136.2075 mm).
(7) Measure cylinder bore (4) at position B. Measurement cannot be greater than 5.3390-in. (135.6106 mm).
(8) Measure cylinder bore (4) at position C. Measurement cannot be greater than 5.2180-in. (132.5372 mm).
(9) Measure cylinder bore (4) at position D. Measurement cannot be greater than 5.2180-in. (132.5372 mm).
(10) Replace engine block (1) if any cylinder bore (4) is beyond limits listed.

(11) Use straight edge and feeler gage to measure flatness of engine block (1) crosswise, between all cylinders (7).
(12) If block (1) varies more than 0.003-in. (0.076 mm), replace engine block (1).
(13) Using a straight edge and feeler gage, measure flatness of engine block contact surface (1) lengthwise. If block (1) varies more than 0.007-in. (O. 178 mm), replace engine block (1).

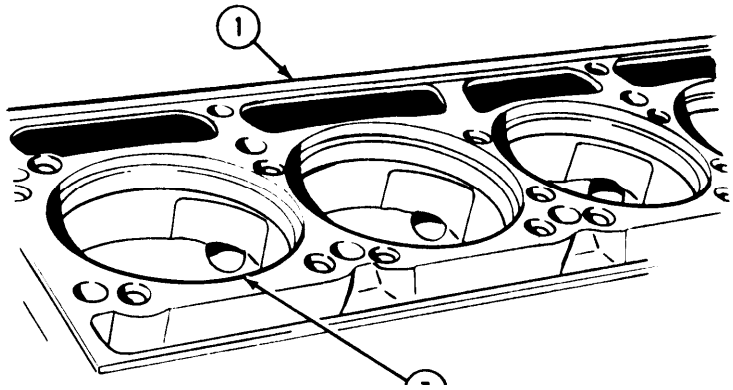

https://truckmanualshub.com/

NOTE

Cylinders may be counterbored to either of two depths.

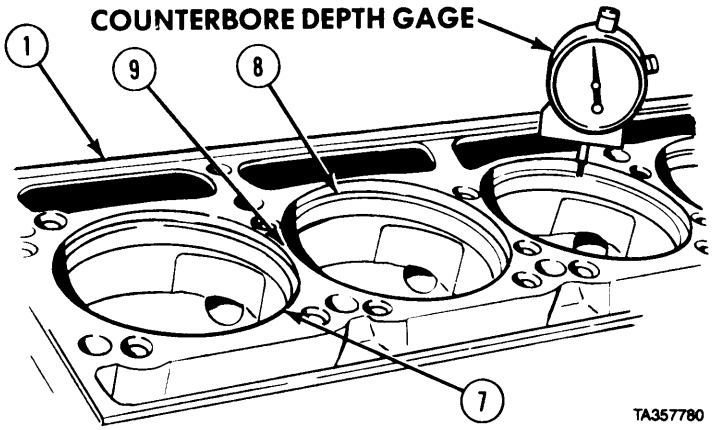

(14) Using counterbore depth gage, measure depth of counterbore (8). If depth is not between ‘ ‘ 0.4755-in. (12. 13 mm) and 0.477-in. (12.12 mm) or between 0.4905-in. (12.46 mm) and 0.4920-in. (12.50 mm) and cannot be brought into limits by installing cylinder liner insert, replace engine block (1).

(15) If counterbore (8) varies more than 0.0015-in. (0.04 mm) around edge of cylinder, replace engine block (l).

NOTE

If two adjacent cylinders are in different counterbore depth ranges measured in step (14) above, step (16) does not apply.

(16) If difference between any one adjacent cylinder counterbores (8) measured at their closest point (9) is more than 0.0015-in. (0.04 mm), replace engine block (l).

NOTE

Main bearing caps must be installed in proper positions in engine block, as marked during removal (para 4-5). Make sure caps are firmly seated in engine block and main bearing shells are removed.

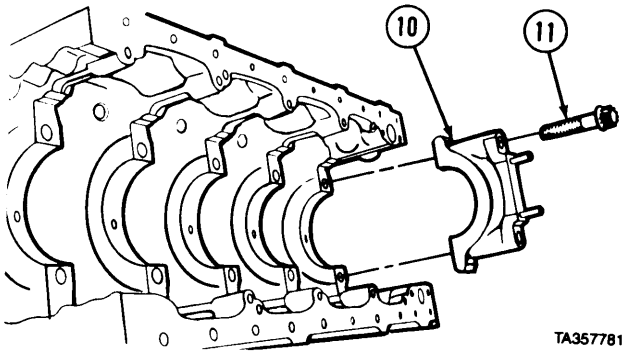

(17) Install five main bearing caps (10) and ten screws (11).
(18) Tighten screws (11) up snug.
(19) Strike caps (10) with soft-face hammer to seat them.
(20) Tighten screws (11) to 50 lb-ft (68 NŽm).
(21) Tighten screws (11) to 110 Ib-ft (149 N•m).
(22) Tighten screws (11) to 250 to 260 lb-ft (339 to 352 N•m).

https://truckmanualshub.com/

3-2. ENGINE BLOCK REPAIR (CONT).

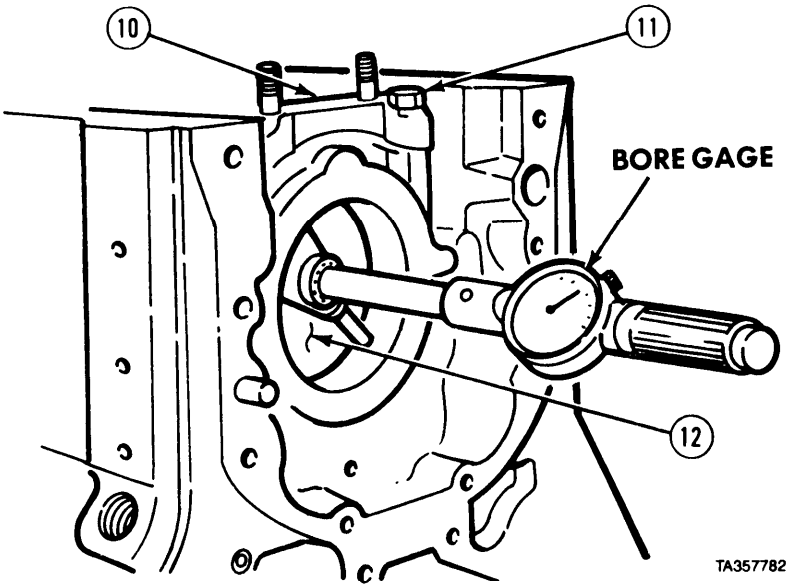

(23) Use bore gage to measure each main bearing bore (12) diameter. If main bearing bore diameter is less than 4.812-in. (122.22 mm) or is greater than 4.813-in. (1 22.25 mm), replace engine block (1).

(24) Remove five main bearing caps (10) and screws (11).

(25) Inspect dowel holes in engine block (1) for oversize holes or damage. Replace engine **block** if damaged or oversize.

(26) Inspect threaded holes for stripped or crossed threads. Use a tap to clean up threads.

(27) Inspect machined surfaces for flatness, burrs, and scratches. If surfaces cannot be cleaned up by lapping, replace engine block (1).

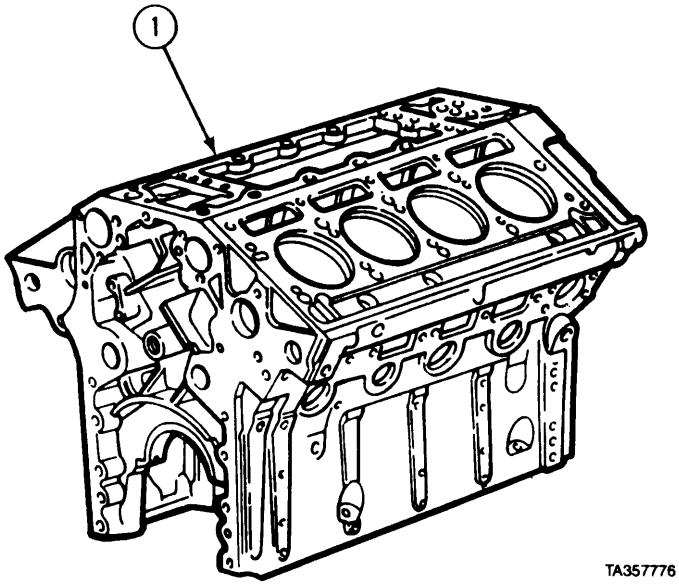

https://truckmanualshub.com/

Engine Block Maintenance Instructions (Cont)

c. Assembly.

WARNING

Adhesives, solvents, and sealing compounds can burn easily, can give off harmful vapors, and are harmful to skin and clothing. To avoid injury or death, keep away from open fire and use in well-ventilated area. If adhesive, solvent, or sealing compound gets on skin or clothing, wash immediately with soap and water.

NOTE

Coat threads of all serviceable plugs, fittings, and draincocks with pipe thread sealing compound and transfer to new engine block.

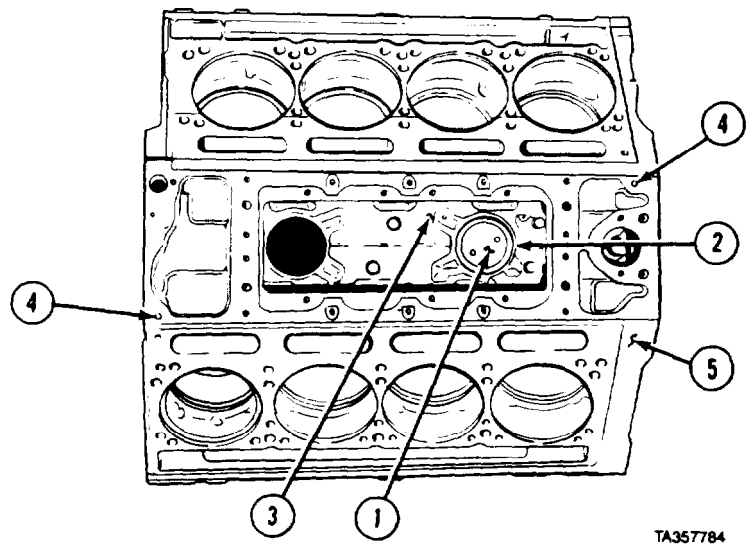

(1) Install core plug (1) and gasket (2) inside air box (3). Tighten plug to 230 to 270 lb-ft (312 to 366 N•m).

(2) Install two 1/4-in. oil galley plugs (4) in top of engine block (5); Tighten plugs to 14 to 16 lb-ft (19 to 22 N•m).

NOTE

If no pressure test (Section *d. Testing)* is to be performed, do next step, otherwise go on to Step (4).

(3) Install aftercooler water inlet adapter (6) and gasket (7) using aftercooler water inlet adapter installer. Tighten aftercooler water inlet adapter to 230 to 270 lb-ft (312 to *366* N•m).

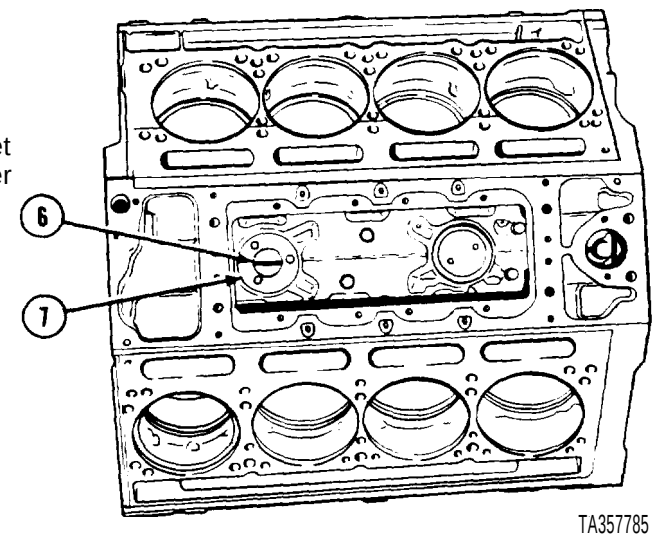

https://truckmanualshub.com/

Cylinder Head Maintenance Instructions

3-2. ENGINE BLOCK REPAIR (CONT).

NOTE
Front face of engine block is shown.

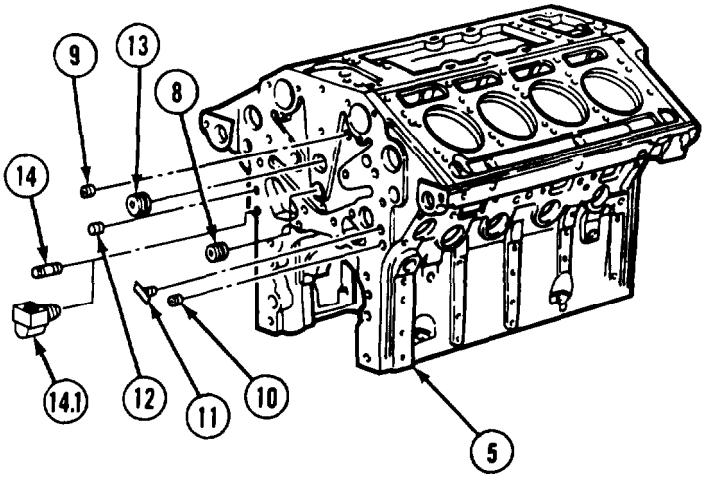

(4) Install 3/4-in. oil galley plug (8) in front of engine block (5). Tighten plug to 33 to 37 lb-ft (45 to 50 N•m).
(5) Install 1/2-in. oil galley plug (9). Tighten plug to 23 to 27 lb-ft (31 to 37 N•m).
(6) Install 1/4-in. oil galley plug (10). Tighten plug to 14 to 16 lb-ft (19 to 22 N•m).
(7) Install 3/8-in. drain cock (11).
(8) Install 1/4-in. water jacket plug (12). Tighten plug to 14 to 16 lb-ft (19 to 22 N•m).
(9) Install 1-1/4-in. water core plug (13). Tighten plug to 95 to 105 lb-ft (129 to 143 N•m).

NOTE
Some engines have a connector. Others have an elbow. Refer to TM 9-2320-279-24P.

(10) Install connector (14) or elbow (14.1).

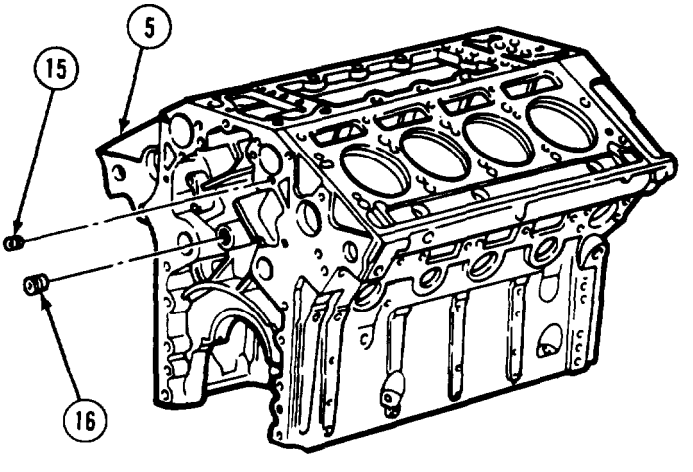

NOTE
Rear face of engine block is shown.

(11) Install 1/2-in. oil galley plug (15) in rear end of engine block (5). Tighten plug to 23 to 27 lb-ft (31 to 37 N•m).
(12) Install 3/4-in. oil galley plug (16). Tighten plug to 33 to 37 lb-ft (45 to 50 N•m).

https://truckmanualshub.com/

Engine Block Maintenance Instructions (Cont)

(13) Install two 1/4-in. plugs (17) in right side of engine block (5). Tighten plugs to 14 to 16 lb-ft (19 to 22 N·m).
(14) Install 1/4-in. drain cock (18).
(15) Install 1/4-in. fitting (19).
(16) Install elbow (20) in fitting (19).
(17) Install 1-in. plug (21). Tighten plug to 75 to 85-lb-ft (102 to 115 NŽm).
(18) Install reducer bushing (22). Install fitting (23) and elbow (24).
(19) Install 1/8-in. oil galley plug (25). Tighten plug to 10 to 12 lb-ft (14 to 16 N•m).

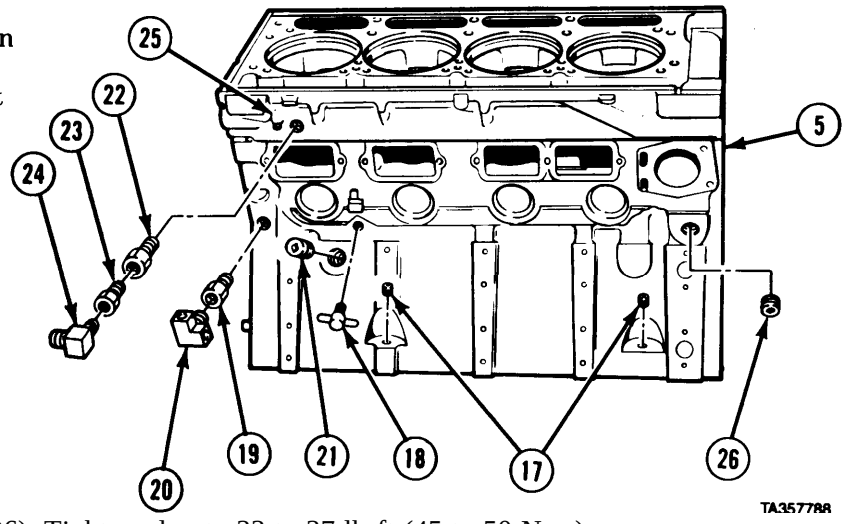

(20) Install 3/4-in. oil galley plug (26). Tighten plug to 33 to 37 lb-ft (45 to 50 N•m).

(21) Install two l-in. plugs (27) in left side of engine block (5). Tighten plugs to 75 to 85 Ib-ft (102 to 115 N•m).
(22) Install 3/4 x 3/8-in. reducer bushing (28).
(23) Install ether starting aid thermostat (29) in reducer bushing (28).
(24) Install l/4-in. plugs (30). Tighten plugs to 14 to 16 lb-ft (19 to 22 N•m).
(25) Install l/8-in. oil plug (31). Tighten plug to 10 to 12 lb-ft (14 to 16 N•m).
(26) Install reducer bushing (32) and elbow (33).
(2?') Install drain cock (34).
(28) Install fitting (35), reducer bushing (36), and elbow (37).
(29) Install starter motor bracket (38), two washers (39), two lockwashers (40), and two screws (41).

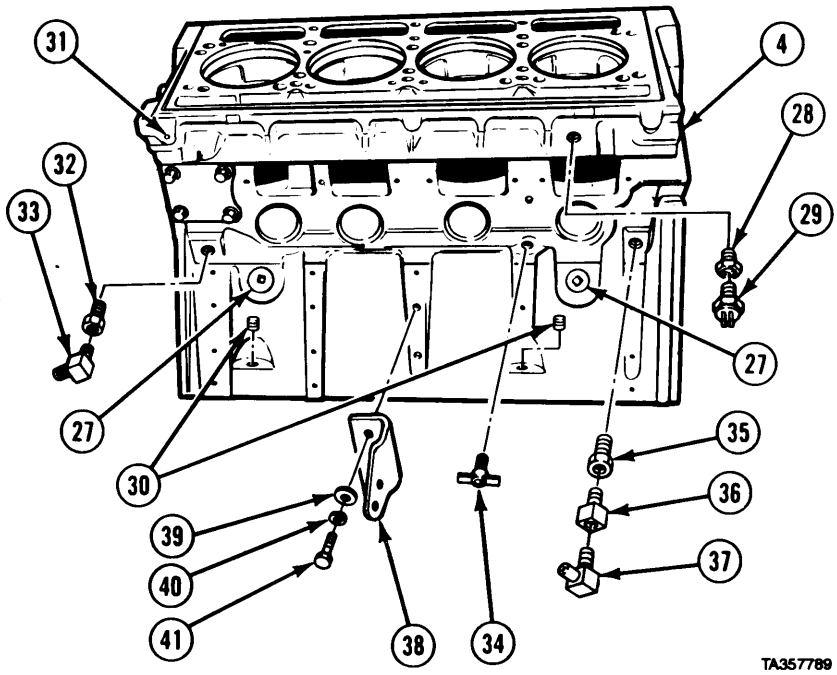

https://truckmanualshub.com/

13-2. ENGINE BLOCK REPAIR (CONT).

(30) Install gasket (42), cover plate (43), four screws (44), and washers (45) on left front side of engine block (5).

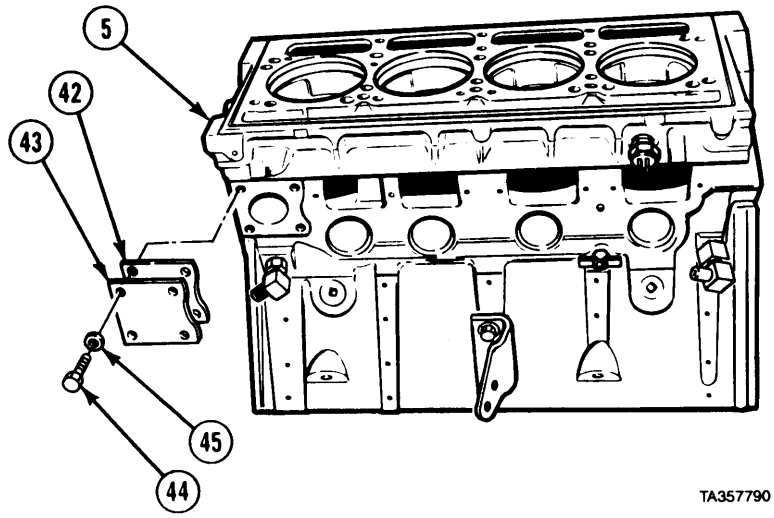

NOTE

If dowel pins were removed, do step (31).

(31) Install two dowel pins (46) in top of engine block (5) until they are flush with surface of engine block.

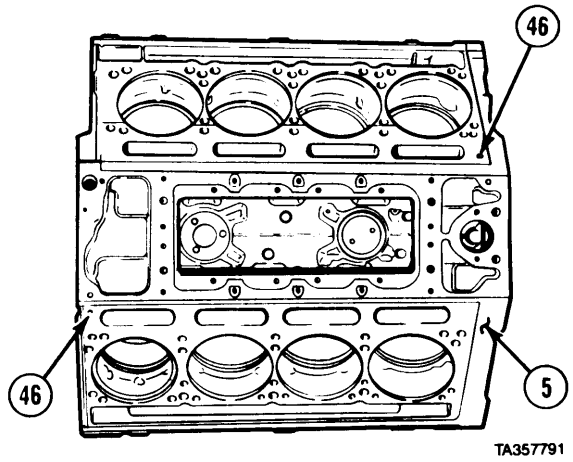

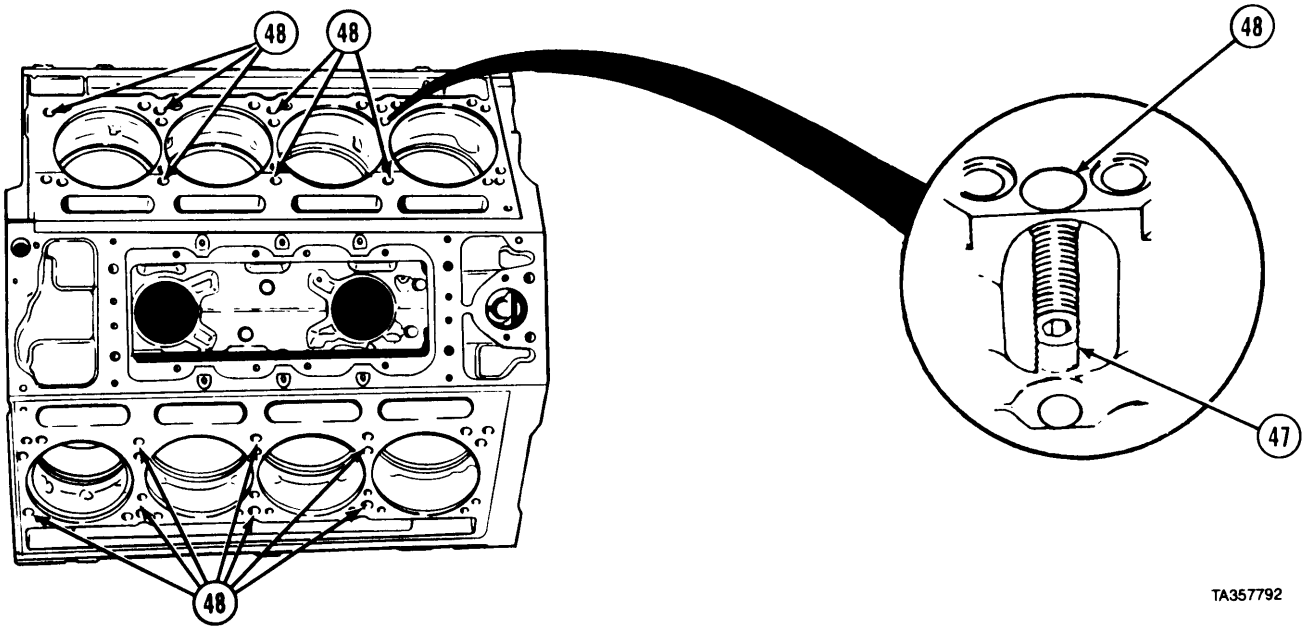

https://truckmanualshub.com/

WARNING

Adhesives, solvents, and sealing compounds can burn easily, can give off harmful vapors, and are harmful to skin and clothing. To avoid injury or death, keep away from open fire and use in well-ventilated area. If adhesive, solvent, or sealing compound gets on skin or clothing, wash immediately with soap and water.

NOTE

- There are 14 plugs, seven in each cylinder bank. Apply small quantity of sealing and lubricating compound to thread area above plug. Do not let sealant get onto threads of cylinder head screws, allow sealant to set for 12 hours before performing pressure check section *d. Testing*
- Top of plugs must be 1.960-in. (50 mm) below surface of block when installed.

(32) Coat threads of 1 1/16-in. plugs (47) with sealing and lubricating compound and install in cylinder head screw holes (48). Tighten to 50 to 60 lb-ft (68 to 81 N•m).

(33) Install two dowels [49) in front of engine block (5) until they-stick out 3/8-in. (9.5 mm)

(34) Install three p]ugs (50) and two plugs (51).

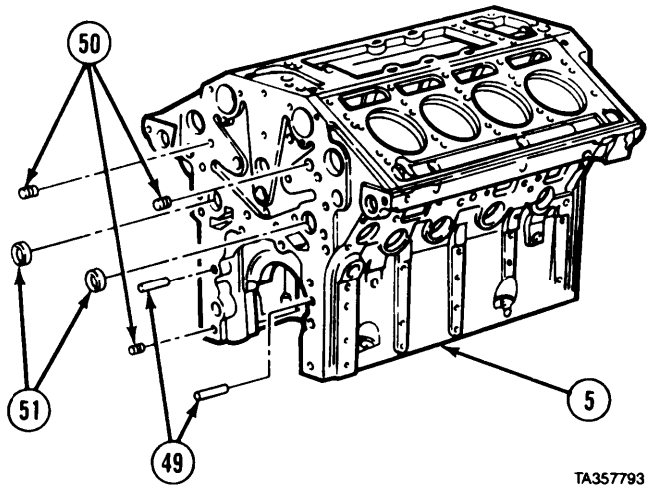

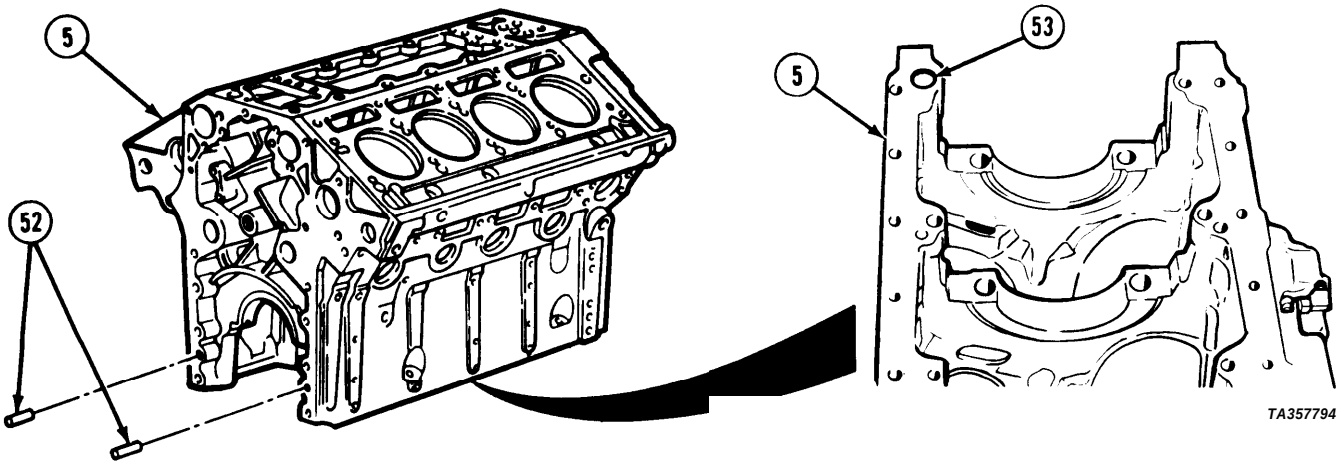

(35) Install two dowels (52) in rear of engine block (5) until they stick out 3/8-in. (9.5 mm).

(36) Install cup plug (53) in bottom of engine block (5).

https://truckmanualshub.com/

3-2. ENGINE BLOCK REPAIR (CONT).

(37) Install four cup plugs (54) in both right and left side of engine block (5).

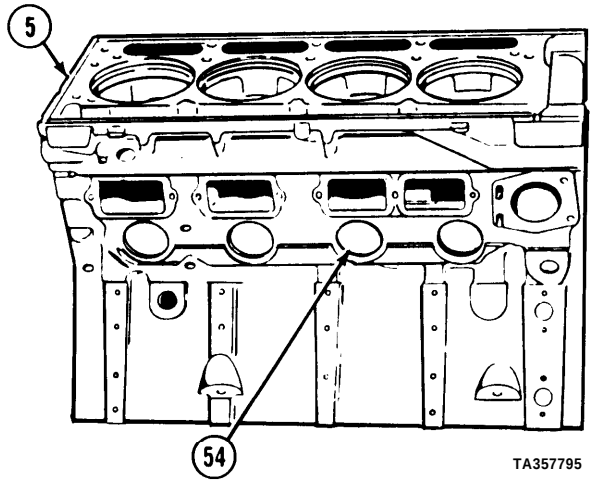

d. Testing.

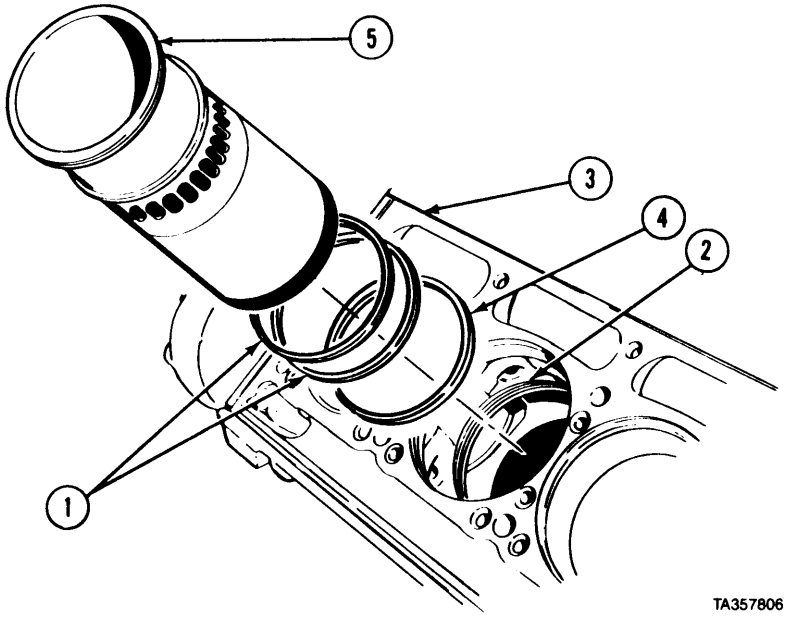

(1) Coat two seal rings (1) with lubricating oil.
(2) Install two seal rings (1) in grooves (2) of each cylinder of engine block (3).
(3) Install cylinder liner inserts (4) into each cylinder recess.
(4) Install eight cylinder liners (5) into engine block (3).

https://truckmanualshub.com/

Engine Block Maintenance Instructions (Cont)

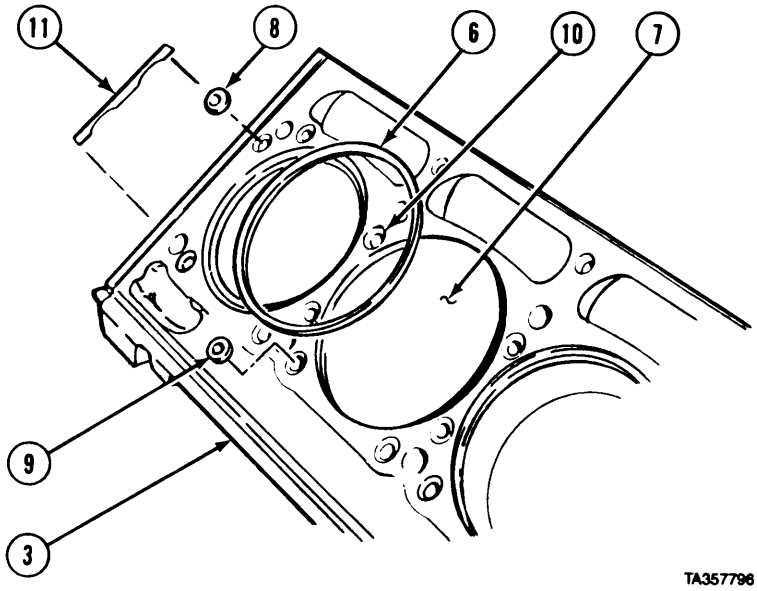

(5) Install eight compression gaskets (6) in cylinders (7).
(6) Install oil hole seals (8) and water hole seals (9) in 34 counterbored holes (10) of each side of engine block (3).
(7) Install four shims (11) one at each end of the cylinder head contact surface of each side of engine block (3).

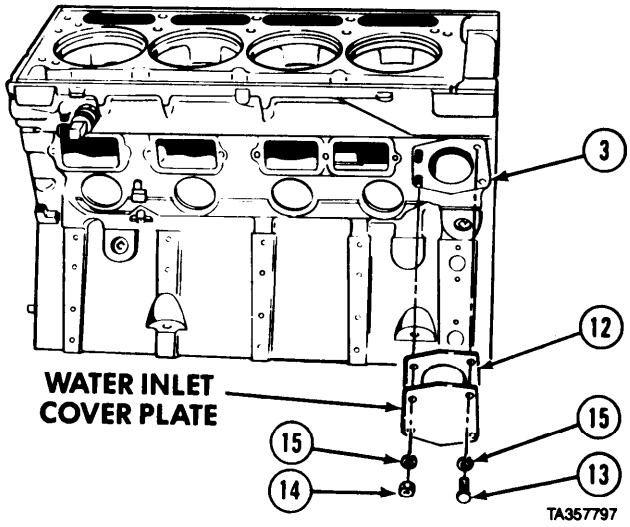

(8) Install gasket (12) and water inlet cover plate on right front side of engine block (3) with two screws (13), nuts (14), and four lockwashers (15).

https://truckmanualshub.com/

3-2. ENGINE BLOCK REPAIR (CONT).

(9) Install engine block pressure test core plug (16) and gasket in hole for aftercooler water inlet adapter using core plug remover/installer. Tighten plug to 230 to 270 lb-ft (312 to 366 N-m).

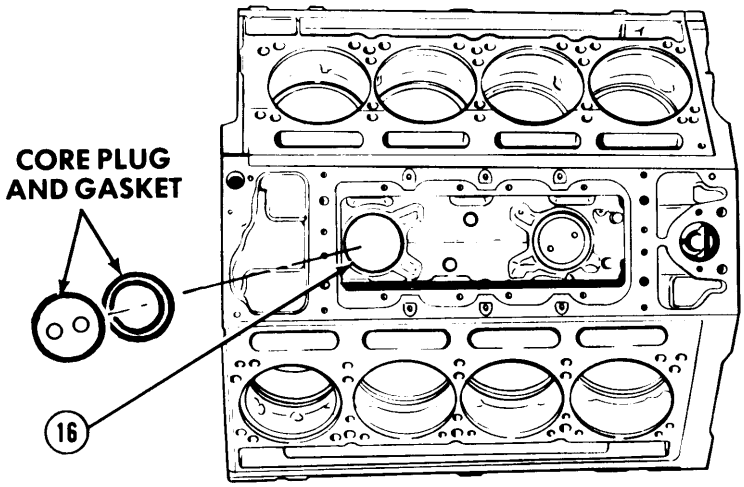

TA357798

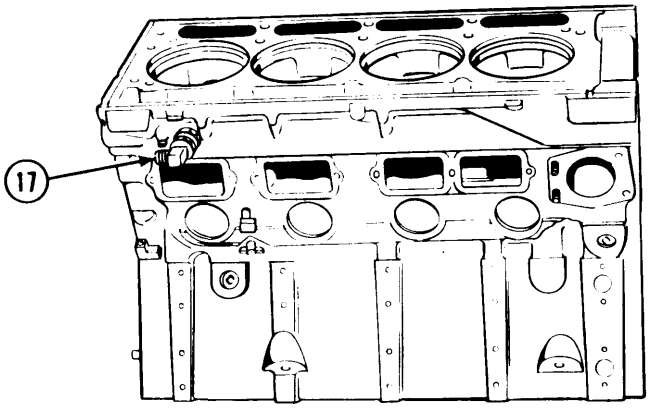

TA357799

(10) Pour one gallon of antifreeze into engine block water jacket through fitting (17) and fill with water.

(11) Connect an air line to fitting (17). Route air line from above engine block to prevent antifreeze solution from draining into hose.

https://truckmanualshub.com/

Engine Block Maintenance Instructions (Cont)

(12) Install two plates (18) from engine block test kit on right and left cylinder banks of engine block (3) with 20 head screws (19) and spacers (20).

(13) Tighten screws (19) to 50 lb-ft (67.80 N-m) then to 110 lb-ft (149.16 N-m).

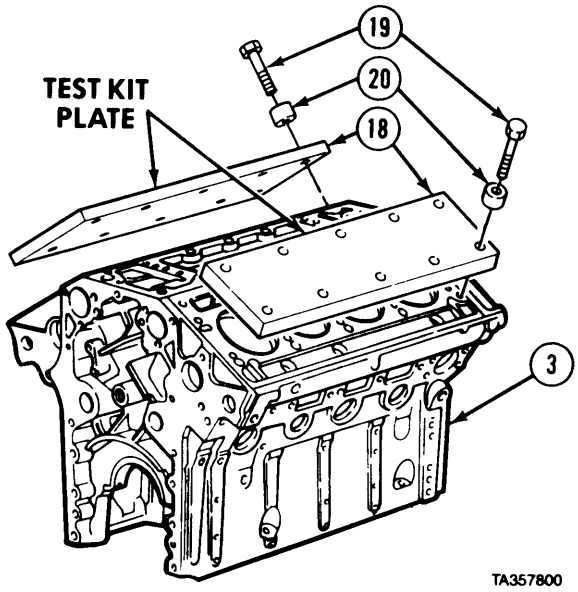

WARNING

Be careful when using high air pressure. Make sure connections and seals are tight before applying pressure. High air pressure can blow out parts, hoses, or debris with force. Explosive force can damage equipment and cause injury.

(14) Apply 40 psi (276 kPa) pressure to engine block (3). Maintain this pressure for at least two hours.

(15) After test period, inspect engine block (3) for leaking antifreeze. If leaks are found in engine block, engine block must be replaced.

(16) Relieve 40 psi (276 kPa) pressure from engine block (3).

(17) Disconnect air line from fitting (17).

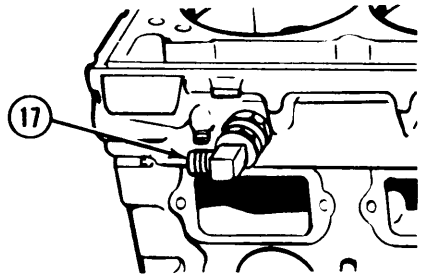

(18) Remove 20 screws (19), spacers (20), and two plates (18) from engine block (3).

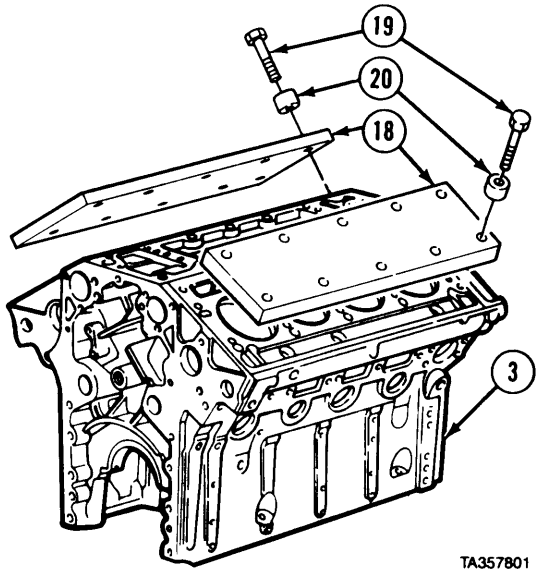

https://truckmanualshub.com/

3-2. ENGINE BLOCK REPAIR (CONT).

(19) Remove engine block pressure test core plug and gasket from aftercooler water inlet adapter hole (16) using core plug remover.

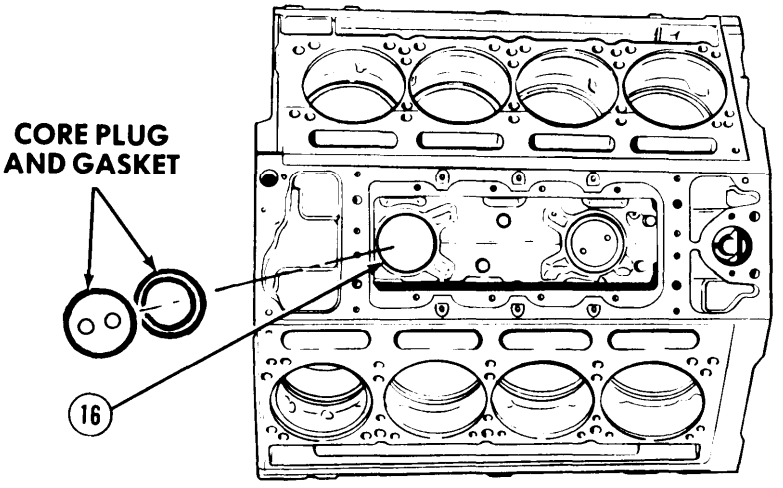

TA357802

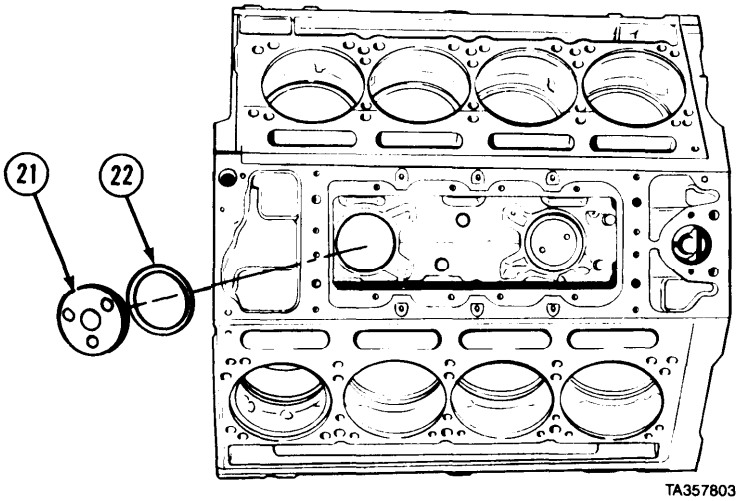

TA357803

(20) Install aftercooler water inlet adapter (21) and gasket (22) using aftercooler water inlet adapter installer. Tighten adapter to 230 to 250 lb-ft (339 N•m).

https://truckmanualshub.com/

(21) Remove two screws (13), nuts (14), four lockwashers (15), water inlet cover plate and gasket (12), from right side of engine block (3).

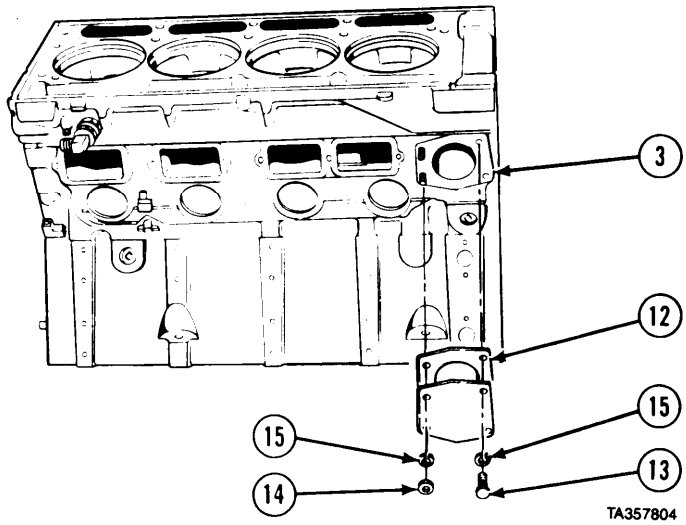

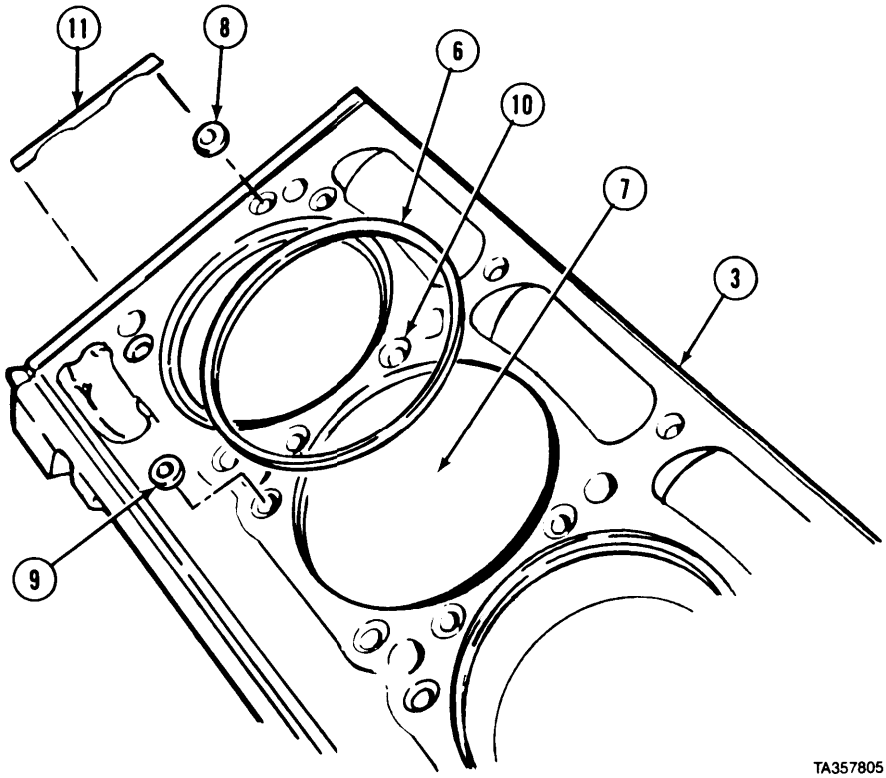

(22) Remove eight compression gaskets (6) from cylinders (7).

(23) Remove oil hole seals (8) and water hole seals (9) from 34 counterbored holes (10) of each side of engine block (3).

(24) Remove four shims (11) from each end of cylinder head contact surface of each side of engine block (3).

https://truckmanualshub.com/

3-2. ENGINE BLOCK REPAIR (CONT).

(25) Remove eight cylinder liners (5) from engine block (3). Coat liners with lubricating oil.
(26) Remove cylinder liner inserts (4) from each cylinder recess.
(27) Remove two seal rings (1) from grooves (2) of each cylinder of engine block (3).

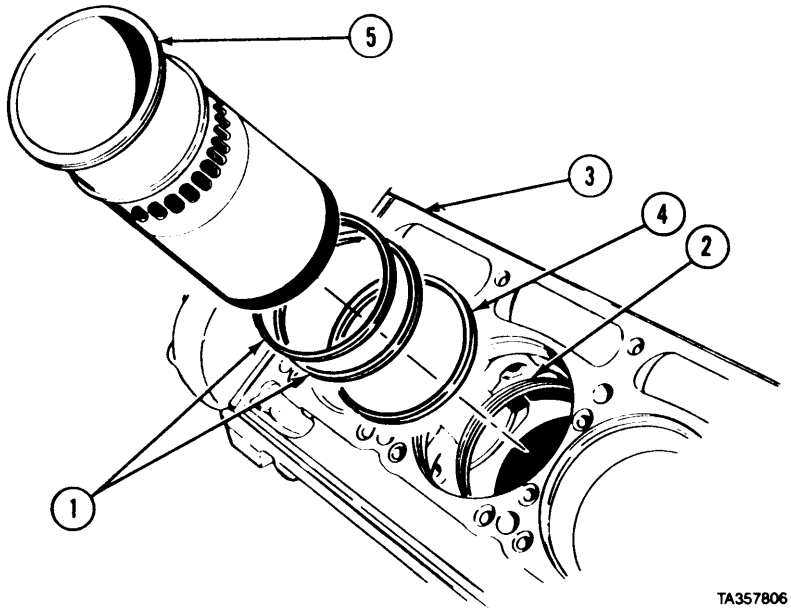

WARNING

Compressed air used for cleaning purposes will not exceed 30 psi (207 kPa). Use only with effective chip guarding and personal protective equipment (goggles/shield, gloves, etc.).

(28) Dry engine block (3) with compressed air.
(29) Coat engine block machined surfaces with lubricating oil to prevent rust.

e. Follow-on Maintenance.
(1) Install right side air box drains (para 3-6).
(2) Install crankshaft (para 4-5).
(3) Install right side air box covers (para 3-5).
(4) Install engine block breather pipe (para 8-2).
(5) Install rear end plate (para 3-4).
(6) Install front end plate (para 3-3).
(7) Install aftercooler (para 16-2).
(8) Install cylinder head (para 3-7).
(9) Install oil cooler (TM 9-2320-279-20).
(10) Install starter (TM 9-2320-279-34).
(11) Install flange elbow (TM 9-2320-279-20).
(12) Install engine circuit breaker bracket (TM 9-2320-279-34).
(13) Remove engine from stand (TM 9-2320-279-34).

END OF TASK

https://truckmanualshub.com/

3-3. FRONT END PLATE REMOVAL/INSTALLATION.

This task covers:

a. Removal
b. Installation
c. Follow-on Maintenance

INITIAL SETUP

Models
All

Test Equipment
None

Special Tools
None

Supplies
Grease, automotive and artillery, Item 36 Appendix C

Personnel Required
MOS 63S, Wheel vehicle repairer

References
None

Equipment Condition

TM or Para	*Condition Description*
TM 9-2320-279-34	Engine mounted on engine stand.
Para 7-9	Camshafts removed.

Special Environmental Conditions
None

General Safety Instructions
None

Level of Maintenance
General Support

a. Removal.

NOTE
Some engines have five screws and lockwashers. Others have flanged head screws and no lockwashers.

(1) Remove live screws (1) and lockwashers (2) from front end plate (3).
(2) Remove two screws (4) and lockwashers (5) from front end plate (3).

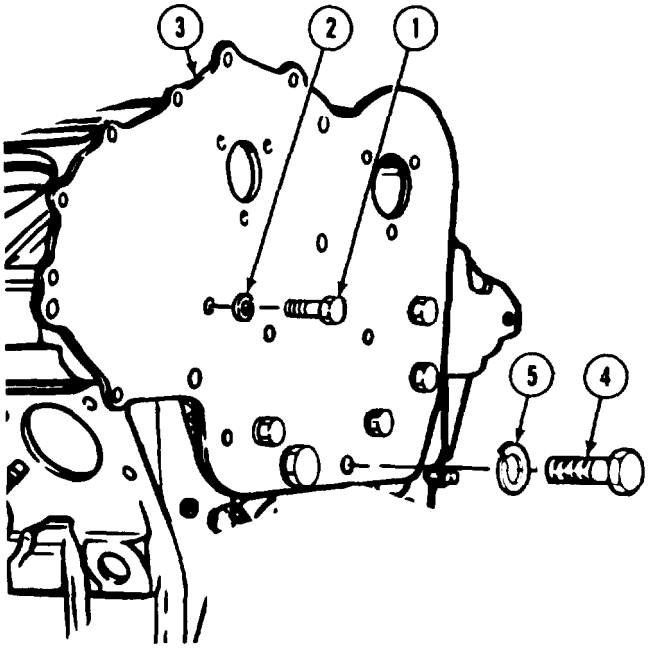

https://truckmanualshub.com/

Engine Block Maintenance Instructions (Cont)

3-3. FRONT END PLATE REMOVAL/INSTALIATION (CONT).

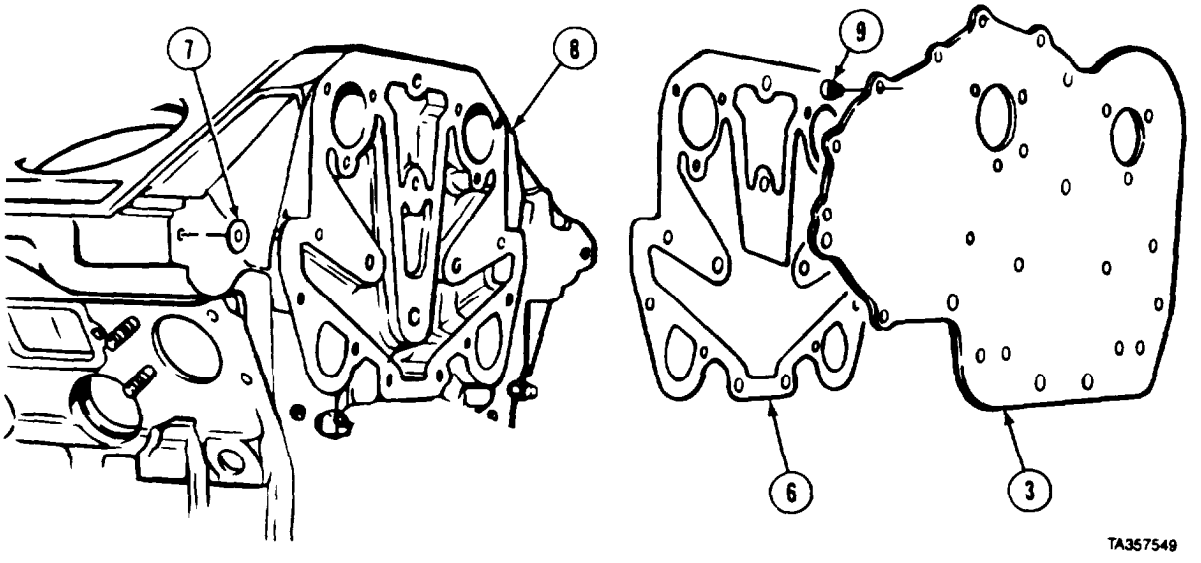

(3) Remove front end plate (3) and gaskets (6 and 7) from engine block (8).

CAUTION

Support front end plate on flat, even surface when removing screw insert to prevent warping or bending end plate

(4) Remove screw insert (9) from front end plate (3).

b. Installation.

CAUTION

Support front end plate on flat, even surface when installing screw insert to prevent wraping or bending end plate.

(1) Support front end plate (1).
(2) Press screw insert (2) into front end, plate (1) until head seats on end plate surface.

https://truckmanualshub.com/

Engine Block Maintenance Instructions (Cont)

(3) Coat end plate gaskets (3 and 4) with grease and install on engine block (5).

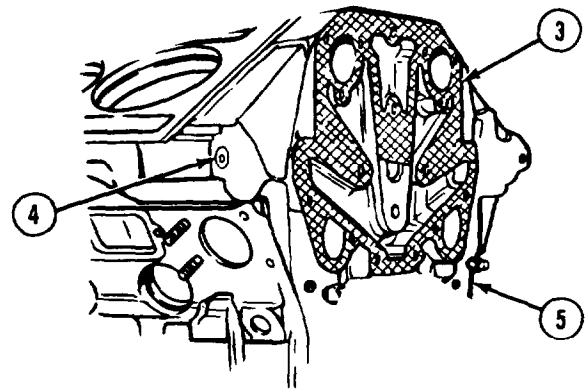

NOTE

Some engines have five screws and lockwashers. Others have flanged head screws and no lockwashers.

(4) Install front end plate (1), five screws (6), lockwashers (7), two screws (8) and lockwashers (9). Tighten screws (6 and 8) finger tight.

NOTE

Smaller right hand camshaft end bearing will be used as a pilot when alining front end plate on engine block.

(5) Install two camshaft end bearings (10) into the front end plate (1).

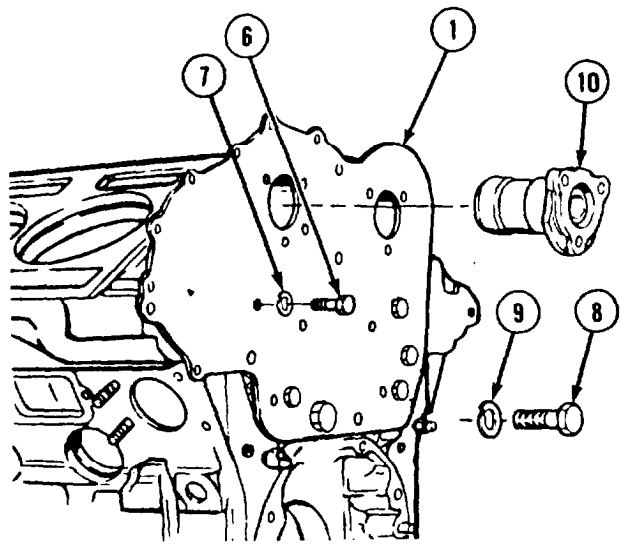

(6) Tighten five screws (6) to 35 lb-ft (47 N•m).

(7) Tighten two screws (8) to 75 lb-ft (102 N•m).

(8) Remove end bearings (10).

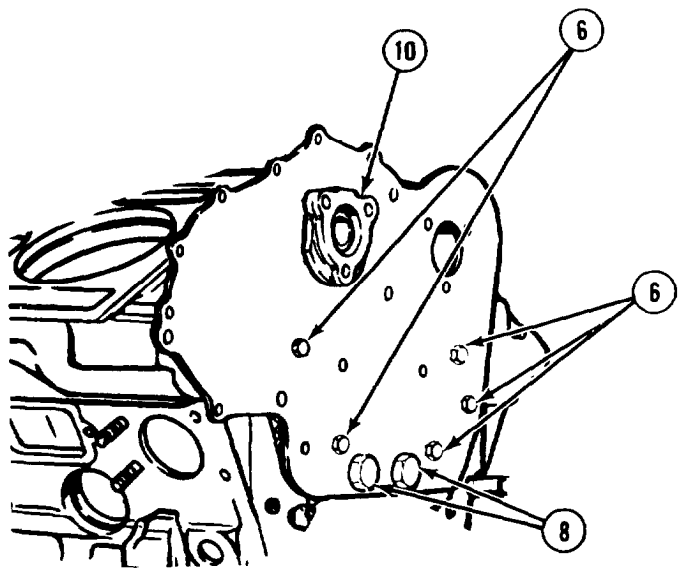

c. Follow-on Maintenance. Install camshafts (para 7-9).

END OF TASK

https://truckmanualshub.com/

Engine Block Maintenance Instructions (Cont)

3-4. REAR END PLATE REMOVAL/INSTALIATION.

This task covers:

a. Removal
b. Installation
c. Follow-on Maintenance

INITIAL SETUP

Models
All

Test Equipment
None

Special Tools
None

Supplies
Grease, automotive and artillery, Item 36, Appendix C

Personnel Required
MOS 63W, Wheel vehicle repairer

References
None

Equipment Condition

TM or Para	*Condition Description*
TM 9-2320-279-34	Engine mounted on engine stand.
Para 7-9	Camshaft removed.
Para 10-2	Blower drive support removed.
Para 7-11	Idler gear removed.

Special Environmental Conditions
None

General Safety Instructions
None

Level of Maintenance
General Support

a. Removal.

NOTE
Note direction of special washer during removal to aid in correct installation.

(1) Remove screw (1), special washer (2), and dummy hub (3) from end plate (4)
(2) Remove screw (5) and lockwasher (6) from end plate (4).

NOTE
Some engines have four screws and lockwashers. Others have flanged head screws and no lockwashers.

(3) Remove four screws (7) and lockwashers (8) from end plate (4).

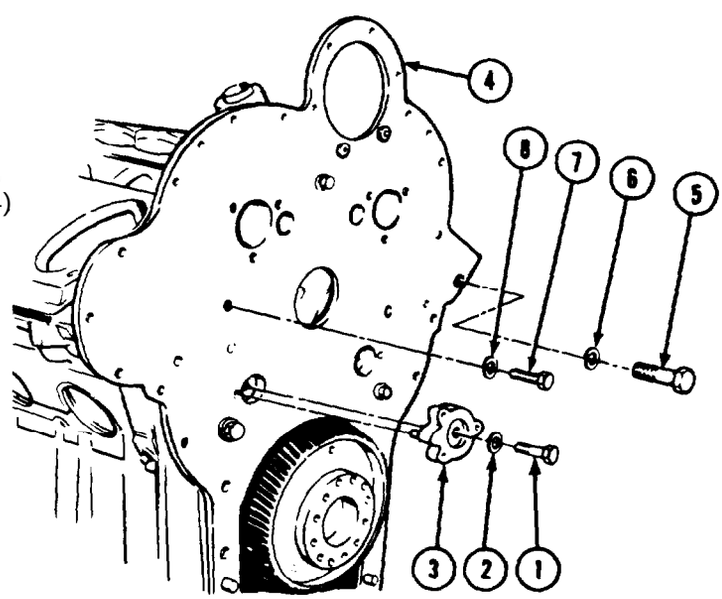

https://truckmanualshub.com/

(4) Remove end plate (4).
(5) Remove gasket (9) from end plate (4) and engine block (10).

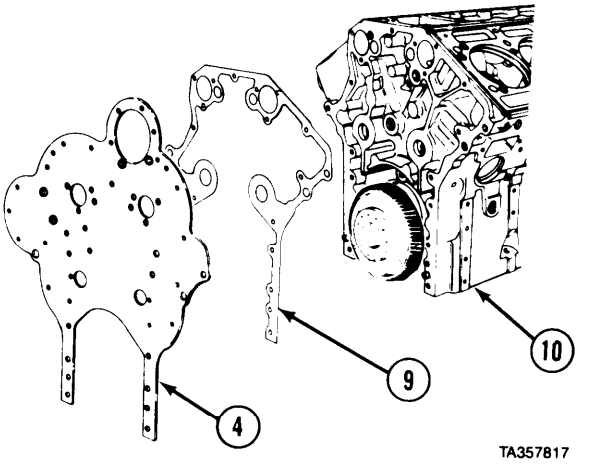

CAUTION

Support rear end plate on flat, even surface when removing screw inserts to prevent warping or bending end plate.

(6) Remove two screw inserts (11) from end plate (4).
(7) Remove eight screw inserts (12) from end plate (4).

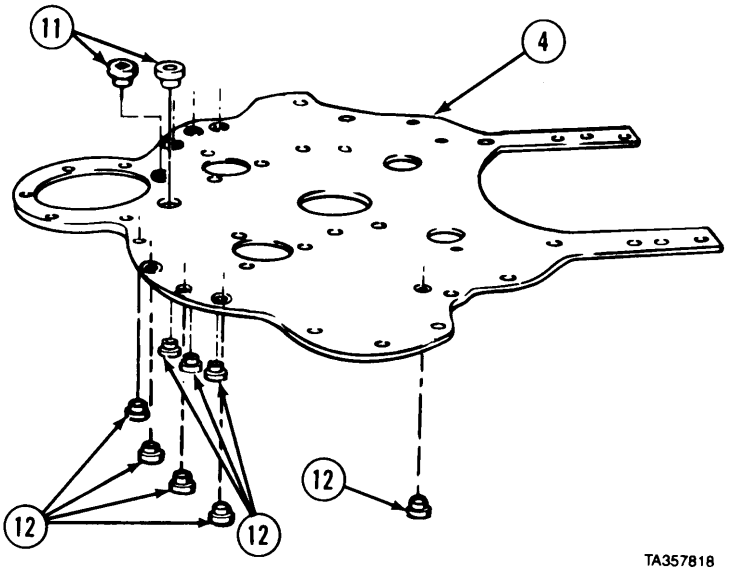

b. Installation.

CAUTION

Support rear end plate on flat, even surface when installing screw inserts to prevent warping or bending end plate.

(1) Press eight screw inserts (1) into back of end plate (2).
(2) Press two screw inserts (3) into front of end plate (2).

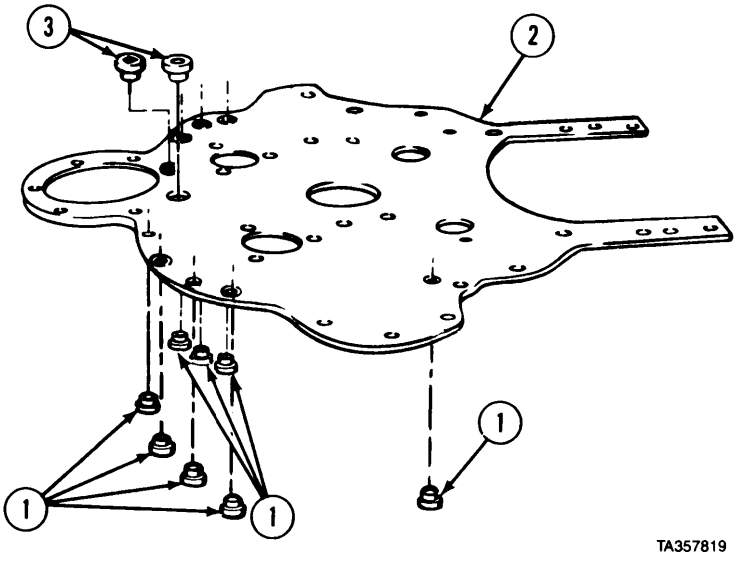

https://truckmanualshub.com/

3-4. REAR END PLATE REMOVAL/INSTALLATION (CONT).

(3) Coat gasket (4) with grease and install over dowel pins (5) onto engine block (6).
(4) Install end plate (2) on dowel pins (5).

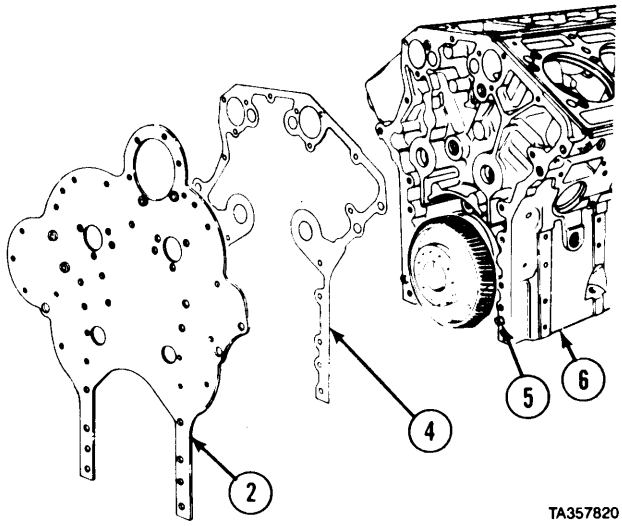

(5) Install four screws (7) and lockwashers (8). Tighten screws finger tight.
(6) Install screw (9) and lockwasher (10). Tighten screw finger tight.

NOTE

Special washer is installed in same direction as noted during removal.

(7) Install special washer (11) on screw (12) with grooved side facing head of screw.
(8) Install dummy hub (13), special washer (11), and screw (12). Tighten screw finger tight.
(9) Insert two right hand camshaft end bearings (14) into end plate (2).

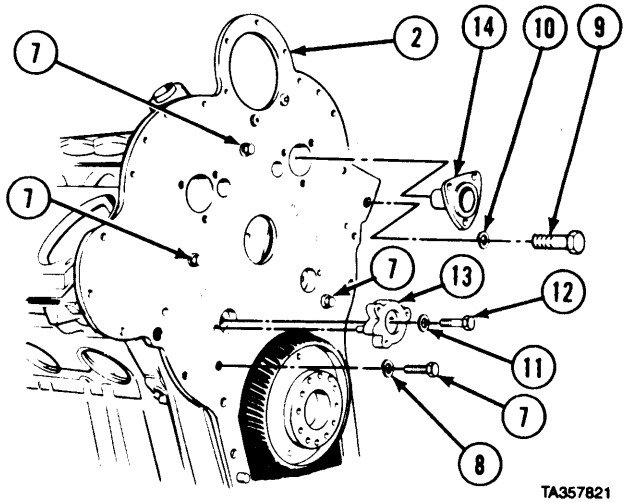

(10) Tighten four screws (7) to 35 lb-ft (47 N•m).
(11) Tighten screw (9) to 110 lb-ft (149 N•m).
(12) Tighten screw (12) to 90 lb-ft (122 N-m).
(13) Remove end bearings (14).

c. Follow-on Maintenance.
(1) Install camshafts (para 7-9).
(2) Install blower drive support (para 10-2).
(3) Install idler gear (para 7-1 1).

END OF TASK

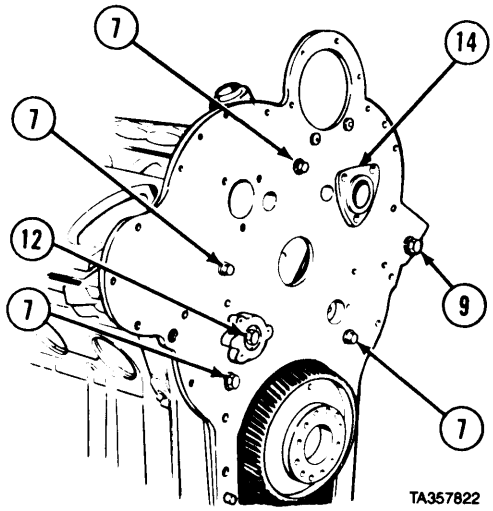

https://truckmanualshub.com/

3-5. AIR BOX COVERS REMOVAL/INSTALIATION.

This task covers:

a. Removal
b. Installation
c. Follow-on Maintenance

INITIAL SETUP

Models
All

Test Equipment
None

Special Tools
None

supplies
Adhesive-sealant, silicone, Item 6, Appendix C General

Personnel Required
MOS 63W, Wheel vehicle repairer

References
None

Equipment Condition

TM or Para	*Condition Description*
TM 9-2320-279-10	Engine off.
TM 9-2320-279-10	Parking brake on. Engine cool.

Special Environmental Conditions
None

Safety Instruction
None

Level *of Maintenance*
Direct Support

a. Removal.

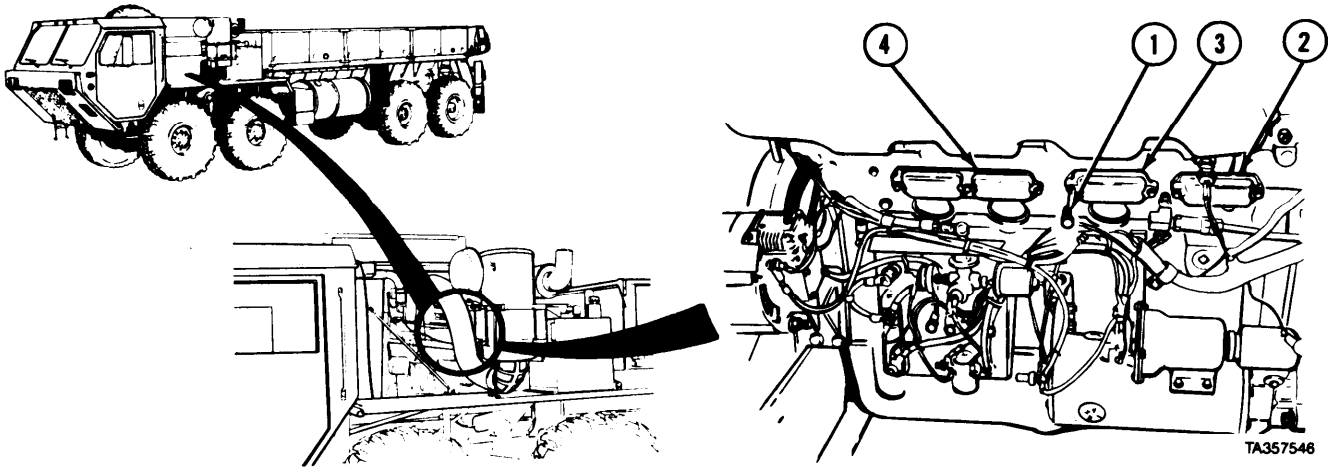

NOTE

Right and left air box covers are removed and installed the same way.

(1) Remove seven screws (1) from air box covers (2, 3, and 4).

https://truckmanualshub.com/

3-5. AIR BOX COVERS REMOVAL/INSTALLATION (CONT).

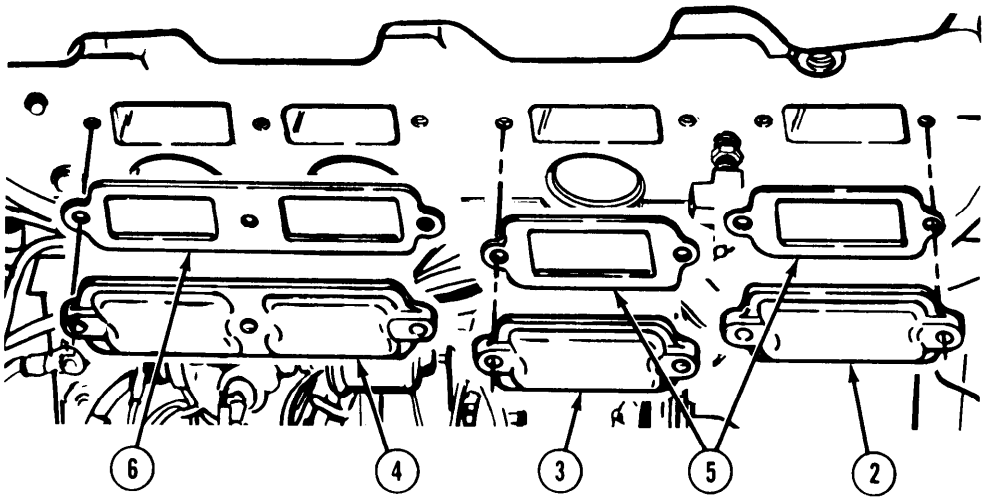

(2) Remove three air box covers (2, 3, and 4), two gaskets (5), and gasket (6).

b. Installation.

WARNING

Adhesives, solvents, and sealing compounds can burn easily, can give off harmful vapors, and are harmful to skin and clothing. To avoid injury or death, keep away from open fire and use in well-ventilated area. If adhesive, solvent, or sealing compound gets on skin or clothing, wash immediately with soap and water.

(1) Coat two gaskets (1) and gasket (2) with adhesive-sealant and install on engine block (3).

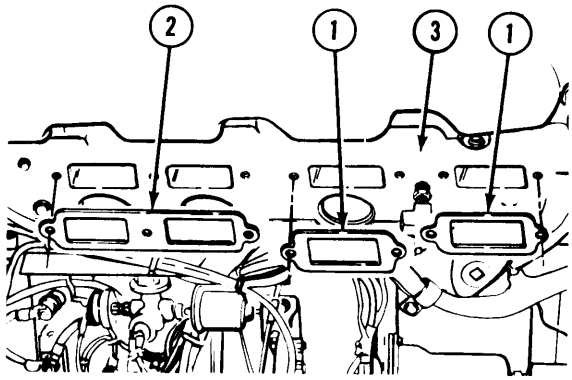

(2) Install three air box covers (4, 5, and 6) on engine block (3) with seven screws (7). Tighten screws to 96 to 144 lb-in (11 to 16 N•m).

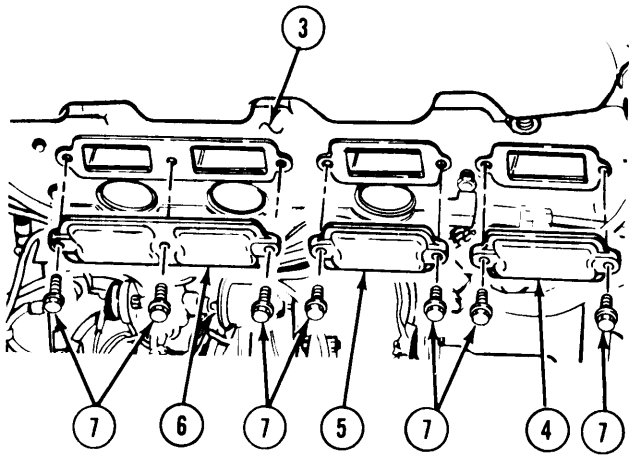

c. Follow-on Maintenance. None.

END OF TASK

https://truckmanualshub.com/

3-6. AIR BOX DRAINS REMOVAL/INSTALLATION.

This task covers:

a. Removal
b. Installation
c. Testing Air Flow
d. Follow-on Maintenance

INITIAL SETUP

Models
All

Test Equipment
Air pressure gage, O to 30 psi (O to 210 kPa)

Special Tools
None

Supplies
Compound, sealing, pipe thread, Item 32, Appendix C

Personnel Required
MOS 63W, Wheel vehicle repairer (2)

References
None

Equipment Condition

TM or Para	*Condition Description*
TM 9-2320-279-10	Engine off.
TM 9-2320-279-10	Parking brake on.
TM 9-2320-279-10	Spare tire removed.
TM 9-2320-279-20	Batteries disconnected. Engine cool.

Special Environmental Conditions
None

General Safety Instructions
None

Level *of Maintenance*
Direct Support

a. Removal.

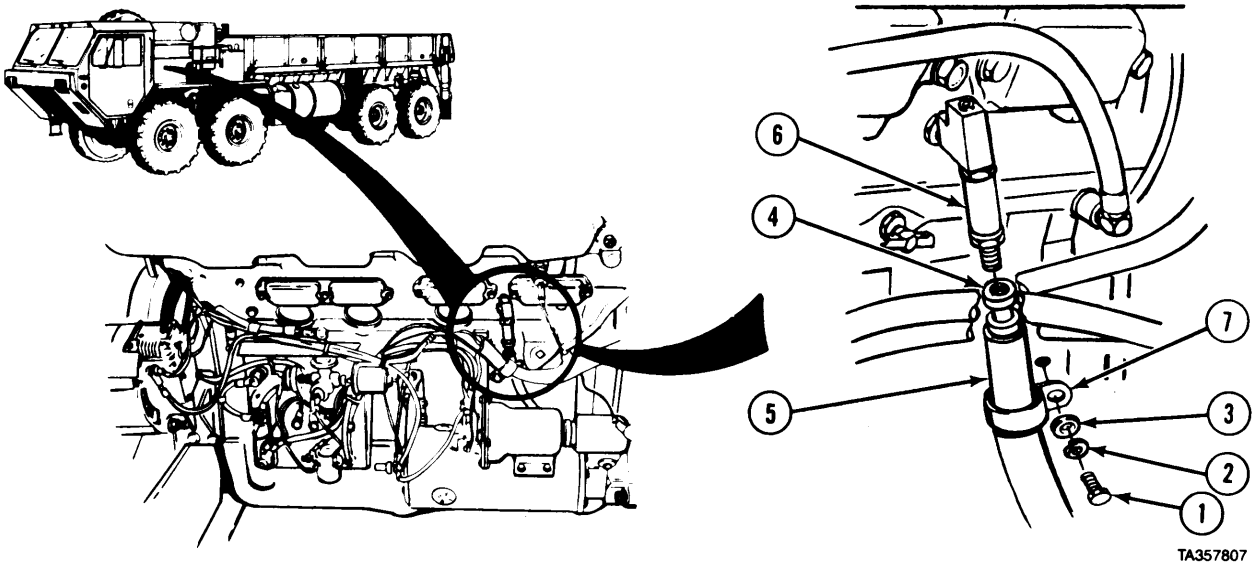

NOTE

Right and left air box drains are removed the same way.

(1) Remove screw (l), and lockwasher (2), and washer (3).
(2) Remove fitting (4) and hose (5) from check valve (6).
(3) Remove clamp (7).

https://truckmanualshub.com/

3-6. AIR BOX DRAINS REMOVAL/INSTALLATION (CONT).

(4) Remove check valve (6) from tee (8).

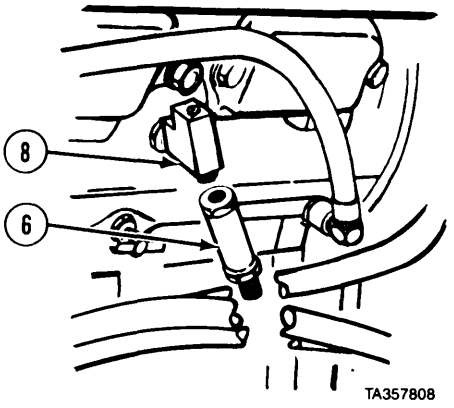

(5) Remove tee (8) and fitting (9) from engine block (10).
(6) Remove plug (1 1).

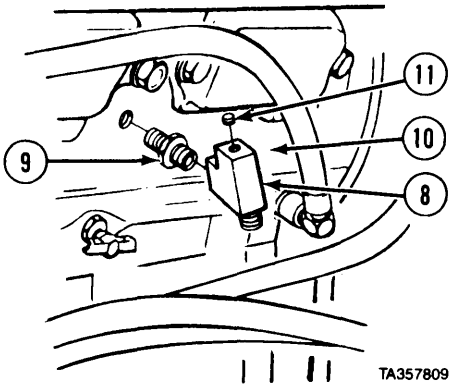

b. Installation.

WARNING

Adhesives, solvents, and sealing compounds can burn easily, can give off harmful vapors, and are harmful to skin and clothing. To avoid injury or death, keep away from open fire and use in well-ventilated area. If adhesive, solvent, or sealing compound gets on skin or clothing, wash immediately with soap and water.

NOTE

Right and left air box drains are installed the same way.

(1) Coat threads of fitting (1) with pipe thread sealant
(2) Install fitting (1) and tee (2) in engine block (3).
(3) Install plug (4).

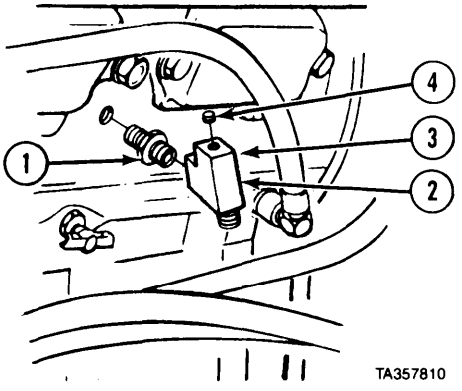

https://truckmanualshub.com/

Engine Block Maintenance Instructions (Cont)

(4) Install check valve (5) on tee (2).
(5) Install fitting (6) and hose (7) on check valve (5).
(6) Install clamp (8) with screw (9), lockwasher (10), and washer (11).

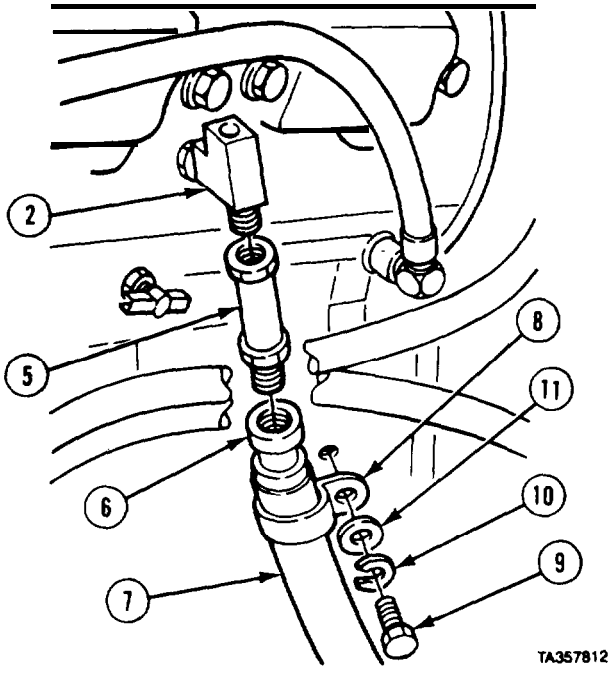

c. Testing Air Flow.

WARNING

Do not stand in front of vehicle when testing airbox pressure. Brake could release and vehicle could jump forward causing personal injury or death.

CAUTION

Do not operate vehicle with transmission engaged and at maximum rpm for more than 15 seconds at a time. Transmission oil heats up quickly and could cause transmission to fail.

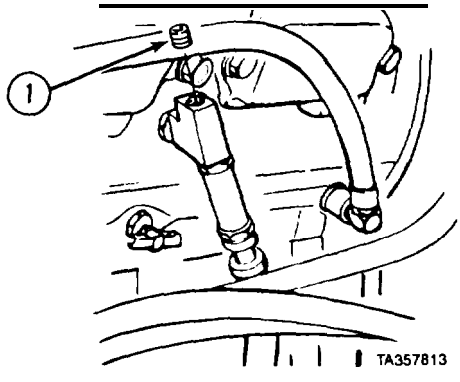

(1) Remove plug (1) and install air pressure gage.
(2) Chock wheels, set parking brake and foot brake (TM 9-2320-279-10).

NOTE

Low airbox pressure can be caused by an obstruction in the air inlet system, dirty or damaged air cleaners, damaged blower rotors, or an air leak from the airbox (such as leaking end plate gaskets). High airbox pressure reading can be caused by partially plugged cylinder liner ports.

(3) When told by Soldier A, Soldier B starts engine (TM 9-2320-279-10), warms up engine for 5 minutes, then shifts transmission into Drive (D).
(4) Check airbox pressure. Pressure shall be 9 psi (62 kPa) at 1200 rpm, 16 psi (110 kPa) at 1800 rpm and 20 psi (138 kPa) at 1950 psi.

d. Follow-on Maintenance.
(1) Stow spare tire (TM 9-2320-279-10).
(2) Connect batteries (TM 9-2320-279-20).

END OF TASK

https://truckmanualshub.com/

Section III. CYLINDER HEAD ASSEMBLY

Cylinder Head Maintenance Instructions

3-7. CYLINDER HEAD REMOVAL/INSTALLATION

This task covers:

a. Removal
b. Cleaning and Inspection
c. Installation
d. Follow-on Maintenance

INITIAL SETUP

Models
All

Test Equipment
None

Special Tools
Stud, guide, cylinder head J24748-1
Fixture, lifting J22062-01
Wrench, fuel line J8932-01

Supplies
Compound, International, No. 2, Item 26, Appendix C
Connector, electrical, butt, Item 34, Appendix C
Solvent, drycleaning, Item 60, Appendix C

Personnel Required
MOS 63W, Wheel vehicle repairer (2)

Referernces
None

Equipment Condition

TM or Para	*Condition Description*
TM 9-2320-279-10	Engine off,
TM 9-2320-279-10	Engine cover open.
TM 9-2320-279-20	Batteries disconnected.

Equipment Condition (cont)

TM or Para	*Condition Description*
TM 9-2320-279-20	Engine cooling system drained.
TM 9-2320-279-10	Spare tire removed.
TM 9-2320-279-20	Muffler exhaust pipe removed.
TM 9-2320-279-20	Air cleaner air hoses removed.
TM 9-2320-279-20	Thermostat hoses removed.
TM 9-2320-279-20	Thermostat housing removed.
TM 9-2320-279-20	Rocker cover removed.
Para 15-4	Governor cover removed.
Para 9-2	Exhaust manifold removed.
Para 12-5	Injector control tube removed.

Special Environmental Conditions
None

General Safety Instructions
None

Level of Maintenance
Direct Support

https://truckmanualshub.com/

Cylinder Head Maintenance Instructions

a. Removal.

NOTE

Left and right banks are different. Left bank has three screws. Right bank has only two screws. Bracket shown being removed from left bank.

(1) Remove two screws (1), lockwashers (2), and washers (3).

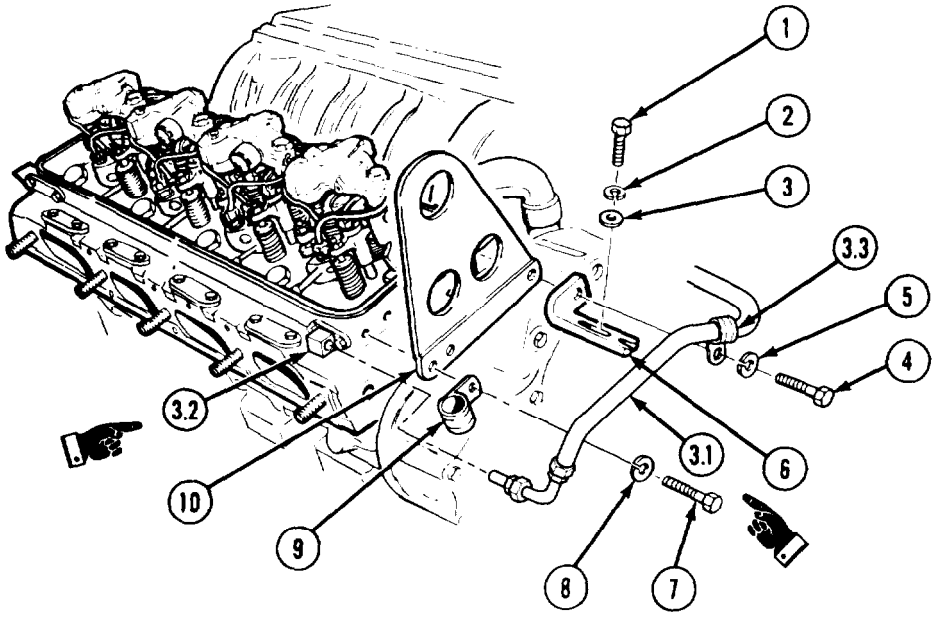

NOTE

Some engines have a fuel modulator air supply hose on the left bank. For engines with fuel modulator air supply hose, perform steps *(1.1)* and (2.2). For engines without fuel modulator or for right bank, perform step (2).

(1.1) Disconnect hose (3.1) from elbow (3.2).

(1.2) Remove screw (4), lockwasher (5), hose (3.1), clamp (3.3), and bracket (6).

(2) Remove screw (4), lockwasher (5), and bracket (6).

(3) Remove two screws (7), lockwashers (8), and hose clamp (9).

(4) Remove engine lifting bracket (10).

(5) Remove two screws (11) and washers (12) from crossover tube (13) at rear of engine (14).

NOTE

- Tag wire before cutting or disconnecting.
- Some brake retarder wires must be cut at butt connector. Others can be disconnected and do not need to be cut.

(6) Disconnect brake retarder wire (15) from cylinder head (31) or cut wire at butt connector.

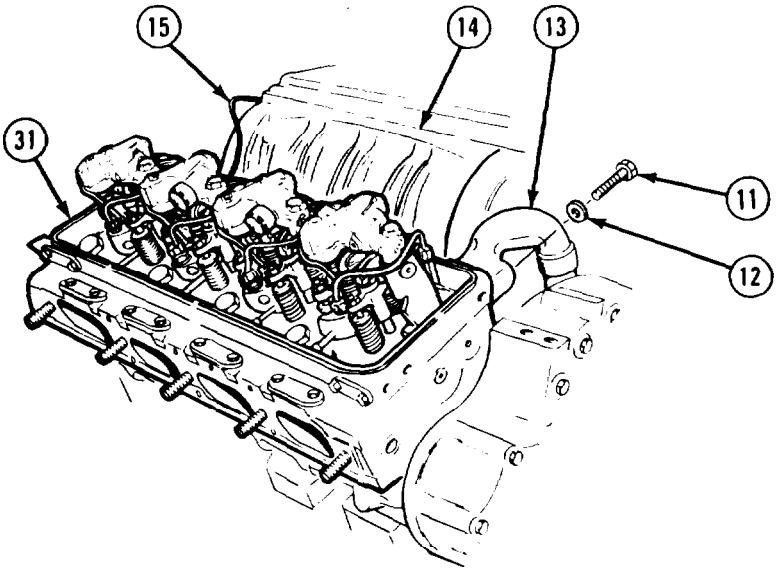

https://truckmanualshub.com/

Cylinder Head Maintanance Instructions (Cont)

3-7. CYLINDER HEAD REMOVAL/INSTALLATION (CONT).

(7) Loosen two hose clamps (16) and slide hose (17) up to clear cover tube (18).

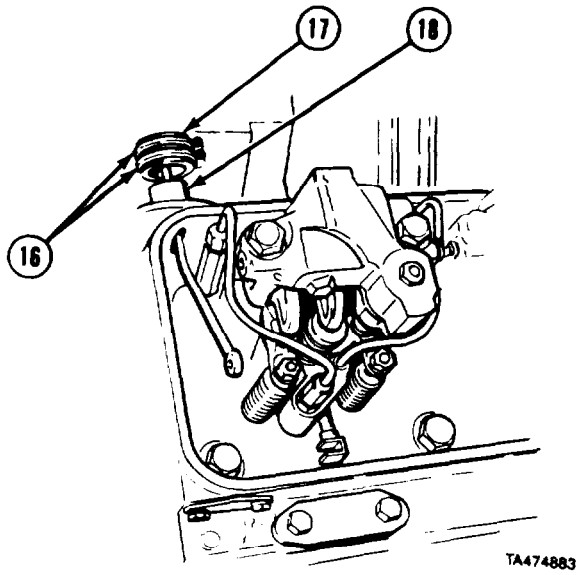

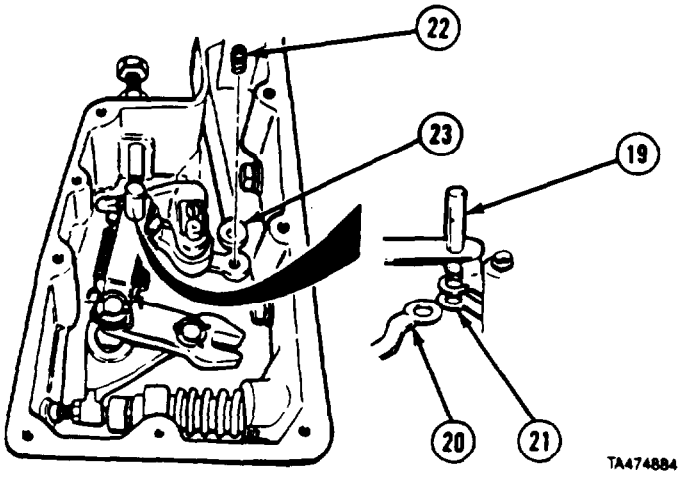

NOTE

Fuel rod is removed through cylinder head. Left and right bank fuel rods are removed differently. Step *(8)* covers left bank and step *(9)* covers right bank.

(8) Lift connecting pin (19) 3/4-in. (19 mm) and remove left bank fuel rod (20) from control link operating lever (21).

(9) Remove screw (22) and right bank fuel rod (23) from control link operating lever (21).

https://truckmanualshub.com/

Cylinder Head Maintenance Instructions

NOTE

Fuel pipes have changed from flare style to preformed packing style pipes and connectors. Use new style pipes and connectors to replace old style pipes and connectors. Refer to TM 9-2320-279-24P for parts identification.

Flare and preformed packing style pipes and connectors are not interchangeable. When replacing one flare type pipe or connector, all pipes and connectors must be replaced with new preformed packing style pipes and connectors.

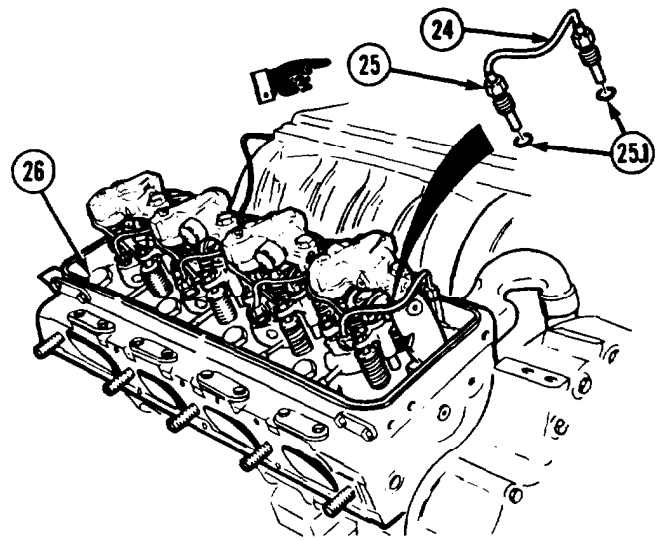

Tag eight fuel tubes (24), loosen sixteen fuel tube nuts (25), and remove eight fuel tubes.

(10.1) Remove and discard sixteen preformed packings (25.1).

NOTE

Checking tightness of cylinder head screws may show cause of cylinder head failure.

(11) Check and record tightness on 10 cylinder head screws (26). Tightness must be between 260 to 270 lb-ft (353 to 366 N•m).

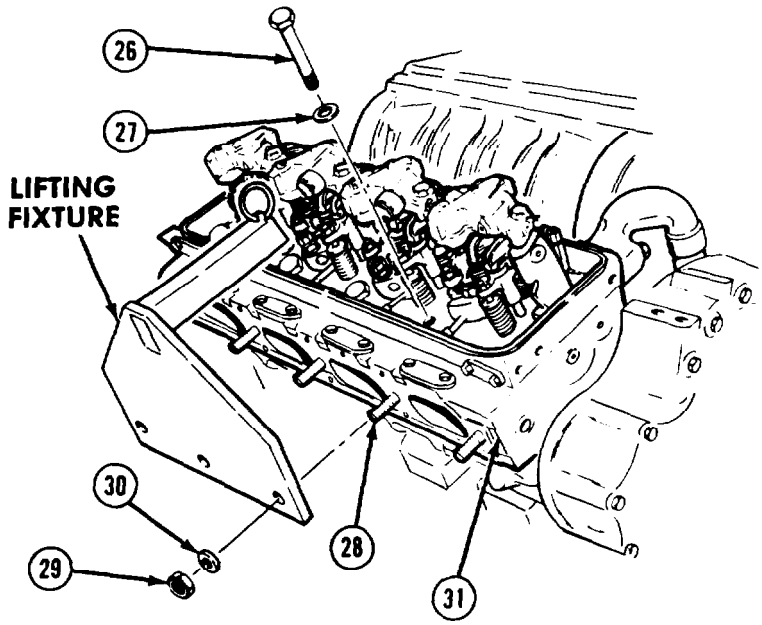

NOTE

Leave in two screws at top right and left of head.

(12) Remove eight screws (26) and washers (27).
(13) Install lifting fixture over three studs (28).
(14) Secure with three nuts (29) and washers (30).
(15) Remove two screws (26) and washers (27).
(16) Using a suitable lifting device lift cylinder head (31).

https://truckmanualshub.com/

3-7. CYLINDER HEAD REMOVAL/INSTALLATION (CONT).

NOTE

Compression gaskets are color coded. Be sure to note color for replacement.

(17) Remove seal strip gasket (32), two support shims (33), seventeen water seals (34), oil seal (35), and four compression gaskets (36).

(18) Remove gasket (37) from crossover tube (13).

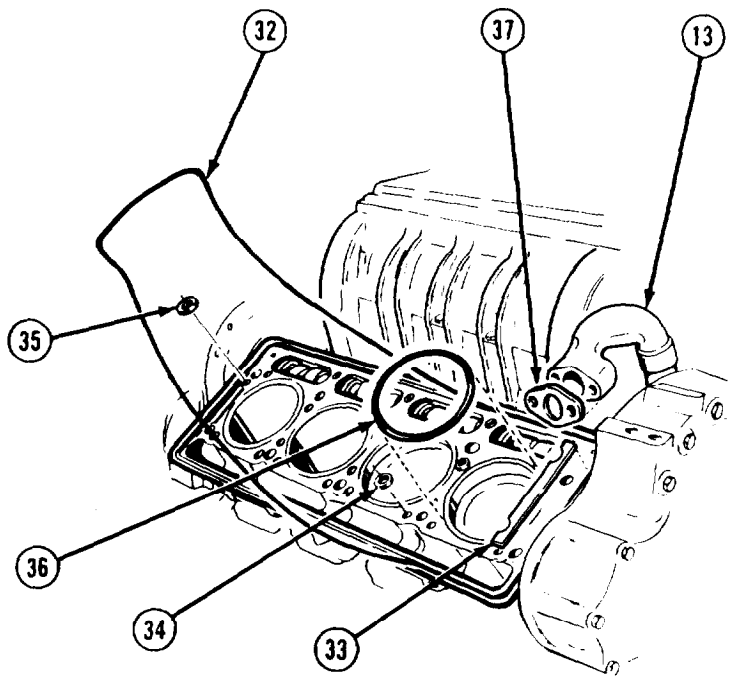

b. Cleaning and Inspection.

WARNING

Adhesives, solvents, and sealing compounds can burn easily, can give off harmful vapors and are harmful to skin and clothing. To avoid injury or death, keep away from open fire and use in well-ventilated area. If adhesive, solvent, or sealing compound gets on skin or clothing, wash immediately with soap and water.

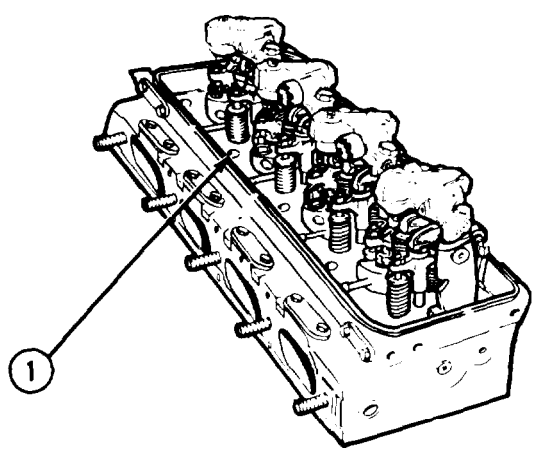

(1) Clean cylinder head (1) with drycleaning solvent.

WARNING

Compressed air used for cleaning purposes will not exceed 30 psi. Use only with effective chip guarding and personal protective equipment (goggles/shield, gloves, etc.)

(2) Dry cylinder head (1) with compressed air.

(3) Inspect cylinder head mounting surface to be sure it is clean and free from burrs.

https://truckmanualshub.com/

Cylinder Head Maintenance Instructions (Cont)

(4) Inspect push rod ends (2) to be sure they are threaded into clevis (3) until end of push rod projects through clevis.
(5) Clean cylinder block head gasket surface with dry cleaning solvent.
(6) Dry cylinder block head gasket surface with compressed air.

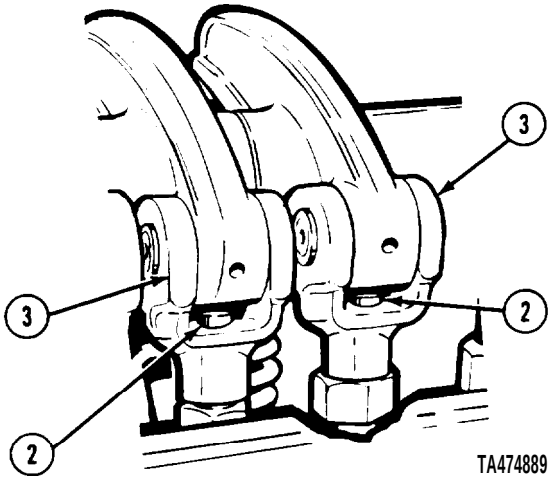

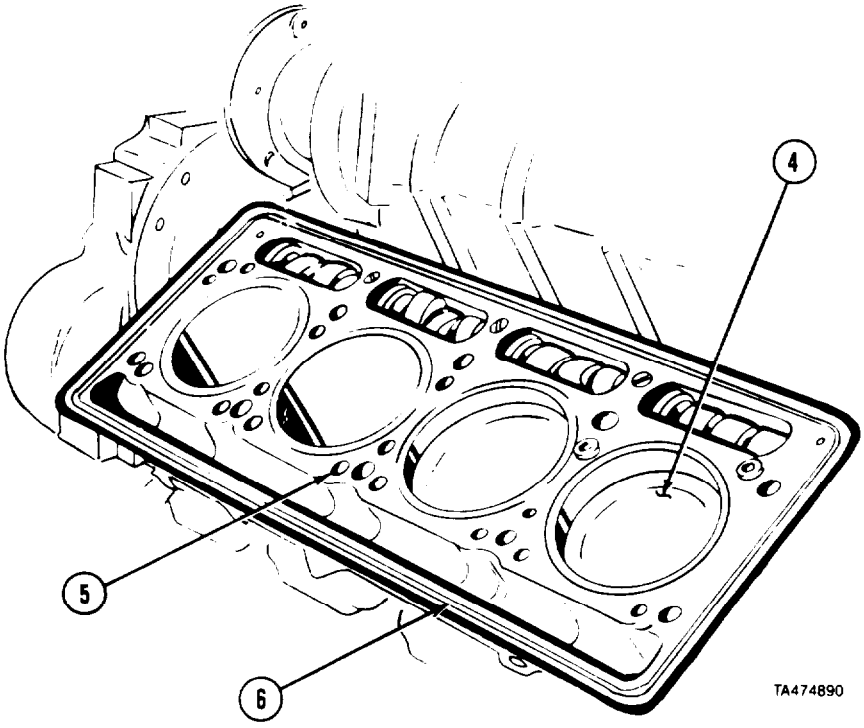

(7) Inspect piston crowns (1) to he sure they are clean and free of foreign material.
(8) Inspect head gasket surface, counterbores (5). and seal grooves (6) to be sure they are clean and free of foreign material.
(9) Inspect counterbores (5) for burrs or sharp edges.
(10) Inspect screw holes for accumulation of water or foreign material.

https://truckmanualshub.com/

3-7. CYLINDER HEAD REMOVAL/INSTALLATION (CONT).

c. Installation.

CAUTION

Never install used compression gaskets; they will cause compression leaks.

(1) Install four compression gaskets (1), seventeen water seals (2), oil seal (3), and seal strip gasket (4).

(2) Remove paper covering from back of two support shims (5) and install glued side down.

(3) Install two cylinder head guide studs into two bottom corners of cylinder block (6).

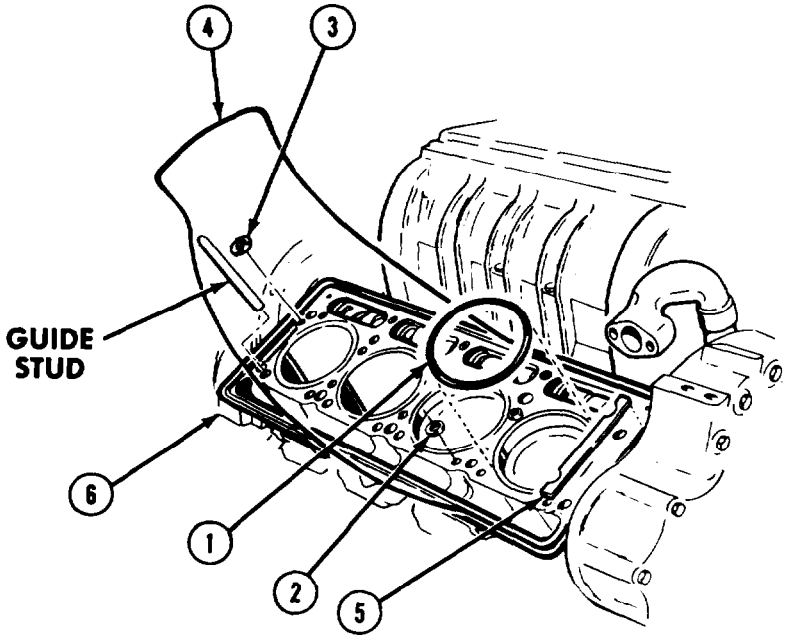

(4) Soldier A alines cylinder head (7) with guide studs while Soldier B operates suitable lifting device.

(5) Lower cylinder head (7) on cylinder block (6).

(6) Remove three nuts (8), washers (9), and lifting fixture from studs (10).

(6.1) Apply international compound No. 2 to threads and under heads of ten cylinder head screws (11).

(7) Install eight cylinder head screws (11) and washers (12). Remove two guide studs and install two remaining cylinder head screws and washers.

(7.1) Tighten ten cylinder head screws (11) in the sequence shown until cylinder head (7) is seated on the compression gaskets (1) and is parallel to the cylinder block (6) face.

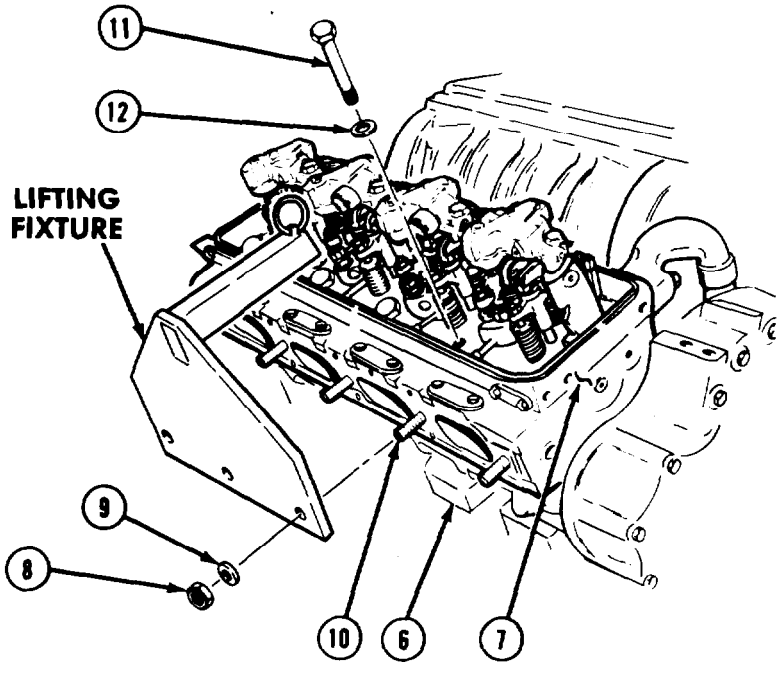

https://truckmanualshub.com/

Cylinder Head Maintenance Instructions

(8) Gradually tighten ten cylinder head screws (11), in 50 lb-ft (68 N•m) increments, to 150 lb-ft (204 N•m) in the sequence shown. Hold the wrench at this torque for 2 to 3 seconds to allow bolts to turn while the compression seals yield to their crushed thickness.

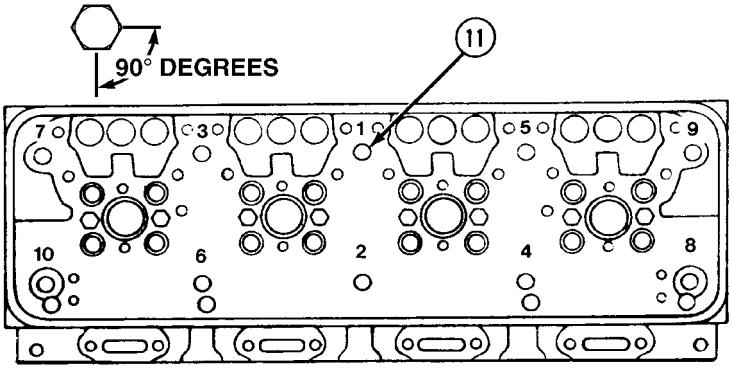

CAUTION

While performing step *(8.1)* do not loosen more than one bolt at a time. Failure to comply may cause damage to equipment.

NOTE

For ease in carrying out the procedure below, it may be convenient to premark a socket with four marks 90 degrees apart. At the start of each turn, mark the head with a grease pencil at one mark on the socket and turn to the next mark.

(8.1) After completing step *(8)* perform the following in the same sequence, beginning with cylinder head screw #1 and continuing one cylinder head screw at a time. Back off cylinder head screw until loose (at least one-half turn.) Retighten to 100 lb-ft (136 N•m), plus a turn of an additional 90 degrees. Try to turn the cylinder head screw in a single arc with one pull of the wrench. Then proceed with cylinder head screw #2, etc.

NOTE

O-rings must be installed dry. Do not apply oil.

(9) Install eight fuel tubes (13 and 14) and sixteen O-rings (14.1).

(10) Tighten 16 nuts (15) to 160 lb-in (18.1 N•m) using fuel line nut wrench.

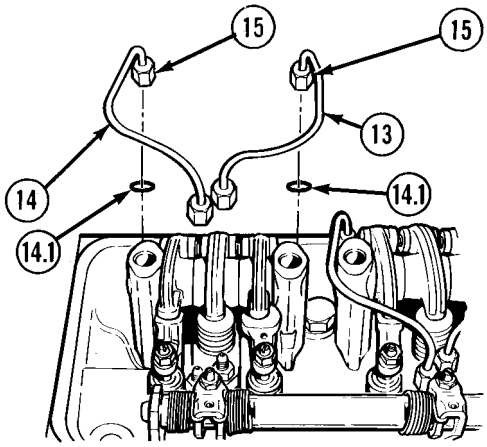

NOTE

- Fuel rod is installed through cylinder head.
- Left and right bank fuel rods are installed differently. Step *(11)* covers installation of left bank; step *(12)* covers installation of right bank.

(11) Lift connecting pin (16) 3/4-in. (19 mm). Install left bank fuel rod (17) to control link operating lever (18).

(12) Install right bank fuel rod (19) to control link operating lever (18). Install screw (20).

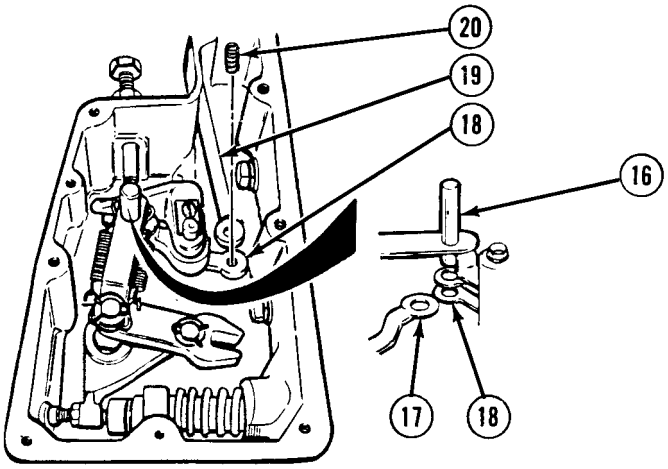

https://truckmanualshub.com/

Cylinder Head Maintenance Instructions (Cont)

3-7. CYLINDER HEAD REMOVAL/INSTALLATION (CONT).

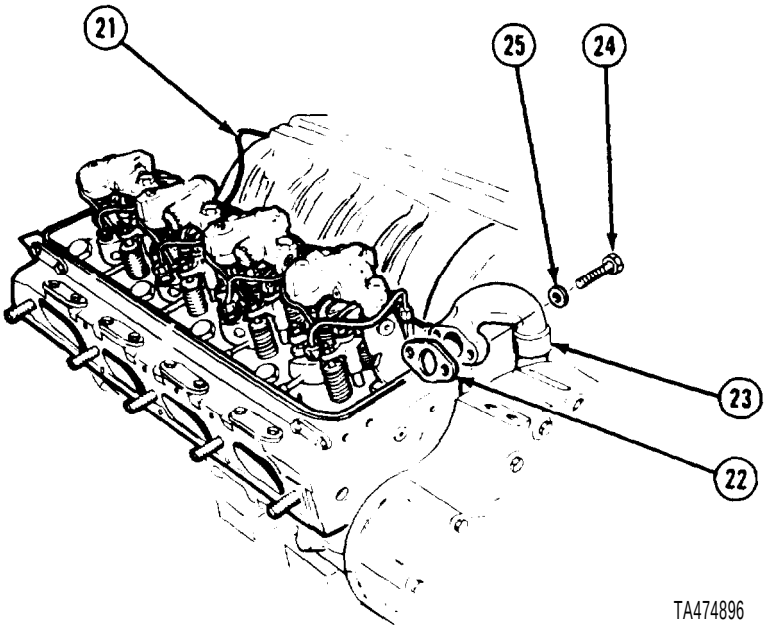

(13) Connect brake retarder wire (21) to cut wire end with butt connector.
(14) Install gasket (22) and crossover tube (23) with two screws (24) and washers (25).

(15) Slide hose (26) into position over cover tube (27). Tighten two clamps (28).

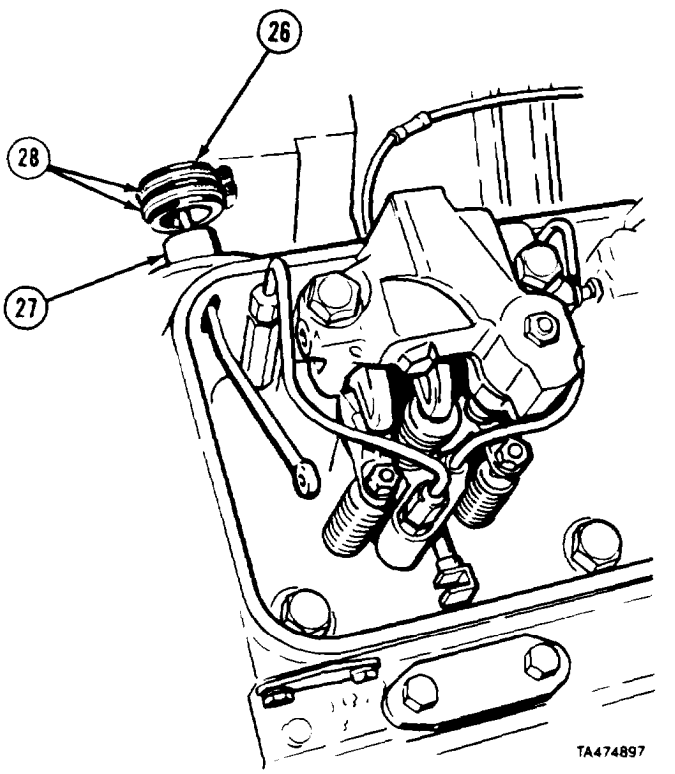

https://truckmanualshub.com/

Cylinder Head Maintenance Instructions

(16) Install engine lifting bracket (29).

NOTE

Left and right banks are different. Left bank has three screws. Right bank has only two screws. Bracket shown being installed on left bank.

(17) Install two screws (30), lockwashers (31), and hose clamp (32). Tighten screws to 20 to 25 lb-ft (27 to 34 N•m).

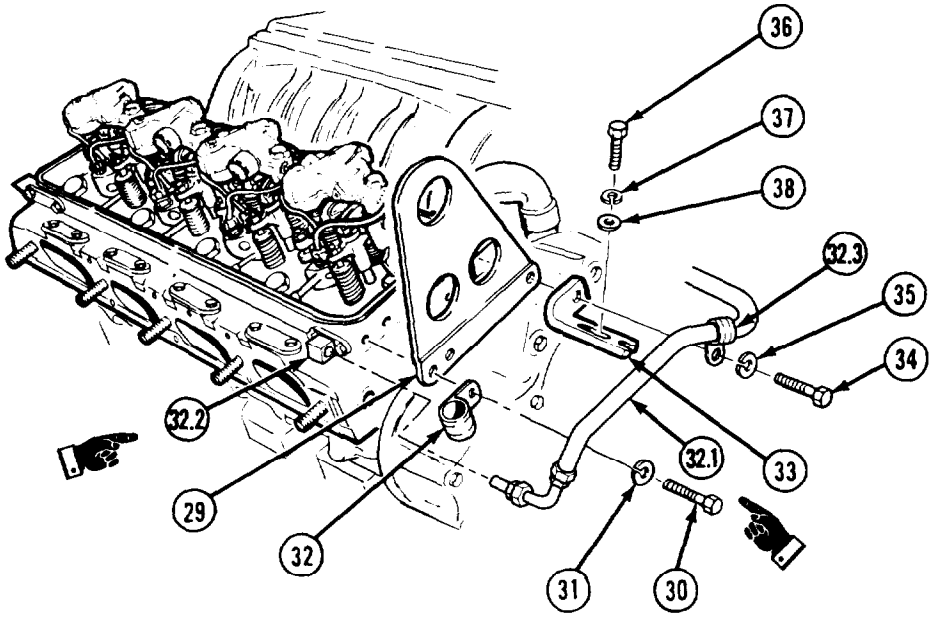

NOTE

Some engines have a fuel modulator air supply hose on the left bank. For engines with fuel modulator air supply hose, perform steps *(17.1)* and *(17.2).* For engines without fuel modulator or for right bank, perform step *(18).*

(17.1) Connect hose (32.1) to elbow (32.2).
(17.2) Install hose (32.1), clamp (32.3), bracket (33), lockwasher (35), and screw (34).
(18) Install bracket (33), screw (34), and lockwasher (35).
(19) Install two screws (36), lockwashers (37), and washers (38). Tighten screws to 20 to 25 lbs-ft (27 to 34 N•m).

d. Follow-on Maintenance.

(1) Install injector control tube (para 12-5).
(2) Install exhaust manifold (para 9-2).
(3) Install governor cover (para 15-4).
(4) Install rocker cover (TM 9-2320-279-20).
(5) Install thermostat housing (TM 9-2320-279-20).
(6) Install thermostat hoses (TM 9-2320-279-20).
(7) Install air cleaner air hoses (TM 9-2320-279-20).
(8) Install muffler exhaust pipe (TM 9-2320-279-20).
(9) Stow spare tire (TM 9-2320-279-10).
(10) Fill engine cooling system (TM 9-2320-279-20).
(11) Connect batteries (TM 9-2320-279-20).
(12) Close engine cover (TM 9-2320-279-10).

END OF TASK

https://truckmanualshub.com/

Cylinder Head Maintenance Instructions

3-8. CYLINDER HEAD REPAIR.

This task covers:

a. Disassembly
b. Cleaning/Inspection
c. Testing
d. Assembly
e. Follow-on Maintenance

INITIAL SETUP

Models
All

Test Equipment
None

Special Tools
Fixture, test, head J28454

Supplies
Solvent, drycleaning, Item 60, Appendix C
Compound, sealing, pipe thread, Item 32, Appendix C

Personnel Required
MOS 63W, Wheel vehicle repairer

References
None

Equipment Condition

TM or Para	*Condition Description*
	Cylinder head on clean work surface
Para 7-5	Rocker arms removed.
Para 7-8	Exhaust valve bridges removed.
Para 12-2	Fuel injectors removed.
Para 7-4	Exhaust valves removed.
Para 11-2	Engine brake retarders removed.
Para 7-6	Cam followers removed.
Para 15-5.1	Fuel modulator and tube removed.

Special Environmental Conditions
None

General Safety Instructions
None

Level of Maintenance
General Support

a. Disassembly.

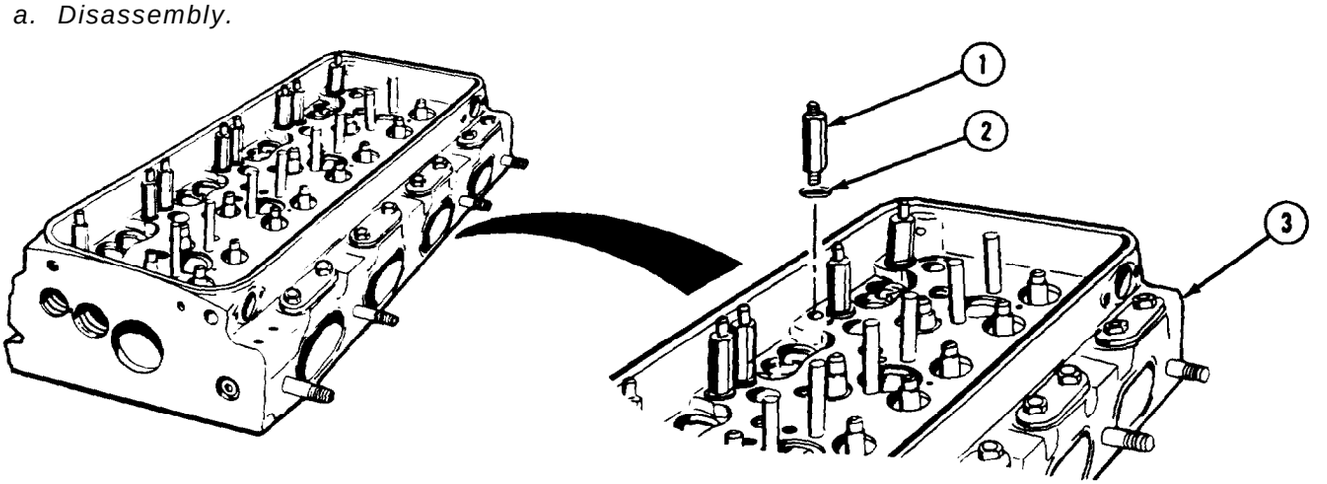

NOTE

Fuel adapters have changed to a preformed packing style adapter instead of a flared style adapter. Replace all old style flared adapters with new style preformed packing adapters as required. Refer to TM 9-2320-279-24P.

(1) Remove eight fuel adapters (1) and washers (2) from cylinder head (3).

https://truckmanualshub.com/

Cylinder Head Maintenance Instructions (Cont)

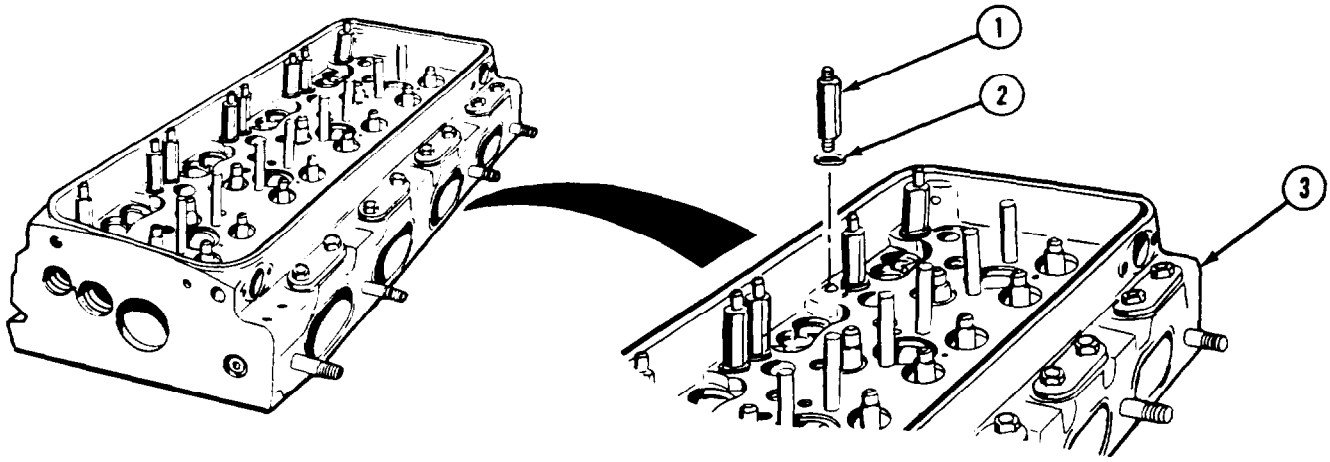

NOTE

Fuel adapters have changed to a preformed packing style adapter instead of a flared style adapter. Replace all old style flared adapters with new style preformed packing adapters as required. Refer to TM 9-2320-279-24P.

(1.3) Remove eight fuel adapters (1) and washers (2) from cylinder head (3).

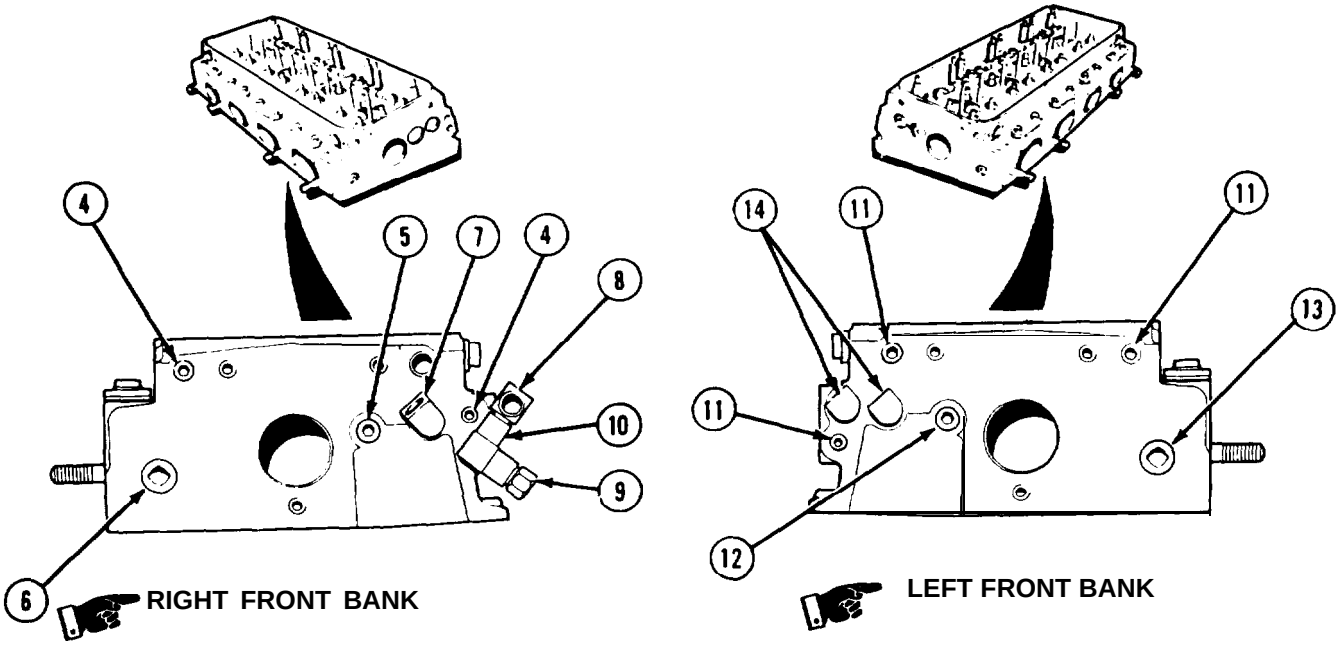

NOTE

It may be necessary to drill plugs and remove with an easy out.

(2) Remove two plugs (4), plug (5), and plug (6).
(3) Remove elbow (7), elbow (8), connector (9), and tee (10).
(4) Remove three plugs (11), plug (12), and plug (13).
(5) Remove two elbows (14).

https://truckmanualshub.com/

Cylinder Head Maintenance Instructions (Cont)

3-8. CYLINDER HEAD REPAIR (CONT).

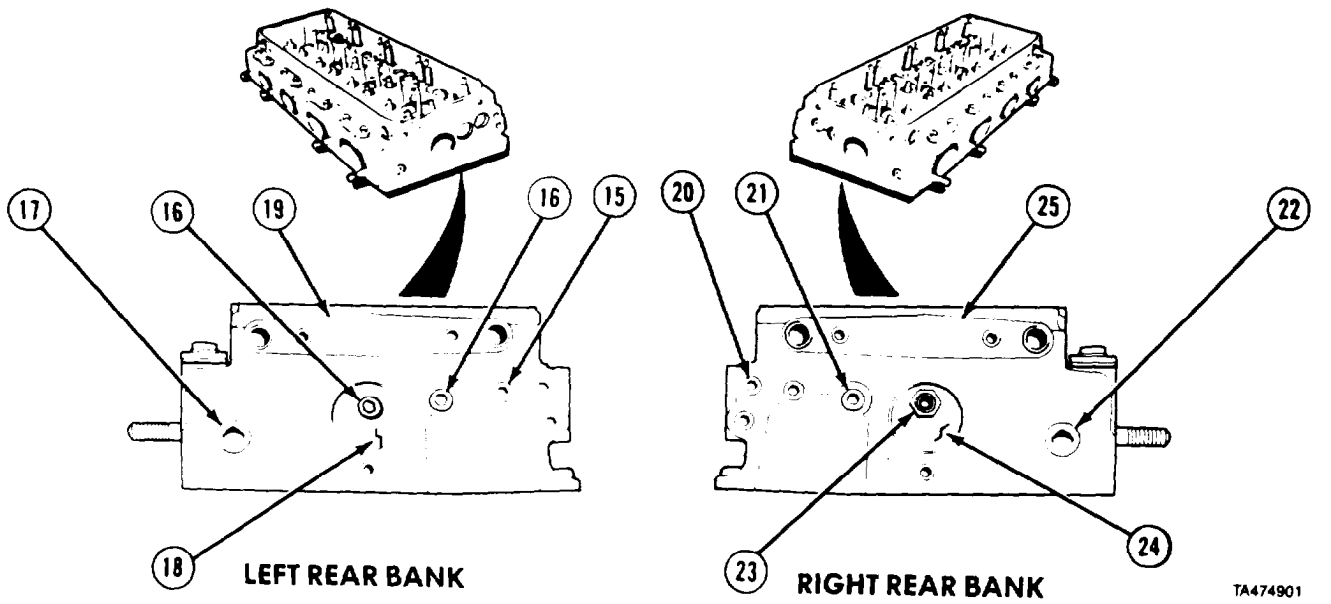

(6) Remove five plugs (15), two plugs (16), and plug (17).
(7) Remove plug (18) and gasket (19).
(8) Remove four plugs (20), plug (21), and plug (22).
(9) Remove fitting (23).
(10) Remove plug (24) and gasket (25).

(11) Remove four screws (26), lockwashers (27), two cover plates (28), and two gaskets (29) from water inlet ports (30).
(12) Remove eight screws (31), copper washers (32). four covers (33), and gaskets (34).

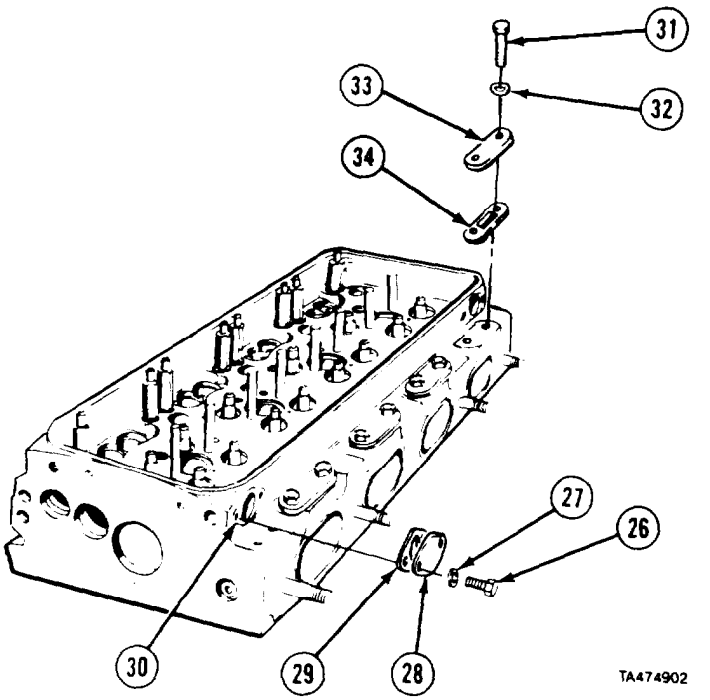

https://truckmanualshub.com/

Cylinder Head Maintenance Instructions (Cont)

(13) Remove nine pipe plugs (3.5) from cylinder head (3).

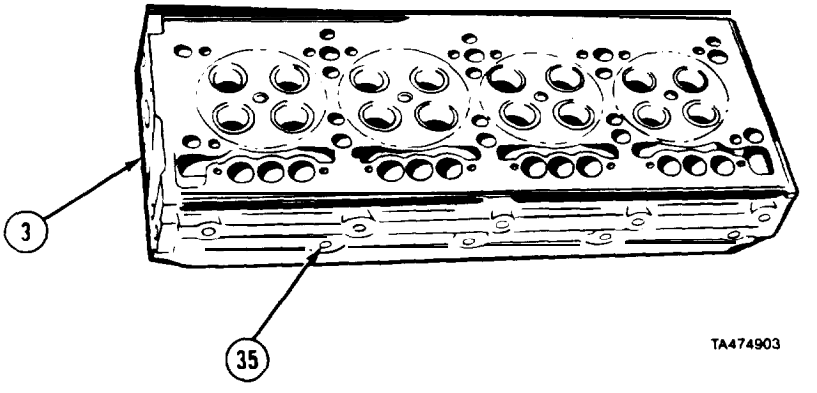

b. Cleaning/Inspection.

WARNING

Adhesives, solvents, and sealing compounds can burn easily, can give off harmful vapors, and are harmful to skin and clothing. To avoid injury or death, keep away from open fire and use in well-ventilated area. If adhesive, solvent, or sealing compound gets on skin or clothing, wash immediately with soap and water.

(1) Clean stripped cylinder head wash dry cleaning solvent.

WARNING

Compressed air used for cleaning purposes will not exceed 30 psi (207 kPa). Use only with effective chip guarding and personal protective equipment (goggles/shield, gloves, etc.).

(2) Dry cylinder head with compressed air.

(3) Aline straightedge along lines 1, 2, 3, 4, and 5 on cylinder head (1). Measure for warp with feeler gage at points where lines 6, 7, 8, 9, 10, and 11 intersect straightedge.

(4) If warp measurement exceeds 0.004-in. (0.1 mm), cylinder head (1) must be replaced.

(5) Aline straight edge along lines 6, 7, 8, 9, 10, and 11 on cylinder head (1). Measure al points where lines 1, 2, 3, 4. and 5 intersect straightedge.

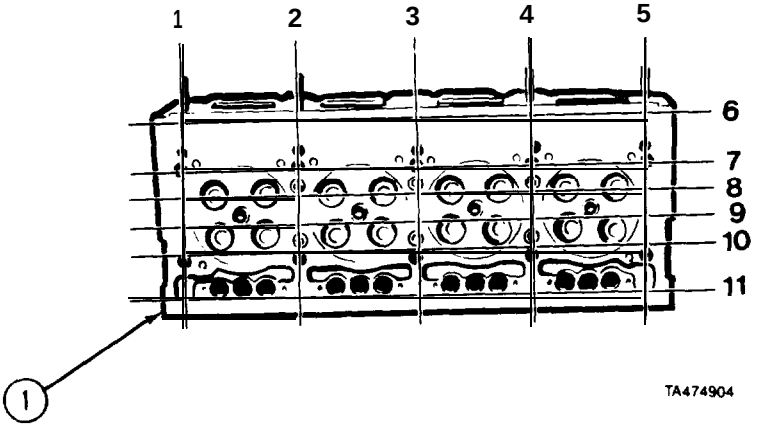

(5) If warp measurement exceeds 0.008-in. (0.2 mm), cylinder head (1) must be replaced.

https://truckmanualshub.com/

Cylinder Head Maintenance Instructions (Cont)

3-8. CYLINDER HEAD REPAIR (CONT).

c. Testing.

NOTE

The cylinder head must be pressure-tested following cylinder head repair.

(1) Using injectors removed in paragraph 12-2, install four injectors (1) into injector tubes (2).
(2) Install four gaskets (3).
(3) Install four covers (4) with eight screws (5).

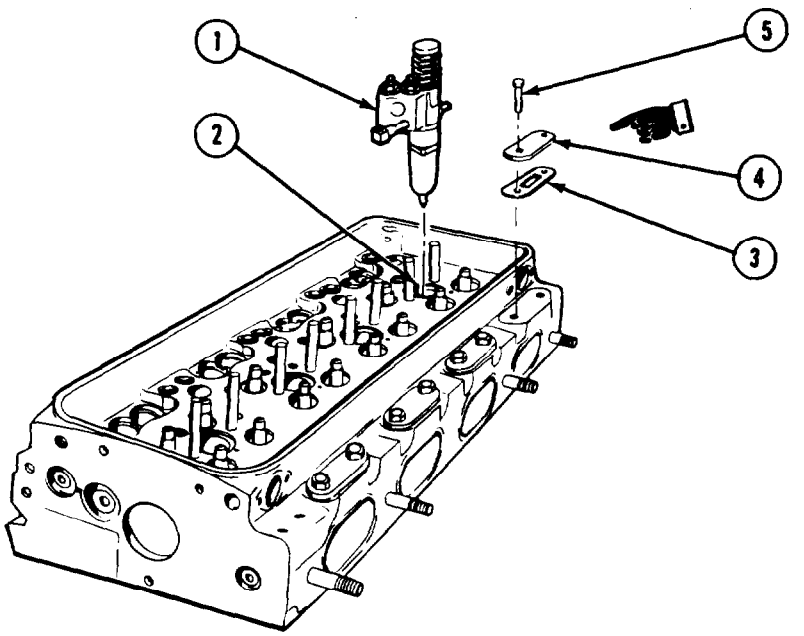

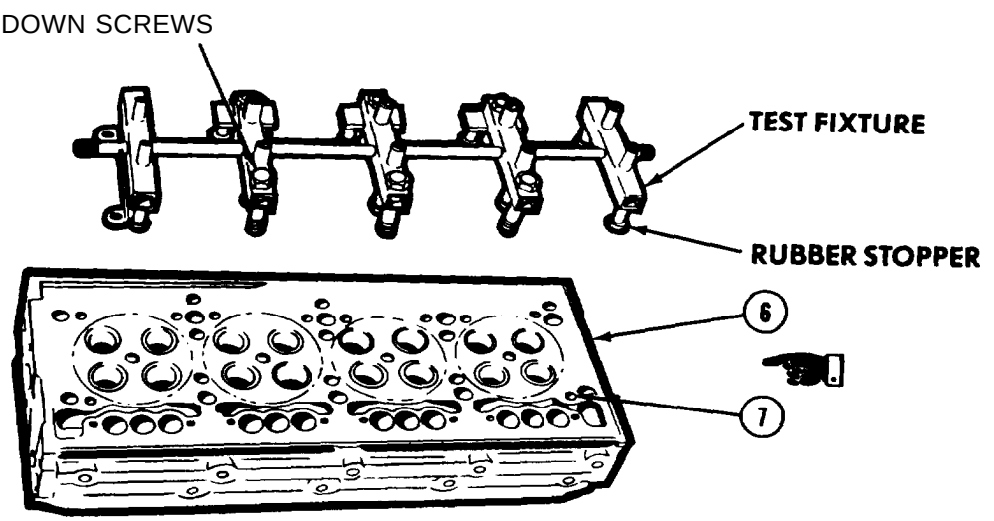

(4) Aline test fixture on top of bottom face of cylinder head (6) so rubber stoppers cover water inlets (7).
(5) Install and tighten 10 holddown screws until rubber stoppers start to flatten out.

https://truckmanualshub.com/

Cylinder Head Maintenance Instructions (Cont)

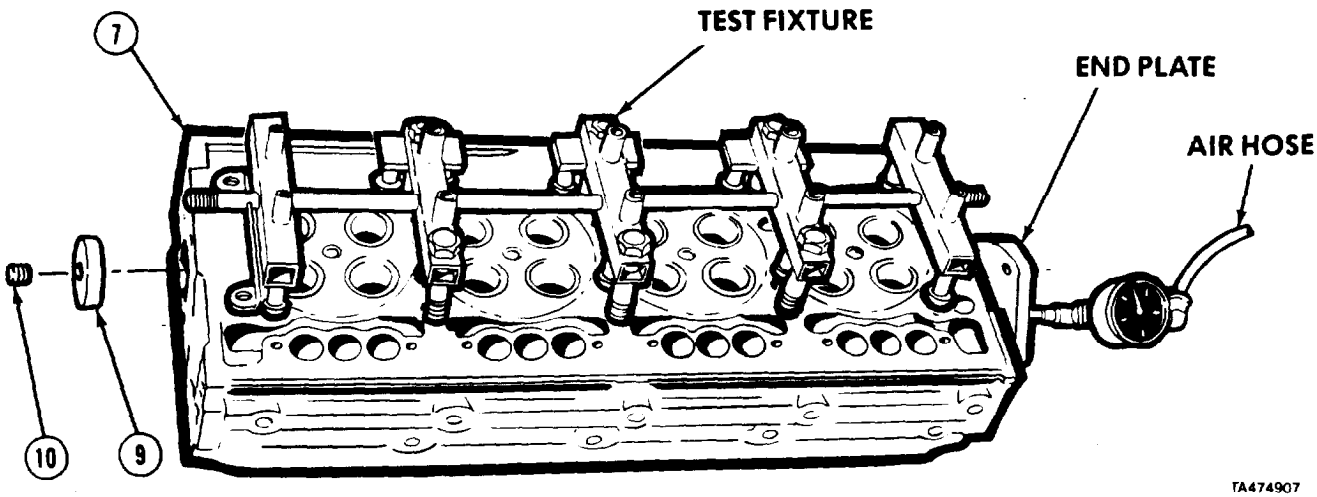

(6) Install end plate onto thermostat end of cylinder head (7).
(7) Install rear plug (9) and pipe plug (10) into rear of cylinder head (7).
(8) Install air hose to end plate and apply 40 psi (275.8 kPa) to cylinder head (7).
(9) Put cylinder head (7) in water for 20 minutes and check for leaks.
(10) If cylinder head (7) does not leak, remove from water.
(11) If leak is found in cylinder head (7), remove from water and check test assembly for proper seating. Repeat steps *(9)* and *(10).*
(12) If cylinder head (7) leaks when steps *(9)* and *(10)* are repeated, replace cylinder head.
(23) Relieve air pressure.

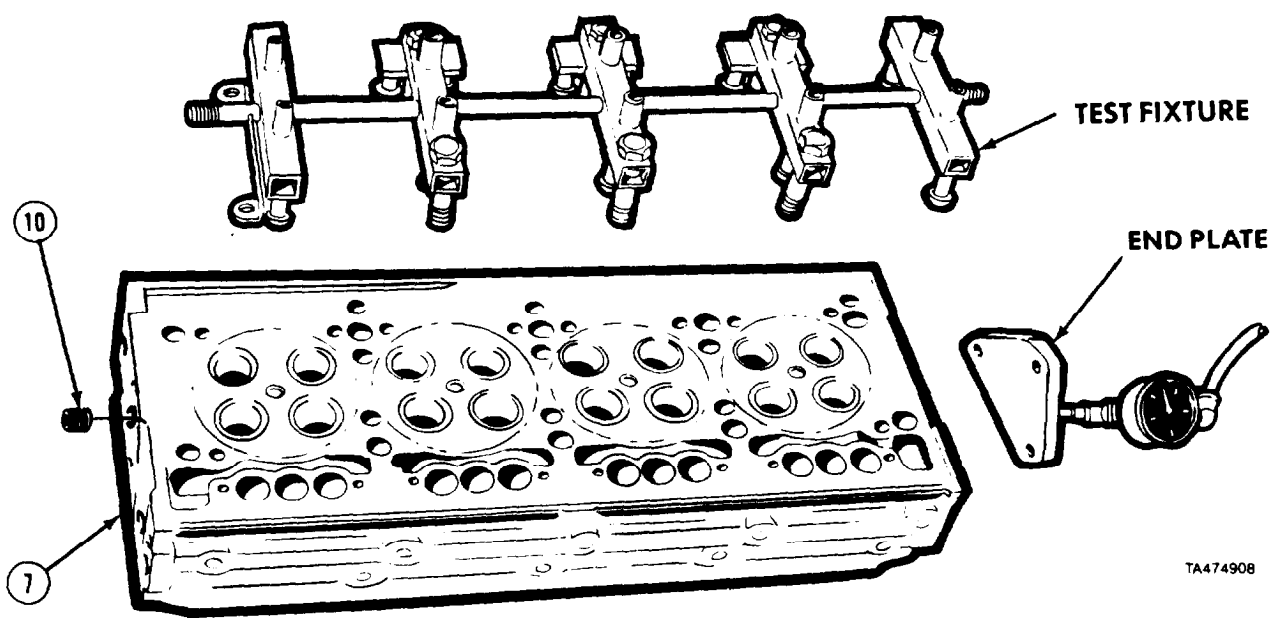

(14) Remove test fixture, pipe plug (10), and end plate from cylinder head (7).

https://truckmanualshub.com/

3-8. CYLINDER HEAD REPAIR (CONT).

(15) Remove four injectors (1) from injector holes (2).

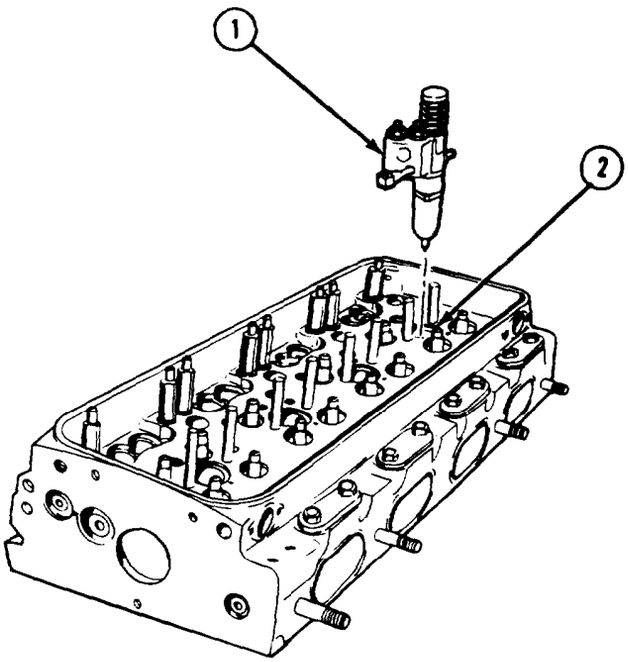

WARNING

Adhesives, solvents, and sealing compounds can burn easily, can give off harmful vapors, and are harmful to skin and clothing. To avoid injury or death, keep away from open fire and use in well-ventilated area. If adhesive, solvent, or sealing compound gets on skin or clothing, wash immediately with soap and water.

(16) Clean cylinder head with drycleaning solvent.

WARNING

Compressed air used for cleaning purposes will not exceed 30 psi (207 kPa). Use only with effective chip guarding and personal protective equipment (goggles/shield, gloves, etc.).

(17) Dry cylinder head with compressed air.

d. Assembly.

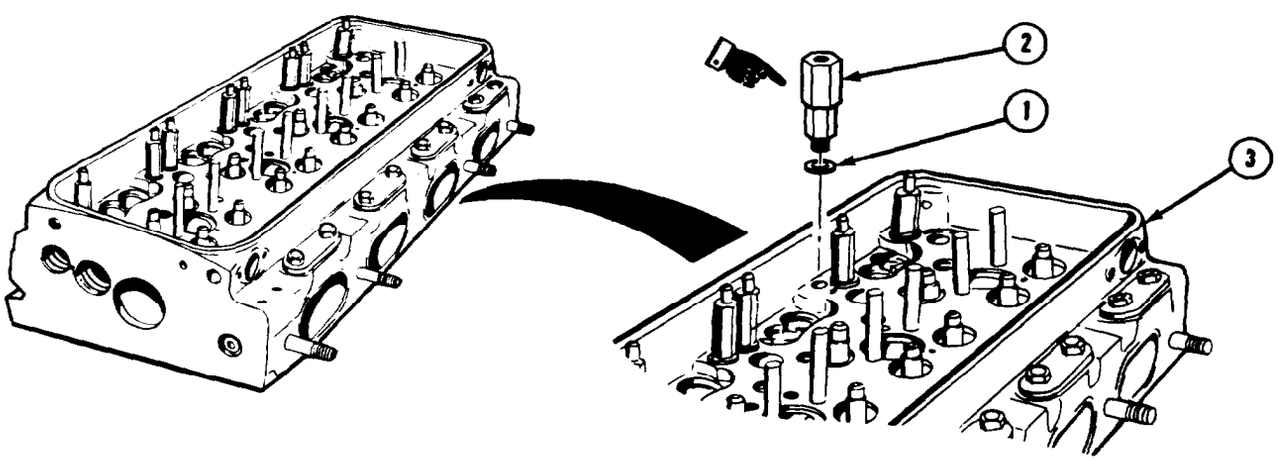

https://truckmanualshub.com/

Cylinder Head Maintenance Instructions (Cont)

WARNING

Adhesives, solvents, and sealing compound can burn easily, can give off harmful vapors, and are harmful to skin and clothing. To avoid injury or death, keep away from open fire and use in well-ventilated area. If adhesive, solvent, or sealing compound gets on skin or clothing, wash immediately with soap and water.

NOTE

Coat threads of plugs with pipe thread sealing compound before installation.

Fuel adapters have changed to a preformed packing style adapter instead of a flared style adapter. Replace all old style flared adapters with new style preformed packing adapters. Refer to TM 9-2320-279-24P.

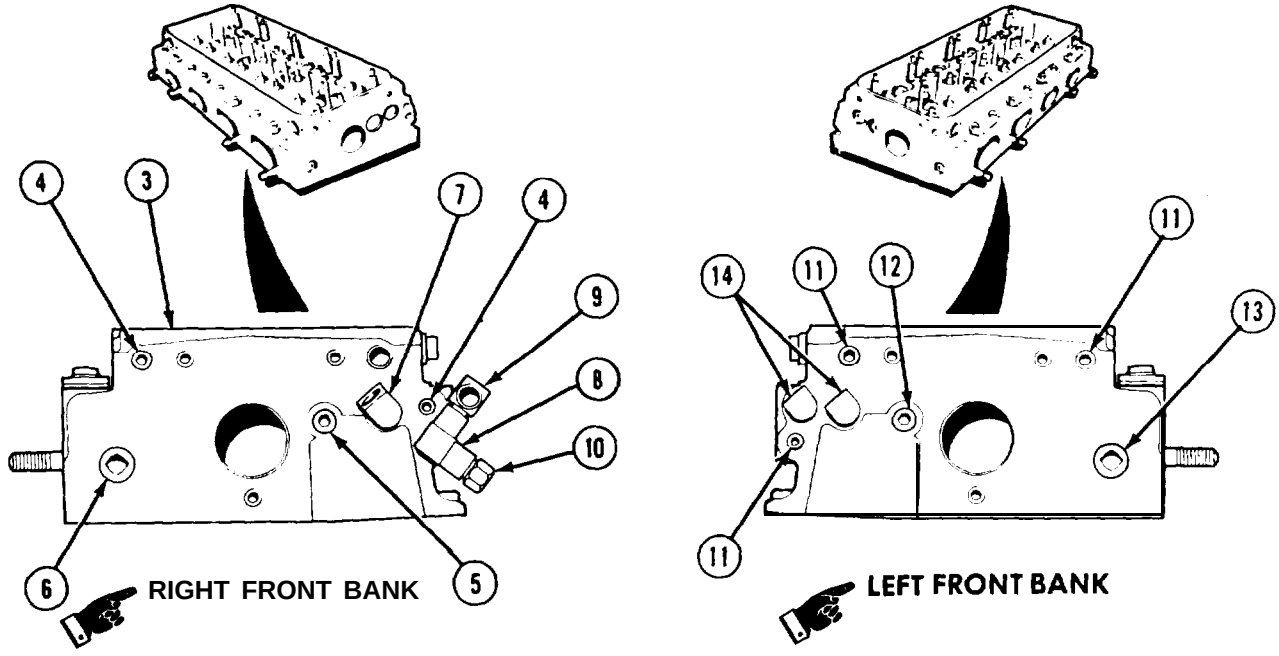

(1) Install eight washers (1) and fuel adapters (2) into cylinder head (3). Tighten adapters to 40 to 45 lb-ft (102 to 115 N•m).
(2) Install two plugs (4), plug (5), and plug (6) flush with end of cylinder head (3).
(3) Install elbow (7), elbow (8), tee (9), and connector (10).
(4) Install three plugs (11), plug (12), and plug (13).
(5) Install two elbows (14).

https://truckmanualshub.com/

Cylinder Head Maintenance Instructions (Cont)

3-8. CYLINDER HEAD REPAIR (CONT).

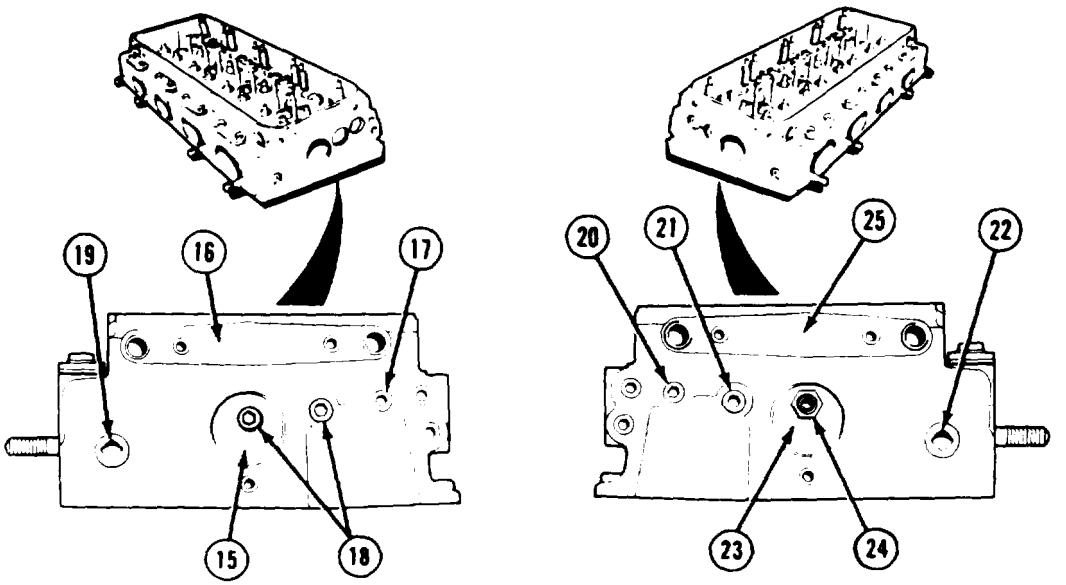

LEFT REAR BANK RIGHT REAR BANK TA474920

(6) Install plug (15) and gasket (16).
(7) Install five plugs (17), two plugs (18), and plug (19).
(8) Install four plugs (20), plug (21), and plug (22).
(9) Install plug (23), fitting (24), and gasket (25).

(10) Install two water manifold gaskets (26), two cover plates (27), four lockwashers (28), and screws (29) into water inlet ports (30).

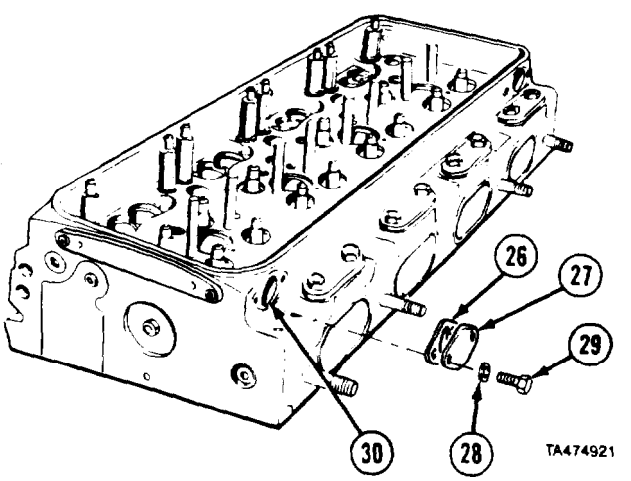

https://truckmanualshub.com/

Cylinder Head Maintenance Instructions (Cont)

(11) Install nine pipe plugs (31).

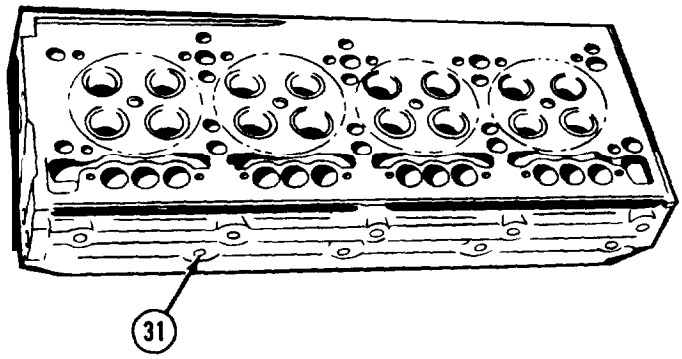

e. ***Follow-on Maintenance.***

(1) Install valves (para 7-4).
(2) Clean and test injectors (para 12-3).
(3) Install fuel injectors (para 12-2).
(4) Install exhaust valve bridges (para 7-8).
(5) Install rocker arms (para 7-5).
(6) Install engine brake retarder (para 11-2).
(7) Install cylinder head (para 3-7).
(8) Install fuel modulator, tube, and fittings (para 15-5.1).

END OF TASK

3-9. INJECTOR TUBE REMOVAL/INSTALLATION.

This task covers:

a. Removal
b. Installation
c. Follow-on Maintenance

INITIAL SETUP

Models
All

Test Equipment
None

Special Tools
Reconditioning set J22525
Gage, sled J22273
Gage, injector J25521

Supplies
Solvent, drycleaning, Item 60, Appendix C
Oil, lubricating, Item 54, Appendix C

Personnel Required
MOS 63W, Wheel vehicle repairer

References
None

Equipment Condition

TM or Para	*Condition Description*
Para 11-2	Engine brake retarder removed.
Para 7-5	Rocker arms removed.
Para 7-8	Exhaust valve bridges removed.
Para 12-2	Fuel injectors removed.
Para 7-4	Exhaust valves removed.
Para 7-6	Cam followers and push rods removed.

Special Environmental Conditions
None

General Safety Instructions
None

Level of Maintenance
General Support

https://truckmanualshub.com/

Cylinder Head Maintenance Instructions (Cont)

3-9. INJECTOR TUBE REMOVAL/INSTALLATION (CONT).

a. Removal.

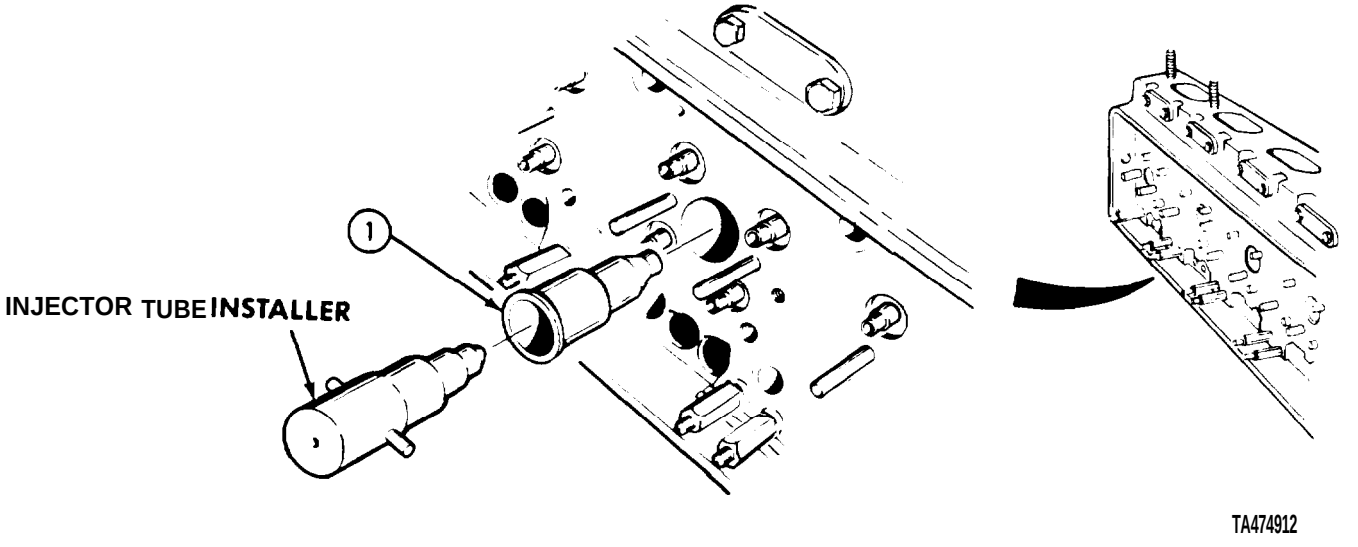

NOTE

All injector tubes are removed the same way.

(1) Insert injector tube installer into injector tube (1).

(2) Install pilot into injector tube installer through bottom of cylinder head (2).

(3) Tap pilot to loosen injector tube (1).

(4) Remove injector tube (1), preformed packing (3), pilot, and installer from cylinder head (2).

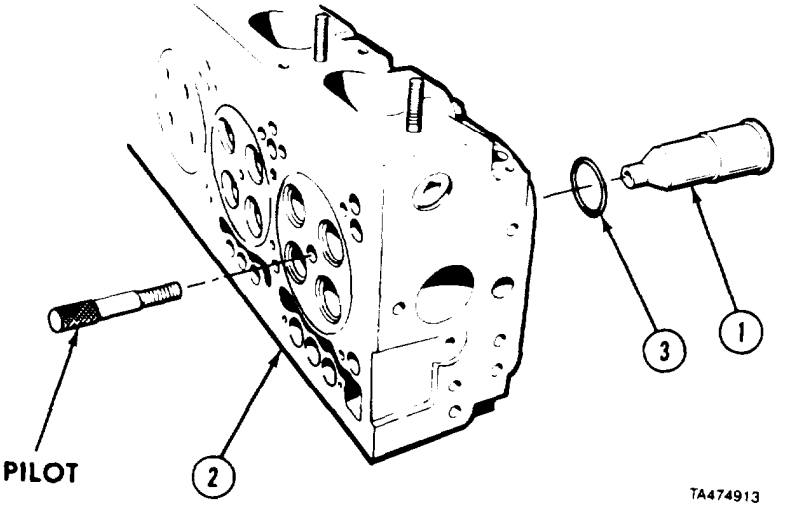

https://truckmanualshub.com/

b. Installation.

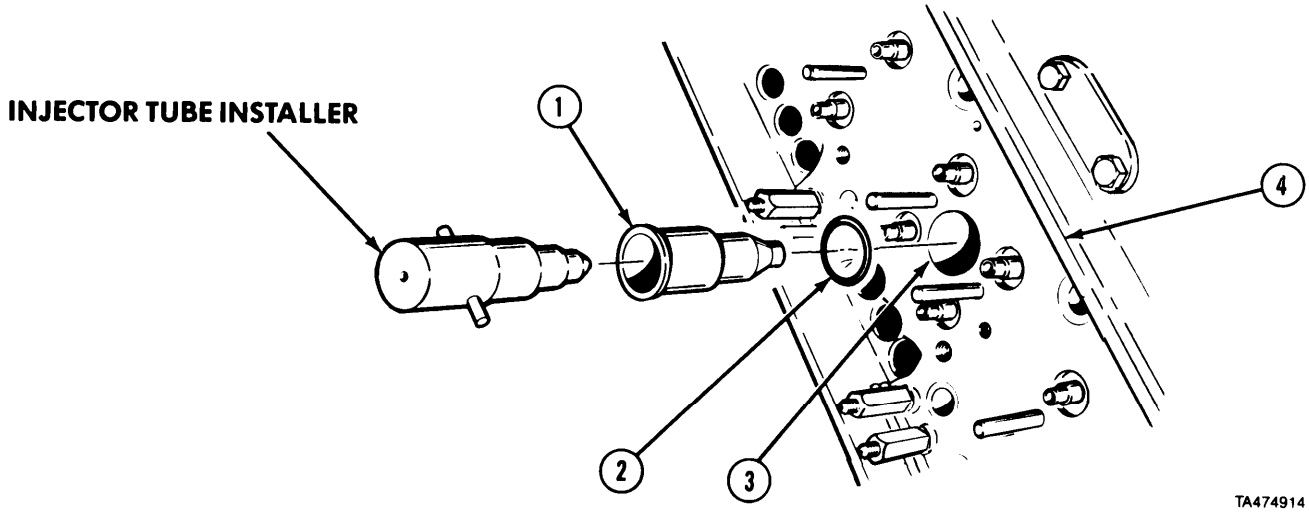

NOTE

- Injector tube must be reamed before injectors can be installed.
- All injector tubes are installed the same way.

(1) Clean dirt from injectors tube (1) and hole.
(2) Install preformed packing (2) into cylinder head counterbore (3).
(3) Tap injector tube (1) into injector tube hole using installer until bottom rim of installer is flush with cylinder head (4).

(4) Set cylinder head (4) upside down on two wood blocks.
(5) Seat injector tube (1) using upsetting die. Tighten to 30 lb-ft (40 N•m) and remove die.

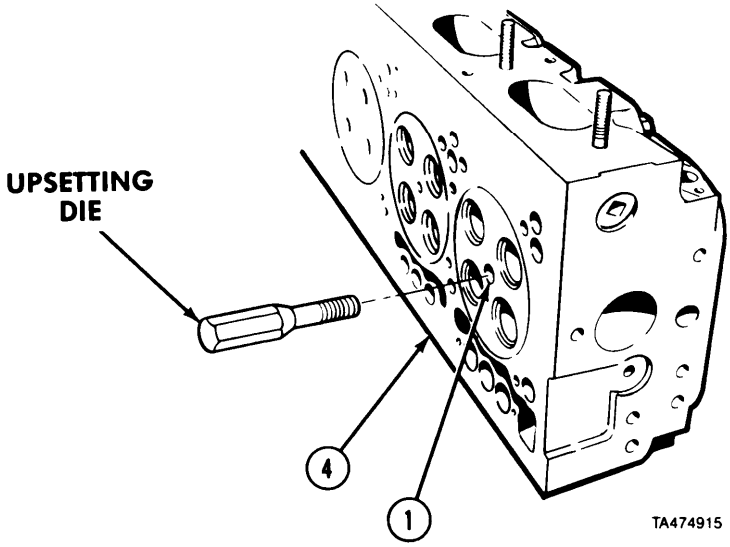

https://truckmanualshub.com/

3-9. INJECTOR TUBE REMOVAL/INSTALLATION (CONT).

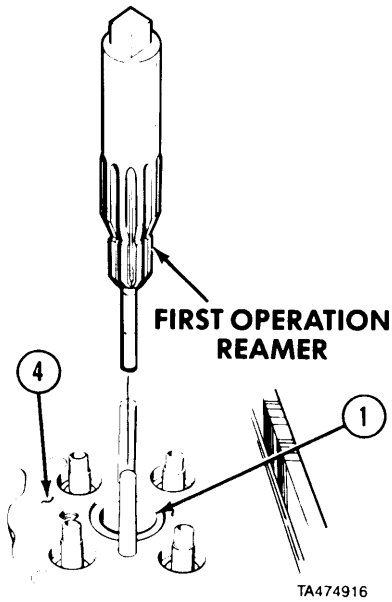

(6) Set cylinder head (4) right side up on work surface on wood blocks.

CAUTION

Turn reamer clockwise only, counterclockwise will ruin reamer and injector tube.

(7) Lubricate reamer blades with lubricating oil.
(8) Ream injector tube (1) with first operation reamer.
(9) Clean metal filings from injector tube (1).
(10)) Repeat steps (7) and (8) until shoulder of reamer touches top of injector tube (l).

(11) Set cylinder head (4) on side.
(12) Remove excess material from tip of injector tube (1) with tube tip refinisher until finisher contacts bottom of cylinder head.
(13) Clean out inside of injector tube (1).

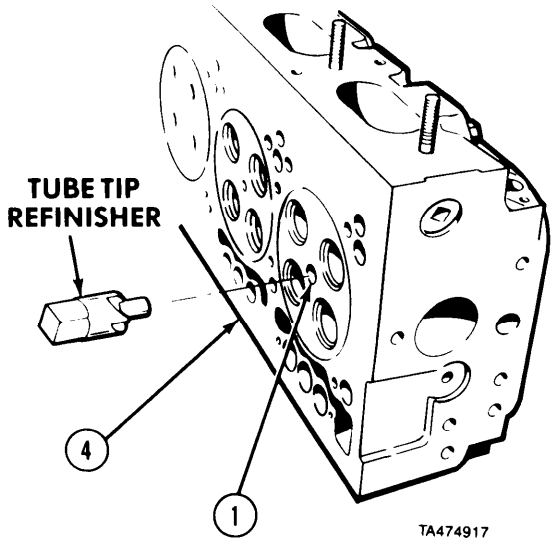

https://truckmanualshub.com/

Cylinder Head Maintenance Instructions (Cont)

(14) Measure depth of gage in injector tube (1) beneath face of cylinder head (4) using sled gage.

(15) Measurement must be 0 ± 0.014 in, (0.36 mm). If measurement is within tolerance, do steps (22) and (23). If measurement is more than 0.014 above 0 reading, replace tube (1) and do steps (16) through (21).

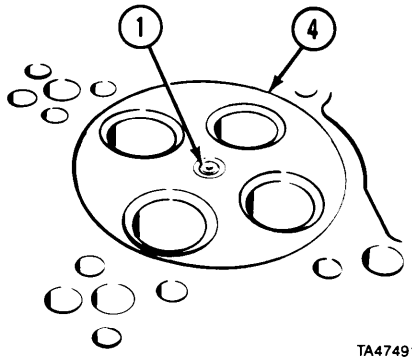

TA474918

(16) Set cylinder head (4) right side up on work surface.

WARNING

Adhesives, solvents, and sealing compounds can burn easily, can give off harmful vapors, and are harmful to skin and clothing. To avoid injury or death, keep away from open fire and use in well-ventilated area. If adhesive, solvent, or sealing compound gets on skin or clothing, wash immediately with soap and water.

(1 ?“ Wash injector tube (1) with dry cleaning solvent.

(18) Lubricate reamer blades while reaming injector tubes.

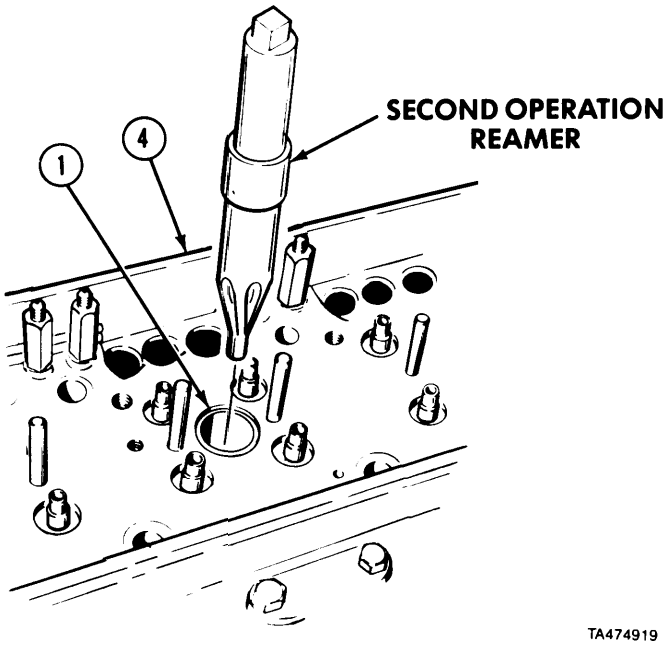

TA474919

CAUTION

Counterclockwise reaming will damage reamer blades and injector tube.

(19) Ream injector tube (1) clockwise.

(20) Clean filings from injector tube (l).

(21) Repeat steps (17) through (20) until protrusion gage is flush ± 0.014 in. (0.36 mm).

(22) Clean injector tube (1) with dry cleaning solvent.

WARNING

Compressed air used for cleaning purposes will not exceed 30 psi (207 kPa). Use only with effective chip guarding and personal protective equipment (goggles/shield, gloves, etc.).

(23) Dry with compressed air.

https://truckmanualshub.com/

3-9. INJECTOR TUBE REMOVAL/INSTALLATION (CONT).

c. Follow-on Maintenance.
(1) Install exhaust valves (para 7-4).
(2) Install fuel injectors (para 12-2).
(3) Install exhaust valve bridges (para 7-8).
(4) Install rocker arms (para 7-5).
(5) Install brake retarder (para 11-2).
(6) Install cam followers and push rods (para 7-6).

END OF TASK

3-10. VALVE SEAT INSERT REMOVAL/INSTALLATION.

This task covers:

a. Removal
b. Installation
c. Follow-on Maintenance

INITIAL SETUP

Models
All

Test Equipment
None

Special Tools
Installing tool J24357
Puller assembly, J23479-15
Collet, valve seat J23479-13
Set, dial indicator J7872

Supplies
None

Personnel Required
MOS 63W, Wheel vehicle repairer

References
None

Equipment Condition

TM or Para	*Condition Description*
Para 7-5	Rocker arms removed.
Para 7-6	Cam followers and push rods removed.
Para 7-8	Exhaust valve bridges removed.
Para 12-2	Fuel injectors removed.
Para 7-4	Exhaust valves removed.
Para 11-2	Engine brake retarders removed.

Special Environmental Conditions
None

General Safety Instructions
None

Level *of Maintenance*
General Support

https://truckmanualshub.com/

Cylinder Head Maintenance Instructions (Cont)

a. Removal.

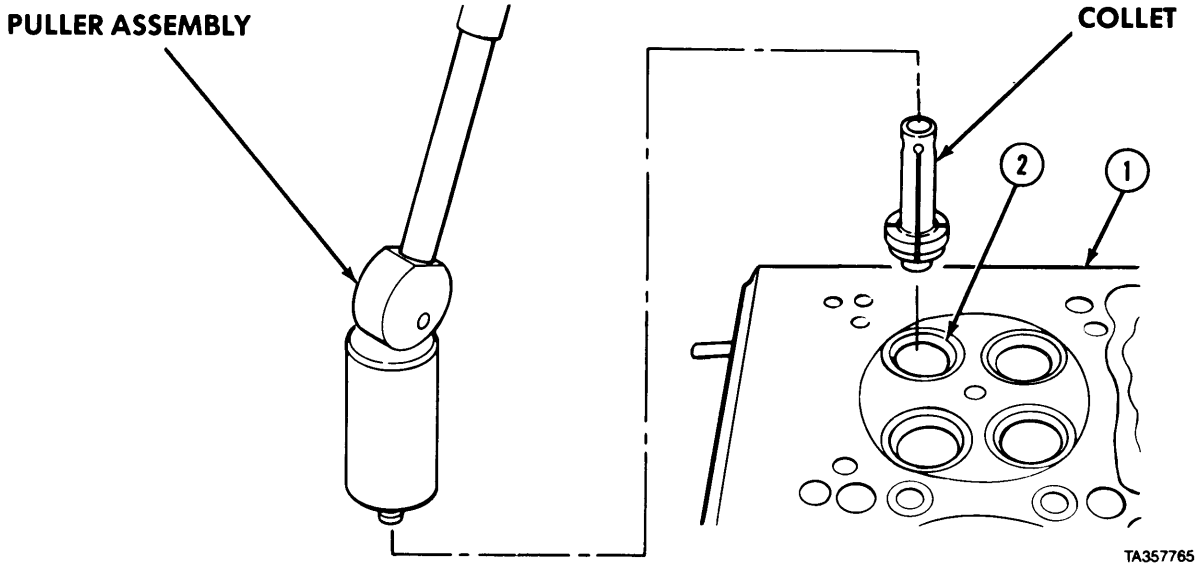

NOTE

There are 16 valve seat inserts on a cylinder head. All valve seat inserts are removed in same manner.

(1) Support cylinder head (l), bottom side up, on two thick wooden blocks.
(2) Remove valve seat insert (2) out of cylinder head (1) using valve seat collet and puller assembly.

b. Installation.

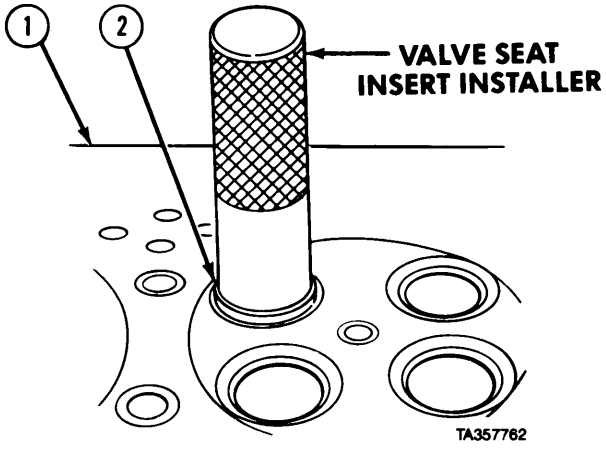

NOTE

New valve seat inserts are pre-ground and need not be ground after installation. All inserts are installed in same manner.

(1) Put cylinder head (1) in water heated to a temperature of 180 to 200°F (82 to 93°C) for not less than 30 minutes.

WARNING

Be sure to wear protective gloves and clothing to prevent personal injury when handling heated part.

(2) Place cylinder head (l), bottom side up, on wooden blocks and place valve seat insert (2), seat side up, in counterbore.
(3) Drive valve seat insert (2) into place until seated solidly in cylinder head using valve seat insert installer.
(4) Set dial indicator on cylinder head and check roundness of each valve seat insert relative to valve guide. Total runout must not exceed 0.002-in. (0.05 mm).
(5) If runout exceeds 0.002-in. (0.05 mm), check for damaged or worn valve guide.

3-10. VALVE SEAT INSERT REMOVAL/INSTALLATION (CONT).

c. Follow-on Maintenance.
(1) Install engine brake retarders (para 11-2).
(2) Install cam followers and push rods (para 7-6).
(3) Install exhaust valves (para 3-8).
(4) Install fuel injectors (para 12-2).
(5) Install exhaust valve bridges (para 7-8).
(6) Install rocker arms (para 7-5).

END OF TASK

3-11. WATER NOZZLE REMOVAL/INSTALLATION.

This task covers:

a. Removal
b. Installation
c. Follow-on Maintenance

INITIAL SETUP

Models
All

Test Equipment
None

Special Tools
Installer, water nozzle J24857-A

Supplies
None

Personnel Required
MOS 63W, Wheel vehicle repairer

References
None

Equipment Condition

TM or Para	*Condition Description*
Para 7-5	Rocker arms removed.
Para 7-8	Exhaust valve bridges removed.
Para 12-2	Fuel injectors removed.
Para 7-4	Exhaust valves removed.
Para 7-6	Cam followers and push rods removed.

Special Environmental Conditions
None

General Safety Instructions
None

Level *of Maintenance*
General Support

https://truckmanualshub.com/

a. Removal.

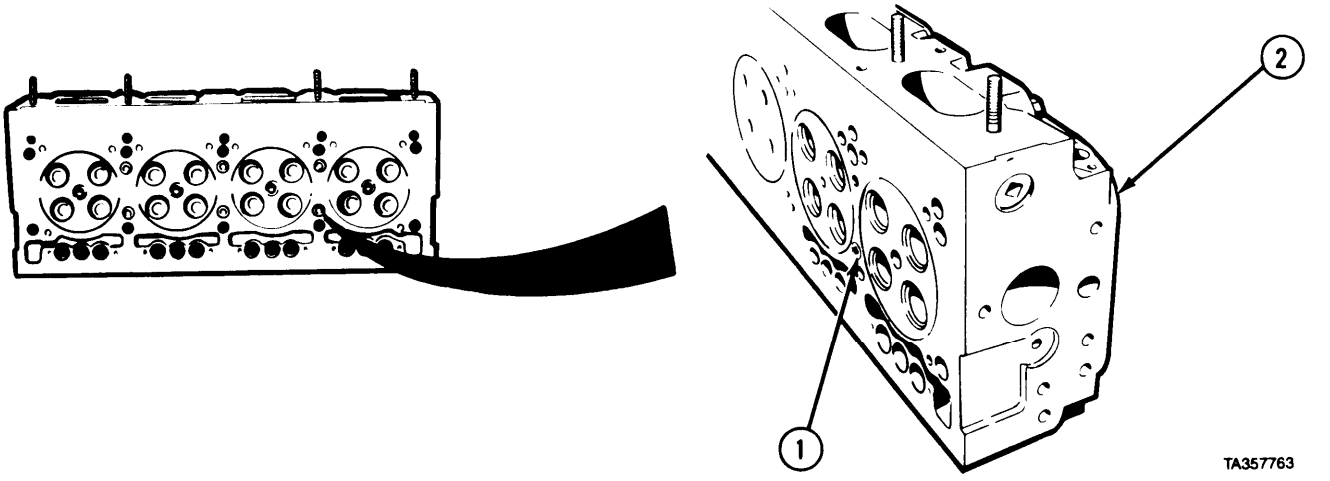

NOTE

Repeat steps (1) through (3) for removing all water nozzles.

(1) Install 1/2-in. tap into water nozzle (1) of cylinder head (2).
(2) Tap water nozzle (1) 1/2-in. (12.7 mm) deep.

(3) Remove water nozzle (1) from cylinder head (2).

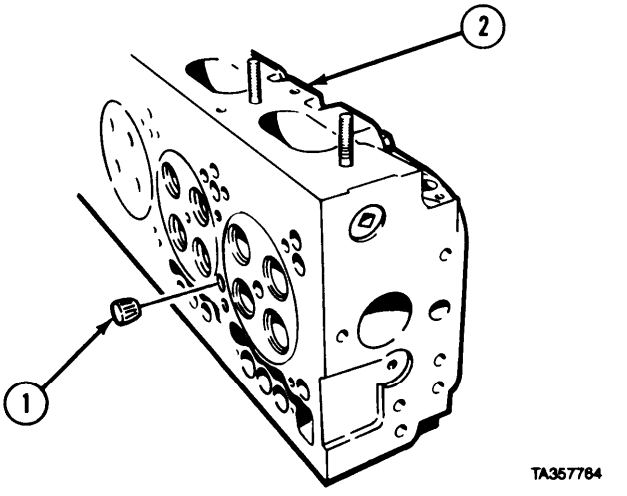

https://truckmanualshub.com/

3-11. WATER NOZZLE REMOVAL/INSTALLATION (CONT).

b. Installation.

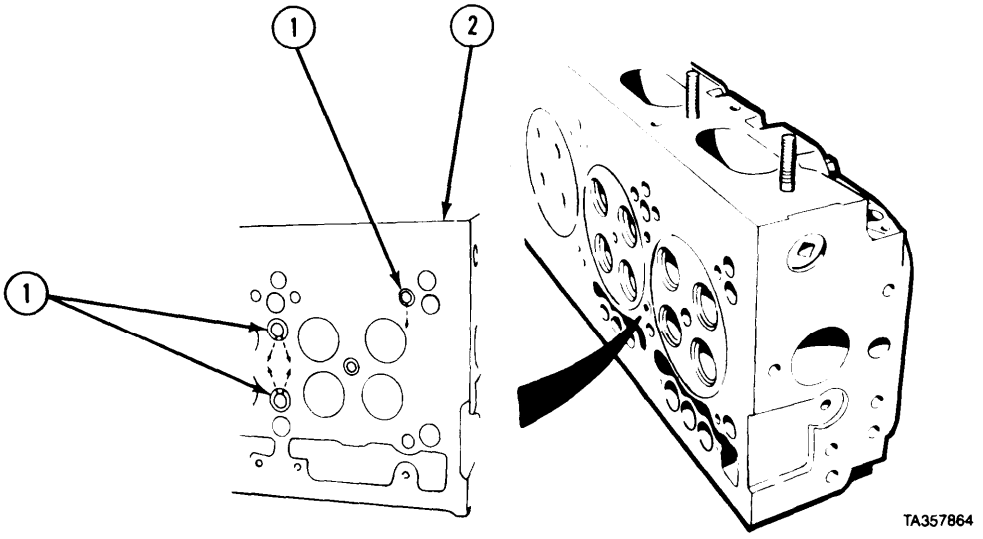

CAUTION

Water nozzles must be installed so holes are pointed toward cylinder for proper cooling water flow to prevent engine overheating.

NOTE

Repeat steps (1) and (2) to install all water nozzles.

(1) Gently tap water nozzle (1) into water nozzle hole using water nozzle installer.
(2) Make sure nozzle (1) is recessed 0.004-in. (0. 1 mm) into face of cylinder head (2).
(3) Pressure test cylinder head (para 3-8).

CO Follow-on Maintenance.
(1) Install cam followers and push rods (para 7-6).
(2) Install exhaust valves (para 7-4).
(3) Install fuel injectors (para 12-2).
(4) Install exhaust valve bridges (para 7-8).
(5) Install rocker arms (para 7-5).

END OF TASK

https://truckmanualshub.com/

CHAPTER 4
CRANKSHAFT MAINTENANCE

Contents

	Para	Page
General	4-1	4-1
Crankshaft Pulley Removal/Installation	4-2	4-1
Vibration Damper Removal/Installation	4-3	4-4
Oil Pump Drive Gear Removal/Installation	4-4	4-8
Main Bearing and Crankshaft Removal/Repair/Installation	4-5	4-10
Crankshaft Cover, Trunnion, and Front Oil Seal Removal/Installation	4-6	4-28

Section 1. INTRODUCTION

4-1. GENERAL. This chapter covers removal, installation, and repair of the crank shaft. The subassemblies and parts which must be removed before the crankshaft components can be removed will be referenced to other paragraphs or chapters of this manual, TM 9-2320-279-10, TM 9-2320-279-20, or TM 9-2320-279-34.

Section II. CRANKSHAFT ASSEMBLY

Crankshaft Maintenance Instructions

4-2. CRANKSHAFT PULLEY REMOVAL/INSTALLATION.

This task covers:

a. Removal
b. Installation
c. Follow-on Maintenance

INITIAL SETUP

Models
All

Test Equipment
None

Special Tools
None

Supplies
Oil, lubricating, Item 48, Appendix C

Personnel Required
MOS 63W, Wheel vehicle repairer

References
None

Equipment Condition

TM or Para	*Condition Description*
TM 9-2320-279-20	Alternator belts removed.
TM 9-2320-279-20	Fan belts removed.
TM 9-2320-279-20	Radiator removed.
TM 9-2320-279-20	Fan removed.

Special Environmental Conditions
None

General Safety Instructions
None

Level of Maintenance
Direct Support

https://truckmanualshub.com/

4-2. CRANKSHAFT PULLEY REMOVAL/INSTALLATION (CONT).

a. Removal.

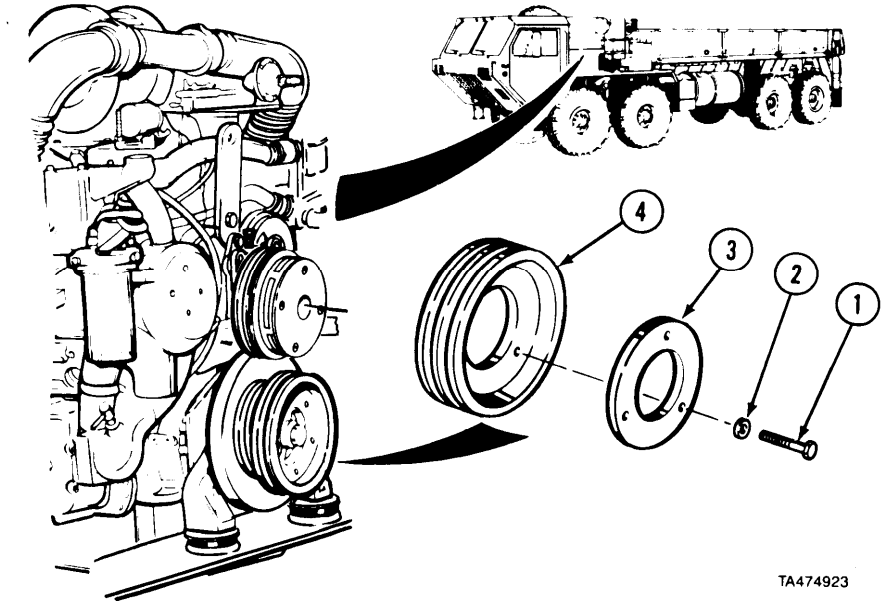

(1) Remove three screws (1), lockwashers (2), support plate (3), and pulley (4).

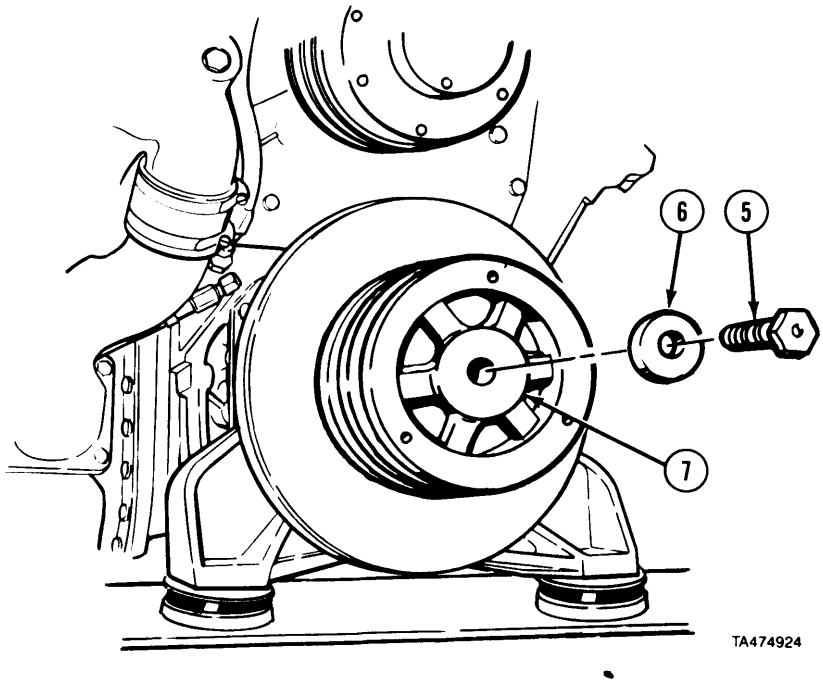

(2) Remove screw (5) and retainer (6) from crankshaft pulley (7).

https://truckmanualshub.com/

Crankshaft Maintenance Instructions (Cont)

CAUTION

Use care when removing crankshaft pulley. Do not pry on vibration damper or damage can occur.

(3) Remove crankshaft pulley (7).
(4) Remove two keys (8).

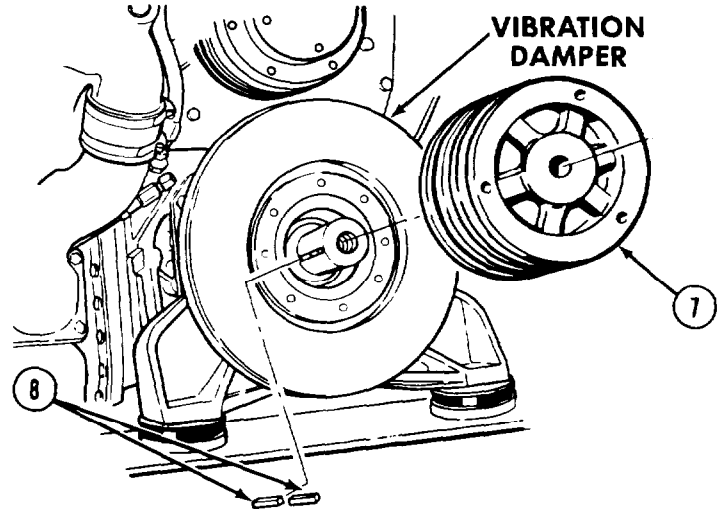

b. Installation

(1) Lubricate end of crankshaft (1) with lubricating oil.
(2) Install two keys (2) in end of crankshaft (1).
(3) Install crankshaft pulley (3) on crankshaft (1).

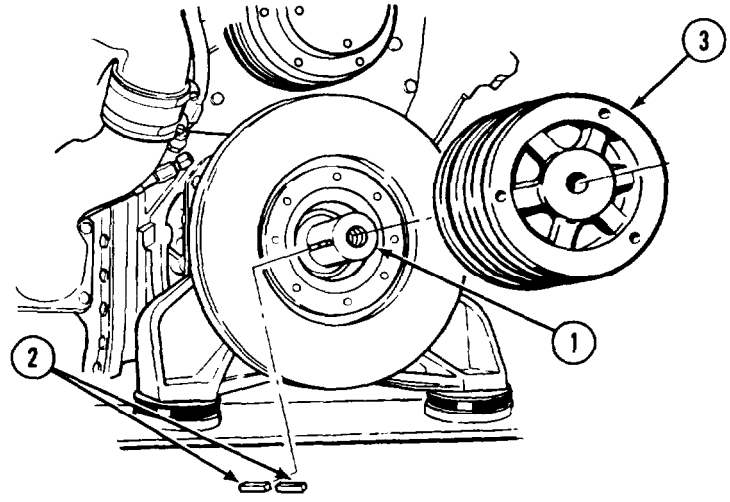

(4) Install screw (4) and retainer (5).
(5) Tighten screw (4) to 180 lb-ft (224 N•m).
(6) Strike head of screw (4) with soft face hammer.

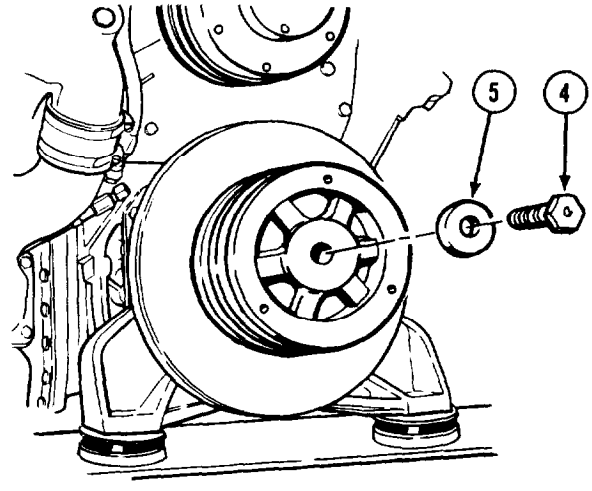

NOTE

Some models of crankshafts have a Grade 8 screw. Skip steps (7) and (8) and do steps *(8.1)* and (8.2) for those models.

(7) Tighten screw (4) to 300 lb-ft (407 N•m) and strike screw again.
(8) Tighten screw (4) to 300 lb-ft (407 N•m).
(8.1) Tighten screw (4) to 450 lb-ft (610 N•m) and strike screw again.
(8.2) Tighten screw (4) to 450 lb-ft (610 N•m).

https://truckmanualshub.com/

Crankshaft Maintenance Instructions (Cont)

4-2. CRANKSHAFT PULLEY REMOVAL/INSTALLATION (CONT).

(9) Install support plate (6) and accessory pulley (7) to crankshaft pulley (3).
(10) Install three screws (8) and Lockwashers (9).
(11) Tighten three screws (8) to 25 to 30 lb-ft (33 to 40 N•m).

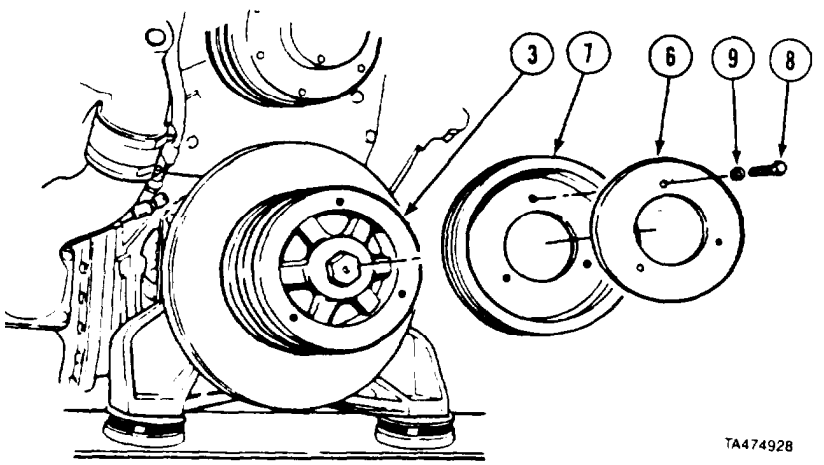

c. Follow-on Maintenance.
(1) Install radiator (TM 9-2320-279-20).
(2) Install fan belts (TM 9-2320-279-20).
(3) Install alternator belts (TM 9-2320-279-20).
(4) Install fan (TM 9-2320-279-20).

END OF TASK

4-3. VIBRATION DAMPER REMOVAL/INSTALLATION.

This task covers:
a. Removal
b. Installation
c. Follow-on Maintenance

INITIAL SETUP

Models
All

Test Equipment
None

Special Tools
None

Supplies
Oil, lubricating, Item 48. Appendix C

Personnel Required
MOS 63W, Wheel vehicle repairer

References
None

Equipment Condition

TM or Para	*Condition Description*
Para 4-2	Crankshaft pulley removed

Special Environmental Conditions
None

General Safety Instructions
None

Level of Maintenance
Direct Support

https://truckmanualshub.com/

Crankshaft Maintenance Instructions (Cont)

a. Removal.

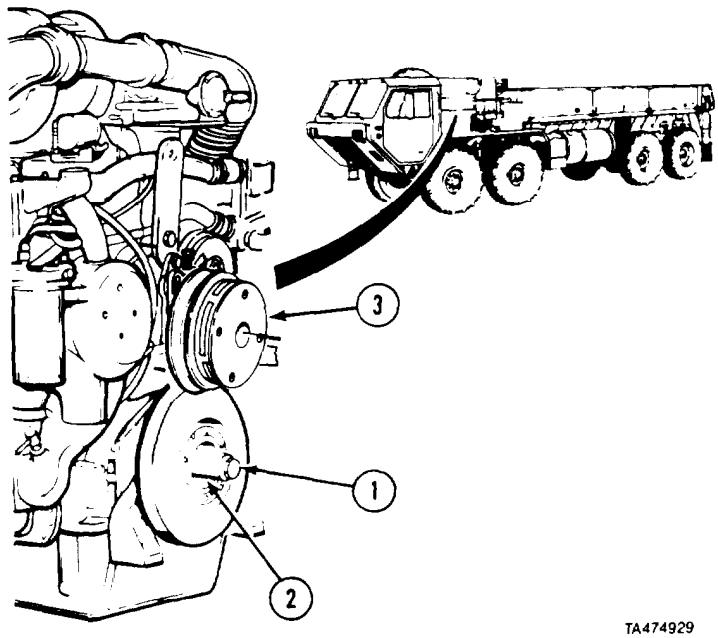

CAUTION

Use care when removing vibration damper, Pounding or prying can den and cause damage.

(1) Install screw (1) in end of crankshaft (2). Loosen vibration damper (3).

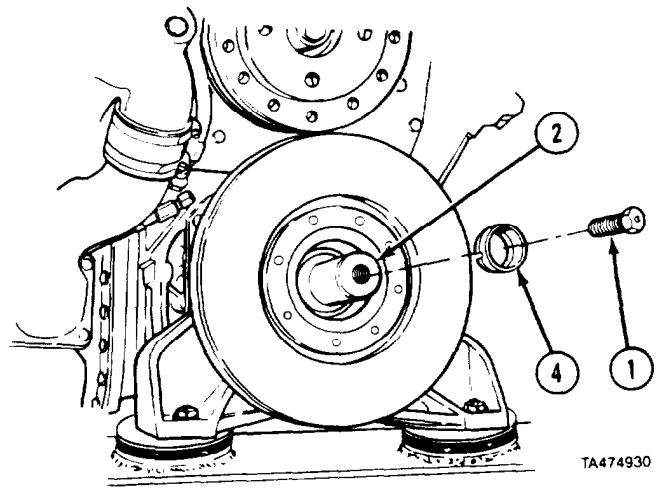

(2) Remove screw (1) and sleeve spacer (4) from crankshaft (2).

https://truckmanualshub.com/

4-3. VIBRATION DAMPER REMOVAL/INSTALLATION (CONT).

(3) Remove vibration damper (3).
(4) Turn cone (5) clockwise and remove from crankshaft (2) inside trunnion support (6).

NOTE

Some engine models contain a cone with a preformed packing to provide better oil seal capability. Replace all cones with cone and preformed packing combinations. Perform step *(4.1)* for those models. Refer to TM 9-2320-279-24P

(4.1) Remove preformed packing (4.1) from cone (5).

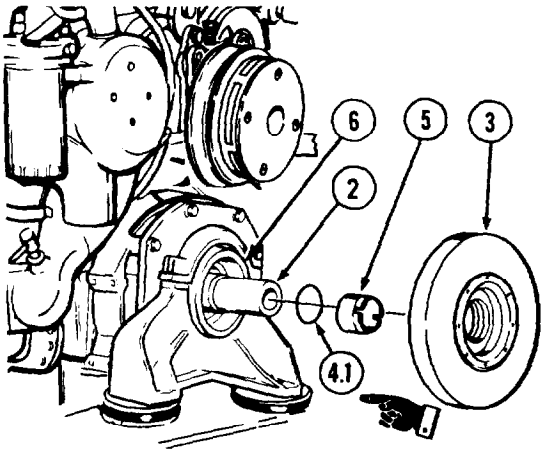

(5) Position damper (3) in soft jaw vise.
(6) Remove eight screws (7), scuff plate (8), and hub (9) from vibration damper (3).
(7) Remove two pins (10) from hub (9).

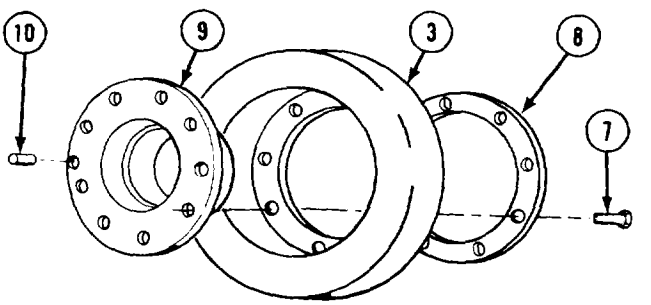

b. Installation.

(1) Install two pins (1) in unthreaded bores in hub (2).
(2) Press two pins (1) through hub (2) until pins stick out from hub 3/8 in. (9.5 mm).

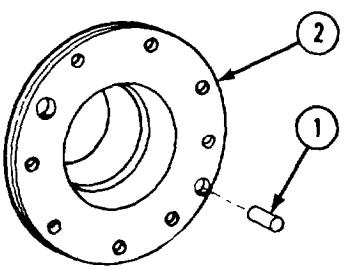

(3) Install eight screws (3), scuff plate (4), and hub (2) in vibration damper (5).
(4) Tighten eight screws (3) to 75 to 85 lb-ft (102 to 115 N•m).

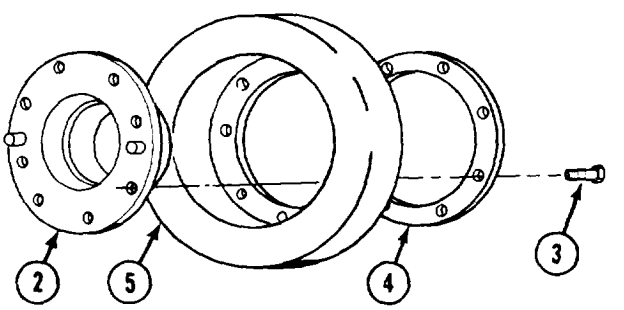

https://truckmanualshub.com/

Crankshaft Maintenance Instructions (Cont)

NOTE

Some engine models contain a cone with a preformed packing. Replace all cones with cone and preformed packing combinations. Perform step *(4.1)* for all installations. Refer to TM 9-2320-279-24P.

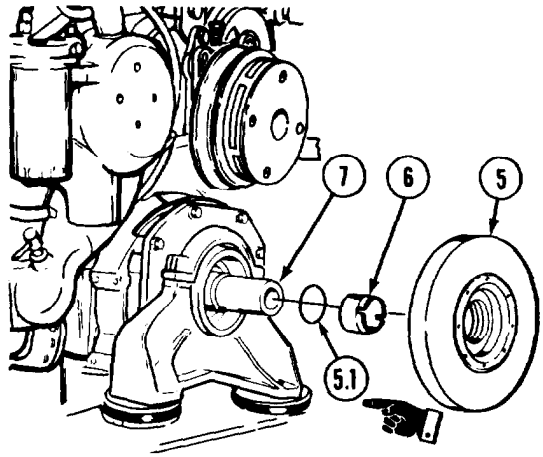

(4.1) Lubricate preformed packing (5.1) with lubricating oil and install in groove on inner diameter of cone (6).

(5) Apply lubricating oil to cone (6) and crankshaft (7).

(6) Turn cone (6) clockwise and install tapered end pointing out on crankshaft (7).

CAUTION

Use care when installing vibration damper. Pounding or hammering vibration damper can cause damage.

(7) Install vibration damper (5) on crankshaft (7).

(8) Install sleeve spacer (8) on crankshaft (7) with tapered end pointing toward vibration damper (5).

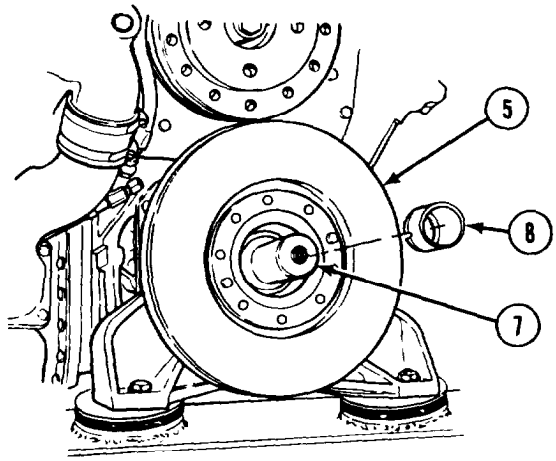

c. Follow-on Maintenance. Install crankshaft pulley (para 4-2).

END OF TASK

https://truckmanualshub.com/

Crankshaft Maintenance Instructions (Cont)

4-4. OIL PUMP DRIVE GEAR REMOVAL/INSTALLATION.

This task covers:

a. Removal
b. Installation
c. Follow-on Maintenance

INITIAL SETUP

Models
All

Test Equipment
None

Special Tools
None

Supplies
Compound retaining, Item 30, Appendix C

Personnel Required
MOS 63W, Wheel vehicle repairer

References
None

Equipment Condition

TM or Para	*Condition Description*
Para 4-6	Crankshaft cover and front oil seal removed.

Special Environmental Conditions
None

General Safety Instructions
None

Level of Maintenance
Direct Support

NOTE

Some crankshafts will have a split pin in oil pump drive gear.

a. Removal. Remove oil pump drive gear (1), spacer (2), woodruff key (3), and split pin (4).

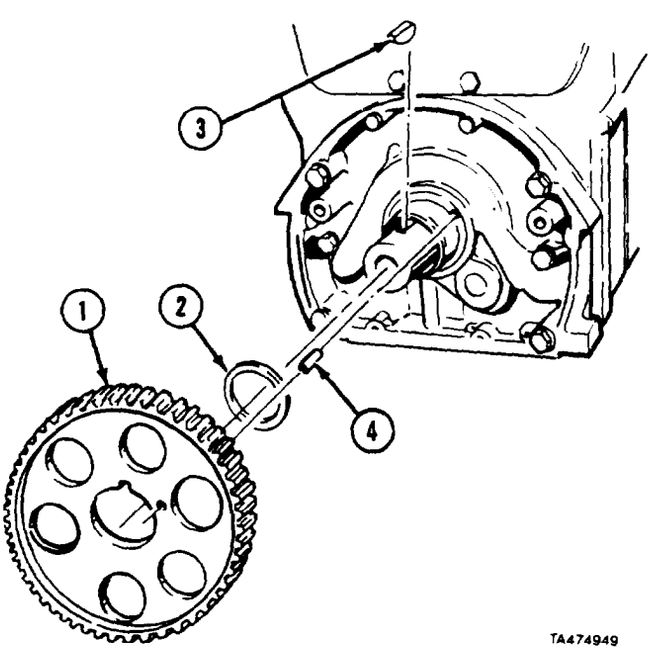

https://truckmanualshub.com/

Crankshaft Maintenance Instructions (Cont)

b. Installation.

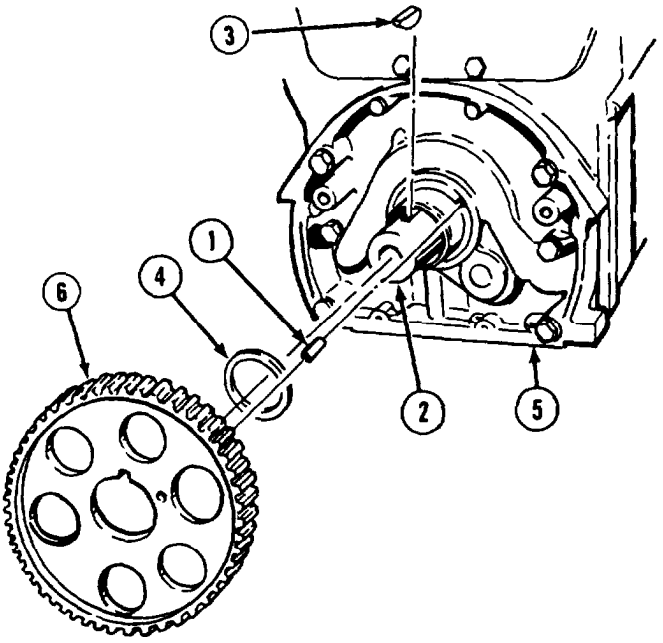

NOTE

If crankshaft has split pin, do step *(1)* then step *(3).* If no split pin, go to step *(2).*

(1) Install split pin (1).

WARNING

Adhesives, solvents, and sealing compounds can burn easily, can give off harmful vapors, and are harmful to skin and clothing. To avoid injury or death, keep away from open fire and use in well-ventilated area. If adhesive, solvent, or sealing compound gets on skin or clothing, wash immediately with soap and water.

NOTE

There are two models of crankshafts. Model B crankshaft, used in engines with Serial No. 8VF-098597 and later, has a different machined diameter for the oil pump drive gear. The oil pump drive gear has not changed but must be pressed on, without adhesive, for Model B crankshaft. Skip step (2) for Model B crankshafts.

(2) Apply retaining compound to crankshaft (2).
(3) Install woodruff key (3).
(4) Install spacer (4), finished side facing away from engine (5).
(5) Install oil pump drive gear (6), flat side of hub facing away from engine (5) and beveled side of hub facing towards engine.

c. ***Follow-on Maintenance.*** Install crankshaft cover and front oil seal (para 4-6).

END OF TASK

https://truckmanualshub.com/

Crankshaft Maintenance Instructions (Cont)

4-5. MAIN BEARING AND CRANKSHAFT REMOVAL, REPAIR, AND INSTALLATION.

This task covers:

a. Removal
b. Disassembly
c. Cleaning/Inspection
d. Assembly
e. Installation
f. Follow-on Maintenance

INITIAL SETUP

Models
All

Test Equipment
None

Special Tools
Set, Dial Indicator J7872

Fabricated Tools
Bearing shell remover 2BG623

Supplies
Compound. International No. 2, Item 26. Appendix C
Oil, fuel, diesel, Item 44, Appendix C
Tags, identification, Item 61, Appendix C
Oil, lubricating, Item 48, Appendix C
Cloth, crocus, abrasive, Item 17, Appendix C
Cloth, cleaning, low-lint, Item 16, Appendix C
Gage. plastic. Item 35, Appendix C

Personnel Required
MOS 63W, Wheel vehicle repairer (2)

References
None

Equipment Condition

TM or Para	*Condition Description*
	Engine turned upside down on engine stand.
Para 8-4	Oil pump removed.
Para 4-6	Crankshaft cover and front seal removed.
Para 5-3	Flywheel housing and rear oil seal removed.
Para 7-11	Idler gear removed.
Para 6-2	Pistons, connecting rods, and liners removed.
Para 4-4	Oil pump drive gear removed.

Special Environmental Conditions
None

General Safety Instructions
None

Level of Maintenance
Direct Support

a. Removal.

(1) Soldier A installs dial indicator on engine block (1). Soldier B pushes crankshaft (2) towards gage with pry bar while Soldier A adjusts dial indicator to zero.

(2) Soldier A notes end play while Soldier B removes pry bar and forces crankshaft (2) in opposite direction.

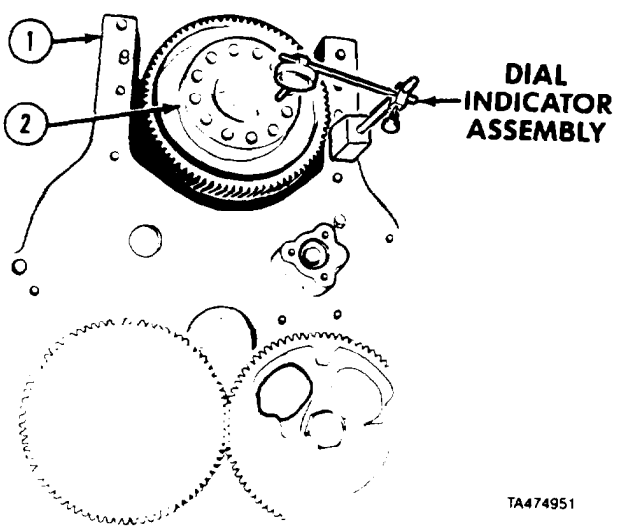

https://truckmanualshub.com/

Crankshaft Maintenance Instructions (Cont)

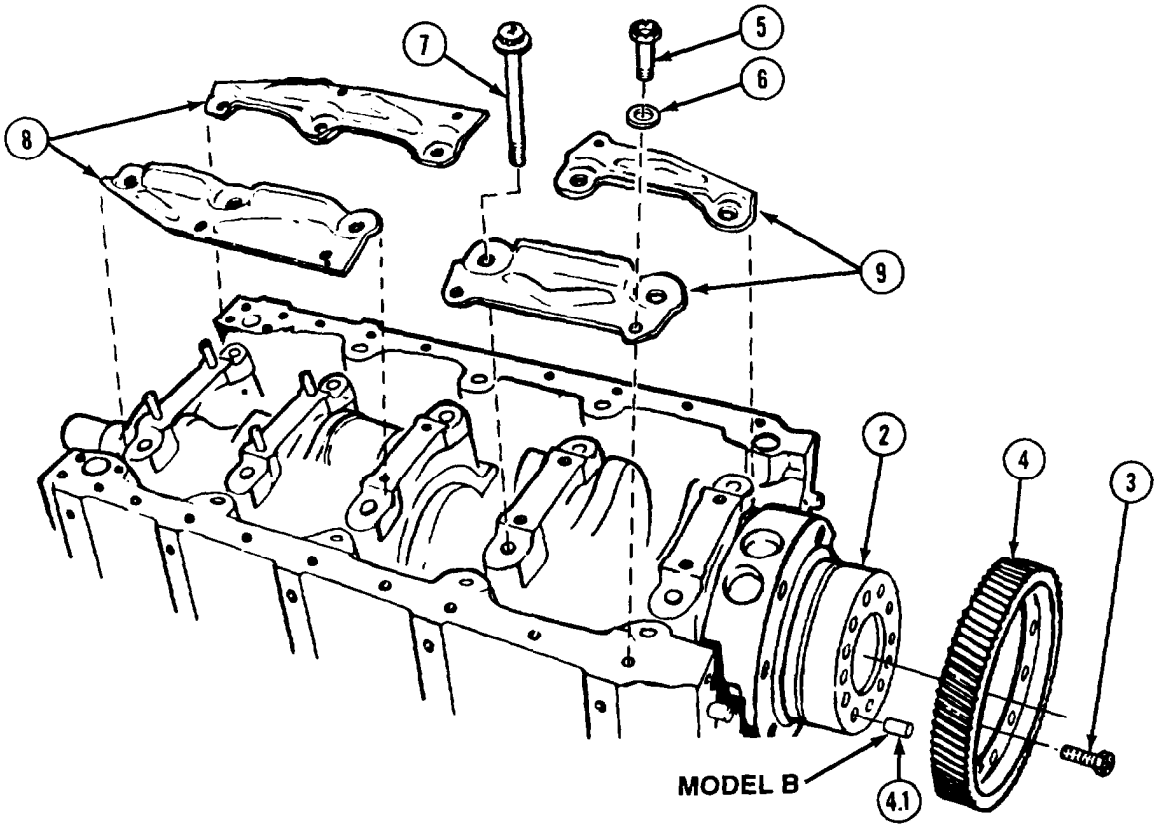

(3) Remove six screws (3) and timing gear (4) from crankshaft (2).

NOTE

- There are two models of crankshafts and timing gears. Model B crankshaft, used in engines with Serial No. 8VF-098597 and later, has a roll pin to locate the timing gear. Model B timing gear, used in the same engines, has a groove to accept the roll pin.
- Model A and B parts are interchangeable with the following exception: do not use roll pin with Model B timing gear and Model A crankshaft, or Model A timing gear and Model B crankshaft.
- Perform step (3.1) for Model B crankshaft and timing gear only.

(3.1) Remove roll pin (4.1) from crankshaft (2).
(4) Remove seven screws (5) and washers (6).
(5) Remove ten screws (7).
(6) Remove four bearing cap stabilizers (8 and 9).

https://truckmanualshub.com/

Crankshaft Maintenance Instructions (Cont)

14-5. MAIN BEARING AND CRANKSHAFT REMOVAL, REPAIR, AND INSTALLATION (CONT).

(7) Install two screws (7) in front main bearing cap (10) and rear main bearing cap (11).

(8) Tighten four screws (7) to 50 lb-ft (5.65 N•m).

(9) Strike front main bearing cap (10) and rear main bearing cap (11) with soft-face hammer.

(10) Tighten four screws (7) to 110 lb-ft (12.43 N•m).

(11) Strike front main bearing cap (10) and rear main bearing cap (11) with soft-face hammer.

(12) Tighten four screws (7) to 250 to 260 lb-ft (28.25 to 29.38 N•m).

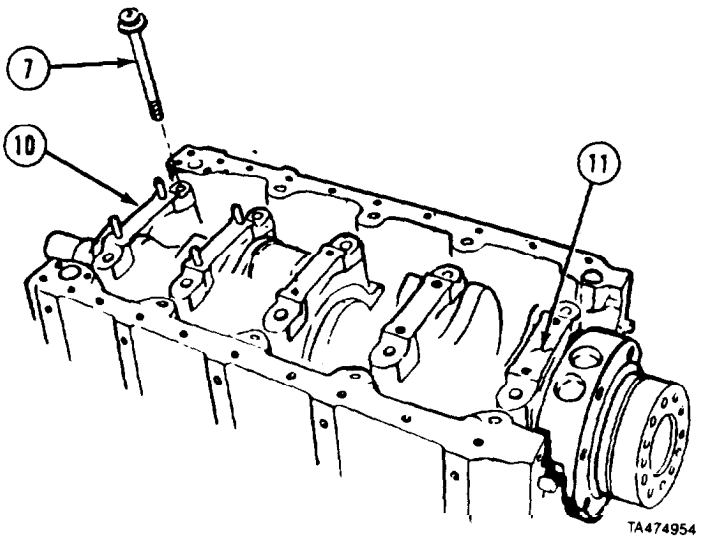

(13) Install spacer (12) and screw (13) on front of crankshaft-(2).

NOTE

Bearing caps are numbered from 1 to 5 for later installation.

(14) Remove three center bearing caps (14).

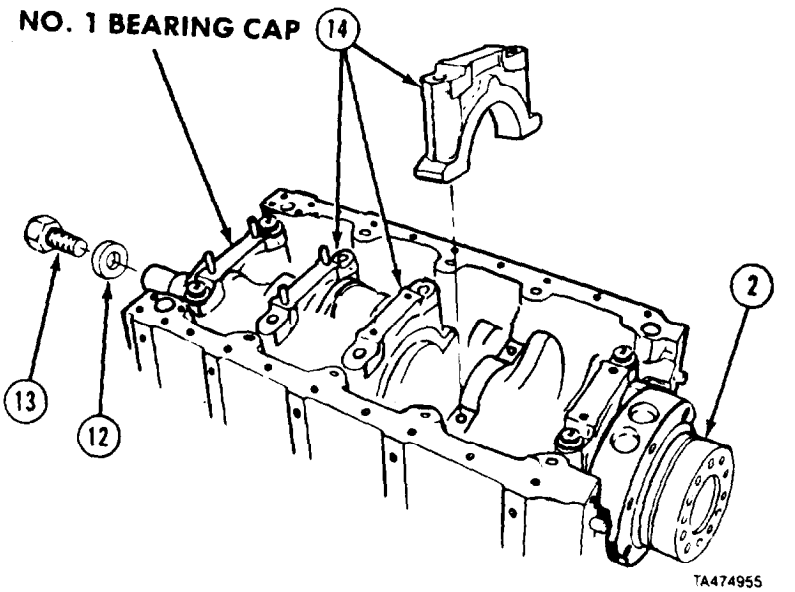

NOTE

If bearing shells will be reused, tag and mark them for installation.

(15) Remove lower bearing shells (15) from three center bearing caps (14).

https://truckmanualshub.com/

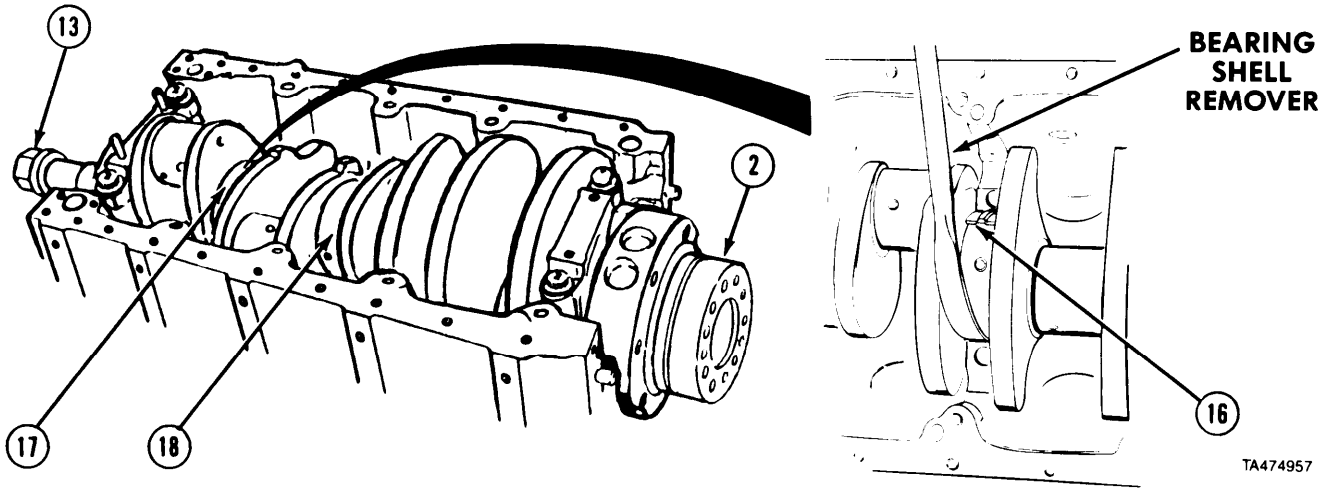

(16) Push upper bearing shell (16) out from under crankshaft main bearing journal No. 2 (17) with bearing shell remover.

NOTE

Turn crankshaft to aid in removing bearing shell from under bearing journal.

(17) Soldier A removes upper bearing shell (16) while Soldier B turns screw (13) to turn crankshaft (2).

(18) Repeat steps *(16)* and *(17)* for crankshaft main bearing journals No. 3 (18) and No. 4 (19).

(19) Soldier A tells Soldier B to turn screw (13) to turn crankshaft (2), while Soldier A reads runout of main bearing journals (17, 18, and 19) with dial indicator.

NOTE

If crankshaft has too much runout, do steps *(21)* to *(27)* to remove crankshaft, do steps *(28)* to *(39)* to see if bad bearing shell caused crankshaft runout. If runout is within limits only do steps *(21)* to *(27).*

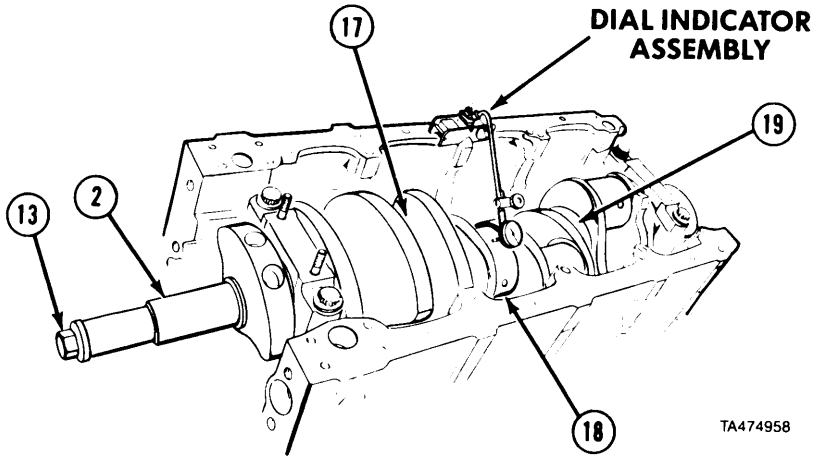

(20) Maximum allowable runout for journals (17 and 19) is 0.002 in. (0.05 mm). Maximum allowable runout for journal (18) is 0.004 in. (0.10 mm).

https://truckmanualshub.com/

4-5. MAIN BEARING AND CRANKSHAFT REMOVAL, REPAIR, AND INSTALLATION (CONT).

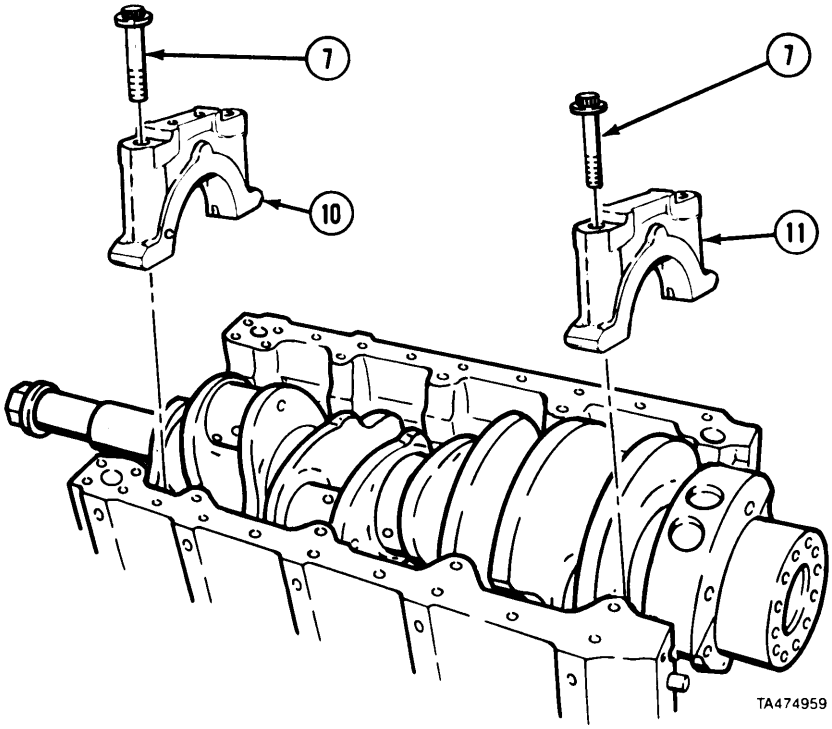

(21) Remove four screws (7) and two bearing caps (10) and (11).

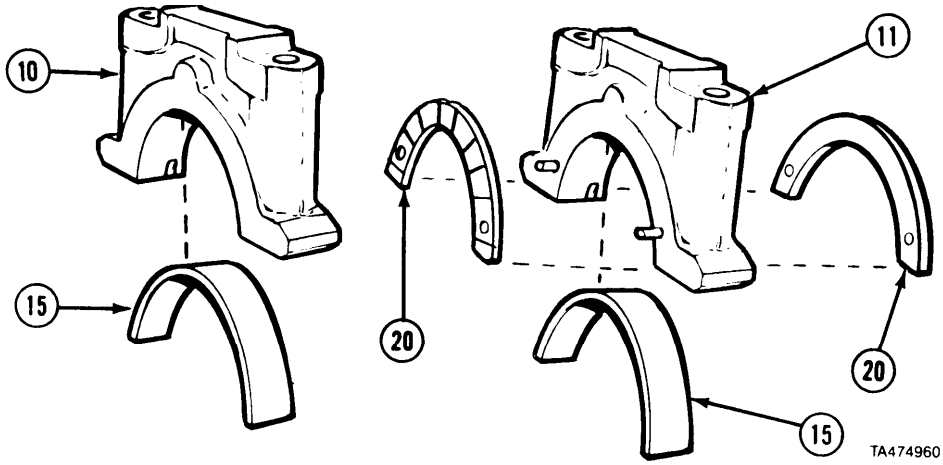

(22) Remove lower bearing shells (15) from bearing caps (10 and 11).

NOTE

Tag and mark thrust washers before removal.

(23) Remove thrust washers (20) from bearing cap (11).

https://truckmanualshub.com/

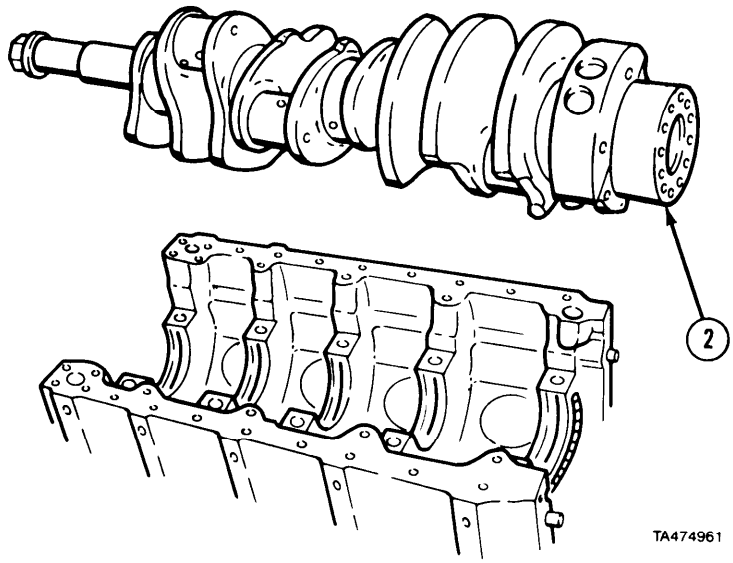

CAUTION

Crankshaft may be bent if stored on side. Store crankshaft on end.

(24) Attach suitable lifting device to crankshaft (2).

(25) Soldier A guides crankshaft (2) while Soldier B operates lifting device to remove crankshaft.

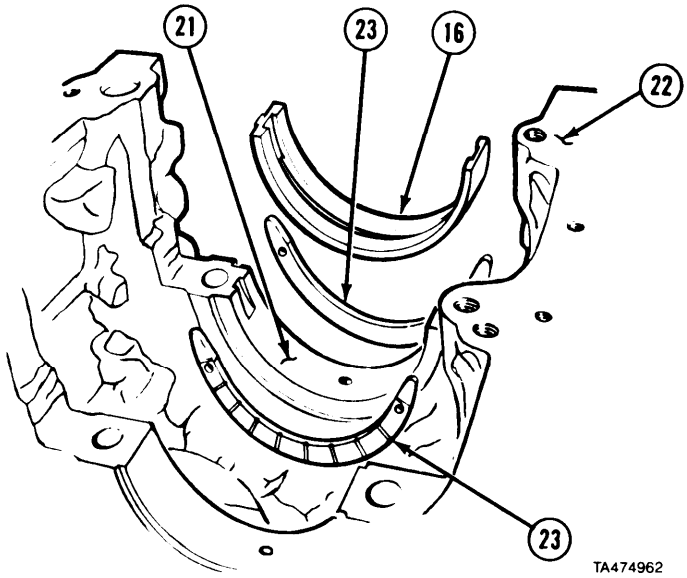

(26) Remove two remaining upper bearing shells (16) from bearing surfaces (21) at front and rear of engine block (22).

(27) Remove two thrust washers (23) from rear bearing surface (21).

https://truckmanualshub.com/

4-5. MAIN BEARING AND CRANKSHAFT REMOVAL, REPAIR, AND INSTALLATION (CONT).

(28) Aline tab (24) on new upper bearing shell (16) with slot (25) on engine block rear bearing surface (21).

(29) Install new bearing shell (16). Make sure both ends of bearing shell are flush with bearing cap mounting surfaces (26). Install another new bearing shell on front bearing surface.

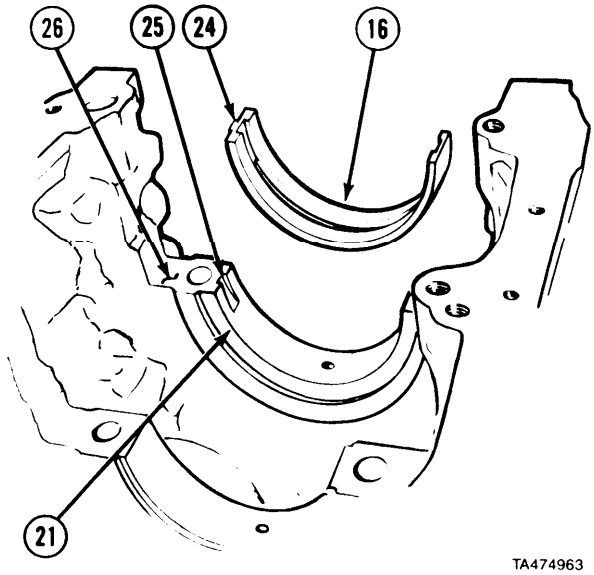

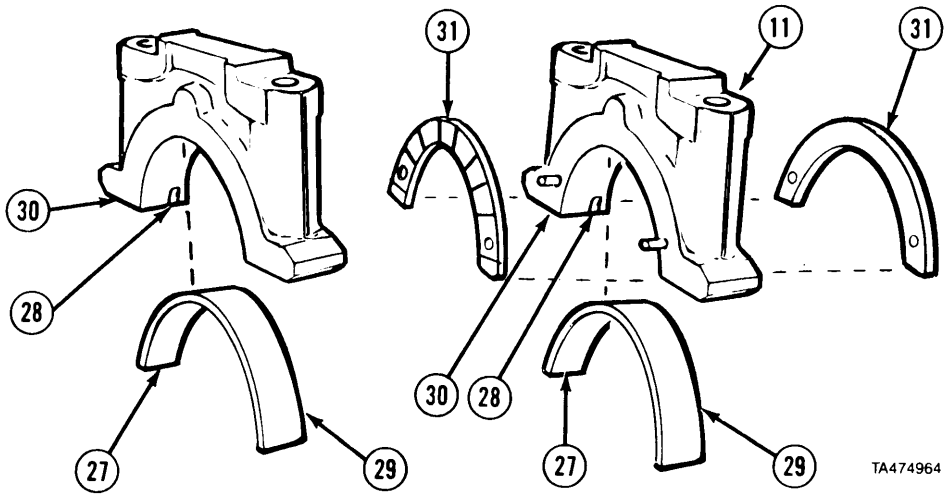

(30) Aline tabs (27) with slots (28) and install new bearing shells (29) making sure both ends of bearing shells are flush with bearing cap mounting surfaces (30).

(31) Install two new thrust washers (31) on rear bearing cap (11) so that grooved sides of thrust washers point away from bearing cap.

https://truckmanualshub.com/

(32) Apply oil to crankshaft front and rear main bearing journals (32).
(33) Attach suitable lifting device to crankshaft (2).
(34) Soldier A guides crankshaft (2) while Soldier B operates lifting device to install crankshaft.
(35) Push crankshaft (2) to front and install thrust washer (33). Push crankshaft to rear and install other thrust washer.

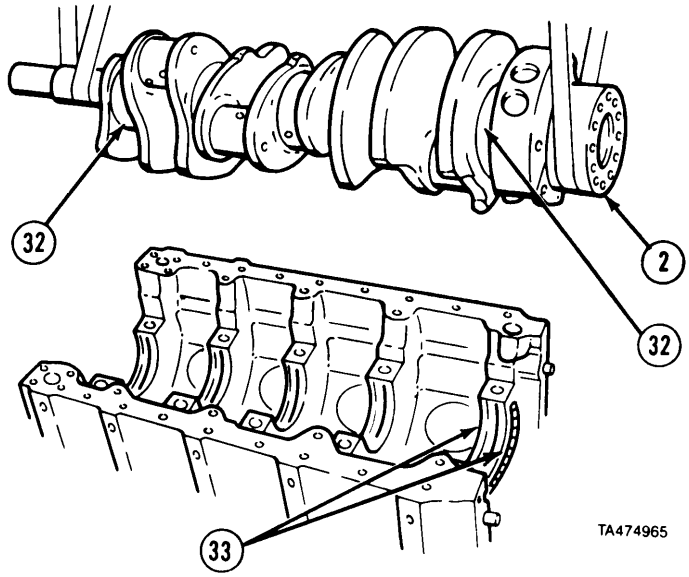

(36) Install two bearing caps (10 and 11).
(37) Do steps *(7)* to *(12)*.
(38) Do steps *(19)* and *(20)* but disregard note between steps. If crankshaft runout is still too high replace crankshaft (2).
(39) Do steps *(21)* to *(27)*.

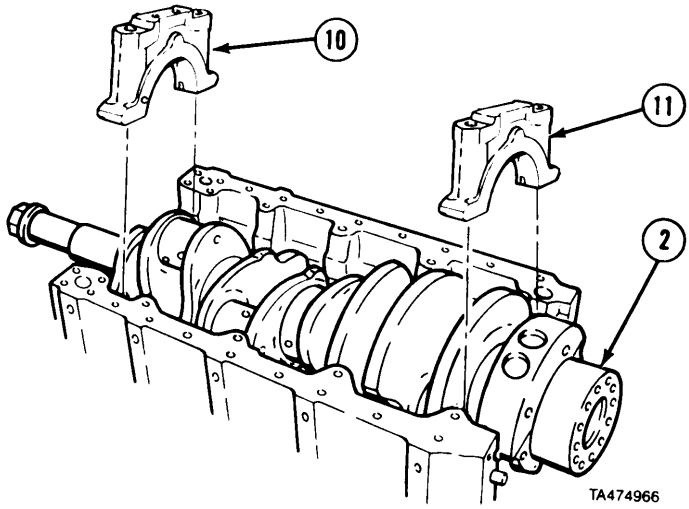

b. Disassembly.

(1) Remove screw (1) and spacer (2) from

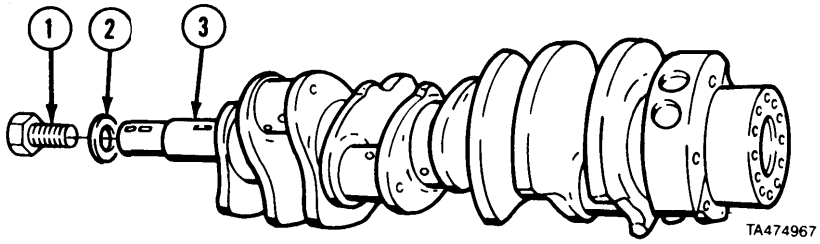

https://truckmanualshub.com/

4-5. MAIN BEARING AND CRANKSHAFT REMOVAL, REPAIR, AND INSTALLATION (CONT).

NOTE

Following steps will be done only to remove loose or broken plugs, studs, and dowels. Steps *(2)* through *(4)* are not necessary for ordinary cleaning and inspection.

(2) Remove four studs (4 and 5) from two. front bearing caps (6).

(3) Remove four dowel pins (7) from rear bearing cap (8).

(4) Remove four plugs (9) from crankshaft (3).

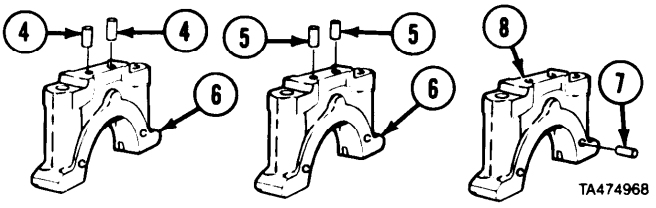

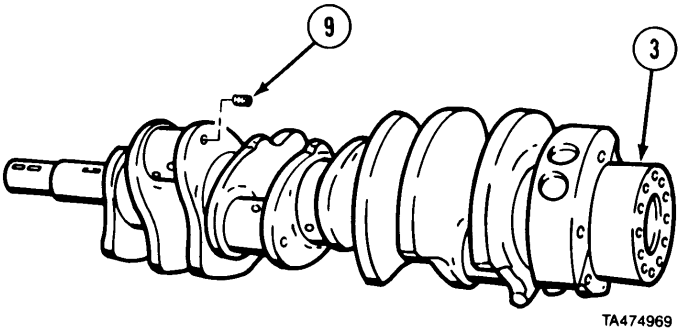

c. Cleaning/Inspection.

WARNING

Fuel is very flammable and can explode easily. lb avoid serious injury or death, keep fuel away from open fire and keep fire extinguisher within easy reach when working with fuel. Do not work on fuel system when engine is hot. Fuel can be ignited by hot engine. Smoking is prohibited while working with fuel.

(1) Clean crankshaft (1) and bearing caps (2) with clean diesel fuel and a lint free cloth.

(2) Flush oil passages (3) in crankshaft (1).

(3) Visually inspect crankshaft (1) for signs of burning or overheating.

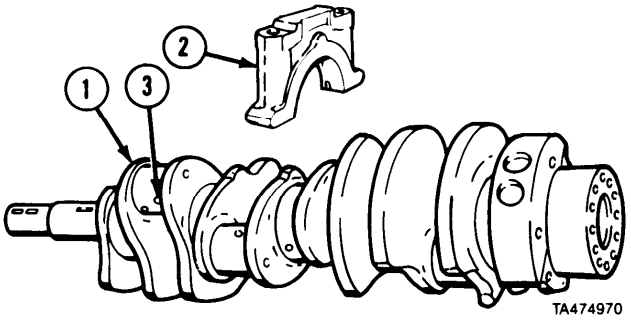

https://truckmanualshub.com/

(4) Inspect crankshaft connecting rod journals (4) and main bearing journals (5) for deep scratches. Replace crankshaft (1) if damaged.

(5) Inspect connecting rod journals (4) and main bearing journals (5) for signs of cracks at connecting rod journal oil holes (6) or at joining points (7) of connecting rod journal and main bearing journals. Replace crankshaft (1) if damaged,

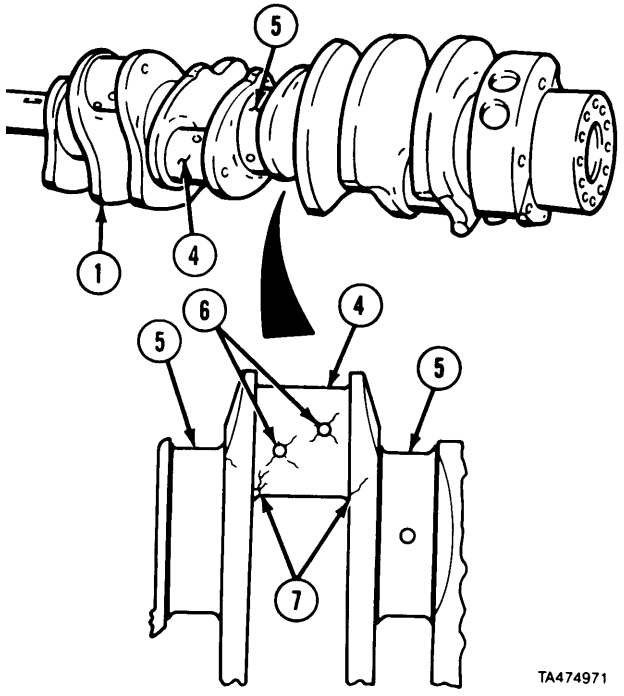

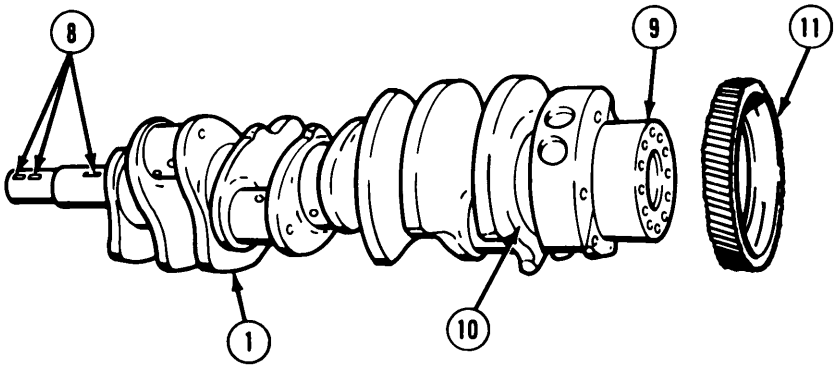

(6) Inspect crankshaft keyways (8) for cracks or damage. Replace crankshaft (1) if damaged.

(7) Inspect rear oil seal (9) contact surface for deep scratching. If scratches cannot be smoothed out with crocus cloth, replace crankshaft (1).

(8) Inspect crankshaft thrust surfaces (10) for grooving. Replace crankshaft (1) if deep grooves have been scratched in thrust surfaces.

(9) Inspect timing gear (11) for chipped teeth. Replace if damaged.

(10) Measure and note thickness of two thrustwashers (12).

https://truckmanualshub.com/

4-5. MAIN BEARING AND CRANKSHAFT REMOVAL, REPAIR, AND INSTALLATION (CONT).

Table 4-1. Main Bearing and Connecting Rod Journal Diameter Specifications

Minimum Diameter (Main Bearing Journals) (13, 14, 15, 16, and 17)	4.498 in. (114.25 mm)
(Connecting Rod Journals) (18)	2.998 in. (76.15 mm)
Maximum Journal Out of Round (All Journals)	0.0005 in. (0.013 mm)
Maximum Taper(All Journals)	0.0004in. (0.010 mm)

Table 4-2. Main Bearing and Connecting Rod Journal Width Specifications

Maximum Width (Main Bearing Journals) (13, 15, 16, and 17)	1.505 in. (38.23 mm)
(Main Bearing Journal) (14)	1.501 in. (38.12 mm)
(Connecting Rod Journals)	2.652 in. (67.36 mm)

Table 4-3. Crankshaft End Play Specifications

Crankshaft end play found in step *(18)*	Use this size thrust washer
Less than 0.016 in. (0.41 mm)	Standard 0.122 in. (3.1 mm)
0.017 to 0.026 in. (0.43 to 0.66 mm)	Oversized 0.127 in. (3.23 mm)
0.027 to 0.036 in. (0.69 to 0.91 mm)	Oversized 0.132 in. (3.35 mm)
More than 0.36 in. (0.91 mm)	Replace crankshaft

NOTE

Refer to Table 4-1 for steps *(11)* to *(13)*. Refer to Table 4-2 for steps *(14)* and *(15)*. Refer to Table 4-3 for steps *(16)* to *(19)*.

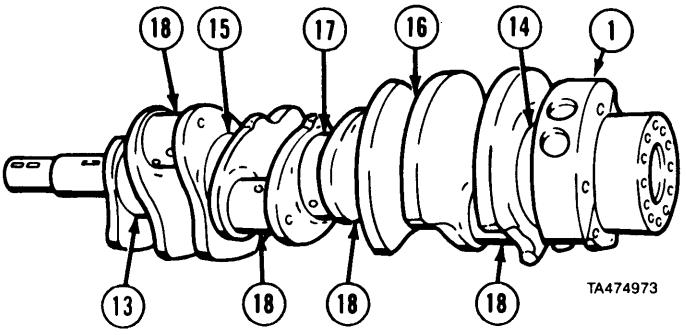

(11) Measure diameter of main bearing journals (13, 14, 15, 16, and 17) at several different spots on each.

(12) Measure diameter of connecting rod journals (18) at several different spots on each.

(13) Replace crankshaft (1) if journals (13, 14, 15, 16, 17, and 18) are outside limits shown on Table 4-1.

(14) Measure width of main bearing journals (13, 14, 15, 16, 17) and connecting rod journals (18).

(15) Replace crankshaft if journals (13, 14, 15, 16, 17, and 18) are outside limits shown on Table 4-2.

(16) Add together thickness of two bottom thrust washers measured in step *(10)*.

(17) Subtract total in step *(16)* from 0.244 in. (6.20 mm).

(18) Subtract result in step *(17)* from crankshaft end play measured in *section a*. step (3).

(19) Find amount of crankshaft end play from step *(18)* on Table 4-3 and read what size thrust washers to use.

https://truckmanualshub.com/

d. Assembly.

NOTE

Do steps *(1)* to *(4)* only if the studs, dowels, and plugs have been removed.

(1) Install two longer studs (1) in front bearing cap (2).
(2) Install two shorter studs (3) in second bearing cap (4).
(3) Install four dowel pins (5) in rear bearing cap (6).

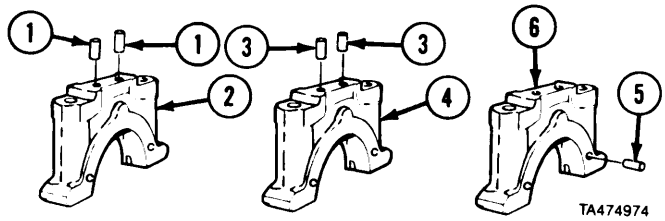

(4) Install four plugs (7) in crankshaft (8).

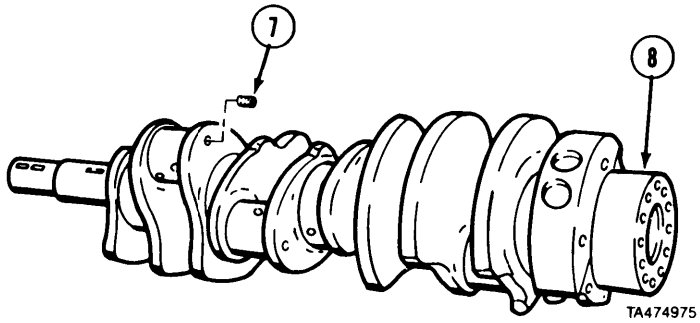

e. Installation.

CAUTION

Do not handle bearing shells and thrust washers more than necessary for installation. Sweat from hands can damage bearing shells and thrust washers.

NOTE

Bearing surfaces are numbered 1 to 5 from front to rear of engine block. Repeat steps *(1)* and *(2)* for four other bearing surfaces.

(1) Aline tab (1) on upper bearing shell (2) with slot (3) on engine block bearing surface (4).
(2) Install shell (2). Make sure both ends of shell are flush with bearing cap mounting surfaces (5).
(3) Apply oil to bearing shells (2) after installation.

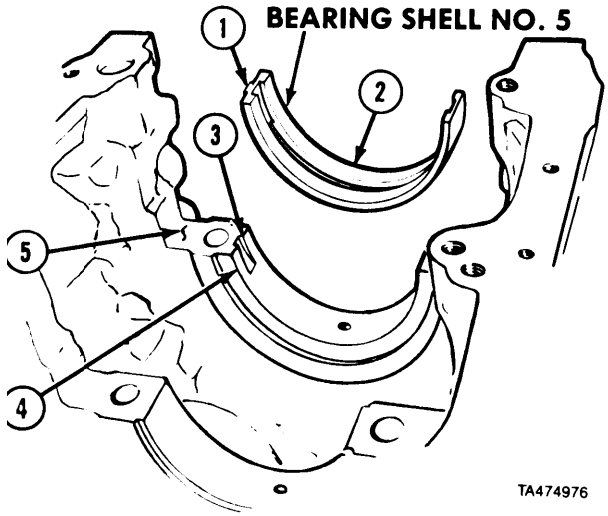

https://truckmanualshub.com/

4-5. MAIN BEARING AND CRANKSHAFT REMOVAL, REPAIR, AND INSTALLATION (CONT).

(4) Apply oil to five crankshaft main bearing journals (6).
(5) Attach suitable lifting device to crankshaft (7).
(6) Soldier A operates lifting device while Soldier B installs crankshaft (7).
(7) Push crankshaft (7) to front and install thrust washer (8). Push crankshaft (7) to rear and install other thrust washer.

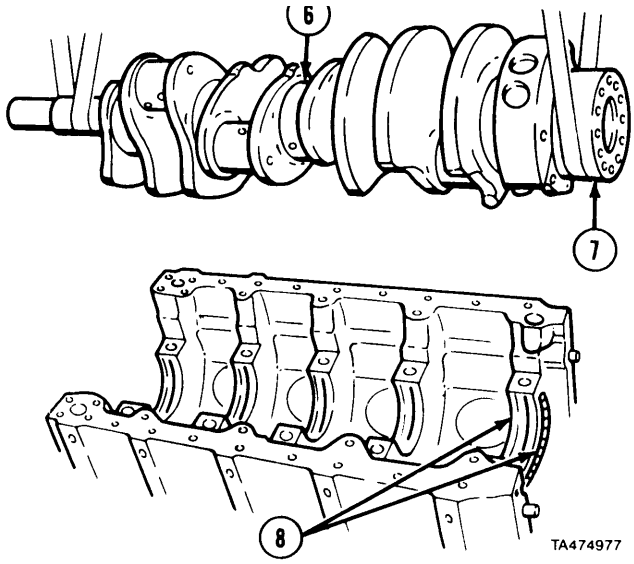

(8) Aline tab (9) with slot (10) and install bearing shell (1 1), making sure both ends of bearing shell are flush with bearing cap (12) mounting surfaces.
(9) Install four bearing shells (9) on other bearing caps (12).
(10) Install two thrust washers (13) on rear bearing cap (12) so that grooved sides of thrust washers point away from bearing cap.

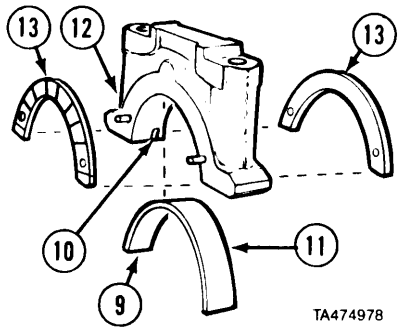

NOTE

Wipe oil from bearing shells and crankshaft main bearing journals before doing steps *(11)* to *(13).*

(11) Place strip of plastic gage across width of bearing shell (11)l/4-in. (6 mm) from center (14).
(12) Do step *(11)* for four bearing caps (12).

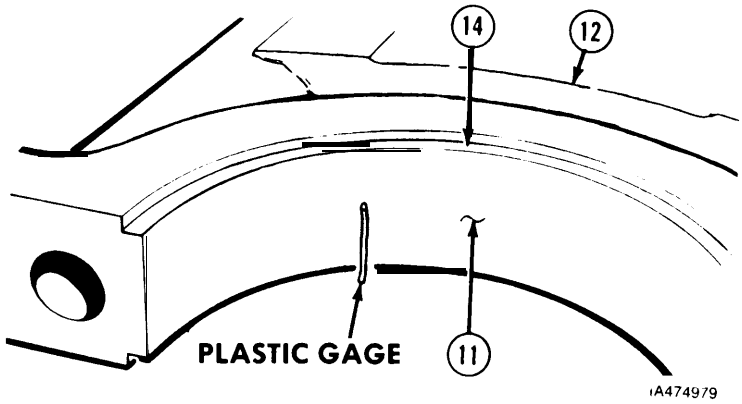

https://truckmanualshub.com/

(13) Install five bearing caps (12).
(14) Strike bearing caps (12) with soft-face hammer.

CAUTION

When installing bearing cap screws on engines built prior to Serial No. 8VF085 187 replace all ten flanged head screws with new 12-point screws with captured washers. If engine has new type screws, individual screws may be replaced. Mixing of old type and new type screws may cause damage to engine.

(15) Install ten screws (15).

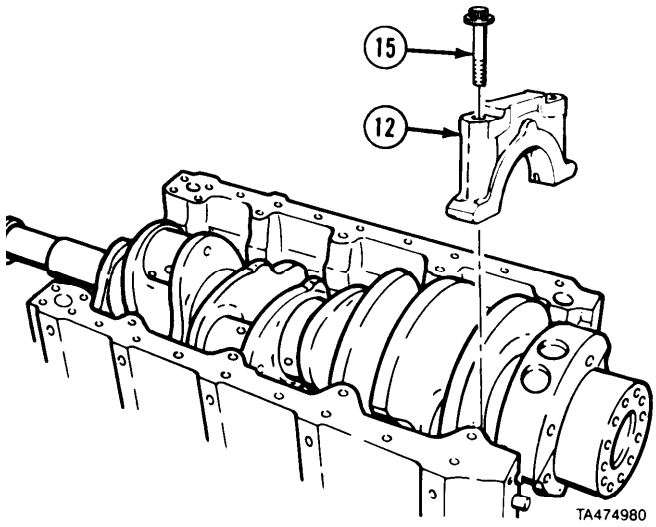

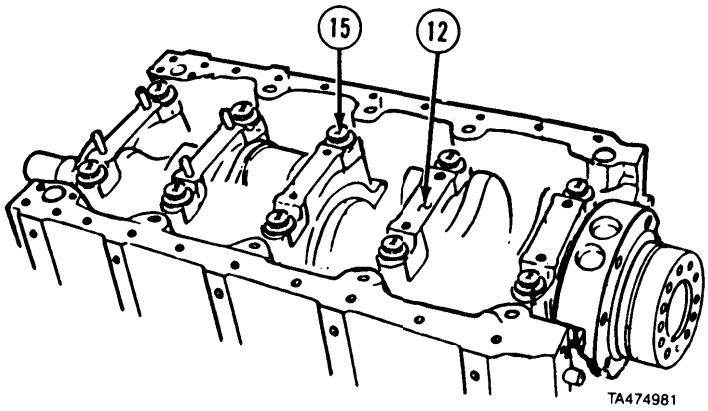

(16) Tighten ten screws (15) to 50 lb-ft (68 N-m).
(17) Strike bearing caps (12) with soft-face hammer.
(18) Tighten ten screws (15) to 110 lb-ft (149 N-m).
(19) Tighten ten screws (15) to 230 to 240 lb-ft (312 to 325 N-m).

https://truckmanualshub.com/

4-5. MAIN BEARING AND CRANKSHAFT REMOVAL, REPAIR, AND INSTALLATION (CONT).

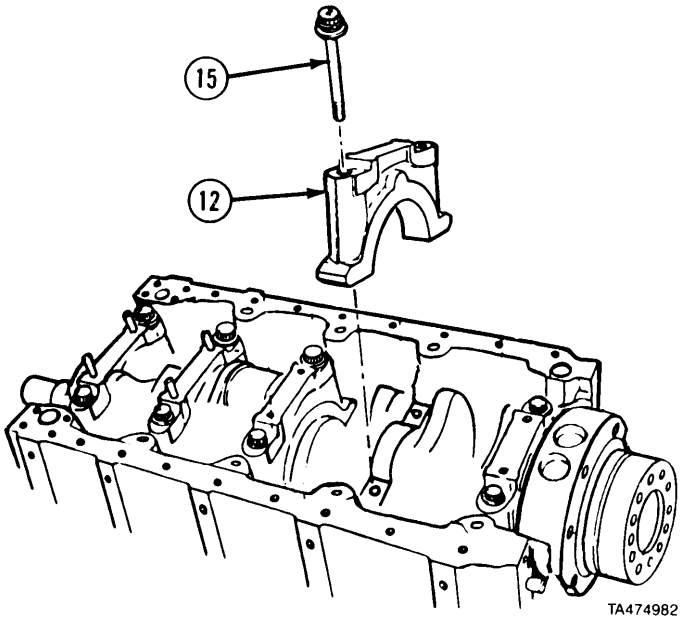

(20) Remove ten screws (15) and five bearing caps (12).

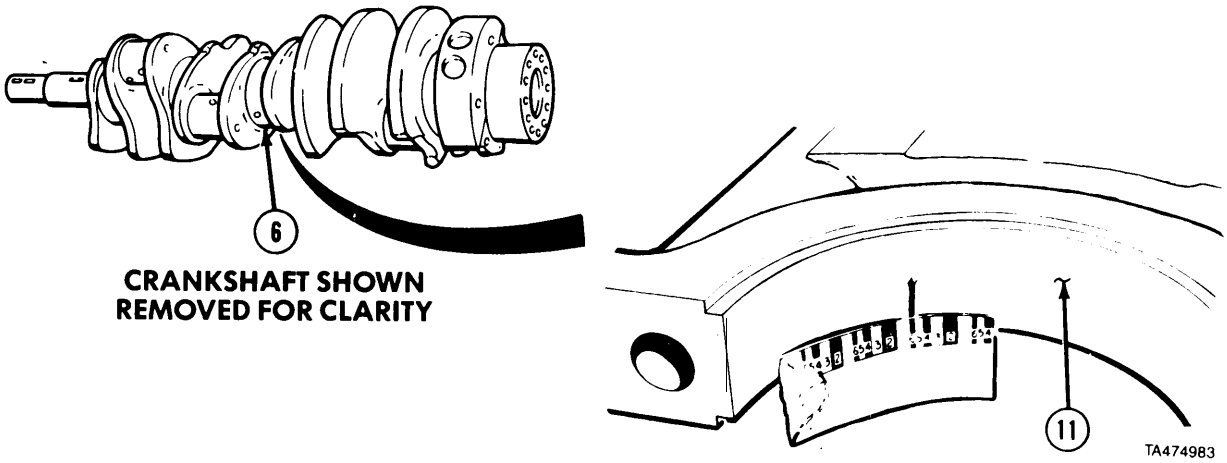

(21) Measure width of plastic gage with measuring strip. Width must be no more than 0.006-in. (0.15 mm). If greater, replace bearing shells (11).

(22) Wipe plastic gage from five main bearing journals (6) or bearing shells (11) and apply lubricating oil to those surfaces.

https://truckmanualshub.com/

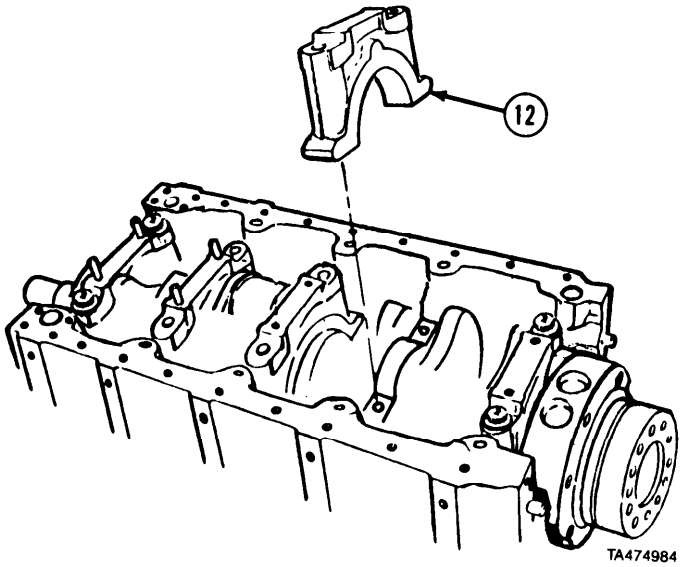

(23) Install five bearing caps (12).
(24) Strike bearing caps (12) with soft-face hammer.

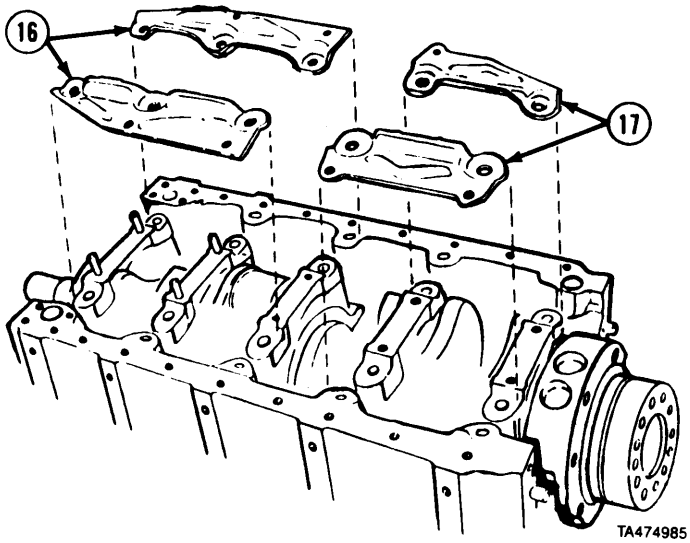

(25) Install four bearing cap stabilizers (16 and 17).

https://truckmanualshub.com/

4-5. MAIN BEARING AND CRANKSHAFT REMOVAL, REPAIR, AND INSTALLATION (CONT).

(26) Install seven screws (18) and washers (19). Tighten screws finger tight.

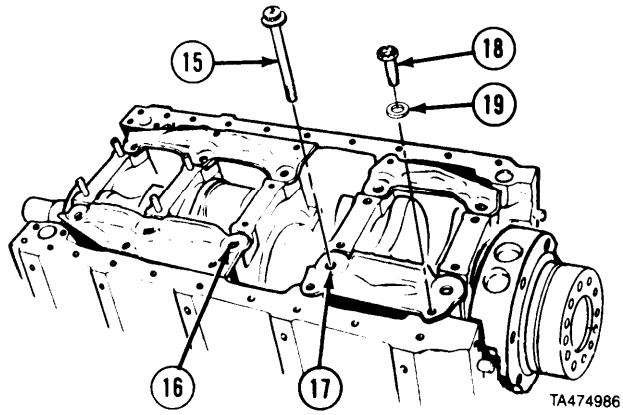

WARNING

Adhesives, solvents, and sealing compounds can burn easily, can give off harmful vapors, and are harmful to skin and clothing. To avoid injury or death, keep away from open fire and use in well-ventilated area. If adhesive, solvent, or sealing compound gets on skin or clothing, wash immediately with soap and water.

(27) Apply small amount of compound No. 2 to threads of ten screws (15) and surfaces of stabilizers (16 and 17).
(28) Install ten screws (15).

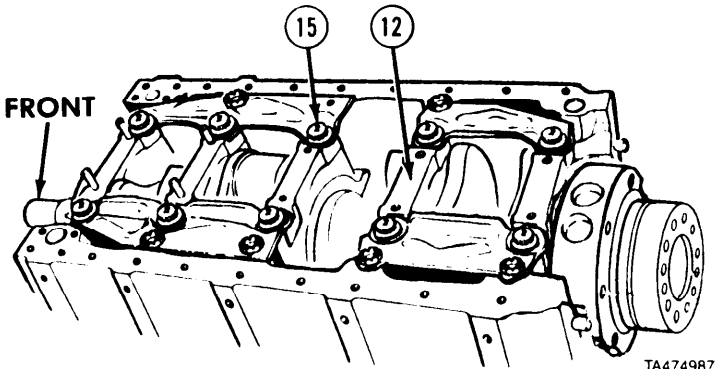

(29) Strike bearing caps (12) with soft-face hammer.
(30) Tighten eight screws (15) on four front bearing caps (12) to 50 lb-ft (68 N-m) starting with the middle two caps.
(31) Strike bearing caps (12) with soft-face hammer and tighten eight screws (15) to 110 lb-ft (149 N-m).
(32) Strike bearing caps (12) with soft-face hammer and tighten eight screws (15) to 230 to 240 lb-ft (312 to 325 N-om).

https://truckmanualshub.com/

Crankshaft Maintenance Instructions (Cont)

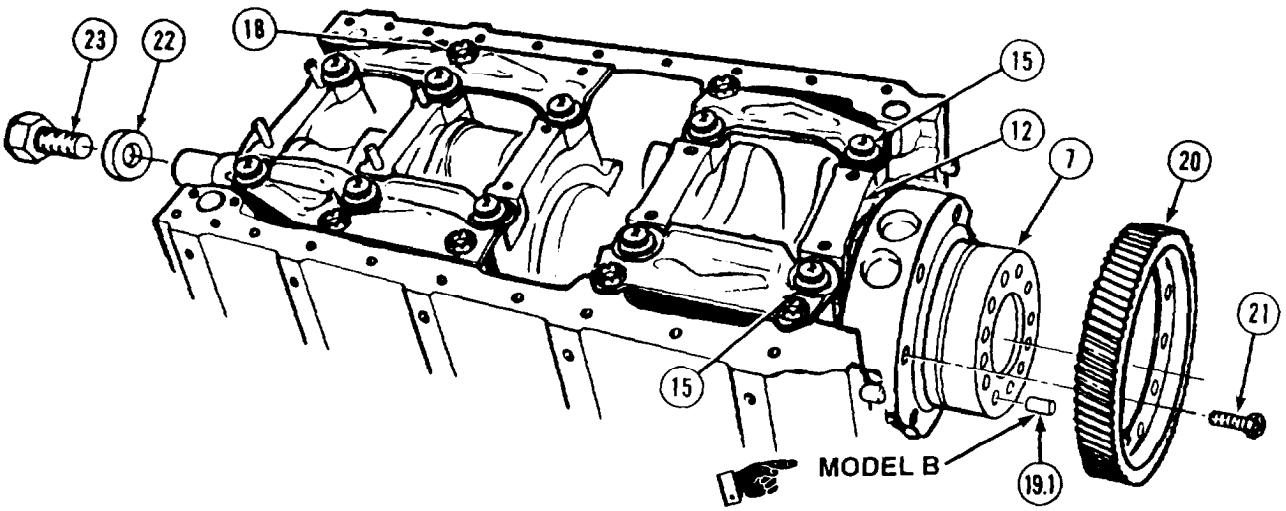

(33) Tighten two screws (15) on rear bearing cap (12) to 50 lb-ft (68 N•m).
(34) Strike both ends of crankshaft (7) two or three blows with soft-face hammer.
(35) Strike rear bearing cap (12) with soft-face hammer.
(36) Tighten two screws (15) on rear bearing cap (12) to 110 lb-ft (149 N•m).
(37) Strike rear bearing cap (12) with soft hammer.
(38) Tighten two screws (15) on rear bearing cap (12) 230 to 240 lb-ft (312 to 325 N•m).
(39) Tighten seven screws (18) to 75 lb-ft (102 N•m).

NOTE

- There are two models of crankshafts and timing gears. Model B crankshaft, used with serial No. 8VF-098597 and later, has a roll pin to locate the timing gear. Model B timing gear, used in the same engines, has a groove to accept the roll pin.
- Mode1 A and B parts are interchangeable with the following exception: do not use roll pin with Mode1 B timing gear and Model A crankshaft, or Mode1 A timing gear and Mode1 B crankshaft.
- Perform step (39.1) for Mode1 B crankshaft and timing gear only.

(39.1) Install roll pin (19.1) in crankshaft (7).
(40) Install timing gear (20) and six screws (21).
(41) Install spacer (22) and screw (23) on end of crankshaft (7).
(42) Soldier A holds front end of crankshaft (7) while Soldier B tightens six screws (21) to 40 lb-ft. (54 Nom).
(43) Remove screw (23) and spacer (22) from crankshaft (7).

https://truckmanualshub.com/

https://truckmanualshub.com/

Crankshaft Maintenance Instructions (Cont)

(44) Soldier A installs dial indicator on engine block (24). Soldier B pushes crankshaft (7) towards gage with pry bar while Soldier A adjusts dial indicator to zero.

(45) Soldier A reads end play while Soldier B removes pry bar and forces crankshaft in opposite direction. Minimum end play is *0.004* in. (0.10 mm) and maximum end play is 0.018 in. (0.46 mm). If end play is outside limits, replace crankshaft (7).

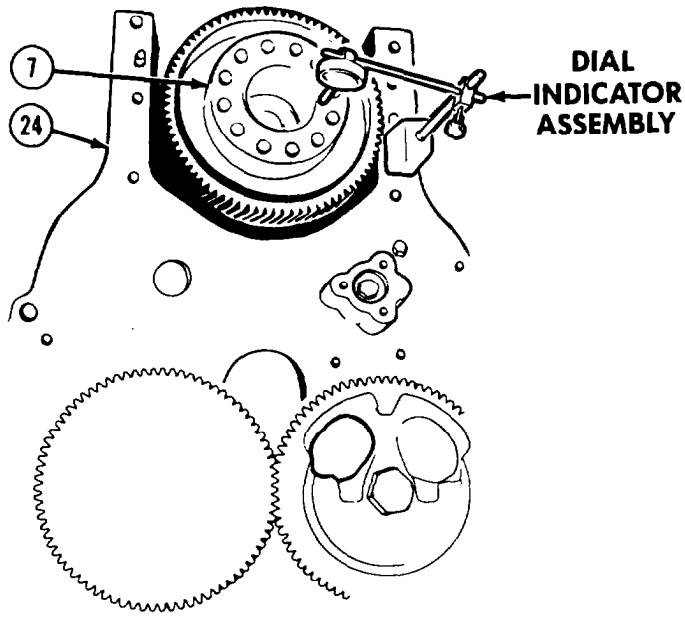

f. Follow-on Maintenance.

(1) Install pistons, connecting rods, and liners (para 6-2).

(2) Install oil pump drive gear (para 4-4).

(3) Install idler gear (para 7-11).

(4) Install flywheel housing and rear oil seal (para 5-3).

(5) Install crankshaft cover and front oil seal (para 4-6).

(6) Install oil pump (para 8-4).

END OF TASK

https://truckmanualshub.com/

Crankshaft Maintenance Instructions (Cont)

4-6. CRANKSHAFT COVER AND FRONT SEAL REMOVAL/INSTALLATION.

This task covers:

a. Removal
b. Installation
c. Follow-on Maintenance

INITIAL SETUP

Models
All

Test Equipment
None

Special Tools
None

Supplies
Oil, lubricating, Item 48, Appendix C
Grease, automotive and artillery, Item 36, Appendix C

Personnel Required
MOS 63W, Wheel vehicle repairer

References
None

Equipment Condition

TM or Para	*Condition Description*
TM 9-2320-279-20	Alternator support and adjusting strap removed.
Para 4-3	Vibration damper removed.
Para 8-3	Oil pan removed.

Special Environmental Conditions
None

General Safety Instructions
None

Level of Maintenance
Direct Support

a. Removal.

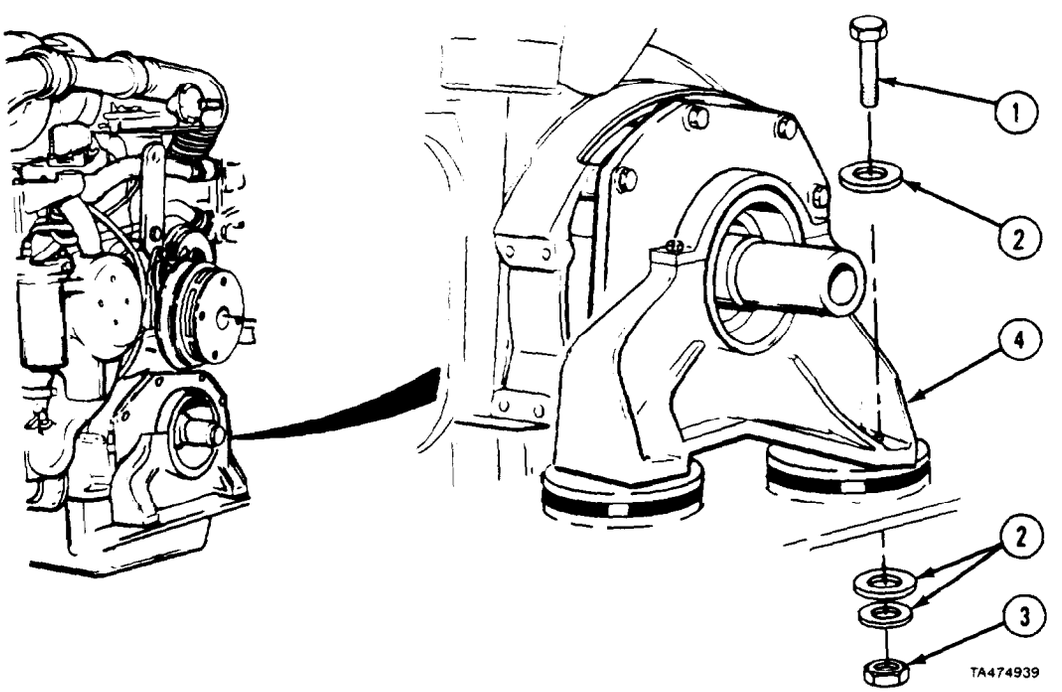

(1) Support engine with a suitable lifting device.
(2) Remove two screws (1) six washers (2) and two locknuts (3) from support (4).

https://truckmanualshub.com/

(3) Remove two screws (5) and lockwashers (6) from support (4).
(4) Remove support (4) and ring (7) --

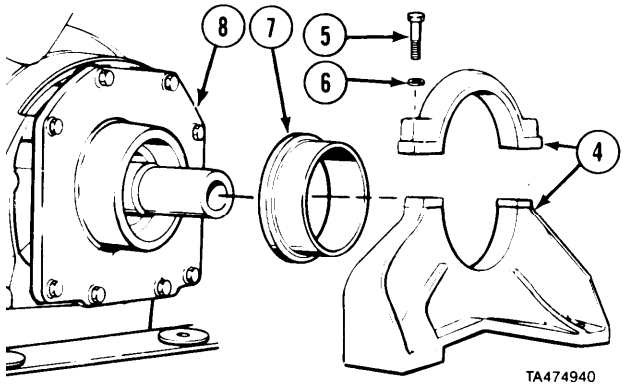

(5) Remove four screws (9) and lockwashers (10) from trunnion (8).
(6) Remove two screws (11) and lockwashers (12).
(7) Remove two screws (13) and lockwashers (14).
(8) Remove trunnion (8) from crankshaft cover (15).

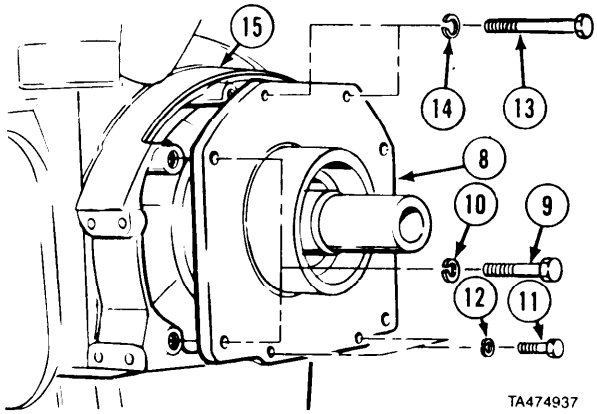

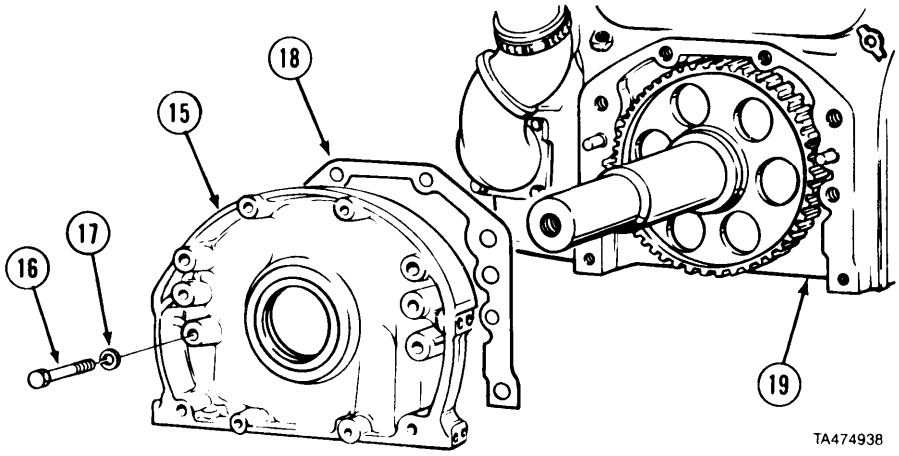

(9) Remove two screws (16) and lockwashers (17) from inside crankshaft cover (15).
(10) Remove crankshaft cover (15) and gasket (18).
(11) Remove old sealant from crankshaft cover (15) and engine block (19).

https://truckmanualshub.com/

4-6. CRANKSHAFT COVER AND FRONT SEAL REMOVALI/INSTALLATION (CONT).

(12) Support crankshaft cover (15) outer face on two wooden blocks.
(13) Drive front seal (20) out front side of crankshaft cover (15).

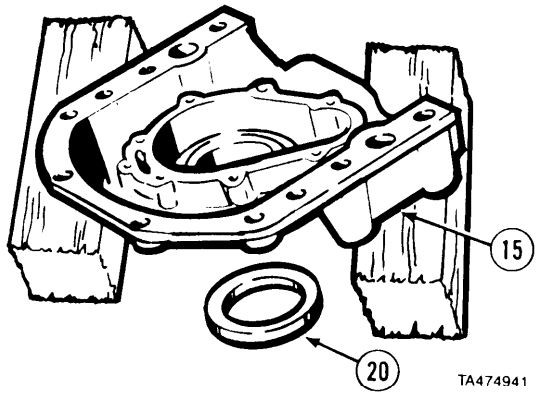

b. Installation.

NOTE

Do not remove lubricant or plastic coating on outer surface of new front seal.

(1) Coat sealing lip of front seal (1) with grease.
(2) Position front seal (1) in crankshaft cover (2) with sealing lip of front seal against inner face of ('crankshaft cover.
(3) Drive front seal (1) into crankshaft cover (2).

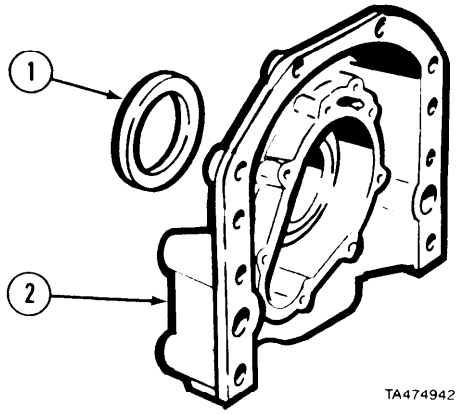

(4) Coat gasket (3) with grease and install on engine block (4).
(5) Install crankshaft cover (2) on dowels (5) and engine block (4) while sliding oil seal (1) over crankshaft (6).

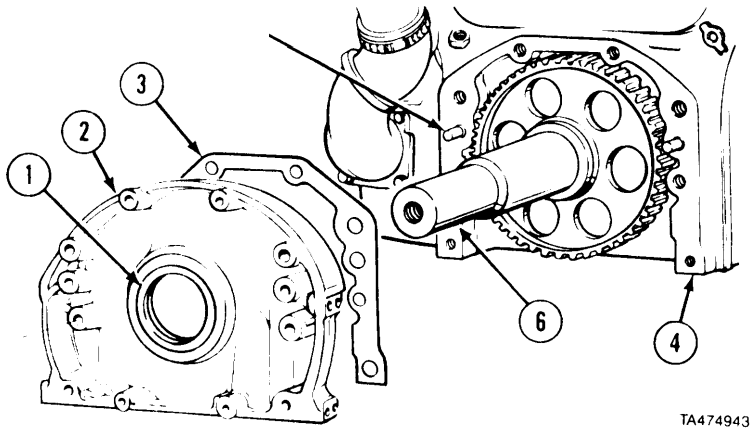

https://truckmanualshub.com/

(6) Install two screws (7) and lockwashers (8) in crankshaft cover (2).
(7) Tighten two screws (7) to 80 to 90 lb-ft (108 to 122 N-m).

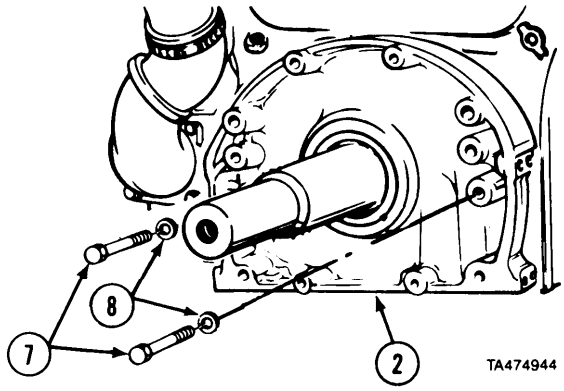

(8) Position trunnion (9) against crankshaft cover (2).
(9) Install four screws (10) and lockwashers(11) in trunnion (9).
(10) Install two screws (12) and lockwashers (13).
(11) Install two screws (14) and lockwashers (15).
(12) Tighten screws (12 and 14) to 30 to 35 lb-ft (41 to 47 N-m).
(13) Tighten screws (10) to 70 to 75 lb-ft (94 to 102 N-m).

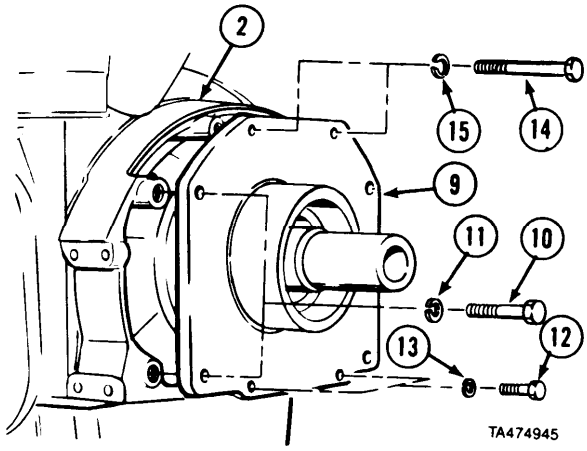

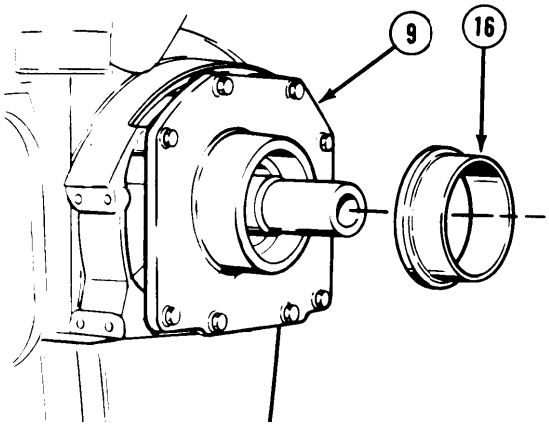

(14) Coat ring (16) with light coat of grease and slide over trunnion (9).

https://truckmanualshub.com/

4-6. CRANKSHAFT COVER AND FRONT SEAL REMOVAL/INSTALLATION (CONT).

(15) Install bottom half of support (17) on engine support bracket (18).
(16) Install two screws (19), six washers (20), and two locknuts (21) in support (17).

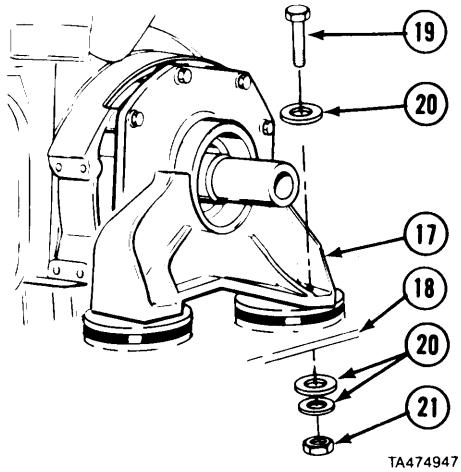

(17) Install top half of support (17).
(18) Install two screws (22) and lockwashers (23) to support (17).
(19) Tighten screws (22) to 45 to 50 lb-ft (61 to 67 N-m).
(20) Remove lifting device from engine.

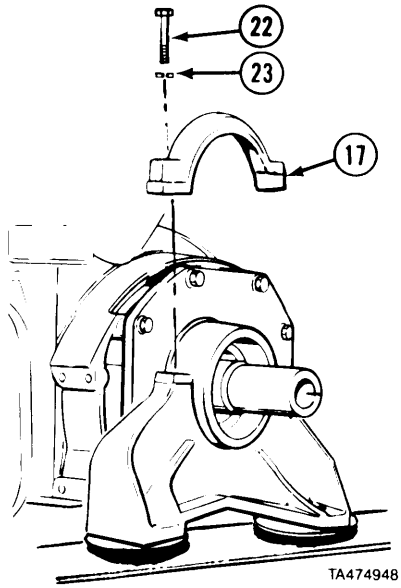

c. Follow-on Maintenance.
(1) Install oil pan (para 8-3).
(2) Install vibration damper (para 4-3).
(3) Install alternator bracket (TM 9-2320-279-20).

END OF TASK

https://truckmanualshub.com/

CHAPTER 5
FLEXPLATE AND FLYWHEEL HOUSING MAINTENANCE

Contents

	Para	Page
General	5-1	5-1
FlexplateRemoval/Installation	5:2	5-1
Flywheel Housing and Rear Oil Seal Removal/Installation	5-3	5-3

Section I. INTRODUCTION

5-1. GENERAL. This chapter includes removal, installation, and repair of the flexplate and flywheel housing. The subassemblies and parts which must be removed before the flexplate and the flywheel housing components can be removed will be referenced to other paragraphs or chapters of this manual, TM 9-2320-279-10, TM 9-2320-279-20, or TM 9-2320-279-34.

Section II. FLEXPLATE AND FLYWHEEL HOUSING

Flexplate and Flywheel Housing Maintenance Instructions

5-2. FLEXPLATE REMOVAL/INSTALLATION.

This task covers:

a. Removal
b. Installation
c. Follow-on Maintenance

INITIAL SETUP

Models
All

Test Equipment
None

Special Tools
None

Supplies
Compound, international, No. 2, Item 26, Appendix C

Personnel Required
MOS 63W, Wheel vehicle repairer

References
None

Equipment Condition

TM or Para	*Condition Description*
TM 9-2320-279-34	Transmission removed from engine.

Special Environmental Condition
None

General Safety Instructions
None

Level of Maintenance
Direct Support

https://truckmanualshub.com/

5-2. FLEXPLATE REMOVAL/INSTALLATION (CONT).

a. Removal.

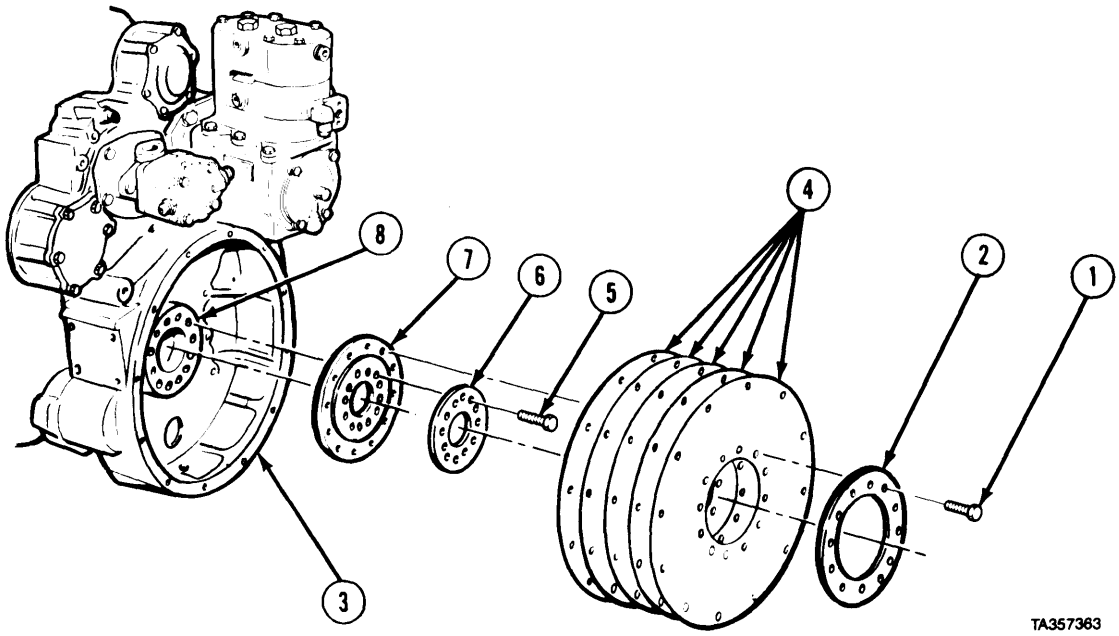

(1) Remove 12 screws (1) and plate (2), from flywheel housing (3).

NOTE

Mark flexplate disks for proper installation.

(2) Remove five disks (4) from flywheel housing (3).
(3) Remove 12 screws (5), plate (6), and hub (7) from crankshaft (8).

b. Installation.

(1) Aline screw holes in hub (7) with crankshaft (8) in flywheel housing (3).

WARNING

Adhesives, solvents, and sealing compounds can burn easily, can give off harmful vapors, and are harmful to skin and clothing. To avoid injury or death, keep away from open fire and use in well-ventilated area. If adhesive, solvent, or sealing compound gets on skin or clothing, wash immediately with soap and water.

(2) Apply international No. 2 compound to 12 screws (5).
(3) With rough side toward engine, install hub (7), plate (6), and 12 screws (5). Tighten screws to 50 lb-ft (67 N-m) and an additional 1/4 turn.
(4) Apply international No. 2 compound to 12 screws (l).
(5) Aline screw holes in five disks (4) and plate (2) with hub (7).
(6) Install five disks (4), plate (2), and 12 screws (l). Tighten screws to 100 lb-ft (135 N-m).

c. Follow-on Maintenance. Install transmission (TM 9-2320-279-34).

END OF TASK

https://truckmanualshub.com/

5-3. FLYWHEEL HOUSING AND REAR OIL SEAL REMOVAL/INSTALLATION.

This task covers:

a. Removal
b. Installation
c. Follow-on Maintenance

INITIAL SETUP

Models
All

Test Equipment
None

Special Tools
Stud set, alinement J1927-01
Stud set, alinement J25002
Installer, seal J21112-B
Expander, seal J4239
Handle J3154-1
Tool set, seal and wear sleeve J35686

Fabricated Tools
Lifting eyes 2BH944

Supplies
Oil, lubricating, Item 48, Appendix C
Grease, automotive and artillery, Item 36, Appendix C
Compound, sealing, pipe thread, Item 32, Appendix C
Compound, sealing, lubricating, Item 31, Appendix C
Compound, sealing, Item 30.1, Appendix C
Tags, identification, Item 61, Appendix C
Cloth, crocus, abrasive, Item 17, Appendix C

Personnel Required
MOS 63W, Wheel vehicle repairer (2)

References
None

Equipment Condition

TM or Para	*Condition Description*
TM 9-2320-279-20	Air compressor removed.
TM 9-2320-279-20	Starting motor removed.
TM 9-2320-279-34	Steering hydraulic pump removed.
TM 9-2320-279-34	Engine removed.
Para 8-3	Oil pan removed.
Para 5-2	Flexplate removed.

Special Environmental Conditions
None

General Safety Instructions
None

Level of Maintenance
Direct Support

https://truckmanualshub.com/

5-3. FLYWHEEL HOUSING AND REAR OIL SEAL REMOVAL/INSTALLATION (CONT).

a. ***Removal.***

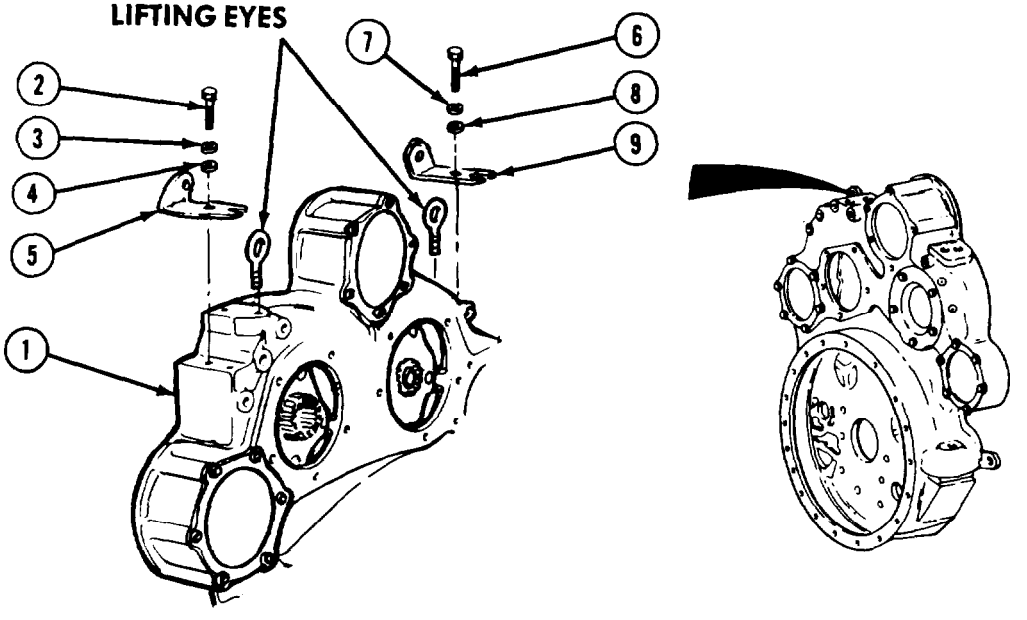

(1) Install two lifting eyes,

(2) support flywheel housing (1) with suitable lifting device.

(3) Remove three screws (2), lockwashers (3), washers (4), and left bank bracket (5)

(4) Remove three screws (6), lockwashers (7), washers (8), and right bank bracket (9).

NOTE

Tag and mark screws (10), (12), (14), and (16).

(5) Remove six screws (10) and washers (11) from flywheel housing (1).

(6) Remove six screws (12) and lockwashers (13) from flywheel housing (1).

(7) Remove four screws (14) and washers (15) from flywheel housing (1).

(8) Remove three screws (16) and washers (17) from flywheel housing (1).

NOTE

Screws (18), (21), (26), (29), (31), (34), and (37) and washers (19), (22), (27), (36), (32), (35), and (38) must not De reused.

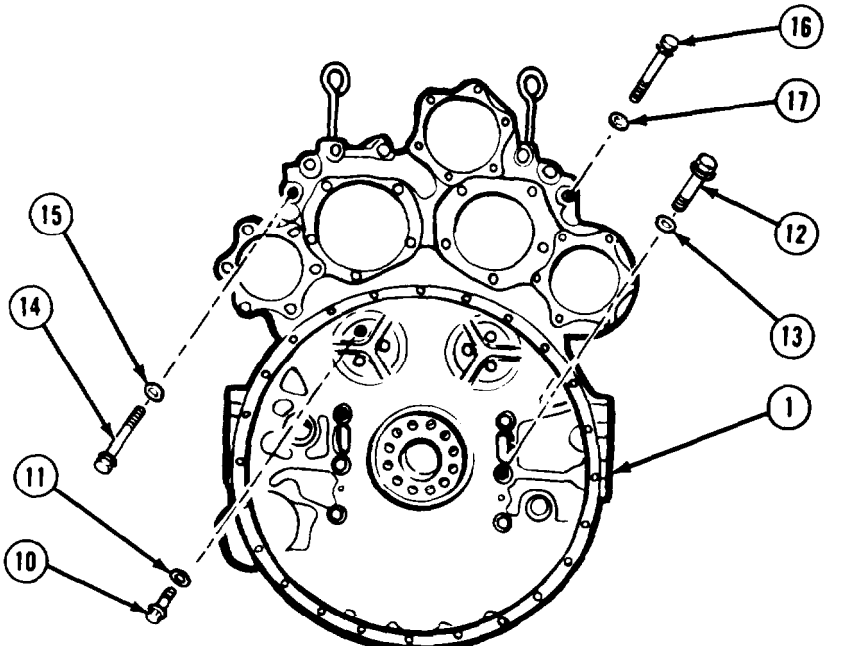

https://truckmanualshub.com/

(9) Remove five screws (18) and lockwashers (19) from access cover (20).

(10) Remove screw (21) and copper washer (22).

(11) Remove access cover (20) and gasket (23).

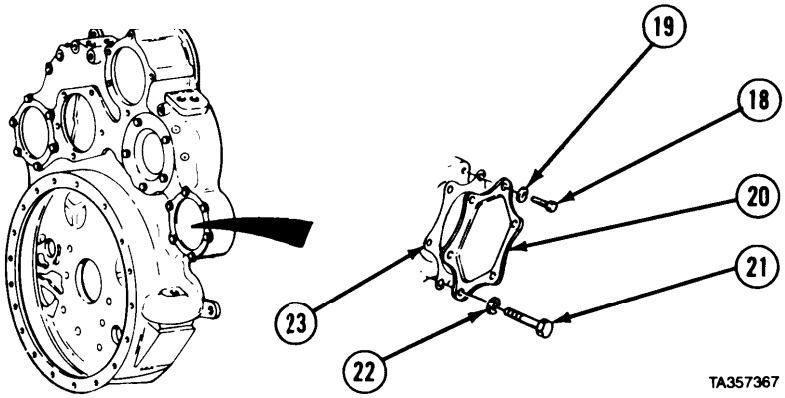

(12) Remove three nuts (24), lockwashers (25), screws (26), and washers (27) from access cover (28).

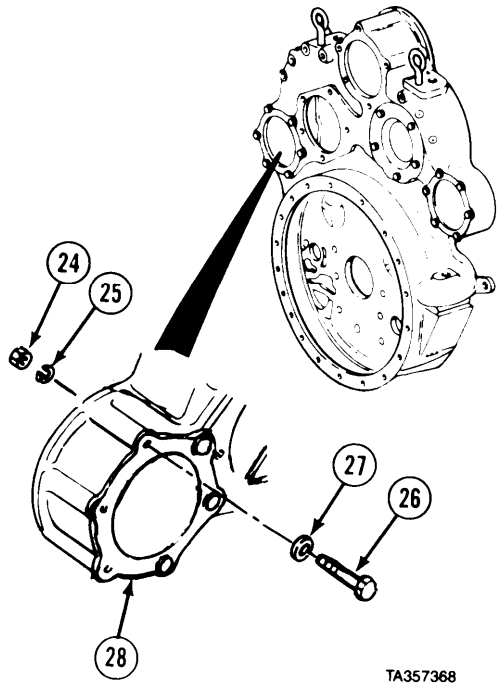

(13) Remove two screws (29) and lockwashers (30).

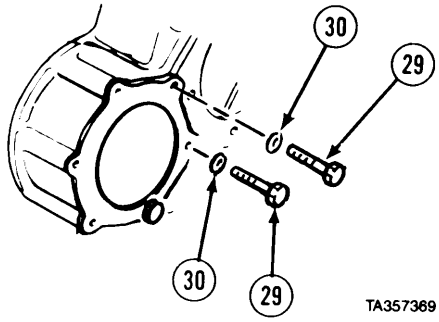

https://truckmanualshub.com/

5-3. FLYWHEEL HOUSING AND REAR OIL SEAL REMOVAL/INSTALLATION (CONT).

(14) Remove screw (31) and washer (32),
(15) Remove access cover (28) and gasket (33).

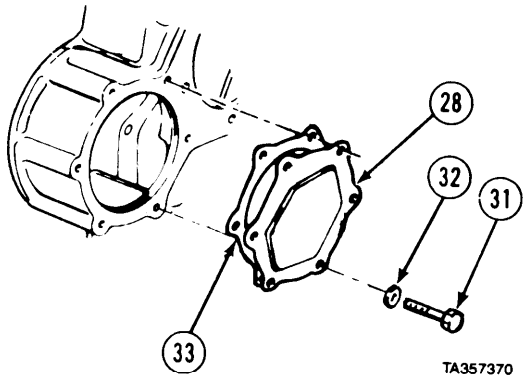

(16) Remove two screws (34) and lockwashers (35) from access plate (36).

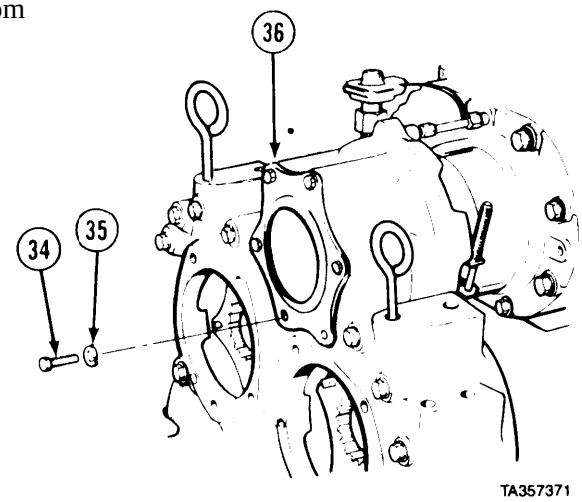

(17) Remove three screws (37) and lockwashers (38) from access plate (36).

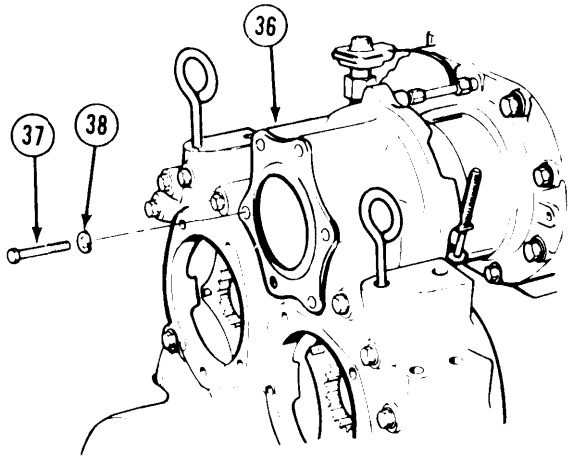

https://truckmanualshub.com/

NOTE

Copper washer must not be reused.

(18) Remove screw (39), copper washer (40), and nut (41).

(19) Remove access plate (36) and gasket (42).

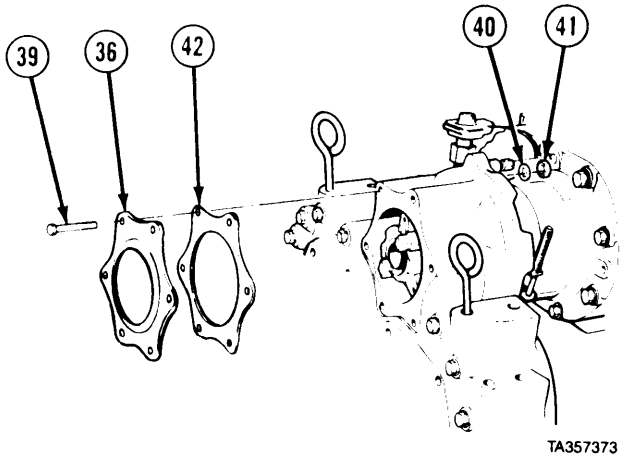

(20) Remove two screws (43) and lockwashers (44).

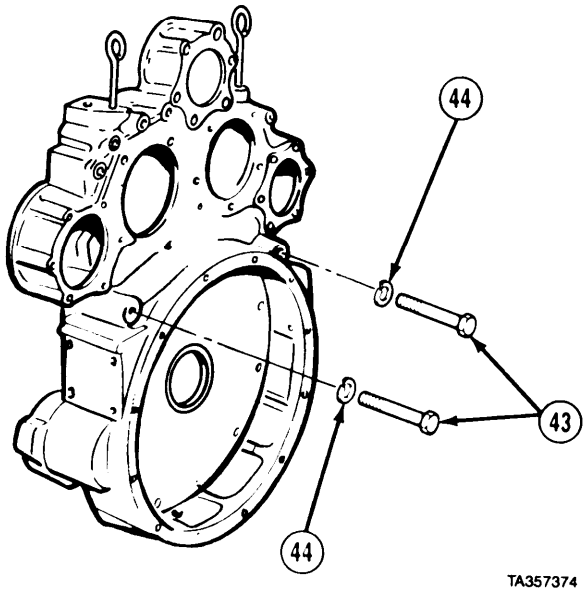

(21) Remove screw (45) and washer (46) from air box drain retaining clip (47).

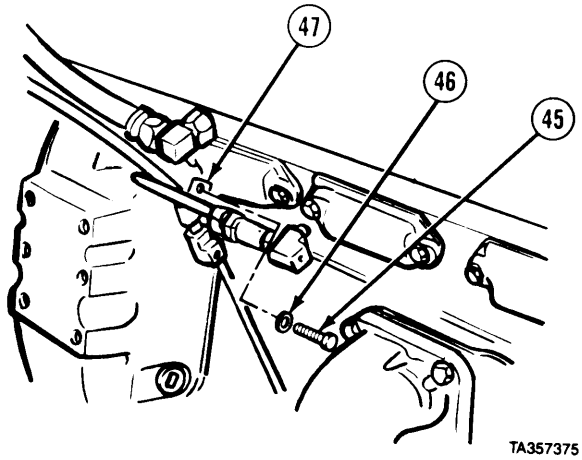

https://truckmanualshub.com/

5-3. FLYWHEEL HOUSING AND REAR OIL SEAL REMOVAL/INSTALLATION (CONT).

CAUTION

Screw inside access hole must be removed. Failure to remove screw may cause flywheel housing to crack when hoisted from engine.

NOTE

Screw must not be reused.

(22) Remove screw (48) from access hole,

(23) Install four alining studs from alinement stud set in engine block (49).

WARNING

Make sure lifting device is secured. Keep hands and feet out from under flywheel housing when removing from engine. Falling parts may cause serious personal injury.

(24) Remove flywheel housing (1) from rear end of engine block (49).

(25) Remove pipe plug (50) from bottom of flywheel housing (1).

(26) Remove pipe plug (51) from back side of flywheel housing (1).

https://truckmanualshub.com/

Flexplate and Flywheel Housing Maintenance Instructions (Cont)

(27) Remove crankshaft rear oil seal (52) from flywheel housing (1).

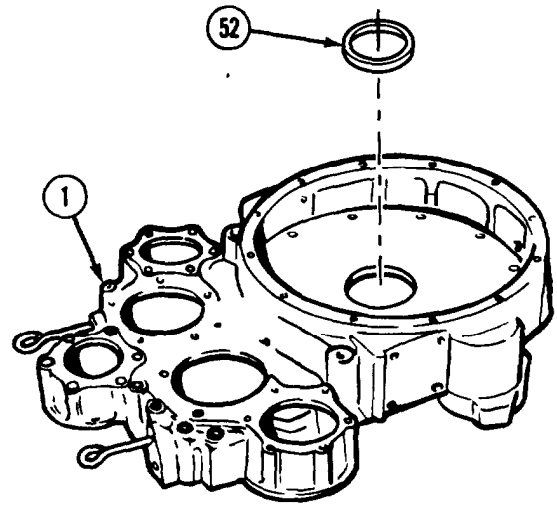

CAUTION

Use care not to damage crankshaft when removing crankshaft rear oil sleeve.

NOTE

Rear oil sleeve may not be present on crankshaft.

(27.1) Remove sleeve (52.1) by splitting with a chisel and hammer.

(28) Remove gasket (53) from engine block rear end plate (54) and flywheel housing (1).

CAUTION

Crankshaft must be clean and smooth or oil seal lip will be damaged when flywheel housing is installed.

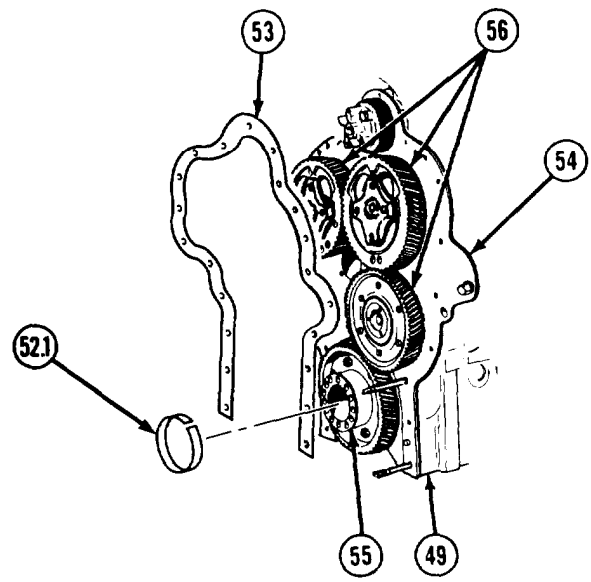

NOTE

Polishing motion should be clockwise around end of crankshaft.

(29) Polish end of crankshaft (55) with crocus cloth wet with lubricating oil.

(30) Lubricate gear train teeth (56) with lubricating oil.

(31) Remove four alining studs from engine block (49).

(32) Remove lifting eyes.

https://truckmanualshub.com/

5-3. FLYWHEEL HOUSING AND REAR OIL SEAL REMOVAL/INSTALLATION(CONT).

a. Installation.

(1) Install two lifting eyes.
(2) Set flywheel housing (1), engine side down, on flat surface.
(3) Deleted.

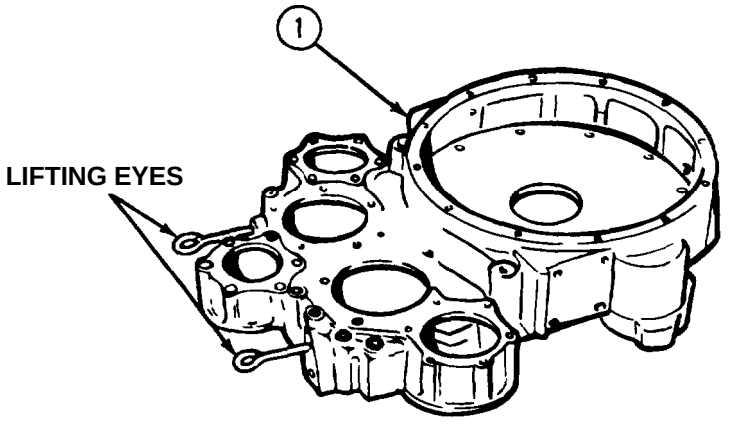

(4) Apply grease to engine side of flywheel housing (1).
(5) Install gasket (3) on engine side of flywheel housing (1).
(6) Apply grease to gasket (3).

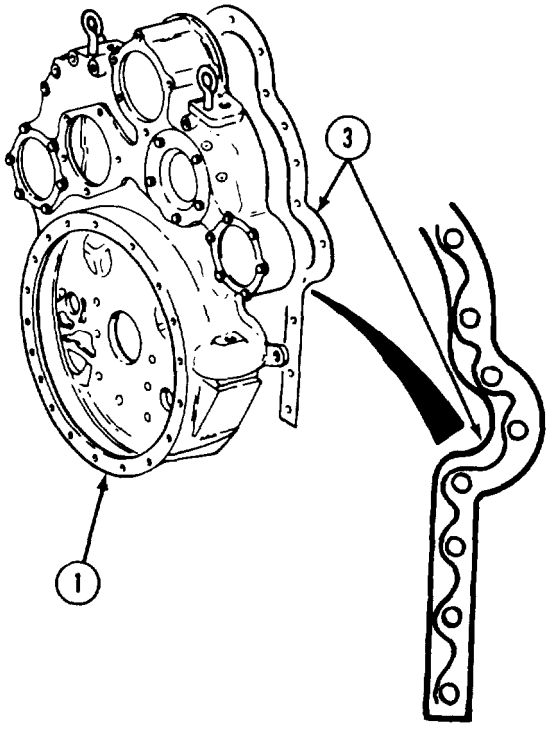

https://truckmanualshub.com/

WARNING

Adhesives, solvents, and sealing compounds can burn easily, can give off harmful vapors, and are harmful to skin and clothing. To avoid injury or death, keep away from open fire and use in well-ventilated area. If adhesive, solvent, or sealing compound gets on skin or clothing, wash immediately with soap and water.

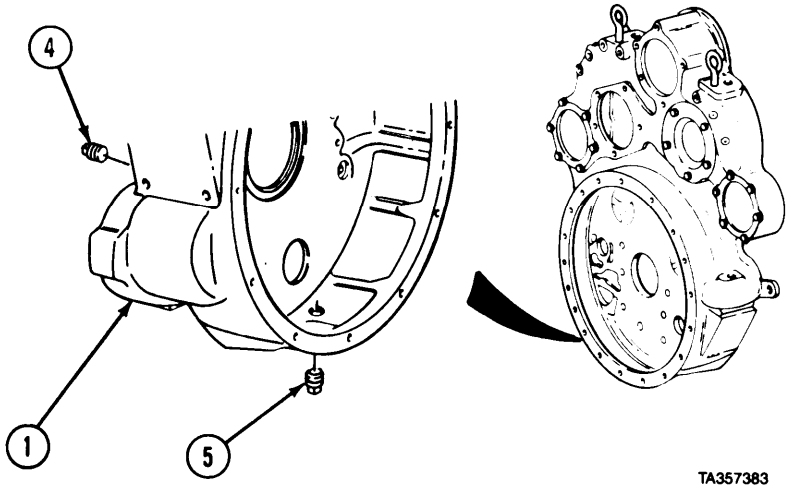

(7) Coat threads of pipe plugs (4 and 5) with pipe thread sealing compound and install pipe plug (4) in back side of flywheel housing (1).

(8) Install pipe plug (5) in bottom of flywheel housing (l).

(9) Coat lip of crankshaft oil seal (2) with lubricating oil.

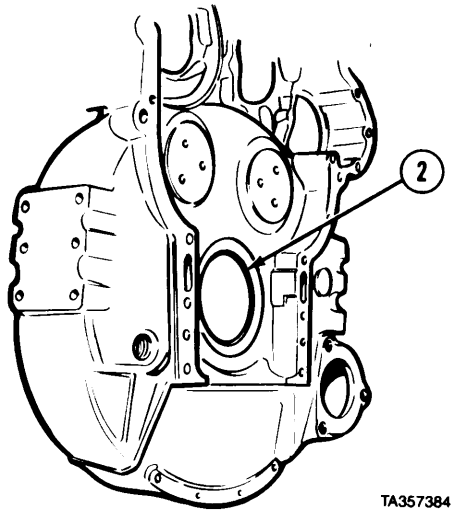

(10) Install four alining studs in engine block (6).

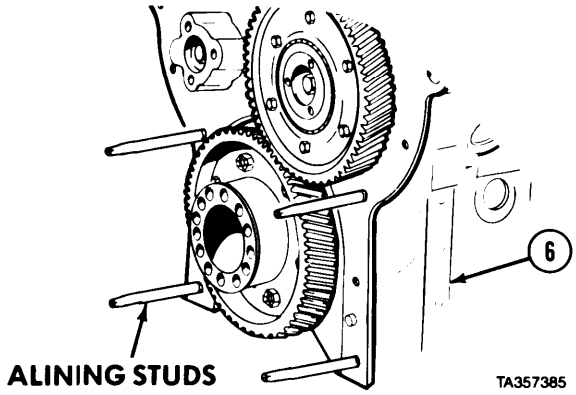

https://truckmanualshub.com/

5-3. FLYWHEEL HOUSING AND REAR OIL SEAL REMOVAL/INSTALLATION (CONT).

(11) Soldier A operates lifting device while Soldier B installs flywheel housing (1) over crankshaft (7) against engine block (6).

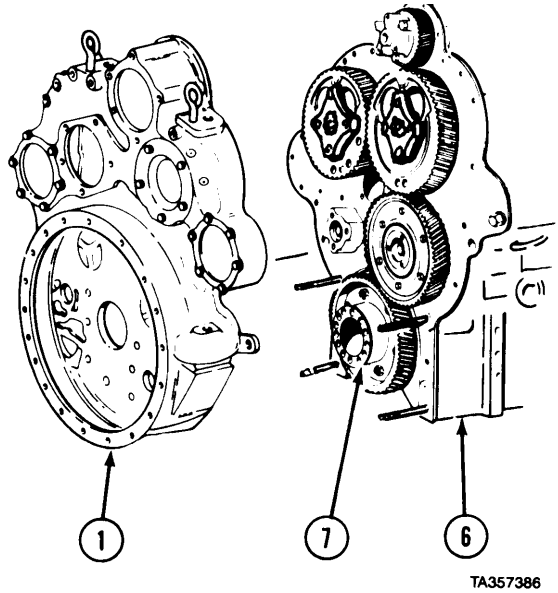

(12) Install new screw (8).

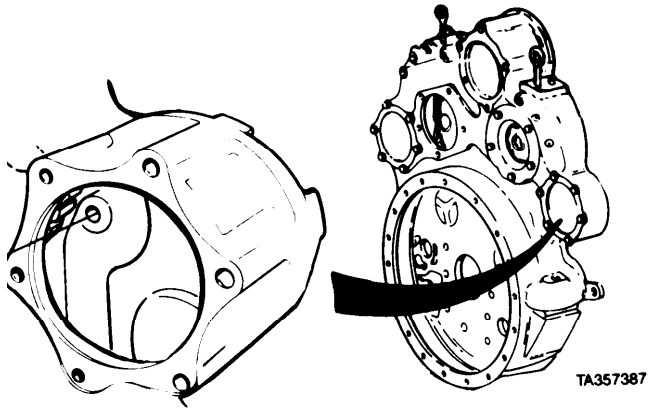

(13) Install screw (9) and washer (10) to air box drain retaining clip (11) on right side of engine.

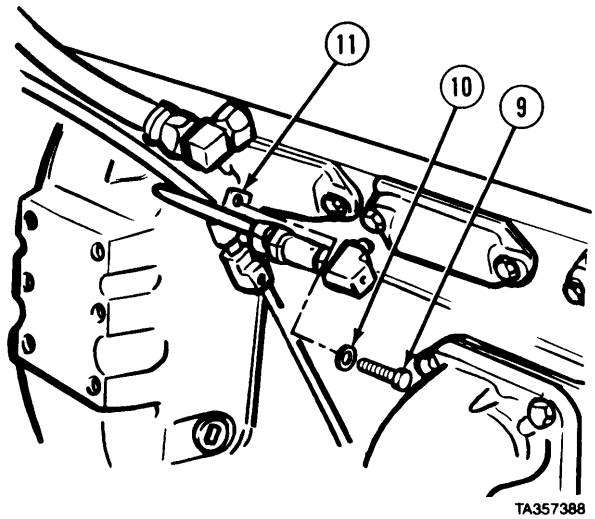

https://truckmanualshub.com/

Flexplate and Flywheel Housing Maintenance Instructions (Cont)

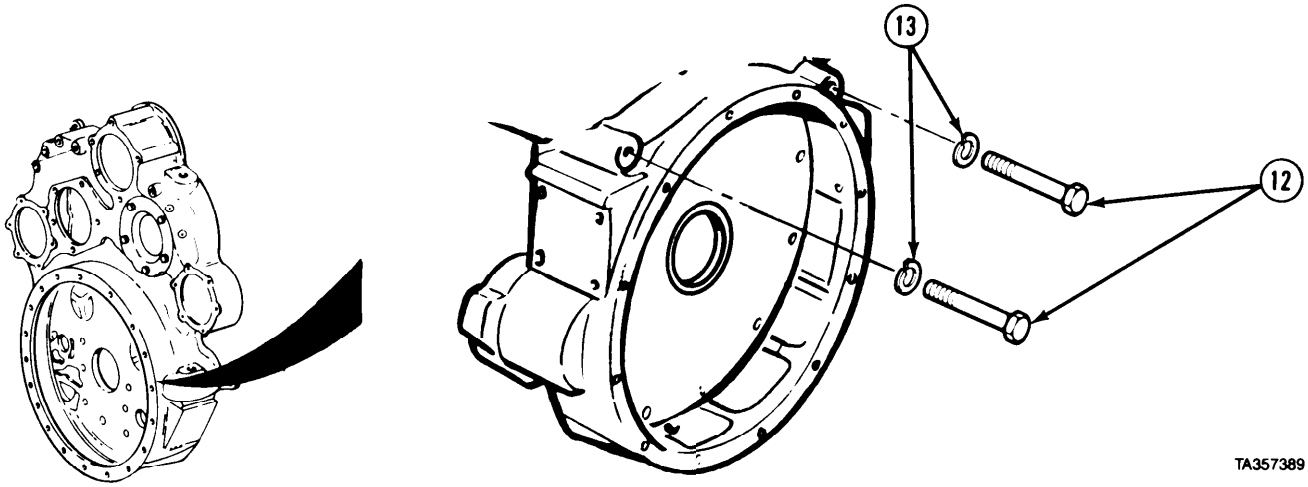

(14) Install two screws (12) and lockwashers (13).

(15) Apply grease to gasket (14) and install gasket and access plate (15) to flywheel housing (1).

(16) Install screw (16), new copper washer (17), and nut (18),

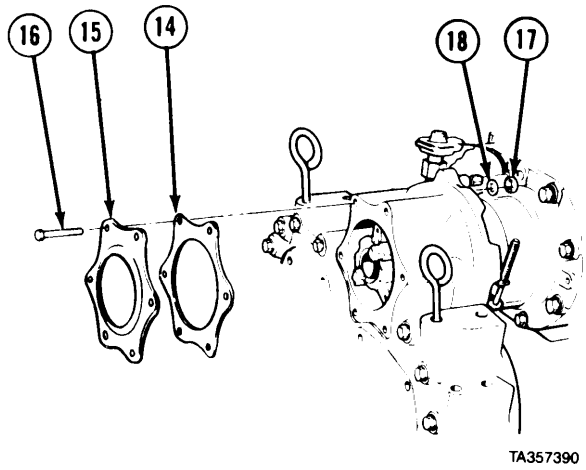

(17) Install three screws (19) and lockwashers (20).

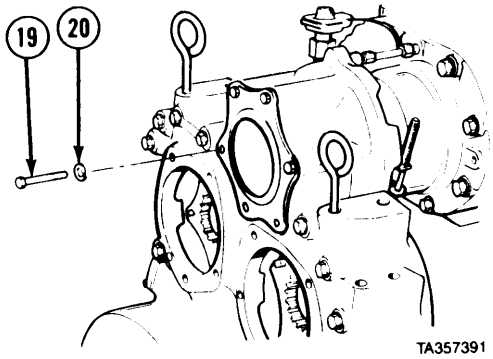

https://truckmanualshub.com/

5-3. FLYWHEEL HOUSING AND REAR OIL SEAL REMOVAL/INSTALLATION (CONT).

(18) Install two screws (21) and lockwashers (22).

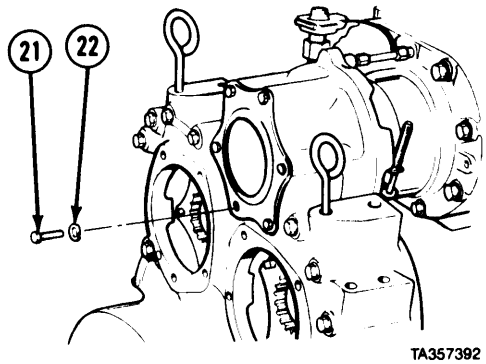

TA357392

(19) Apply grease to gasket (23).
(20) Install gasket (23), access plate (24), screw (25), and washer (26) to flywheel housing (1).

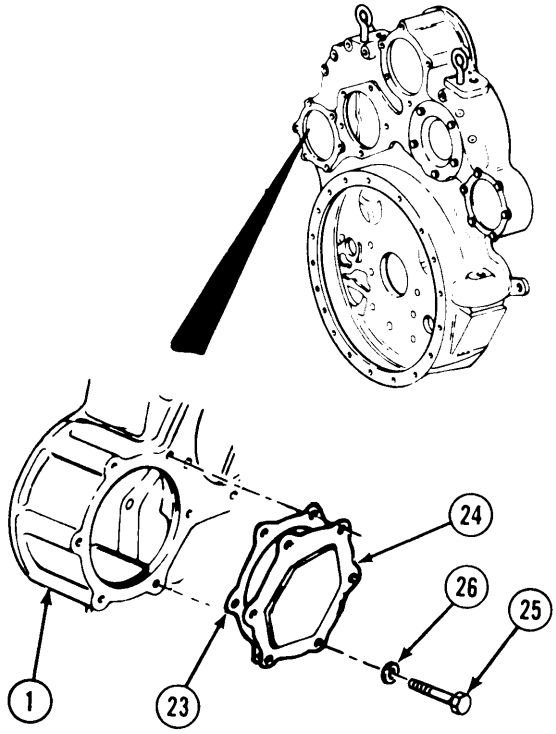

TA357393

(21) Install two screws (27) and lockwashers (28).

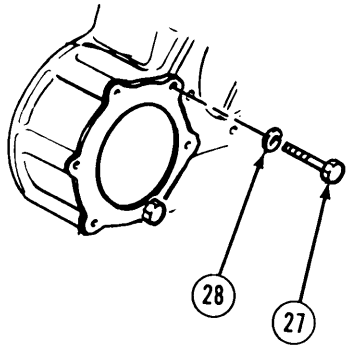

TA357394

https://truckmanualshub.com/

(22) Install three screws (29), washers (30), lockwashers (31), and nuts (32).

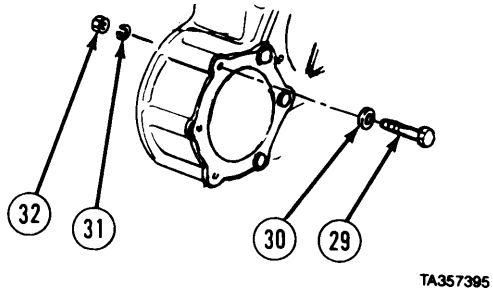

(23) Install four screws (33) and washers (34) in flywheel housing (1).
(24) Install three new screws (35) and washers (36).
(25) Coat six screws (37) with sealing compound and install screws and washers (38).

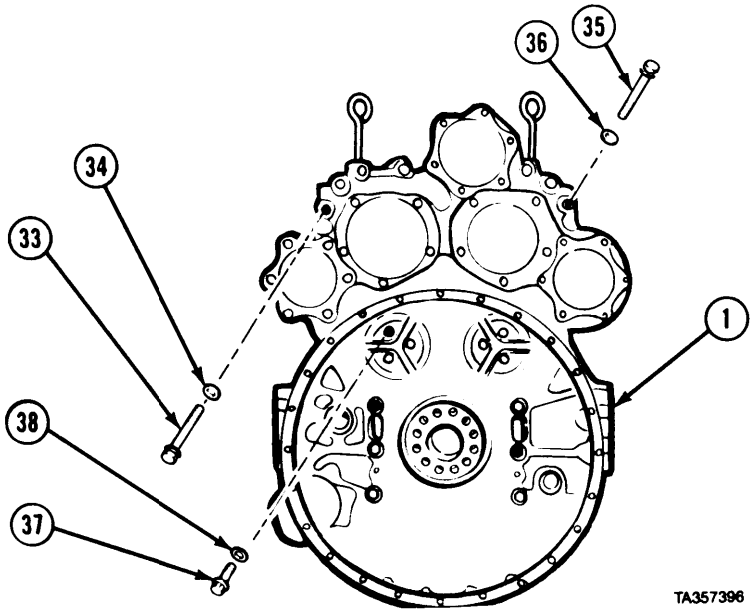

(26) Remove lifting eyes and four alining studs from engine block (6).

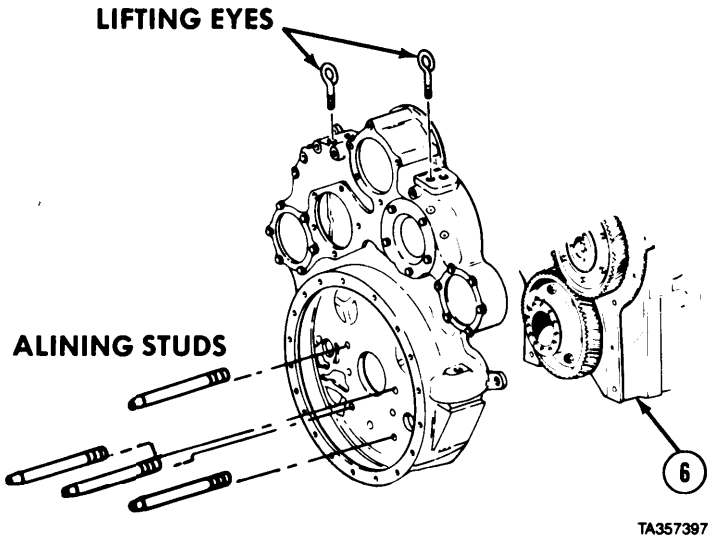

https://truckmanualshub.com/

5-3. FLYWHEEL HOUSING AND REAR OIL SEAL REMOVAL/INSTALLATION (CONT).

(27) Install six screws (39) and washers (40).

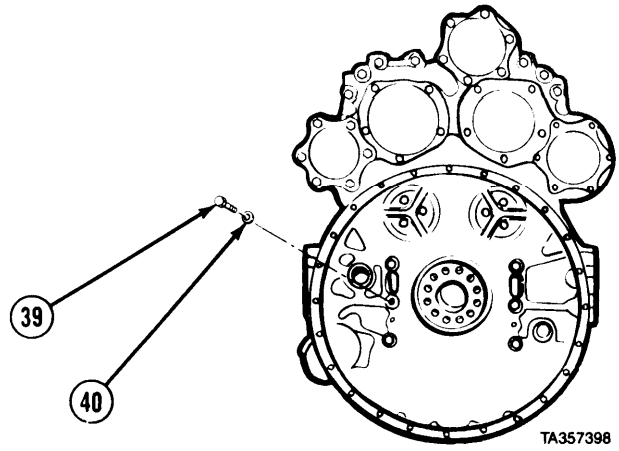

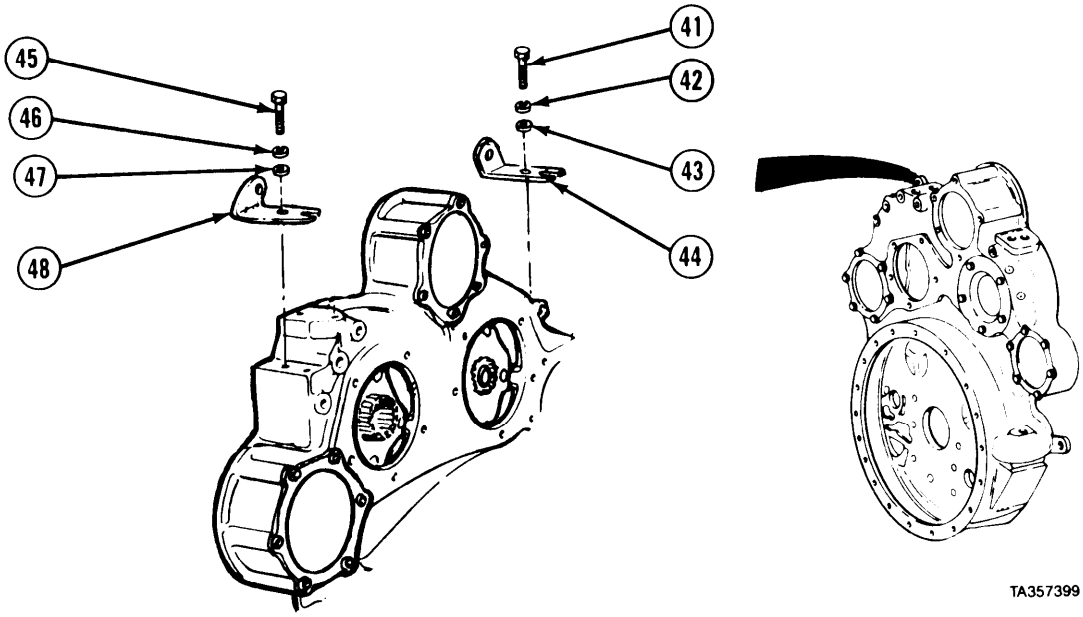

(28) Install three screws (41), lockwashers (42), washers (43), and right bank bracket (44).
(29) Install three screws (45), lockwashers (46), washers (47), and left bank bracket (48).

https://truckmanualshub.com/

Flexplate and Flywheel Housing Maintenance Instructions (Cont)

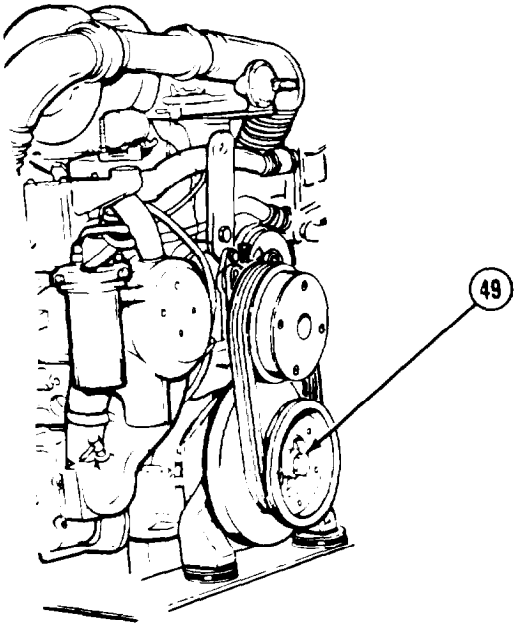

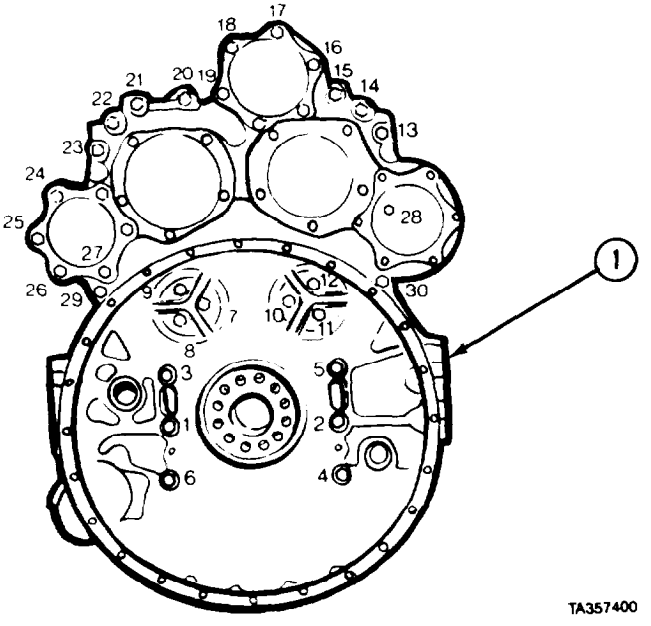

NOTE

Screws are numbered to show tightening sequence. Screws must be tightened in order.

(30 Tighten first six screws in flywheel housing (1) to 90 to 100 lb-ft (122 to 136 N•M).

(31) Tighten seventh through ninth screws to 40 to 45 lb-ft (54 to 61 N•m).

(32) While Soldier A turns crankshaft screw (49) clockwise, Soldier B tightens tenth through twelth screws to 10 to 45 lb-ft (5.4 to 61 N•m) then tells Soldier A to stop turning Screw (49).

(33) Tighten thirteenth through twenty seventh screws to 25 to 30 lb-ft (34 to 41 N•m).

(34) Tighten screw (9) on right side of engine to 40 to 45 lb-ft (54 to 61 N•m).

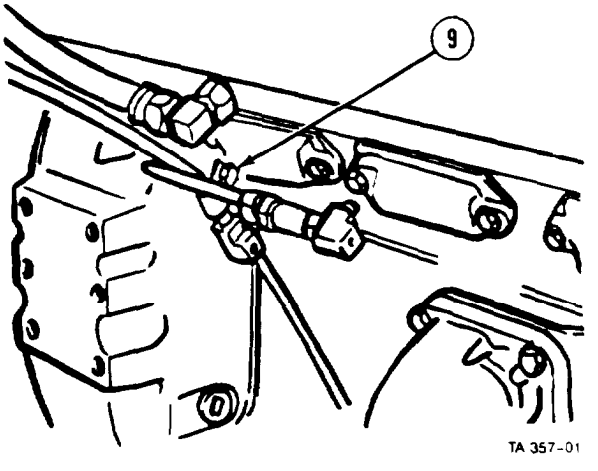

https://truckmanualshub.com/

5-3. FLYWHEEL HOUSING AND REAR OIL SEAL REMOVAL/INSTALLATION (CONT).

(35) Tighten twenty-eighth screw on flywheel housing (1) to 30 to 35 lb-ft (41 to 47 N•m).

(36) Tighten twenty-ninth and thirtieth screws to 137 to 147 lb-ft (186 to 200 N•m).

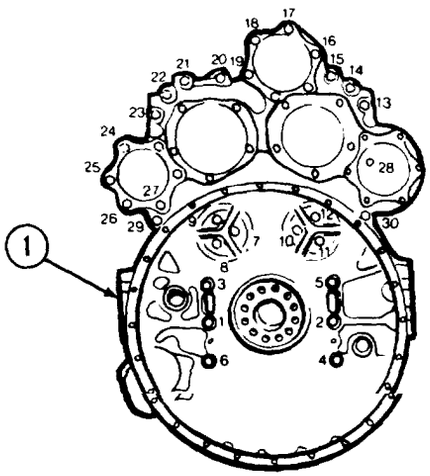

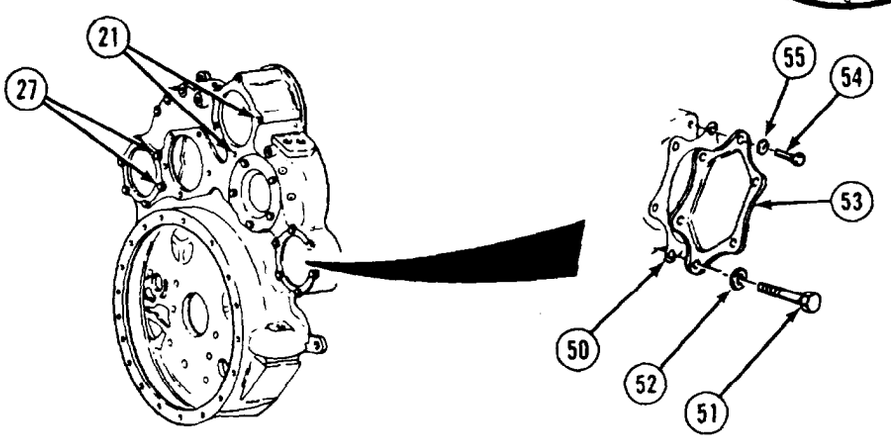

(37) Apply grease to gasket (50).

(38) Install screw (51), copper washer (52), access cover (53), and gasket (50)

(39) Install five screws (54) and lockwashers (55).

(40) Tighten screws (51 and 54) to 25 to 30 lb-ft (34 to 41 N•m).

(41) Tighten four screws (21 and 27) to 25 to 30 lb-ft (34 to 41 N•m).

https://truckmanualshub.com/

Flexplate and Flywheel Housing Maintenance Instructions (Cont)

CAUTION

- Standard rear crankshaft oil seal with Teflon lip should only be installed on new crankshaft. Oversize oil seal with Teflon lip and sleeve should be installed on worn crankshaft. Failure to comply could result in seal damage and oil leakage.
- During installation of sleeve, make sure outside diameter of sleeve remains clean and dry. Failure to comply could result in oil leakage.

NOTE

To install oversize rear crankshaft oil seal, do steps (42) through (48) and continue with step (55). To install standard oil seal, do steps (49) through (60).

(42) Apply a thin even coating of sealing compound (Item 30.1, Appendix C) to inside diameter of sleeve (56).

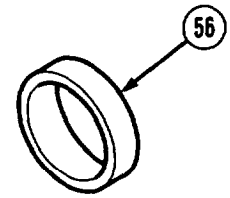

(43) Install sleeve (56) in housing with chamfered end of sleeve out.

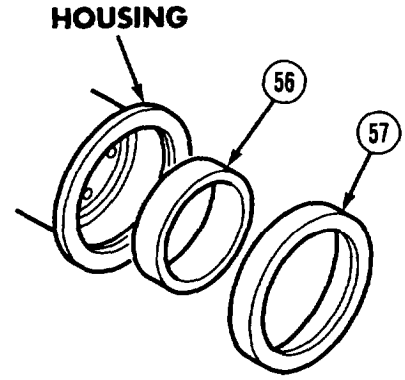

CAUTION

- Do not lubricate Teflon seal lip or outside of sleeve before installing seal. Teflon lip seals must be installed dry to allow transfer of Teflon to sleeve for proper sealing.
- Seals are designed for use on either right-hand or left-hand rotating engines. Direction is indicated by an arrow molded into seal face. Failure to install correct rotation seal will result in seal damage and oil leaks.

(44) With arrow showing crankshaft rotation toward housing, slide oversize oil seal (57) onto protruding end of sleeve (56) and against housing.

https://truckmanualshub.com/

5-3. FLYWHEEL HOUSING AND REAR OIL SEAL REMOVAL/INSTALLATION (CONT).

(45) Install base on end of crankshaft (7) with two guide studs. Tighten guide studs until base is firmly against end of crankshaft.

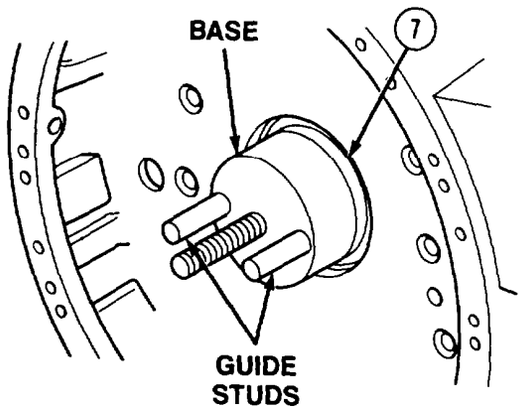

(46) Install spacer over center screw of base.

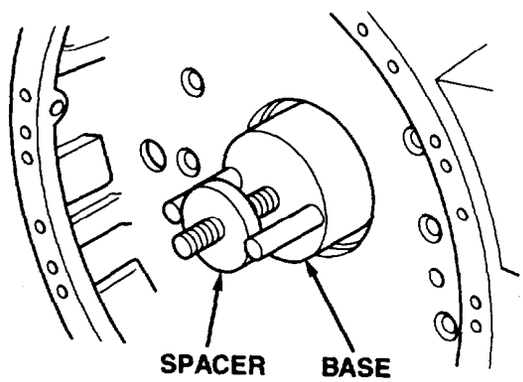

(47) Install installation tool housing, with sleeve (56) and oversize oil seal (57), onto guide studs with thrust washer and nut. Tighten nut by hand until snug. Further tighten nut until installation tool housing is seated against base.

(48) Remove installation tools from end of crankshaft (7).

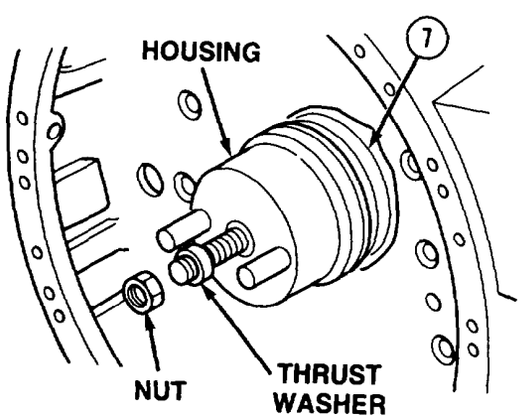

https://truckmanualshub.com/

Flexplate and Flywheel Housing Maintenance Instructions (Cont)

(49) Install two guide studs in rear of crankshaft (7).

(50) Install oil seal expander on guide studs and against end of crankshaft (7).

CAUTION

- Do not lubricate Teflon seal lip or outside of crankshaft before seal installation. Teflon lip seals must be installed dry to allow transfer of Teflon to crankshaft for proper sealing.
- Seals are designed for use on either right-hand or left-hand rotating engines. Direction is normally indicated by an arrow on seal case. Failure to install correct rotation seal will result in seal damage and oil leaks.

(51) With lip of seal (2) pointed toward engine, slide seal over expander and onto crankshaft. Remove seal expander and guide studs.

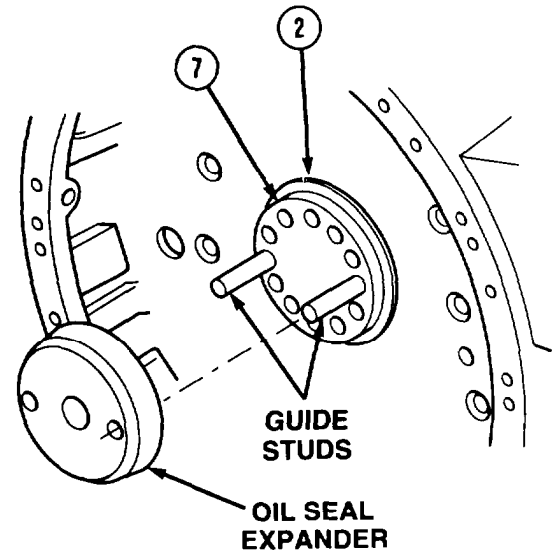

(52) Install guide studs in rear of crankshaft (7).

(53) Position seal installer on guide studs and install handle.

(54) Drive seal (2) in place until seal installer seats squarely on end of crankshaft (7). Remove installation tools.

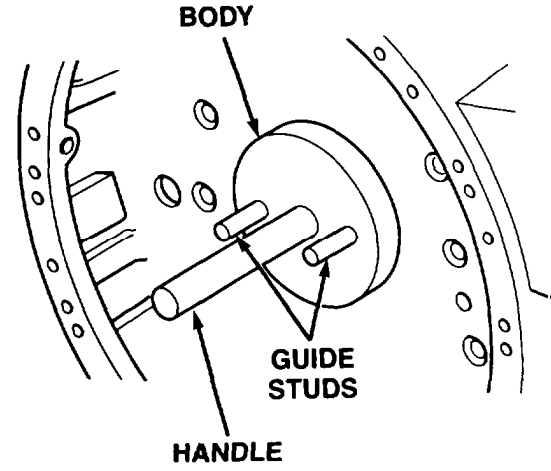

(55) Attach magnetic base dial indicator to end of crankshaft (7).

(56) Position point of dial indicator on face of seal (2).

(57) Pry crankshaft (7) toward one end of block to ensure end play is in one direction only.

CAUTION

When using front crankshaft screw to bar over engine, always turn crankshaft in clockwise direction. Turning engine over in a counterclockwise direction may loosen screw and vibration damper. Failure to comply may result in serious engine damage.

(58) Soldier A rotates crankshaft (7) clockwise while Soldier B records readings at 12,9,6, and 3 o'clock positions. Total runout at each position should not exceed 0.015 in. (0.38 mm).

(59) If any dial indicator reading exceeds 0.015 in. (0.38 mm), place appropriate seal installer over seal (2) and lightly tap at high points.

(60) Repeat step (58). If seal (2) will not seat properly, remove and replace seal.

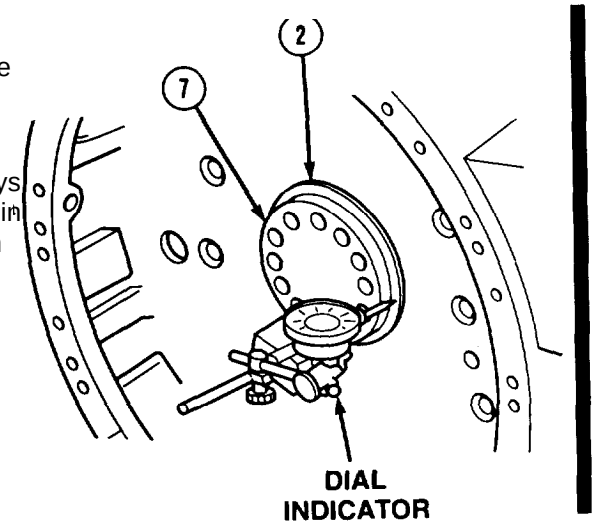

https://truckmanualshub.com/

5-3. FLYWHEEL HOUSING AND REAR OIL SEAL REMOVAL/INSTALLATION (CONT).

c. *Follow-on Maintenance.*

(1) Install flexplate (para 5-2).
(2) Install oil pan (para 8-3).
(3) Install steering hydraulic pump (TM 9-2320-279-34).
(4) Install starting motor (TM 9-2320-279-20).
(5) Install air compressor (TM 9-2320-279-20).
(6) Install engine (TM 9-2320-279-34).

END OF TASK

https://truckmanualshub.com/

CHAPTER 6
PISTON AND CONNECTING ROD MAINTENANCE

Contents

	Para	Page
General	6-1	6-1
Piston, Connecting Rod and Liner Removal/Installation	6-2	6-1
Piston Repair	6-3	6-7

Section 1. INTRODUCTION

6-1. GENERAL. This chapter covers removal and installation of the piston and connecting rod assemblies. The subassemblies and parts which must be removed before the piston and connecting rod can be removed will be referenced to other paragraphs chapter of this manual, TM 9-2320-279-10, TM 9-2320-279-20, or TM 9-2320-279-34.

Section II. PISTON AND CONNECTING ROD

Piston and Connecting Rod Maintenance Instructions

6-2. PISTON, CONNECTING ROD, AND LINER REMOVAL/INSTALLATION.

This task covers:

a. Removal
b. Installation
c. Follow-on Maintenance

INITIAL SETUP

Models
All

Test Equipment
None

Special Tools
Remover assembly, cylinder liner J24563-A
Clamp, cylinder liner J24565-02

Supplies
Oil, lubricating, Item 48, Appendix C
Tags, identification, Item 61, Appendix C

Personnel Required
MOS 63W, Wheel vehicle repairer (2)

References
None

Equipment Condition

TM or Para	*Condition Description*
TM 9-2320-279-34	Engine installed on engine stand.
Para 8-3	Oil pan removed.
Para 8-4	Oil pump removed.
Para 3-7	Cylinder head removed.

Special Environmental Conditions
None

General Safety Instructions
None

Level of Maintenance
General Support

https://truckmanualshub.com/

6-2. PISTON, CONNECTING ROD, AND LINER REMOVAL/INSTALLATION (CONT).

a. Removal.

NOTE

Repeat steps (1) through (4) for each cylinder liner.

(1) Move piston (1) so top is just above air inlet ports in cylinder liner (2).
(2) Place clean rag on top of piston (1) to catch carbon deposits as they are removed from cylinder liner (2).
(3) Scrape carbon ridge from top of cylinder liner (2).
(4) Remove rag and carbon residue from cylinder liner (2).

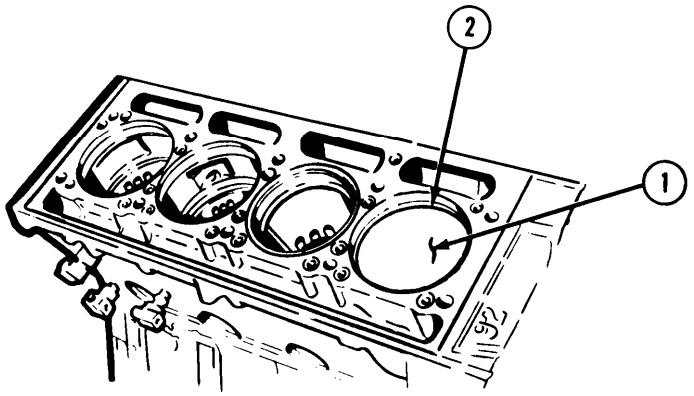

TA357415

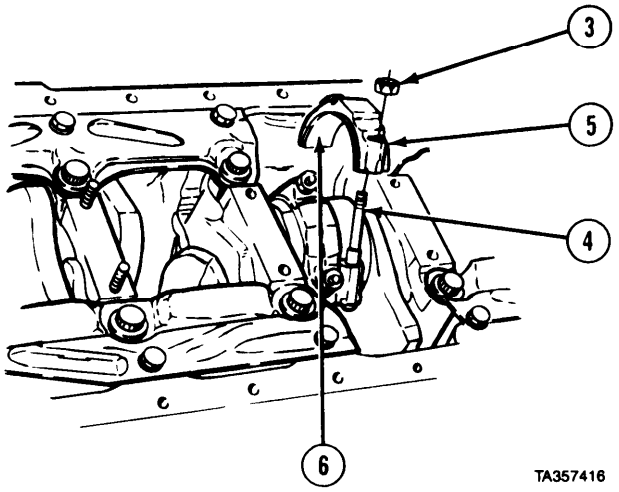

TA357416

CAUTION

Do not use scribe or punch to mark piston, connecting rods or cylinder head mounting surface. Leaks may be caused.

NOTE

Using identification tags, mark each rod and piston with location.

(5) Turn engine stand to upside down position. Remove two nuts (3) from two bearing cap screws (4).
(6) Remove connecting rod bearing cap (5) with bearing shell (6).

https://truckmanualshub.com/

NOTE

Cylinder liner may come out with piston.

(7) Soldier A pushes piston (l), connecting rod (7), and bearing shell (8) out through engine block (9) and Soldier B removes piston from engine block.

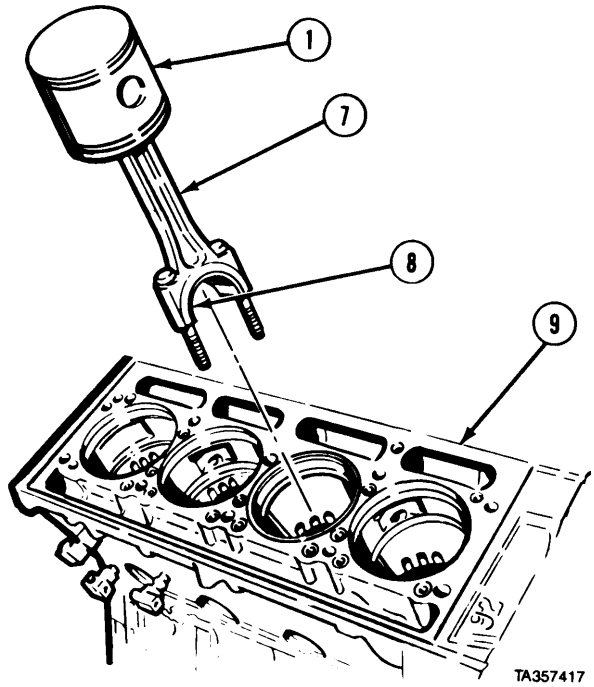

(8) Place bearing cap (5), upper shell (6), lower shell (8), and two nuts (3) back on two bearing cap screws (4) to keep matched parts together.

(9) Remove seven remaining pistons (1) and connecting rods (7).

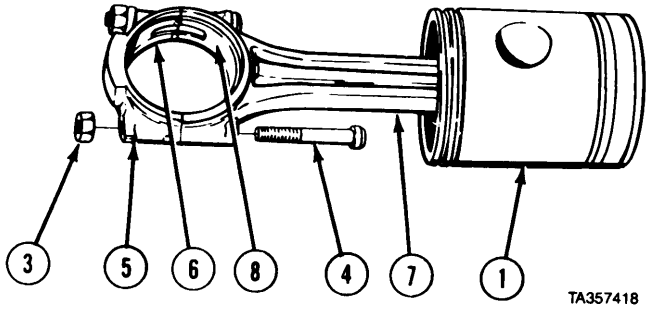

(10) Turn engine stand to place cylinder head bank facing up.

(11) Matchmark cylinder liner (2) and engine block (9).

NOTE

Crankshaft may have to be turned to allow for clearance of special tool.

(12) Using cylinder liner removal tool, remove liner (2).

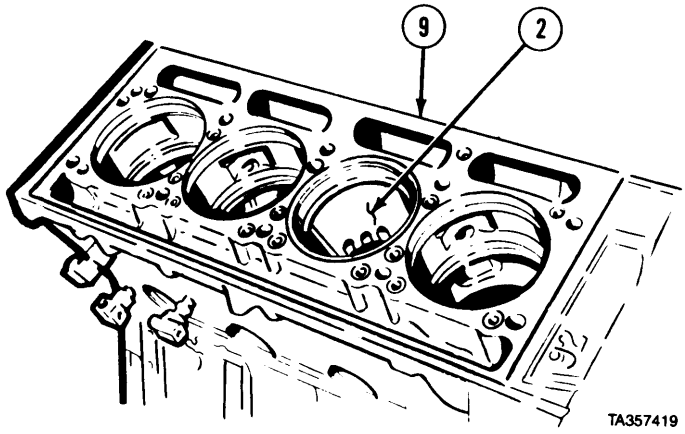

https://truckmanualshub.com/

6-2. PISTON, CONNECTING ROD, AND LINER REMOVAL/INSTALLATION (CONT).

NOTE

Tag cylinder liner insert noting cylinder number.

(13) Remove cylinder liner insert (10).
(14) Remove two cylinder liner seal rings (11).

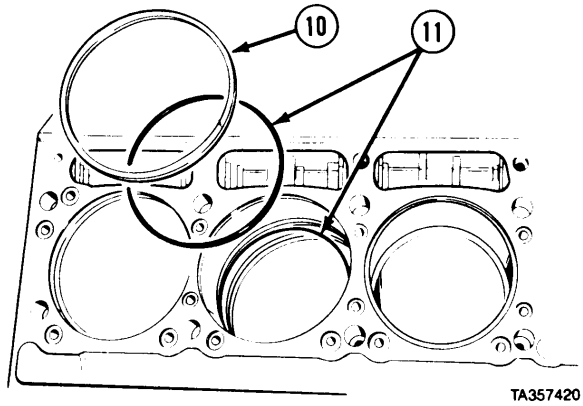

b. Installation.

(1) Wipe cylinder bore, counterbore, and seal ring grooves clean.
(2) Install two cylinder liner seal rings (1) in engine block (2).
(3) Apply lubricating oil to inner surface of cylinder liner seal rings (1).
(4) Install liner insert (3) in counterbore of engine block (2).

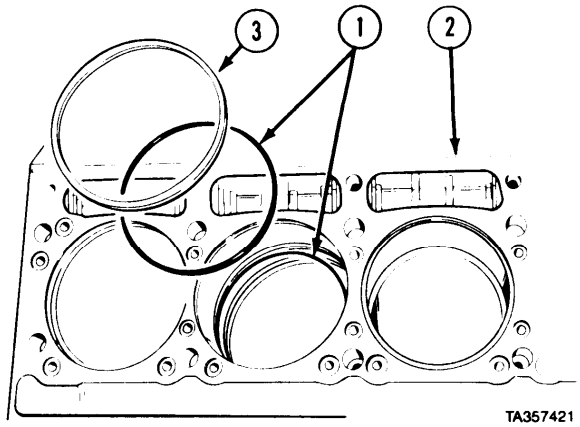

(5) Apply lubricating oil to piston rings (4),
(6) Install piston (5) into ring compressor.

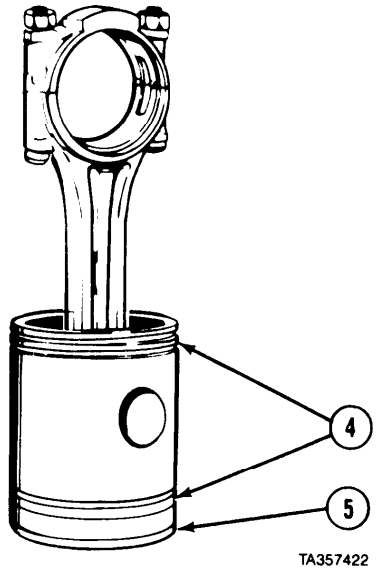

https://truckmanualshub.com/

Piston and Connecting Rod Maintenance Instructions (Cont)

(7) Coat inside of cylinder liner (6) with lubricating oil.
(8) Soldier A holds cylinder liner (6), flange end down, on wood block and Soldier B places ring compressor with piston and connecting rod assembly (7) on cylinder liner.
(9) Aline numbers on rod bearing cap (8) with marks on cylinder liner (6).
(10) Push piston and connecting rod assembly (7) into cylinder liner (6) until piston is free from ring compressor. Remove ring compressor.
(11) Remove two nuts (9), bearing cap (8), and bearing shells (10).
(12) Push piston into cylinder liner (6) until compression rings pass cylinder liner ports (11).
(13) Coat connecting rod bearing shells (10) with lubricating oil.

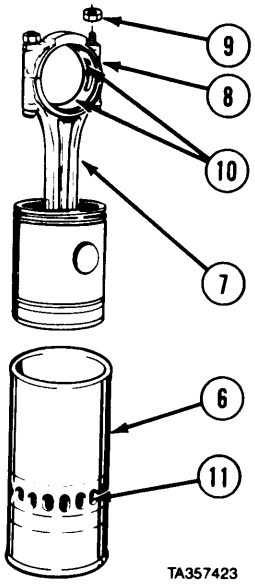

(14) Position crankshaft connecting rod journal (12) of cylinder being worked to bottom of its travel.
(15) Coat journal (12) with lubricating oil.

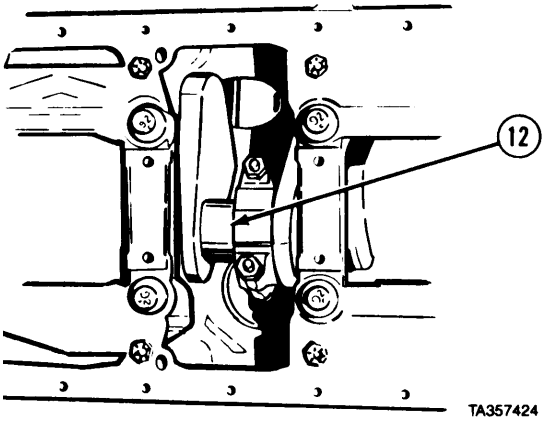

(16) Aline mark on cylinder liner (6) with mark on engine block (2).
(17) Soldier A slides cylinder liner (6) with piston and connecting rod assembly (7) into engine block (2) while Soldier B guides connecting rod assembly over crankshaft journal.

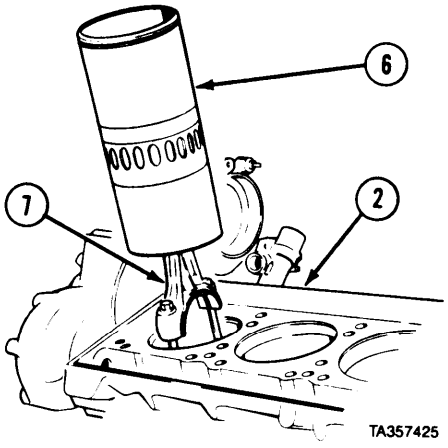

https://truckmanualshub.com/

Piston and Connecting Rod Maintenance Instructions (Cont)

6-2. PISTON, CONNECTING ROD, AND LINER REMOVAL/INSTALLATION (CONT).

(18) Seat connecting rod firmly on crankshaft journal (12).
(19) Install cap (8) and bearing shell (10) over studs (13).
(20) Install two nuts (9) and tighten to 70 lb-ft (95 N•m).

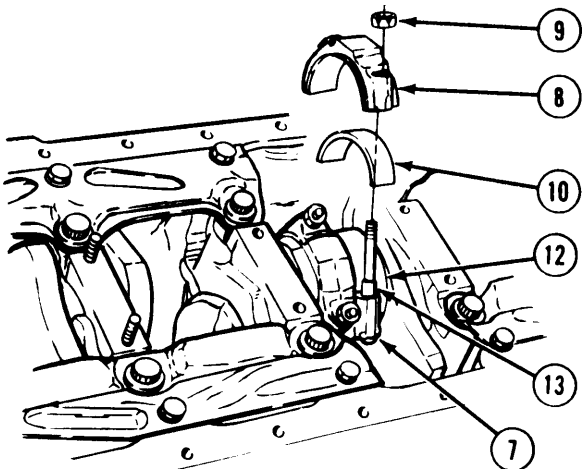

TA357426

NOTE

Install holddown clamps, screws, and washers to hold liners in place.

(21) After all liners and pistons have been installed, remove screws, washers, and holddown clamps.

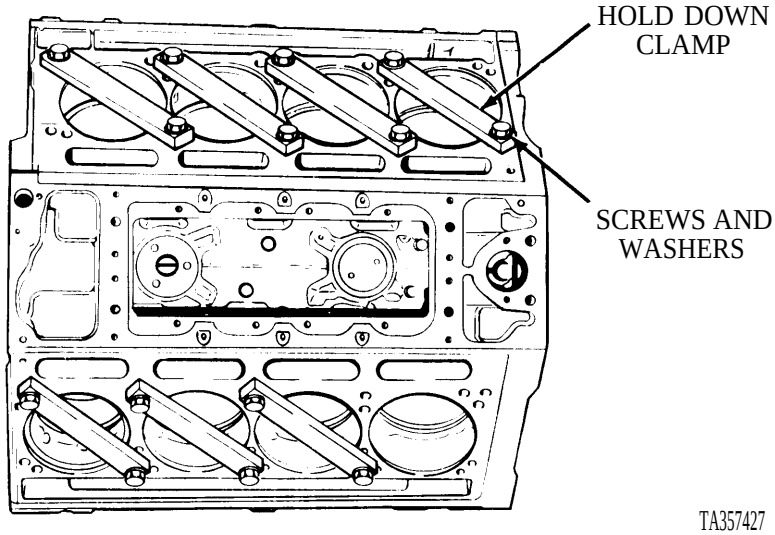

TA357427

(22) Using feeler gage, check that clearance between each connecting rod attached to same crankshaft journal is 0.008 to 0.016 in. (0.2 to 0.4 mm).

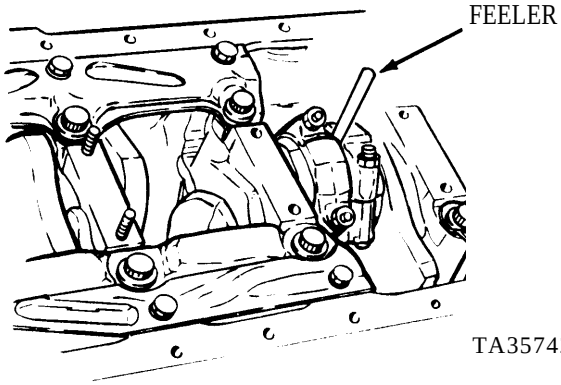

TA357428

c. Follow-on Maintenance.
(1) Install cylinder head (para 3-7).
(2) Install oil pump (para 8-4).
(3) Install oil pan (para 8-3).
(4) Remove engine from engine stand (TM9-2320-279-34).

END OF TASK

https://truckmanualshub.com/

Piston and Connecting Rod Maintenance Instructions (Cont)

6-3. PISTON REPAIR.

This task covers:

a. Disassemble y
b. Cleaning/Inspection
c. Assembly
d. Follow-on Maintenance

INITIAL SETUP

Models
All

Test Equipment
Spring scale

Special Tools
Tool, piston pin retainer J23762
Gage set, piston J3174-02
Gage, crown, piston J25397
Gage, piston groove J24599
Leak detector set J23987-01

Supplies
Solvent, dry cleaning, Item 60, Appendix C
Oil, lubricating, Item 48, Appendix C
Compound, international, No. 2, Item 26, Appendix C
Tags, identification, Item 61, Appendix C
Brush, paint, oval 1-1/4 in. (32 mm) size 12, Item 10, Appendix C

Personnel Required
MOS 63W, Wheel vehicle repairer

References
None

Equipment Condition

TM or Para	*Condition Description*
Para 6-2	Piston, connecting rod and liner removed.

Special Environmental Conditions
None

General Safety Instructions
None

Level of Maintenance
General Support

a. Disassembly.

(1) Place connecting rod (1) in vise with soft jaws.
(2) Remove three upper piston rings (2) using piston ring remover and installer. Remove four lower piston rings (3) by hand.
(3) Remove oil ring expander (4) from each lower piston ring groove.
(4) Punch hole in two piston pin retainers (5). Remove both retainers.
(5) Loosen two screws (6).
(6) Remove connecting rod (1) and piston (7) from vise.
(7) Remove two screws (6) and two spacers (8).

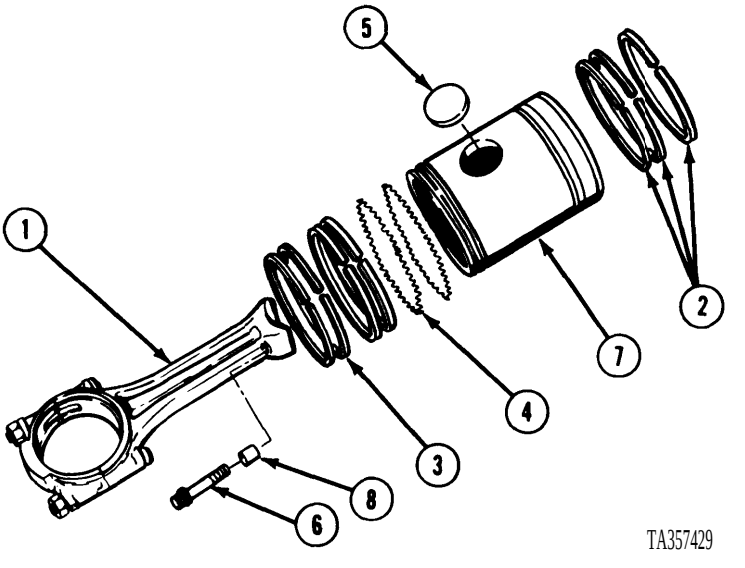

NOTE

Matchmark connecting rod before removal.

(8) Remove connecting rod (1) from piston (7).

https://truckmanualshub.com/

Piston and Connecting Rod Maintenance Instructions (Cont)

6-3. PISTON REPAIR (CONT).

NOTE

Matchmark piston pin, piston crown, piston skirt, and piston pin bearing before removal.

(9) Remove piston pin (9).
(10) Separate piston crown (10) from piston skirt (11).
(11) Remove metal seal ring (12) from piston crown (10).
(12) Remove piston pin bearing (13).

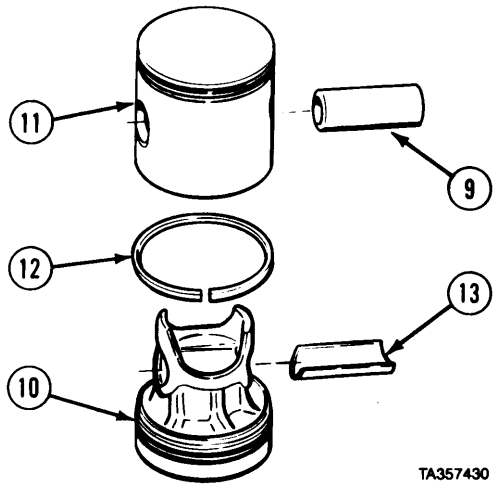

b. Cleaning/Inspection.

WARNING

Adhesives, solvents, and sealing compounds can burn easily, can give off harmful vapors, and are harmful to skin and clothing. To avoid injury or death, keep away from open fire and use in well-ventilated area. If adhesive, solvent, or sealing compound gets on skin or clothing, wash immediately with soap and water.

(1) Clean all metal parts with dry cleaning solvent.
(2) Clean ring grooves and oil holes in pistons with paint brush and dry cleaning solvent.

WARNING

Compressed air used for cleaning purposes will not exceed 30 psi (207 kPa). Use only with effective chip guarding and personal protective equipment (goggles/shield, gloves, etc.).

(3) Dry parts with compressed air.
(4) Inspect all parts for damage. Replace damaged parts.

(5) Check fire ring groove (1) of piston crown (2) with piston groove gage tool.

NOTE

Piston crown, bearing, and pin must be replaced as an assembly.

(6) Slide groove gage completely around groove (1). If wire is below flush at any one area, replace crown (2).

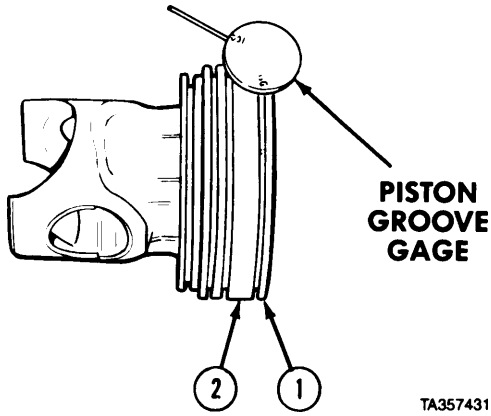

https://truckmanualshub.com/

Piston and Connecting Rod Maintenance Instructions (Cont)

(7) Measure diameter of piston skirt (3) and check for roundness. Diameter must not be less than 4.829-in. (122,6 mm) at any one point.

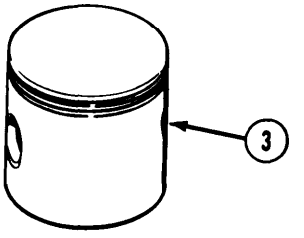

TA357432

(8) With cylinder liner (4) installed in engine block (5), Soldier A holds piston skirt (3) upside down in liner. Soldier B attaches spring scale to feeler gage set and checks clearance in four places 90 degrees apart.

(9) Select feeler gage thickness that will require a pull of 6 pounds (2.7 kg). Clearance will be 0.001-in. (0.25 mm) greater than feeler gage thickness when it is withdrawn with a pull of 6 pounds (2.7 kg). Clearance must not exceed 0.012-in. (0.3 mm).

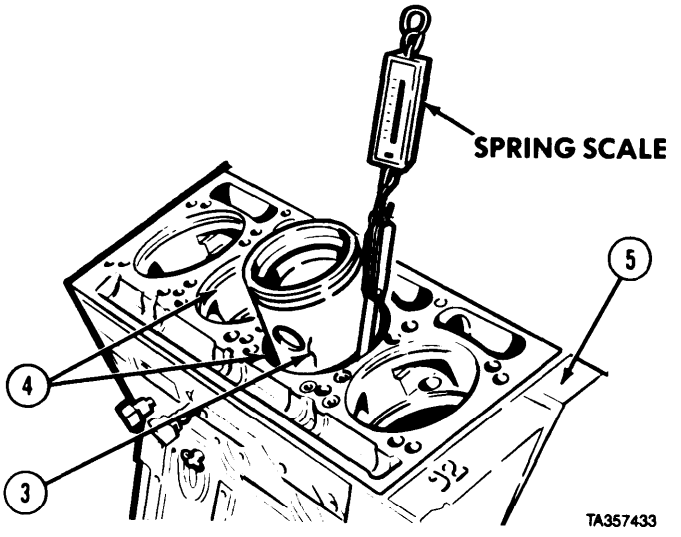

TA357433

(10) Insert piston rings (6), one at a time inside cylinder liner (4) far enough to be in area of ring travel 2 to 3 in. deep. Use piston skirt to position ring parallel with top of cylinder liner.

(11) Measure ring gap (7) with feeler gage. Three compression rings should have a gap of 0.025 to 0.045 in. (0.63 to 1.1 mm). Top compression ring is marked with two punch marks, middle compression ring is marked with one punch mark and bottom compression ring is not punch marked. Two oil rings (upper slotted) should have a gap of 0.007 to 0.017 in. (0.2 to 0.4 mm). Two oil rings (lower) should have a gap of 0.010 to 0.025 in. (0.25 to 0.63 mm).

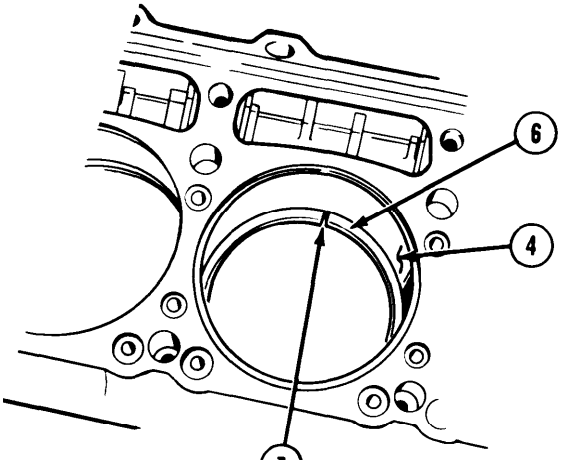

TA357434

https://truckmanualshub.com/

Piston and Connecting Rod Maintenance Instructions (Cont)

6-3. PISTON REPAIR (CONT).

(12) Install top compression ring (8) with two punch marks up.

(13) Measure clearance between ring (8) and groove; clearance should be 0.001 to 0.005 in. (0.025 to 0.13 mm).

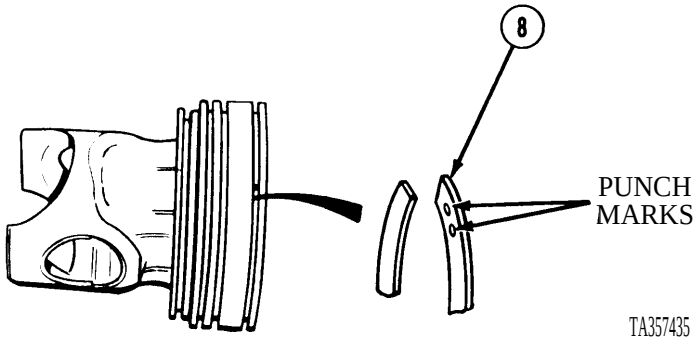

(14) Put middle compression ring (9) with one punch mark in groove on piston dome (10); clearance should be 0.010 to 0.013 in. (0.25 to 0.33 mm).

(15) Put lower compression ring in groove on side of piston dome (10); clearance should be 0.004 to 0.007 in. (0.10 to 0.18 mm).

(16) Put seal ring in groove on side of piston dome (10); clearance should be 0.0010 to 0.003 in. (0.025 to 0.08 mm).

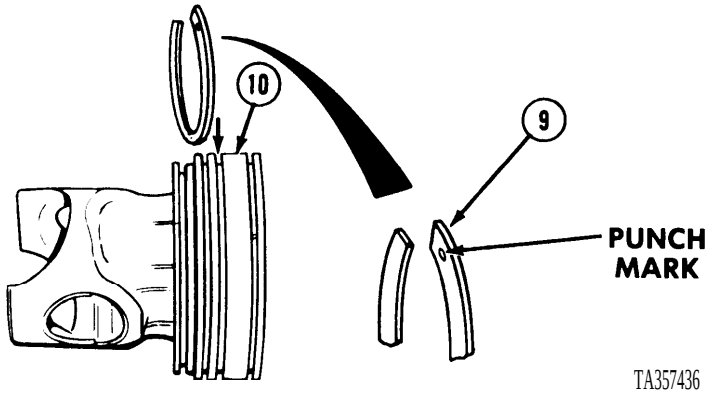

(17) Using edge of piston crown gage marked "92T Go, 92 NA No Go", check piston dome (10) by setting piston crown gage into bowl of piston crown. Gage must rest fully down on rim of piston crown.

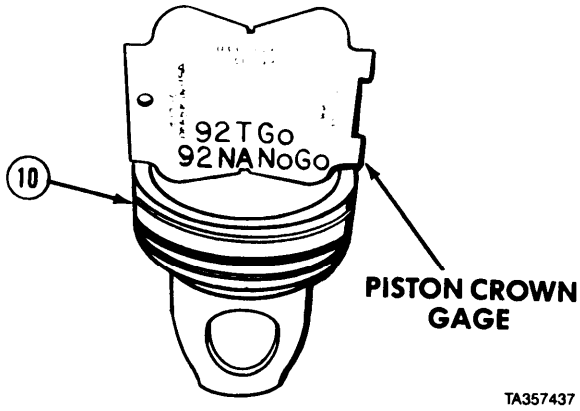

https://truckmanualshub.com/

Piston and Connecting Rod Maintenance Instructions (Cont)

c. Assembly.

NOTE

Be sure to aline all match marks.

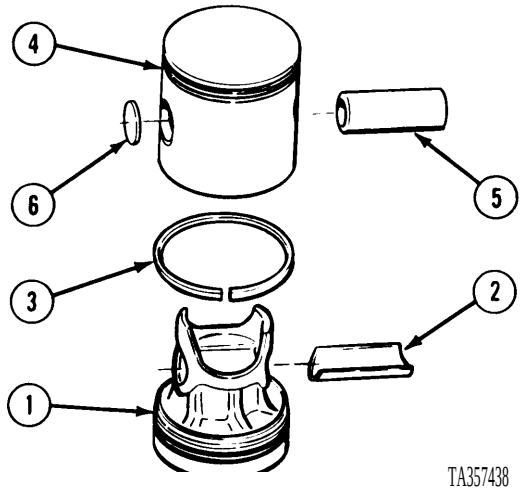

(1) Place piston crown (l), top end down, on work bench.
(2) Install piston pin bearing (2).
(3) Coat metal seal ring (3) with lubricating oil.
(4) Install metal seal ring (3) on piston crown (1). Beveled side must face toward bottom of piston crown (l).
(5) Rotate metal seal ring (3) fully around piston crown (1) and be sure it turns freely with no sticking or binding.
(6) Compress metal seal ring (3) and push piston skirt (4) down into position on piston crown (1).
(7) Hold piston crown (1) and spin piston skirt (4). Piston skirt (4) must turn freely with no binding.
(8) Coat piston pin (5) with lubricating oil.
(9) Line up hole in piston skirt (4) with hole in piston crown (l).
(10) Install piston pin (5) with threaded holes toward bottom of piston skirt (4).

NOTE

Retainers must be seated fully and evenly in piston skirt.

(11) Install piston pin retainers (6) in piston skirt (4) at each side of piston pin (5) using piston pin retainer tool; install until they bottom out.
(12) Using leak detector, apply 10-in. (254 mm) of vacuum to each piston pin retainer (6). There should be no loss of pressure.

(13) Install two spacers (7) on two screws (8).

WARNING

Adhesives, solvents, and sealing compounds can burn easily, can give off harmful vapors, and are harmful to skin and clothing. To avoid injury or death, keep away from open fire and use in well-ventilated area. If adhesive, solvent, or sealing compound gets on skin or clothing, wash immediately with soap and water.

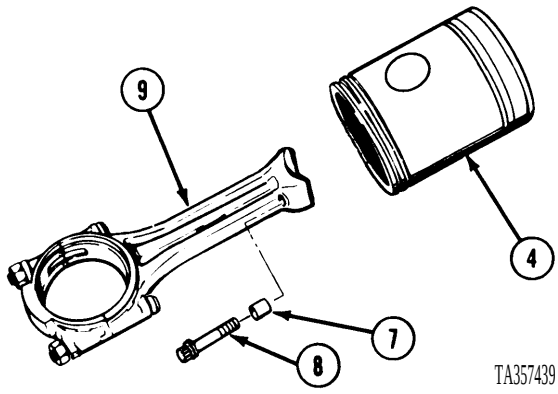

(14) Apply small amount of international No. 2 compound to threads and head contact surface of two screws (8).
(15) Insert connecting rod (9) into piston skirt (4).
(16) Install screws (8) and tighten finger tight.
(17) Clamp connecting rod (9) in vise with soft jaws.
(18) Tighten screws (8) to 55 to 60 lb-ft (75 to 81 N•m).

https://truckmanualshub.com/

6-3. PISTON REPAIR (CONT).

NOTE

Replace piston rings in sets only.

(19) Coat piston crown (1) and skirt (4) with lubricating oil.

NOTE

Position ring gaps 1200 apart, around piston crown.

(20) Install lower piston ring (10) (ring without marks).
(21) Install middle piston ring (11) (ring with one punch mark) toward top of piston crown (1).
(22) Install top piston ring (12) (ring with two punch marks) toward top of piston crown (1).

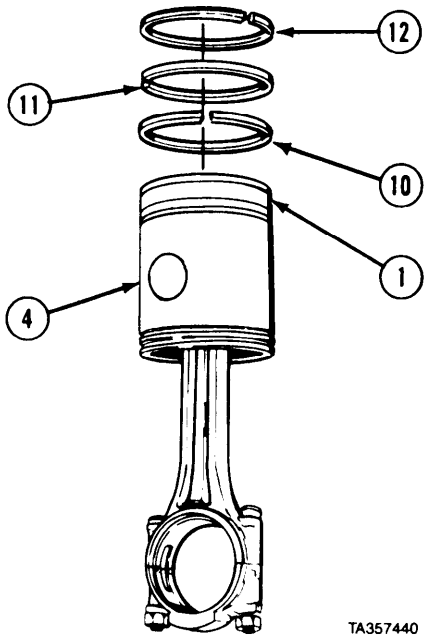

CAUTION

To prevent damage to oil rings when piston is installed in ring compressor, make sure ends of expander rings do not overlap.

(23) Install two oil ring expanders (13) on piston skirt (4) with ends pointing upward.

NOTE

Install oil rings wit h beveled edge facing upward.

(24) Install chrome nonsloted, oil ring (14) with gap posit ion 180 degrees from gap in expander ring (1 3).
(25) Install nonslot ted oil ring (15) with gap positioned 90 degrees from gap in oil ring (14).

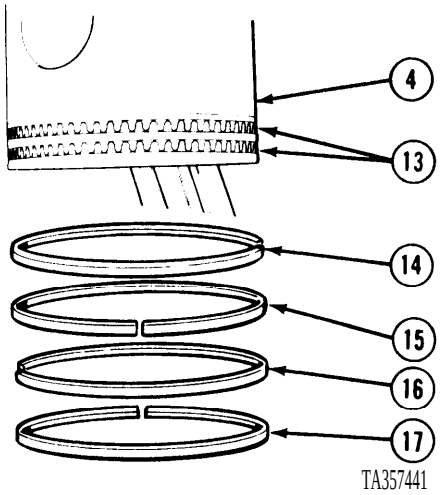

(26) Install oil ring (16) wit h black, slotted bottom down and gap positioned 180 degrees from gap in expander ring (13).
(27) Install oil ring (17) with black slotted bot tom down and gap positioned 90 degrees from gap in oil ring (16).

d. Follow-on Maintenance. Install piston, connecting rod and liner (para 6-2).

END OF TASK

https://truckmanualshub.com/

CHAPTER 7
VALVE MECHANISM MAINTENANCE

Contents

	Para	Page
General	7-1	7-1
Valve Bridge Guide Removal/Installation	7-2	7-1
Valve Guide Removal/Installation	7-3	7-3
Exhaust Valve Removal/Repair/Installation	7-4	7-5
Rocker Arm Removal/Repair/Installation	745	7-8
Cam Follower/Push Rod Removal/Installation	7-6	7-11
Cam Follower Repair	7-7	7-15
Exhaust Valve Bridge Removal/Installation	7-8	7-16
Camshaft Removal/Repair/Installation	7-9	7-20
Camshaft End Bearing Bushing Removal/Installation	7-10	7-34
Idler Gear Removal/Repair/Installation	7-11	7-36
Front Balance Cover and Vibration Damper Removal/Installation	7-12	7-43

Section I. INTRODUCTION

7-1. GENERAL. This chapter covers removal, installation, and repair of the valve mechanism. The subassemblies and parts which must be removed before these components can be removed will be referenced to other paragraphs of this manual, TM 9-2320-279-10, TM 9-2320-279-20, or TM 9-2320-279-34.

Section II. VALVE MECHANISMS

Valve Mechanism Maintenance Instructions

7-2. VALVE BRIDGE GUIDE REMOVAL/INSTALLATION.

This task covers:

a. Removal
b. Installation
c. Follow-on Maintenance

INITIAL SETUP

Models
All

Test Equipment
None

Special Tools
Installer, valve bridge guide J7482

Supplies
None

Personnel Requi red
MOS 63W Wheel vehicle repairer

References
None

Equipment Condition

TM or Para	*Condition Description*
Para 11-2	Engine brake retarder removed.
Para 7-5	Rocker arms removed.
Para 7-8	Exhaust valve bridges removed.
Para 12-2	Fuel injectors removed.
Para 7-4	Exhaust valves removed.

Special Environmental Conditions
None

General Safety Instructions
None

Level of Maintenance
General Support

https://truckmanualshub.com/

Valve Mechanism Maintenance Instructions (Cont)

7-2. VALVE BRIDGE GUIDE REMOVAL/INSTALLATION (CONT).

a. Removal.

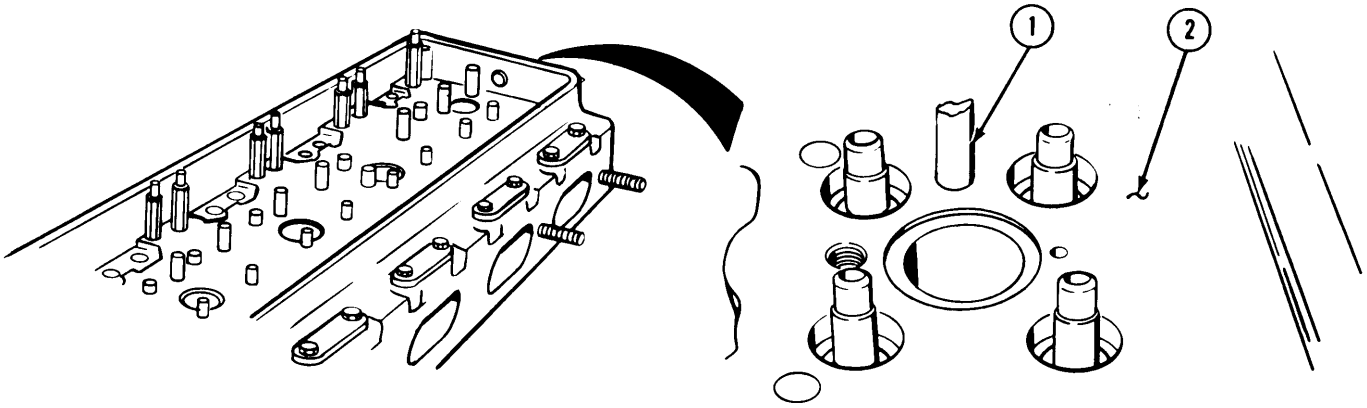

TA357657

(1) Break off bridge guide (1).
(2) Center punch bridge guide (l).
(3) Drill hole into bridge guide (1) using no. 3, 0.213 in. drillbit.
(4) Using screw extractor, remove bridge guide (1) from cylinder head (2).

b. Installation.

(1) Install undercut edge of bridge guide (1) in tap hole.
(2) Install bridge guide (1) straight into cylinder head (2) using valve bridge guide installer.

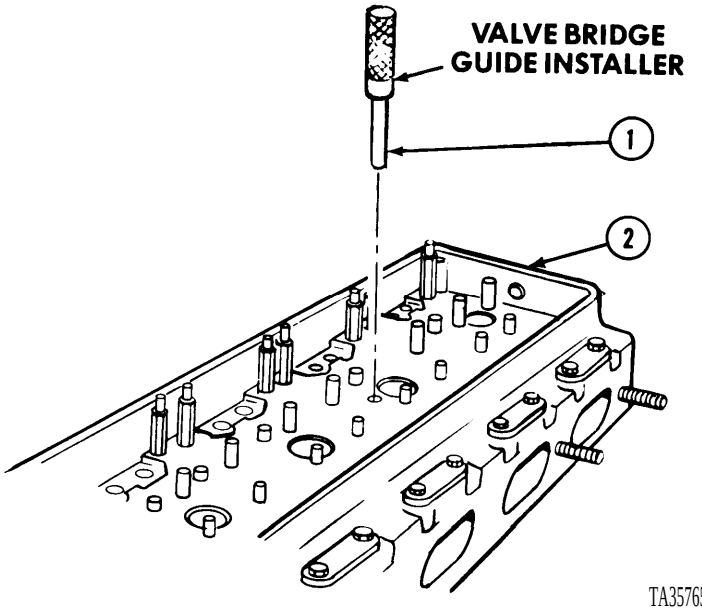

TA357658

c. Follow-on Maintenance.

(1) Install exhaust valves (para 7-4).
(2) Install fuel injectors (para 12-2).
(3) Install exhaust valve bridges (para 7-8).
(4) Install rocker arms (para 7-5).
(5) Install engine brake retarder (para 11-2).

END OF TASK

https://truckmanualshub.com/

Valve Mechanism Maintenance Instructions (Cont)

7-30 VALVE GUIDE REMOVAL/INSTALLATION.

This task covers:

a. Removal
b. Installation
c. Follow-on Maintenance

INITIAL SETUP

Models
All

Test Equipment
None

Special Tools
Remover, valve guide J6569
Installer, valve guide J2 1520

Supplies
Oil, lubricating, Item 48, Appendix C
Brush, bore, Item 9, Appendix C

Personnel Required
MOS 63W, Wheel vehicle repairer

References
None

Equipment Condition

TM or Para	*Condition Description*
Para 11-2	Engine brake retarder removed.
Para 7-5	Rocker arms removed.
Para 7-8	Exhaust valve bridges removed.
Para 12-2	Fuel injectors removed.
Para 7-4	Exhaust valves removed.
Para 7-6	Cam followers and push rods removed.

Special Environmental Conditions
None

General Safety Instructions
None

Level of Maintenance
Direct Support

a. Removal.

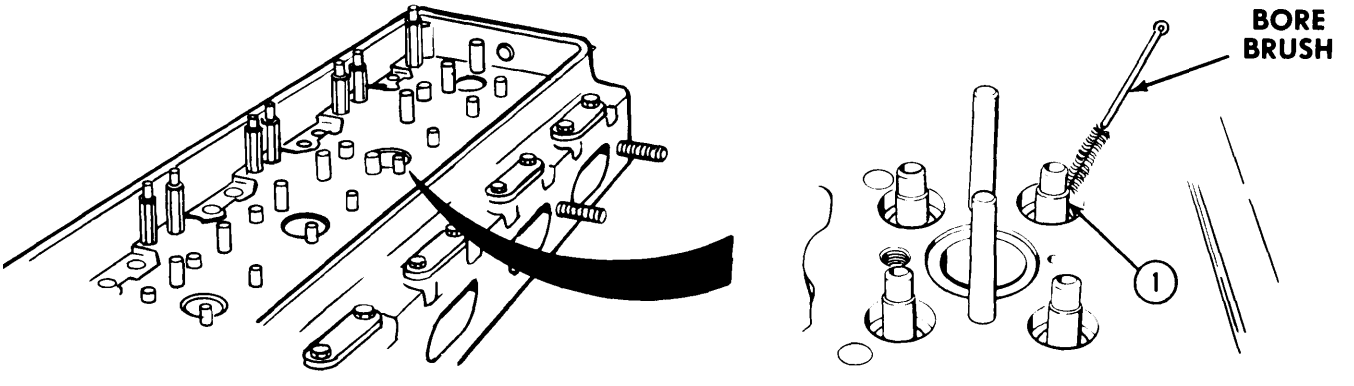

TA357659

NOTE

There are 16 valve guides on cylinder heads. Repeat steps (1) through (3) for removal of each valve guide.

(1) Clean valve guide (1) using bore brush.

https://truckmanualshub.com/

7-3. VALVE GUIDE REMOVAL/INSTALLATION (CONT).

(2) Set cylinder head (2) upside down on two wood blocks.
(3) Drive valve guide (1) out of valve bore (3) using valve guide remover.

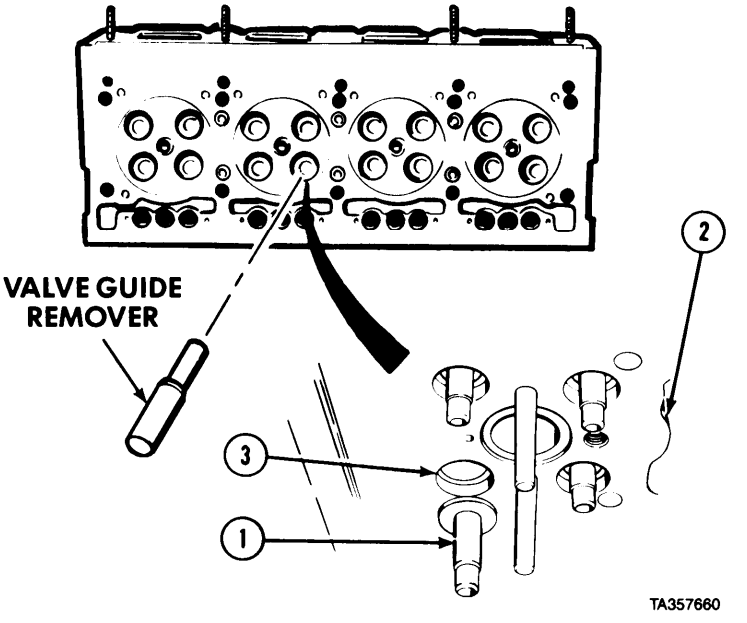

b. Installation.

NOTE

There are 16 valve guides on cylinder heads. Repeat steps (1) through (3) to install each valve guide.

(1) Turn cylinder head (1) on right side.
(2) Install threaded end of valve guide (2) into valve guide installer.
(3) Install valve guide (2) into cylinder head (1) until valve guide extends above face of cylinder head 0.67 to 0.7 l-in. (17.02 to 18.03 mm).

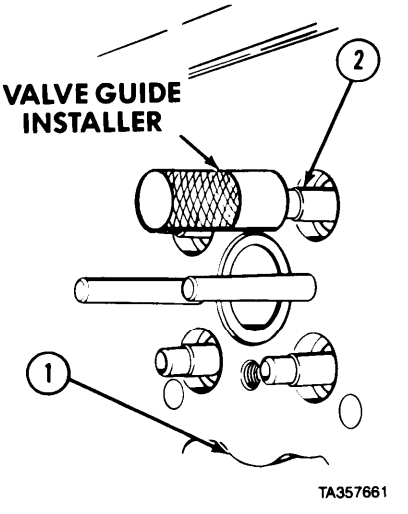

c. Follow-on Maintenance.
(1) Install cam followers and push rods (para 7-6).
(2) Install exhaust valves (para 7-4).
(3) Install fuel injectors (para 12-2).
(4) Install exhaust valve bridges (para 7-8).
(5) Install rocker arms (para 7-5).
(6) Install engine brake retarders (para 11-2).

END OF TASK

https://truckmanualshub.com/

Valve Mechanism Maintenance Instructions (Cont)

7-4. EXHAUST VALVE REMOVAL, REPAIR, AND INSTALLATION.

This task covers:

a. Removal
b. Cleaning/Inspection
c. Repair
d. Installation
e. Follow-on Maintenance

INITIAL SETUP

Models
All

Test Equipment
None

Special Tools
None

Supplies
Solvent, dry cleaning, Item 60, Appendix C
Oil, lubricating, Item 48, Appendix C

Personnel Required
MOS 63W, Wheel vehicle repairer

References
None

Equipment Condition

TM or Para	*Condition Description*
Para 7-5	Rocker arms removed.
Para 7-8	Exhaust valve bridges removed.
Para 12-2	Fuel injectors removed.
Para 7-6	Cam followers and push rods removed.

Special Environmental Conditions
None

General Safety Instructions
None

Level of Maintenance
General Support

a. Removal.

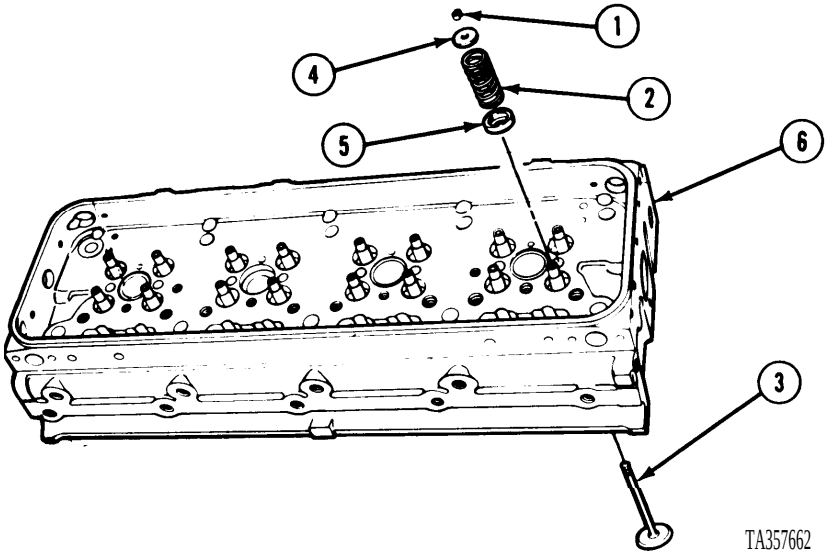

(1) Remove valve spring retainers (1) by compressing spring (2) on valve (3).
(2) Release pressure on spring (2).
(3) Remove seat (4), spring (2), and washer (5).
(4) Remove valve (3) from cylinder head (6).

https://truckmanualshub.com/

7-4. EXHAUST VALVE REMOVAL, REPAIR, AND INSTALLATION (CONT).

b. Cleaning/Inspection.

WARNING

Adhesives, solvents, and sealing compounds can burn easily, can give off harmful vapors, and are harmful to skin and clothing. To avoid injury or death, keep away from open fire and use in well-ventilated area. If adhesive, solvent, or sealing compound gets on skin or clothing, wash immediately with soap and water.

(1) Clean all metal parts with dry cleaning solvent,

WARNING

Compressed air used for cleaning purposes will not exceed 30 psi (207 kPa). Use only with effective chip guarding and personal protective equipment (goggles/shield, gloves, etc.)

(2) Dry all parts with compressed air.
Inspect spring for pitting or fractures.
(4) Check tension of each spring using valve spring compressor. Replace spring when a load of less than 25 lbs. (111 N•m) will compress it to 1.80 in. (45.72 mm) installed length.

(5) Inspect valve stem (1) and valve face (2) for cracks, pitting, and warpage. Replace if damaged.
(6) Inspect outer diameter of valve face (2) for scoring or galling. Grind or replace as necessary.

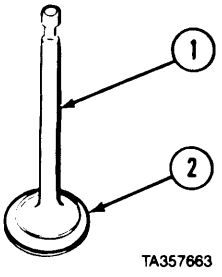

c. Repair.

NOTE

Valve seat must be ground before valve is installed.

(1) Grind exhaust valve (1) using 300 grinding stone.
(2) Edge of valve (1) must not be less than 0,03 l-in. (0.79 mm) thick after grinding.

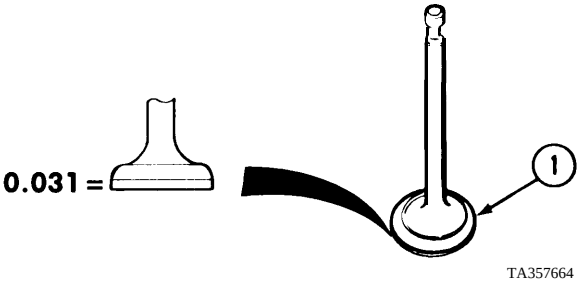

WARNING

Adhesives, solvents, and sealing compounds can burn easily, can give off harmful vapors, and are harmful to skin and clothing. To avoid injury or death, keep away from open fire and use in well-ventilated area. If adhesive, solvent, or sealing compound gets on skin or clothing, wash immediately with soap and water.

(3) Clean valve with dry cleaning solvent.

WARNING

Compressed air used for cleaning purposes will not exceed 30 psi (207 kPa). Use only with effective chip guarding and personal protective equipment (goggles/shield, gloves, etc.).

(4) Dry with compressed air.

https://truckmanualshub.com/

Valve Mechanism Maintenance Instructions (Cont)

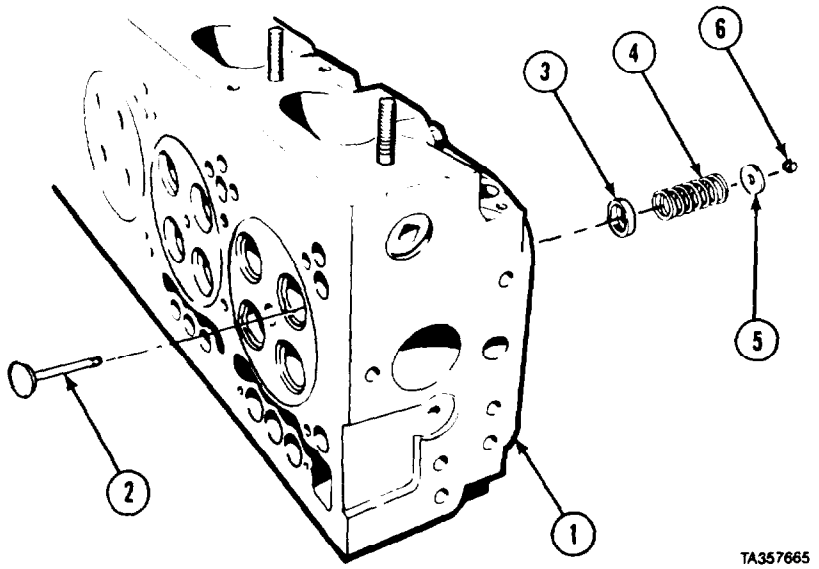

d. Installation.

NOTE

Repeat steps (2) through (4) for each valve.

(1) Set cylinder head (1) on side.
(2) Lubricate valve (2) with lubricating oil.
(3) Install valve (2) in cylinder head (1).
(4) Secure valve (2) with tape to keep from falling out.

NOTE

Board must be thick enough to keep exhaust valves from touching work surface while installing spring retainers.

(5) Set cylinder head (1) right side up on top of a board.

NOTE

Repeat steps (6) through (9) for each valve being installed.

(6) Install washer (3), spring (4), and seat (5).
(7) Compress spring (4) using valve spring compressor.
(8) Install valve spring retainer (6) on valve (2).
(9) Release pressure on spring (4).

e. Follow-on Maintenance.

(1) Install cam followers and push rods (para 7-6).
(2) Install fuel injectors (para 12-2).
(3) Install exhaust valve bridges (para 7-8).
(4) Install rocker arms (para 7-5).

END OF TASK

https://truckmanualshub.com/

7-5. ROCKER ARM REMOVAL/REPAIR/INSTALLATION.

This task covers:

a. Removal
b. Disassembly
c. Cleaning/Inspection
d. Assembly
e. Installation
f. Follow-on Maintenance

INITIAL SETUP

Models
All

Test Equipment
None

Special Tools
Wrench, fuel line nut J8932-01

Supplies
Solvent, drycleaning, Item 60, Appendix C
Oil, lubricating, Item 48, Appendix C
Caps, shipping and sealing, Item 11, Appendix C
Tags, Identification, Item 61, Appendix C

Personnel Required
MOS 63W, Wheel vehicle repairer (2)

References
None

Equipment Condition

TM or Para	*Condition Description*
TM 9-2320-279-20	Batteries disconnected.
TM 9-2320-279-20	Rocker cover removed.

Equipment Condition

TM or Para	*Condition Description*
Para 11-2	Engine brake retarder removed.
Para 11-4	Engine brake wire harness removed.
Para 15-5	Throttle delay removed (right front rocker arm only) (engines equipped with throttle delay only).
Para 15-5.1	Fuel modulator removed (left rear rocker arms only) (engines equipped with fuel modulator only).

Special Environmental Conditions
None

General Safety Instructions
None

Level of Maintenance
Direct Support

a. Removal.

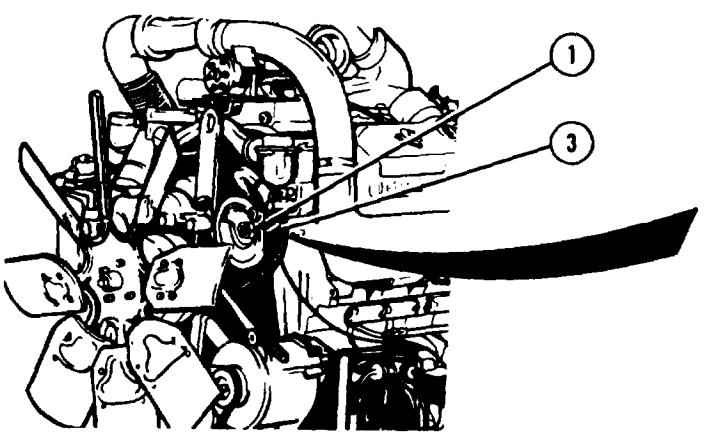

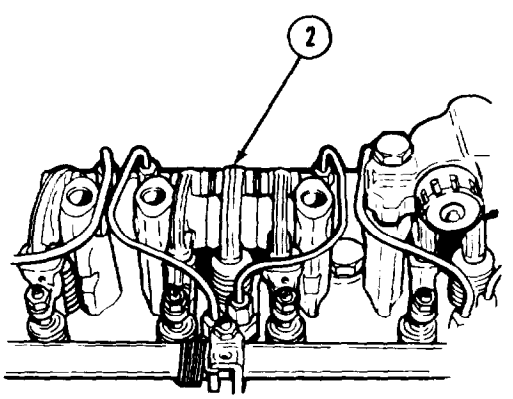

NOTE

This task shows removal of one set of rocker arms. Remove other rocker arms in the same way.

(1) Soldier A tells Soldier B to stop turning nut (1) when three rocker arms (2) line up.
(2) Soldier B turns nut (1) on camshaft pulley (3) clockwise until told to stop by Soldier A.

https://truckmanualshub.com/

Valve Mechanism Maintenance Instructions (Cont)

NOTE

- Fuel pipes have changed from flare style to preformed packing style pipes and connectors. Use new style pipes and connectors to replace old style pipes and connectors. Refer to TM 9-2320-279-24P for parts identification.
- Flare and preformed packing style pipes and connectors are not interchangeable. When replacing one flare type pipe or connector, all pipes and connectors must be replaced with new preformed packing style pipes and connectors.

(3) Tag and loosen four fuel tube nuts (4) and remove two fuel tubes (5 and 6).

(3.1) Remove and discard four preformed packings (6.1).

(4) Cover four fuel line connectors (7) with caps.

(5) Remove two brackets (8) from cylinder head (9).

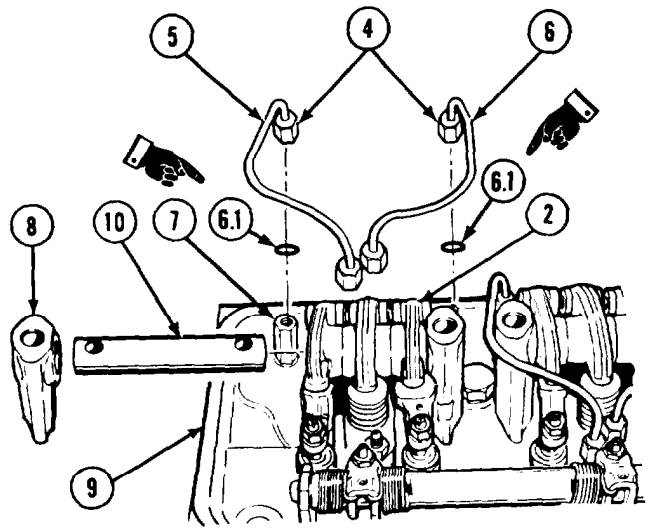

CAUTION

Do not force rocker arms all the way back with shaft in place. This could result in damage to push rods.

(6) Move three rocker arms (2) up and toward center of engine to permit shaft (10) to be removed.

(7) Hold three push rods (11) and loosen three locknuts (12).

NOTE

Tag rocker arms before removal.

(8) Remove three rocker arms (2) from three push rods (11).

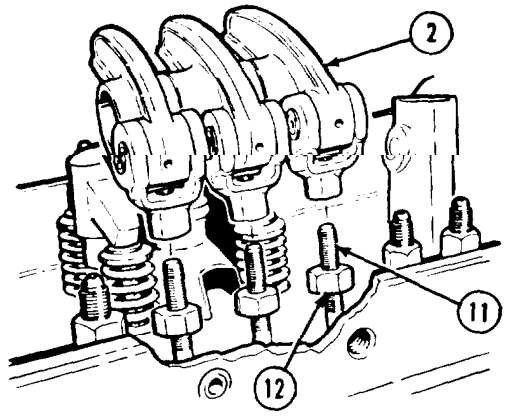

(9) Measure inside diameter of bushing (13) in rocker arms (2) and outside diameter of shaft (10). Clearance between bushing (13) and shaft (10) must not exceed 0.004-in. (0.102 mm).

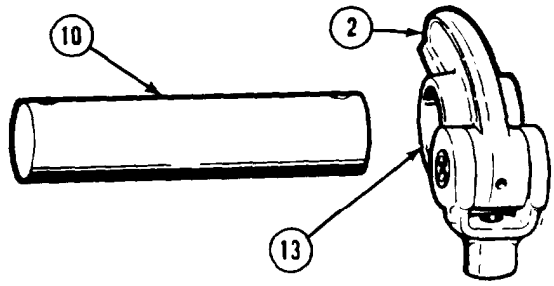

https://truckmanualshub.com/

Valve Mechanism Maintenance Instructions (Cont)

7-5. ROCKER ARM REMOVAL/REPAIR/INSTALLATION (CONT).

b. Disassembly.

(1) Place rocker arm (1) in press.
(2) Remove bushing (2) from rocker arm (1).

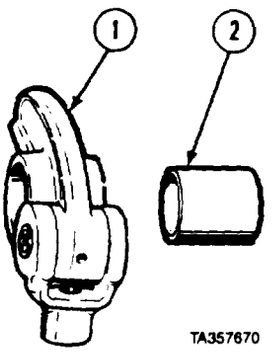

c. Cleaning/Inspection.

WARNING

Adhesives, solvents, and sealing compounds can burn easily, can give off harmful vapors, and are harmful to skin and clothing. To avoid injury or death, keep away from open fire and use in well-ventilated area. If adhesive, solvent, or sealing compound gets on skin or clothing, wash immediately with soap and water.

(1) Clean metal parts in dry cleaning solvent.
(2) Inspect rocker arm assembly and brackets for cracks and other damage.

d. Assembly.

(1) Place rocker arm (1) in press.
(2) Install bushing (2) in rocker arm (1).
(3) Ream replacement bushing (2) to 7/8 in. (22 mm).

e. Installation.

(1) Thread each of three rocker arms (1) onto push rod (2) until end of push rod is above inside of clevis yoke (3).
(2) Coat shaft (4) with oil and slide it through three rocker arms (1).
(3) Install two brackets (5) one over each end of shaft (4) with finished face next to rocker arms (1).
(4) Position rocker arms (1) down on valve bridge (6).
(5) Hold each push rod (2) while tightening three locknuts (7).

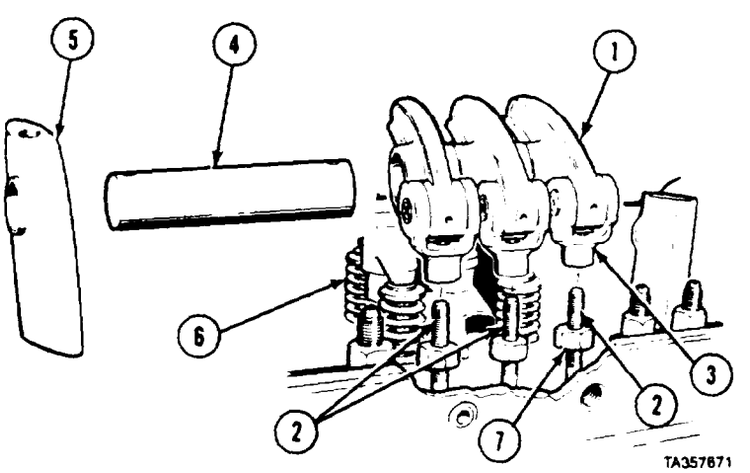

https://truckmanualshub.com/

(6) Remove caps from four fuel line connectors (8).

NOTE

Preformed packings must be installed dry. Do not apply oil.

(7) Install two fuel tubes (9 and 10) and four preformed packings (10.1).
(8) Tighten four nuts (11) to 160 lb-in. (18.1 N•m) using fuel line nut wrench.
(9) Loosen four nuts (11) slightly and retighten to 10 lb-ft (14 N•m).

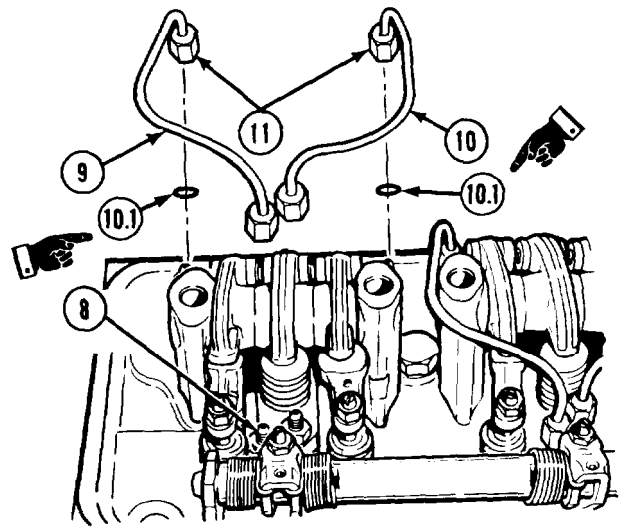

f. ***Follow-on Maintenance.***

(1) Install throttle delay (right front rocker arm only) (engines equipped with throttle delay only) (para 15-5).
(1.1) Install fuel modulator (left rear rocker arms only) (engines equipped with fuel modulator only) (para 15-5.1).
(2) Install engine brake retarder (para 11-2).
(3) Install engine brake wire harness (para 11-4).
(4) Install rocker cover (TM 9-2320-279-20).
(5) Connect batteries (TM 9-2320-279-20).

END OF TASK

7-6. CAM FOLLOWER/PUSH ROD REMOVAL/INSTALLATION.

This task covers:

a. Removal
b. Installation
c. Follow-on Maintenance

INITIAL SETUP

Models
All

Test Equipment
None

Special Tools
Gage, feeler FB310B

Supplies
Tags, identification, Item 61, Appendix C
Oil, lubricating, Item 48, Appendix C

Personnel Required
MOS 63W, Wheel vehicle repairer

References
None

Equipment Condition

TM or Para	*Condition Description*
Para 3-7	Cylinder head removed from engine.
Para 7-5	Rocker arms removed.
Para 7-8	Exhaust valve bridge removed.

Special Environmental Conditions
None

General Safety Instructions
None

Level of Maintenance
Direct Support

https://truckmanualshub.com/

Valve Mechanism Maintenance Instructions (Cont)

7-6. CAM FOLLOWER/PUSH ROD REMOVAL/INSTALLATION (CONT)

a. Removal.

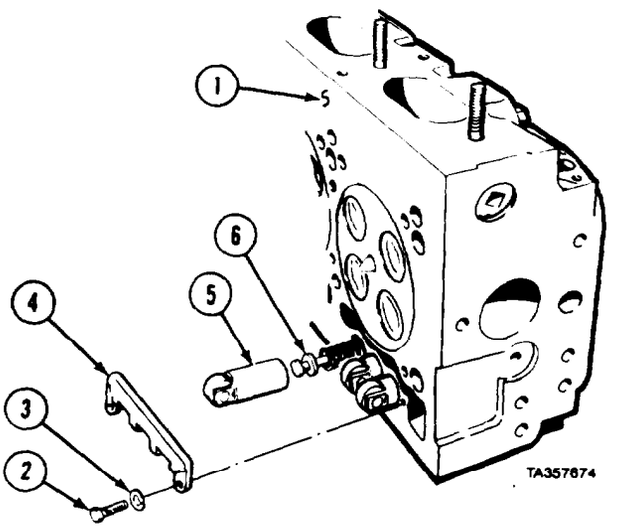

NOTE

- Tag cam follower and associated parts so they may be installed in original location.
- This procedure shows removal of one cam follower. Remove other cam followers in same way.

(1) Set cylinder head (1) on side on 1 in. (25 mm) wooden blocks
(2) Remove two screws (2) and lockwashers (3) from cam follower guide (4).
(3) Remove cam follower guide (4) from cylinder head (1).
(4) Remove cam follower (5) and push rod assembly (6), as a unit, from cylinder head (1).
(5) Remove cam follower (5) from push rod assembly (6).

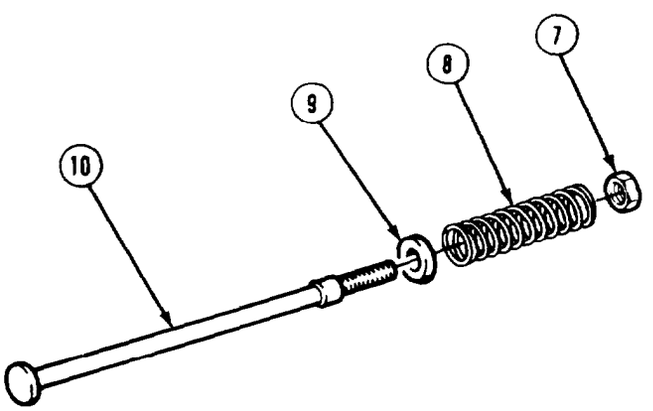

(6) Remove locknut (7), spring (8), and lower spring seat (9), and push rod (10).

https://truckmanualshub.com/

Valve Mechanism Maintenance Instructions (Cont)

NOTE

Spring retainer must point in proper direction when installed. Mark direction of spring retainer for installation.

(7) Remove spring retainer (11) from top side of cylinder head (l).

(8) Remove upper spring seat (12) from cylinder head (l).

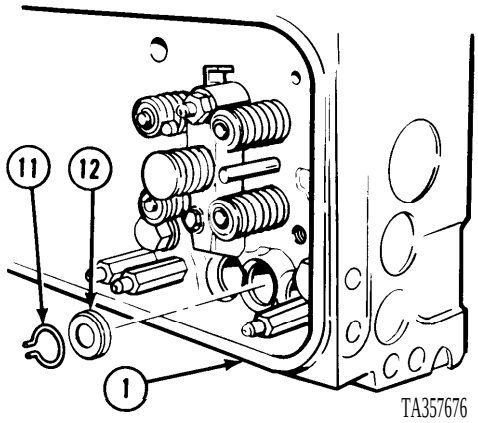

b. Installation.

NOTE

Apply lubricating oil to all parts before installation.

(1) Install spring retainer (1) in top of cam follower bore in cylinder head (2).

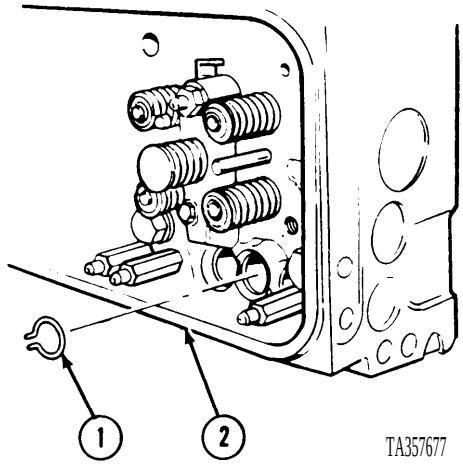

(2) Install lower spring seat (3), spring (4), upper spring seat (5), and nut (6) on push rod (7).

(3) Install push rod (7) in cylinder head (2).

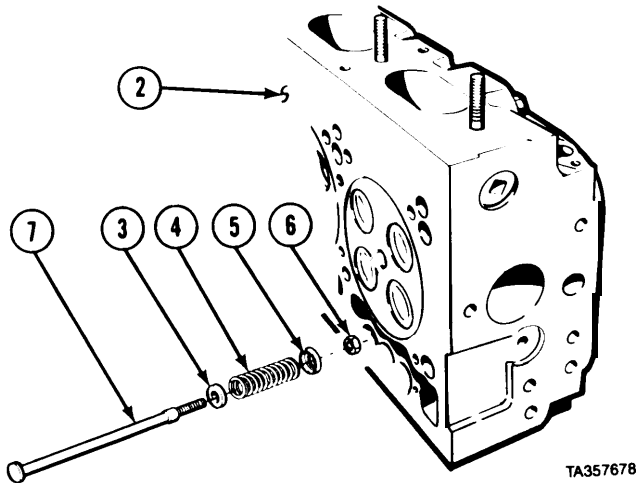

https://truckmanualshub.com/

7-6. CAM FOLLOWER/PUSH ROD REMOVAL/INSTALLATION (CONT).

(4) Position cam follower (8) so oil hole points away from exhaust valves (9).
(5) Install cam follower (8) over push rod (7) and into cylinder head (2).
(6) Install other push rods (7) and cam followers (8) in same manner.

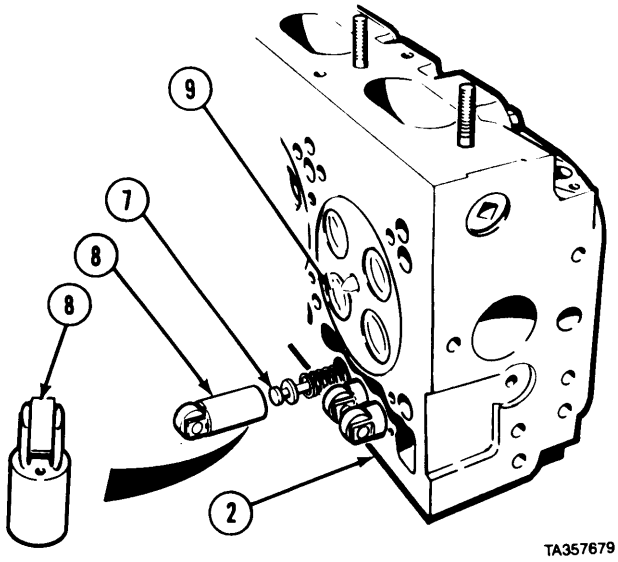

(7) Install cam follower guide (10), two screws (11), and lockwashers (12).
(8) Tighten screws (11) to 15 lb-ft (20 NŽm).

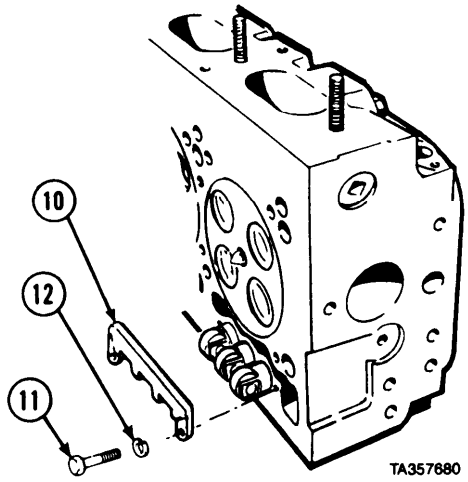

NOTE

There must be 0.005-in. (0. 13 mm) clearance between cam follower guide and cam follower.

(9) Insert 0.005 in. 013 mm) feeler gage between cam follower guide (10) and legs of cam followers (8).
(10) If there is not enough clearance, loosen screws (11), move guide (10), and repeat steps (8) and (9).

c. Follow-on Maintenance.
(1) Install exhaust valve bridge (para 7-8).
(2) Install rocker arms (para 7-5).
(3) Install cylinder head (para 3-7).

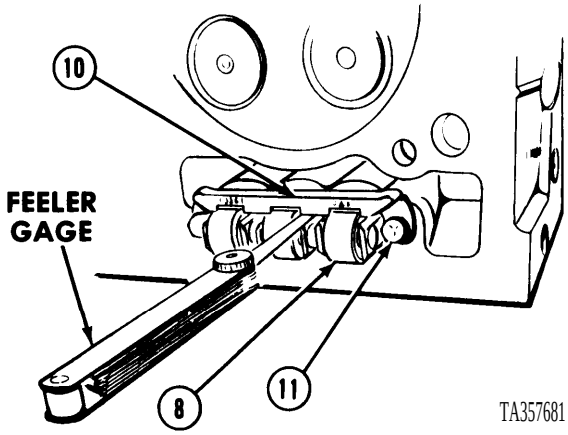

END OF TASK

https://truckmanualshub.com/

Valve Mechanism Maintenance Instructions (Cont)

7-7. CAM FOLLOWER REPAIR.

This task covers:

a. Cleaning/Inspection
b. Disassembly
c. Assembly
d. Follow-on Maintenance

INITIAL SETUP

Models
All

Test Equipment
None

Special Tools
Set, dial indicator J7872
Gage, feeler FB310B

Supplies
Solvent, dry cleaning, Item 60, Appendix C
Oil, lubricating, Item 48, Appendix C

Personnel Required
MOS 63W, Wheel vehicle repairer

References
None

Equipment Condition

TM or Para	*Condition Description*
	Cam follower on clean work surface.

Special Environmental Conditions
None

General Safety Instructions
None

Level of Maintenance
Direct Support

a. Cleaning/Inspection.

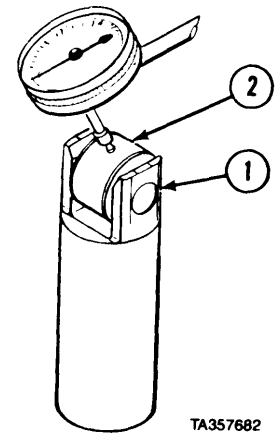

WARNING

Adhesives, solvents, and sealing compounds can burn easily, can give off harmful vapors, and are harmful to skin and clothing. To avoid injury or death, keep away from open fire and use in well-ventilated area. If adhesive, solvent, or sealing compound gets on skin or clothing, wash immediately with soap and water.

(1) Clean cam follower (1) with dry cleaning solvent.
(2) Inspect cam follower (1) for damage.
(3) Check side clearance between cam follower body (1) and roller (2) is not more than 0.023 in. (0. 58 mm). If clearance is more than 0.023 in. *(0.58* mm) go to disassembly.
(4) Put cam follower in vise. Check for more than 0.010 in. (0.25 mm) pin-to-bushing clearance using dial indicator. If clearance is more than 0.010 in. (0.25 mm), go to disassembly.

b. Disassembly.

NOTE

Pin and roller must be replaced together.

(1) Drive pin (1) out of cam follower body (2).
(2) Remove roller (3).

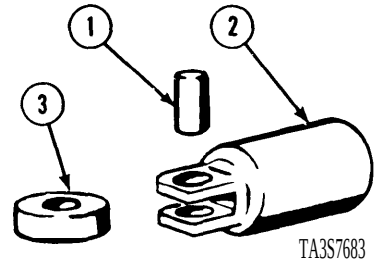

https://truckmanualshub.com/

Valve Mechanism Maintenance Instructions (Cont)

7-7. CAM FOLLOWER REPAIR (CONT).

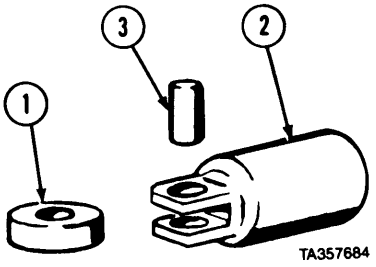

c. Assembly.

NOTE

Apply lubricating oil to all parts before assembly.

(1) Install roller (1) in cam follower body (2).
(2) Install pin (3) through cam follower body (2) and roller (l).
(3) Check side clearance between cam follower body (2) and roller (1) using feeler gage. Clearance must be between 0.011 and 0.023 in. (0.28 and 0.58 mm).
(4) Check pin-to-bushing clearance using dial indicator. Clearance must be less than 0.010 in. (0.25 mm).

f. Follow-on Maintenance. None.

END OF TASK

7-8. EXHAUST VALVE BRIDGE REMOVAL/iNSTALLATION.

This task covers:

a. Removal
b. Installation
c. Follow-on Maintenance

INITIAL SETUP

Models
All

Test Equipment
None

Special Tools
Gage, feeler FB310B

Supplies
Oil, lubricating, Item 48, Appendix C
Tags identification, Item 61, Appendix C

Personnel Required
MOS 63W, Wheel vehicle repairer

References
None

Equipment Condition

TM or Para	*Condition Description*
Para 7-5	Rocker arms removed.

Special Environmental Conditions
None

General Safety Instructions
None

Level of Maintenance
Direct Support

https://truckmanualshub.com/

Valve Mechanism Maintenance Instructions (Cont)

a. Removal.

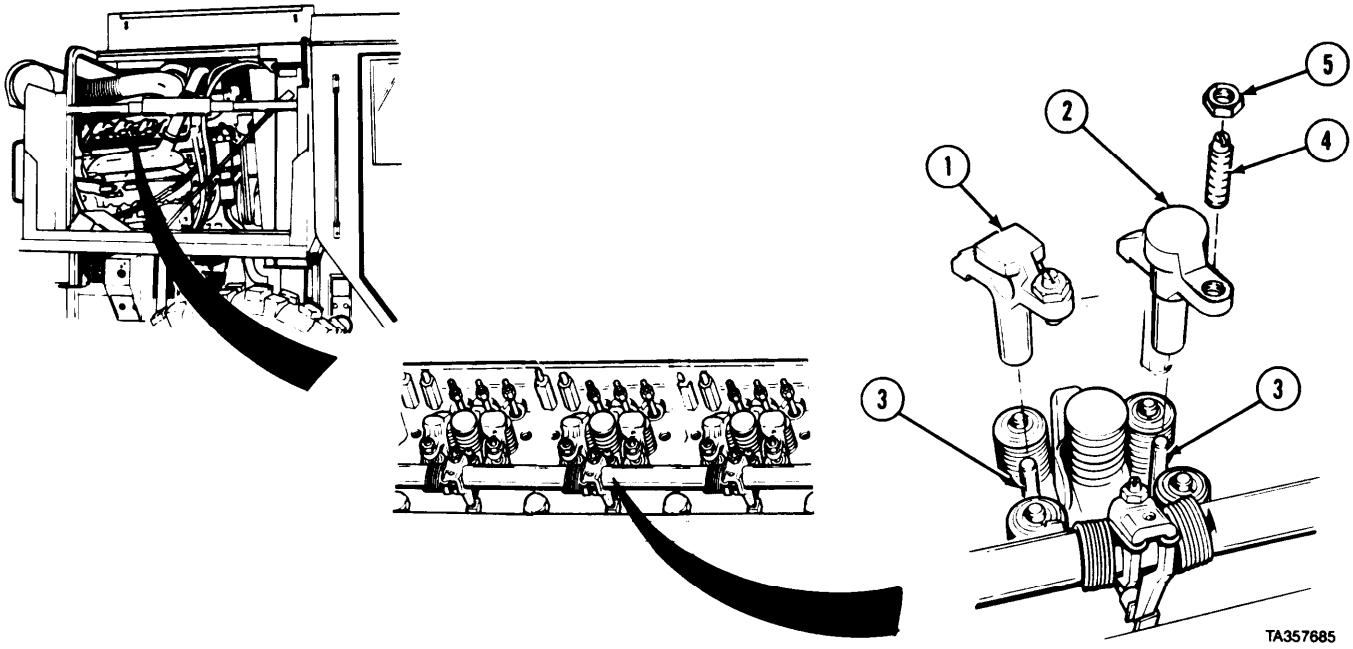

NOTE

Tag valve bridges when removed so bridges may be installed in original locations at installation.

(1) Remove valve bridges (1 and 2) from valve bridge guides (3).

NOTE

Remove remaining valve bridges in same way.

(2) Remove screw (4) and nut (5) from valve bridge (1 and 2).
(3) Remove nut (5) from screw (4).

b. Installation.

(1) Place valve bridge (1) in vise with soft jaws.
(2) Install screw (2) into valve bridge (l).
(3) Install nut (3) on screw (2). Do not tighten.

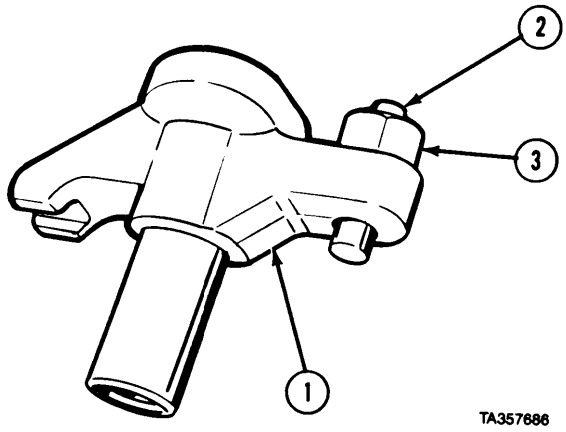

https://truckmanualshub.com/

7-8. EXHAUST VALVE BRIDGE REMOVAL/INSTALLATION (CONT).

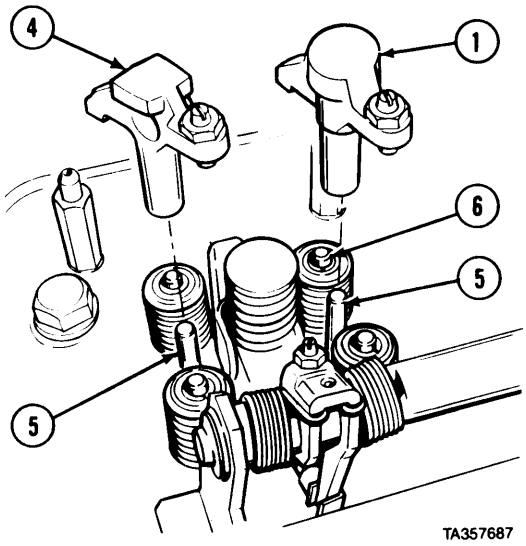

(4) Install valve bridges (1 and 4) on bridge guides (5), making sure grooves in bridges fit over top of valve stem (6).

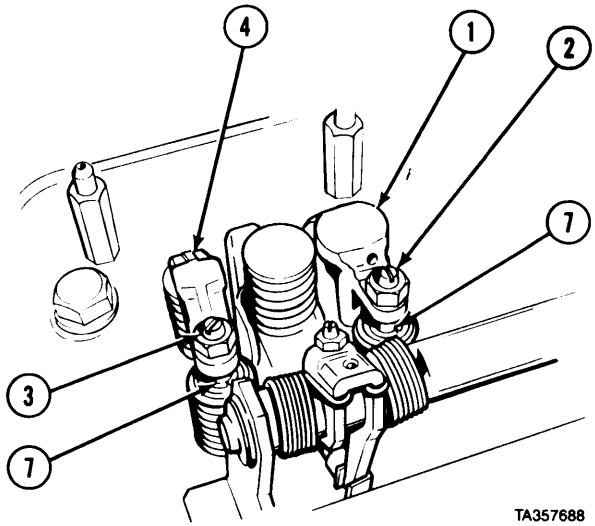

(5) Push down on top of valve bridge (1 or 4) and turn adjusting screw (2) until it just touches valve stem (7).
(6) Turn screw (2) an additional 1/4-turn and tighten nut (3) finger tight
(7) Remove valve bridge (1 or 4) and mount in vise with soft jaws.
(8) Hold screw (2) and tighten nut (3) to 20 to 25 lb-ft (27 to 34 N•m).

https://truckmanualshub.com/

Valve Mechanism Maintenance Instructions (Cont)

(9) Coat valve bridges (1 and 4) and valve bridge guides (5) with lubricating oil.
(10) Install valve bridges (1 and 4) on valve bridge guides (5) making sure grooves in bridges fit over top of valve stem (6).

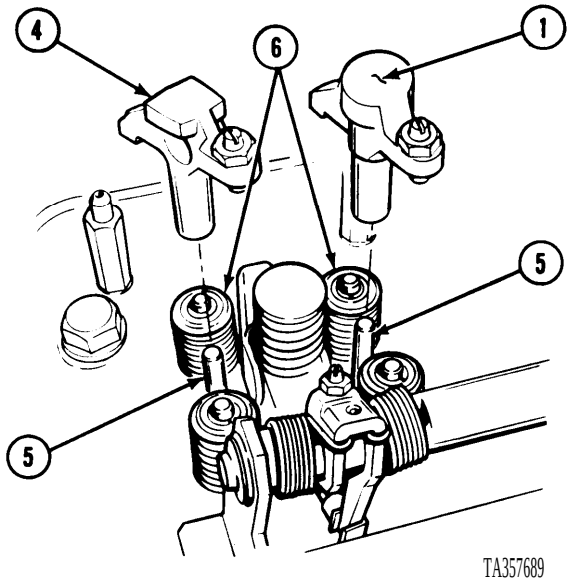

(11) Insert 0.0015-in. feeler gage between end of valve bridge (1) and exhaust valve stem (7).
(12) Press down on top surface of valve bridge (l). Feeler gage must be tight.
(13) Repeat steps (11) and (12) for other end of valve bridge (1).
(14) Install all other valve bridges in the same manner.

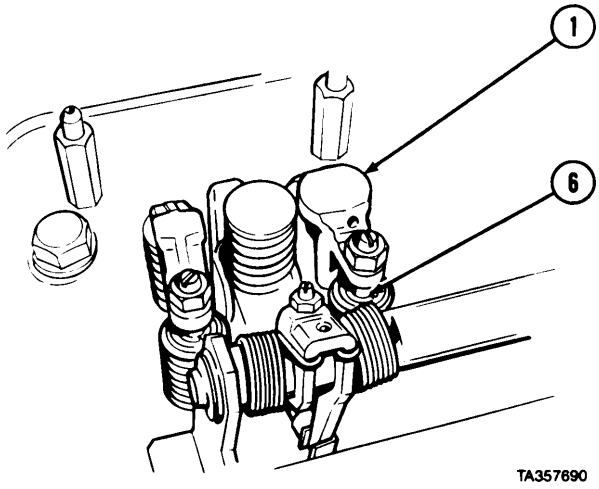

c. Follow-on Maintenance. Install rocker arm (para 10-2).

END OF TASK

https://truckmanualshub.com/

Valve Mechanism Maintenance Instructions (Cont)

7-9. CAMSHAFT REMOVAL/REPAIR/INSTALLATION.

This task covers:

a. Removal
b. Disassembly
c. Cleaning/Inspection
d. Assembly
e. Installation
f. Follow-on Maintenance

INITIAL SETUP

Models
All

Test Equipment
None

Special Tools
Puller, camshaft gear J1902-01
Remover, camshaft gear and water pump pulley J7932
Set, dial indicator J7872
Gage, feeler FB310B

Supplies
Solvent, dry cleaning, Item 60, Appendix C
Oil, lubricating, Item 48, Appendix C
Grease, automotive and artillery, Item 36, Appendix C
Tags, identification, Item 61, Appendix C

Personnel Required
MOS 63W, Wheel vehicle repairer

References
None

Equipment Condition

TM or Para	*Condition Description*
TM 9-2320-279-34	Engine installed on engine stand.
Para 3-7	Cylinder heads removed.
Para 5-3	Flywheel housing and rear oil seal removed.
Para 7-12	Front balance cover removed.
Para 10-5	Water pump drive gear removed.

Special Environmental Conditions
None

General Safety Instructions
None

Level *of Maintenance*
General Support

a. Removal.

(1) Remove four screws (l), adapter (2), and retainer (3) from left camshaft gear (4).

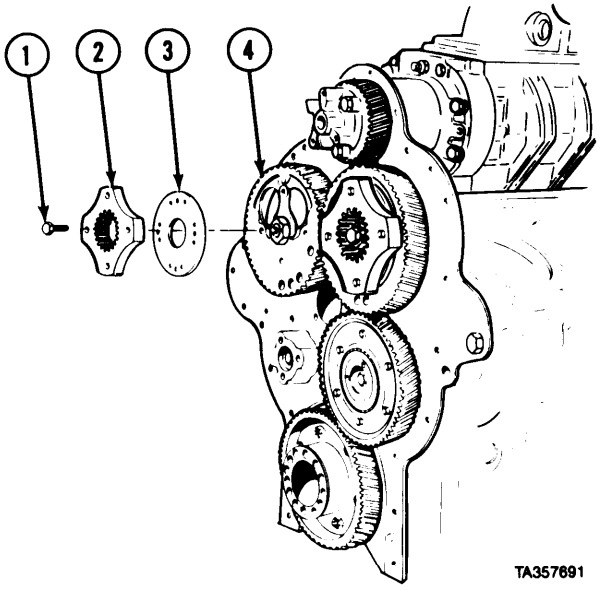

https://truckmanualshub.com/

Valve Mechanism Maintenance Instructions (Cont)

(2) Remove four screws (5), adapter (6), and retainer (7) from right camshaft gear (8).

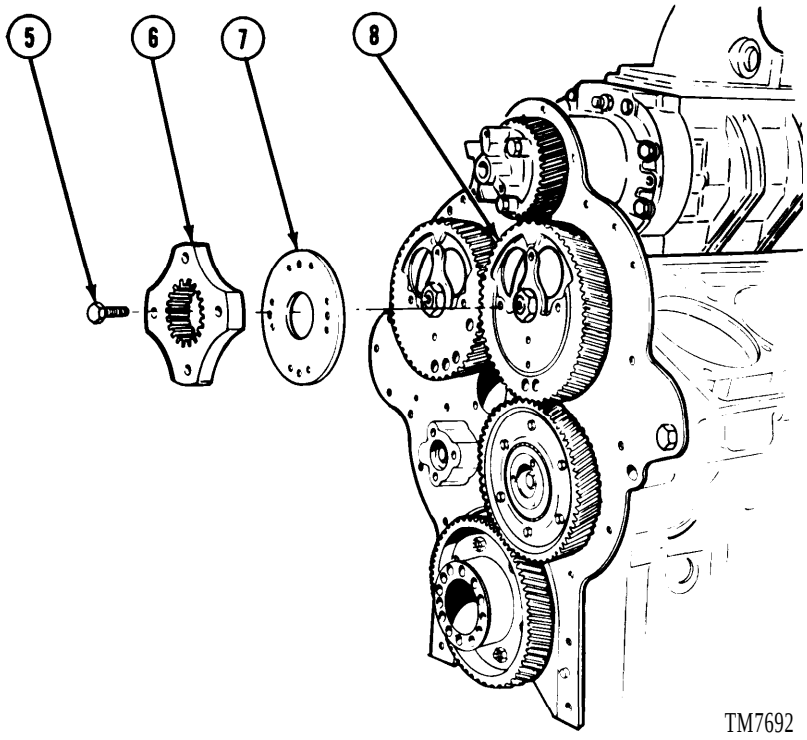

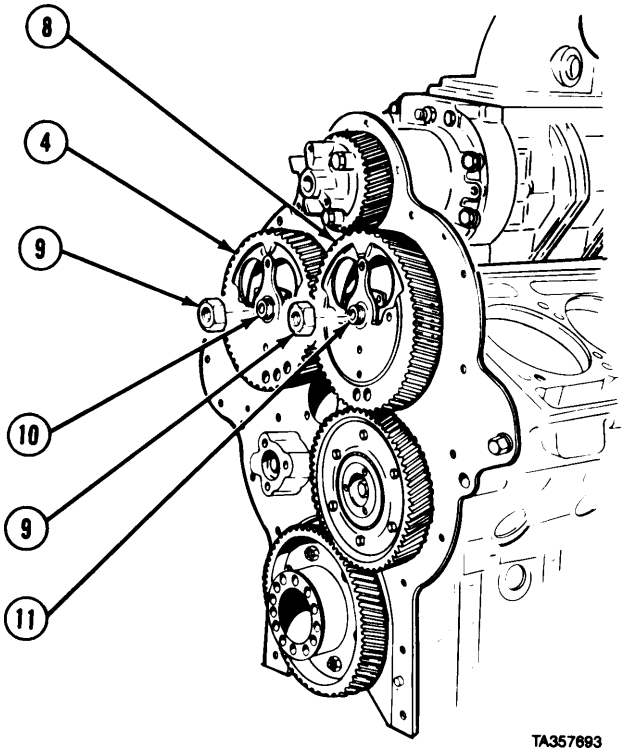

NOTE

Shop cloth is used between camshaft gears to prevent turning.

(3) Place a clean shop cloth between gears (4 and 8).
(4) Remove two nuts (9) from rear end of camshafts (10 and 11).

https://truckmanualshub.com/

Valve Mechanism Maintenance Instructions (Cont)

7-9. CAMSHAFT REMOVAL/REPAIR/INSTALLATION (CONT).

(5) Remove nut (12), lockwasher (13), and accessory drive pulley (14) from front of camshaft (10).

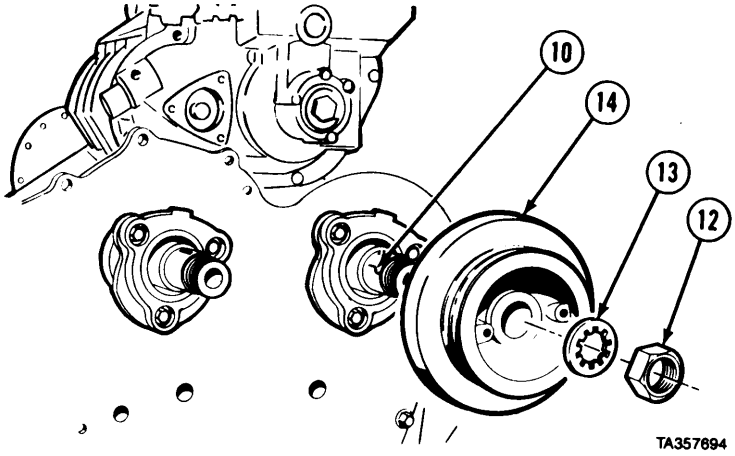

(6) Remove woodruff key (15) and spacer (16) from front end of camshaft (10).
(7) Remove oil seal (17) from camshaft (10).

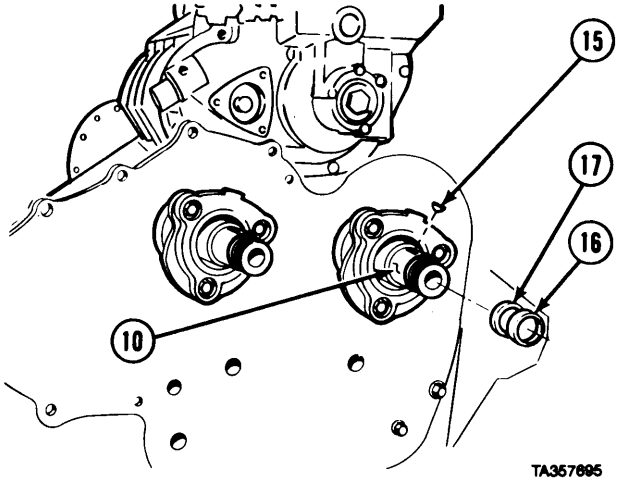

(8) Remove three intermediate bearing lock screws (18) from camshafts (10 and 11).

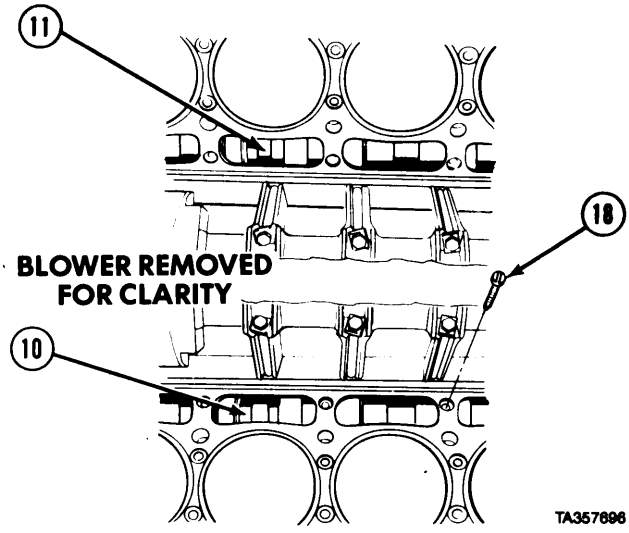

https://truckmanualshub.com/

Valve Mechanism Maintenance Instructions (Cont)

NOTE

Remove cloth from between gears. Gears can be turned to reach rear end camshaft bearing screws using nut on end of camshaft.

(9) Install nut (9) on rear end of camshaft (10).
(10) Remove three camshaft rear end bearing screws (19) and Iockwashers (20) from each rear camshaft bearing (21).
(11) Remove nut (9).

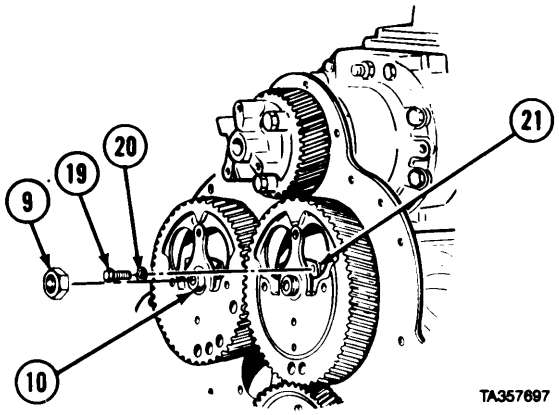

CAUTION

Use care when removing camshafts. Camshafts can be damaged by scraping or hitting engine block or hard surface.

NOTE

Tag and mark all parts to aid in assembly,

(12) Remove camshaft assemblies (10 and 11) from engine block (22).

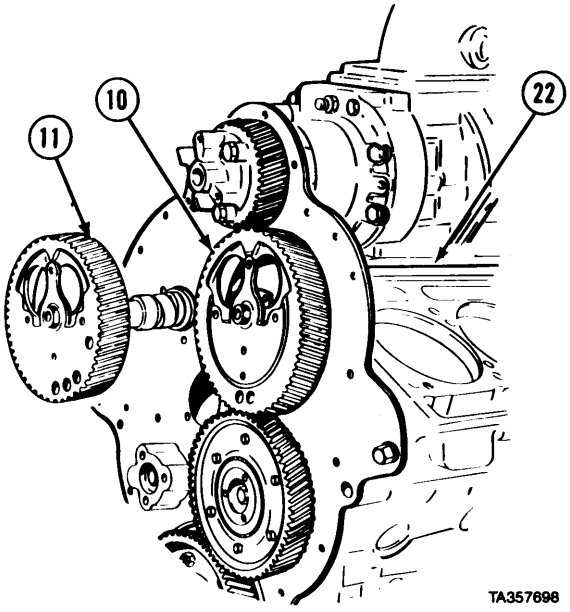

(13) Remove three screws (23) and lockwashers (24) from each front camshaft bearing (25).

NOTE

Gasket is on left-hand bearing only.

(14) Remove two bearings (25) and gasket (26).

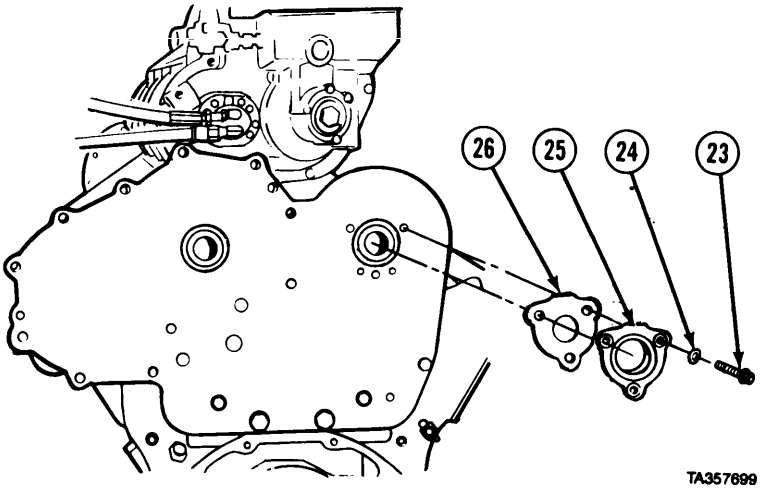

https://truckmanualshub.com/

7-9. CAMSHAFT REMOVAL/REPAIR/INSTALLATION (CONT).

b. Disassembly.

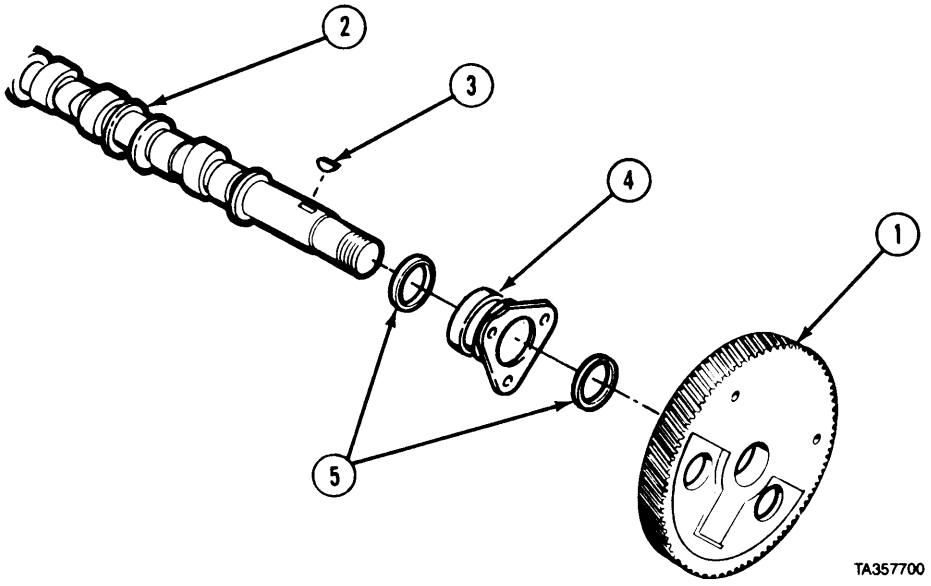

NOTE

Repeat steps (1) through (5) for disassembly of other camshaft.

(1) Remove gear (1) from end of camshaft (2) using camshaft gear puller and remover.
(2) Remove woodruff key (3) from end of camshaft (2).
(3) Remove end bearing (4) with thrust washers (5) from end of camshaft (2).

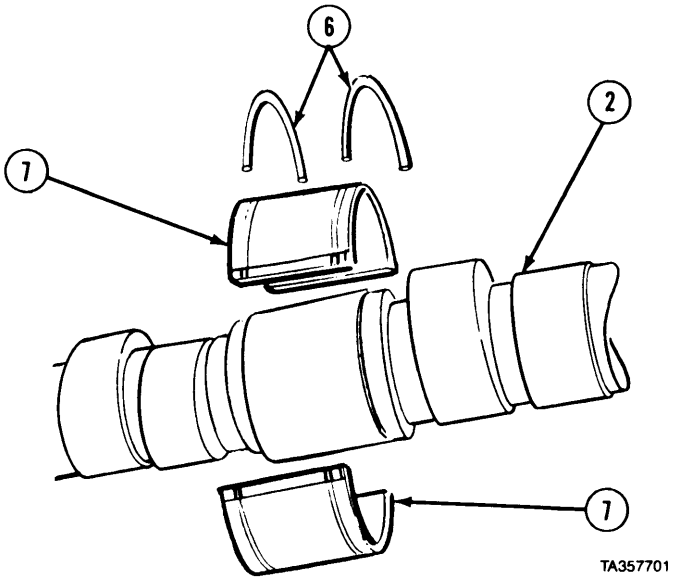

NOTE

Tag and mark three camshaft bearings for later installation.

(4) Remove six lockrings (6) and three camshaft intermediate bearings (7) from camshaft (2).

https://truckmanualshub.com/

Valve Mechanism Maintenance Instructions (Cont)

c. Cleaning/Inspection.

WARNING

Adhesives, solvents, and sealing compounds can burn easily, can give off harmful vapors, and are harmful to skin and clothing. To avoid injury or death, keep away from open fire and use in well-ventilated area. If adhesive, solvent, or sealing compound gets on skin or clothing, wash immediately with soap and water.

(1) Clean all camshaft parts with dry cleaning solvent.

WARNING

Compressed air used for cleaning purposes will not exceed 30 psi (207 kPa). Use only with effective chip guarding and personal protective equipment (goggles/shield, gloves, etc.).

(2) Dry parts with compressed air.

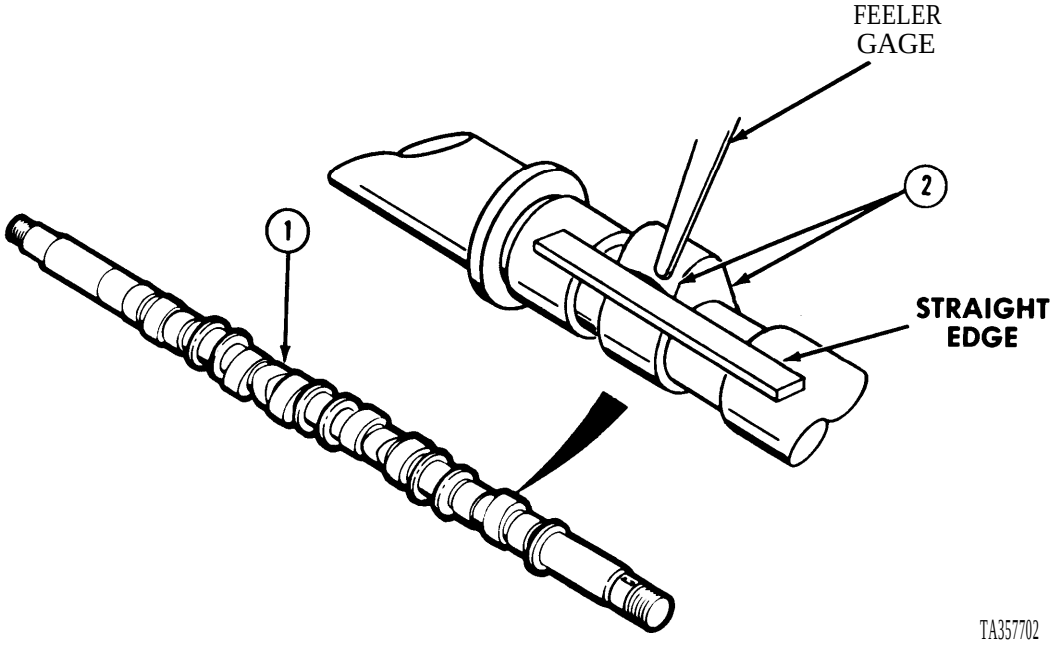

(3) Inspect camshaft (1) for scratches or damage,
(4) Damaged keyways maybe filed smooth.
(5) Threaded holes may be retapped.

NOTE

Flat measurement must not exceed 0.003 in. (0.076 mm).

(6) Measure flat spots (2) on 12 cam lobes using a straight edge and 0.003 in. (0.076 mm) feeler gage.

https://truckmanualshub.com/

Valve Mechanism Maintenance Instructions (Cont)

7-9. CAMSHAFT REMOVAL/REPAIR/INSTALLATION (CONT).

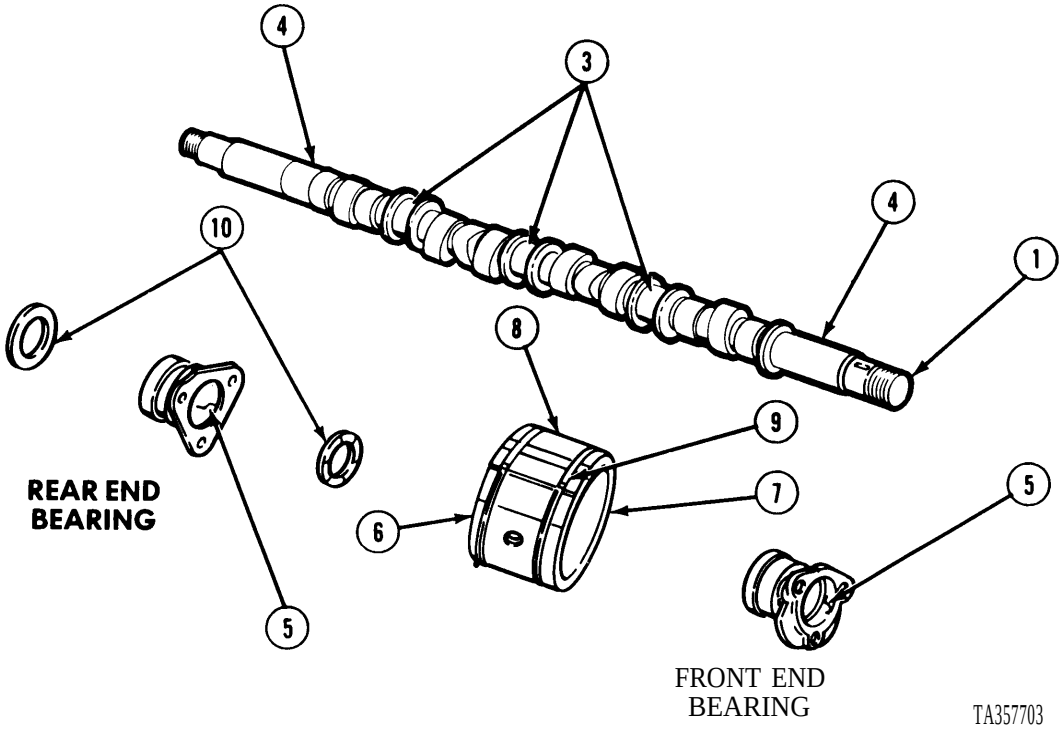

NOTE

Both ends of lockring must cover split line of bearing.

(7) Measure and note diameters of three bearing journals (3). Replace camshaft (1) if any diameter is less than 1.4980 in. (38.049 mm).
(8) Measure and note diameters of two end bearing journals (4). Replace camshaft (1) if any diameter is less than 1.4960 in. (37.998 mm).
(9) Measure and note inside diameter of four end bearing bushings (5).
(10) Put lower half (6) of three intermediate bearings (7) together with top half (8).
(11) Install six lockrings (9) over three intermediate bearings (7).
(12) Measure and note inside diameter of three intermediate bearings (7).
(13) Take measurement recorded in step (7) and subtract from measurement recorded in step *(12)*. Total difference may not exceed 0.009 in. (0.23 mm).
(14) Replace three intermediate bearings (7) if clearance exceeds limit.
(15) Measure thickness of four rear end bearing thrust washers (10) and replace if less than 0.119 in. (3.02 mm).
(16) Take measurement recorded in step (8) and subtract it from measurement recorded in step (9). Total difference may not exceed 0.006 in. (0. 15 mm).
(17) Replace front or rear end bearing bushings if clearance exceeds limits (para 7-10).
(18) Inspect spacers and oil seal. Replace if damaged.
(19) Inspect two camshaft gears for worn or damaged teeth. Replace if damaged.

https://truckmanualshub.com/

Valve Mechanism Maintenance Instructions (Cont)

(20) **Place camshaft (1) in V blocks and use dial indicator to check center bearing surface for runout. Runout should not exceed 0.002 in. (0.05 mm).**
(21) **If runout exceeds 0.002 in. (0.05 mm) replace camshaft.**
(22) **Repeat steps (1) to (21) for other camshaft.**

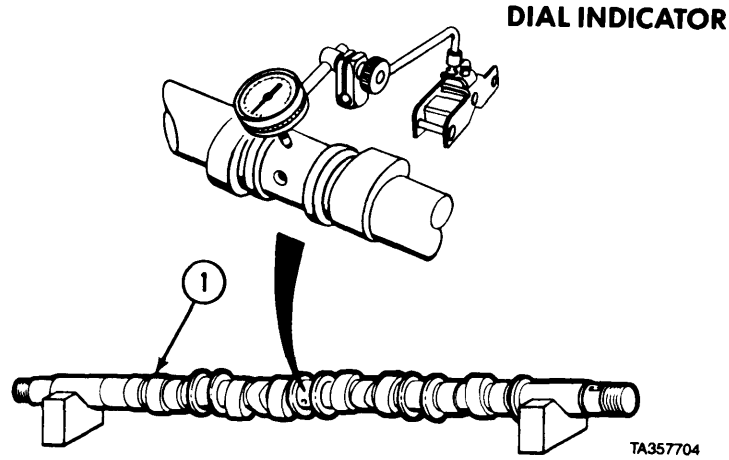

d. Assembly.

NOTE

- Repeat steps (1) through (11) for assembly of both camshafts.
- Steel faces of thrust washers are next to bearing.

(1) Apply grease to steel faces of two thrust washers (1).
(2) Put thrust washer (1) against each end of camshaft rear end bearing (2).

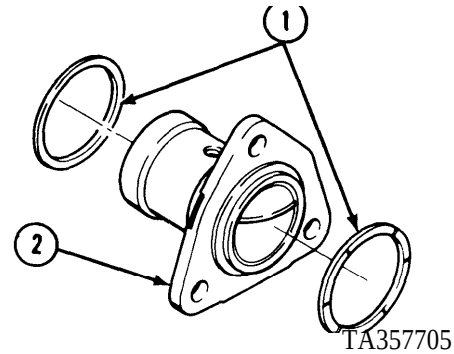

(3) Apply lubricating oil to camshaft rear bearing journal (3).
(4) Install two thrust washers (1) and camshaft rear end bearing (2) on camshaft (4).

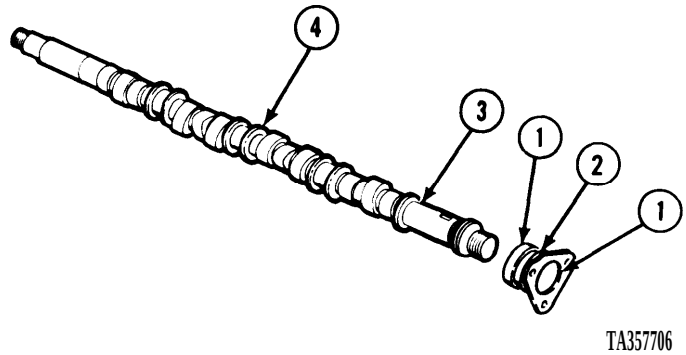

(5) Install woodruff key (5) in keyway at rear of camshaft (4).
(6) Aline camshaft gear (6) with key (5).
(7) Press gear (6) onto shoulder of camshaft (4).
(8) Install nut (7) on camshaft (4) and tighten finger tight.

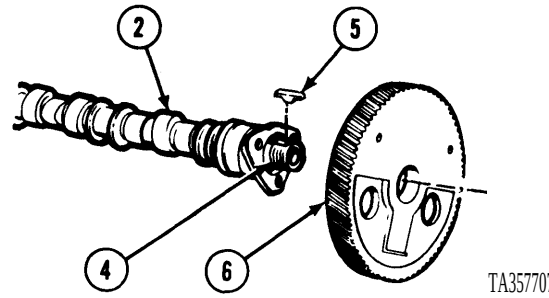

https://truckmanualshub.com/

Valve Mechanism Maintenance Instructions (Cont)

7-9 CAMSHAFT REMOVAL/REPAIR/INSTALLATION (CONT).

(9) Apply lubricating oil to camshaft intermediate bearing journals (8).

(10) Put six halves of intermediate bearing (9) on camshaft journals (8).

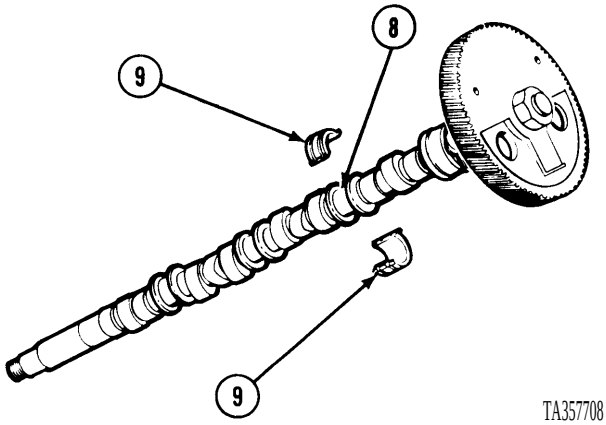

NOTE

Both ends of lockring must cover split line of bearing and be installed over bottom half of bearing. Bottom half of bearing is half without hole.

(11) Install six lockrings (10) over bottom half of three intermediate bearings (11).

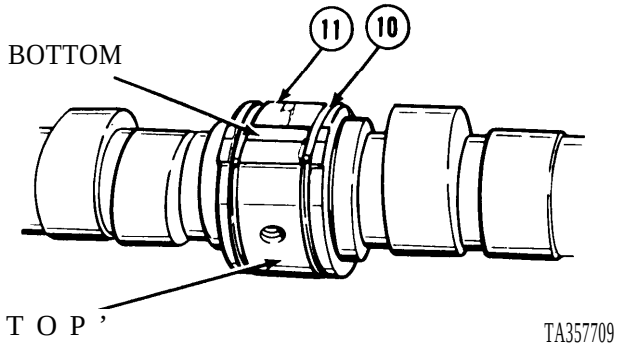

e. Installation.

(1) Install right-hand camshaft (1) into engine block (2).

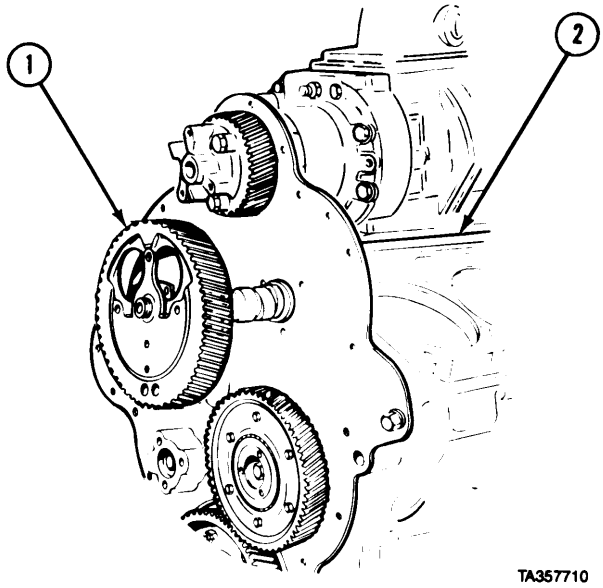

https://truckmanualshub.com/

Valve Mechanism Maintenance Instructions (Cont)

(2) Install left-hand camshaft (3) into engine block (2).

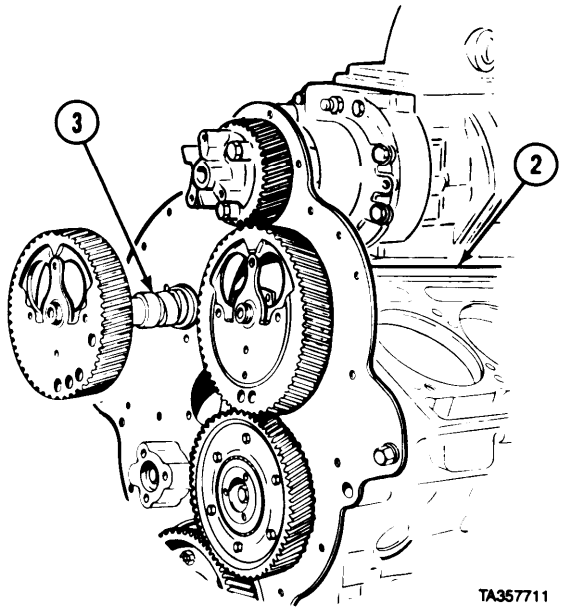

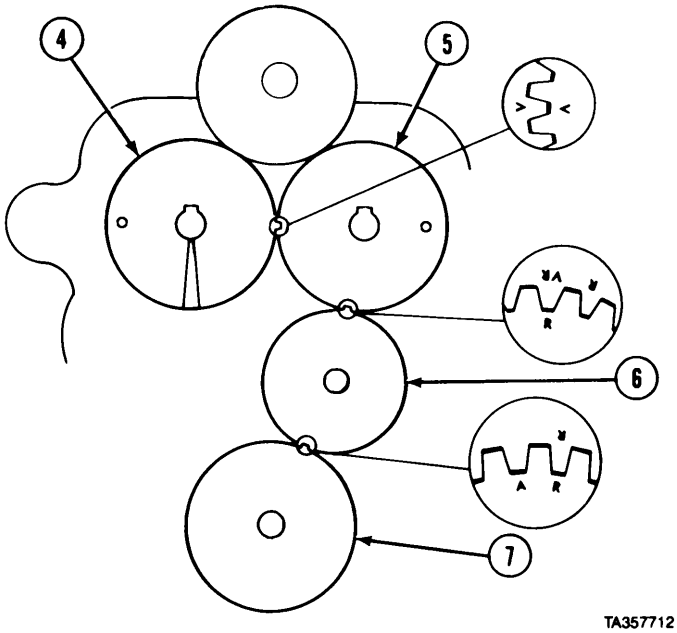

(3) Aline left camshaft gear (4), right camshaft gear (5), idler gear (6), and crankshaft timing gear (7) so that timing marks on gears (4, 5, 6, and 7) line up as shown.

(4) Slide camshaft gears (4 and 5) into place until camshaft gears (4 and 5) and idler gear (6) are fully meshed.

(5) Check timing marks again to make sure gears (4, 5, 6, and 7) are alined as shown.

https://truckmanualshub.com/

Valve Mechanism Maintenance Instructions (Cont)

7-9. CAMSHAFT REMOVAL/REPAIR/INSTALLATION (CONT).

(6) Turn gear *(5)* to reach all rear end bearing screw holes.
(7) Install six screws (8) and lockwashers (9) to both camshaft rear end bearings (10) and engine block (2).
(8) Tighten screws (8) to 40 lb-ft (54 N•m).

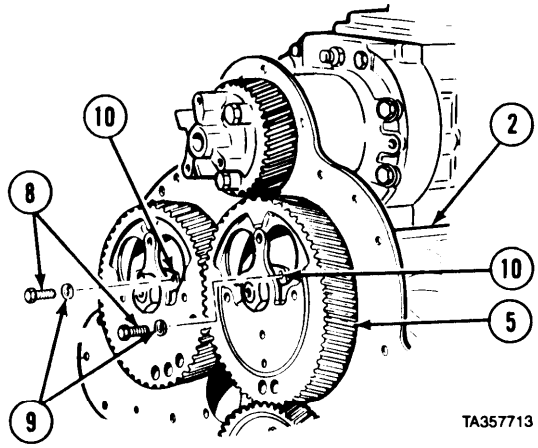

(9) Aline holes in three intermediate bearings (11) on right and left camshafts (1 and 3) with tapped holes in engine block (2).
(10) Install three lock screws (12).
(11) Tighten lock screws (12) to 20 lb-ft (27 N•m).

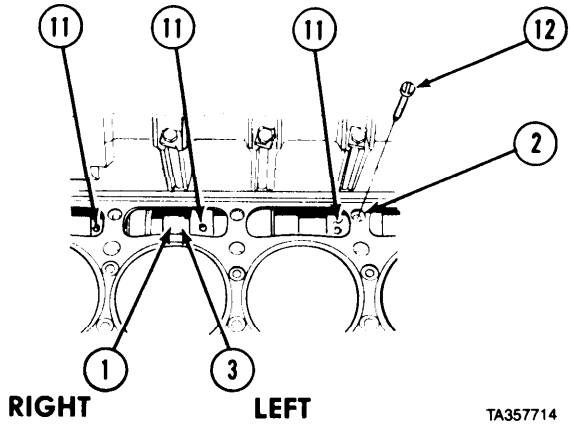

(12) Apply clean engine oil to left camshaft front end bearing journal (13).
(13) Install gasket (14) and bearing (15) on camshaft (3).
(14) Install three screws (16) and lockwashers (17) to bearing (15) and engine block (2).
(15) Tighten screws (16) to 40 lb-ft (54 N•m).

NOTE

Spacers have polished outside diameters.

(16) Install oil seal (18) and spacer (19).

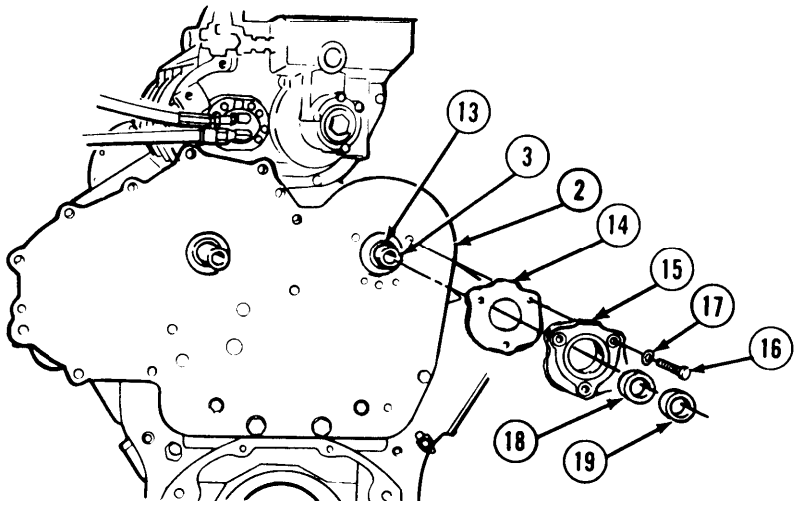

https://truckmanualshub.com/

Valve Mechanism Maintenance Instructions (Cont)

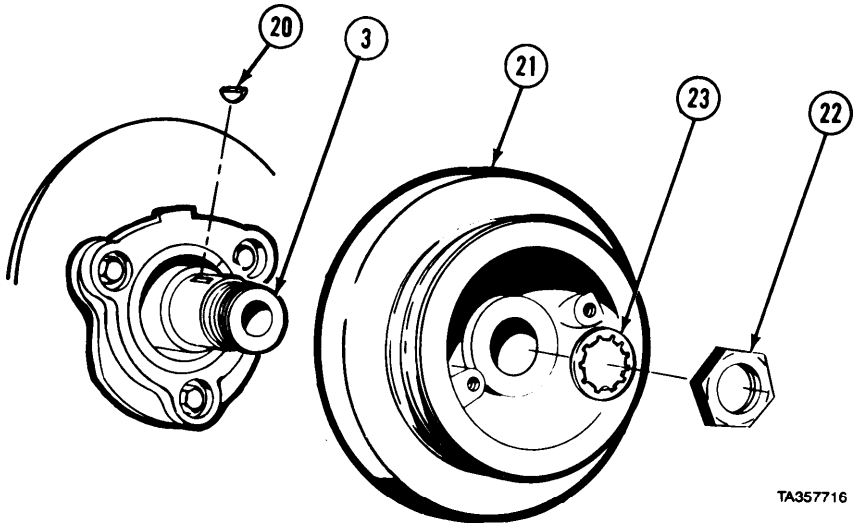

(17) Install woodruff key (20) in camshaft (3).
(18) Install pulley (21) on camshaft (3).
(19) Install nut (22) and lockwasher (23) on camshaft (3). Tighten nut finger tight.

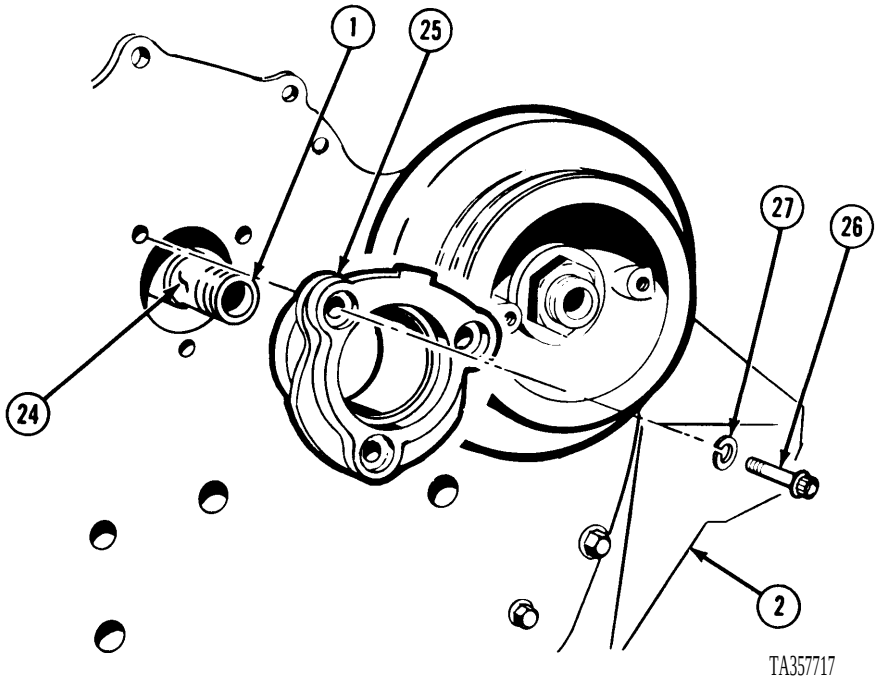

(20) Apply lubricating oil to right camshaft front end bearing journal (24).
(21) Install bearing (25) on camshaft (1).
(22) Install three screws (26) and lockwashers (27) in bearing (25) and engine block (2).
(23) Tighten screws (26) to 40 lb-ft (54 N•m).

https://truckmanualshub.com/

Valve Mechanism Maintenance Instructions (Cont)

7-9. CAMSHAFT REMOVAL/REPAIR/INSTALLATION (CONT).

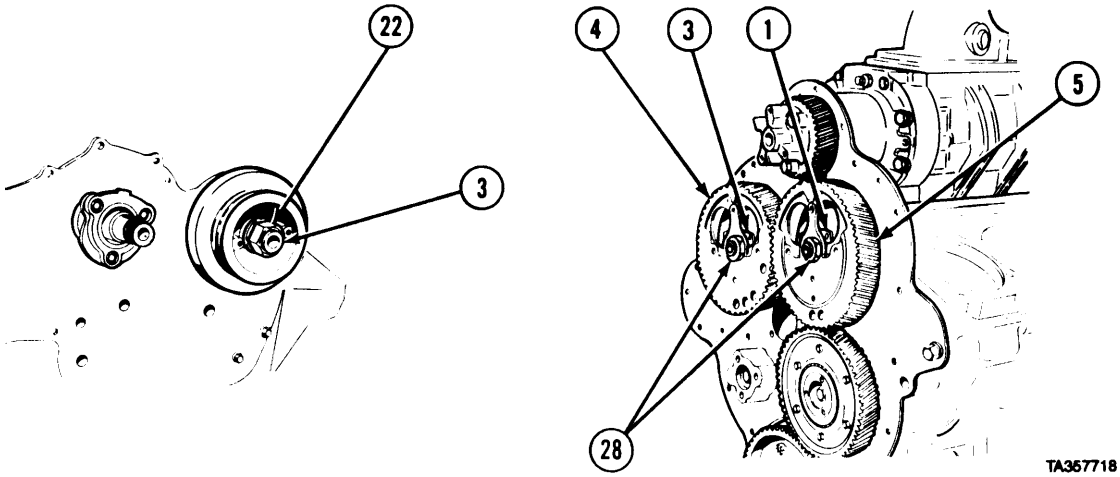

(24) Place clean cloth between teeth of camshaft gears (4 and 5).
(25) Tighten nuts (28) on rear end of camshafts (1 and 3) to 300 lb-ft (407 N•m).
(26) Tighten nut (22) on front end of camshaft (3) to 300 lb-ft (407 N•m).

NOTE

Remaining nut on right camshaft is installed with water pump drive gear.

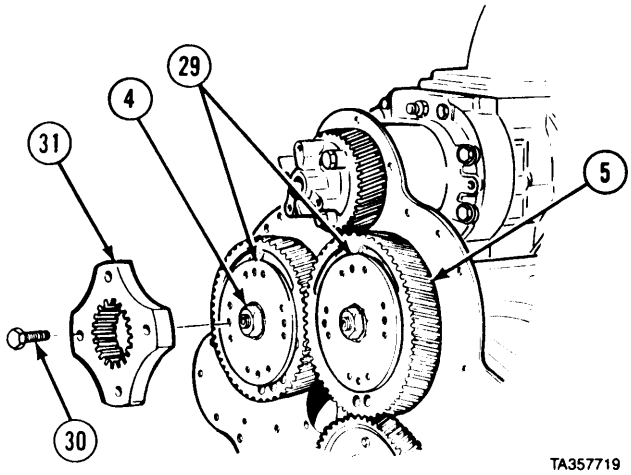

(27) Put two retainers (29) in mounting position on camshaft gears (4 and 5).
(28) Install eight screws (30) in two adapters (31) and retainers (29).
(29) Tighten screws (30) to 40 lb-ft (54 N•m).

https://truckmanualshub.com/

Valve Mechanism Maintenance Instructions (Cont)

(30) Check clearance between thrust washer (32) and shoulder (33) of camshaft (1). If clearance is less than 0.004 in. (0.1 mm) or greater than 0.018 in. (0.45 mm), replace camshaft (l).

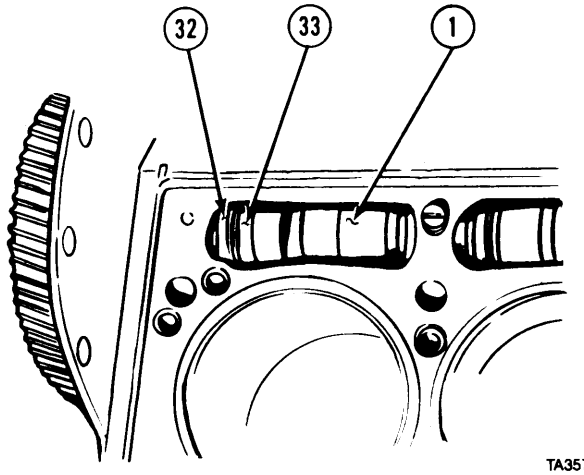

TA357720

(31) Check backlash between gears (4 and 5). Minimum backlash is 0.002 in. (0.05 mm). Maximum backlash is 0.010 in. (0.25 mm).

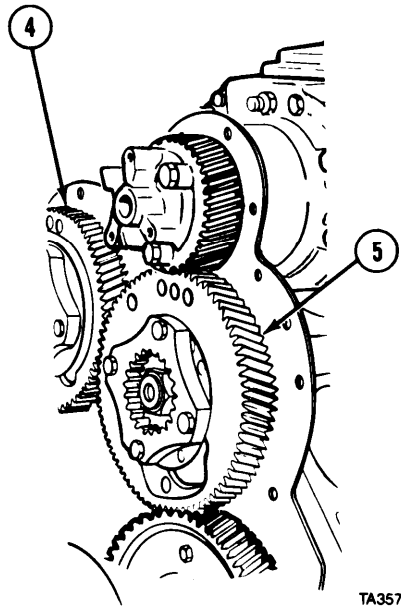

TA357721

f. Follow-on Maintenance.

(1) Install water pump drive gear (para 10-5).
(2) Install front balance cover (para 7-12).
(3) Install flywheel housing and rear oil seal (para 5-3).
(4) Install cylinder heads (para 3-7).
(5) Remove engine from engine stand (TM 9-2320-279-34).

END OF TASK

https://truckmanualshub.com/

Valve Mechanism Maintenance Instructions (Cont)

7-10. CAMSHAFT END BEARING BUSHING REMOVAL/INSTALLATION.

This task covers:

a. Removal
b. Installation
c. Follow-on Maintenance

INITIAL SETUP

Models
All

Test Equipment
None

Special Tools
None

Supplies
None

Personnel Required
MOS 63W, Wheel vehicle repairer

References
None

Equipment Condition

TM or Para	*Condition Description*
Para 7-9	Camshaft end bearings removed.

Special Environmental Conditions
None

General Safety Instructions
None

Level of Maintenance
General Support

a. Removal.

NOTE

Do this procedure only if camshaft end bearing bushings fail inspection specifications in para 7-9. If one bushing in end bearing has failed both bushings must be replaced.

(1) Remove two thrust spacers (1) from camshaft rear end bearing (2).
(2) Remove two bushings (3) from camshaft front and rear end bearing (4 and 2).

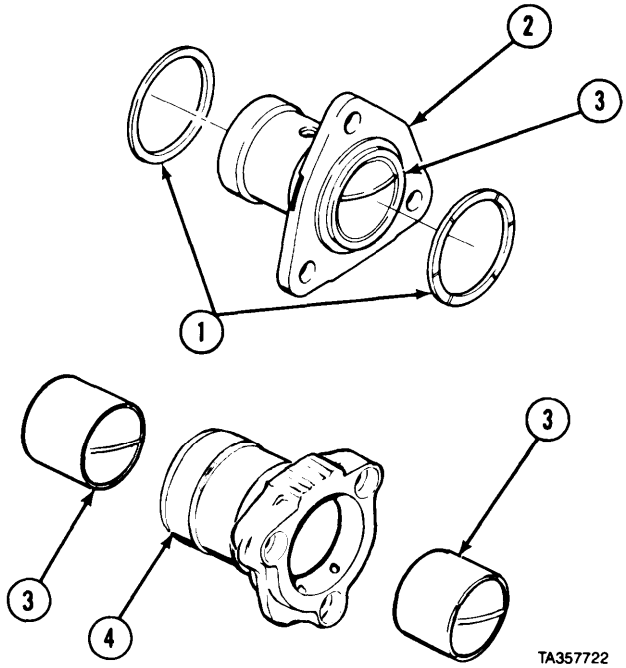

https://truckmanualshub.com/

Valve Mechanism Maintenance Instructions (Cont)

b. Installation.

(1) Press two bushings (1) into camshaft front end bearing (2) until flush with ends of bearing (2).

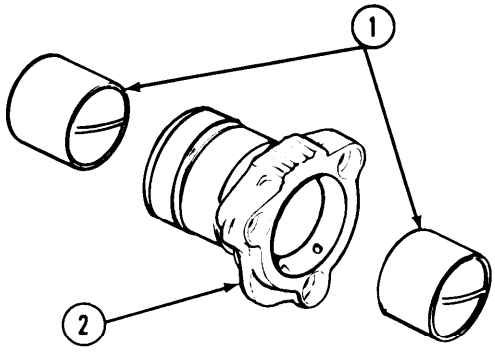

TA357723

(2) Press two bushings (1) into camshaft rear end bearing (3) until bushing sticks out approximately 0.045 to 0.055 in. (1.14 to 1.40 mm).

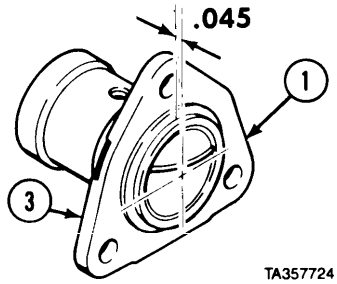

TA357724

(3) Install two thrust spacers (4) on rear end bearing (3).

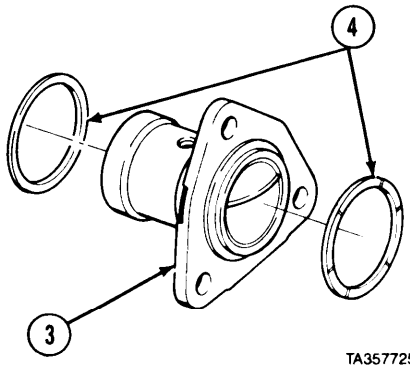

TA357725

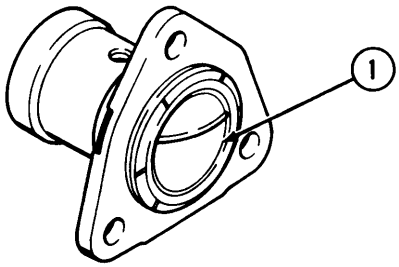

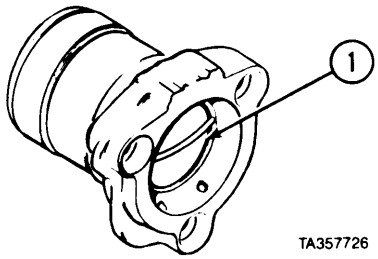

TA357726

(4) Bore bushing (1) to 1.496 to 1.498 in. (37.998 to 38.049 mm).

c. Follow-on Maintenance. Install camshaft end bearings (para 7-9).

END OF TASK

https://truckmanualshub.com/

Valve Mechanism Maintenance Instructions (Cont)

7-11 IDLER GEAR REMOVAL/REPAIR/INSTALLATION

This task covers:

a. Removal
b. Disassembly
c. Cleaning/Inspection
d. Assembly
e. Installation
f. Follow-on Maintenance

INITIAL SETUP

Models
All

Test Equipment
None

Special Tools
Holding fixture, idler gear 2SK900
Set, dial indicator J7872

Supplies
Solvent, dry cleaning, Item 60, Appendix C
Oil, lubricating, Item 48, Appendix C

Personnel Required
MOS 63W, Wheel vehicle repairer

References
None

Equipment Condition

TM or Para	*Condition Description*
TM 9-2320-279-34	Engine mounted on engine stand.
Para 5-3	Flywheel housing removed.

Special Environmental Conditions
None

General Safety Instructions
None

Level *of Maintenance*
General Support

a. Removal.

(1) Remove screw (1) and special washer (2).
(2) Remove idler gear assembly (3) from engine block (4).

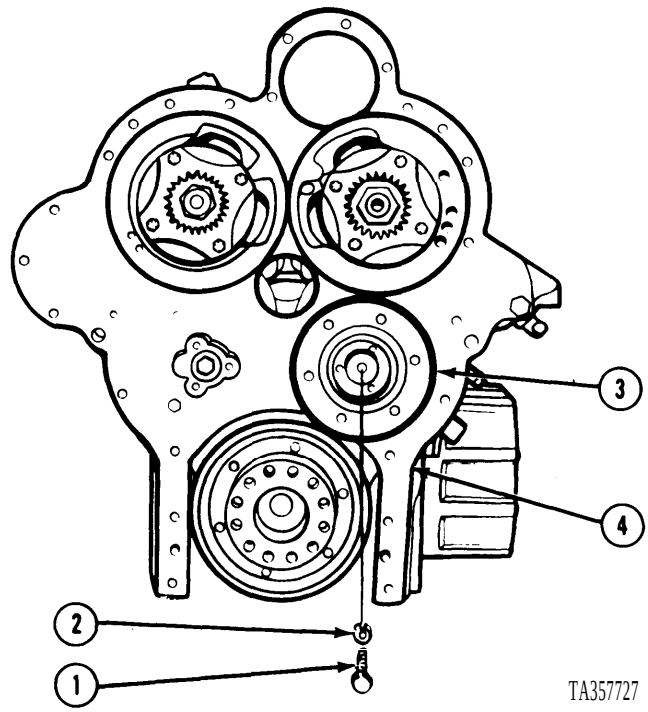

https://truckmanualshub.com/

Valve Mechanism Maintenance Instructions (Cont)

b. Disassembly.

(1) Remove six screws (l).

(2) Remove retainer (2) from idler gear assembly (3).

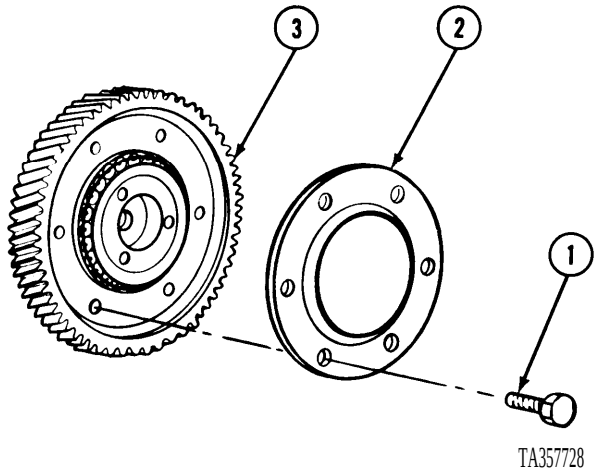

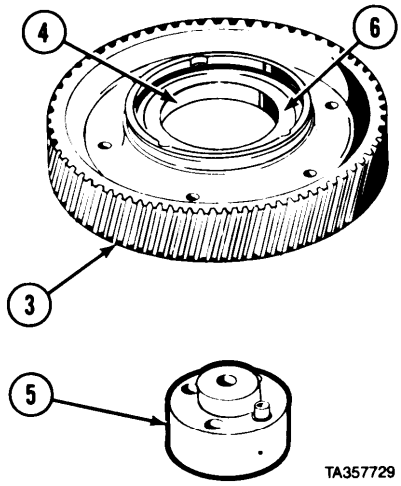

NOTE

Mark parts of idler gear bearings if they will be used again. Do not scratch or damage bearings.

(3) Place idler gear assembly (3) in press with outer bearing cone (4) supported on steel blocks.

CAUTION

Idler gear assembly must be rotated during removal to prevent damage to bearing cones.

(4) Rotate idler gear assembly (3) while pressing idler gear hub (5) out of bearing cones (4 and 6).

(5) Remove idler gear assembly (3) as a unit from the press.

https://truckmanualshub.com/

Valve Mechanism Maintenance Instructions (Cont)

7-11. IDLER GEAR REMOVAL/REPAIR/INSTALLATION (CONT).

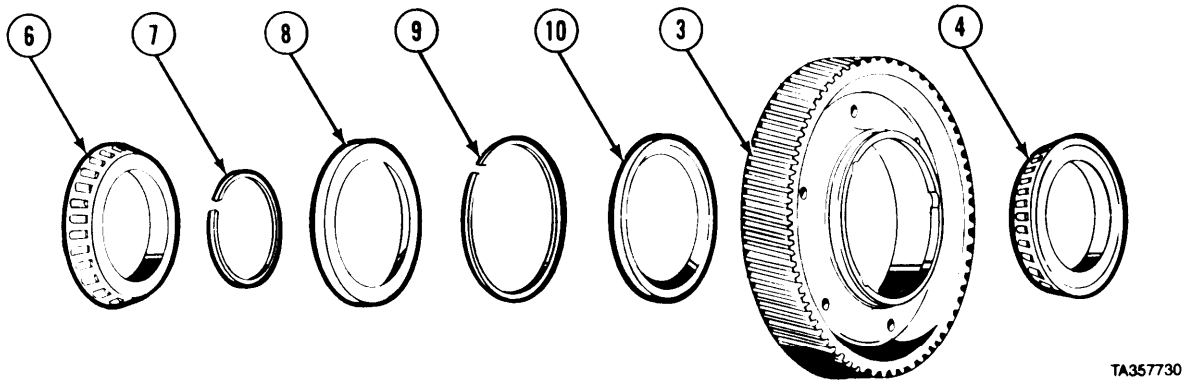

(6) Remove outer bearing cone (6), inner spacer ring (7), and inner bearing cone (4) from idler gear assembly (3).

NOTE

Do not remove bearing cups unless they are damaged or loose.

(7) Remove outer bearing cup (8), outer spacer ring (9), and inner bearing cup (10) from idler gear assembly (3).

c. Cleaning/Inspection.

WARNING

Adhesives, solvents, and sealing compounds can burn easily, can give off harmful vapors, and are harmful to skin and clothing. To avoid injury or death, keep away from open fire and use in well-ventilated area. If adhesive, solvent, or sealing compound gets on skin or clothing, wash immediately with soap and water.

(1) Clean idler gear and bearing parts with dry cleaning solvent.
(2) Inspect bearing for scoring, pitting, or flat spots on rollers or cones.
(3) Inspect bearing cups for scoring, pitting, and dents in bearing surface.
(4) Examine gear teeth for scoring, pitting, and chips.
(5) Replace all damaged parts.
(6) Coat all parts with lubricating oil.

d. Assembly.

(1) Support idler gear (1), shoulder down, on bed of press.
(2) Apply lubricating oil to bearing cup (2) and start inner bearing cup, numbered side up, into bore of gear (l).
(3) Press inner bearing cup (2) to seat against shoulder of gear (1).
(4) Install outer spacer ring (3) on inner bearing cup (2).
(5) Apply lubricating oil to outer bearing cup (4) and start outer bearing cup, numbered side down, into bore of idler gear (l).

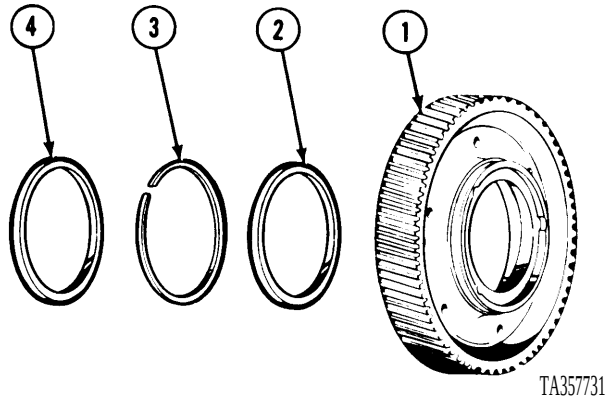

(6) Press outer bearing cup (4) against outer spacer ring (3).

https://truckmanualshub.com/

Valve Mechanism Maintenance Instructions (Cont)

(7) Apply lubricating oil to all parts, place outer bearing cone (5) numbered side down on bed of press.
(8) Press idler gear hub (6) into outer bearing cone (5) until bottom of hub (6) is flush with bottom of cone (5).

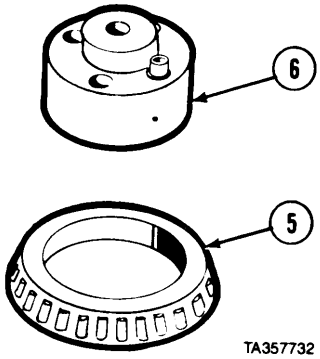

(9) Install inner spacer ring (7) on idler gear hub (6).
(10) Position gap in spacer ring (7) on side opposite of oil hole in idler gear hub (6).

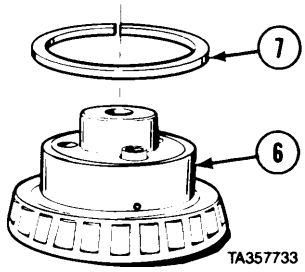

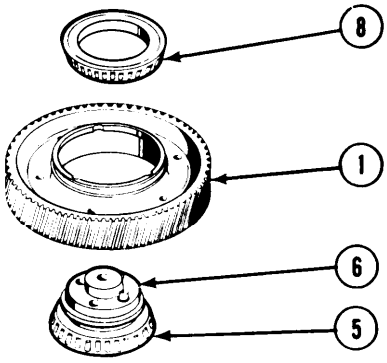

(11) Support outer bearing cone (5) and idler gear hub (6).
(12) Install idler gear assembly (1) onto idler gear hub (6).

CAUTION

Turn gear while installing bearing cone on idler gear hub to prevent damage to bearing cups.

(13) Turn idler gear assembly (1) while pressing inner bearing cone (8), numbered side up, over hub (6).
(14) Hold hub (6) and turn gear assembly (1) to see if binding occurs.

https://truckmanualshub.com/

7-11. IDLER GEAR REMOVAL/REPAIR/INSTALLATION (CONT).

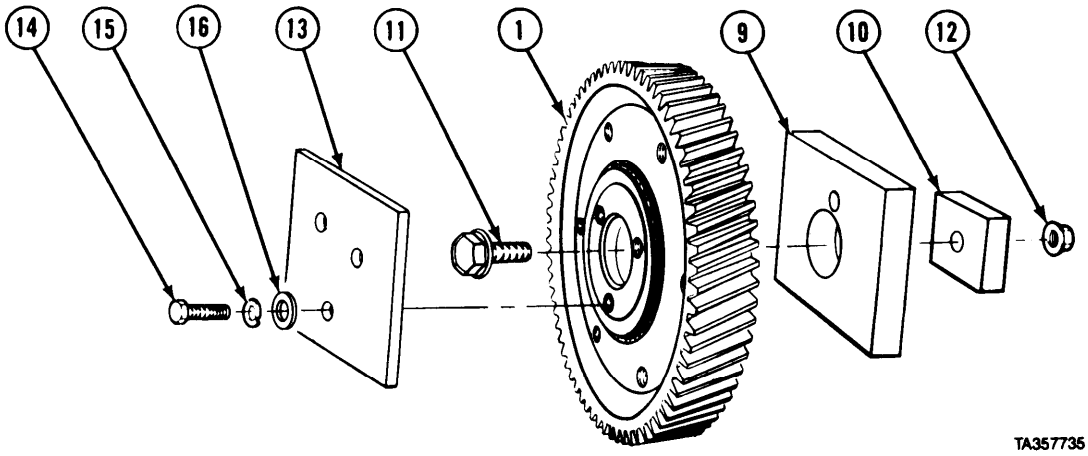

NOTE

To check idler gear pre-load, do steps (15) through (25).

(15) Mount idler gear (1) in soft jaw vise.
(16) Mount two test fixture plates (9 and 10) on idler gear (1) with screw (11) and nut (12). Tighten to 90 lb-ft (122 N•m).
(17) Mount test fixture plate (13) on idler gear (1) with three screws (14), lockwashers (15), and washers (16). Tighten to 40 lb-ft (54 N•m).
(18) Place plate (10) in jaws of vise.

NOTE

Pull to start gear moving must not be less than 0.5 lb (0.23 kg) or more than 4.0 lbs (1.8 kg).

(19) Wrap cord several times around idler gear assembly (1) and attach spring scale.
(20) Pull idler gear assembly (1) several times and record pull required to start gear moving. Maximum difference between pulls is 2 lbs, 11 ounces (1.22 kg).
(21) If difference between pulls does not fall in correct ranges, replace bearings.

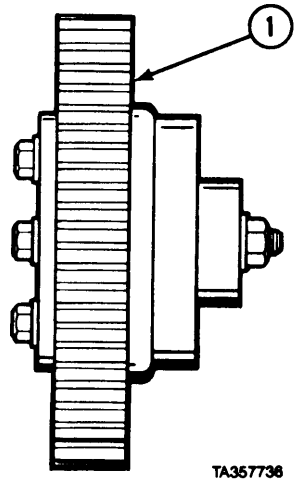

https://truckmanualshub.com/

Valve Mechanism Maintenance Instructions (Cont)

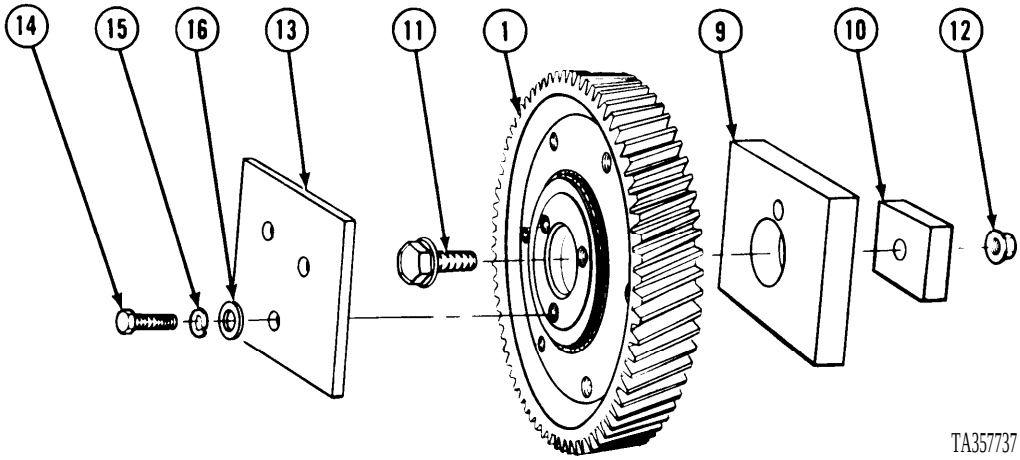

(22) Place idler gear assembly (1) in soft jaw vise.
(23) Remove three screws (14), lockwashers (15), washers (16), and test fixture plate (13).
(24) Remove nut (12), screw (11), and two test fixture plates (10 and 9).
(25) Remove idler gear assembly (1) from vise.

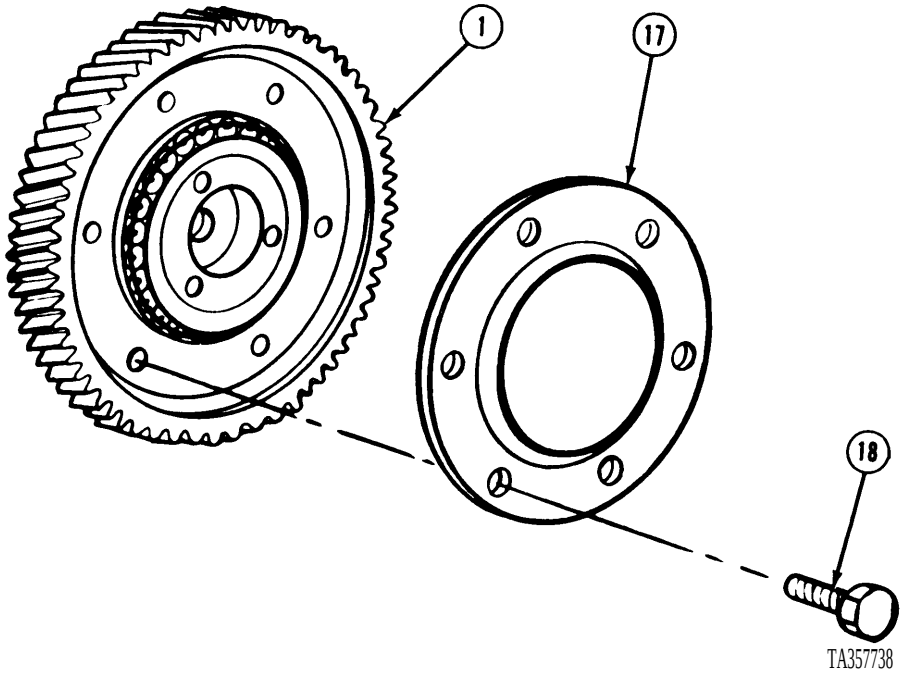

(26) Install retainer (17) and six new nylon patch screws (18) on idler gear assembly (l).
(27) Tighten screws (18) to 30 lb-ft (41 N•m).

https://truckmanualshub.com/

17-11. IDLER GEAR REMOVAL/REPAIR/INSTALLATION (CONT).

e. Installation.

(1) Aline timing marks on camshaft gear (1) and crankshaft gear (2) with timing marks on idler gear (3).
(2) Slide idler gear (3) into place until crankshaft gear (2) and camshaft gear (1) are fully meshed.
(3) Rotate gear hub (4) so dowel in hub alines with hole in end plate (5).
(4) Tap hub (4) until it seats against end plate (5).
(5) Check timing marks again to make sure gears (1, 2, and 3) are alined as shown.

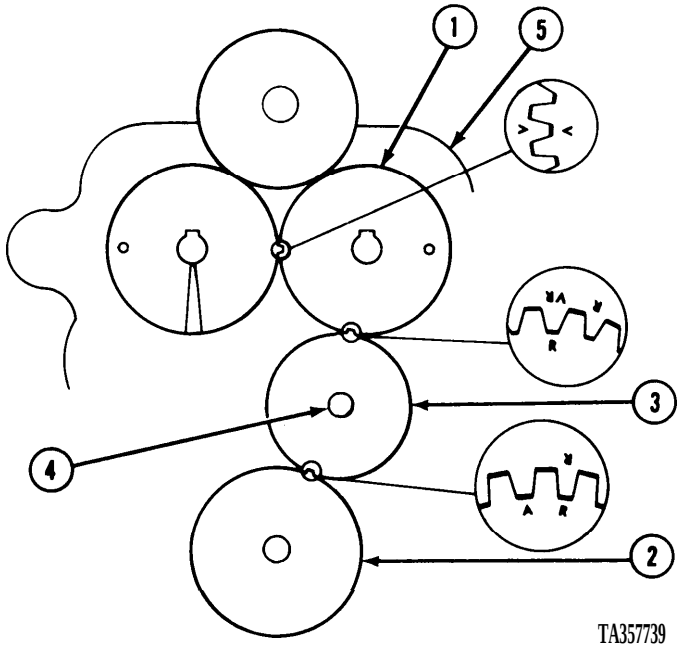

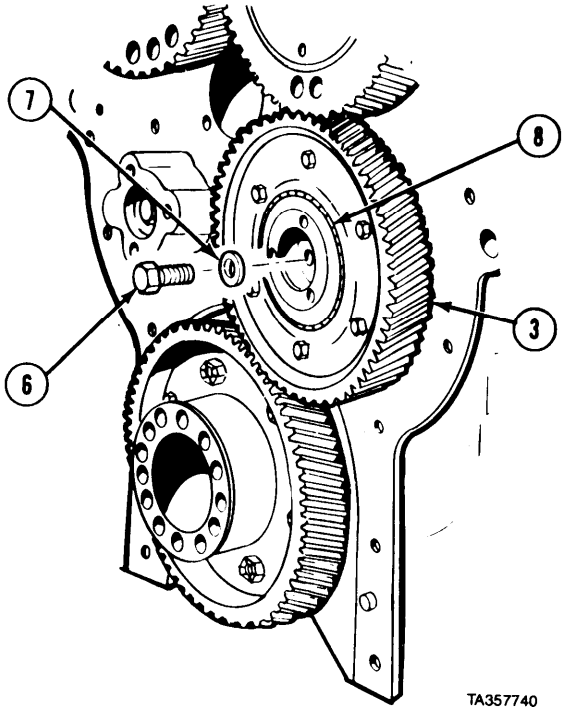

(6) Install screw (6) and special washer (7).
(7) Tighten screw (6) to 90 lb-ft (122 N•m).
(8) Coat bearing (8) and idler gear (3) with lubricating oil.

https://truckmanualshub.com/

Valve Mechanism Maintenance Instructions (Cont)

(9) Mount dial indicator on end plate (5) and check backlash between gears (2, 3, and 4). Minimum backlash is 0.002 in. (0.05 mm). Maximum backlash is 0.008 in. (0.20 mm).

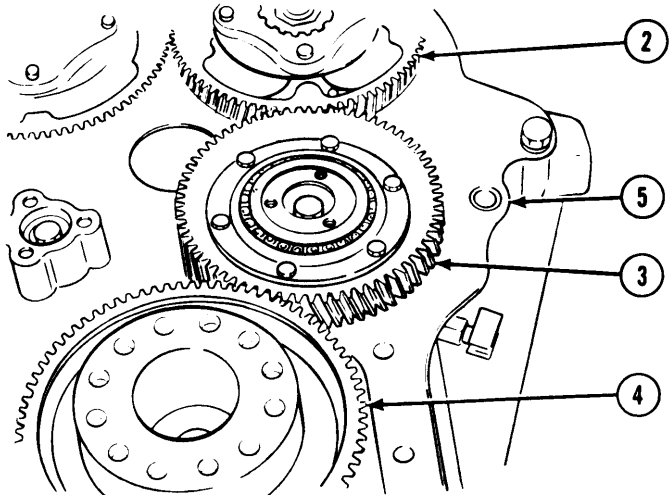

f. Follow-on Maintenance.

(1) Install flywheel housing (para 5-3).

(2) Remove engine from engine stand (TM 9-2320-279-34).

END OF TASK

7-12. FRONT BALANCE COVER AND VIBRATION DAMPER REMOVAL/INSTALLATION.

This task covers:

a. Removal
b. Installation
c. Follow-on Maintenance

INITIAL SETUP

Models
All

Test Equipment
None

Special Tools
None

Supplies
Grease, automotive and artillery, Item 36, Appendix C
Tags, identification, Item 61, Appendix C

Personnel Required
MOS 63W, Wheel vehicle repairer

References
None

Equipment Condition

TM or Para	*Condition Description*
TM 9-2320-279-20	Fan clutch removed.
Para 17-2	Water pump removed.

Special Environmental Condition
None

General Safety Instructions
None

Level of Maintenance
Direct Support

https://truckmanualshub.com/

7-12. FRONT BALANCE COVER AND VIBRATION DAMPER REMOVAL/INSTALLATION (CONT).

a. Removal.

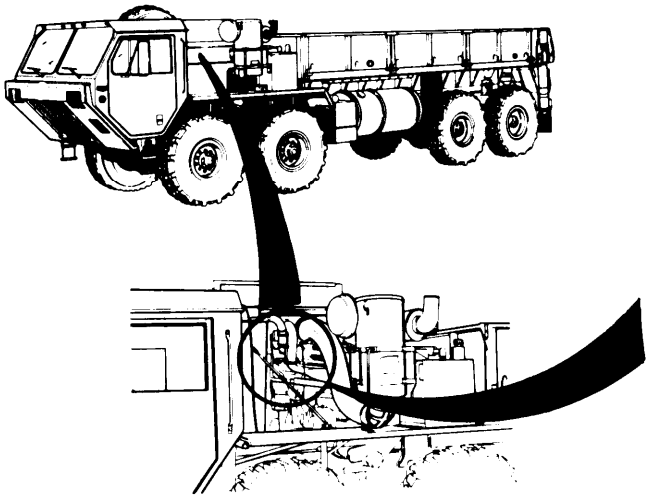

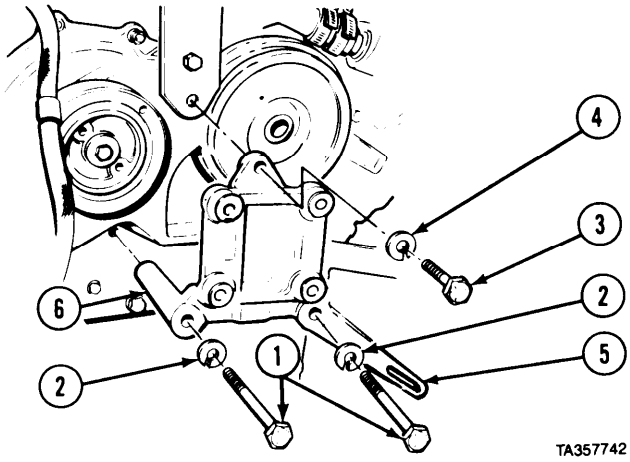

(1) Remove two screws (1) and lockwashers (2).
(2) Remove screw (3), lockwasher (4), alternator adjusting strap (5), and fan clutch support (6).

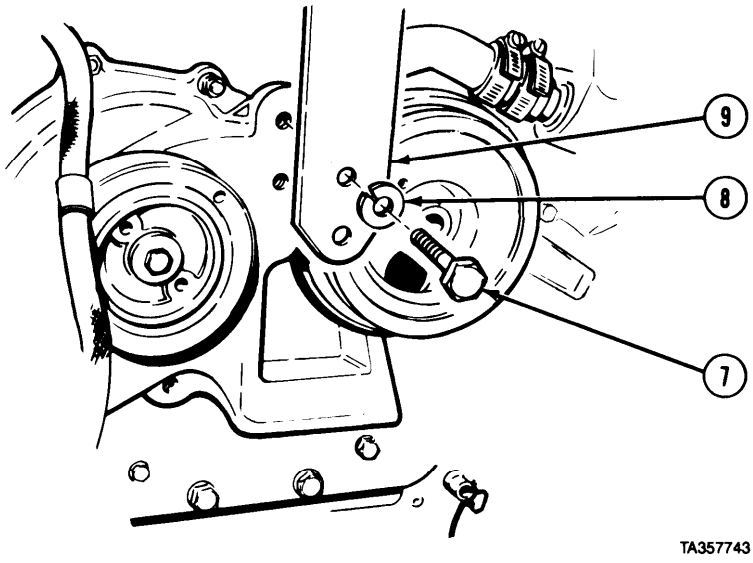

(3) Remove screw (7), lockwasher (8), and engine lifting bracket (9)

https://truckmanualshub.com/

Valve Mechanism Maintenance Instructions (Cont)

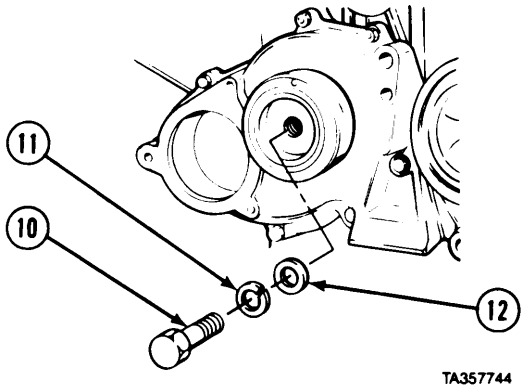

(4) Remove screw (10), lockwasher (11), and washer (12).

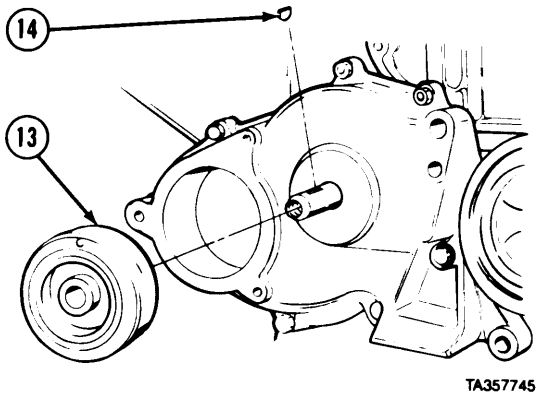

NOTE

Engines between serial numbers 8VF-120299 and 8VF-122899 may not have a Woodruff key.

(5) Remove vibration damper (13) and Woodruff key (14).

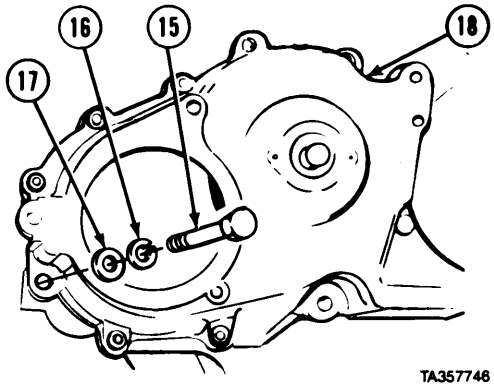

NOTE

Tag and mark screws, lockwashers, washers, and front balance cover before removal.

(6) Remove screw (15), lockwasher (16), and washer (17) from front balance cover (18).

https://truckmanualshub.com/

Valve Mechanism Maintenance Instructions (Cont)

7-12. FRONT BALANCE COVER AND VIBRATION DAMPER REMOVAL/INSTALLATION (CONT).

(7) Remove two screws (19), lockwashers (20), and washers (21),
(8) Remove screw (22), lockwasher (23), and washer (24).

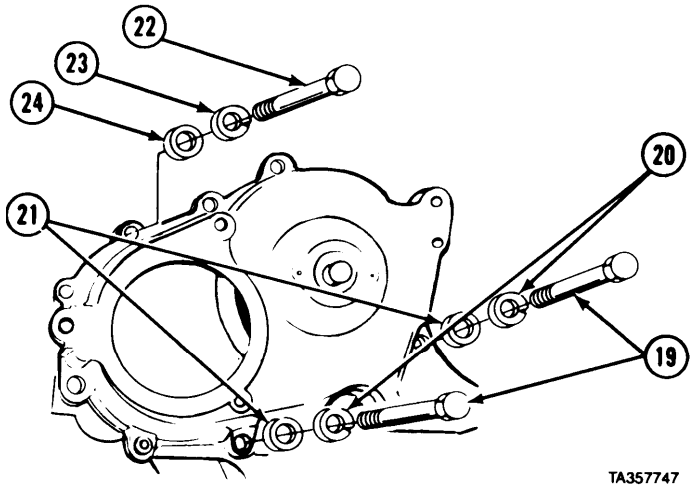

(9) Remove screw (25), washer (26), lockwasher (27), and nut (28).
(10) Remove screw (29), lockwasher (30), washer (31), and nut (32).

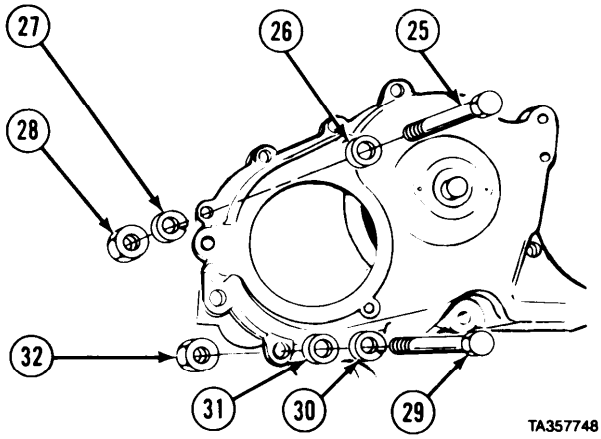

(11) Remove three screws (33), washer (34), lockwasher (35), and nut (36) from front balance cover (18).

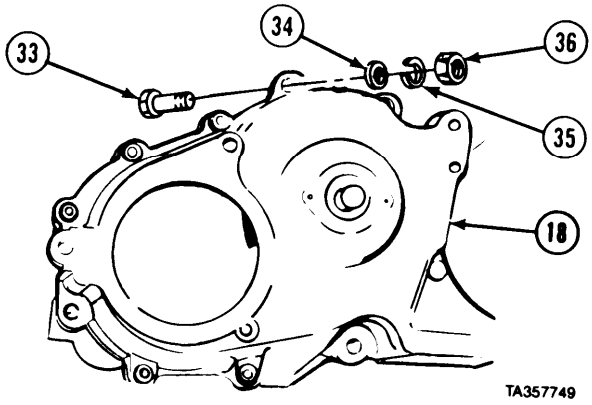

https://truckmanualshub.com/

Valve Mechanism Maintenance Instructions (Cont)

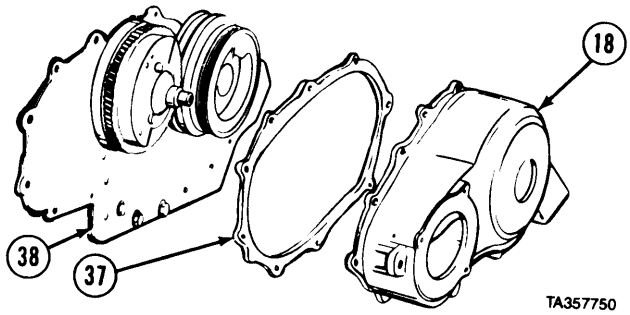

(12) Remove front balance cover (18) and gasket (37) from end plate (38).

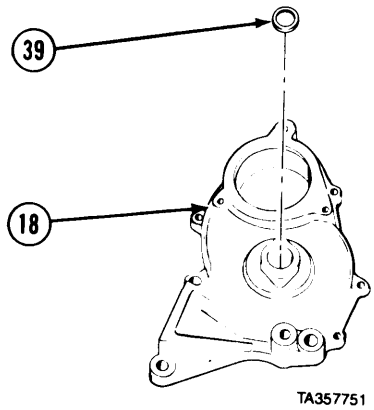

(13) Remove oil seal (39) from front balance cover (18).
(14) Inspect oil seal mounting area for scratches or nicks.

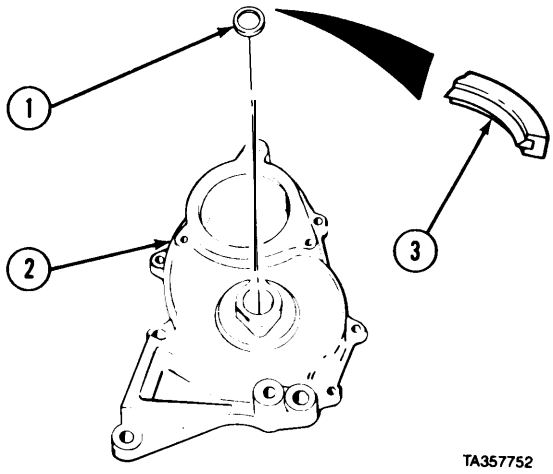

b. Installation.

(1) Install oil seal (1) in front balance cover (2). Seal lip (3) will point inward.

https://truckmanualshub.com/

7-12. FRONT BALANCE COVER AND VIBRATION DAMPER REMOVAL/INSTALLATION (CONT).

(2) Coat gasket (4) with grease and install on front cover (2).
(3) Aline studs (5) on front balance cover (2) with holes in end plate (6).
(4) Install front balance cover (2) on end plate (6).

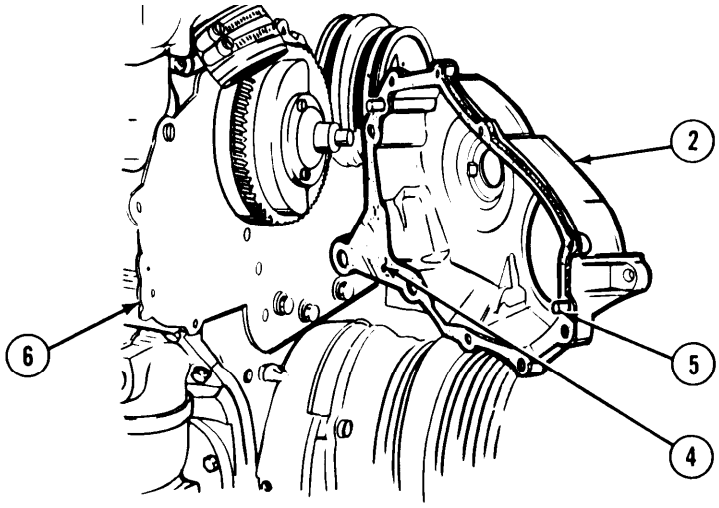

TA357753

(5) Install three screws (7), washers (8), lockwashers (9), and nuts (10). Tighten nuts to 30 to 35 lb-ft (40 to 47 N•m).

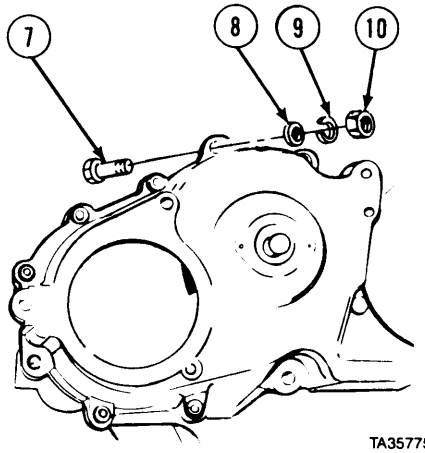

TA357754

(6) Install screw (11), washer (12), lockwasher (13), and nut (14) in front balance cover (2). Tighten screw to 35 to 40 lb-ft (47 to 54 N•m).
(7) Install screw (15), lockwasher (16), washer (17), and nut (18). Tighten screw to 35 to 40 lb-ft (47 to 54 N•m).

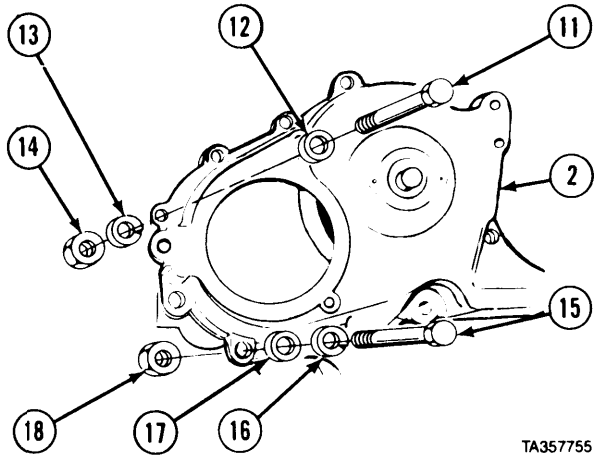

TA357755

https://truckmanualshub.com/

Valve Mechanism Maintenance Instructions (Cont)

(8) Install two screws (19), lockwashers (20), and washers (21). Tighten screws to 30 to 35 lb-ft (41 to 47 N•m).

(9) Install screw (22), lockwasher (23), and washer (24). Tighten screw to 35 to 40 lb-ft (47 to 54 N•m).

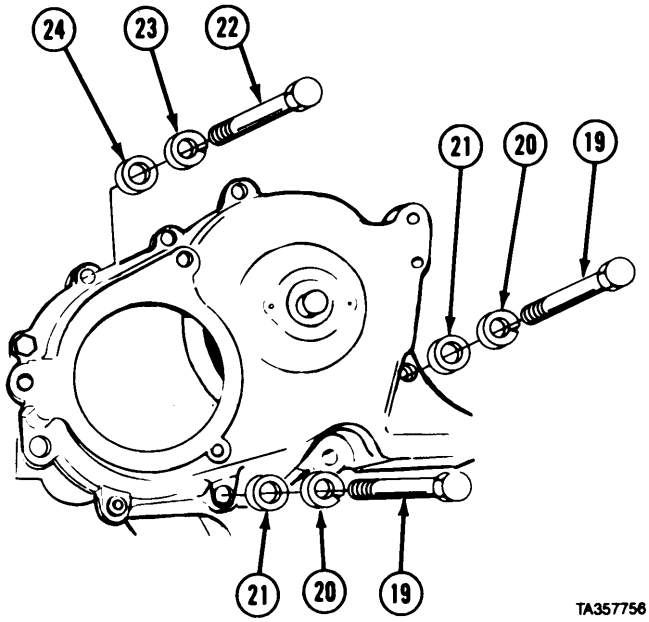

(10) Install screw (25), lockwasher (26), and washer (27). Tighten screw to 30 to 35 lb-ft (41 to 47 N•m).

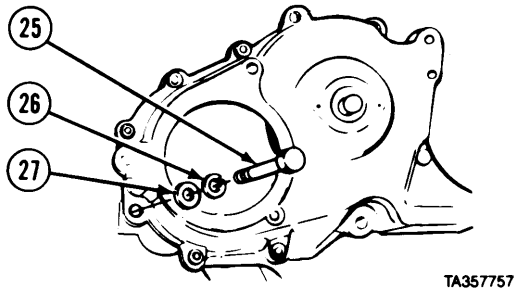

NOTE

Some pulley shafts do not have grooves for the Woodruff key. The key is not used on this type of shaft.

(11) Install Woodruff key (28) and vibration damper (29) on pulley shaft (30).

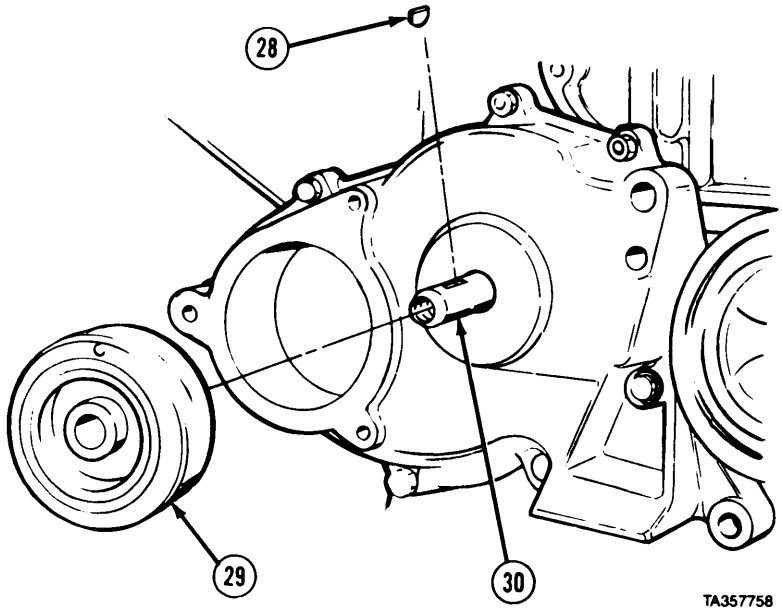

https://truckmanualshub.com/

Valve Mechanism Maintenance Instructions (Cont)

7-12. FRONT BALANCE COVER AND VIBRATION DAMPER REMOVAL/INSTALLATION (CONT).

(12) Install screw (31), lockwasher (32), and washer (33). Tighten screw to 25 lb-ft (34 N•m).

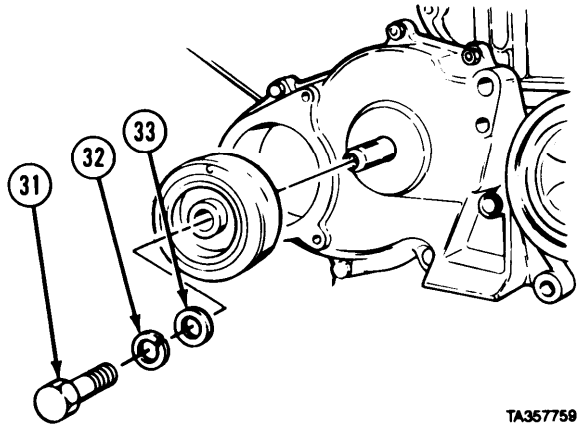

(13) Install screw (34), washer (35), and engine lifting bracket (36). Do not tighten screw.

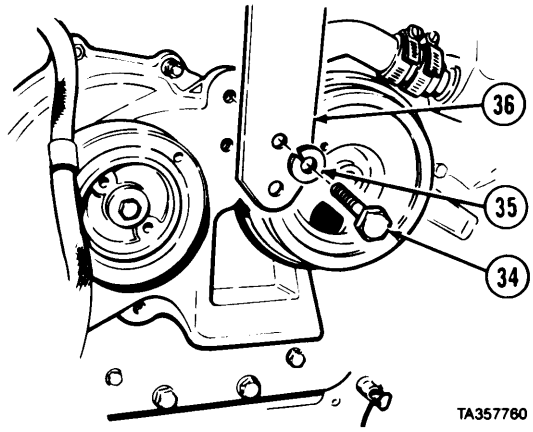

(14) Install screw (37), lockwasher (38), and fan clutch support (39) in front balance cover (2). Do not tighten screw.

(15) Install two screws (40), lockwashers (41), and alternator adjusting strap (42). Tighten screws (34 and 40) to 140 to 150 lb-ft (189 to 203 N•m).

(16) Tighten screw (37) to 90 to 100 lb-ft (122 to 135 N•m).

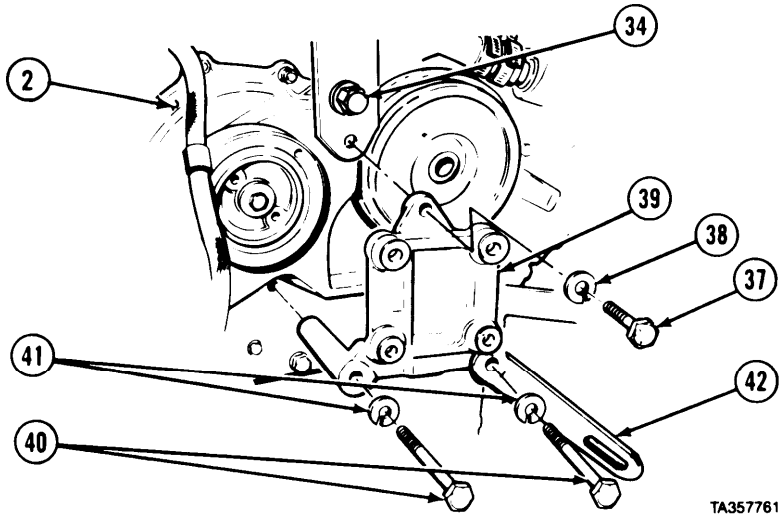

c. Follow-on Maintenance.

(1) Install water pump (para 17-2).

(2) Install fan clutch (TM 9-2320-279-20).

END OF TASK

https://truckmanualshub.com/

CHAPTER 8
OIL SYSTEM MAINTENANCE

Contents

	Para	Page
General	8-1	8-1
Engine Block Breather Pipe Removal/Installation	8-2	8-1
Oil Pan Removal/Installation	8-3	8-2
Oil Pump Removal/Installation	8-4	8-8
Oil Pump Repair	8-5	8-14
Oil Pressure Relief Valve Removal/Repair/Installation	8-6	8-17
Oil Pressure Regulator Valve Removal/Repair/Installation	8-7	8-20

Section I. INTRODUCTION

8-1. GENERAL. This chapter covers removal, installation, and repair of the oil system. Subassemblies and parts which must be removed before the oil system can be removed will be referenced in other chapters of this manual or TM 9-2320-279-10, TM 9-2320-279-20, or TM 9-2320-279-34.

Section II OIL SYSTEM

Oil System Maintenance Instructions

8-2. ENGINE BLOCK BREATHER PIPE REMOVAL/INSTALLATION.

This task covers:

a. Removal
b. Installation
c. Follow-on Maintenance

INITIAL SETUP

Models
All

Test Equipment
None

Special Tools
None

Supplies
None

Personnel Required
MOS 63W, Wheel vehicle repairer

References
None

Equipment Condition

TM or Para	*Condition Description*
TM 9-2320-279-34	Engine mounted on engine stand.
Para 3-4	Rear end plate removed.

Special Environmental Conditions
None

General Safety Instruction
None

Level of Maintenance
Direct Support

https://truckmanualshub.com/

8-2. ENGINE BLOCK BREATHER PIPE REMOVAL/INSTALLATION (CONT).

a. Removal.
(1) Remove two clamps (1) and hose (2).
(2) Remove two clamps (3), hose (4), and elbow (5).
(3) Remove pipe (6) from engine block (7).

b. Installation.
(1) Install pipe (6) in engine block (7).
(2) Install hose (4), elbow (5), and two clamps (3).
(3) Install hose (2) and two clamps (l).

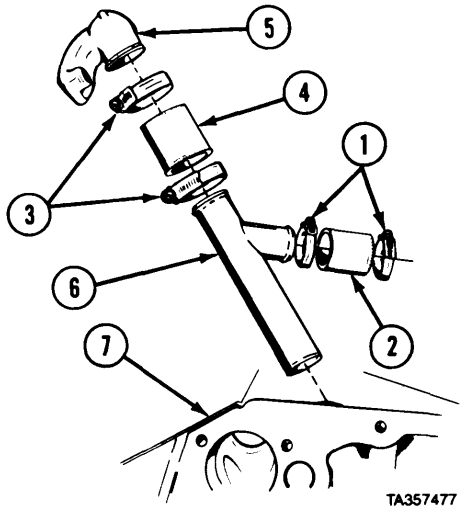

c. Follow-on Maintenance. Install rear end plate (para 3-4).

END OF TASK

8-3 OIL PAN REMOVAL/INSTALLATION.

This task covers:
a. Removal
b. Installation
c. Follow-on Maintenance

INITIAL SETUP

Models
All

Test Equipment
None

Special Tools
None

Supplies
Adhesive-sealant, silicone, Item 6, Appendix C
Compound, sealing, lubricating, Item 31, Appendix C
Compound, sealing, pipe thread, Item 32, Appendix C

Personnel Required
MOS 63W, Wheel vehicle repairer

References
None

Equipment Condition

TM or Para	*Condition Description*
TM 9-2320-279-10	Engine off.
TM 9-2320-279-10	Parking brake on.
TM 9-2320-279-10	Engine side panel removed.
TM 9-2320-279-20	Batteries disconnected.
LO 9-2320-279-12	Engine oil drained.
TM 9-2320-279-20	Splash guards removed.
TM 9-2320-279-20	Rear propeller shaft removed from No. 2 axle.

Special Environmental Conditions
None

General Safety Instructiom
None

Level *of Maintenance*
Direct Support

https://truckmanualshub.com/

Oil System Maintenance Instructions (Cont)

a. Removal.

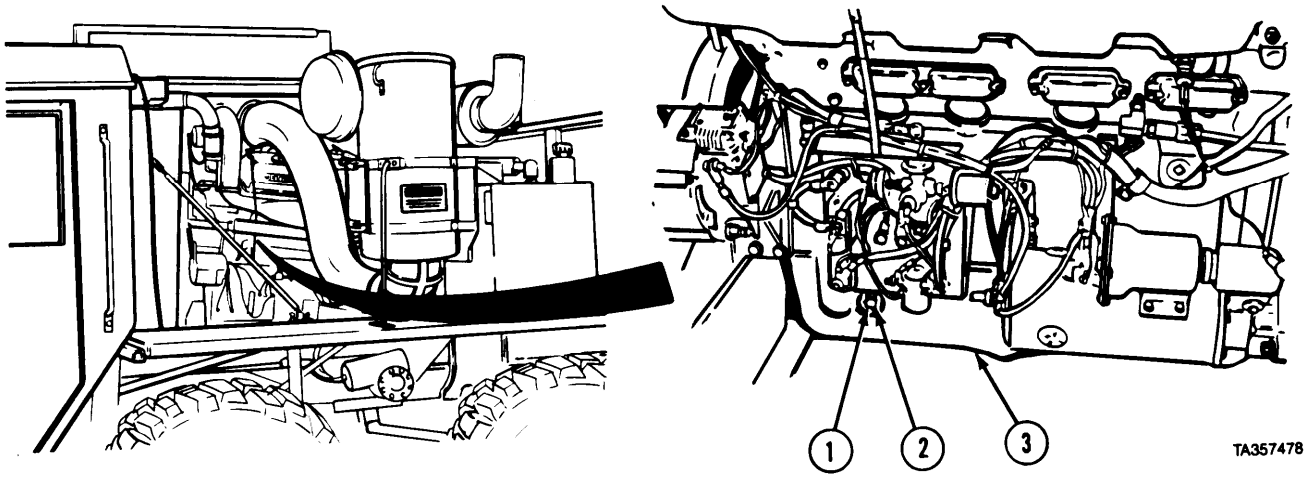

(1) Disconnect oil return line (1) from elbow (2) on oil pan (3).

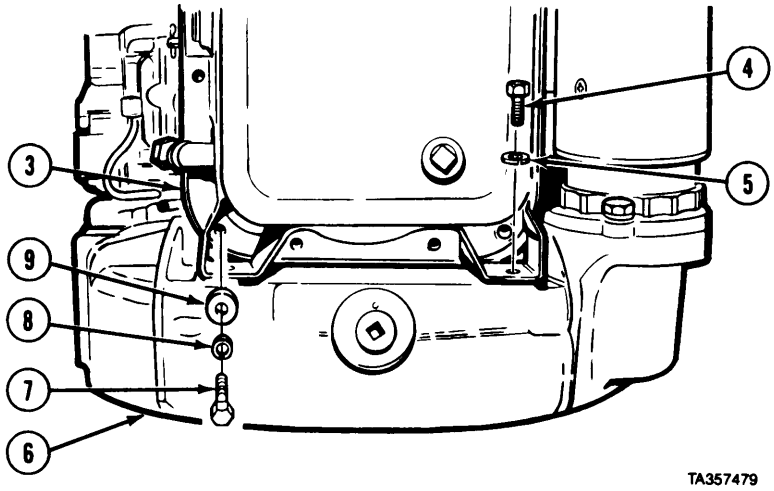

(2) Remove two screws (4) and lockwashers (5) from oil pan (3) and flywheel housing (6).
(3) Remove two screws (7), lockwashers (8), and washers (9) from rear end of oil pan (3).

https://truckmanualshub.com/

Oil System Maintenance Instructions (Cont)

8-3. OIL PAN REMOVAL/INSTALLATION (CONT).

(4) Remove 26 screws (10) and lockwashers (11) from oil pan (3).

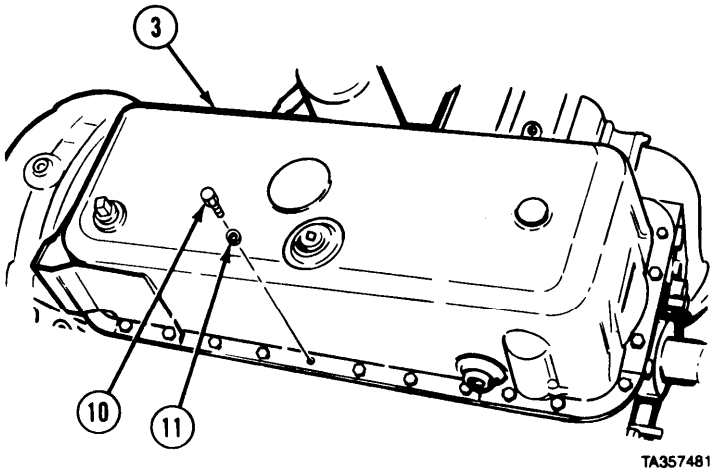

(5) Lower oil pan (3) and gasket (12) until oil pump front pickup screen elbow (13) is visible.
(6) Remove two screws (14), lockwashers (15), gasket (16) and oil pump front pickup screen elbow (13).
(7) Remove oil pan (3) and gasket (12).
(8) Remove gasket (12) from oil pan (3) and engine.
(9) Remove gasket (16) from oil pump front pickup screen elbow (13) and oil pump (17).

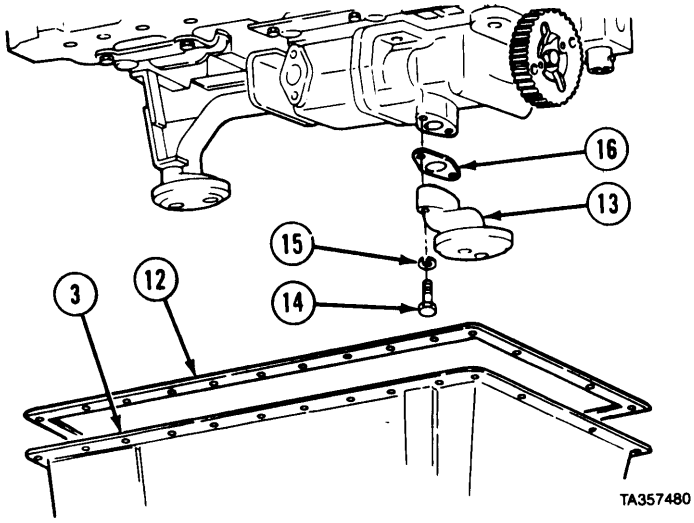

(10) Remove plug (18) from oil pan (3).
(11) Remove elbow (19) and reducer bushing (20) from oil pan (3).

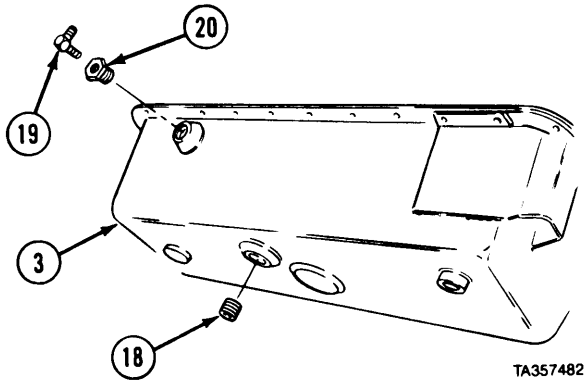

https://truckmanualshub.com/

Oil System Maintenance Instructions (Cont)

(12) Remove plugs (21 and 22) from oil pan (3).

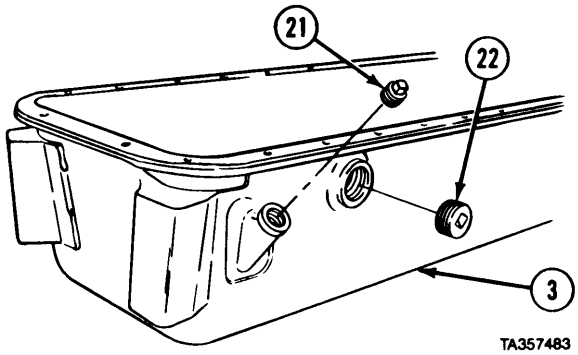

b. Installation.

WARNING

Adhesives, solvents, and sealing compounds can burn easily, can give off harmful vapors, and are harmful to skin and clothing. To avoid injury or death, keep away from open fire and use in well-ventilated area. If adhesive, solvent, or sealing compound gets on skin or clothing, wash immediately with soap and water.

(1) Coat threads of plugs (1 and 2) with pipe thread sealing compound.
(2) Install plugs (1 and 2) in oil pan (3).

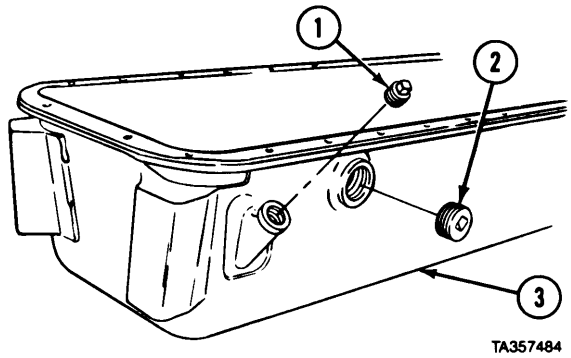

(3) Coat threads of reducer bushing (4), elbow (5), and drain plug (6) with pipe thread sealing compound.
(4) Install reducer bushing (4), elbow (5) and drain plug (6) in oil pan (3).

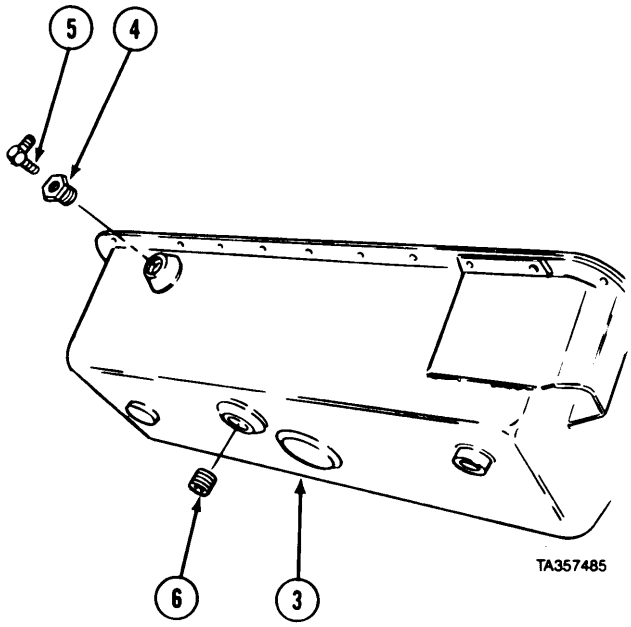

https://truckmanualshub.com/

Oil System Maintenance Instructions (Cont)

8-3. OIL PAN REMOVAL/INSTALLATION (CONT).

(5) Apply silicone adhesive-sealant to mating surface of oil pan (3).
(6) Aline holes in gasket (7) with holes in oil pan (3) and install gasket.

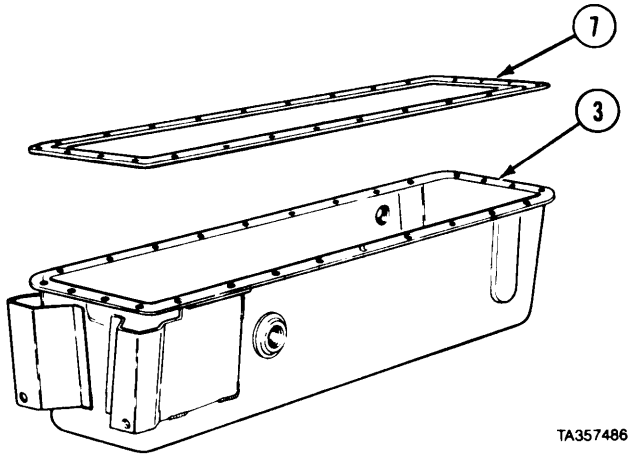

(7) Position oil pan (3) under oil pump (8).
(8) Mount gasket (9) and oil pump front pickup screen elbow (10) on oil pump (8).
(9) Install two screws (11) and lockwashers (12).

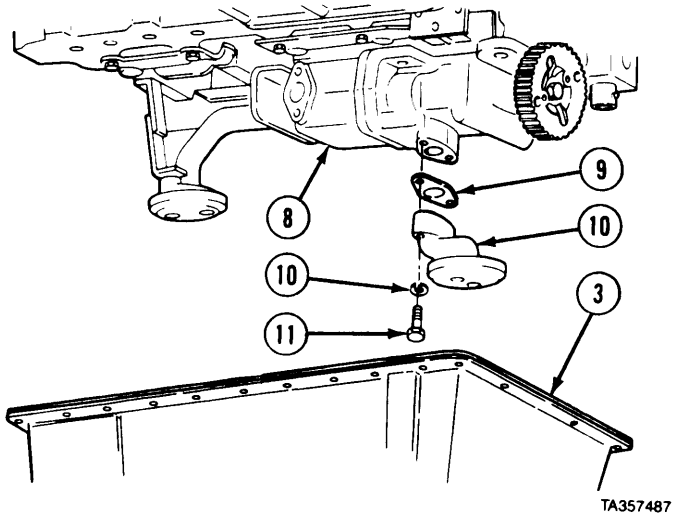

(10) Position oil pan (3) on block (13).
(11) Coat threads of 28 screws (14) with sealing and lubricating compound.
(12) Install two screws (14) and lockwashers (15) in right and left center hole of oil pan (3).
(13) Install 24 screws (14) and lockwashers (15) finger tight.

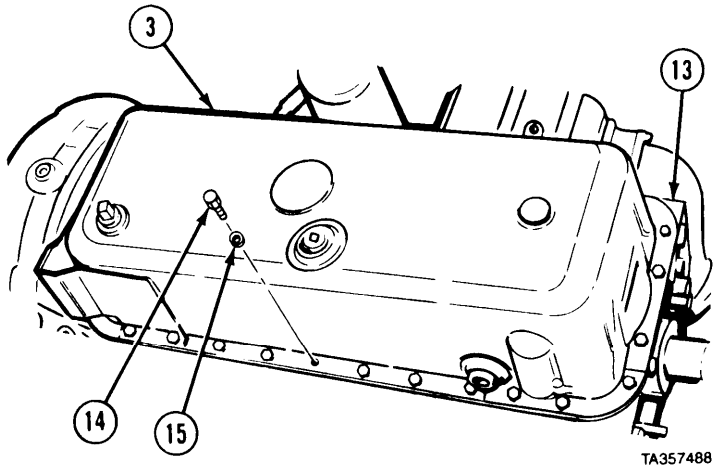

https://truckmanualshub.com/

Oil System Maintenance Instructions (Cont)

(14) Install two screws (14), lockwashers (15), and washers (16).
(15) Install two screws (17) and lockwashers (18) to oil pan (3) and flywheel housing (19).
(16) Tighten 28 screws (14), starting at center of oil pan (3), to 15 lb-ft (21.69 N•m).
(17) Tighten two screws (17) 30 to 35 lb-ft (41 to 47 N•m).

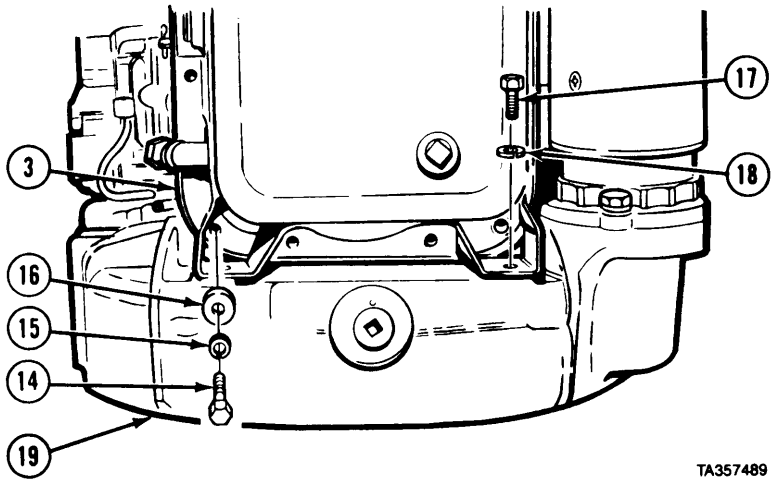

(18) Connect oil return line (20) to elbow (21) on oil pan (3).

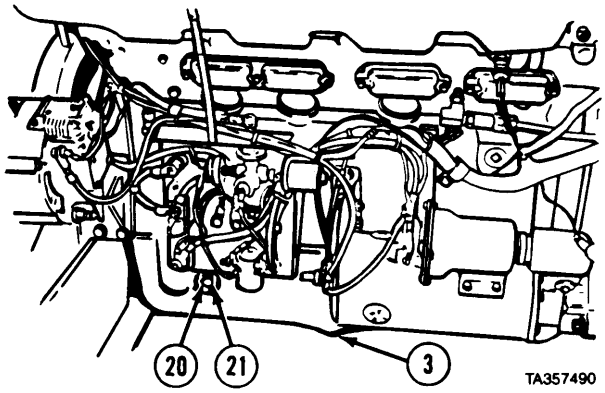

c. **Follow-on Maintenance.**

(1) Install oil pan drain plug and refill engine oil system (LO 9-2320-279-12).
(2) Install propeller shaft (TM 9-2320-279-20).
(3) Install splash guard (TM 9-2320-279-20).
(4) Connect batteries (TM 9-2320-279-20).
(5) Install engine side panel (TM 9-2320-279-10).
(6) Start and run engine for a short time. Inspect for oil leaks.
(7) Stop engine. After 20 minutes, check oil level. Add oil if necessary.

END OF TASK

https://truckmanualshub.com/

8-4. OIL PUMP REMOVAL/INSTALLATION.

This task covers:

a. Removal
b. Installation
c. Follow-on Maintenance

INITIAL SETUP

Models
All

Test Equipment
None

Special Tools
Set, dial indicator J7872

Supplies
None

Personnel Required
MOS 63W, Wheel vehicle repairer (2)

References
None

Equipment Condition

TM or Para	*Condition Description*
Para 8-3	Oil pan removed.
Para 8-6	Pressure relief valve removed.

Special Environmental Conditions
None

General Safety Instructions
None

Level of Maintenance
Direct Support

a. Removal.

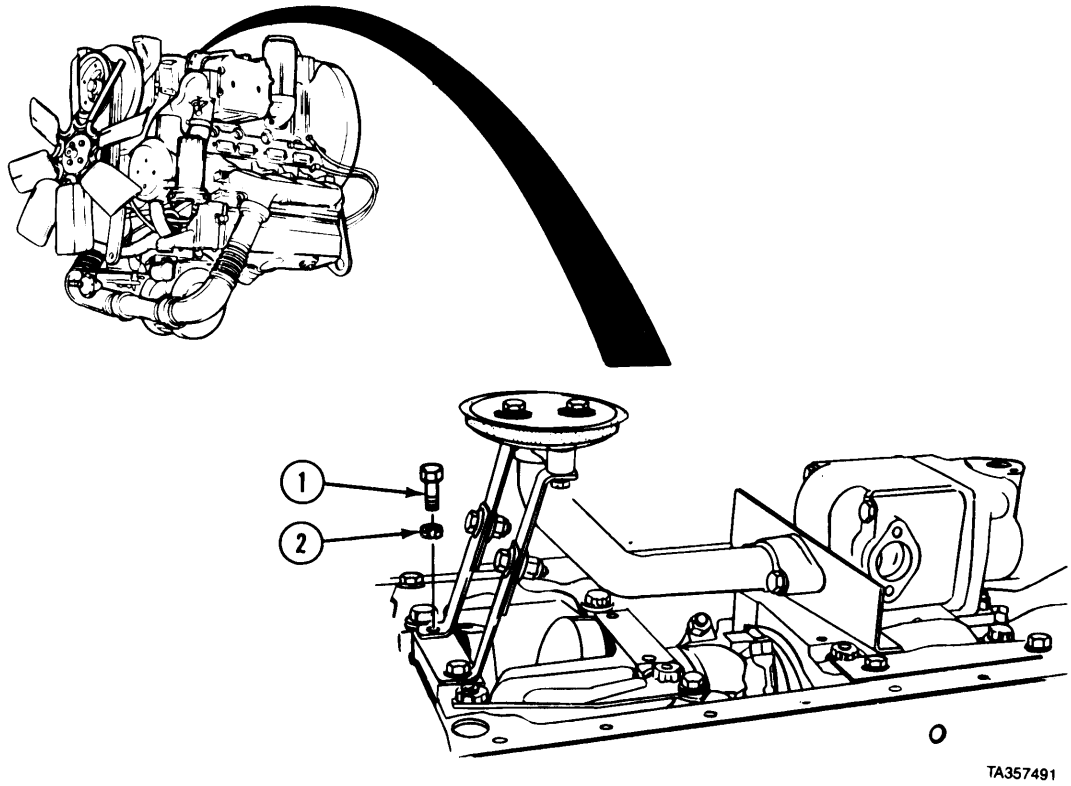

(2) Remove two screws (1) and lockwashers (2).

https://truckmanualshub.com/

Oil System Maintenance Instructions (Cont)

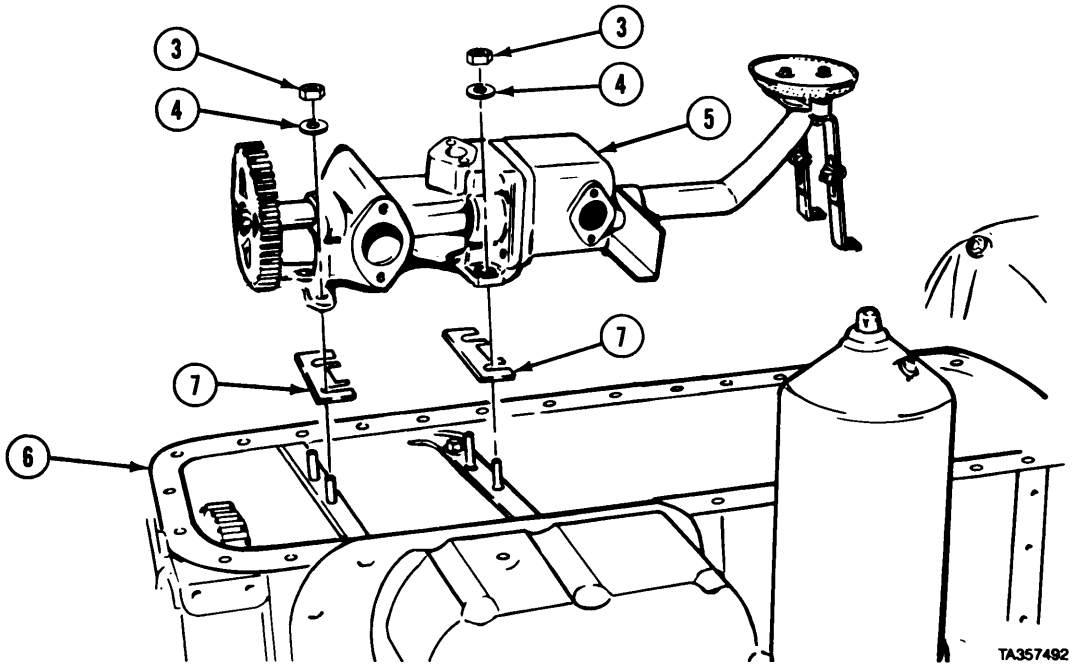

(2) Remove four nuts (3) and lockwashers (4).
(3) Soldier A and Soldier B remove oil pump (5) from engine (6),
(4) Remove two shims (7) from under pump (5).

(5) Remove two screws (8), lockwashers (9), washers (10), and oil pump rear screen (11) from tube assembly (12).
(6) Remove two screws (13), lockwashers (14), and bracket assemblies (15).
(7) Remove screw (16), four washers (17), and nut (18) from each bracket assembly (15).

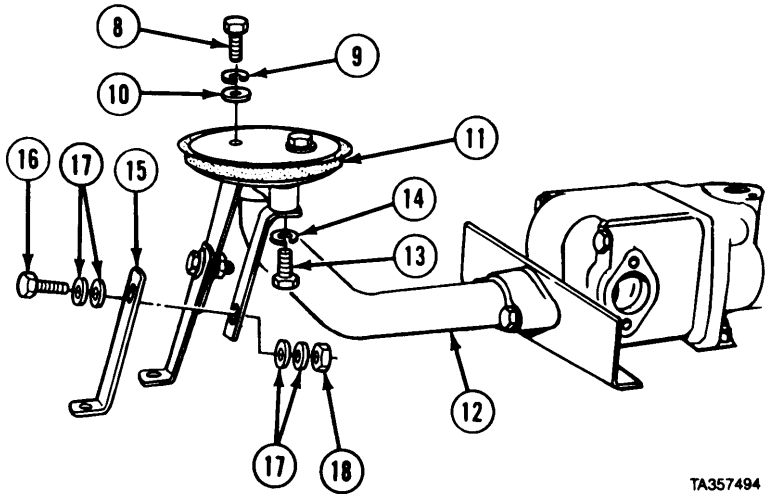

https://truckmanualshub.com/

Oil System Maintenance Instructions (Cont)

[8-4. OIL PUMP REMOVAL/INSTALLATION (CONT).

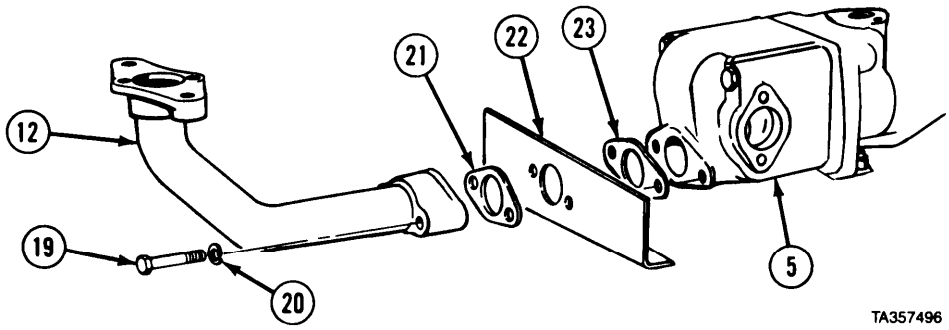

(8) Remove two screws (19), lockwashers (20), tube assembly (12), gasket (21), oil pump baffle (22), and gasket (23) from oil pump (5).

(9) Remove two screws (24), lockwashers (25), cover (26), and gasket (27) from oil pump (5).

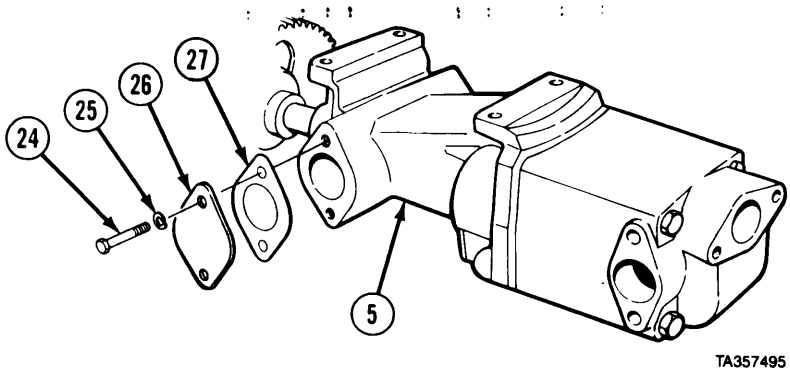

(10) Remove screw (28) and washer (29) from shaft (30).

(11) Remove gear (31) from shaft (30).

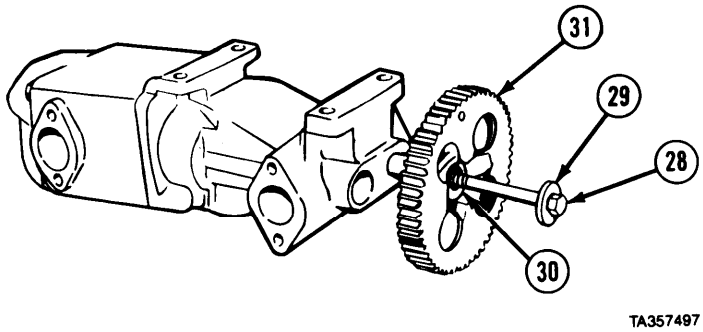

b. Installation.

NOTE

Be sure curved surface of washer is toward head of screw.

(1) Install oil pump drive gear (1) onto end of shaft (2). Install washer (3) and screw (4).

(2) Tighten screw (4) to 57 to 61 lb-ft (77 to 83 N•m).

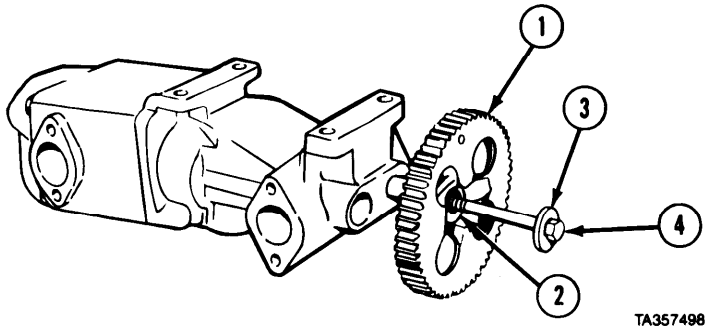

https://truckmanualshub.com/

Oil System Maintenance Instructions (Cont)

(3) Install gasket (5), cover (6), two lockwashers (7), and screws (8).

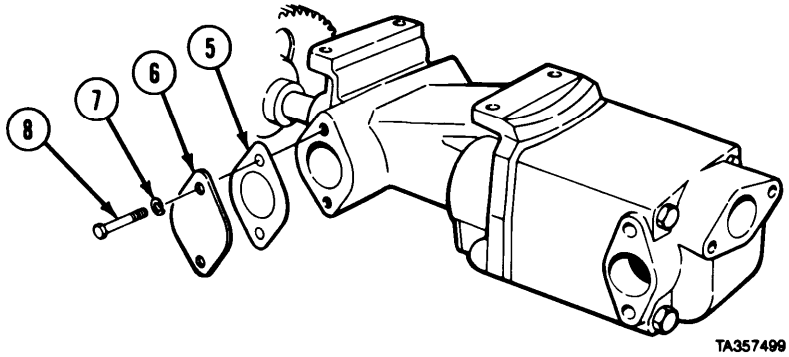

(4) Install gasket (9), oil pump baffle (10), gasket (11), and tube assembly (12) on oil pump (13) with two screws (14) and lockwashers (15).

(5) Tighten screws (14) to 30 to 35 lb-ft (41 to 47 N•m).

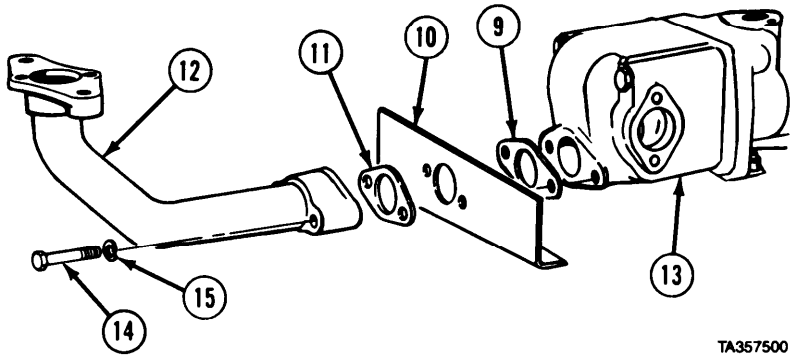

(6) Install screw (16), four washers (17), and nut (18) to each bracket assembly (19).

(7) Install two bracket assemblies (19) on tube assembly (12).

(8) Install two screws (20) and lockwashers (21). Tighten screws (20) to 30 to 35 lb-ft (41 to 47 N•m).

(9) Install oil pump rear screen (22) on tube assembly (12).

(10) Install two screws (23), lockwashers (24), and washers (25). Tighten screws (23) to 13 to 17 lb-ft (18 to 23 N•m).

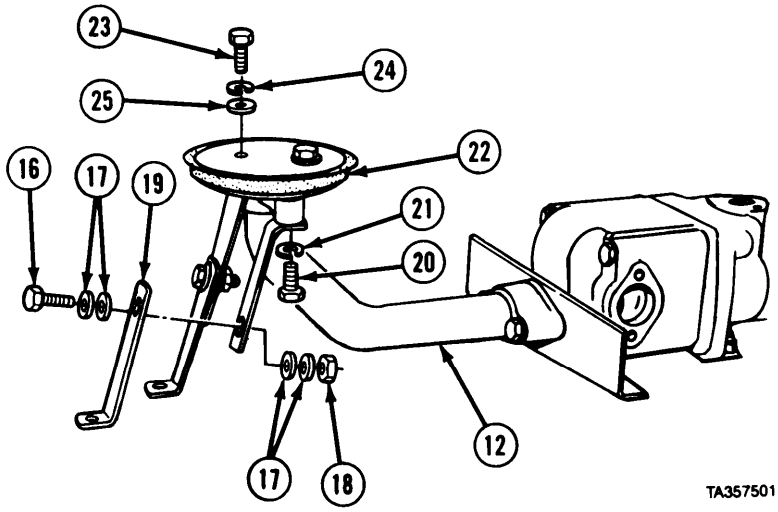

https://truckmanualshub.com/

Oil System Maintenance Instructions (Cont)

[8-4. OIL PUMP REMOVAL/INSTALLATION (CONT).

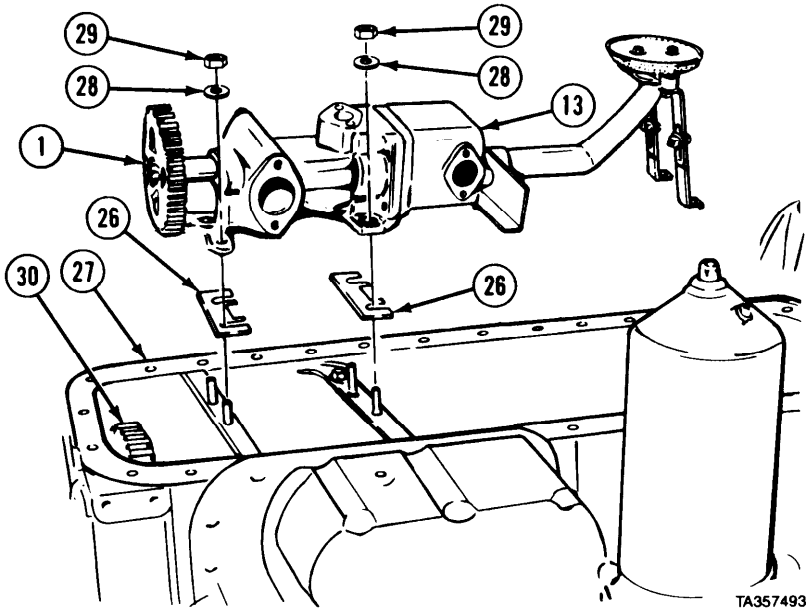

(11) Install two shims (26).
(12) Position oil pump (13) on engine (27).
(13) Install four lockwashers (28) and nuts (29).

NOTE

- Each 0.005-in (0.13 mm) shim changes gear backlash 0.0035-in. (0.088 mm).
- Backlash should be 0.006 to 0.012-in (0. 15 to 0.030 mm),

(14) Measure backlash between crankshaft gear (30) and oil pump drive gear (1) with dial indicator. Install same number and thickness of shims (26) under pump (13) to obtain correct backlash.

(15) Loosen two nuts (18).
(16) Install two screws (31) and lockwashers (32). Tighten screws finger tight.

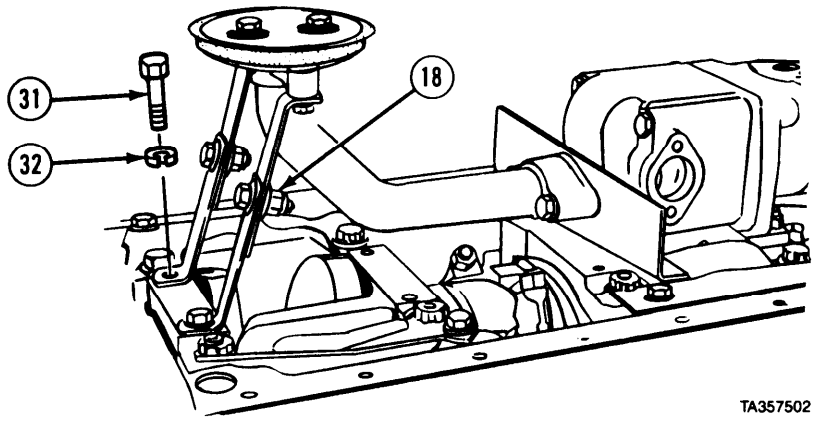

https://truckmanualshub.com/

Oil System Maintenance Instructions (Cont)

(17) Tighten four nuts (29) to 40 lb-ft (54.2 N•m).

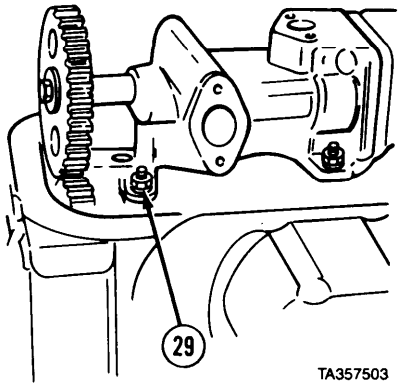

(18) Adjust oil tube brackets (19) to seat firmly against engine mounting surface.
(19) Tighten two screws (31) to 15 lb-ft (20.3 N•m).
(20) Tighten two nuts (18).

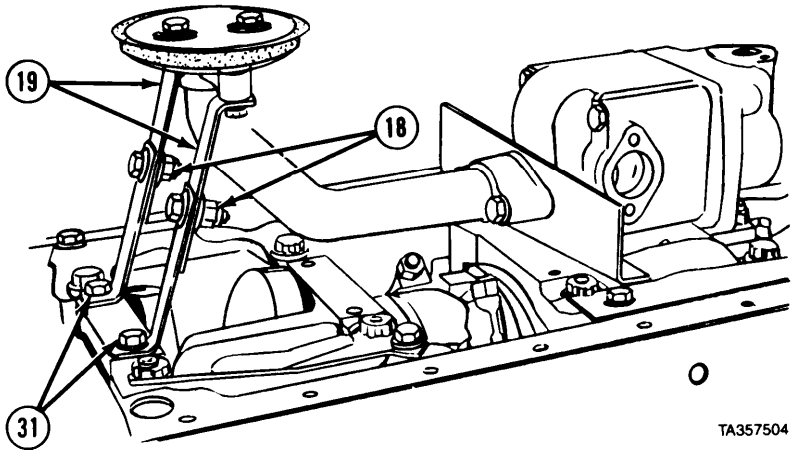

c. Follow-on Maintenance.
(1) Install oil pan (para 8-3).
(2) Install pressure relief valve (para 8-6).

END OF TASK

https://truckmanualshub.com/

Oil System Maintenance Instructions (Cont)

8-5. OIL PUMP REPAIR.

This task covers:

a. Disassembly
b. Cleaning/Inspection
c. Assembly
d. Follow-on Maintenance

INITIAL SETUP

Models
All

Test Equiprnent
None

Special Tools
None

Supplies
Tags, identification, Item 61, Appendix C
Solvent, dry cleaning, Item 60, Appendix c
Oil, lubricating, Item 48, Appendix C

Personnel Required
MOS 63W, Wheel vehicle repairer

References
None

Equipment Condition

TM or Para	*Condition Description*
	Oil pump on clean work surface.

Special Environrnental Conditions
None

General Safety Instructions
None

Level of Maintenance
General Support

a. Disassembly.

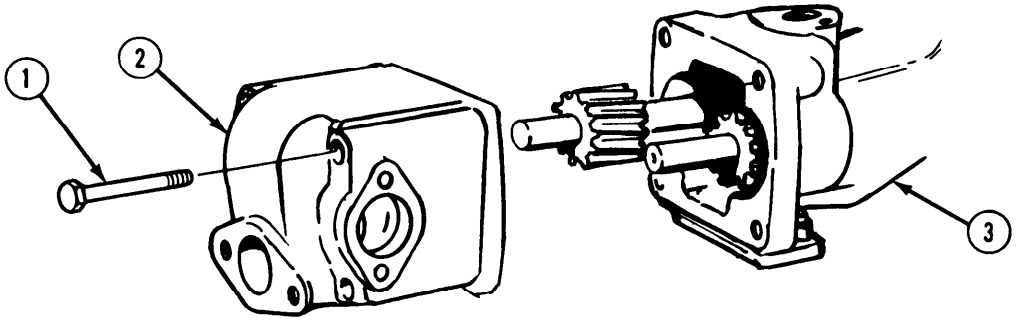

(1) Remove four screws (1) and cover (2) from oil pump (3).

NOTE

Tag and matchmark gears before removal.

(2) Remove gears (4 and 5), and two keys (6) from drive gear shafts (7 and 8).
(3) Remove spacer (9).

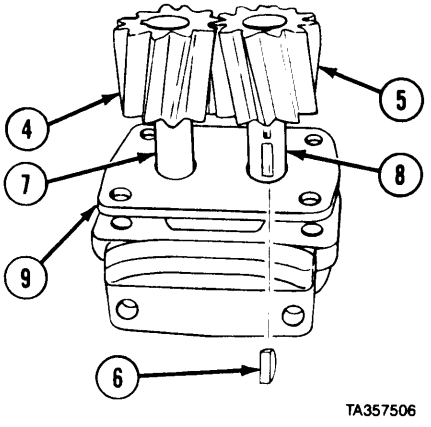

https://truckmanualshub.com/

Oil System Maintenance instructions (Cont)

(4) Remove gear (10) and shaft (7) from oil pump (3).

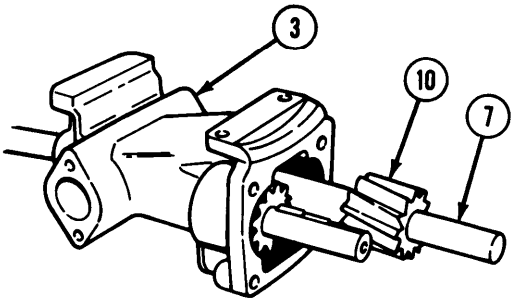

(5) Remove gear (11) and shaft (8) as an assembly from pump (3).

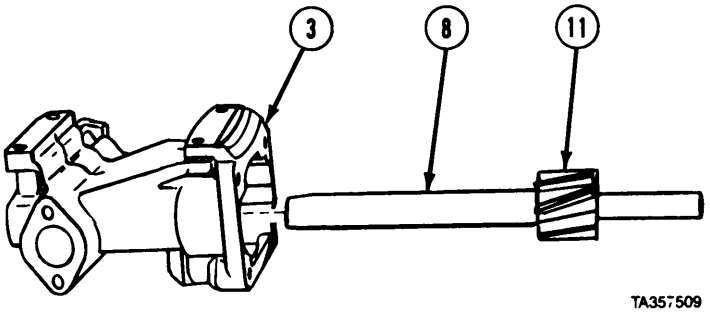

(6) Press gears (10 and 11) from shafts (7 and 8).
(7) Remove two keys (12) from shafts (7 and 8).

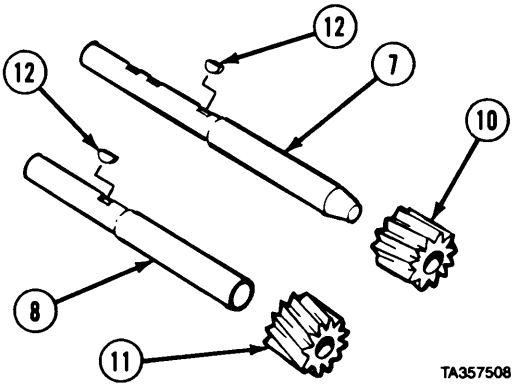

b. Cleanig/Inspection.

WARNING

Adhesives, solvents, and sealing compounds can burn easily, can give off harmful vapors, and are harmful to skin and clothing. To avoid injury or death, keep away from open fire and use in well-ventilated area. If adhesive, solvent, or sealing compound gets on skin or clothing, wash immediately with soap and water.

(1) Clean all metal parts with dry cleaning solvent.

WARNING

Compressed air used for cleaning purposes will not exceed 30 psi (207 kPa). Use only with effective chip guarding and personal protective equipment (goggles/shield, gloves, etc.).

(2) Dry parts with compressed air.
(3) Examine all parts for damage. Replace if damaged.
(4) Check for bushing diameters. Replace housing if bushing diameter is larger than 1.0056 inches (25.542 mm).

https://truckmanualshub.com/

Oil System Maintenance Instructions (Cont)

8-5. OIL PUMP REPAIR (CONT).

c. Assembly.

(1) Install two keys (1) in shafts (2 and 3).
(2) Lubricate shafts (2 and 3) with lubricating oil.
(3) Press gear (4) on shaft (2).
(4) Press gear (5) on shaft (3).

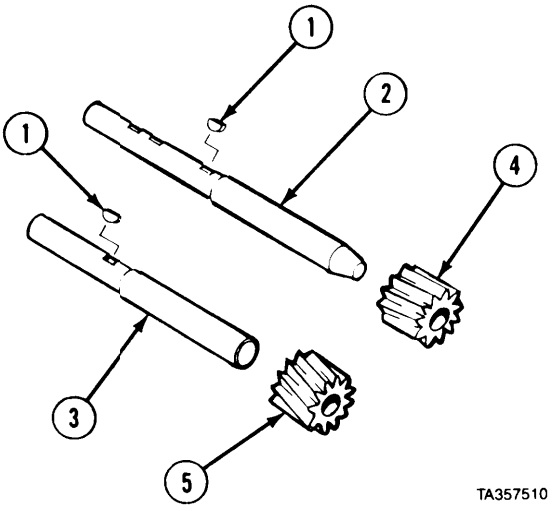

TA357510

(5) Install shaft (2) and gear (4) into pump body (6).

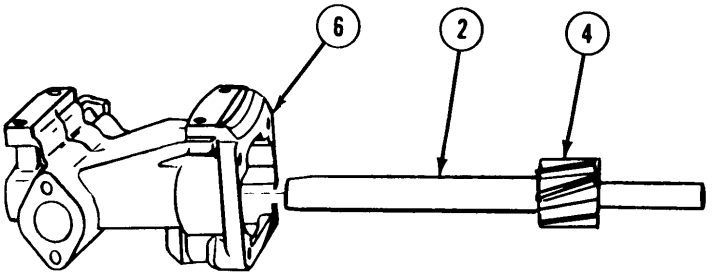

TA357511

(6) Install shaft (3) and gear (5) into pump (6).

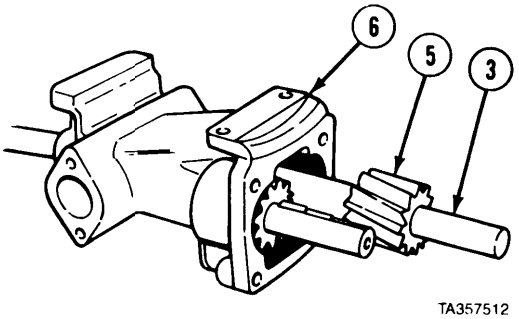

TA357512

(7) Install spacer (7) onto shafts (2 and 3).
(8) Install two keys (8) in shafts (2 and 3).
(9) Aline matchmarks and install gears (9 and 10) on shafts (2 and 3).

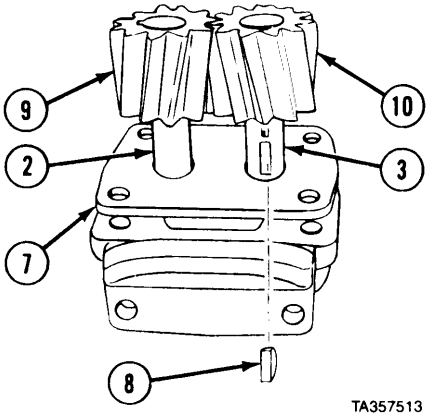

TA357513

https://truckmanualshub.com/

Oil System Maintenance Instructions (Cont)

(10) Install pump cover (11) and four screws (12).
(11) Tighten screws (12) to 30 to 35 lb-ft (41 to 47 N•m).

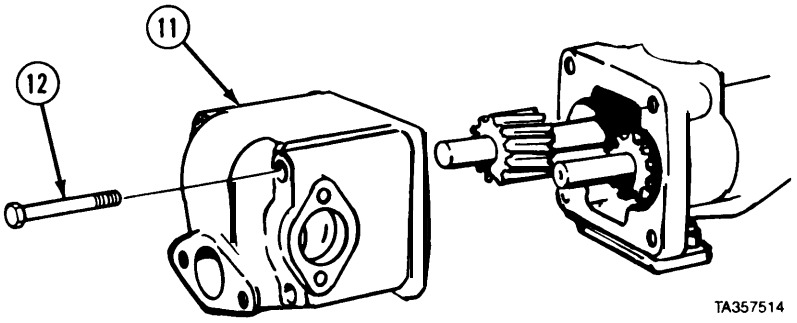

d. Follow-on Maintenance. None.

END OF TASK

8.6.PRESSURE RELEIF VALVE REMOVAL/REPAIR/INSTALLATION.

This task covers:

a. Removal
b. Disassembly
c. Cleaning/Inspection
d. Assembly
e. Installation
f. Follow-on Maintenance

INITIAL SETUP

Models
All

Test Equipment
None

Special Tools
None

Supplies
Solvent, dry cleaning, Item 60, Appendix C
Oil, lubricating, Item 48, Appendix C

Personnel Required
MOS 63W, Wheel vehicle repairer (2)

RefERences
None

Equipment Condition

TM or Para	*Condition Description*
Para 8-3	Oil pan removed.

Special Environmental Conditions
None

General Safety Instructions
None

Level of Maintenance
Direct Support

https://truckmanualshub.com/

8-6. PRESSURE RELIEF VALVE REMOVAL/REPAIR/INSTALLATION (CONT).

a. Removal.

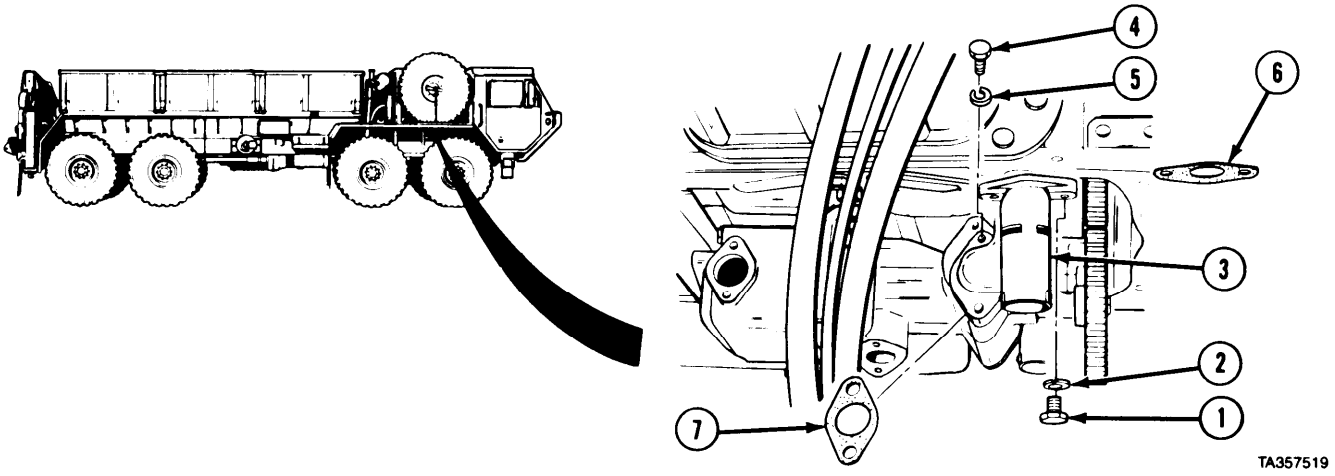

(1) Remove two screws (1) and lockwashers (2) from pressure relief valve (3).
(2) Remove two screws (4) and lockwasher (5) from pressure relief valve (3).
(3) Remove pressure relief valve (3) and gaskets (6 and 7).

b. Disassembly.

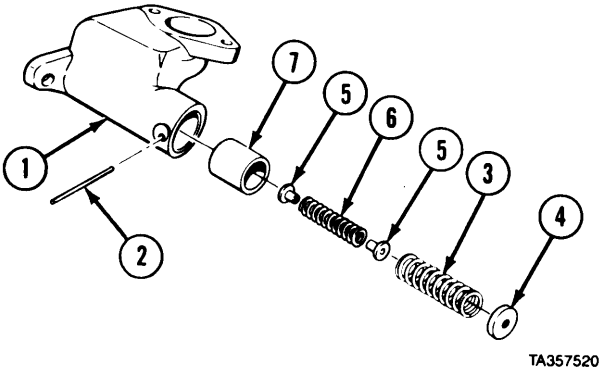

(1) Mount pressure relief valve (1) in vise with soft jaws.

WARNING

Spring is under compression load and can cause injury if released suddenly. Keep spring compressed when removing pin, then release spring slowly.

(2) Soldier A drives spring seat retaining pin (2) out of pressure relief valve body (1) while Soldier B keeps spring (3) under pressure.
(3) Remove spring seat (4), spring (3), end cap (5), inner spring (6), end cap (5), and valve (7).

https://truckmanualshub.com/

Oil System Maintenance Instructions (Cont)

c. Cleaning/Inspection.

WARNING

Adhesives, solvents, and sealing compounds can burn easily, can give off harmful vapors, and are harmful to skin and clothing. To avoid injury or death, keep away from open fire and use in well-ventilated area. If adhesive, solvent, or sealing compound gets on skin or clothing, wash immediately with soap and water.

(1) Clean metal parts of valve with dry cleaning solvent.

WARNING

Compressed air used for cleaning purposes will not exceed 30 psi (207 kPa). Use only with effective chip guarding and personal protective equipment (goggles/shield, gloves etc.).

(2) Dry valve with compressed air.
(3) Clean gasket material from mounting surface of valve, oil pump, and cylinder block.
(4) Inspect all parts for damage. Replace damaged parts.
(5) Make sure relief valve moves freely in valve body.

d. Assembly.

(1) Mount-valve body (1) in vise with soft jaws.
(2) Apply lubricating oil to valve (2). Install valve, closed end first, into valve body (1).
(3) Install two end caps (3) on inner spring (4). Insert inner spring (4) into valve body (1).
(4) Insert spring (5) over inner spring (4) into valve body (1).
(5) Install spring seat (6) closed end first, into valve body (1).
(6) Soldier A compresses spring (5) while Soldier B installs pin (7).

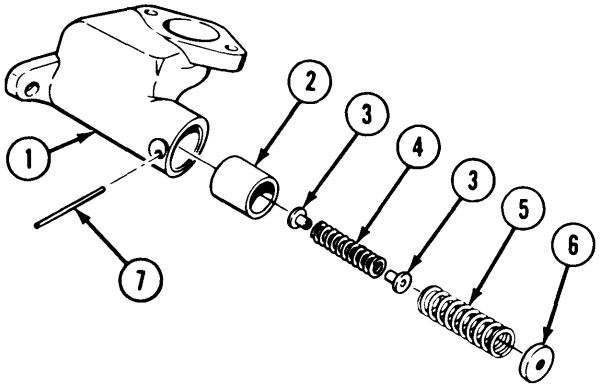

TA357521

e. Installation.

(1) Install gasket (1) and pressure relief valve (2) on engine (3).
(2) Install two screws (4) and lockwashers (5). Turn screws three or four turns only.
(3) Install gasket (6) under pressure relief valve (2).
(4) Install two screws (7) and lockwashers (8).
(5) Tighten screws (4 and 7) to 30 to 35 lb-ft (41 to 47 NŽm).

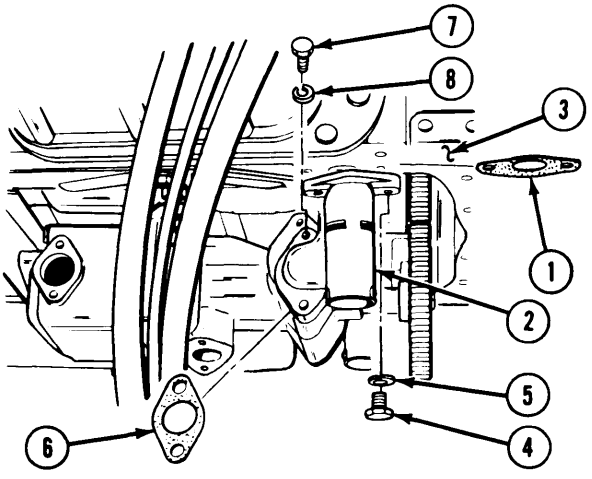

TA357522

f. Follow-on Maintenance. Install oil pan (para 8-3).

END OF TASK

https://truckmanualshub.com/

Oil System Maintenance Instructions (Cont)

8-7. PRESSURE REGULATOR VALVE REMOVAL/REPAIR/INSTALLATION.

This task covers:

a. Removal
b. Disassembly
c. Cleaning/Inspection
d. Assembly
e. Installation
f. Follow-on Maintenance

INITIAL SETUP

Models
All

Test Equiprnent
None

Special Tools
None

Supplies
Solvent, dry cleaning, Item 60, Appendix C
Oil, lubricating, Item 48, Appendix C

Personnel Required
MOS 63W, Wheel vehicle repairer

References
None

Equipment Condition

TM or Para	*Condition Description*
Para 8-3	Oil pan removed.

Special Environmental Conditions
None

General Safety Instructions
None

Level of Maintenance
Direct Support

a. Removal.

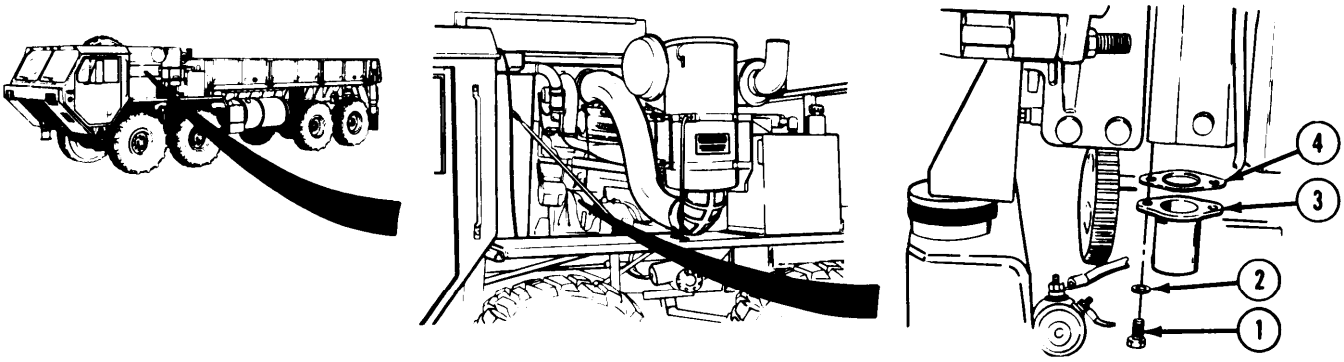

TA357515

(1) Remove two screws (1) and washers (2) from oil pressure regulator (3).
(2) Remove oil pressure regulator (3) and gasket (4).

b. Disassembly.

(1) Mount oil pressure regulator (1) in vise with soft jaws.

WARNING

Spring is under compression load and can cause injury if released suddenly. Keep spring compressed when removing pin, then slowly release compression.

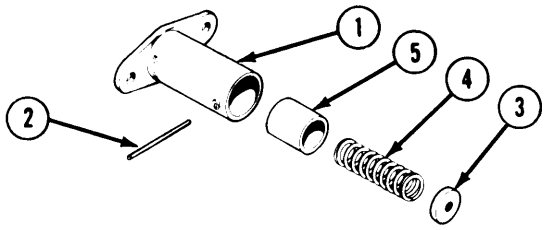

TA357516

(2) Drive spring seat retaining pin (2) out of pressure regulator body (1).
(3) Remove spring seat (3), spring (4), and valve (5) from regulator body (1).

https://truckmanualshub.com/

Oil System Maintenance Instructions (Cont)

c. Cleaning/Inspection.

WARNING

Adhesives, solvents, and sealing compounds can burn easily, can give off harmful vapors, and are harmful to skin and clothing. To avoid injury or death, keep away from open fire and use in well-ventilated area, If adhesive, solvent, or sealing compound gets on skin or clothing, wash immediately with soap and water.

(1) Clean regulator with dry cleaning solvent.

WARNING

Compressed air used for cleaning purposes will not exceed 30 psi (207 kPa). Use only with effective chip guarding and personal protective equipment (goggles/shield, gloves, etc.).

(2) Dry regulator with compressed air.
(3) Inspect all parts for damage. Replace damaged parts.
(4) Make sure regulator valve moves freely in valve body.

d. Assembly.

(1) Install regulator body (1) in vise with soft jaws.
(2) Apply lubricating oil to valve (2) and insert into regulator body (1), closed end first.
(3) Insert spring (3) into regulator body (1).
(4) Install spring seat (4), open end first, and compress spring (3).
(5) Install pin (5).

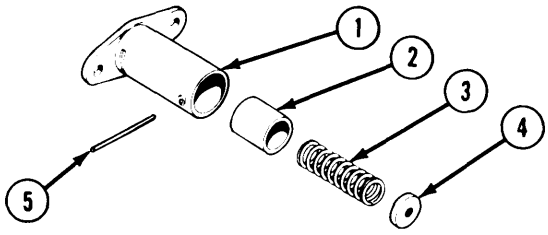

e. Installation.

(1) Install gasket (1) and oil pressure regulator (2) on engine (3).
(2) Install two screws (4) and washers (5).
(3) Tighten screws (4) to 30 to 35 lb-ft (41 to 47 N•m).

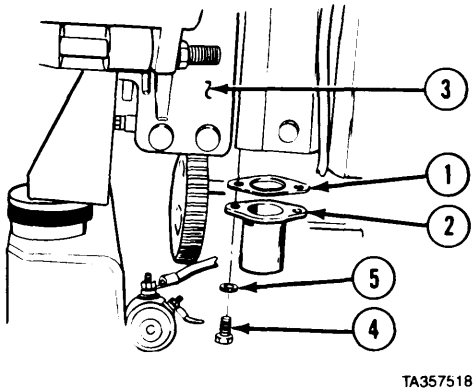

f. Follow-on Maintenance.

(1) Install oil pan (para 8-3).
(2) Start engine (TM 9-2320-279- 10).
(3) Check oil pressure (TM 9-2320-279-10).

END OF TASK

https://truckmanualshub.com/

https://truckmanualshub.com/

CHAPTER 9
EXHAUST MANIFOLD MAINTENANCE

Contents

	Para	Page
General	9-1	9-1
Exhaust Manifold Removal/Installation	9-2	9-1

Section I. INTRODUCTION

9-1. GENERAl. This chapter includes removal and/or replacement of the exhaust manifold. Equipment conditions will be referenced from TM 9-2320-279-10, TM 9-2320-279-20, TM 9-2320-279-34, and other chapters in this technical manual.

Section II. EXHAUST MANIFOLD ASSEMBLY

Exhaust Manifold Maintenance Instructions

9-2. EXHAUST MANIFOLD REMOVAL/INSTALLATION.

This task covers:

a. Removal
b. Inspection
c. Installation
d. Follow-on Maintenance

INITIAL SETUP

Models
All

Test Equipment
None

Special Tools
None

Supplies
None

Personnel Required
MOS 63W, Wheel vehicle repairer

References
None

Equipment Condition

TM or Para	*Condition Description*
TM 9-2320-279-10	Engine side panels removed.
TM 9-2320-279-10	Engine cover open.

Special Environmental Conditions
None

General Safety Instructions
None

Level *of Maintenance*
Direct Support

https://truckmanualshub.com/

Exhaust Manifold Maintenance Instructions (Cont)

9-2. EXHAUST MANIFOLD REMOVAL/INSTALLATION (CONT).

a. Removal.

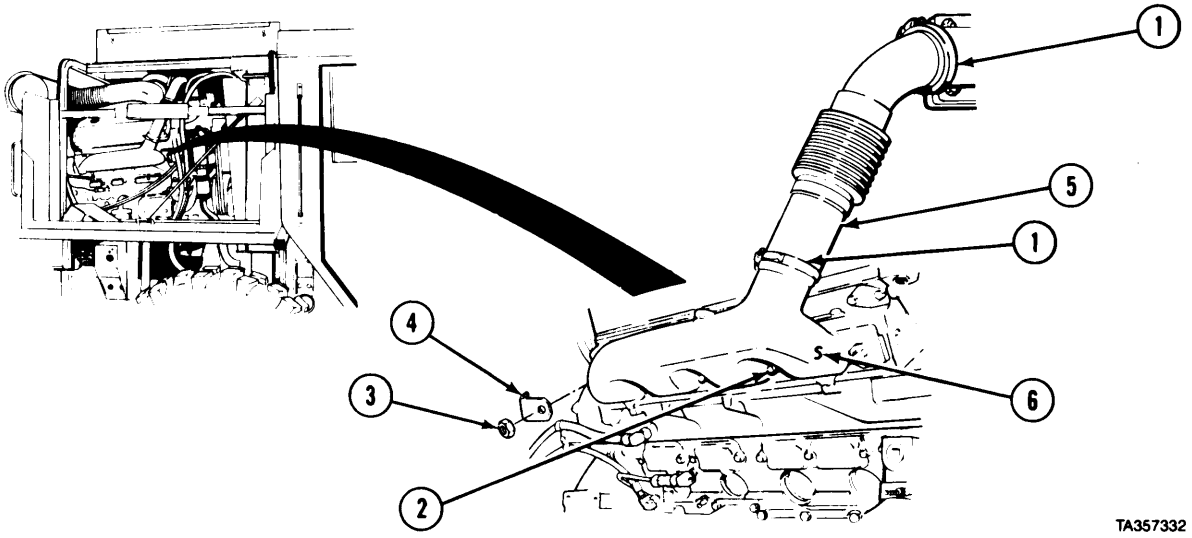

NOTE

Instructions cover right hand exhaust manifold, Removal of left hand manifold is the same.

(1) Loosen clamps (1).
(2) Loosen three nuts (2).
(3) Remove two nuts (3) and two crabs (4).
(4) Remove exhaust tube (5) from exhaust manifold (6).

(5) Remove manifold (6), three nuts (7), and washers (8).
(6) Remove two gaskets (9) from cylinder head (10).

b. Inspection.

(1) Inspect manifold (6) for cracks and breaks.
(2) Inspect for broken, worn, or stripped threads on studs (11) and nuts (7).

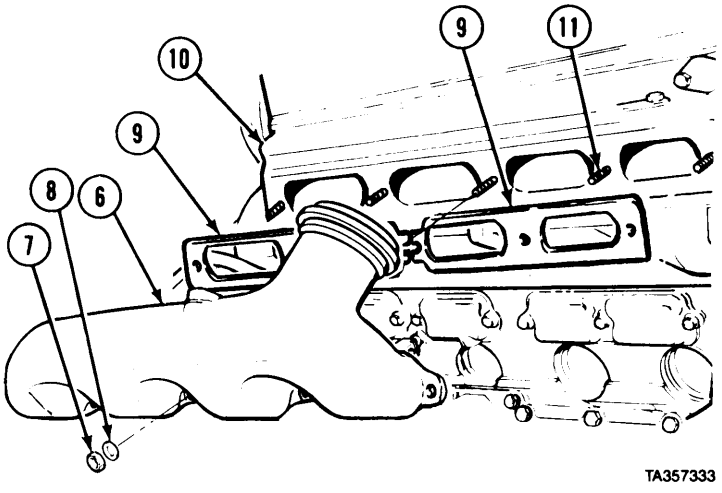

https://truckmanualshub.com/

Exhaust Manifold Maintenance Instructions (Cont)

c. Installation.

NOTE

Instructions cover right hand exhaust manifold. Installation of left hand manifold is the same.

(1) Install studs (1) if necessary.
(2) Tighten studs (1) to 25 to 40 lb-ft (34 to 54 N•m).
(3) Install gaskets (2) with crimped side facing cylinder head (3).

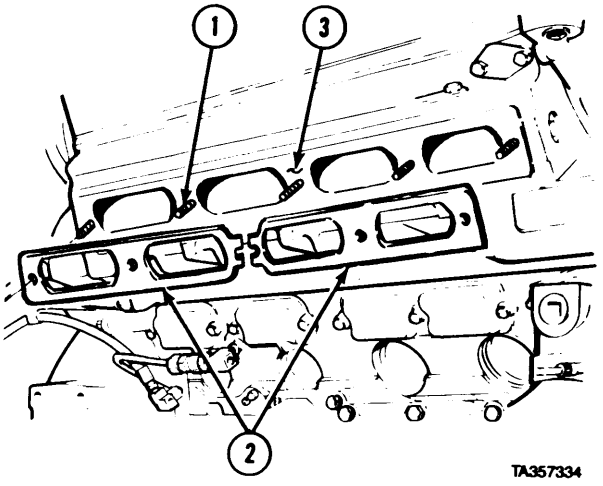

NOTE

Manifold retaining washers are special curved washers. Convex side must be mounted toward manifold.

(4) Install manifold (4) on studs (1).
(5) Install three washers (5) and nuts (6) loosely.

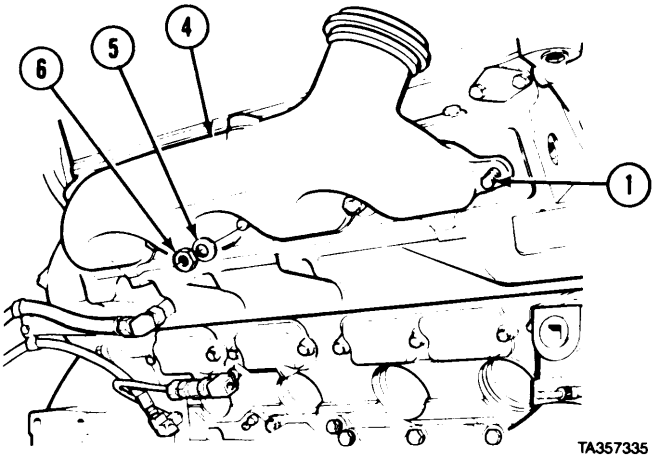

(6) Install exhaust tube (7) with clamps (8).
(7) Install but do not tighten two crabs (9) and nuts (10).

CAUTION

Be sure to tighten nuts from center nut outward. Tightening outside nuts first can crack exhaust manifold.

(8) Tighten nuts (6 and 10) in the following order:
  (a) Tighten nut (6) to 30 to 35 lb-ft (41 to 47 N•m).
  (b) Tighten nut (10) to 30 to 35 lb-ft (41 to 47 N•m).

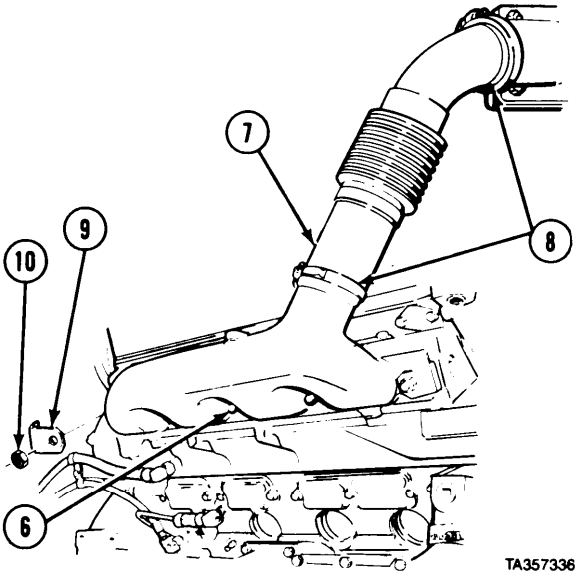

d. Follow-on Maintenance.

(1) Install engine side panels (TM 9-2320-279-10).
(2) Close engine cover (TM 9-2320-279-10).

END OF TASK

https://truckmanualshub.com/

https://truckmanualshub.com/

CHAPTER 10
BLOWER AND WATER PUMP DRIVES MAINTENANCE

Contents

	Para	Page
General	10-1	10-1
Blower Drive Support Removal/Repair/Installation	10-2	10-1
Blower Accessory Drive Hub Removal/Installation	10-3	10-7
Blower Drive Seal Ring Removal/Installation	10-4	10-11
Water Pump Drive Gear Removal/Installation	10-5	10-12

Section I. INTRODUCTION

10-1. GENERAL. This chapter includes removal, installation, and repair of the blower and water pump drives. The subassemblies and parts which must be removed before the blower and water pump drives can be removed will be referenced-to other paragraphs or chapters of this manual, TM 9-2320-279-10, TM 9-2320-279-20, or TM 9-2320-279-34.

Section II. BLOWER DRIVE ASSEMBLY

Blower and Water Pump Drives Maintenance Instructions

10-2. BLOWER DRIVE SUPPORT REMOVAL/REPAIR/INSTALLATION.

This task covers:

a. Removal
b. Disassembly
c. Cleaning/Inspection
d. Assembly
e. Installation
f. Follow-on Maintenance

INITIAL SETUP

Models
All

Test Equipment
None

Special Tools
None

Supplies
Solvent, dry cleaning, Item 60, Appendix C
Grease, automotive and artillery, Item 36, Appendix C
Oil, lubricating, Item 48, Appendix C

Personnel Required
MOS 63W, Wheel vehicle repairer

References
None

Equipment Condition

TM or Para	*Condition Description*
Para 14-3	Blower removed.

Special Environmental Conditions
None

General Safety Instructions
None

Level of Maintenance
Direct Support

https://truckmanualshub.com/

10-2. BLOWER DRIVE SUPPORT REMOVAL/REPAIR/INSTALIATION (CONT).

a. Removal.

(1) Loosen clamp (1) and remove two screws (2), lockwashers (3), and crossover pipe (4).

(2) Remove two screws (5) and copper washers (6) from blower drive assembly (7).

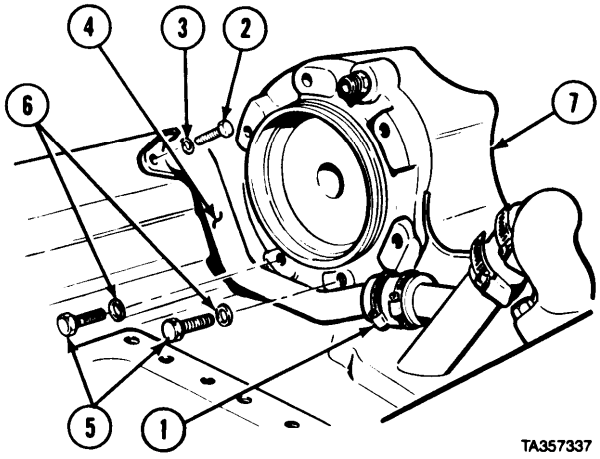

(3) Remove blower drive assembly (7) and gasket (8) from flywheel housing (9).

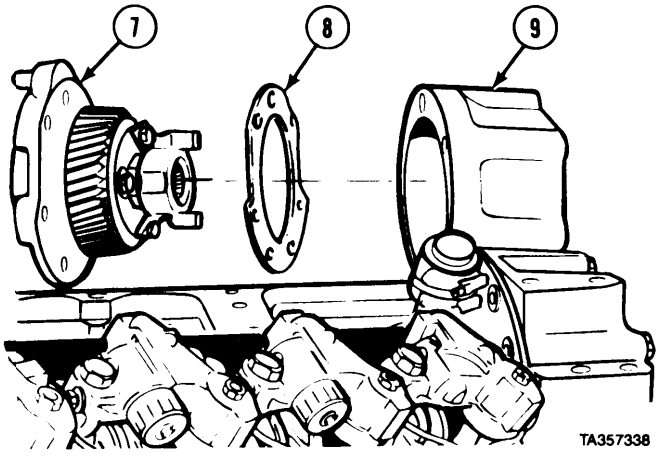

b. Diassembly.

(1) Remove three screws (1), and accessory drive hub assembly (2) from blower drive assembly (3).

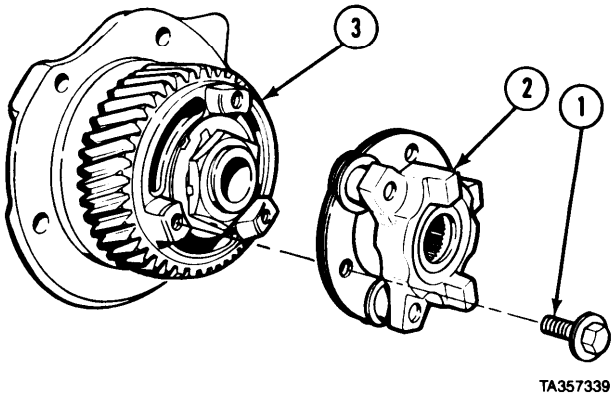

https://truckmanualshub.com/

Blower and Water Pump Drives Maintenance Instructions (Cont)

(2) Remove three screws (4), and two spring plates (5) from auxiliary drive hub (6).

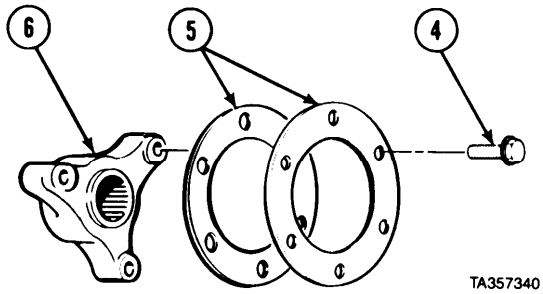

(3) Position blower drive support (7) in vise with soft jaws.
(4) Bend tangs of lockwasher (8) away from nut (9).

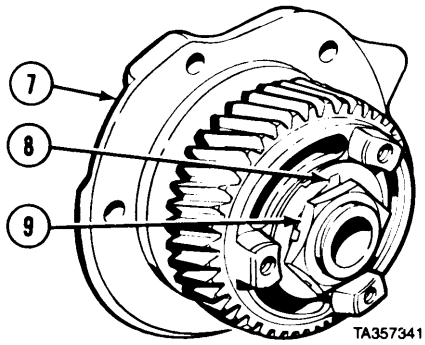

(5) Remove nut (9), lockwasher (8), thrust washer (10), thrust bearing (11), drive gear (12), and second thrust bearing (13) from blower drive support (7).
(6) Remove blower drive support (7) from vise,

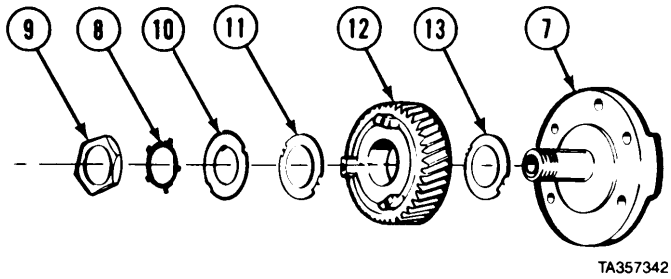

(7) Check inside diameter of two bushings (14). If diameter is more than 0.005 in. (0. 127 mm) larger than shaft diameter, replace bushings.
(8) Press two bushings (14) from drive gear (12).

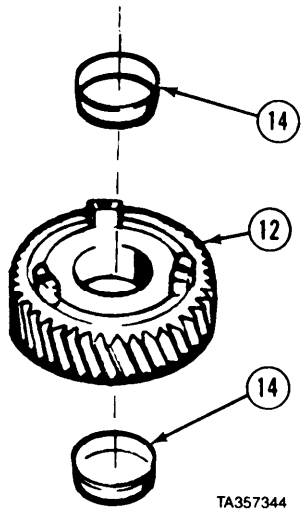

https://truckmanualshub.com/

10-2. BLOWER DRIVE SUPPORT REMOVAL/REPAIR/INSTALLATION (CONT).

c. Cleaning/Inspection.

WARNING

- Adhesives, solvents, and sealing compounds can burn easily, can give off harmful vapors, and are harmful to skin and clothing. To avoid injury or death, keep away from open fire and use in well-ventilated area. If adhesive, solvent, or sealing compound gets on skin or clothing, wash immediately with soap and water.
- Compressed air used for cleaning purposes will not exceed 30 psi (207 kPa). Use only with effective chip guarding and personal protective equipment (goggles/shield, gloves, etc.).

(1) Clean all metal parts with dry cleaning solvent.
(2) Dry parts, except bearings, with compressed air. Let bearings air dry.
(3) Make sure oil passages are clear.
(4) Inspect threads for damage. Replace parts if damaged.
(5) Check that thrust washer thickness is between 0.2350 and 0.2450-in. (5.969 and 6.223 mm). Inspect thrust washer for scoring.
(6) Check that two thrust bearings thickness is between 0.0590 and 0.0610-in. (1.498 and 1.549 mm). Inspect thrust bearings for scoring.
(7) Check that inside diameter of support bushing is between 1.6260 and 1.6265-in. (41.300 and 41.313 mm). Record diameter.
(8) Check diameter of drive hub at base. It must be between 1.6240 and 1.6250-in. (41.249 and 41.275 mm). Record diameter.
(9) Subtract diameter recorded in step (7) from diameter recorded in step (8). Make sure that clearance between drive hub and support bushing is between 0.0010 and 0.0025-in. (0.025 and 0.063 mm) when parts are new. Limit is 0.0050-in. (0. 127 mm) for used parts.
(10) If support bushing is worn beyond limits in step (7), replace bushings.
(11) Inspect drive gear teeth for scoring, pitting, and burning (blue or dark spots). Replace if teeth are defective.
(12) Inspect auxiliary drive hub for cracks, breaks, stripped threads or worn-out splines in bore. Replace if damaged.
(13) Inspect both flex spring plates for cracks, distortion, or other damage. Replace if defective.

d. Assembly.

NOTE

If bushing were removed, do step (1). If not, go to step (2).

(1) Press two bushings (1) into drive gear (2) flush with drive gear.

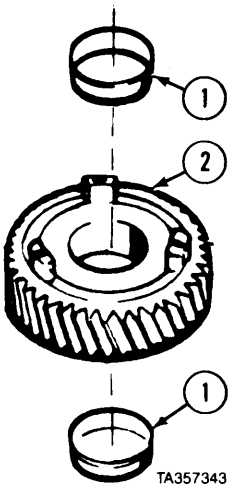

https://truckmanualshub.com/

Blower and Water Pump Drives Maintenance Instructions (Cont)

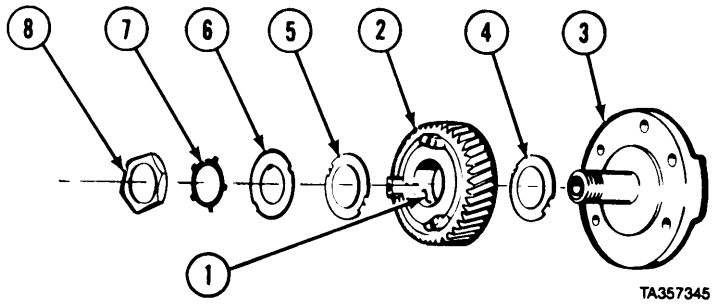

(2) Place blower drive support (3) in vise with soft jaws.
(3) Apply light coat of lubricating oil to blower drive support (3), support bushing (1), thrust bearings (4 and 5), and thrust washer (6),
(4) Install thrust bearing (4) onto blower drive support (3).
(5) Install drive gear (2) with flat side towards blower drive support (3).
(6) Install second thrust bearing (5) and thrust washer (6) with notches fitting in bearing.
(7) Install lockwasher (7).
(8) Install nut (8) flat side down.
(9) Tighten nut (8) to 50 to 60 lb-ft (67.8 to 81.4 N•m).

(10) Measure clearance between thrust washer (6) and thrust bearing (5). Clearance must not be less than 0.005-in. or more than 0.010-in. (0.13 mm and 0.25 mm).
(11) Bend tangs of lockwasher (7) against nut (8).

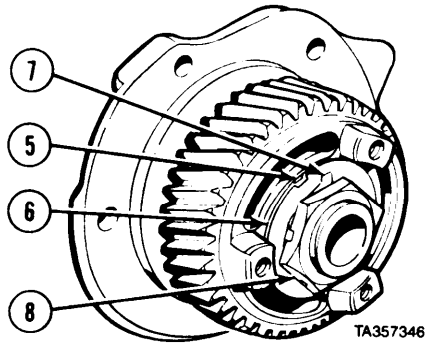

(12) Install two spring plates (9) and three screws (10) on auxiliary drive hub (11).
(13) Tighten screws (10) to 35 to 40 lb-ft (47.5 to 54.0 N•m).

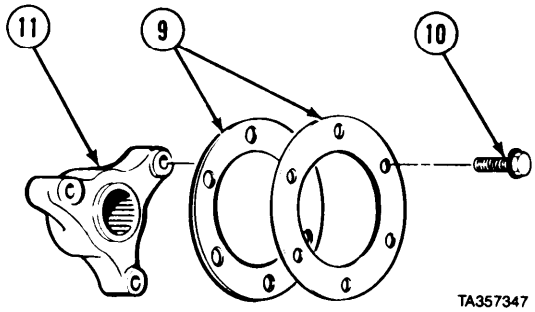

(14) Install accessory drive hub assembly (12) and three screws (13) on blower drive support (3). Tighten screws to 35 to 40 lb-ft (47.5 to 54.0 N•m).

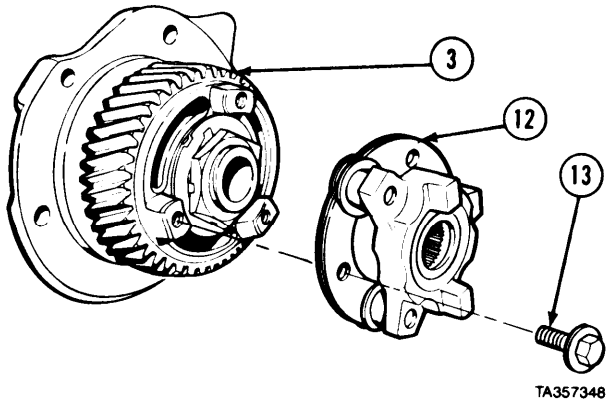

https://truckmanualshub.com/

10-2. BLOWER DRIVE SUPPORT REMOVAL/REPAIR/INSTALLATION (CONT).

e. Installation.

NOTE

Apply light coat of grease to both sides of gasket.

(1) Install gasket (1) and blower drive assembly (2) in flywheel housing (3).

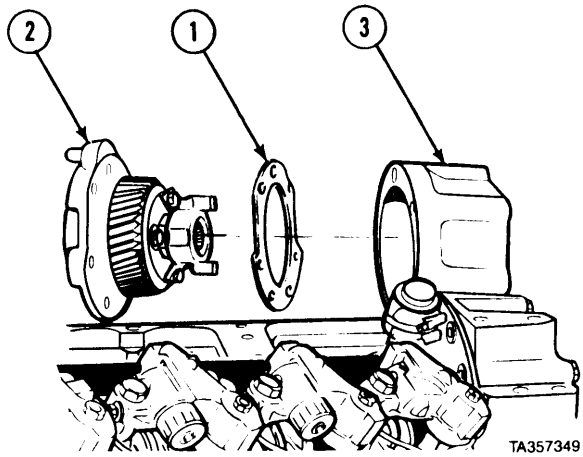

(2) Install two screws (4) and copper washers (5).
(3) Tighten two screws (4) to 25 to 30 lb-ft (34 to 41 N·m).
(4) Install crossover pipe (6), two lockwashers (7), and screws (8).
(5) Tighten clamp (9).

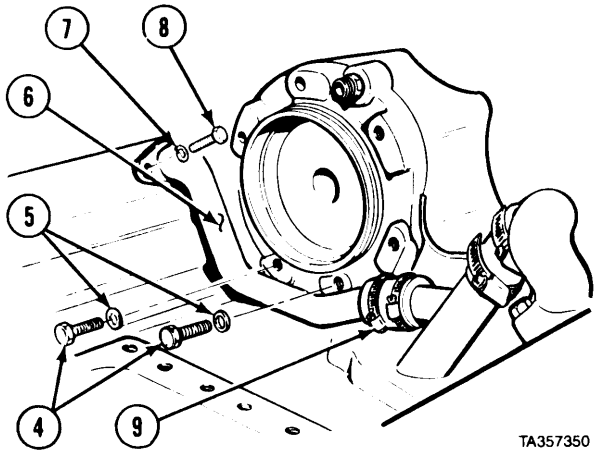

NOTE

Used gear backlash cannot be over 0.010-in. (0.25 mm). New gear backlash will measure 0.002-in. (0.05 mm) to 0.008-in. (0.20 mm). If backlash cannot be checked at face of blower drive gear, check at accessory drive hub.

(6) Check backlash between blower drive gear (10) and right bank camshaft gear (11).

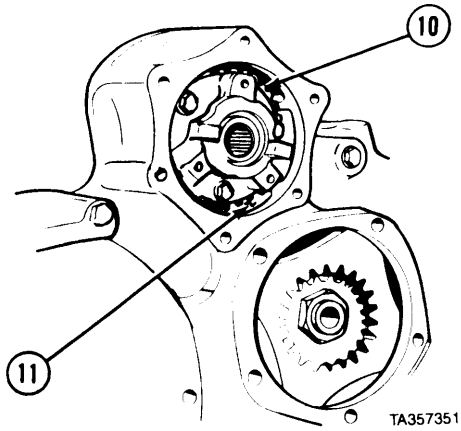

f. Follow-on Maintenance. Install blower (para 14-3).

END OF TASK

https://truckmanualshub.com/

Blower and Water Pump Drives Maintenance Instructions (Cont)

10-3. BLOWER ACCESSORY DRIVE HUB REMOVAL/INSTALLATION.

This task covers:

a. Removal
b. Cleaning/Inspection
c. Installation
d. Follow-on Maintenance

INITIAL SETUP

Models
All

Test Equipment
None

Special Tools
Tool, blower drive shaft alinement J24619 or J33001

Supplies
Solvent, dry cleaning, Item 60, Appendix C

Personnel Required
MOS 63W, Wheel vehicle repairer

References
None

Equipment Condition

TM or Para	*Condition Description*
TM 9-2320-279-20	Engine cover removed.
TM 9-2320-279-20	Air compressor removed.

Special Environmental Conditions
None

General Safety Instructions
None

Level of Maintenance
Direct Support

a. Removal.

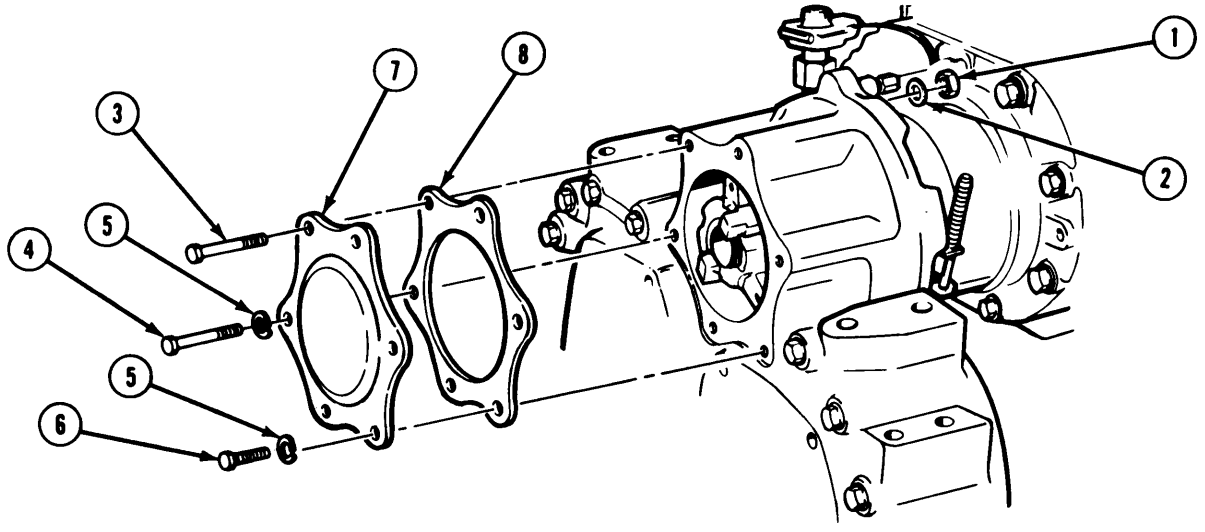

TA357352

(1) Remove nut (1), copper washer (2), and screw (3).
(2) Remove three screws (4) and lockwashers (5).
(3) Remove two screws (6), lockwashers (5), cover (7), and gasket (8).

https://truckmanualshub.com/

[10-3. BLOWER ACCESSORY DRIVE HUB REMOVAL/INSTALLATION (CONT).

(4) Remove retaining ring (9) from blower drive shaft (10).

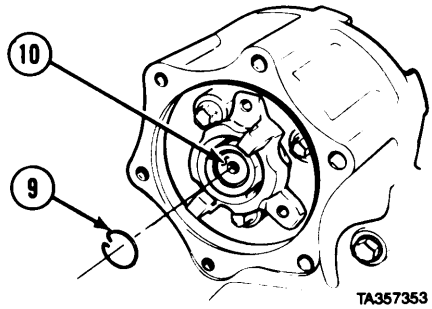

CAUTION

Be careful when removing shaft; spring may fall out.

(5) Remove blower drive shaft (10) with spring (11).

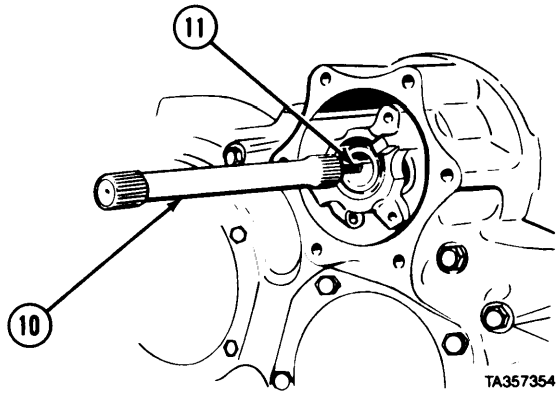

(6) Remove three screws (12).
(7) Remove accessory drive hub assembly (13).
(8) Remove three screws (14) and two spring plates (15) from accessory drive hub assembly (13).

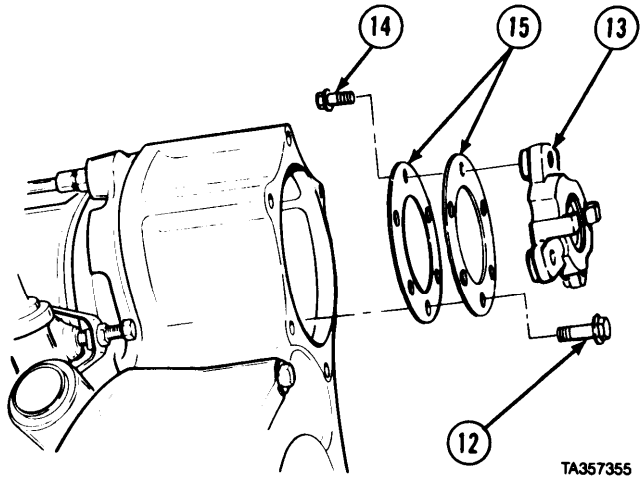

b. Cleaning/Inspection.

WARNING

Adhesives, solvents, and sealing compounds can burn easily, can give off harmful vapors, and are harmful to skin and clothing. To avoid injury or death, keep away from open fire and use in well-ventilated area. If adhesive, solvent, or sealing compound gets on skin or clothing, wash immediately with soap and water.

(1) Clean metal parts with dry cleaning solvent.

https://truckmanualshub.com/

Blower and Water Pump Drives Maintenance Instructions (Cont)

WARNING

Compressed air used for cleaning purposes shall not exceed 30 psi (207 kPa). Use only with effective chip guarding and personal protective equipment (goggles/shield, gloves etc.).

(2) Dry parts with compressed air.
(3) Inspect splines in bore of hub. If defective, replace hub.
(4) Inspect spring plates and washers for breaks, cracks, dents, or distortion. Replace if defective,
(5) Inspect hub bosses for stripped threads.

c. **Installation.**

(1) Install two spring plates (1) and three screws (2) on hub ,assembly (3). Tighten screws to 35 to 40 lb-ft (47.5 to 54.2 N•m).

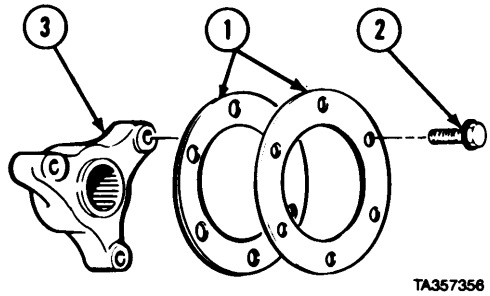

(2) Install accessory drive hub assembly (2).
(3) Install three screws (4).
(4) Tighten three screws (4) to 35 to 40 lb-ft (47.5 to 54.2 N•m).
(5) Using blower drive shaft alining tool, install blower drive shaft (5) and spring (6).

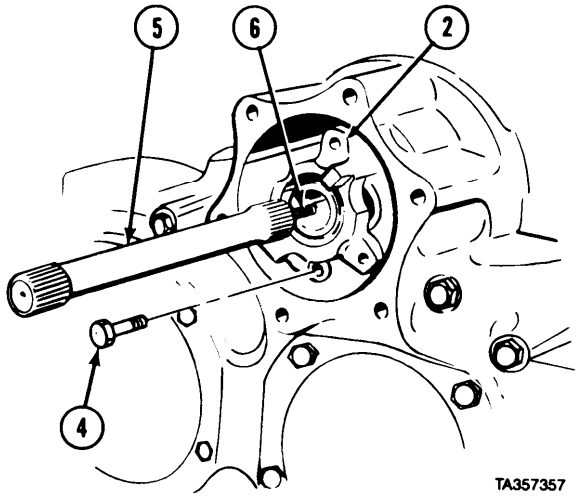

(6) Push in on shaft (5) and install retaining ring (7).

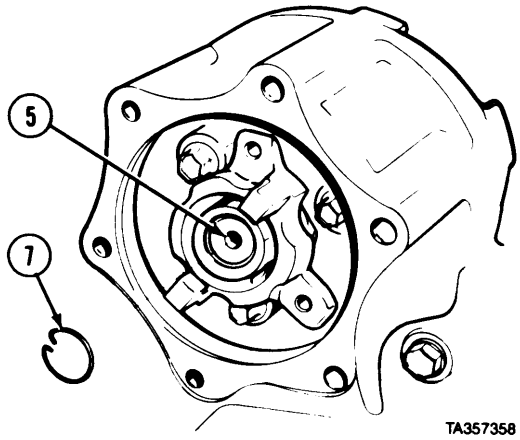

https://truckmanualshub.com/

10-3. BLOWER ACCESSORY DRIVE HUB REMOVAL/INSTALLATION (CONT).

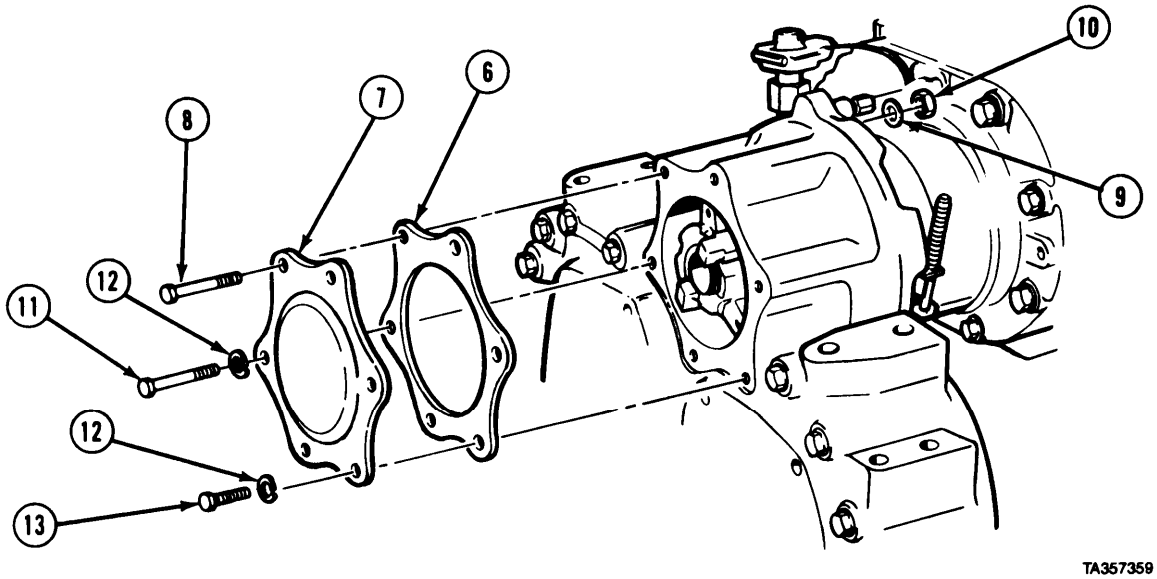

(7) Install gasket (8) and cover (9) with screw (10), copper washer (11), and nut (12).
(8) Install three screws (13) and lockwashers (14).
(9) Install two screws (15) and lockwashers (14).
(10) Tighten screws (13 and 15) to 35 to 40 lb-ft (47.5 to 54.2 N•m).

d. Follow-on Maintenance.

(1) Install air compressor (TM 9-2320-279-20).
(2) Install engine cover (TM 9-2320-279-20).
(3) Start engine and check operation (TM 9-2320-279-10).

END OF TASK

https://truckmanualshub.com/

10-4. BLOWER DRIVE SEAL RING REMOVAL/INSTALLATION.

This task covers:

a. Removal
b. Installation
c. Follow-on Maintenance

INITIAL SETUP

Models
All

Test Equipment
None

Special Tools
None

Supplies
Cement, general purpose, synthetic base, Item 12, Appendix C

Personnel Required
MOS 63W, Wheel vehicle repairer

References
None

Equipment Condition

TM or Para	*Condition Description*
TM 9-2320-279-20	Engine cover removed.

Special Environmental Conditions
None

General Safety Instructions
None

Level of Maintenance
Direct Support

a. Removal.

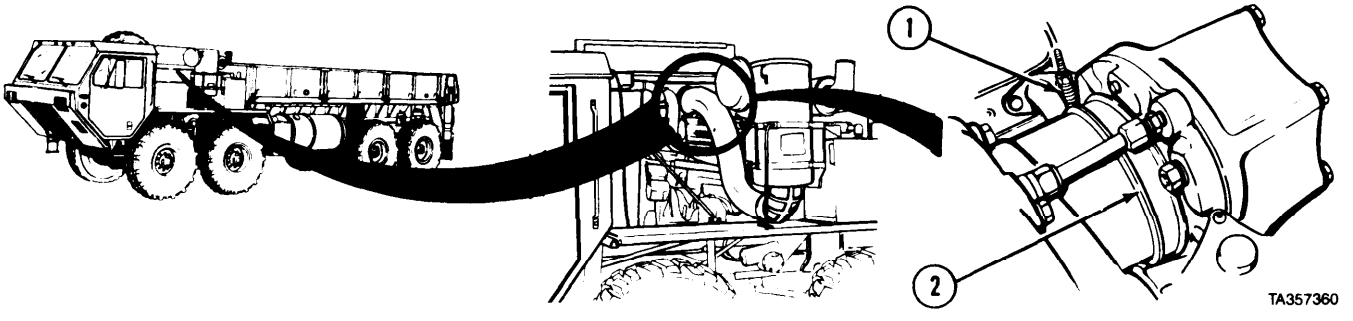

(1) Loosen seal ring clamp (1) and slide clamp off blower drive seal ring (2)
(2) Cut and remove blower drive seal ring (2).

b. Installation.

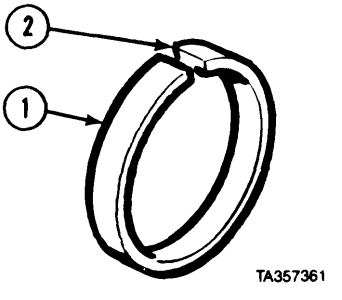

NOTE

Make sure cut ends of blower drive seal ring are straight and clean.

(1) Cut blower drive seal ring (1) straight across.

WARNING

Use general purpose cement lightly and avoid contact with skin. Cement will burn on contact.

(2) Apply general purpose cement to one end (2) of cut blower drive seal ring (1).

https://truckmanualshub.com/

Blower and Water Pump Drives Maintenance Instructions (Cont)

10-40 BLOWER DRIVE SEAL RING REMOVAL/INSTALLATION (CONT).

(3) Install blower drive seal ring (1) on blower drive (3) with cement coated cut end (2) on top.
(4) Slide other cut end of blower drive seal ring (1) up to mate with cement coated end.
(5) Hold joined ends of blower drive seal ring (1) together for 30 seconds.
(6) Position seal ring clamp (4) between raised edges of blower drive seal ring (1).
(7) Tighten seal ring clamp (4).

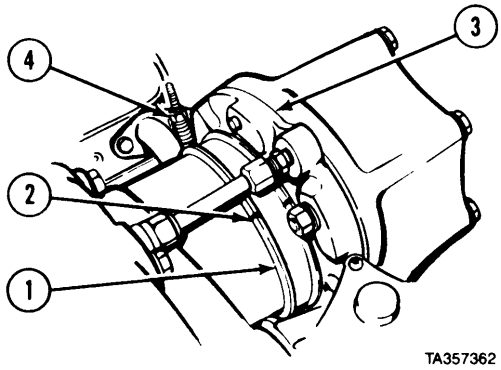

c. Follow-on Maintenance.
(1) Start engine (TM 9-2320-279-10).
(2) Let engine idle for three or four minutes. Then check around blower drive seal ring for oil leaks.
(3) Install engine cover (TM 9-2320-279-20).

END OF TASK

Section III. WATER PUMP DRIVE GEAR ASSEMBLY

10-5. WATER PUMP DRIVE GEAR REMOVAL/INSTALLATION.

This task covers:

a. Removal
b. Installation
c. Follow-on Maintenance

INITIAL SETUP

Models
All

Test Equipment
None

Special Tools
None

Supplies
None

Personnel Required
MOS 63W, Wheel vehicle repairer

References
None

Equipment Condition

TM or Para	*Condition Description*
Para 7-12	Front balance cover removed.

Special Environmental Conditions
None

General Safety Instructions
None

Level of Maintenance
Direct Support

https://truckmanualshub.com/

Blower and Water Pump Drives Maintenance Instructions (Cont)

a. Removal.

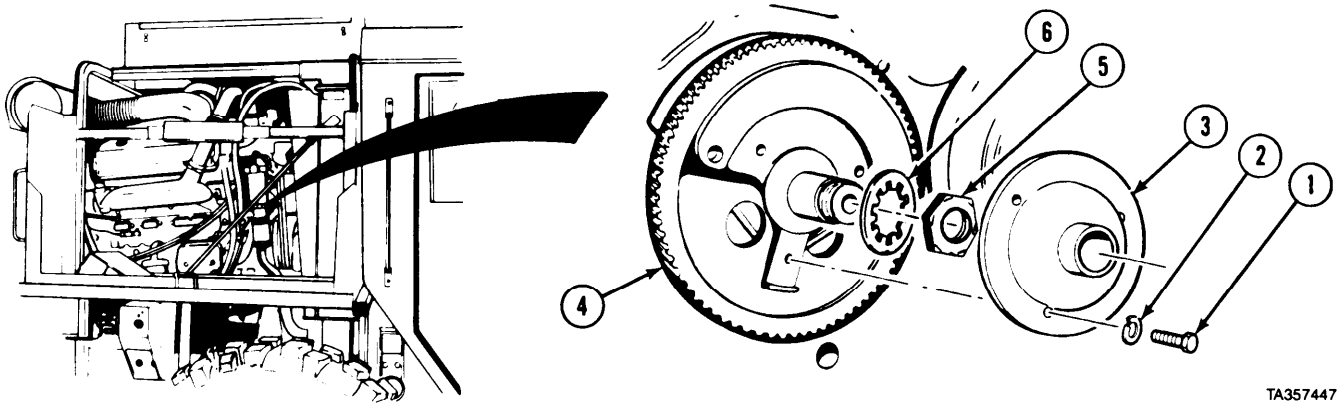

(1) Remove three screws (1), lockwashers (2), and hub (3) from drive gear (4).
(2) Remove retaining nut (5) and lockwasher (6) from drive gear (4).
(3) Remove drive gear (4).

(4) Remove two screws (7) from balance weight (8).
(5) Remove balance weight (8) from drive gear (4).

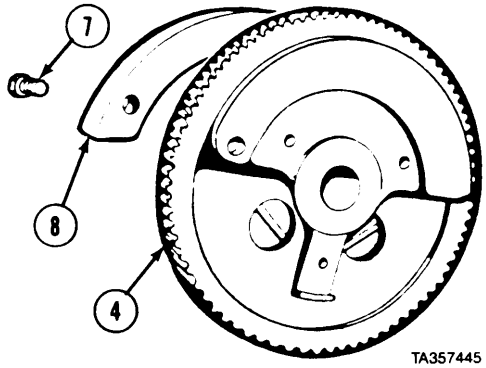

(6) Remove spacer (9) and key (10).

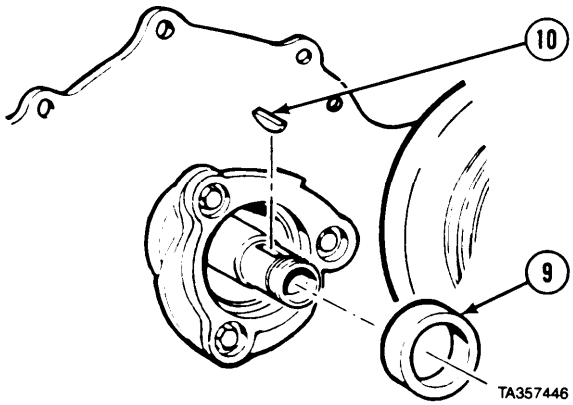

https://truckmanualshub.com/

10-5. WATER PUMP DRIVE GEAR REMOVAL/INSTALLATION (CONT).

b. Installation.

(1) Install spacer (1) and key (2).

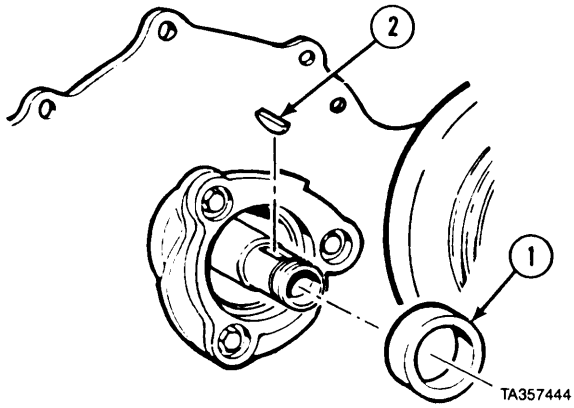

(2) Install balance weight (3) on gear (4) with two screws (5). Tighten screws to 35 to 40 lb-ft (47 to 54 N•m).

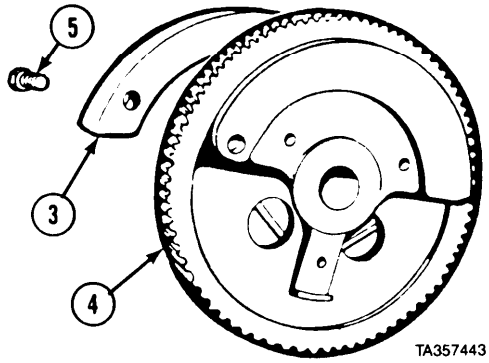

(3) Install gear (4), lockwasher (6), and retaining nut (7). Hold gear and tighten nut to 300 to 325 lb-ft (407 to 441 N•m).

(4) Install hub (8) with three lockwashers (9) and screws (10).

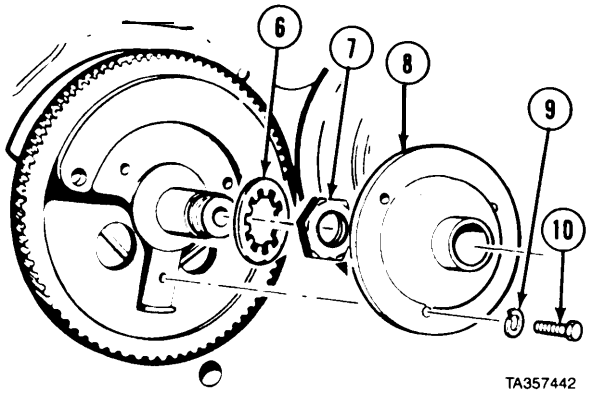

c. Follow-on Maintenance. Install front balance cover (para 7-12).

END OF TASK

https://truckmanualshub.com/

CHAPTER 11

ENGINE BRAKE RETARDER MAINTENANCE

Contents

	Para	Page
General	11-1	11-1
Engine Brake Retarder Removal/Installation	11-2	11-1
Engine Brake Retarder Repair	11-4	11-6
Engine Brake Wire Harness Removal/Installation	11-4	11-11

Section I. INTRODUCTION

11-1. GENERAL. This chapter covers the removal, disassembly, cleaning and inspection, assembly and installation of the engine brake retarder which consists of supply housing, drone housing, solenoid, control valve, slave piston and master piston. The subassemblies and parts which must be removed before these components can be removed will be referenced to other paragraphs of this manual, TM 9-2320-279-10, TM 9-2320-279-20, or TM 9-2320-279-34.

Section II. ENGINE BRAKE RETARDER ASSEMBLY

Engine Brake Retarder Maintenance Instructions

11-2. ENGINE BRAKE RETARDER REMOVAL/INSTALLATION.

This task covers:

a. Removal
b. Installation
c. Follow-on Maintenance

INITIAL SETUP

Models
All

Test Equipment
None

Special Tools
None

Supplies
Connector, electrical, butt, Item 34, Appendix C
Tags, identification, Item 61, Appendix C

Personnel Required
MOS 63W, Wheel vehicle repairer

References
None

Equipment Condition

TM or Para	Condition Description
TM 9-2320-279-20	Batteries disconnected.
TM 9-2320-279-20	Rocker covers removed.

Special Environmental Conditions
None

General Safety Instructions
None

Level of Maintenance
Direct Support

https://truckmanualshub.com/

11-2. ENGINE BRAKE RETARDER REMOVAL/INSTALLATION (CONT).

a. Removal.

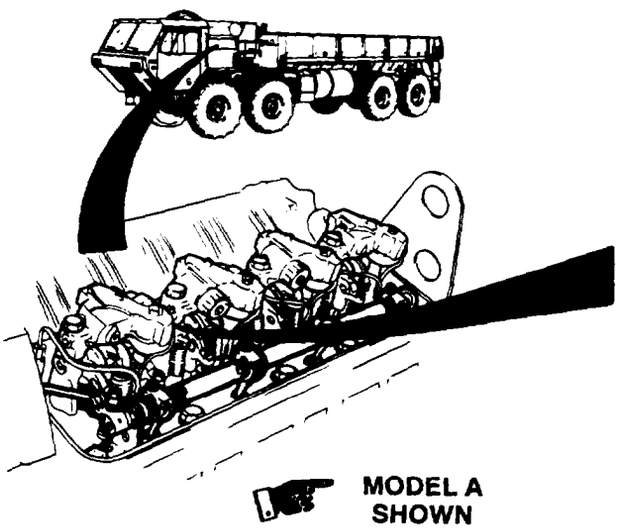

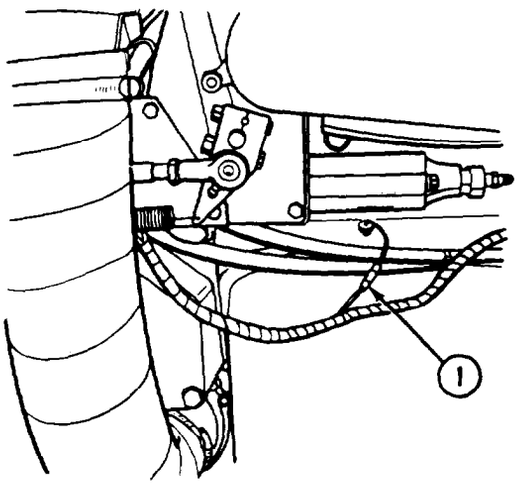

NOTE

- Tag and mark wires before removal.
- There are two kinds of engine brake wiring harnesses. Model A has a wire extending through the cylinder head and uses a “butt type” connector while Model B has a “spade type” connector. Model A is shown.

(1) Cut wire (1) for Model A and disconnect wire (1) for Model B.

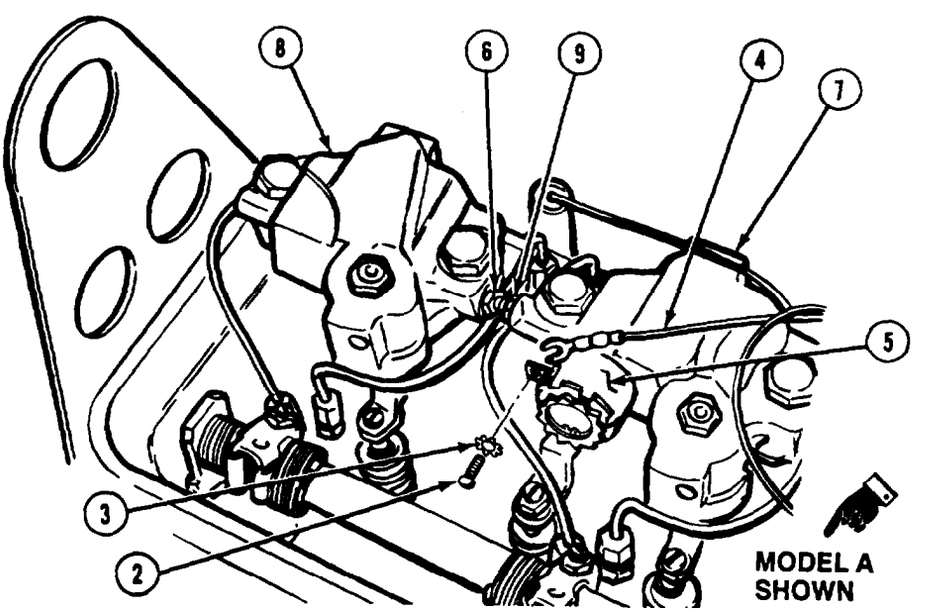

(2) Remove screw (2), lockwasher (3), and solenoid valve wire (4) from solenoid (5) for Model A. Disconnect wire (4) from engine brake solenoid valve (5) for Model B.

(3) Loosen connector nut (6) between supply brake (7) and drone (8).

(4) Screw connector (9) into drone (8) to clear supply brake (7).

https://truckmanualshub.com/

Engine Brake Retarder Maintenance Instructions (Cont)

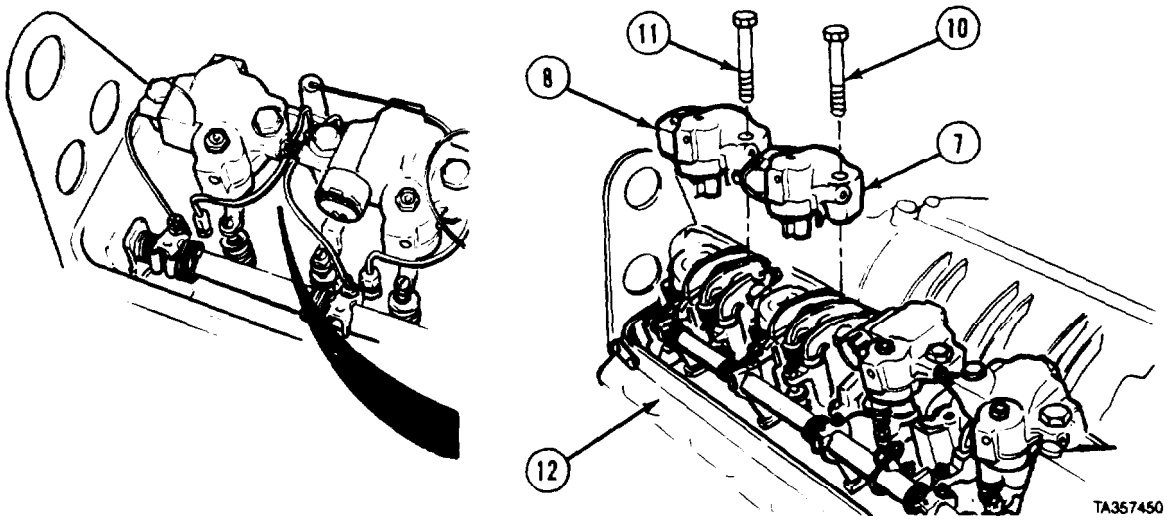

(5) Remove two mounting screws (10) from supply brake (7) and two mounting screws (11) from drone (8).
(6) Remove supply brake (7) and drone (8) from cylinder head (12).

(7) Remove connector (9) and nut (6) from drone (8).
(8) Remove seal ring (13) from supply brake (7).
(9) Repeat steps (2) through (8,) for remaining supply brake and drone.

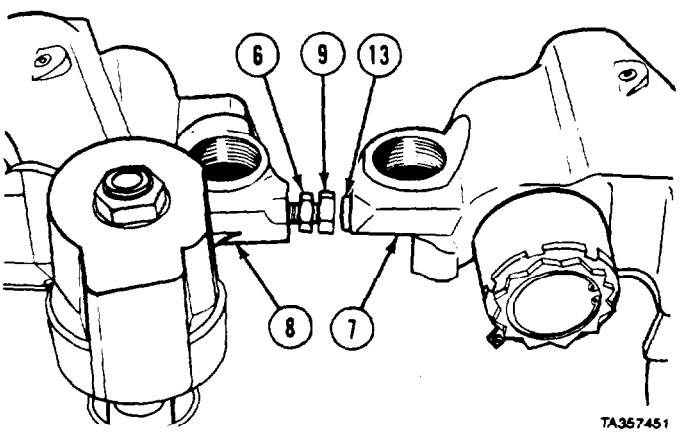

b. Installation.
(1) Install seal ring (1) in supply brake (2).

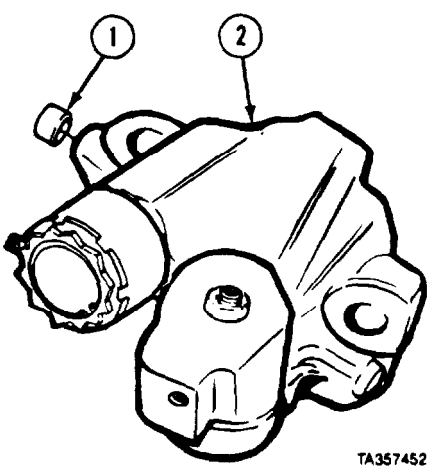

https://truckmanualshub.com/

11-2. ENGINE BRAKE RETARDER REMOVAL/INSTALLATION (CONT).

(2) Install connector (3) with nut (4) in drone (5).
(3) Screw connector (3) in about 1/2-in. (13 mm).

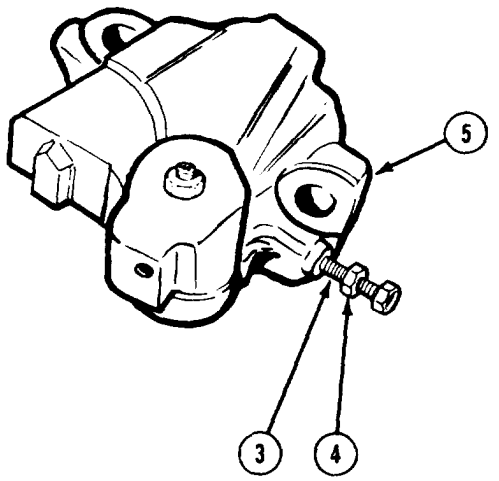

NOTE

Clean engine mounting surface before positioning supply brakes and drones on engine.

(4) Position master piston fork assembly (6) over injector rocker clevis (7).
(5) Install supply brake (2) and drone (5) with four mounting screws (8) through rocker arm shaft (9) to cylinder head (10).
(6) Tighten screws (8) to 45 lb-ft (61 N•m).
(7) Tighten screws (8) to 88 to 92 lb-ft (119 to 124 N•m).
(8) Move master piston fork assembly (6) up and down several times to make sure it rides freely on injector rocker clevis (7).
(9) Unscrew connector (3) from drone (5) until connector covers seal ring (1) and makes contact with supply brake (2).

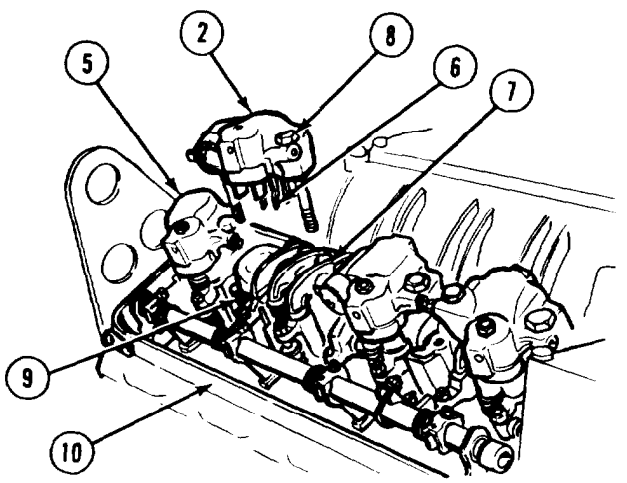

CAUTION

Be sure screw is backed out 1/3 turn from contact point to provide working clearance. If the screw is allowed to contact adjacent housing during brake operation, the screw will break resulting in leakage and loss of engine braking.

(10) After connector (3) makes contact, back off connector 1/3 turn. Hold connector and tighten nut (4) against drone (5).

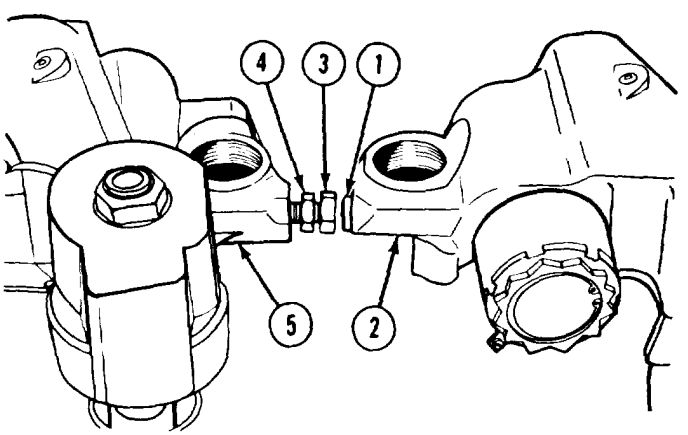

https://truckmanualshub.com/

Engine Brake Retarder Maintenance Instructions (Cont)

(11) Install solenoid valve wire (11), screw (12), and lockwasher (13) on solenoid valve (14) for Model A. Connect wire (11) on engine brake solenoid valve (14) for Model B.

(12) Repeat steps *(1)* through (11) for remaining supply brake and drone.

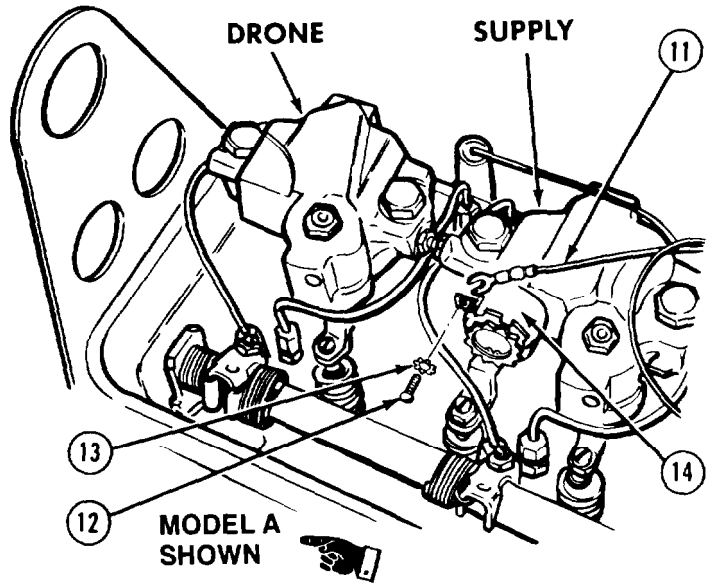

NOTE

- Tag and mark wires before removal.
- There are two kinds of engine brake wiring harnesses. Model A has a wire extending through the cylinder head and uses a "butt type" connector while Model B has a "spade type" connector. Model A is shown.

(13) Connect engine brake wire (15) with butt connector (16) for Model A, and connect wire (15) for Model B.

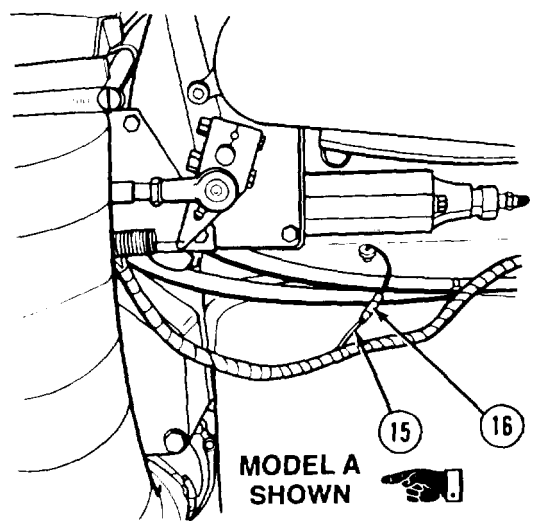

c. Follow-on Maintenance.

(1) Adjust exhaust valve clearance (para 19-2).
(2) Adjust fuel injector timing (para 19-4).
(3) Adjust engine brake retarder (para 19-3).
(4) Install rocker covers (TM 9-2320-279-20).
(5) Connect batteries (TM 9-2320-279-20).
(6) Start and run engine for 10 minutes (TM 9-2320-279-10).
(7) Turn on engine brake switch (TM 9-2320-279-10).
(8) Open throttle to full engine speed and release.
(9) Check engine brake operation when returning to idle.
(10) Repeat full-throttle and release procedure six to eight times to bleed air from engine brake system.
(11) Shut off engine (TM 9-2320-279-10).

END OF TASK

https://truckmanualshub.com/

11-3. ENGINE BRAKE RETARDER REPAIR,

This task covers:

a. Disassembly
b. Cleaning/Inspection
c. Assembly
d. Follow-on Maintenance

INITIAL SETUP

Models
All

Test Equipment
None

Special Tools
Gage, feeler 007958

Supplies
Oil, fuel, diesel, Item 44, Appendix C
Oil, lubricating, Item 48, Appendix C
Compound, sealing, lubricating, Item 31, Appendix C

Personnel Required
MOS 63W, Wheel vehicle repairer

References
None

Equipment Condition

TM or Para	*Condition Description*
	Engine brake retarder on clean work surface.

Special Environmental Conditions
None

General Safety Instructions
None

Level of Maintenance
Direct Support

a. Disassembly,

(1) Remove screw (1) and cover (2) from supply housing (3).
(2) Remove two springs (4 and 5) and control valve (6) from supply housing (3).

https://truckmanualshub.com/

Engine Brake Retarder Maintenance Instructions (Cont)

NOTE

- Solenoid valve is used on supply housing only.
- There are three models of solenoid valves. Models A and B use a screw and lockwasher to attach the solenoid wire, while Model C has a spade (push-on) type connector. If a Model A or B solenoid must be replaced with a Model C solenoid, the housing must be changed also. Refer to TM 9-2320-279-24P for proper identification of parts.

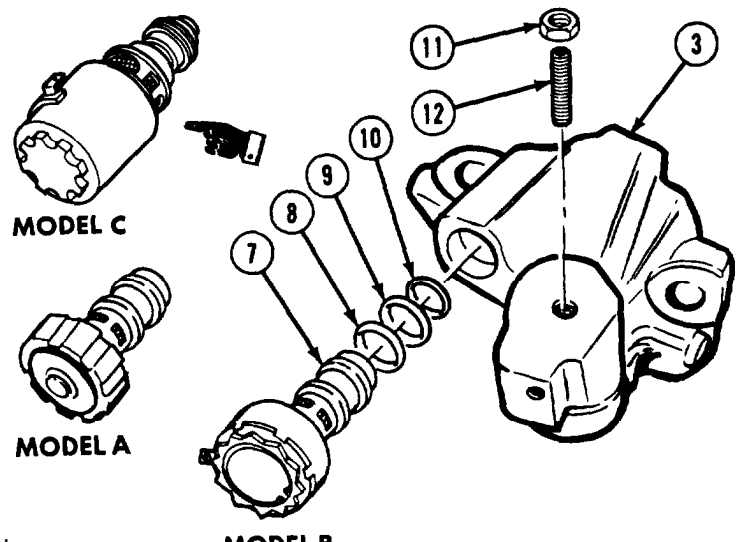

(3) Remove solenoid valve (7) from supply housing (3).
(4) Remove two seals (8 and 9) from solenoid valve (7).
(5) Remove seal (10) from supply housing (3).
(6) Remove nut (11) and setscrew (12) from supply housing (3).

WARNING

Slave piston is retained by spring under compression. Spring can be discharged and cause personal injury.

(7) Turn supply housing (3) over and use press to hold slave piston spring (13) and spring retainer (14) in place.
(8) Remove retaining ring (15).
(9) Slowly release force from spring retainer (14) and release slave piston spring (13).
(10) Remove spring retainer (14), spring (13), and slave piston (16) from supply housing (3).

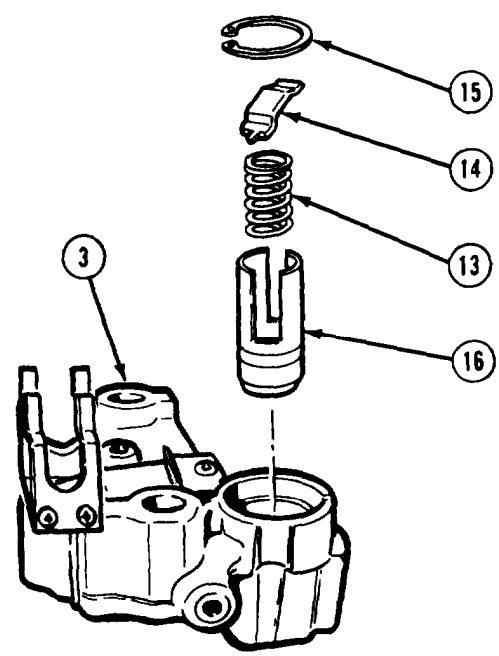

https://truckmanualshub.com/

Engine Brake Retarder Maintenance Instructions (Cont)

11-3 ENGINE BRAKE RETARDER REPAIR (CONT).

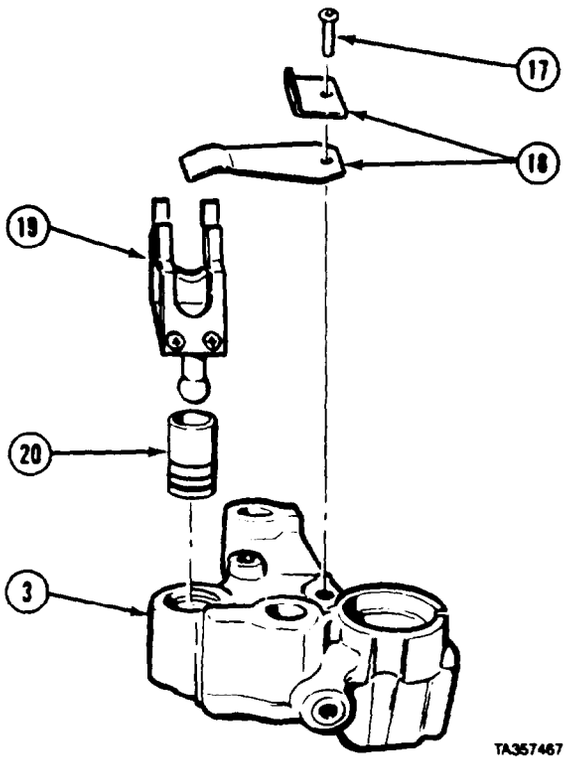

(11) Remove screw (17), lockplate assembly (18), and fork assembly (19) from supply housing (3).
(12) Remove master piston (20).

b. Cleaning/Inspection.

WARNING

- When working with fuel, post signs that read “NO SMOKING WITHIN 50 FEET”. To avoid serious injury or death, keep fuel away from open fire and keep fire extinguisher within easy reach when working with fuel.
- Compressed air used for cleaning purposes will not exceed 30 psi (207 kPa). Use only with effective chip guarding and personal protective equipment (goggles/shield, gloves, etc.).

(1) Clean housings and parts with diesel fuel, and dry with compressed air.
(2) Inspect all parts for damage. Replace damaged parts.

https://truckmanualshub.com/

Engine Brake Retarder Maintenance Instructions (Cont)

c. Assembly.

(1) Apply lubricating oil to master piston (1).

(2) Install master piston (1) and fork assembly (2) in bottom of supply housing (3).

WARNING

Adhesives, solvents, and sealing compounds can burn easily, can give off harmful vapors, and are harmful to skin and clothing. To avoid injury or death, keep away from open fire and use in well-ventilated area. If adhesive, solvent, or sealing compound gets on skin or clothing, wash immediately with soap and water.

(3) Apply sealing and lubricating compound to screw (4) and install lockplate assembly (5) and screw. Tighten screw to 50 lb-in (5.5 N•m).

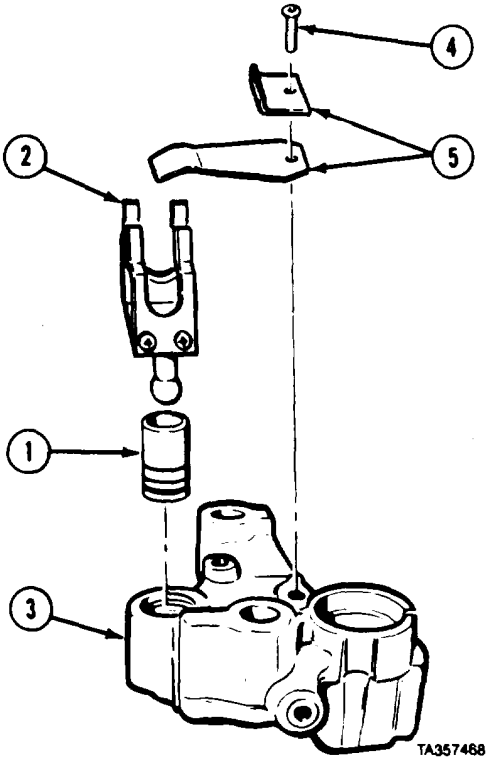

(4) Apply lubricating oil to slave piston (6) and slave piston spring (7).

(5) Install slave piston (6) and slave piston spring (7) in supply housing (3).

(6) Aline tab on spring retainer (8) with slot in supply housing (3).

(7) Press spring (7) and spring retainer (8) into supply housing (3), to just below retaining ring groove (10) and install retaining ring (11).

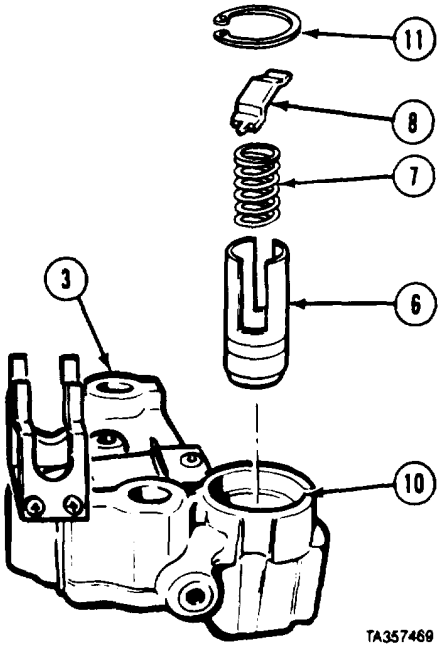

https://truckmanualshub.com/

11-3. ENGINE BRAKE RETARDER REPAIR (CONT).

(8) Apply oil to seal (12) and install in supply housing (3).

(9) Apply lubricating oil to two seals (13 and 14), and install on solenoid valve (15).

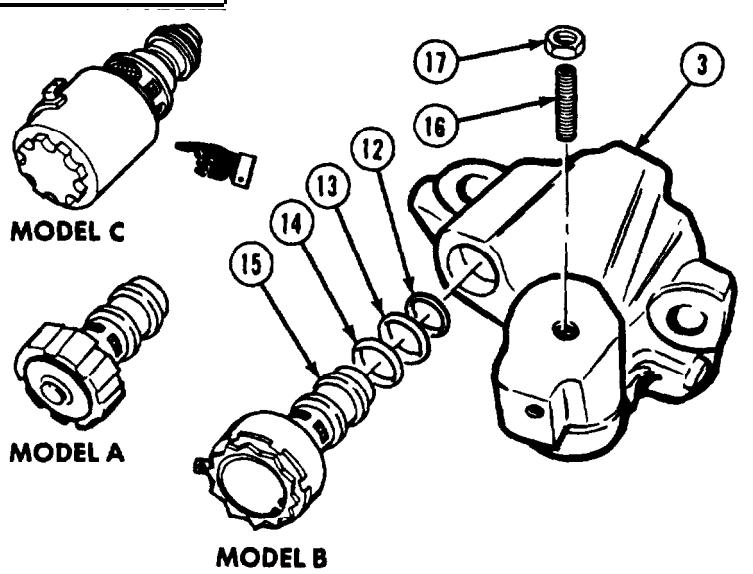

NOTE

There are three models of solenoid valves. Models A and B use a screw and lockwasher to attach the solenoid wire, while Model C has a spade (push-on) type connector. If a Model A or B solenoid must be replaced with a Model C solenoid, the housing must be changed also. Refer to TM 9-2320-279-24P for proper identification of parts.

(10) Install solenoid valve (15) in supply housing (3).

(11) Install setscrew (16) with nut (17) in supply housing (3).

(12) Apply lubricating oil to control valve (18) and install control valve and two springs (19 and 20) in supply housing (3).

WARNING

Adhesives, solvents, and sealing compounds can burn easily, can give off harmful vapors, and are harmful to skin and clothing. To avoid injury or death, keep away from open fire and use in well-ventilated area. If adhesive, solvent, or sealing compound gets on skin or clothing, wash immediately with soap and water.

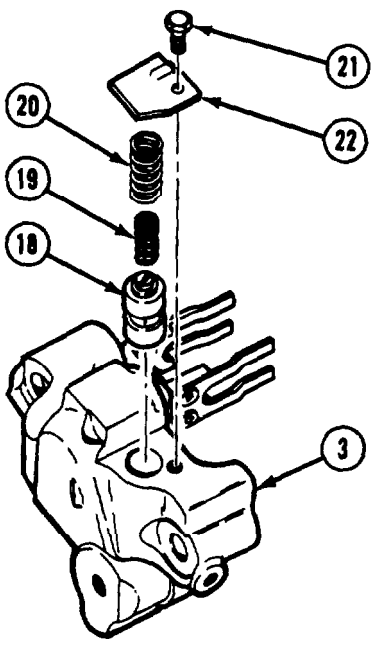

(13) Apply sealing and lubricating compound to screw (21) and install cover (22) and screw in supply housing (3).

(14) Tighten screw (21) to 110 lb-in. (12 N•m).

d. Follow-on Maintenance. None,

END OF TASK

https://truckmanualshub.com/

11-4. ENGINE BRAKE WIRE HARNESS REMOVAL/INSTALLATION.

This task covers:

a. Removal
b. Installation
c. Follow-on Maintenance

INITIAL SETUP

Models
All

Test Equipment
None

Special Tools
None

Supplies
Connector, electrical butt, Item 34, Appendix C
Tags, identification, Item 61, Appendix C

Personnel Required
MOS 63W, Wheel vehicle repairer

References
None

Equipment Condition

TM or Para	*Condition Description*
TM 9-2320-279-20	Batteries disconnected.
TM 9-2320-279-20	Rocker covers removed.

Special Environmental Conditions
None

General Safety Instructions
None

Level of Maintenance
Direct Support

a. Removal.

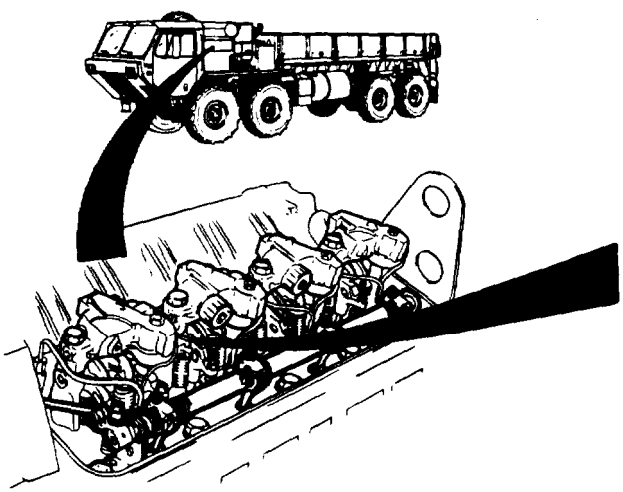

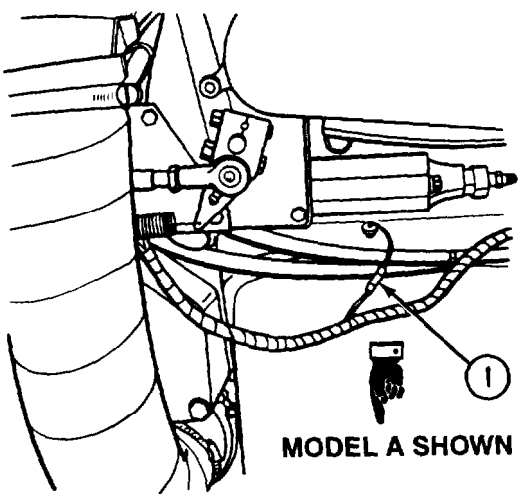

NOTE

- There are two models of engine brake wire harnesses. Model A has a wire extending through the cylinder head and uses a butt connector to connect to the engine harness. Model B has a spade (push-on) type connector. The following procedure covers both models.
- Engine brake wire harness is removed from left and right cylinder heads the same way.

Tag and mark wires before removal.

(1) Cut wire (1) for Model A. Disconnect wire (1) for Model B.

https://truckmanualshub.com/

11-4. ENGINE BRAKE WIRE HARNESS REMOVAL/INSTALLATION (CONT).

(2) Remove screw (2), lockwasher (3), and wire (4) from both engine brake solenoids (5) for Model A. Disconnect wire (4) from both engine brake solenoids (5) for Model B.

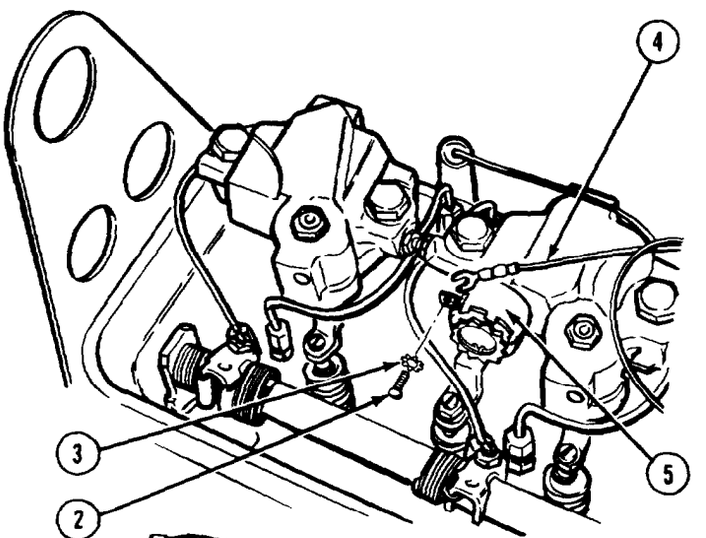

MODEL A SHOWN

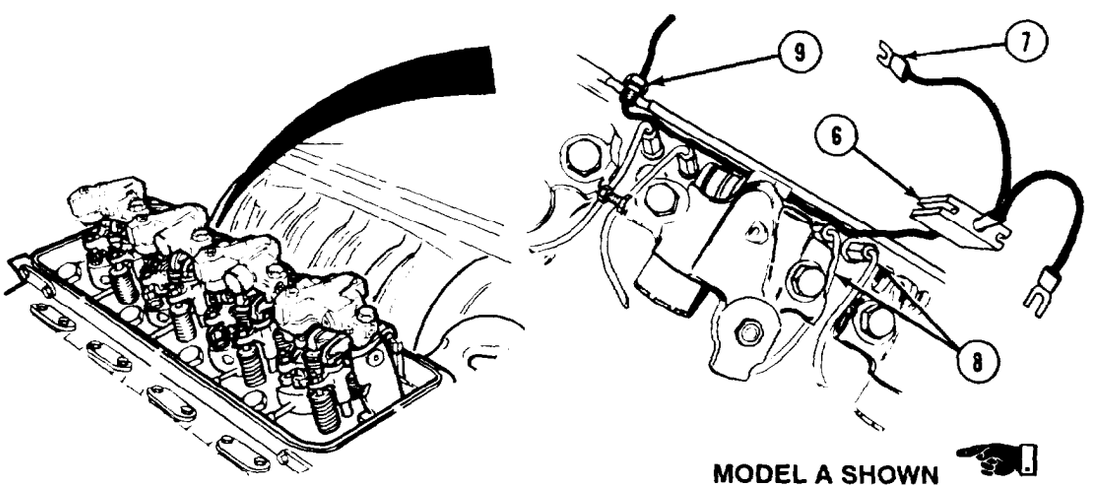

MODEL A SHOWN

(3) Remove spacer (6) and harness (7) from two fuel tubes (8).
(4) Remove bushing (9).

https://truckmanualshub.com/

Engine Brake Retarder Maintenance Instructions (Cont)

b. Installation.

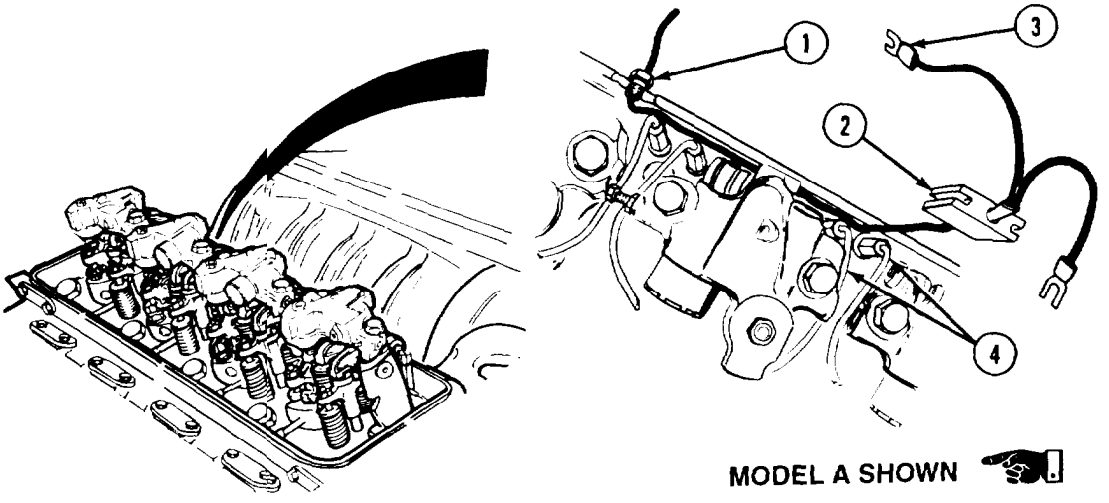

NOTE

- There are two models of engine brake wire harnesses. Model A has a wire extending through the cylinder head and uses a butt connector to connect to the engine harness. Model B has a spade (push-on) type connector. The following procedure covers both models.
- Engine brake wire harness is installed in left and right cylinder heads the same way.

(1) Install bushing (1).

(2) Install spacer (2) and harness (3) on two fuel tubes (4).

(3) Install wire (5) on both engine brake solenoids (6) with screw (7) and lockwasher (8) for Model A. Connect wire (5) on both engine brake solenoids for Model B.

https://truckmanualshub.com/

11-4. ENGINE BRAKE WIRE HARNESS REMOVAL/INSTALLATION (CONT).

(4) Connect wire (9) using butt connector for Model A. Connect wire (9) for Model B.

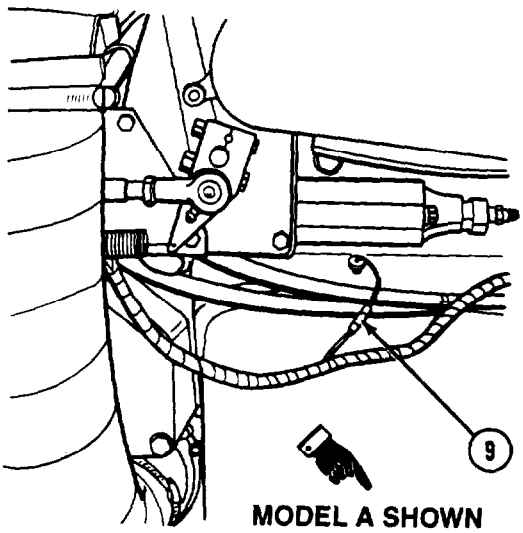

c. Follow-on Maintenance.

(1) Install rocker covers (TM 9-2320-279-20).
(2) Connect batteries (TM 9-2320-279-20).

END OF TASK

https://truckmanualshub.com/

CHAPTER 12
FUEL INJECTOR MAINTENANCE

Contents

	Para	Page
General	12-1	12-1
Fuel Injector Removal/Installation	12-2	12-1
Fuel Injector Repair	12-3	12-5
Fuel Injector Testing	12-4	12-21
Injuetor Control Tube Removal/Installation.	12-5	12-29

Section 1. INTRODUCTION

12-1. GENERAL. [This chapter covers removal, installation, and repair of the fuel injectors. The subassemblies and parts which must be removed before the fuel injector components can be removed will be referenced to other paragraphs or chapters of this manual, TM 9-2320-279-10, TM 9-2320-279-20, or TM 9-2320-279-20.

Section II. FUEL INJECTOR ASSEMBLY

Fuel Injector Maintenance Instructions

12-2. FUELINJECTORREMOVAL/iNSTALLATION.

This task covers:

a. Removal
b. Installation
c. Follow-on Maintenance

INITIAL SETUP

Models
All

Test Equipment
None

Special Tools
None

Supplies
Oil, diesel fuel, Item 44, Appendix C
Caps, shipping, Item 11, Appendix C

Personnel Required
MOS 63W, Vehicle wheel repairer

References
None

Equipment Condition

TM or Para	*Condition Description*
Para 11-2	Engine brake retarder removed.
Para 7-5	Rocker arms removed.

Special Environmental Conditions
None

General Safety Instructions
None

Level of Maintenance
Direct Support

https://truckmanualshub.com/

12-2. FUEL INJECTOR REMOVAL/INSTALLATION (CONT).

a. Removal.

NOTE

This procedure tells how to remove and install one injector. Remove and install other seven injectors in same way.

(1) Loosen retaining nut (1) and injector control rack lever adjusting screw (2).
(2) Slide injector control rack lever (3) away from injector control rack (4).

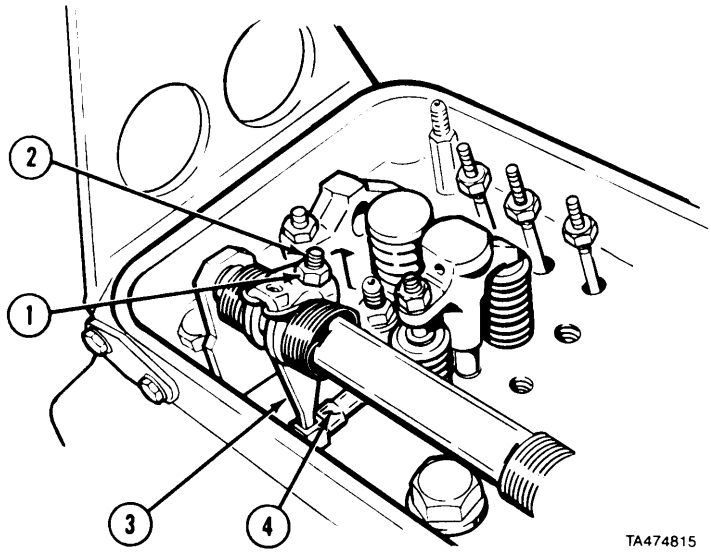

(3) Mark and remove screw (5), convex washer (6), and clamp (7).

NOTE

Injector tube hole in cylinder head must be covered to keep dirt out.

(4) Remove injector (8).

WARNING

- Compressed air used for cleaning purposes will not exceed 30 psi (207 kPa). Use only with effective chip guarding and personal protective equipment (goggles/shield, gloves, etc.).
- When working with fuel, post signs that read "NO SMOKING WITHIN 50 FEET". To avoid serious injury or death, keep fuel away from open fire and keep fire extinguisher within easy reach when working with fuel.

(5) Clean exterior of each injector (8) with diesel fuel and dry with compressed air.

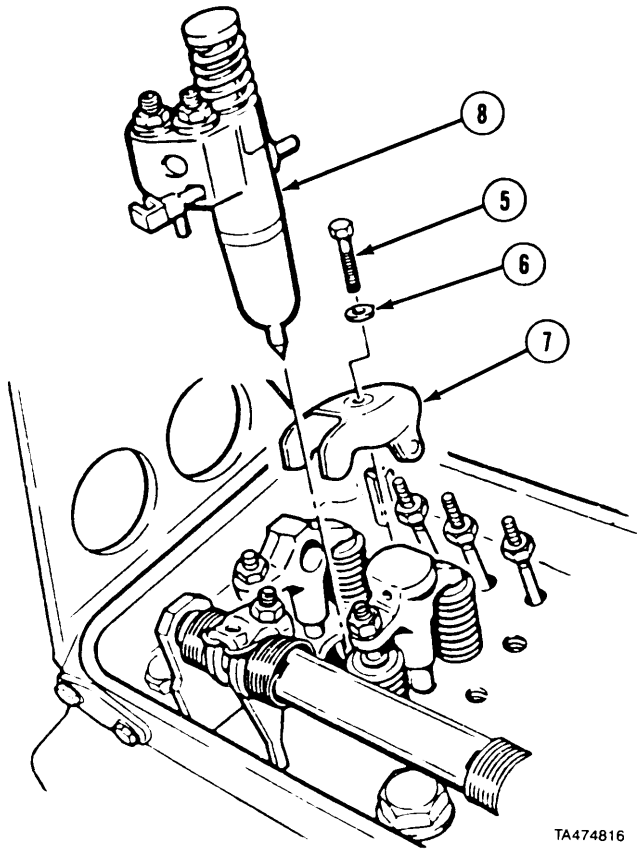

https://truckmanualshub.com/

b. Installation.

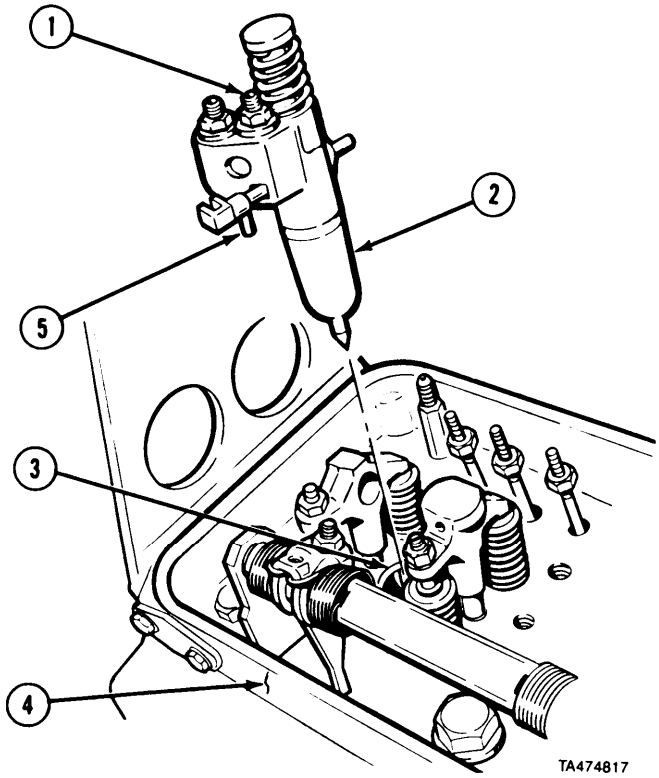

(1) Add diesel fuel to fuel inlet filter cap(l) to fill injector 2).
(2) Remove cover from injector tube hole\ (3).
(3) Insert injector (2) into injector tube hole (3) in cylinder head (4). Aline dowel pin (5) in body of injector with locating hole in cylinder head.

(4) Slide injector rack control lever (6) into injector control rack (7).

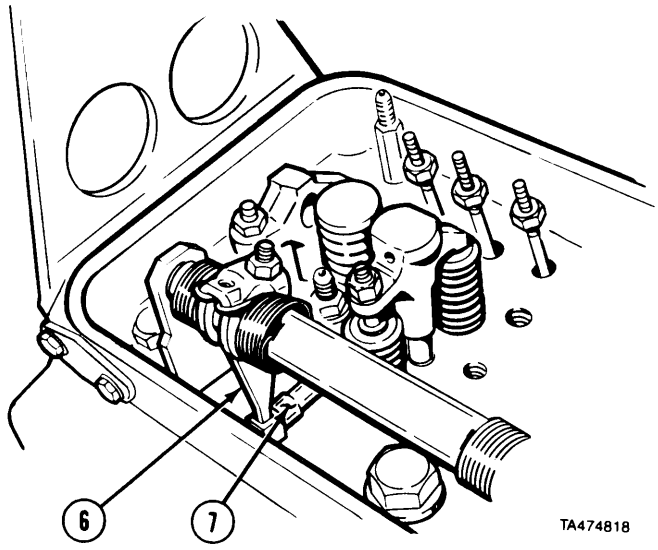

https://truckmanualshub.com/

12-2. FUEL INJECTOR REMOVAL/INSTALLATION (CONT).

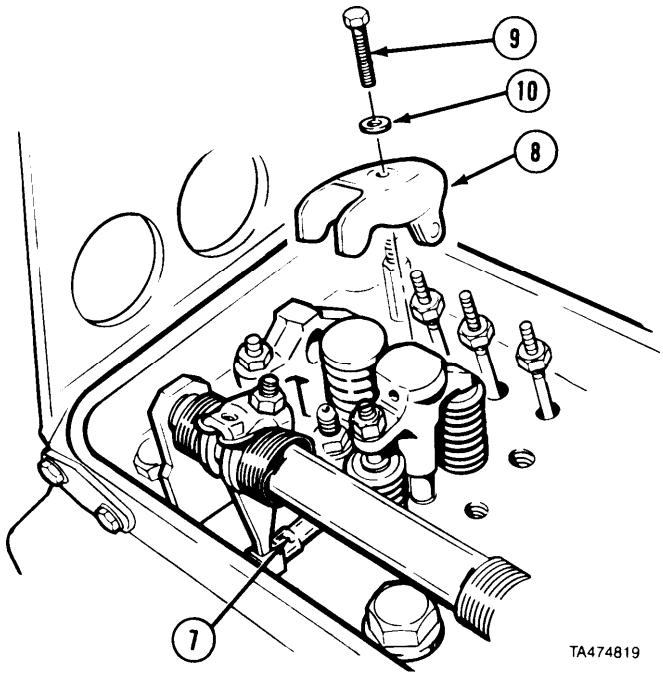

CAUTION

Make sure clamp does not interfere with injector spring or valve springs. Interference of clamp with spring travel can cause damage to components.

(5) Install clamp (8), screw (9), and convex washer (10). Tighten screw to 20 to 25 lb-ft (27 to 34 N•m).

(6) Check injector control rack (7) for free movement. Loosen screw (9) if injector control rack is too tight to allow easy checking. Retighten to 20 to 25 lb-ft (27 to 34 N-m).

c. Follow-on Maintenance.

(1) Install rocker arms (para 7-5).
(2) Install engine brake retarder (para 11-2).
(3) Adjust exhaust valve clearance (para 19-4).
(4) Adjust fuel injector timing (para 19-4).
(5) Adjust injector rack control lever (para 19-6).
(6) Install rocker covers (TM 9-2320-279-20).

END OF TASK

https://truckmanualshub.com/

12-3. FUEL INJECTOR REPAIR.

This task covers:

a. Disassembly
b. Cleaning/Inspection
c. Needle Valve Lift Test
d. Needle Valve Tip Test
e. Assembly
f. Follow-on Maintenance

INITIAL SETUP

Models
All

Test Equipment
Tension tester

Special Tools
Injector tip gage J5119
Rack tester kit J22396
Injector service kit J23435-02
Brass wire brush J7944
Reamer, injector J2 1089
Block set, lapping J22090-A
Polishing stick set J22964
Injector test kit J23010
Spray tip gage J9462-02

Supplies
Oil, fuel, diesel, Item 44, Appendix C
Methyl ethyl ketone, Item 42, Appendix C
Solvent, dry cleaning, Item 60, Appendix C
Lapping and grinding compound, Item 27, Appendix C
Oil, test, fuel injector, Item 52, Appendix C
Compound, polishing Item 28, Appendix C
Caps, shipping and sealing, Item 11, Appendix C
Ties, cable, plastic, Item 66, Appendix C

Personnel Required
MOS 63W, Vehicle wheel repairer

References
None

Equipment Condition

TM or Para	*Condition Description*
	Fuel injector on clean work surface.

Special Environmental Conditions
Work in a clean, well ventilated work area.

General Safety Instructions

WARNING

- Fuel and test oil are very flammable and can explode easily. To avoid serious injury or death, keep fuel away from open fire and keep fire extinguisher within easy reach when working with fuel.
- When working with fuel, post signs that read “NO SMOKING WITHIN 50 FEET.”
- When testing or adjusting fuel injectors, do not place hands or arms in front of injector spray tip.
- Fuel spray from an injector has sufficient penetrating power to puncture the flesh and destroy tissue. Should fuel enter blood stream, it can cause blood poisoning.

Level of *Maintenance*
General Support

https://truckmanualshub.com/

12-3. FUEL INJECTOR REPAIR (CONT).

a. Disassembly.

(1) Put injector assembly (1) upright in rack tester kit.

NOTE

One filter is used in inlet side injector. No filter is used in outlet side injector.

(2) Remove two injector fittings (2), two gaskets (3), and one filter (4) from injector body (5).

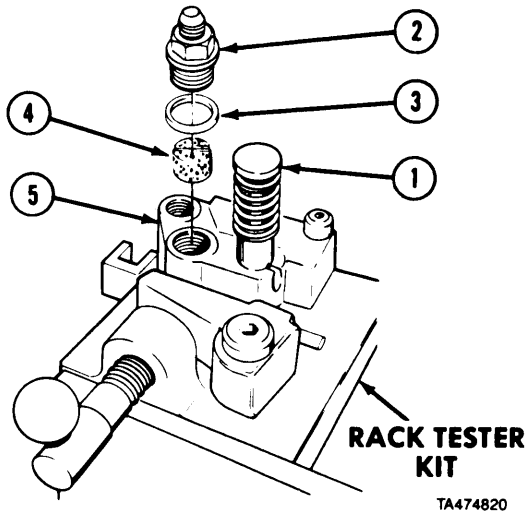

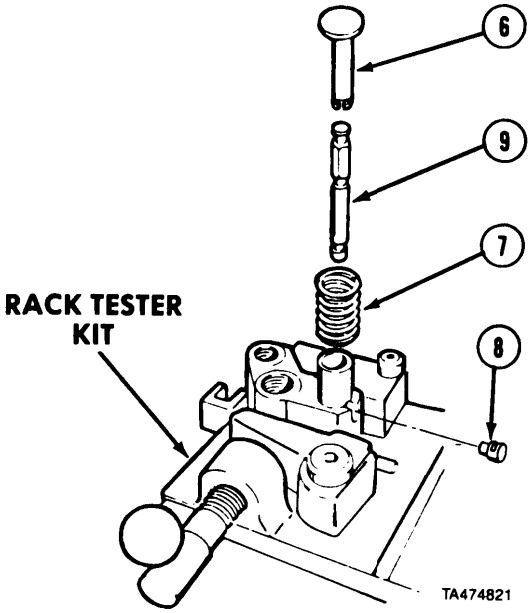

(3) Press follower guide (6) down by hand, raise follower spring (7) above stop pin (8), and remove stop pin. Allow follower spring to rise slowly.

(4) Remove follower guide (6), plunger pin (9), and follower spring (7).

https://truckmanualshub.com/

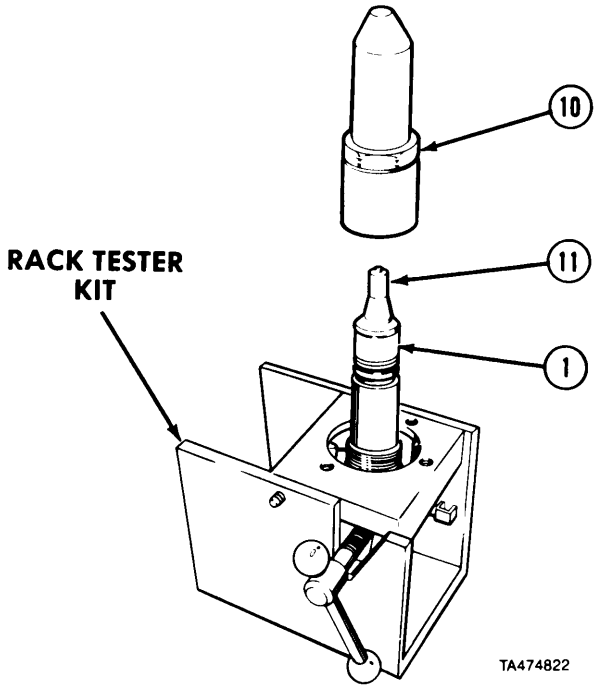

(5) Turn injector (1) upside down in rack tester kit.
(6) Loosen injector valve nut (10) using injector nut socket from injector service kit.
(7) Lift injector valve nut (10) straight out without touching spray tip assembly (11).

CAUTION

If spray tip assembly does not remove easily from injector valve nut, follow step (8). Use of other removal procedures can damage spray tip assembly.

(8) Drive spray tip assembly (11) through injector valve nut (10) using injector spray tip driver from injector service kit.

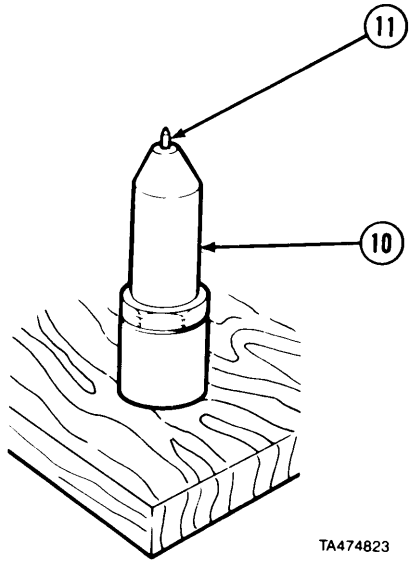

https://truckmanualshub.com/

12-3. FUEL INJECTOR REPAIR (CONT).

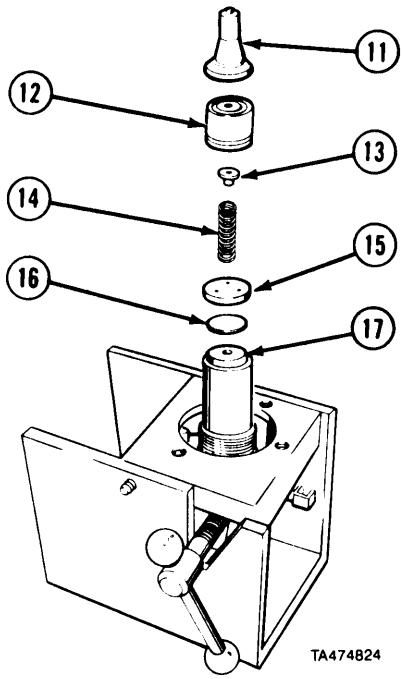

(9) Remove spray tip assembly (11), spring cage (12), spring seat (13), valve helical spring (14), check valve cage (15), and check valve (16) from bushing (17).

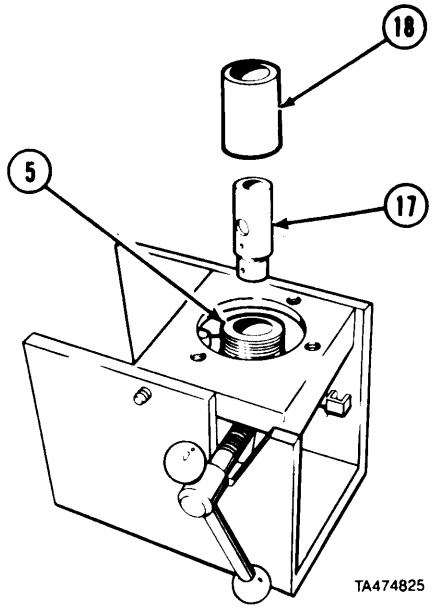

(10) Lift bushing (17) and spill deflector (18) straight out of injector body (5).

https://truckmanualshub.com/

Fuel Injector Maintenance Instructions (Cont)

NOTE

Sleeve spacer and spur gear may fall out of injector body when body is turned over.

(11) Turn injector body (5) upside down to remove sleeve spacer (19) and spur gear (20).

(12) Remove injector body (5) from rack tester kit.

NOTE

There are two colors of preformed packing. Model A is black and Model B is red. Either packing may be used.

(13) Remove injector rack (21) and preformed packing (22) from injector body (5).

(14) Remove needle valve (23) from spray tip (11).

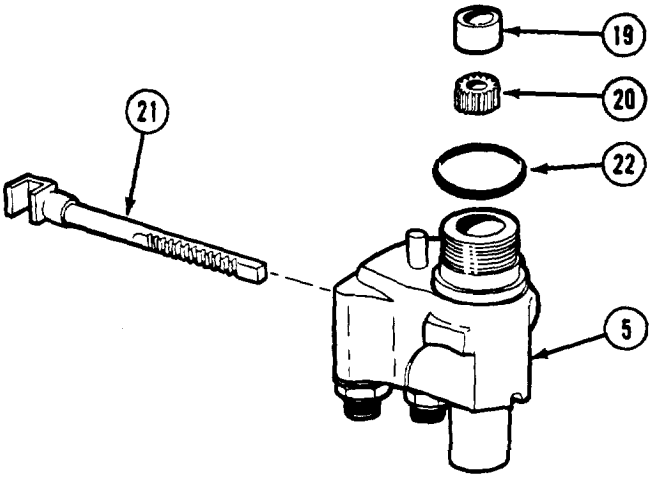

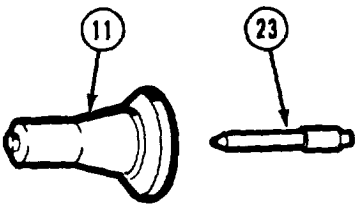

b. Cleaning/Inspection.

WARNING

Adhesives, solvents, and sealing compounds can burn easily, can give off harmful vapors, and are harmful to skin and clothing. To avoid injury or death, keep away from open fire and use in well-ventilated area. If adhesive, solvent, or sealing compound gets on skin or clothing, wash immediately with soap and water.

CAUTION

- Injector parts must be cleaned and placed on an extremely clean surface. Dirt particles cause most injector problems, and dirt in injectors can result in serious engine damage.
- Do not clean injector parts with rags. Lint particles can become trapped in injectors and cause damage. Use lint-free cloths.

(1) Wash all injector parts in clean diesel fuel oil.

WARNING

Compressed air used for cleaning purposes will not exceed 30 psi (207 kPa). Use only with effective chip guarding and personal protective equipment (goggles/shield, gloves, etc.).

(2) Dry injector parts with compressed air. Clean out all passages, drilled holes, and slots in injector parts.

https://truckmanualshub.com/

Fuel Injector Maintenance Instructions (Cont)

12-3. FUEL INJECTOR REPAIR (CONT).

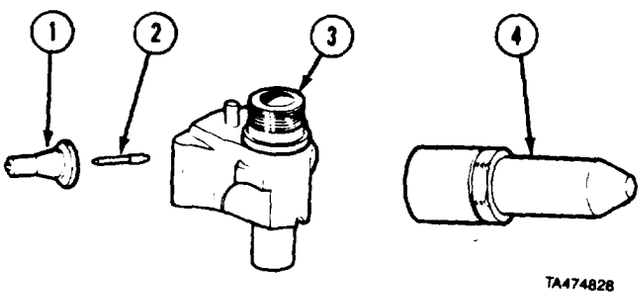

(3) Clean carbon from inside spray tip (1) by soaking in methyl ethyl ketone for 15 minutes.

CAUTION

Use care when inserting carbon remover in spray tip. Contact with valve seat can damage valve.

(4) Clean spray tip (1) using carbon remover from injector service kit.

(5) Clean spray tip (1) in diesel fuel oil, and dry with compressed air.

CAUTION

Do not buff excessively. Do not use steel wire buffing wheel or damage to spray tip holes can result.

(6) Clean needle valve (2) and outside surface of injector body (3), injector valve nut (4), and spray tip (1) with brass wire brush. Use spray tip carbon remover to hold spray tip against brass wire brush.

(7) Hone a 0.006 in. (0.152 mm) spray hole wire from injector service kit until free of burrs. Taper one end of-spray hole wire on wire sharpening stone from injector service kit.

(8) Clean orifices in spray tip (1) using pin vise and spray hole wire from injector service kit.

(9) Clean and brush passages in injector body (3), using fuel hole cleaning brush and rack hole cleaning brush from injector service kit.

(10) Dry and blow out passages with compressed air.

(11) Insert injector body reamer in injector body (3) turning clockwise until bore face is reamed.

NOTE

Use straight fluted reamer with 0.375-in. diameter.

(12) Insert reamer into ring bore inside injector body (3) and turn clockwise to remove bum.

(13) Wash injector body (3) in container of diesel fuel oil.

(14) Dry injector body (3) with compressed air.

CAUTION

When removing carbon deposits, use care not to remove excess metal or cause burrs on spray tip seat. Remove only enough metal to make a clean uniform seat to prevent leakage between seat and nut. Excessive reaming can damage injector parts.

(15) Remove carbon deposits from lower inside diameter of injector valve nut (4) using taper reamer from injector service kit.

(16) Inspect seating surface of injector valve nut (4) for nicks, burrs, erosion, or scratches.

https://truckmanualshub.com/

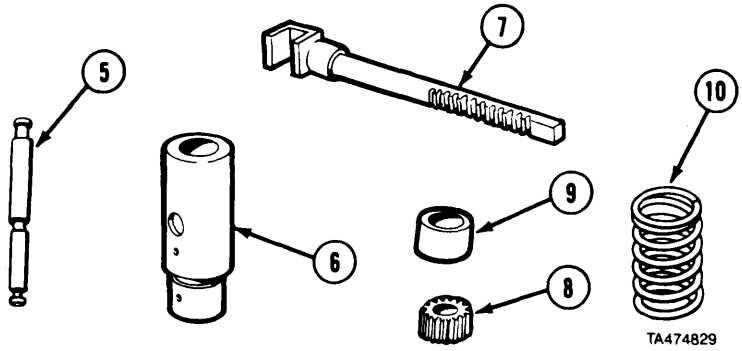

CAUTION

Do not touch finished plunger surfaces with fingers. Dirt and oils from fingers can result in defective operation of injector.

NOTE

Plunger and bushing are matched and must always be replaced as a set.

(1 ?') Inspect plunger pin (5) and bushing (6) for scoring, erosion, chipping, or wear, Remove any sharp edges with a fine stone. Inspect bushing port holes and high pressure bleed hole with injector bushing inspectalite. Replace plunger pin and bushing, as a set, if any damage is found.

(18) Place parts of each injector assembly in clean containers of clean diesel fuel oil. Dry parts with compressed air for inspection.

(19) Inspect teeth on injector rack (7) and spur gear (8) for wear or damage. Inspect gear bore and sleeve spacer (9) for excessive wear, sharp edges, and burrs that might cause flakes of metal in injector.

(20) Inspect follower spring (10) for defects. Check spring with tension tester.

(21) Replace follower spring (10) if a load of less than 70 pounds (3 1.78 kg) will compress it to 1.028-in. (26. 11 mm).

(22) Inspect injector body (3) surface where it contacts injector bushing (6) for scratches or damage.

(23) Lap bushing (6) if slight damage is found. Use lapping block and lapping and grinding compound. See steps (31) to (41) for lapping instructions.

(24) Inspect injector body (3) plugs and dowel pins. Replace injector body if plugs or dowel pins are found loose.

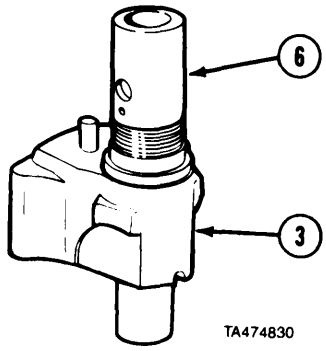

https://truckmanualshub.com/

12-3. FUEL INJECTOR REPAIR (CONT).

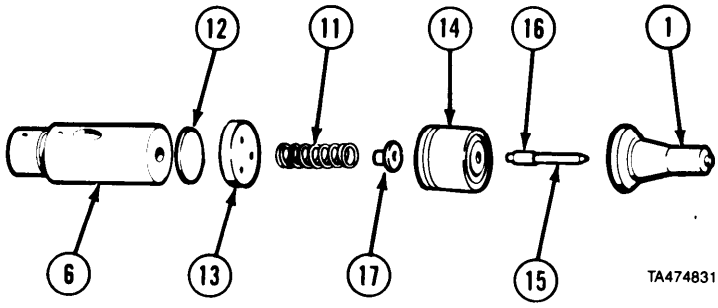

(25) Inspect valve spring (11) for wear or damage. Replace if worn or damaged.

(26) Inspect sealing surfaces of injector valve parts. Use magnifying glass and inspect bushing (6), check valve (12), check valve cage (13), and spring cage (14) for burrs, nicks, erosion, and scratches. Replace damaged parts.

(27) Inspect seating area of needle valve (15) for wear or damage. Inspect needle quill (16) and contact point with spring seat (17).

CAUTION

Make sure no polishing compound gets on lapped surfaces located higher than end of spray tip. Any lapping on these surfaces can alter near-perfect fit between needle valve and tip.

(28) Inspect needle valve seat in spray tip (l). Polish seat area with polishing stick from injector service kit coated with polishing compound.

(29) Insert polished tapered end of polishing stick directly into center of spray tip (1) until it bottoms. Rotate polishing stick 6 to 12 times with light pressure.

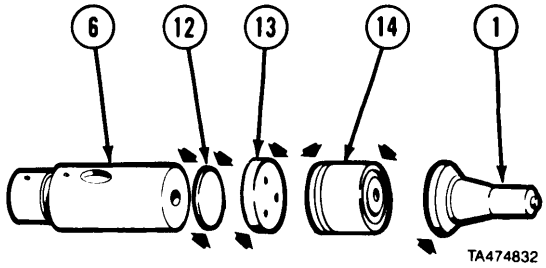

(30) Lap sealing surfaces (see arrows) of injector valve parts. Follow given lapping procedures for bushing (6), check valve (12), check valve cage (13), spring cage (14), and spray tip (1).

(31) Clean lapping blocks with compressed air only.

(32) Spread lapping and grinding compound on first lapping block.

CAUTION

- Do not press on parts when lapping, but use enough pressure to keep part flat on lapping block or injector malfunction will result.
- Do not lap parts excessively. Inspect injector parts for minimum thickness. Excessive lapping can result in improper seating surfaces and injector malfunction.

NOTE

Minimum thicknesses of used injector parts are:

Spray tip (shoulder) O. 199-in. (5.05 mm)
Check valve cage 0.165 to 0.163-in. (4.19 to 4.14 mm)
Check valve 0.022-in. (0.55 mm)
Valve spring cage 0.602-in. (15.29 mm)

(33) Place injector part flat on lapping block and using a figure-eight motion, move part back and forth.

(34) Wash injector parts in dry cleaning solvent after lapping.

https://truckmanualshub.com/

(35) Dry injector parts with compressed air.
(36) Apply lapping and grinding compound to second lapping block.
(37) Move dry injector part flat on lapping block lightly in a figure-eight motion. Lap part until finish is smooth.
(38) Clean injectr parts in dry cleaning solvent and dry with compressed air.
(39) Place dry injector part on third lapping block, using no lapping and grinding compound.
(40) Keep injector part flat and move it across third block several times in a figure-eight motion.
(41) Clean all lapped injector parts in diesel fuel oil and dry with compressed air.

c. Needle Valve Lift Test.

(1) Adjust spray tip gage to zero.
(2) Install spray tip (1) and needle valve (2) assembly on gage with needle valve quill (3) in plunger of gage.

NOTE

Needle valve lift limits are 0.008 to 0.018-in. (0.203 to 0.457 mm).

(3) If valve lift is above limits, replace spray tip and needle valve assembly (4). If valve lift is below limits, inspect for contamination and clean needle valve assembly (4).

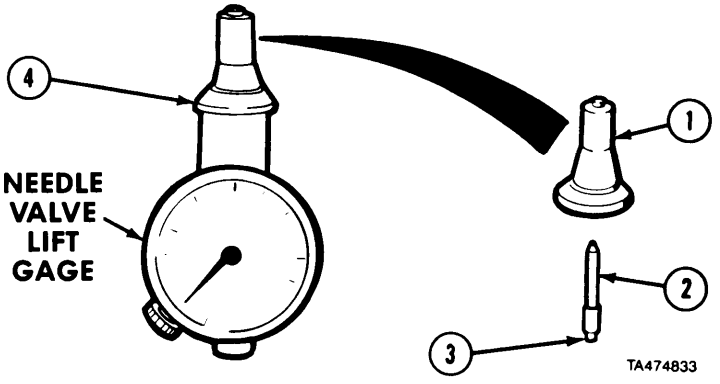

d. Needle Valve Tip Test.

(1) Install tip test adapter (1) in vise and install check valve cage (2), spring (3), spring seat (4), spring cage (5), needle valve (6), and spray tip (7).
(2) Install injector valve nut (8) over spray tip assembly (7) onto tip test adapter (l).
(3) Tighten injector valve nut (8) to 75 to 85 lb-ft (102 to 115 N-m).
(4) Remove tip test adapter (1) and assembled parts from vise.

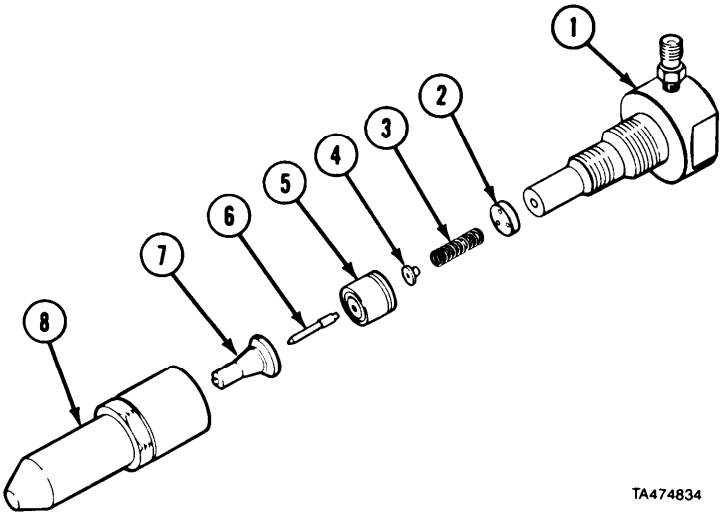

https://truckmanualshub.com/

12-3. FUEL INJECTOR REPAIR (CONT).

(5) Set up injector test kit (refer to para 12-4).
(6) Loosen thumb screw (9) and lift clamping head (10).
(7) Install oil flow adapter (1 1), open end up, on injector test fixture (12).
(8) Install clamping head (10) on post (13) so that thumb screw (9) fits in upper hole (14) on post.
(9) Tighten thumb screw (9).
(10) Position fuel connector adapter (15) over oil flow adapter (11).
(11) Pull pump lever (16) forward to seat fuel connector adapter (15) on oil flow adapter (11).

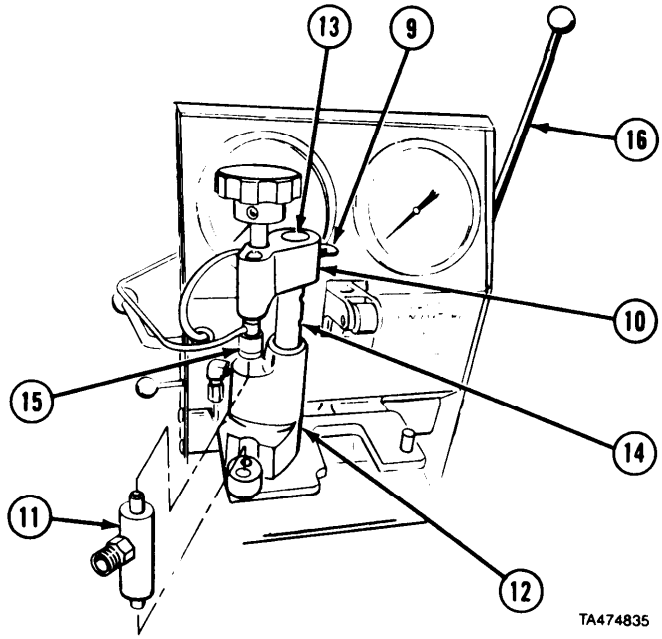

(12') Install coupling nut (17), small hole first, on tube (18) as far as it will go.
(13) Install tube (18) and coupling nut (17) on tip test adapter (l).
(14) Install tube (18) and tip test adapter (1) on oil flow adapter (11).

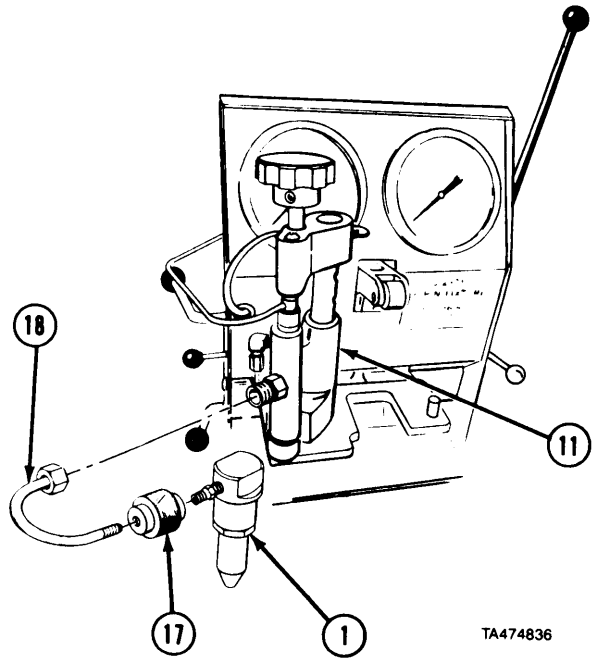

https://truckmanualshub.com/

Fuel Injector Maintenance Instructions (Cont)

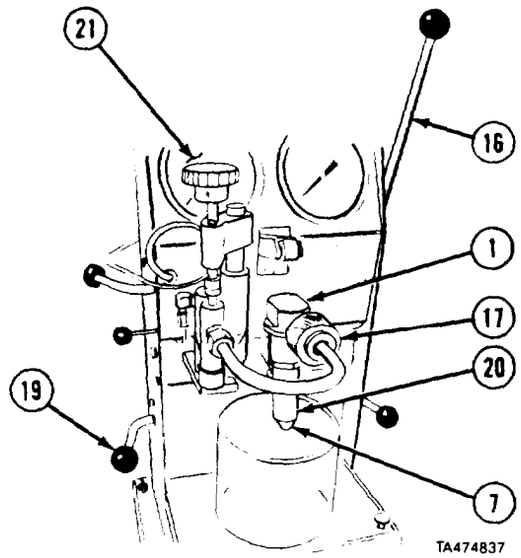

(15) Position valve lever (19) so it points down.
(16) Pull pump lever (16) forward 40 to 80 times a minute with steady strokes and watch oil spray pattern from tip of injector (20).
(17) If injector (20) does not spray oil evenly in a fine mist, disassemble injector and inspect for contamination.
(18) Check left gage (21) to find pressure that causes injector (20) to spray. If injector spray pressure is less than 2200 psi (15 169 kPa) or more than 3300 psi (22 753 kPa), disassemble injector and inspect for contamination or damage.
(19) Move pump lever (16) forward several times slowly to let pressure build up to 1500 psi (10 335 kPa) on left gage (2 1). Keep moving lever (16) as needed to keep pressure at 1500 psi (10 335 kPa) for *15* seconds.
(20) Check injector tip (7) for signs of leakage or oil droplets. Slight wetting of tip is all right, but if tip leaks or if there are drops of oil present, disassemble injector, clean and reassemble.
(21) Loosen coupling nut (17) slowly to allow release of pressure and remove tip test adapter (1).

(22) Move clamp release lever (22) down.
(23) Remove oil flow adapter (11) and tube (18). Disconnect adapter from tube.

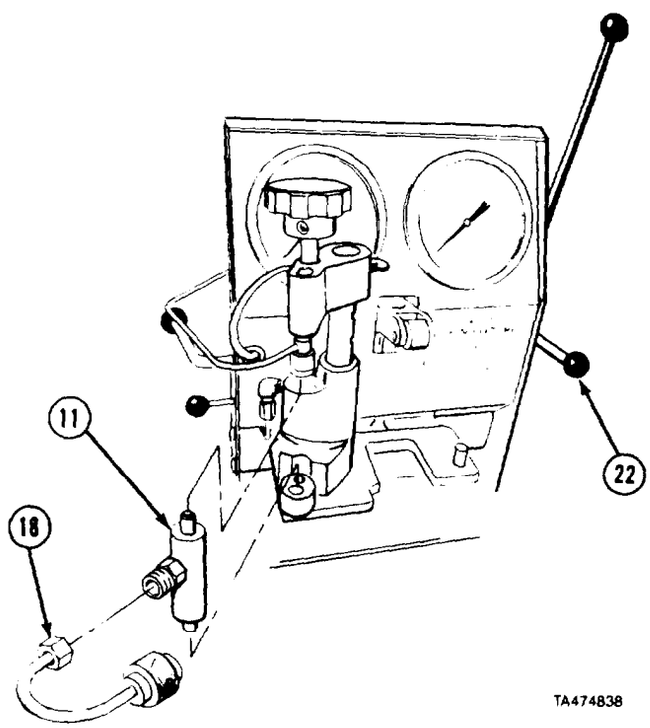

https://truckmanualshub.com/

2-3. FUEL INJECTOR REPAIR (CONT).

(24) Place adapter (1) in vise.

(25) Remove injector valve nut (8), spray tip (7), needle valve (6), cage (5), spring seat (4), spring (3), and check valve cage (2).

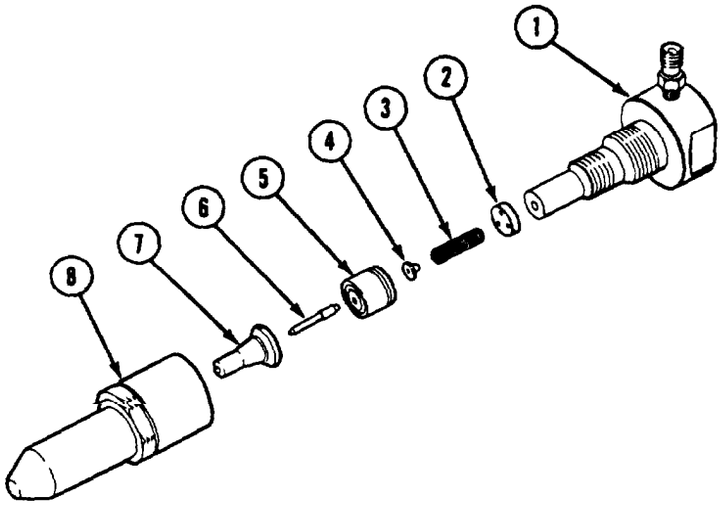

e. Assembly

NOTE

Outlet side injector does not have filter.

(1) Insert filter (1), slotted end up, in inlet side fuel cavity in top of injector body (2).

(2) Install two gaskets (3) in each of two injector caps (4).

(3) Apply injector test oil to thread of injector caps (4) and install in injector body (2).

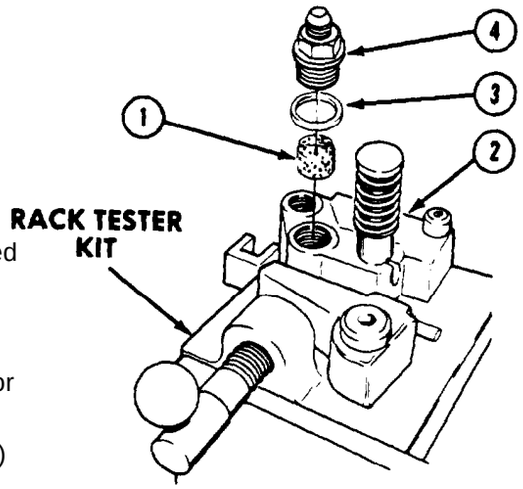

CAUTION

Some injector caps (4) and injector bodies (2) could have a blued or non-blued finish. These parts are fully interchangeable, however, to avoid parts damage due to overtightening, the correct torque values listed below must be used.

(a) Torque a non-blued injector cap (4) on a non-blued injector body (2) to 62 lb-ft (84 N•m).

(b) Torque a blued injector cap (4) on a blued injector body (2) to 70 lb-ft (95 N•m).

(c) Torque a non-blued injector cap (4) on a blued injector body (2) or a blued injectocap (4) on a non-blued injector body (2) to 62 lb-ft (84 N•m).

(4) Place injector body (2) in rack tester kit and tighten injector caps (4).

(5) Purge filter (1) with diesel fuel oil directed through injector caps (4).

(6) Install clean shipping caps on injector caps (4) to prevent dirt from entering injector body (2).

(7) Support injector body (2), bottom end up, in rack tester kit.

(8) Slide injector rack (5) through injector body (2) with teeth of rack pointing towards center of injector body.

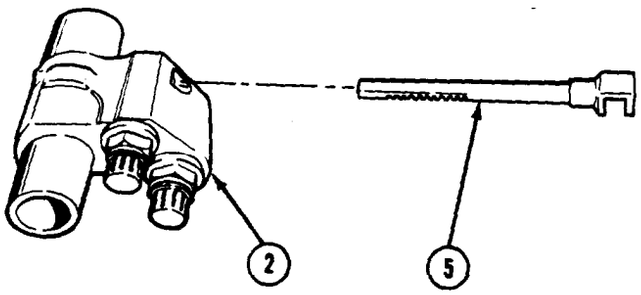

https://truckmanualshub.com/

Fuel Injector Maintenance Instructions (Cont)

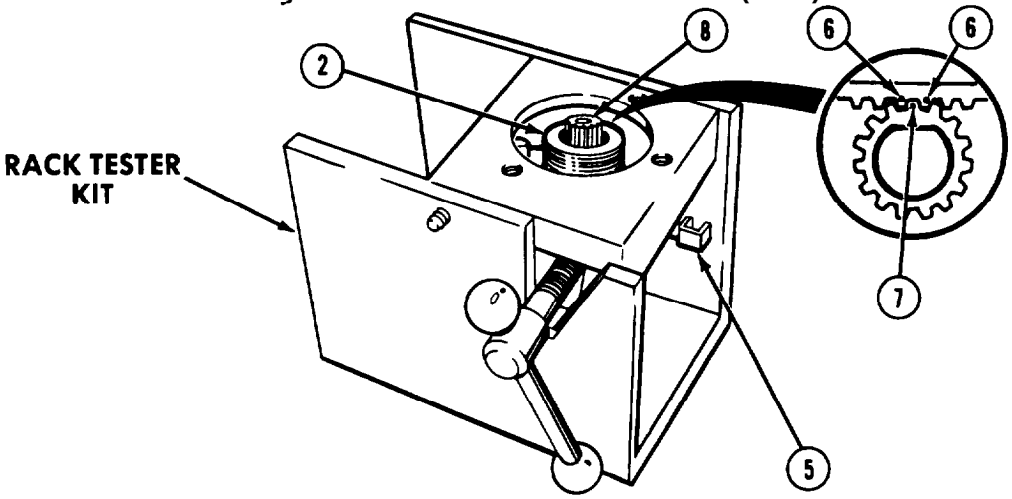

(9) Look through bore of injector body (2) and move injector rack (5) until punch marks (6) on teeth are visible.

(10) Aline timing mark (7) on gear (8) between two punch marks (6) on rack (5).

(11) Install gear (8), recheck alinement from step (9), and repeat step (9) if necessary to get proper alinement.

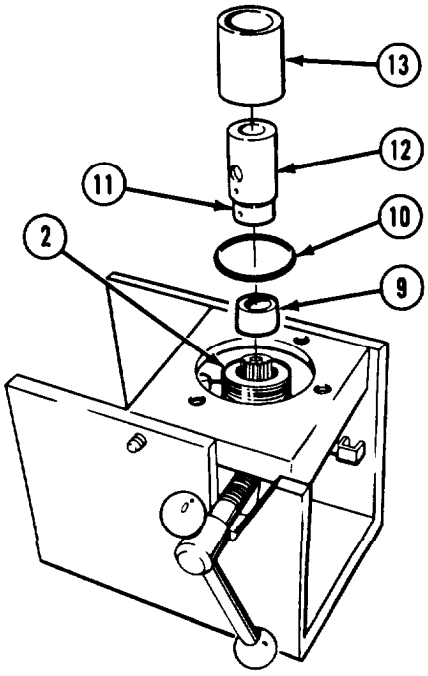

(12) Install sleeve spacer (9).

NOTE

There are two colors of preformed packings. Model A is black and Model B is red. Either packing may be used.

(13) Install preformed packing (10) on shoulder of injector body (2).

(14) Aline pin (11) in bushing (12) with slot in injector body (2) and slide end of bushing into injector body.

(15) Install spill deflector (13) over barrel of bushing (12).

https://truckmanualshub.com/

Fuel Injector Maintenance Instructions (Cont)

12-3. FUEL INJECTOR REPAIR (CONT).

(16) Install check valve (14) into check valve cage (15).
(17) Install cage (1.5) and valve (14) over bushing (12).

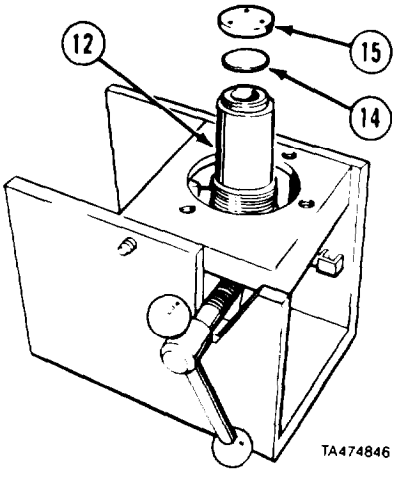

(18) Install spring seat (16) in valve spring (17).
(19) Install spring cage (18) over spring seat (16) and valve spring (17).

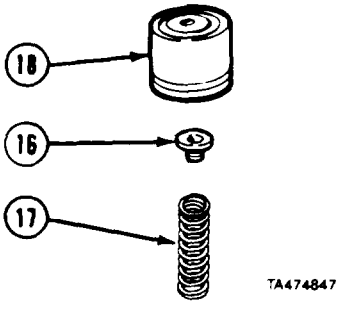

(20) Put spring cage (18), spring end down, on check valve cage (14).

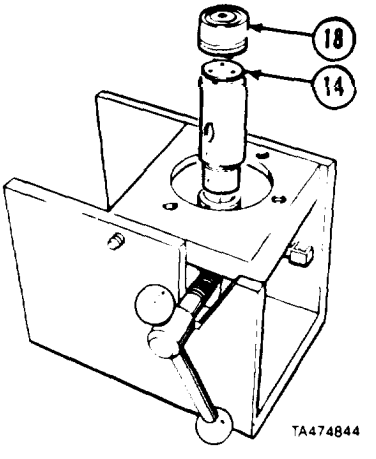

(21) Install needle valve (19), point first. in spray tip (20).

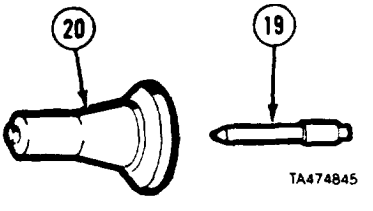

https://truckmanualshub.com/

Fuel Injector Maintenance Instructions (Cont)

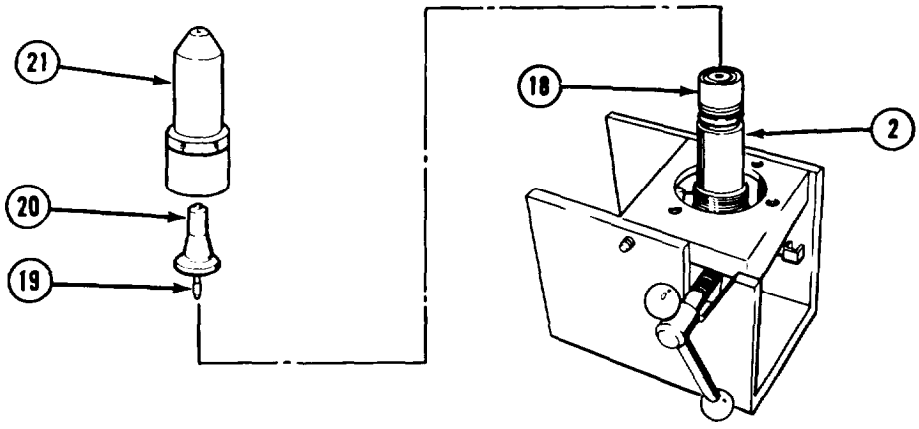

(22) Put spray tip (20) and needle valve (19) on spring cage (18) with end of needle valve in hole in spring cage.

(23) Apply fuel injector test oil on injector nut (21) threads. Install injector nut carefully on injector body (2).

(24) Tighten injector valve nut (21) as tightly as possible by hand.

CAUTION

- Do not exceed specified torque or injector nut may stretch and result in improper sealing of lapped surfaces.
- Some injector nuts (21) and injector bodies (2) could have a blued or non-blued finish. These parts are fully interchangeable, however. To avoid parts damage due to overtightening, the correct torque values listed below must be used.
  - (a) Torque a non-blued injector nut (21) on a non-blued injector body (2) to 50 lb-ft (68 N•m).
  - (b) Torque a blued injector nut (21) on a blued injector body (2) to 80 lb-ft (108 N•m).
  - (c) Torque a non-blued injector nut (21) on a blued injector body (2) or a blued injector nut (21) on a non-blued injector body (2) to 65 lb-ft (88 N•m).

(25) Tighten injector valve nut (21) using injector nut socket.

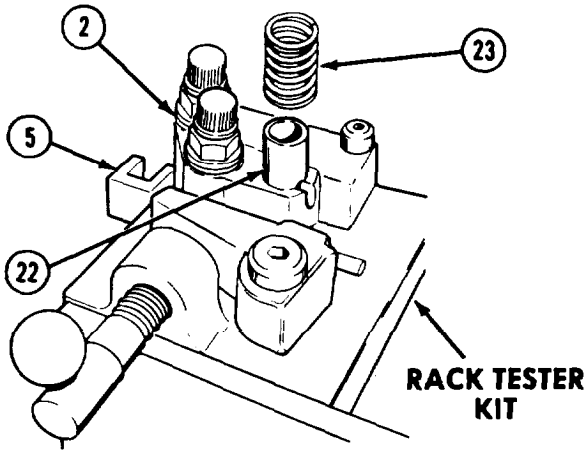

(26) Turn injector assembly (22) over in rack tester kit and push injector rack (5) all the way in.

(27) Place follower spring (23) on injector body (2).

https://truckmanualshub.com/

Fuel Injector Maintenance Instructions (Cont)

12-3. FUEL INJECTOR REPAIR (CONT).

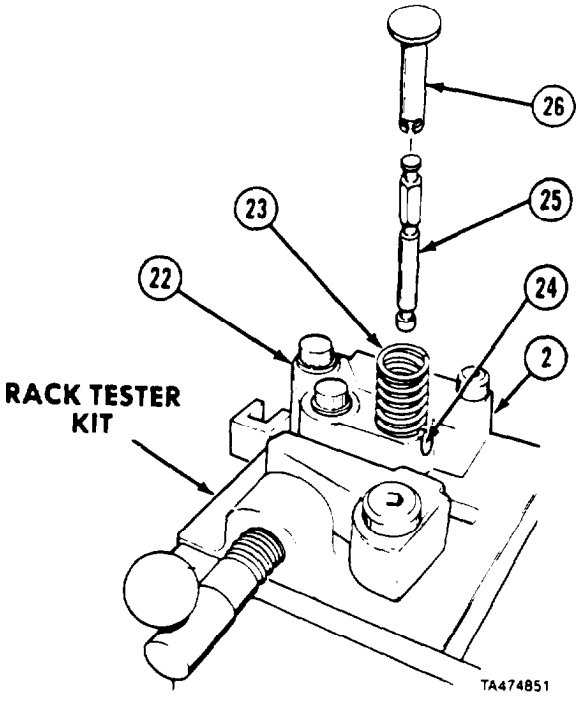

(28) Install plunger pin (25) into follower guide (26).
(29) Aline slot on follower guide (26) with flat side of plunger pin (25) and stop pin (24) on injector body (2).
(30) Install plunger pin (25) and follower guide (26).

NOTE

Make sure follower spring holds stop pin in body.

(31) Hold spring (23) up from body (2), push follower guide (26) down and install stop pin (24) into slots in body (2) and on follower guide.
(32) Remove injector assembly (22) from rack tester kit.

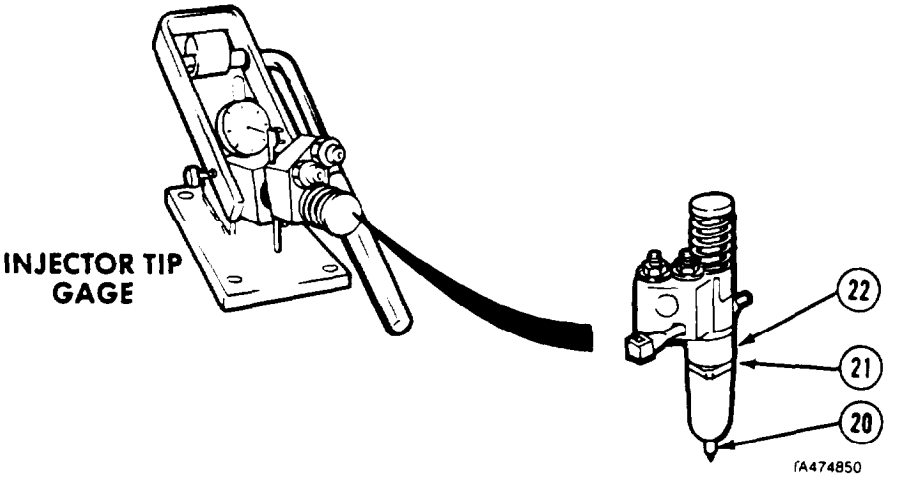

https://truckmanualshub.com/

Fuel Injector Maintenance Instructions (Cont)

(33) Put injector assembly (22) in injector tip gage and adjust dial to zero.

(34) Rotate injector assembly (22) 360°. If total runout exceeds 0.008-in. (0.203 mm), do steps *(35)* through *(38).* If runout is less than 0.008-in., go to follow-on maintenance.

(35) Remove injector assembly (22) from injector tip gage. Loosen injector nut (21), using injector nut socket, and center spray tip (20).

CAUTION

Some injector nuts (21) and injector bodies (2) could have a blued or non-blued finish. These parts are fully interchangeable, however. To avoid parts damage due to overtightening, the correct torque values listed below must be used.

(a) Torque a non-blued injector nut (21) on a non-blued injector body (2) to 50 lb-ft (68 N•m).

(b) Torque a blued injector nut (21) on a blued injector body (2) to 80 lb-ft (108 N•m).

(c) Torque a non-blued injector nut (21) on a blued injector body (2) or a blued injector nut (21) on a non-blued injector body (2) to 65 lb-ft (88 N•m).

(36) Tighten injector nut (21).

(37) Check spray tip again, following procedures in steps *(33)* and *(34).*

(38) Replace injector nut (21) if spray tip (20) cannot be positioned correctly.

f. Follow-on Maintenance. Test fuel injector (para 12-4).

END OF TASK

12-4. FUEL INJECTOR TESTING.

This task covers:

a. Set-Up Injector Test Kit
b. Testing
c. Follow-on Maintenance

INITIAL SETUP

Models
All

Test Equipment
None

Special Tools
Rack tester kit J22396
Spray tip gage J9462-02
Injector test kit J23010 or J23010-A

Supplies
Oil, test, fuel injector, Item 49, Appendix C

Personnel Required
MOS 63W, Vehicle wheel repairer

References
None

Equipment Condition

TM or Para	*Condition Description*
	Fuel injector on clean work surface.

Special Environmental Conditions
Work in clean, well-ventilated work area.

General Safety Instructions

WARNING

- Fuel and test oil are very flammable and can explode easily. To avoid serious injury or death, keep fuel away from open fire and keep fire extinguisher within easy reach when working with fuel.
- When working with fuel, post signs that read "NO SMOKING WITHIN 50 FEET."
- When testing or adjusting fuel injectors, do not place hands or arms in front of injector spray tip.
- The fuel spray from an injector has sufficient penetrating power to puncture the flesh and destroy tissue. Should the fuel enter the blood stream, it can cause blood poisoning.

Level of Maintenance
General Support

https://truckmanualshub.com/

12-4. FUEL INJECTOR TESTING (CONT).

a. Set Up Injector Test Kit.

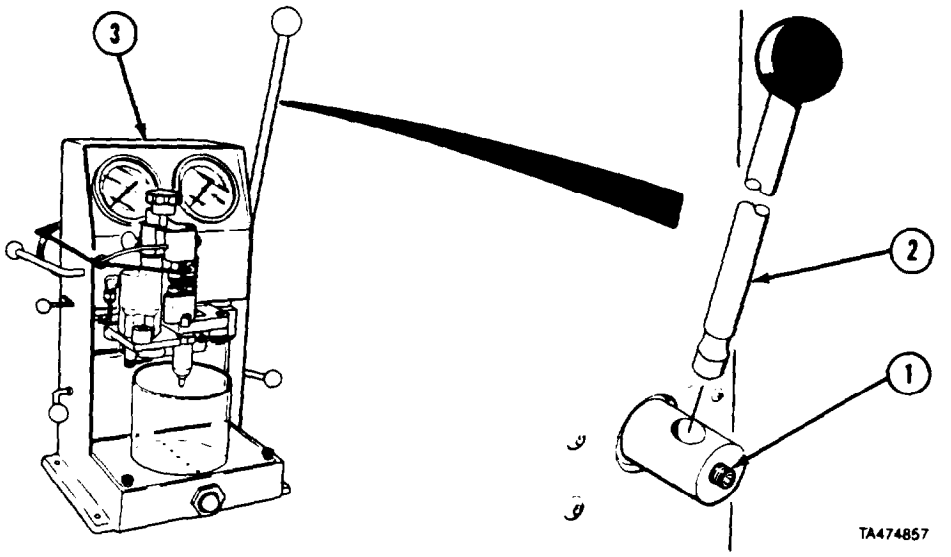

(1) Loosen set screw (1).
(2) Install pump lever (2) on injector test kit (3) and tighten set screw (1).

NOTE

There are two clamping heads with injector test kit.

(3) Select offset clamping head (4).

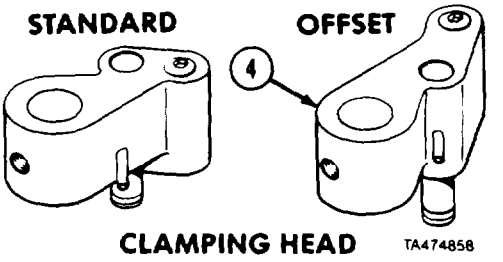

(4) Install preformed packing (5) and valve tip (6) on control valve (7).
(5) Install control valve (7) in clamping head (4).
(6) Install thumb screw (8).

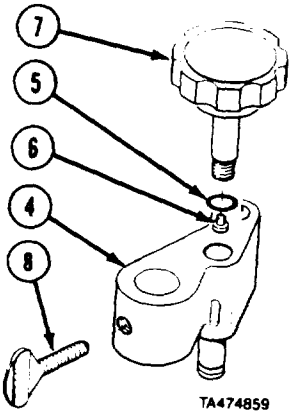

https://truckmanualshub.com/

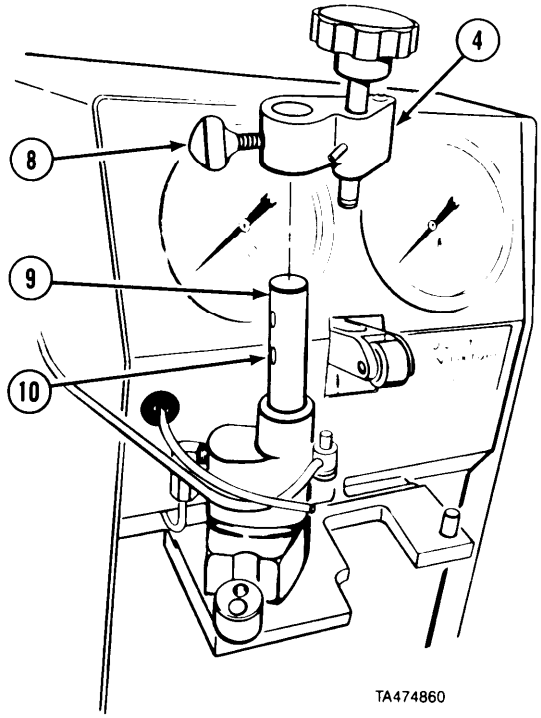

(7) Install clamping head (4) on post (9) so that thumb screw (8) fits in lower hole (10) on post. Tighten thumb screw.

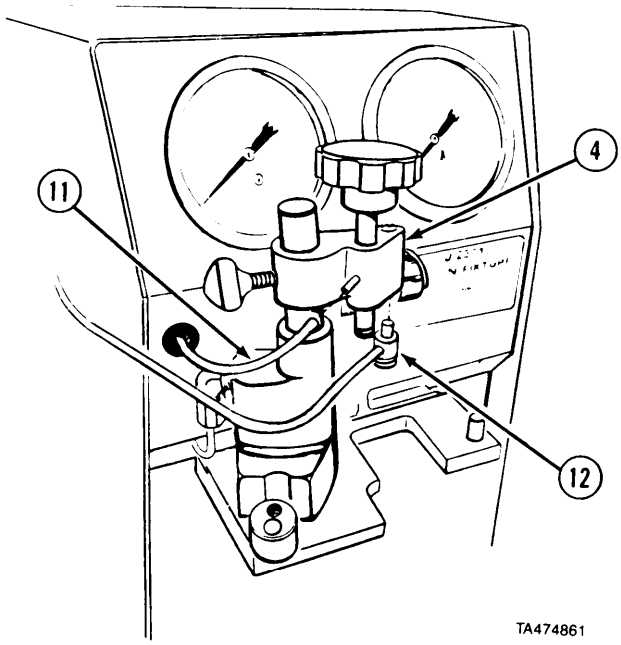

(8) Install fuel discharge line (11) on clamping head (4) using plastic ties.
(9) Install fuel delivery line (12) on clamping head (4).

https://truckmanualshub.com/

12-4. FUEL INJECTOR TESTING (CONT).

(10) Install four preformed packings (13 and 14) in two fuel connector adapters (15).

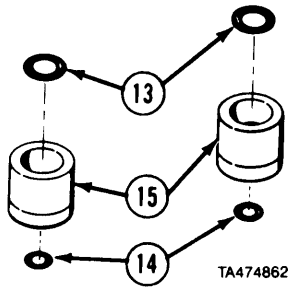

(11) Install two fuel connector adapters (15) on clamping head (4).

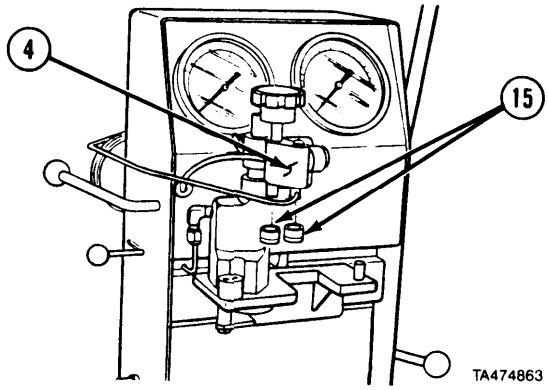

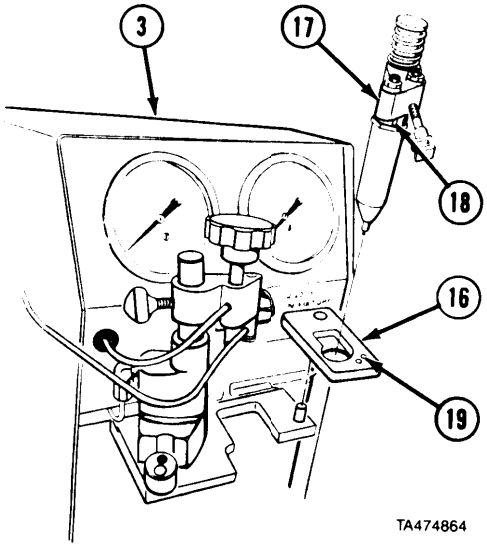

(12) Install adapter plate (16) on injector test kit (3).
(13) Install injector (17) in adapter plate (16) with injector locating pin (18) in hole (19).

https://truckmanualshub.com/

(14) Remove two screws (20) and drain plate (21).

NOTE

Reservoir holds one quart test oil.

(15) Fill reservoir (22) to top of filter (23).
(16) Install plate (21) with two screws (20).

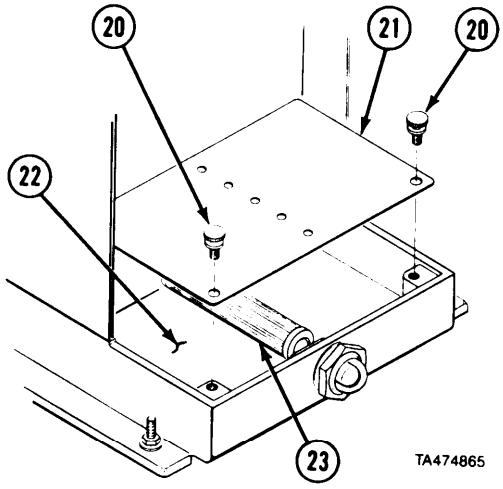

(1 ?“ Install spray shield (24).
(18) Position two fuel connector adapters (15) over fuel injector caps (25).
(19) Point plunger position lever (26) towards the rear.
(20) Push rocker arm engagement lever (27) to its rear position.
(21) Push valve lever (28) so it points forward.
(22) Open control valve (7).
(23) Move pump lever (2) down to seat clamping head (4) on injector caps (25).

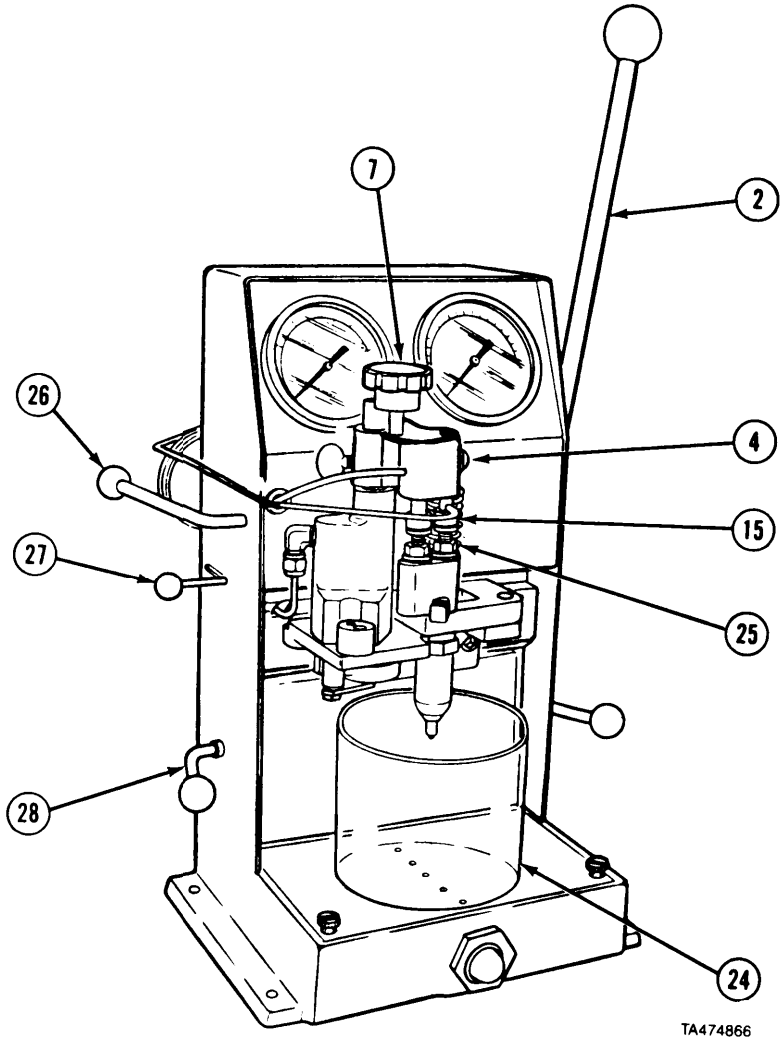

https://truckmanualshub.com/

12-4. FUEL INJECTOR TESTING (CONT).

(24) Push valve lever (28) down.
(25) Pull pump lever (2) and watch flow of test oil passing through discharge line (11). When no air bubbles pass through line (11), do next step.
(26) Push injector control rack (29) in to full fuel position.
(27) Position pump lever (2) so it points straight up.
(28) Move rocker arm engagement lever (27) to forward position.
(29) Pull pump lever (2) forward 40 to 80 times a minute with steady strokes and read maximum reference value from right hand gage (30).
(30) Injector (17) must be repaired (refer to para 12-3) if maximum reference value is less than 138 or more than 162.
(31) Pull pump lever (2) forward several times with steady strokes and observe spray pattern produced by injector (17).
(32) Injector must be repaired (refer to para 12-3) if spray pattern is uneven or if test oil does not break up into a fine mist.

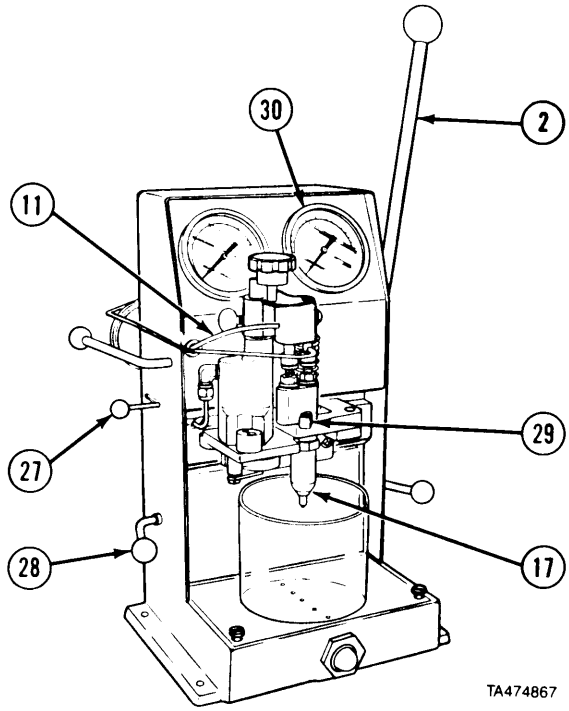

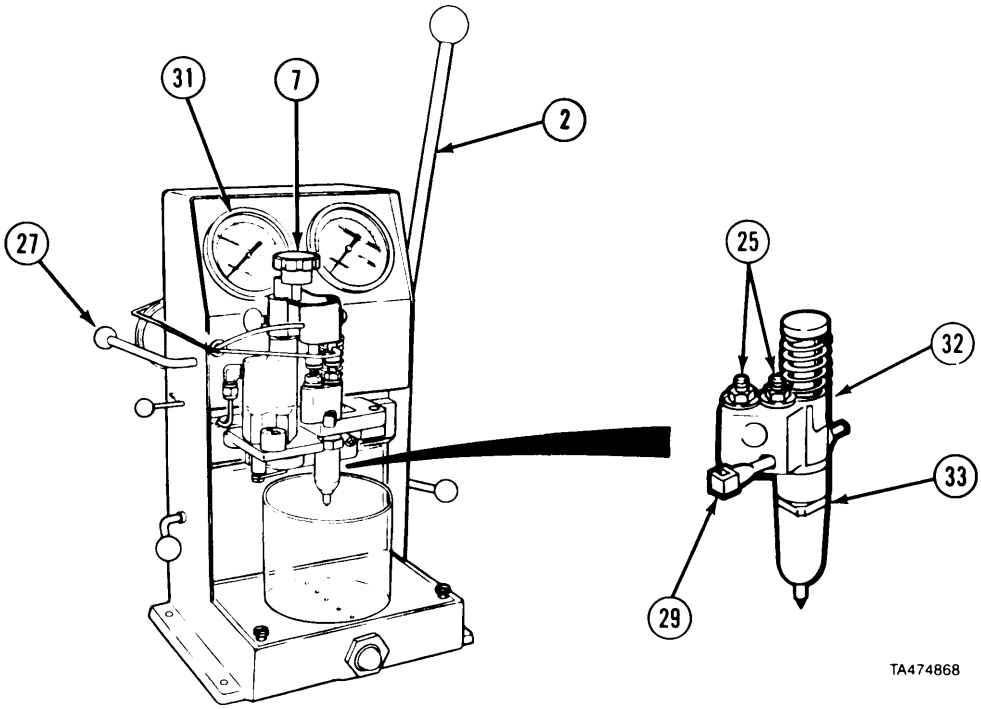

https://truckmanualshub.com/

(33) Position pump lever (2) so it points straight up.
(34) Move rocker arm engagement lever (27) to rear.

CAUTION

Do not over tighten control valve or nylon bushing may be damaged.

(35) Close control valve (7).
(36) Pull pump lever (2) forward several times to slowly build up to 1600 to 2000 psi (11032 to 13790 kPa) on left gage (31).
(37) Check for leaks at injector caps (25), body plugs (32), rack (29), and injector nut (33).
(38) Open control valve (7).

CAUTION

Do not over tighten control valve or nylon bushing may be damaged.

(39) Close control valve (7).
(40) Pull pump lever (2) forward several times until pressure builds up to 500 psi (3447.5 kPa) on left gage (31).
(41) Move valve lever (28) so it points forward,
(42) If it takes less than 15 seconds for pressure to drop from 450 to. 250 psi (3102 to 1723 kPa) on left gage (31), disassemble injector clean and reassemble.
(43) Open control valve (7).
(4-4) Move clamp release lever (34) down.
(45) Remove injector (17) and adapter plate (16) from injector test kit (3).

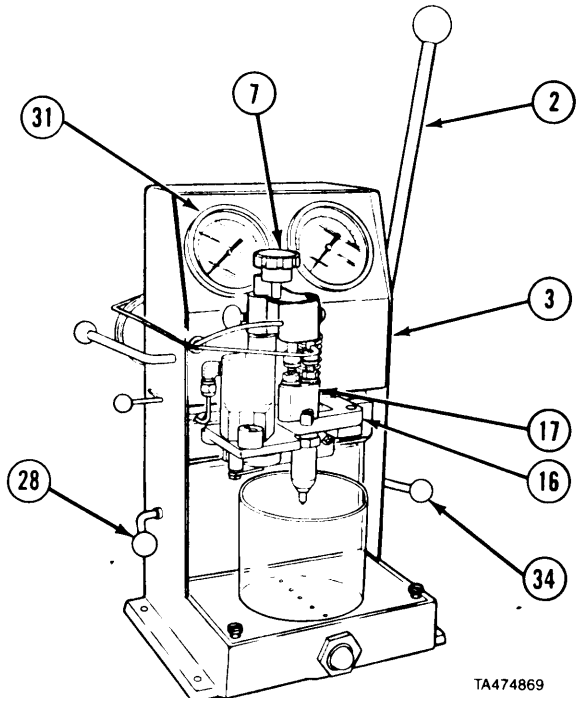

b. Testing.
(1) Injectors which pass all tests can be installed (refer to para 12-2).
(2) Injectors which fail one or more tests will be repaired (refer to para 12-3). Perform all injector tests before repairing injectors.

NOTE

To test injector control rack do steps (3) through (10).

(3) Install fuel injector (1) in rack freeness tester.

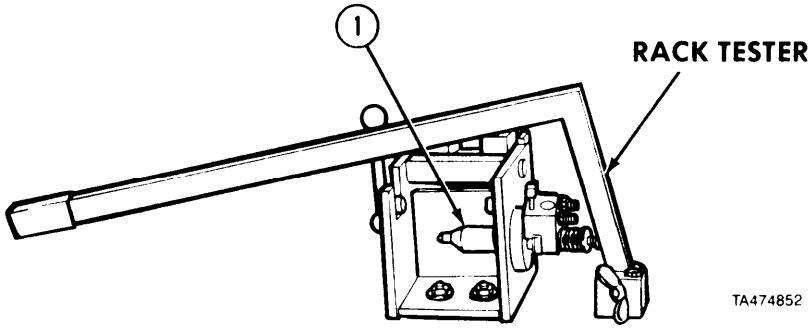

https://truckmanualshub.com/

12-4. FUEL INJECTOR TESTING (CONT).

(4) Make sure dowel (2) on injector (1) fits in hole (3) in rack freeness tester.

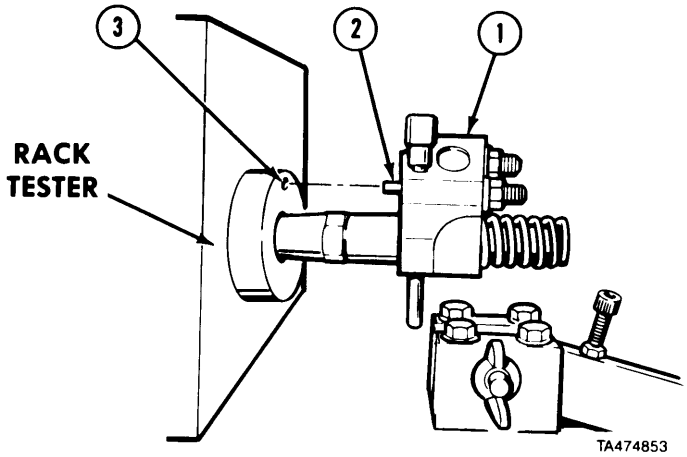

(5) Put handle on top of injector follower (4).
(6) Pull injector control rack (5) out to no-fuel position and push injector follower (4) in with handle.

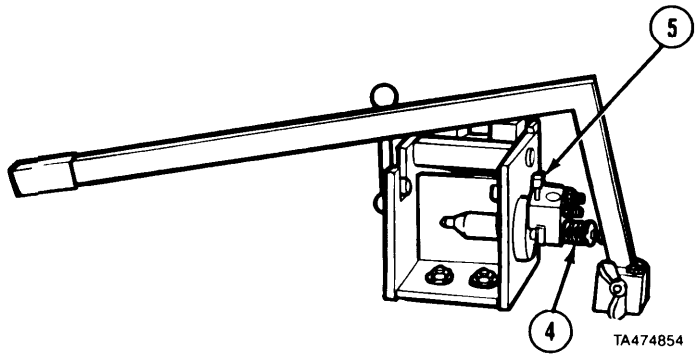

(7) Loosen locknut (6) and adjust screw (7) so it is in center of injector follower (4) when injector" spring (8) is fully compressed. Tighten locknut.
(8) Release handle slowly while moving injector control rack (5) up and down to test for freedom of movement.

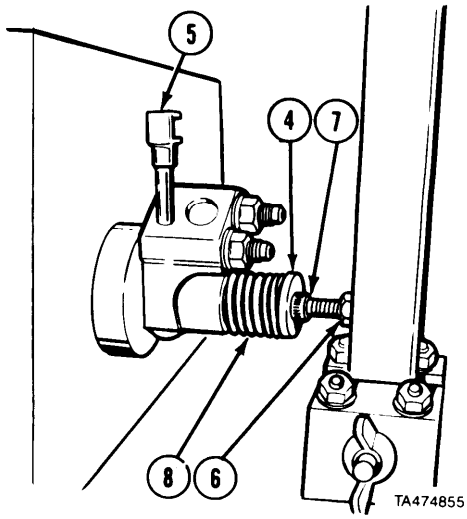

https://truckmanualshub.com/

Fuel Injector Maintenance Instructions (Cont)

(9) Loosen injector valve nut (9) and turn spray tip (10). Tighten injector valve nut 75 to 85 lb-ft (102 to 115 N•m) and repeat steps *(4)* to *(10)* until control rack moves freely.

(10) If control rack (5) does not move freely, repair fuel injector (1) (refer to para 11-3).

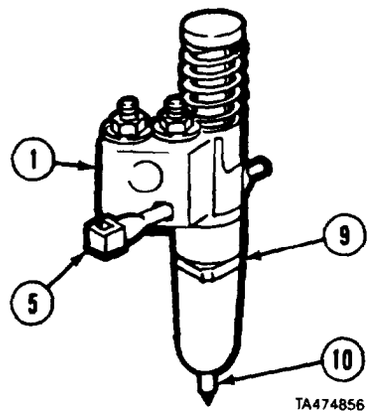

c. Follow-on Maintenance. None.

END OF TASK

12-5. INJECTOR CONTROL TUBE REMOVAL/INSTALLATION.

This task covers:

a. Removal
b. Disassembly
c. Cleaning/Inspection
d. Assembly
e. Installation
f. Follow-on Maintenance

INITIAL SETUP

Models
All

Test Equipment
None

Special Tools
1/4" drive 12 pt socket 819158 (34104)

Supplies
Tags, identification, Item 61, Appendix C
Solvent, dry cleaning, Item 60, Appendix C

Personnel Required
MOS 63W, Wheel vehicle repairer

References
None

Equipment Condition

TM or Para	*Condition Description*
TM 9-2320-279-20	Valve rocker covers removed.

Special Environmental Conditions
None

General Safety Instructions
None

Level of Maintenance
Direct Support

https://truckmanualshub.com/

12-5. INJECTOR CONTROL TUBE REMOVAL/INSTALLATION (CONT).

a. Removal.

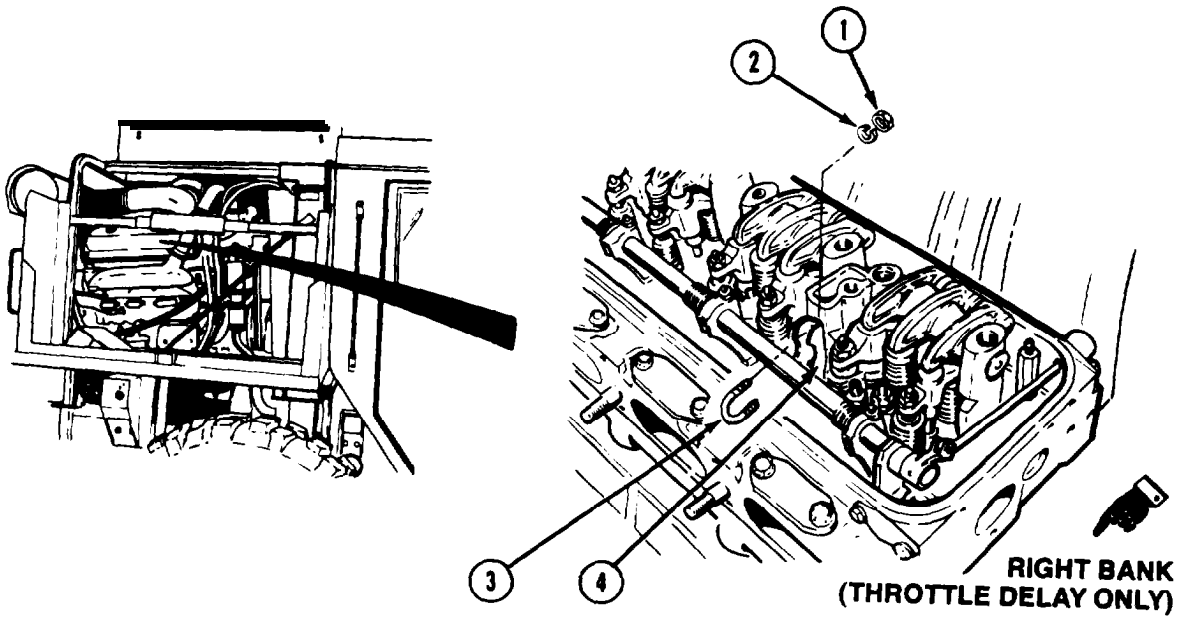

NOTE

- Step *(1)* applies to right side only.
- Some engines are equipped with throttle delay, others are equipped with a fuel modulator. Perform step *(1)* for engines with throttle delay. Perform step *(1.1)* for engines with fuel modulator.

(1) Remove two nuts (1), lockwashers (2), and U-bolt (3) from throttle delay cylinder lever (4).

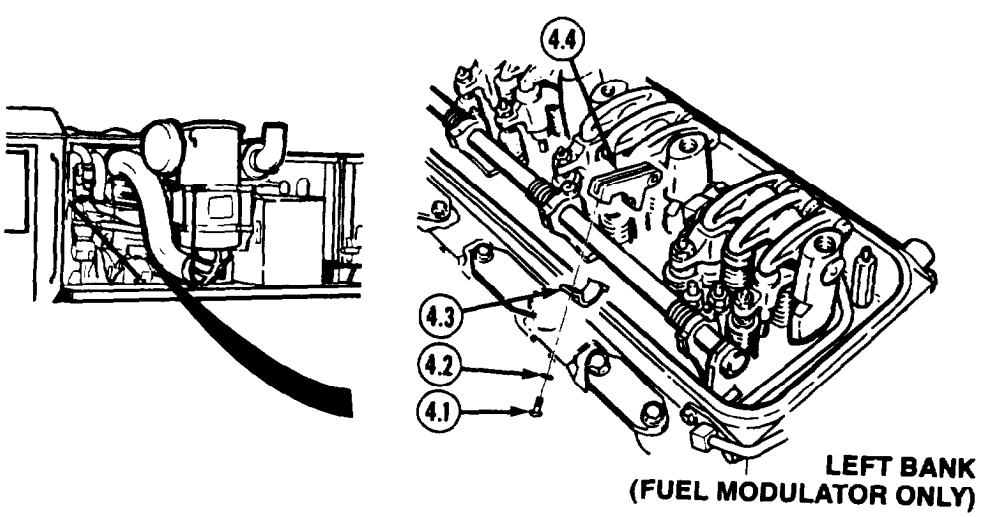

(1.1) Remove screw (4.1), lockwasher (4.2), clamp (4.3), and lever (4.4).

https://truckmanualshub.com/

Fuel Injector Maintenance Instructions (Cont)

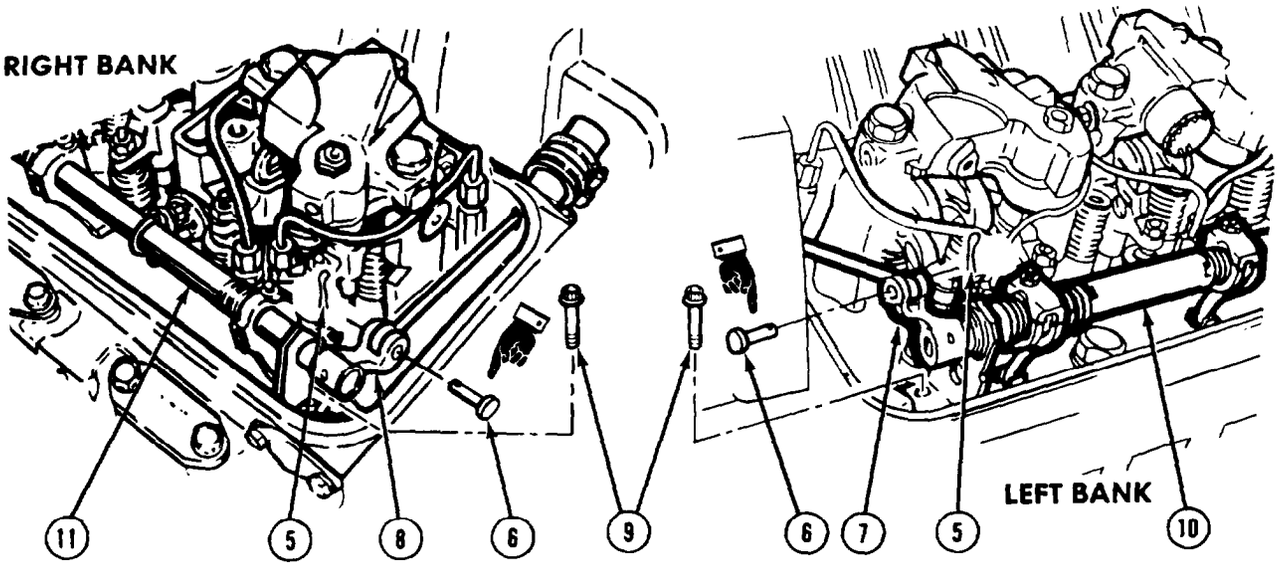

(2) Remove cotter pin (5) and pin (6) from left injector control tube clevis (7).
(3) Remove cotter pin (5) and pin (6) from right injector control tube clevis (8).
(4) Remove four screws (9) and left injector control tube (10).
(5) Remove four screws (9) and right injector control tube (11).

https://truckmanualshub.com/

https://truckmanualshub.com/

b. Disassembly.

(1) Remove bracket (1) from left injector control tube (2).

NOTE

Four control levers are removed the same on both left and right control tubes.

(2) Loosen locknut (3) and screw (4) and remove control lever (5). Remove locknut and screw.

NOTE

Tag and mark springs before removal.

(3) Remove spring (6) from control lever (5).

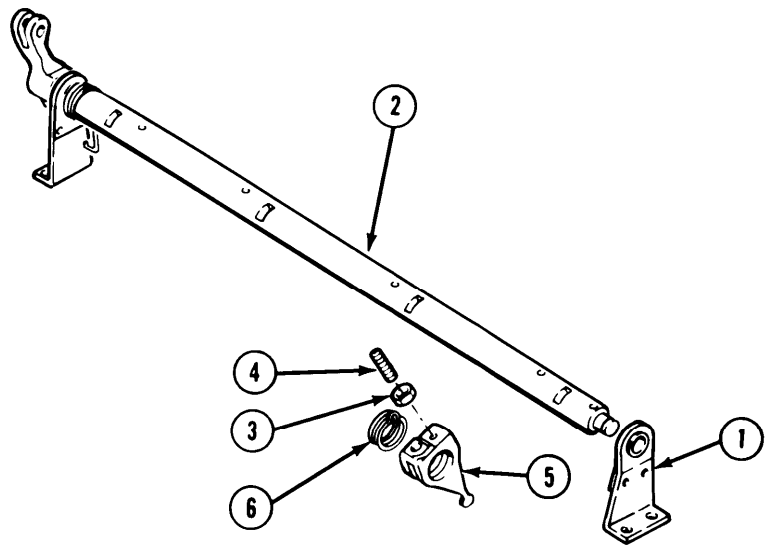

LEFT BANK INJECTOR CONTROL TUBE

TA474872

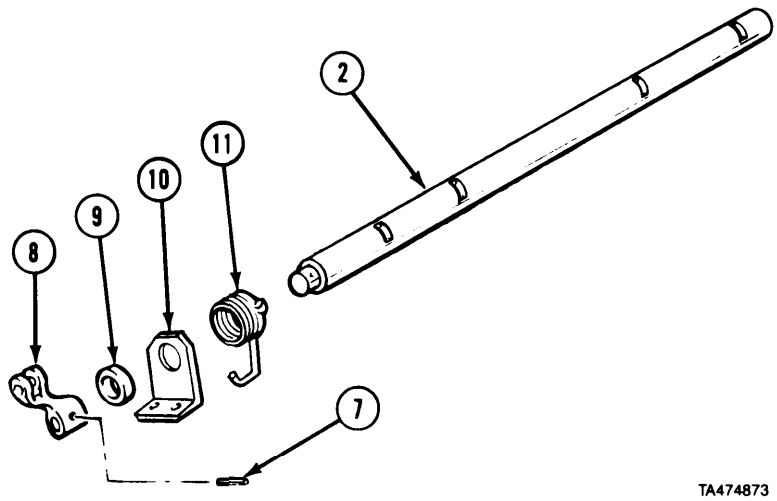

TA474873

(4) Remove pin (7) and injector control tube clevis (8).
(5) Remove spacer (9) and bracket (10).
(6) Remove return spring (11) from injector control tube (2).

https://truckmanualshub.com/

12-5. INJECTOR CONTROL TUBE REMOVAL/INSTALLATION (CONT).

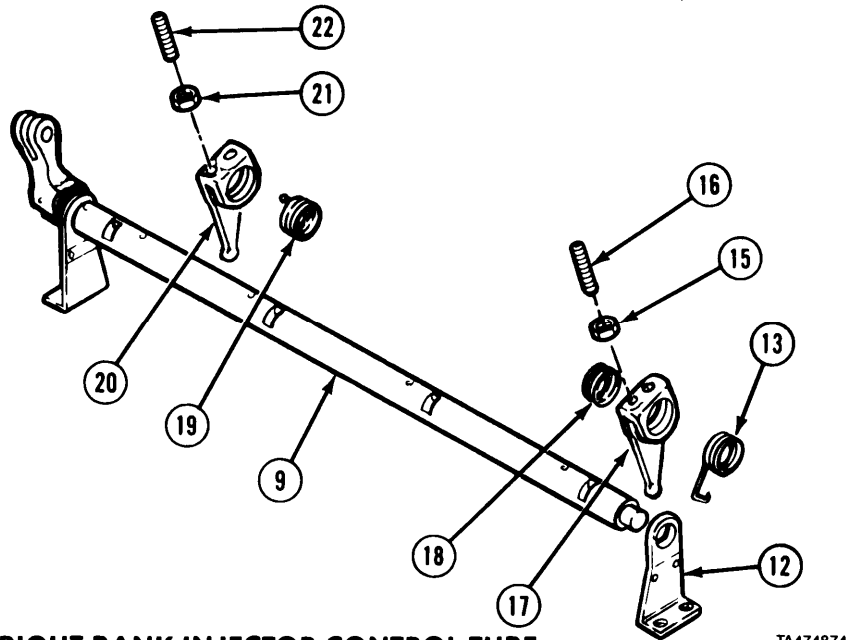

RIGHT BANK INJECTOR CONTROL TUBE

(7') Remove bracket (12) and return spring (13) from right injector control tube (14).
(8) Loosen locknut (15) and screw (16), and remove control lever (17). Remove locknut and screw.
(9) Remove spring (18) from control lever (17).

NOTE

All three remaining control levers are removed the same.

(lo) Remove spring (19) from second control lever (20).
(11) Loosen locknut (21) and screw (22) and remove second control lever (20). Remove locknut and screw.

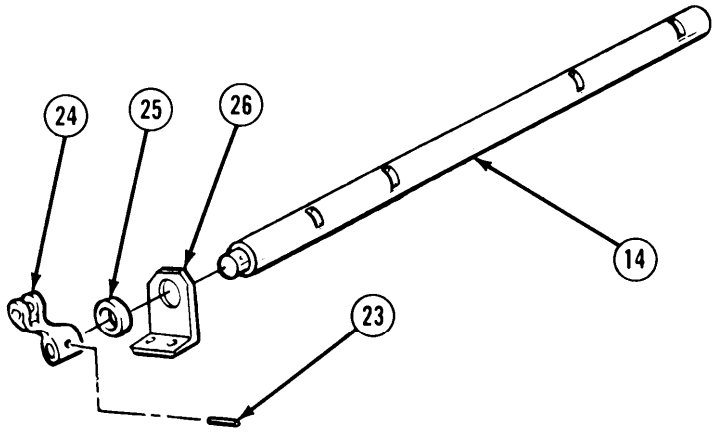

RIGHT BANK INJECTOR CONTROL TUBE

(12) Remove pin (23) and right injecot control tube clevis (24).
(13) Remove spacer (25) and bracket (26) from right injector control tube (14).

c. Cleaning/Inspection.

WARNING

Adhesives, solvents, and sealing compounds can burn easily, can give off harmful vapors, and are harmful to skin and clothing. To avoid injury or death, keep away from open fire and use in well-ventilated area. If adhesive, solvent, or sealing compound gets on skin or clothing, wash immediately with soap and water.

(1) Clean all metal parts with dry cleaning solvent.

WARNING

Compressed air used for cleaning purposes will not exceed 30 psi (207 kPa). Use only with effective chip guarding and personal protective equipment (goggles/shield, gloves, etc.).

(2) Use compressed air to dry all metal parts.
(3) Inspect all parts for damage.
(4) Replace damaged parts.

d. Assembly.

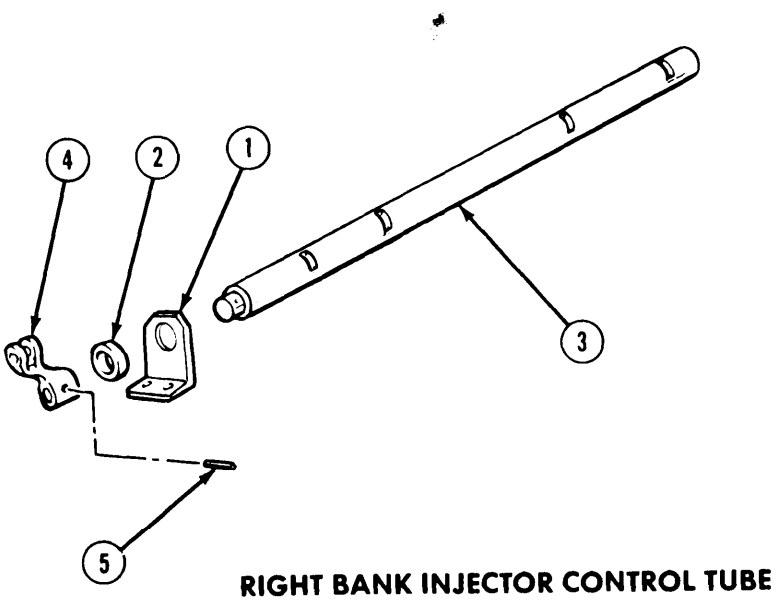

RIGHT BANK INJECTOR CONTROL TUBE

(1) Install bracket (1) and spacer (2) on injector control tube (3).
(2) Install right injector control tube clevis (4) with pin (5).

https://truckmanualshub.com/

12-5. INJECTOR CONTROL TUBE REMOVAL/INSTALLATION (CONT).

(3) Position control lever (6) and spring (7) over slot in right injector control tube (8).
(4) Install control lever (6) with screw (9) and locknut (10).

NOTE

Repeat steps (3) and (4) for next two control levers.

(5) Position spring (11) and control levers (12) over slot in injector control tube (8).
(6) Install control lever (12) with screw (9) and locknut (10).
(7) Install return spring (13) and bracket (14).

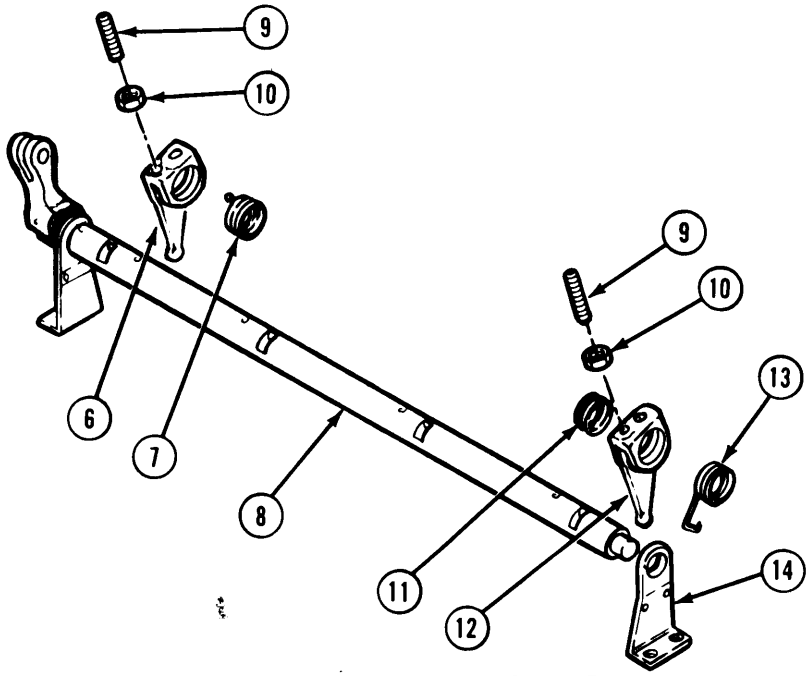

RIGHT BANK INJECTOR CONTROL TUBE

TA474875

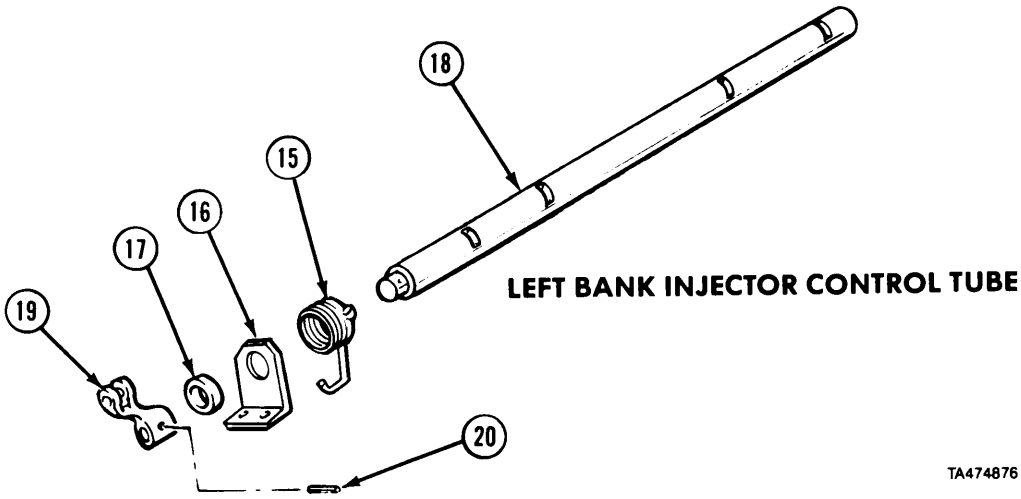

LEFT BANK INJECTOR CONTROL TUBE

TA474876

(8) Install return spring (15), bracket (16), and spacer (17) on left injector control tube (18).
(9) Install injector control tube clevis (19) with pin (20).

https://truckmanualshub.com/

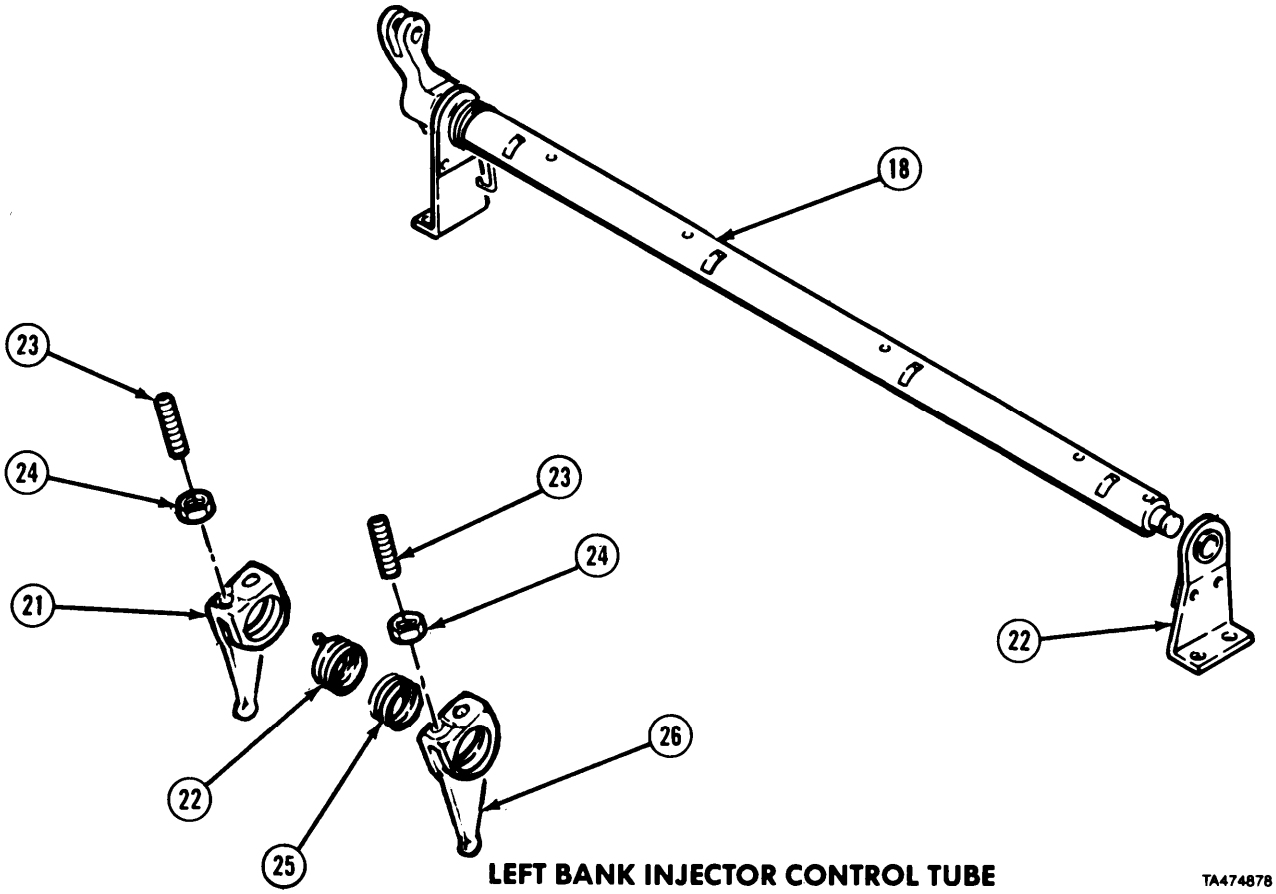

LEFT BANK INJECTOR CONTROL TUBE

(10) Position control lever (21) and spring (22) over slot in left injector control tube (18).
(11) Install control lever (21) with screw (23) and locknut (24).
(12) Position next spring (25) and control lever (26) over slot in left injector control tube (18).
(13) Install control lever (26) with screw (23) and locknut (24).

NOTE

Repeat steps (12) and (13) for next two control levers.

(14) Install bracket (27).

https://truckmanualshub.com/

12-5. INJECTOR CONTROL TUBE REMOVAL/iNSTALLATION (CONT).

e. Installation.

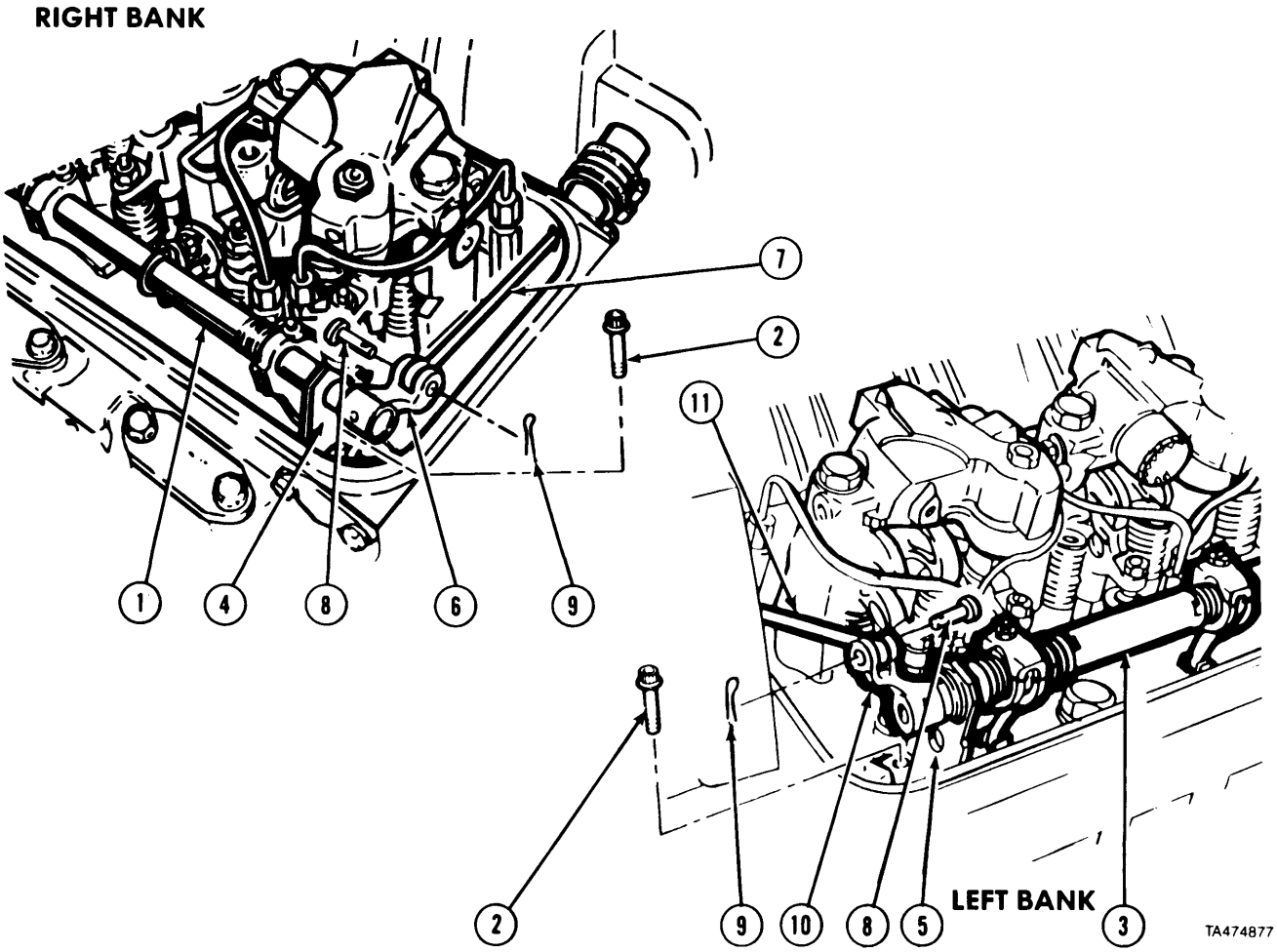

(1) Install right injector control tube (1) with four screws (2). Tighten to 10 lb-ft (13.5 N•m),
(2) Install left injector control tube (3) with four screws (2). Tighten to 10 lb-ft (13.5 N-m).

NOTE

Make sure injector control tubes move freely in brackets.

(3) Tap injector control tubes (1 and 3) lightly to aline bearings in brackets (4 and 5).
(4) Install right injector control tube clevis (6) to fuel rod (7) with pin (8) and cotter pin (9).
(5) Install left injector control tube clevis (10) to fuel rod (11) with pin (8) and cotter pin (9),

https://truckmanualshub.com/

Fuel Injector Maintenance Instructions (Cont)

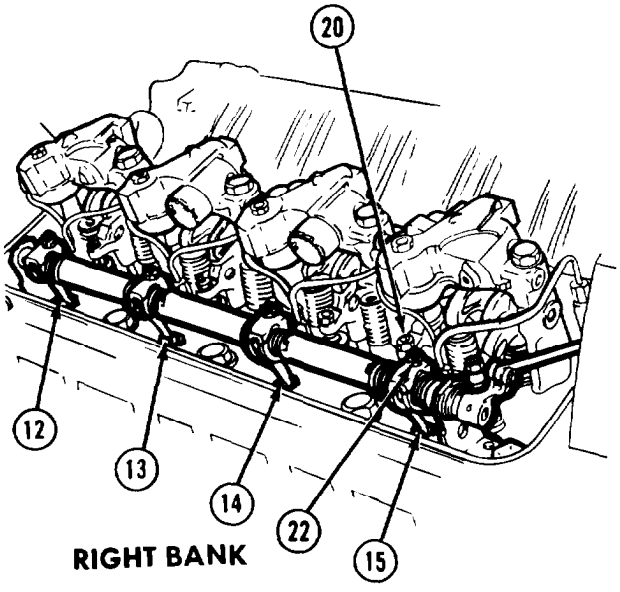

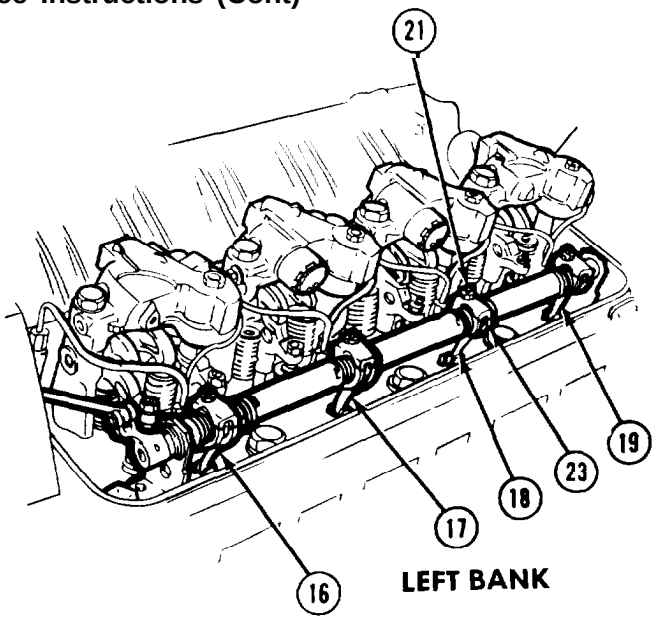

(6) Pull eight injector control levers (12 through 19).
(7) Tighten eight screws (20 and 21).
(8) Tighten eight locknuts (22 and 23) to 35 lb-in (4 N•m).

NOTE

- Step *(9)* applies to right side only.
- Some engines are equipped with throttle delay, others are equipped with a fuel modulator. Perform step *(9)* for engines with throttle delay. Perform step *(10)* for engines with fuel modulator.

(9) Install U-bolt (24), two lockwashers (25), and nuts (26) to throttle delay cylinder lever (27).

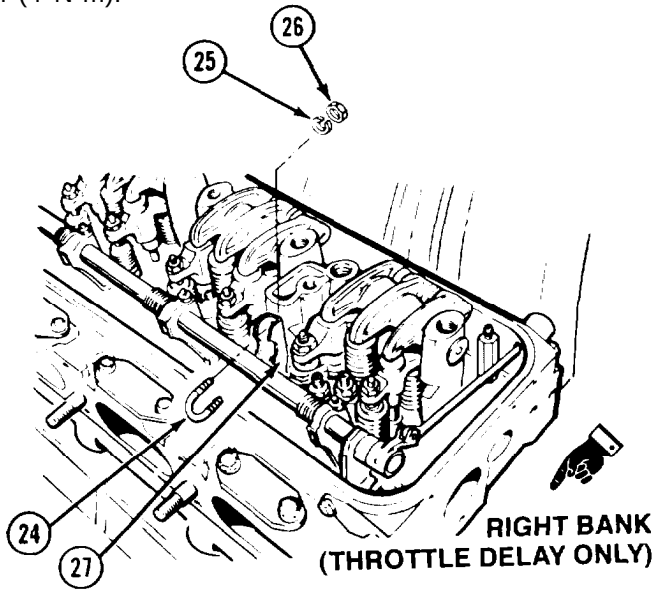

https://truckmanualshub.com/

12-5. INJECTOR CONTROL TUBE REMOVAL/INSTALLATION (CONT).

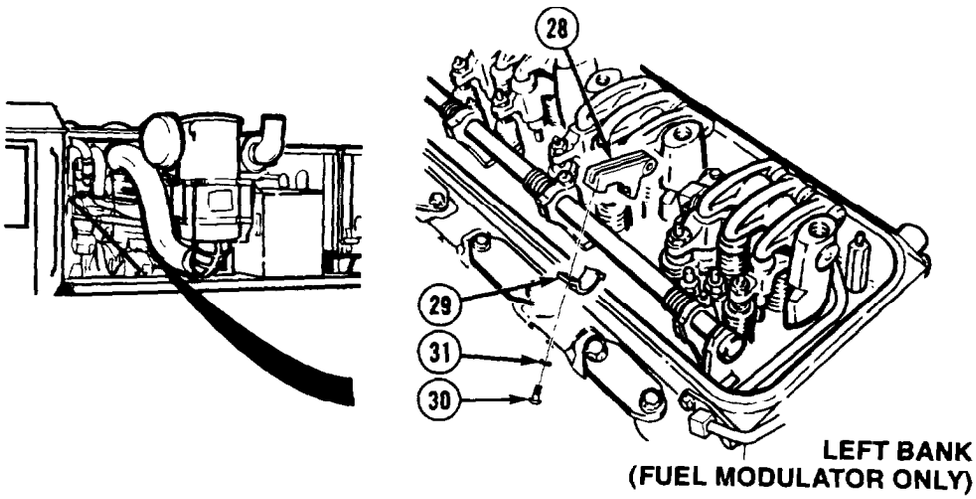

(10) Install lever (28) and clamp (29) with screw (30) and lockwasher (31).

f. ***Follow-on Maintenance,***

(1) Adjust injector rack control lever (para 19-6).
(2) Adjust throttle delay (engines equipped with throttle delay only) (para 19-8)
(2.1) Adjust fuel modulator (engines equipped with fuel modulator only) (para 19-8.1).
(3) Install valve rocker cover (TM 9-2320-279-20).

END OF TASK

https://truckmanualshub.com/

CHAPTER 13
FUEL SYSTEM MAINTENANCE

Contents

	Para	Page
General	13-1	13-1
Fuel Pump Removal/Repair/Installation	13-2	13-1

Section I. INTRODUCTION

13-1. GENERAL. This chapter covers removal, installation, and repair of the fuel pump. The subassemblies and parts which must be removed before the fuel pump can be removed will be referenced to other paragraphs or chapters of this manual, TM 9-2320-279-20, TM 9-2320-279-10, or TM 9-2320-279-34.

To repair the fuel pump, use the fuel pump repair kit, part No. 5195078. Replace all the parts included in this kit.

The fuel pump can be removed with the engine installed in the vehicle or with the engine removed.

Section II. FUEL SYSTEM

Fuel System Maintenance Instructions

13-2. FUEL PUMP REMOVAL/REPAIR/iNSTALLATION.

This task covers:

a. Removal
b. Disassembly
c. Cleaning/Inspection
d. Assembly
e. Installation
f. Follow-on Maintenance

INITIAL SETUP

Models
All

Test Equipment
None

Special Tools
Tool set, fuel pump J1508-3

Supplies
Solvent, dry cleaning, Item 60, Appendix C
Grease, automotive and artillery, Item 36, Appendix C
Adhesive-sealant, silicone, Item 6, Appendix C
Oil, lubricating, Item 48, Appendix C
Crocus cloth, Item 17, Appendix C
Compound, pipe thread sealing, Item 32, Appendix C
Tags, identification, Item 61, Appendix C

Personnel Required
MOS 63W, Wheel vehicle repairer
MOS 63G, Fuel and electrical systems repairer

References
None

Equipment Condition

TM or Para	*Condition Description*
TM 9-2320-279-10	Engine off.
TM 9-2320-279-10	Parking brake on.
TM 9-2320-279-20	Thermostat crossover tube removed.
Para 15-10	Engine stop solenoid removed.

Special Environmental Conditions
None

General Safety Instructions
None

Level of Maintenance
Direct Support

https://truckmanualshub.com/

13-2. FUEL PUMP REMOVAL/REPAIR/INSTALLATION (CONT).

a. Removal.

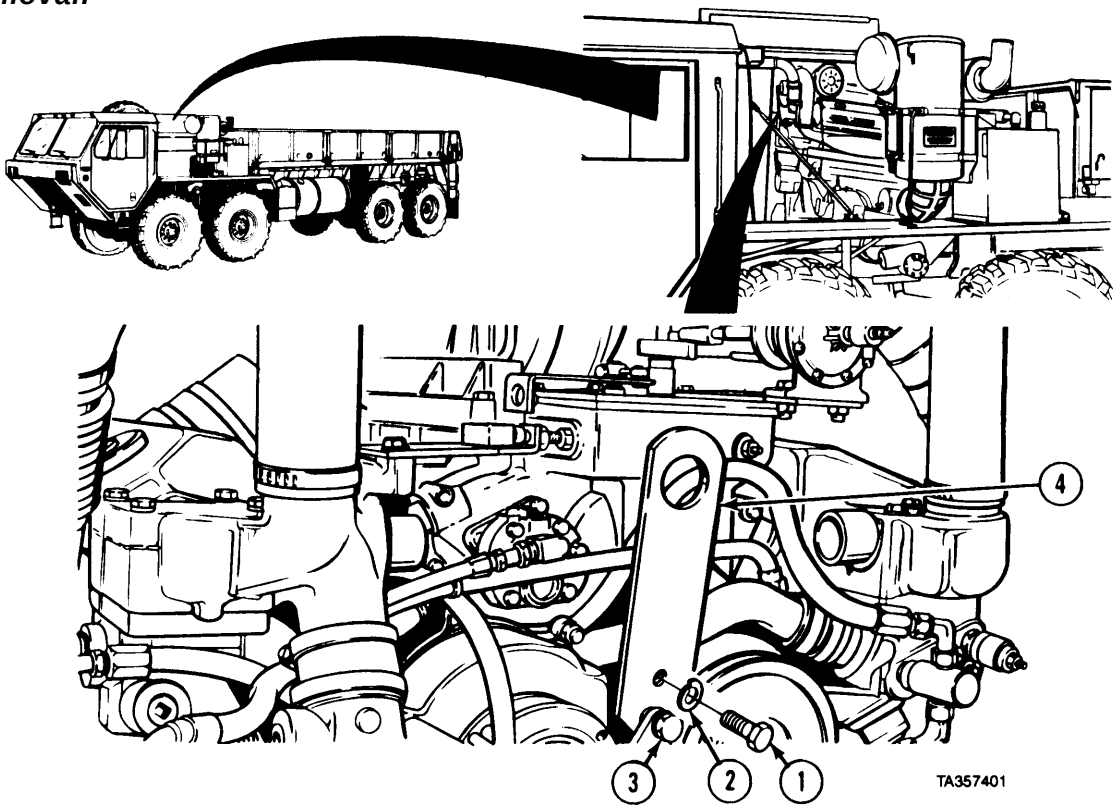

(1) Remove screw (1) and lockwasher (2).
(2) Loosen screw (3) and move bracket (4) aside.

(3) Remove two fuel hoses (5).
(4) Remove three screws (6).

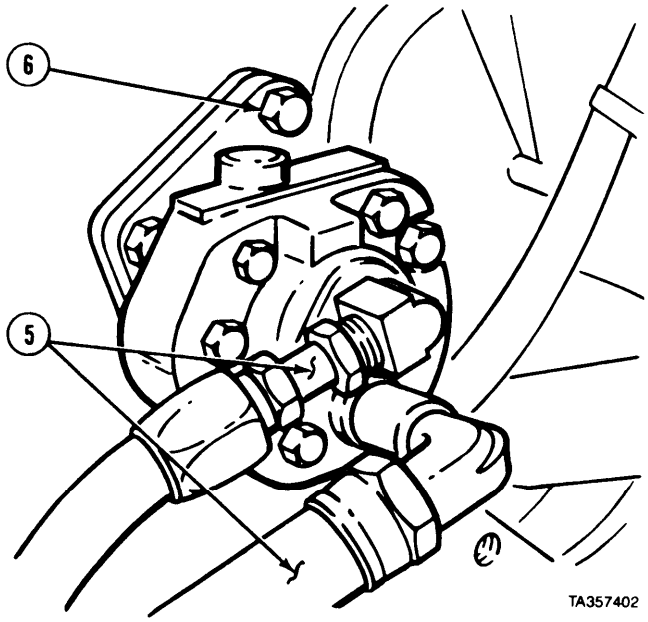

https://truckmanualshub.com/

(5) Remove fuel pump (7) and gasket (8) from governor housing (9).

WARNING

Adhesives, solvents, and sealing compounds can burn easily, can give off harmful vapors, and are harmful to skin and clothing. To avoid injury or death, keep away from open fire and use in well-ventilated area. If adhesive, solvent, or sealing compound gets on skin or clothing, wash immediately with soap and water.

(6) Clean fuel pump (7) with dry cleaning solvent.

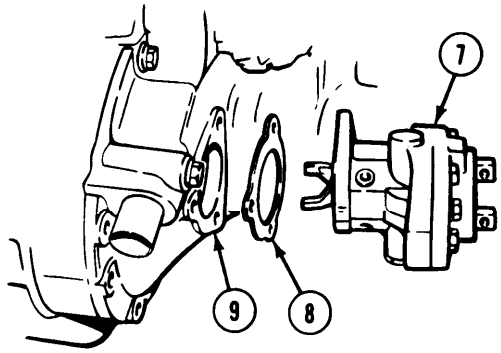

TA357403

b. Disassembly.

(1) Remove fork (1) from fuel pump (2).

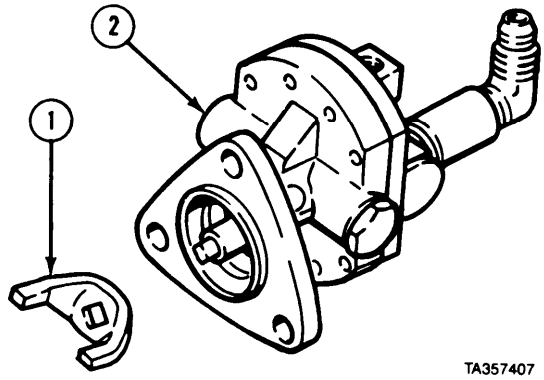

TA357407

(2) Mount fuel pump holder in vise and install fuel pump (2) on holder.

(3) Mark anti remove elbow (3), elbow (4), coupling (5), and nipple (6).

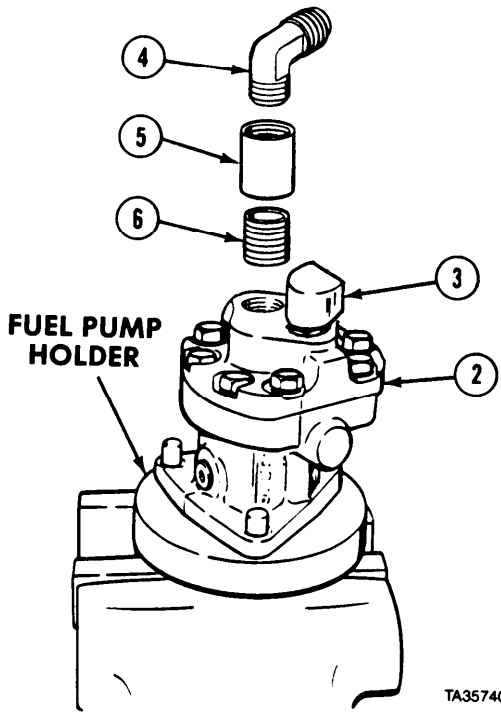

TA357408

https://truckmanualshub.com/

13-2. FUEL PUMP REMOVAL/REPAIR/INSTALLATION (CONT).

(4) Remove eight screws (7), lockwashers (8), and cover (9) from housing (10).
(5) Remove drive shaft and gear assembly (11). Do not remove gear from shaft.
(6) Remove drive shaft and gear assembly (12). Do not remove gear from shaft.

(7) Remove plug (13), gasket (14), spring (15), pin (16), and valve (17) from housing (10).
(8) Remove fuel pump holder from vise. Install housing (10) in vise.

NOTE

Tag and mark how oil seals are installed, Install new seals with lips pointing in same direction.

(9) Remove two oil seals (18 and 19) from housing (10).
(10) Mark location and remove two pipe plugs (20) from housing (10).

c.Cleaning/Inspection

WARNING

Adhesives, solvents, and sealing compounds can burn easily, can give off harmful vapors, and are harmful to skin and clothing. To avoid injury or death, keep away from open fire and use in well-ventilated area. If adhesive, solvent, or sealing compound gets on skin or clothing, wash immediately with soap and water.

(1) Inspect all parts for damage. Replace damaged parts.
(2) Inspect mating surfaces of housing and cover. Mating surfaces must be flat and smooth and fit together tightly.
(3) Inspect valve. If valve is lightly scored, use crocus cloth to remove marks. If marks cannot be removed with crocus cloth, replace valve,

Fuel System Maintenance Instructions (Cont)

d. Assembly.

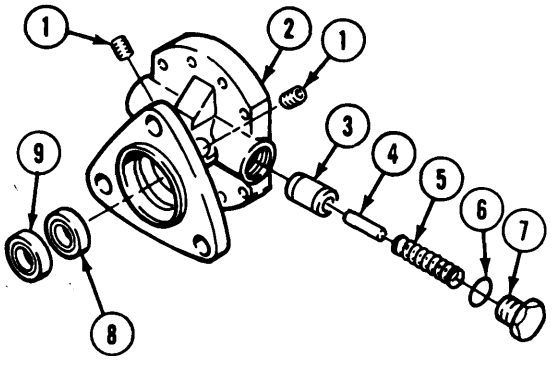

TA357411

WARNING

Adhesives, solvents, and sealing compounds can bum easily, can give off harmful vapors, and are harmful to skin and clothing. To avoid injury or death, keep away from open fire and use in well-ventilated area. If adhesive, solvent, or sealing compound gets on skin or clothing, wash immediately with soap and water.

(1) Coat threads of two pipe plugs (1) with pipe thread sealing compound and install in fuel pump housing (2).
(2) Mount fuel pump holder in vise and install fuel pump housing (2) on holder.
(3) Lubricate valve (3) and install valve, pin (4), spring (5), gasket (6), and plug (7) in housing (2). Tighten plug to 20 lb-ft (27 N•m).
(4) Lubricate two oil seals (8 and 9) with lubricating oil.
(5) Set fuel pump housing (2) on top of two wooden blocks.

NOTE

Install new seals with lips pointing in same direction.

(6) Install inner oil seal (8) on pilot (pin) of oil seal installer. Install inner oil seal (8) in housing (2). Tap seal until seated.
(7) Install adapter on tool.
(8) Install outer oil seal (9) on pilot of oil seal installer. Install outer oil seal in housing (2). Tap seal until seated.

(9) Lubricate two shaft and gear assemblies (10 and 11) with lubricating oil. Install assemblies in housing (2).

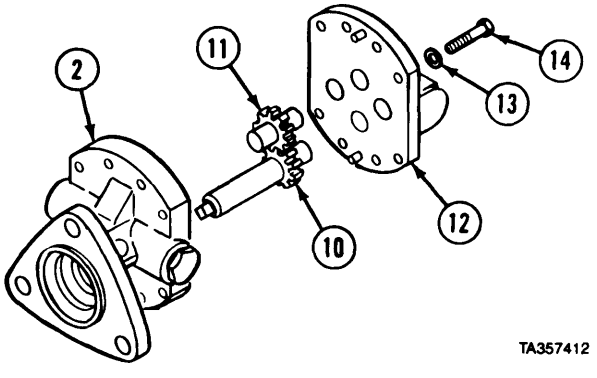

TA357412

CAUTION

When applying adhesive-sealant to pump cover, insure no sealant gets into gear compartment. Sealant in gear compartment can damage equipment.

(10) Apply coating of adhesive-sealant to mating surface of cover (12). Install cover on housing (2).
(11) Install eight lockwashers (13) and screws (14). Tighten screws evenly.

https://truckmanualshub.com/

Fuel System Maintenance Instructions (Cont)

13-2. FUEL PUMP REMOVAL/REPAIR/INSTALLATION (CONT).

(12) Coat threads of nipple (15), coupling (16), elbow (17), and elbow (18) with pipe thread sealing compound and install on pump (19).

(13) Remove pump (19) from fuel pump holder.

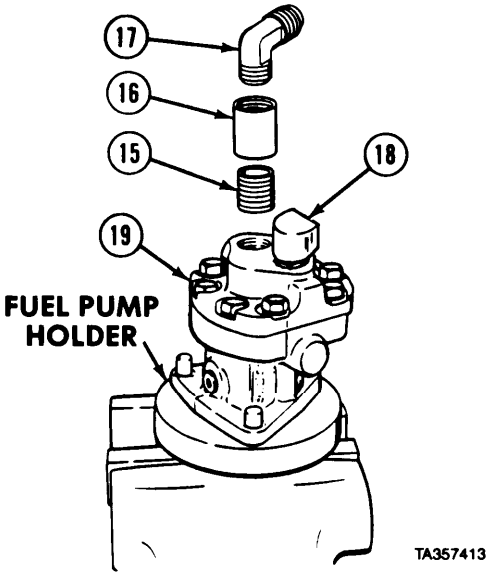

(14) Install fork (20) in pump (19).

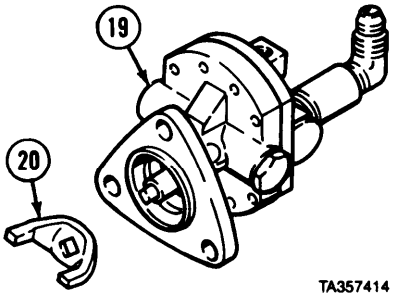

e. Installation.

(1) Apply grease to gasket (1).

(2) Install gasket (1) to governor housing (2).

(3) Aline fork (3) with blower shaft (4) and install fuel pump (5).

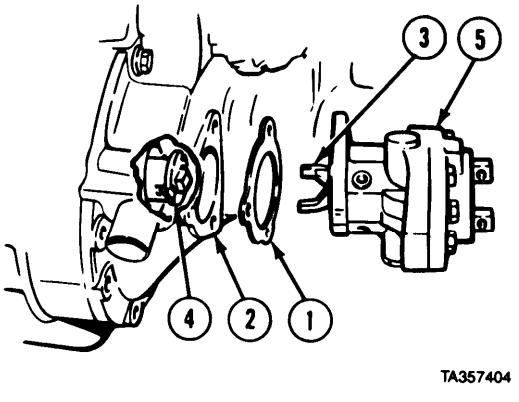

https://truckmanualshub.com/

Fuel System Maintenance Instructions (Cont)

WARNING

Adhesives, solvents, and sealing compounds can burn easily, can give off harmful vapors,and are harmful to skin and clothing. To avoid injury or death, keep away from open fire and use in well-ventilated area. If adhesive, solvent, or sealing compound gets on skin or clothing, wash immediately with soap and water.

(4) Apply adhesive-sealant to three screws (6).
(5) Install three screws (6).
(6) Install two fuel hoses (7).

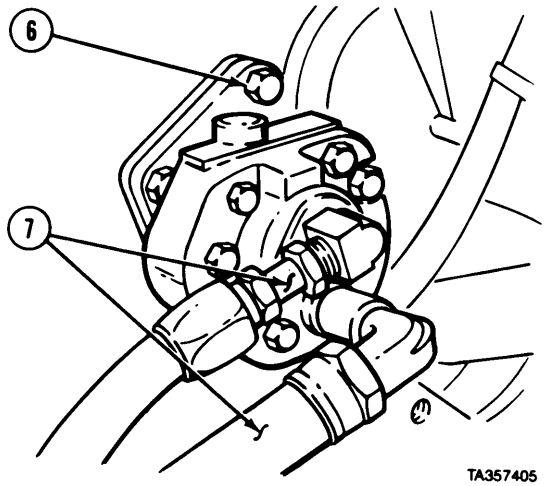

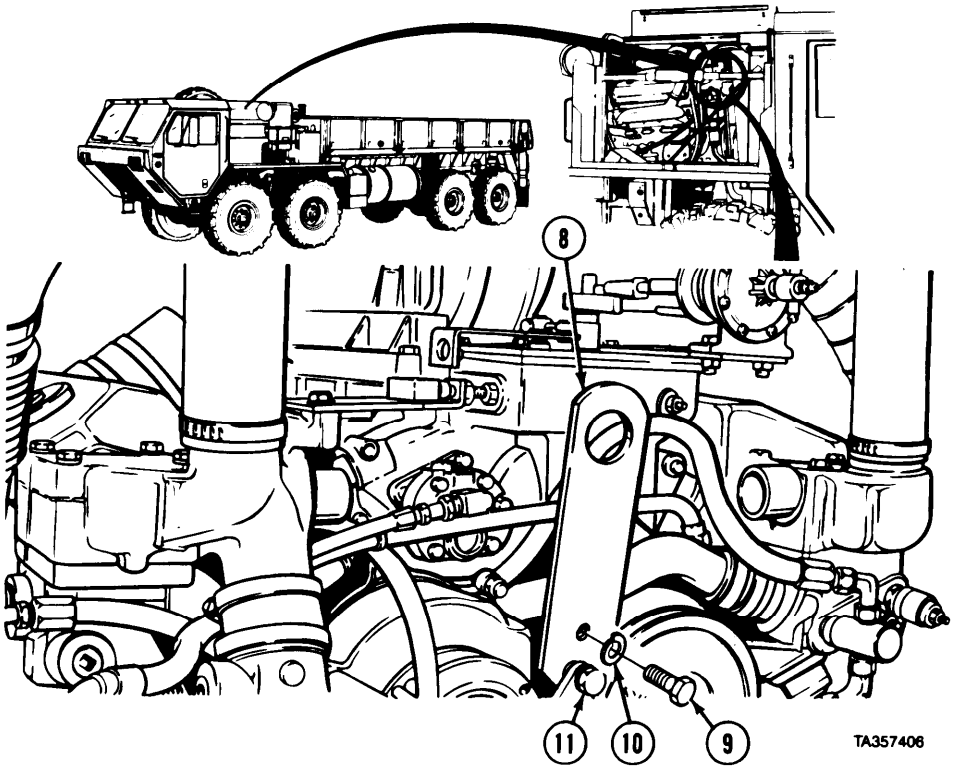

(7) Straighten up bracket (8), install screw (9) and lockwasher (10).
(8) Tighten screw (11).

f. Follow-on Maintenance.
(1) Install engine stop solenoid (para 15-10).
(2) Install thermostat crossover tube (TM 9-2320-279-20).

END OF TASK

https://truckmanualshub.com/

https://truckmanualshub.com/

CHAPTER 14
BLOWER AND TURBOCHARGER MAINTENANCE

Contents

	Para	Page
General	14-1	14-1
Tachometer Drive Removal/Installation	14-2	14-1
Blower Removal/Installation	14-3	14-4
Blower Repair	14-4	14-14.1
Air Inlet Adapter Removal/Installation	14-5	14-36
Turbocharger Removal/Installation	14-6	14-38
Turbocharger Repair	14-7	14-44

Section I. INTRODUCTION

14-1. GENERAL. This chapter includes removal, installation, and repair of the blower, tachometer drive, and turbocharger assemblies. All assemblies can be removed with the engine in the vehicle. Preliminary procedures may differ if assembly components are removed after engine is removed from vehicle. Subassemblies and parts which must be removedbefore blower, tachometer drive, and turbocharger components can be removed or repaired will be referenced to other paragraphs of this manual, TM 9-2320-279-10, TM 9-2320-279-20, or TM 9-2320-279-34.

Section II. BLOWER ASSEMBLY

Blower Maintenance Instructions

14-2. TACHOMETER DRIVE REMOVAL/INSTALLATION.

This task covers:

a. Removal
b. Installation
c. Follow-on Maintenance

INITIAL SETUP

Models
All

Test Equipment
None

Special Tools
None

Supplies
None

Personnel Required
MOS 63W, Wheel vehicle repairer

References
None

Equipment Condition

TM or Para	*Condition Description*
TM 9-2320-279-10	Engine off.
TM 9-2320-279-10	Parking brake on.
TM 9-2320-279-10	Engine cover open.
TM 9-2320-279-10	Engine side panel removed.
TM 9-2320-279-20	Tachometer sending unit removed.

Special Environmental Conditions
None

General Safety Instructions
None

Level of Maintenance
Direct Support

https://truckmanualshub.com/

14-2. TACHOMETER DRIVE REMOVAL/INSTALLATION (CONT)

a. Removal.

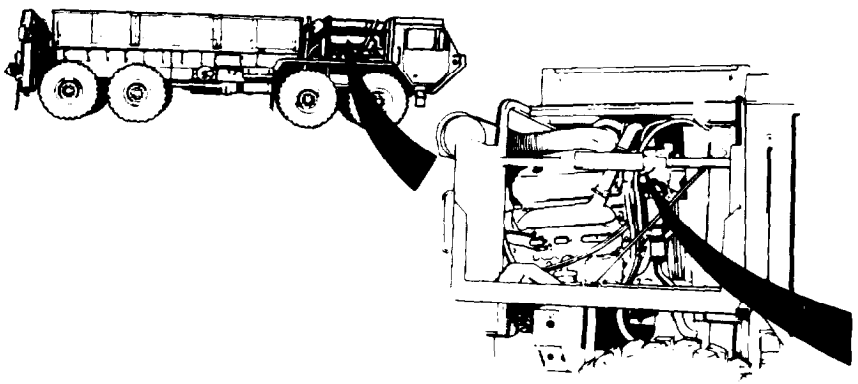

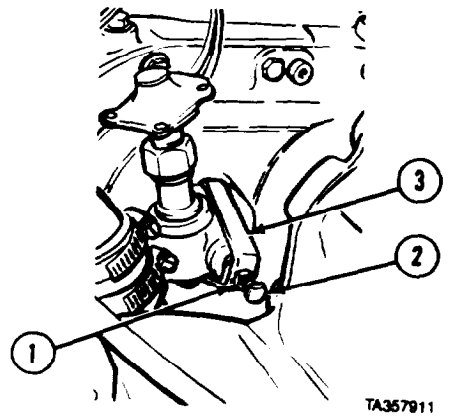

(1) Loosen jamnut (1).
(2) Loosen screw (2) and remove clamp (3).

(3) Remove tachometer drive housing (4) and gasket (5).

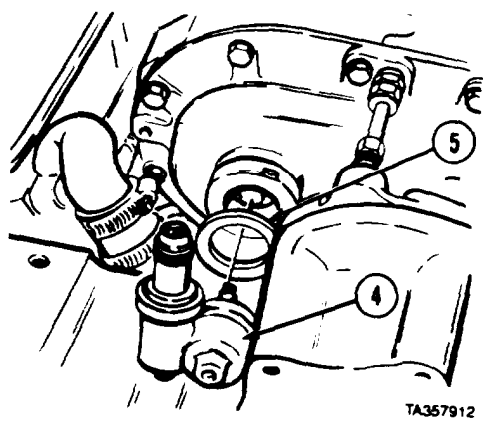

(4) Remove tachometer drive (6).

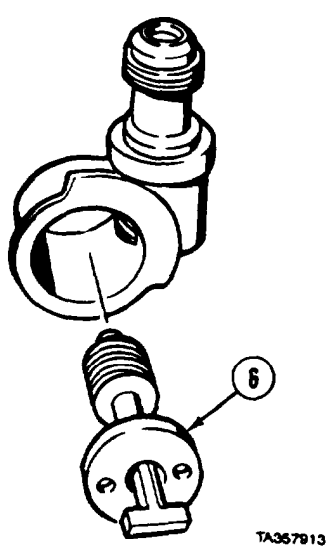

https://truckmanualshub.com/

Blower Maintenance Instructions (Cont)

b. Installation.

(1) Install tachometer drive (1)in tachometer drive housing (2).

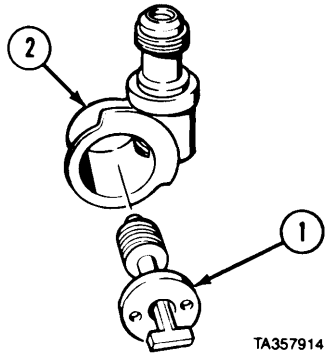

(2) Install gasket (3)on housing (2).
(3) Install housing (2).

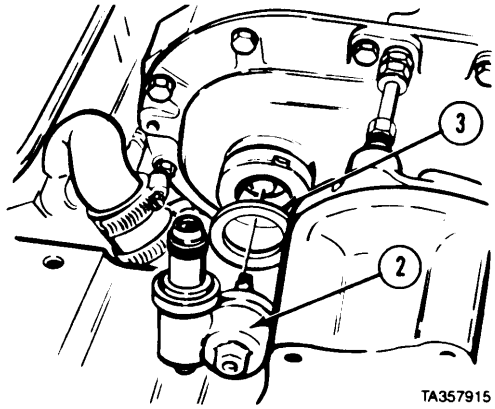

(4) Install clamp (4)and tighten screw (5).
(5) Tighten jamnut (6).

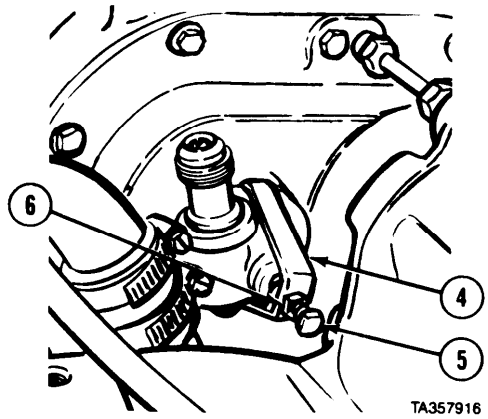

c. Follow-on Maintenance.

(1) Install tachometer sending unit (TM 9-2320-279-20).
(2) Install engine side panel (TM 9-2320-279-10),
(3) Close engine cover (TM 9-2320-279-10).
(4) Start engine (TM 9-2320-279-10).
(5) Check operation of tachometer.

END OF TASK

https://truckmanualshub.com/

Blower Maintenance Instructions (Cont)

14-3. BLOWER REMOVAL/INSTALLATION.

This task covers:

a. Removal
b. Installation
c. Follow-on Maintenance

INITIAL SETUP

Models
All

Test Equipment
None

Special Tools
Tool, blower shaft alinement J-24619 or J33001

Supplies
Grease, automotive and artillery, Item 36, Appendix C

Personnel Required
MOS 63W, Wheel vehicle repairer (2)

References
None

Equipment Condition

TM or Para	*Condition Description*
TM 9-2320-279-20	Rocker covers removed.
TM 9-2320-279-20	Air compressor removed.
TM 9-2320-279-20	Coolant level lowered.
Para 14-5	Air inlet adapter removed.
Para 15-10	Engine stop solenoid removed.
Para 15-4	Governor cover removed.
Para 13-2	Fuel pump removed,

Special Environmental Conditions
None

General Safety Instructions
None

Level of Maintenance
Direct Support

a. Removal.

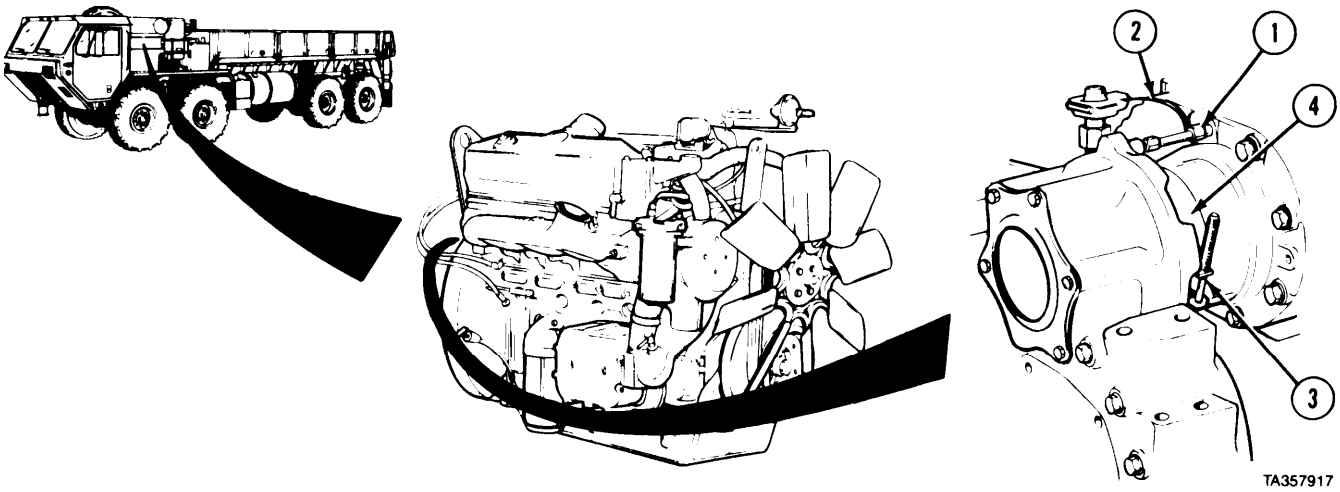

(1) Disconnect blower lube line (1).
(2) Disconnect tachometer sender wire (2).
(3) Loosen clamp (3) on blower drive support seal (4).

https://truckmanualshub.com/

Blower Maintenance Instructions (Cont)

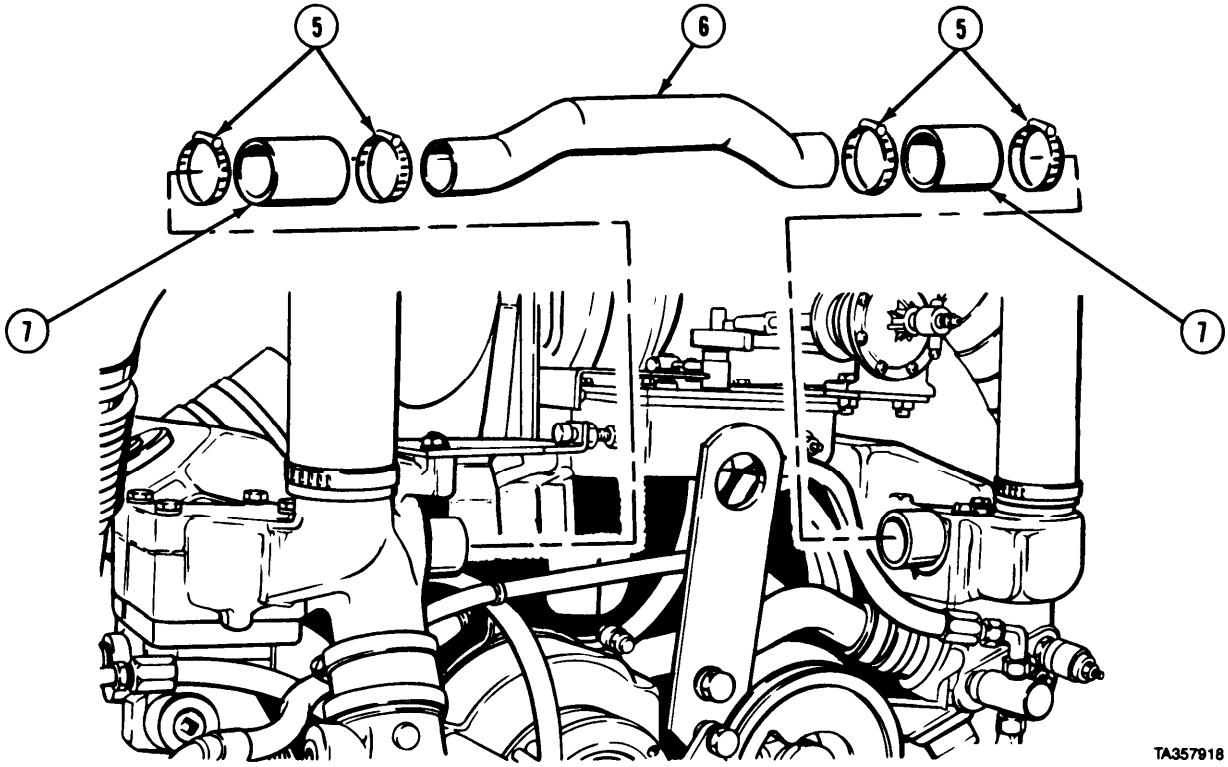

(4) Loosen four hose clamps (5).
(5) Remove thermostat cross-over tube (6), hoses (7), and clamps (5).

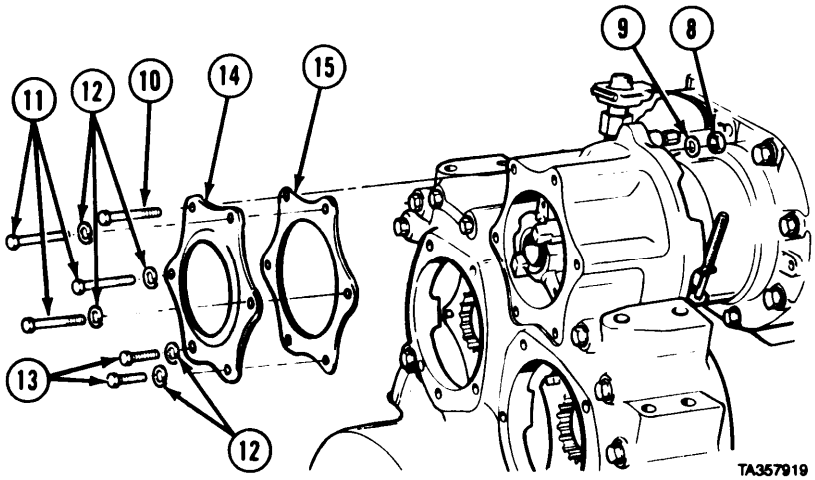

(6) Remove nut (8), copper washer (9), and screw (10).
(7) Remove three screws (11) and lockwashers (12).
(8) Remove two screws (13), lockwashers (12), cover (14), and gasket (15).

https://truckmanualshub.com/

14-3. BLOWER REMOVAL/INSTALLATION (CONT).

(9) Remove retaining ring (16) from blower drive shaft (17).

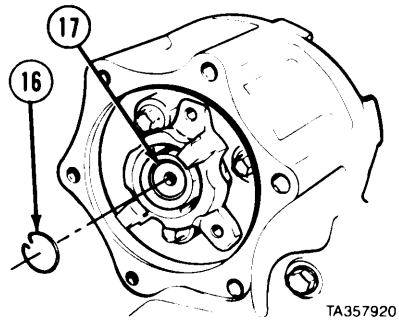

CAUTION

Be careful when removing shaft; spring may fall out.

(10) Remove blower drive shaft (17) and spring (18) from drive adapter (19).

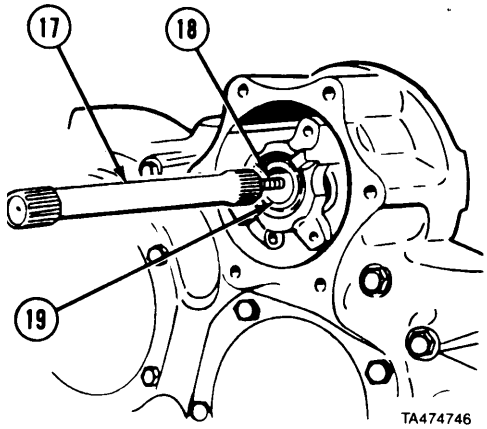

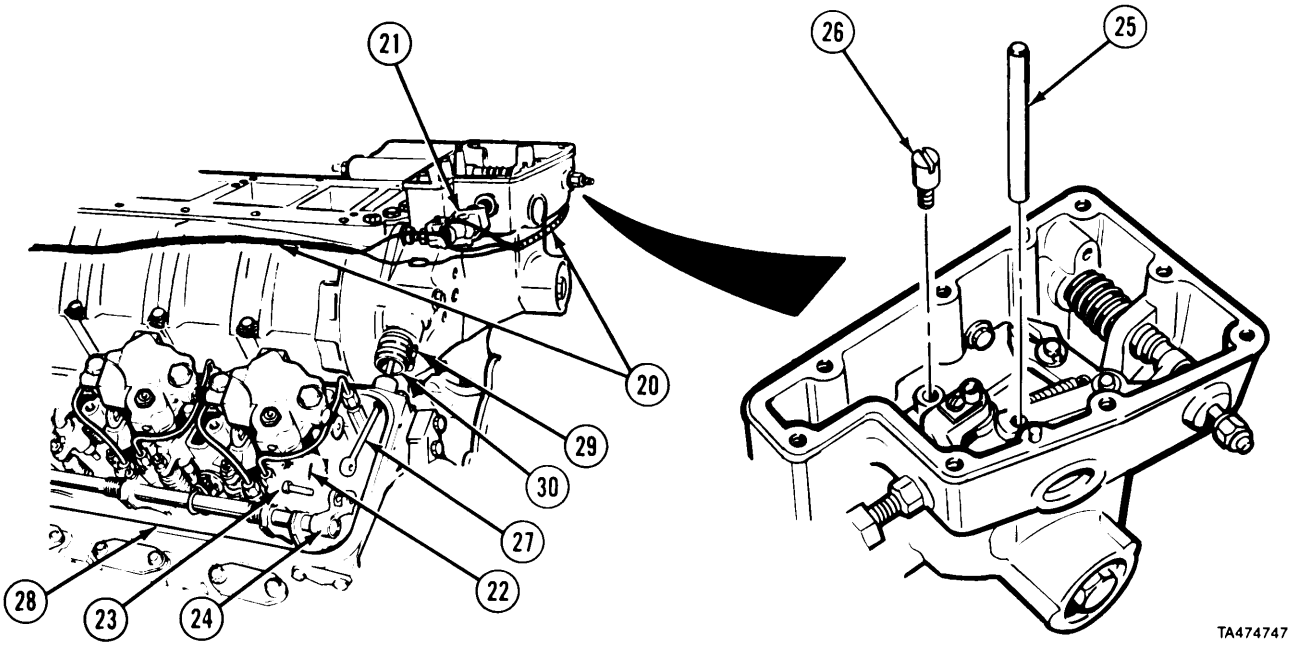

https://truckmanualshub.com/

Blower Maintenance Instructions (Cont)

NOTE

Tag and mark wires before disconnecting.

(11) Disconnect two wires (20) from buffer swtich (2 1).
(12) Remove two cotter pins (22) and clevis pins (23) from injector control tube levers (24) on both sides of engine.
(13) Remove connecting pin (25) and fuel rod connecting pin (26).

NOTE

Tag and mark fuel control rods.

(14) Remove two fuel control rods (27) through cylinder head (28).
(15) Loosen four clamps (29) and slide hose (30) clear of cover tube onto governor.

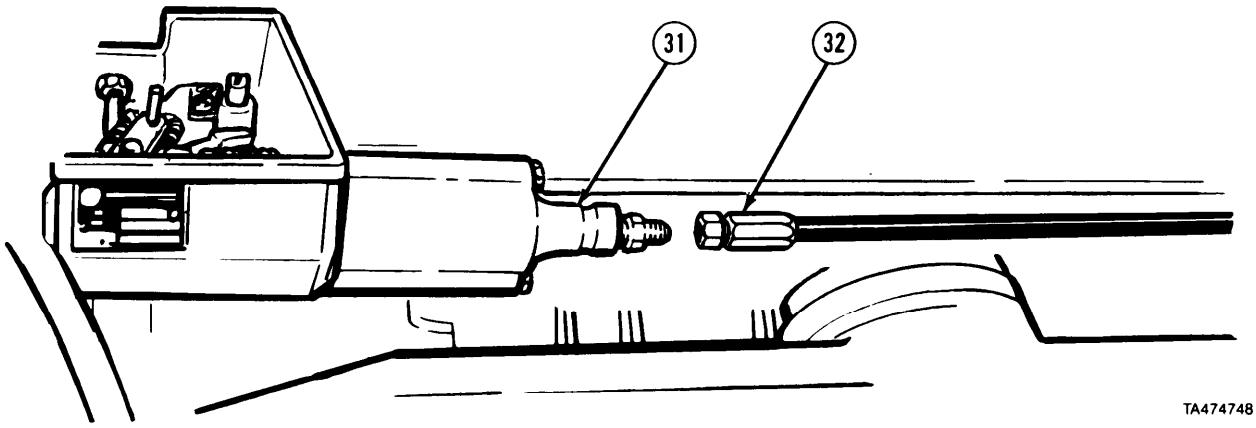

(16) Disconnect variable low speed limiting governor (31) at hose fitting (32).

(17) Remove four screws (33) and washers (34) from blower (35).
(18) Remove six screws (36) and retainers (37).

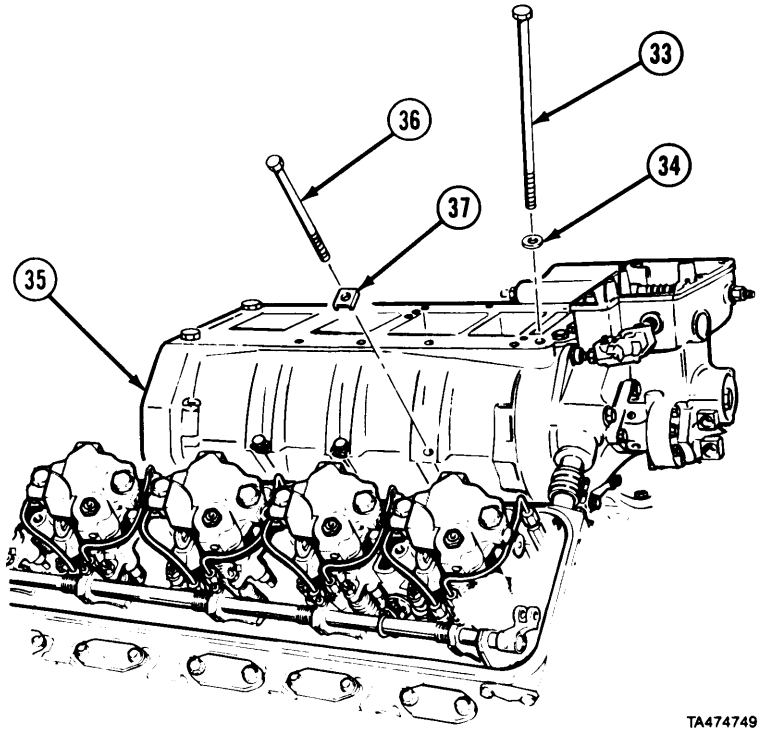

Blower Maintenance Instructions (Cont)

14-3. BLOWER REMOVAL/INSTALLATION (CONT).

(19) Soldier A and Soldier B remove blower (35) and gasket (38) from engine block (39).
(20) Remove governor housing assembly (para 15-2).
(21) Remove tachometer drive (para 14-2).

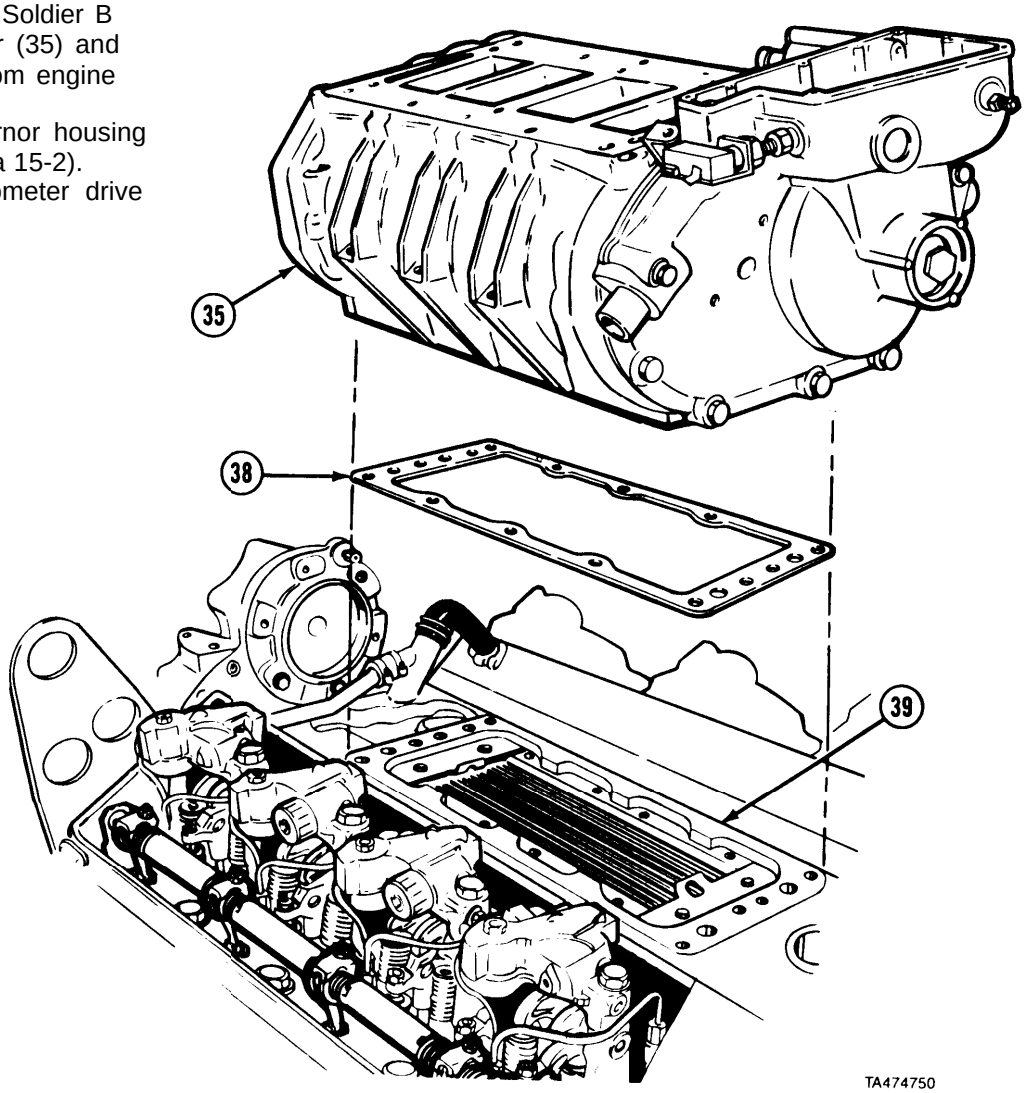

(22) Remove clamp (40) and seal (41) from drive end of cover (42).

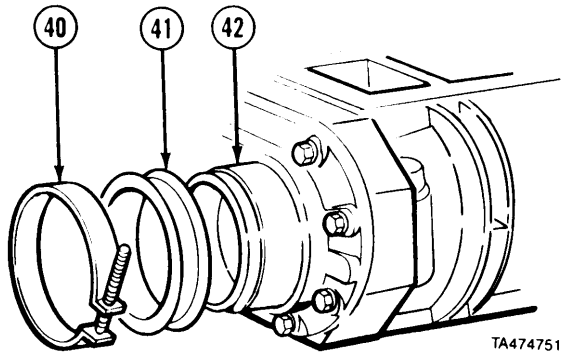

https://truckmanualshub.com/

Blower Maintenance Instructions (Cont)

b. Installation.

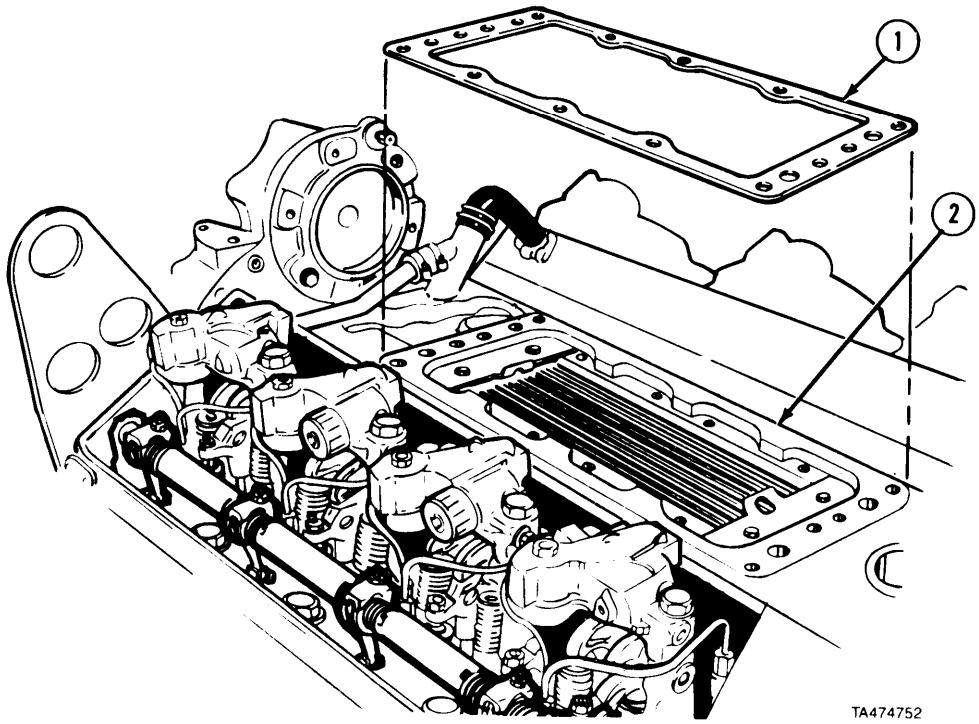

(1) Apply grease to bottom side of gasket (1).
(2) Position gasket (1)on engine block mounting flange (2).

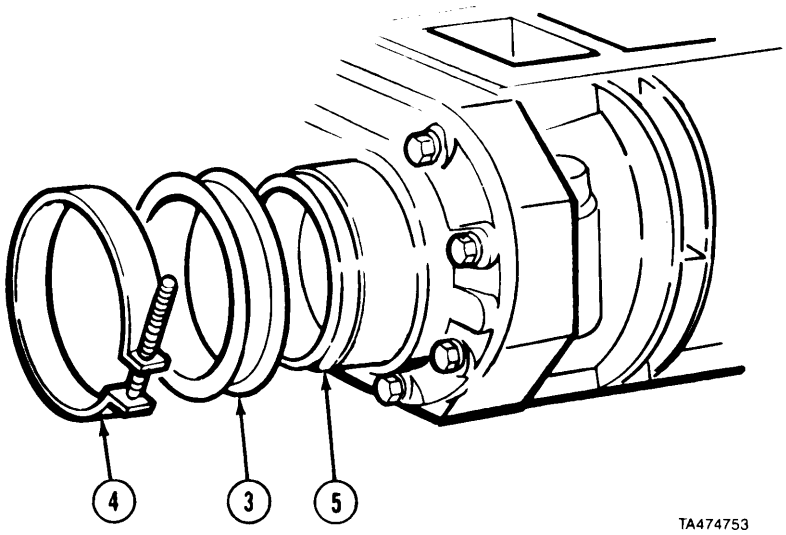

(3) Position seal (3) and clamp (4) over drive end of cover (5).

https://truckmanualshub.com/

Blower Maintenance Instructions (Cont)

14-3. BLOWER REMOVAL/INSTALLATION (CONT).

(4) Install governor housing assembly (para 15-2).
(5) Install tachometer drive (para 14-2).
(6) Soldier A and Soldier B position blower assembly (6) on gasket (1).

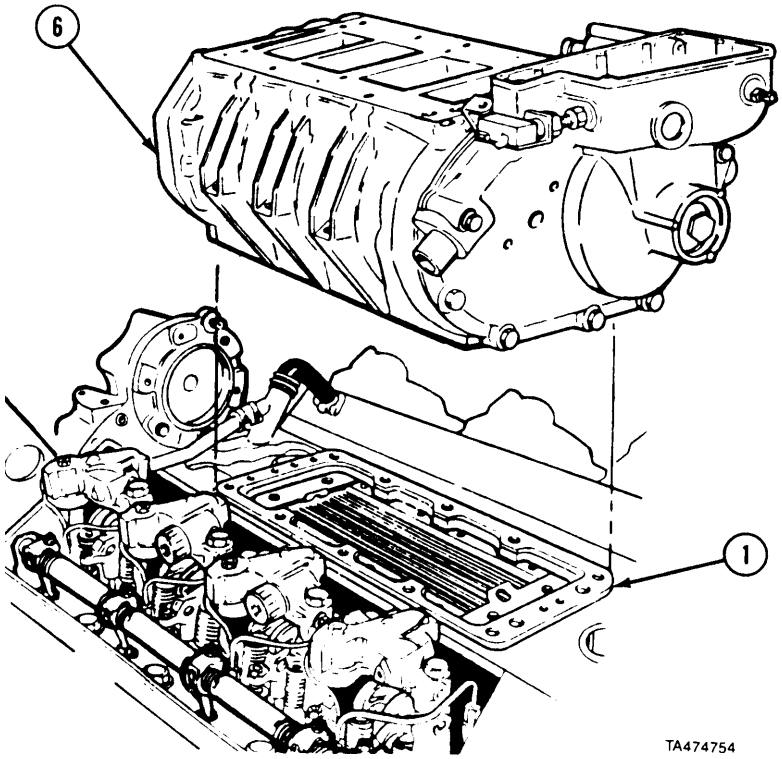

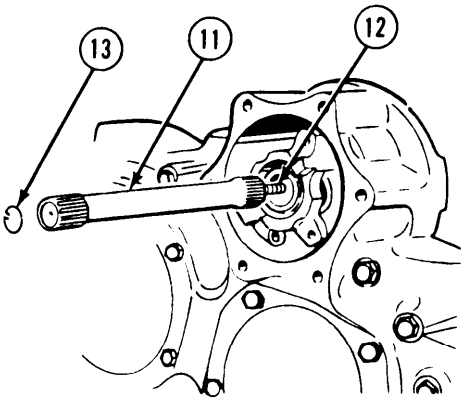

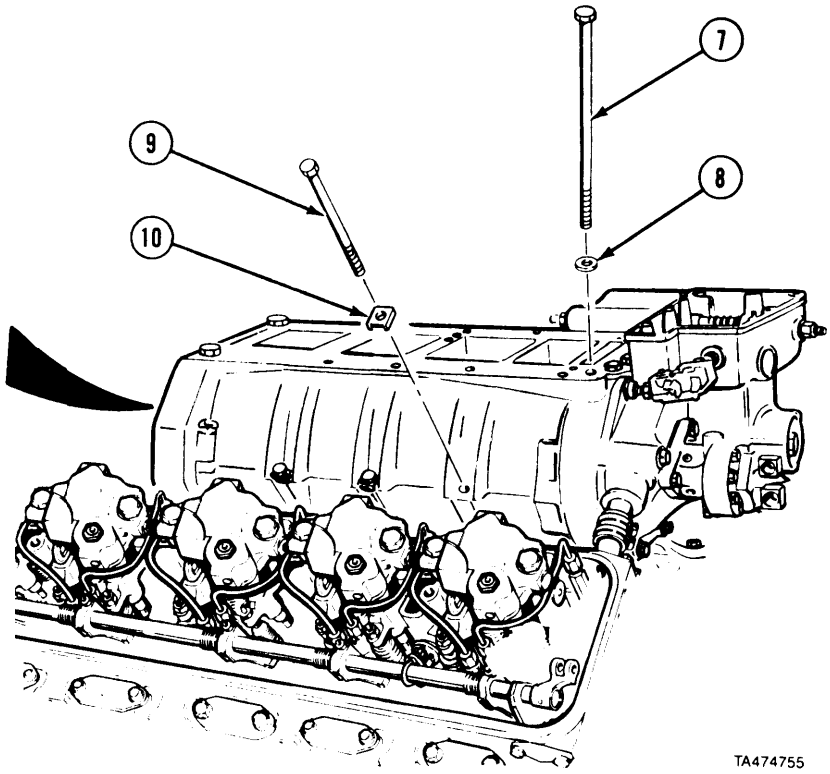

https://truckmanualshub.com/

Blower Maintenance Instructions (Cont)

(7) Install four screws (7) and washers (8) finger tight.
(8) Install six screws (9) and retainers (10) finger tight.
(9) Using blower alinement tool, install blower drive shaft (11) and spring (12).
(10) Tighten four screws (7) to 40 to 45 lb-ft (54.2 to 61.0 N-m),
(11) Tighten six screws (9) in 5 lb-ft increments uniformly until tightened to 30 to 35 lb-ft (41.7 to 47.5 N-m).
(12) Retighten four screws (7) to 40 to 45 Ib-ft (54.2 to 61.0 N-m).

NOTE

Blower shaft should move freely, if not, loosen screws and repeat steps (10), (11), and (12).

(13) Remove blower alinement tool.
(14) Push in on blower drive shaft (11) and install retaining ring (13).

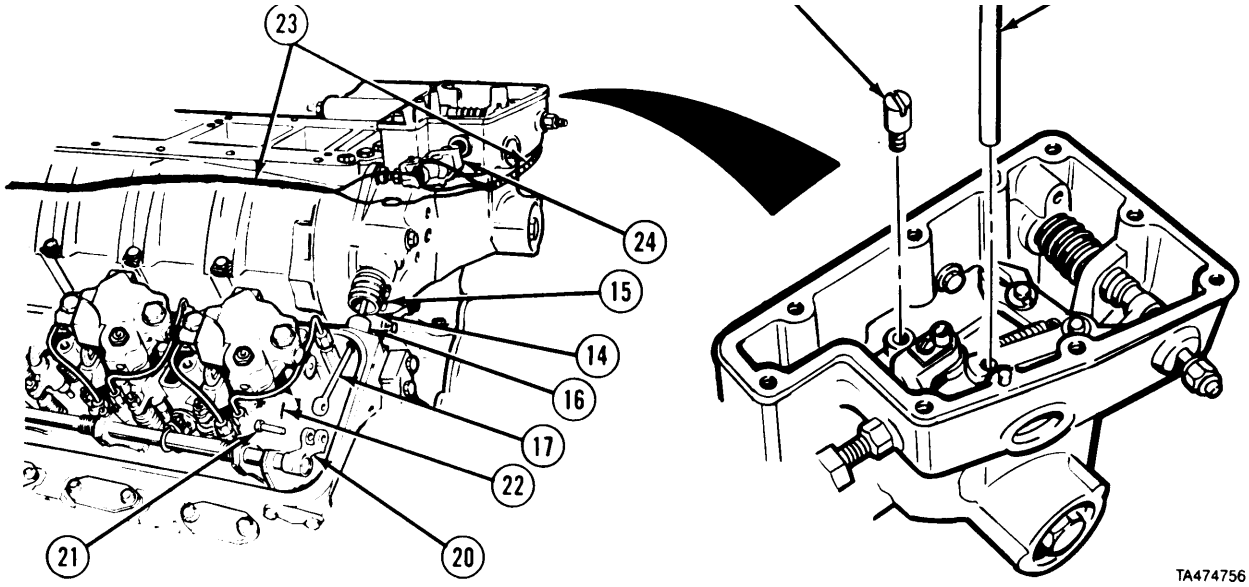

(15) Install two hoses (14) and tighten four clamps (15) on two crossover tubes (16).
(16) Install fuel control rods (17), on both sides of engine, with connecting pin (18) and connecting pin (19).
(17) Connect fuel control rods (17) to injector control tube levers (20) with two clevis pins (21) and cotter pins (22).
(18) Install wires (23) on buffer switch (24).

https://truckmanualshub.com/

Blower Maintenance Instructions (Cont)

14-3. BLOWER REMOVAL/INSTALLATION (CONT).

(19) Position blower drive seal (3) on blower drive support (25).
(20) Position clamp (4) in groove of seal (3). Tighten clamp.

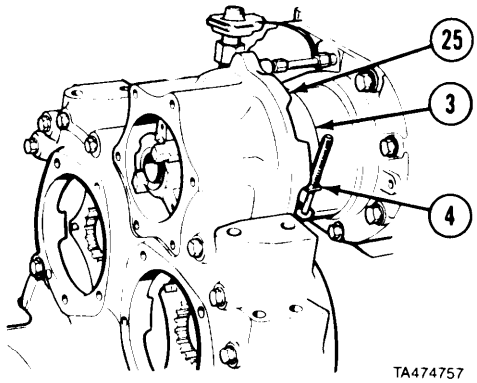

(21) Position cover (26) with gasket (27) on blower drive support (25).
(22) Install three screws (28) and lockwashers (29).
(23) Install two screws (30) and lockwashers (31).
(24) Install screw (32), copper washer (33), and nut (34).

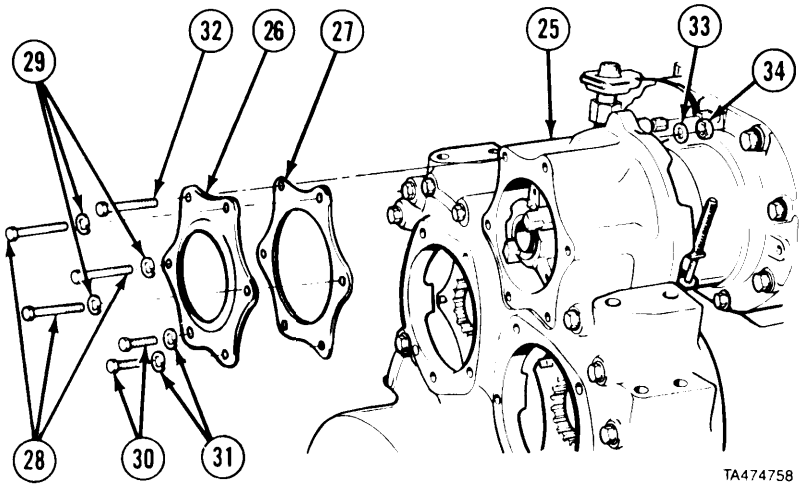

(25) Connect and tighten blower lube line fittings (35).

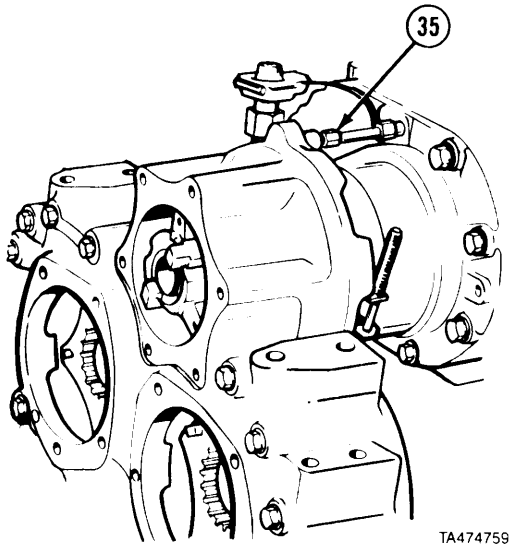

https://truckmanualshub.com/

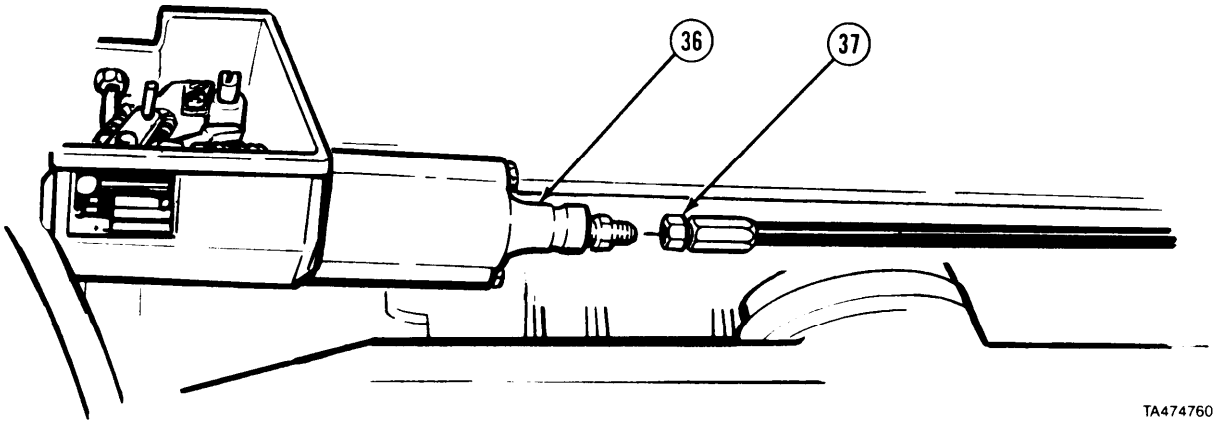

(26) Connect variable low speed limiting governor (36) to hose fitting (37).

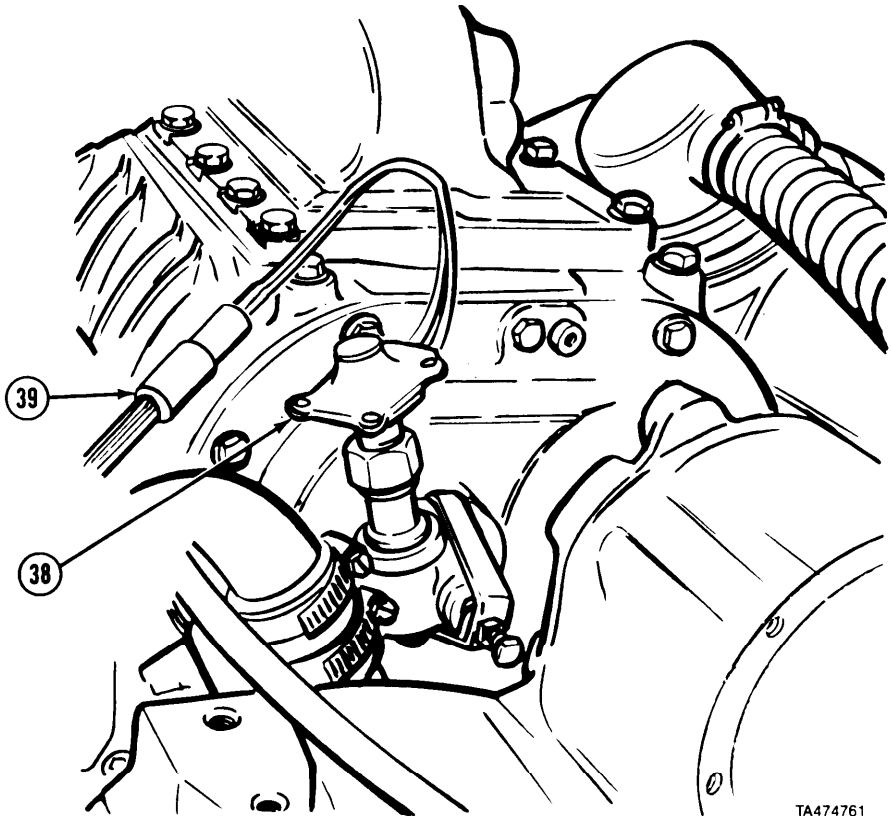

(27) Connect engine tachometer sending unit (38) at plug (39).

https://truckmanualshub.com/

14-3. BLOWER REMOVAL/INSTALLATION (CONT).

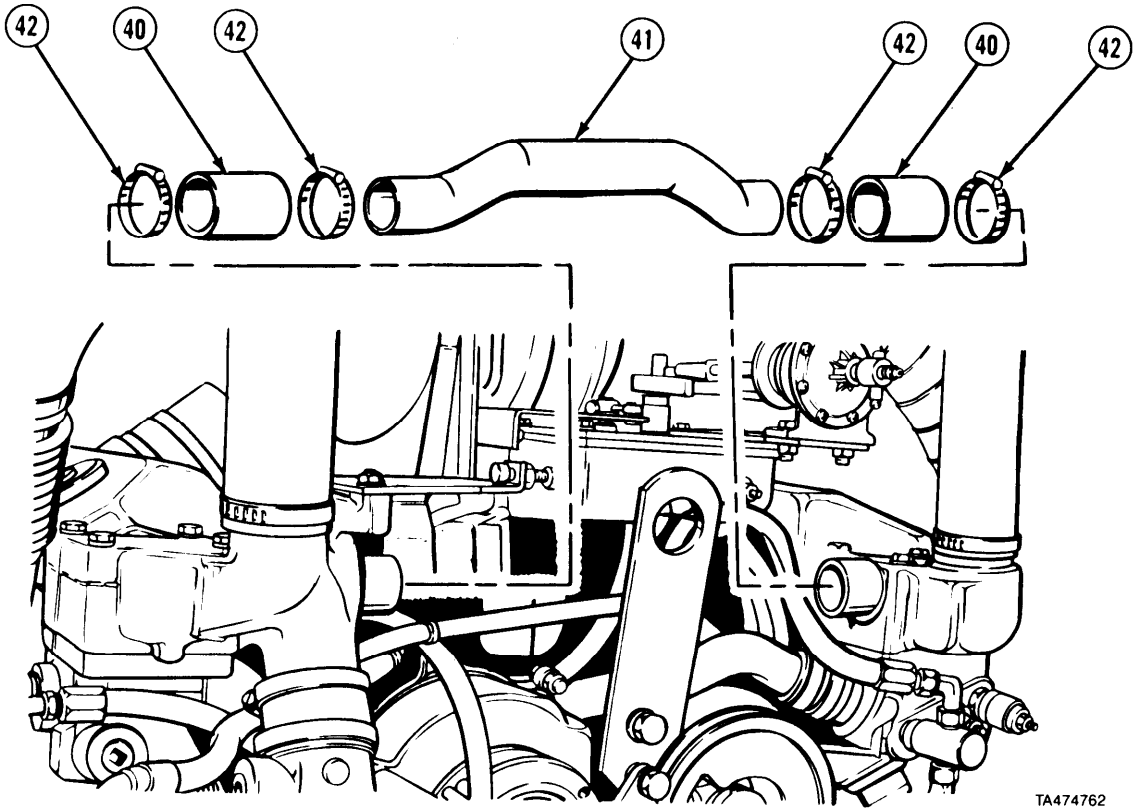

(28) Install two hoses (40) and thermostat crossover tube (41) with four clamps (42).

c. Follow-on Maintenance.

(1) Install governor cover (para 15-4).
(2) Install air inlet adapter (para 14-5).
(3) Install engine stop solenoid (para 15-10).
(4) Install valve rocker covers (TM 9-2320-279-20).
(5) Install fuel pump (para 13-2).
(6) Install air compressor (TM 9-2320-279-20).
(7) Add coolant to engine (TM 9-2320-279-20).

END OF TASK

https://truckmanualshub.com/

14-4. BLOWER REPAIR.

This task covers:

a. Disassembly
b. Cleaning/Inspection
c. Assembly
d. Follow-on Maintenance

INITIAL SETUP

Models
All

Test Equipment
None

Special Tools
Tool set, blower service J6270-F
Gage set, piston J3174-02
Seal installer J35787-2
Spacer installer J35787-1

Supplies
Adhesive-sealant, silicone, Item 6, Appendix C
Cloth, crocus, Item 17, Appendix C
Oil, lubricating, Item 48, Appendix C
Sealant, Teflon, Item 57.1, Appendix C
Solvent, drycleaning, Item 60, Appendix C
Tags, identification, Item 61, Appendix C

Personnel Required
MOS 63W, Wheel vehicle repairer

References
None

Equipment Condition

TM or Para	*Condition Description*
Para 15-2	Governor housing assembly removed. Blower on clean work surface.

Special Environmental Conditions
None

General Safety Instructions
None

Level of Maintenance
General Support

a. Disassembly.

NOTE

Some engines are equipped with a bypass valve on the blower. If equipped with bypass valve, do steps *(1)* through *(1.7).* If not, go to step *(1.8).*

(1) Remove two screws (0.1) from pressure clamp (0.2).
(1.1) Remove pressure clamp (0.2) from bypass valve (0.3).
(1.2) Compress clamp (0.4) and pull hose (0.5) off of hose fitting (0.6).
(1.3) Remove bypass valve (0.3) with hose (0.5) from blower (0.7).
(1.4) Remove two clamps (0.4 and 0.8) from hose (0.5).
(1.5) Remove hose (0.5) from bypass valve (0.3).
(1.6) Remove and discard preformed packing (0.9) from bypass valve (0.3).
(1.7) Note position of hose fitting (0.6) and remove hose fitting (0.6).

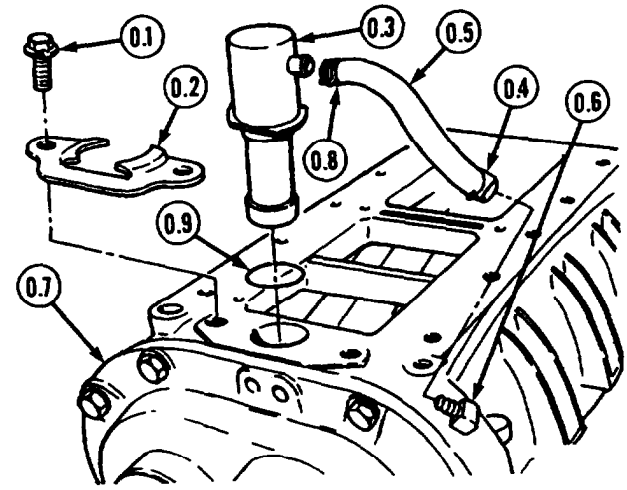

https://truckmanualshub.com/

https://truckmanualshub.com/

Blower Maintenance Instructions (Cont)

NOTE

- To keep gears from turning, place clean folded shop towel between blower rotors.
- Some blowers have ten screws and lockwashers. Others have nine screws and lockwashers.

(1.8) Remove nine or ten screws (1), lockwashers (2), rear end plate cover (3), and gasket (4).

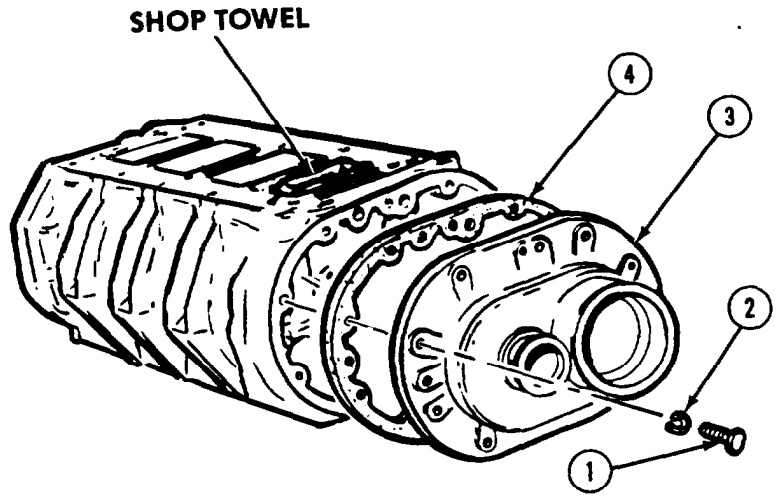

https://truckmanualshub.com/

Blower Maintenance Instructions (Cont)

14-4. BLOWER REPAIR (CONT).

NOTE

Some engines may have spacers and long screws. Turn in spacers and use new short screws to install coupling.

(2) Remove three screws (5), coupling assembly (6), and spacers (7).

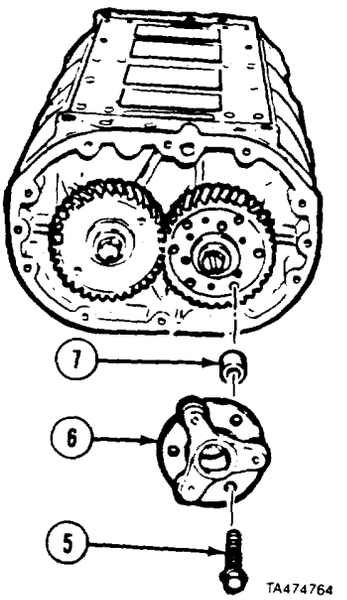

(3) Remove three screws (8) and two spring plates (9) from coupling (6).

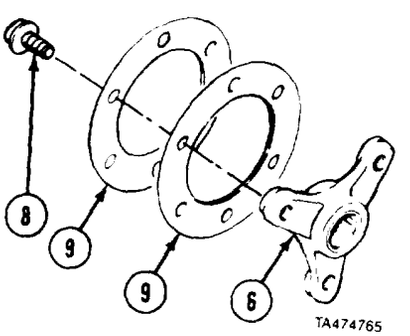

(4) Remove two screws (10 and 11) and washers (12).

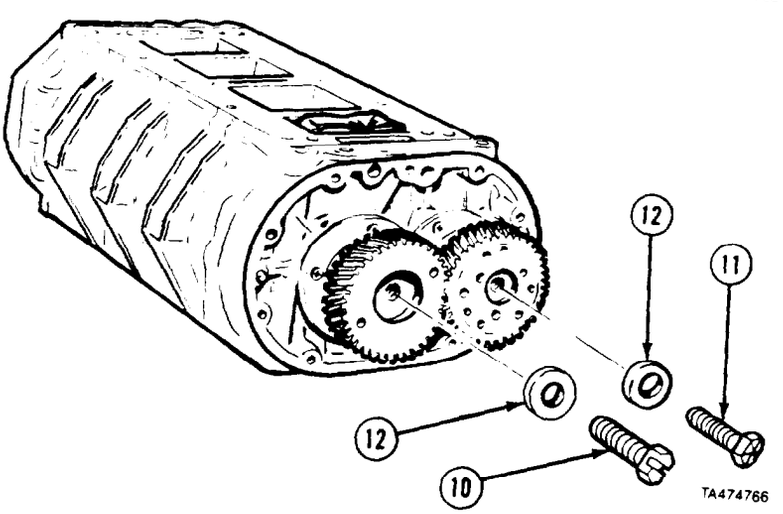

https://truckmanualshub.com/

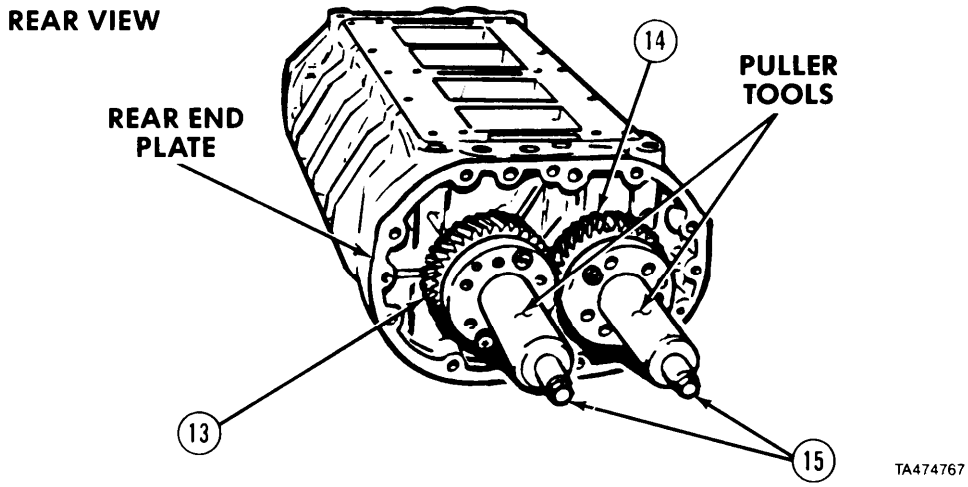

NOTE

Use five screws with puller tools on rear end plate. Use 5/16 in. -24 x 1-1/2 in. (38 mm) screws and aline with tapped holes in gears.

(5) Install puller tool on left timing gear (13) with two screws.
(6) Install puller tool on right timing gear (14).

CAUTION

If puller screws are not tightened evenly during removal of timing gears damage may result to gears.

(7) Tighten screws (15) evenly to remove gears (13 and 14).
(8) Remove pullers from gears (13 and 14)
(9) Mark rear end plate to indicate top.

NOTE

Rig and mark shims and spacers.

(10) Remove shims (16) and two spacers (17) from each rotor shaft (18).

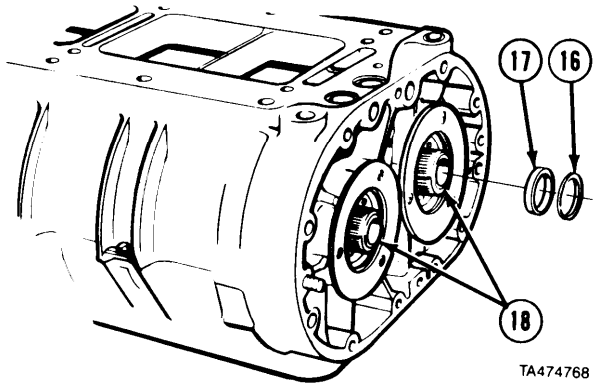

https://truckmanualshub.com/

14-4. BLOWER REPAIR (CONT).

(11) Bend tangs of lockwasher (19) flat.
(12) Remove screw (20), lockwasher (19), fuel pump disk (21), and spacer (22) from front end plate (23).

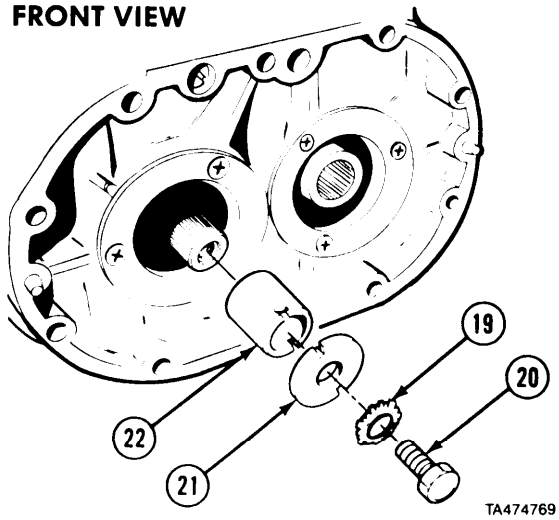

NOTE

Remove shop cloth.

(13) Remove six screws (24) and two flanged bearing retainers (25) from front end plate (23).
(14) Loosen two screws (26) three turns.

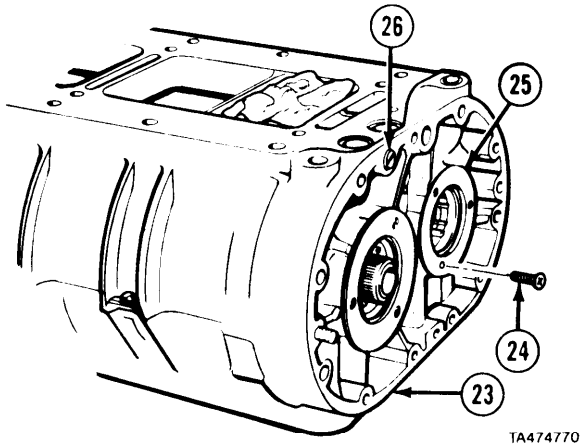

(15) Remove six screws (27) and two flat bearing retainers (28) from rear end plate (29).
(16) Remove two screws (30) from rear end plate (29).

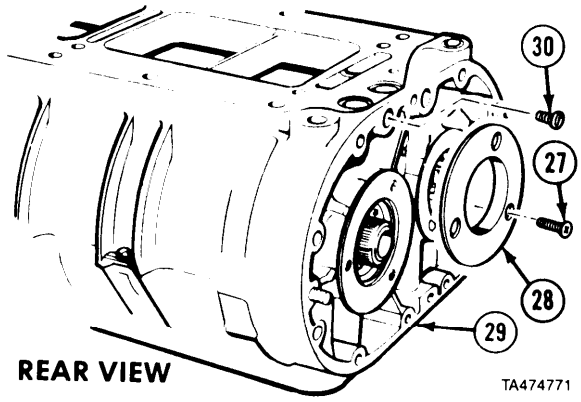

https://truckmanualshub.com/

Blower Maintenance Instructions (Cont)

NOTE

Six puller screws must be 1/4 in.-20 x 1-1/4 in. (32 mm) or longer.

(17) Install three screws and aline two puller tools to rear end plate (29).
(18) Turn both puller screws (15) evenly and remove rear end plate (29).
(19) Remove puller tool from rear end plate (29).

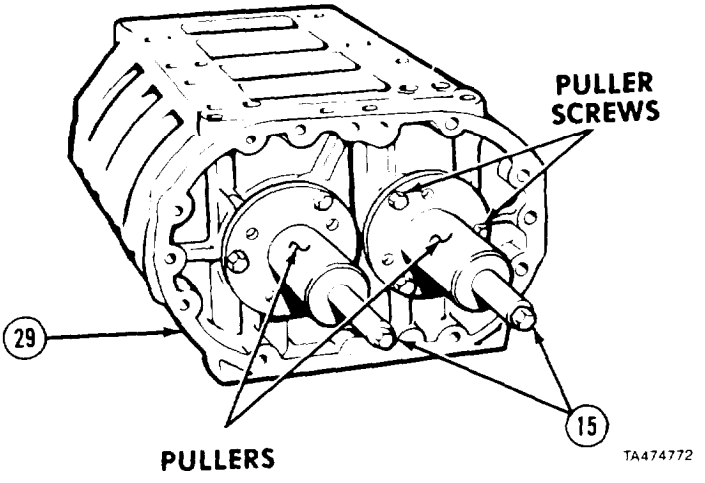

(20) Remove two screws (26) from front end plate (23).
(21) Tag front end plate (23) and indicate top. Tag front end of blower housing (31) and indicate top.
(22) Remove front end plate (23) by tapping with mallet.

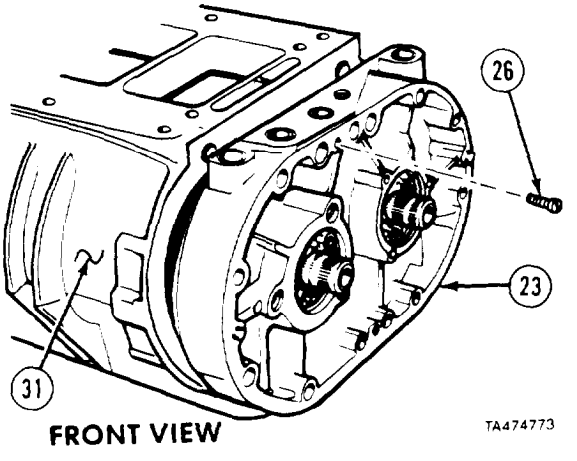

CAUTION

Handle rotors with care to avoid scratching surfaces.

NOTE

Tag rotors before removal.

(23) Remove right rotor (32) and left rotor (33).

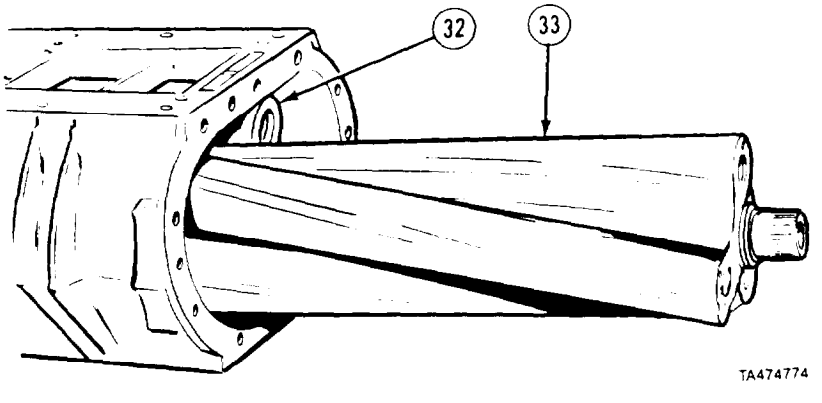

https://truckmanualshub.com/

14-4. BLOWER REPAIR (CONT).

NOTE

- There are two models of seals. Model A has three parts: collar, oil seal ring, and carrier. Model B is a double-lip oil seal. Model B repair kit has a double-lip oil seal and spacer.
- Do steps *(24)* and *(25)* through *(27)* for Model A. Do step *(24.1)* for Model B only.

(24) Remove oil seal ring (34) from ring carrier (35) on each end of rotors (32 and 33).

WARNING

To prevent personal injury, wear a face shield when removing spacer. Pieces of spacer could cause severe eye injury if protection is not used.

(24.1) Using a sharp chisel, crack and remove spacer (35.1), if present, from each end of rotors (32 and 33).

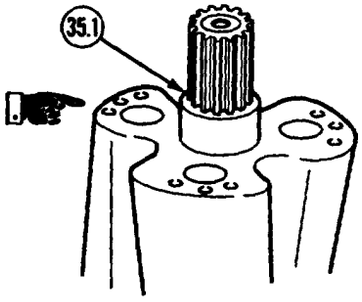

MODEL B

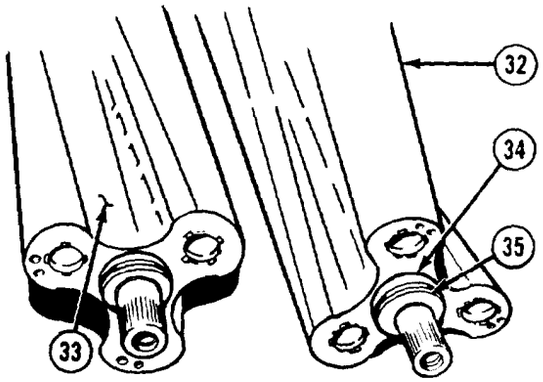

NOTE

All carriers are removed the same. Tighten vise just enough to hold rotor in place.

(25) Clamp lobe of right rotor (32) in vise with soft jaws.

(26) Install adapter on right rotor (32).

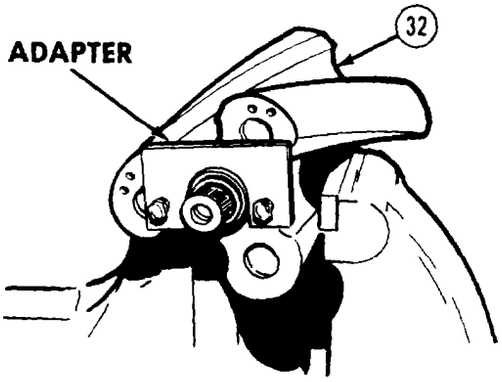

https://truckmanualshub.com/

Blower Maintenance Instructions (Cont)

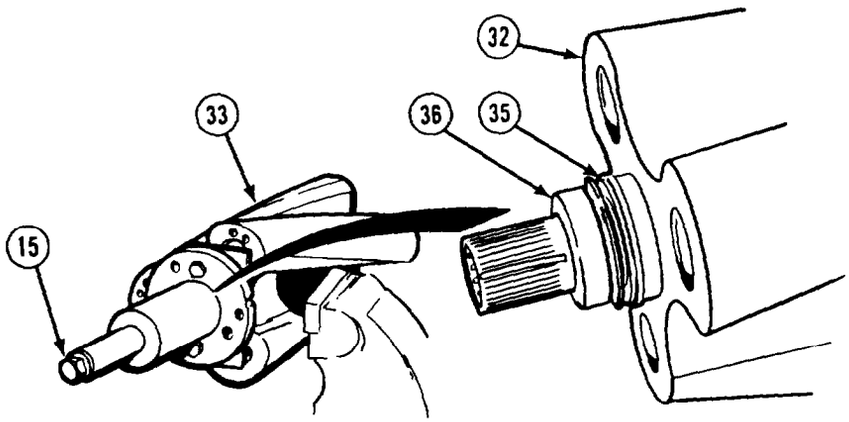

(27) Install puller tool to adapter with two screws. Turn puller screw (15) to remove ring carrier (35) and inner bearing race (36) from rotors (32 and 33).

NOTE

- Repeat steps *(29)* through *(31)* for front and rear end plates.
- Seal ring collar on Model A only. Do steps *(28), (29), (30),* and (31) for Model A. Do steps *(28), (29), (30.1),* and *(31)* for Model B.

(28) Position rear end plate (29) on wood blocks.

(29) Place long end of remover and installer tool through seal ring collar (37) into ball bearing (38).

(30) Press out ball bearing (38) and seal ring collar (37).

(30.1) Press out ball bearing (38) and double lip seal (38.1).

(31) Inspect dowel pins (39) for breakage or damage. Replace if broken or damaged.

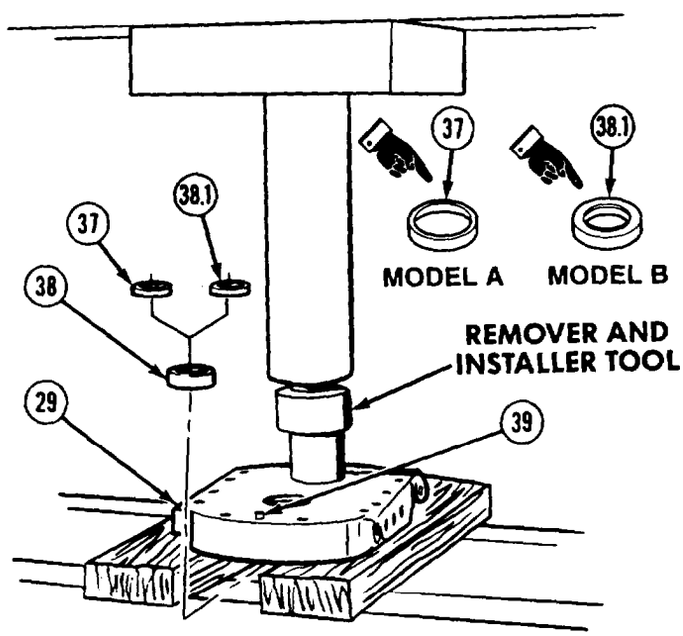

b. Cleaning/Inspection.

WARNING

- Adhesives and solvents burn easily and give off harmful vapors. To avoid injury, use in a well ventilated area and keep away from flame.
- Compressed air used for cleaning purposes will not exceed 30 psi (207 kPa). Use only with effective chip guarding and personal protective equipment (goggles/shield, gloves, etc.).

CAUTION

Do not use compressed air on bearings. Allow bearings to air dry. Compressed air may cause damage to bearings.

(1) Clean metal parts in drycleaning solvent. Dry parts other than bearings with compressed air.

(2) Inspect roller and ball bearings for corrosion, scoring, pitting, or other damage.

(3) Inspect both timing gears at teeth and at bore splines for chips or nicks.

(4) Inspect oil holes. If clogged, clean with drycleaning solvent.

(5) Inspect all finished surfaces for burrs and scoring. Use crocus cloth to clean.

https://truckmanualshub.com/

14-4. BLOWER REPAIR (CONT).

c. Assembly.

NOTE

Model A seal, with three parts: collar, oil seal ring, and carrier, is not available. Model B seal repair kit has a double-lip oil seal and spacer.

(1) Support rotor (1) on blocks.
(2) Deleted.
(3) Deleted.
(4) Deleted.

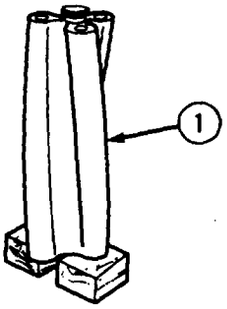

CAUTION

Do not lubricate seal, spacer, or rotor shaft before assembly Seal is of a Teflon type and must be installed dry for proper sealing.

(4.1) Install four spacers (4.1) on two rotors (1) with installer (4.2), pressing until shoulder of tool or spacer contacts rotor.

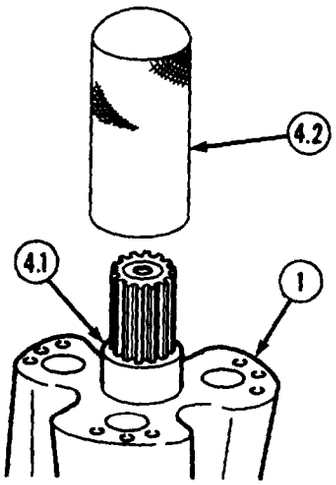

NOTE

Numbered side of seal must be toward installation tool. Seal is properly installed when installation tool contacts end plate.

(4.2) Install four double-lipped oil seals (4.3) into two end plates (6) and (10) (10 not shown) using installation tool (4.4).
(4.3) Remove four plastic seal protectors (4.5) from four double-lipped oil seals (4.3).

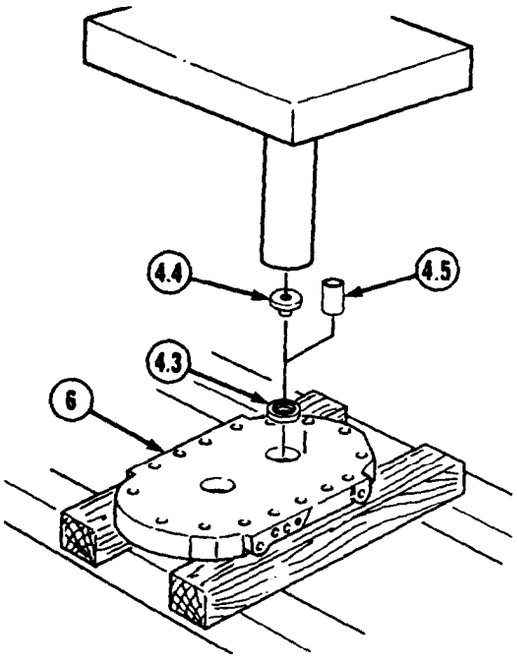

https://truckmanualshub.com/

Blower Maintenance Instructions (Cont)

(5) Deleted.

CAUTION

- Blower housing and front end plate mating surfaces must be perfectly flat and smooth or parts will not seal.
- Allow Teflon sealant to dry to the touch before installing front end plate. Teflon sealant must not protrude into blower housing or damage to blower may result.
- Teflon sealant must not prevent front end plate from laying flat against the blower housing or damage to blower may result.

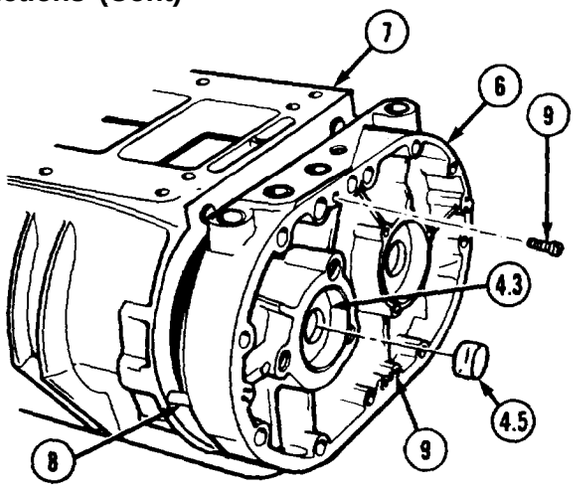

(5.1) Apply a thin, even coating of Teflon sealant over entire end surface of front end plate side of blower housing (7). Wipe off any excess sealant from housing bores.
(5.2) Aline dowel pins (8) and install front end plate (6) on blower housing (7).
(5.3) Install and tighten two screws (9) to 10 lb-ft (14 N•m).

CAUTION

- To prevent double-lipped oil seal damage, do not apply oil to either the seals or rotor shafts.
- Installation of rotors without using plastic seal protectors could damage double-lipped oil seals.

(5.4) Install plastic seal protectors (4.5) into double-lipped oil seals (4.3) with tapered edge facing out.
(5.5) Install two pilot tools (4.6) on two rotor shafts (4).

NOTE

- Gap between splines on rotor shafts must face left and aline to one another.
- Plastic seal protectors will be pushed out of seals when rotors are installed.

(5.6,) Install the rotors (1) in housing (7) and front end plate (6).
(5.7) Remove two pilot tools (4.6) from rotor shafts (4).
(6) Deleted.
(7) Deleted.
(8) Deleted.
(9) Deleted.
(10) Deleted.
(11) Deleted.
(12) Deleted.
(13) Deleted.

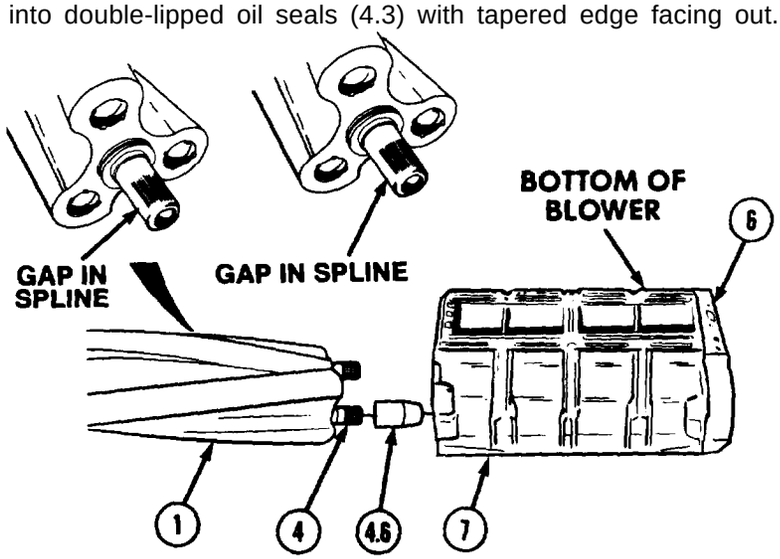

https://truckmanualshub.com/

https://truckmanualshub.com/

Blower Maintenance Instructions (Cont)

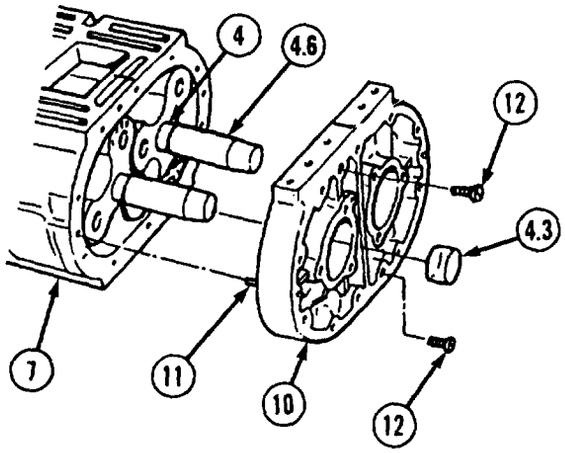

(14) Deleted.

CAUTION

- Blower housing and rear end plate mating surfaces must be perfectly flat and smooth or parts will not seal.
- Allow Teflon sealant to dry to the touch before installing rear end plate. Teflon sealant must not protrude into blower housing or damage to blower may result.
- Teflon sealant must not prevent rear end plate from laying flat against the blower housing or damage to blower may result.

(15) Apply a thin, even coating of Teflon sealant over entire end surface of rear end plate side of blower housing (7). Wipe off any excess sealant from housing bores.
(16) Deleted.
(17) Deleted.
(17.1) Install two plastic seal protectors (4.3).
(17.2) Install two pilot tools (4.6) on rotor shafts (4).

NOTE

Plastic seal protectors will be pushed out of seals when rear end plate is installed.

(18) Position rear end plate (10) and aline dowel pins (11) to holes in blower housing (7).
(19) Tap rear end plate (10) into blower housing (7).
(20) Install and tighten two screws (12) to 10 lb-ft (14 N•m).

(21) Apply lubricating oil to two ball bearings (13).
(22) Install two ball bearings (13) numbered end up, in rear end plate (10) with bearing installer.

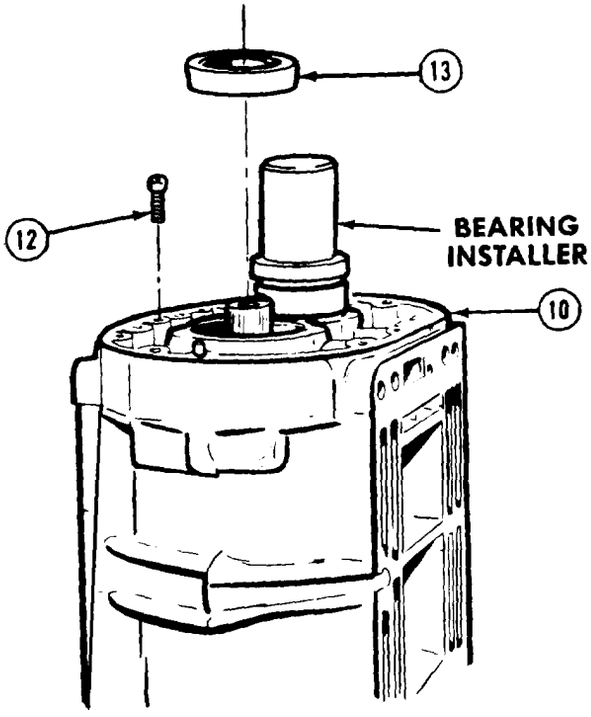

https://truckmanualshub.com/

Blower Maintenance Instructions (Cont)

14-4. BLOWER REPAIR (CONT).

(23) Position two flat bearing retainers (14) on rear end plate (10) and install six screws (15) in retainers. Tighten six screws to 10 lb-ft (13.5 N•m).

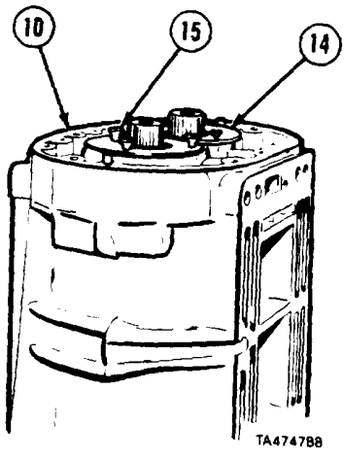

(24) Install two roller bearing collars (16) to both shafts (4) at front end plate (6) with bearing installer tool.
(25) Apply lubricating oil to two roller bearings (17)
(26) Install roller bearing (17), over rotor shafts (4) with bearing installer tool.

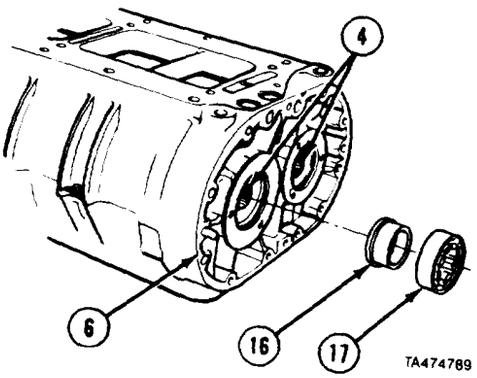

NOTE

Flanges on bearing retainers face front end plate.

(27) Install two flanged bearing retainers (18) with six screws (19) in front end plate (6). Tighten screws to 10 lb-ft (13.5 N•m).

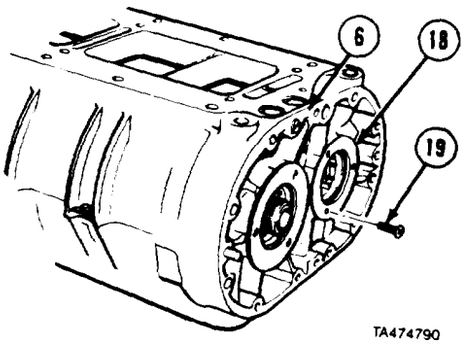

https://truckmanualshub.com/

WARNIN6

Do not place fingers between rotors. If rotors turn, they can cause serious injury.

(28) Set rotor shafts (4) at rear end plate (10) so that each gap in splines aline with one another.
(29) Install spacer (20) and shim (21) on each rotor shaft (4).
(30) Apply lubricating oil to splines on rotor shaft (4).

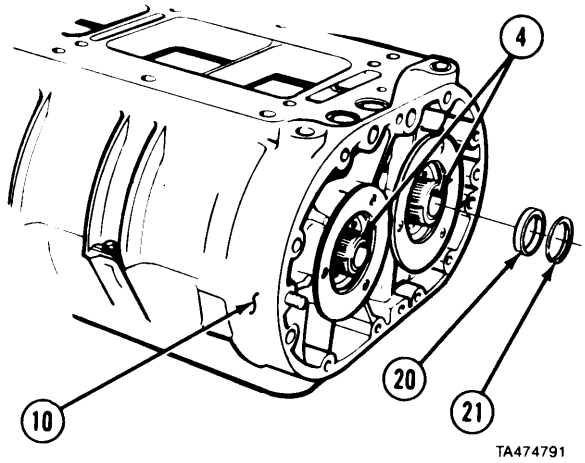

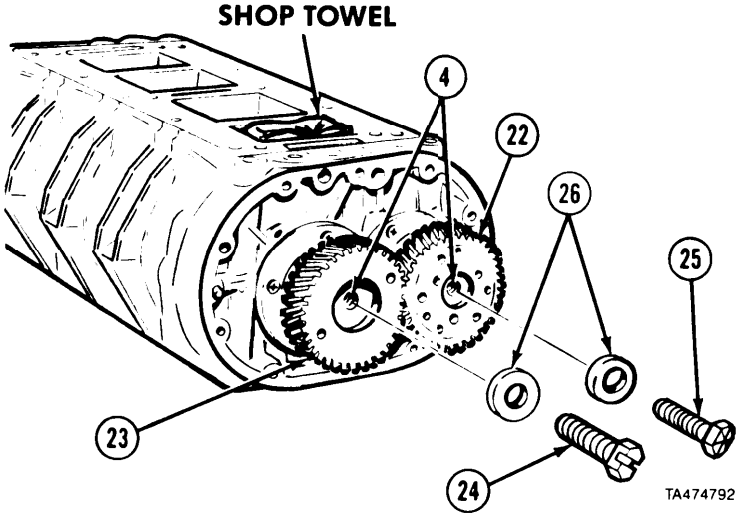

NOTE

Place folded shop towel between rotor lobes.

(31) Install both timing gears (22 and 23) at same time so gap in splines on gears mate with gap in splines on rotor shafts (4).
(32) Install two timing gear screws (24 and 25) with washers (26).
(33) Tighten both timing gear screws (24 and 25) evenly to draw both timing gears (22 and 23) tight.
(34) Apply lubricating oil to both timing gear screws (24 and 25).
(35) Tighten timing gear screws (24 and 25) to 110 lb-ft (149.2 N-m).

https://truckmanualshub.com/

14-4. BLOWER REPAIR (CONT).

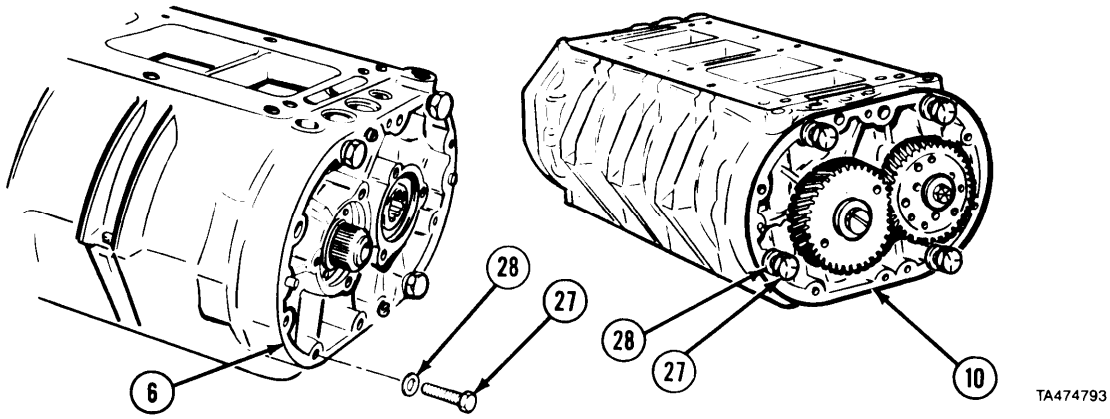

NOTE

Remove shop cloth before timing rotors and setting clearances.

(36) Install four screws (27) and washers (28) in front end plate (6) and rear end plate (10).
(37) Tighten screws (27) to 15 lb-ft (20.34 N-m).

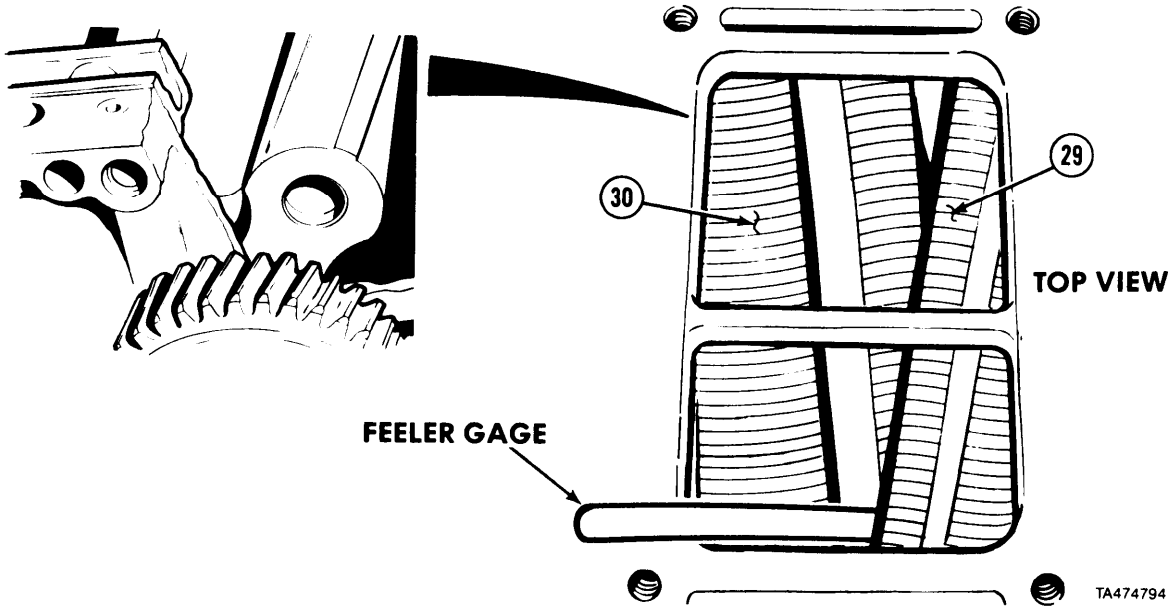

NOTE

- Correct rotor operating range is 0.004 to 0.006 in. (0.102 to 0.152 mm). If rotor does not meet specification, do steps *(41)* through *(46)*.
- Clearances between rotor lobes must be measured 1 in. (25.4 mm) from end plate.

(38) Place 0.004-in. (0.102 mm) feeler gage between rotor lobes (29 and 30). Rotate rotors while gage is installed.
(39) Remove feeler gage.

https://truckmanualshub.com/

(40) Turn blower (7) upside down and place 0.004-in. (0.102 mm) feeler gage between rotor lobes (29 and 30). Rotate rotors while gage is installed.
(41) Remove feeler gage.

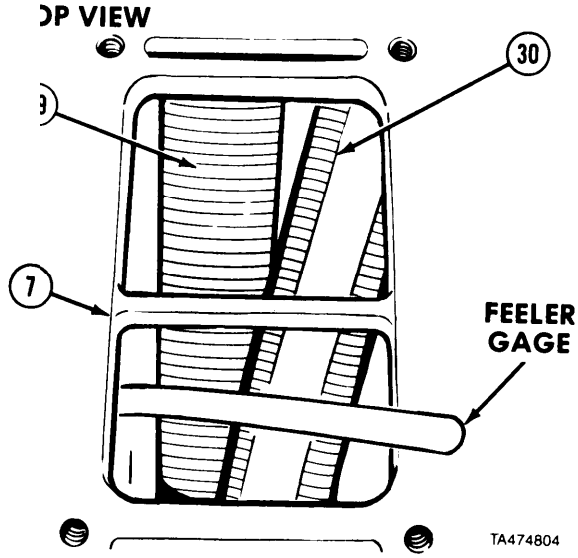

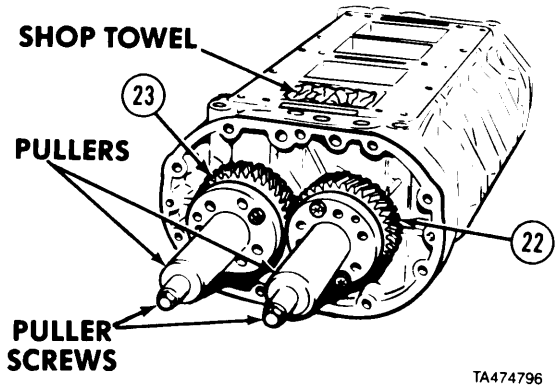

NOTE

To increase or decrease gap between trailing edge of right rotor lobes and leading edge of left rotor lobes, do steps *(42)* through *(45)*.

(42) Install puller tool on left timing gear (23) with two screws.
(43) Install puller tool on right timing gear (22) with three screws.

NOTE

Place clean, folded shop towel between blower rotors to keep gears from turning.

(44) Tighten puller screws evenly to remove gears (22 and 23).

https://truckmanualshub.com/

14-4. BLOWER REPAIR (CONT).

NOTE

To change gap between rotor lobes by 0.001-in. (0.025 mm), add or remove a 0.003-in. (0.076 mm) shim.

(45) Add or remove shims (21) to left rotor shaft (4) as necessary.
(46) Install blower timing gears according to steps *(31)* through *(35).*
(47) Check rotor lobe clearance according to steps *(38)* through *(40).*

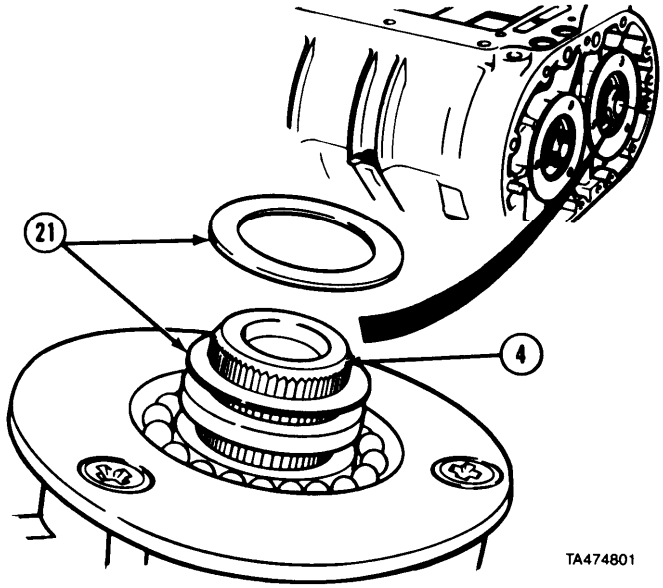

NOTE

Correct rotor operating range is 0.009 to 0.011 in. (0.23 to 0.28 mm). If rotors do not meet this specification, do steps *(52)* through *(54).*

(48) Place 0.010-in. (0.254 mm) feeler gage between rotor lobes (29 and 30). Rotate rotors to insure rotation while gage is installed.
(49) Remove feeler gage.

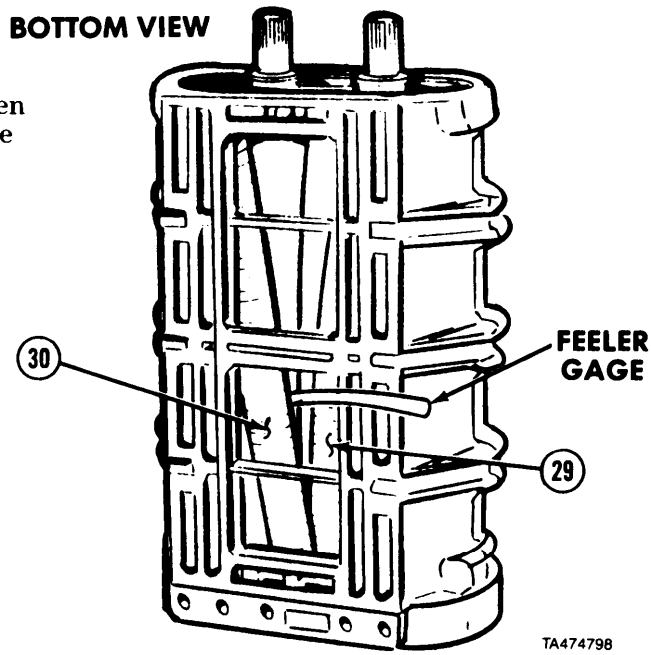

https://truckmanualshub.com/

(50) Turn blower (7) right side up and place 0.010-in. (0.254 mm) feeler gage between rotor lobes (29 and 30). Rotate rotors while gage is installed.
(51) Remove feeler gage.

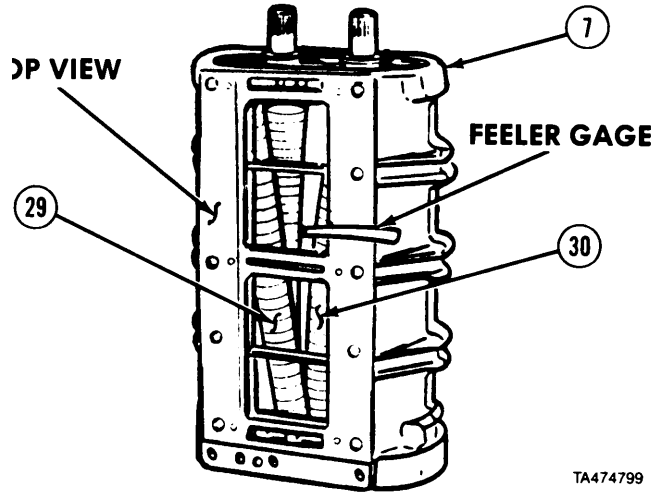

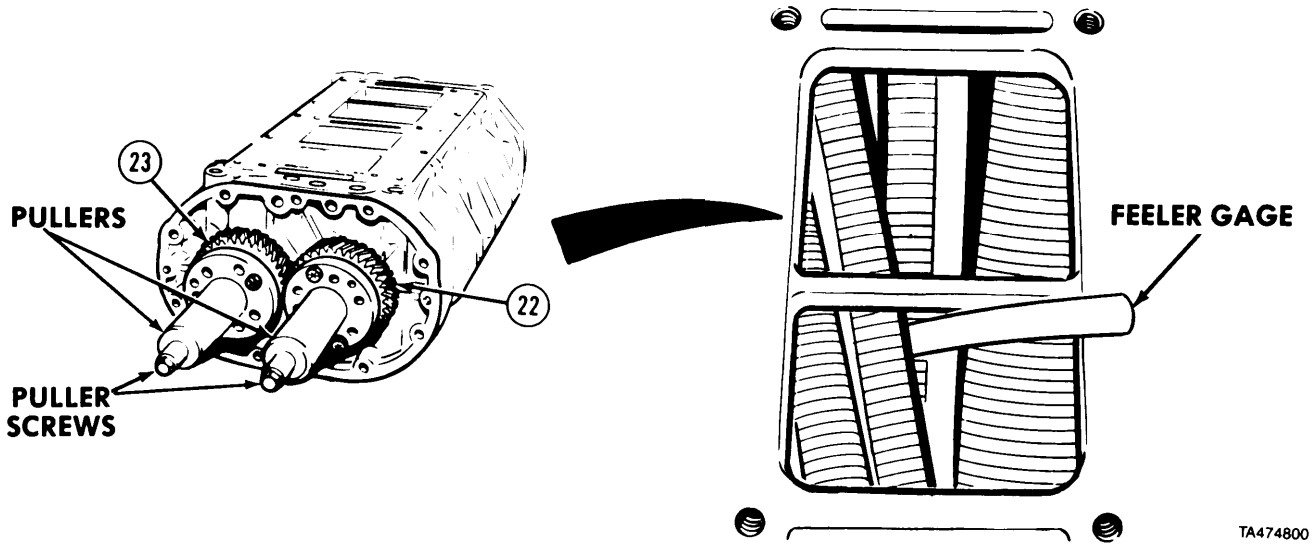

NOTE

To increase or decrease gap between leading edge of right rotor lobe and trailing edge of left rotor lobe (30), do steps *(52)* through *(55).*

(52) Install puller tool on left timing gear (23) with two screws.
(53) Install puller tool on right timing gear (22) with three screws.
(54) Tighten puller screws evenly to remove timing gears (22 and 23).

https://truckmanualshub.com/

14-4. BLOWER REPAIR (CONT).

NOTE

To change gap between rotor lobes by 0.001-in. (0.025 mm), add or remove a 0.003-in. (0.076 mm) shim.

(55) Add or remove shims (21) to right rotor shaft (4) as necessary.

(56) If rotor lobe clearances cannot be corrected with shims, replace rotors.

(57) Install blower timing gears, following steps *(31)* through *(35).*

(58) Check clearance of rotor lobes, following steps *(48)* through *(51).*

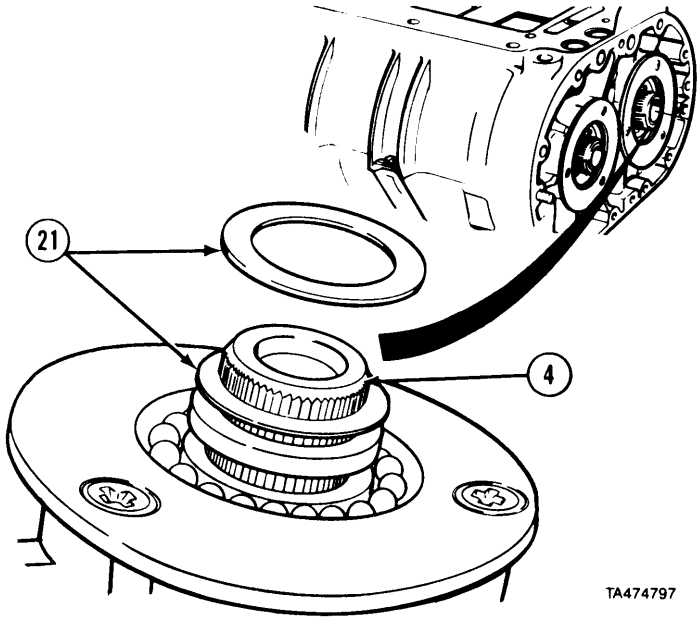

NOTE

There are six measurements between rear end plate and rotor lobes, one for each lobe of each rotor.

(59) Using 0.007-in. (0. 178 mm) feeler gage, check clearance between rear end plate (10) and both rotor lobes (29 and 30). If clearance is not correct, replace rear end plate.

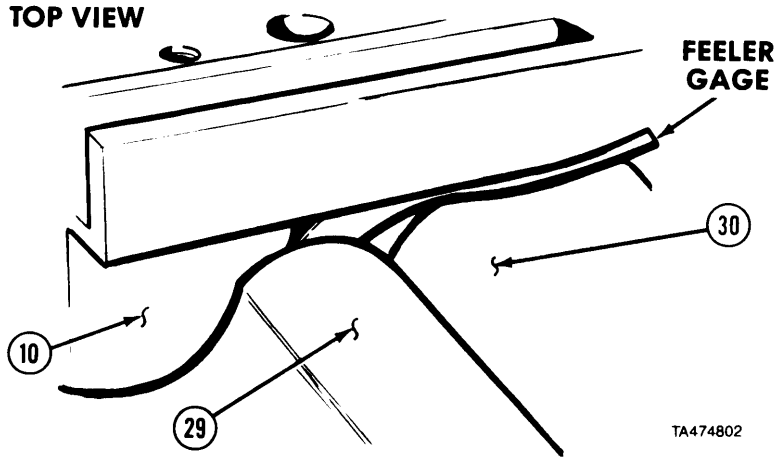

(60) Using 0.012-in. (0.305 mm) feeler gage, check clearance between front end plate (6) and both rotor lobes (29 and 30). If clearance is not correct, replace front end plate.

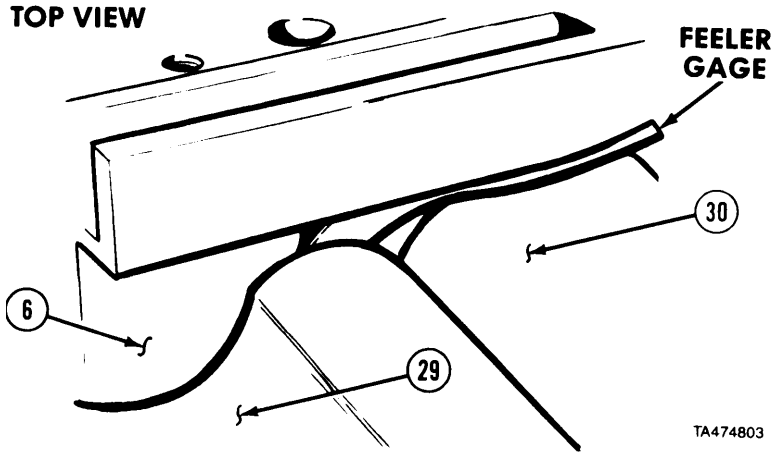

https://truckmanualshub.com/

NOTE

There are six measurements between rotors and housing made through top of blower.

(61) Using 0.015-in. (0.381 mm) feeler gage, check clearance between rotor lobes (29 and 30) and housing (7) while rotating rotors. If clearance is not correct, replace housing.

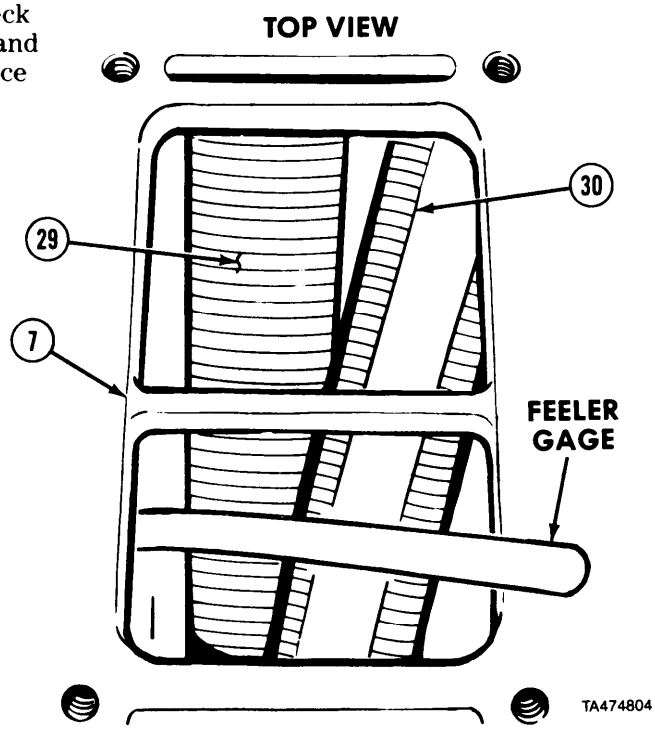

NOTE

There are six measurements between rotors and housing made through bottom of blower.

(62) Using 0.004-in. (0.103 mm) feeler gage, check clearance between rotor lobes (29 and 30) and blower housing (7) while rotating rotors. If clearance is not correct, replace 'housing.

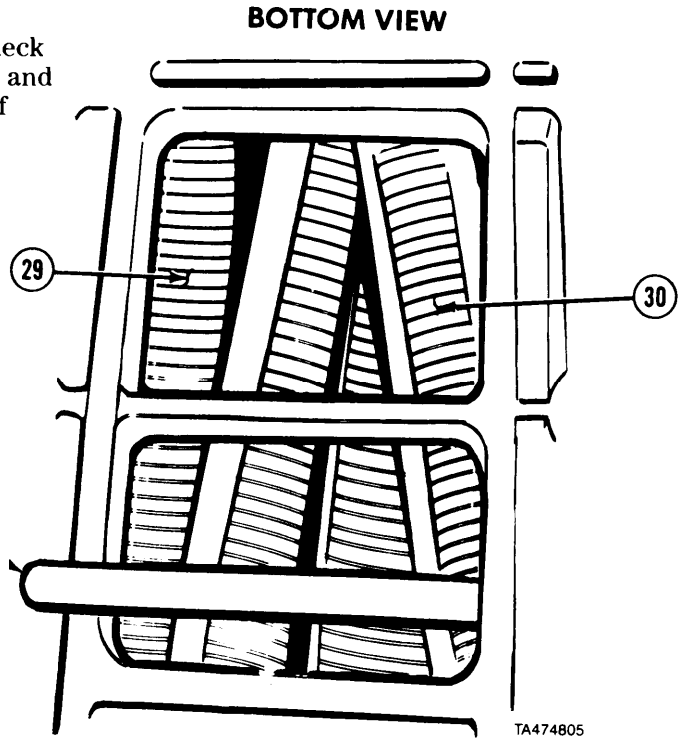

https://truckmanualshub.com/

14-4. BLOWER REPAIR (CONT).

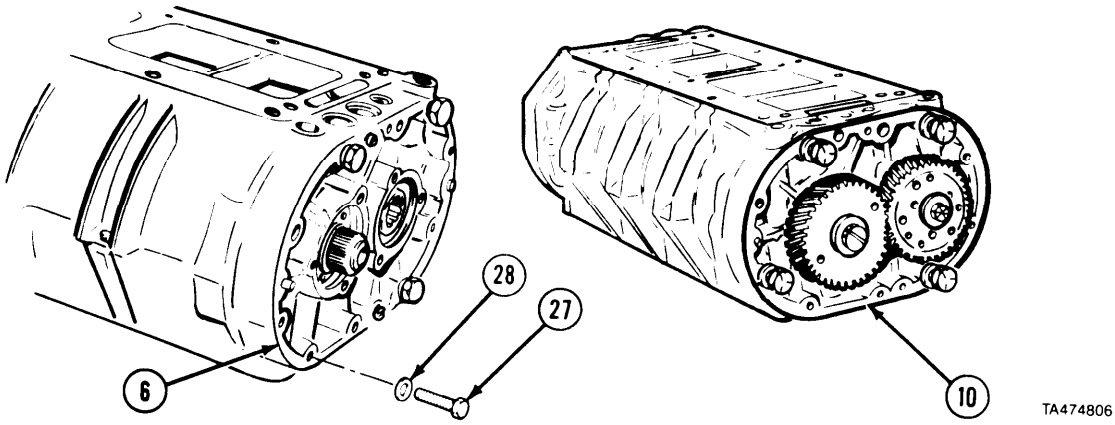

(63) Remove four screws (27) and washers (28) from front end plate (6) and rear end plate (10).

(64) Install spacer (31) on rotor shaft (4) at front end plate (6).
(65) Install fuel pump disk (32), lockwasher (33), and screw (34).
(66) Tighten screw (34) to 65 lb-ft (88 N-m).
(67) Bend two more lockwasher tangs around head of screw (34).

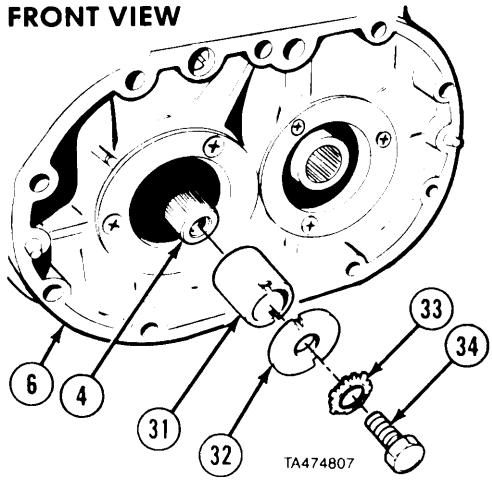

(68) Install three screws (35) and two spring plates (36) into coupling (37).
(69) Tighten three screws (35) to 30 lb-ft (40 N-m).

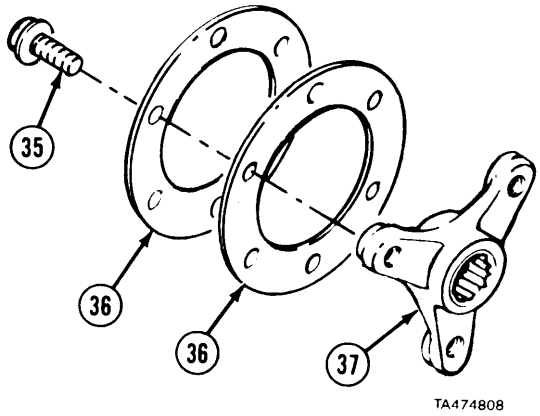

https://truckmanualshub.com/

Blower Maintenance Instructions (Cont)

NOTE

Install clean shop cloth between gears.

(70) Install coupling assembly (37) with three screws (38).
(71) Tighten three screws (38) to 30 lb-ft (40 N•m).

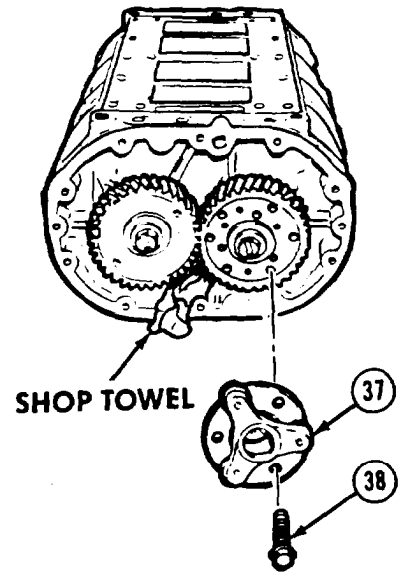

https://truckmanualshub.com/

https://truckmanualshub.com/

Blower Maintenance Instructions (Cont)

(72) Install rear end plate cover (39) with gasket (40).

NOTE

Some blowers have ten screws and lockwashers. Others have nine screws and lockwashers.

(73) Install nine or ten screws (41) and lockwashers (42).

(74) Tighten screws (41) evenly to 15 lb-ft (20 N•m).

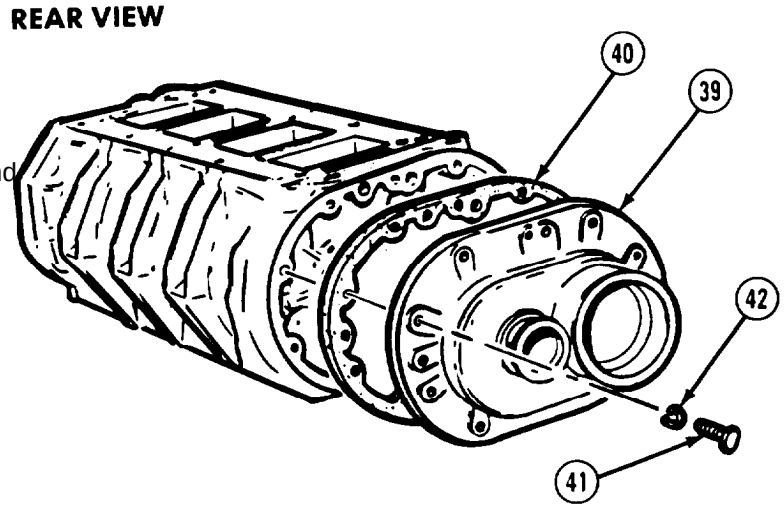

NOTE

Some engines are equipped with a bypass valve on the blower. If equipped with bypass valve, do steps *(75)* through *(83).* If not, go to Follow-on Maintenance.

(75) Install preformed packing (43) on bypass valve (44).

(76) Install bypass valve (44) until fully seated.

(77) Install pressure clamp (45) on bypass valve (44).

(78) Install two screws (46) in pressure clamp (45). Tighten screws 23 to 26 lb-ft (31 to 35 N•m).

(79) Install two clamps (47 and 48) on hose (49).

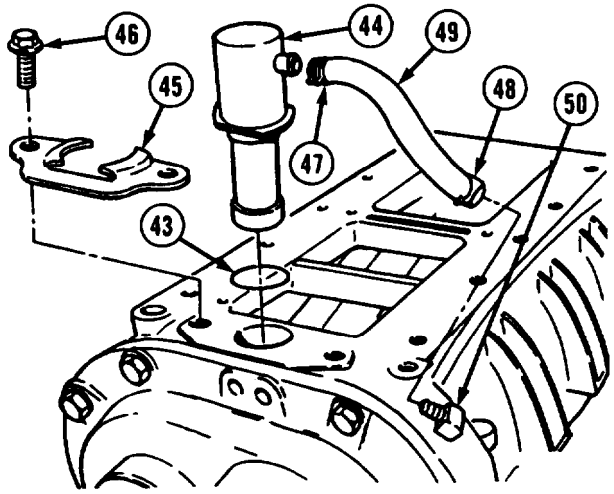

WARNING

Adhesives solvents, and sealing compounds can burn easily, can give off harmful vapors, and are harmful to skin and clothing. To avoid injury or death, keep away from open fire and use in well-ventilated area. If adhesive, solvent, or sealing compound gets on skin or clothing, wash immediately with soap and water.

(80) Apply sealing compound on threads of hose fitting (50).

(81) Install hose fitting (50) securely in position as noted during disassembly.

(82) Install hose (49) on bypass valve (44) and hose fitting (50).

(83) Position clamps (47 and 48) over hose (49) on bypass valve (44) and hose fitting (50).

d. Follow-on Maintenance. None.

END OF TASK

https://truckmanualshub.com/

Section III. TURBOCHARGER ASSEMBLY

Turbocharger Maintenance Instructions

14-5. AIR INLET ADAPTER REMOVAL/INSTALLATION.

This task covers:

a. Removal
b. Installation
c. Follow-on Maintenance

INITIAL SETUP

Models
All

Test Equipment
None

Special Tools
None

Supplies
None

Personnel Required
MOS 63W, Wheel vehicle repairer

References
None

Equipment Condition

TM or Para	*Condition Description*
Para 14-6	Turbocharger removed.

Special Environmental Conditions
None

General Safety Instructions
None

Level of Maintenance
Direct Support

a. Removal.

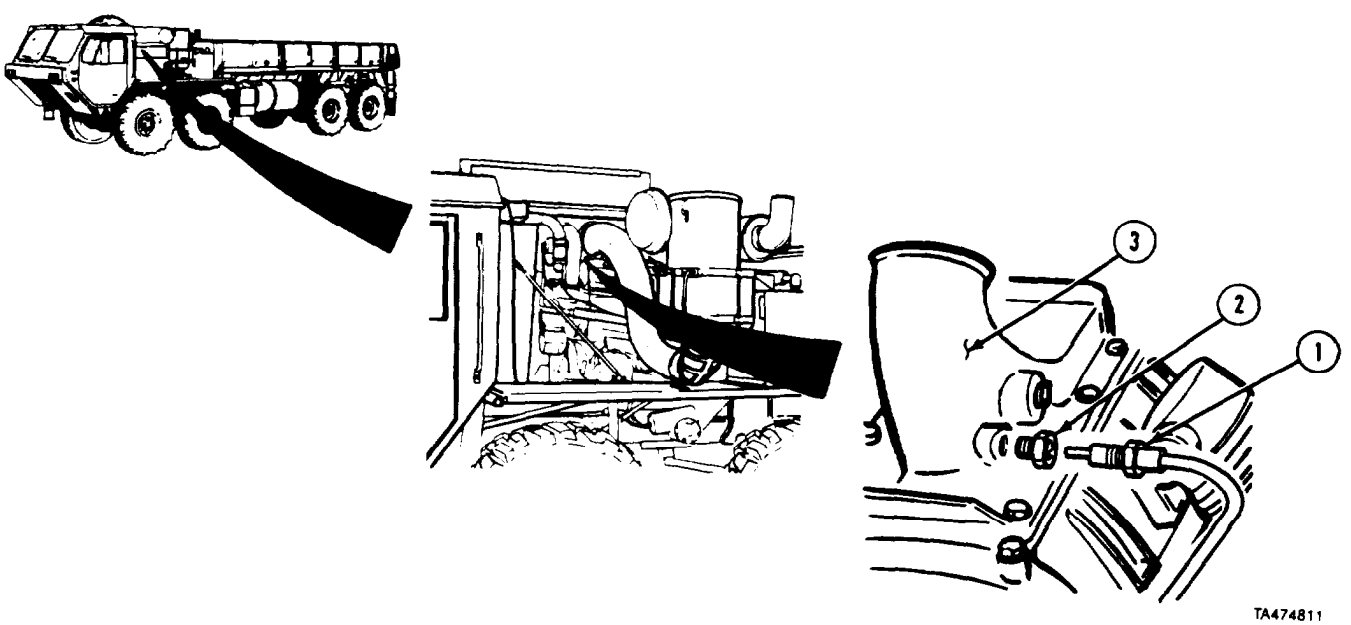

(1) Remove ether starting aid line (1) and fitting (2) from air inlet adapter (3).

https://truckmanualshub.com/

Blower Maintenance Instructions (Cont)

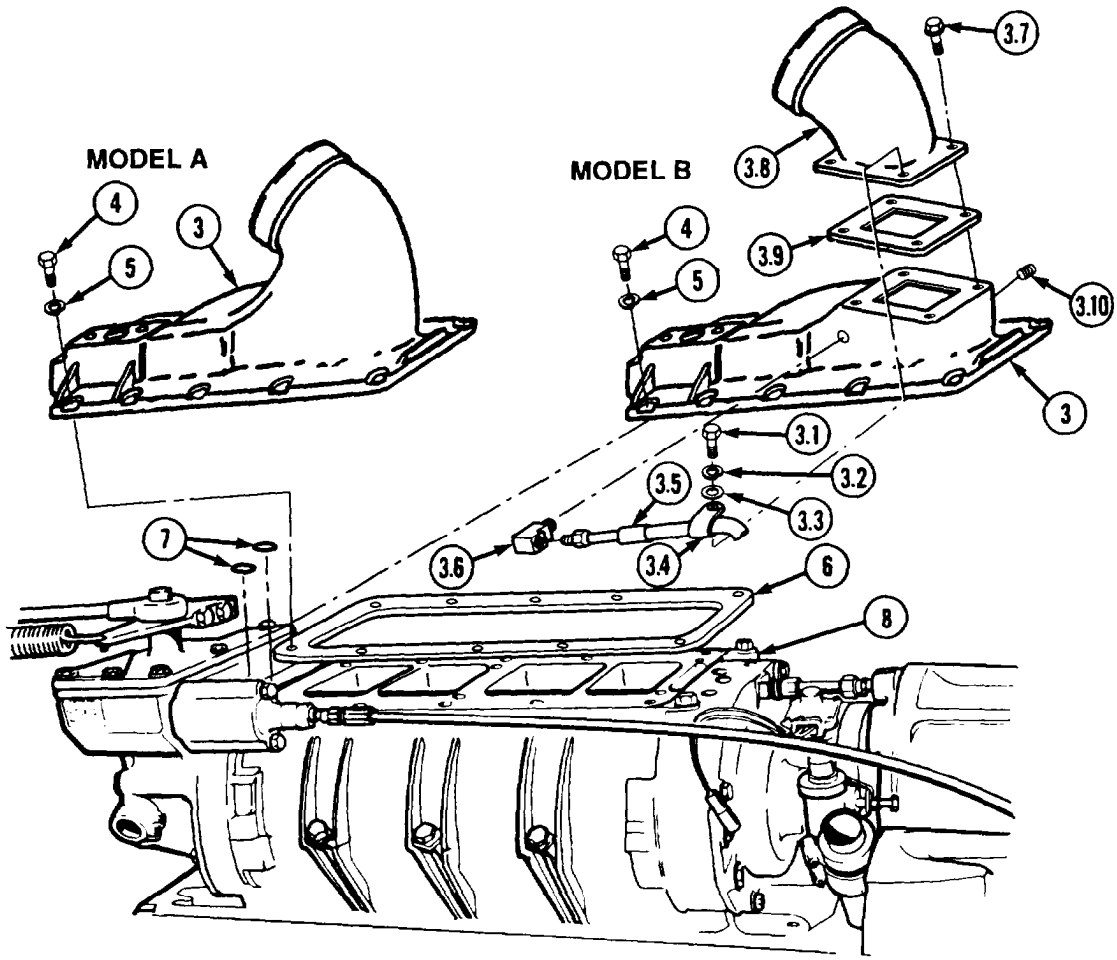

NOTE

There are two models of air inlet adapter. Model B has a removable air inlet. If removing Model B, perform steps *(1.1* through *3).* If removing Model A, perform steps *(2* and *3).*

(1.1) Remove screw (3.1), lockwasher (3.2), and washer (3.3) from hose clamp (3.4).
(1.2) Remove hose (3.5) from elbow (3.6).
(1.3) Remove three screws (3.7), air inlet (3.81, and gasket (3.9) from air inlet adapter (3).
(1.4) Remove plug (3.10) and elbow (3.6) from air inlet adapter (3).
(2) Remove 10 screws (4) and lockwashers (5) from air inlet adapter (3).

CAUTION

Keep dirt and debris out of blower. Foreign material will damage blower.

(3) Remove air inlet adapter (3), gasket (6), and two preformed packings (7) from top of blower (6).

https://truckmanualshub.com/

https://truckmanualshub.com/

Blower Maintenance Instructions (Cont)

b. Installation.

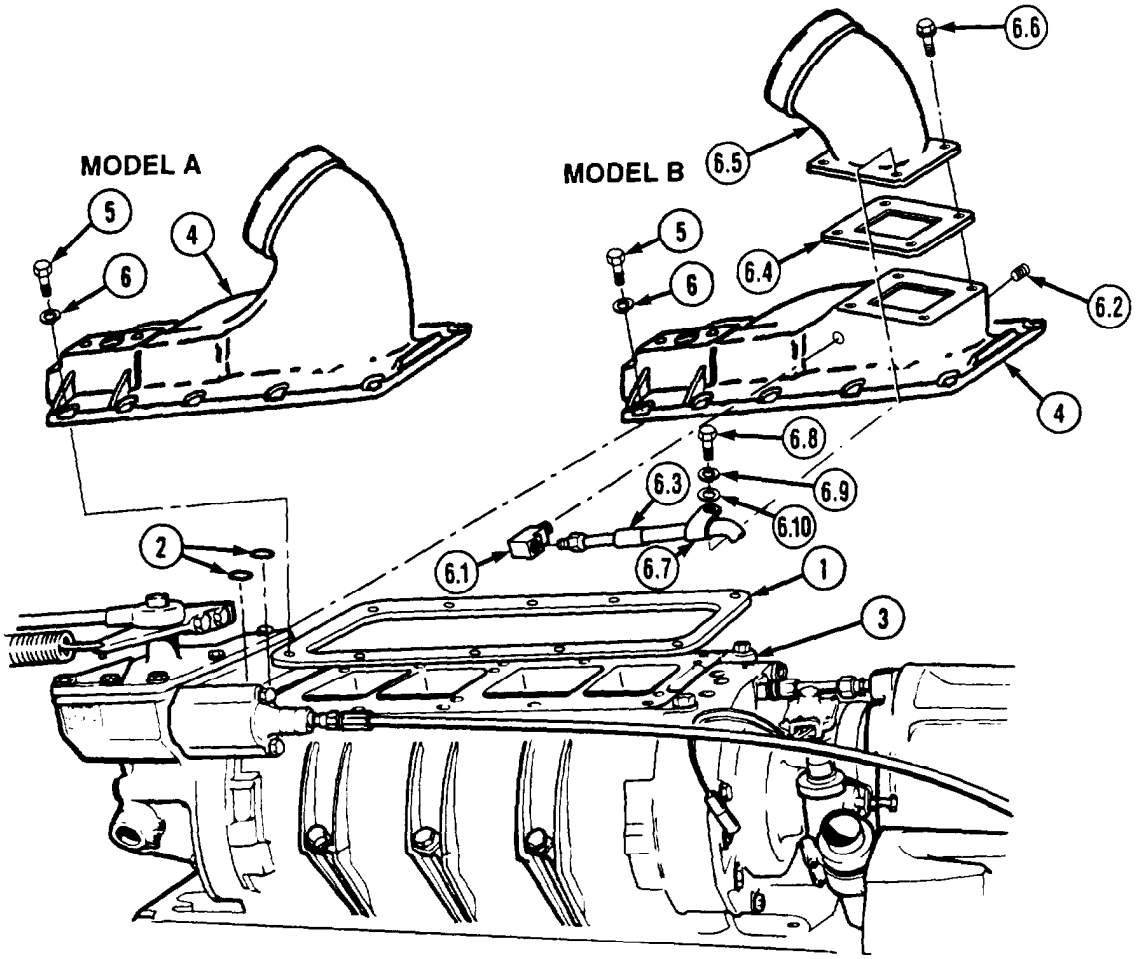

(1) Position gasket (1) and two preformed packings (2) on blower (3).

NOTE

There are two models of air inlet adapter. Model B has a removable air inlet. If installing Model A, perform step *(2).* If installing Model B, perform steps *(3* through *3.4).*

(2) Install air inlet adapter (4) with 10 screws (5) and lockwashers (6). Tighten to 45 lb-ft (61 N•m).

(3) Install elbow (6.1) and plug (6.2) in air inlet adapter (4).

(3.1) Install air inlet adapter (4) with 10 screws (5) and lockwashers (6). Tighten to 45 lb-ft (61 N•m),

(3.2) Install hose (6.3) in elbow (6.1).

(3.3) Install gasket (6.4) and air inlet (6.5) on air inlet adapter (4) with three screws (6.6). Tighten screws to 16 to 20 lb-ft (22 to 27 N•m).

(3.4) Install hose clamp (6.7) with screw (6.8), lockwasher (6.9, and washer (6.10).

https://truckmanualshub.com/

14-5. AIR INLET ADAPTER REMOVAL/INSTALLATION (CONT).

(4) Install fitting (7) and ether starting aid line (8) to air inlet adapter (2).

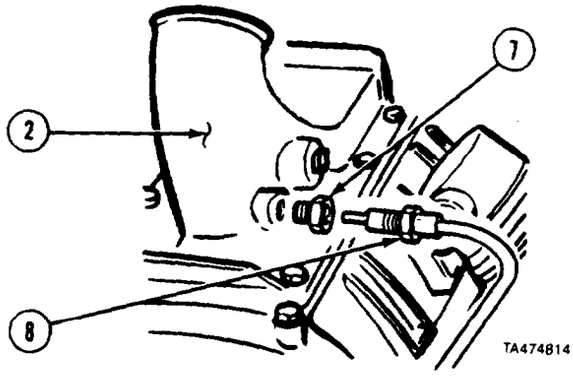

c. Follow-on Maintenance. Install turbocharger (para 14-6).

END OF TASK

14-6. TURBOCHARGER REMOVAL/INSTALLATION.

This task covers:

a. Removal
b. Installation
c. Follow-on Maintenance

INITIAL SETUP

Models
All

Test Equipment
None

Special Tools
None

Supplies
Oil, lubricating, Item 48, Appendix C

Personnel Required
MOS 63W, Wheel vehicle repairer

References
None

Equipment Condition

TM or Para	Condition Description
TM 9-2320-279-20	Batteries disconnected.
TM 9-2320-279-10	Parking brake on.
TM 9-2320-279-20	Exhaust pipe removed from turbocharger.
TM 9-2320-279-20	Air intake duct disconnected from turbocharger.

Special Environmental Conditions
None

General Safety Instructions
None

Level of Maintenance
Direct Support

https://truckmanualshub.com/

Turbocharger Maintenance Instructions (Cont)

a. Removal.

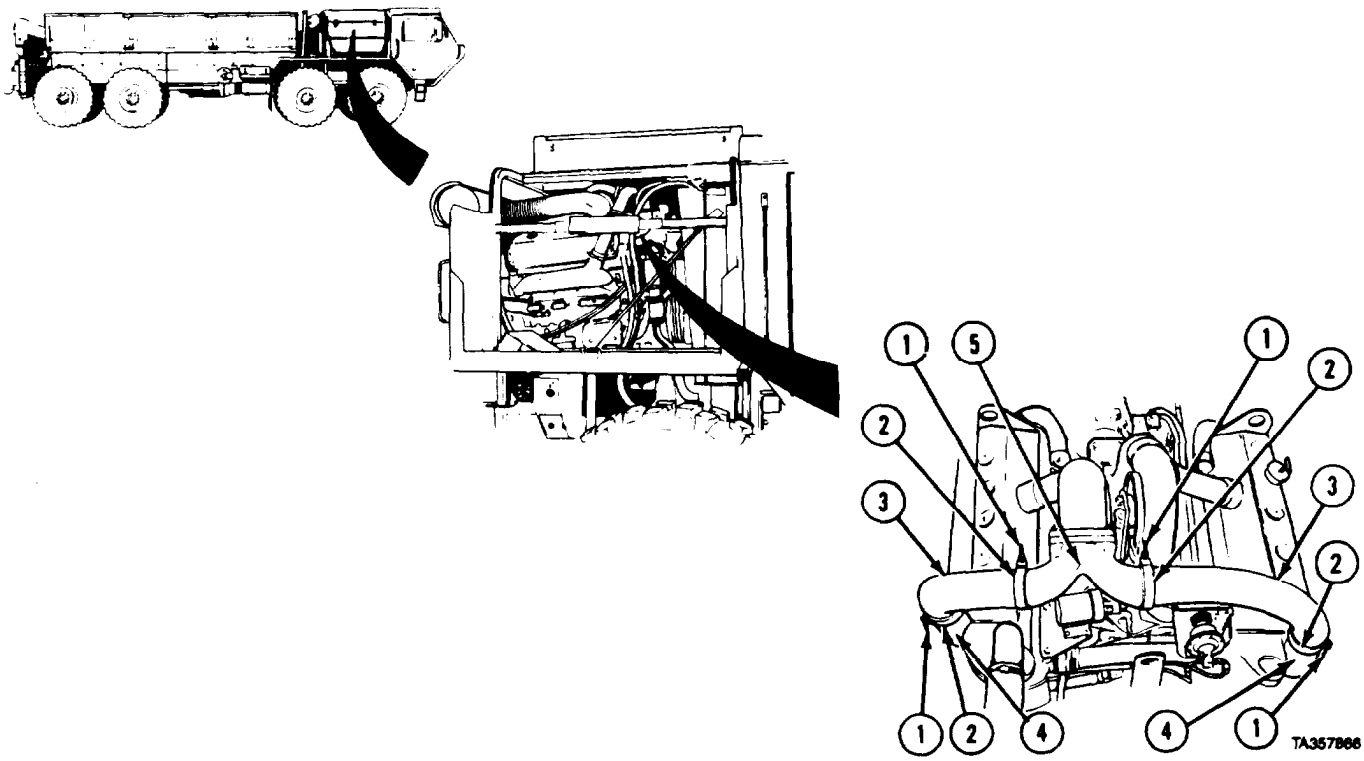

(1) Loosen four nuts (1) and clamps (2).
(2) Remove two exhaust tubes (3) from two exhaust manifolds (4) and tee (5).

(3) Loosen nut (6) and disconnect oil tube (7) from turbocharger (8).
(4) Remove four nuts (9), lockwashers (10), gasket (11), and tee (5) from turbocharger (8).

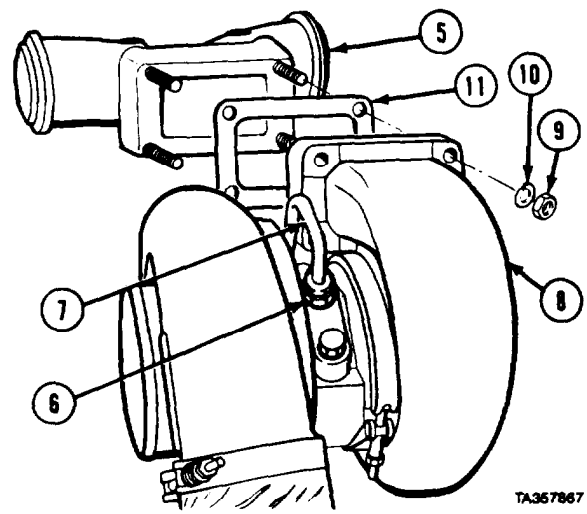

https://truckmanualshub.com/

14-6. TURBOCHARGER REMOVAL/INSTALLATION (CONT).

NOTE
Some vehicles have a screw, nut, lockwasher, and washer. Others have a flanged screw, nut, lockwasher, and washer.

(5) Remove screw (12), nut (13), lockwasher (14), and washer (15) from clip (16).

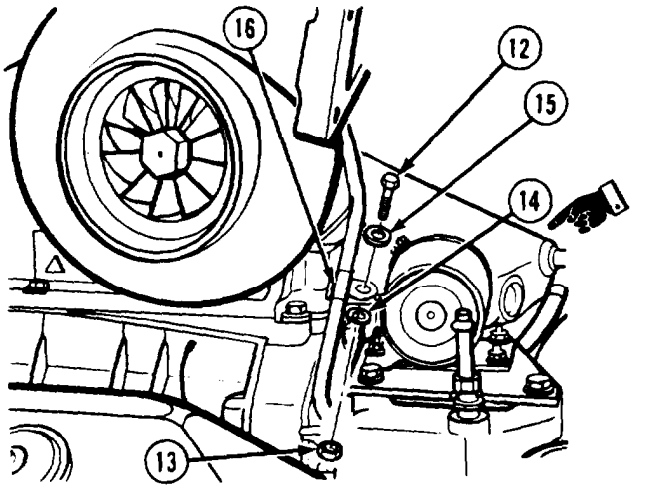

NOTE
Some engines do not have screw, lockwasher, and clip.

(6) Remove screw (17), lockwasher (18), and clip (19).

NOTE
Some engines have a connector. Others have an elbow.

(7) Disconnect oil hose (20) from connector or elbow (21).

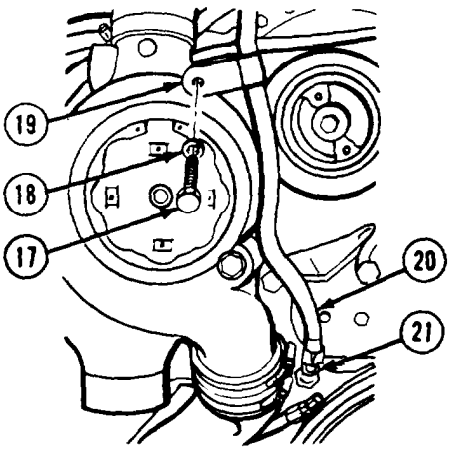

(8) Loosen clamps (22) on hose (23).
(9) Remove two screws (24) and lockwashers (25) from turbocharger (8).

NOTE
Hose should be pried loose if it sticks to turbocharger.

(10) Remove turbocharger (8).
(11) Remove hose (23) and clamps (22).

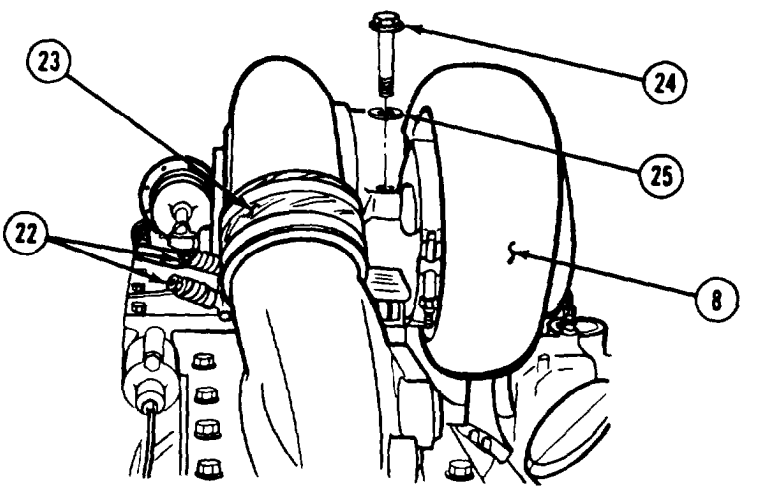

https://truckmanualshub.com/

Turbocharger Maintenance Instructions (Cont)

(12) Inspect air inlet adapter (26) for breaks and cracks. Replace if damaged (para 14-6).
(13) Remove preformed packing (27) from air inlet adapter (26).
(14) Cover air inlet adapter (26) with clean cloth over opening.

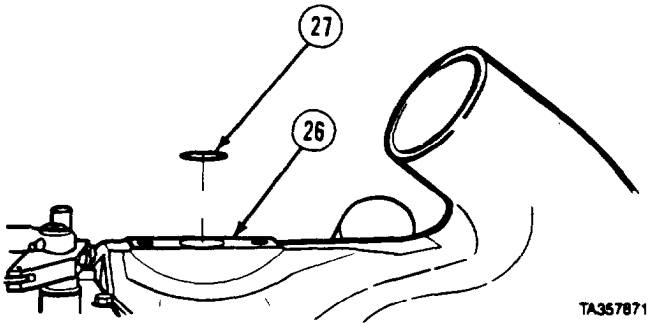

b. Installation.

(1) Install hose (1) on air inlet adapter (2).
(2) Slide clamps (3) over hose (1).
(3) Remove clean cloth from air inlet adapter (2).
(4) Install preformed packing (4) in air inlet adapter (2).

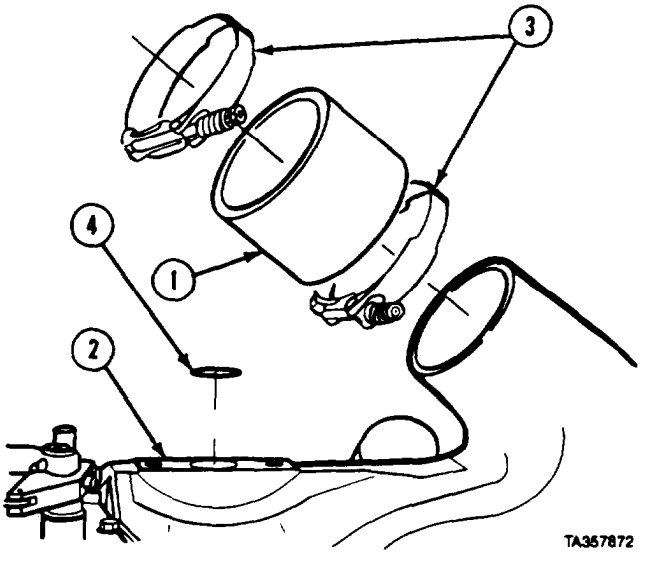

(5) Slide air outlet end of turbocharger (5) into hose (1).
(6) Install turbocharger (5) on air inlet adapter (2).

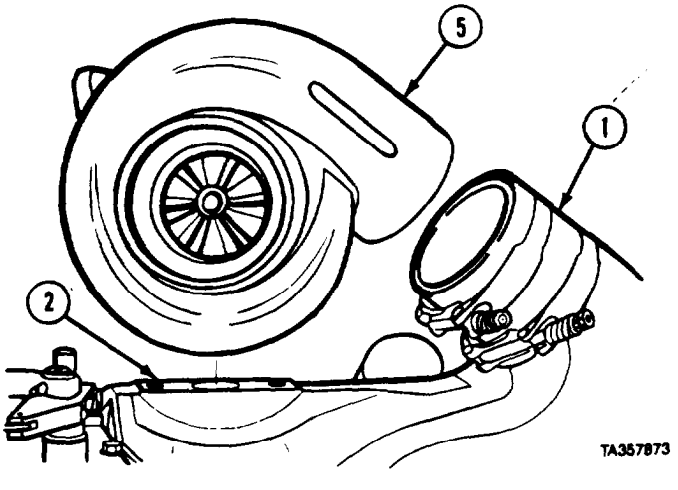

https://truckmanualshub.com/

14-6. TURBOCHARGER REMOVAL/INSTALLATION (CONT)

(7) Install two screws (6) and lockwashers (7) in turbocharger (5).

(8) Tighten screws (6) to 45 to 50 lb-ft (61 to 67 N•m).

(9) Position two clamps (3), one over air inlet adapter (2) and one over turbocharger (5).

(10) Tighten clamps (3).

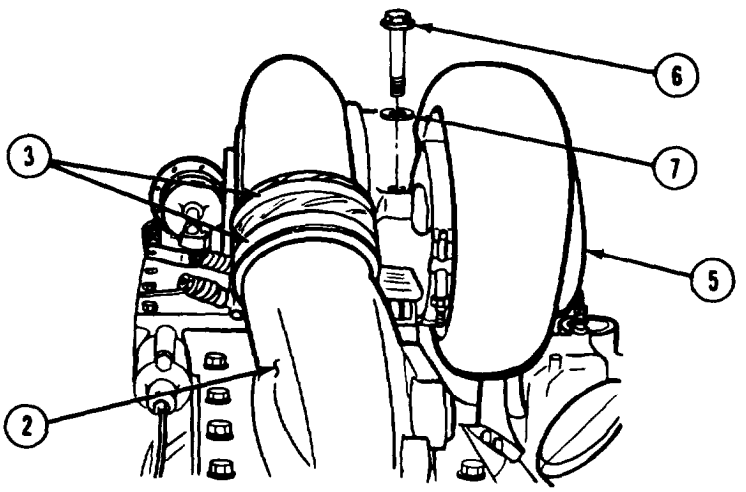

(11) Fill center housing (8) with lubricating oil through fitting (9).

(12) Connect oil tube (10) to fitting (9) and tighten nut (11).

(13) Install tee (12), gasket (13), four nuts (14), and lockwashers (15) on turbocharger (5).

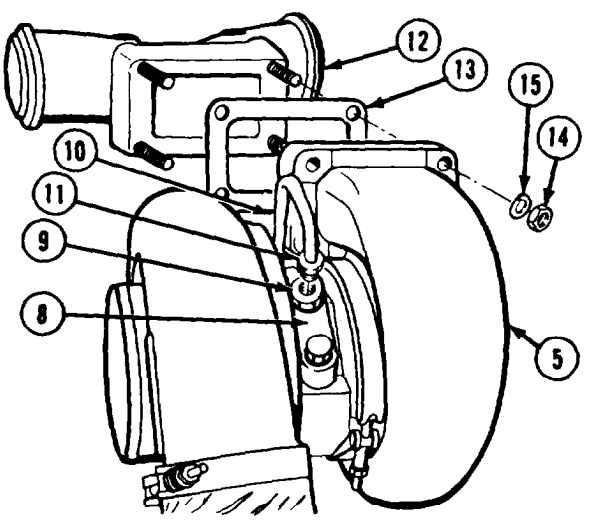

NOTE

Some engines have a connector. Others have an elbow. Refer to TM 9-2320-279-24P

(14) Connect oil hose (16) to elbow (17).

NOTE

Some engines do not have screw, lockwasher, and clip. Refer to TM 9-2320-279-24P

(15) Install clip (18) with screw (19) and lockwasher (20).

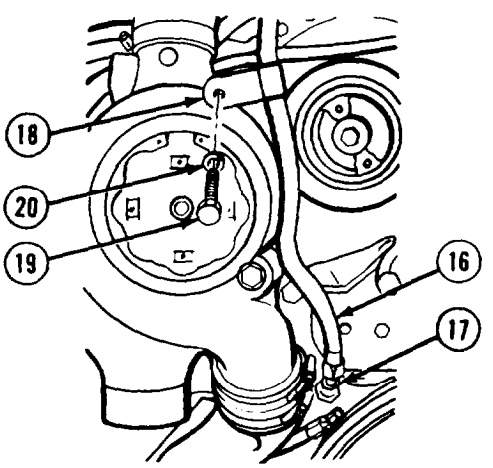

https://truckmanualshub.com/

Turbocharger Maintenance Instructions (Cont)

NOTE

Some vehicles have a washer, lockwasher, screw, and nut. Others have a washer, lockwasher, flanged screw, and nut.

(16) Connect clip (21) to bracket (22) with washer (23), lockwasher (24), screw (25), and nut (26).

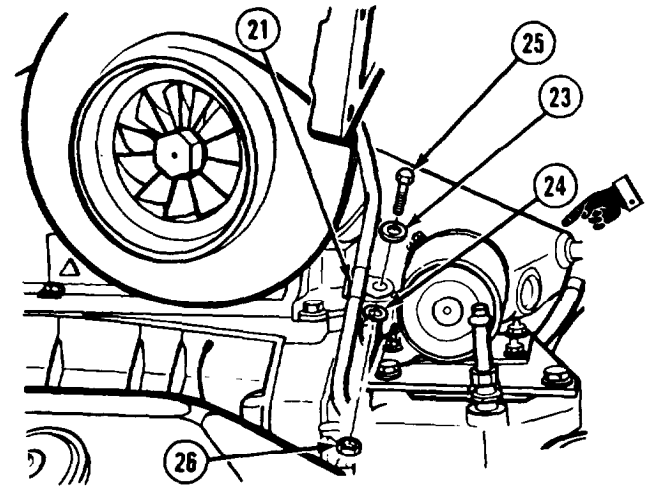

(17) Slide four clamps (27) over two exhaust tubes (28).

(18) Install two exhaust tubes (28) on tee (12) and two exhaust manifolds (29).

(19) Tighten four clamp nuts (30).

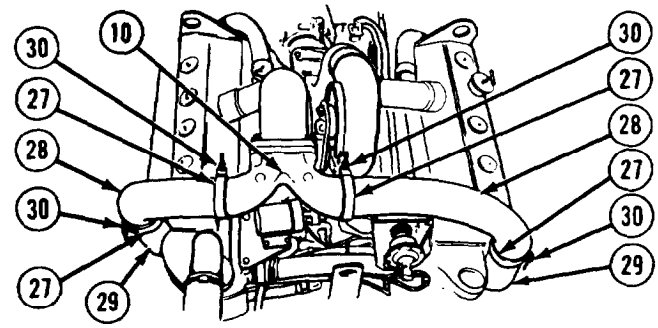

c. Follow-on Maintenance.

(1) Connect air intake duct to turbocharger (TM 9-2320-279-20).
(2) Connect exhaust pipe to turbocharger (TM 9-2320-279-20).
(3) Connect batteries (TM 9-2320-279-20).
(4) Start engine and run at idle for ten minutes (TM 9-2320-279-10).
(5) Check turbocharger gaskets and ducts for leaks.
(6) Increase engine speed and listen for smooth operation of turbocharger.
(7) Shut off engine (TM 9-2320-279-10).
(8) Install engine top cover (TM 9-2320-279-20).

END OF TASK

https://truckmanualshub.com/

14-7. TURBOCHARGER REPAIR.

This task covers:

a. Disassembly
b. Cleaning/Inspection
c. Assembly
d. Follow-on Maintenance

INITIAL SETUP

Models
All

Test Equipment
None

Special Tools
Set, dial indicator J7872

Fabricated Tools
Pliers, retaining ring 2BH945, Fig. D-3, Appendix D
Holding fixture, turbocharger 2SK742, Fig. D-4, Appendix D

Supplies
Solvent, drycleaning, Item 60, Appendix C
Grease, automotive and artillery, Item 36, Appendix C
Compound, antiseize, Item 21, Appendix C
Oil, lubricating, Item 48, Appendix C
Compound, sealing, pipe thread, Item 32, Appendix C
Brush, paint, oval, Item 10, Appendix C

Personnel Required
MOS 63W, Wheel vehicle repairer (2)

References
None

Equipment Condition

TM or Para	*Condition Description*
	Turbocharger on clean work surface.

Special Environmental Conditions
Work in extremely clean area.

General Safety Instructions
None

Level of Maintenance
General Support

a. Disassembly.

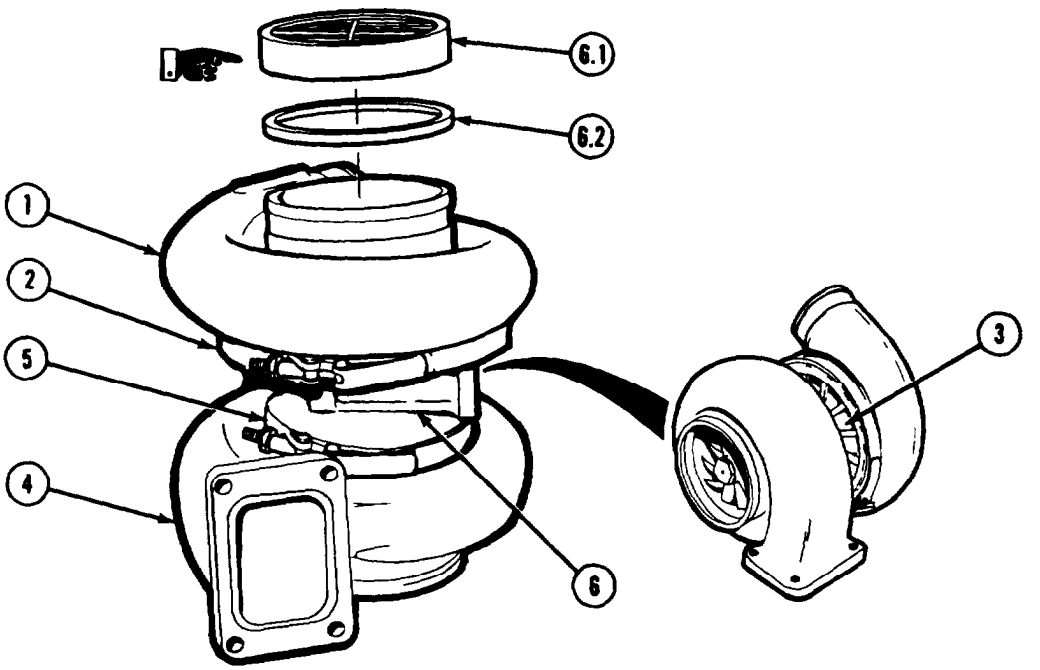

https://truckmanualshub.com/

Turbocharger Maintenance Instructions (Cont)

CAUTION

Be careful when removing turbine housing and compressor housing in order to prevent damaging housing.

(1) Matchmark compressor housing (1), coupling (2), and compressor backplate (3).
(2) Matchmark turbine housing (4), coupling (5), and center housing (6).
(3) Loosen coupling (2) and remove housing (1) and coupling.
(4) Loosen coupling (5) and remove center housing (6) and coupling from housing (4).
(4.1) Remove turbocharger guard (6.1) and seal (6.2) from intake side of compressor housing (1).
(5) Install turbine wheel (7) in holding fixture. Remove locknut (8).

NOTE

Distance between assembly and work surface should be no more than one inch.

(6) With Soldier B holding the center housing (6), Soldier A supports the turbine wheel (7) in one hand and with the other hand gently taps shaft (9) with rubber mallet to loosen impeller (10).

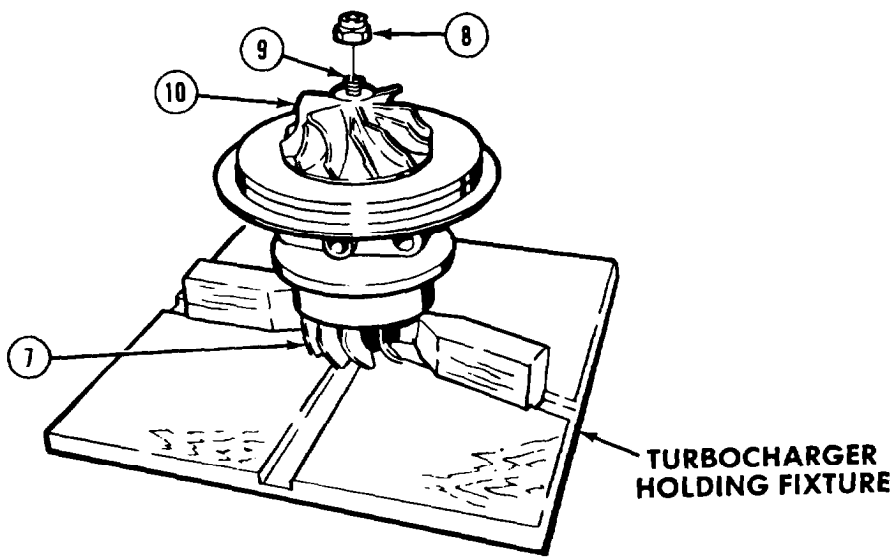

CAUTION

Do not pry off impeller. Damage will occur.

(7) Remove impeller (10) from shaft (9).

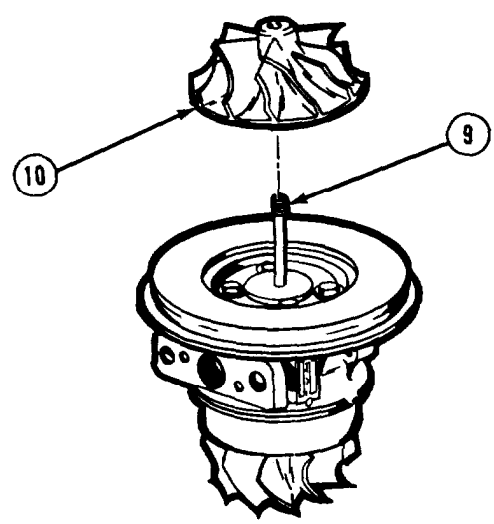

https://truckmanualshub.com/

14-7. TURBOCHARGER REPAIR (CONT).

(8) Remove center housing (6) from shaft (9).

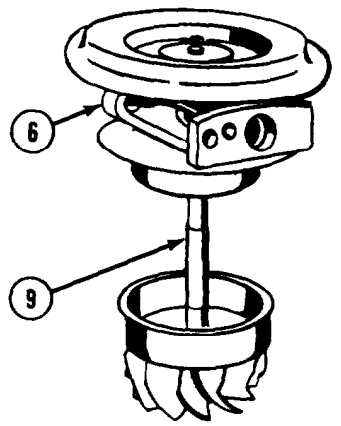

(9) Remove retaining ring (11) from shaft (9).
(10) Remove turbine wheel shroud (12) from shaft (9).
(10.1) Remove seal ring (12.1) from shaft (9).

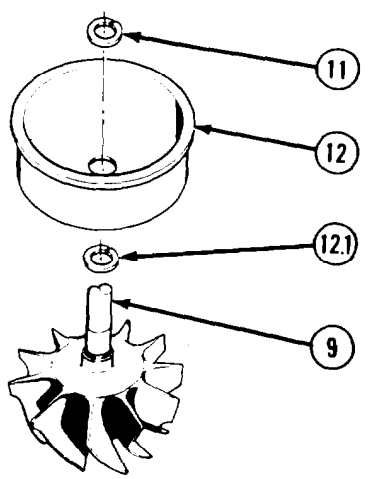

CAUTION

Lockplates must not be reused. Screws can come loose and destroy turbocharger.

NOTE

Model B turbocharger does not have lockplates.

(11) Straighten tabs (13) on lockplates (14).
(12) Remove four screws (15) and lockplates (14).
(13) Remove backplate (3) from center housing (6).

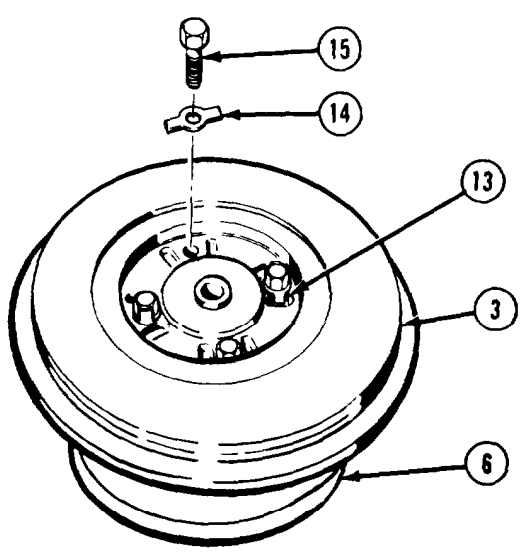

https://truckmanualshub.com/

Turbocharger Maintenance Instructions (Cont)

(14) Remove seal ring (16) from center housing (6).
(15) Remove brass fitting (17).

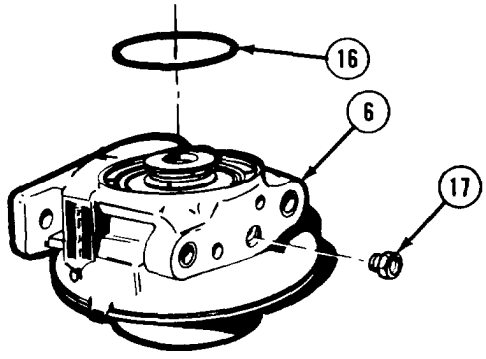

(16) Remove sleeve spacer (18) from backplate (3).
(17) Remove two piston rings (19).

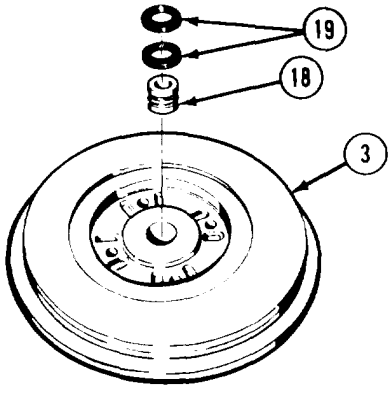

NOTE

There are two turbocharger models. Do step *(18)* for Model A and steps *(18.1)* and *(18.2)* for Model B.

(18) Remove thrust collar (20) and thrust washer (21) from center housing (6).
(18.1) Remove three screws (21.1) from thrust washer bearing (21.2).
(18.2) Remove shaft collar (21.3) and thrust washer bearing (21.2) from center housing (6).

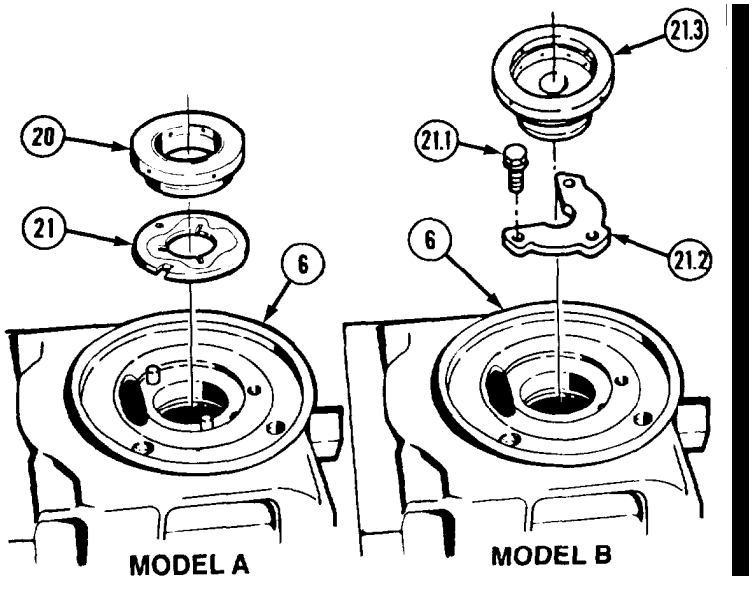

https://truckmanualshub.com/

14-7. TURBOCHARGER REPAIR (CONT).

(19) Remove bearing (22) and washer (23) from center housing (6).
(20) Remove retaining ring (24) from center housing (6).

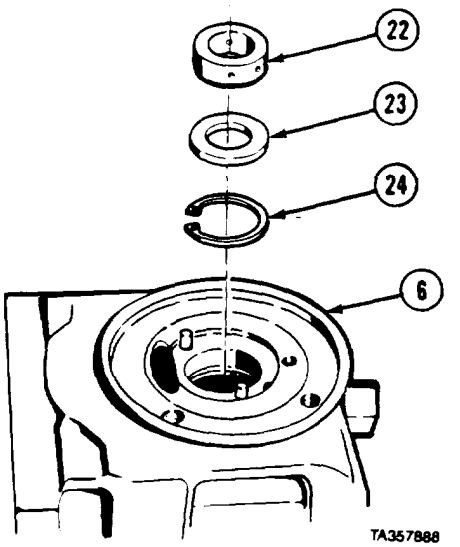

(21) Remove retaining ring (25) and bearing (26).
(22) Remove thrust washer (27) from center housing (6).
(23) Using retaining ring pliers, remove-retaining ring (28).

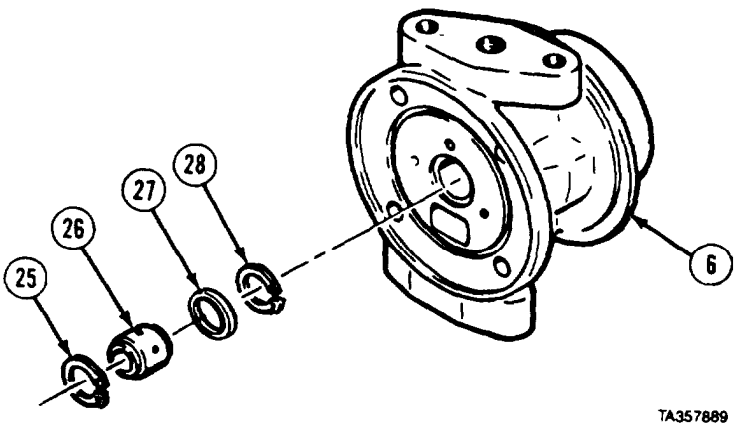

b. Cleaning/Inspection.

WARNING

Adhesives, solvents, and sealing compounds can burn easily, can give off harmful vapors, and are harmful to skin and clothing. lb avoid injury or death, keep away from open fire and use in well-ventilated area. If adhesive, solvent, or sealing compound gets on skin or clothing, wash immediately with soap and water.

(1) Soak metal parts in dry cleaning solvent for 25 minutes.

CAUTION

Do not clean with steel bristle brush. Turbocharger parts can be damaged by steel bristles.

(2) Clean parts with stiff bristle brush after soaking in dry cleaning solvent.

https://truckmanualshub.com/

Turbocharger Maintenance Instructions (Cont)

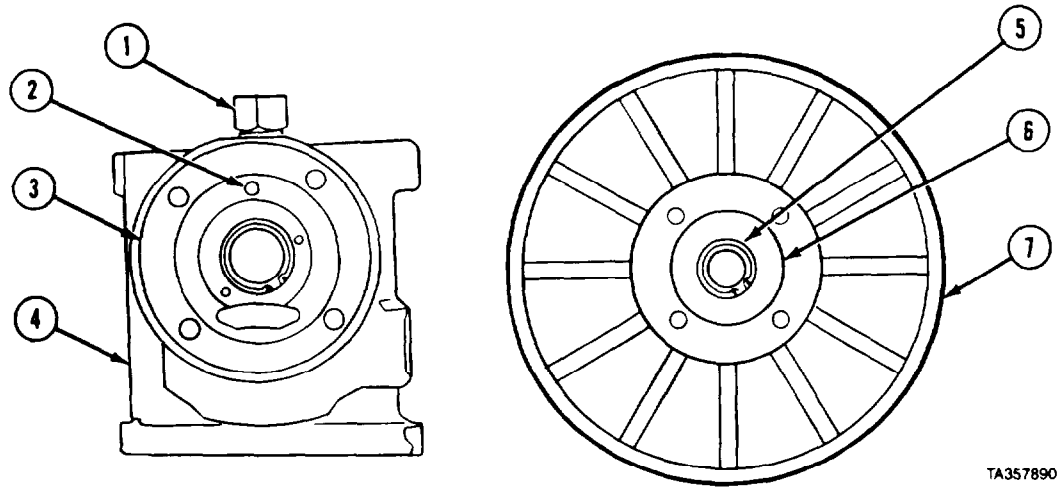

(3) Clean oil passages (1, 2, and 3) in center housing (4) and oil passages (5 and 6) in backplate (7).
(4) Clean oil inlet line inside and out. If oil line is dented or crimped, replace.

WARNING

Compressed air used for cleaning purposes shall not exceed 30 psi (207 kPa). Use only with effective chip guarding and personal protective equipment (goggles/shield, gloves, etc.).

(5) Dry turbocharger parts with compressed air.

CAUTION

Do not use compressed air on hearings. Allow bearings to air dry. Compressed air may cause damage to bearing.

(6) Allow bearings to air dry.
(7) Inspect turbocharger parts for nicks, cuts, scratches, scoring or other damage.
(8) Inspect screw threads for stripping or cross-threading.

NOTE

Measurements given in this section are for used parts.

(9) Check diameters of turbine wheel shaft journals (8 and 9) on shaft (10). Journal diameters must be between 0.6250 and 0.6254-in. (15.875 and 15.885 mm).

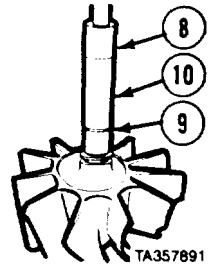

(10) Inside diameter of impeller bore (11) must not be greater than 0.3749-in. (9.522 mm).

https://truckmanualshub.com/

14-7. TURBOCHARGER REPAIR (CONT).

(11) Inside diameter of center housing (12) must not be greater than 0.9842-in. (24.998 mm).

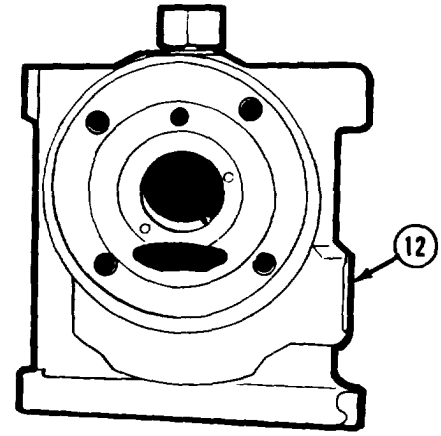

(12) Seal bore (13) must not be greater than 0.6895-in (17.513 mm).

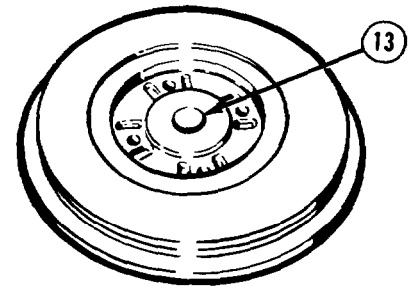

(13) Bearing (14) inside diameter must be 0.9783 to 0.9787-in. (24.849 to 24.859 mm) (Model A only).

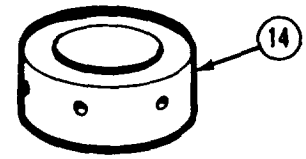

(14) Thrust collar (15) thickness must not be less than 0.2970-in. (7.543 mm) (Model A only). Thrust collar bore inside diameter must not be greater than 0.3778-in. (9.596 mm) (Model A only).

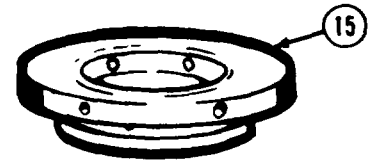

(15) Ring groove width will not be greater than 0.0715-in (1.816 mm). Sleeve spacer (16) outside diameter must not be less than 0.6705-in. (17.030 mm).

(16) Replace damaged parts.

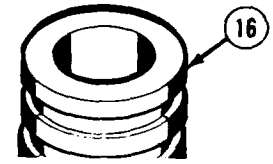

https://truckmanualshub.com/

Turbocharger Maintenance Instructions (Cont)

c. Assembly

(1) Using retaining ring pliers, install retaining ring (1).

(2) Install thrust washer (2), bearing (3), and retaining ring (4) in turbine side of center housing (5).

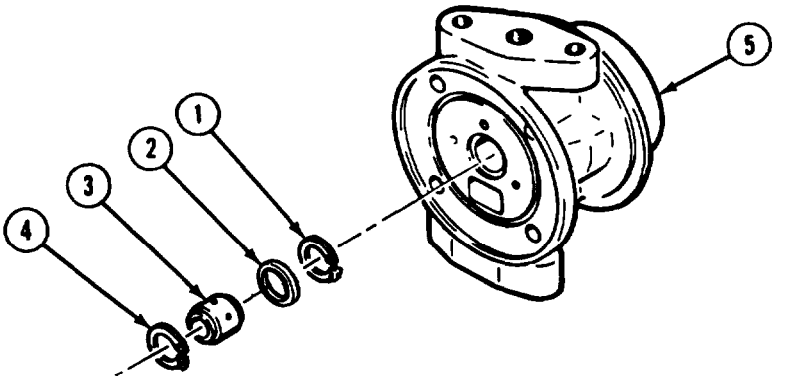

(3) Install retaining ring (6), thrust washer (7), and bearing (8) in center housing (5).

NOTE

There are two turbocharger models. Do steps (4) and (5) for Model A and (5.11 through (5.3) for Model B. Refer to TM 9-2320-279-24P.

(4) Aline holes and notch (9) in thrust. washer (10) and install over pins (11) in center housing (5).

(5) Install thrust collar (12) and seal ring (13).

(5.1) Install shaft collar (13.1) in thrust washer bearing (13.2).

(5.2) Install center housing (5) in soft-jaw vise and install thrust washer bearing (13.2) in center housing with three screws (13.3).

(5.3) Install seal ring (13.4).

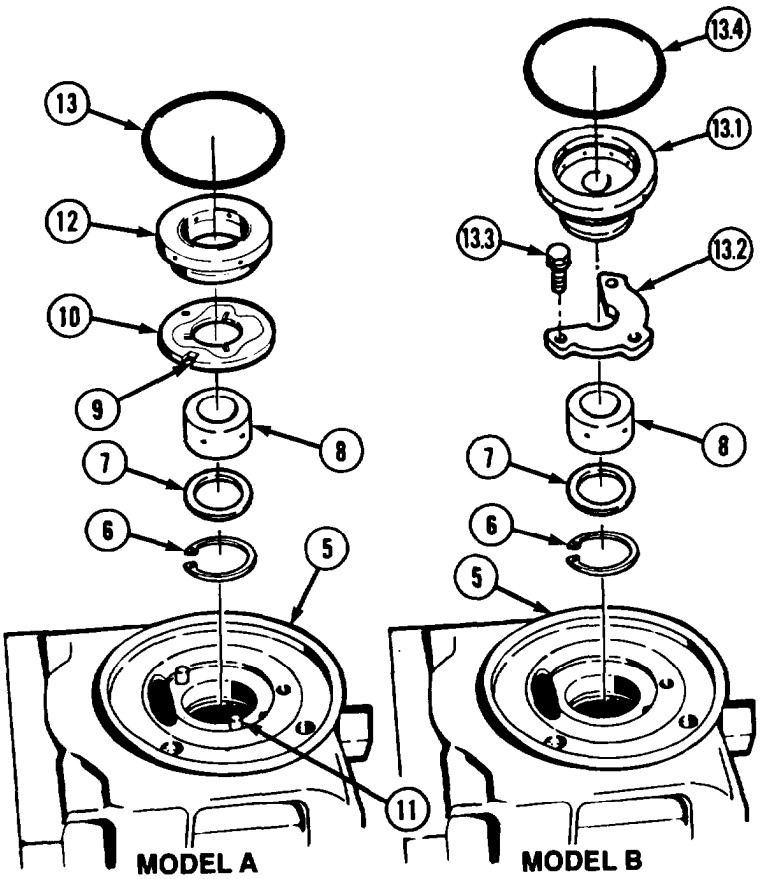

https://truckmanualshub.com/

14-7. TURBOCHARGER REPAIR (CONT).

NOTE

Flat surface of sleeve spacer faces up.

(6) Coat sleeve spacer (15) with grease and install two new piston rings (14).

(7) Install sleeve spacer (15) in compressor backplate (16).

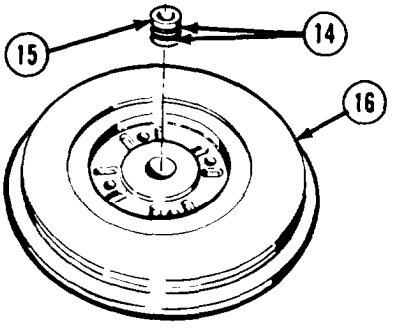

(8) Aline oil lubrication holes (17), and install backplate (16) on center housing (5).

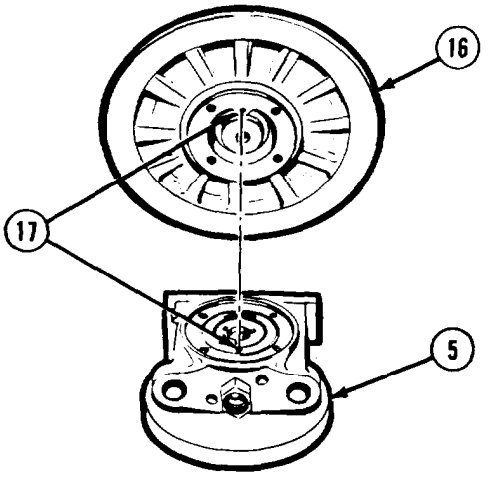

CAUTION

Used lockplates must not be reused. Screws can come loose and destroy turbocharger.

NOTE

Model B turbochargers do not have lockplates. Refer to TM 9-2320-279-24P.

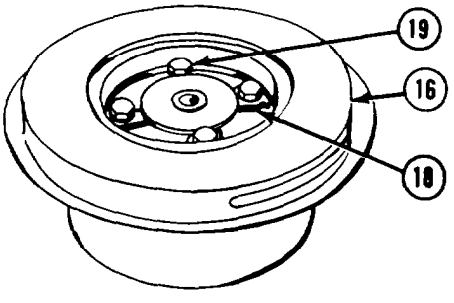

(9) Install four new lockplates (18) and four screws (19) in backplate (16).

(10) Tighten screws (19) to 80 to 100 lb-in. (9 to 11 N•m).

(11) Bend tabs of lockplates (18) up against screws (19).

https://truckmanualshub.com/

Turbocharger Maintenance Instructions (Cont)

(11.1) Install seal ring (19.1) on turbine wheel shaft (21).

(12) Install turbine wheel shroud (20) on turbine wheel shaft (21).

(13) Fill retaining ring groove in turbine wheel shroud (20) with grease and install retaining ring (22) in groove.

(14) Install turbine wheel shaft (21) in center housing (5).

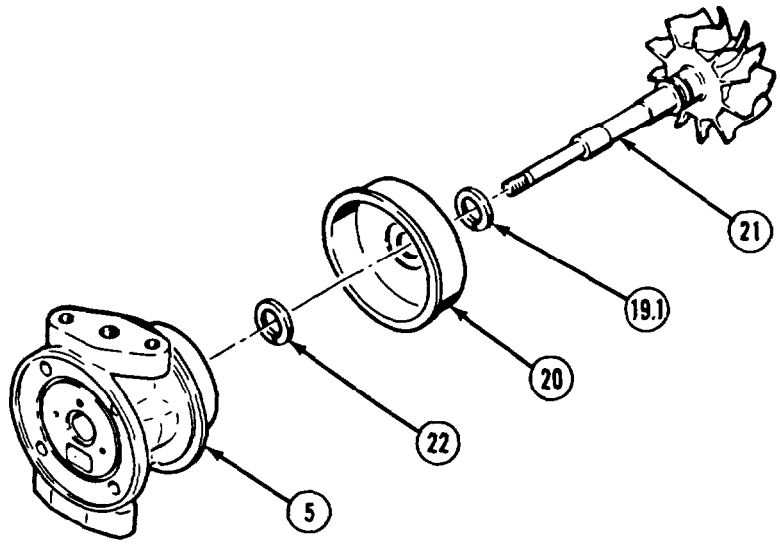

(15) Install impeller (23) on shaft (21).

(16) Install locknut (24) on shaft (21).

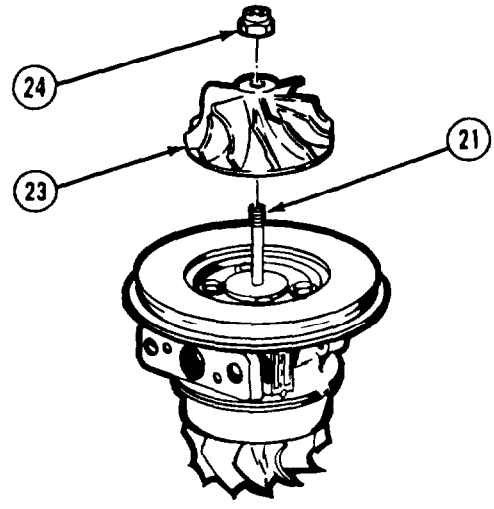

(17) Place center housing (5) in holding fixture.

(18) Tighten locknut (24) to 135 lb-in. (14.9 N•m).

(19) Remove locknut (24).

(20) Inspect face of locknut (24) and impeller (23) for scratches. Make sure both surfaces are clean and smooth.

(21) Apply grease to threads of shaft (21) and base of locknut (24).

(22) Tighten locknut (24) to 35 to 55 lb-in. (4 to 6 N•m).

(23) Tighten locknut (24) 1/4 turn more.

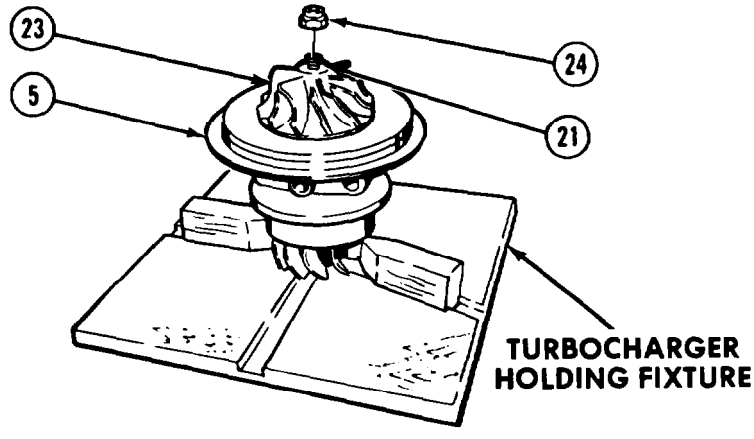

https://truckmanualshub.com/

14-7. TURBOCHARGER REPAIR (CONT).

(24) Place backplate (16) in vise with soft jaws.
(25) Check thrust float with dial indicator. Move shaft (21) back and forth in center housing (5). Indicator reading (thrust float) must be 0.003 to 0.010-in. (0.08 to 0.25 mm).

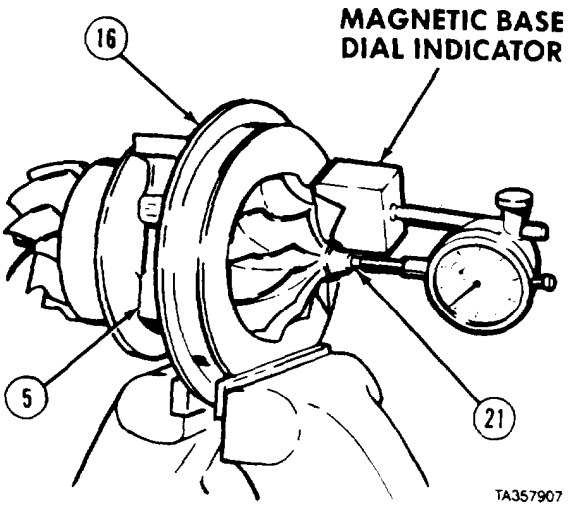

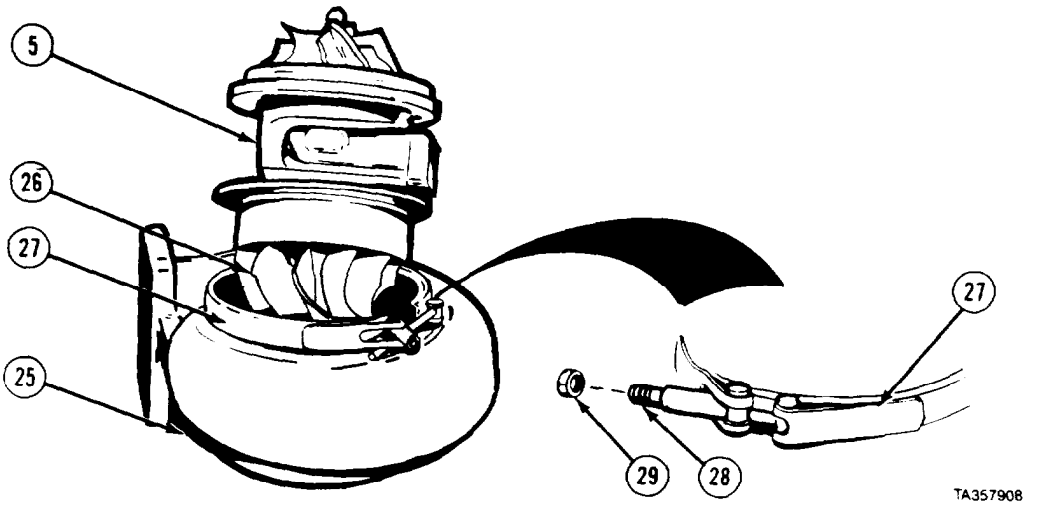

(26) Aline matchmarks on center housing (5) with those on turbine housing (25).
(27) Install turbine wheel assembly (26) in turbine housing (25) and coupling (27).
(28) Apply antiseize compound to threads of screw (28).

CAUTION

Do not tighten turbine housing clamp until alined with turbine housing. If parts are not alined, turbocharger will be damaged.

(29) Tighten locknut (29) to 160 lb-in. (18 N•m).
(30) Loosen locknut (29).
(31) Tighten locknut (29) to 165 lb-in. (18.9 N•m).

https://truckmanualshub.com/

Turbrocharger Maintenance Instructions (Cont)

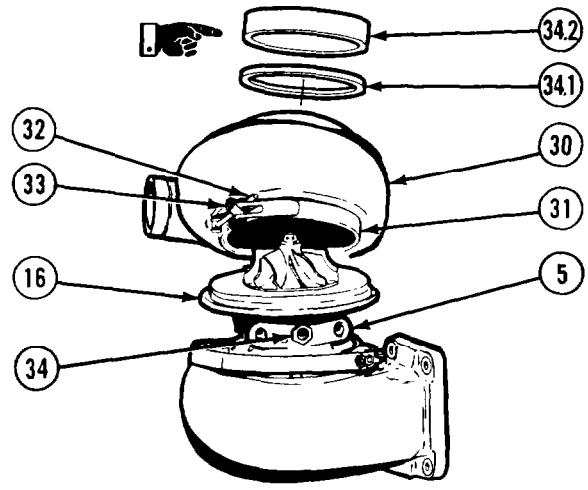

(32) Aline matchmarks on compressor housing (30) and center housing (5).

(33) Install compressor housing (30) and coupling (31) on backplate (16).

(34) Apply lubricating oil to threads of screw (32).

(35) Tighten locknut (33) to 110 to 130 lb-in. (12 to 15 N•m).

(36) Coat threads of brass fitting (34) with pipe thread sealing compound and install. Tighten to 240 lb-in. (27.1 N•m).

(36.1) Install seal (34.1) and turbocharger guard (34.2) on intake side of compressor housing (30).

(37) Position magnetic base, equipped with swivel adapter, dial indicator, and extension rod, on flat surface of housing inlet flange (35).

NOTE

Do not allow extension rod to touch sides of center housing. Inaccurate readings can result in poor fit and damage.

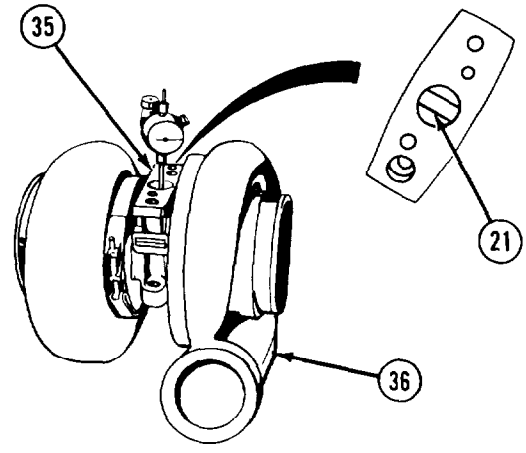

(38) Insert extension rod into oil drain hole so that rod is against turbine wheel shaft (21).

(39) Move turbine wheel shaft (21) up and down. Turbine wheel shaft must not move more than 0.0070 in. (0.177 mm) or less than 0.003 in. (0.076 mm).

(40) Disassemble and inspect turbocharger (36) if fit of turbine wheel shaft (21) is not within limits.

d. Follow-on Maintenance. None.

END OF TASK

https://truckmanualshub.com/

https://truckmanualshub.com/

CHAPTER15
ENGINE GOVERNOR MAINTENANCE

Contents

	Para	Page
General	15-1	15-1
Governor Housing Assembly Removal/Installation	15-2	15-1
Governor Repair	15-3	15-3
Governor Cover Removal/Repair/Installation	15-4	15-15
Throttle Delay Removal/Installation	15-5	15-20
Fuel Modulator Removal/Installation	15-5.1	15-22
Variable, Low Speed Limiting Governor Removal/Installation	15-6	15-22.5
Buffer Screw Switch Removal/Repair/Installation	15-7	15-27
Throttle Air Cylinder Removal/Installation	15-8	15-30
Throttle Control Solenoid Removal/Repair/Installation	15-9	15-33
Engine Stop Solenoid Removal/Installation	15-10	15-35

SectionI.INTRODUCTION

15-1. GENERAL This chapter covers removal, installation, and repair of the engine governor. The subassemblies and parts which must be removed before the governor components can be removed will be referenced to other paragraphs or chapters of this manual, TM 9-2320-279-10, TM 9-2320-279-20, or TM 9-2320-279-34.

Section II. ENGINE GOVERNOR ASSEMBLY

Engine Governor Maintenance Instructions

15-2. GOVERNOR HOUSING ASSEMBLY REMOVAL/INSTALLATION.

This task covers:

a. Removal
b. Installation
c. Follow-on Maintenance

INITIAL SETUP

Models
All

Test Equipment
None

Special Tools
None

Supplies
Grease, automotive and artillery, Item 26, Appendix C

Personnel Required
MOS 63W, Wheel vehicle repairer

References
None

Equipment Condition

TM or Par-a	Condition Description
Para 14-3	Blower removed.

Special Environmental Conditions
None

General Safety Instructions
None

Level of Maintenance
Direct Support

https://truckmanualshub.com/

Engine Governor Maintenance Instructions (Cont)

15-2. GOVERNOR HOUSING ASSEMBLY REMOVAL/INSTALLATION (CONT).

a. Removal.

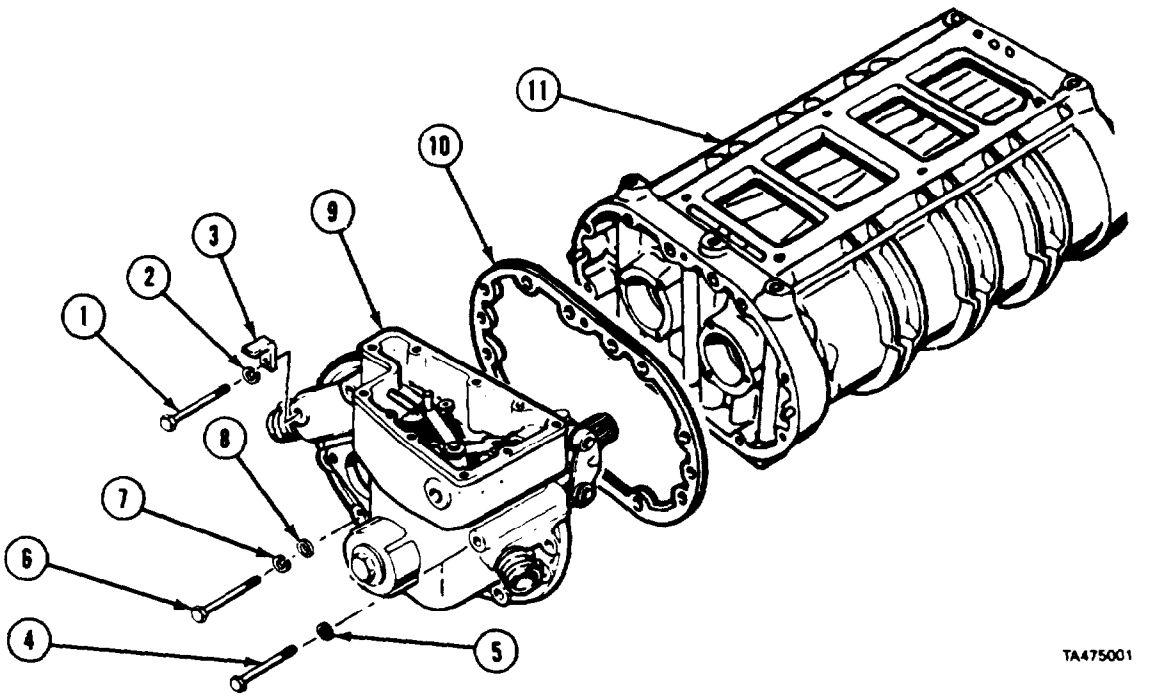

(1) Remove screw (1), copper washer (2), and bracket (3) .
(2) Remove screw (4) and copper washer (5).
(3) Remove eight screws (6), lockwashers (7), and washers (8).
(4) Remove governor (9) and gasket (10) from blower (11).

b. Installation.

(1) Apply grease to face of blower (11) and governor (9) and install gasket (10) and governor.
(2) Install screw (4) with copper washer (5).
(3) Install screw (1),copper washer (2) and bracket (3).
(4) Install eight screws (6), lockwashers (7), and washer (8).
(5) Tighten ten screws (4,1,and 6) to 15 lb-ft 934 N•m).

c. Follow-on Maintenance. Install blower (para 14-3).

END OF TASK

https://truckmanualshub.com/

Engine Governor Maintenance Instructions (Cent)

15-3. GOVERNOR REPAIR.

This task covers:

a. Disassembly
b. Cleaning/Inspection
c. Assembly
d. Follow-on Maintenance

INITIAL SETUP

Models
All

Test Equipment
None

Special Tools
None

Supplies
Compound, sealing, pipe thread, Item 32, Appendix C
Solvent, dry cleaning, Item 60, Appendix C
Tags, identification, Item 61, Appendix C
oil, lubricating, Item 48, Appendix C
Grease, automotive and artillery, Item 36, Appendix C

Personnel Required
MOS 63W, Wheel vehicle repairer

References
None

Equipment Condition

TM or Para	*Condition Description*
Para 14-3	Blower removed.
Para 15-6	Variable low speed limiting governor removed.

Special Environmental Conditions
None

General Safety Instructions
None

Level *of Maintenance*
General Support

a. Disassembly.

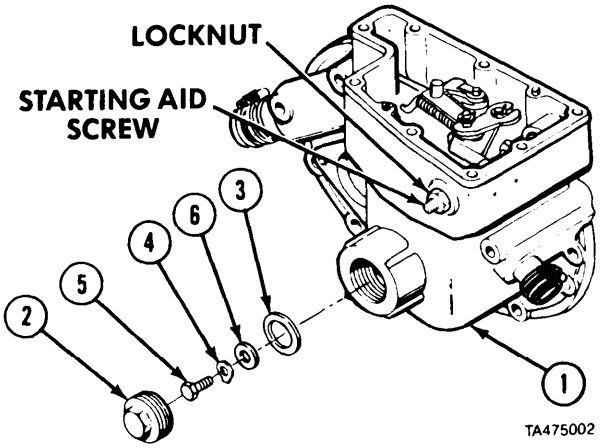

NOTE

Engines after serial number 8VF- 106635 will not have starting aid screw and locknut.

(1) Mount governor housing (1) in vise with soft jaws.
(2) Remove plug (2) and gasket (3) from governor housing (1).
(3) Bend tang of lockwasher (4) away from head of bearing retaining screw (5).
(4) Remove bearing retaining screw (5), lockwasher (4), and washer (6).

https://truckmanualshub.com/

Engine Governor Maintenance Instructions (Cont)

115-3. GOVERNOR REPAIR (CONT).

(5) Remove governor housing (1) from vise and support in press.
(6) Press governor weight shaft (7) out of governor housing bearing (8).
(7) Remove bearing assembly (9) and governor riser (10) from governor weight shaft (7).
(8) Remove bearing (8) from governor housing (l).

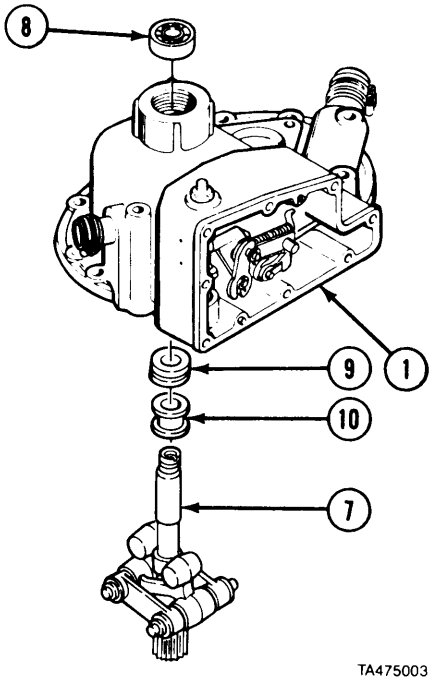

(9) Remove four retaining rings (11) and washers (12).
(10) Remove two washers (13) and pins (14).
(11) Remove two weights (15).

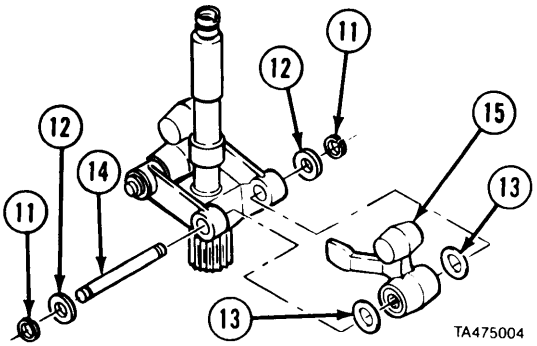

NOTE

Bearings are removed from both weights in same manner. Remove only if damaged.

(12) Press two bearings (16) from weight (15).

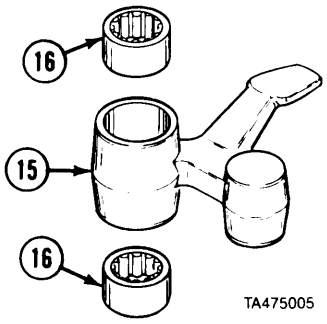

https://truckmanualshub.com/

(13) Press shaft (7) from weight carrier (17).

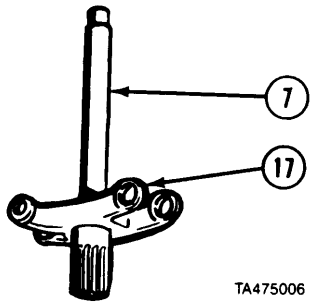

(14) Remove spring clip (18) and washer (19) from operating lever connecting link (20).
(15) Remove operating lever connecting link (20).
(16) Remove spring clip (21) and washer (22) from differential lever (23).
(17) Remove differential lever (23).
(18) Remove pin (24).
(19) Press pin (25) out.

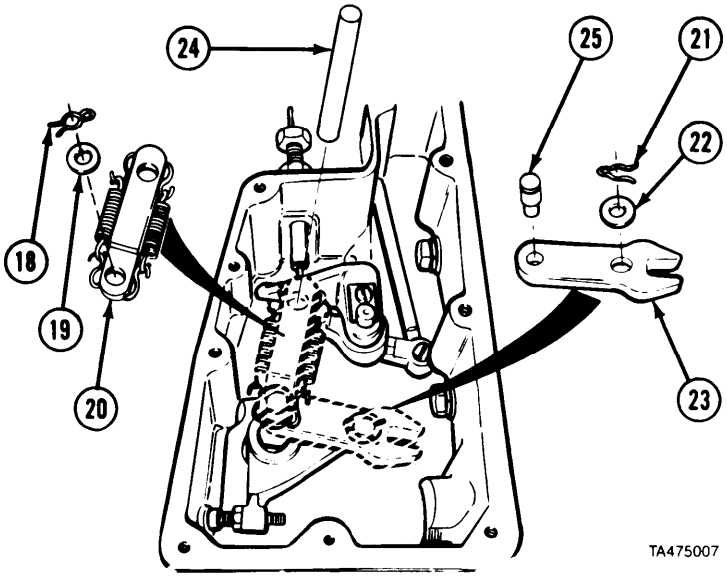

(20) Remove two springs (26) and retainer clips (27).
(21) Separate governor links (28 and 29).
(22) Remove pin (30) from link (29).

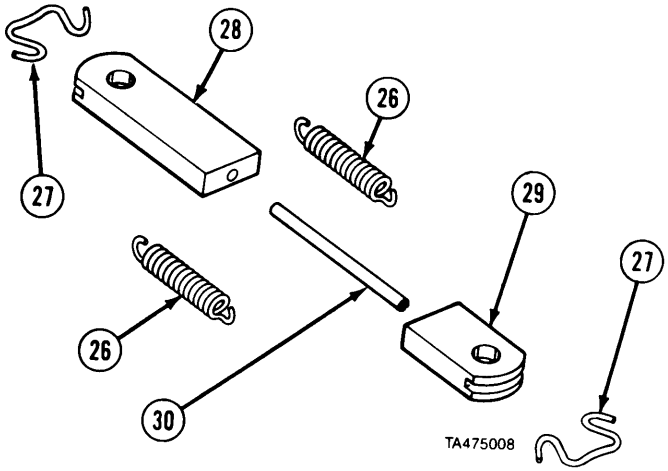

https://truckmanualshub.com/

Engine Governor Maintenance Instructions (Cont)

15-3. GOVERNOR REPAIR (CONT).

(23) Remove expansion plug (31) from governor housing (1).

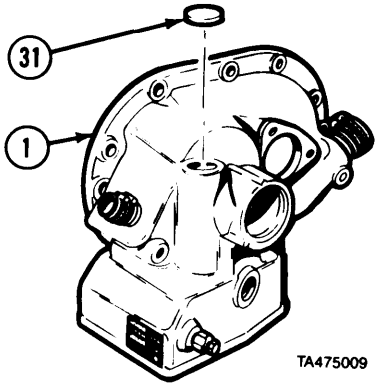

(24) Remove upper bearing retaining screw (32), lockwasher (33), and washer (34).

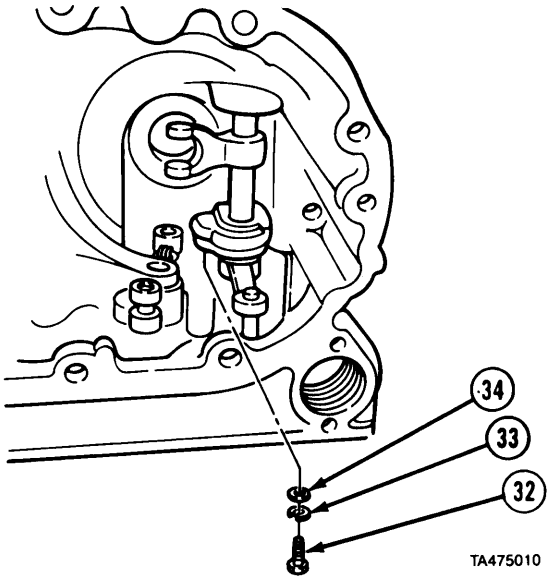

(25) Press operating shaft and spacer (35) from lower bearing (36).

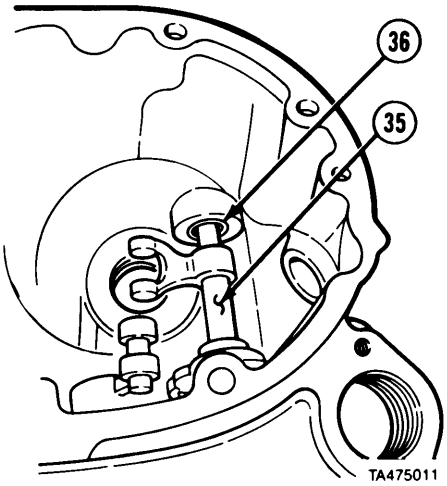

https://truckmanualshub.com/

Engine Governor Maintenance Instructions (Cont)

(26) Support operating fork (37) with wrench.
(27) Press operating shaft spacer (38) from operating fork (37). Remove operating fork.
(28) Remove operating shaft spacer (38), operating shaft (35), upper bearing (39), and operating lever (40) from governor housing (1).

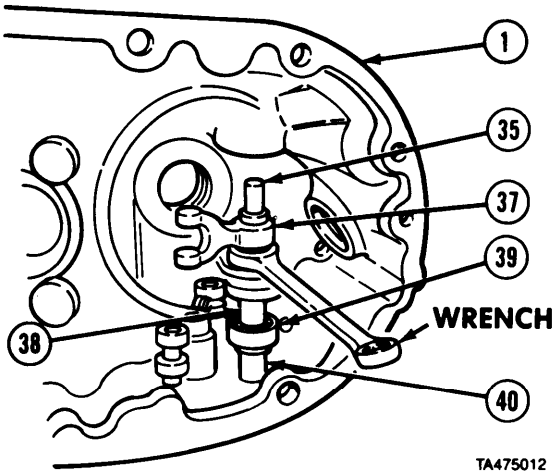

(29) Press operating shaft (35) from upper bearing (39) and operating lever (40).

NOTE

Measure and note length of gap adjusting screw to aid in assembly.

(30) Loosen jamnut (41) and remove gap adjusting screw (42).
(31) Press pin (43) from operating lever (40).

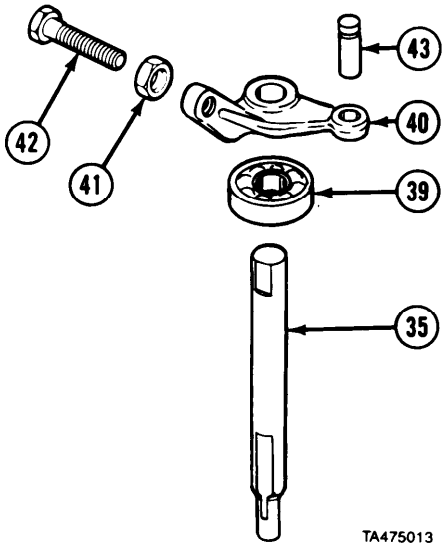

(32) Press lower bearing (44) from governor housing (1).

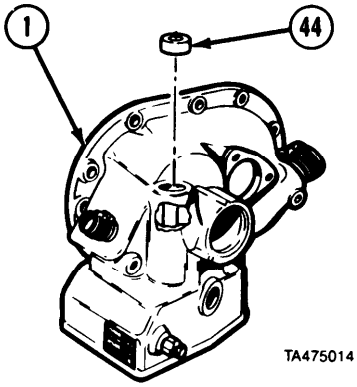

https://truckmanualshub.com/

Engine Governor Maintenance Instructions (Cont)

15-30 GOVERNOR REPAIR (CONT).

(33) Remove screw (45), lockwasher (46), and locking clip (47).
(34) Remove operating lever shaft (48), control link operating lever (49), and two washers (50).

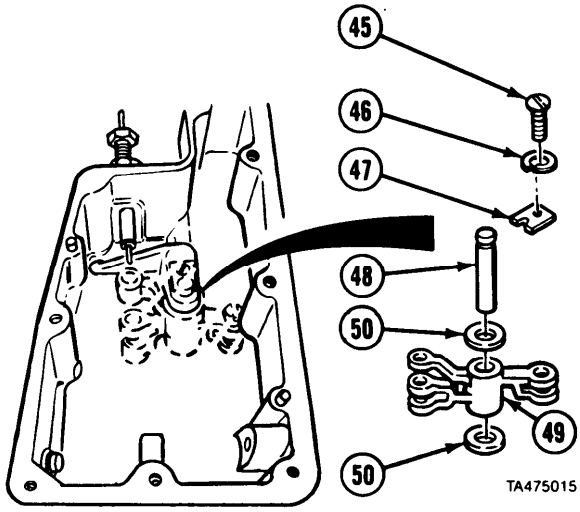

NOTE

Replace needle bearings only if damaged.

(35) Remove pin (51).
(36) Press two bearings (52) from control link operating lever (49).

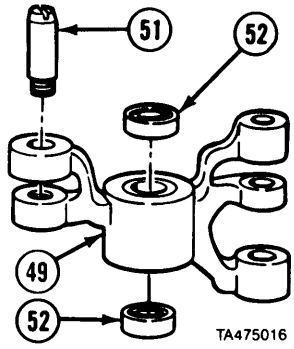

NOTE

Engine after serial number 8VF-106635 will not have starting aid screw and locknut.

(37) Measure and note length starting aid screw (53) extends from governor housing (l).
(38) Remove locknut (54) and screw (53) from housing (l).
(39) Remove four clamps (55) and two hoses (56).
(40) Press two tubes (57) from governor housing (1).

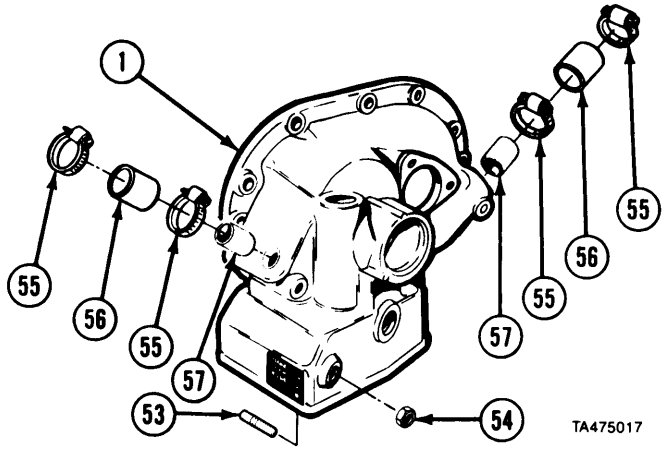

https://truckmanualshub.com/

Engine Governor Maintenance Instructions (Cont)

b. Cleaning/Inspection.

WARNING

. Adhesives, solvents, and sealing compounds can burn easily, can give off harmful vapors, and are harmful to skin and clothing. To avoid injury or death, keep away from open fire and use in well-ventilated area. If adhesive, solvent, or sealing compound gets on skin or clothing, wash immediately with soap and water.

l Compressed air used for cleaning purposes will not exceed 30 psi (207 kPa). Use only with effective chip guarding and personal protective equipment (goggles/shield, gloves, etc.).

(1) Scrape old sealant from parts.
(2) Clean all metal parts with dry cleaning solvent.
(3') Dry metal parts, except bearings, with compressed air. Let bearings air dry.
(4) Inspect housing for cracks, warpage and damages threads.
(5) Inspect bearings for pitting, corrosion, or rough spots.
(6) Inspect mechanical parts for nicks and burrs.
(7') Replace all damaged parts.

c Assembly.

(1) Press two tubes (1) into governor housing (2).
(2) Install two hoses (3) with four clamps (4).

NOTE

Screw must be installed from inside housing.

(3) Install screw (5) and locknut (6).

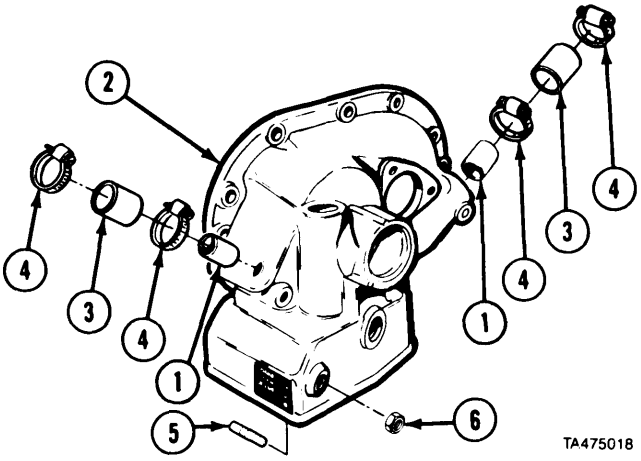

NOTE

Press bearings flush with operating lever,

(4) Lubricate two bearings (7) with grease. Press bearings, numbered side up, into control link operating lever (8).
(5) Install pin (9).

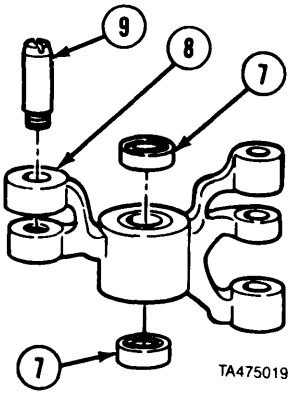

https://truckmanualshub.com/

Engine Governor Maintenance Instructions (Cont)

15-3. GOVERNOR REPAIR (CONT).

(6) Mount governor housing (2) in vise with soft jaws.
(7) Place control link operating lever (8) inside governor housing (2).
(8) Insert washer (10) on each side of lever (8).
(9) Install operating lever shaft (11) with slot up.
(lo) Install locking clip (12), lockwasher (13), and screw (14).

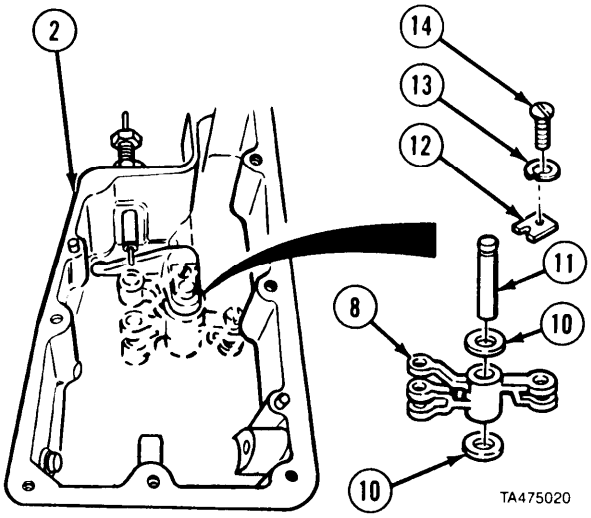

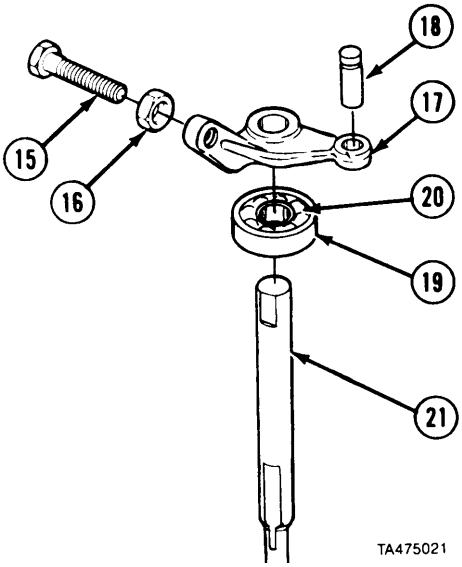

(11) Install gap adjusting screw (15) and jamnut (16) into operating lever (17).
(12) Tighten jamnut. (16) so length of gap adjusting screw (15) is same as noted at disassembly.
(13) Press pin (18) into operating lever (17).
(14) Press upper bearing (19) with bearings (20) facing up onto operating shaft.
(15) Press operating lever (17) and bearing (19) on operating shaft (21) until flush with top of shaft.

https://truckmanualshub.com/

Engine Governor Maintenance Instructions (Cont)

(16) **Install shaft (21) and position lever (17) so gap adjusting screw (15) contacts low speed limiting screw (22).**

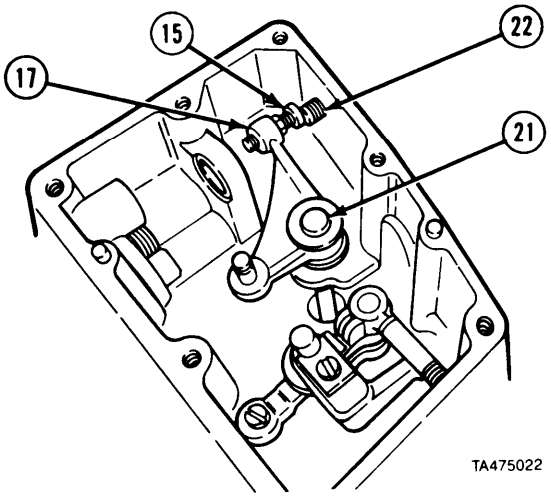

NOTE

Flat on shaft goes on flat in fork.

(17) **Place shaft (21) into spacer (23) and position operating fork (24) with finished cam surfaces of fork fingers facing rear of governor housing.**

(18) **Place tool between housing (2) and operating fork (24) and press shaft (21) until spacer *(23)* does not move up or down.**

(19) **Seat upper bearing (19).**

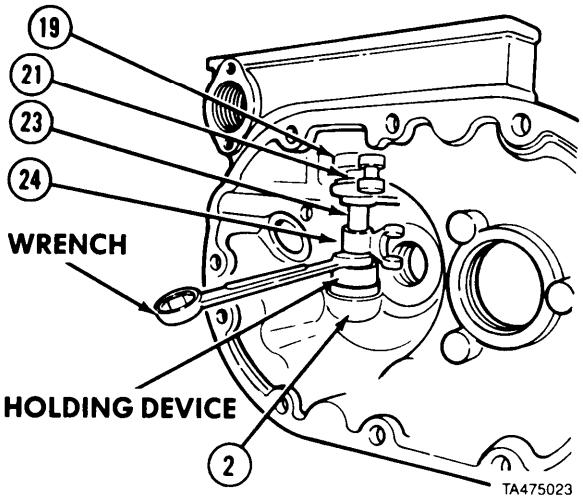

(20) **Install upper bearing retaining screw (25), lockwasher (26), and washer (27).**

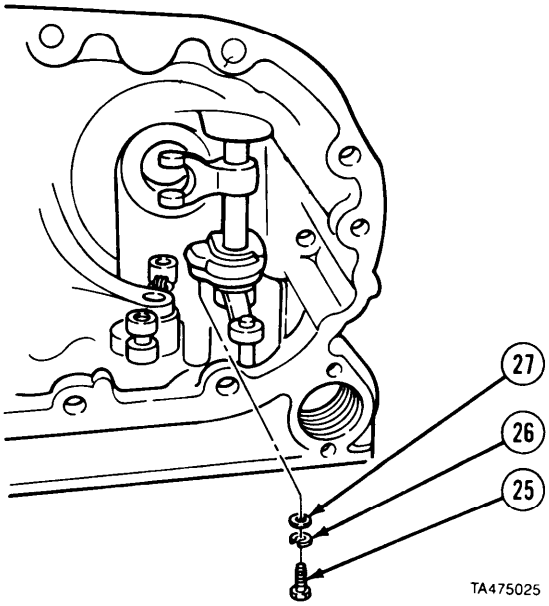

https://truckmanualshub.com/

Engine Governor Maintenance Instructions (Cont)

15-3. GOVERNOR REPAIR (CONT).

(21) Lubricate inside lower bearing (28) with grease, and lubricate outside with lubricating oil.
(22) Start lower bearing (28) closed side up into governor housing (2) over shaft (21).
(23) Press lower bearing (28) on shaft (21) until it seats on shoulder in governor housing (2).

WARNING

Adhesives, solvents, and sealing compounds can burn easily, can give off harmful vapors, and are harmful to skin and clothing. To avoid injury or death, keep away from open fire and use in well-ventilated area. If adhesive, solvent, or sealing compound gets on skin or clothing, wash immediately with soap and water.

(24) Apply small amount of pipe thread sealing compound to edge of expansion plug (29).
(25) Install expansion plug (29), curved side up, in governor housing (2).
(26) Tap center of expansion plug (29) to seal.

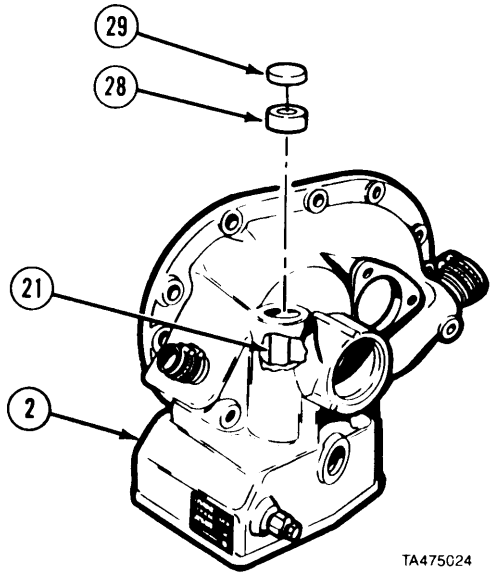

(27) Install pin (30) into link (31).
(28) Connect link (31) and (32).
(29) Install two retainer clips (33) and springs (34).

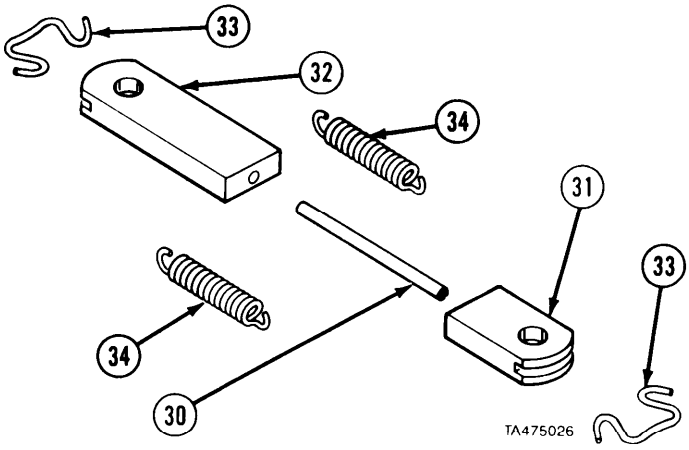

(30) Install pin (35).
(31) Install differential lever (36), washer (37), and spring clip (38) on operating shaft lever (17).
(32) Install short end of connecting link (31), washer (39), and spring clip (40) on operating shaft lever (17).

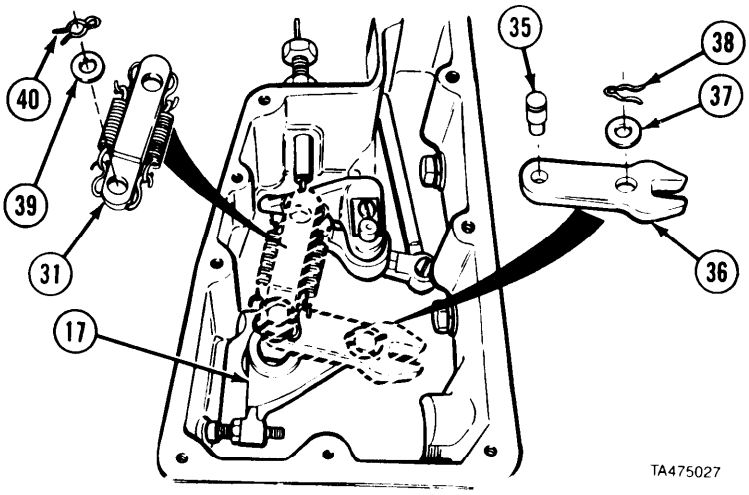

https://truckmanualshub.com/

Engine Governor Maintenance Instructions (Cont)

(33) Support weight earner (42) in center and press shaft (41) into weight carrier.

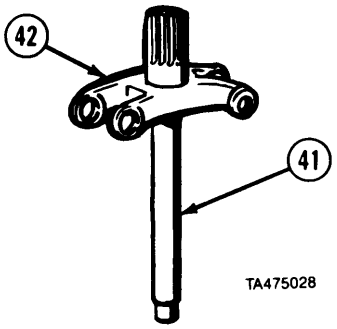

(34) Press two bearings (43) in weight (44).

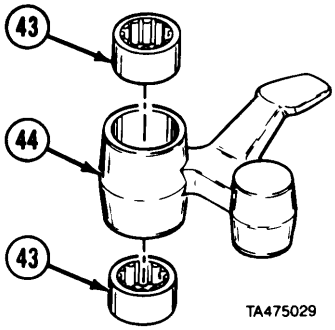

NOTE

Repeat steps (35) and (36) for other weight.

(35) Install weight (45) and two washers (46).
(36) Install pin (47), two washers (48), and two retaining rings (49).

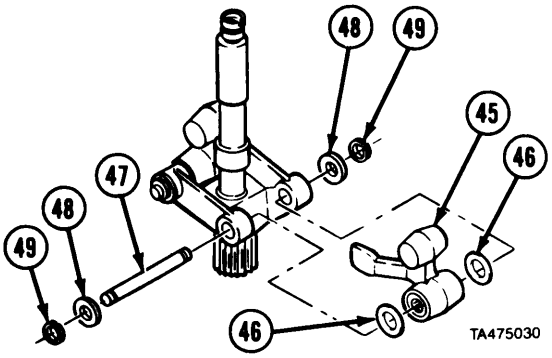

(37) Install governor housing bearing (50) in governor housing (2).
(38) Install governor riser (51) on governor weight shaft (41).
(39) Install governor riser thrust bearing (52), smaller inside diameter first, against governor riser (51).
(40) Support spline end of governor weight shaft (41) on bed of press. Set governor housing (2) over governor weight shaft and press housing on shaft.

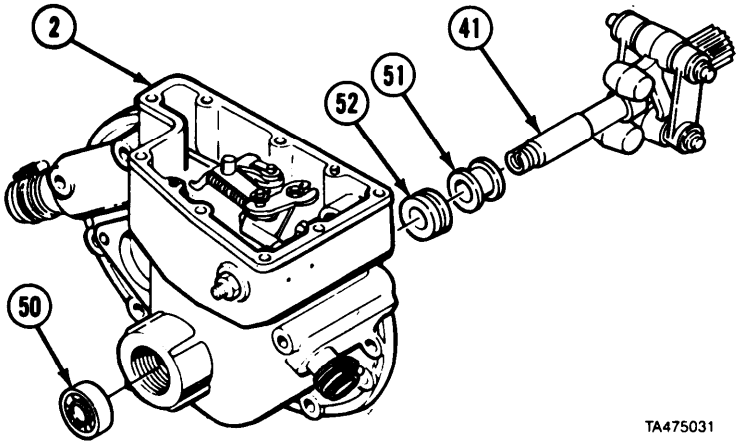

https://truckmanualshub.com/

15-3. GOVERNOR REPAIR (CONT).

(41) Position lockwasher (53) with tab facing into housing (2).
(42) Install washer (54) into housing (2).
(43) Position lockwasher (53) and screw (55).
(4-4) Install bearing retaining screw (55).
(45) Tighten bearing retaining screw (55) to 20 lb-ft (27 N-m). Bend tang on lockwasher (53) against head of bearing retaining screw.
(46) Install gasket (56) inside governor housing (2).

CAUTION

Apply small amount of sealing compound. Excess could get in bearing causing bearing failure.

(47) Apply pipe thread sealing compound to threads of plug (57) and install plug in governor housing (2). Tighten plug to 45 lb-ft (61 N.m).
(48) Install pin (58).

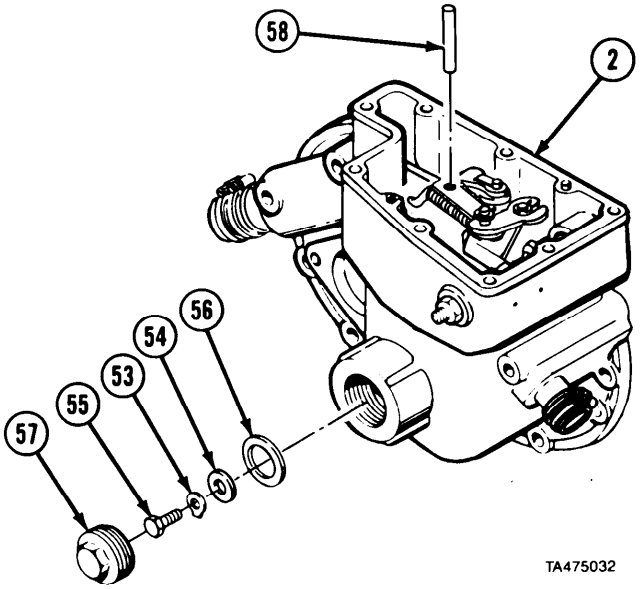

d. Follow-on Maintenance.
(1) Install variable low speed limiting governor (para 15-6).
(2) Install blower (para 14-3).

END OF TASK

https://truckmanualshub.com/

Engine Governor Maintenance Instructions (Cont)

15-4. GOVERNOR COVER REMOVAL/REPAIR/INSTALLATION.

This task covers:

a. Removal
b. Disassembly
c. Cleaning/Inspection
d. Assembly
e. Installation
f. Follow-on Maintenance

INITIAL SETUP

Models
All

Test Equipment
None

Special Tools
None

Supplies
Grease, automotive, artillery, Item 36, Appendix C
Solvent, dry cleaning, Item 60, Appendix C
Oil, lubricating, Item 48, Appendix C

Personnel Required
MOS 63W, Wheel vehicle repairer

Preferences
None

Equipment Condition

TM or Para	*Condition Description*
Para 15-8	Thottle air cylinder removed.

Special Environmental Conditions
None

General Safety Instructions
None

Level of Maintenance
Direct Support

a. Removal.

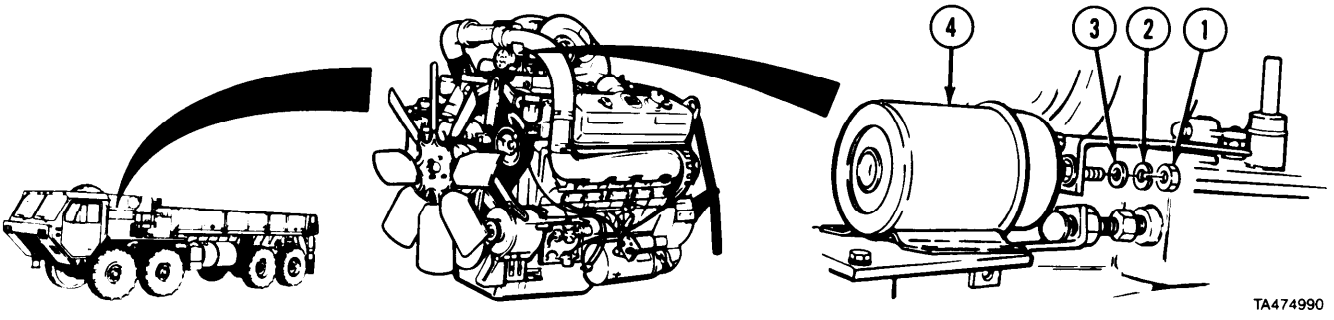

(1) Remove nut (1), lockwasher (2), and washer (3) from engine stop solenoid (4),

https://truckmanualshub.com/

15-4. GOVERNOR COVER REMOVAL/REPAIR/iNSTALLATION (CONT).

WARNING

Adhesives, solvents, and sealing compounds can burn easily, can give off harmful vapors, and are harmful to skin and clothing. To avoid injury or death, keep away from open fire and use in well-ventilated area. If adhesive, solvent, or sealing compound gets on skin or clothing, wash immediately with soap and water.

(2) Clean governor cover assembly (5) with dry cleaning solvent and wipe dry.
(3) Remove five screws (6), lockwashers (7), governor cover assembly (5), and gasket (8).

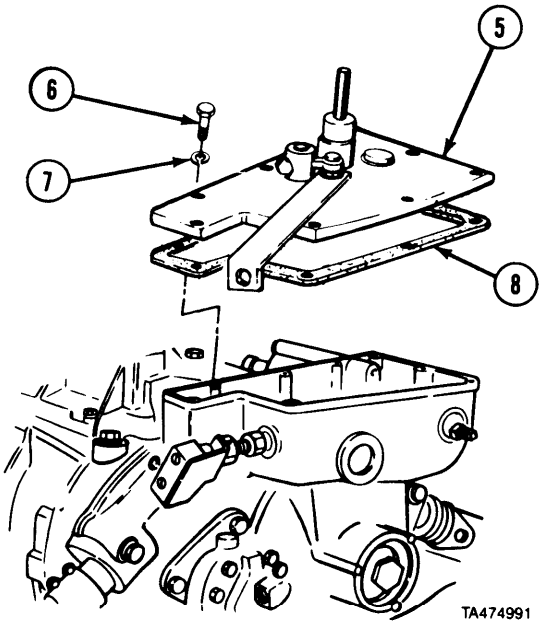

b. ***Disassembly.***

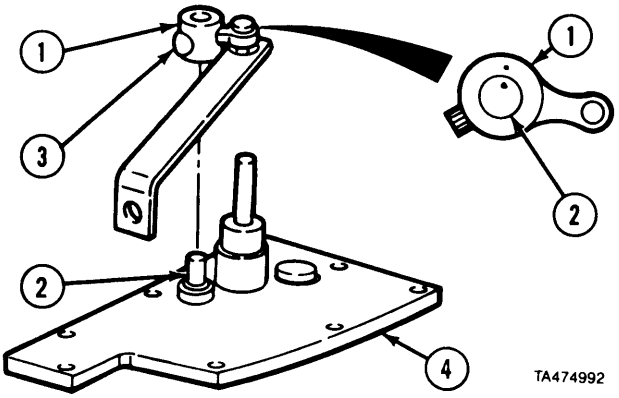

(1) **Matchmark stop lever (1) and stop lever shaft (2).**
(2) Loosen screw (3) and remove stop lever (1) from governor cover (4).

https://truckmanualshub.com/

Engine Governor Maintenance Instructions (Cent)

(3) Remove retaining ring (5), two washers (6), and preformed packing (7).
(4) Remove stop lever shaft (2) and return spring (8) from governor cover (4).
(5) Remove retaining ring (9), washer (10), copper washer (11), preformed packing (12), and two bushings (13) from speed control lever shaft (14).
(6) Remove speed control lever shaft (14) from governor cover (4).
(7') Remove pin (15) from speed control lever shaft (14).

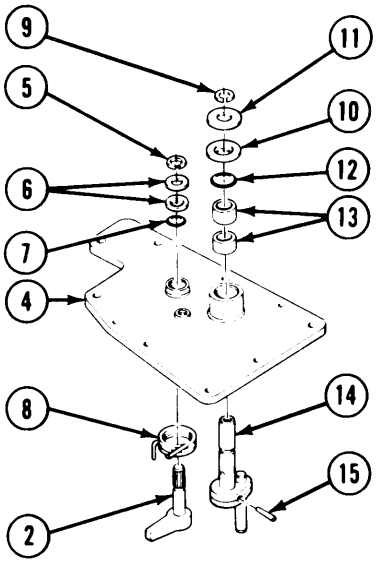

TA474993

c. Cleaning/Inspection.

WARNING

Adhesives, solvents, and sealing compounds can burn easily, can give off harmful vapors, and are harmful to skin and clothing. To avoid injury or death, keep away from open fire and use in well-ventilated area. If adhesive, solvent, or sealing compound gets on skin or clothing, wash immediately with soap and water.

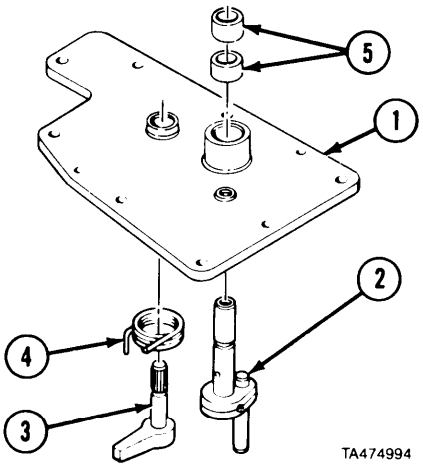

TA474994

(1) Clean cover assembly (1) with dry cleaning solvent and dry with clean rag.
(2) Inspect speed control lever shaft (2) and stop lever shaft (3) for wear or damage. Replace if damaged.
(3) Inspect return spring (4) for cracks, breaks, or damage. Replace if damaged, cracked, or broken.
(4) Inspect bushings (5) for scoring or out-of-round condition. If bushings are deeply scored (0.0312 in. (0.79 mm)) or if more than 0.005 in. (0.15 mm) out-of-round, replace cover.

d. Assembly.

NOTE

Spring arm goes behind stop pin. Spring tang goes over stop lever shaft.

(1) Install return spring (1) on governor cover (2).

NOTE

Lever end of shaft is positioned against stop pin on side opposite speed control lever shaft.

(2) Install stop lever shaft (3) in return spring (1) in governor cover (2).

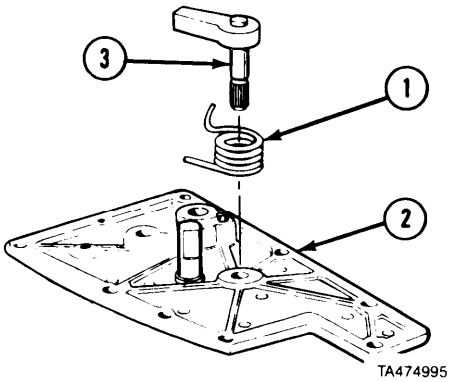

TA474995

https://truckmanualshub.com/

Engine Governor Maintenance Instructions (Cont)

15-4. GOVERNOR COVER REMOVAL/REPAIR/INSTALLATION (CONT).

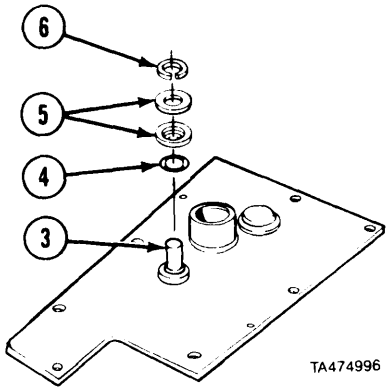

(3) Install preformed packing (4), two washers (5), and retaining ring (6) on stop lever shaft (3).

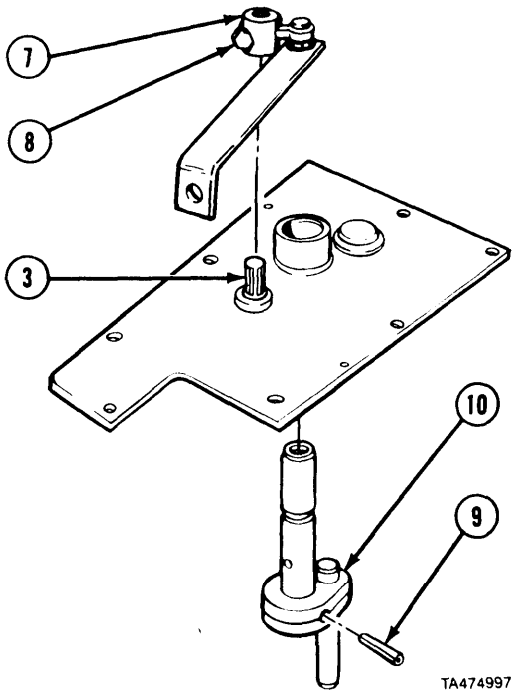

(4) Aline matchmarks and install stop lever (7) on stop lever shaft (3). Tighten screw (8).
(5) Install pin (9) in speed control lever shaft (10).
(6) Install speed control lever shaft (10).

https://truckmanualshub.com/

Engine Governor Maintenance Instructions (Cont)

(7') Install two bushings (11), preformed packing (12), washer (13), copper washer (14), and retaining ring (15) on speed control lever shaft (10).

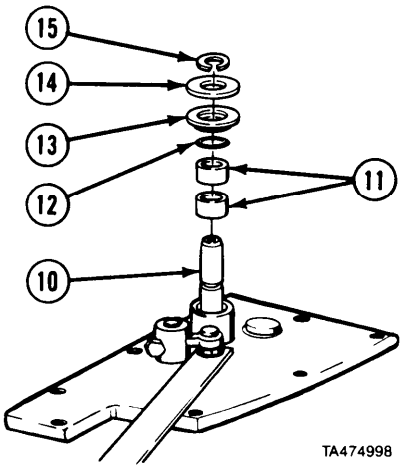

e. Installation.

NOTE

Apply a light coat of grease to both sides of gasket before installing.

(1) Install gasket (1) on governor housing (2).

NOTE

When installing governor cover assembly, speed control lever shaft pin fits into fork of lever.

(2) Install governor cover assembly (3) with five screws (4) and lockwashers (5).

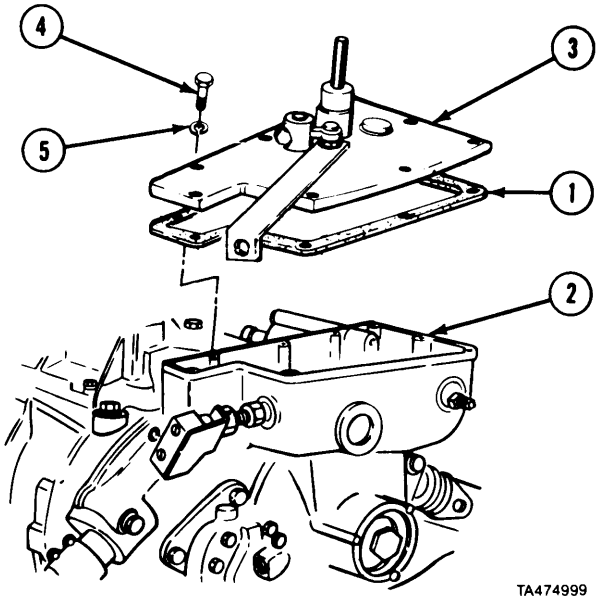

(3) Install engine stop solenoid (6) with washer (7), lockwasher (8), and nut (9).

f. Follow-on Maintenance. Install throttle control air cylinder (para 15-8).

END OF TASK

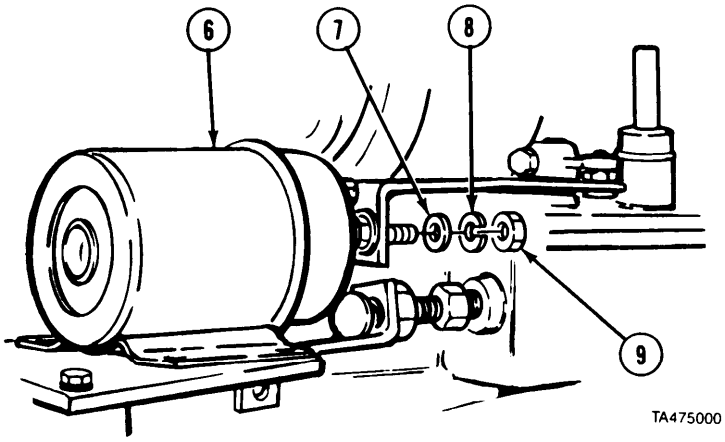

https://truckmanualshub.com/

Engine Governor Maintenance Instructions (Cont)

15-5. THROTTLE DELAY REMOVAL/INSTALLATION.

This task covers:

a. Removal
b. Installation
c. Follow-on Maintenance

INITIAL SETUP

Models
All

Test Equipment
None

Special Tools
None

Supplies
None

Personnel Required
MOS 63W, Wheel vehicle repairer

References
None

Equipment Condition

TM o r *Pam*	*Condition Description*
Para 11-2	Right front engine brake retarder and drone removed.

Special Environmental Conditions
None

General Safety Instruct ions
None

Level of Maintenance
Direct Support

a. Removal.

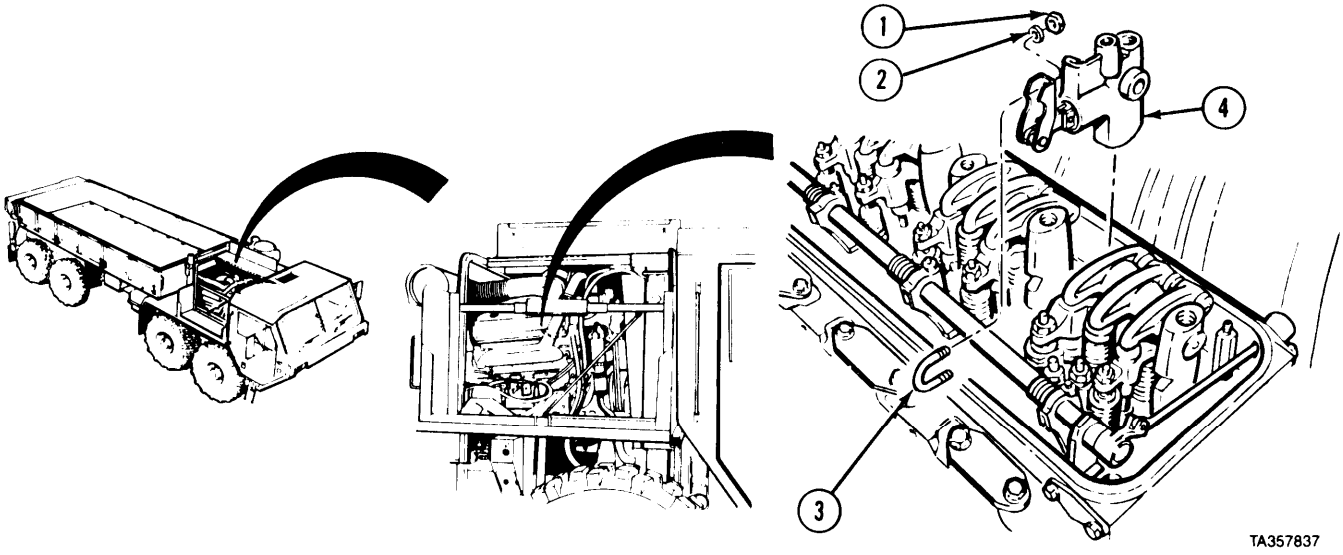

(1) Remove two nuts (1), lockwashers (2), and U-bolt (3).
(2) Remove throttle delay cylinder (4).

https://truckmanualshub.com/

Engine Governor Maintenance Instructions (Cont)

(3) Remove cotter pin (5) pin (6), and lever (7) from connecting link (8).
(4) Remove spring pin (9), connecting link (8) and throttle piston (10).
(5) Remove check valve (11) and plug (12) from cylinder (4).

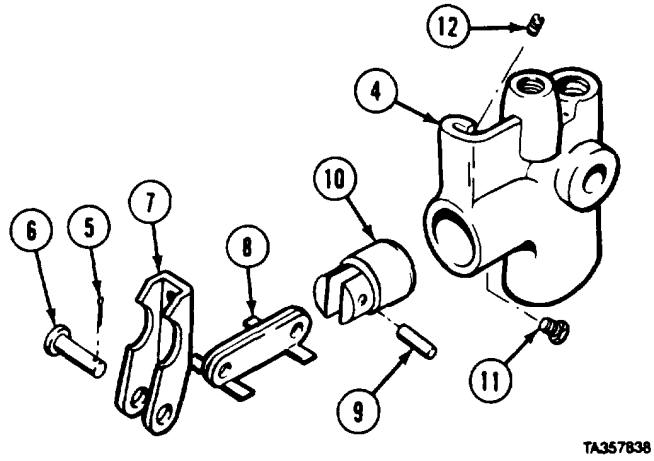

b. Installation.

(1) Install plug (1) and check valve (2) in cylinder (3).
(2) Install connecting link (4) and spring pin (5) to throttle piston (6).
(3) Install lever (7), pin (8), and cotter pin (9) to connecting link (4).
(4) Install throttle piston (6) in cylinder (3).

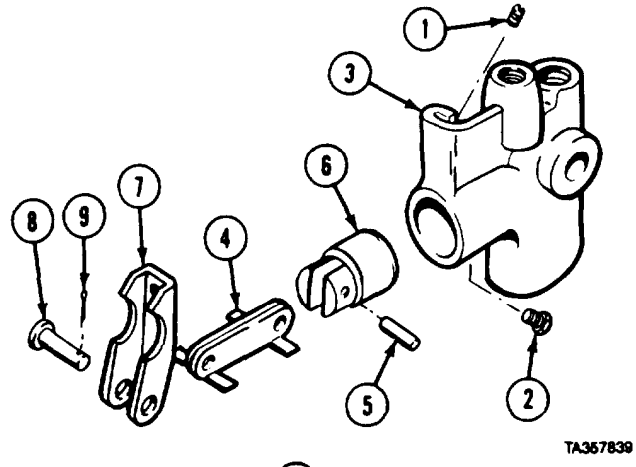

(5) Install cylinder (3) in cylinder head (10).
(6) Install U-bolt (11), two nuts (12), and lockwasher (13).

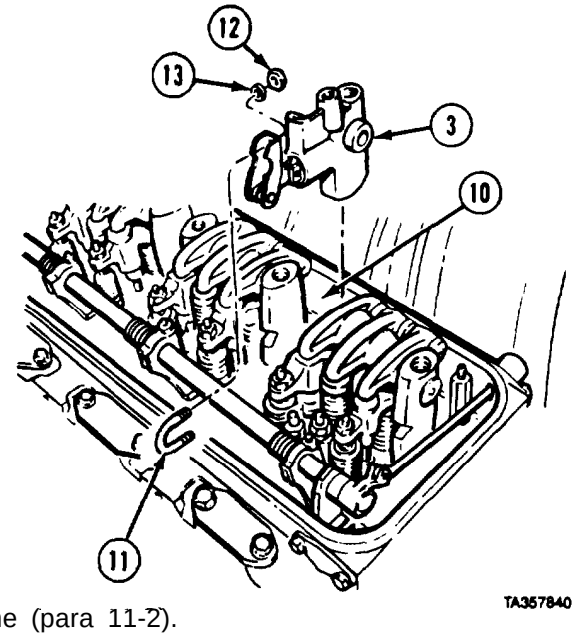

c. Follow-on Maintenance.

(1) Install right front engine brake retarder and drone (para 11-2).
(2) Adjust injector rack control levers (para 19-6).
(3) Adjust throttle delay (para 19-8).

END OF TASK

https://truckmanualshub.com/

15-5.1 FUEL MODULATOR AND TUBE REMOVAL/INSTALLATION

This task covers:

a. Removal
b. Cleaning/Inspection
c. Installation
d. Follow-on Maintenance

INITIAL SETUP

Models
All

Test Equipment
None

Special Tools
None

Supplies
None

Personnel Required
MOS 63W, Wheel vehicle repairer

References
None

Equipment Condition

TM or Para	*Condition Description*
Para 11-2	Left rear engine brake retarder and drone removed.

Special Environmental Conditions
None

General Safety Instructions
None

Level of Maintenance
Direct Support

a Removal.

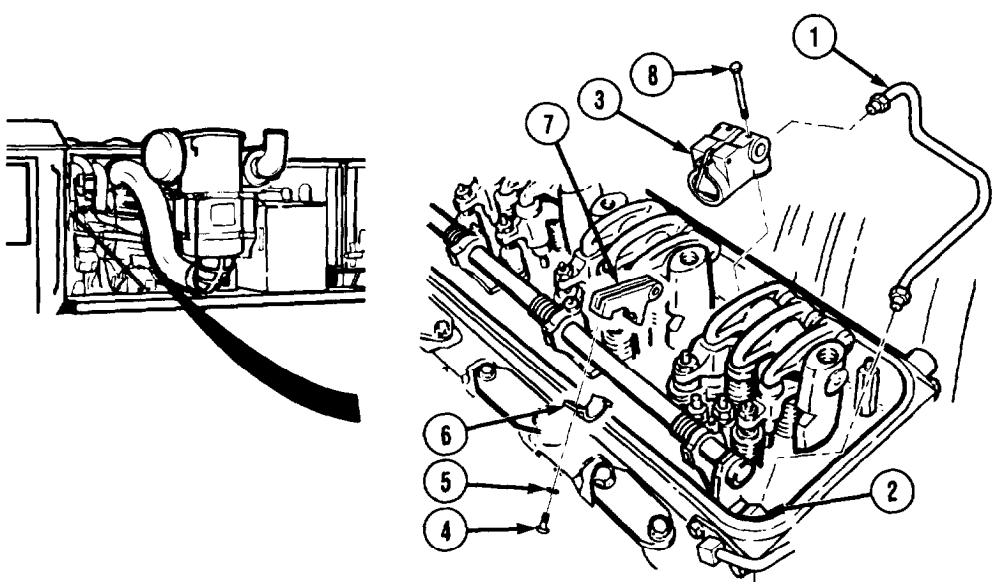

(1) Disconnect tube (1) from elbow (2) and fuel modulator (3).
(2) Remove screw (4), lockwasher (5), clamp (6), and lever (7).
(3) Remove two screws (8) and fuel modulator (3).

https://truckmanualshub.com/

Engine Governor Maintenance Instructions (Cont)

(4) Disconnect hose (9) from elbow (10).
(5) Remove elbows (2) and (10) from adapter (11).
(6) Remove two screws (12), lockwashers (13), adapter (11), and gasket (14).

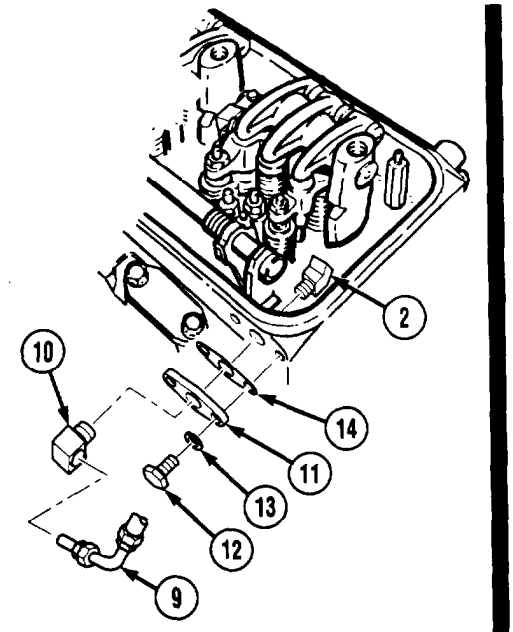

(7) Remove pin (15), from cam (16), and bracket and cylinder housing (17).

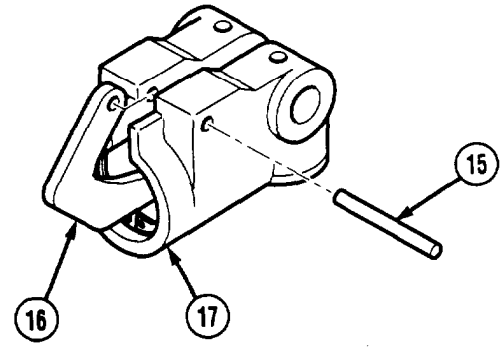

https://truckmanualshub.com/

155.1 FUEL MODULATOR REMOVAL/INSTALLATION (CONT).

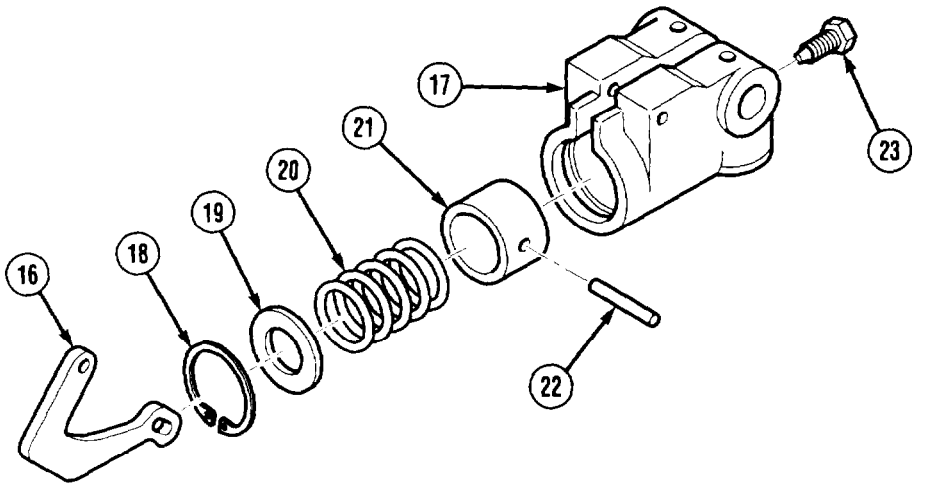

WARNING

Use care when removing snap and retaining rings. Snap and retaining rings are under spring tension and can act as projectiles when released and could cause severe eye injury,

(8) Remove retainer ring (18), retainer (19), spring (20), and piston (21) with cam (16) from bracket and cylinder housing (17).
(9) Remove pin (22) from piston (21) and cam (16).
(10) Remove cam (16), retainer ring (18), retainer (19), and spring (20) from piston (21).
(11) Remove connector (23) from bracket and cylinder housing (17).

b. Cleaning/inspection

WARNING

Adhesives, solvents, and sealing compounds can burn easily, can give off harmful vapors, and are harmful to skin and clothing. To avoid injury or death, keep away from open fire and use in well-ventilated area. If adhesive, solvent, or sealing compound gets on skin or clothing, wash immediately with soap and water.

(1) Clean all metal parts with drycleaning solvent.
(2) Inspect parts for defects.
(3) Inspect roller and piston outer diameter and cylinder bore inner diameter for wear. Inspect operating surfaces, lever roller, roller pins at the cam pivot, and cam attachment to the piston.
(4) Replace defective parts.
(5) Coat all metal parts with oil.

https://truckmanualshub.com/

Engine Governor Maintenance Instructions (Cont)

c. Installation.

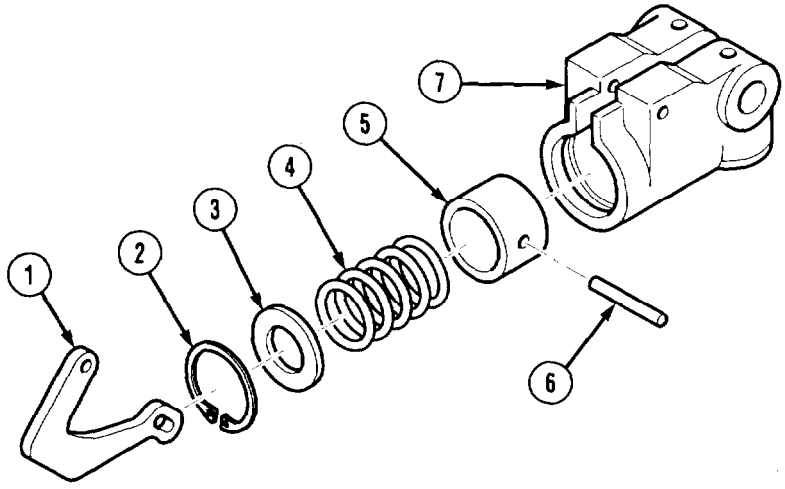

WARNING

Use care when installing snap and retaining rings. Snap and retaining rings are under spring tension and can act as projectiles when released and could cause severe eye injury.

(1) Position cam (1) through retainer ring (2), retainer (3), and spring (4).
(2) Install cam (1) in piston (5) with pin (6).
(3) Install piston (5), spring (4), and retainer (3) in bracket and cylinder housing (7) with retainer ring (2).
(4) Install cam (1) in bracket and cylinder housing (7) with pin (8).
(5) Install connector (9) in bracket and cylinder housing (7).

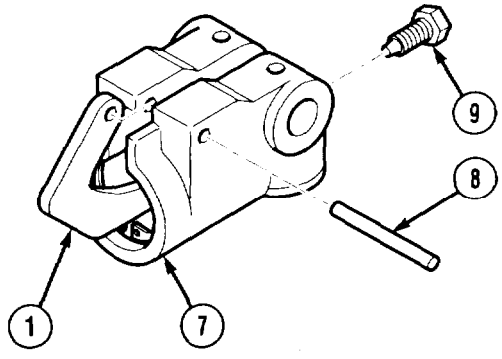

https://truckmanualshub.com/

15-5.1 FUEL MODULATOR REMOVAL/INSTALLATION (CONT).

(6) Install gasket (10) and adapter (11) with two screws (12) and lockwashers (13).
(7) Install elbows (14) and (15) on adapter (11).
(8) Connect hose (16) on elbow (14).

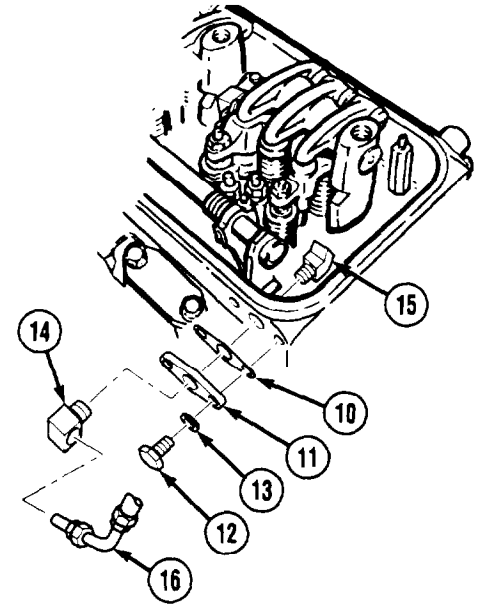

(9) Install fuel modulator (17) with two screws (18).
(10) Install lever (19) and clamp (20) with screw (21) and lockwasher (22).
(11) Connect tube (23) to fuel modulator (17) and elbow (15).

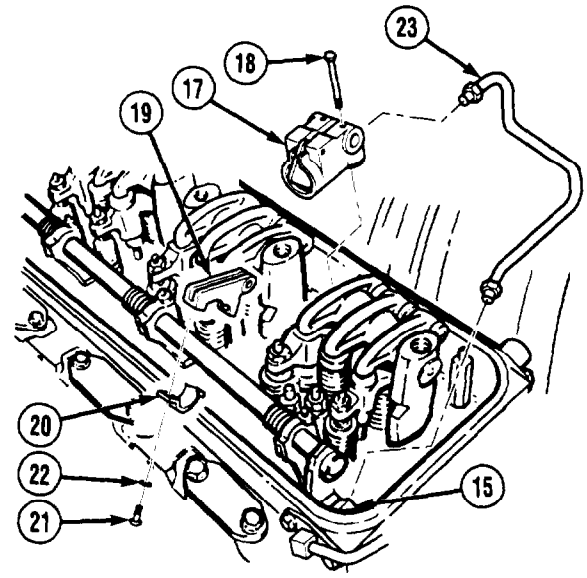

d. Follow-on Maintenance.

(1) Install left rear engine brake retarder and drone (para 11-2).
(2) Adjust injector rack control levers (para 19-6).
(3) Adjust fuel modulator (para 19-8.1).

END OF TASK

https://truckmanualshub.com/

15-6. VARIABLE, LOW SPEED LIMITING GOVERNOR REMOVAL/INSTALLATION.

This task covers:

a. Removal
b. Installation
c. Follow-on Maintenance

INITIAL SETUP

Models
All

Test Equipment
None

Special Tools
None

Supplies
Solvent, drycleaning, Item 60, Appendix C
Grease automotive and artillery, Item 36, Appendix C

Personnel Required
MOS 63W, Wheel vehicle repairer

References
None

Equipment Condition

TM or Para	Condition Description
TM 9-2320-279-20	Batteries disconnected.
TM 9-2320-279-20	Air intake ducting removed.

Special Environmental Conditions
None

General Safety Instructions
None

Level of Maintenance
Direct Support

a. Removal.

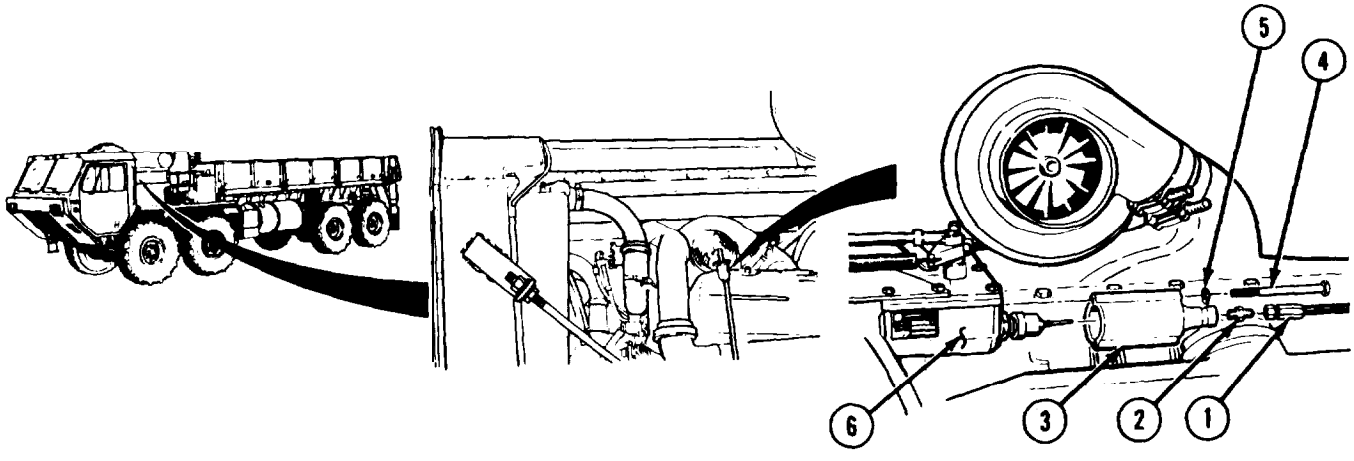

(1) Remove air hose (1) and fitting (2) from limiting governor housing (3).
(2) Remove two screws (4), lockwashers (5), and limiting governor housing (3) from governor housing (6).

https://truckmanualshub.com/

https://truckmanualshub.com/

Engine Governor Maintenance Instructions (Cont)

(3) Remove seal (7) from idle adjusting screw (8).
(4) Remove jamnut (9) and idle adjusting screw (8) from air cylinder (10).
(5) Remove air cylinder (10) from plunger (11).

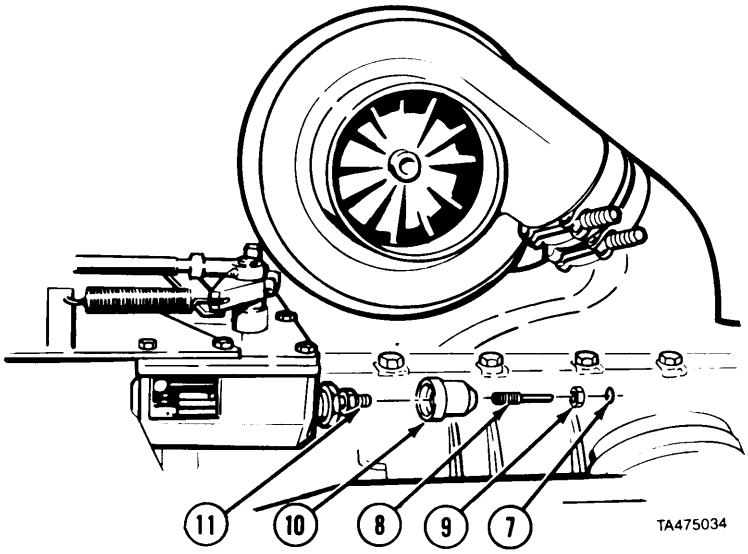

(6) Remove nut (12) from plunger (1 1).
(7) Loosen locknut (13).

WARNING

Spring retainer holds back three springs. Remove retainer slowly. Springs can eject parts with force and cause injury.

(8) Remove spring retainer assembly (14) from governor housing (6).
(9) Remove gasket (15) from governor housing (6).

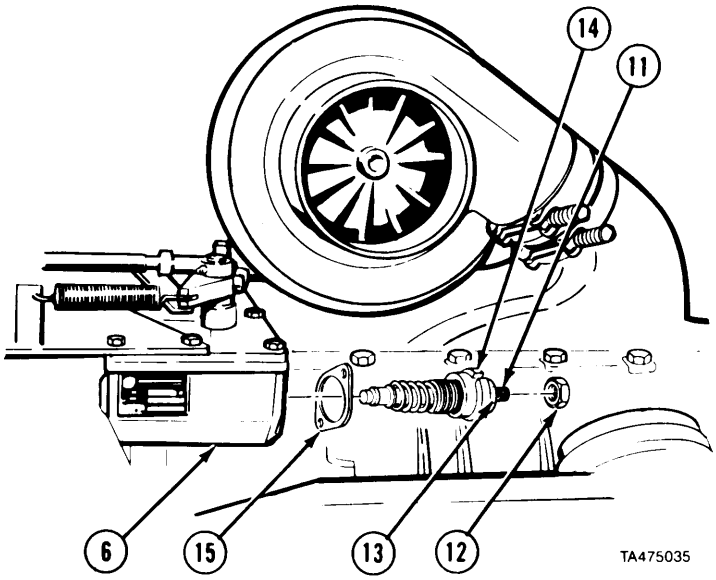

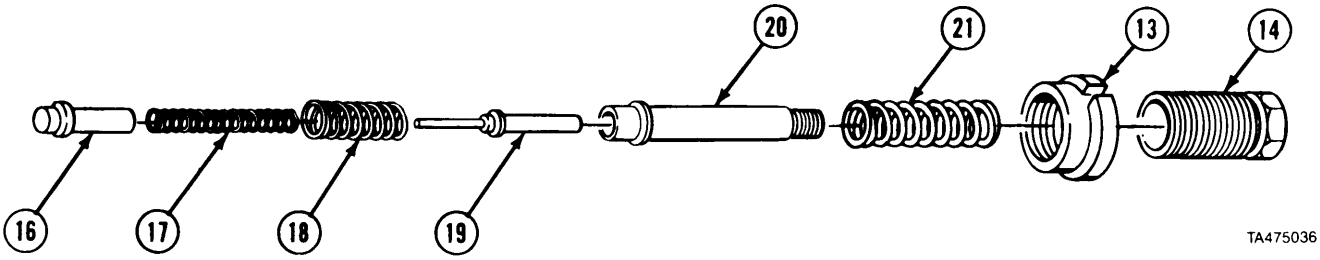

(10) Remove spring cap (16), two springs (17 and 18), two plungers (19 and 20), spring (21), and locknut (13) from spring retainer (14).

https://truckmanualshub.com/

15-6. VARIABLE, LOW SPEED LIMITING GOVERNOR REMOVAL/INSTALLATION (CONT).

(11) Remove pin *(22)* from air cylinder (10) and air cap (23).
(12) Remove retaining ring (24), air cap (23), and piston (25) from air cylinder (10).
(13) Remove seal ring (26) from piston (25).

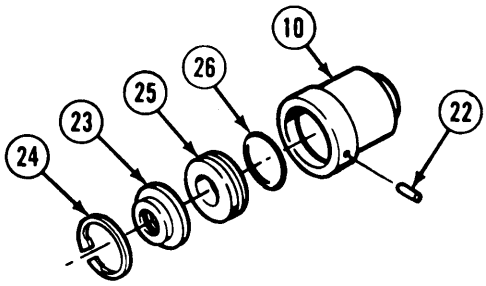

TA475037

WARNING

- Adhesives, solvents, and sealing compounds can burn easily, can give off harmful vapors, and are harmful to skin and clothing. To avoid injury or death, keep away from open fire and use in well-ventilated area. If adhesive, solvent, or sealing compound gets on skin or clothing, wash immediately with soap and water.
- Compressed air used for cleaning purposes will not exceed 30 psi (207 kPa). Use only with effective chip guarding and personal protective equipment (goggles/shield, gloves, etc.).

(14) Clean low speed limiting governor in dry cleaning solvent. Dry parts with compressed air.

b. Installation.

NOTE

All metal parts must be lubricated with grease.

(1) Install seal ring (1) on piston (2).
(2) Install piston (2) and air cap (3) in air cylinder (4).
(3) Install pin (5) flush with edge of air cylinder (4) and air cap (3).
(4) Install retaining ring (6) on air cylinder (4).

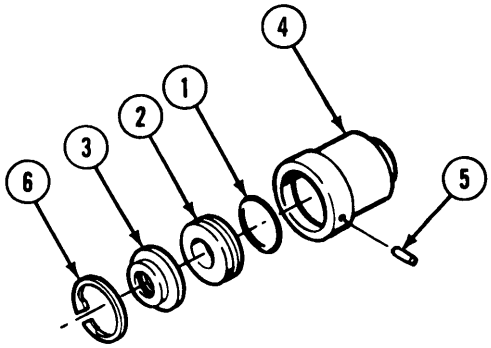

TA475038

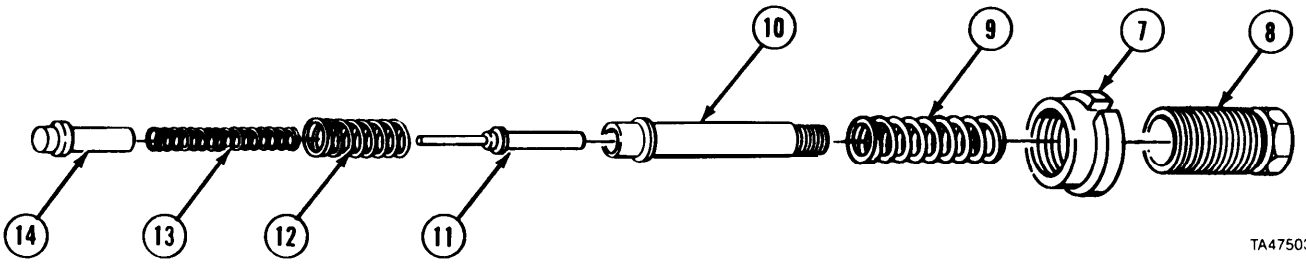

TA475039

NOTE

Locknut is installed 1-1/2 in. (38,1 mm) on spring retainer. Only for clearance when installing spring retainer.

(5) Install locknut (7) on spring retainer (8).
(6) Install spring (9) and plunger (10) in spring retainer (8).
(7) Install spring (12), plunger (11), spring (13), and spring cap (14) in plunger (10).

https://truckmanualshub.com/

Engine Governor Maintenance Instructions (Cont)

WARNING

- **Spring retainer holds down three springs. Install retainer carefully. Springs can eject parts with force and cause injury.**
- **Spring retainer is installed approximately 1 in. (25 mm) in governor housing.**

(8) Install gasket (15) on governor housing (16).
(9) Install spring retainer assembly (8) through gasket (15) and governor housing (16). Tighten locknut (7).

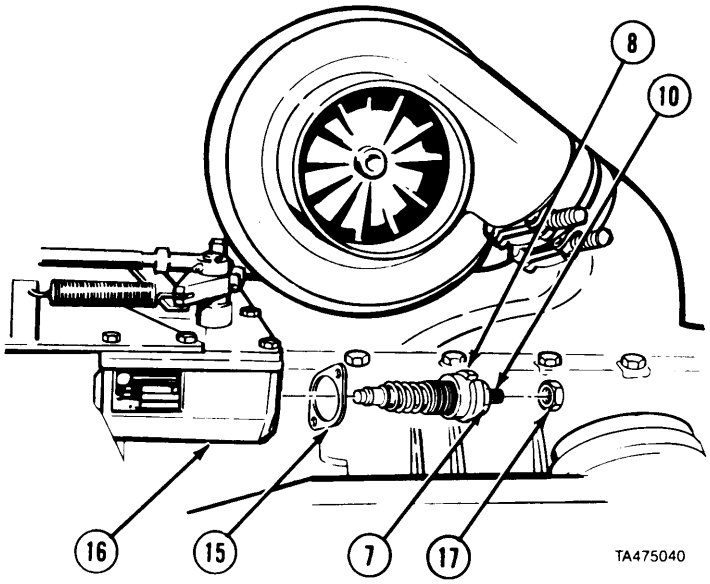

NOTE

Nut is installed 1/2 in. (12.7 mm) on plunger.

(10) **Install nut (17) on plunger (10).**

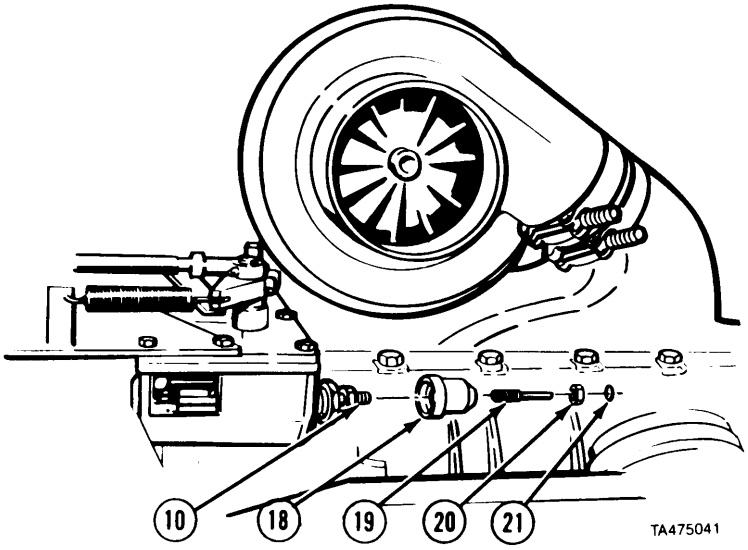

(11) **Install air cylinder assembly (18) on plunger (10).**
(12) **Install idle adjusting screw (19) on air cylinder assembly (18) finger tight.**
(13) **Loosen idle adjusting screw (19) one turn and install jamnut (20).**
(14) **Install seal (21) on idle adjusting screw (19).**

https://truckmanualshub.com/

15-6. VARIABLE, LOW SPEED LIMITING GOVERNOR REMOVAL/INSTALLATION (CONT).

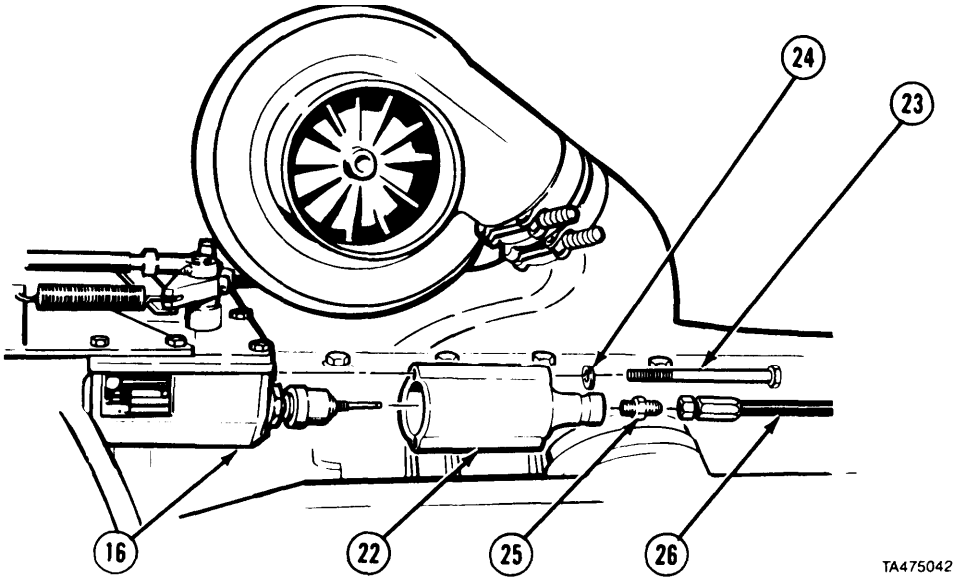

(15) Install limiting governor housing (22) on governor housing (16) with two screws (23) and lockwashers (24).
(16) Install fitting (25) and hose (26) on limiting governor housing (22).

c. Follow-on Maintenance.

(1) Install air intake ducting (TM 9-2320-279-20).
(2) Connect batteries (TM 9-2320-279-20).
(3) Adjust governor gap (para 19-5).

END OF TASK

https://truckmanualshub.com/

15-7. BUFFER SCREW SWITCH REMOVAL/REPAIR/INSTALLATION.

This task covers:

a. Removal
b. Disassembly
c. Cleaning/Inspection
d. Assembly
e. Installation
f. Follow-on Maintenance

INITIAL SETUP

Models
All

Test Equipment
None

Special Tools
None

Supplies
Tags, identification, Item 61, Appendix C
Solvent, drycleaning, Item 60, Appendix C
Oil, lubricating, Item 48, Appendix C

Personnel Required
MOS 63W, Wheel vehicle repairer

References
None

Equipment Condition

TM or Para	*Condition Description*
TM 9-2320-279-20	Batteries disconnected.
TM 9-2320-279-10	Parking brake set.
TM 9-2320-279-10	Engine cover open.

Special Environmental Conditions
None

General Safety Instructions
None

Level of Maintenance
Direct Support

a. Removal.

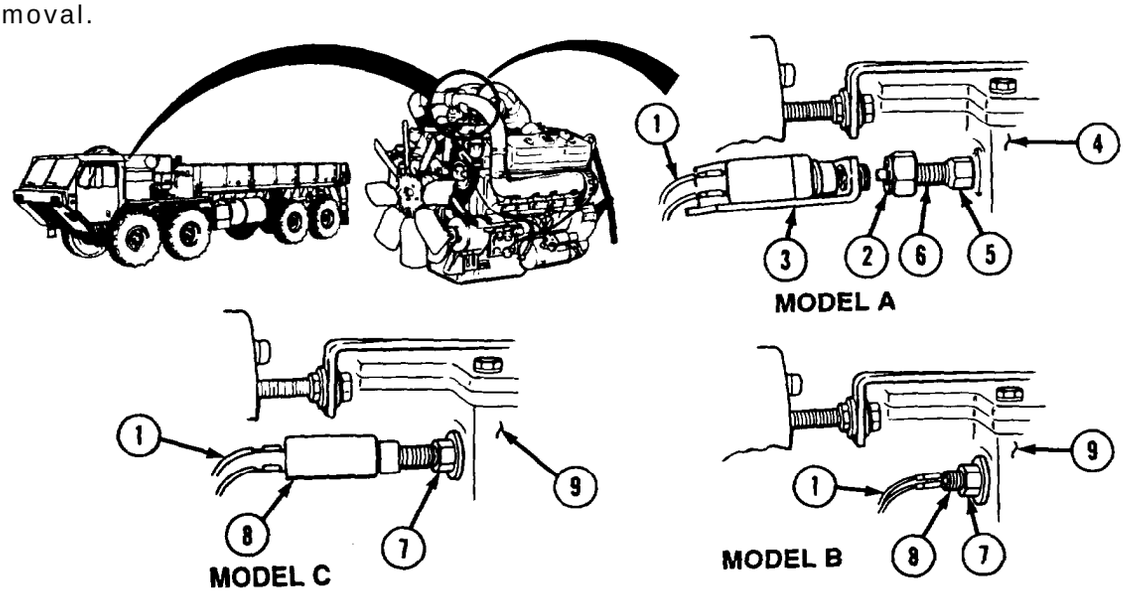

NOTE

- There are three models of buffer switches. Model A is square and has removable parts. Model B is round and has no removable parts. Model C is square and has no removable parts.
- For Models B and C, do steps (l) and (5) only.
- Tag and mark wires before disconnecting.

(1) Disconnect two wires (1).
(2) Loosen nut (2) and remove switch and bracket (3).
(3) Measure and record distance buffer switch nut (2) extends from governor (4).
(4) Loosen locknut (5) and remove screw (6).
(5) Loosen locknut (7) and remove buffer switch (8) from governor (9).

https://truckmanualshub.com/

15-7. BUFFER SCREW SWITCH REMOVAL/REPAIR/INSTALLATION (CONT).

b. Disassembly,

NOTE

Disassembly pertains to Model A switch only.

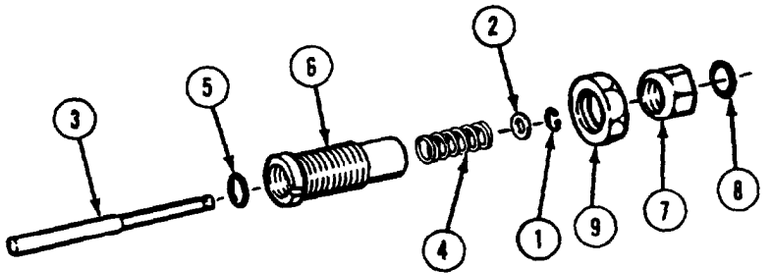

(1) Remove retaining ring (1), washer (2), plunger (3), spring (4), and preformed packing (5) from plunger assembly (6).

(2) Remove locknut (7), locking ring (8), and nut (9) from plunger assembly (6).

(3) Remove two screws (10), clamp (11), bracket (12), clamp (13), and two washers (14).

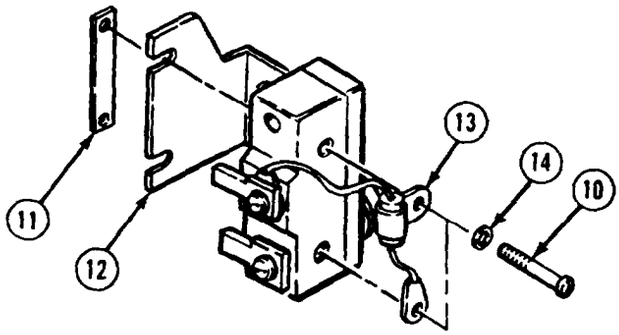

(4) Remove two screws (15) and lockwashers (16) with two terminals (17), diode wire (18), and lockwasher (19) from switch (20).

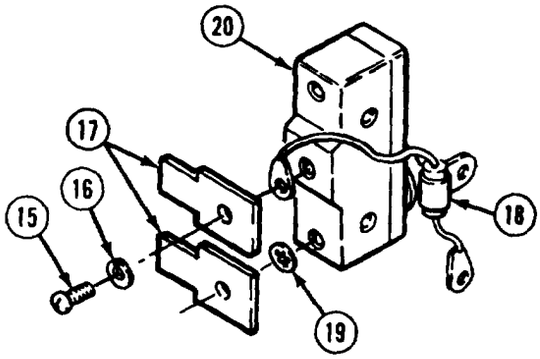

C. ***Cleaning/Inspection.***

WARNING

Adhesives, solvents, and sealing compounds can burn easily, can give off harmful vapors, and are harmful to skin and clothing. 'lb avoid injury or death, keep away from open fire and use in well-ventilated area. If adhesive, solvent, or sealing compound gets on skin or clothing, wash immediately with soap and water.

(1) Clean all metal parts with drycleaning solvent.
(2) Inspect parts for defects.
(3) Replace defective parts and all packings.
(4) Coat all metal parts with oil.

https://truckmanualshub.com/

d. Assembly.

NOTE

- Assembly pertains to Model A switch only.
- Silver end of wire is installed on center screw on switch.

(1) Install two screws (1), lockwashers (2), diode wire (3), lockwasher (4), and two terminals (5) on switch (6).

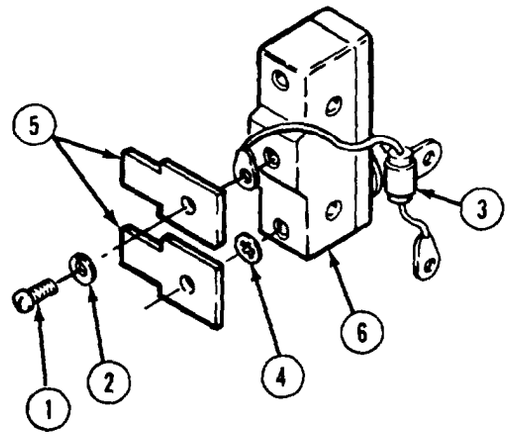

(2) Install two screws (7), washers (8), clamp (9), diode wire (10), switch (6), bracket (11), and clamp (12) finger-tight.

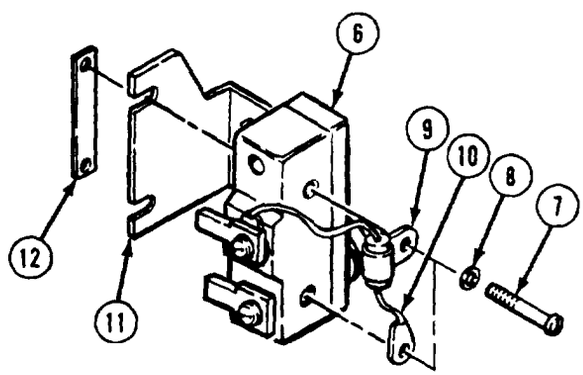

NOTE

The switch should close when the gage is inserted.

(3) Adjust gap between bracket (11) and switch (13). Gap between bracket and switch must be 0.010 in. (0.254 mm).

(4) Tighten two screws (7).

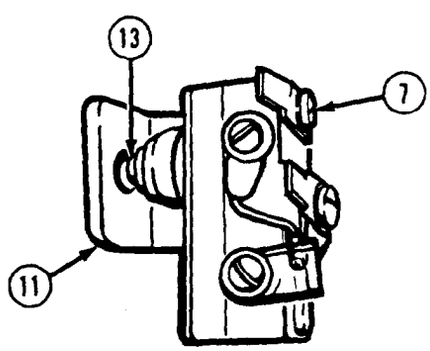

(5) Install plunger (14) in plunger assembly (15).

(6) Install spring (16), washer (17), and retaining ring (18).

(7) Install nut (19), locknut (2O) locking ring (21), and preformed packing (22).

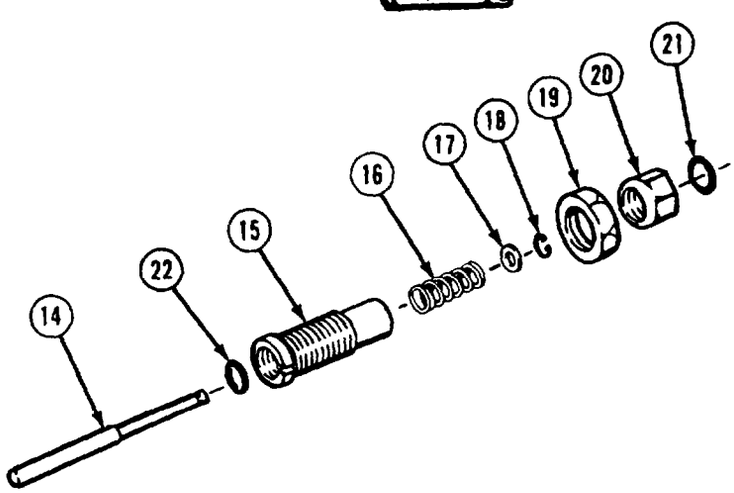

https://truckmanualshub.com/

15-7. BUFFER SCREW SWITCH REMOVAL/REPAIR/INSTALLATION (CONT).

e. **Installation.**

CAUTION

Installing screw in deeper than recorded distance can cause engine to overspeed at start-up.

NOTE

There are three models of buffer switches. Model A is square and has removable parts. Model B is round and has no removable parts. Model C is square and has no removable parts. For Models B and C, do steps (1.1) and (3) only.

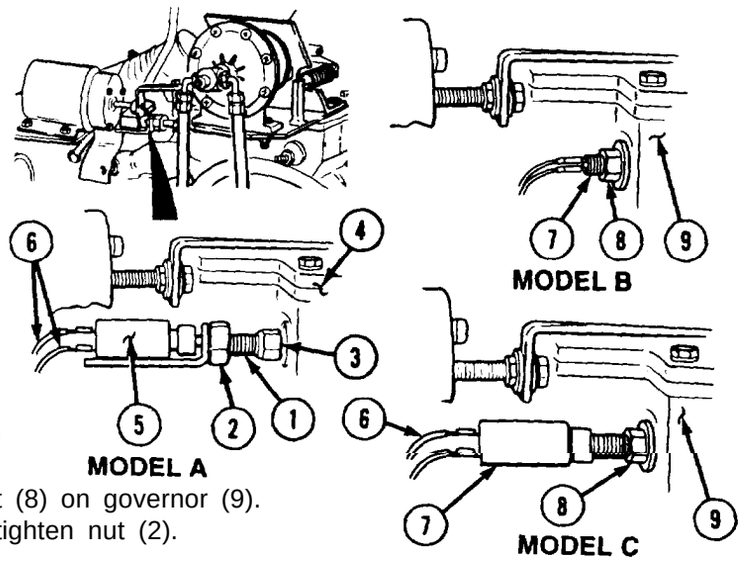

(1) Install buffer screw (1) with nut (2) and locknut (3) on governor (4).
(1.1) Install buffer switch (7) with locknut (8) on governor (9).
(2) Install bracket and switch (5) and tighten nut (2).
(3) Install two wires (6).

f. **Follow-on Maintenance.**

(1) Connect batteries (TM 9-2320-279-20).
(2) Adjust buffer switch (para 19-9).

END OF TASK

15-8. THROTTLE AIR CYLINDER REMOVAL/INSTALLATION.

This task covers:

a. Removal
b. Disassembly
c. Assembly
d. Installation
e. Follow-on Maintenance

INITIAL SETUP

Models
All

Test Equipment
None

Special Tools
None

Supplies
Solvent, drycleaning, Item 60, Appendix C
Grease, automotive and artillery, Item 36, Appendix C

Personnel Required
MOS 63W, Wheel vehicle repairer

References
None

Equipment Condition

TM or Para	Condition Description
TM 9-2320-279-20	Batteries disconnected.
TM 9-2320-279-10	Engine side cover opened.

Special.Environmental Conditions
None

General Safety Instructions
None

Level of Maintenance
Direct Support

https://truckmanualshub.com/

Engine Governor Maintenance Instructions (Cont)

a. Removal.

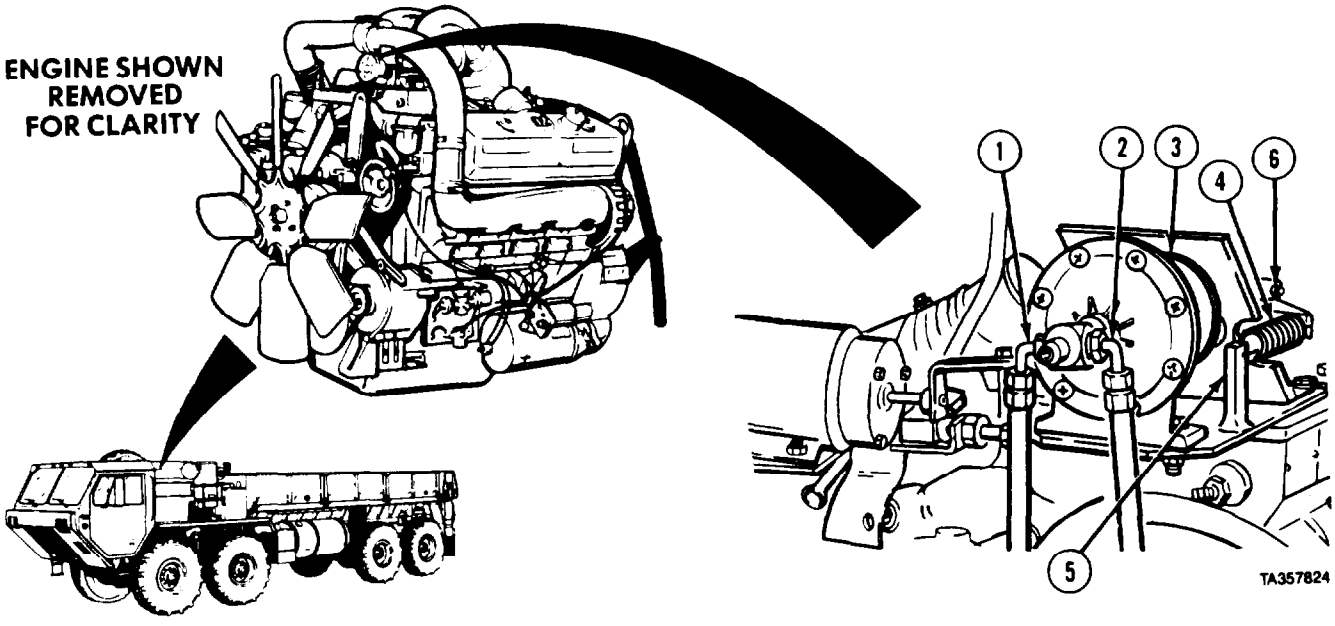

(1) Remove air lines (1 and 2) from throttle air cylinder (3).
(2) Disconnect spring (4) from air cylinder bracket (5) and speed control lever (6).

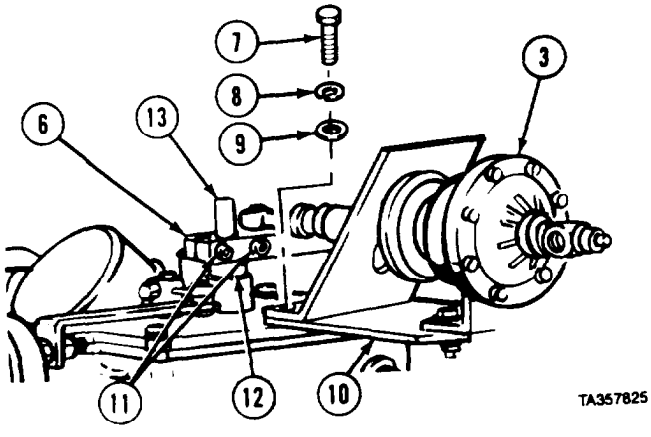

(3) Remove three screws (7), lockwashers (8), and two washers (9) from air cylinder mounting plate (10).
(4) Loosen two speed control lever screws (11). .
(5) Remove throttle air cylinder (3), speed control lever (6), and spacer (12) from speed control lever shaft (13).

https://truckmanualshub.com/

15-8. THROTTLE AIR CYLINDER REMOVAL/INSTALLATION (CONT).

b. Disassembly.

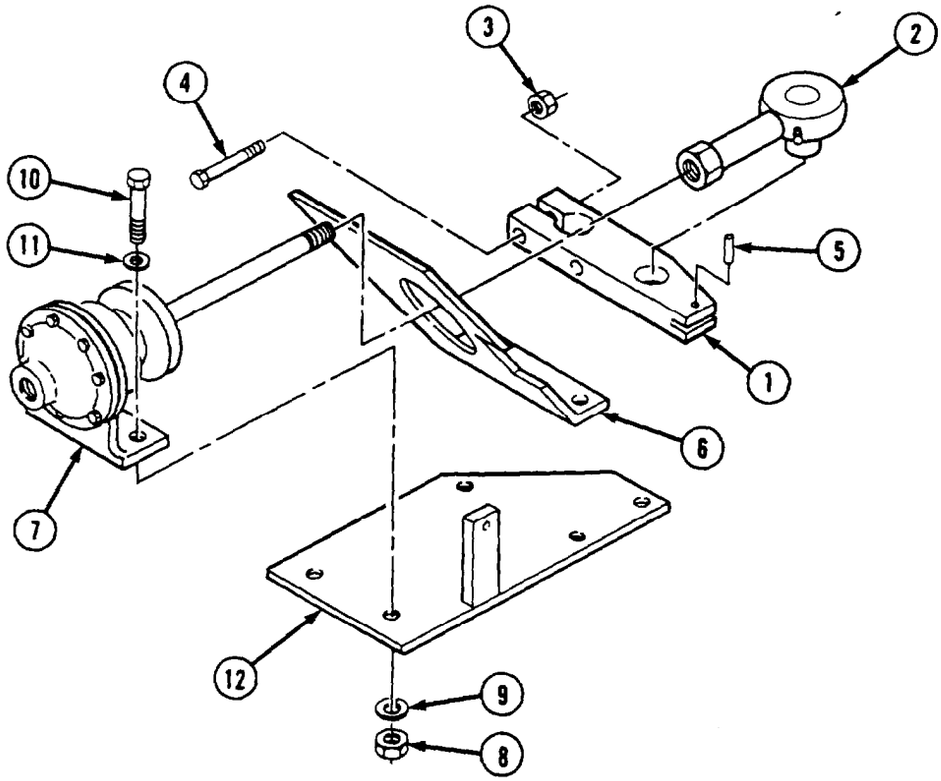

(1) Remove remote control lever (1) from rod end assembly (2).
(2) Remove two nuts (3), two screws (4), and spring pin (5) from remote control lever (1),
(3) Remove heat shield (6) from shaft of cylinder assembly (7).
(4) Remove rod end assembly (2) from shaft of cylinder assembly (7).
(5) Remove two nuts (8), lockwasher-s (9), screws (10), washers (11), and cylinder assembly (7) from air cylinder mounting plate (12).

https://truckmanualshub.com/

Engine Governor Maintenance Instructions (Cont)

***c.* Assembly.**

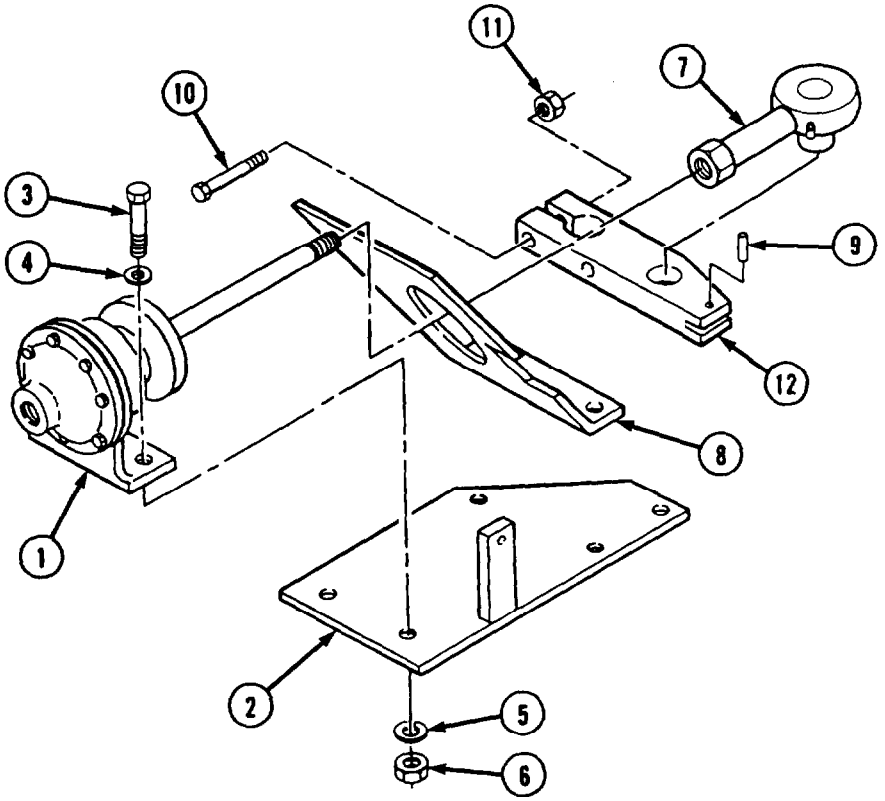

(1) Install cylinder assembly (1) on air cylinder mounting plate (2) with two screws (3), washers (4) lockwashers (5), and nuts (6).
(2) Install extension stud (7) on shaft of cylinder assembly (1).
(3) Position heat shield (8) on shaft of cylinder assembly (1).
(4) Install spring pin (9), two screws (10), and nuts (11) in remote control lever (12). Do not tighten nuts.
(5) Place remote control lever (12) on extension stud (7).

d. Installation.

(1) Install spacer (1) and speed control lever (2) on speed control lever shaft (3).
(2) Install throttle air cylinder (4) with three screws (5), lockwashers (6), and two washers (7).

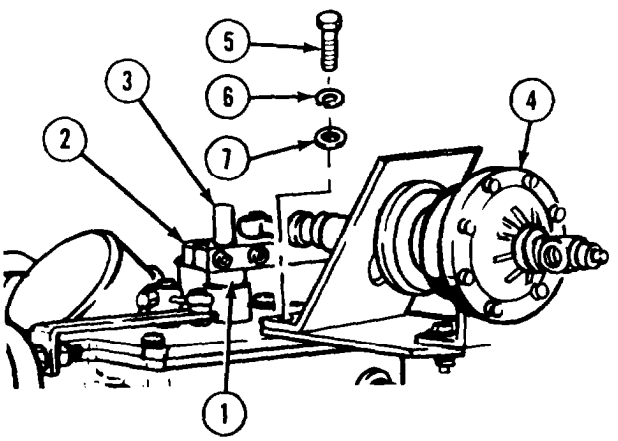

https://truckmanualshub.com/

15-8. THROTTLE AIR CYLINDER REMOVAL/INSTALLATION (CONT).

(3) Adjust link adapter (8) so that distance from center of screw (9) to center of link adapter pivot point (3) is 7 in. (177.8 mm).

(4) Tighten two speed control lever screws (10).

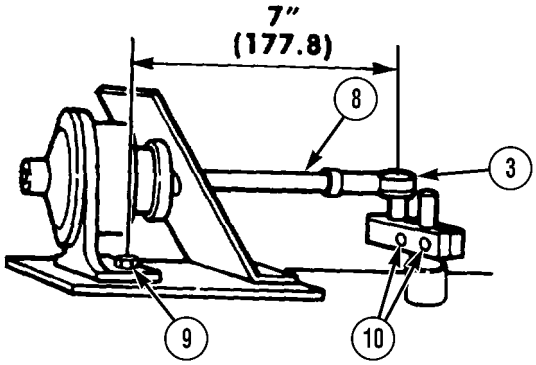

(5) Connect air lines (11 and 12) to throttle air cylinder (4).

(6) Connect spring (13) from air cylinder bracket (14) to speed control lever (15).

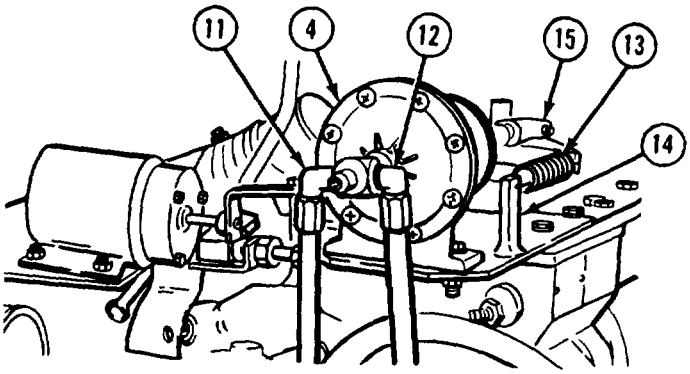

e. Follow-on Maintenance.

(1) Connect batteries (TM 9-2320-279-20).

(2) Start engine and check engine operation of throttle air cylinder (TM 9-2320-279-10).

END OF TASK

https://truckmanualshub.com/

Engine Governor Maintenance Instructions (Cont)

15-9. THROTTLE CONTROL SOLENOID REMOVAL/INSTALLATION.

This task covers:

a. Removal
b. Installation
c. Follow-on Maintenance

INITIAL SETUP

Models
All

Test Equipment
None

Special TooLs
None

Supplies
Compound, sealing, pipe thread, Item 32, Appendix C
Tags, identification, Item 61, Appendix C

Personnel Required
MOS 63W, Wheel vehicle repairer

References
None

Equipment Condition

TM or Para	*Condition Description*
TM 9-2320-279-10	Parking brake set.
TM 9-2320-279-10	Front cargo panel removed. (*M977* and M985 only).
TM 9-2320-279-20	Batteries disconnected.
TM 9-2320-279-10	Air system drained.

Special Environmental Conditions
None

General Safety Instructions
None

Level of *Maintenance*
Direct Support

a. Removal.

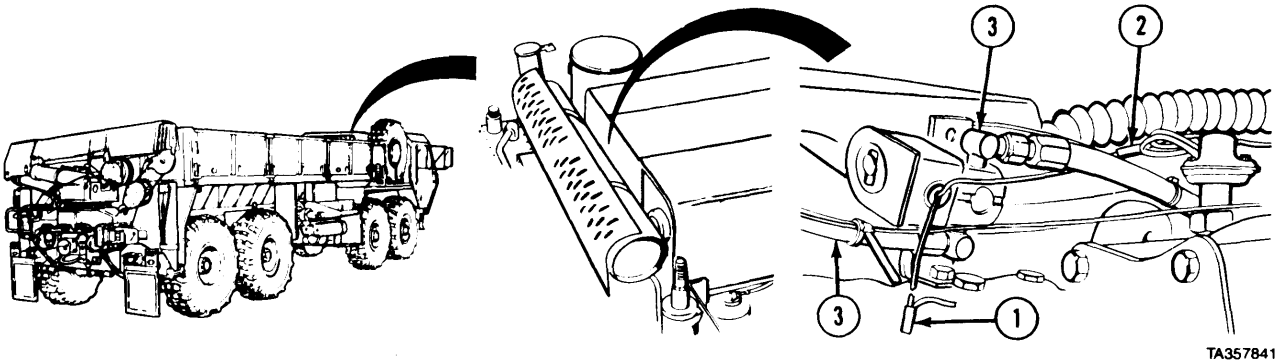

NOTE

Tag and mark wires and air lines before disconnecting.

(1) Disconnect wires (1 and 2).
(2) Disconnect two air lines (3).

https://truckmanualshub.com/

Engine Governor Maintenance Instructions (Cont)

15-9. THROTTLE CONTROL SOLENOID REMOVAL/INSTALLATION (CONT).

(3) Remove two fittings (4).
(4) Remove solenoid (5).
(5) Remove screw (6), lockwasher (7), and ground wire (8).
(6) Remove two screws (9) and lockwashers (10) to separate brackets (11 and 12).

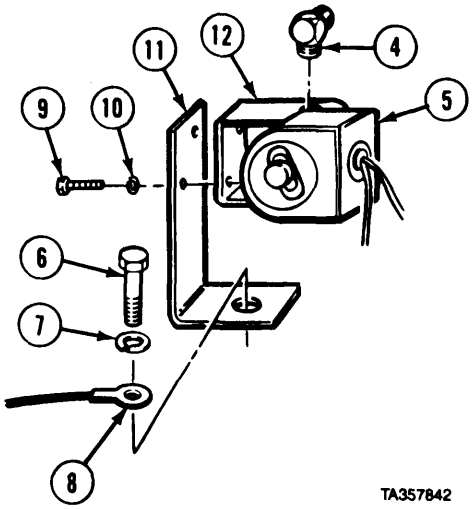

b. Installation.
(1) Install two screws (1) and lockwashers (2) to brackets (3 and 4).
(2) Install screw (5), lockwasher (6), and ground wire (7).
(3) Slide solenoid (8) in position.

WARNING

Adhesives, solvents, and sealing compounds can burn easily, can give off harmful vapors, and are harmful to skin and clothing. To avoid injury or death, keep away from open fire and use in well-ventilated area. If adhesive, solvent, or sealing compound gets on skin or clothing, wash immediately with soap and water.

(4) Apply pipe thread sealing compound on two fittings (9). Install fittings.

(5) Connect two air lines (10).
(6) Connect two wires (11 and 12).

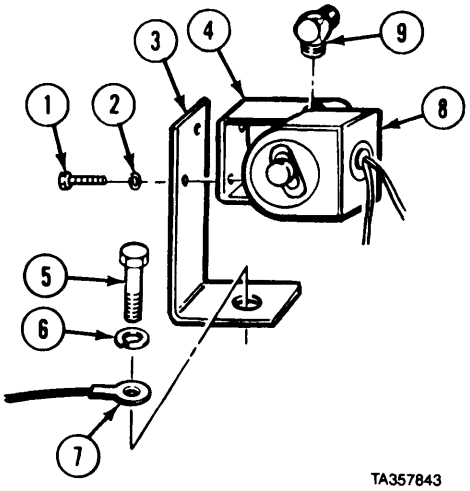

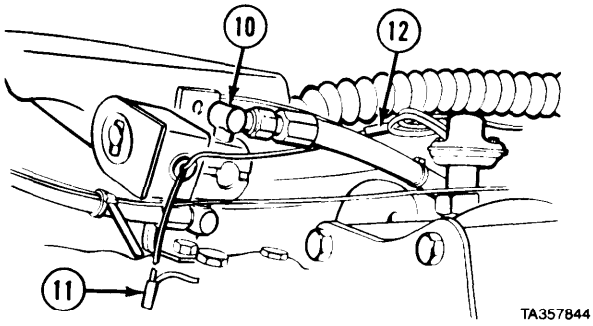

c. Follow-on Maintenance.
(1) Connect batteries (TM 9-2320-279-20).
(2) Close air drains (TM 9-2320-279-20).
(3) Start engine and build air pressure to operating pressure (TM 9-2320-279-10).
(4) Adjust engine speed control (para 19-9).
(5) Install front cargo panel (M977 and M985 only) (TM 9-2320-279-10).

END OF TASK

https://truckmanualshub.com/

15-10. ENGINE STOP SOLENOID REMOVAL/INSTALLATION/ADJUSTMENT

This task covers:

a. Removal
b. Installation
c. Adjustment
d. Follow-on Maintenance

INITIAL SETUP

Models
All

Test Equipment
None

Special Tools
None

Supplies
Tags, identification, Item 61, Appendix C

Personnel Required
MOS 63W, Wheel vehicle repairer

References
None

Equipment Condition

TM or Para	*Condition Description*
TM 9-2320-279-20	Batteries disconnected.
TM 9-2320-279-10	Parking brake on.
TM 9-2320-279-20	Engine side panel removed.
TM 9-2320-279-10	Engine top cover removed.

Special Environmental Conditions
None

General Safety Instructions
None

Level of Maintenance
Direct Support

https://truckmanualshub.com/

15-10. ENGINE STOP SOLENOID REMOVAL/INSTALLATION /ADJUSTMENT (CONT).

a. Removal.

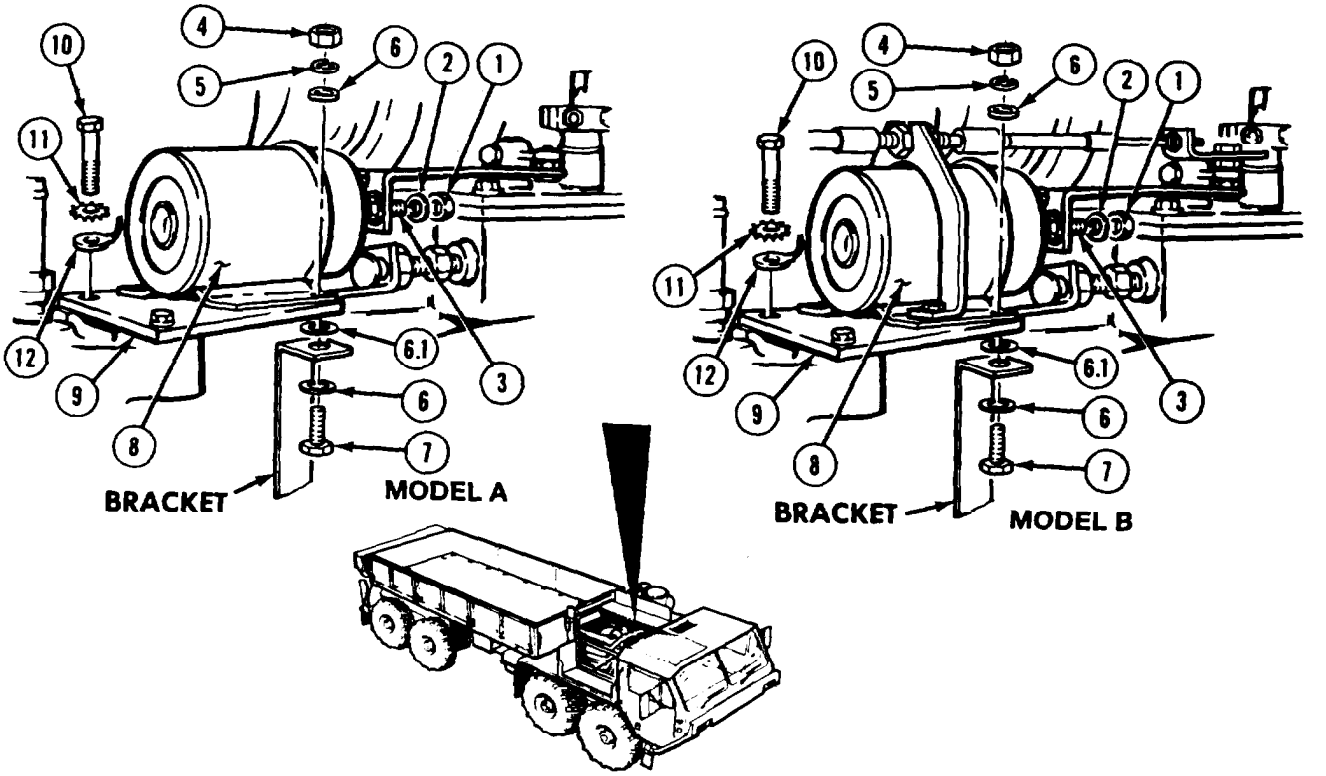

NOTE

There are two models of engine stop solenoids. Model A works by electrical signal only. Model B has a manual shutdown cable.

Some older model engines have one washer and do not have a bracket,

Screw that goes through bracket is longer than others.

(1) Remove nut (1) and washer (2) from shaft (3).

(2) Remove four nuts (4) lockwashers (5) three washers (6) spacer washer (6.1), and four srews (7) from solenoid (8) and plate (9).

NOTE

Tag and mark wires before removal.

(3) Remove screw (10), lockwasher (11), and ground wire (12).

https://truckmanualshub.com/

Engine Governor Miaintenance Instructions (Cont)

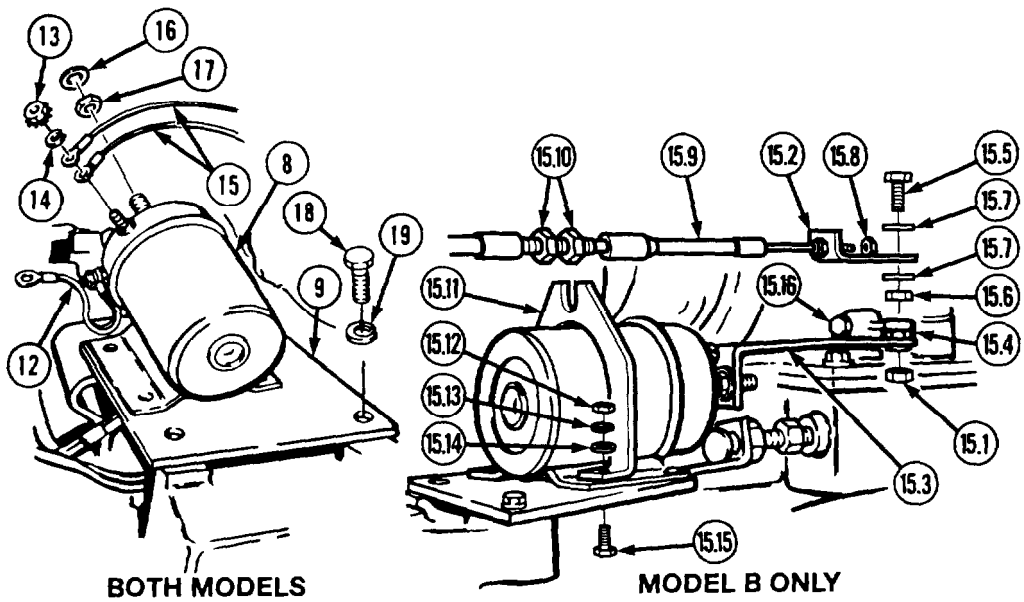

(4) Remove two nuts (13), lockwashers (14), two wires (15), and ground wire (12).

NOTE

Model B has a manual shutdown cable. Do steps (4.1) through (4.6) for Model B

(4.1) Remove locknut (15.1). Pull up on shutdown link (15.2) and remove bracket (15.3) and stop lever (15.4) from screw (15.5).
(4.2) Remove locknut (15.6), two washers (15.7), and screw (15.5).
(4.3) Remove locknut (15.8) and shutdown link (15.2) from shutdown cable (15.9).
(4.4) Loosen two nuts (15.10) and remove shutdown cable (15.9) from cable bracket (15.11).
(4.5) Remove two nuts (15.12), lockwashers (15.13), washers (15.14), screws (15.15), and cable bracket (15.11).

NOTE

Matchmark stop lever and stop lever shaft.

(4.6) Loosen screw (15.16) and remove stop lever (15.4).
(5) Remove solenoid (8).
(5.1) Remove washer (16) and nut (17) from solenoid (8).
(6) Remove screw (18), lockwasher (19), and plate (9).

https://truckmanualshub.com/

15-10. ENGINE STOP SOLENOID REMOVAL/INSTALLATION/ADJUSTMENT (CONT).

NOTE

- Matchmark stop lever and stop lever shaft.
- Do steps (7) through (9) for Model A.

(7) Loosen screw (20) and raise lever (21).
(8) Remove locknut (22) and screw (23).
(9) Remove lever (24).

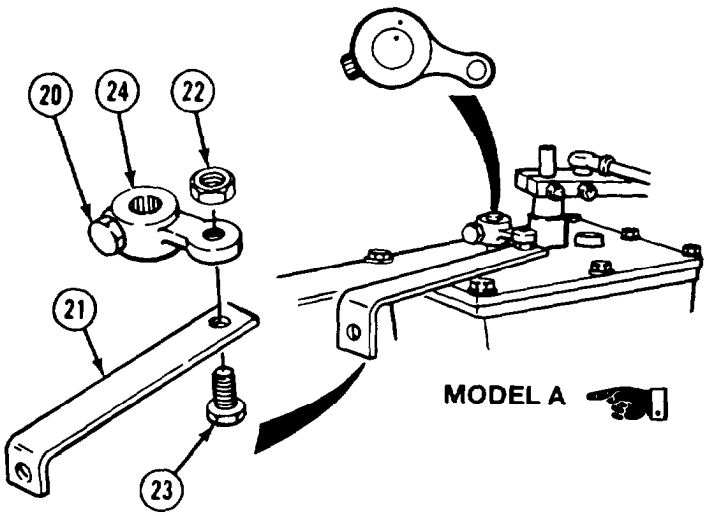

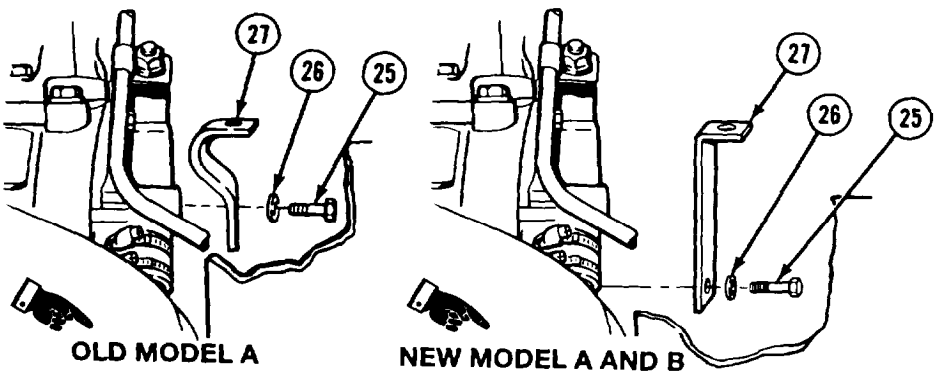

(10) Remove screw (25), copper washer (26), and bracket (27).

NOTE

Model B has a manual shutdown cable. Do steps (10.1) through (10.3) for Model B.

(10.1) Remove three ties connecting shutdown cable (15.9) to heater hoses, horizontal tube of cab, and transmission shift cable.
(10.2) Loosen nut (28) and unscrew handle (29) from shutdown cable (15.9).
(10.3) Remove nut (30) and pull shutdown cable (15.9) downward through opening in cab.

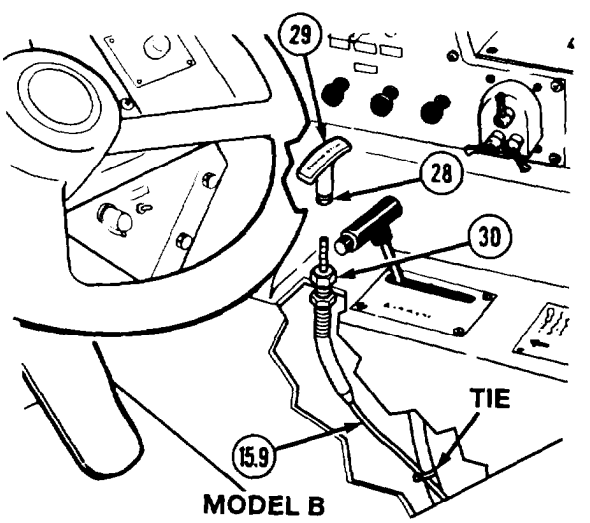

https://truckmanualshub.com/

Engine Governor Maintenance Instructions (Cont)

b. Installaton.

NOTE

Model B has a manual shutdown cable. Do steps (1) through (1.2) for Model B.

(1) Route shutdown cable (1) upward through opening in cab. Secure using nut (1.1).

(1.1) Screw handle (1.2) on shutdown cable (1) and tighten nut (1.3).

(1.2) Secure shutdown cable (1) to transmission shift cable, horizontal tube of cab, and heater hoses using three ties.

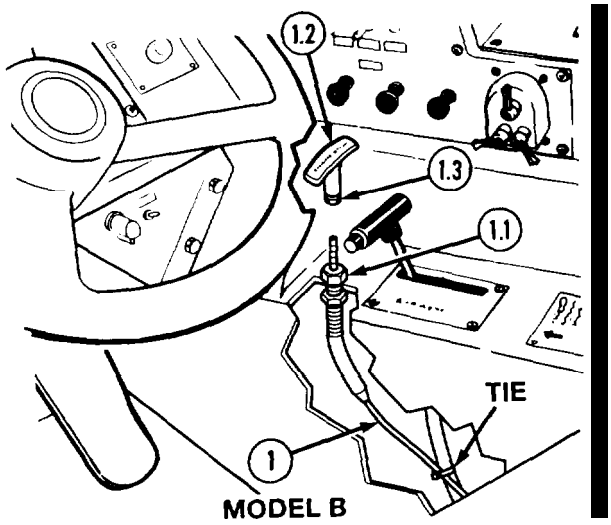

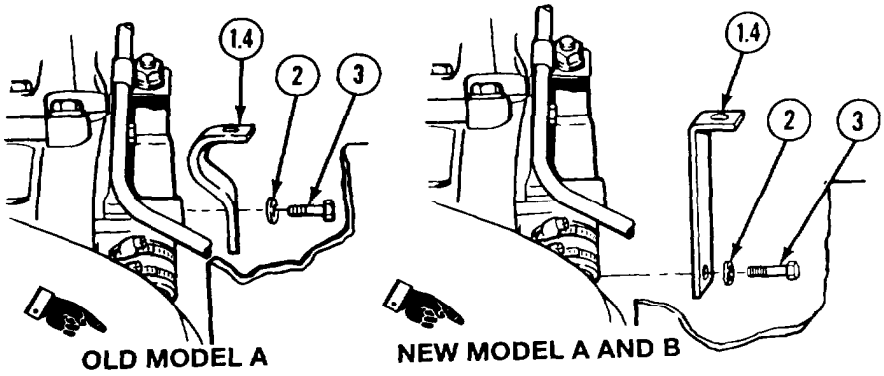

(1.3) Install bracket (1.4), copper washer (2), and screw (3).

NOTE

- Do steps (2) through (7) for Model A.
- Model B has a manual shutdown cable. Do steps (7.1) through (7.11) for Model B.

(2) Install bracket (4) to lever (5) with screw (6) and nut (7). Do not tighten.

(3) Tighten nut (7) leaving lever (4) loose.

(4) Aline and install lever (5).

(5) Tighten screw (8).

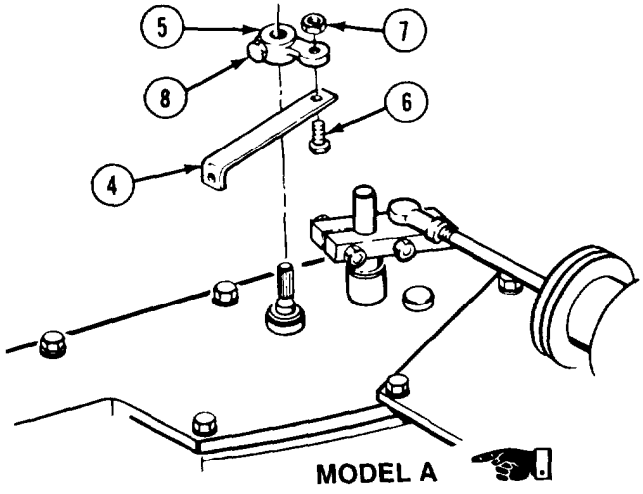

https://truckmanualshub.com/

Engine Governor Maintenance Instructions (Cont)

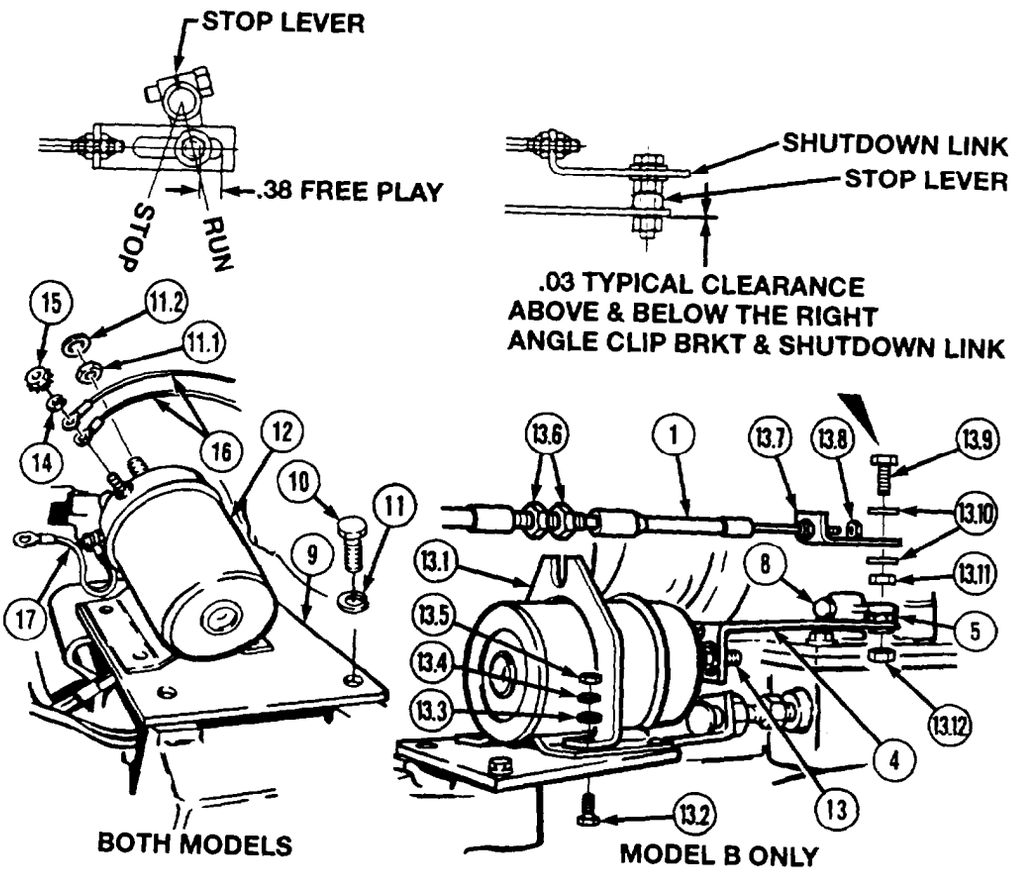

(6) Install plate (9) with screw (10) and lockwasher (11).
(6.1) Install nut (11.1) and washer (11.2) onto solenoid (12).
(7) Install solenoid (12) with actuating screw (13) in hole of bracket (4).
(7.1) Aline matchmarks and install stop lever (5).
(7.2) Tighten screw (8).
(7.3) Install plate (9) with screw (10) and lockwasher (11).
(7.4) Position solenoid (12) on plate (9).
(7.5) Install cable bracket (13.1) with two screws (13.2), washers (13.3), lockwashers (13.4), and nuts (13.5).
(7.6) Install shutdown cable (1) on cable bracket (13.1) and tighten two nuts (13.6).
(7.7) Install shutdown link (13.7) on shutdown cable (1) and locknut (13.8). Do not tighten locknut.
(7.8) Install bracket (4) on actuating screw (13).
(7.9) Install screw (13.9) in shutdown link (13.7) with two washers (13.10) and locknut (13 11) Tighten locknut to provide 0.03 in. (0.76 mm) clearance above and below shutdown link ('13 7).
(7.10) Install stop lever (5) and bracket (4) on screw (13.9) with locknut (13.12). Tighten locknut to provide 0.03 in. (0.76 mm) clearance above and below bracket (4).
(7.) Adjust locknuts (13.8) until shutdown link (13.7) has approximately 0.38 in. (9.65 mm) free play in slot before shutdown link contacts screw (13.9). Tighten locknuts.
(8) Install washer (14), two nuts (15), wires (16), and ground wire (17).

https://truckmanualshub.com/

Engine Governor Maintenance Instructions (Cont)

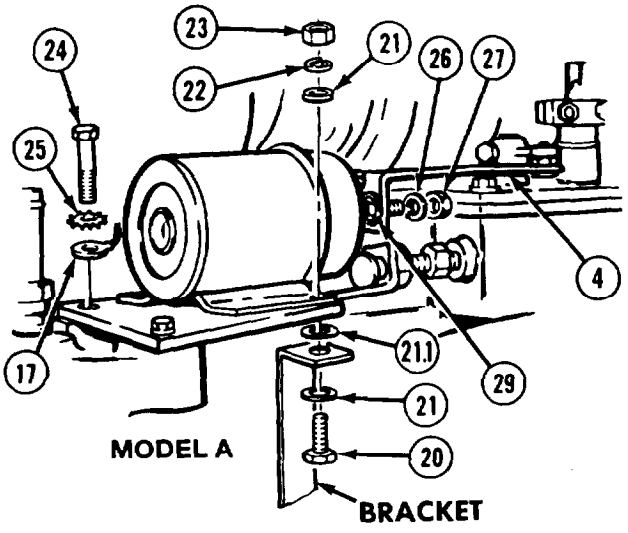

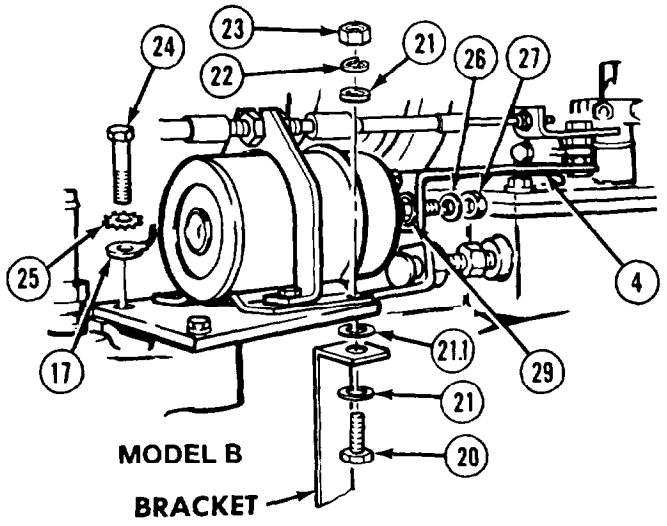

NOTE

- Some older model engines have one washer and do not have a bracket.
- Screw that goes through bracket is longer than the others.

(9) Install two screws (20), three washers (21), spacer washer (21.11, four lockwashers (22), and nuts (23).
(10) Install screw (24), lockwasher (25), and ground wire (17).
(11) Install washer (26) and nut (27) finger tight and take slack out of bracket (4).
(12) Tighten nuts (27) and (29) against bracket (4).

c. Adjustment.

(1) Hold lever (1) in run position.
(2) Adjust nut (2) to touch bracket (3).
(3) Tighten nuts (2 and 4) against bracket (3).
(4) Move lever (1) to stop position; if it binds, loosen mounting bolts and realine solenoid (5).

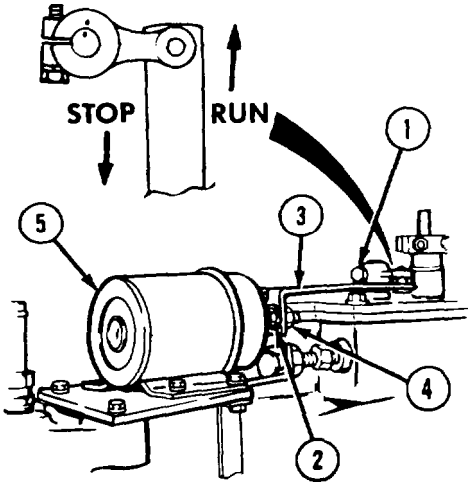

d. Follow-on Maintenance.

(1) Connect batteries (TM 9-2320-279-20).
(2) Start engine and check operation of engine stop switch (TM 9-2320-279-10).
(3) Shut off engine (TM 9-2320-279-10).
(4) Install engine cover (TM 9-2320-279-20).
(5) Install engine side panel (TM 9-2320-279-10).

END OF TASK

https://truckmanualshub.com/

https://truckmanualshub.com/

CHAPTER 16
AFTERCOOLER MAINTENANCE

Contents

	Para	Page
General,	16-1	16-1
Aftercooler Removal/Installation	16-2	16-1

Section I. INTRODUCTION

116-1. GENERAL. This chapter covers the removal and installation of the aftercooler assembly. Subassemblies and Parts which must be removed before the aftercooler can be removed will be referenced to TM 9-2320-279-10, TM9-232O-279-2O, or TM 9-2320-279-34, or to other paragraphs of this manual.

Section II. AFTERCOOLER ASSEMBLY

Aftercooler Maintenance Instructions

16-2. AFTERCOOLER REMOVAL/INSTALLATION.

This task covers:

a. Removal
b. Installation
c. Follow-on Maintenance

INITIAL SETUP

Models
All

Test Equipment
None

Special Tools
None

Supplies
Oil, lubricating, Item 48, Appendix C
Adhesive-sealant, silicone, Item 6, Appendix C

Personnel Required
MOS 63W, Wheel vehicle repairer

References
None

Equipment Condition

TM or Para	*Condition Description*
Para 14-3	Blower removed.

Special Environmental Conditions
None

General Safety Instructions
None

Level of Maintenance
Direct Support

https://truckmanualshub.com/

16-2. AFTERCOOLER REMOVAL/INSTALLATION (CONT).

a. Removal.

NOTE

Some engines have two bolts, lockwashers, and washers. Others have two flanged head bolts.

(1) Loosen clamps (1), remove two bolts (2), lockwashers (3), and washers (4) from elbow (5).

(2) Remove connector (6), hose (7), elbow (5), and gasket (8) from engine block (9).

(3) Remove eight lock screws (10) from after-cooler (11).

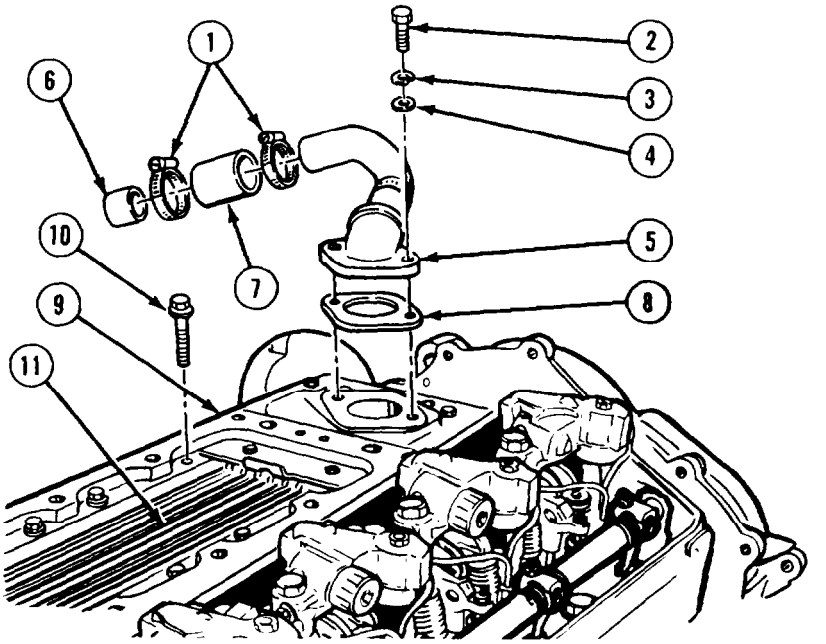

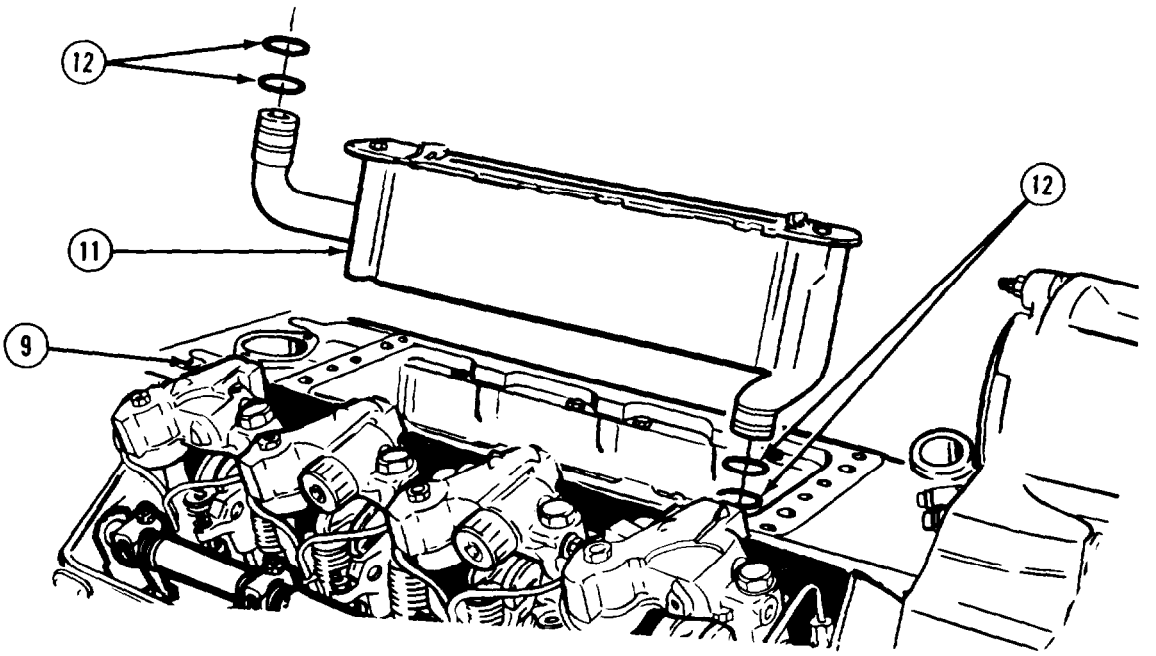

CAUTION

Remove aftercooler carefully Fins are delicate and can be easily damaged.

(4) Remove after-cooler (11) from engine block (9) and inspect water openings for blockage,

(5) Remove four seal rings (12).

https://truckmanualshub.com/

Aftercooler Maintenance Instructions (Cont)

b. Installation.

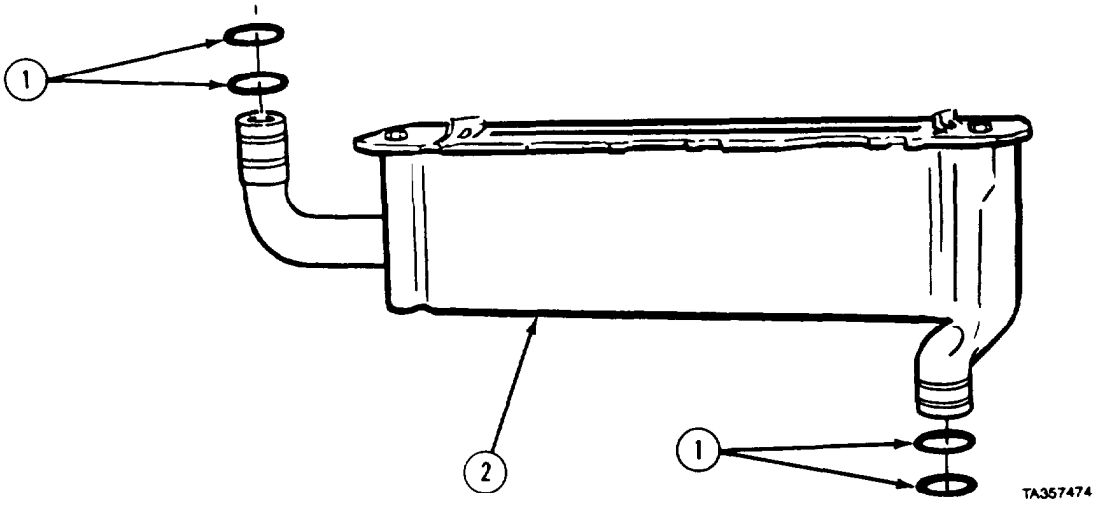

(l) Apply lubricating oil to four seal rings (1).
(2) Install seal rings (1) on after-cooler (2).

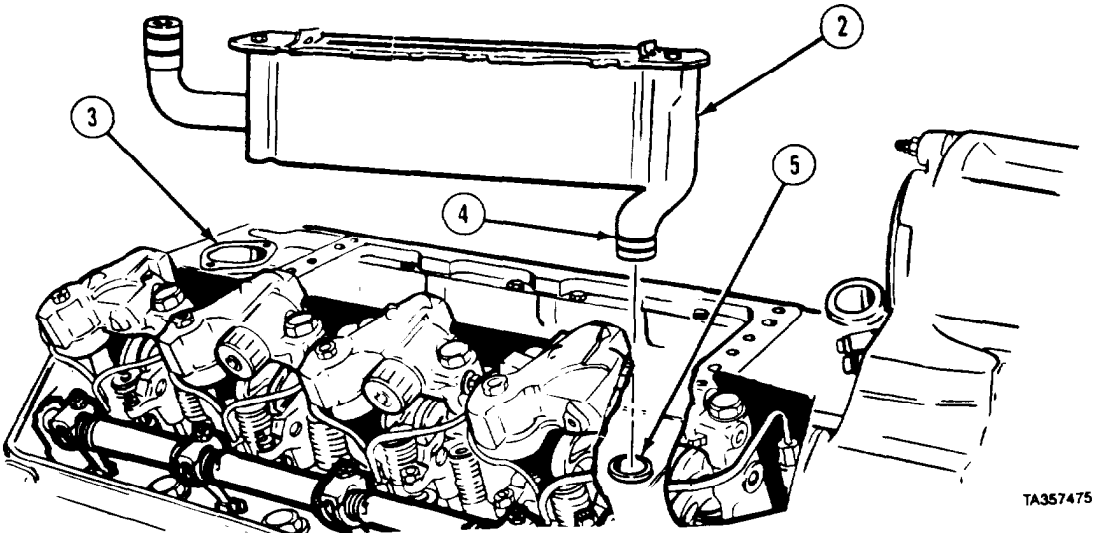

(3) Position aftercooler (2) in engine block (3) so inlet tube (4) fits into adapter (5).

https://truckmanualshub.com/

16-2. AFTERCOOLER REMOVAL/INSTALLATION (CONT).

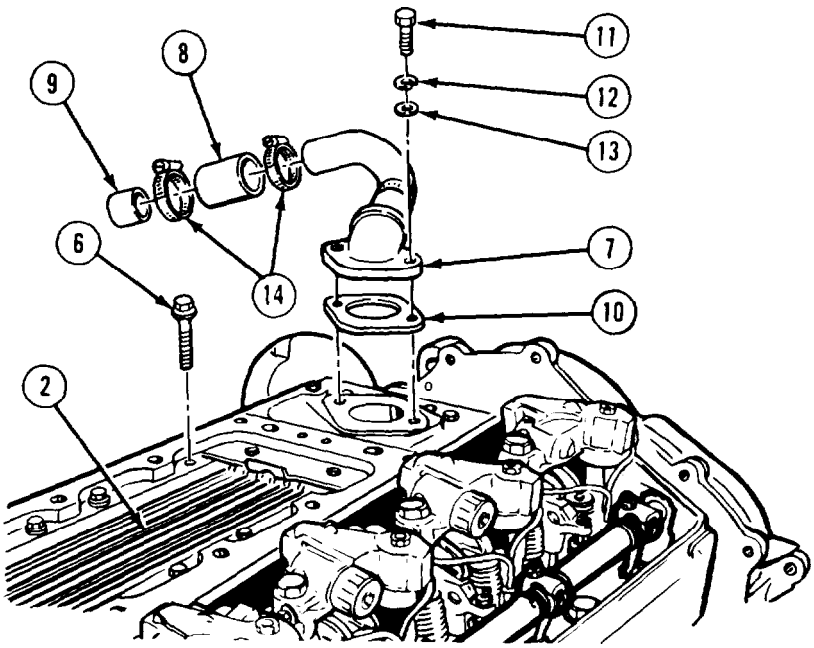

(4) Secure aftercooler (2) with eight lock bolts (6). Do not tighten.

WARNING

Adhesives, solvents, and sealing compounds can burn easily, can give off harmful vapors, and are harmful to skin and clothing. To avoid injury or death, keep away from open fire and use in well-ventilated area. If adhesive, solvent, or sealing compound gets on skin or clothing, wash immediately with soap and water.

(5) Apply silicone adhesive-sealant to flange to elbow (7), hose (8), and connector (9).

NOTE

Some engines have two bolts, lockwashers, and washers. Others have two flanged head bolts. Refer to TM 9-2320-279-24P

(6) Install elbow (7) and gasket (10) with two bolts (11), lockwashers (12), and washers (13). Do not tighten bolts (11).
(7) Install hose (8) and connector (9) on elbow (7).
(8) Tighten hose clamps (14).
(9) Tighten two bolts (11) to 15 lb-ft (20 N•m).
(10) Tighten eight lock bolts (6) to 15 lb-ft (20 N•m).

C. **Follow-on Maintenance.**

(1) Install blower (para 14-3).
(2) Start engine and check engine operation (TM 9-2320-279-10)

END OF TASK

https://truckmanualshub.com/

CHAPTER 17
WATER PUMP MAINTENANCE

Contents

	Para	Page
General	17-1	17-1
Water Pump Removal/Repair/Installation	17-2	17-1

Section I. INTRODUCTION

17-1. GENERAL. This chapter includes removal, installation, and repair of the water pump. The subassemblies and parts which must be removed before the water pump components can be removed will be referenced to other paragraphs or chapters of this manual, TM 9-2320-279-10, TM 9-2320-279-20, or TM 92330-279-34.

Section II. WATER PUMP ASSEMBLY

Water Pump Maintenance Instructions

17-2. WATER PUMP REMOVAL/REPAIR/INSTALLATON.

This task covers:

a. Removal
b. Disassembly
c. Cleaning/Inspection
d. Assembly
e. Installation
f. Follow-on Maintenance

INITIAL SETUP

Models
All

TEST Equipment
None

Special Tools
Installer. water pump drive gear, J25257
Remover, water pump seal, J22150-B
Gage, feeler FB310B
Set, dial indicator J7872

Supplies
Solvent, dry cleaning, Item 60. Appendix C
Compound, sealing, pipe thread, Item 32, Appendix C
Adhesive-sealant, silicone, Item 6, Appendix C
Oil, lubricating, Item 48, Appendix C
Tags, identification, Item 61, Appendix C
Compound, International No. 2, Item 26. Appendix C
Screw, 5 16-18 x 2 in., Item 58. Appendix C

Presonnel Required
MOS 63W, Wheel vehicle repairer (2)

Reference
None

Equipment Condition

TM or Para	Condition Description
TM 9-2320-279-20	Cooling system drained.
TM 9-2320-279-20	Fan removed.

Special Environmental Conditions
None

General Safety Instructions
None

Level of Maintenance
Direct Support

https://truckmanualshub.com/

17-2. WATER PUMP REMOVAL/REPAIR/INSTALLATiON (CONT).

a. **Removal.**

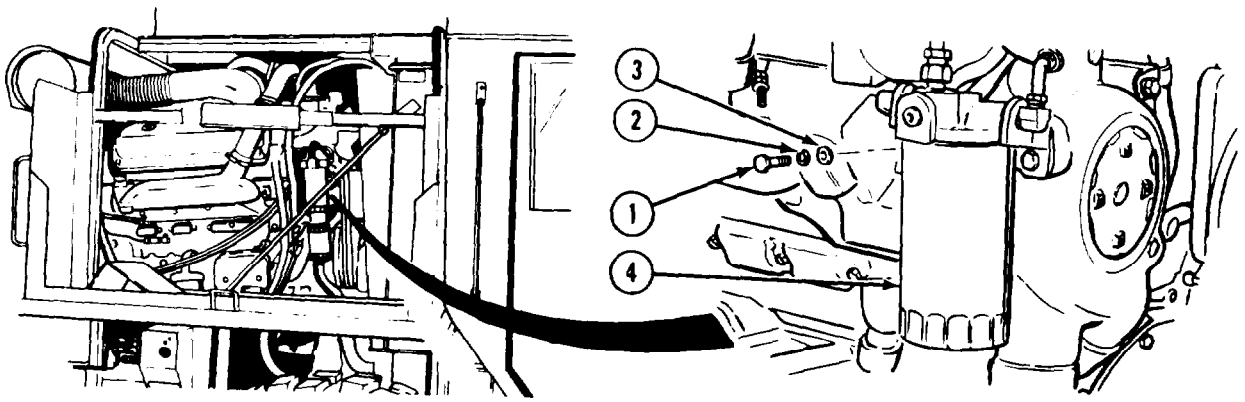

(1) Loosen two screws (1), lockwashers (2), and washers (3). Move secondary fuel filter (4) out of way.

(2) Loosen two hose clamps (5) and slide hose (6) up.

(3) Loosen two hose clamps (7) and slide hose (8) down.

(4) Loosen two hose clamps (9) and slide hose (10) down.

(5) Loosen hose clamp (11) and remove hose (12).

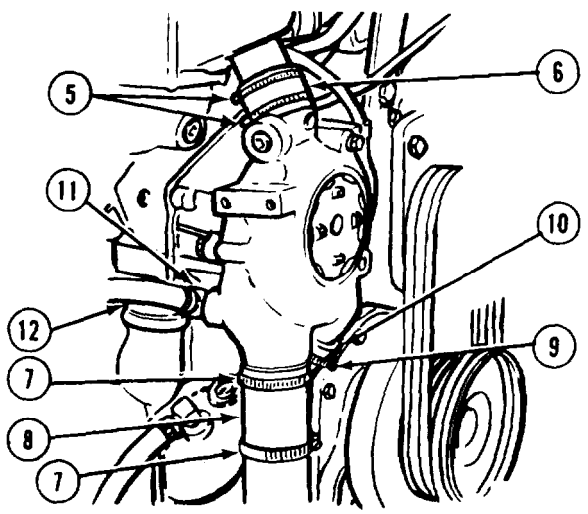

NOTE

Some engines do not have screw, lockwashers, and clip.

(6) Remove screw (13), lockwasher (14), and clip (15).

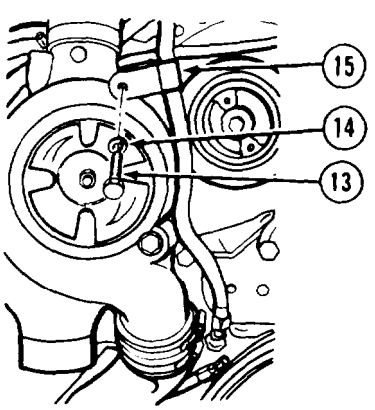

https://truckmanualshub.com/

Water Pump Maintenance Instructions (Cont)

(7) Remove screw (16) and lockwasher (17).
(8) Remove screw (18), lockwasher (19), and washer (20).
(9) Remove water pump (21) and preformed packing (22).
(10) Remove preformed packing (22) from water pump (21).

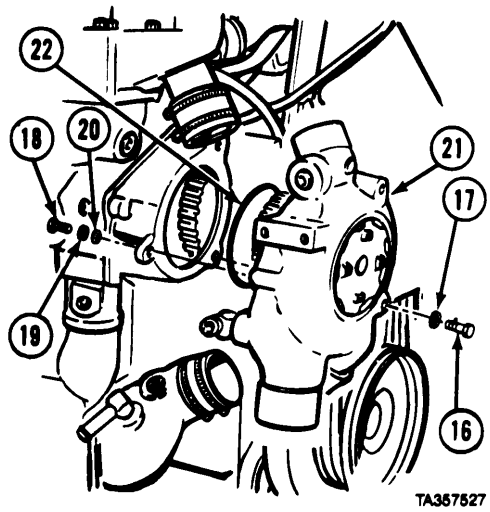

b. Disassembly.

(1) Place pump body (1) gear-side down on a clean work surface.
(2) Remove retaining ring (2), pump cover (3), and preformed packing (4).

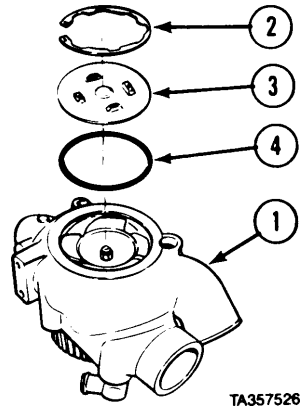

(3) Soldier A removes locknut (5), washer (6), and impeller (7) while Soldier B holds pump gear (8) with strap wrench.

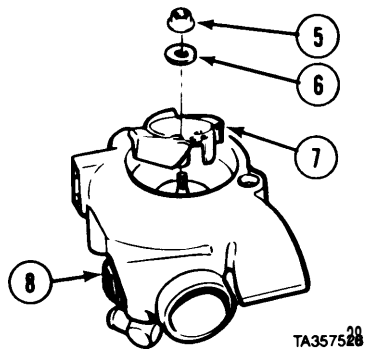

(4) Place pump body (1), gear side up, on work surface.

NOTE

Tag and mark elbow before removal.

(5) Remove elbow (9).

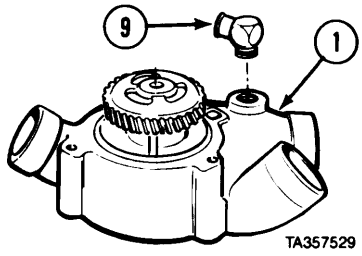

https://truckmanualshub.com/

Water Pump Maintenance Instructions (Cont)

17-2. WATER PUMP REMOVAL/REPAIR/INSTALLATION (CONT).

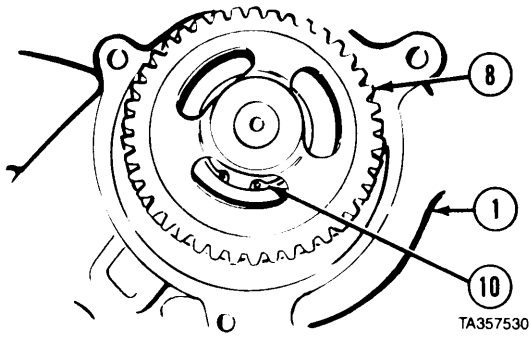

(6) Turn pump gear (8) until ends of retaining ring (1()) can be seen.
(7) Move retaining ring (10) out of groove in pump body (1).

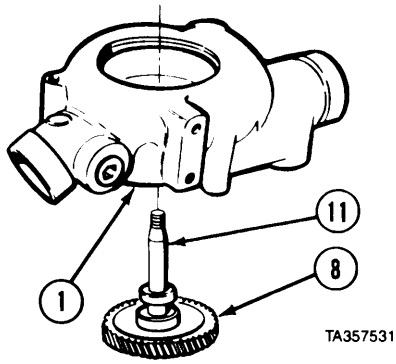

(8) Press pump gear (8) and shaft assembly (11) out of pump body (1).

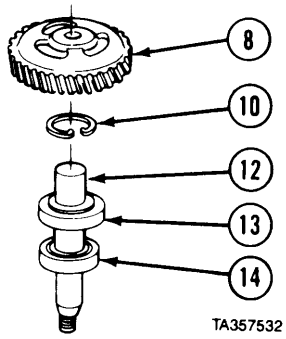

(9) Press shaft (12) out of pump gear (8).
(10) Remove retaining ring (10).
(11) Press shaft (12) out of bearing (13).
(12) Press shaft (12) out of bearing (14).

Water Pump Maintenance Instructions (Cont)

(13) Remove water seal (15) and oil seal (16) from pump body (l).
(14) Remove plug (17).

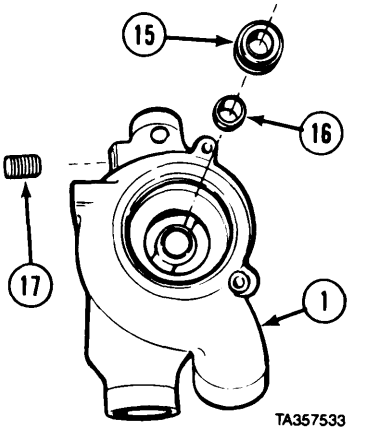

c. Cleaning/Inspection.

WARNING

Adhesives, solvents, and sealing compounds car burn easily, can give off harmful vapors, and are harmful to skin and clothing. To avoid injury or death, keep away from open fire and use in well-ventilated area. If adhesive, solvent, or sealing compound gets on skin or clothing, wash immediately with soap and water.

(1) Clean all metal parts with dry cleaning solvent.
(2) Inspect passages of housing for obstructions, deposits, and cracks. Clean out any obstruction or deposits. Replace housing if cracked.
(3) Inspect bearings for damage and rough turning. Replace both bearings if either bearing is damaged.
(4) Inspect impeller and replace if damaged.

d. Assembly.

(1) Lubricate bearings (1 and 2) and shaft (3) with oil.

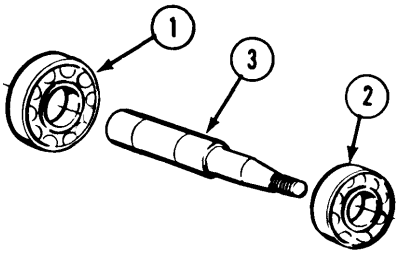

NOTE

Bearings are installed so that numbered side of each bearing faces in toward numbered side of other bearing.

(2) Press shaft (3), threaded end down, into small bearing (2) using water pump drive gear installer to support bearing.
(3) Press shaft (3), threaded end up, into large bearing (1) using water pump drive gear installer to support bearing.

CAUTION

When installing shaft assembly, make sure that shaft assembly is installed straight into pump body otherwise shaft assembly and pump body may be damaged.

NOTE

When installing shaft assembly, press against outer race of large bearing.

(4) Install shaft assembly (4) into pump body (5) by pressing on outer race of larger bearing (1).

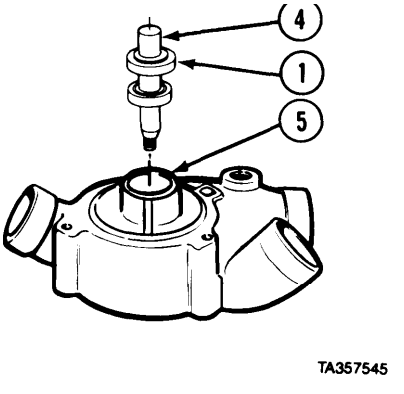

https://truckmanualshub.com/

17-2. WATER PUMP REMOVAL/REPAIR/INSTALLATION (CONT).

(5) Install retaining ring (6).

CAUTION

Gear must be installed straight onto shaft or gear will be damaged.

(6) Press pump gear (7) onto shaft assembly (4) using water pump drive gear installer to support shaft assembly from beneath.

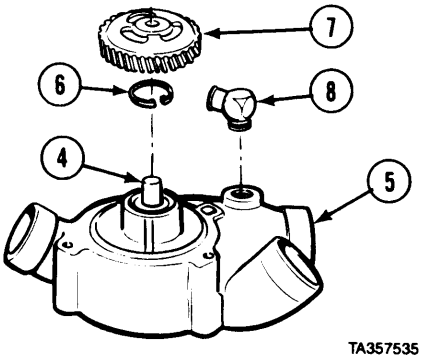

WARNING

Adhesives, solvents, and sealing compounds can burn easily, can give off harmful vapors, and are harmful to skin and clothing. To avoid injury or death, keep away from open fire and use in well-ventilated area. If adhesive, solvent, or sealing compound gets on skin or clothing, wash immediately with soap and water.

(7) Apply pipe thread sealing compound to threads and install elbow fitting (8) into pump body (5).

(8) Apply pipe thread sealing compound to threads and install plug (9).

CAUTION

Oil seal must be installed flush with water seal counter bore. Pump will not operate if oil seal is not properly installed.

(9) Support pump body (5), gear side down, with suitable blocking.
(lo) Apply lubricating oil to shaft (3) and lip of oil seal (10).
(11) Install oil seal (10), with lip toward bearing (2).
(12) Apply silicone adhesive-sealant to outside of water seal (11).
(13) Position water seal (11) into pump body (5).

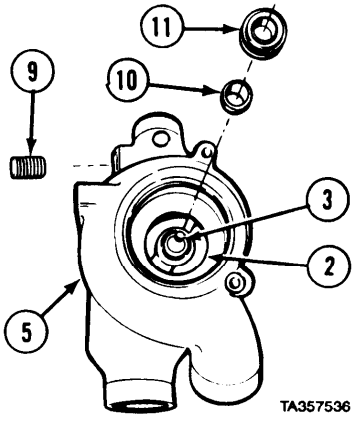

NOTE

Water pump seal remover comes with teeth for cutting and removing seals. Remove these teeth before using to install water seal.

(14) Attach water pump seal remover to pump body (5) with retaining ring (12) beveled edge out.
(15) Seat water seal (11) by turning shaft of water pump seal remover clockwise until tight.

NOTE

After removing tool wipe excess sealant off water seal.

(16) Remove retaining ring (12) and water pump seal remover.

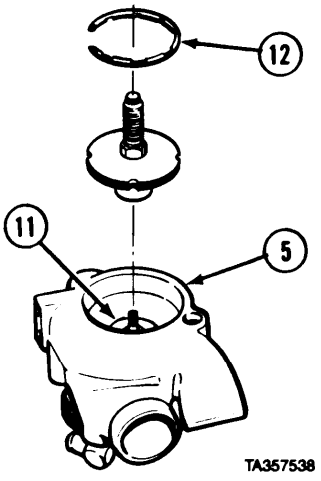

https://truckmanualshub.com/

Water Pump Maintenance Instructions (Cont)

(17) Apply compound No. 2 to threads of shaft (3).
(18) Soldier A installs impeller (13), washer (14), and locknut (15).

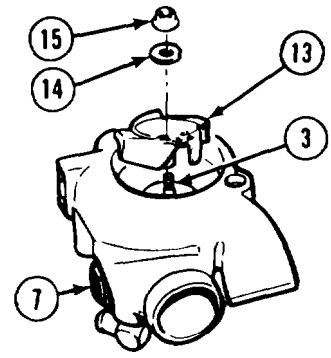

(19) Hold 0.015 in. (0.38 mm) feeler gage between impeller (13) and corner (16) of pump body (5).
(20) While holding feeler gage in position described in step (19), turn impeller (13) and wall of pump body (5).
(21) If clearance is wrong, repeat section **b. Disassembly** and section **c. Cleaning/Inspection** of this procedure.

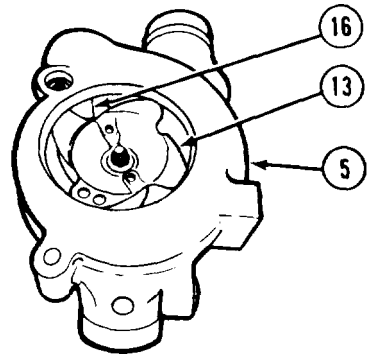

e. Installtion.

(1) Install ring seal (1) on water pump (2).
(2) Install water pump (2) on front cover (3) and into two hoses (4) and (5).
(3) Install screw (6) and washer (7). Tighten screw to 20 to 25 lb-ft (27 to 34 N•m).
(4) Install screw (8), lockwasher (9), and washer (10). Tighten screw to 20 to 25 lb-ft (27 to 34 N•m).

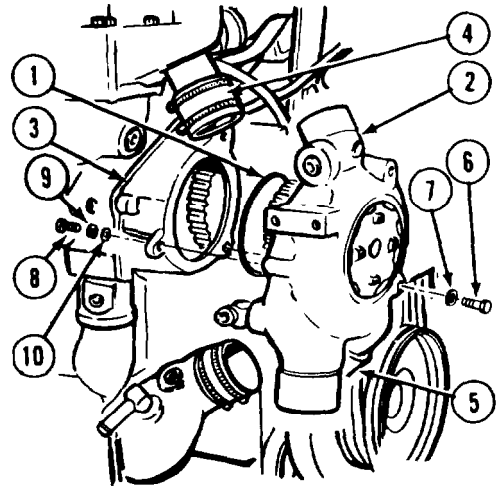

NOTE

Some engines do not have screw, lockwasher, and clip. Refer to TM 9-2320-279-24P.

(5) Install screw (11), lockwasher (12), and clip (13).

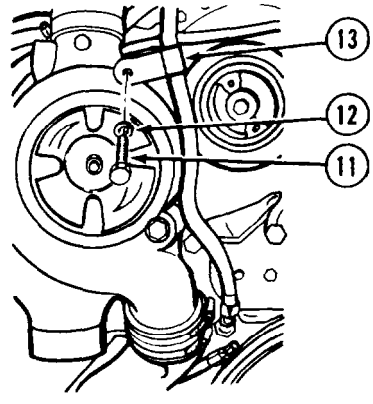

https://truckmanualshub.com/

Water Pump Maintenance Instructions (Cont)

17-2. WATER PUMP REMOVAL/REPAIR/INSTALLATION (CONT).

(6) Install 5/16-18 x 2 in. screw (14) into impeller (15).

NOTE

Limits for gear backlash are 0.001-in. to 0.006-in. (0.025 mm to 0.15 mm). If backlash cannot be fixed, replace pump.

(7) Place plunger of dial indicator against screw (14). Move impeller (15) and read backlash.
(8) If backlash is outside limits, loosen two screws (6 and 8) and pivot pump to obtain proper backlash.
(9) Tighten screws (6 and 8) to 25 lb-ft (27 N-m).
(10) Remove screw (14).
(11) Tighten screws (6, 8, and 11) to 45 to 50 lb-ft (61 to 67 N.m).

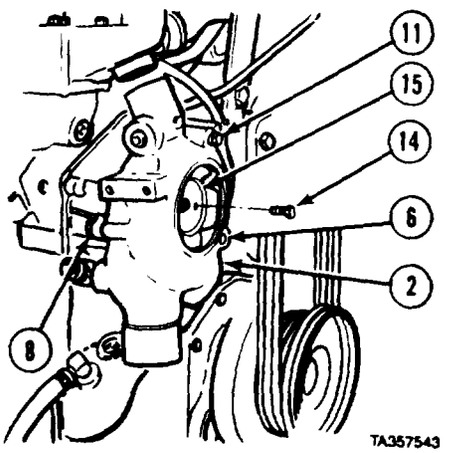

(12) Install preformed packing (16), pump cover (17), and retaining ring (18).
(13) Install three hoses (19, 20 and 21).
(14) Tighten six hose clamps (22).
(15) Install hose (23).
(16) Tighten hose clamp (24).

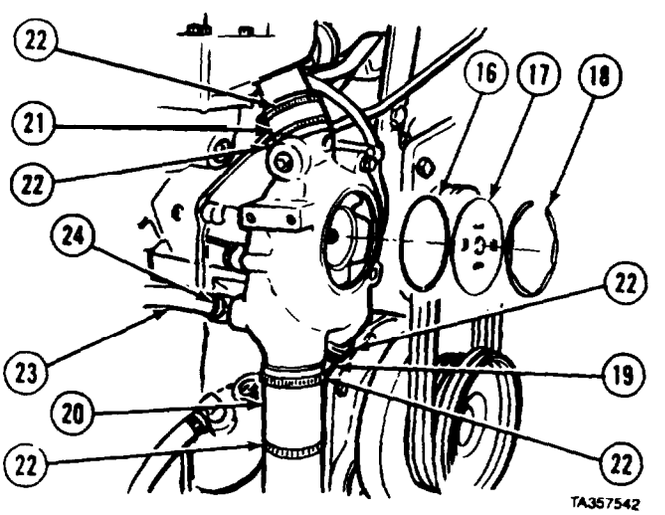

(17) Aline secondary fuel filter (25) with mounting holes and tighten two screws (26) lockwashers (27), and washers (28).

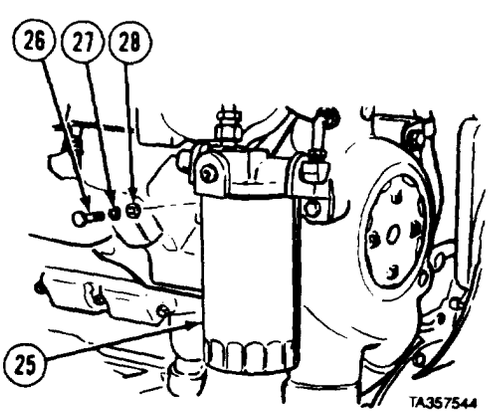

f. Follow-on Maintenanca.
(1) Install fan (TM 9-2320-279-20).
(2) Fill cooling system (LO 9-2320-279- 12)

END OF TASK

https://truckmanualshub.com/

CHAPTER 18
FAN CLUTCH MAINTENANCE

Contents

	Para	Page
General	18-1	18-1
Fan Clutch Repair	18-2	18-2

Section I. INTRODUCTION

18-1. GENERAL. This chapter covers repair of the fan clutch. The subassemblies and parts which must be removed before the fan clutch can be removed will be referenced to other paragraphs or chapters of this manual or TM 9-2320-279-10, TM 9-2320-279-20, or TM 9-2320-279-34.

Section II. FAN CLUTCH ASSEMBLY

Fan Clutch Maintenance Instructions

18-2. FAN CLUTCH REPAIR.

This task covers:

a. Disassembly
b. Cleaning/Inspection
c. Assembly
d. Follow-on Maintenance

INITIAL SETUP

Models
All

Test Equipment
None

Special Tools
Kit, tool, overhaul 3-462-902-24460
Gage, feeler FB310B

Fabricated Tools
Wear sleeve installation tool

Supplies
Oil, lubricating, Item 48, Appendix C
Solvent, drycleaning, Item 60, Appendix C
Grease, automotive and artillery, Item 36, Appendix C
Compound, sealing, lubricating, Item 31, Appendix C
Adhesive-sealant, silicone, Item 6, Appendix C
Compound, sealing, pipe thread, Item 32, Appendix C
Gasket, loctite plastic, Item 35.1, Appendix C

Personnel Required
MOS 63W, Wheel vehicle repairer

References
None

Equipment Condition

TM or Para	Condition Description
	Fan clutch on clean work surface.

Special Environmental Conditions
None

General Safety Instructions
None

Level of Maintenance
Direct Support

https://truckmanualshub.com/

Fan Clutch Maintenance Instructions (Cont)

18-2. FAN CLUTCH REPAIR (CONT).

a. Disassembly.

NOTE

Shim may or may not be installed on fan mounting hub.

(1) Remove eight screws (1), bearing retainer (2), and shim (3).
(2) Remove preformed packing (4) from bearing retainer (2).

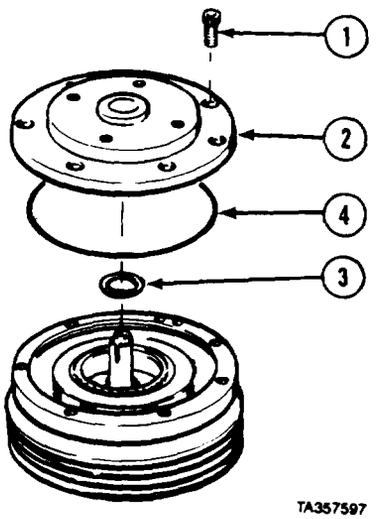

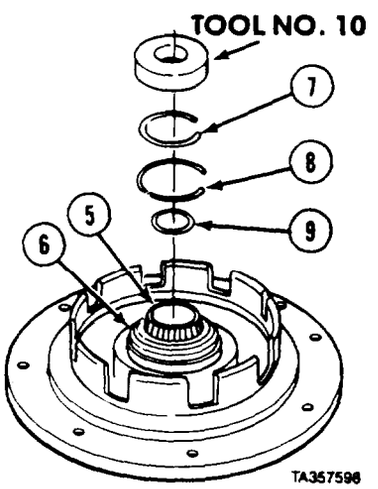

CAUTION

Be sure that supports are under fan hub and not under bearing retainer, or damage to fan hub may result.

(3) Support fan hub (5) with suitable blocking.
(4) Press bearing (6) down l/16-in. (1.5 mm), using tool No. 10.
(5) Remove retaining ring (7) and spacer (8).
(6) Remove retaining ring (9) from inside fan hub (5).

https://truckmanualshub.com/

Fan Clutch Maintenance Instructions (Cont)

(7) Support bearing retainer (2) with suitable blocking.
(8) Press fan hub (5) out of bearing retainer (2) using short end of tool No. 1.
(9) Remove bearing (6).

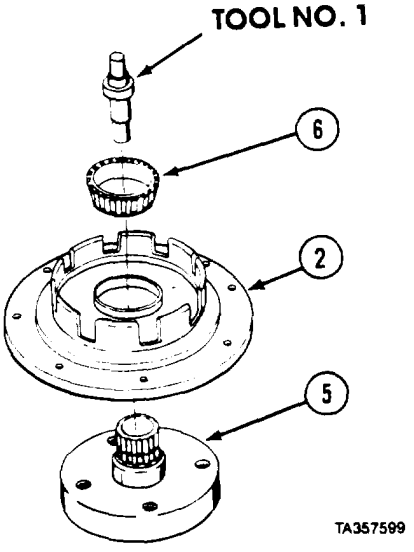

(10) Support bearing retainer (2) with suitable blocking.
(11) Press out bearing race (10) and oil seal (11) using tool NO. 3 and tool No. 8.

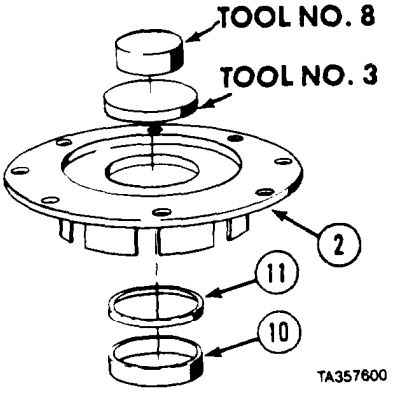

(12) Support fan hub (5) with suitable blocking.
(13) Press out expansion plug (12) using tool No. 9.
(14) Remove retaining ring (13) from fan hub (5).

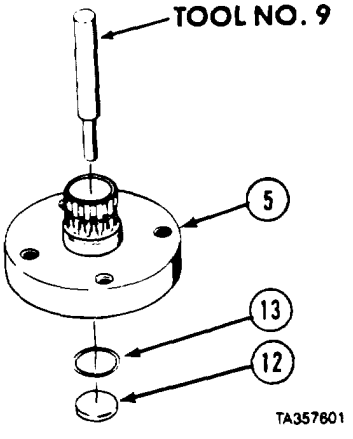

https://truckmanualshub.com/

18-2. FAN CLUTCH REPAIR (CONT).

(1.5) Support fan hub (5) with suitable blocking.

NOTE

Number and type of shims may vary among fan clutches.

(16) Press out two roller bearings (14), thrust washers (15), one needle bearing (16), and shims (17) using small end of tool No. 9.

NOTE

There are two models of fan hubs. Model A has no wear sleeve. Model B is a smaller diameter and uses a wear sleeve. Model B fan hub replaces Model A and is supplied with wear sleeve already installed. If a new Model B fan hub is being installed, skip step (16.1). To replace wear sleeve on Model B fan hub, do step (16.1).

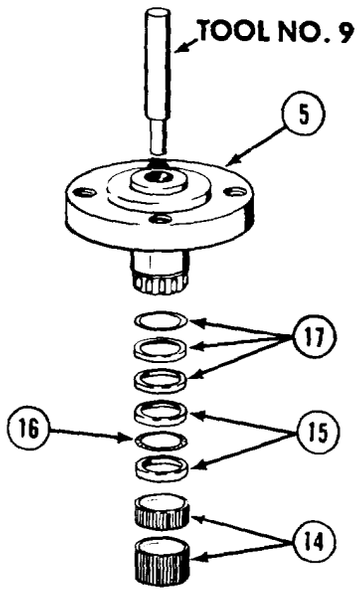

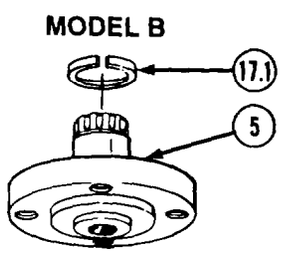

(16.1) Using a hammer and chisel, split wear sleeve (17.1) and remove wear sleeve from shoulder of fan hub (5).

(17) Remove splined hub (18) with back plate (19) from fan pulley (20).

(18) Remove six spline plates (21), five clutch plates (22), and pressure plate (23).

(19) Remove retaining ring (24) and back plate (19) from splined hub (18).

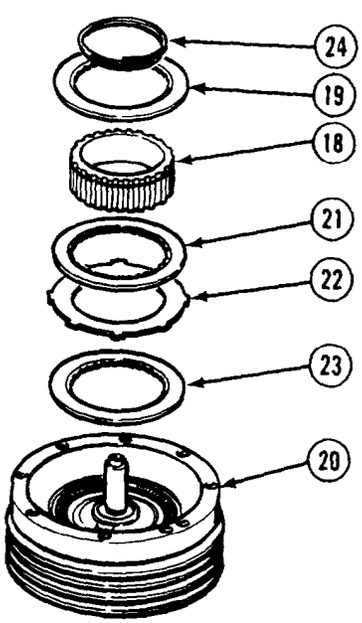

https://truckmanualshub.com/

Fan Clutch Maintenance Instructions (Cont)

(20) Remove needle bearing (25).
(21) Loosen setscrew (26) until 1/4-in. (6 mm) of setscrew is sticking out of load cell assembly (27).
(22) Remove load cell assembly (27) from fan pulley (20). Remove setscrew (26).

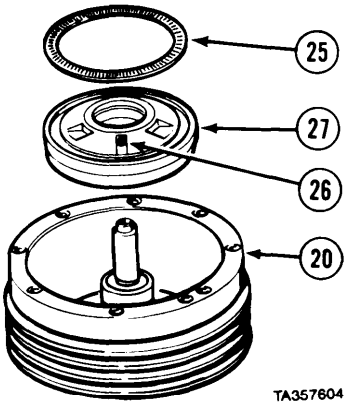

CAUTION

Make sure tool No. 6 is centered on thrust washer, or retaining ring and thrust washer may be damaged.

(23) Support load cell assembly (27) with suitable blocking.

CAUTION

Pressing thrust washer more than 1/32-in. (0.8 mm) may damage parts in load cell.

(24) Press thrust washer (28) down 1/32-in. (0.8 mm) using tool No. *6* and remove retaining ring (29).
(25) Remove thrust washer (28) and two springs (30).

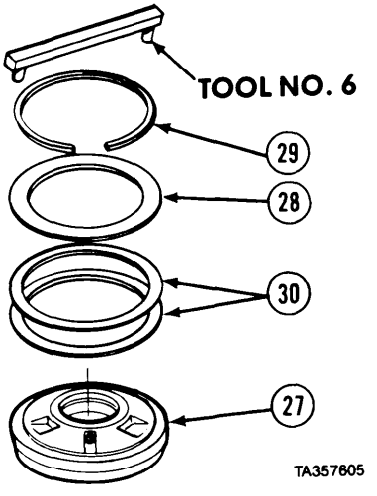

(26) Remove four screws (31) and two oilers (32).
(27) Remove piston housing (33) from clutch body (34).
(28) Remove two preformed packings (35 and 36) from clutch body (34).

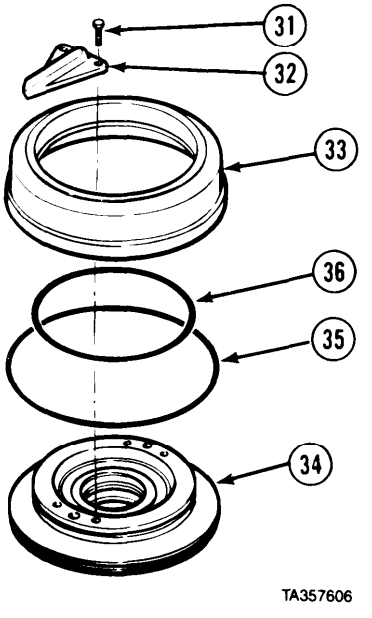

https://truckmanualshub.com/

Fan Clutch Maintenance Instructions (Cont)

18-2. FAN CLUTCH REPAIR (CONT).

CAUTION

Be sure support is placed beneath bracket and shaft assembly, and not fan pulley, or fan pulley may be damaged during removal of bearing.

(29) Support bracket and shaft assembly (37) with suitable blocking.
(30) Press bearing (38) down 1/16-in. (1.5 mm) using tool No. 5.
(31) Remove two preformed packings (39), retaining ring (40) and spacer (41).

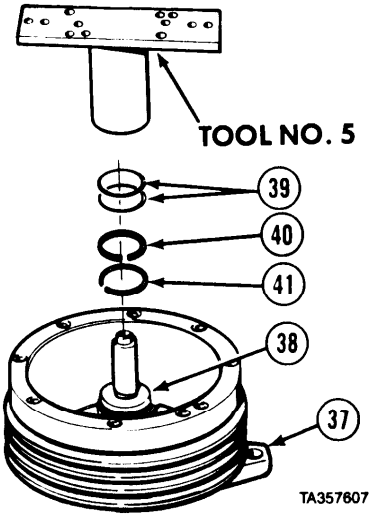

(32) Support fan pulley (20) with suitable blocking.
(33) Press out bracket and shaft assembly (37) using tool No. 8.
(34) Remove bearing (38).
(35) Remove two screws (42) and washers (43).

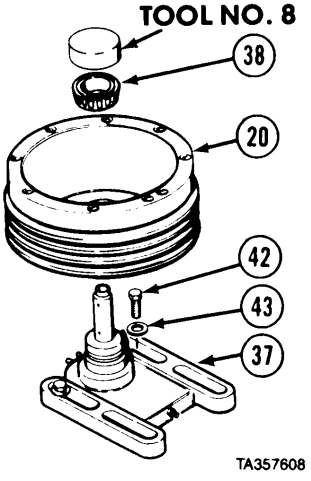

CAUTION

Be sure tool No. 8 and tool No. 3 are centered on top of oil seal, or damage to fan pulley and oil seal may result.

(36) Support fan pulley (20) with suitable blocking.
(37) Press out bearing race (44) and oil seal (45), using tool No. 8 and tool No. 3.

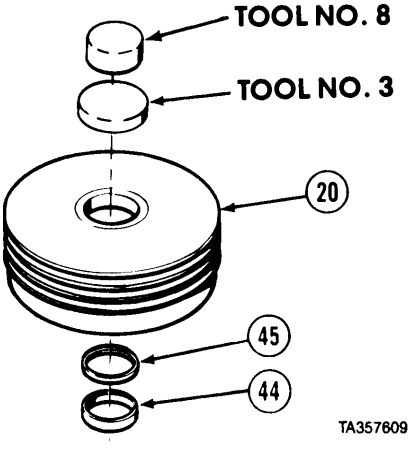

https://truckmanualshub.com/

Fan Clutch Maintenance Instructions (Cont)

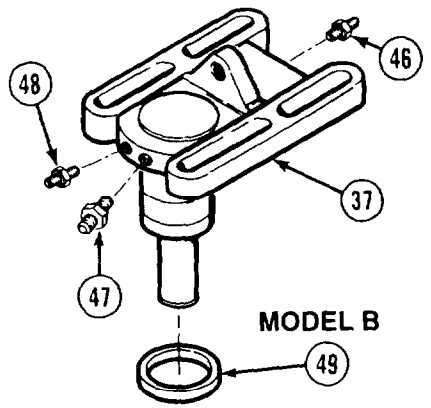

NOTE

Tag fittings before removal.

(38) Remove three fittings (46,47, and 48) from bracket and shaft assembly (37).

NOTE

There are two models of bracket and shaft assemblies. Model A has no wear sleeve. Model B is a smaller diameter and uses a wear sleeve. Model B bracket and shaft assembly replaces Model A and is supplied with wear sleeve already installed. If new Model B bracket and shaft assembly is being installed, skip step (39). To replace wear sleeve on Model B bracket and shaft assembly, do step (39).

(39) Using a hammer and chisel, split wear sleeve (49) and remove wear sleeve from shoulder of bracket and shaft assembly (37).

b. Cleaning/Inspection.

WARNING

Adhesives, solvents, and sealing compounds can burn easily, can give off harmful vapors, and are harmful to skin and clothing. To avoid injury or death, keep away from open fire and use in well-ventilated area. If adhesive, solvent, or sealing compound gets on skin or clothing, wash immediately with soap and water.

(1) Clean all metal parts with drycleaning solvent.

WARNING

Compressed air used for cleaning must not exceed 30 psi (207 kPa) and must be used only with chip guarding and personnel protective equipment such as goggles, shield, gloves, etc.

(2) Dry all parts, except bearings, with compressed air.
(3) Blow air through passageways in shaft and bracket assembly to make sure passageways are not blocked.
(4) Remove burrs from setscrew contact point.
(5) Replace any spline plates or clutch plates that look or smell burned.
(6) Inspect clutch plates for wear spots. Replace clutch plates if wear spots exceed 0.010 in. (0.25 mm), or if clutch plate is bent.
(7) Inspect spline plates for wear. Replace spline plates if worn to bottom of wear grooves on surface of plate.
(8) Inspect all metal parts for scratches, grooves, scoring, dents, nicks, and burrs. Replace damaged parts.

https://truckmanualshub.com/

https://truckmanualshub.com/

Fan Clutch Maintenance Instructions (Cont)

c. Assembly.

WARNING

Adhesives, solvents, and sealing compounds can burn easily, can give off harmful vapors, and are harmful to skin and clothing.To avoid injury or death, keep away from open fire and use in well-ventilated area. If adhesive, solvent, or sealing compound gets on skin or clothing, wash immediately with soap and water.

(1) Coat three fittings (1, 2, and 3) with pipe thread sealing compound and install on bracket and shaft assembly (4).

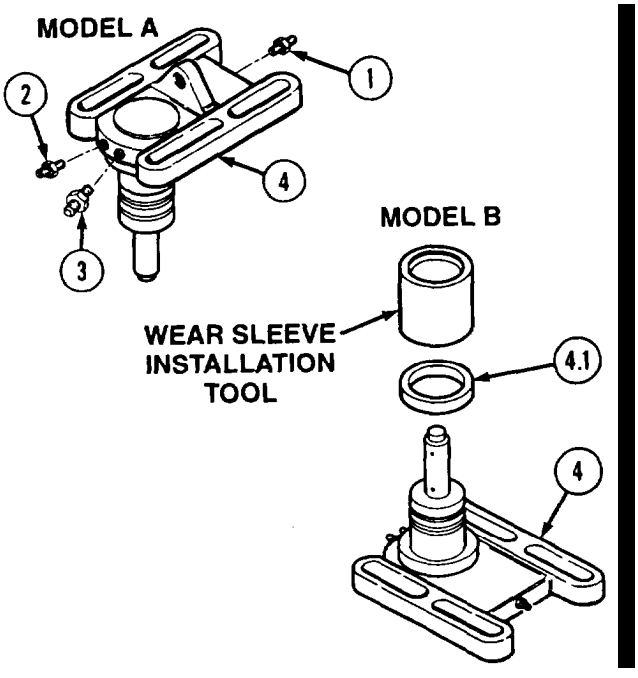

NOTE

There are two models of bracket and shaft assemblies. Model A has no wear sleeve. Model B has a wear sleeve. Model B replaces Model A and is supplied with wear sleeve already installed. If installing a new Model B bracket and shaft assembly, skip steps (1.1) through (1.3). If replacing wear sleeve on existing Model B bracket and shaft assembly, do steps (1.1) through (1.3).

(1.1) Apply plastic gasket to outside diameter of shoulder of bracket and shaft assembly (4) and inside diameter of wear sleeve (4.1).

(1.2) Support bracket and shaft assembly (4) with suitable blocking.

(1.3) Press wear sleeve (4.1) on shoulder of bracket and shaft assembly (4) using wear sleeve installation tool.

https://truckmanualshub.com/

Fan Clutch Maintenance Instructions (Cont)

18-2. FAN CLUTCH REPAIR (CONT).

(2) Install tool No. 2 on tool No. 5.
(3) Support fan pulley (5) with tool No. 2 and tool No. 5.
(4) Apply lubricating oil to oil seal (6) and tool No. 4.

CAUTION

All tools should be centered and oil seal properly alined with fan pulley to prevent improper installation or damage to oil seal during installation.

(5) Press oil seal (6) flat side up. into fan pulley (5) until tool No. 4 contacts tool No. 2.

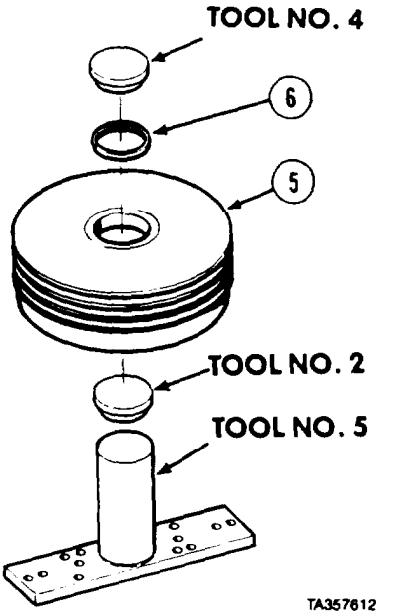

(6) Support fan pulley (5) with suitable blocking.
(7) Apply lubricating oil to bearing race (7).
(8) Press bearing race (7), thin edge up, into fan pulley (5) using tool No. 2 until tool No. 2 contacts fan pulley.
(9) Apply lubricating oil to bearing (8).
(10) Install bearing (8), numbered side up, in bearing race (7).
(11) Attach tool No. 5 to fan pulley (5) using 3/8-16 x 2 in. (51 mm) screws from fan drive overhaul tool kit. Finger tighten screws.

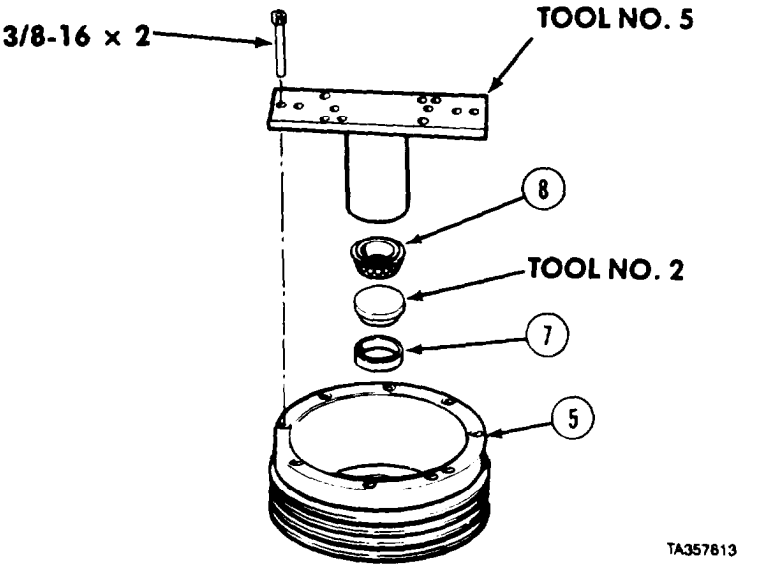

https://truckmanualshub.com/

Fan Clutch Maintenance Instructions (Cont)

(12) Support fan pulley (5) and tool No. 5 with suitable blocking.
(13) Place two screws (9) and washers (10), threads up, on fan pulley (5).
(14) Apply lubricating oil to bracket and shaft assembly (4).
(15) Press bracket and shaft assembly (4) into fan pulley (5) over two screws (9) using tool No. 8,
(16) Remove tool No. 5.

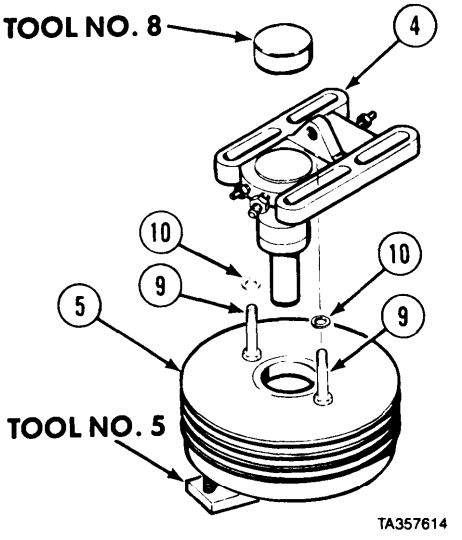

(17) Install spacer (11) and retaining ring (12) on bracket and shaft assembly (4).

CAUTION

Make sure blocks are placed under pulley, not under bracket and shaft assembly, or bracket and shaft-assembly may be damaged.

(18) Support fan pulley (5) with suitable blocking.
(19) Press bracket and shaft assembly (4) down 1/16-in. (1.5 mm) with tool No. 8 to seat spacer (11) and retaining ring (12) on bearing (8).
(20) Apply lubricating oil to two preformed packings (13) and install on bracket and shaft assembly (4).

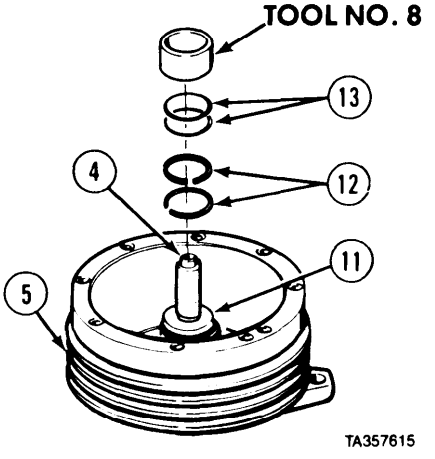

(21) Apply lubricating oil to two preformed packings (14 and 15) and install on clutch body (16).
(22) Install clutch body (16) in piston housing (17).

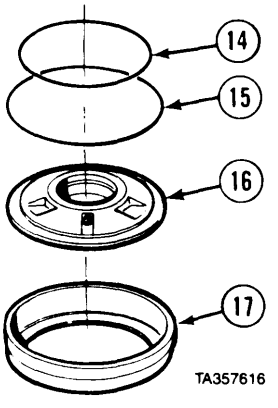

https://truckmanualshub.com/

18-2. FAN CLUTCH REPAIR (CONT).

(23) Apply lubricating oil to two springs (18) and install springs, concave side up, on clutch body (16).
(24) Apply oil to thrust washer (19) and install, flat side up, on springs (18).

NOTE

Be sure blocking does not touch clutch body.

(25) Support piston housing (17) with suitable blocking.

CAUTION

Do not press thrust washer down more than 1/32-in. (0.8 mm) or thrust washer and springs may be damaged.

(26) Press thrust washer (19) down 1/32-in. (0.8 mm) using tool No. 6 and install retaining ring (20) in piston housing (17).

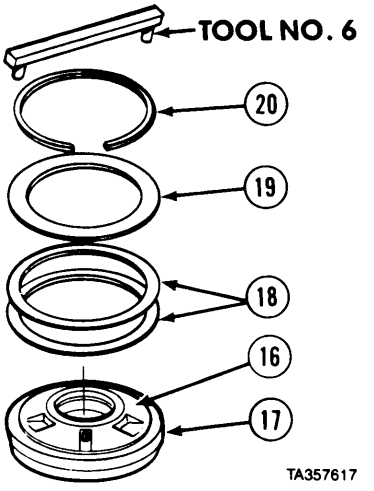

(27) Apply sealing compound to threads of four screws (21).
(28) Install two oilers (22) with four screws (21). Tighten screws to 45 lb-in (5.1 N°m).

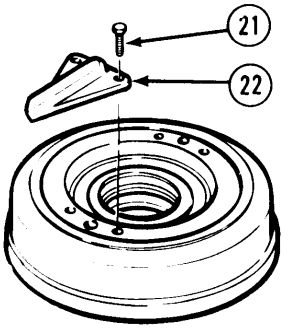

TA357618

(29) Install setscrew (23) but do not tighten.
(30) Install load cell assembly (24) until upper surface of clutch body (16) is flush with, or just below shoulder of shaft.
(31) Aline setscrew (23) with oil holes (25) and setscrew hole (26) on bracket and shaft assembly (4).

CAUTION

Setscrew must rest in center of hole. Make sure setscrew is centered when tightened or damage to shaft may result.

(32) Tighten setscrew (23) to 50 lb-in (5.4 N°m).

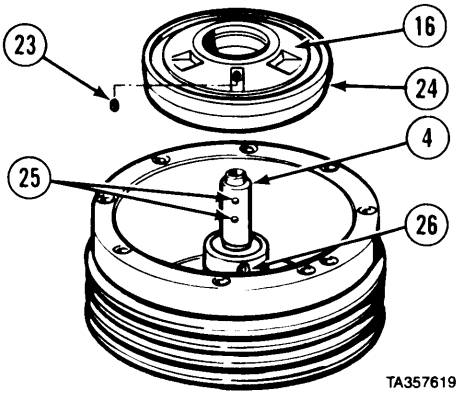

https://truckmanualshub.com/

Fan Clutch Maintenance Instructions (Cont)

(33) Support fan hub (27) with suitable blocking.

NOTE

There are two models of fan hubs. Model A has no wear sleeve. Model B has a wear sleeve. Model B replaces Model A and is supplied with wear sleeve already installed. If installing a new Model B fan hub, skip steps (33.1) and (33.2). If replacing wear sleeve on existing Model B fan hub, do steps (33.1) and (33.2).

(33.1) Apply plastic gasket to inside diameter of wear sleeve (27.1) and mating surface of fan hub (27).

(33.2) Press wear sleeve (27.1) on shoulder of fan hub (27).

(34) Apply lubricating oil to 0.75 in. long (19 mm) straight roller bearing (28).

(35) Press 0.75 in. long (19 mm) straight roller bearing (28), numbered side up, into fan hub (27), using long end of tool No. 1 until shoulder of tool No. 1 contacts fan hub.

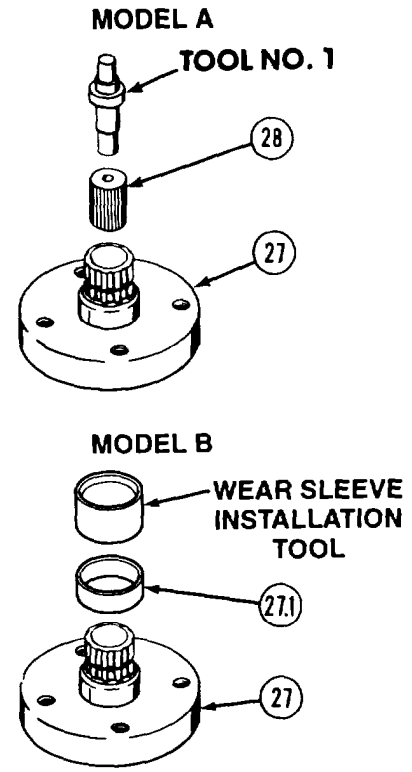

(36) Apply lubricating oil to 1 in. long (25 mm) straight roller bearing (29).

NOTE

Roller bearing is correctly installed when shoulder of tool No. 1 contacts fan hub.

(37) Press l-in. long (25 mm) roller bearing (29) numbered side up, into fan hub (27) using short end of tool No. 1 until shoulder of tool No. 1 contacts fan hub.

(38) Install retainer ring (30) in fan hub (27).

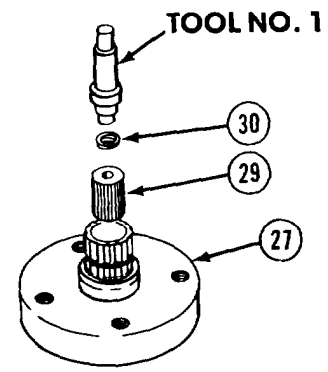

(39) Install tool No. 2 on tool No. 5.

(40) Support bearing retainer (31) with tool No. 2 and tool No. 5.

(41) Apply lubricating oil to oil seal (32).

(42) Press oil seal (32) into bearing retainer (31) using tool No. 4 until tool No. 4 bottoms out against tool No. 2.

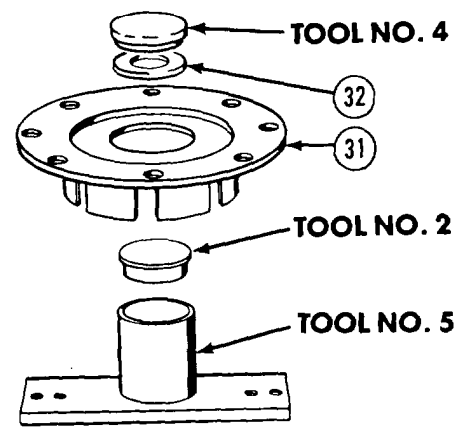

https://truckmanualshub.com/

Fan Clutch Maintenance Instructions (Cont)

18-2. FAN CLUTCH REPAIR (CONT).

(43) Support bearing retainer (31) with suitable blocking.
(44) Apply lubricating oil to bearing race (33).
(45) Press bearing race (33), thin edge up, into place using tool No. (2) until tool No. 2 contacts bearing retainer (31).
(46) Apply lubricating oil to oil seal (32) and install fan hub (27) in bearing retainer (31).

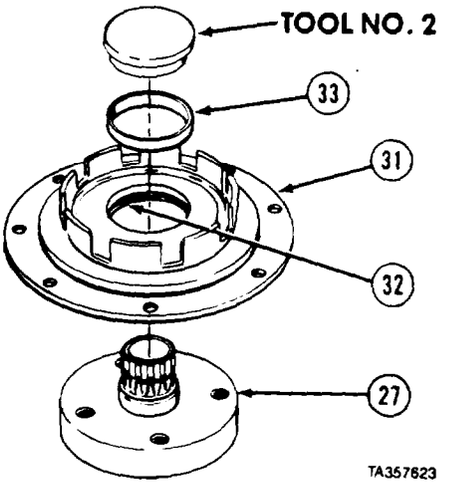

CAUTION

Before installing bearing, make sure blocking is under fan hub or damage to bearing retainer may result.

(47) Support fan hub (27) with suitable blocking.
(48) Apply lubricating oil to bearing (34).
(49) Press bearing (34), numbered side up, over fan hub (27) into bearing retainer (31) using tool No. 10 until tool No. 10 contacts bearing retainer.

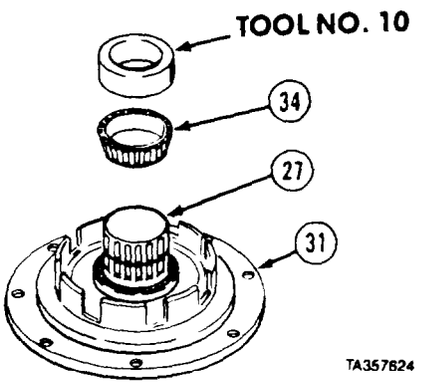

(50) Install spacer *(35)* and retaining ring *(36).*

CAUTION

Before pressing fan hub, make sure blocking is installed under bearing retainer. not fan hub, or damage to fan hub may result.

(51) Support bearing retainer (31) with suitable blocking.
(52) Press fan hub (27) down l/16-in. (1.5 mm) using tool No. 3 to seat bearing (34) against spacer (35) and retaining ring (36).

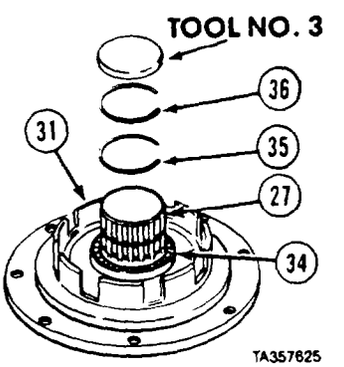

https://truckmanualshub.com/

Fan Clutch Maintenance Instructions (Cont)

CAUTION

Make sure retaining ring fits completely in groove of splined hub and groove of back plate or retaining ring, splined hub, and back plate may be damaged.

(53) Install back plate (37), flat side down, on splined hub (38).
(54) Install retaining ring (39) on splined hub (38).

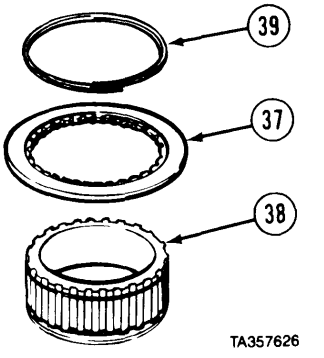

CAUTION

Oil holes in fan hub must aline with oil ducts in splined hub or clutch may be damaged.

(55) Aline oil holes (40) with ducts (41) and install splined hub (38) on bearing retainer (31).
(56) Install six internally splined plates (42) alternating with five clutch plates (43).
(57) Install pressure plate (44) flat side down.

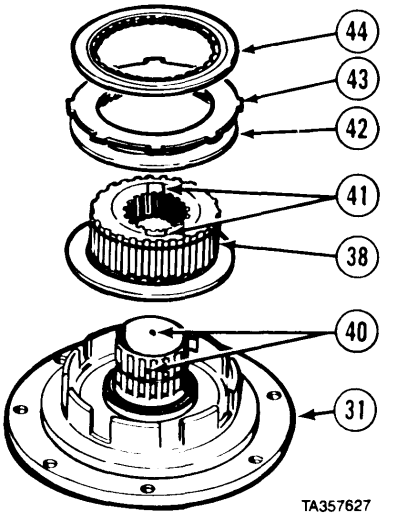

(58) Support bearing retainer (31) with suitable blocking.
(59) Apply light pressure against pressure plate (44) using tool No. 5.

CAUTION

Do not touch pressure plate with hands while taking measurements or measurements will be wrong,

(60) Measure and write down distance from pressure plate (44) to outer flange of bearing retainer (31).
(61) Measure and write down distance from pressure plate (44) and bearing retainer (31) on opposite side of bearing retainer from first measurement,
(62) Add measurements from step (60 and (61) and write down answer.
(63) Add 0.250-in. (6.35 mm) to result from step (62) and write down answer. This is measurement A.

https://truckmanualshub.com/

Fan Clutch Maintenance Instructions

18-2. FAN CLUTCH REPAIR (CONT).

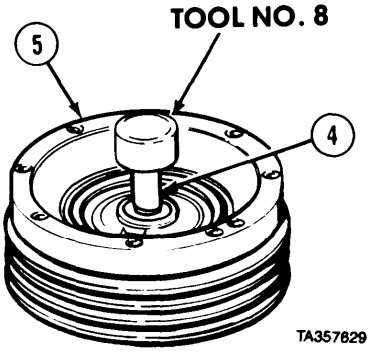

(64) Support fan pulley (5) with suitable blocking.

CAUTION

Apply only slight pressure on shaft when alining shaft straight up and down, or parts on fan hub may be damaged or improperly alined.

(65) Aline bracket and shaft assembly (4) straight up and down using tool No. 8.

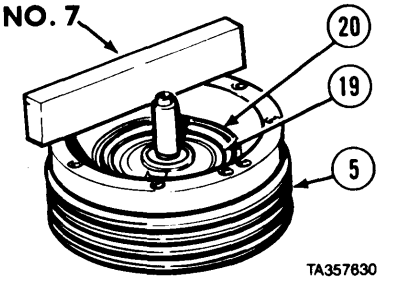

CAUTION

Do not place tool No. 7 over screw holes or improper measurements may result and cause damage to clutch parts.

(66) Place tool No. 7 on fan pulley (5).
(67) Measure and write down distance between top side of tool No. 7 and thrust washer (19), Take measurement next to retaining ring (20).
(68) Move tool No. 7 and repeat step (67) on opposite side of fan pulley (5).
(69) Add measurement from step (67) to measurement from step (68) and write down answer.
(70) Subtract 2.00-in. (50.8 mm) from result in step (69) and write down answer. This is measurement B.
(71) Subtract measurement B from measurement A, step (63), and write down answer.
(72) Subtract answer in step *(71)* from 0. 136-in. (3.45 mm). This answer is shim gap indicator.
(73) If shim gap indicator is 0.000 to 0.008 in. (0.00 to 0.20 mm), shim is not required. If gap is 0.009 to 0.028 in. (0.23 to 0.71 mm), use 0.010 in. (0,25 mm) shim. If gap is 0.029 to 0.048 in. (0.74 to 1.22 mm), use 0.020 in. (0.51 mm) shim. If gap is 0.049 to 0.068 in. (1.25 to 1.73 mm), use 0.030 in. (0.76 mm) shim. If gap is 0,069 to 0.088 in. (1.75 to 2.23 mm), use 0.040 in. (1.02 mm) shim, and if gap is 0.089 to 0.108 in. (2.26 to 2.74 mm), use 0.050 in. (1.27 mm) shim.

NOTE

When removing clutch assembly, carefully lift out assembly so all parts remain together for easy installation.

(74) Remove clutch assembly (45) from bearing retainer (31).
(75) Apply grease to shim (46).
(76) Install shim (46) on fan hub (27).

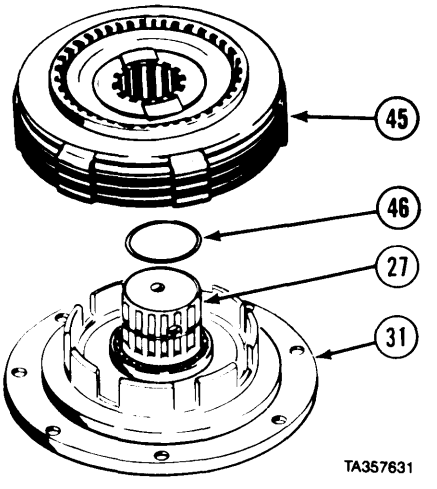

https://truckmanualshub.com/

Fan Clutch Maintenance Instructions (Cont)

CAUTION

Oil holes in fan hub must line up with oil ducts in splined hub or clutch may be damaged during operation.

(77) Aline oil holes (40) with ducts (41) and install clutch assembly (45) on bearing retainer (31).

NOTE

If clutch assembly has come apart, it must be installed following steps (53) through (57).

(78) Apply lubricating oil to preformed packing (47) and needle bearing (48).
(79) Install preformed packing (47).
(80) Install needle bearing (48).

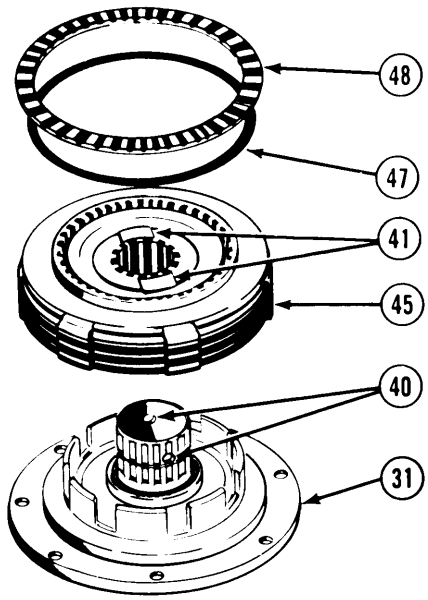

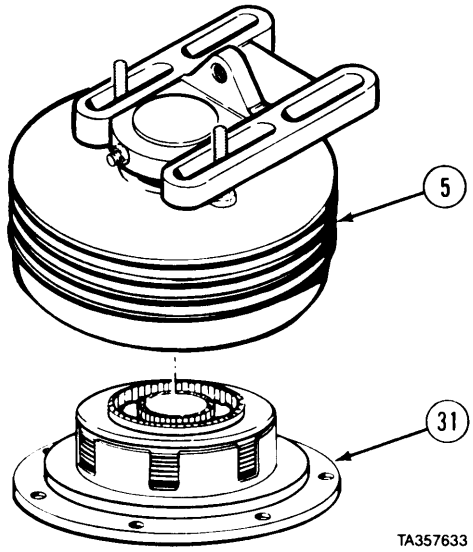

(81) Install fan pulley (5) on bearing retainer (31).

https://truckmanualshub.com/

Fan Clutch Maintenance Instructions (Cont)

18-2. FAN CLUTCH REPAIR (CONT).

NOTE

Clutch assembly will fall apart if not held together while turning over fan clutch.

(82) Install eight screws (49) and tighten to 20 lb-ft (27 N°m).

(83) Install 0.095-in. (2.4 mm) thick thrust washer (50), needle bearing (51), and second 0.095-in. (2.4 mm) thick thrust washer (50).

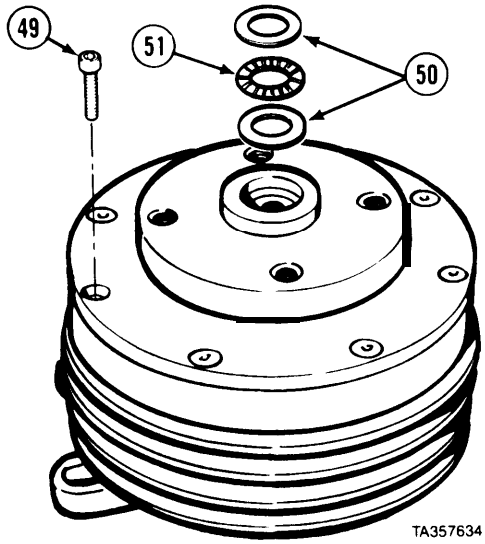

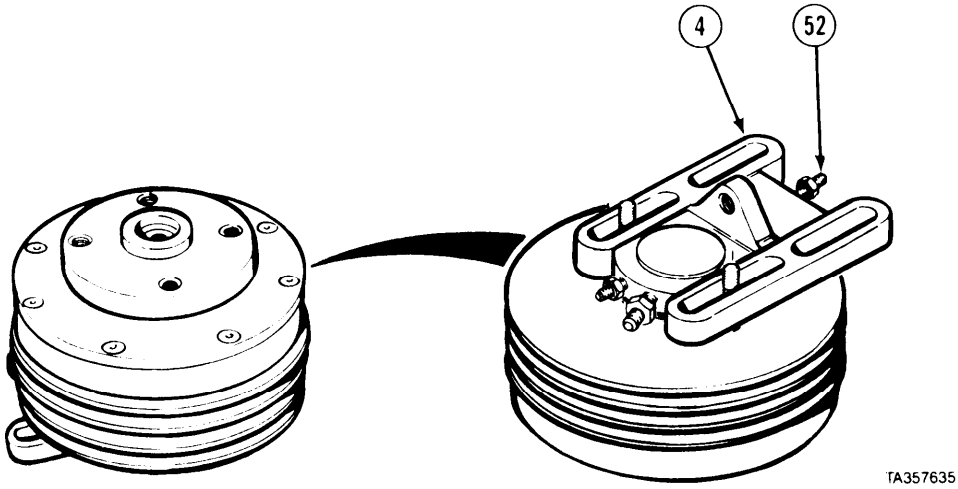

WARNING

When using compressed air, be sure to use chip guarding and personal protective equipment, (goggles/shield, gloves, etc.) to avoid personal injury.

CAUTION

Do not turn fan clutch upside down, thrust washers and needle bearing will fall out.

(84) Apply compressed air four times, at 100 psi (690 kPa), into port (52) on bracket and shaft assembly (4).

https://truckmanualshub.com/

Fan Clutch Maintenance Instructions (Cont)

(85) Keep air pressure applied at 100 psi (690 kPa) and install shims (53) between thrust washers (50) and retaining ring groove (54).
(86) Install retaining ring (55). If retaining ring cannot be installed, remove one shim (53).
(87) Release air pressure.

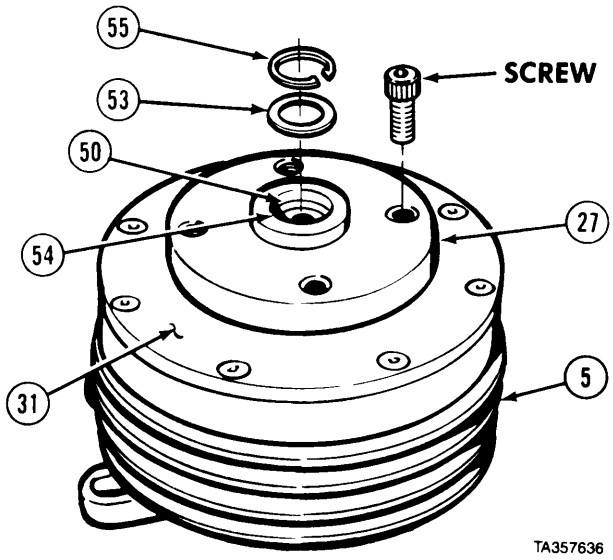

CAUTION

Screws must go through holes on opposite sides of fan hub or improper adjustment may result and cause damage to fan clutch during operation.

(88) Install two 1/2-13 x 2 in. (51 mm) screws from fan drive overhaul tool kit through fan hub (27) and finger-tighten against bearing retainer (31).
(89) Rotate fan pulley (5) four turns.

CAUTION

Screws in fan hub must be finger tight and retaining ring must be against top of groove or incorrect measurement will be taken and result in improper shim adjustment and possible damage to fan clutch during operation.

(90) Using feeler gage, measure gap between shims (53) and retaining ring (55).

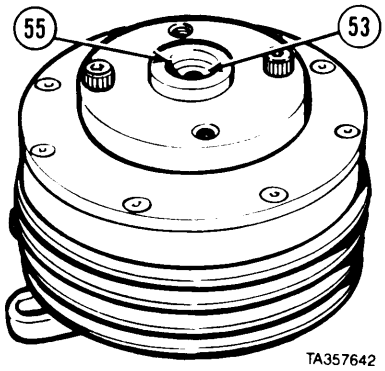

NOTE

Shim stack should be arranged so that thickest shims are against thrust washer and retaining ring, with thinner shims between.

(91) Add or remove shims (53) as needed, to leave 0.001-in. (0.025 mm) gap between shim and retaining ring (55).

WARNING

When using compressed air, be sure to use chip guarding and personal protective equipment, (goggles/shield, gloves, etc.), to avoid personal injury.

(92) Apply air pressure at 100 psi (690 kPa).

NOTE

If 0.001-in. to 0.003-in. (0.025 to 0.076 mm) gap cannot be reached, perform steps (94) through (98),

(93) Add or remove shims (53) as needed, to leave 0.003-in. (0.076 mm) gap between shim and retaining ring (55) with air pressure applied.

https://truckmanualshub.com/

Fan Clutch Maintenance Instructions (Cont)

18-2. FAN CLUTCH REPAIR (CONT).

(94) Release air pressure and remove two 1/2-13 x 2 in. (51 mm) screws.
(95) Loosen eight screws (49),
(96) Add shims (53), as needed, to leave 0.001 to 0.003-in. (0.025 to 0.076 mm) gap.
(97) Tighten eight screws (49) evenly to 20 lb-ft (27.12 N°m).
(98) Install two 1/2- 13 x 2 in. (51 mm) screws through fan hub (27) and finger-tighten screws against bearing retainer (31).

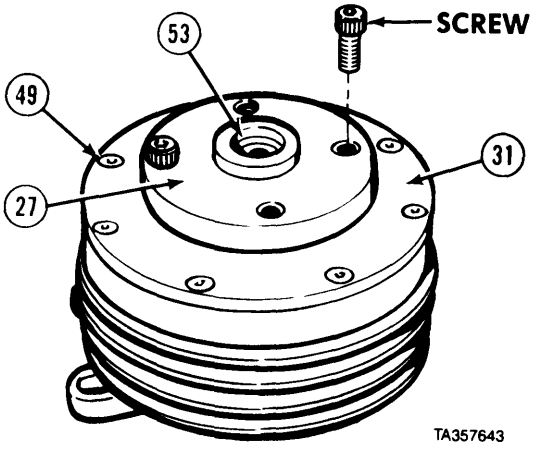

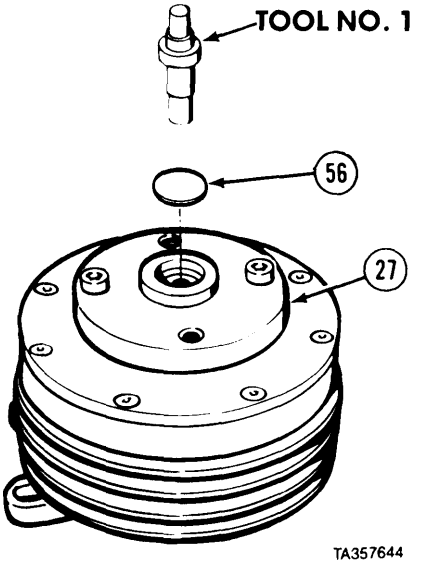

(99) Apply adhesive-sealant to expansion plug (56).

CAUTION

Insure screws from fan drive overhaul tool kit are installed while installing expansion plug to prevent damage to bearings.

(100) Install expansion plug (56), numbered side down, in fan hub (27) using tool No. 1.
(101) Remove two 1/2-13 x 2 in. (51 mm) screws from fan hub (27).

https://truckmanualshub.com/

Fan Clutch Maintenance Instructions (Cont)

(102) Install tool No. 5 and two tools No. 11 on fan hub (27) with two 1/2-13 x 2 in. (51 mm) screws.

CAUTION

Jaws of vise must not touch fan mounting hub or fan mounting hub and attaching parts may be damaged.

(103) Clamp clutch assembly (45) in vise with soft jaws.

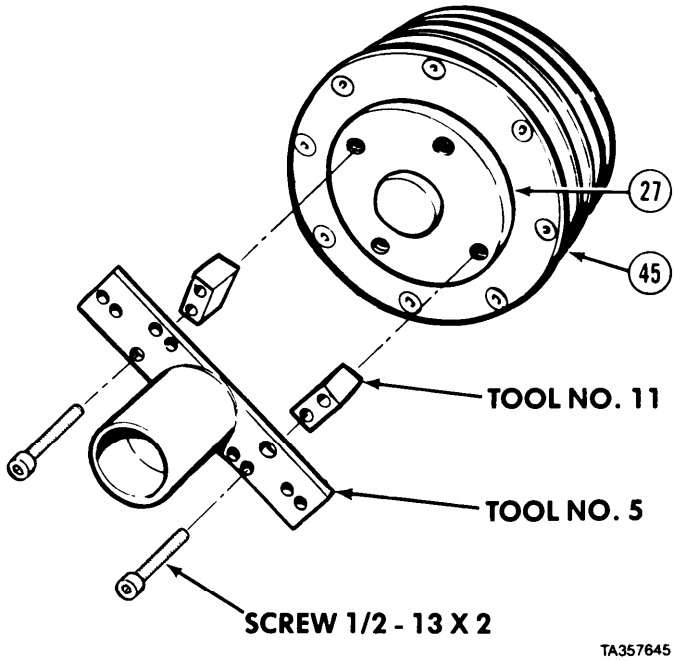

WARNING

When using compressed air, be sure to use chip guarding and personal protective equipment, (goggles/shield, gloves, etc.) to avoid personal injury.

(104) Apply compressed air at 100 psi (690 kPa) and spin fan hub (27) four times. Fan hub should turn easily.

(105) Remove compressed air. Turn fan hub (27) with socket extension installed in 1/2 in. drive hole (57) in tool No. 5. Fan hub should require 140 lb-ft (189.84 N°m) to turn.

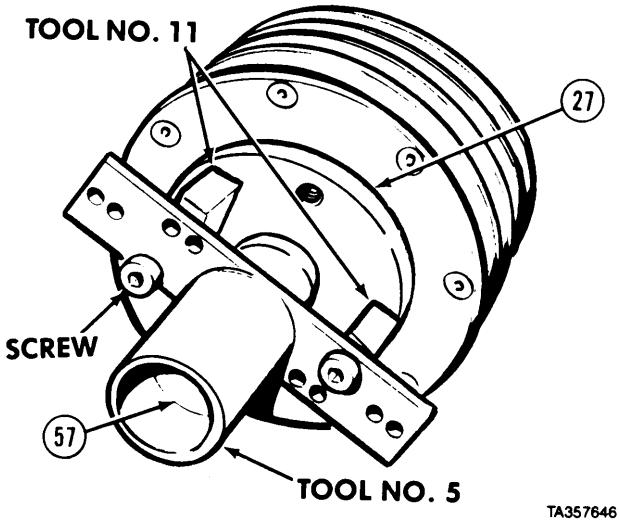

(106) Remove tool No. 5, two tools No. 11, and two 1/2-13 x 2 in. (51 mm) screws from fan hub (27).

d. Follow-on Maintenance. None.

END OF TASK

https://truckmanualshub.com/

https://truckmanualshub.com/

CHAPTER 19

ENGINE TUNE-UP

Contents

	Para	Page
General	19-1	19-1
Exhaust Valve Clearance Adjustment	19-2	19-1
Engine Brake Retarder Adjustment	19-3	19-4
Fuel Injector Timing Adjustment	19-4	19-6
Governor Gap Adjustment	19-5	19-8
Injector Rack Control Lever Adjustment	19-6	19-9
Starting Aid Screw Adjustment	19-7	19-19
Throttle Delay Adjustment	19-8	19-21
Fuel Modulator Adjustment	19-8.1	19-22.1
Engine Speed Adjustment	19-9	19-22.4
Engine Speed Control Adjustment (M984)	19-10	19-27
EngineCompressionCheck	19-11	19-31

Section I. INTRODUCTION

19-1. GENERAL. This chapter covers tune-up instructions for the 8V92TA engine. Adjustments are given for exhaust valve clearance, brake retarder adjustment, fuel injector timing, governor adjustments, injector rack control lever, starting aid screw, throttle delay, engine speed adjustments, and compression check. The subassemblies and parts which must be removed before engine tune-up will be referenced to other paragraphs of this manual, TM 9-2320-279-10, TM 9-2320-279-20, or TM 9-2320-279-34.

Section II. ENGINE TUNE-UP ADJUSTMENTS

Engine Tune-Up Instructions

19-2. EXHAUST VALVE CLEARANCE ADJUSTMENT.

This task covers:

a. Adjustment
b. Follow-on Maintenance

INITIAL SETUP

Models
All

Test Equipment
None

Special Tools
Gage, feeler 007958

Supplies
None

Personnel Required
MOS 63W, Wheel vehicle repairer (2)

References
None

Equipment Condition

TM or Para	*Condition Description*
TM 9-2320-279-10	Valve rocker covers removed.

Special Environmental Conditions
None

General Safety Instructions
None

Level of Maintenance
Direct Support

https://truckmanualshub.com/

Engine Tune-Up Instructions (Cont)

19-2. EXHAUST VALVE CLEARANCE ADJUSTMENT (CONT).

a. Adjustment.

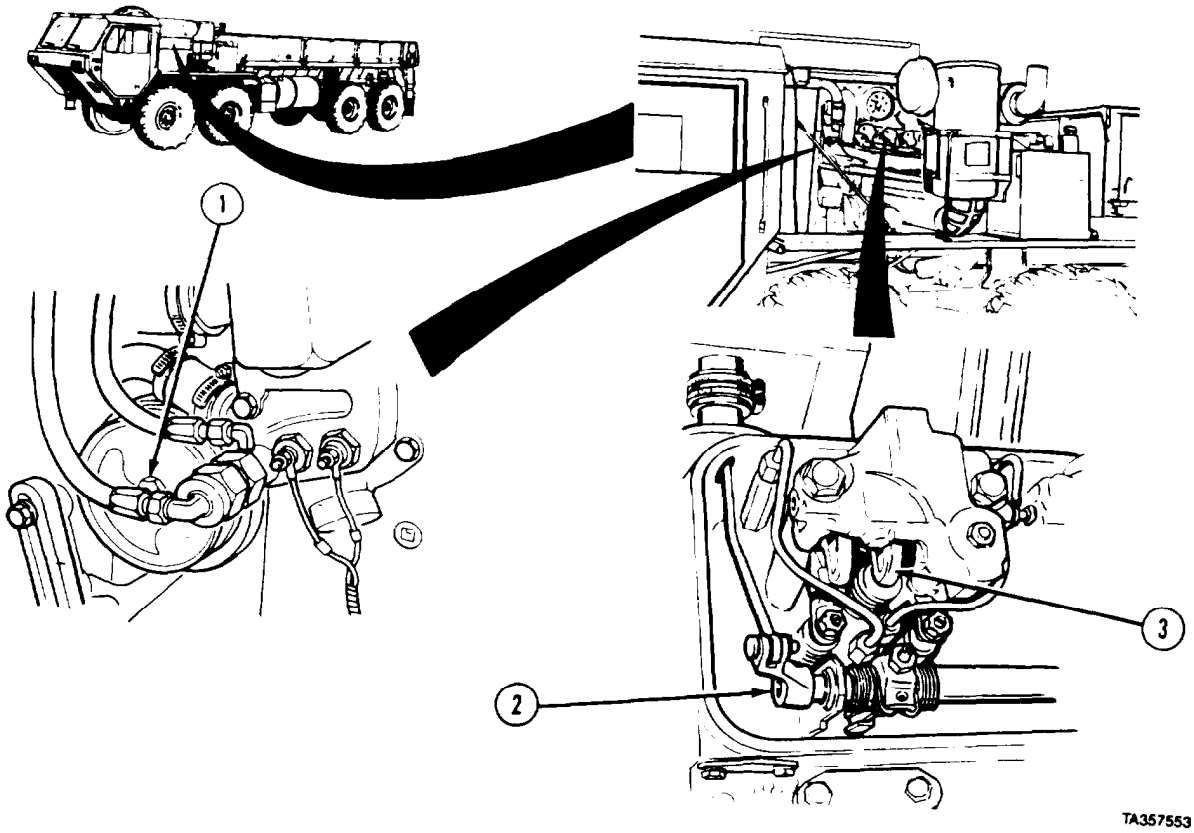

NOTE

Pull control lever fully toward operator for no fuel position.

(1) Soldier A rotates crankshaft by turning pulley (1) clockwise while Soldier B holds rack control lever (2) in the no-fuel position and tells Soldier A when injector follower (3) is fully depressed.

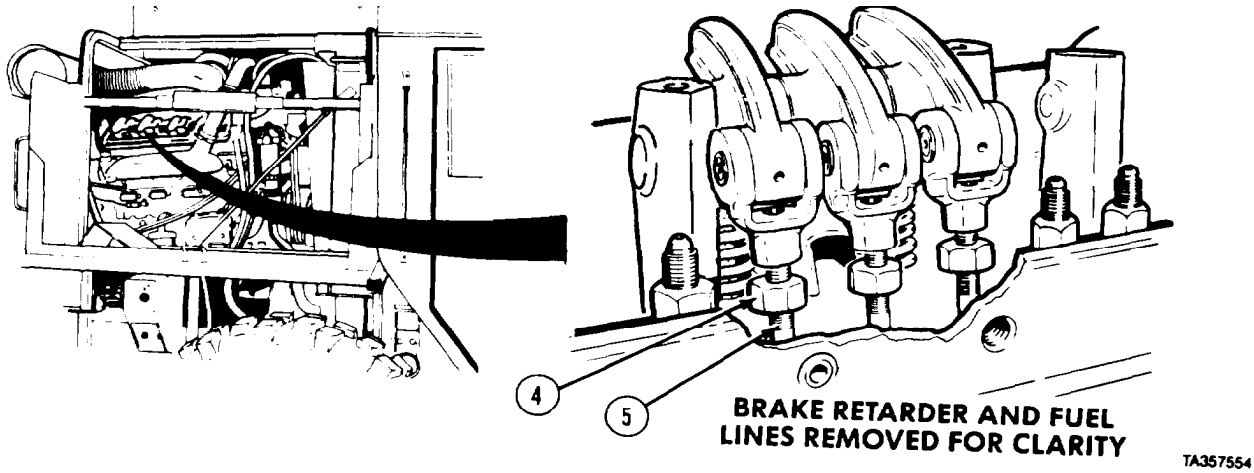

(2) Loosen locknut (4) on exhaust valve rocker arm push rod (5).

https://truckmanualshub.com/

Engine Tune-Up Instructions (Cont)

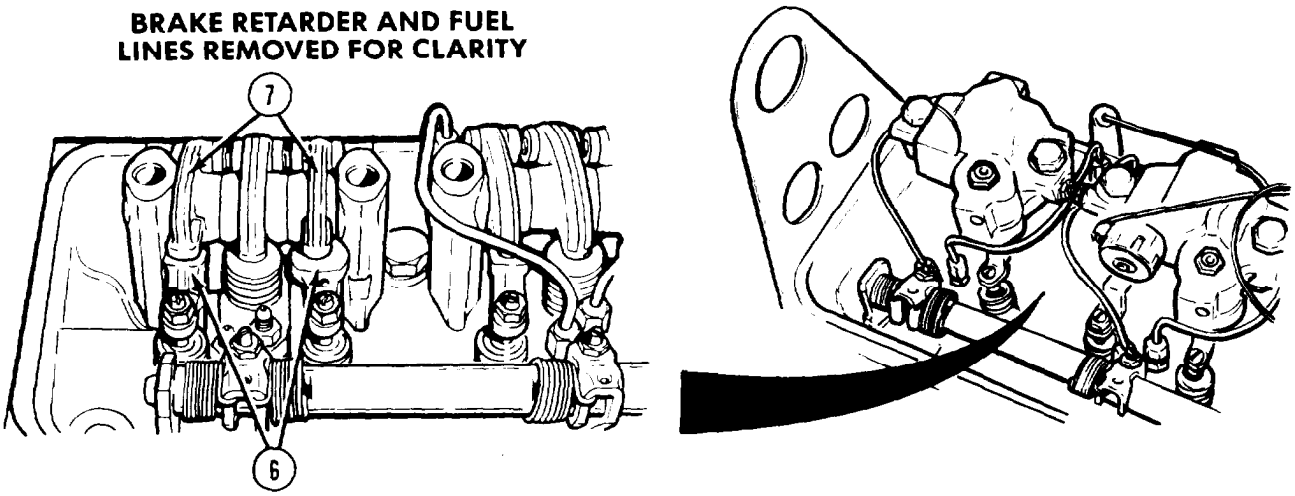

NOTE

Use 0.016 in. feeler gage for cold setting.

(3) Insert feeler gage between valve bridge (6) and valve rocker arm pallet (7).

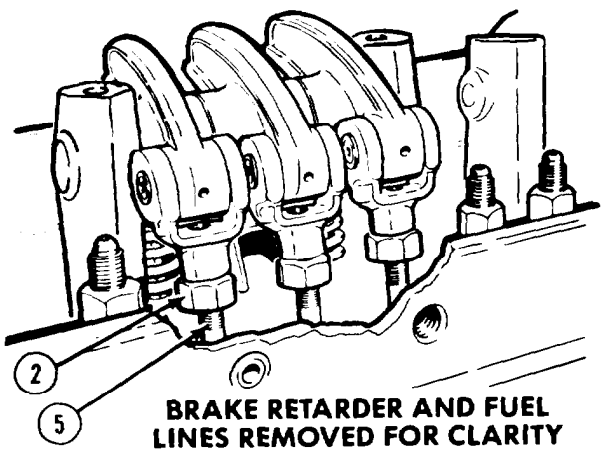

(4) Adjust push rod (5) until slight drag is felt on feeler gage.
(5) Remove feeler gage and tighten push rod locknut (4). Recheck clearance.

https://truckmanualshub.com/

Engine Tune-Up Instructions (Cont)

19-2. EXHAUST VALVE CLEARANCE ADJUSTMENT (CONT).

NOTE

Final exhaust valve clearance check is done after engine has been running.

(6) Repeat steps *(1)* through *(5)* to adjust exhaust valves (8) on remaining seven cylinders.

(7) Start engine and operate for 15 minutes (TM 9-2320-279-10).

(8) Stop engine and check exhaust valve (8) clearance. Follow steps *(1)* through *(5)* if further adjustment is necessary.

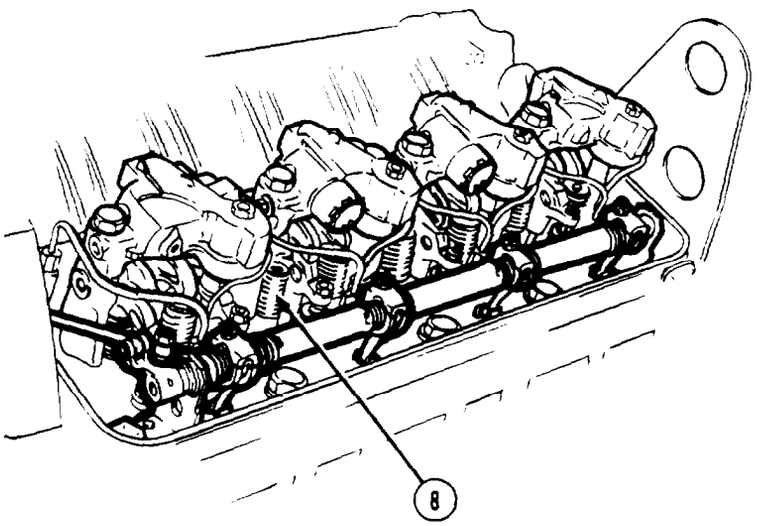

TA357557

b. Follow-on Maintenance. Adjust engine brake retarders (para 19-3).

END OF TASK

19-3. ENGINE BRAKE RETARDER ADJUSTMENT.

This task covers:

a. Adjustment
b. Follow-on Maintenance

INITIAL SETUP

Models
All

Test Equipment
None

Special Tools
Gage, feeler 007958

Supplies
None

Personnel Required
MOS 63W, Wheel vehicle repairer (2)

References
None

Equipment Condition

TM or Para	*Condition Description*
Para 19-2	Exhaust valve clearance adjusted.

Special Environmental Conditions
None

General Safety Instructions
None

Level of Maintenance
Direct Support

https://truckmanualshub.com/

Engine Tune-Up Instructions (Cont)

a. Adjustment.

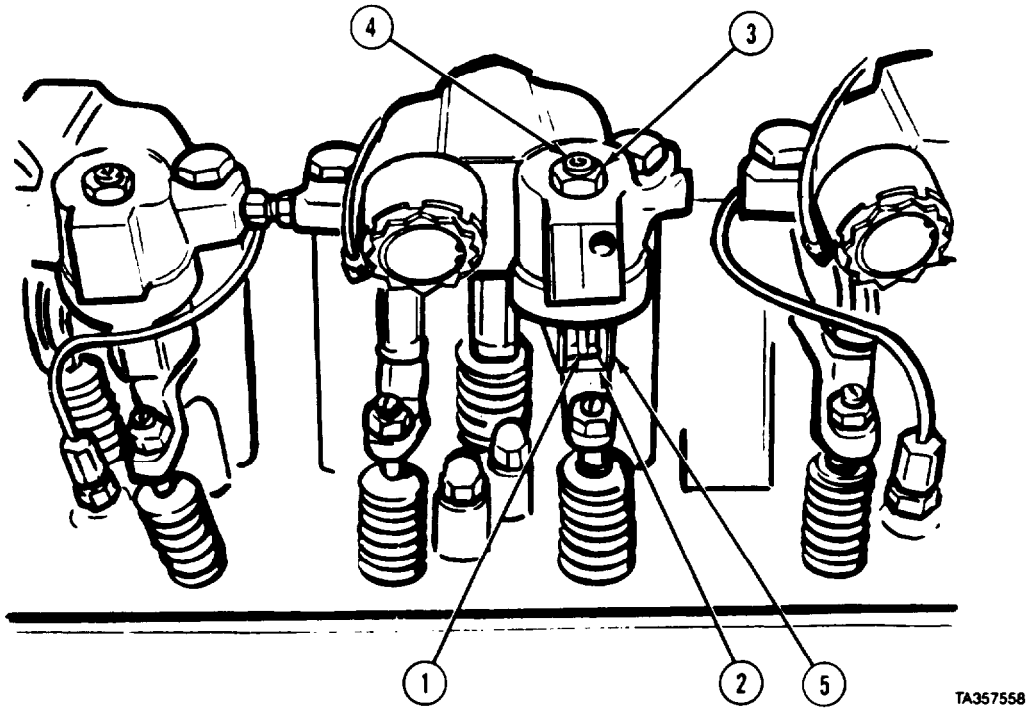

CAUTION

To prevent engine damage make sure exhaust valves are closed and injector follower is fully depressed.

(1) Insert 0.059-in. feeler gage between slave piston foot (1) and exhaust valve bridge (2).
(2) *Loosen locknut (3) and turn adjusting screw (4) until a slight drag is felt on feeler gage.*
(3) Check both feet of slave piston (5).
(4) Hold adjusting screw (4). Tighten locknut (3) to 15 to 18 lb-ft (20 to 24 N.m) and recheck clearance.

b. Follow-on Maintenance.

(1) Install valve rocker cover (TM 9-2320-279-20).
(2) Start engine and operate for 10 minutes (TM 9-2320-279-10).
(3) Turn on engine brake switch (TM 9-2320-279-10).
(4) Open throttle to full engine speed and release.
(5) Check brake operation while engine is returning to idle.
(6) Repeat full-throttle and release procedure six to eight times to bleed air from engine brake system.
(7) Turn off engine (TM 9-2320-279- 10).
(8) Adjust fuel injector timing (para 19-4).

END OF TASK

https://truckmanualshub.com/

Engine Tune-Up Instructions (Cont)

19-4. FUEL INJECTOR TIMING ADJUSTMENT.

This task covers:

a. Adjustment
b. Follow-on Maintenance

INITIAL SETUP

Models
All

Test Equipment
None

Special Tools
Gage, injector J34610 (engines equipped with throttle delay only)
Gage, injector J25502 (engines equipped with fuel modulator only)

Supplies
None

Personnel Required
MOS 63W, Wheel vehicle repairer (2)

References
None

Equipment Condition

TM or Para	*Condition Description*
Para 19-3	Engine brake retarder adjusted.
TM 9-2320-279-20	Valve rocker covers removed.

Special Environmental Conditions
None

General Safety Instructions
None

Level of Maintenance
Direct Support

a. Adjustment.

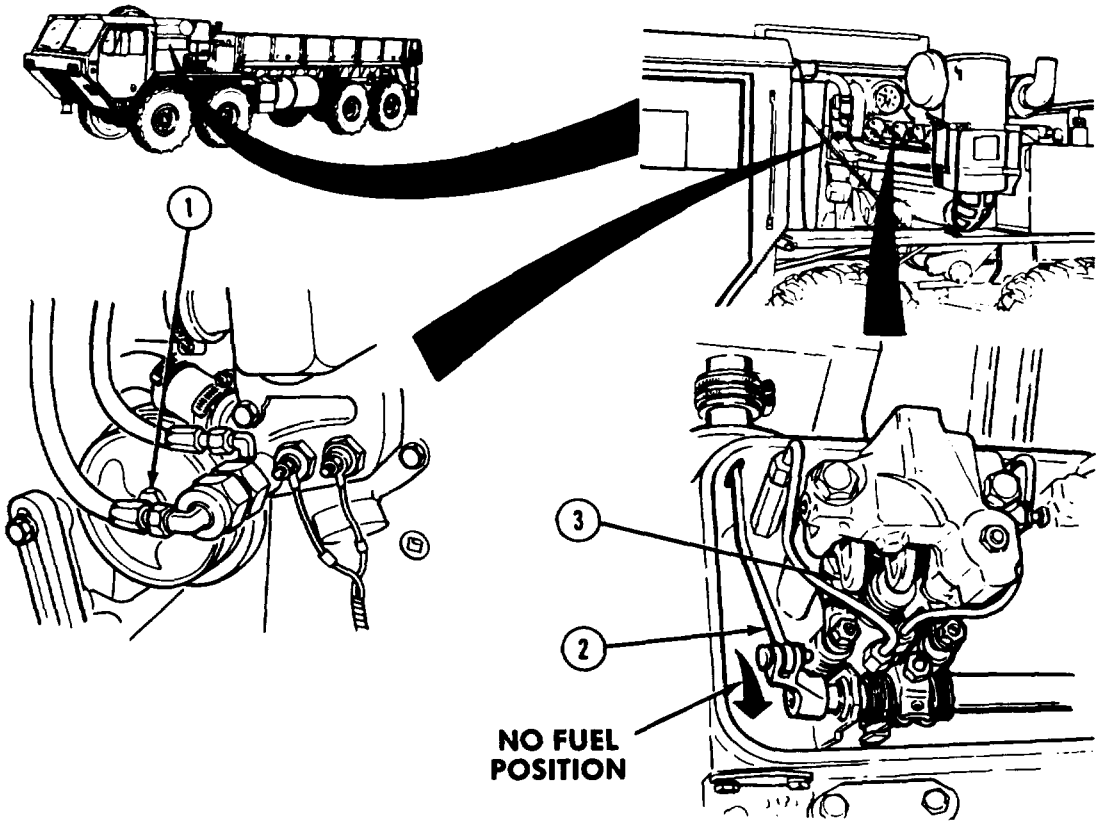

https://truckmanualshub.com/

Engine Tune-Up Instructions (Cont)

(*1*) Soldier B rotates crankshaft by turning pulley (1) clockwise while Soldier A holds fuel rod clevis (2) in the no-fuel position and tells Soldier B when exhaust valves (3) are fully opened.

NOTE

Flat side of injector gage faces injector follower.

(2) Insert 1.466 in. injector gage (engines with throttle delay) or 1.52 in. injector gage (engines with fuel modulator) in hole at top of fuel injector body (4).

(3) Loosen locknut (5) on injector rocker arm push rod (6).

(4) Turn push rod (6) and adjust injector rocker arm (7) so flat side of injector gage passes just over top of injector follower (8).

(5) Hold push rod (6) and tighten locknut (5).

(6) Push injector gage into fuel injector body (4) and recheck clearance of injector follower (8). If clearance is wrong repeat steps *(2)* through *(5)*.

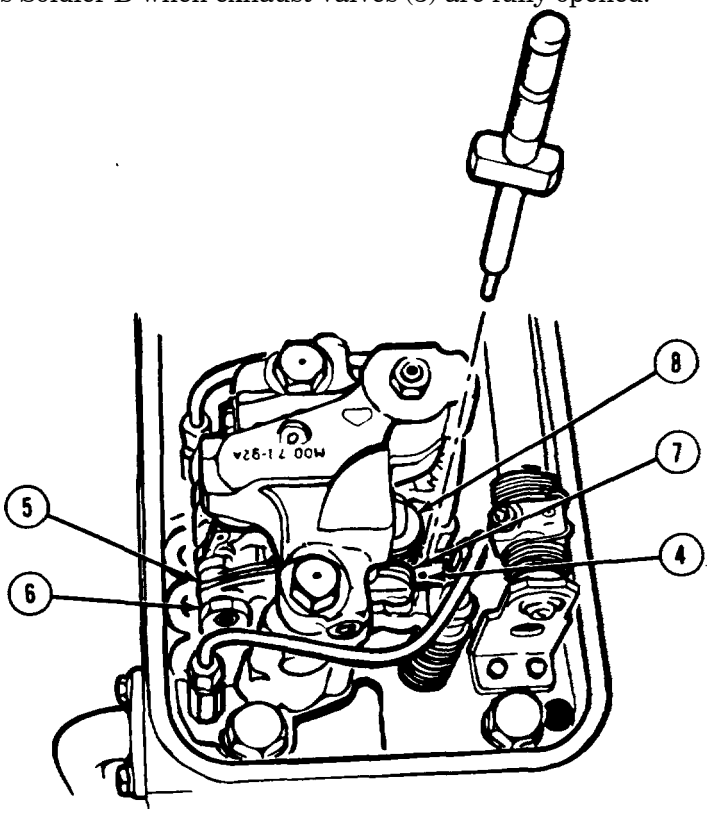

(7) Adjust timing of remaining seven fuel injectors (9) following steps *(1)* through *(6)*.

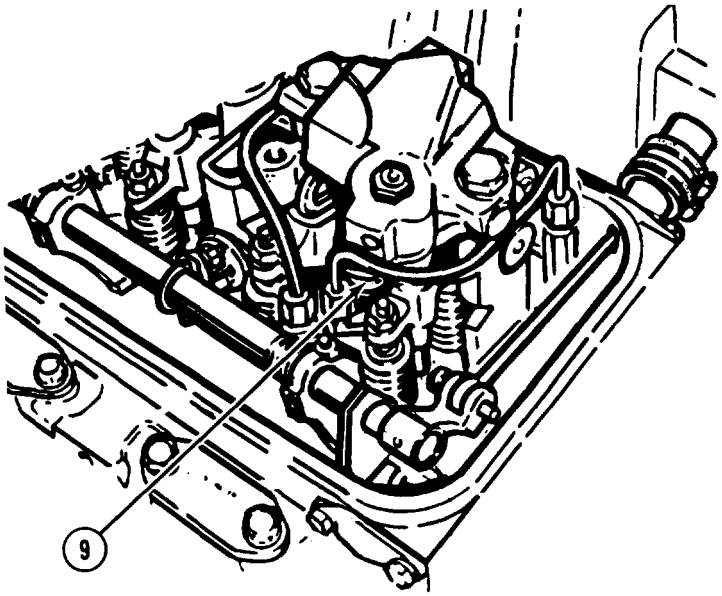

b. Follow-on Maintenance. Adjust governor gap (para 19-5).

END OF TASK

https://truckmanualshub.com/

19-5. GOVERNOR GAP ADJUSTMENT.

This task covers:

a. Adjustment
b. Follow-on Maintenance

INITIAL SETUP

Models
All

Test Equipment
None

Special Tools
Gage, governor gap J23478

Supplies
None

Personnel Required
MOS 63W, Wheel vehicle repairer

References
None

Equipment Condition

TM or Para	*Condition Description*
Para 19-4	Fuel injector timing adjusted.
Para 15-4	Governor cover removed.

Special Environmental Conditions
None

General Safety Instructions
None

Level of Maintenance
Direct Support

a. Adjustment.

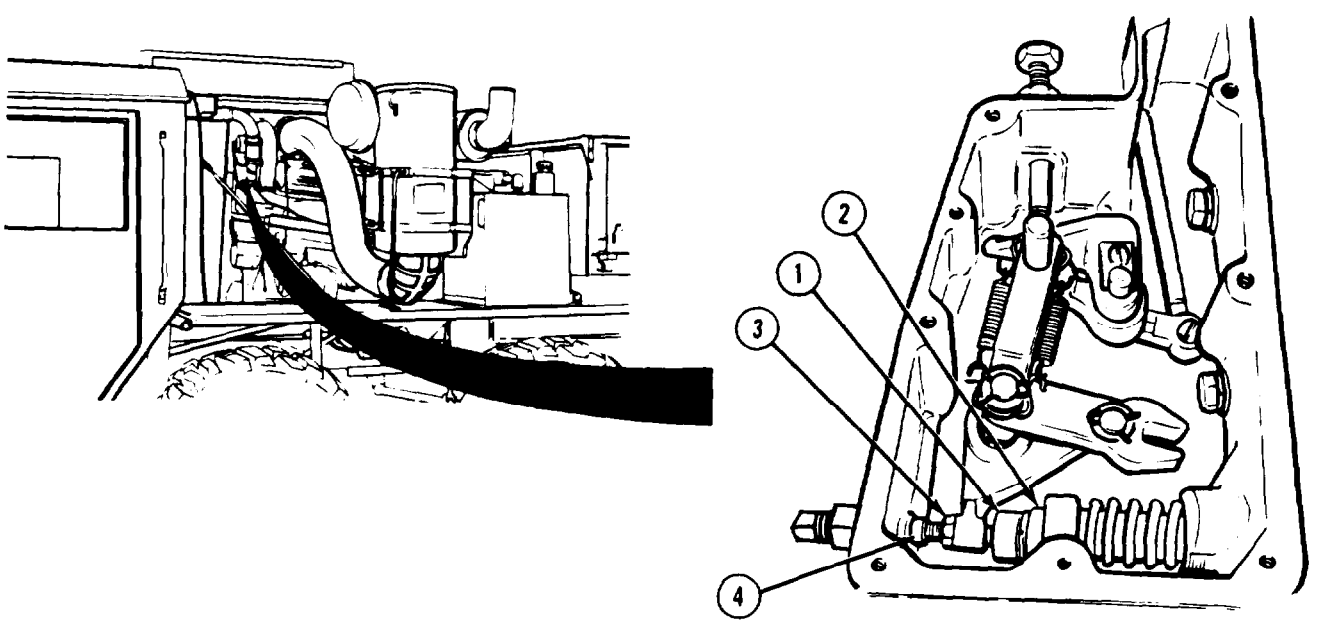

https://truckmanualshub.com/

NOTE

Clearance required is 0.200-m. (5.08 mm).

Be sure starting aid screw is backed out enough to make it ineffective when making adjustment. Starting aid screw is only used with engines prior to serial number 8VF-106635.

(1) Check gap between low speed spring cap (1) and high speed spring plunger (2) using governor gap gage.
(2) Loosen nut (3) and adjust screw (4) to obtain proper clearance.

b. Follow-on Maintenance.

(1) Install governor cover (para 15-4).
(2) Adjust injector rack control lever (para 19-6).

END OF TASK

19-6. INJECTOR RACK CONTROL LEVER ADJUSTMENT.

This task covers:

a. Adjustment
b. Follow-on Maintenance

INITIAL SETUP

Models
All

Test Equipment
None

Special Tools
None

Supplies
None

Personnel Required
MOS 63W, Wheel vehicle repairer (2)

References
None

Equipment Condition

TM or Para	*Condition Description*
Para 19-4	Fuel injection timing adjusted.
Para 19-5	Governor gap adjusted.
Para 15-7	Buffer screw switch removed.
Para 15-5.1	Fuel modulator clamp removed from injector control tube (engines equipped with fuel modulator only).

Special Environmental Conditions
None

General Safety Instructions
None

Level of Maintenance
Direct Support

https://truckmanualshub.com/

Engine Tune-Up Instructions (Cont)

19-6. INJECTOR RACK CONTROL LEVER ADJUSTMENT (CONT).

a. Adjustment.

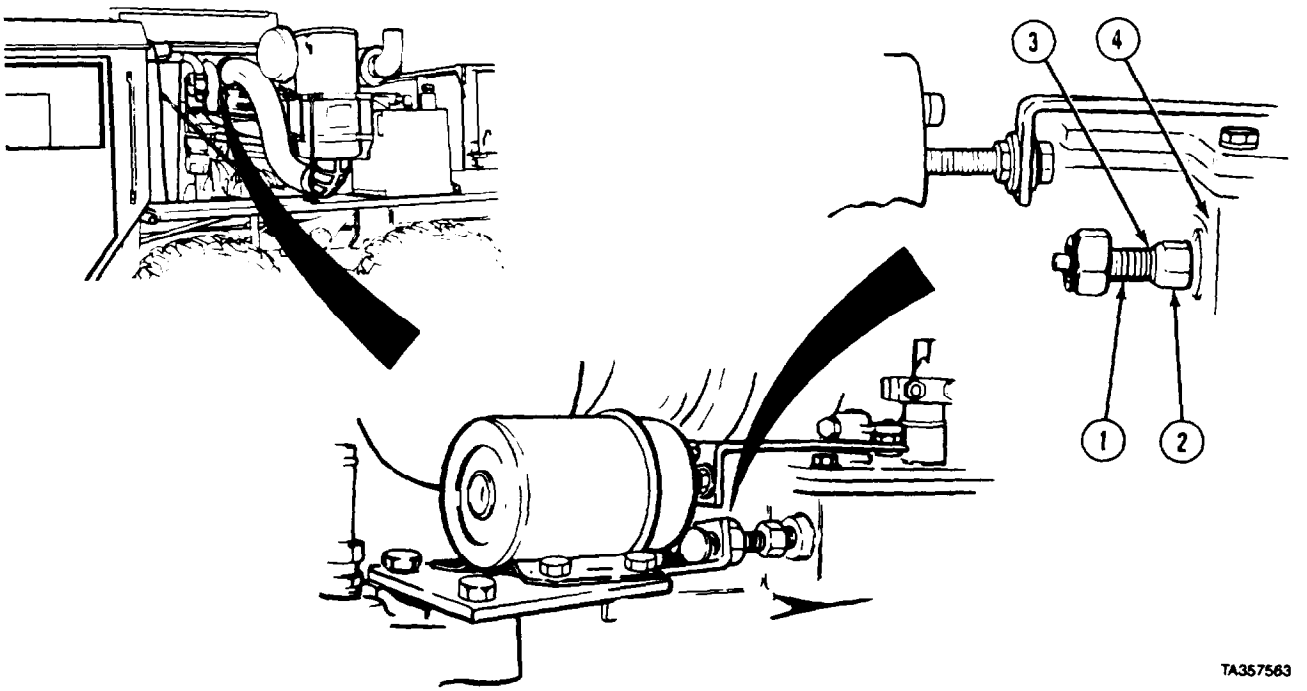

NOTE

Buffer screw will turn with locknut.

(1) Loosen buffer screw (1) by turning locknut (2) until face (3) of locknut (2) is 5/8-in. (15.89 mm) from governor housing (4).

NOTE

Adjustment is same for right and left hand cylinder head banks. Right hand clevis lever is disconnected to adjust left cylinder number one.

(2) Remove cotter pin (5) and clevis pin (6) from fuel rod (7) and injector rack clevis lever (8).

(3) Loosen two nuts (9) from throttle delay (10).

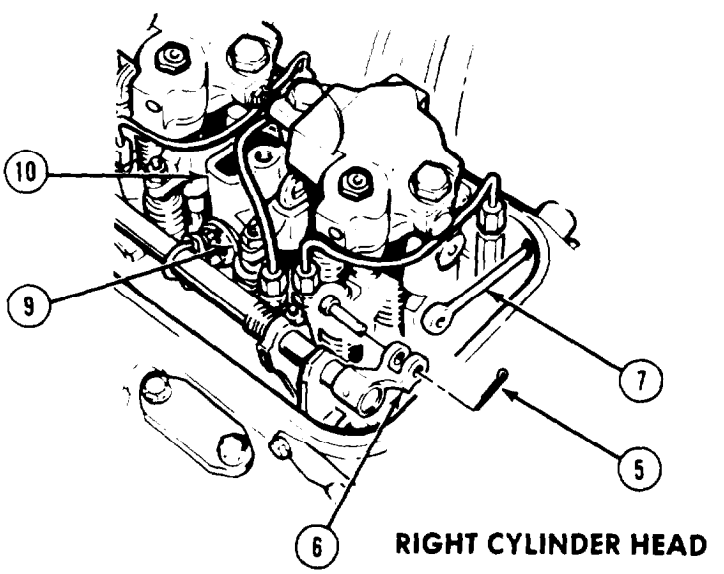

https://truckmanualshub.com/

Engine Tune-Up Instructions (Cont)

NOTE

False fuel rack setting may result if idle speed adjusting screw is not backed out.

(4) Loosen locknut (11) and remove idle screw (12) half way, approximately 12 to 14 threads.

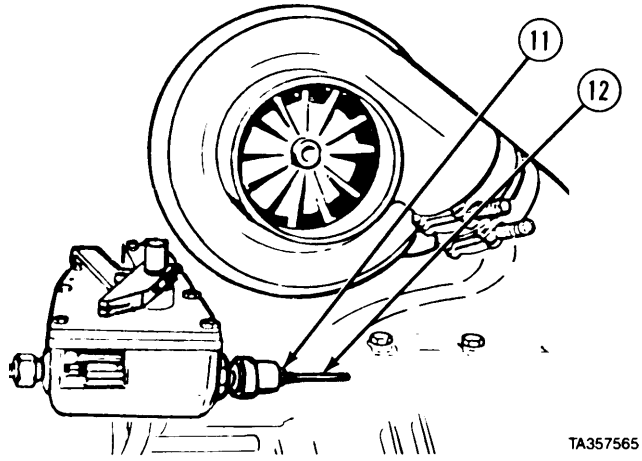

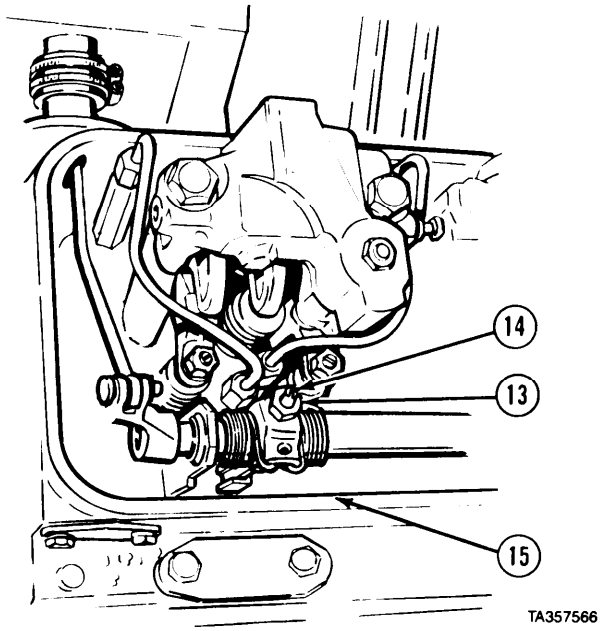

(5) Loosen four locknuts (13) and screws (14) on left hand cylinder head

https://truckmanualshub.com/

19-6. INJECTOR RACK CONTROL LEVER ADJUSTMENT (CONT).

NOTE

- Full fuel position is reached when injector rack is completely in.
- Adjust number one injector rack control lever (right or left cylinder head) first to establish guide for remaining three cylinder control racks,
- Number 1 left and number 1 right are only two preloaded cylinders.

CAUTION

Do not over tighten injector rack control lever adjusting screws. Over tightened screws can damage injector control tube.

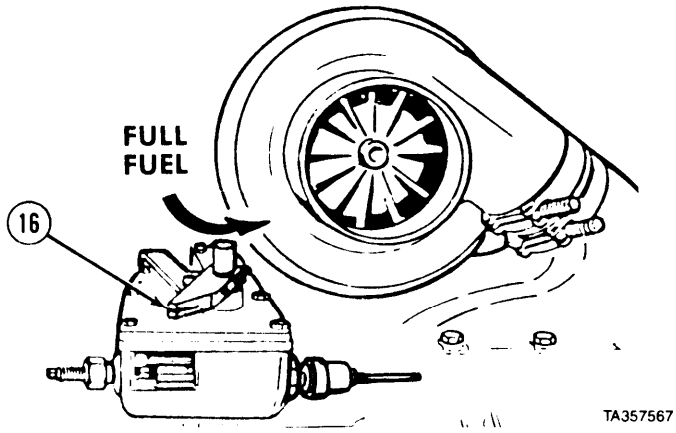

(6) Soldier A pulls throttle control arm (16) to full fuel position and holds arm with light pressure while Soldier B stands by to make adjustment.

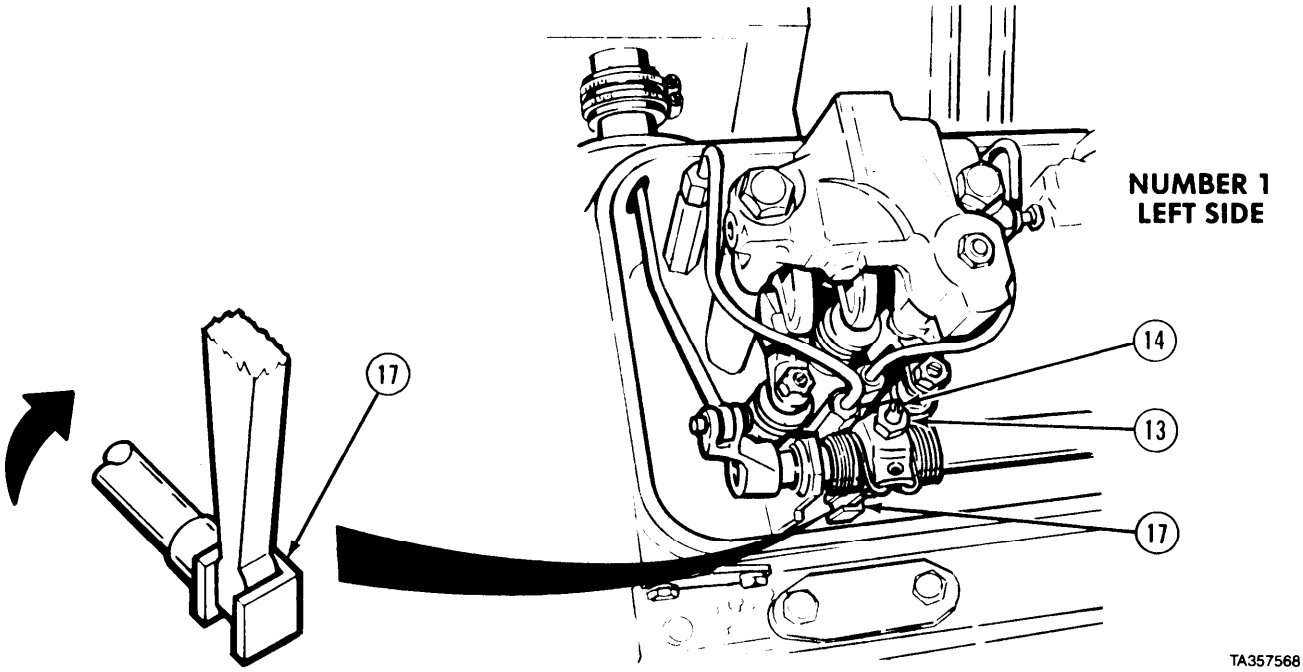

(7) While Soldier A maintains full fuel position, Soldier B tightens adjusting screw (14) until injector control lever (17) starts slight rotation. Tight en additional 1/8 turn, then hold adjusting screw and tighten locknut (13) to 24 to 35 lb-in (2.712 4.068 N°m).

https://truckmanualshub.com/

Engine Tune-Up Instructions (Cont)

(8) Remove cotter pin (18) and clevis pin (19).

(9) Disconnect fuel rod (20) from clevis lever (21).

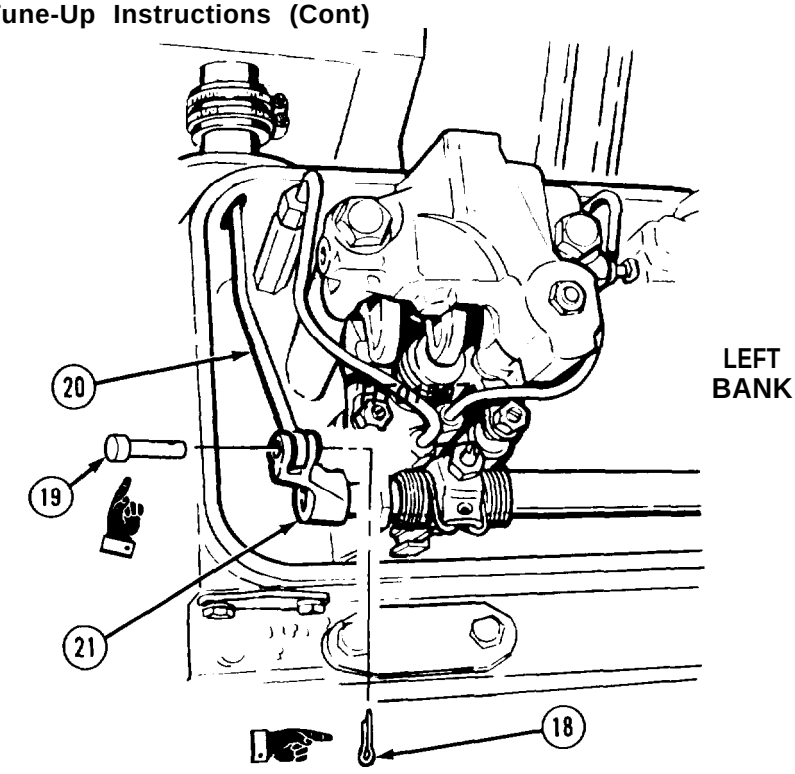

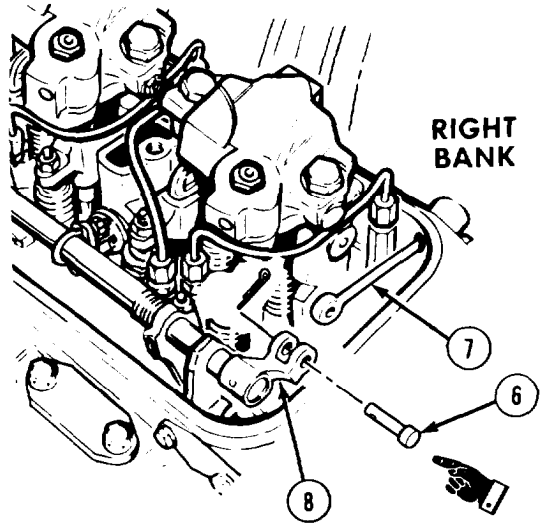

(10) Install fuel rod (7) into clevis lever (8) with clevis pin (6).

https://truckmanualshub.com/

Engine Tune-Up Instructions (Cont)

19-6. INJECTOR RACK CONTROL LEVER ADJUSTMENT (CONT).

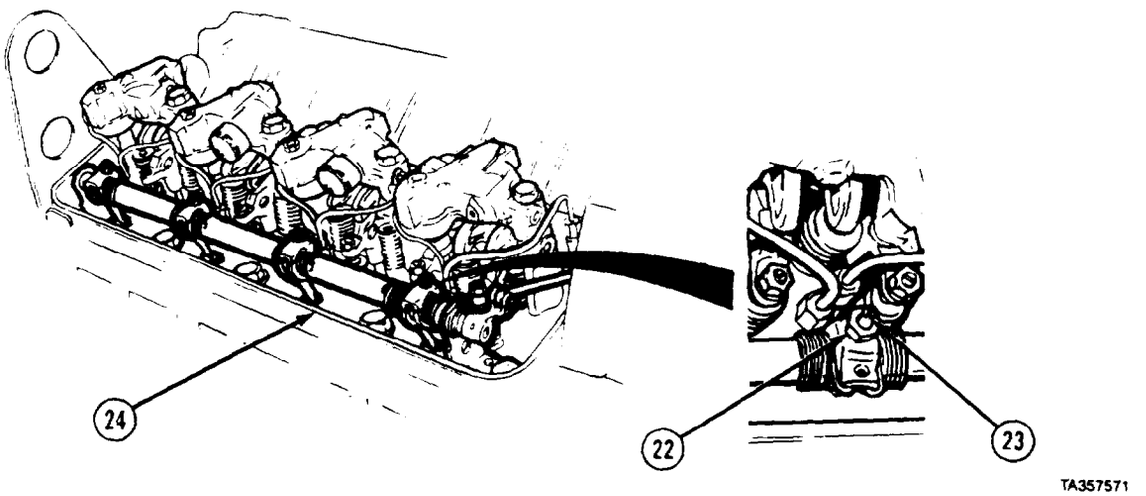

(11) Loosen four locknuts (22) and screws (23) on right cylinder head (24).

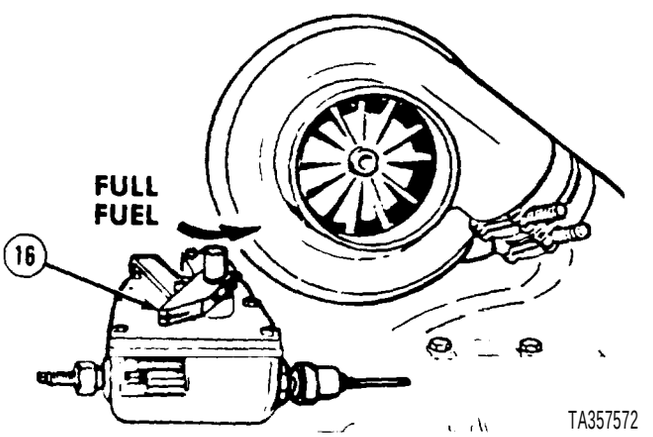

NOTE

. Full fuel position is reached when the injector rack is completely in.

. Adjust number one injector rack control lever (right or left cylinder head) first to establish a guide for remaining three cylinder control racks.

(12) Soldier A pulls throttle control arm (16) to full fuel position and holds arm with light pressure while Soldier B stands by to make adjustment.

https://truckmanualshub.com/

Engine Tune-Up Instructions (Cont)

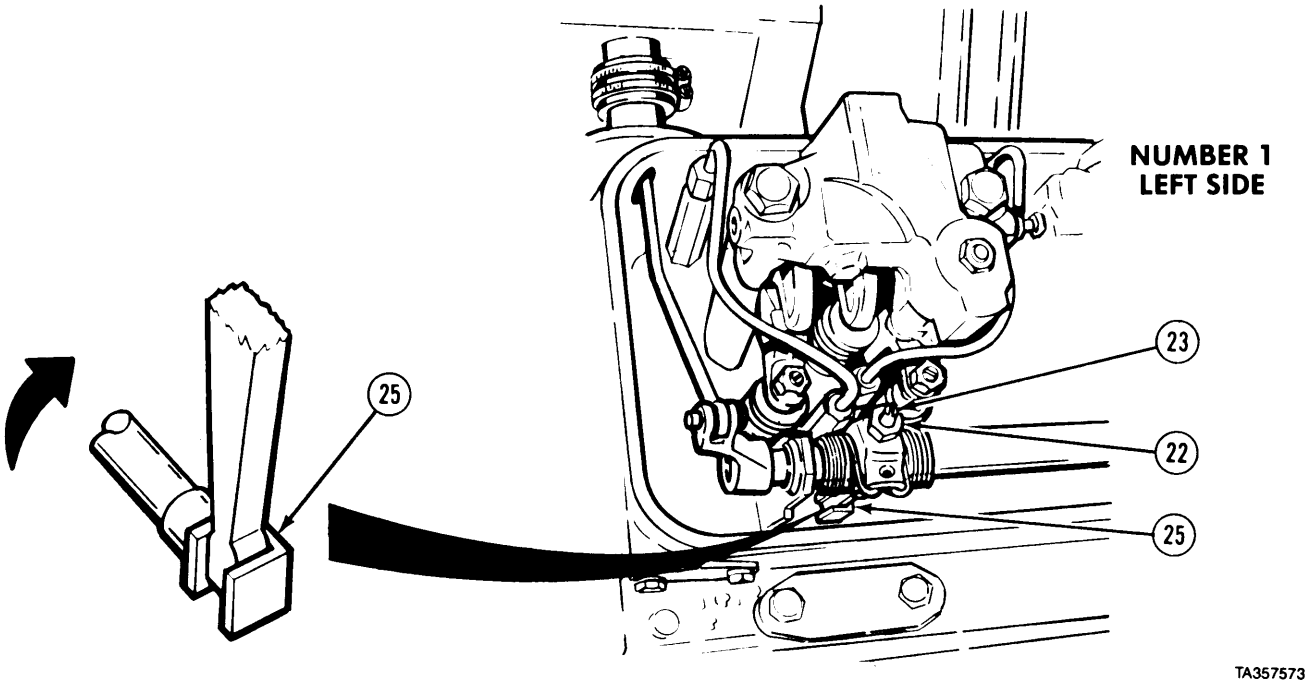

(13) While Soldier A maintains full fuel position, Soldier B tightens adjusting screw (23) until injector rack control lever (25) starts slight rotation. Tighten additional 1/8 turn, then hold adjusting screw and tighten locknut (22) to 25 to 35 lb-in (2.712 to 4.068 N°m).

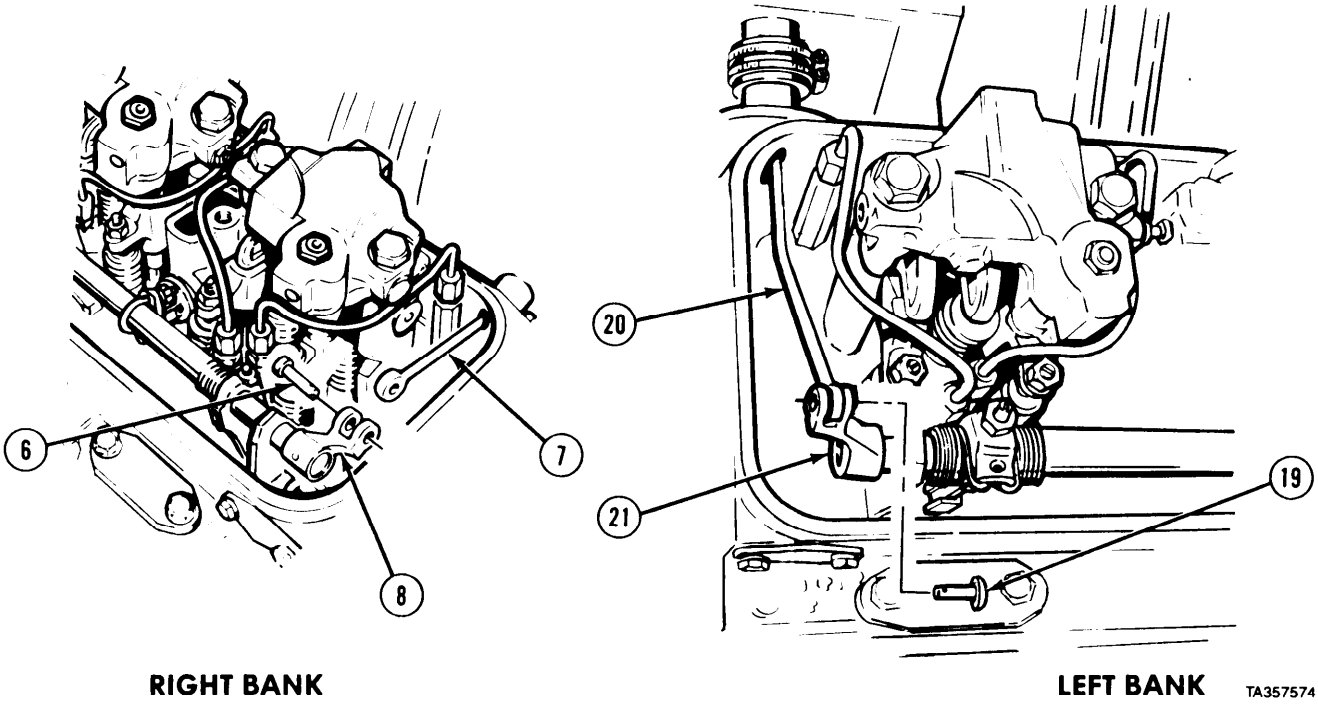

(14) Connect fuel rod (20) to clevis lever (21) with clevis pin (19).
(15) Check drag on both clevis pins (6 and 19). If drag is not equal, readjust number one right until drag is equal to number one left.
(16) Remove clevis pin (6) from fuel rod (7) and clevis lever (8).

https://truckmanualshub.com/

19-6. INJECTOR RACK CONTROL LEVER ADJUSTMENT (CONT).

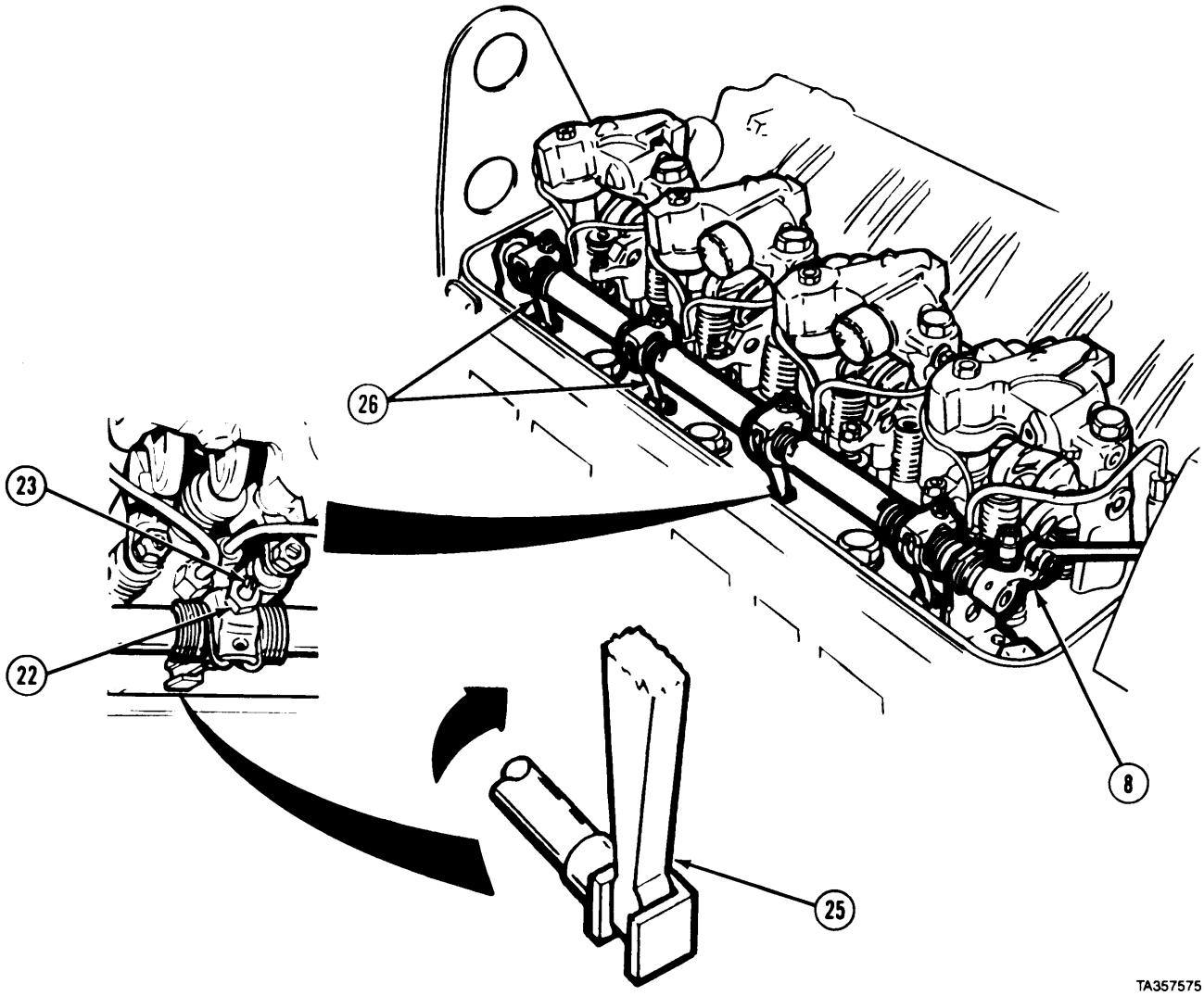

(17) Hold clevis lever (8) out in full fuel position and tighten adjusting screw (23) until injector rack (25) starts a slight rotation.
(18) Hold adjusting screw (23) and tighten locknut (22) to 25 to 35 lb-in. (92.712 to 4.068 N°m).
(19) Repeat steps (17) and (18) for remaining two injector control levers (26).

https://truckmanualshub.com/

Engine Tune-Up Instructions (Cont)

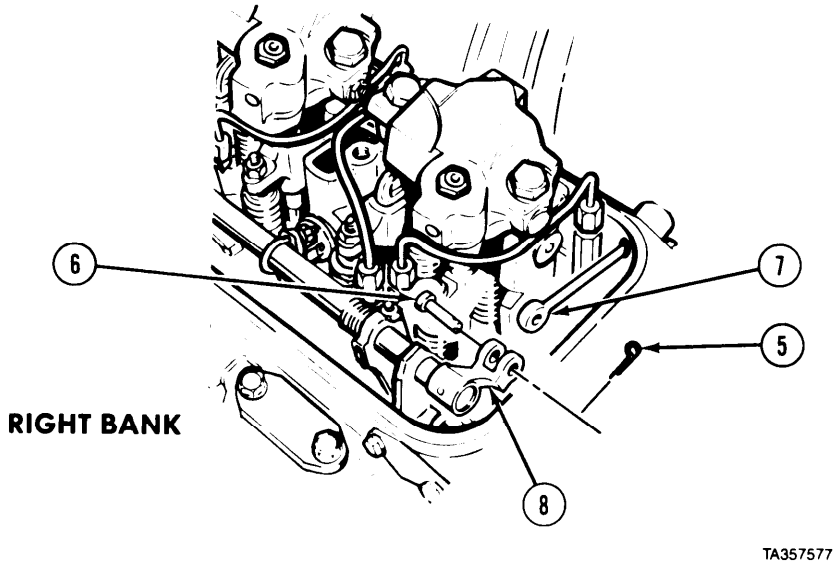

(20) Connect fuel rod (7) to clevis lever (8) with clevis pin (6).
(21) Install cotter pin (5).

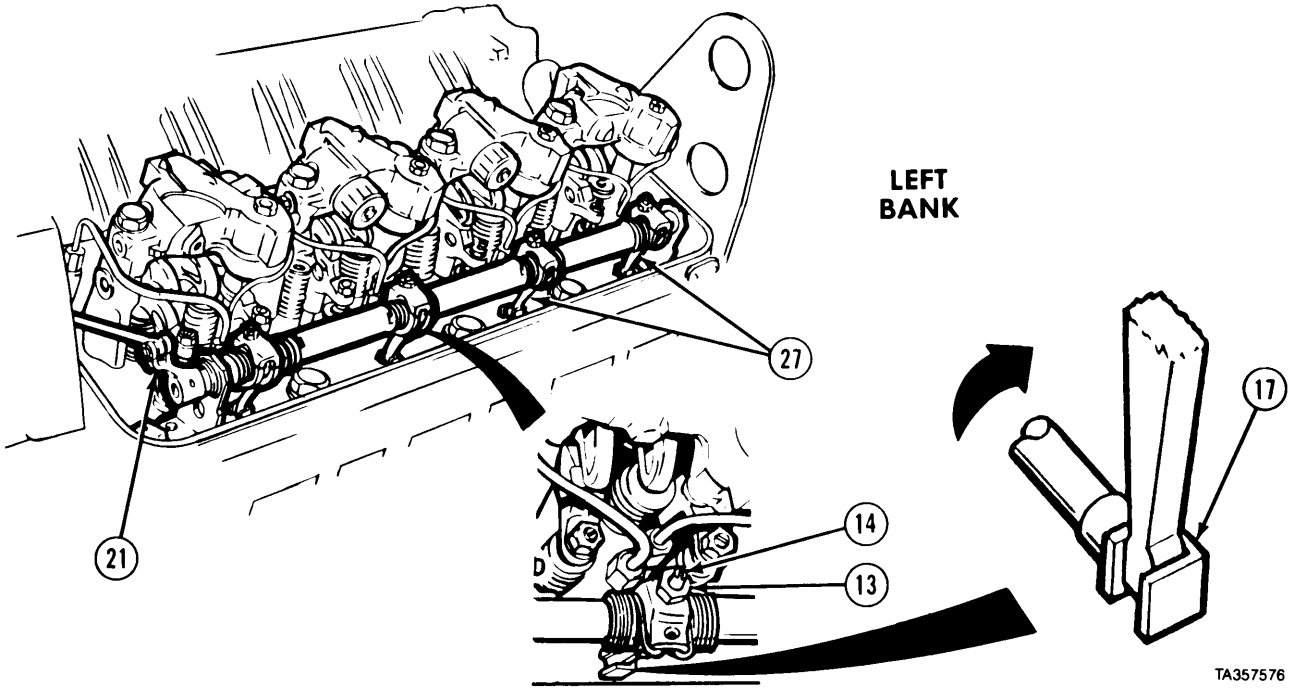

(22) Hold clevis lever (21) out in full fuel position and tighten adjusting screw (14) until injector rack (17) starts a slight rotation.
(23) Hold adjusting screw (14) and tighten locknut (13) to 25 to 35 lb-in. (2.712 to 4.068 N°m).
(24) Repeat steps (22) and (23) for remaining two injector control levers (27),

https://truckmanualshub.com/

19-6. INJECTOR RACK CONTROL LEVER ADJUSTMENT (CONT).

(25) Connect fuel rod (20) to clevis lever (21) with clevis pin (19).
(26) Install cotter pin (18).

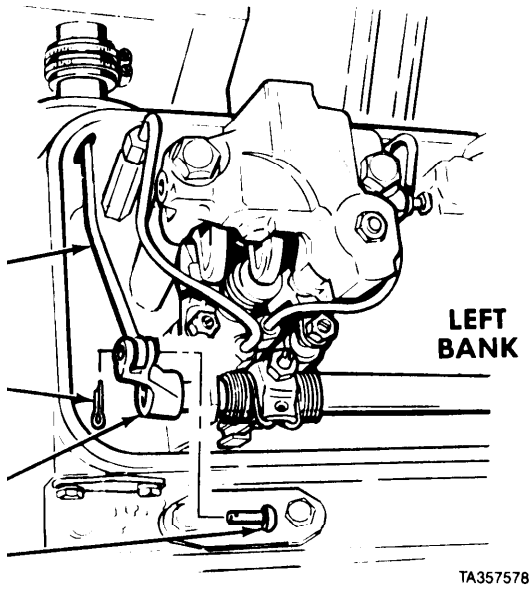

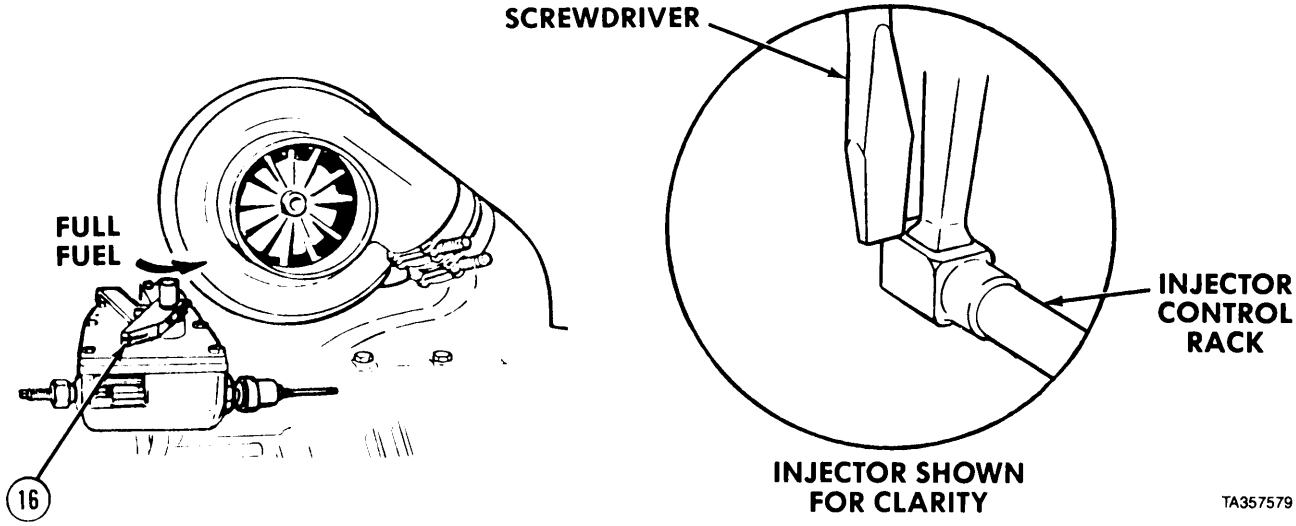

NOTE

When moving from no fuel to full fuel, if injector rack is fully in before full fuel position is reached, rack setting is too tight. Readjust injectors.

(27) Hold throttle control arm (16) in full fuel position. Using a screwdriver, press downward on injector rack. Rack should tilt downward. When pressure is released, rack should spring back upward. If injectors do not spring back, injector rack is too loose.

https://truckmanualshub.com/

b. Follow-on Maintenance.

(1) Install buffer screw switch (para 15-7).
(2) Adjust buffer screw switch (para 15-7).
(3) Adjust starting aid screw (para 19-7).
(4) Adjust throttle delay (para 19-8).
(5) Install fuel modulator clamp (engines equipped with fuel modulator only) (para 15-5.1).

END OF TASK

19-7. STARTING AID SCREW ADJUSTMENT.

This task covers:

a. Starting Aid Screw Adjustment
b. Follow-on Maintenance

INITIAL SETUP

Models
All engines prior to serial number 8VF-106635.

Test Equipment
None

Special Tools
None

Supplies
None

Personnel Required
MOS 63W, Wheel vehicle repairer

References
None

Equipment Condition

TM or Para	*Condition Description*
TM *9-2320-279-20*	Air intake ducting removed.
Para 19-6	Injector rack control levers adjusted.
Para 15-8	Throttle air cylinder removed.
Para 15-6	Spring housing removed.
Para 19-9	Engine speed adjusted.

Special Environmental Conditions
None

General Safely Instructions
None

Level of Maintenance
Direct Support

https://truckmanualshub.com/

Engine Tune-Up Instructions (Cont)

19-7. STARTING AID SCREW ADJUSTMENT (CONT).

a. Starting Aid Screw Adjustment.

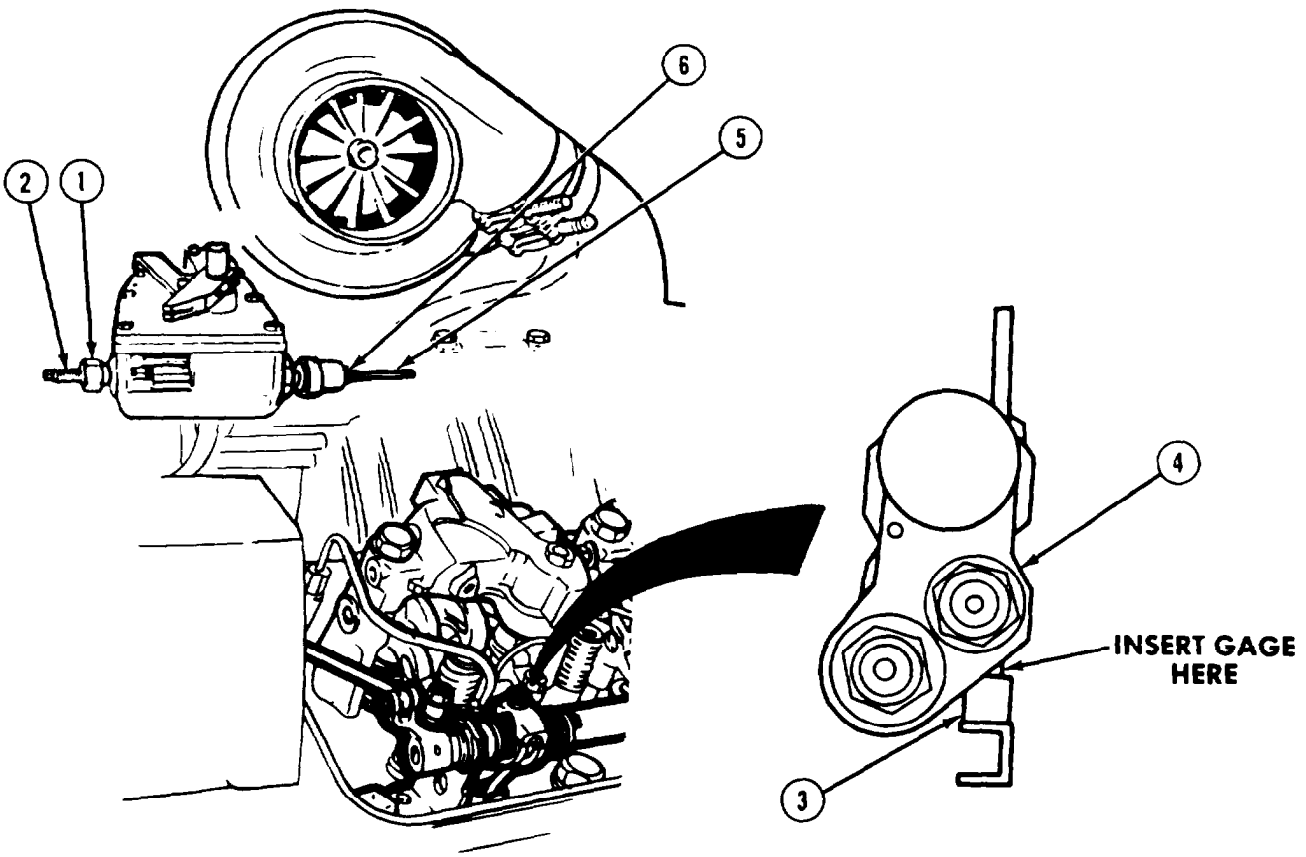

NOTE

Starting aid screw setting is 0.454-in. (11.53 mm) between injector body and shoulder of injector rack control clevis.

(1) Loosen locknut (1) and turn screw (2) out until it stops.
(2) Insert gage from tune up kit between injector rack clevis (3) and injector body (4).
(3) Turn starting aid screw (2) until gage pivots freely then tighten locknut (1).
(4) Back idle screw (5) out until it is free from piston,
(5) Turn idle screw (5) in three turns.
(6) Install locknut (6) finger tight.

b. Follow-on Maintenance.

(1) Install air intake ducting (TM 9-2320-279-10).
(2) Install throttle air cylinder (para 15-8).
(3) Adjust engine speed (para 19-9).

END OF TASK

https://truckmanualshub.com/

19-8. THROTTLE DELAY ADJUSTMENT.

This task covers:

a. Adjustment

b. Follow-on Maintenance

INITIAL SETUP

Models
All

Test Equipment
None

Special Tools
Gage, pin, throttle, J25558
Gage, throttle delay, J25560

Supplies
None

Personnel Required
MOS 63W, Wheel vehicle repairer

References
None

Equipment Condition

TM or Para	*Condition Description*
Para 19-7	Starting aid screw adjusted.
TM 9-2320-279-20	Air intake ducting removed.
Para 19-6	Injector rack control levers adjusted.
Para 15-8	Throttle air cylinder removed.
Para 15-6	Spring housing removed.
Para 19-9	Engine speed adjusted.

Special Environmental Conditions
None

General Safety Instructions
None

Level of Maintenance
Direct Support

a. Adjustment

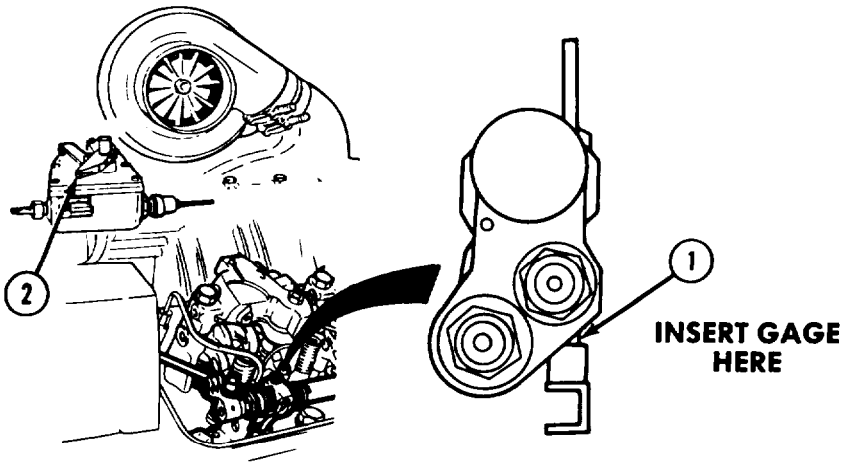

NOTE
Use 0.636 in. gage for throttle delay.

(1) Insert throttle delay cylinder gage on injector control rack (1).
(2) Push throttle lever (2) down until gage is held securely.

https://truckmanualshub.com/

19-8. THROTTLE DELAY ADJUSTMENT (CONT).

(3) Insert throttle delay cylinder pin gage in fill hole in cylinder (3) using 0.072-in. end of gage. If gage goes into hole, do steps (4) through (7).

(4) Loosen two nuts (4) on U-bolt (5) and insert gage.

CAUTION

Do not bend pin gage or use excessive force.

(5) Rotate throttle delay lever (6) and move piston (7) inward to contact throttle delay cylinder pin gage.

(6) Tighten two nuts (4) while lightly pressing throttle delay lever (6).

(7) Remove cylinder pin gage.

(8) While keeping a light pressure against cylinder gage insert 0.072-in. end of pin gage. If adjusted correctly, 0.072-in. end will not go in, but 0.069-in. end will.

(9) Remove both gages from cylinder head (8).

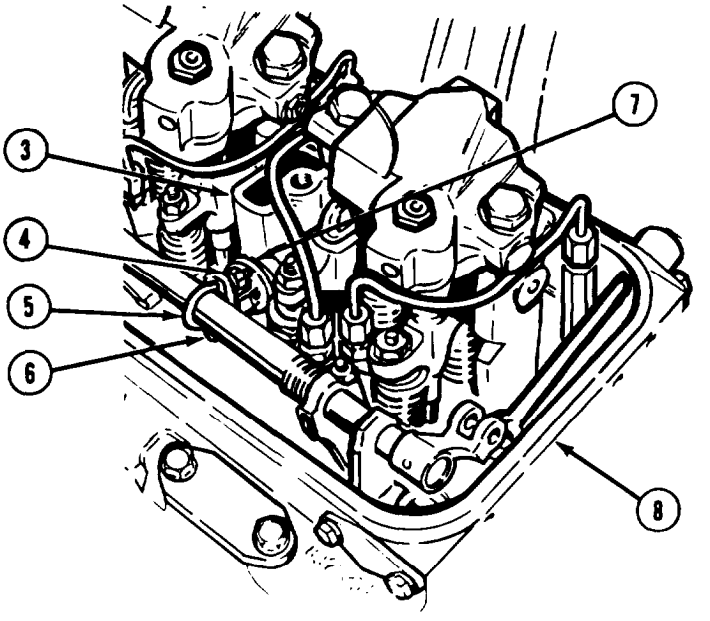

b. Follow-on Maintenance.

(1) Install throttle air cylinder (para 15-8).

(2) Adjust engine speed (para 19-9).

END OF TASK

https://truckmanualshub.com/

19-8.1 FUEL MODULATOR ADJUSTMENT.

This task covers:

a. Adjustment

b. Follow-on Maintenance

INITIAL SETUP

Models
All

Test Equipment
None

Special Tools
Gage, injector rack, J34080

Fabricated Tools
Gage, feeler, 0.004 in. (0.102 mm)
Gage, feeler, 0.005 in. (0.127 mm)
Gage, feeler, 0.017 in. (0.432 mm)

Supplies
None

Personnrl Required
MOS 63W, Wheel vehicle repairer

References
None

Equipment Condition

TM or Para	Condition Description
TM 9-2320-279-20	Air intake ducting removed.
Para 19-6	Injector rack control levers adjusted.
Para 15-8	Throttle air cylinder removed.
Para 15-6	Spring housing removed.
Para 19-9	Engine speed adjusted.

Special Environmental Conditions
None

General Safety Instructions
None

Level of Maintenance
Direct Support

a. *Adjustment.*

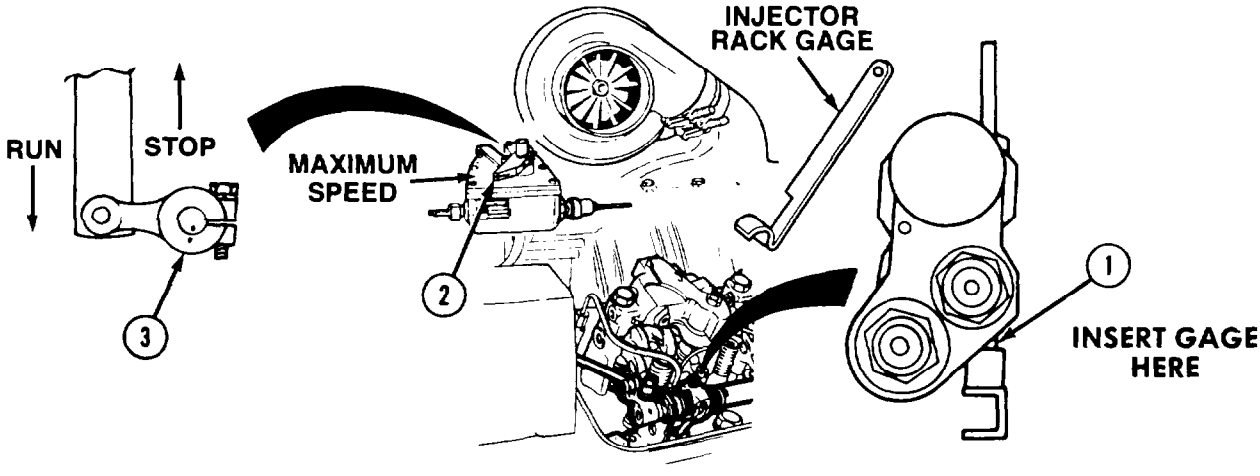

NOTE

Use the injector next to and forward of the fuel modulator assembly.

(1) Insert injector rack gage on injector control rack (1) so that handle is at approximately 45 degree angle.

(2) Position governor lever (2) toward maximum speed position and run/stop lever (3) in run position. The injector rack gage must stand up while being held in place by the rack.

https://truckmanualshub.com/

19-8.1 FUEL MODULATOR ADJUSTMENT (CONT).

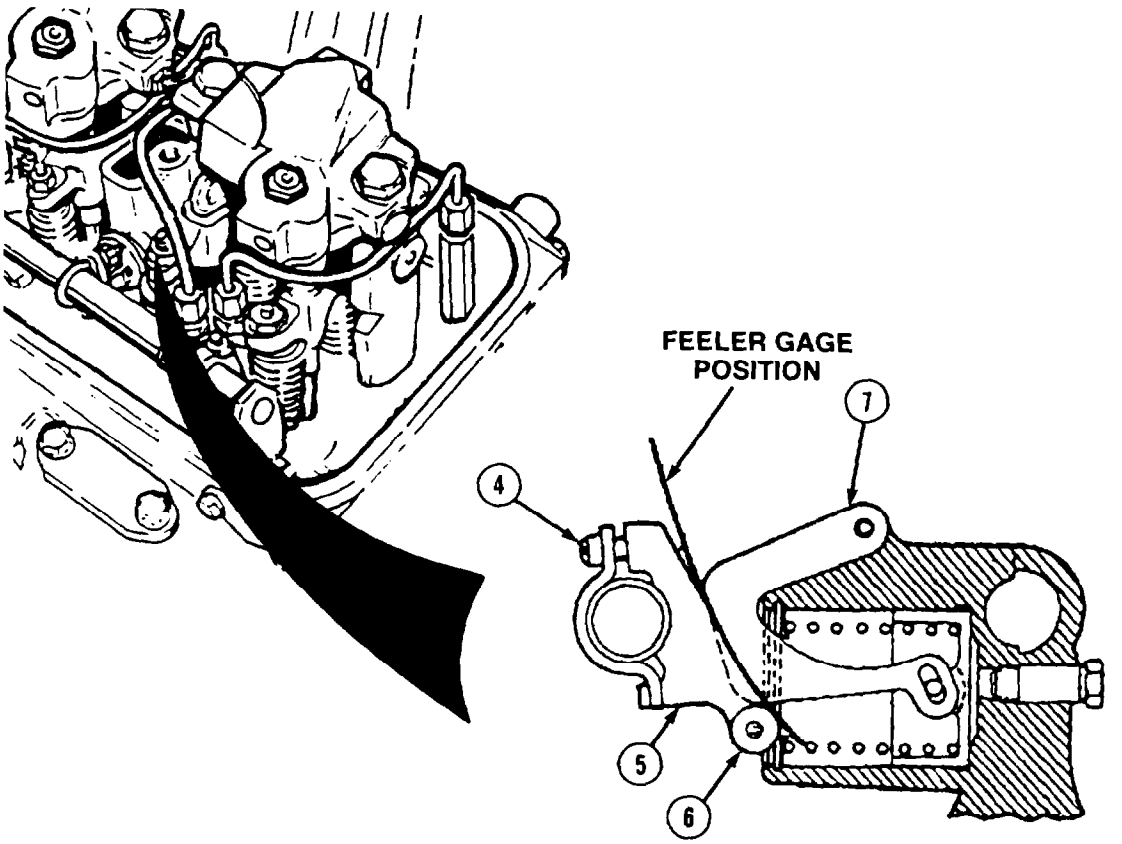

(3) Loosen screw (4) and push lever assembly (5) until roller (6) contacts cam (7) with sufficient force to remove all slack.

(4) Insert a 0.017 inch (0.4318 mm) feeler gage between cam (7) and roller (6).

NOTE

Ensure cam is centered.

(5) Tighten clamp screw (4) until feeler gage falls.

(6) Replace 0.017 inch feeler gage with a 0.004 inch (0.1016 mm) feeler gage.

(7) Tighten clamp screw (4) until 0.004 inch (0.1016 mm) feeler gage falls.

https://truckmanualshub.com/

Engine Tune-Up Instructions (Cont)

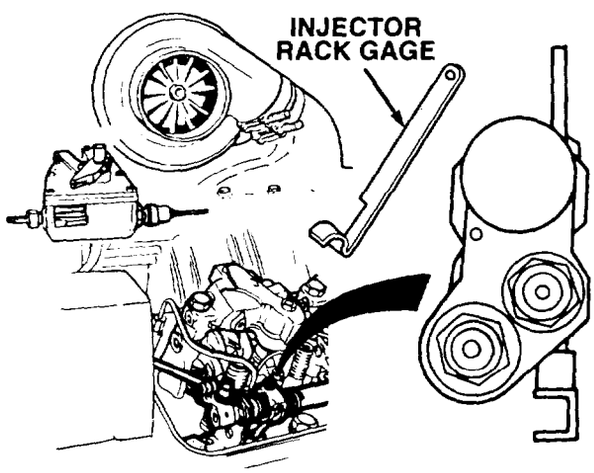

NOTE

When 0.004 (0.1016 mm) feeler gage is removed from between cam and roller, injector control rack pressure should hold injector rack gage at approximately a 45 degree angle. When 0.005 inch (0.127 mm) feeler gage is placed between cam and roller, injector rack gage should fall.

(8) Verify proper adjustment by inserting a 0.005 inch (0.127 mm) feeler gage between cam (7) and roller (6). If injector rack gage does not fall, repeat steps (1) through (8).

b. Follow-on Maintenance.

(1) Install air intake ducting (TM 9-2320-279-20).
(2) Install throttle air cylinder (para 15-8).
(3) Adjust engine speed (para 19-9).

END OF TASK

https://truckmanualshub.com/

19-9. ENGINE SPEED ADJUSTMENTS,

This task covers:

a. Maximum No-Load Speed Adjustment
b. Engine Idle Speed and Buffer Screw Adjustment
c. Follow-on Maintenance

INITIAL SETUP

Models
All

Test Equipment
None

Special Tools
Shield, inlet J26554-A

Supplies
None

Personnel Required
MOS 63W, Wheel vehicle repairer (2)

References
None

Equipment Condition

TM or Pam	*Condition Description*
Para 19-8	Throttle delay adjusted (engines equipped with throttle delay only).
Para 19-8.1	Fuel modulator adjusted (engines equipped with fuel modulator only).
TM 9-2320-279-20	Fan removed.

Special Environmental Conditions
None

General Safely Instructions
None

Level of Maintenance
Direct Support

https://truckmanualshub.com/

Engine Tune-Up instructions (Cord)

a. Maximum No-Load Speed Adjustment.

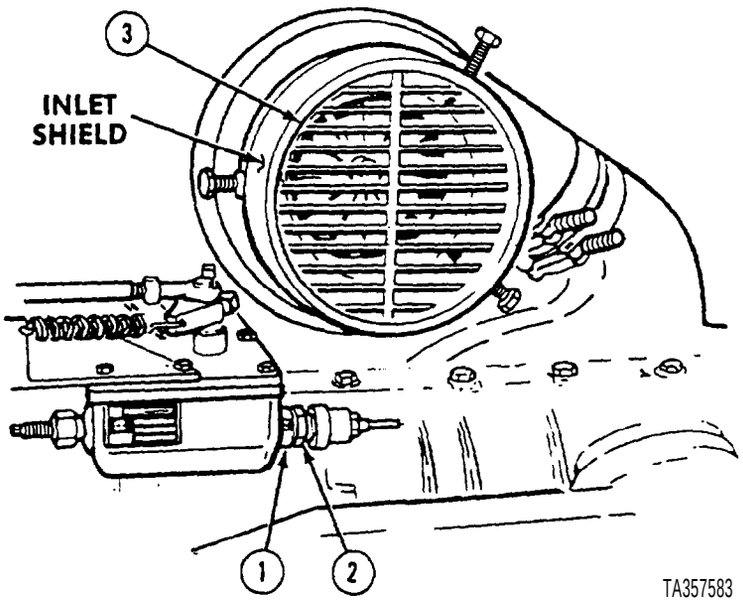

(1) Soldier A loosens spring retainer locknut (1) while Soldier B is in cab.
(2) Loosen high speed spring retainer (2) five turns.
(3) Install inlet shield on air inlet port (3).

WARNING

. Wear ear protection when running engine. Noise volume of engine can cause hearing loss or injury.

. Do not touch hot engine with bare hands. Manifolds and covers are hot and can cause severe bums if touched.

CAUTION

Run engine in clean area when air intake ducting is removed. Dirt, dust, and particles in unfiltered air can enter engine intake and damage parts or cause mechanical failure.

(4) When told by Soldier A, Soldier B starts engine (TM 9-2320-279-10).
(5) Operate engine for 15 minutes.

NOTE

Maximum no-load speed is 2300 rpm.

Tighten high speed spring retainer (2) until engine runs at maximum no-load speed. Hold high speed spring retainer (2) and tighten locknut (1).

https://truckmanualshub.com/

Engine Tune-Up Instructions (Cont)

19-9. ENGINE SPEED ADJUSTMENTS (CONT).

b. Engine Idle Speed, Buffer Screw and Buffer Switch Adjustment.

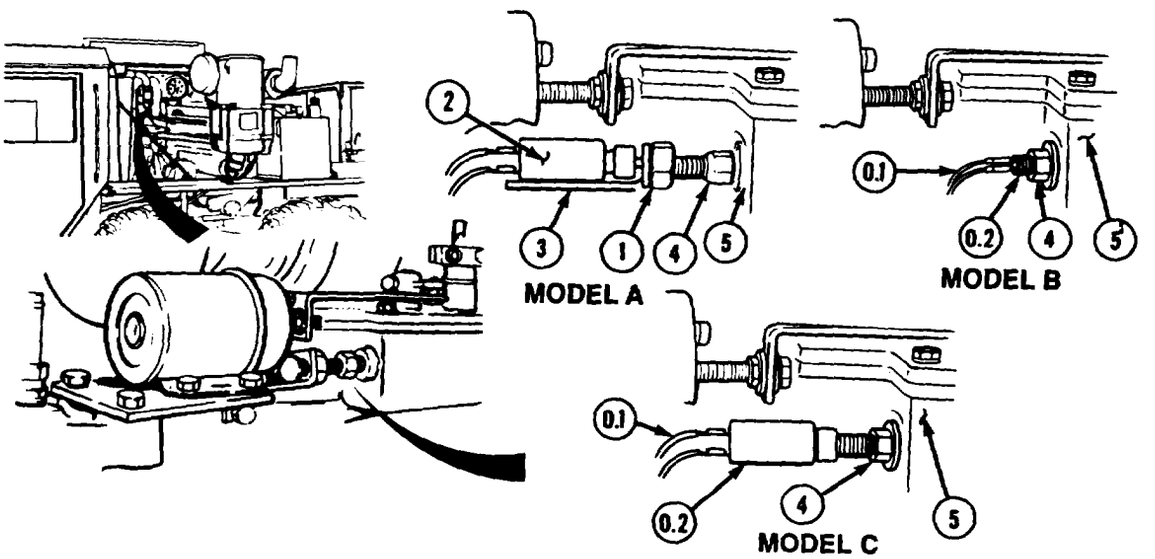

NOTE

- There are three styles of buffer switches, Model A Model B and Model C.
- Buffer screw and buffer switch will turn out with locknut.

(1) Adjust maximum no-load engine speed (para 19-9).

NOTE

Perform step (1.1) for Model B and Model C buffer switches.

(1.1) Tag, mark and remove wires (0.1) from buffer switch (0.2).

NOTE

Perform step (2) for Model A buffer switch.

Loosen nut (1) and remove buffer switch (2) and bracket (3).

(3) Loosen locknut (4) and back out to 0.65in. (15.88 mm) from governor housing (5).

(4) Loosen locknut (6) from idle adjusting screw (7).

(5) When told by Soldier A, Soldier B starts engine and operates for 15 minutes (TM 9-2320-279-10).

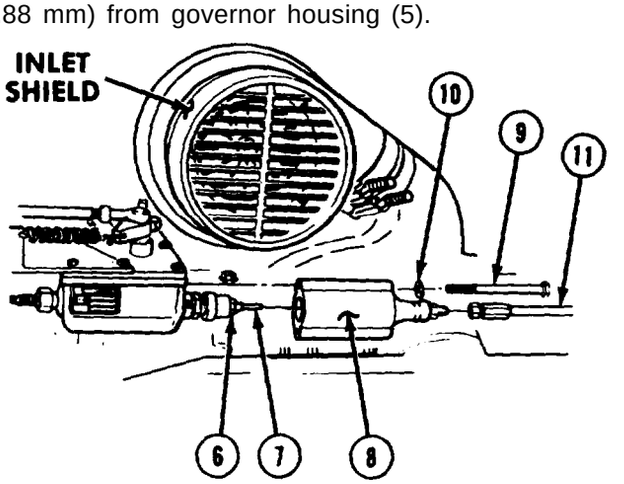

NOTE

Correct engine idle speed is 675-725 rpm.

(6) Turn idle adjusting screw (7) to correct engine idle speed.

(7) Tighten locknut (6) when correct engine idle speed is reached.

(8) When told by Soldier A, Soldier B stops engine.

NOTE

Gasket is not replaced unless damaged.

(9) Install high speed spring retainer cover (8) with two screws (9) and lockwashers (10).

(10) Install air hose (11) on cover (8).

(11) Remove inlet shield.

https://truckmanualshub.com/

Engine Tune-Up Instructions (Cont)

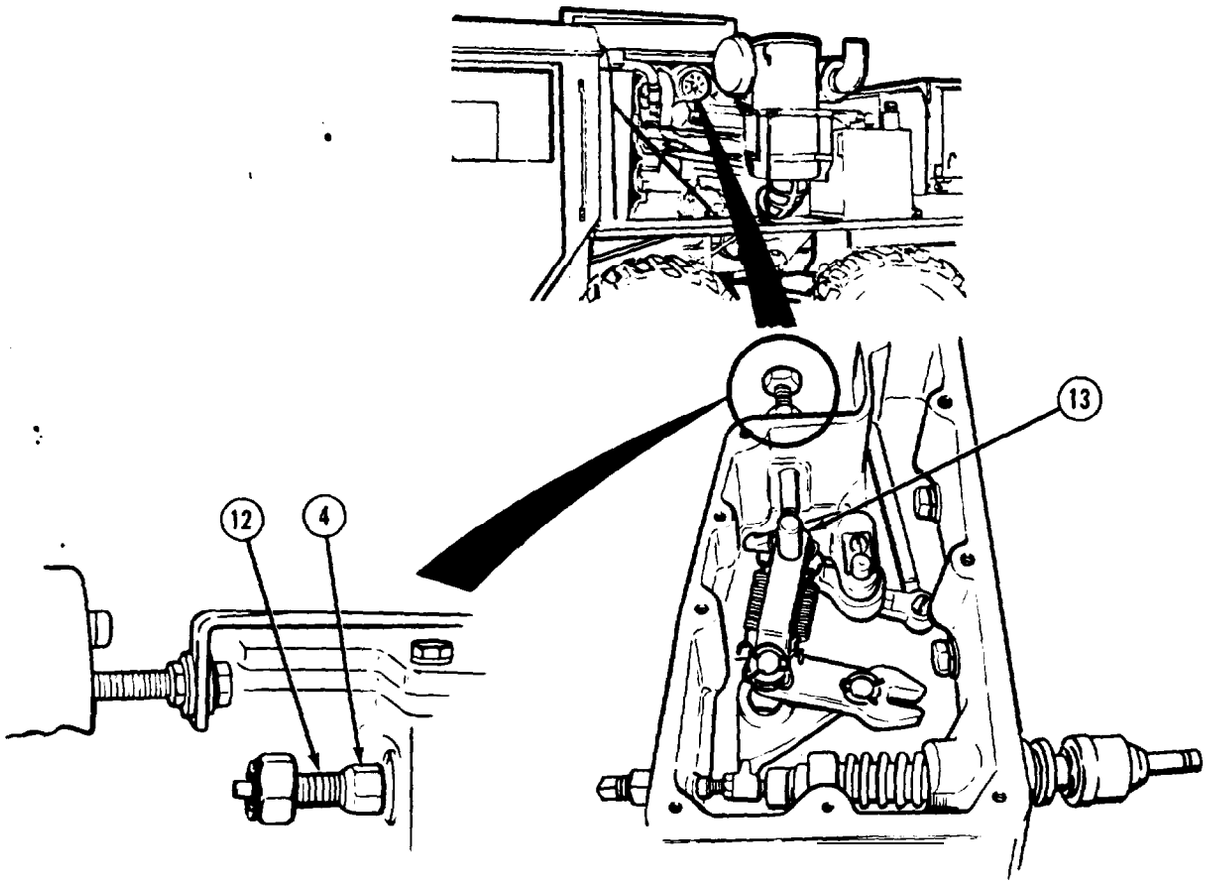

(12) Install air intake ducting (TM 9-2320-279-20).

(13) When told by Soldier A, Soldier B starts engine and operates for 15 minutes.

CAUTION

Do not increase engine speed more than 15 rpm with buffer screw or buffer switch. Excessive engine speed can damage engine components.

(14) Soldier A turns buffer screw (12) or buffer switch (0.2) and locknut (4) until it contacts differential lever (13) as lightly as possible and still remove engine roll. Soldier B remains in cab.

CAUTION

Maximum engine speed cannot exceed 2325 rpm. Excessive engine speed can damage engine components.

(15) When told by Soldier A, Soldier B increases engine speed to maximum engine speed and notes rpm reading.

(16) Release throttle and let engine return to idle.

(17) Soldier A holds buffer screw (12), or buffer switch (0.2), tightens locknut (4), and tells Soldier B to stop engine.

NOTE

Perform step (17.1) for Model B and Model C buffer switches.

(17.1) Connect wires (0.1), as tagged during removal, to buffer switch (0.2)

https://truckmanualshub.com/

19-9. ENGINE SPEED ADJUSTMENTS (CONT).

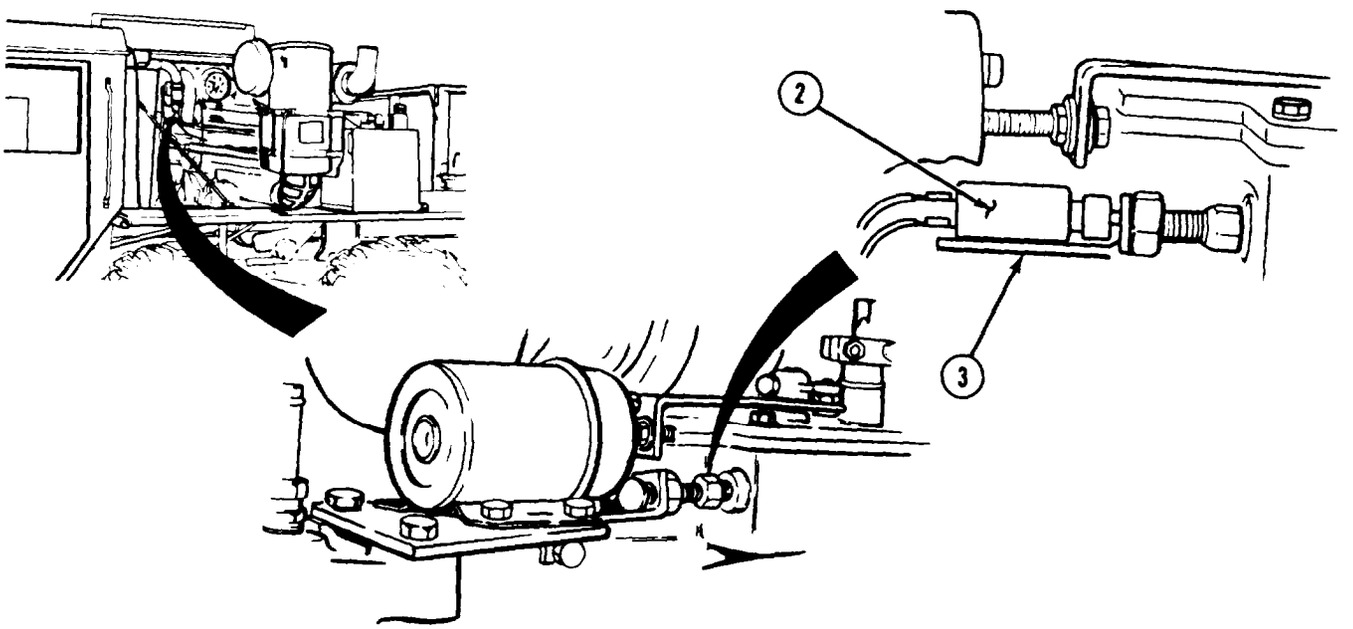

NOTE

Perform step (18) for Model A buffer switch.

(16) Install bracket (3) and switch (2).

C. ***Follow-on*** *Maintenance.*

(1) Install spring housing (para 15-6).
(2) Install valve rocker covers (TM 9-2320-279-10).
(3) Install fan (TM 9-2320-279-20).
(4) Install engine side panels (TM 9-2320-279-10).
(5) Close engine covers (TM 9-2320-279-10).

END OF TASK

https://truckmanualshub.com/

19-10. ENGINE SPEED CONTROL ADJUSTMENT (M984).

This task covers:

a. Maximum Load Speed Adjustment
b. Engine Idle Speed Adjustment
c. Follow-on Maintenance

INITIAL SETUP

Models
M984

Test Equipment
None

Special Tools
Shield, inlet J26554-A

Supplies
None

Personnel Required
MOS 63W, Wheel vehicle repairer (2)

References
None

Equipment Condition

TM or Para	*Condition Description*
Para 19-8	Throttle delay adjusted.
TM 9-2320-279-10	Engine side panels removed.
TM 9-2320-279-20	Air intake ducting removed.

Special Environmental Conditions
None

General Safety Instructions
None

Level of Maintenance
Direct Support

a. Maximum Load Speed Adjustment.

NOTE

- Engine speed control adjustment for M984 Heavy Duty Winch operation.
- Tag and mark wires before disconnecting.

(1) Disconnect two wires (1) from connectors (2) and solenoids (3) on selector valve (4).

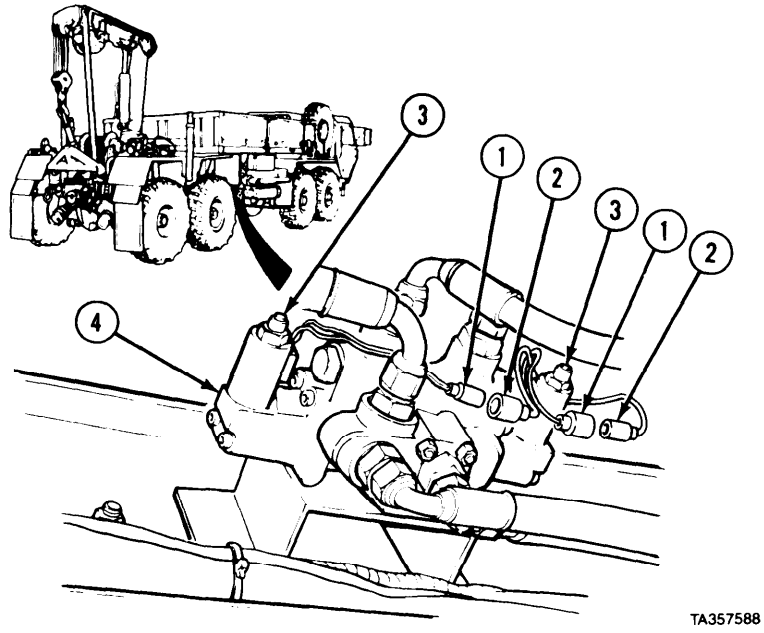

https://truckmanualshub.com/

19-10. ENGINE SPEED CONTROL ADJUSTMENT (M984) (CONT).

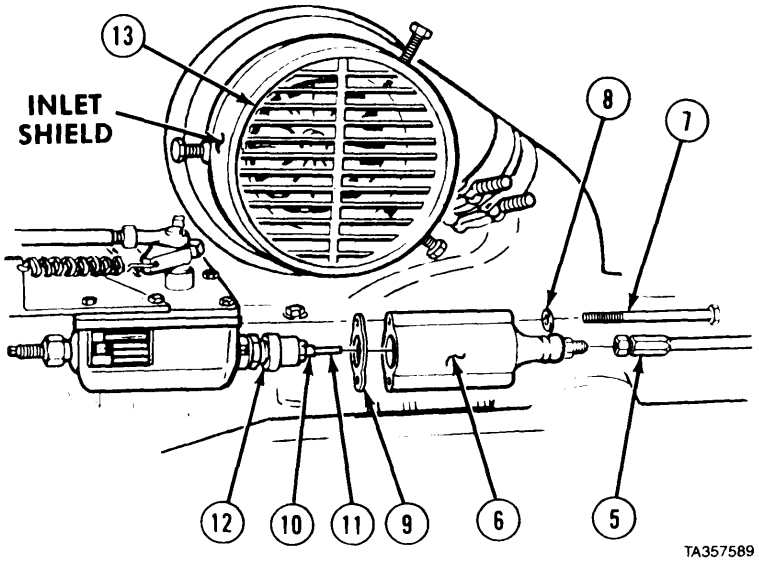

(2) Disconnect air hose (5) from cover (6).
(3) Remove two screws (7), lockwashers (8), cover (6), and gasket (9).
(4) With Soldier B in cab, Soldier A loosens idle speed locknut (10).
(5) Turn idle adjusting screw (11) clockwise until-snug.
(6) Tighten idle speed locknut (10).
(7) Loosen high speed locknut (12).
(8) Install inlet shield on air inlet port (13).

WARNING

- Wear ear protection when running engine. Noise volume of engine can cause hearing loss or injury.
- Do not touch hot engine with bare hands. Manifolds and covers are hot and can cause severe burns if touched.

CAUTION

Run engine in clean area when air intake ducting is removed. Dirt, dust, and particles in unfiltered air can enter engine intake and damage parts or cause mechanical failure.

(9) When told by Soldier A, Soldier B starts engine (TM 9-2320-279-10).
(10) Operate engine for 15 minutes.

https://truckmanualshub.com/

Engine Tune-Up Instructions (Cont)

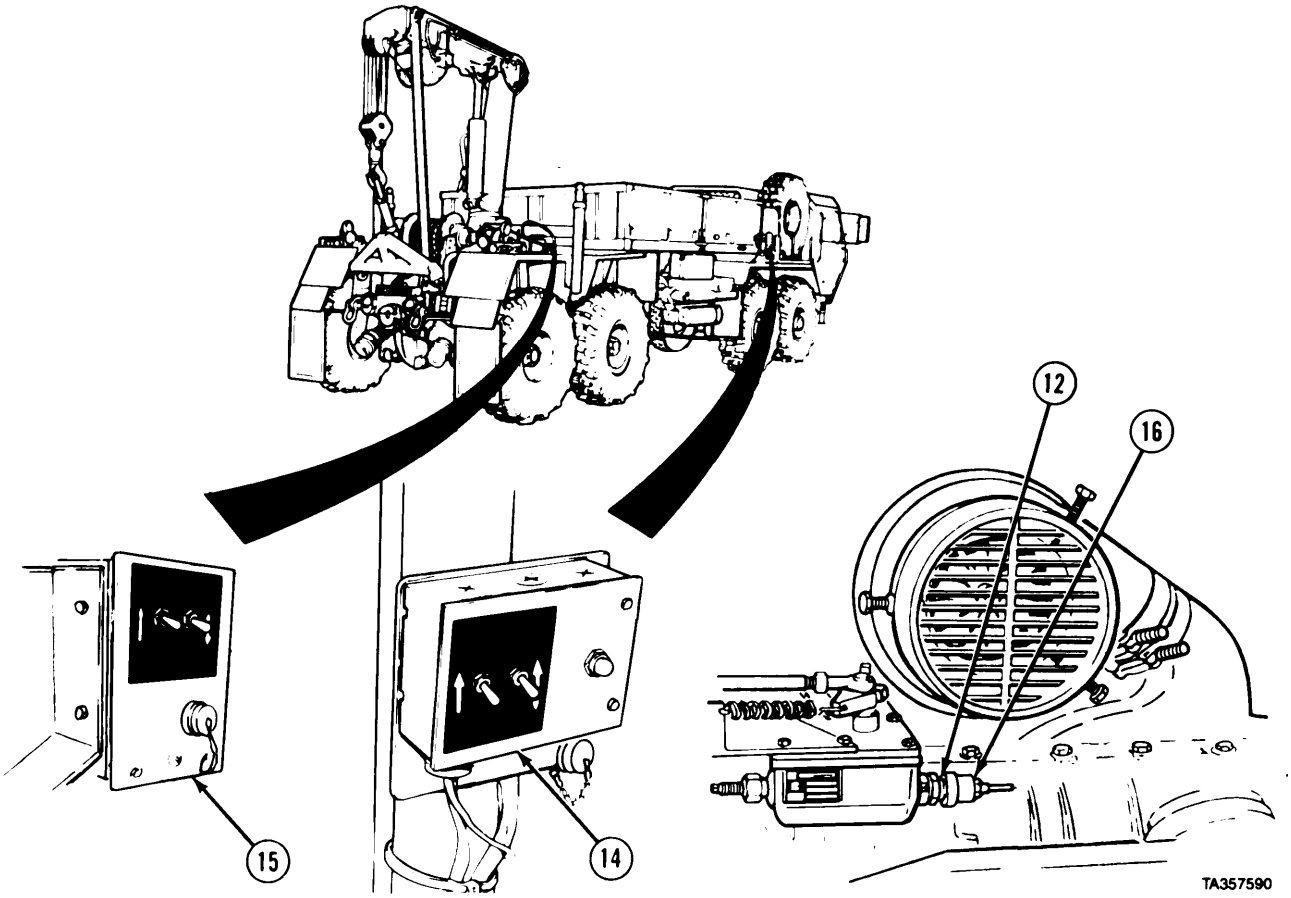

(11) Engage PTO switch (TM 9-2320-279-10).
(12) Activate high idle at either high idle box (14 or 15) (TM 9-2320-279-10).

NOTE

Maximum load speed is 1800 rpm.

(13) Turn air cylinder (16) clockwise to correct engine speed.
(14) Tighten high speed locknut (12).
(15) Shut off high idle (TM 9-2320-279-10).
(16) Stop engine (TM 9-2320-279- 10).

https://truckmanualshub.com/

19-10. ENGINE SPEED CONTROL ADJUSTMENT (M984) (CONT).

b. Engine Idle Speed Adjustment.

(1) Soldier A loosens idle speed locknut (1) while Soldier B is in cab.

(2) When told by Soldier A, Soldier B starts engine (TM 9-2320-279-10).

NOTE

Correct engine speed is 700 rpm.

(3) Turn idle adjusting screw (2) counterclockwise to correct engine speed.

(4) Tighten idle speed locknut (1).

(5) Soldier B stops engine when told by Soldier A (TM 9-2320-279-10).

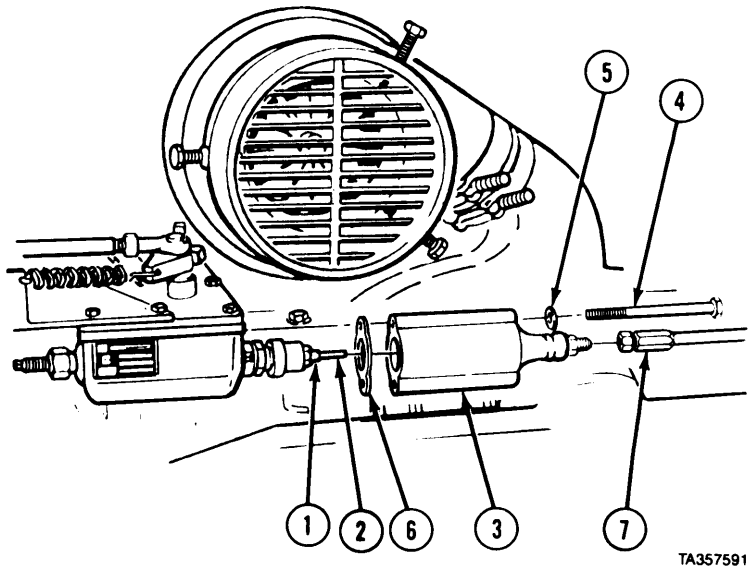

NOTE

Gasket is not replaced unless damaged.

(6) Install high speed spring retainer cover (3) with two screws (4), lockwashers (5), and gasket (6).

(7) Install air hose (7) on cover (3).

(8) Connect two wires (8) to connectors (9) and solenoids (10) on selector valve (11).

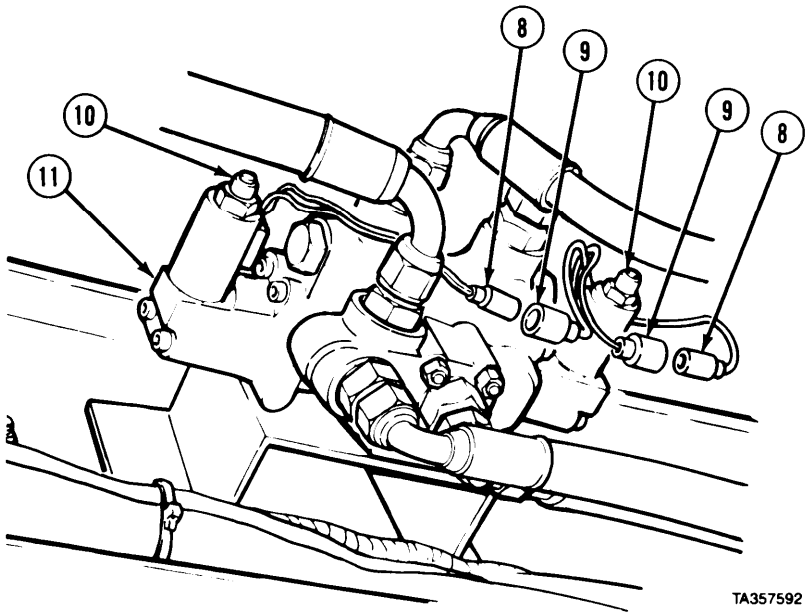

c. Follow-on Maintenance.

(1) Air intake ducting installed (TM 9-2320-279-20).

(2) Install engine side panels (TM 9-2320-279-10).

(3) Close engine covers (TM 9-2320-279-20).

END OF TASK

https://truckmanualshub.com/

Engine Tune-Up Instructions *(Cont)*

19-11. ENGINE COMPRESSION CHECK.

This task covers:

a. Compression Check
b. Follow-on Maintenance

INITIAL SETUP

Models
Ail

Test Equipment
None

Special Tools
Gage, cylinder compression J7334-04
Wrench, fuel line J-8932-01

Supplies
None

Personnel Required
MOS 63W, Wheel vehicle repairer

References
None

Equipment Condition

TM or Pam	***condition*** *Description*
Para 11-2	Engine brake retarder removed.

Special Enwvironmental Conditions
None

General Safety Instructions
None

Level of Maintenance
Direct Support

a. compression Check.

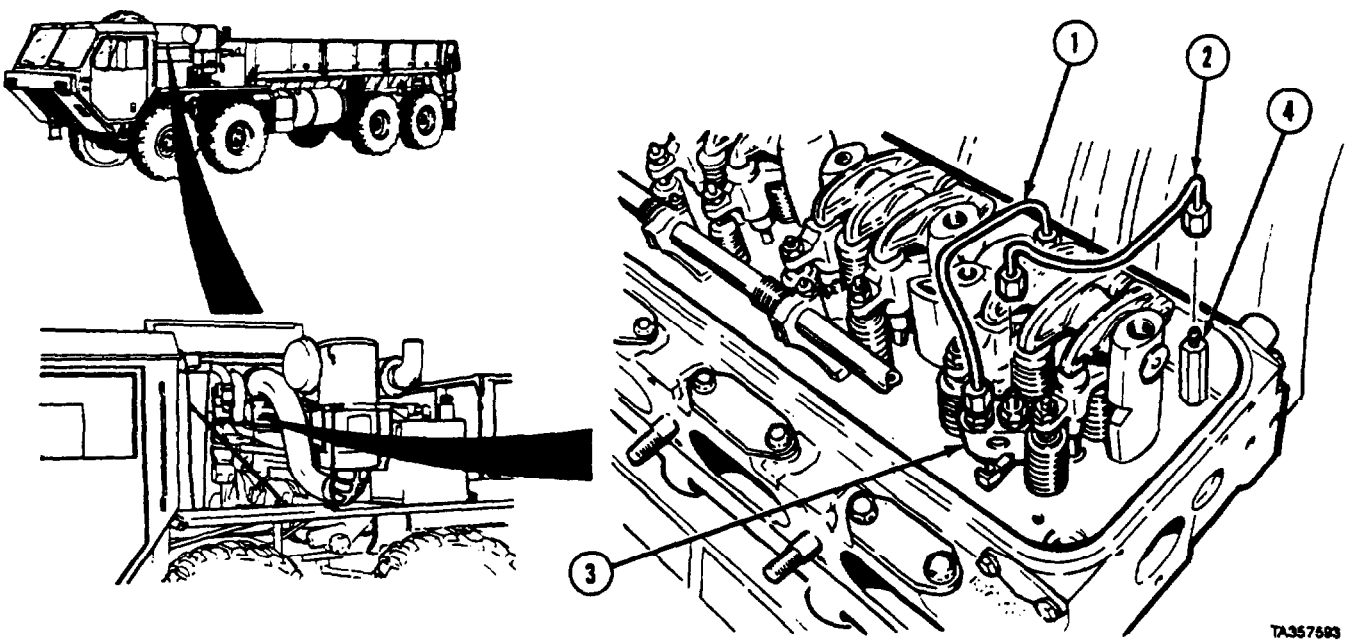

(1) Start engine and run until normal operating temperature is reached.
(2) Stop engine. Remove fuel pipes (1 and 2) from injector (3) and fuel connectors (4).

https://truckmanualshub.com/

19-11. ENGINE COMPRESSION CHECK (Cont).

(3) Remove fuel injector (para 12-2).
(4) Install adapter and gage.
(5) Install bolt, clamp, and convex washer, tighten to 20-25 ft-lb (27-34 N•m).

CAUTION

Shorter screws must be used with retarders off. Check shorter screws for oil passage hole. If shorter screws are not used, equipment damage could occur,

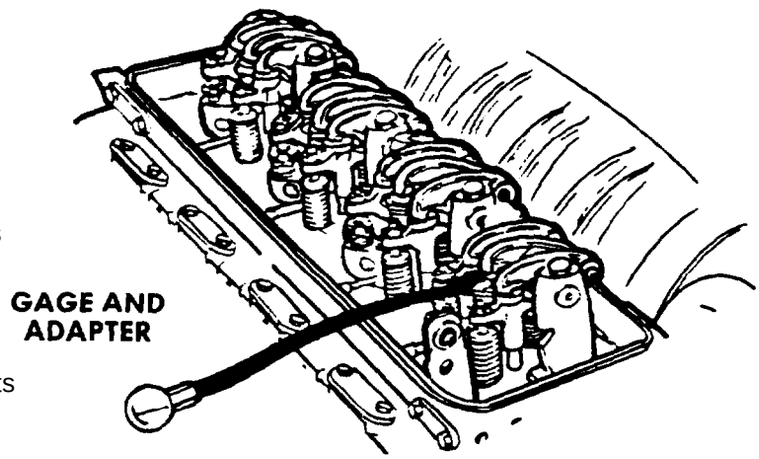

(6) Secure rocker arm pin and supports using shorter screws. Tighten to 45 (61) then 88-92 ft-lb (119-125 N•m).
(7) Install adapter and gage.

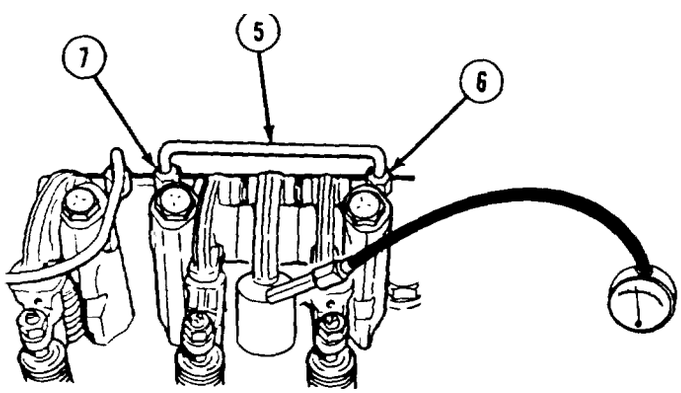

(8) Install jumper connection (5) between fuel inlet (6) and return manifold connector (7).

NOTE

Engine must be running to obtain compression.

(9) Start engine and run at 600 to 670 rpm. Record compression pressure shown on gage.

NOTE

The compression pressure in any one cylinder at a given altitude above sea level must not be less than the minimum shown in Table 19-1. The variation in compression pressures between cylinders must not exceed 25 psi (172 kPa) at 635 rpm.

(10) Repeat steps 3 through 9 on each cylinder.

https://truckmanualshub.com/

Table 19-1. Compression Pressure Specifications

Minimum Compression Pressure at 600 RPM Turbocharged Engines		Altitude above Sea Level		+ Air Density
psi	kPa	feet	meters	
450	3101	500	152	.0715
415	2859	2,500	762	.0663
385	2653	5,000	1,524	.0613
355	2446	7,500	2,286	.0567
330	2274	10,000	3,048	.0525

+ Air density at 500 feet altitude based on 85°F (29.4 °C) and 29.38 in. Hg (99.49 kPa) wet barometer.

b. Follow-on Maintenance.

(1) Install engine brake retarder (para 11-2).

(2) Install valve rocker covers (TM 9-2320-279-20).

END OF TASK

https://truckmanualshub.com/

https://truckmanualshub.com/

APPENDIX A

REFERENCES

A-l. SCOPE. This appendix lists all forms, field manuals, technical manuals, and other publications referenced in this manual. Also, those publications that should be consulted for additional information about vehicle operations are listed.

A-2. PUBLICATION INDEXES. The following indexes should be consulted frequently for latest changes or revisions and for new publications relating to material covered in this technical manual.

Consolidated Index of Army Publications and Blank Forms	DA Pam 310-l

A-3. FORMS. **The** following forms pertain to this manual. Refer to DA Pamphlet 310-1 for index of blank forms.

Equipment Control Record (DA Form 2408-9)).
Equipment Inspection and Maintenance Worksheet (DA Form 2404).
Maintenance Request (DA Form 2407).
Recommended Changes to DA Publications and Blank Forms (DA Form 2028).

Refer to DA PAM 738-750, The Army Maintenance Management Systems (TAMMS), for instructions for the use of maintenance forms pertaining to this material.

A-4. OTHER PUBLICATIONS. The following publications contain information pertinent to the M977 series vehicles and associated equipment.

a. Safety.

First Aid for Soldiers	FM 21-11
Safety Inspection and Testing of Lifting Devices	TB 43-0142
Security of 'Ihctical Wheeled Vehicles	TB 9-2300-422-20

b. Vehicle Operation.

Operator's Manual. M977 Series Vehicles	TM g-2320-279-10

c. Maintenance and Repair.

Organizational hlaintenance Manual for MH77 Series	TM 9-2320-279-20
Lubrication Order for M977 Series Vehicles	L0 9-2320-279-12
Organizational Repair Parts and Special Tools List for M977 Series Vehicles	TM 9-2320-279-20P
Direct Support and General Support Maintenance for M977 Series Vehicles	TM 9-2320-279-34
Cooling Systems: Tactical Vehicles	TM 750-254
Use of Antifreeze Solutions and Cleaning Compounds in Engine Cooling Systems	TB 750-651
Description, Use. Bonding Techniques, and Properties of Adhesives.	TB ORD 1032
Materials L'sed for Cleaning, Preserving, Abrading, and Cementing Ordnance Materiel and Related Materiels Including Chemicals	TM 9-247
Inspection, Care, and Maintenance of Antifriction Bearings	TM 9-214
Care and Use of Handtools and Measuring Tools.	TM 9-243
Operator's Organizational. Direct Support, and General Support Maintenance Manual for Lead-Acid Storage Batteries	TM 9-6140-200-14

d. Decontamination.

Chemical, Biological, and Radiological (CBR) Decontamination	TM 3-220

https://truckmanualshub.com/

References (Cont)

A-4. OTHER PUBLICATIONS (CONT).

e. General.

Hand Receipt Manual for M977 Series Vehicles . . . . . TM 9-2320-279-10HR
Procedures for Destruction of Tank-Automotive Equipment to Prevent Enemy Use . . . . . TM 750-244-6
Principles of Automotive Vehicles . . . . . TM 9-8000
Quality Deficiency Report . . . . . SF 368
Equipment Improvement Report and Maintenance Digest . . . . . TB 43-0001-39
Equipment Improvement Report and Maintenance Summary . . . . . TM 43-1043

f. Warranty.

Warranty Technical Bulletin for M977 Series Vehicles . . . . . TB 9-2300-295-15/19

https://truckmanualshub.com/

APPENDIX C
EXPENDABLE SUPPLIES AND MATERIALS LIST

Section I. INTRODUCTION

C-1. SCOPE. This appendix lists expendable supplies and materials needed to operate and maintain M977 Series Vehicles. These items are authorized by CTA 50-970. This appendix includes expendable items (except Medical, Class V, Repair Parts, and Heraldic Items) and consumable materials.

C-2. EXPLANATION OF COLUMNS.

a. Column (1) - Item Number. This number is assigned to the entry in the listing and is referenced in the narrative instructions to identify the material (e.g., "Use cleaning compound, Item 5, Appendix D").

b. Column (2) - Level. This column identifies the lowest level of maintenance that requires the listed item.

C — Operator/Crew
O — Organizational Maintenance
F — Direct Support Maintenance
H — General Support Maintenance

c. Column (3) - National Stock Number. This is the national stock number assigned to the item. Use the national stock number to request or requisition the item.

d. Column (4) - Description. Indicates the federal item name and, if required, a description to identify the item. Where applicable, the last line for each item indicates the Federal Supply Code for Manufacturer (FSCM) in parentheses followed by the part number.

e. Column (5) - Unit of Measure (U/M). Indicates the measure used in performing the actual maintenance function. This measure is expressed by a two-character alphabetical abbreviation (e.g., ea, in., pr). If the unit of measure differs from the unit of issue, requisition the **lowest** unit of issue that will satisfy the requirements.

Section II. EXPENDABLE SUPPLIES AND MATERIALS LIST

(1) Item Number	(2) Level	(3) National Stock Number	(4) Description	(5) U/M
1	F	8040-00-826-3535	Adhesive, Cyanoacrylate, RTV (MIL-A-46050)	
2		8040-00-262-9025	Adhesive MMM-A-1617 4 oz tube	
3	O		Adhesive No. M6497 (FSCM 89616) (EE 39597) (FSCM 45152)	
4	O	8040-01-152-8104	Adhesive No. PL 200 (1322080) (FSCM 45152)	

https://truckmanualshub.com/

Expendable Supplies and Materials List (Cont)

(1) Item Number	(2) Level	(3) National Stock Number	(4) Description	(5) U/M
5	O		Adhesive No. 4500 (FSCM 08853) (30456 AX) (FSCM 45152)	
6	O	8040-00-995-0590	Adhesive-Sealant, Silicone, RTV, General Purpose (MIL-A-46106A) 108 (FSCM 01139)	
7	C		Antifreeze, Permanent, Glycol, Inhibited (MIL-A-46153)	gal
		6850-00-181-7929	1-gal can	
		6850-00-181-7933	5-gal can	
		6850-00-181-7940	55-gal drum	
8			Antifreeze, Arctic Type 1-gal can (MIL-A-46155)	gal
		6850-00-174-1806	55-gal can	
9	F	1005-00-556-4171	Brush, bore	
10	F	8020-00-297-6657	Brush, paint, oval 1-1/4 in. size 12 (FSCM 81348)	
11	O		Caps, Shipping and Sealing	
12	O		Cement, General Purpose, Synthetic Base (MIL-C-4003)	
13	O	7510-00-164-8893	Chalk, Marking, White and Colored SS-C-266F	Box
14	C	7930-00-579-8532	Chips, Soap, P-S-579	
15	O	5340-01-029-9172	Clips, Cushioned (FSCM 75272)	
16	O	7920-00-044-9281	Cloth, Cleaning, Low-lint MIL-C-85043A	
17	O		Cloth, Crocus, Abrasive P-C-458	
18			Cloth, Emery 80-Grit	
19	O		Coating, Chemical Agent Resistant CARC No. 383 Green (MIL-C-46168B)	
		8010-01-160-6741	1-qt kit	kit
		8010-01-162-5578	1-gal kit	kit
		8010-01-160-6742	5-gal kit	kit
20	O		Coating, Chemical Agent Resistant CARC No. 383 Brown (MIL-C-46168B)	
		8010-01-160-6744	1-qt kit	kit
		8010-01-160-6745	5-gal kit	kit
		8010-01-160-6746	1-gal kit	kit
21	O	8030-00-597-5367	Compound, Antiseize, High Temperature (MIL-A-907) 2 1/2 lb can	lb

https://truckmanualshub.com/

Expendable Supplies and Materials List (Cont)

(1) Item Number	(2) Level	(3) National Stock Number	(4) Description	(5) U/M
22	O		Compound, Cleaning, Conditioner and Inhibitor for Engine Cooling System (MIL-C-10597)	
		6850-00-598-7328	Package, Consisting of: a. Cleaner, Part 1, Oxalic Acid. b. Cleaner, Part 2, Aluminum Chloride. c. Sodium Silicate Conditioner. d. Alkaline Conditioner. e. Inhibitor. f. Instruction Sheet	ea
23	O		Compound, Cleaning, Creosol Base (MIL-C-5546)	
24	C		Compound, Corrosion Preventive (77493) NYK-77	
25	F	5970-00-166–5697	Compound, Insulating, Electrical, Embedding (MIL-C-47233)	
26	F		Compound, International, No. 2 (5198563) (FSCM 72582)	
27	F	5350-01-157-6916	Compound, Lapping and Grinding J3179-5 (FSCM 58805) 1 pk No. 1 dry grain	ea
28	F		Compound, Polishing 523028 (FSCM 58805)	
29	F		Compound, Retaining - Loctite RC-620	
		8030-00-181-7603	50-cc	cc
		8030-00-181-7529	250-cc	cc
30	F		Compound, Retaining (MIL-R-46082)	
30.1	F		Compound, Sealing, Non-hardening (MIL-S-45180) Type III, Permatex No. 3 (FSCM 77247) Formagasket 3	
		8030-00-656-1426	1-pint can	oz
31	O		Compound, Sealing, Lubricating, Wicking, Thread Locking, Anaerobic, Single Component (MIL-46163) Type I, Grade K	
32	O	8030-01-166-0675	Compound, Sealing, Pipe Thread (FSCM 05972) (702350-X)	
33	O	5610-00-267-1533	Compound, Walkway, Nonslip (MIL-W-5044)	gal
34	O		Connector, Electrical, Butt 34072 (FSCM 04618)	ea
35	F		Gage, Plastic PR 1	
35.1	F		Gasket, Loctite Plastic (#56841) (FSCM 05972)	
36	C		Grease, Automotive and Artillery GAA (MIL-G-10924)	
		9150-00-065-0029	2-1/4 oz tube	oz
		9150-00-935-1017	14-oz cartridge	oz
		9150-00-190-0904	1-lb can	lb
		9150-00-190-0905	5-lb an	lb
		9150-00-190-0907	35-lb can	lb
37	F	9150-01-095-5512	Grease, Ball Bearing, Lithium Base	
38	F	9150-01-091-9336	Grease, General Purpose, Lithium Base	
39	F		Grease, High Performance, Multi-purpose, (MIL-G-24508)	

https://truckmanualshub.com/

Expendable Supplier and Materials List (Cont)

(1) Item Number	(2) Level	(3) National Stock Number	(4) Description	(5) U/M
40	F	9150-00-543-7220	Grease, Molybdenum Disulfide (MIL-2 1164)	
41	O	9505-00-191-3680	Lockwire	
42	F	6810-00-812-9181	Methyl Ethyl Ketone (MEK) TT-M-261 (MIL-T-27602)	gal
43	C		Oil, Fuel, Diesel DF-1 Winter (W-F-800)	
		9140-00-286-5286	Bulk	gal
		9140-00-286-5287	5-gal can	gal
		9140-00-286-5288	55gal drum, 16 gage	gal
		9140-00-286-5289	55-gal drum, 18 gage	gal
44	C		Oil, Fuel, Diesel DF-2 Regular (VV-F-800)	
		9140-00-286-5294	Bulk	gal
		9140-00-286-5295	5-gal can	gal
		9140-00-286-5296	55-gal drum, 16 gage	gal
		9140-00-286-5297	55-gal drum, 18 gage	gal
45	C		Oil, Lubricating Gear, GO 75 (MIL-L-2105C)	
		9150-01-035-5390	1-qt can	qt
		9150-01-035-5393	5-gal drum	gal
		9150-01-035-5391	55-gal drum	gal
46	C		Gil, Lubricating, Gear GO 80/90 (MIL-L-2105C)	
		9150-01-035-5393	5-gal drum	gal
47	O		Oil, Lubricating OEA Ice, Subzero (MIL-L-46167)	
		9150-00-402-4478	1-qt can	qt
		9150-00-402-2372	5-gal drum	gal
		9150-00-491-7197	55-gal drum, 16 gage	gal
48	C		Oil, Lubricating, OE/BDG 10 (MIL-L-2104)	
		9150-00-189-6727	1qt can	qt
		9150-00-186-6668	5-gal drum	gal
			55-gal drum, 16 gage	gal
		9150-00-191-2772	55-gal drum, 18 gage	gal
49	C		Oil, Lubricating, OE/HDO 30 (SAE 30) (MIL-L-2104)	
		9150-00-186-6681	1qt can	
		9150-00-188-9858	5-gal drum	qt
		9150-00-265-9436	55-gal drum, 16 gage	gal
		9150-00-189-6729	55-gal drum, 18 gage	gal
50	C		Gil, Lubricating OE/HDO 50 (MIL-L-2104)	
		9150-00-188-9864	1qt can	qt
		9150-00-188-9865	5-gal drum	gal
		9150-OO-188-9866	55-gal drum, 16 gage	gal
51	O		Oil, Mineral	
52	F		Oil, Test, Fuel Injector J26400-5 (FSCM 58805)	
			5-gal can	gal

https://truckmanualshub.com/

Expendable Supplies and Materials List (Cont)

(1) Item Number	(2) Level	(3) National Stock Number	(4) Description	(5) U/M
53	O	5350-00-186-8818	Paper, Abrasive, Garnet (Emery Cloth) P-P-121	
54	O	5350-00-224-7203	Paper, Abrasive, Silicon Carbide, Waterproof P-P-101	
55	F		Paper, Abrasive, 600 grit	
56	O		Primer, Epoxy, 1-qt kit	kit
57	F		Rust Preventive (MIL-C-16173) Texaco Type 19AS436 (FSCM 45152)	ea
		8030-00-062-5866	1 gal	gal
		8030-00-244-1293	5 gal	gal
		8030-00-244-1294	55 gal	gal
57.1	H		Sealant, Teflon (23520676) (FSCM 72582)	
58	F		Screw, 5116-18 x 2 in.	
59	O		Solder, Rosin Flux Core ASTM B 284-79	
60	C		Solvent, Dry Cleaning SD (P-D-680)	
		6850-00-664-5685	1-qt can	qt
		6850-00-281-1985	l-gal can	gal
61	O	8135-00-178-9200	Tags, Identification (MIL-T-12755) pk/1000	pk
62	F	8030-00-398-4130	Tape, Antiseize, Tetrafluoroethylene (MIL-T-27730)	ea
63	0	5970-00-644-3167	Tape, Insulation, Electrical (MIL-T-50886) 3/4” 82.5 ft roll	roll
64	O		Tape, Masking, A-A-883	
65	O		Thinner, Aliphatic, Polyurethane Coating (MIL-T-81772)	
		8010-00-181-8080	1 gal	gal
		8010-00-181-8079	5-gal drum	gal
66	O		Ties, Cable, Plastic (MIL-S-29190)	
67	O		Trichloroethylene (MIL-T-27602)	
68	F		Tubing, Heat Shrinkable (MIL-T-47051)	
69	O		Coating, Chemical Agent Resistant CARC No. 383 Black (MIL-C-46168B)	
		8010-01-131-6254	1-qt kit	kit
		8010-01-131-6261	1-gal kit	kit
		8010-01-141-2419	5-gal kit	kit

https://truckmanualshub.com/

https://truckmanualshub.com/

APPENDIX D
ILLUSTRATED LIST OF MANUFACTURED ITEMS

Section I. INTRODUCTION

This appendix includes complete instructions for making items authorized to be manufactured or fabricated at direct support and general support maintenance.

A parts number index in alphanumeric order is provided for cross-referencing the part number of the item to be manufactured to the figure which covers fabrication criteria.

All bulk materials needed for manufacture of an item are listed by part number or specification number in a tabular list on the illustration.

Section II. MANUFACTURED ITEMS PART NUMBER INDEX

Part No.	NSN	Description	Fig. No.
2BG623		Remover, Bearing Shell	D-1
2BH944		Eyes, Lifting	D-2
2BH945	5120-00-789-0492	Pliers, Retaining Ring	D-3
2SK742		Holding Fixture, Turbocharger	D-4
21021FX24	4720-00-676-7936	Hose	D-5
25351FX7W	6145-01-074-7535	Wire Assembly	D-6
2HK392		Installation Tool, Wear Sleeve	D-7
		Gage, Feeler	D-8

https://truckmanualshub.com/

Illustrated list of Manufactured Items (Cont)

Section III. MANUFACTURED ITEMS ILLUSTRATION

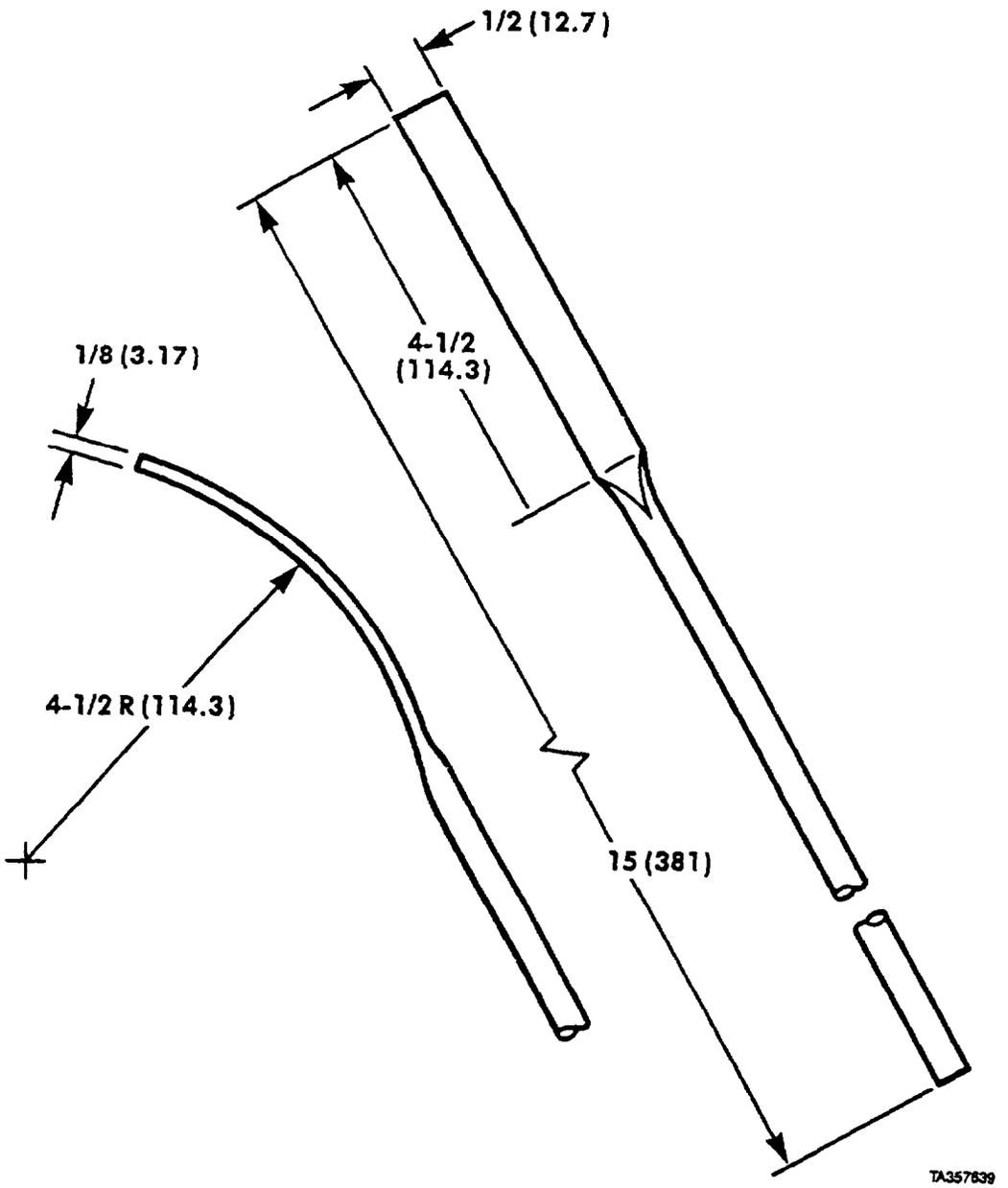

NOTES:
1. FABRICATE FROM 3/8 INCH (9.52 MM) DLAMETER COLD ROLL STEEL.
2. HEAT AND FLATTEN END OVER 9 INCH (228.6MM) DIAMETER ROUND STOCK UNTIL END IS 1/8 x 1/2 x 4-1/2 INCHES (3.17 x 12.7 x 114.3 MM).
3. ALL DIMENSIONS ARE IN INCHES (MM).

Figure D-1. *Bearing Shell* ***Remover (PIN 2BG623).***

https://truckmanualshub.com/

Illustrated List of Manufactured Items (Cont)

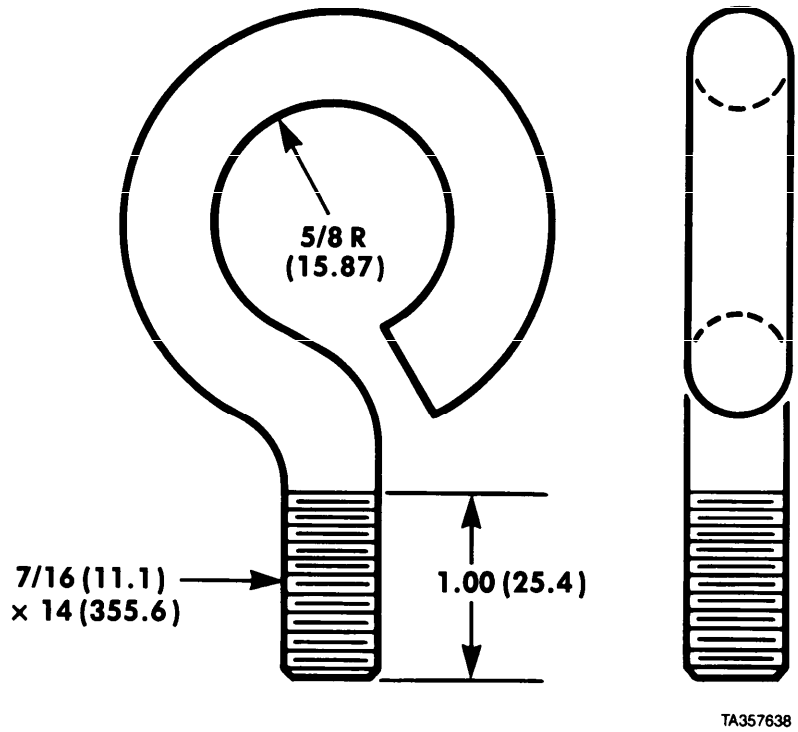

NOTES:

1. FABRICATE FROM 1/2 × 6 INCH (12.7 × 152.4 MM) COLD ROLLED STEEL.
2. THREAD SIZE 7/16 × 14 × 1 INCH (11.1 × 355.6 × 25.4 MM) LONG.
3. HEAT UNTHREADED END AND BEND OVER 1-1/4 INCH (651.5 MM) DIAMETER ROD.
4. ALL DIMENSIONS ARE IN INCHES (MM).

Figure D-2. Lifting Eyes (P/N 2BH944).

https://truckmanualshub.com/

Illustrated List of Manufactured Items (Cont)

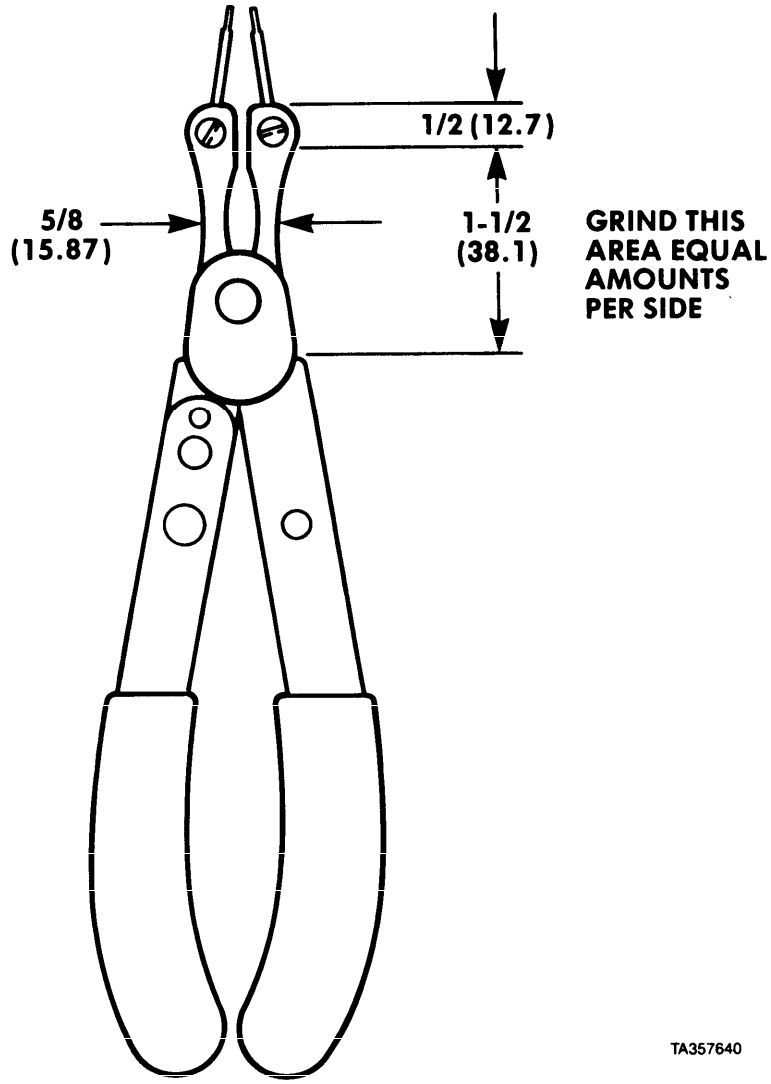

NOTES:

1. FABRICATE FROM SNAP RING PLIERS, NSN 5120-00-789-0492.
2. GRIND 1/2 INCH (12.7 MM) FROM END, 1-1/2 INCHES (38.1 MM) DOWN TO A THICKNESS OF 5/8 INCHES (15.87 MM).
3. ALL DIMENSIONS ARE IN INCHES (MM).

Figure D-3. Retaining Ring Pliers (P/N 2BH945).

https://truckmanualshub.com/

Illustrated List of Manufactured Items (Cont)

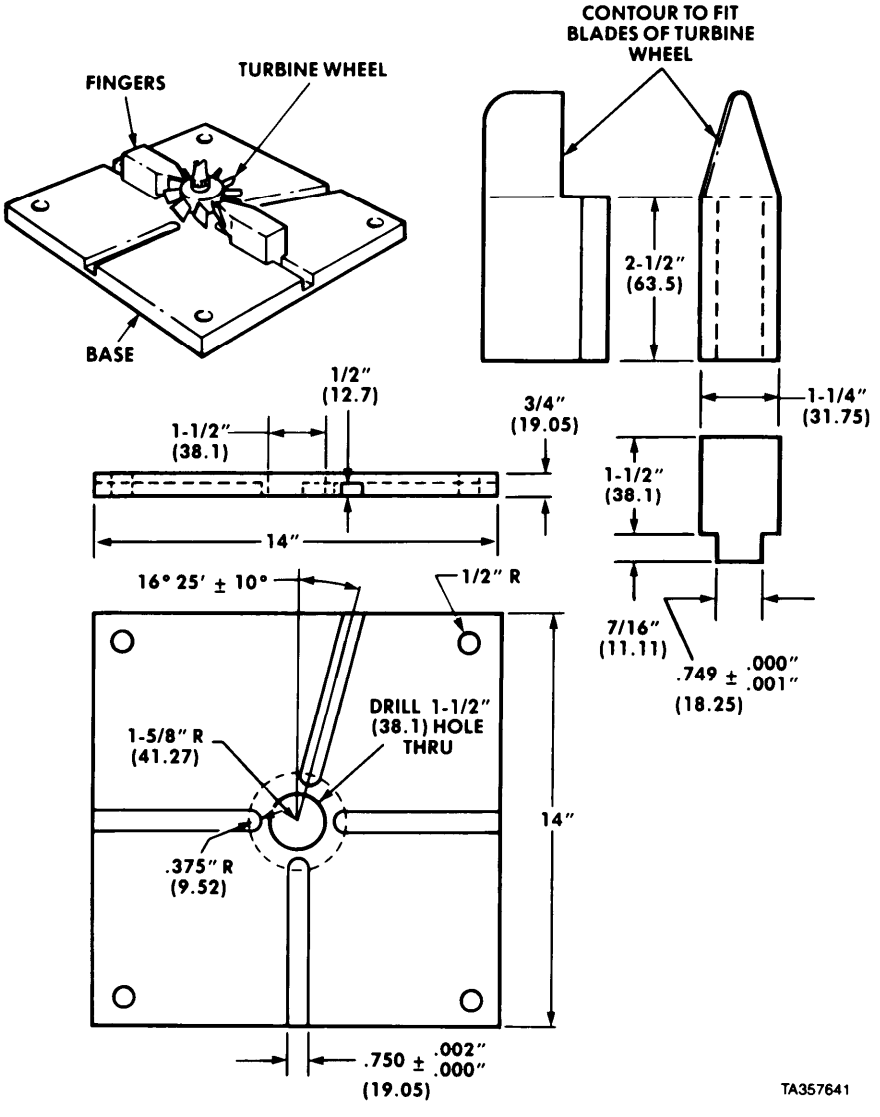

NOTES:

1. FABRICATE FROM 3/4 INCH (19.05 MM) EXTERIOR GRADE PLYWOOD.
2. DRILL 1-1/2 INCH (38.1 MM) DIAMETER HOLE IN CENTER OF BASE.
3. DRILL FOUR 1/2 INCH (12.7 MM) DIAMETER HOLES IN CORNERS OF BASE.
4. ROUTE FOUR SLOTS 1/2 INCH (12.7 MM) DEEP, 3/4 INCH (38.1 MM) WIDE, AND 6-5/8 INCHES (153.02 MM) LONG IN BASE.
5. FABRICATE TWO FINGERS FROM PLYWOOD 1-15/16 INCHES (49.21 MM) HIGH, 2-1/2 INCHES (63.5 MM) LONG, AND 1-1/4 INCH (31.75 MM) WIDE.
6. GRIND BOTTOM OF FINGERS 23/32 INCH (18.25 MM) WIDE AND 7/16 INCH (11.11 MM) HIGH. CONTOUR FRONT SURFACE OF FINGERS TO FIT TURBINE WHEEL BLADES.
7. ALL DIMENSIONS ARE IN INCHES (MM).

Figure D-4. Turbocharger Holding Fixture (P/N 2SK742)

https://truckmanualshub.com/

Illustrated List of Manufactured Items (Cont)

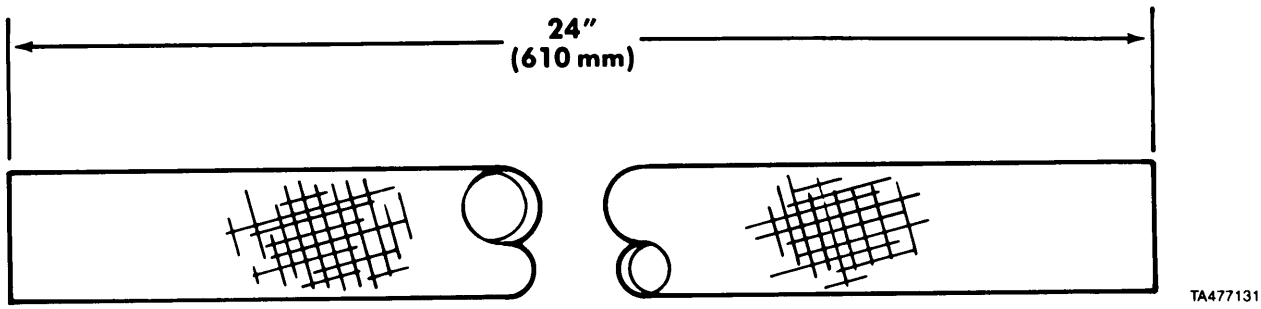

NOTES:
1. FABRICATE FROM NSN 4720-00-676-7936 STOCK.
2. USING SUITABLE KNIFE AND WORKING ON A CLEAN SURFACE, CUT HOSE TO 24 INCHES (610 MM).
3. ALL DIMENSIONS ARE IN INCHES (MM).

Figure D-5. Hose (P/N 21021FX24)

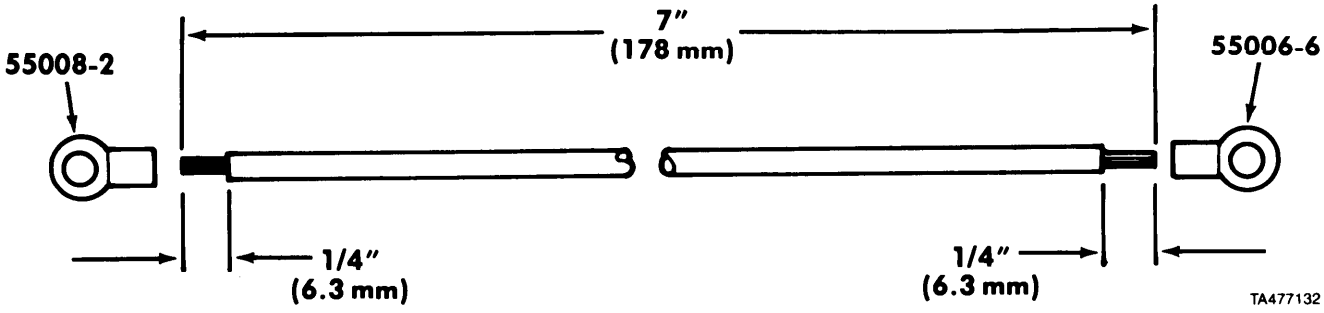

NOTES:
1. FABRICATE FROM NSN 6145-01-074-7535 STOCK.
2. USING SUITABLE WIRE CUTTERS, CUT WIRE TO 7 INCHES (178 MM).
3. STRIP BOTH ENDS OF WIRE 1/4 INCH (6.3 MM).
4. CRIMP 55008-2 LUG TERMINAL ONTO END OF WIRE.
5. CRIMP 55006-6 LUG TERMINAL ONTO END OF WIRE.
6. ALL DIMENSIONS ARE IN INCHES (MM).

Figure D-6. Wire Assembly (P/N 25351FX7W)

☆U.S. GOVERNMENT PRINTING OFFICE: 1989 643-016/00053

https://truckmanualshub.com/

Illustrated List of Manufactured Items (Cont)

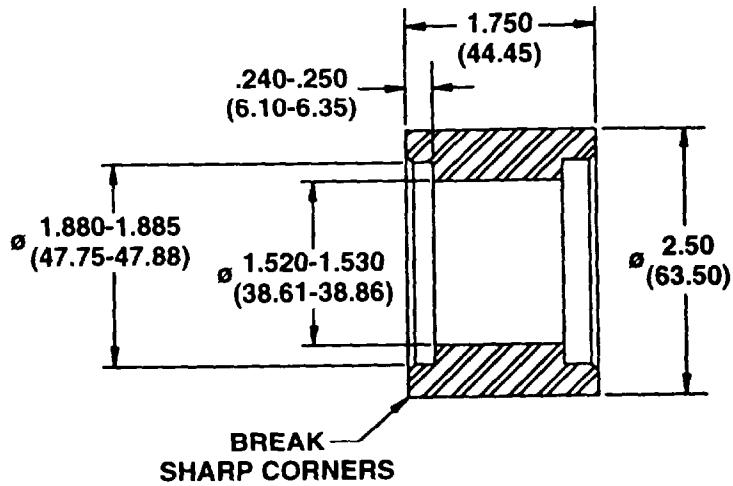

NOTES:

1. FABRICATE FROM 2.50 INCH OUTSIDE DIAMETER X 1.50 INCH DIAMETER (63.50 MM X 38.10 MM) TUBING.
2. BORE INSIDE DIAMETER TO 1.52-1.53 INCH (38.61-38.86 MM).
3. BORE ONE SIDE OF TUBING TO 1.880-1.885 INCH (47.75-47.88 MM) TO A DEPTH OF 0.240-0.250 INCH (6.10-6.35 MM).
4. ALL DIMENSIONS ARE IN INCHES (MM).

Figure D-7 Wear Sleeve Installation Tool

https://truckmanualshub.com/

Illustrated List of Manufactured Items (Cont)

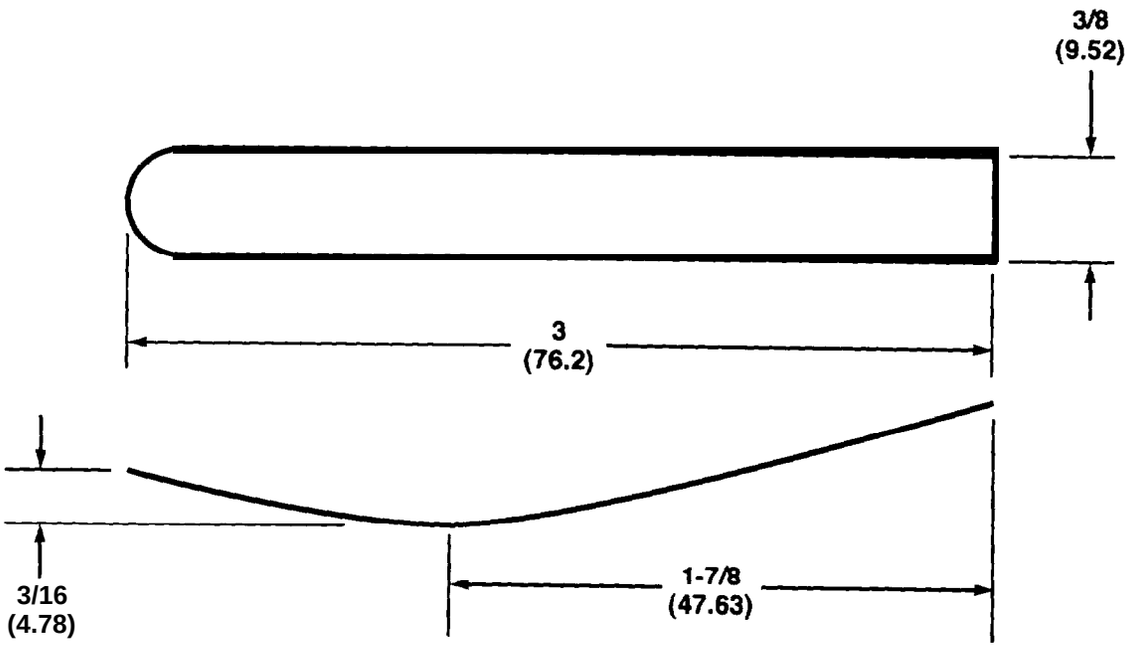

NOTES:

1. FABRICATE FROM FEELER GAGE STOCK OF THE FOLLOWING THICKNESSES:
   . 0.004 INCH (0.102 MM)
   . 0.005 INCH (0.127 MM)
   . 0.017 INCH (0.432 MM)
2. CUT APPROPRIATE THICKNESS FEELER GAGE STOCK TO A SIZE OF 0.38 INCH (9.52 MM) BY 3 INCH (76.2 MM).
3. BEND FEELER GAGE AS SHOWN ABOVE.
4. ALL DIMENSIONS ARE IN INCHES (MM).

Figure D-8. Feeler Gage [0.004 *in. (0.102 mm), 0.005 in. (0.127 mm), 0.017 in. (0.432mm)]*

*U.S. GOVERNMENT PRNTING 0FFICE:1999-746-025/8011

https://truckmanualshub.com/

APPENDIX E
TORQUE LIMITS

E-1. GENERAL. This section provides general torque limits for screws used on the M977 series vehicles. Special torque limits are indicated in the maintenance procedures for applicable components. The general torque limits given in this appendix shall be used when specific torque limits are not indicated in the maintenance procedure. These general torque limits cannot be applied to screws that retain rubber components. The rubber components will be damaged before the torque limit is reached. If a special torque limit is not given in the maintenance instructions, tighten the screw or nut until it touches the metal bracket then tighten it one more turn.

E-2. TORQUE LIMITS. Table E-1 lists dry torque limits. Dry torque limits are used on screws that do not have lubricants applied to the threads. Table E-2 lists wet torque limits. Wet torque limits are used on screws that have high pressure lubricants applied to the threads.

E-3. HOW TO USE TORQUE TABLE:

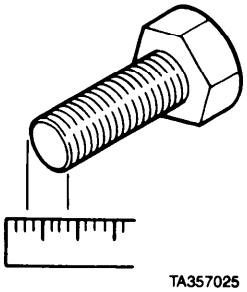

TA357025

(1) Measure the diameter of the screw you are installing.

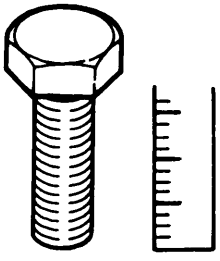

TA357026

(2) Count the number of threads per inch.

(3) Under the heading SIZE, look down the left hand column until you find the diameter of the screw you are installing (there will usually be two lines beginning with the same size).

(4) In the second column under SIZE, find the number of threads per inch that matches the number of threads you counted in step (2). (Not required for metric screws.)

CAPSCREW HEAD MARKINGS

Manufacturer's marks may vary. These are all SAE Grade 5 (3-line).	Metric screws are of three grades: 8.8, 10.9, and 12.9. Grades & Manufacturer's marks appear on the screw head.
	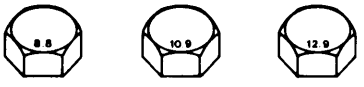
STANDARD	**METRIC**

TA357028

(5) To find the grade screw you are installing, match the markings on the head to the correct picture of CAPSCREW HEAD MARKINGS on the torque table.

(6) Look down the column under the picture you found in step (5) until you find the torque limit (in lb-ft or N·m) for the diameter and threads per inch of the screw you are installing.

https://truckmanualshub.com/

Torque Limits (Cont)

Table E-1. Torque Limits for Dry Fasteners

CAPSCREW HEAD MARKINGS

Manufacturer's marks may vary. These are all SAE Grade 5 (3-line).

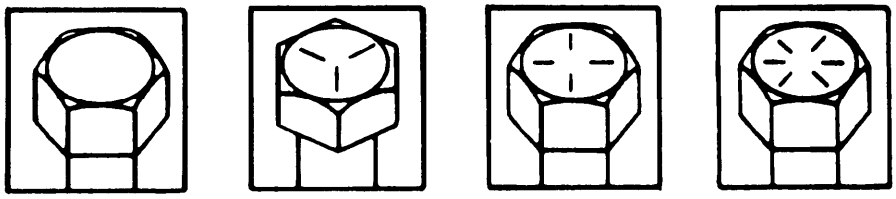

TA357027

SIZE			TORQUE							
			SAE GRADE NO. 2		SAE GRADE NO. 5		SAE GRADE NO. 6 or 7		SAE GRADE NO. 8	
DIA. INCHES	THREADS PER INCH	MILLIMETERS	POUNDS FEET	NEWTON METERS	POUNDS FEET	NEWTON METERS	POUNDS FEET	NEWTON METERS	POUNDS FEET	NEWTON METERS
1/4	20	6.35	5	7	8	11	10	14	12	16
1/4	28	6.35	6	9	10	14	12	16	14	19
5/16	18	7.94	11	15	17	23	21	28	25	34
5/16	24	7.94	12	16	19	26	24	33	25	34
3/8	16	9.53	20	27	30	41	40	54	45	61
3/8	24	9.53	23	31	35	47	45	61	50	68
7/16	14	11.11	30	41	50	68	60	81	70	95
7/16	20		35	47	55	75	70	95	80	108
1/2	13	12.70	50	68	75	102	95	129	110	149
1/2	20		55	75	90	122	100	136	120	163
9/16	12	14.29	65	88	110	149	135	183	150	203
9/16	18		75	102	120	163	150	203	170	231
5/8	11	15.88	90	122	150	203	190	258	220	298
5/8	18		100	136	180	244	210	285	240	325
3/4	10	19.05	160	217	260	353	320	434	380	515
3/4	16		180	244	300	407	360	488	420	597
7/8	9	22.23	140	190	400	542	520	705	600	814
7/8	14		155	210	440	597	580	786	660	895
1	8	25.40	220	298	580	786	800	1085	900	1220
1	12		240	325	640	868	860	1166	1000	1356
1-1/8	7	25.58	300	407	800	1085	1120	1519	1280	1736
1-1/8	12		340	461	880	1193	1260	1709	1440	1953
1-1/4	7	31.75	420	570	1120	1519	1580	2142	1820	2468
1-1/4	12		460	624	1240	1681	1760	2387	2000	2712
1-3/8	6	34.93	560	759	1460	1980	2080	2820	2380	3227
1-3/8	12		640	868	1680	2278	2380	3227	2720	3688
1-1/2	6	38.10	740	1003	1940	2631	2780	3770	3160	4285
1-1/2	12		840	1139	2200	2983	3100	4204	3560	4827

https://truckmanualshub.com/

Torque Limits (Cont)

Table E-2. Torque Limits for Wet Fasteners

CAPSCREW HEAD MARKINGS

Manufacturer's marks may vary. These are all SAE Grade 5 (3-line).

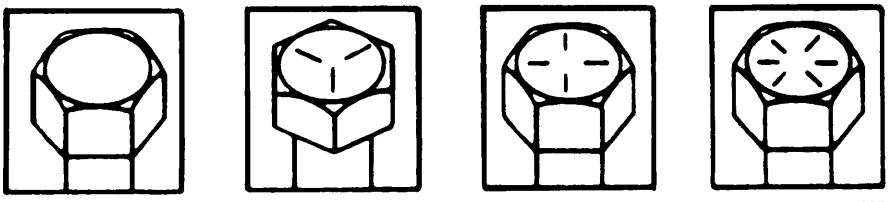

TA357027

SIZE			TORQUE							
			SAE GRADE NO. 2		SAE GRADE NO. 5		SAE GRADE NO. 6 or 7		SAE GRADE NO. 8	
DIA. INCHES	THREADS PER INCH	MILLIMETERS	POUNDS FEET	NEWTON METERS	POUNDS FEET	NEWTON METERS	POUNDS FEET	NEWTON METERS	POUNDS FEET	NEWTON METERS
1/4	20	6.35	4	6	6	8	8	11	9	12
1/4	28	6.35	5	7	7	9	9	12	10	14
5/16	18	7.94	8	11	13	18	16	22	18	24
5/16	24	7.94	9	12	14	19	18	24	20	27
3/8	16	9.53	15	20	23	31	30	41	35	47
3/8	24	9.53	17	23	25	34	30	41	35	47
7/16	14	11.11	24	33	35	47	45	61	55	75
7/16	20		25	34	40	54	50	68	60	81
1/2	13	12.70	35	47	55	75	70	95	80	108
1/2	20		40	54	65	88	80	108	90	122
9/16	12	14.29	50	68	80	108	100	136	110	149
9/16	18		55	75	90	122	110	149	130	176
5/8	11	15.88	70	95	110	149	140	190	170	231
5/8	18		80	108	130	176	160	217	180	244
3/4	10	19.05	120	163	200	271	240	325	280	380
3/4	16		140	190	220	298	280	380	320	434
7/8	9	22.23	110	149	300	407	400	542	460	624
7/8	14		120	163	320	434	440	597	500	678
1	8	25.40	160	217	440	597	600	814	680	922
1	12		170	231	480	651	660	895	740	1003
1-1/8	7	25.58	220	298	600	814	840	1139	960	1302
1-1/8	12		260	353	660	895	940	1275	1080	1464
1-1/4	7	31.75	320	434	840	1139	1100	1492	1360	1844
1-1/4	12		360	488	920	1248	1320	1790	1500	2034
1-3/8	6	34.93	420	570	1100	1492	1560	2115	1780	2414
1-3/8	12		460	624	1260	1709	1780	2414	2040	2766
1-1/2	6	38.10	560	760	1460	1980	2080	2820	2360	3200
1-1/2	12		620	841	1640	2224	2320	3146	2660	3607

https://truckmanualshub.com/

https://truckmanualshub.com/

INDEX

Subject	Paragraph, Figure, Table Number
A	
Adapter, air inlet removal/installation	14-5
Aftercooler	
Maintenance	16-1
Removal/Installation	16-2
Air box covers removal/installation	3-5
Air box drains removal/installation	3-6
Air cylinder, throttle removal/repair/installation	15-8
Air inlet adapter removal/installation	14-5
Arm, rocker removal/repair/installation	7-5
B	
Balance cover, front removal/installation	7-12
Bearing bushing, camshaft end removal/installation	7-10
Bearing, main, and crankshaft removal/repair/installation	4-5
Block, engine	
Maintenance	3-1
Repair	3-2
Blower	
Maintenance	14-1
Removal/Installation	14-3
Repair	14-4
Blower accessory drive hub removal/repair/installation	10-3
Blower drive seal ring removal/installation	10-4
Blower drive support removal/repair/installation	10-2
Box covers,air removal/installation	3-5
Box drains,air removal/installation	3-6
Brake retarder, engine	
Maintenance	11-1
Removal/Installation	11-2
Adjustment	19-3
Repair	11-3
Brake wire harness,engine removal/installation	11-4
Breather tube, cylinder block removal/installation	8-2
Bridge guide,valve removal/installation	7-2
Bridge, exhaust valve removal/installation	7-8
Buffer screw switch removal/repair/installation	15-7
Bushing, camshaft end bearing removal/installation	7-10
C	
Cam follower repair	7-7
Cam follower/push rod removal/repair/installation	7-6
Camshaft	
Maintenance	7-1
Removal/Repair/Installation	7-9
Camshaft end bearing and bushing removal/installation	7-10
Clutch, fan	
Maintenance	18-1
Repair	18-2
Common tools and equipment	2-2
Compression check, engine	19-11
Connecting rod removal/installation	6-2
Connecting rod, and liner, piston removal/installation	6-2
Connecting rod maintenance, and piston	6-1

https://truckmanualshub.com/

INDEX (CONT)

Subject	Paragraph, Figure, Table Number
Control adjustment, engine speed	19-10
Control lever, adjustment, injector rack	19-6
Control tube, injector removal/installation	12-5
Cover, air box removal/installation	3-5
Cover, crankshaft removal/installation	4-6
Cover, front balance removal/installation	7-12
Cover, governor removal/repair/installation	15-4
Crankshaft cover removal/installation	4-6
Crankshaft, main bearing and removal/repair/installation	4-5
Crankshaft maintenance	4-1
Crankshaft pulley removal/installation	4-2
Cylinder head	
Maintenance	3-1
Removal/Installation	3-7
Repair	3-8
Cylinder, throttle air removal/repair/installation	15-8
D	
Damper, vibration removal/installation	4-3
Delay, throttle removal/installation	15-5
Drains, airbox removal/installation	3-6
Drive gear.oil pump removal/installation	4-4
Drive gear,water pump removal/installation	10-5
Drive hub, blower accessory removal/repair/installation	10-3
Drive seal ring, blower removal/installation	10-4
Drive support, blower removal/repair/installation	10-2
E	
End bearing bushing, camshaft removal/installation	7-10
End plate,front removal/installation	3-3
End plate,rear removal/installation	3-4
Engine block	
Maintenance	3-1
Repair	3-2
Engine block breather tube removal/installation	8-2
Engine brake retarder	
Maintenance	11-1
Removal/Installation	11-2
Repair	11-3
Adjustment	19-3
Engine brake wire harness removal/installation	11-4
Engine compression check	19-11
Engine disassembly/reassembly sequence	2-8
Engine governor maintenance	15-1
Engine idle speed and buffer screw adjustment	19-7
Engine speed adjustments	19-9
Engine stop solenoid removal/installation	15-10
Engine tune-up	19-1
Equipment characteristics, capabilities and features	1-9
Equipment data	1-7
Equipment improvement recommendations, reporting	1-2
Equipment improvement report and maintenance digest (EIRMD) and equipment improvement report and maintenance summary(EIR MS)	1-5
Exhaust manifold	
Maintenance	9-1

https://truckmanualshub.com/

INDEX (CONT)

Subject	Paragraph, Figure, Table Number
Exhaust manifold (Cont)	
Removal/Installation	9-2
Exhaust valve removal/repair/installation	7-4
Exhaust valve bridge removal/Installation	7-8
Expendable supplies and materials list	C-2
F	
Fan Clutch	
Maintenance	18-1
Repair	18-2
Flex plate removal/installation	5-2
Flywheel housing and rear oil seal removal/installation	5-3
Forms	A-2
Forms, maintenance, records and reports	1-2
Front balance cover removal/installation	7-12
Front end plate removal/installation	3-3
Front seal removal/installation	4-6
Fuel injector	
Maintenance	12-1
Removal/Installation	12-2
Repair	12-3
Testing	12-4
Timing Adjustment	19-3
Fuel pump removal/repair/installation	13-2
Fuel system maintenance	13-1
G	
Gear, idler removal/repair/installation	7-11
Gear, oil pump drive removal/installation	4-4
Gear, water pump drive removal/installation	10-5
General information	2-1
General maintenance instructions	2-5
Governor repair	15-3
Governor cover removal/repair/installation	15-4
Governor gap adjustment	19-5
Governor housing assembly removal/installation	15-2
Governor, variable low speed limiting removal/installation	15-6
Guide, valve removal/installation	7-3
Guide, valve bridge removal/installation	7-2
H	
Harness, engine brake wire removal/installation	11-4
Head, cylinder	
Removal/Installation	3-7
Repair	3-8
How to use this manual	vi
How to use torque table	E-3
Housing assembly, governor removal/installation	15-2
Hub, blower accessory drive removal/repair/installation	10-3
I	
Idler gear removal/repair/installation	7-11
Illustrated list of manufactured items	D-1
Injector control tube removal/installation	12-5
Injector, fuel	
Maintenance	12-1

https://truckmanualshub.com/

INDEX (CONT)

Subject	Paragraph, Figure, Table Number
Injector, fuel (Cent)	
Removal/Installation	12-2
Repair	12-3
Tasting	12-4
Timing Adjustment	19-3
Injector rack control lever adjustment	19-6
Injector tube removal/installation	3-9
Insert, valve sea tremoval/installation	3-10
Introduction	1-1
L	
Left and right sides of engine	2-6
Limiting governor, variable low speed removal/installation	15-6
Liner, piston, connecting rod and removal/installation	6-2
Location and description of components	1-10
Low speed limiting governor, variable removal/installation	15-6
M	
Main bearing and crank shaft removal/repair/installation	4-5
Maintenance forms, records, and reports	1-2
Maintenance instructions, general	2-5
Manifold, exhaust removal/installation	9-2
Manufactured items illustrations	D-3
Manufactured items part number index	D-2
Materials list, expendable supplies and	C-1
Maximum no-load speed adjustment	19-9
Metric System	1-2
N	
National stock number to figure and item numbers cross-reference	B-5
Nozzle, water removal/installation	3-11
O	
Oil pan removal/installation	8-3
Oil pressure regulator valve removal/repair/installation	8-7
Oil pressure relief valve removal/repair/installation	8-6
Oil pump	
Removal/Installation	8-4
Repair	8-5
Oil pump drive gear removal/installation	4-4
Oil seal, front, crankshaft cover removal/installation	4-6
Oil seal, rear, flywheel housing and removal/installation	5-3
Oil system maintenance	8-1
Other publications	A-3
Organization of removal,installation, and repair procedures	2-7
P	
Pan,oil removal/installation	8-3
Part number index, manufactured items	D-2
Part number to figure and item numbers cross-reference	B-4
Parts list, repair	B-2
Parts, repair	2-4
Piston	
Removal/Installation	6-2
Repair	6-3
Piston and connecting rod maintenance	6-1
Piston, connecting rod, and liner removal/installation	6-2
Plate, front end removal/installation	3-3

INDEX (CONT)

Subject	Paragraph, Figure, Table Number
Plate, rear end removal/installation	3-4
Preparation for storage or shipment	1-2
Pressure regulator valveoil removal/repair/installation	8-7
Pressure relief valve oil removal/repair/installation	8-6
Publication indexes	A-1
Publications, other	A-3
Pulley, crankshaft removal/installation	4-2
Pump, fuel removal/repair/installation	13-2
Pump, oil	
Removal/Installation	8-4
Repair	8-5
Pump drive gear,oil removal/installation	4-4
Pump drive gear, water removal/installation	10-5
Pump, water	
Maintenance	17-1
Removal/Repair/Installation	17-2
Push rod removal/installation	7-6
R	
Rear end plate removal/installation	3-4
Rear oil seal, flywheel housing and removal/installation	5-3
Records and reports, maintenance forms	1-2
References	A-1
Regulator valve, oil pressure removal/repair/installation	8-7
Relief valvel oil pressure removal/repair/installation	8-6
Repair parts	2-4
Repair parts list	B-2
Repair parts and special tools list	B-1
Retarder, engine brake	
Removal/Installation	11-2
Repair	11-3
Rocker arm removal/repair/installation	7-5
Rod and liner, connecting, piston removal/installation	6-2
S	
Screw switch, buffer removal/repair/installation	15-7
Seal, front removal/installation	4-6
Seal, oil, front, crankshaft cover removal/installation	4-6
Seal ring,blower drive removal/installation	10-4
Solenoid, engine stop removal/installation	15-10
Solenoid, throttle control removal/repair/installation	15-9
Special tools	2-3
Special tools list	B-3
Speed adjustments	19-9
Starting aid screw adjustment	19-7
Stop solenoid, engine removal/installation	15-10
Supplies and materials list, expendable	C-1
Support, blower drive removal/repair/installation	10-2
Switch, buffer screw removal/repair/installation	15-7
T	
Tachometer drive removal/installation	14-2
Throttle air cylinder removal/repair/installation	15-8
Throttle control solenoid removal/repair/installation	15-9
Throttle delay removal/installation	15-5
Tool sand equipment,common	2-2

https://truckmanualshub.com/

INDEX (CONT)

Subject	Paragraph, Figure, Table 'Number
Tools, special	2-3
Torque table, how to use....	E-3
Torque limits	E-2
Troubleshooting instructions.	2-10
Trunnion and front oil seal, crankshaft cover removal installation	4-6
Tube, cylinder block breather removal/installation	8-2
Tube injector removal/installation	3-9
Tube, injector control removal/installation	12-5
Tune-up, engine	19-1
Turbocharger	
Maintenance	14-1
Removal/Installation	14-6
Repair	14-7
V	
Valve bridge, exhaust removal/installation	7-8
Valve bridge guide removal/installation	7-2
Valve, exhaust removal/repair/installation	7-4
Valve guide removal/installation.	7-3
Valve mechanism maintenance	7-1
Valve, oil pressure relief removal/repair/installation	8-6
Valve, oil pressure regulator removal/repair/installation	8-7
Valve seat insert removal/installation	3-10
Variable low speed limiting governor removal/installation.	15-6
Vibration damper removal/installation.	4-3
W	
Warranty information	1-2
Water nozzle removal/installation.	3-11
Water pump	
Maintenance	17-1
Removal/Repair/Installation.	17-2
Water pump drive gear removal/installation	10-5
Wire harness, engine brake removal/installation	11-4

☆ U.S. GOVERNMENT PRINTING OFFICE: 1988— 542-015/80054

https://truckmanualshub.com/

By Order of the Secretary of the Army

CARL E. VUONO
General, United States Army
Chief of Staff

Official:

R.L. DILWORTH
Brigadier General United States Amy
The Adjutant General

Distribution

To be distributed in accordance with DA Form 12-38, Direct and General Support Maintenance requirements for Engine, Diesel, 8-cylinder, Turbocharged, Detroit Diesel Allison Model 8V92T.

https://truckmanualshub.com/

https://truckmanualshub.com/

TEAR ALONG PERFORATED LINE

RECOMMENDED CHANGES TO EQUIPMENT PUBLICATIONS

THEN - JOT DOWN THE INFO ON THIS FORM---TEAR OUT THIS PAGE---FOLD IT---AND DROP IT IN THE MAIL!

SOMETHING WRONG WITH THIS PUBLICATION?

FROM: (IMPRINT YOUR UNIT'S COMPLETE ADDRESS)
HQ & HQ CO.
46TH TRANS. BN.
FT. CARSON, CO

DATE SENT: 5 JAN., 1997

PUBLICATION NUMBER	PUBLICATION DATE	PUBLICATION TITLE
TM9-2815-224-34&P	20 JANUARY 88	DIRECT SUPPORT AND GENERAL SUPPORT MAINTENANCE MANUAL M977 Series Vehicles

BE EXACT...PINPOINT WHERE IT IS				IN THIS SPACE, TELL WHAT IS WRONG AND WHAT SHOULD BE DONE ABOUT IT:
PAGE NO.	PARA-GRAPH	FIGURE NO.	TABLE NO.	
12-9	12-3	NA	NA	Step (12) states to remove injector body (5) from sleeve spacer (19). Change to remove injector body (5) from rack tester kit.

SAMPLE

PRINTED NAME, GRADE OR TITLE, AND TELEPHONE NUMBER
ALBERT RAND, SSG, 226-5644

SIGN HERE: Albert Rand

DA FORM 1 JUL 79 2028-2

PREVIOUS EDITIONS ARE OBSOLETE.

P.S. IF YOUR OUTFIT WANTS TO KNOW ABOUT YOUR RECOMMENDATION, MAKE A CARBON COPY OF THIS AND GIVE IT TO YOUR HEADQUARTERS.

https://truckmanualshub.com/

REVERSE OF DA FORM 2028-2

SAMPLE

TEAR ALONG PERFORATED LINE

FILL IN YOUR UNIT'S ADDRESS

FOLD BACK

DEPARTMENT OF THE ARMY
HQ & HQ CO. 46TH TRANS. BN.
FT. CARSON, CO

OFFICIAL BUSINESS

U.S. MAIL

NOTE:
Apply Stamp

Commander
US Army Tank-automotive and Armaments Command
ATTN: AMSTA-AC-NML
Rock Island, IL 61299-7630

https://truckmanualshub.com/

TEAR ALONG PERFORATED LINE

RECOMMENDED CHANGES TO EQUIPMENT PUBLICATIONS

THEN - JOT DOWN THE INFO ON THIS FORM---TEAR OUT THIS PAGE---FOLD IT---AND DROP IT IN THE MAIL!

SOMETHING WRONG WITH THIS PUBLICATION?

FROM: (IMPRINT YOUR UNIT'S COMPLETE ADDRESS)

DATE SENT:

PUBLICATION NUMBER	PUBLICATION DATE	PUBLICATION TITLE
TM9-2815-224-34&P	20 JANUARY 88	DIRECT SUPPORT AND GENERAL SUPPORT MAINTENANCE MANUAL M977 Series Vehicles

BE EXACT...PINPOINT WHERE IT IS				IN THIS SPACE, TELL WHAT IS WRONG AND WHAT SHOULD BE DONE ABOUT IT:
PAGE NO.	PARA-GRAPH	FIGURE NO.	TABLE NO.	

PRINTED NAME, GRADE OR TITLE, AND TELEPHONE NUMBER

SIGN HERE:

DA FORM 1 JUL 79 **2028-2**

PREVIOUS EDITIONS ARE OBSOLETE.

P.S. IF YOUR OUTFIT WANTS TO KNOW ABOUT YOUR RECOMMENDATION, MAKE A CARBON COPY OF THIS AND GIVE IT TO YOUR HEADQUARTERS.

https://truckmanualshub.com/

REVERSE OF DA FORM 2028-2 AMSMC OP 100-85

TEAR ALONG PERFORATED LINE

FILL IN YOUR
UNITS ADDRESS

DEPARTMENT OF THE ARMY

OFFICIAL BUSINESS

NO POSTAGE
NECESSARY
IF MAILED
IN THE
UNITED STATES

BUSINESS REPLY MAIL

FIRST CLASS PERMIT NO. 82 ROCK ISLAND IL

POSTAGE WILL BE PAID BY ROCK ISLAND ARSENAL

Director
Armament and Chemical Acquisition
and Logistics Activity
ATTN: AMSTA-AC-NML
Rock Island, IL 61201-9948

https://truckmanualshub.com/

TEAR ALONG PERFORATED LINE

RECOMMENDED CHANGES TO EQUIPMENT PUBLICATIONS

THEN - JOT DOWN THE INFO ON THIS FORM---TEAR OUT THIS PAGE---FOLD IT---AND DROP IT IN THE MAIL!

SOMETHING WRONG WITH THIS PUBLICATION?

FROM: (IMPRINT YOUR UNIT'S COMPLETE ADDRESS)

DATE SENT:

PUBLICATION NUMBER	PUBLICATION DATE	PUBLICATION TITLE
TM9-2815-224-34&P	20 JANUARY 88	DIRECT SUPPORT AND GENERAL SUPPORT MAINTENANCE MANUAL M977 Series Vehicles

BE EXACT...PINPOINT WHERE IT IS

PAGE NO.	PARA-GRAPH	FIGURE NO.	TABLE NO.

IN THIS SPACE, TELL WHAT IS WRONG AND WHAT SHOULD BE DONE ABOUT IT:

PRINTED NAME, GRADE OR TITLE, AND TELEPHONE NUMBER

SIGN HERE:

DA FORM 1 JUL 79 **2028-2**

PREVIOUS EDITIONS ARE OBSOLETE.

P.S. IF YOUR OUTFIT WANTS TO KNOW ABOUT YOUR RECOMMENDATION, MAKE A CARBON COPY OF THIS AND GIVE IT TO YOUR HEADQUARTERS.

https://truckmanualshub.com/

REVERSE OF DA FORM 2028-2 AMSMC OP 103-85

FILL IN YOUR
UNITS ADDRESS

DEPARTMENT OF THE ARMY

OFFICIAL BUSINESS

NO POSTAGE
NECESSARY
IF MAILED
IN THE
UNITED STATES

BUSINESS REPLY MAIL

FIRST-CLASS PERMIT NO. 82 ROCK ISLAND IL

POSTAGE WILL BE PAID BY ROCK ISLAND ARSENAL

Director
Armament and Chemical Acquisition
and Logistics Activity
ATTN: AMSTA-AC-NML
Rock Island, IL 61201-9948

TEAR ALONG PERFORATED LINE

https://truckmanualshub.com/

TEAR ALONG PERFORATED LINE

RECOMMENDED CHANGES TO EQUIPMENT PUBLICATIONS

THEN - JOT DOWN THE INFO ON THIS FORM---TEAR OUT THIS PAGE---FOLD IT---AND DROP IT IN THE MAIL!

SOMETHING WRONG WITH THIS PUBLICATION?

FROM: (IMPRINT YOUR UNIT'S COMPLETE ADDRESS)

DATE SENT:

PUBLICATION NUMBER	PUBLICATION DATE	PUBLICATION TITLE
TM9-2815-224-34&P	20 JANUARY 88	DIRECT SUPPORT AND GENERAL SUPPORT MAINTENANCE MANUAL M977 Series Vehicles

BE EXACT...PINPOINT WHERE IT IS

PAGE NO.	PARA-GRAPH	FIGURE NO.	TABLE NO.

IN THIS SPACE, TELL WHAT IS WRONG AND WHAT SHOULD BE DONE ABOUT IT:

PRINTED NAME, GRADE OR TITLE, AND TELEPHONE NUMBER

SIGN HERE:

DA FORM 1 JUL 79 **2028-2**

PREVIOUS EDITIONS ARE OBSOLETE.

P.S. IF YOUR OUTFIT WANTS TO KNOW ABOUT YOUR RECOMMENDATION, MAKE A CARBON COPY OF THIS AND GIVE IT TO YOUR HEADQUARTERS.

https://truckmanualshub.com/

REVERSE OF DA FORM 2028-2 AMSMC OP 100-85

FILL IN YOUR
UNITS ADDRESS

DEPARTMENT OF THE ARMY

OFFICIAL BUSINESS

NO POSTAGE
NECESSARY
IF MAILED
IN THE
UNITED STATES

BUSINESS REPLY MAIL

FIRST-CLASS PERMIT NO. 82 ROCK ISLAND IL

POSTAGE WILL BE PAID BY ROCK ISLAND ARSENAL

Director
Armament and Chemical Acquisition
and Logistics Activity
ATTN: AMSTA-AC-NML
Rock Island, IL 61201-9948

TEAR ALONG PERFORATED LINE

https://truckmanualshub.com/

TEAR ALONG PERFORATED LINE

RECOMMENDED CHANGES TO EQUIPMENT PUBLICATIONS

THEN - JOT DOWN THE INFO ON THIS FORM---TEAR OUT THIS PAGE---FOLD IT---AND DROP IT IN THE MAIL!

SOMETHING WRONG WITH THIS PUBLICATION?

FROM: (IMPRINT YOUR UNIT'S COMPLETE ADDRESS)

DATE SENT:

PUBLICATION NUMBER	PUBLICATION DATE	PUBLICATION TITLE
TM9-2815-224-34&P	20 JANUARY 88	DIRECT SUPPORT AND GENERAL SUPPORT MAINTENANCE MANUAL M977 Series Vehicles

BE EXACT...PINPOINT WHERE IT IS

PAGE NO.	PARA-GRAPH	FIGURE NO.	TABLE NO.

IN THIS SPACE, TELL WHAT IS WRONG AND WHAT SHOULD BE DONE ABOUT IT:

PRINTED NAME, GRADE OR TITLE, AND TELEPHONE NUMBER

SIGN HERE:

DA FORM 1 JUL 79 **2028-2**

PREVIOUS EDITIONS ARE OBSOLETE.

P.S. IF YOUR OUTFIT WANTS TO KNOW ABOUT YOUR RECOMMENDATION, MAKE A CARBON COPY OF THIS AND GIVE IT TO YOUR HEADQUARTERS.

https://truckmanualshub.com/

REVERSE OF DA FORM 2028-2 AMSMC OP 100-85

TEAR ALONG PERFORATED LINE

FILL IN YOUR
UNITS ADDRESS

DEPARTMENT OF THE ARMY

OFFICIAL BUSINESS

NO POSTAGE
NECESSARY
IF MAILED
IN THE
UNITED STATES

BUSINESS REPLY MAIL

FIRST-CLASS PERMIT NO. 82 ROCK ISLAND IL

POSTAGE WILL BE PAID BY ROCK ISLAND ARSENAL

Director
Armament and Chemical Acquisition
and Logistics Activity
ATTN: AMSTA-AC-NML
Rock Island, IL 61201-9948

https://truckmanualshub.com/

THE METRIC SYSTEM AND EQUIVALENTS

LINEAR MEASURE

1 Centimeter = 10 Millimeters = 0.01 Meters = 0.3937 Inches
1 Meter = 100 Centimeters = 1000 Millimeters = 39.37 Inches
1 Kilometer = 1000 Meters = 0.621 Miles

WEIGHTS

1 Gram = 0.001 Kilograms = 1000 Milligrams = 0.035 Ounces
1 Kilogram = 1000 Grams = 2.2 Lb
1 Metric Ton = 1000 Kilograms = 1 Megagram = 1.1 Short Tons

LIQUID MEASURE

1 Milliliter = 0.001 Liters = 0.0338 Fluid Ounces
1 Liter = 1000 Milliliters = 33.82 Fluid Ounces

SQUARE MEASURE

1 Sq Centimeter = 100 Sq Millimeters = 0.155 Sq Inches
1 Sq Meter = 10,000 Sq Centimeters = 10.76 Sq Feet
1 Sq Kilometer = 1,000,000 Sq Meters = 0.386 Sq Miles

CUBIC MEASURE

1 Cu Centimeter = 1000 Cu Millimeters = 0.06 Cu Inches
1 Cu Meter = 1,000,000 Cu Centimeters = 35.31 Cu Feet

TEMPERATURE

5/9 (^{0}F − 32) = ^{0}C
212^0 Fahrenheit is equivalent to 100^0 Celsius
90^0 Fahrenheit is equivalent to 32.2^0 Celsius
32^0 Fahrenheit is equivalent to 0^0 Celsius
9/5 C^0 + 32 = F^0

APPROXIMATE CONVERSION FACTORS

TO CHANGE	TO	MULTIPLY BY
Inches	Centimeters	2.540
Feet	Meters	0.305
Yards	Meters	0.914
Miles	Kilometers	1.609
Square Inches	Square Centimeters	6.451
Square Feet	Square Meters	0.093
Square Yards	Square Meters	0.836
Square Miles	Square Kilometers	2.590
Acres	Square Hectometers	0.405
Cubic Feet	Cubic Meters	0.028
Cubic Yards	Cubic Meters	0.765
Fluid Ounces	Milliliters	29.573
Pints	Liters	0.473
Quarts	Liters	0.946
Gallons	Liters	3.785
Ounces	Grams	28.349
Pounds	Kilograms	0.454
Short Tons	Metric Tons	0.907
Pound-Feet	Newton-Meters	1.356
Pounds per Square Inch	Kilopascals	6.895
Miles per Gallon	Kilometers per Liter	0.425
Miles per Hour	Kilometers per Hour	1.609

TO CHANGE	TO	MULTIPLY BY
Centimeters	Inches	0.394
Meters	Feet	3.280
Meters	Yards	1.094
Kilometers	Miles	0.621
Square Centimeters	Square Inches	0.155
Square Meters	Square Feet	10.764
Square Meters	Square Yards	1.196
Square Kilometers	Square Miles	0.386
Square Hectometers	Acres	2.471
Cubic Meters	Cubic Feet	35.315
Cubic Meters	Cubic Yards	1.308
Milliliters	Fluid Ounces	0.034
Liters	Pints	2.113
Liters	Quarts	1.057
Liters	Gallons	0.264
Grams	Ounces	0.035
Kilograms	Pounds	2.205
Metric Tons	Short Tons	1.102
Newton-Meters	Pound-Feet	0.738
Kilopascals	Pounds per Square Inch	0.145
Kilometers per Liter	Miles per Gallon	2.354
Kilometers per Hour	Miles per Hour	0.621

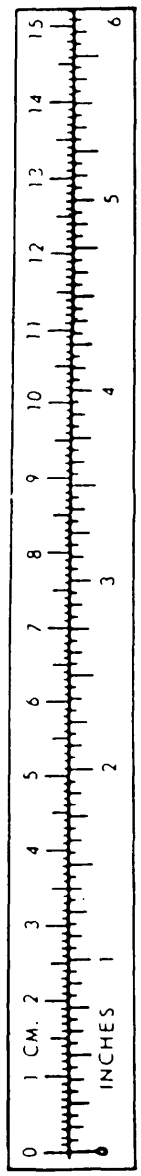

TA184454

https://truckmanualshub.com/

PIN: 063616–000