https://truckmanualshub.com/

OPERATOR'S MANUAL

ENGLISH

KUBOTA
ZERO TURN MOWER

MODELS Z724X
Z726X

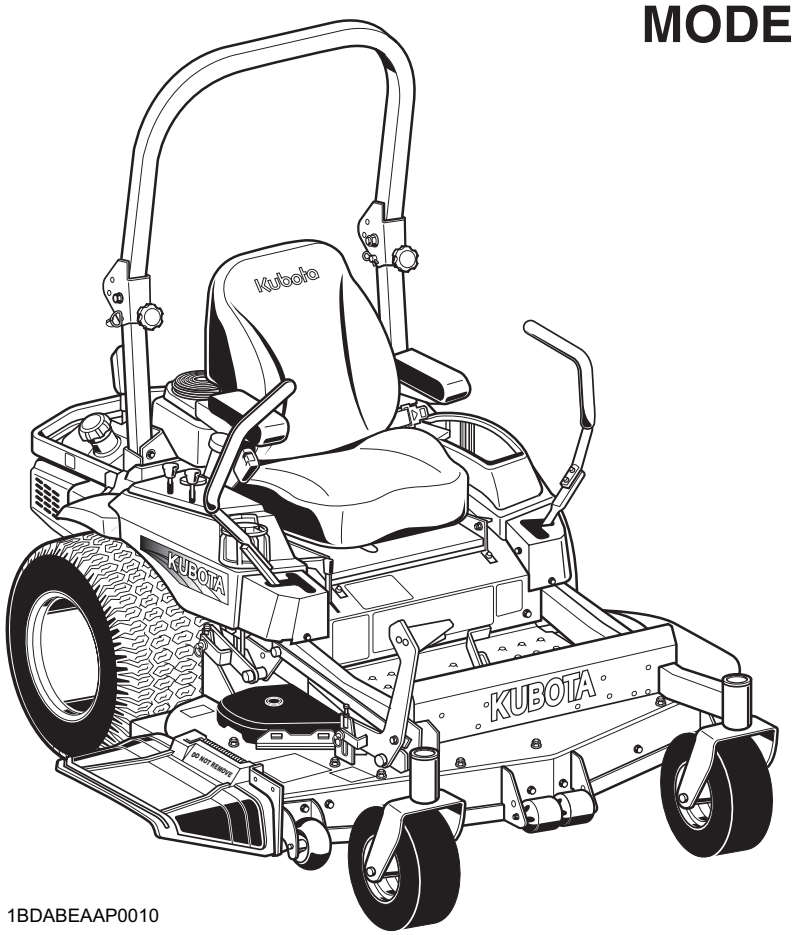

1BDABEAAP0010

K3851-7121-2

READ AND SAVE THIS MANUAL

Kubota

https://truckmanualshub.com/

ABBREVIATION LIST

Abbreviations	Definitions
API	American Petroleum Institute
PTO	Power Take Off
RH/LH	Right-hand and left-hand sides are determined by facing in the direction of forward travel
ROPS	Roll-Over Protective Structures
rpm	Revolutions Per Minute
SAE	Society of Automotive Engineers

UNIVERSAL SYMBOLS

As a guide to the operation of your machine, various universal symbols have been utilized on the instruments and controls. The symbols are shown below with an indication of their meaning.

- Safety Alert Symbol
- Read Operator's Manual
- Gasoline Fuel
- Fuel-Level
- Parking Brake-Engaged position
- Parking Brake-Disengaged position
- Battery Charging Condition
- Engine-Stop
- Engine-Run
- Starter Control
- Power Take-Off Switch Control-Off Position (Disengaged)
- Power Take-Off Switch Control-On Position (Engaged)
- Hours
- Cutting Height
- Fast
- Slow
- Engine Speed Control
- Choke

California Proposition 65

⚠ WARNING ⚠

Engine exhaust, some of its constituents, certain vehicle components and fluids, contain or emit chemicals known to the State of California to cause cancer and birth defects or other reproductive harm.

IMPORTANT

The engine in this machine is not equipped by the manufacturer with a standard spark arrester.
It is a violation of California Public Resource Code Section 4442 to use or operate this engine on or near any forest-covered, brush-covered land, or grass- covered land unless the exhaust system is equipped with a working spark arrester meeting state laws. Other states or federal areas may have similar laws.

This spark ignition system complies with Canadian ICES-002.

https://truckmanualshub.com/

FOREWORD

You are now the proud owner of a KUBOTA ZERO TURN MOWER. This machine is a product of KUBOTA's quality engineering and manufacturing. It is made of excellent materials and under a rigid quality control system. It will give you long, satisfactory service. To obtain the best use of your machine, please read this manual carefully. It will help you become familiar with the operation of the machine and contains many helpful hints about machine maintenance. It is KUBOTA's policy to utilize, as quickly as possible, every advance in our research. The immediate use of new techniques in the manufacturing of products may cause some small parts of this manual to become outdated. KUBOTA distributors and dealers will have the most up-to-date information. Please do not hesitate to consult them.

SAFETY FIRST

This symbol, the industry's "Safety Alert Symbol", is used throughout this manual and on labels on the machine itself to warn of the possibility of personal injury. Read these instructions carefully. It is essential that you read the instructions and safety regulations before you attempt to assemble or use this unit.

DANGER : Indicates an imminently hazardous situation which, if not avoided, will result in death or serious injury.

WARNING : Indicates a potentially hazardous situation which, if not avoided, could result in death or serious injury.

CAUTION : Indicates a potentially hazardous situation which, if not avoided, could result in minor or moderate injury.

IMPORTANT : Indicates that equipment or property damage could result if instructions are not followed.

NOTE : Gives helpful information.

https://truckmanualshub.com/

ENGLISH

CONTENTS

⚠SAFE OPERATION ..... ⚠-1

SERVICING OF MACHINE 1

SPECIFICATIONS 3

IMPLEMENT LIMITATIONS 5

INSTRUMENT PANEL AND CONTROLS 6

MOWER MOUNTING 8
- MOUNTING THE MOWER DECK 8
- ADJUSTING THE MOWER 10
- DISMOUNTING THE MOWER DECK 11

OPERATING THE ENGINE 12
- MOUNT AND DISMOUNT MACHINE SAFELY 12
- STARTING THE ENGINE 12
  - Throttle Lever and Choke lever 14
  - Key Switch 14
- CHECK DURING OPERATING 15
  - Immediately Stop the Engine if: 15
  - Easy Checker (TM) 15
  - Fuel Gauge 15
  - Hour Meter 15
- COLD WEATHER STARTING 16
- WARMING UP 16
  - Warm-up and Transmission Oil in the Low Temperature Range 16
- JUMP STARTING 16
- STOPPING THE ENGINE 17

OPERATING THE MACHINE 18
- OPERATING NEW MACHINE 18
  - Changing Lubricating Oil for New Machines 18
  - Machine Break-in 18
- OPERATING FOLDABLE ROPS 19
  - To Fold the ROPS 19
  - To Raise the ROPS to Upright Position 20
  - Adjustment of Foldable ROPS 20
- STARTING 20
  - Operator's Seat 20
  - Seat Belt 21
  - Mower Lift Pedal 22
  - Throttle Lever 23
  - Parking Brake Pedal 23
  - Motion Control Lever 23
- STOPPING 25
- PARKING 26
- TRANSPORTING 26
  - Hydrostatic Transaxle Bypass Lever 27

https://truckmanualshub.com/

ENGLISH

OPERATING THE MOWER 28
MAKING THE MOST OF YOUR MOWER 28
ADJUSTING CUTTING HEIGHT 28
OPERATING MOWER 31
PTO Switch 31
Starting 31

TIRES AND WHEELS 32
TIRES 32
Inflation Pressure 32
WHEELS 32
Remove and Install Front Caster Wheels 33

MAINTENANCE 34
SERVICE INTERVALS 34
PERIODIC SERVICE CHART LABEL 36
LUBRICANTS AND FUEL 37

PERIODIC SERVICE 38
HOW TO OPEN THE STEP 38
Step 38
HOW TO RAISE THE OPERATOR'S SEAT 38
DAILY CHECK 39
Checking Engine Oil Level 40
Checking Amount of Fuel and Refueling 40
Checking and Cleaning Air Intake Screen 41
Checking Tire Pressure 42
Inflation Pressure 42
Checking Transaxle Fluid Level 43
Checking Dial Cam Rotation Force 43
Checking Movable Parts 43
AFTER FIRST 8 HOURS 44
Changing Engine Oil 44
EVERY 50 HOURS 44
Checking Engine Start System 44
Checking OPC System 45
Greasing 45
Checking Muffler and Spark Arrester (if equipped) 46
EVERY 100 HOURS 46
Changing Engine Oil 46
Checking Carbon Canister Air Filter 47
Checking Air Cleaner Outer Element 48
Checking Fuel Lines and Fuel Filter 49
Adjusting Parking Brake 50
Checking Battery Condition 51
Adjusting Choke Cable 53
Adjusting Throttle Cable 53
Cleaning Engine Cooling Areas 54
Cleaning Engine Oil Cooler Fins (if equipped) 55
Greasing 55
Checking Spark Plug Condition & Gap 56
EVERY 200 HOURS 57

https://truckmanualshub.com/

Checking Hydraulic Hose 57
Replacing Engine Oil Filter 57
Replacing Fuel Filter 58
EVERY 250 HOURS 58
Replacing Air Cleaner Outer Element 58
Checking Air Cleaner Inner Element 58
EVERY 300 HOURS 58
Cleaning Combustion Chamber 58
Cleaning and Adjusting Valve Seat and Clearance 58
EVERY 500 HOURS AFTER 300 HOURS 58
Replacing Transaxle Oil Filter Cartridge 58
Changing Transaxle Fluid 59
EVERY 500 HOURS 60
Electric Clutch Adjustment 60
Lubricating Crank shaft 61
Replacing Air Cleaner Inner Element 61
Replacing Spark Plugs 61
EVERY 1 YEAR 62
Cleaning Engine Oil Cooler Fins 62
Changing Engine Oil 62
Cleaning Engine Cooling Areas 62
Checking Muffler and Spark Arrester 62
EVERY 2 YEARS 62
Replacing Hydraulic Hose 62
Replacing Fuel Lines 62
Replacing Carbon Canister Air Filter 62
SERVICE AS REQUIRED 62
Replacing Fuses 62
Checking and Replacing Blade 63
Mower Belt Replacement 64

ADJUSTMENT 65
MOTION CONTROL LEVER 65
HST NEUTRAL 65
MOTION CONTROL LEVER FORCE 66
MAXIMUM SPEED (FORWARD) 67
MOTION CONTROL LEVER ALIGNMENT 67
MOWER DECK LEVEL 68
ANTI-SCALP ROLLERS 68
LEVEL MOWER DECK (Side-to-Side) 68
LEVEL MOWER DECK (Front-to-Rear) 69
MOWER LIFT PEDAL ADJUSTMENT 70
GENERAL TORQUE SPECIFICATION 71
TIGHTENING TORQUE CHART 72

STORAGE 73

TROUBLESHOOTING 74
ENGINE TROUBLESHOOTING 74
BATTERY TROUBLESHOOTING 76
MACHINE TROUBLESHOOTING 77
MOWER TROUBLESHOOTING 77

https://truckmanualshub.com/

INDEX..... 79

https://truckmanualshub.com/

SAFE OPERATION

Careful operation is your best insurance against an accident. Read and understand this manual carefully before operating the machine. All operators, no matter how much experience they may have had, should read this and other related manuals before operating the machine or any implement attached to it. It is the owner's obligation to instruct all operators in safe operation.
This mowing machine is capable of amputating hands and feet and throwing objects. Failure to observe the following safety instructions could result in serious injury or death.

1. BEFORE OPERATING

1. The ZERO TURN MOWING MACHINE has different steering characteristics than other machines with a steering wheel and does not have a service brake pedal (but, has a parking brake pedal that can be used to stop the machine in an emergency. Normal slowing down and stopping is done with the motion control levers.). Read and understand the operators manual before operating the machine. Practice operating machine at low engine speed without mower engaged in an unobstructed area.
2. Know your equipment and its limitations. Read all instructions in this manual and machine safety labels before attempting to start and operate the machine.
3. Pay special attention to the safety labels on the machine itself.
4. KUBOTA recommends the use of a Roll Over Protective Structures (ROPS) and seat belt in almost all applications. This combination will reduce the risk of serious injury or death, should the machine be upset.
   The machine is equipped with a Foldable ROPS, which may be temporarily folded down only when absolutely necessary for areas with height constraints. (There is no operator protection provided by the ROPS in the folded position. For operator safety the ROPS should be placed in the upright and locked position and the seat belt fastened for all other operations.)
   If the ROPS is loosened or removed for any reason, make sure that all parts are reinstalled correctly before operating the machine.
   Never modify or repair a ROPS because welding, bending, drilling, grinding, or cutting may weaken the structure.
   If any structural member of the ROPS is damaged, replace the entire structure at your local KUBOTA Dealer.

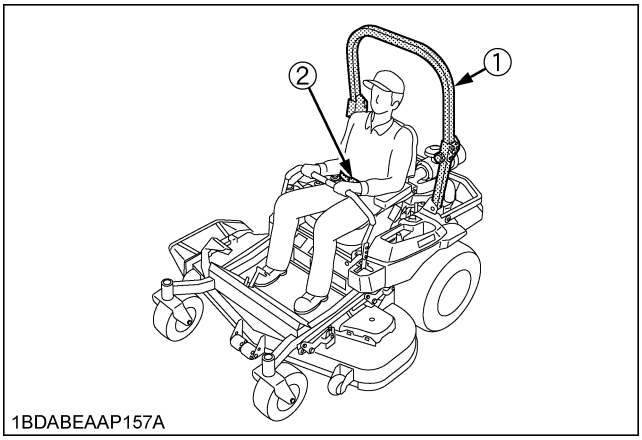

(1) ROPS
(2) Seat belt

5. Always use the seat belt when the ROPS is upright. Do not use the seat belt if the ROPS is down or if there is no ROPS. Check the seat belt regularly and replace if frayed or damaged.
6. Do not allow any bystanders around or near machine during operation.
7. Do not allow passengers, children or non-qualified operators on the machine at any time. The operator must remain in the machine seat throughout operation.
8. Do not operate the machine or any attachments while under the influence of alcohol, medication, controlled substances or when fatigued.
9. Do not wear loose, torn, or bulky clothing around machine. The clothing may catch on moving parts or controls, leading to the risk of accident. Wear and use any additional safety items such as hard hat, safety boots or shoes, eye and hearing protection, gloves, etc. as appropriate or required.
10. Do not wear radio or music headphones while operating the machine.
    Safe operation requires your full attention.
11. Carefully check the vicinity before operating machine or any implement attached to it. Clear the work area of objects (wires, rocks, etc.) that might be picked up and thrown. Check for overhead clearance which may interfere with a grass catcher or ROPS.
12. Check brakes and other mechanical parts for correct adjustment and wear. Replace worn or damaged parts promptly. Check the tightness of all nuts and bolts regularly. (For further details, see "PERIODIC SERVICE" and "ADJUSTMENT" section.)
13. Keep all shields and guards in place. Replace any that are damaged or missing.

https://truckmanualshub.com/

14. Before allowing other people to use your machine, explain how to operate and have them read this manual before operation.
15. In addition to the design and configuration of equipment, hazard control and accident prevention are dependent upon the awareness, concern and prudence of personnel involved in the operation, transport and maintenance of the equipment.
16. Keep the machine and attachments in good operating condition and keep safety devices in place and in proper working condition.
17. Do not modify the machine. Unauthorized modification may affect the function of the machine, which may result in personal injury.
18. Use only implements approved by KUBOTA. Use proper ballast in front or rear of machine to reduce the risk of upsets. Follow the "Safe Operation" procedures, specified in the manuals with equipment.
19. Keep your machine clean. Accumulations of dirt, grease, and trash can contribute to fires and lead to personal injury.
20. The exhaust gas from the muffler is very hot. To prevent fire, do not expose dry grass, mowed grass, oil and any other combustible materials to exhaust gas. Use a spark arrester where required. Also keep the engine and muffler clean all the time.

2. OPERATING

◆ Starting

1. Always sit in the operator's seat when starting engine or operating levers or controls.
2. Before starting the engine make sure that the motion control levers are in neutral lock, the parking brake is applied, and Power Take Off (PTO) is disengaged (OFF).
3. Do not start engine by shorting across starter terminals. The machine may start in gear and move if normal starting circuitry is bypassed.
4. Do not operate or idle engine in a non-ventilated area. Carbon monoxide gas is colorless, odorless, and deadly.
5. Check before each use that operator presence controls are functioning correctly. Test safety systems. (See "Checking Engine Start System" and "Checking OPC System" in "EVERY 50 HOURS" in "PERIODIC SERVICE" section.)
   Do not operate unless they are functioning correctly.

◆ Working

1. Do not turn sharply when driving at high speed.
2. To avoid tip over, slow down when turning on uneven terrain or before stopping.
3. Do not operate near ditches, holes, embankments, or other terrain, which may collapse under the machine weight. The risk of machine tip over increases when the ground is loose or wet.
4. Park the machine on a firm and level surface.
5. Watch where you are going at all times. Watch for and avoid obstacles. Be alert at curbs, near trees, and other obstructions and hidden hazards.
6. Know what is behind you before backing up. Look to the rear before and when backing. Do not mow while in reverse unless absolutely necessary and make sure the area immediately behind you is clear of obstructions or holes and small children. Use extra caution when machine is equipped with Grass Catcher. Your view to the rear is restricted.
7. When working in groups, always let others know what you are doing ahead of time.
8. Do not drive machine on streets or highways. Watch for traffic when you cross roads or operate near roads.
9. Be aware of the mower discharge direction and do not point it at anyone.
10. When using any attachments, never direct discharge material toward bystanders. Do not allow anyone near the attachments while in operation.
    Do not mow when bystanders are present in the mowing area.
11. To reduce fire hazards, keep the engine exhaust area free of grass or leaves.
12. Be sure rotating blades and engine are stopped and the key is removed before placing hands or feet near blades and cleaning blockages or unclogging chute.
13. Shut the engine off and wait for all movement to stop before removing grass catcher or unclogging chute.
14. Maintain all screens to avoid overheating conditions.
15. Always inspect the mower for damage after striking a foreign object. Repair or replace any damaged parts before restarting.
16. Operate during daylight or in bright artificial light.

◆ Children

Tragic accidents can occur if the operator is not alert to the presence of children. Children are attracted to the machine and mowing activity.

Never assume that children will remain where you last saw them.

1. Keep children out of the mowing area and under the watchful care of another responsible adult.
2. Be alert and turn machine off if children enter the area.
3. Before and when backing, look behind and down for small children.
4. Never carry children. There is no safe place for them to ride. They may fall off and be seriously injured or interfere with safe machine operation.
5. Never allow children to operate the machine, even under adult supervision.
6. Use extra care when approaching blind corners, shrubs, trees, or other obstructions that might hide children from sight.
7. Do not mow in reverse unless it is absolutely necessary and make sure area to the rear is clear of children before doing so.

https://truckmanualshub.com/

◆ **Operators, age 60 years and above**

Data indicates that operators, age 60 years and above, are involved in a large percentage of machine-related injuries. These operators should evaluate their ability to operate the machine safely enough to protect themselves and others from serious injury.

◆ **Operation on slopes**

Slopes are a major factor related to loss-of-control and tip-over accidents, which can result in severe injury or death. All slopes require extra caution.

If you cannot back up the slope or if you feel uneasy on it, do not mow it.

If the engine stops when operating on a slope apply the parking brake immediately to prevent machine run away.

DO

1. To avoid tip over, operate across the slopes not up and down. Stay off hills and slopes too steep for safe operation.
2. Remove obstacles such as rocks, tree limbs, etc.
3. Stay alert for holes in the terrain and other hidden hazards. Keep away from drop-offs. Uneven terrain could overturn the machine. Tall grass can hide obstacles.
4. Follow the manufacturer's recommendations for wheel weight or counterweights to improve stability.
5. Keep all movement on the slopes slow and gradual. Do not make sudden changes in speed or direction.
6. Avoid starting or stopping on a slope. If tires lose traction, disengage PTO and proceed slowly straight down the slope.
7. Reduce speed and exercise extreme caution on slopes and in sharp turns to prevent tip-over or loss of control.
8. Use special caution when changing direction on slopes. Slow down, and use extra caution when changing direction on a slope.

DO NOT

1. Do not turn on slopes unless necessary. If necessary, turn uphill slowly and gradually.
2. Do not mow near drop-offs, ditches, or embankments. The mower could suddenly turn over if a wheel is over the edge of cliff or ditch, or if an edge caves in.
3. Do not mow on wet grass. Reduced traction could cause sliding and loss of control.
4. Do not try to stabilize the machine by putting your foot on the ground.
5. Do not use grass catcher on steep slopes.
6. Do not start or stop suddenly when going uphill or downhill. Avoid sudden start and stops on slopes.
7. Never "freewheel". Do not let the machine travel downhill with motion control levers at neutral lock position or in neutral.
8. Do not operate machine without the mower deck installed.

◆ **Stopping**

1. Park the machine on level ground.
2. Make sure that the machine and all attachments have come to a complete stop before dismounting.
3. Before dismounting, apply parking brake, place the motion control levers in their neutral lock positions, disengage the PTO, lower all attachments to the ground, turn off the engine, and remove the key.
4. Do not park the machine on dry grass or leaves.

3. TRANSPORTING

1. Disengage power to attachment(s) when transporting or not in use.
2. Do not tow this machine. Use a suitable truck or trailer when transporting on public roads.
3. Use extra care when loading or unloading the machine into a trailer or truck.
4. This machine is not allowed to be used on public roads.

4. SERVICING AND STORAGE

◆ **Servicing**

1. Before servicing, park the machine on a firm, level surface and apply the parking brake. Remove the key to prevent accidental start-up.
2. Allow the machine time to cool before touching the engine, muffler, etc.
3. Always stop the engine before refueling. Avoid spills and overfilling. Wipe up spilled fuel immediately.

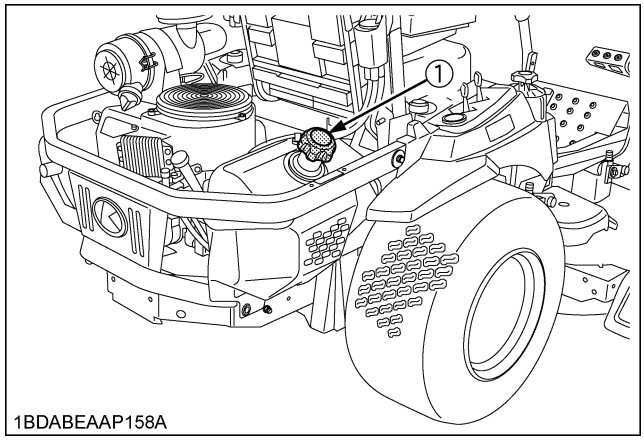

(1) Fuel tank cap

https://truckmanualshub.com/

4. Use extra care in handling gasoline fuels. They are flammable.
   (1) Use only an approved container.
   (2) Do not remove fuel cap or refuel with the engine running. Allow engine to cool before refueling. Do not smoke while refueling or when standing near fuel.
   (3) Do not refuel the machine indoors and always clean up spilled fuel or oil.
   (4) Do not store the machine or fuel container inside where there is an open flame, such as in a water heater.
5. Do not smoke when working around battery or when refueling. Keep all sparks and flames away from battery and fuel tank.
   A battery, especially when charging, will give off hydrogen and oxygen gases, which can explode and cause serious personal injury.
6. Before "jump starting" a dead battery, read and follow all the instructions.
7. Disconnect the battery's ground cable before working on or near electric components.
8. Do not use or charge the refillable type battery if the fluid level is below the LOWER (lower limit level) mark. Otherwise, the battery component parts may prematurely deteriorate, which may shorten the battery's service life or cause an explosion. Check the fluid level regularly and add distilled water as required so that the fluid level is between the UPPER and LOWER levels.
9. Keep first aid kit and fire extinguisher handy at all times.
10. Do not attempt to mount a tire on a rim unless qualified to do so and all proper safety precautions are followed.
11. Always maintain the correct tire inflation pressure. Do not inflate tires above the recommended pressure shown in the Operator's Manual.

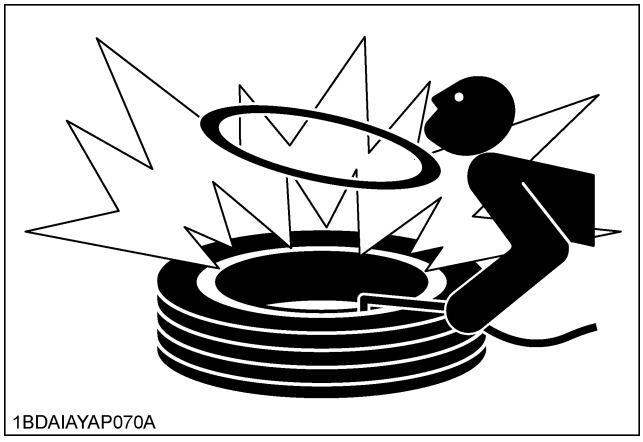
1BDAIAYAP070A

12. Provide adequate support when changing wheels.
13. Make sure that wheel nuts and bolts have been tightened to the specified torque.
14. Do not make adjustments or repairs with the engine running.
15. Keep machine free of grass, leaves, or other debris build-up.
16. Do not change the engine governor setting or overspeed the engine.
17. Do not run a machine inside a closed area.
18. Mower blades are sharp and can cut your hands. Wrap the blade(s) or wear gloves, and use extra caution when servicing them.
19. Keep nuts and bolts, especially blade attachment bolts, tight and keep equipment in good condition.
20. Never tamper with safety devices. Check their operation for proper function regularly.
21. Waste products such as used oil, fuel, coolant, brake fluid, and batteries, can harm the environment, people, pets and wildlife. Please dispose of properly.
22. Do not use beverage containers for waste fluids or other products. Someone, particularly children, may drink them by mistake.
23. Securely support machine or any machine elements with stands or suitable blocking before working underneath. For your safety do not rely on hydraulically supported devices, they may leak down, suddenly drop or be accidently lowered.
24. See your local Recycling Center or KUBOTA Dealer to learn how to recycle or get rid of waste products.
    - A Material Safety Data Sheet (MSDS) provides specific details on chemical products; physical and health hazards, safety procedures, and emergency response techniques. The seller of the chemical products used with your machine is responsible for providing the MSDS for that product upon request.

◆ **Storage**

1. Keep the machine and supply of fuel in locked storage and remove the ignition key to prevent children or others from playing or tampering with them.
2. To avoid sparks from an accidental short circuit, always disconnect the battery's ground cable (-) first and reconnect it last.

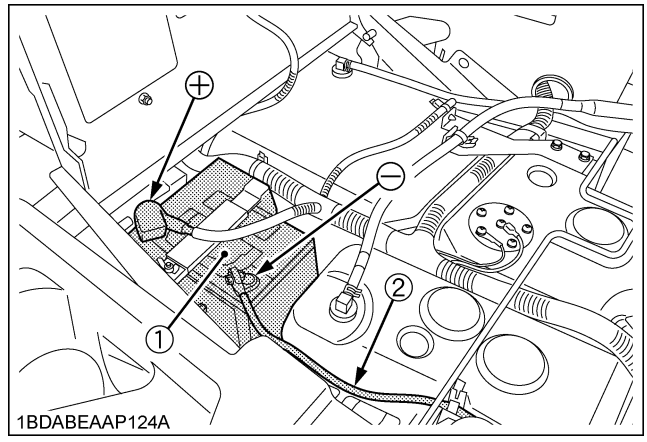

1BDABEAAP124A

(1) Battery *(+): Positive terminal*
(2) Ground cable *(-): Negative terminal*

https://truckmanualshub.com/

3. To avoid the danger of exhaust fume poisoning, do not operate the engine in a closed building without adequate ventilation.
4. To reduce fire hazards, clean the machine thoroughly before storage. Dry grass and leaves around the engine and muffler may ignite.

https://truckmanualshub.com/

5. DANGER, WARNING AND CAUTION LABELS

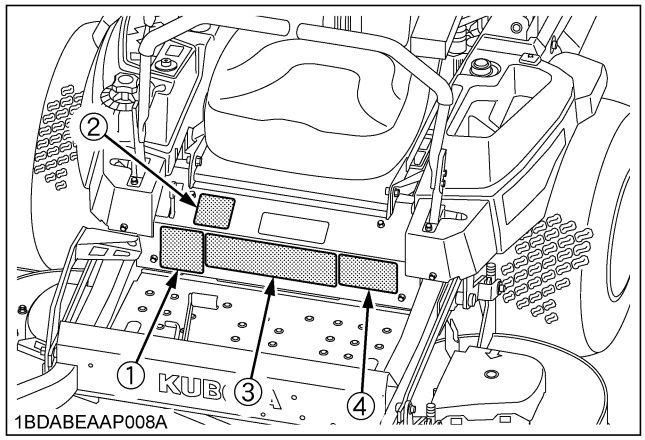

1BDABEAAP008A

(1) Part No. K3811-6581-1

⚠WARNING

TO AVOID SERIOUS INJURY OR DEATH
1. Mow across slopes
   - Not up and down.
2. Use extreme caution when operating on slopes.
3. Loss of traction may occur when operating on slopes.
4. Drive slowly on slopes.
5. Do not operate on wet slopes.
6. Avoid sudden starts.
7. Execute turns slowly.

⚠ADVERTENCIA

PARA EVITAR LESIONES PERSONALES GRAVES O LA MUERTE
1. Corte el césped de manera transversal en las colinas
   - No de arriba hacia abajo.
2. Tenga mucho cuidado durante la operación en colinas.
3. Se puede perder tracción durante la operación en colinas.
4. Conduzca lentamente en las colinas.
5. No use la máquina en colinas húmedas.
6. Evite arranques súbitos.
7. Realice las vueltas lentamente.

1BDABEAAP087A

(2) Part No. K3811-6571-1

⚠WARNING

Operation of this equipment may create sparks that can start fires around dry vegetation. A spark arrester may be required. The operator should contact local fire agencies for laws or regulations relating to fire prevention requirements.

⚠ADVERTENCIA

La operación de este equipo puede generar chispas que pueden iniciar incendios en cercanías de vegetación seca. Podría requerirse un parachispas. El operador debería contactar a las agencias de bomberos locales para informarse sobre leyes o normas relacionadas con los requisitos de prevención de incendios.

1BDABEAAP088A

(4) Part No. K3851-6582-1

⚠WARNING

TO AVOID SERIOUS INJURY OR DEATH
1. Park the machine on level ground.
2. If necessary to park on an incline,
   ① Stop the machine.
   ② Apply the parking brake.
   ③ Stop the engine.
   If you stop the engine on an incline without applying the parking brake, the machine could move and run away.
3. If the engine stops suddenly during operation, apply the parking brake immediately to prevent machine runaway.

⚠ADVERTENCIA

PARA EVITAR LESIONES PERSONALES GRAVES O LA MUERTE
1. Estacione la máquina en la tierra del nivel.
2. Si es necesario estacionar en una cuesta,
   ① Apagar la máquina.
   ② Aplique el freno de estacionamiento.
   ③ Luego apague el motor.
   Si apaga el motor en una cuesta sin aplicar el freno de estacionamiento, la máquina puede moverse sin control.
3. Si la máquina se detiene repentinamente durante la operación, enganche el freno de estacionamiento inmediatamente para evitar la pérdida de control.

1BDABEAAP171A

(3) Part No. K3851-6585-1

⚠WARNING TO AVOID SERIOUS INJURY OR DEATH

1. Read and understand the operator's manual before operation.
2. Do not operate this machine unless you are trained.
3. Before allowing other people to use the machine, have them read the operator's manual.
4. Check the tightness of all nuts and bolts regularly.
5. Before starting the engine, make certain that everyone is at a safe distance from the machine, PTO is disengaged and motion control levers are in neutral lock.
6. Remove objects that could be thrown by the blade.
7. Do not operate the machine when children and/or others are around.
8. Do not carry children or others on the machine at any time.
9. Before dismounting, disengage PTO clutch, lower the implement, place motion control levers in neutral lock position, set the parking brake, stop the engine and remove the key.
10. Keep safety devices (guards, shields and switches) in place, and working.
11. To reduce the fire hazard, keep the exhaust clear of dry grass, dry leaves or other combustible materials.
12. This machine is not for street or highway use.
13. Securely support the machine and implement before working underneath.

⚠ADVERTENCIA PARA EVITAR LESIONES PERSONALES GRAVES O LA MUERTE

1. Lea y entienda el manual del operador antes de efectuar la operación.
2. No ponga en funcionamiento la máquina a menos que esté capacitado para hacerlo.
3. Antes de permitir que otras personas usen la máquina, indíqueles que lean el manual del operador.
4. Verifique con regularidad el apriete de todas las tuercas y pernos.
5. Antes de arrancar el motor, asegúrese de que todos estén a una distancia segura de la máquina. La toma de fuerza debe estar desactivada y las palancas de control de movimiento bloqueadas en neutro.
6. Retire los objetos que pueden ser lanzados por la cuchilla.
7. No opere la máquina cuando hayan niños u otras personas alrededor.
8. No lleve a niños ni a otras personas en la máquina en ningún momento.
9. Antes de desmontar, desenganche el embrague de la toma de fuerza, baje el implemento, cambie a neutro, aplique el freno de estacionamiento, apague el motor y retire la llave.
10. Mantenga los dispositivos de protección(guardas, barreras de protección e interruptores) en su lugar y en buen estado de funcionamiento.
11. Para reducir los riesgos de incendio, mantenga el escape exento de hierbaseca, hojas secas u otros materiales combustibles.
12. Esta máquina no está diseñada para uso en calles ni carreteras.
13. Use un soporte seguro para la máquina y el implemento antes de trabajar debajo de los mismos.

1BDABEAAP146A
1BDABEAAP153A

https://truckmanualshub.com/

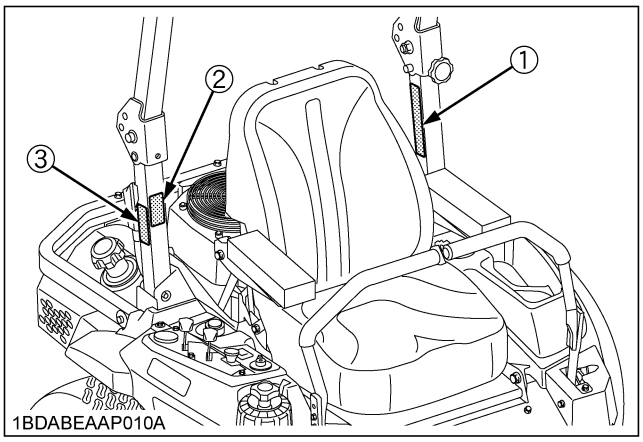

1BDABEAAP010A

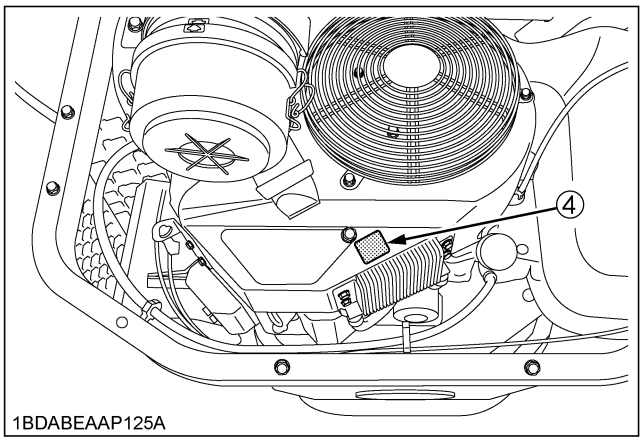

1BDABEAAP125A

(1) Part No. K3851-6566-1

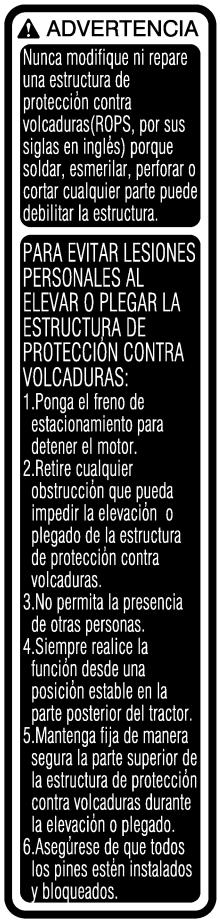

1BDABEAAP147A
1BDABEAAP154A

(2) Part No. K3851-6574-1

1BDABEAAP148A

(3) Part No. K3811-6563-1

1BDABEAAP093A

(4) Part No. K3851-6533-1
[Z726X only]

1BDABEAAP149A

https://truckmanualshub.com/

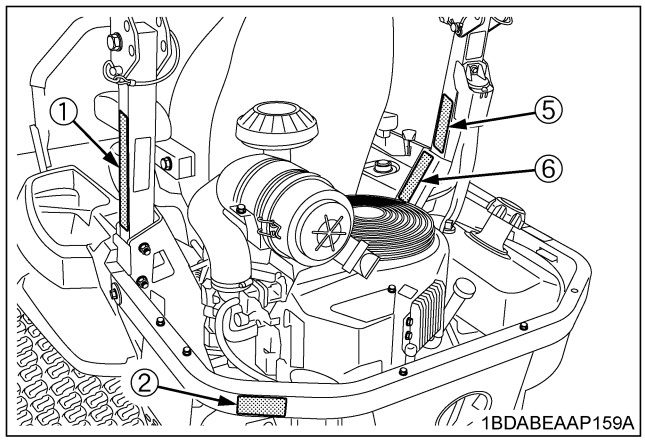

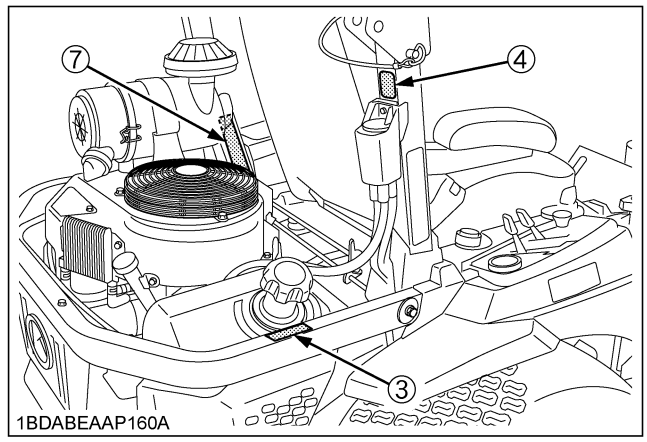

(1) Part No. K3811-6565-1

1BDABEAAP094A
1BDABEAAP155A

(2) Part No. K3811-6532-1

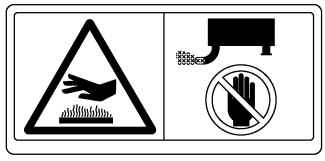

1BDABEAAP095A

(3) Part No. K3811-6587-1

1BDABEAAP096A

(4) Part No. K3851-6573-1

1BDABEAAP151A

(5) Part No. K3851-6564-1

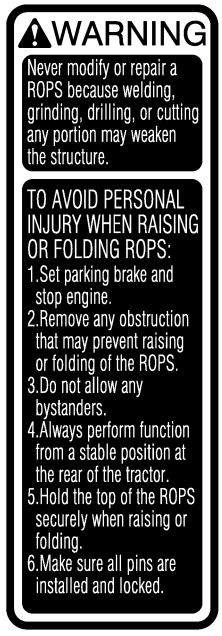

1BDABEAAP150A

(6) Part No. K3811-6583-1

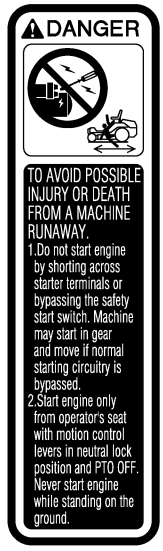

1BDABEAAP099A

(7) Part No. K3811-6584-1

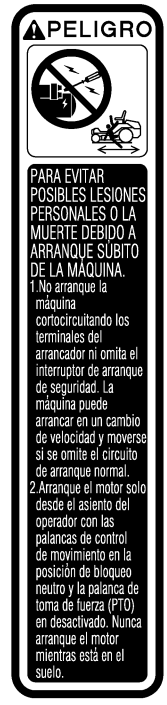

1BDABEAAP100A

https://truckmanualshub.com/

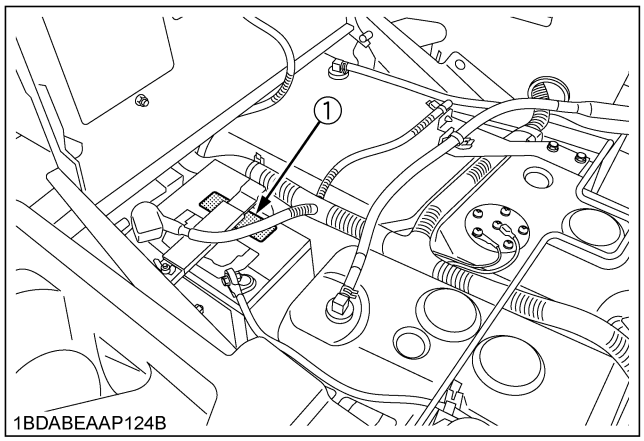

1BDABEAAP124B

(1) Part No. K3011-6118-2

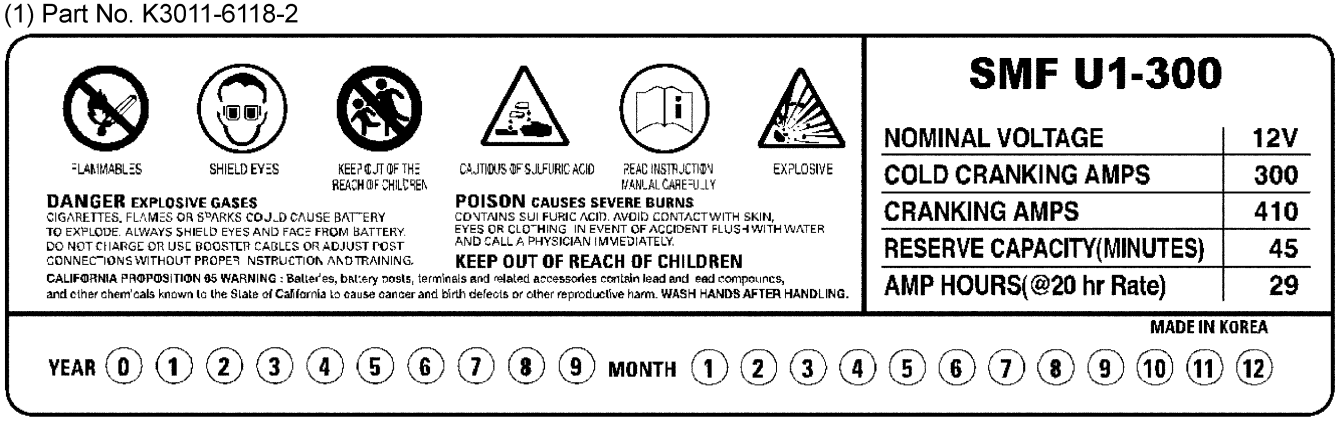

1BDABEAAP173A

TO AVOID INJURY FROM BATTERY GASES AND ACIDES

- Keep away cigarettes, flames or sparks.
- Always shield eyes and face from battery.
- Keep out of reach of children.
- Poison causes severe burns.
- Contains sulfuric acid.
- Read and understand operator's manual.
- Danger explosive gases.

1BDABEAAP174A

1BDABEAAP175A

https://truckmanualshub.com/

[RCK48P]

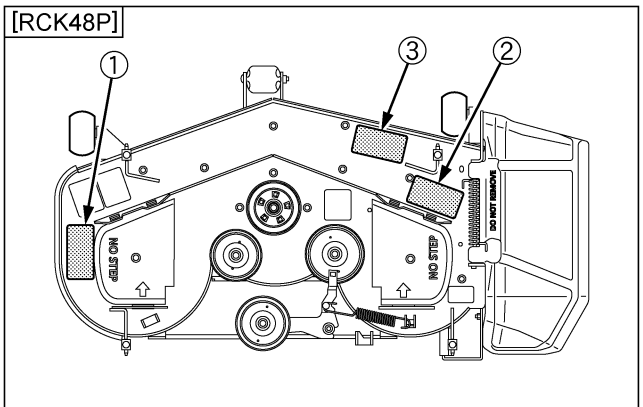

1BDABEAAP002A

[RCK54P]

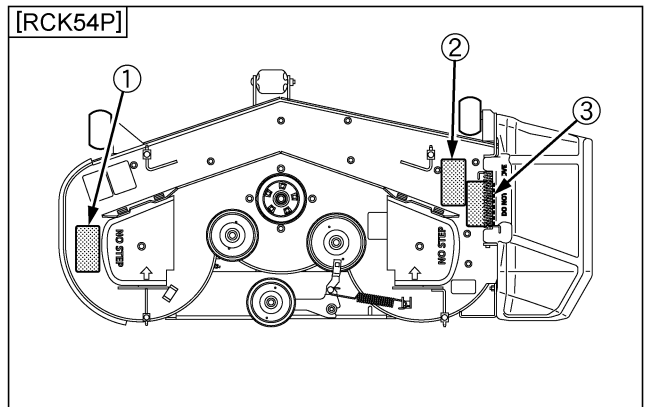

1BDABEAAP003A

[RCK60P]

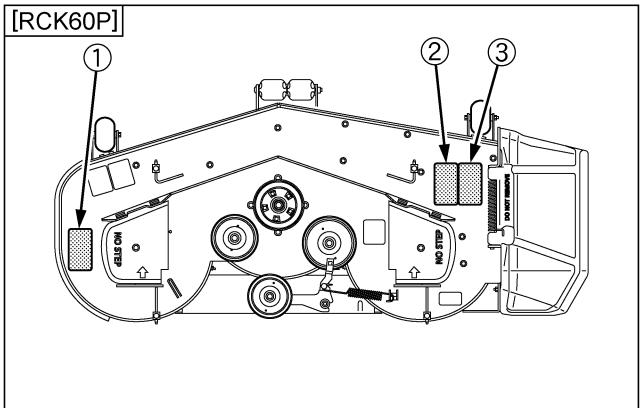

1BDABEAAP004A

(1) Part No. K5681-7312-2

1BDACAEAP015B

(2) Part No. K5681-7311-2

1BDACAEAP016B

(3) Part No. K5681-7310-1

1BDACAEAP017B

1BDABEAAP106A

6. CARE OF DANGER, WARNING, AND CAUTION LABELS

1. Keep danger, warning and caution labels clean and free from obstructing material.
2. Clean danger, warning and caution labels with soap and water, and dry with a soft cloth.
3. Replace damaged or missing danger, warning and caution labels with new labels from your local KUBOTA Dealer.
4. If a component with danger, warning and caution label(s) affixed is replaced with new part, make sure new label(s) is (are) attached in the same location(s) as the replaced component.
5. Mount new danger, warning and caution labels by applying on a clean dry surface and pressing any bubbles to outside edge.

https://truckmanualshub.com/

SERVICING OF MACHINE

After reading this manual thoroughly, you will find that you can do some of the regular maintenance yourself. Your dealer is interested in helping you get the best performance from your new machine and wants to help you get the most value from it. When in need of parts or major service, be sure to see your KUBOTA Dealer. When in need of parts, be prepared to give your dealer the serial number of the machine, ROPS, engine and mower.

Locate the serial numbers now and record them in the space provided.

	Type	Serial No.
Machine		
ROPS		
Engine		
Mower		
Date of Purchase		
Name of Dealer		
(To be filled in by purchaser)		

◆ **Warranty**

This machine is warranted under the Kubota Limited Express warranty, a copy of which may be obtained from your selling dealer. No warranty shall, however, apply if the machine has not been handled according to the instruction given in the Operator's Manual even it is within the warranty period.

The engine is warranted under the Kawasaki Limited Warranty, a copy of which has been provided with your machine purchase.

Please refer to the Kawasaki Limited Warranty for details regarding warranty coverage, owner obligations, warranty limitations, and liabilities.

◆ **Scrapping the machine and its procedure**

To put the machine out of service, correctly follow the local rules and regulations of the country or territory where you scrap it. If you have questions, consult your local KUBOTA Dealer.

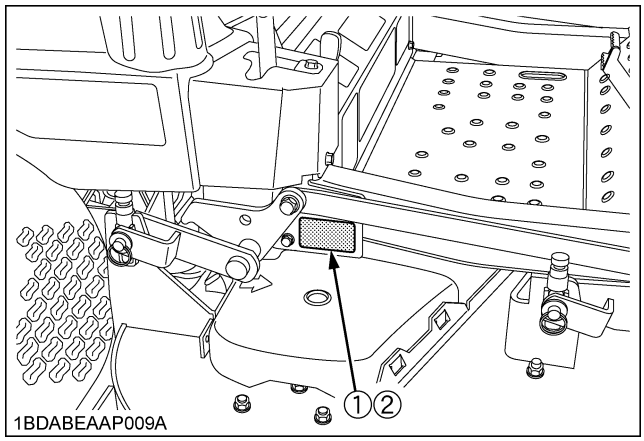

(1) Machine identification plate
(2) Machine serial No.

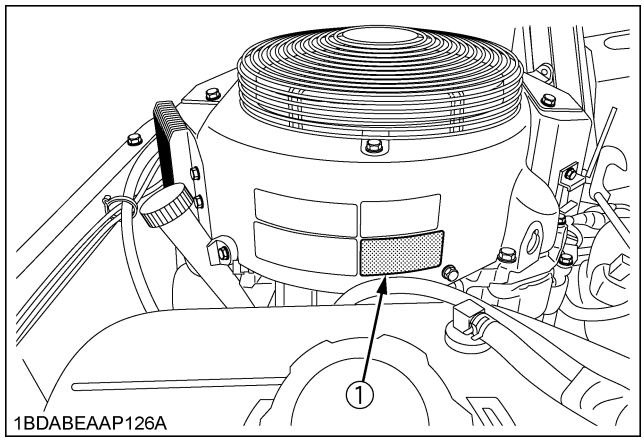

(1) Engine serial No.

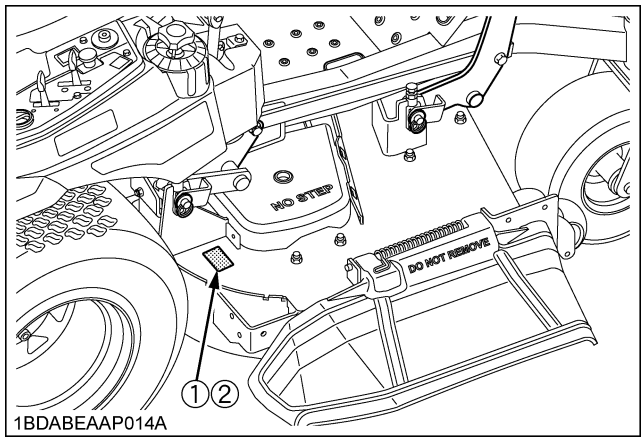

(1) Mower identification plate
(2) Mower serial No.

https://truckmanualshub.com/

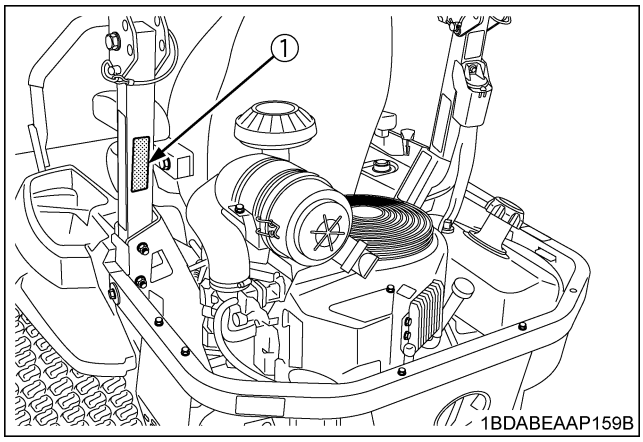

(1) ROPS serial No.

https://truckmanualshub.com/

SPECIFICATIONS

Model				Z724XKW		Z726XKW
Engine	Model			KAWASAKI GH735V		KAWASAKI GH860V
	Max. engine power (Gross)		kW (HP)	17.6 (23.5) *1*2		19.0 (25.5) *1*2
	Type			Air-cooled gasoline engine		
	Number of cylinders			2 (V-Twin)		
	Bore and stroke		mm (in.)	78 x 76 (3.07 x 2.99)		84.5 x 76 (3.33 x 2.99)
	Total displacement		cm^3 (cu. in.)	726 (44.3)		852 (52)
	Rated revolution		rpm	3600		
	Fuel			Unleaded gasoline		
	Starter			Electric		
	Lubrication			Full pressure lubrication		
	Cooling			Air cooled		
	Battery			U1 (12 V, RC: 45 min, CCA: 300, CA: 410)		
Capacities	Fuel tank		L (U.S.gals.)	44 (11.6)		
	Engine crankcase (with filter)		L (U.S.qts.)	2.1 (2.2)		2.3 (2.4)
	Transmission case		L (U.S.qts.)	RH: 3.3 (3.5) (*3) LH: 3.3 (3.5) (*3)		
Dimensions	Overall length		mm (in.)	2130 (83.9)		
	Overall width w/o mower deck		mm (in.)	1280 (50.4)		1390 (54.7)
	Overall height	With ROPS	mm (in.)	1781 (70.1)		
	Wheelbase		mm (in.)	1294 (50.9)		
	Min. ground clearance		mm (in.)	130 (5.12) W/48"	130 (5.12) W/54"	130 (5.12) W/60"
	Tread	Front	mm (in.)	954 (37.6)		
		Rear	mm (in.)	1020 (40.2)		1083 (42.6)
Weight (W/MOWER DECK)			kg (lbs.)	538 (1186) with 48"	542 (1195) with 54"	560 (1235) with 60"
Traveling system	Tires	Front		13 x 5.0 - 6 (Semi-pneumatic Non Flat Tire) Smooth		13 x 6.5 - 6 (Semi-pneumatic Non Flat Tire) Smooth
		Rear		24 x 9.5 - 12 (4PR) Turf		24 x 12 - 12 (4PR) Turf
	Traveling speeds	Forward	mph (km/h)	0 to 11.2 (0 to 18.0)		
		Reverse	mph (km/h)	0 to 5.6 (0 to 9.0)		
	Steering			2 - Hand levers		
	Transmission			2 HST - G rotor type		
	Parking brake			Drum / Foot applied, released		
	Min. turning radius		mm (in.)	0 (0)		

https://truckmanualshub.com/

Model		Z724XKW	Z726XKW
PTO	Drive system	Belt	
	Clutch type	Electric	

(Specifications and design subject to change without notice)

NOTE:

*1: Manufacturer's estimate

*2: These Kawasaki engines have been tested in accordance with SAE J1995, verified by TÜV Rheinland Group, and certified by SAE International. The gross power ratings of these engines were determined by using measurements according to SAE J1995 which were witnessed by SAE-approved witnesses from TÜV Rheinland Group. Torque ratings of these engines were not certified by SAE. Actual power and torque output will vary depending on numerous factors, including, but not limited to, the operating speed of the engine in application, environmental conditions, maintenance, and other variables.

*3: Oil amount when the oil level is at the upper level.

Model				RCK48P-723Z	RCK54P-724Z	RCK60P-725Z
PRO Commercial Deck (Fabricated deck)	Suitable machine			Z724XKW		Z726XKW
	Mounting method			Parallel linkage		
	Adjustment of cutting height			Dial gauge		
	Cutting width		mm (in.)	1219 (48)	1372 (54)	1524 (60)
	Cutting height		mm (in.)	25 to 127 (1.0 to 5.0)		
	Weight (Approx.)		kg (lbs.)	102 (225)	110 (243)	119 (262)
	Blade spindle speed		r/s (rpm)	70.9 (4256) *1	63.3 (3799) *1	57.5 (3450) *1
	Blade tip velocity		m/s (fpm)	94.5 (18600) *1		
	Blade length		mm (in.)	424 (16.7)	475 (18.7)	523 (20.6)
	Number of blades			3		
	Dimensions	Total length	mm (in.)	835 (32.9)	850 (33.5)	905 (35.6)
		Total width	mm (in.)	1557 (61.3)	1710 (67.3)	1875 (73.8)
		Total height	mm (in.)	370 (14.6)		

*1: Engine Max rpm

https://truckmanualshub.com/

IMPLEMENT LIMITATIONS

The KUBOTA Machine has been thoroughly tested for proper performance with implements sold or approved by KUBOTA. Use with implements which are not sold or approved by KUBOTA and which exceed the maximum specifications listed below, or which are otherwise unfit for use with the KUBOTA Machine may result in malfunctions or failures of the machine, damage to other property and injury to the operator or others. [Any malfunctions or failures of the machine resulting from use with improper implements are not covered by the warranty.]

Model	Maximum loading weight		Implement weight W_1	Maximum total weight
	Front axle Wf	Rear axle Wr		
Z726XKW	154 kg (339 lbs.)	772 kg (1703 lbs.)	119 kg (262 lbs.)	926 kg (2042 lbs.)
Z724XKW	155 kg (342 lbs.)	746 kg (1645 lbs.)	110 kg (242 lbs.)	901 kg (1987 lbs.)

NOTE :
- These limits include operator weight with seat in rearmost position.

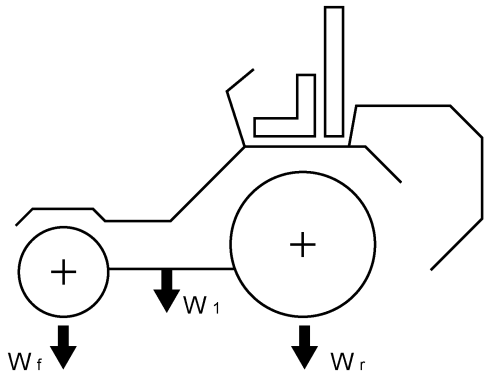

1BDABCQAP132A

https://truckmanualshub.com/

ENGLISH

INSTRUMENT PANEL AND CONTROLS

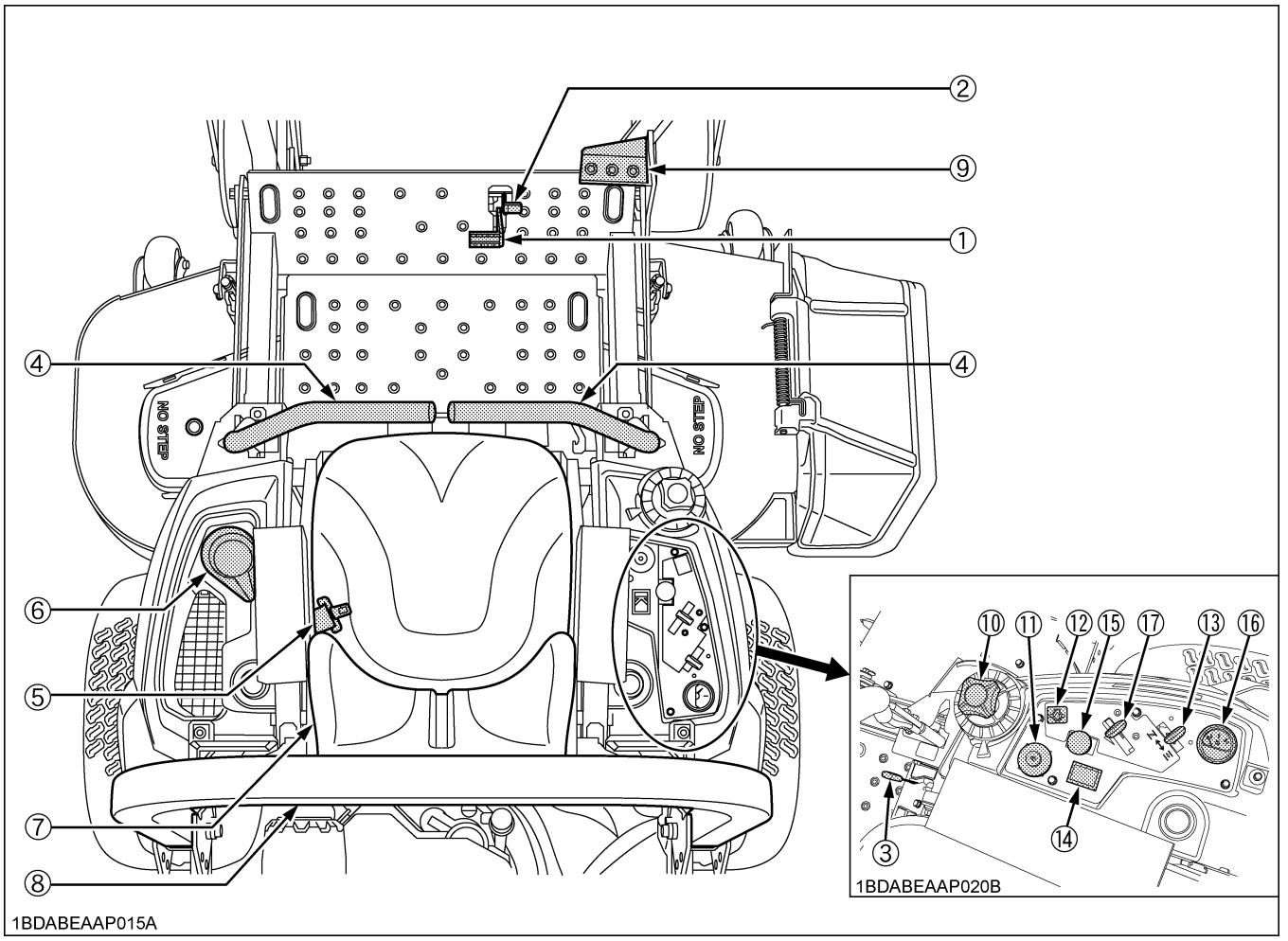

ILLUSTRATED CONTENTS

(1)	*Parking brake pedal*	*12, 23*
(2)	*Parking brake lock pedal*	*12, 23*
(3)	*Mower lock lever*	*22*
(4)	*Motion control lever*	*12, 23*
(5)	*Seat belt*	*21*
(6)	*Cup holder*	*-*
(7)	*Operator's seat*	*20*
(8)	*ROPS*	*19*
(9)	*Mower lift pedal*	*22*

ILLUSTRATED CONTENTS

(10)	*Cutting height control dial*	*28*
(11)	*Key switch*	*14*
(12)	*Easy checker (TM)*	*15*
(13)	*Choke lever*	*12*
(14)	*Hour meter*	*15*
(15)	*PTO switch*	*31*
(16)	*Fuel gauge*	*15*
(17)	*Throttle lever*	*23*

https://truckmanualshub.com/

RCK60P

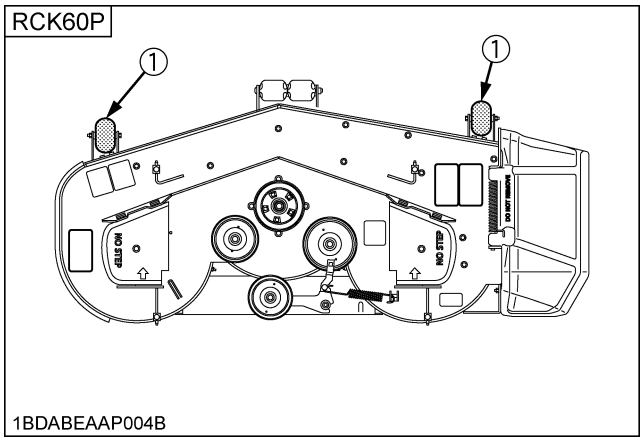

1BDABEAAP004B

ILLUSTRATED CONTENTS

(1) Anti-scalp roller (Front, bolt shift type)..... 28

RCK48P, RCK54P

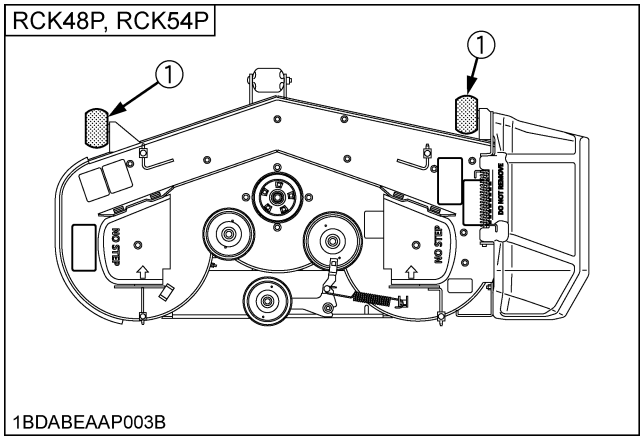

1BDABEAAP003B

ILLUSTRATED CONTENTS

(1) Anti-scalp roller (Front, bolt shift type)..... 28

https://truckmanualshub.com/

ENGLISH

MOWER MOUNTING

MOUNTING THE MOWER DECK

WARNING

To avoid serious injury:

- **Park the machine on a firm and level surface.**
- **Apply the parking brake.**
- **Stop the engine and remove the key.**
- **Fix mower link at 25.4 mm (1 in.) position.**

1. Before mounting the mower deck, raise the lift links to the full up position.
2. Adjust the cutting height control dial to 1 in. position.
3. Adjust the anti-scalp rollers to 25.4 mm (1 in.) position. (See "ADJUSTING CUTTING HEIGHT" in "OPERATING THE MOWER" section.)
4. Go backward so that right and left front tires would be on the board 38.1 mm (1.5 in.) high.

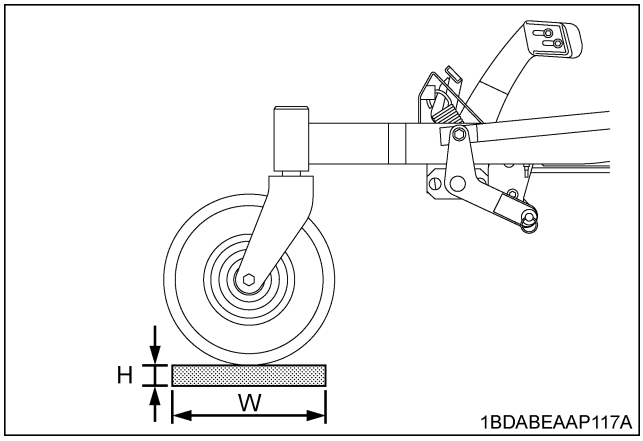

H: 38.1 mm (1.5 in.) *W: 133 mm (5.25 in.)*

IMPORTANT :

- Use a board more than 133 mm (5.25 in.) wide and 1600 mm (63.0 in.) long.
- Make sure that right and left front tires are firm on the board.

5. Make sure the direction of the front tires is as shown in the figure.

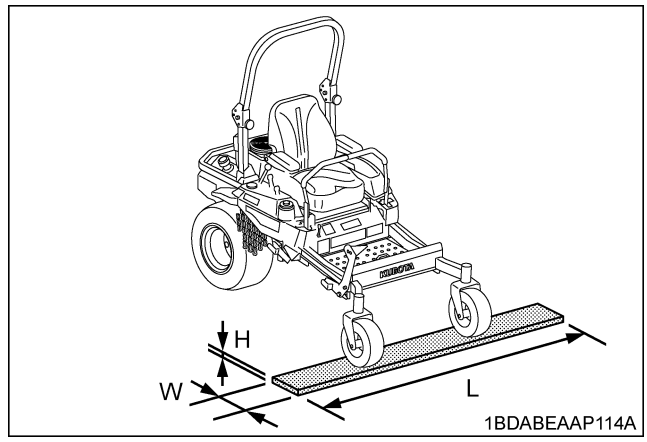

H: 38.1 mm (1.5 in.) *W: 133 mm (5.25 in.)*
L: 1600 mm (63.0 in.)

6. Place the mower deck at the right side of the machine.

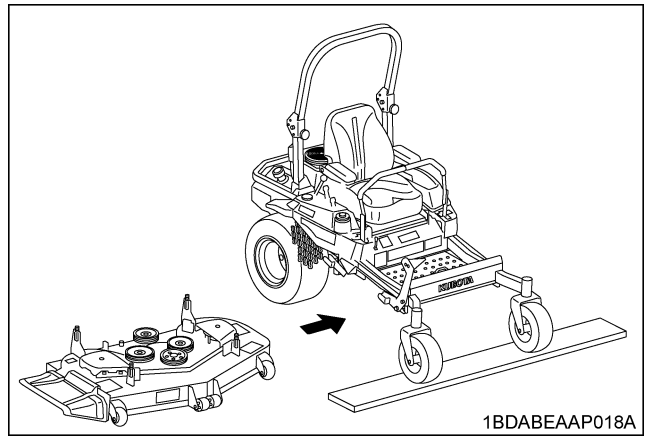

7. Slide the mower deck under the machine, then lower mower lift links.

https://truckmanualshub.com/

8. Put a ϕ14 mm (0.55 in.) shaft in the hole in the rear right side lift link.

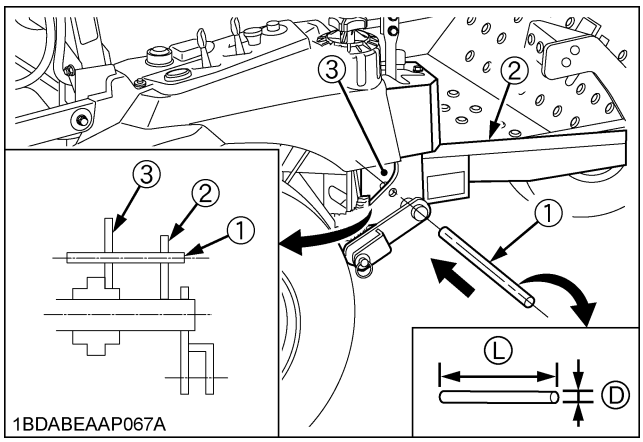

(1) Shaft
(2) Lift link
(3) Frame
(D) ϕ 14 mm (0.55 in.)
(L) More than 150 mm (6 in.)

IMPORTANT :
- Use a shaft more than 150 mm (6 in.) long.
- It passes through a hole in the frame.

9. Attach the lift links to the mower deck with attaching hardware.

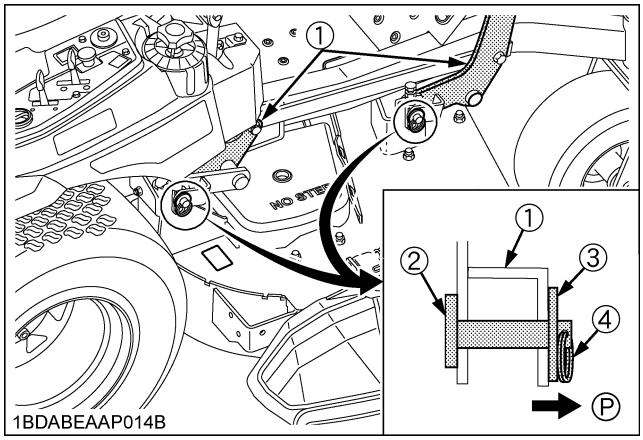

(1) Lift link
(2) Clevis pin
(3) Plain washer
(4) Snap ring
(P) OUTSIDE

10. Remove the ϕ14 mm (0.55 in.) shaft from the hole in the rear right side lift link.

11. Attach the mower belt to the PTO clutch pulley.

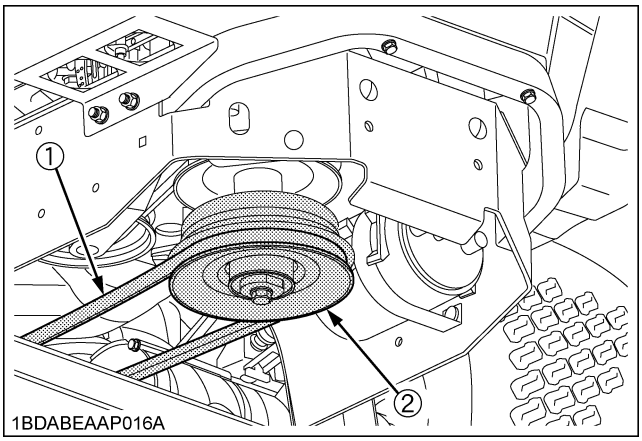

(1) Mower belt
(2) PTO clutch pulley

12. Remove the step.
(See "HOW TO OPEN THE STEP" in "PERIODIC SERVICE" section.)
13. Turn the tension arm counterclockwise with a square wrench.

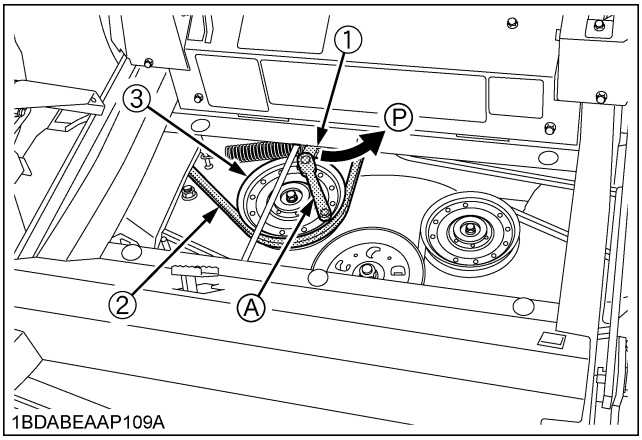

(1) Tension arm
(2) Mower belt
(3) Mower pulley
(A) Square wrench
(P) "COUNTERCLOCK WISE"

https://truckmanualshub.com/

14. Attach the mower belt to the mower pulleys.
    Refer to the routing label.

IMPORTANT :

- The belt between the idler pulley and PTO clutch pulley should be to the left of pin-1 as shown in figure A, and to the left of the PTO clutch guide as shown in figure B.
- The belt between the tension pulley and the PTO clutch pulley must be to the left of pin-2 as shown in figure A, and to the right of pin-3 as shown in figure B.

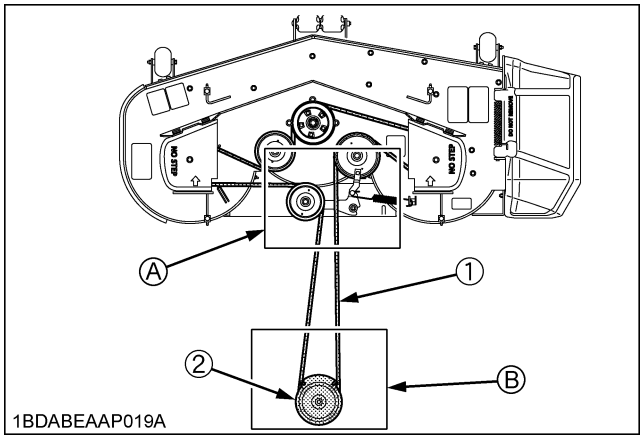

(1) Mower belt
(2) PTO clutch pulley
(A) Mower tension arm area
(B) PTO clutch area

[Figure A]

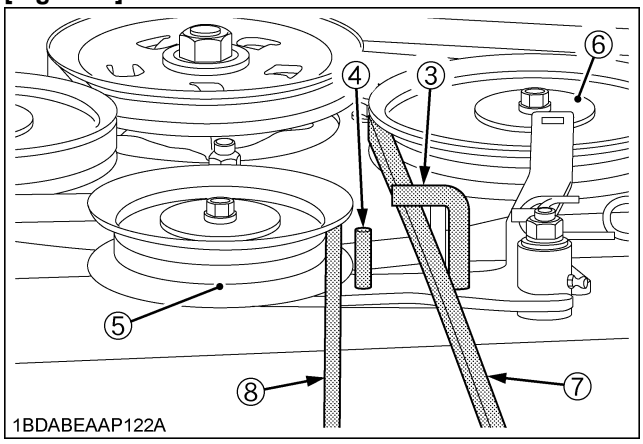

(3) Pin-1
(4) Pin-2
(5) Tension pulley
(6) Idler pulley
(7) Belt between the idler pulley and PTO clutch pulley
(8) Belt between the tension pulley and the PTO clutch pulley

[Figure B]

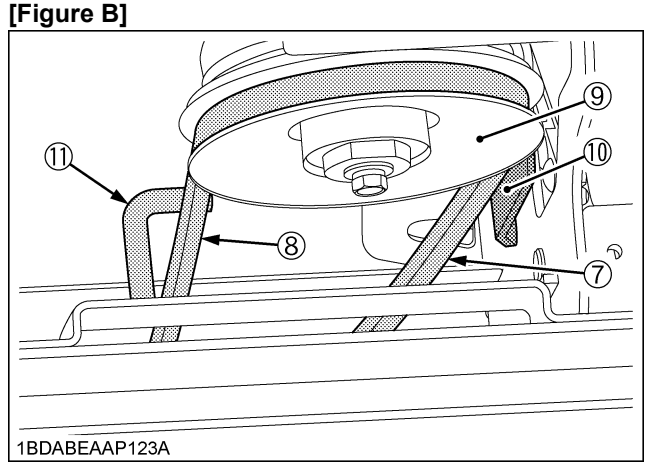

(7) Belt between the idler pulley and PTO clutch pulley
(8) Belt between the tension pulley and the PTO clutch pulley
(9) PTO clutch pulley
(10) PTO clutch guide
(11) Pin-3

15. After mounting the mower, check the mower level. If necessary, adjust the mower level and anti-scalp rollers.

ADJUSTING THE MOWER

See "OPERATING THE MOWER" section.

https://truckmanualshub.com/

DISMOUNTING THE MOWER DECK

WARNING

To avoid serious injury:

- **Push the mower deck lift pedal with enough force. If the force is not enough, the mower link will jump up when the ϕ14 mm (0.55 in.) shaft is removed from the right side of the machine due to the power of the spring. Keep all hands and feet clear of the mower links during this time.**

1. Adjust the cutting height control dial to 25.4 mm (1 in.) position with the machine placed on the board.

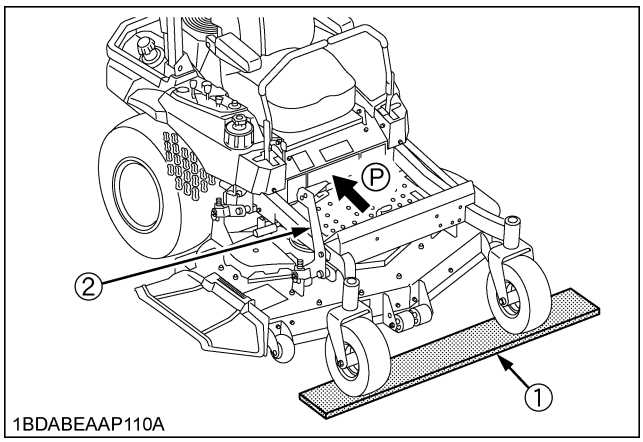

(1) Board *(P) "PUSH"*
(2) Mower lift pedal

2. Adjust the anti-scalp rollers to 25.4 mm (1 in.) position. (See "ADJUSTING CUTTING HEIGHT" in "OPERATING THE MOWER" section.)
3. Put a ϕ14 mm (0.55 in.) x 150 mm (6 in.) shaft in the hole of the rear right side lift link.

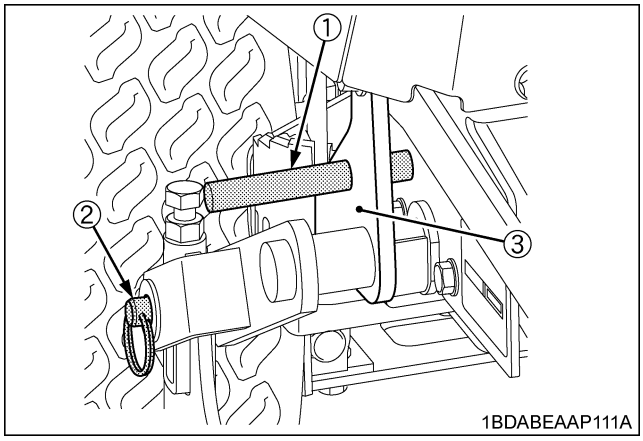

(1) Shaft (ϕ14 mm (0.55 in.) x 150 mm (6 in.))
(2) Clevis pin
(3) Lift link

4. Remove the mower belt.
5. Remove 4 clevis pins mounting the mower deck.
6. Push the mower lift pedal toward the seat and remove the ϕ14 mm (0.55 in.) shaft from the hole in the rear right side lift link.
7. Slowly let the mower lift pedal move to the full up position.
8. Slide the mower deck from under the machine to the right side of it.

https://truckmanualshub.com/

OPERATING THE ENGINE

WARNING

To avoid serious injury:

- **Read and understand "SAFE OPERATION" in the front of this manual.**
- **Read and understand the danger, warning and caution labels located on the machine.**
- **To avoid danger of exhaust fume poisoning, do not operate the engine in a closed building without proper ventilation.**
- **Never start the engine while standing on the ground. Start the engine only from operator's seat.**

MOUNT AND DISMOUNT MACHINE SAFELY

DO NOT step on either side of the mower deck when mounting and dismounting the machine. When mounting the machine from either side, step over the mower deck.

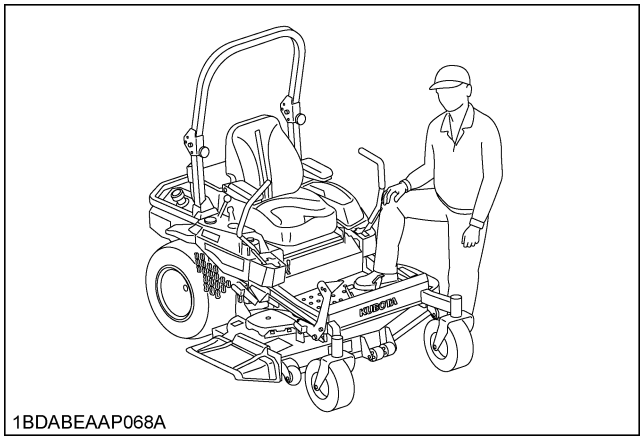

STARTING THE ENGINE

1. **Sit on the operator's seat.**
2. **Apply the parking brake.**

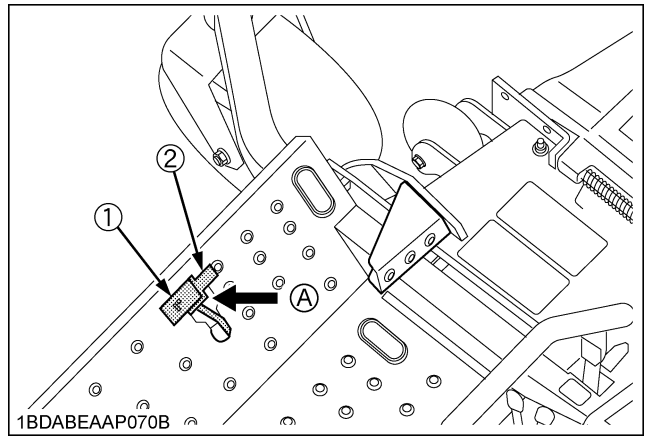

(1) Parking brake pedal
(2) Parking brake lock pedal
(A) "DEPRESS"

To apply the parking brake:
Depress the parking brake pedal firmly with the left side of your right foot. Keeping the parking brake pedal depressed, use the right side of your right foot to depress the parking brake lock pedal. Then release the parking brake pedal while holding the parking brake lock pedal down. Then release the parking brake lock pedal.

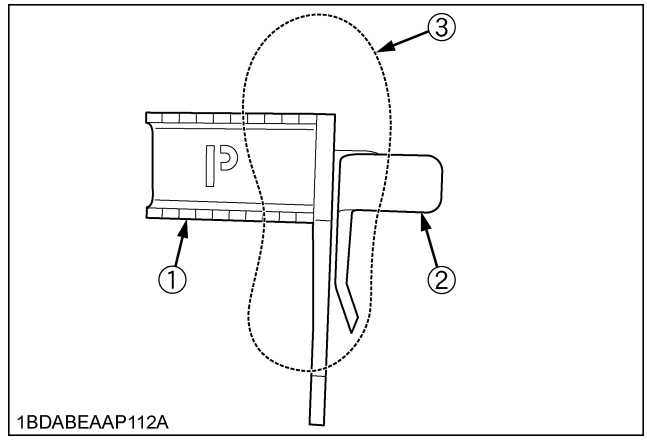

(1) Parking brake pedal
(2) Parking brake lock pedal
(3) Right foot

https://truckmanualshub.com/

To release the parking brake:
Depress the parking brake pedal and release slowly with your right foot without pressing the parking brake lock pedal.

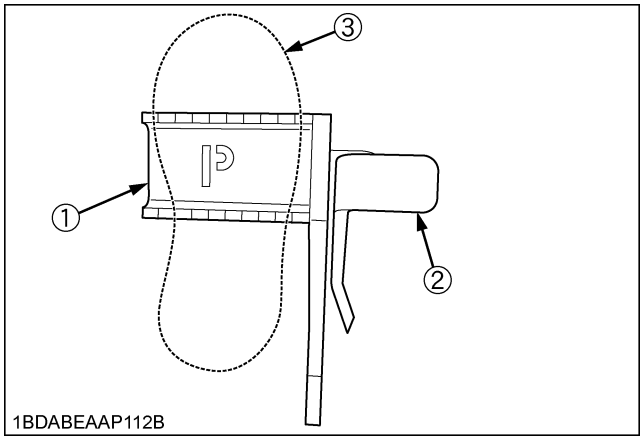

(1) Parking brake pedal
(2) Parking brake lock pedal
(3) Right foot

3. Make sure that the PTO switch is in the "DISENGAGED" (OFF) position.

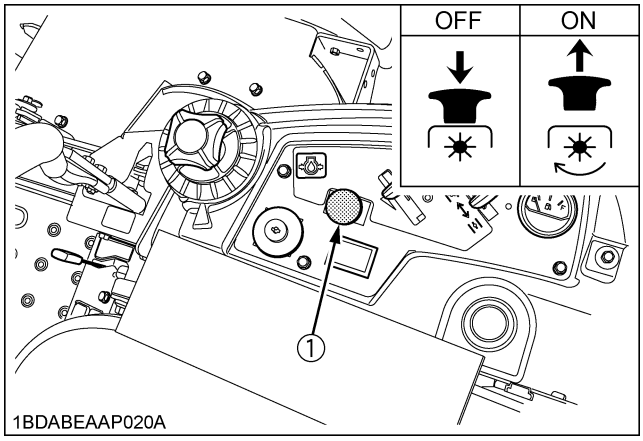

(1) PTO switch

"ENGAGED" (ON)
"DISENGAGED" (OFF)

4. Place the motion control levers in the "NEUTRAL LOCK" position.

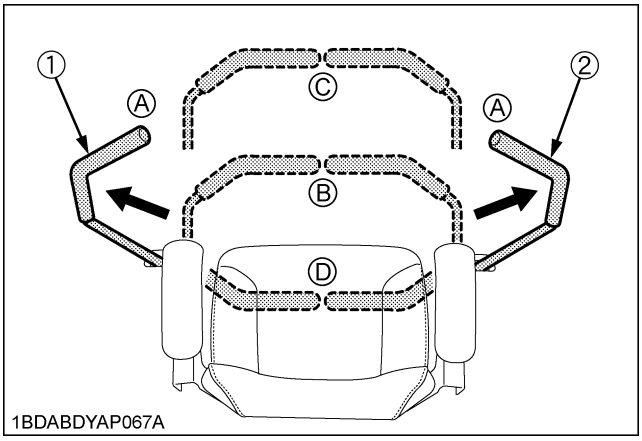

(1) Motion control lever (LH)
(2) Motion control lever (RH)

(A) "NEUTRAL LOCK" Position
(B) "NEUTRAL" Position (held by hands)
(C) "FORWARD"
(D) "REVERSE"

5. Set the throttle lever as follows.

Place the throttle lever **midway** between the **"SLOW"** and the **"FAST"** positions.

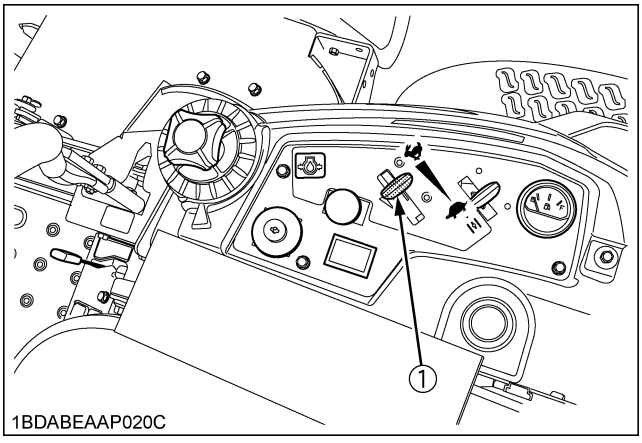

(1) Throttle lever

"FAST"
"SLOW"

https://truckmanualshub.com/

6. Set the choke lever to the "ON" position.

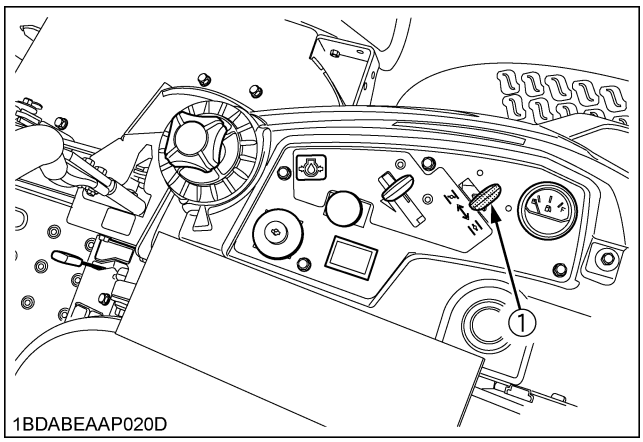

(1) Choke lever *"CHOKE ON"* *"CHOKE OFF"*

7. Insert the key into the key switch. Turn the key switch to the "START" position and release the key to the "ON" position when the engine starts.

IMPORTANT :
- Because of the start interlocks, the engine can not be started except when the PTO switch is disengaged (OFF), the parking brake lock pedal is applied, motion control levers are in "NEUTRAL LOCK" position and the operator is sitting on the seat.

■Throttle Lever and Choke lever

Pulling the throttle lever backward decreases the engine speed and pushing it forward increases the engine speed.

[For a Cold Engine]
Always set the choke lever to the "ON" position to start the engine in cold conditions.

Gradually return the choke lever to the "OFF" position after the engine starts and warms up.

The engine/equipment may be operated during the warm-up period, but it may be necessary to leave the choke partially on until the engine warms up.

[For a Warm Engine]
Always set the choke lever to the "OFF" position after the engine starts.

■Key Switch

OFF.....	The position where the key can be inserted into or removed from the key switch. [When the key is turned to this position, the engine shuts off.]
ON.....	The engine keeps running.
START.....	Apply the parking brake and turn the key switch to this position to start the engine.

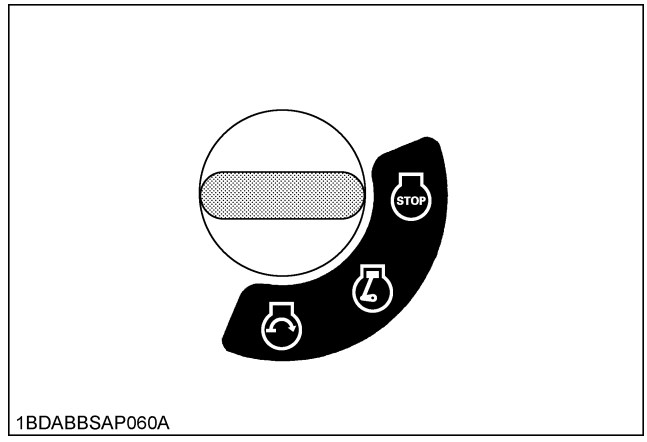

: "OFF" *: "START"*
: "ON"

IMPORTANT :
- Do not use starting fluid or ether.
- To protect the battery and the starter, make sure that the starter is not continuously turned for more than 10 seconds at a time.
  If the engine does not start, allow 60 seconds cool down period between starting attempts.
- If the starter does not turn the engine over, shut off the starter immediately. Do not make further attempts to start the engine until the condition is corrected. Do not jump start using another battery.
  Consult your local KUBOTA dealer.
- Do not turn the key switch to the "START" position while the engine is running.
- When the temperature is below 0℃(32℉), run the engine at medium speed to warm up the lubricant of the engine and the transmission for at least 10 minutes. If the machine is operated before the lubricant is warm enough, the machine life will be shortened.
- Do not operate the machine under full load until it is sufficiently warmed up 2 or 3 minutes for temperature above 0℃(32℉).

https://truckmanualshub.com/

- When the ambient temperature is less than -15℃ (5℉), remove the battery from the machine and store it somewhere warm until the next operation.

8. Make sure that the Easy Checker (TM) lights have gone off. If the light is still on, immediately stop the engine and check the remedy following the instruction. (See "CHECK DURING OPERATING" in "OPERATING THE ENGINE" section.)

9. Warm the engine by running at medium speed.

CHECK DURING OPERATING

While operating, make the following checks to see that all the parts are functioning normally.

■Immediately Stop the Engine if:

- The engine suddenly slows down or accelerates.
- Unusual noises are suddenly heard.
- Exhaust fumes suddenly become discolored.

■Easy Checker (TM)

If the warning lamps in the Easy Checker (TM) come on during operation, stop the engine immediately, and find the cause as shown below.
Never operate the machine while Easy Checker (TM) lamp is "ON".

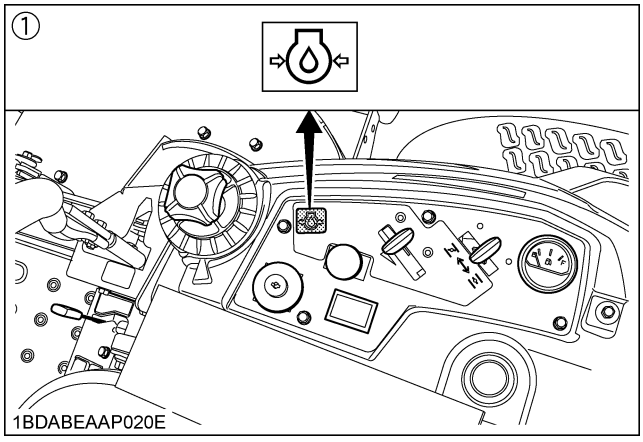

(1) Easy checker (TM)

Engine oil pressure

If the oil pressure in the engine goes below the prescribed level, the warning lamp in the Easy Checker (TM) will come on.
If this should happen during operation, stop the engine immediately and check level of engine oil.

■Fuel Gauge

The fuel gauge indicates the fuel level.

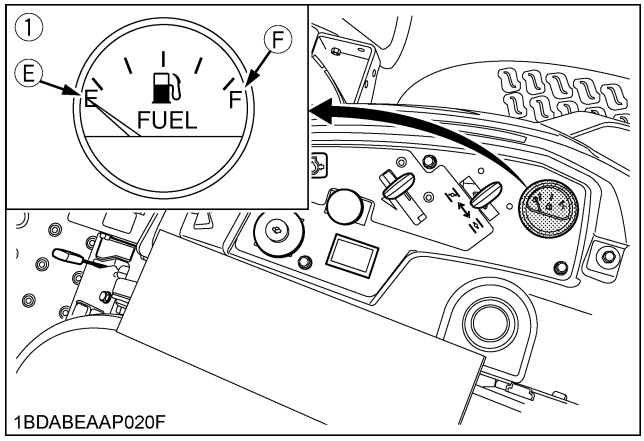

(1) Fuel gauge
(E) "EMPTY"
(F) "FULL"

IMPORTANT :
- Do not refuel over "F". Fill the tank only to the bottom of the filler neck in the fuel tank.
- Fill the fuel on a level ground.

■Hour Meter

This meter gives readings for the hours the machine has been operated for.

NOTE :
- As the hour meter works electrically, it starts to work when the key switch is turned to "ON", regardless of the engine running or not.

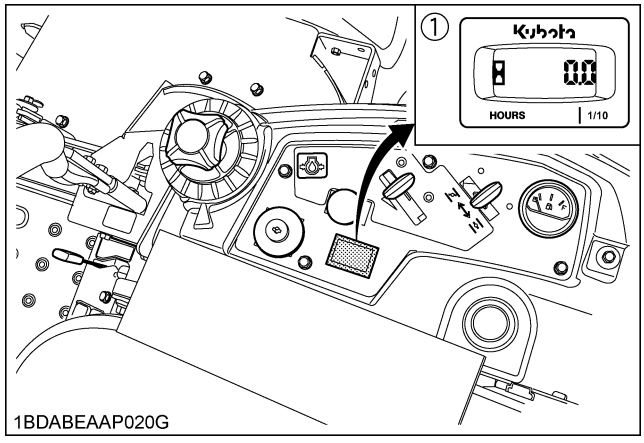

(1) Hour meter

https://truckmanualshub.com/

COLD WEATHER STARTING

If the ambient temperature is below 0℃ (32℉) and the engine is very cold, start it in the following manner:

1. Place the choke lever to the "ON" position, and place the throttle lever midway between the "SLOW" and the "FAST" positions.
2. Turn the key switch to the START ("") position.
   - Operate the starter 5 seconds.
   - If the engine does not start, wait 15 seconds.
   - Repeat this procedure until the engine starts.
3. When the engine starts, release the key to the "ON" ("") position.

WARMING UP

WARNING

To avoid serious injury:

- **Be sure to apply the parking brake during warm-up.**

For 5 minutes after engine start-up, allow the engine to warm up without applying any load. This is to allow oil to reach every part of the engine. If load should be applied to the engine without this warm-up period, problems may develop such as seizure, breakage or premature wear.

■Warm-up and Transmission Oil in the Low Temperature Range

Hydraulic oil serves as transmission oil. In cold weather, the oil may be cold with increased viscosity. This can cause delayed oil circulation or abnormally low hydraulic pressure for some time after engine start-up. This in turn can create problems with the hydraulic system.

To prevent the above, observe the following instructions:

Warm up the engine at about 50% of rated rpm according to the table below:

Ambient temperature	Warm-up time requirement
Higher than 0℃ (32℉)	Approx. 5 minutes
-10 to 0℃ (14 to 32℉)	5 to 10 minutes
-20 to -10℃ (-4 to 14℉)	10 to 15 minutes
Below -20℃ (-4℉)	More than 15 minutes

IMPORTANT :

- Do not operate unless the engine is well warmed up. If operation is attempted while the engine is still cold, the hydraulic mechanism will not function properly and its service life will be shortened.

JUMP STARTING

WARNING

To avoid serious injury:

- **Keep cigarettes, sparks, and flames away from battery.**
- **If the machine battery is frozen, do not jump start the engine.**
- **Do not connect the other end of negative jumper cable to the negative terminal of the machine battery.**

When jump starting the engine, follow the instructions below to start the engine safely.

1. Bring a helper vehicle with a battery of the same voltage as the disabled machine within easy cable reach. "THE VEHICLES MUST NOT TOUCH".
2. Apply the parking brakes of both vehicles and put the shift levers in neutral. Shut the engine off.
3. Put on safety goggles and rubber gloves.
4. Ensure vent caps are securely in place (if equipped).
5. Attach the red clamp to the positive (red, (+) or pos.) terminal of the dead battery and clamp the other end of the same cable to the positive (red, (+) or pos.) terminal of the helper battery.
6. Clamp the other cable to the negative (black, (-) or neg.) terminal of the helper battery.
7. Clamp the other end to the engine block or the frame of the disabled machine as far from the dead battery as possible.
8. Start the helper vehicle and let its engine run for a few moments. Start the disabled machine.
9. Disconnect the jumper cables in the exact reverse order of attachment. (Steps 7, 6 and 5)

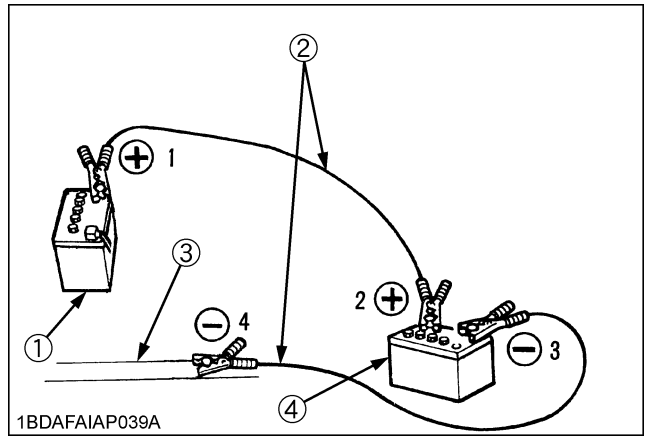

(1) Dead battery
(2) Jumper cables
(3) Engine block or frame
(4) Helper battery

Connect cables in numerical order. Disconnect in reverse order after use.

IMPORTANT :

- This machine has a 12 volt negative (-) ground starting system.
- Use only same voltage for jump starting.

https://truckmanualshub.com/

- Use of a higher voltage source on a machine could result in severe damage to the machine electrical system.
  Use only matching voltage source when "jump-starting" a low or dead battery condition.

STOPPING THE ENGINE

1. After setting the engine throttle to "SLOW", turn the key switch to the "OFF" position.
2. Remove the key.
3. Do not leave the key switch "ON" (key in the "ON" position) as the battery will discharge when the engine is not running.
4. Apply the parking brake.
5. Turn the carburetor fuel valve to "STOP" (OFF) position.

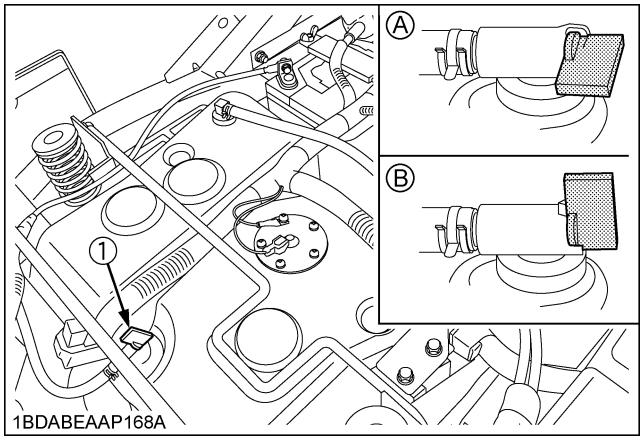

(1) Fuel valve

(A) "STOP" (OFF)
(B) "RUN"

IMPORTANT :

- Do not stop the engine when the machine is on an incline for a long time. The engine oil may go into the carburetor and the muffler through the valve system.
- Place the throttle control lever in the half speed position to help prevent the engine from backfiring before stopping the engine.

https://truckmanualshub.com/

OPERATING THE MACHINE

OPERATING NEW MACHINE

How a new machine is operated and maintained will determine the life of the machine.

A new machine just off the factory production line has been tested, but the various parts are not accustomed to each other, so care should be taken to operate the machine for the first 50 hours at a slower speed and avoid excessive work or operation until the various parts become "broken-in." The manner in which the machine is handled during the "breaking-in" period greatly affects the life of your machine. Therefore, to obtain the maximum performance and the longest life of the machine, it is very important to properly break-in your machine. In handling a new machine, the following precautions should be observed.

■Changing Lubricating Oil for New Machines

The lubricating oil is especially important in the case of a new machine. The various parts are not "broken-in" and are not accustomed to each other; small metal grit may develop during the operation of the machine; and this may wear out or damage the parts. Therefore, care should be taken to change the lubricating oil a little earlier than would ordinarily be required.

For further details of change interval hours.

(See "SERVICE INTERVALS" in "MAINTENANCE" section.)

■Machine Break-in

After the first 8 hours, change the engine oil. (See "EVERY 100 HOURS" in "PERIODIC SERVICE" section.)

After the first 300 hours of operation, change the transaxle fluid and oil filter cartridge. (See "EVERY 500 HOURS AFTER 300 HOURS" in "PERIODIC SERVICE" section.)

DANGER

To avoid serious injury or death:

- **Do not operate the mower without the deflector shield in the down position.**

WARNING

To avoid serious injury or death:

- **The machine relies upon the engine driven transmission for speed, direction, and motion control. If the engine is not running, the machine cannot be driven or controlled.**
  If the engine stops when operating on a slope, apply the parking brake immediately to prevent machine runaway.
- **Do not allow any person other than the driver to ride on the machine.**
- **Do not drive the machine close to the edges of ditches or banks which may collapse under the weight of the machine, especially when the ground is loose or wet.**
- **When turning the machine, be sure to reduce the travel speed and operate motion control levers carefully.**
- **To avoid tip over, operate across slopes, not up and down. Avoid sudden starts and stops on slopes. Slow down, and use extra caution when changing direction on a slope.**
  Park the machine on a firm and level surface.
- **Watch where you are going at all times. Watch for and avoid obstacles. Be alert at curbs, near trees, and other obstructions and hidden hazards.**
- **Do not mow near drop-offs, ditches or embankments. The mower could turn over if a wheel is over the edge of a cliff or ditch, or if an edge caves in.**
- **Do not drive machine on streets or highways. Watch for traffic when you cross roads or operate near roads.**
- **Look to the rear before and when backing. Make sure the area immediately behind you is clear of obstructions, holes and small children. Use extra caution when machine is equipped with Grass Catcher.**
- **Keep bystanders especially children and animals away from the mowing area.**

WARNING

To avoid serious injury:

- **Clear the work area of objects which might be picked up and thrown by blades.**
- **Do not direct the opening of the chute at bystanders or animals. Ejected objects may cause injury. Plan your mowing carefully before starting operation.**
- **Be sure to disengage the PTO and sit on the operator's seat before starting the engine.**

https://truckmanualshub.com/

OPERATING FOLDABLE ROPS

WARNING

To avoid serious injury:

- **When raising or folding the ROPS, apply parking brake, stop the engine and remove the key.**
  Always perform function from a stable position to the rear of the machine.
- **Fold the ROPS down only when absolutely necessary and fold it up and lock it again as soon as possible.**
- **Before proceeding to fold the ROPS, check for any possible interference with installed implements and attachments.**
  If interference occurs, contact your KUBOTA Dealer.

■To Fold the ROPS

1. Unscrew the knob bolts 1 to 2 turns.
2. Remove both lock pins.

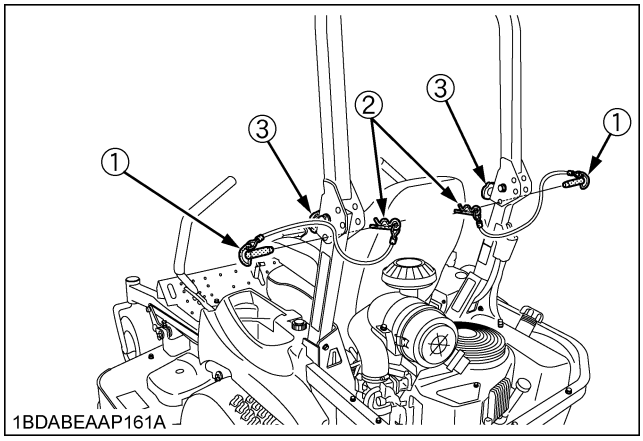

(1) Lock pin
(2) Hair pin
(3) Knob bolt

3. Fold the ROPS.

CAUTION

To avoid personal injury:

- **Hold the ROPS tightly with both hands and fold the ROPS slowly and carefully.**

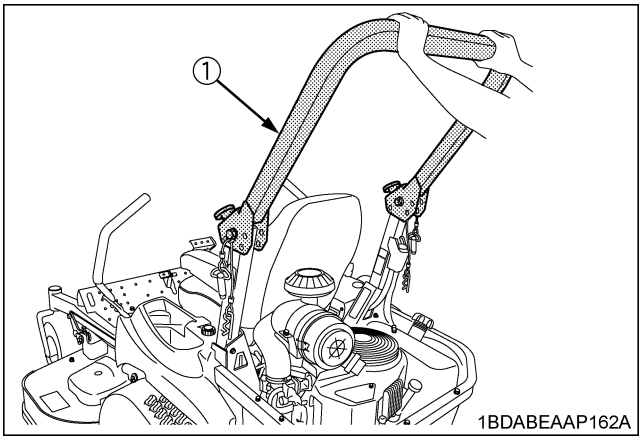

(1) ROPS

4. Align lock pin holes and insert both lock pins and secure them with the hair pins.

CAUTION

To avoid personal injury:

- **Make sure that both lock pins are properly installed and secured with the hair pins.**

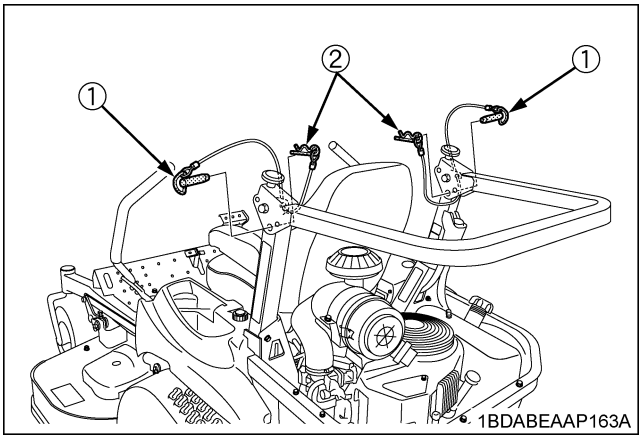

(1) Lock pin
(2) Hair pin

https://truckmanualshub.com/

ENGLISH

■To Raise the ROPS to Upright Position

1. Remove both hair pins and lock pins.

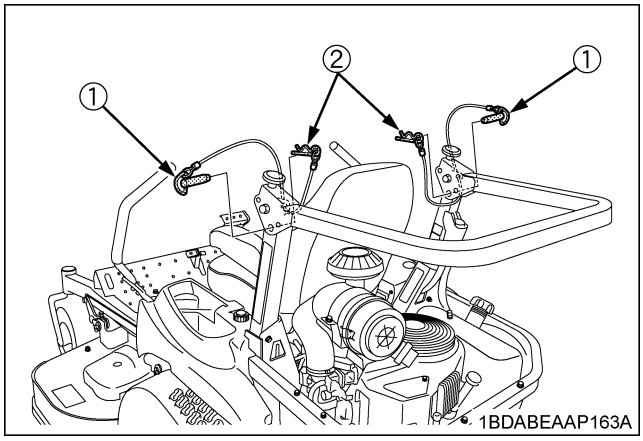

(1) Lock pin
(2) Hair pin

2. Raise ROPS to the upright position.

CAUTION

To avoid personal injury:

- **Hold the ROPS tightly with both hands and raise the ROPS slowly and carefully.**

3. Align lock pin holes, insert both lock pins and secure them with the hair pins.
4. Tighten the knob bolts slightly.

CAUTION

To avoid personal injury:

- **Make sure that both lock pins are properly installed as soon as the ROPS is in the upright position and secured with the hair pins.**

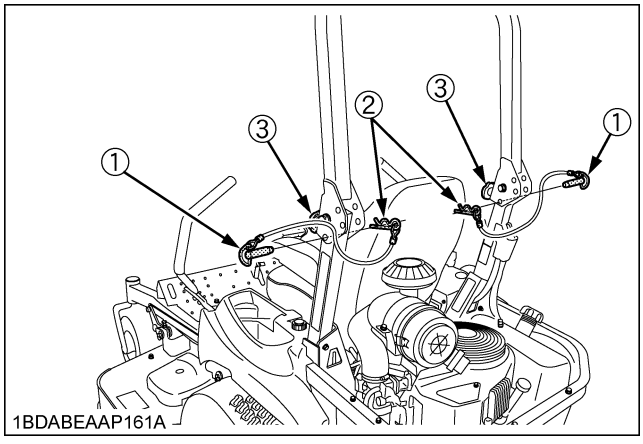

(1) Lock pin
(2) Hair pin
(3) Knob bolt

■Adjustment of Foldable ROPS

- Adjust free fall of the ROPS upper frame regularly.
- If you feel less friction when folding the ROPS, tighten the nut (1) until you feel the right friction in the movement and then replace the hair pin.

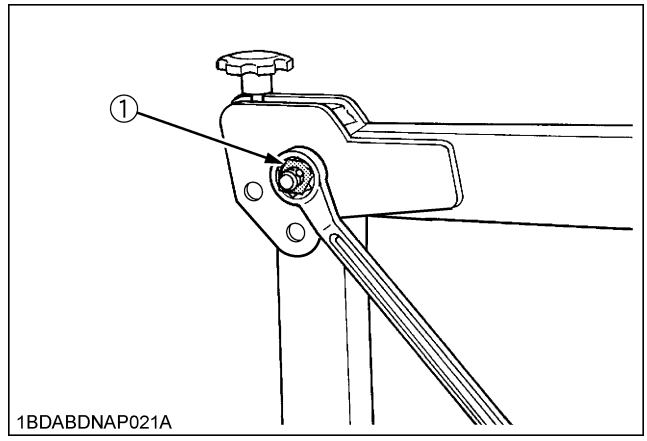

(1) Nut

STARTING

1. Adjust the operator's position and apply the seat belt.

■Operator's Seat

WARNING

To avoid serious injury:

- **Make adjustments to the seat only while the machine is stopped.**
- **Make sure that the seat is completely secured after each adjustment.**
- **Do not allow any person other than the driver to ride on the machine.**

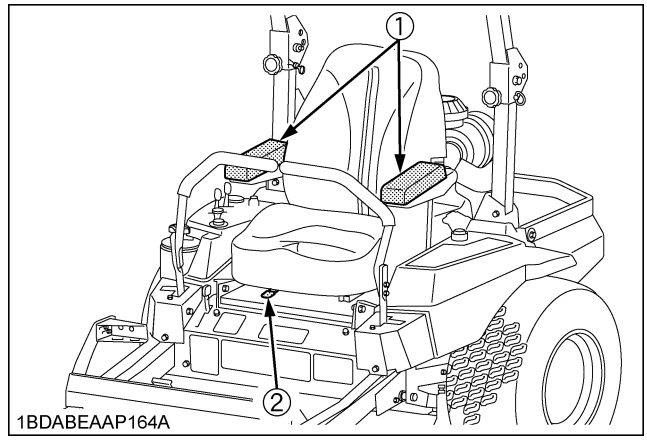

(1) Armrest
(2) Seat slide lever

https://truckmanualshub.com/

◆ **How to adjust the operator's seat**

- Fore-aft adjustment
  Pull the seat slide lever and slide the seat.

◆ **Armrest**

Armrest may be set at upright position if desired.

◆ **Armrest angle adjustment**

Turn the armrest angle adjustment knob to the desired angle.

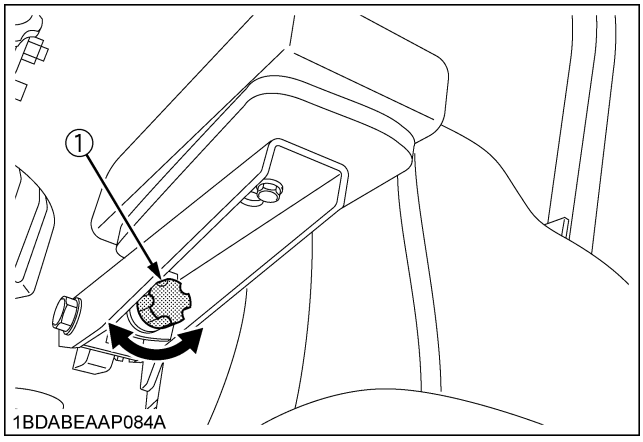

(1) Armrest angle adjustment knob

IMPORTANT :

- After adjusting the operator's seat, be sure to check and see that the seat is securely locked.

■Seat Belt

WARNING

To avoid serious injury:

- **Always use the seat belt when the ROPS is installed.**
- **Do not use the seat belt if a foldable ROPS is down or there is no ROPS.**

Adjust the seat belt for proper fit and connect to the buckle. The seat belt is an auto-locking retractable type.

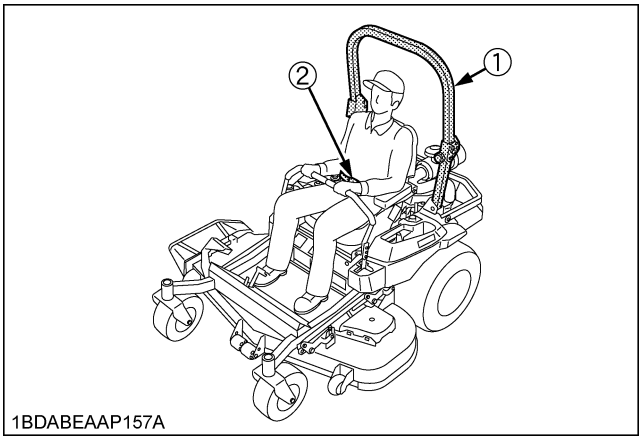

(1) ROPS
(2) Seat belt

2. Start the engine.
See "OPERATING THE ENGINE" section.

https://truckmanualshub.com/

3. Raise the implement.

■Mower Lift Pedal

The mower lift pedal is used to raise and lower the mower deck.

TO LOCK MOWER IN CARRY POSITION:

1. Set mower lock lever in "LOCK" position.

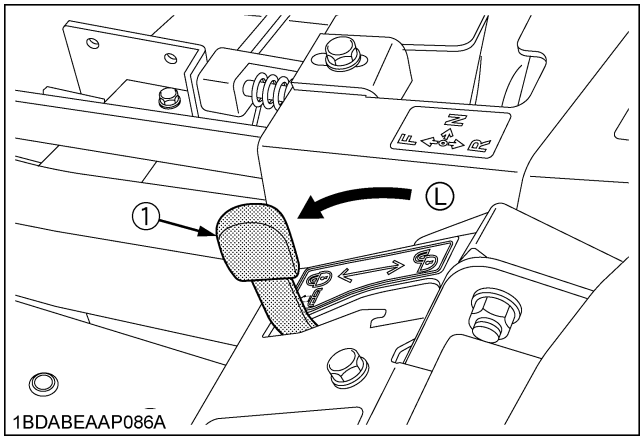

(1) Mower lock lever *(L) "LOCK"*

2. Push mower lift pedal to end of pedal stroke.

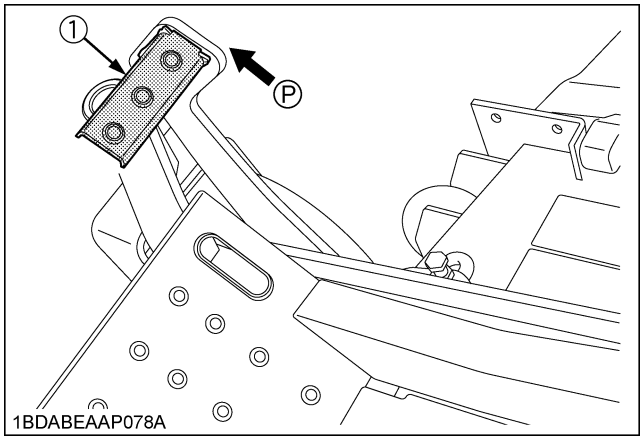

(1) Mower lift pedal *(P) "PUSH"*

TO LOWER MOWER FROM CARRY POSITION:

1. While pushing mower lift pedal to end of stroke, set mower lock lever to "UNLOCK" position.

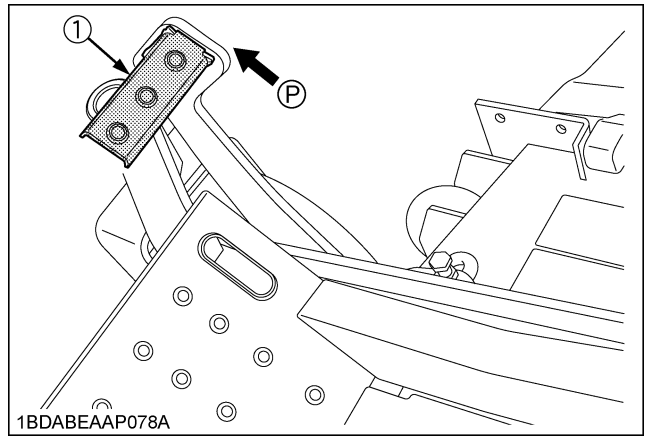

(1) Mower lift pedal *(P) "PUSH"*

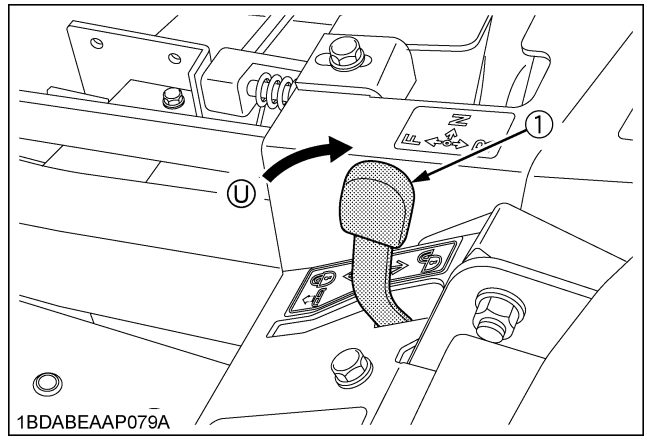

(1) Mower lock lever *(U) "UNLOCK"*

2. Slowly release mower lift pedal.

https://truckmanualshub.com/

4. Accelerate the engine.

■Throttle Lever

Moving the throttle lever backward decreases the engine speed and moving it forward increases the engine speed.

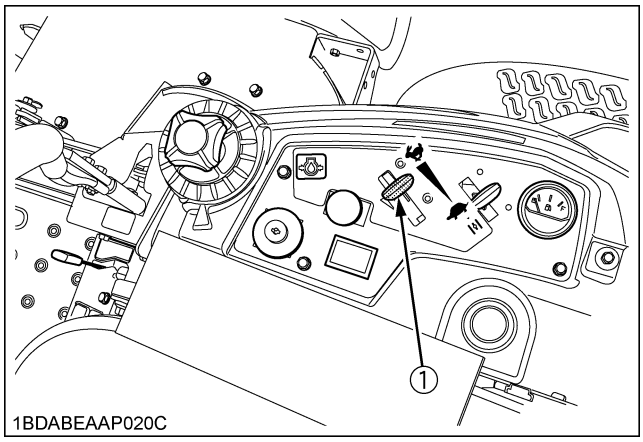

(1) Throttle lever *"INCREASE"* *"DECREASE"*

5. Unlock the parking brake.

■Parking Brake Pedal

To release the parking brake:

Depress the parking brake pedal and release slowly with your right foot, without pressing the parking brake lock pedal.

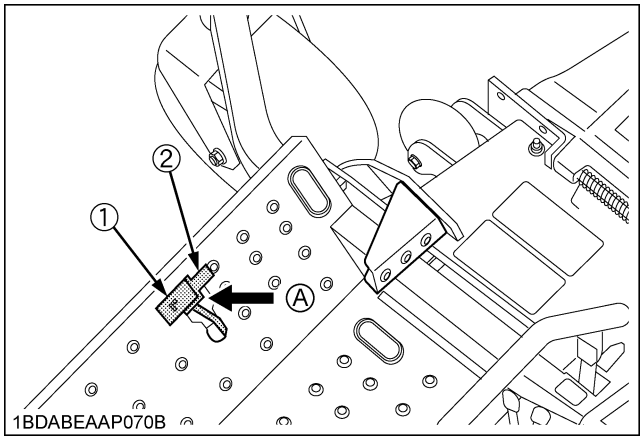

(1) Parking brake pedal *(A) "DEPRESS"*
(2) Parking brake lock pedal

6. Operate the machine.

■Motion Control Lever

WARNING

To avoid serious injury:

- **Understand how to use the motion control levers and practice in an unrestricted area at a little more than an idle speed without the mower engaged until becoming proficient in the operation of the machine.**
- **Do not move motion control levers from forward to reverse or reverse to forward position rapidly.**
  Sudden direction changes could cause loss of control or damage to the machine or property.
- **Do not make sharp turns at high speeds.**
  Fast and sharp turns could cause loss of control.
- **Motion control levers must be in "NEUTRAL LOCK" position to safely enter and exit the operator's seat or to carry out maintenance and safety checks.**
- **This machine can make sharp turns. Always make sure your intended path is clear of obstructions or persons.**

Stop position

◆ **Neutral lock position**

- Forward and reverse movement of the motion control levers are prevented when levers are in "NEUTRAL LOCK" position. (Engine can only be started with levers in this position.)

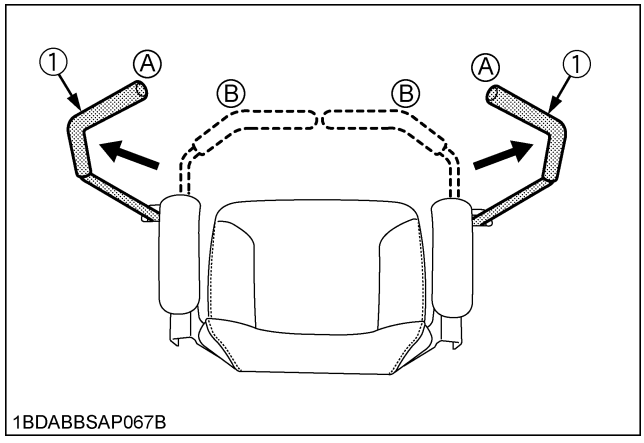

(1) Motion control levers *(A) "NEUTRAL LOCK" position*
(B) "NEUTRAL" position (held by hand)

https://truckmanualshub.com/

ENGLISH

Operating position

Machine speed and steering is controlled by the motion control levers, when the engine is running and the parking brake is released.

WARNING

To avoid serious injury:

- **No control is provided by the motion control levers when the engine is off.**

◆ **Neutral position**

- Grasp the motion control levers and move them inward from the "NEUTRAL LOCK" position so that the machine is in "NEUTRAL". (Engine cannot be restarted.)

◆ **Forward and Reverse Motion:**

1. Move throttle lever to the "FAST" position.
2. Release the parking brake.
3. Move both motion control levers from the "NEUTRAL LOCK" position inward to the "NEUTRAL" position.
4. Push the control levers slowly forward to begin forward motion.
   To move reverse:
   Pull both control levers slowly rearward at the same time to begin reverse motion.
   To stop:
   Move and hold both motion control levers to the "NEUTRAL" position until the machine comes to a stop.

WARNING

To avoid serious injury:

- **The motion control lever adjustment is important to ensure the machine operates properly.**

NOTE :

- The motion control linkages are adjustable.
  If adjustment is required, see "ADJUSTMENT" section. We recommend you to contact your local KUBOTA Dealer.

FORWARD:

- Push both motion control levers forward equally at the same time. For forward travel in a straight line.

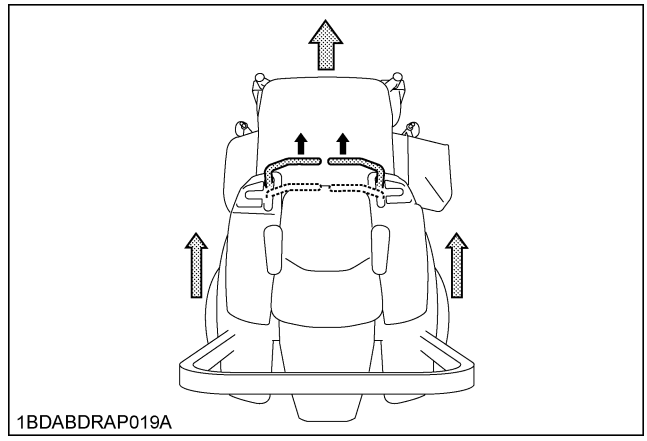

REVERSE:

- Pull both motion control levers past center rearward equally at the same time. For rearward travel in a straight line.

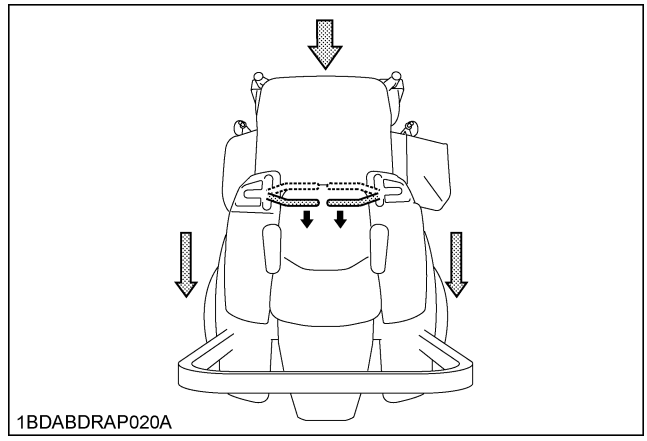

GENERAL LEFT TURN:

- Push right motion control lever further forward than the left motion control lever. For forward travel to the left.

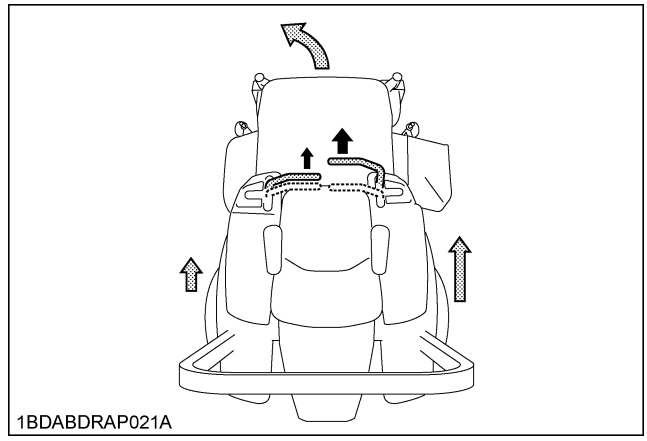

https://truckmanualshub.com/

GENERAL RIGHT TURN:

- Push left motion control lever further forward than the right motion control lever. For forward travel to the right.

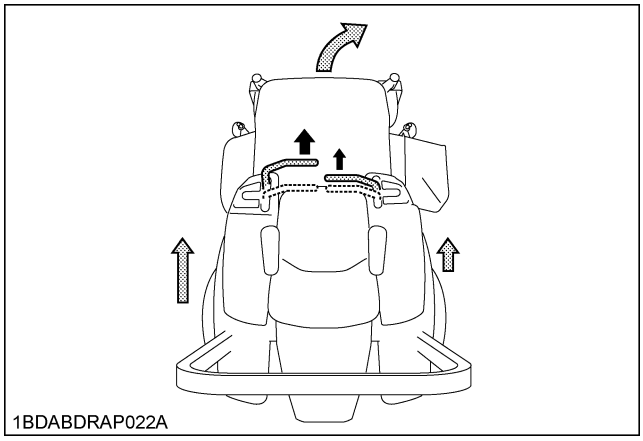

SHARP (ZERO) LEFT TURN:

- Push right motion control lever forward and pull left motion control lever rearward at the same time.

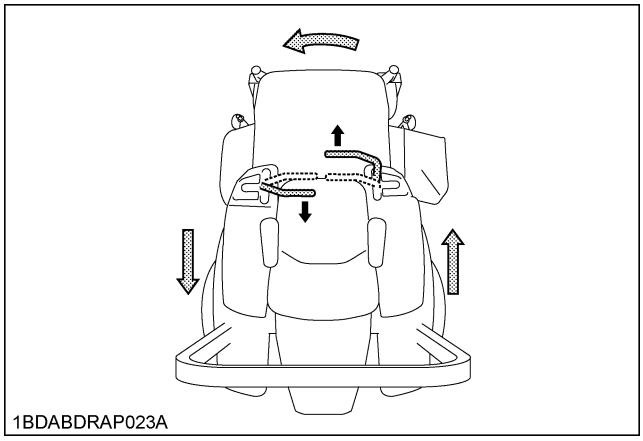

SHARP (ZERO) RIGHT TURN:

- Push left motion control lever forward and pull right motion control lever rearward at the same time.

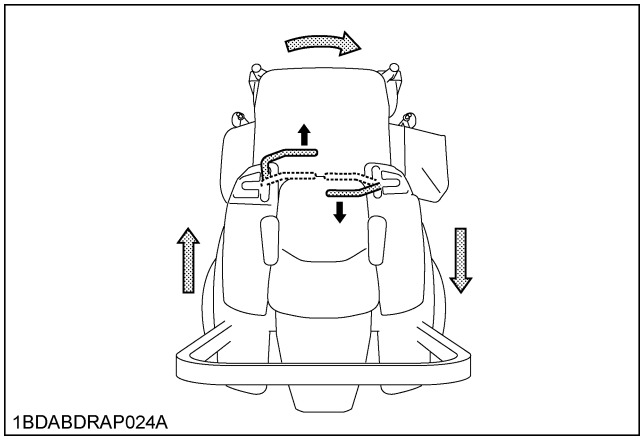

STOPPING

WARNING

To avoid serious injury:

- **Park the machine on level ground.**
  If necessary to park on an incline,
  (1) Stop the machine,
  (2) Apply the parking brake, then
  (3) Stop the engine.
- **If you stop the engine on an incline without applying the parking brake, the machine could move and run away.**

IMPORTANT :

- The parking brake pedal is for parking and emergency use only. If the parking brake is applied when the motion control levers are not in "NEUTRAL LOCK" position, the engine will stop immediately. This feature is to prevent brake and transmission damage during operation.

1. Move both motion control levers to the "NEUTRAL" position to stop the machine.
2. Move both motion control levers to "NEUTRAL LOCK" position.
3. Apply parking brake.
4. Move the throttle lever to the half speed position and shift PTO lever to the "DISENGAGE" (OFF) position.
5. Lower all implements to the ground.
6. Turn off the engine and remove the key.

IMPORTANT :

- Do not stop the engine when the machine is on an incline for a long time. The engine oil may go into the carburetor and the muffler through the valve system.
- Place the throttle control lever in the half speed position to help prevent the engine from backfiring before stopping the engine.

https://truckmanualshub.com/

PARKING

TO LOCK:

Depress the parking brake pedal firmly with the left side of your right foot. Keeping the parking brake pedal depressed, use the right side of your right foot to depress the parking brake lock pedal. Then release the parking brake pedal while holding the parking brake lock pedal down. Then release the parking brake lock pedal.

TO UNLOCK:

Depress the parking brake pedal and release slowly with your right foot, without pressing the parking brake lock pedal.

WARNING

To avoid serious injury:
Before leaving the operator's position,

- **Apply parking brake.**
- **Lower all implements to the ground.**
- **Shut off the engine.**
- **Remove the key.**
- **Place the motion control levers in the "NEUTRAL LOCK" position.**

If necessary to park on an incline, be sure to chock the wheels on the downhill side to prevent accidental rolling of the machine.

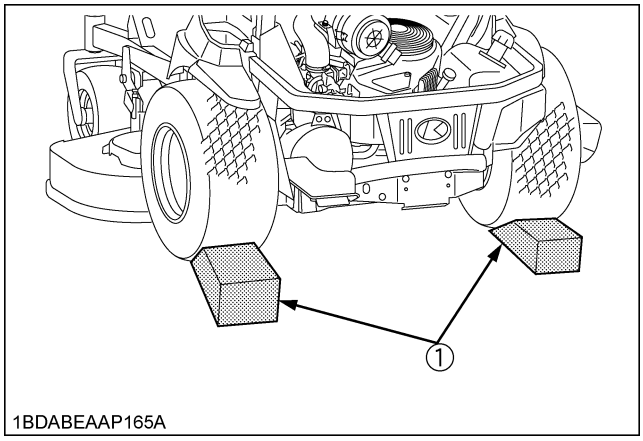

(1) Chocks

TRANSPORTING

IMPORTANT :

1. Transport the machine on a trailer.
   - Turn the fuel valve to the "OFF" position.
   - Fasten the machine to the trailer.
2. Do not attempt to tow this machine, or damage to the transmission may result.
3. When trailering the machine over a long distance:
   - Move the mower lock lever to the "UNLOCK" position.
   - Make sure to lower the mower to the 25.4 mm (1 in.) cutting height by using the mower lift pedal.
4. When transporting the machine under its own power:
   - Move the mower lock lever to the "LOCK" position.
   - Make sure to lift the mower to the "TRANSPORT" position by using the mower lift pedal.

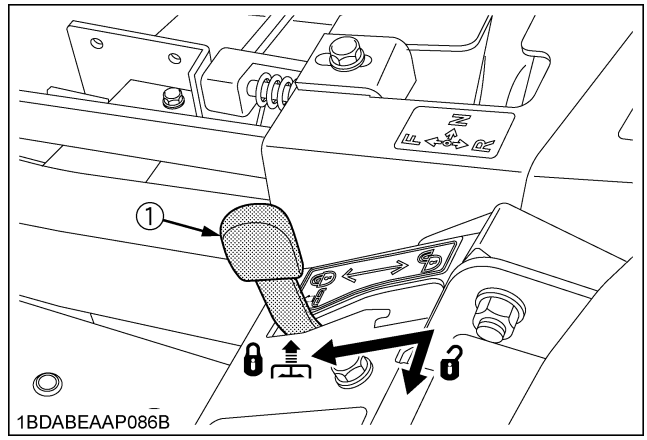

(1) Mower lock lever

: "LOCK"
: "UNLOCK"

https://truckmanualshub.com/

■Hydrostatic Transaxle Bypass Lever

DANGER

To avoid serious injury or death:

- **Do not use bypass levers on or around slopes. The machine can runaway and cause injury or death easily.**

IMPORTANT :

- Do not push the machine without rotating the bypass levers, or transmission damage may occur.
- Never rotate the levers with the engine running.

1. From the front of the transaxle, rotate the bypass lever to the right.
   Do this for both transaxle (LH and RH).
   See the figure below.

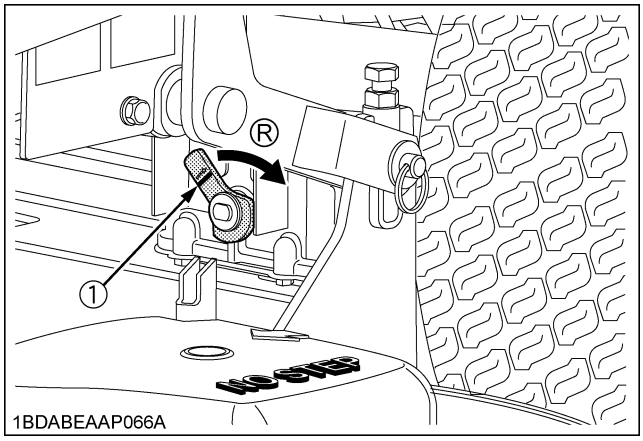

(1) Bypass lever *(R) "ROTATE THE LEVER TO THE RIGHT"*

2. After moving the machine, rotate both the right side and left side bypass levers completely to the left.

https://truckmanualshub.com/

OPERATING THE MOWER

MAKING THE MOST OF YOUR MOWER

1. When using your mower for the first time, choose a smooth level area and cut in straight and slightly overlapping strips.
2. The size and type of the area to be mowed will determine the proper mowing pattern. Take into account obstructions, such as trees, fences and buildings. To keep grass clippings off fences, sidewalks, etc., it is advisable to go over the outside of the area to be mowed several times in a clockwise direction. To mow the area remaining, work in a counterclockwise direction so that the clippings are dispersed onto the previously cut area.
3. Always keep the left side of the mower toward trees, posts or other obstacles on the first trip around the obstacle.
4. Most lawns should be mowed to keep the grass approximately 50 to 80 mm (2 to 3 in.) high. Best results are obtained by cutting often and not too short. To keep a green lawn, never mow more than 1/3 of the height of the grass or a maximum of 25 mm (1 in.) in 1 mowing.
   For extremely tall grass, set the cutting height at maximum cutting height for the first mowing, then reset to the desired height and mow again. Allow the grass to grow to 80 mm (3 in.), then cut off only the top inch.
5. For best appearance, grass should be cut in the afternoon or evening when it is free of moisture.

ADJUSTING CUTTING HEIGHT

DANGER

To avoid serious injury or death:

- **Never engage the PTO and blades in transport position.**

1. Before adjusting cutting height, check that all tire pressures are correct. If necessary adjust to the correct tire pressure.

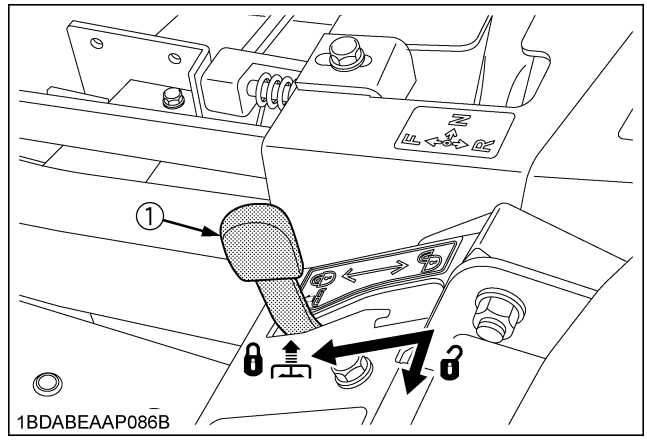

(1) Mower lock lever

: "LOCK"
: "UNLOCK"

2. To set the cutting height, keep depressing the mower lift pedal to raise mower deck to the top position. Make sure that the mower lock lever is in unlock position. Adjust the cutting height control dial to desired height.
3. Use the higher settings for mowing in a rough area or when mowing tall grass. Lower settings should be used only for smooth lawns where short grass is desired.

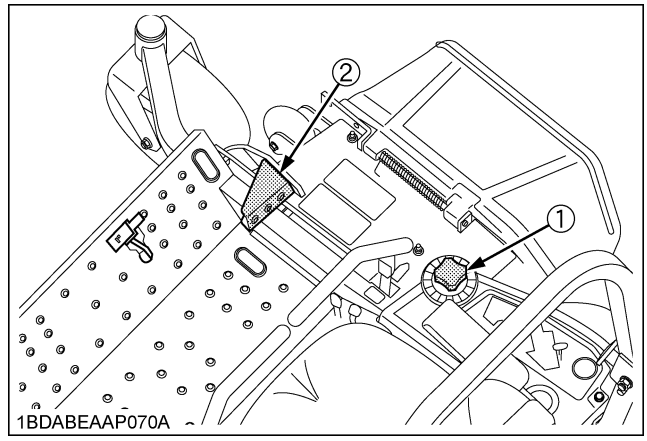

(1) Cutting height control dial
(2) Mower lift pedal

https://truckmanualshub.com/

4. Lower the mower deck by releasing the mower lift pedal. This lowers the mower deck from the "TRANSPORT" position to the "OPERATING" position.
5. Adjust the anti-scalp rollers' height as recommended below for normal operating condition. To minimize gouging and roller damage or wear, the anti-scalp rollers will maintain the ground clearance of 6 mm (0.25 in.).

IMPORTANT :
- Never allow roller to contact the ground continuously as premature roller wear may develop if set incorrectly.
- Anti-scalp rollers must maintain a minimum clearance of 6 mm (0.25 in.) to the ground.

[BOLT]

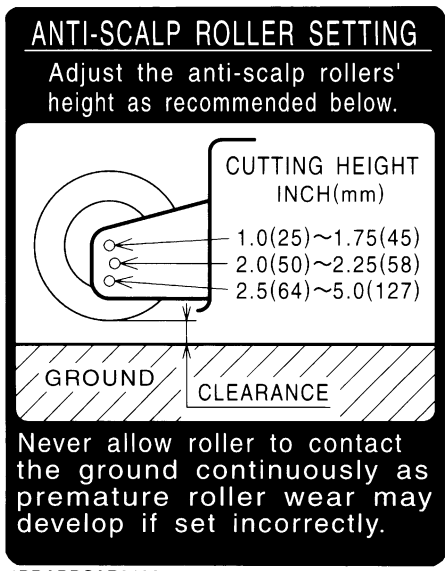

1BDABBSAP0130

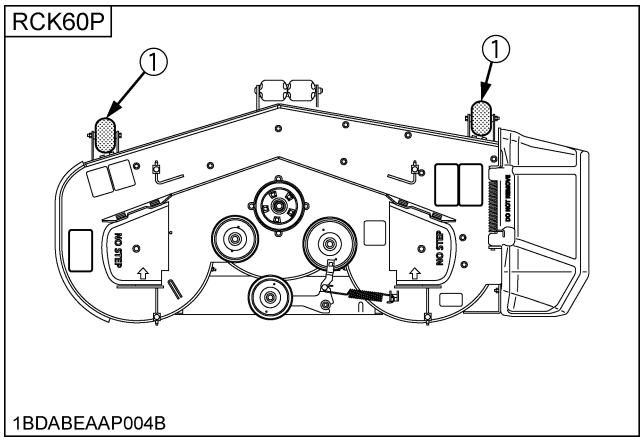

1BDABEAAP004B

(1) Anti-scalp roller (Front, bolt shift type)

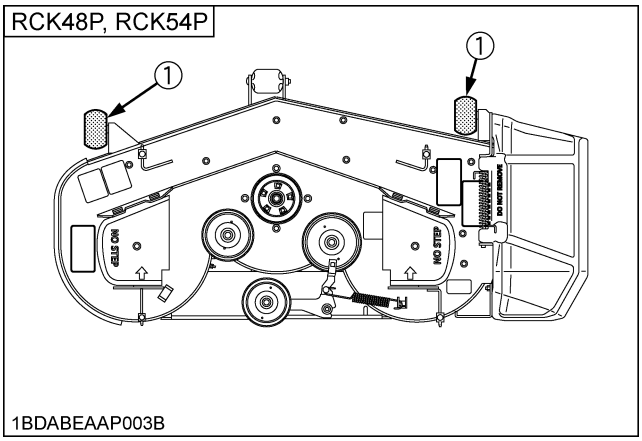

1BDABEAAP003B

(1) Anti-scalp roller (Front, bolt shift type)

https://truckmanualshub.com/

Reference

- Set position for recommended ground clearance 19 mm (3/4 in.).

Cutting height inch (mm)	Position of bolts 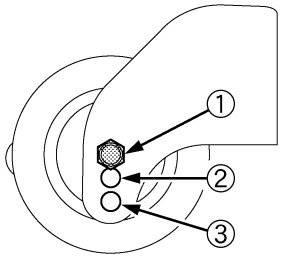 1BDABEAAP113A	Ground clearance mm (Ref.)
1.00" (25)	1	6
1.25" (32)		12
1.50" (38)		19
1.75" (44)		25
2.00" (50)	2	19
2.25" (58)		25
2.50" (64)	3	19
2.75" (70)		25
3.00" (76)		(31) *1
3.25" (83)		(38) *2
3.50" (89)		(44) *2
3.75" (95)		(51) *2
4.00" (102)		(57) *2
4.25" (108)		(63) *2
4.50" (114)		(70) *2
4.75" (121)		(76) *2
5.00" (127)		(83) *2

*1. For cutting heights above 3.0". The anti-scalp rollers will still be effective against scalping.
*2. Use it if necessary.

https://truckmanualshub.com/

OPERATING MOWER

DANGER

To avoid serious injury or death:

- **Do not operate the mower without the discharge deflector being in place properly.**

WARNING

To avoid serious injury:

- **Clear the work area of objects which might be picked up and thrown.**
- **Do not direct the opening of the deflector at bystanders especially children or animals. Ejected objects may cause injury. Plan your mowing carefully before starting operations.**
- **Keep bystanders and animals away from the mowing area.**
- **Be sure to disengage the PTO clutch of the mower before attempting to start the engine.**

■PTO Switch

To engage the PTO, pull the PTO switch to the "ENGAGED" (ON) position.

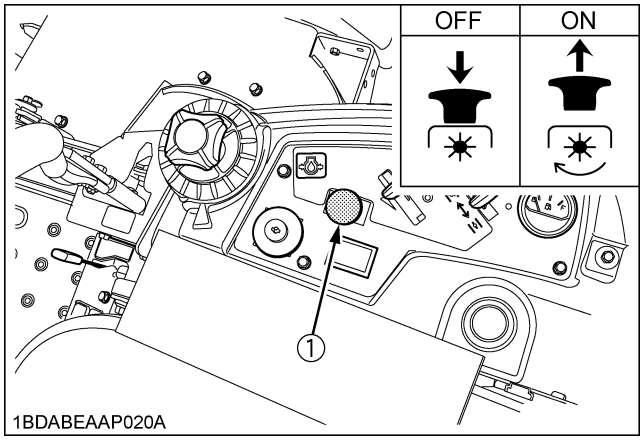

(1) PTO switch

"ENGAGED" (ON)

"DISENGAGED" (OFF)

1. If you get off the seat while the PTO is running, the engine will stop automatically. (Operator presence control)
2. Before starting the engine, push the PTO switch to the "DISENGAGED" (OFF) position. If it is at the "ENGAGED" (ON) position, the engine will not start.

NOTE :

- These interlock features are built-in.

■Starting

WARNING

To avoid serious injury or death:

- **Engine components can get extremely hot from operation. To prevent severe burns, do not touch these areas while the engine is running, or immediately after it is turned off.**
  Never operate the engine without heat shields or guards.

1. Sit on the operator's seat.
2. Start the engine.
3. Engage the PTO switch.
4. Disengage the parking brake.
5. Speed up the engine by moving the throttle lever forward.
6. Push or pull the motion control levers to move forward or backward.

IMPORTANT :

- Never attempt to move the machine with the parking brake "ON".

NOTE :

- Keep the engine running at full throttle for best results. Control the travel speed with the motion control levers.
- During heavy duty use, operate the machine at a slower ground speed or go over the area twice.
- Keep the mower deck in the raised position when the mower is disengaged.
- The mower will not cut cleanly if the ground speed is too high or if the blade speed drops due to an overload.
- If debris builds up on the grass screen or other cooling air intake areas, stop the engine and clean them. Operating the engine with blocked or dirty air intake and cooling areas causes damage due to overheating.

https://truckmanualshub.com/

ENGLISH

TIRES AND WHEELS

TIRES

WARNING

To avoid serious injury:

- **Do not attempt to mount a tire. This should be done by a qualified person with the proper equipment.**
- **Always maintain the correct tire pressure. Do not inflate tires above the recommended pressure shown in the Operator's Manual.**

WARNING

To avoid serious injury:

- **Never operate machine with a loose rim, wheel, or axle.**
- **Whenever bolts are loosened, retighten to specified torque.**
- **Check all bolts frequently and keep them tightened.**

■Inflation Pressure

Though the inflation pressure is factory-set to the prescribed level, it naturally drops slowly in the course of time. Thus, check it everyday and inflate as necessary.

[Z726X]

	Tire sizes	Recommended Inflation Max. Pressure
Front	13 x 6.5 - 6, (Non flat) Smooth	---
Rear	24 x 12 - 12, (4PR) Turf	69 kPa (0.7 kgf/cm^2, 10 psi)

[Z724X]

	Tire sizes	Recommended Inflation Max. Pressure
Front	13 x 5.0 - 6, (Non flat) Smooth	---
Rear	24 x 9.5 - 12, (4PR) Turf	69 kPa (0.7 kgf/cm^2, 10 psi)

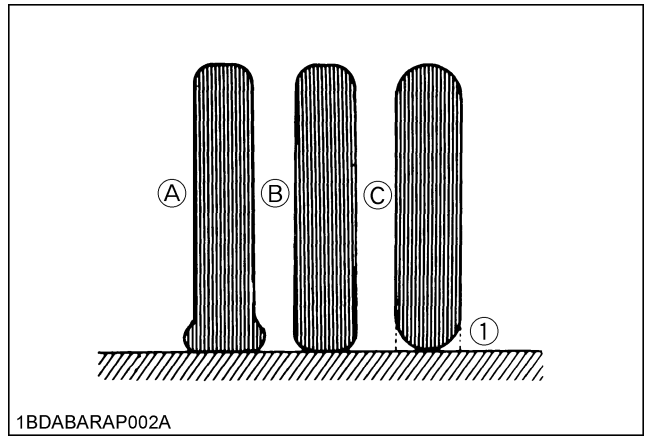

(1) Ground

(A) "INSUFFICIENT"
(B) "NORMAL"
(C) "EXCESSIVE"

WHEELS

IMPORTANT :

- When re-fitting a wheel, tighten the wheel bolt to the following torques then recheck after traveling 200 m (200 yards) changing directions several times.

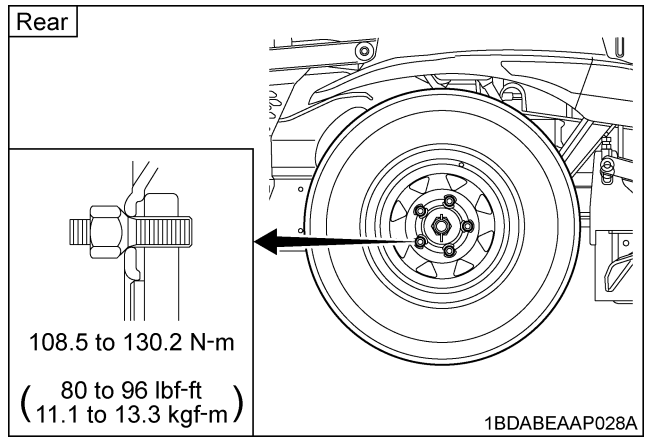

Wheels with beveled or tapered holes:
Use the tapered wheel nut.

https://truckmanualshub.com/

■Remove and Install Front Caster Wheels

WARNING

To avoid serious injury:

- **Do not place your body under the machine or the mower deck, while lifting the machine.**

◆ **Removing**

1. Park the machine on a firm and level surface.
2. Stop the engine and apply parking brake.
3. Lift the front of machine with a safe lifting device.
4. Remove the lock nut with nylon sleeve and the wheel bolt.
5. Remove the wheel and dust covers from assembly yoke.

◆ **Installing**

1. Install the replacement wheel and dust covers.
2. Install the wheel bolt and the lock nut with nylon sleeve.
3. Tighten the nut.
4. After installing, add grease to the nipples.

IMPORTANT :

- Insert the wheel bolt from the outside of the yoke.
- Tighten the nut gradually until wheel bearing play is eliminated and wheel turns freely by hand.

Reference

Tightening torque	20 to 25 N-m (14.8 to 18.4 lbf-ft) (2 to 2.5 kgf-m)

5. Lower machine.

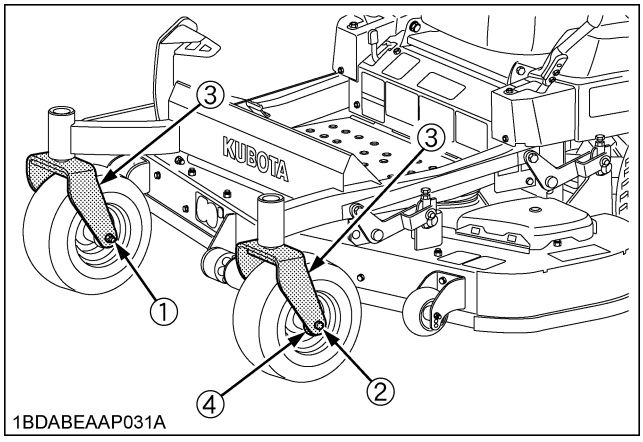

(1) Lock nut
(2) Wheel bolt
(3) Yoke
(4) Dust cover

https://truckmanualshub.com/

ENGLISH

MAINTENANCE

SERVICE INTERVALS

The following servicing tasks should be carried out on the machine at the stated running-time intervals.

No.	Items			Indication hour meter (Hr)														Ref. Page	
				8	50	100	150	200	250	300	350	400	450	500	550	600	After since		
1	Engine oil		Change	○		○		○		○		○		○		○	every 100Hr after 8Hr	46	
2	Engine oil filter		Replace					○				○				○	every 200Hr	57	
3	Transaxle oil filter		Replace							◎							every 500Hr after 300Hr	58	
4	Transaxle fluid		Change							◎							every 500Hr after 300Hr	59	
5	Engine start system		Check		○	○	○	○	○	○	○	○	○	○	○	○	every 50Hr	44	
6	OPC system		Check		○	○	○	○	○	○	○	○	○	○	○	○	every 50Hr	45	
7	Greasing (front axle and wheel, seat adjuster)		-		○	○	○	○	○	○	○	○	○	○	○	○	every 50Hr	45	
8	Greasing (mower link bushings, mower belt tension pivot)		-			○		○		○		○		○		○	every 100Hr	45	
9	Muffler and spark arrester		Check		○	○	○	○	○	○	○	○	○	○	○	○	every 50Hr	46	
10	Air cleaner	Outer element	Check			○		○		○		○		○		○	every 100Hr	48	*1
			Replace						○					○			every 250Hr	58	
		Inner element	Check						○					○			every 250Hr	58	*1
			Replace											○			every 500Hr	61	
11	Carbon canister air filter		Check			○		○		○		○		○		○	every 100Hr	47	*1
			Replace														every 2 years	62	*2
12	Fuel filter		Check			○		○		○		○		○		○	every 100Hr	49	
			Replace					○				○				○	every 200Hr	58	
13	Fuel line		Check			○		○		○		○		○		○	every 100Hr	49	
			Replace														every 2 years	62	*2
14	Battery condition		Check			○		○		○		○		○		○	every 100Hr	51	
15	Throttle cable		Adjust			○		○		○		○		○		○	every 100Hr	53	
16	Choke cable		Adjust			○		○		○		○		○		○	every 100Hr	53	
17	Parking brake		Adjust			○		○		○		○		○		○	every 100Hr	50	*2
18	Spark plug Condition and gap		Check			○		○		○		○		○		○	every 100Hr	56	
			Replace											○			every 500Hr	61	
19	Hydraulic hose		Check					○				○				○	every 200Hr	57	
			Replace														every 2 years	62	*2
20	Engine oil cooler fins		Clean			○		○		○		○		○		○	every 100Hr	55	
21	Engine cooling areas		Clean			○		○		○		○		○		○	every 100Hr	54	
22	Electric clutch		Adjust											○			every 500Hr	60	
23	Lubricating (crank shaft)		-											○			every 500Hr	61	
24	Combustion chamber		Clean							○							every 300Hr	58	*2

https://truckmanualshub.com/

No.	Items		Indication hour meter (Hr)														Ref. Page	
			8	50	100	150	200	250	300	350	400	450	500	550	600	After since		
25	Fuse	Replace														Service as required	62	
26	Blade	Replace															63	
27	Mower belt	Replace															64	
28	Valve seats and clearance	Clean							○						○	every 300Hr	58	*2
		Adjust							○						○	every 300Hr	58	*2

IMPORTANT :

- The jobs indicated by ◎ must be done initially.
  *1 This maintenance should be done daily or more often in dusty condition than in normal conditions.
  *2 These items should be serviced by an authorized KUBOTA Dealer, unless the owner has the proper tools and is mechanically proficient.
- GASOLINE ENGINE EMISSION RELATED MAINTENANCE INSTRUCTIONS:
  1. Non-warranty maintenance, repair, or replacement of the emission control devices and systems should be performed by a qualified repair establishment or individual which has the experience and equipment to perform such work.
     See the Emissions Warranty Statement.
  2. To ensure the best quality and reliability, use new KUBOTA Genuine parts or their equivalents for repair and replacement, whenever you have maintenance done.

https://truckmanualshub.com/

PERIODIC SERVICE CHART LABEL

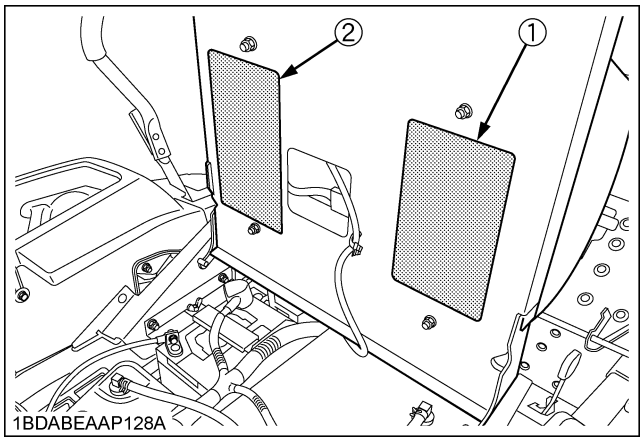

(1) Part No. K3851-6551-△ (ENGLISH)

PERIODIC SERVICE CHART

INTERVAL		RECOMMENDED SERVICE ※	
DAILY	CHECK	1.Tire pressure, wear, or damage. 2.Fuel and oil leakage from machine and mower. 3.Engine and transmission oil and fuel level. 4.Damage to machine body, tightness of all bolts, nuts and pins, etc. 5.All blades and belts for wear or damage. 6.Parking brake, speed control levers, all safety switches and easy checker functions. 7.Color of the exhaust fumes, abnormal noise and vibrations. 8.Dial cam rotation force.	
	CLEAN	Mower deck / Engine and muffler area / Cutting height cam area / Air inlet screen★	
FIRST 8 Hrs.		CHANGE	Engine oil [BREAK-IN](MUST BE DONE)
FIRST 300 Hrs. [BREAK-IN](MUST BE DONE)		CHANGE	Transmission fluid
		REPLACE	Transmission oil filter
EVERY	50 Hrs.	CHECK	Safety device
		GREASE	Front axle and wheel (4 places) / Seat adjuster (2 places)
	100 Hrs.	CHECK	Fuel filter element / Fuel line / Battery condition / Spark plug condition and gap / Filter (Carbon canister) / Air cleaner outer element★
		CLEAN	Engine cooling shroud ★ / Engine oil cooler fins / Cylinder & Cylinder head fins ◆☆
		CHANGE	Engine oil ◆
		GREASE	Mower link bushing (5 places) / Mower belt tension pivot
		ADJUST	Throttle cable / Choke cable / Parking brake ☆
	200 Hrs.	CHECK	Hydraulic hose
		REPLACE	Engine oil filter / Fuel filter element
	250 Hrs.	CHECK	Air cleaner inner element
		CHANGE	Air cleaner outer element★
	300 Hrs.	CLEAN	Combustion Chamber☆/ Valve seats (Relap) ☆
		ADJUST	Valve Clearance ☆
	500 Hrs.	CHANGE	Transmission fluid / Air cleaner inner element★
		REPLACE	Transmission oil filter / Spark plugs
		LUBRICATE	Crankshaft
	2 Years	REPLACE☆	Fuel line / Filter (Carbon canister) / Hydraulic hose

※ : See Operator's manual in details.
☆ : Should be serviced by KUBOTA Dealer.
★ : Required more often in dusty conditions.
◆ : More frequently under severe conditions.

Approximate fluid capacities.

	Z724XKW	Z726XKW
Engine	2.1 L (2.2 qts.)	2.3 L (2.4 qts.)
Transmission	3.0 L per side (3.2 qts. per side)	

Tire pressure and tightening torque recommendation.

Front	13x5.0-6(NO FLAT)	NO NEED	Ensure smooth rotation of wheel. <Do not over tighten.>
	13x6.5-6(NO FLAT)		
Rear	24x9.5-12	69 kPa (10 psi)	108.5-130.2 Nm (80.0-96.0 ft·lbs)
	24x12-12		

1BDABEAAP152A

(2) Part No. K3851-6552-△ (SPANISH)

TABLA DE SERVICIO PERIÓDICO

INTERVALO		SERVICIO RECOMENDADO ※	
DIARIO	REVISAR	1.Presión, desgaste y daño de los neumáticos. 2.Escape de combustible y aceite de la máquina y la segadora. 3.Aceite del motor, fluido de transmisión y nivel de combustible. 4.Daño a la carrocería de la máquina, ajuste de todos los pernos, tuercas y pines, etc. 5.Desgaste y daños de todas las cuchillas y las correas. 6.Freno de estacionamiento, palancas de control de velocidad, todos los interruptores de seguridad y funciones para una facil inspeccion. 7.Color del humo del escape, ruido y vibraciones anormales. 8.Fuerza rotativa de la leva del cuadrante.	
	LIMPIAR	Plataforma de segadora / Zona del motor y del silenciador / Zona de la leva de altura de corte / Reja de entrada de aire★	
PRIMERAS 8 hrs.		CAMBIAR	Aceite del motor [USO INICIAL](DEBE HACERSE)
PRIMERAS 300 hrs. [USO INICIAL](DEBE HACERSE)		CAMBIAR	Aceite de transmisión
		REEMPLAZAR	Filtro del aceite de transmisión
CADA	50 hrs.	REVISAR	Dispositivo de seguridad
		ENGRASAR	Eje frontal y rueda (4 lugares) / Regulador del asiento (2 lugares)
	100 hrs.	REVISAR	Elemento de filtro de combustible / Linea de combustible / Condición de la bateria / Condición de la bujia y distancia entre electrodos / Filtro (deposito de carbono) / Elemento externo del filtro de aire★
		LIMPIAR	Carcaza de refrigeración del motor ★ / Aletas de refrigeración de aceite del motor / Cilindro y aletas del cilindro ◆☆
		CAMBIAR	Aceite del motor ◆
		ENGRASAR	Casquillo del brazo de la segadora (5 lugares) / Pivote de tensión de correa de la segadora
		AJUSTAR	Cable de estrangulamiento / Cable de estrangulador / Freno de estacionamiento ☆
	200 hrs.	REVISAR	Manguera del sistema hidráulico
		REEMPLAZAR	Filtro de aceite del motor / Elemento de filtro de combustible
	250 hrs.	REVISAR	Elemento interno del filtro de aire
		CAMBIAR	Elemento externo del filtro de aire ★
	300 hrs.	LIMPIAR	Cámara de combustión ☆ / Asiento de válvula (repulir) ☆
		AJUSTAR	Juego de válvulas ☆
	500 hrs.	CAMBIAR	Aceite de transmisión / Elemento interno del filtro de aire★
		REEMPLAZAR	Filtro del aceite de transmisión / Bujias
		LUBRIQUE	Cigüeñal
	2 años	REEMPLAZAR☆	Linea de combustible / Filtro (depósito de carbono) / Manguera del sistema hidráulico

※ : Consulte el Manual del Operador para obtener más información.
☆ : El servicio de mantenimiento debe proporcionarlo un distribuidor de KUBOTA.
★ : Se requiere más seguido en condiciones polvorosas.
◆ : Más frecuentemente bajo condiciones severas.

Capacidades de fluido(aproximadas).

	Z724XKW	Z726XKW
Motor	2.1 L (2.2 cuartos de galón)	2.3 L (2.4 cuartos de galon)
Transmisión	3.0 L por cada lado (3.2 cuartos de galón por cada lado)	

Recomendación de presión para neumáticos y par de ajuste.

Frontal	13x5.0-6(No pinchada nada)	Ninguna necesidad	Asegure rotación libre de la rueda. <No apriete en exceso.>
	13x6.5-6(No pinchada nada)		
Posterior	24x9.5-12	69 kPa (10 psi)	108.5-130.2 Nm (80.0-96.0 pies·lbs)
	24x12-12		

1BDABEAAP152B

https://truckmanualshub.com/

LUBRICANTS AND FUEL

Place	Capacities		Lubricants
	Z724X	**Z726X**	
Fuel	44 L (11.6 U.S. gals.)		• Automobile unleaded or regular gasoline • Unleaded gasoline 87 octane or higher
Engine crankcase	2.1 L (2.2 U.S.qts.)*1	2.3 L (2.4 U.S.qts.)*1	• Engine oil: API service Classification SF, SG, SH, SJ or SL Above 20 ℃ (68 ℉)...SAE40 Between 0 ℃ (32 ℉) to 35 ℃ (86 ℉)...SAE30 Between -20 ℃ (-4 ℉) to 35 ℃ (86 ℉)...SAE10W-30 Below 0 ℃ (32 ℉)...SAE5W-20
Transmission case with filter, hose and tank (RH & LH)	6.0 L (6.3 U.S.qts.)		• Castrol Syntec 5W-50, or Valvoline Premium Blue Extreme Diesel 5W-40, or Kubota Genuine Lubricating Oil 5W-40

Greasing	No. of greasing points	Capacity	Type of grease
Front axle	2	Until grease overflows	• Multipurpose EP2 Grease (NLGI Grade No.2)
Front wheel	2		
Mower lift links	5	Moderate amount	
Cutting height cam	1		
Seat adjuster	2		
[MOWER]		Until grease overflows	
Belt tension pivot	1		
Crank shaft	1	Moderate amount	• Copper Based Anti - Seize

Note *1 Oil amount when the oil level is at the upper level of the oil level gauge.

IMPORTANT :
- To prevent serious damage to hydraulic systems, use only KUBOTA genuine fluid or its equivalent.

NOTE :

◆ Engine Oil:
- Oil used in the engine should have an American Petroleum Institute (API) service classification and proper SAE Engine Oil according to the ambient temperatures as shown above.
- Indicated capacity of oil is manufacture's estimate.

◆ Transmission oil:
- Indicated capacity of oil is manufacture's estimate.

◆ Fuel:
- Clean, fresh, unleaded gasoline.
- A minimum of 87 octane / 87AKI (90 RON).
- Gasoline with up to 10% ethanol (ethyl or grain alcohol) or up to 15% MTBE (methyl tertiary butyl ether) by volume is acceptable.
- Do not use unapproved gasoline, such as E85. Do not mix oil in gasoline or modify the engine to run on alternate fuels. This will damage the engine components and **void the engine warranty**.
- **High Altitude:**
  This engine may require a high altitude carburetor kit to ensure correct engine operation at altitudes above 3300 ft. (1006 meters). Operation without this kit will cause decreased performance, increased fuel consumption, and increased emissions.
  This engine should be operated in its original configuration below 3300 ft. (1006 meters) as damage may occur if high altitude carburetor kit is installed and operated below 3300 ft. (1006 meters).
- Indicated capacity of fuel is manufacture's estimate.

https://truckmanualshub.com/

PERIODIC SERVICE

HOW TO OPEN THE STEP

WARNING

To avoid serious injury from contact with moving parts:

- **Never open the step while the engine is running.**

■Step

To open the step, use grip to rotate the step in (A) direction, then remove the step in (B) direction.

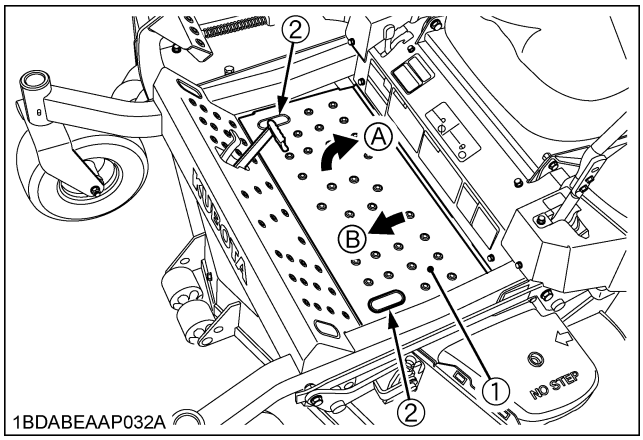

(1) Step *(A) "ROTATE"*
(2) Grip *(B) "REMOVE"*

HOW TO RAISE THE OPERATOR'S SEAT

◆ **Raise**

WARNING

To avoid serious injury:

- **Fully raise the operator's seat. (To the resting position) Do not keep the seat halfway.**

1. Slide seat to rearmost position.

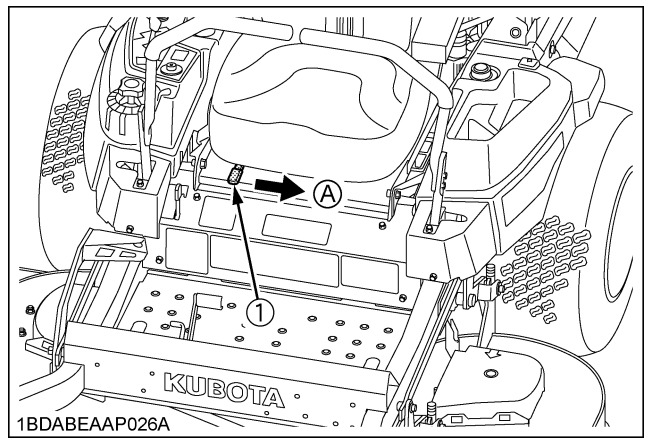

(1) Seat slide lever *(A) "UNLOCK"*

2. Pull the latch lever on the seat panel rearward.

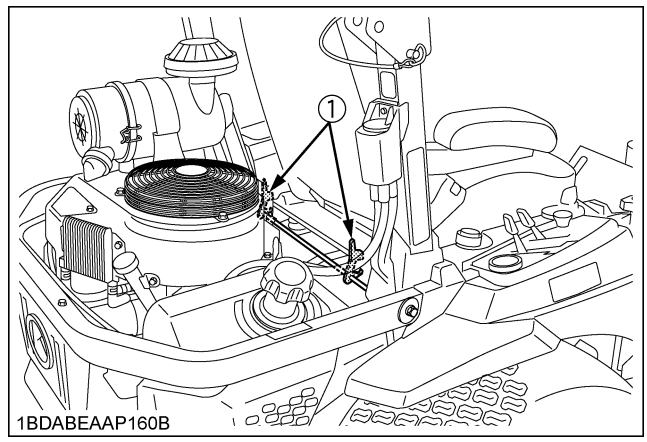

(1) Latch lever

https://truckmanualshub.com/

3. Raise the operator's seat to the resting position.

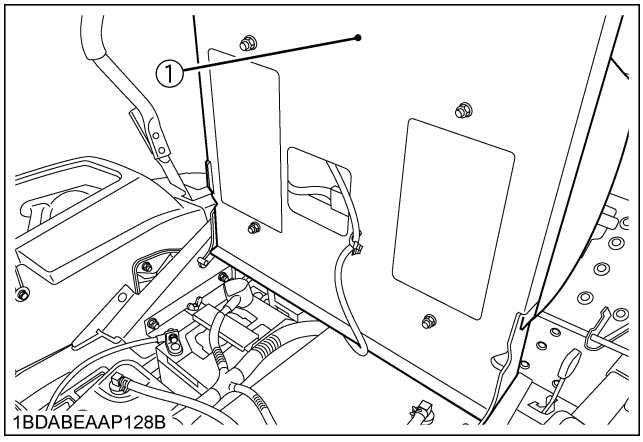

(1) Operator's seat

◆ **Lower**

WARNING

To avoid serious injury:

- **Do not drop the seat to close it.**
- **Watch your hands. Do not place your hands under the seat, when closing.**

1. Lower the seat slowly to lock.

DAILY CHECK

To prevent trouble from occurring, it is important to know the condition of the machine. Check it before starting.

WARNING

To avoid serious injury:

- **Be sure to check and service the machine on a level surface with the engine shut off, the key removed and the parking brake securely set or chock the rear wheels.**

	No.	Check item	Ref. Page
Walking around the machine	1	Damage of machine body, tightness of all bolts, nuts and pins, etc.	-
	2	Fuel and oil leak	-
	3	Tire pressure, wear and damage	32 42
	4	Engine oil level	40
	5	Fuel level	40
	6	Transaxle fluid level	43
	7	Machine body cleaning	-
	8	Clean area around muffler, engine and cutting height cam.	-
Mower	1	Check all hardware.	-
	2	Make sure all pins are in place	-
	3	Mower deck cleaning	-
	4	Make sure blade bolts are tight	63
	5	Blades and belt wear or damage	63
While sitting in the operator's seat	1	Motion control lever	-
	2	Parking brake	-
	3	Dial cam rotation force	43
	4	Other movable parts	43
Turning the key switch "ON"	1	Performance of the Easy Checker (TM) Light	15
Starting the engine	1	Color of the exhaust fumes	-
	2	Check for abnormal noise and vibration.	-
	3	Safety systems. If either of these do not operate properly, contact your local KUBOTA Dealer immediately.	44 45
Others	1	Check the areas where previous trouble was experienced.	-

https://truckmanualshub.com/

■Checking Engine Oil Level

WARNING

To avoid serious injury:

- **Always stop the engine and remove the key before checking oil.**

1. Check engine oil before starting and 5 minutes or more after the engine has stopped.
2. Wipe dipstick area clean.
3. To check the oil level, remove the dipstick and wipe it clean. Reinsert dipstick into tube; rest cap on tube, do not thread cap onto tube. Remove the dipstick again. Check to see that the oil level is between the 2 notches.
4. Add new oil to the prescribed level at the oil port if necessary.

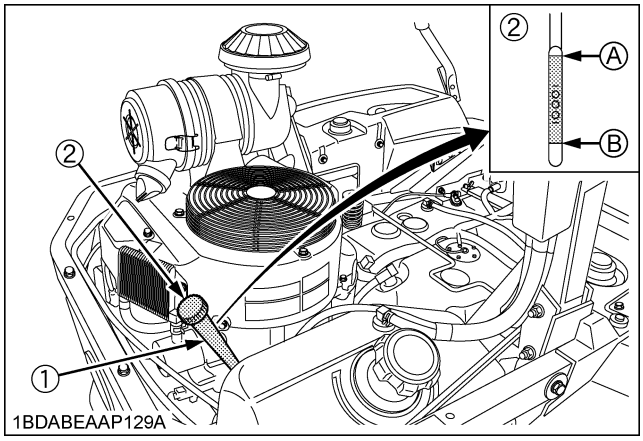

(1) Engine oil port *(A) "UPPER LEVEL"*
(2) Oil level dipstick *(B) "LOWER LEVEL"*

5. When using a different brand or viscosity oil from the previous one, remove all of the old oil and oil filter. Never mix 2 different types of oil.
6. Use the proper Engine Oil SAE according to the ambient temperatures. (See "LUBRICANTS AND FUEL" in "MAINTENANCE" section.)

■Checking Amount of Fuel and Refueling

WARNING

To avoid serious injury:

- **Handle fuel carefully. If the engine is running, do not fill the fuel tank. If engine is hot, let engine cool several minutes before adding fuel. Do not smoke while filling the fuel tank or servicing the fuel system. Fill fuel tank only to bottom of filler neck. Do not fill completely full. The empty space in the tank allows gasoline to expand, when it heats up. Never remove the fuel tank cap or add fuel when the fuel tank is hot.**

Check the fuel level. Take care that the fuel tank does not become empty.

Fuel tank capacity	44 L (11.6 U.S.gals.)

IMPORTANT :

- Do not mix oil with gasoline.
- Tighten the fuel cap until it clicks.
- Do not use the fuel cap other than KUBOTA approved one.
- Do not permit dirt or trash or water to get into the fuel system.
- Be careful not to spill fuel during refueling. If a spill should occur, wipe it off at once, or it may cause a fire.

Use only unleaded gasoline with an octane rating index of 87 or higher may be used.

NOTE :

- Use fuel within approximately 30 days after purchase to avoid deterioration in fuel quality, or add fuel stabilizer to keep fuel fresh and stabilized.
- Fuel blend differs from season to season for the best seasonal engine performance. To prevent engine performance troubles such as vapor lock or hard starting, use fuel within the season in which the fuel is purchased.

https://truckmanualshub.com/

- Infrequent use of the engine during a season can make fuel stale in the fuel tank of the machine. Stale fuel condition can cause engine performance troubles by varnish and plugged carburetor components.
- Seal the fuel storage container tightly and store it out of sunlight and heat to prevent fuel degradation.
- Condensation in the fuel tank may occur because of various operating or environmental conditions. To reduce condensation and avoid affecting machine operation, fill the fuel tank at the end of daily operations.

IMPORTANT :
- Do not use old fuel.

[Use of alcohol mixed gasoline]
Only use gasoline containing ethanol when the ethanol is 10% or less of the fuel. When using gasoline containing MTBE, the MTBE is 15% or less of the fuel mixture. The use of methanol additive is not recommended. For the best results, use unleaded fuel with a minimum of 87 octane.

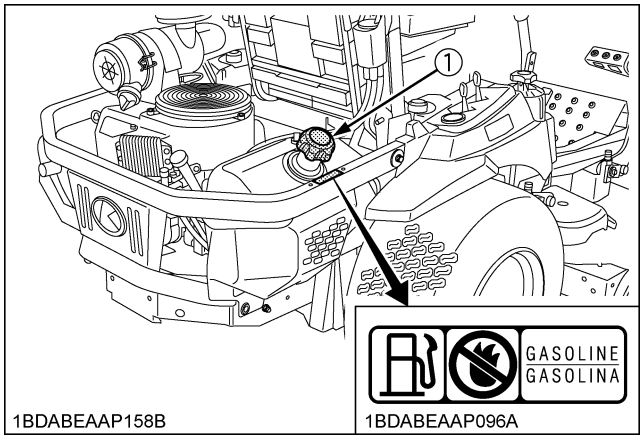

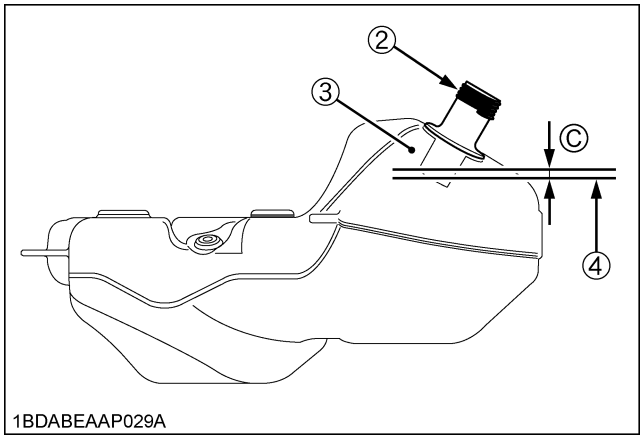

(1) Fuel tank cap
(2) Fuel tank filler neck
(3) Empty space
(4) Max. fuel level
(C) Clearance
(Fuel level is under the filler neck.)

■Checking and Cleaning Air Intake Screen

WARNING
To avoid serious injury:
- **Be sure to stop the engine and remove the key before cleaning.**
- **Make sure that the engine is cool to the touch before cleaning.**

IMPORTANT :
- The air intake screen and air intake area must be clear of debris to prevent the engine from overheating.

Daily or after every 5 hours of operation, check to be sure the air intake screen and the air intake area are clean.
Dirt or chaff around the air intake screen and air intake area or the engine cooling area decrease cooling performance.
1. Check that the air intake screens are clear of grass clippings and debris.
2. If screens are dirty, clean screens with a brush or cloth.
3. Remove the dust and all foreign material from the engine plate.

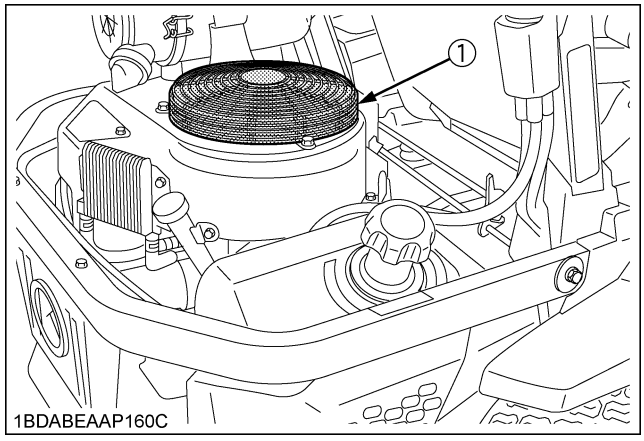

(1) Air intake screen

https://truckmanualshub.com/

■Checking Tire Pressure

WARNING

To avoid serious injury:

- **Do not attempt to mount a tire on a rim. This should be done by a qualified person with the proper equipment.**
- **Always maintain the correct tire pressure. Do not inflate tires above the recommended pressure shown in the Operator's Manual.**

IMPORTANT :

- Do not use tires larger than specified.

■Inflation Pressure

Though the inflation pressure is factory-set to the prescribed level, it naturally drops slowly in the course of time. Thus, check it everyday and inflate as necessary.

[Z726X]

	Tire sizes	Recommended Inflation Max. Pressure
Front	13 x 6.5 - 6, (Non flat) Smooth	---
Rear	24 x 12 - 12, (4PR) Turf	69 kPa (0.7 kgf/cm^2, 10 psi)

[Z724X]

	Tire sizes	Recommended Inflation Max. Pressure
Front	13 x 5.0 - 6, (Non flat) Smooth	---
Rear	24 x 9.5 - 12, (4PR) Turf	69 kPa (0.7 kgf/cm^2, 10 psi)

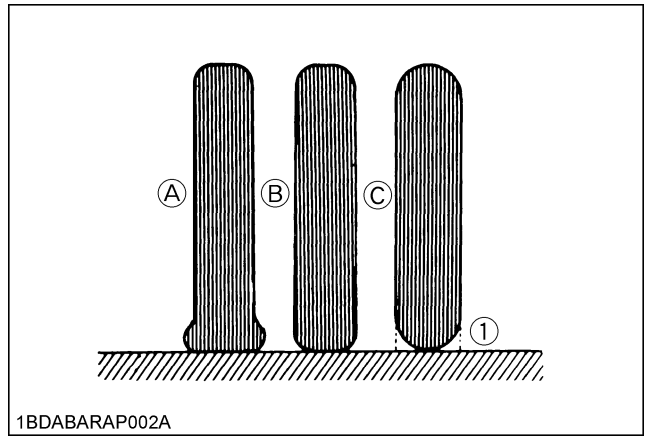

(1) Ground

(A) "INSUFFICIENT"
(B) "NORMAL"
(C) "EXCESSIVE"

https://truckmanualshub.com/

■Checking Transaxle Fluid Level

1. Park the machine on a flat surface, lower the implement to the ground and shut off the engine and remove the key.
2. Check to see that the oil level lies between the "MAX" and "MIN" lines while the machine and oil are at ambient temperature.
   If the level is too low, add the new oil to the prescribed level into the expansion tank.
   (See "LUBRICANTS AND FUEL" in "MAINTENANCE" section.)
3. Do not overfill past "MAX" line.
   Oil expands with heat and may leak from cap during usage if overfilled.

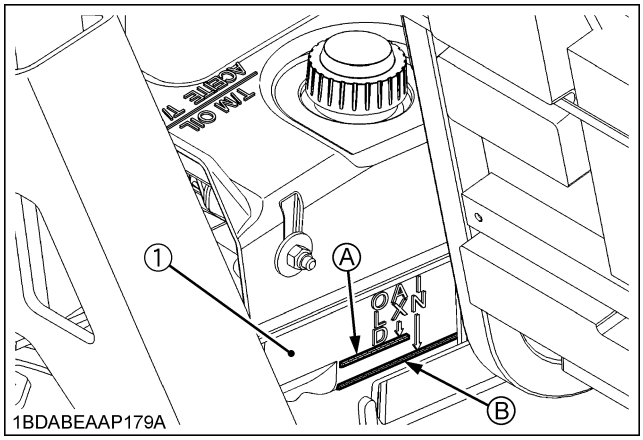

(1) Transaxle fluid expansion tank *(A) MAX line*
(B) MIN line

IMPORTANT :

- If oil level is low, do not run engine.
  Add the new oil to the prescribed level into the expansion tank.
- Do not overfill the expansion tank.

■Checking Dial Cam Rotation Force

1. Park the machine on a flat surface, shut off the engine and remove the key.
2. Raise the implement to the "TRANSPORT" position. (See "ADJUSTING CUTTING HEIGHT" in "OPERATING THE MOWER" section.)
3. Rotate the cutting height control dial and check for smoothness.
4. If rotation force is too high, clean dial cam area and apply grease under the dial cam between the dial cam and frame.

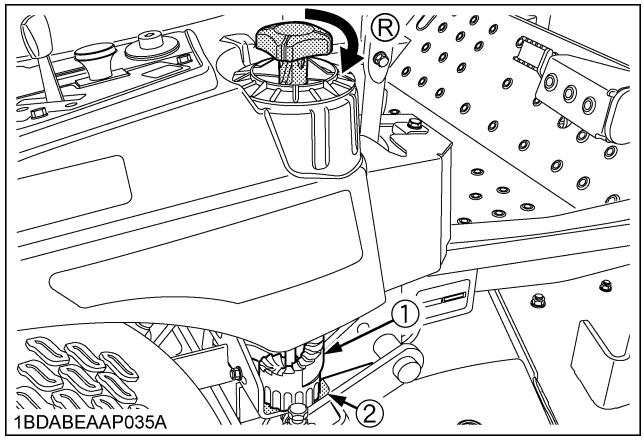

(1) Dial cam *(R) "ROTATE"*
(2) Frame surface

■Checking Movable Parts

If any of the movable parts, such as levers and pedals, is not smoothly moved because of rust or sticky material, do not attempt to force it into motion.
In the above case, remove the rust or the sticky material, and apply oil or grease on the relevant spot.
Otherwise, the machine may get damaged.

https://truckmanualshub.com/

AFTER FIRST 8 HOURS

■Changing Engine Oil

The engine oil should be changed after the first 8 hours of operation. This is the break-in period for the engine. (See "EVERY 100 HOURS" in "PERIODIC SERVICE" section.)

EVERY 50 HOURS

■Checking Engine Start System

The Engine Start System in your machine are designed to protect you while operating. Please check these Engine Start System periodically. It is recommended to check the Engine Start System before daily operation.

WARNING

To avoid serious injury:

- **Do not allow anyone near the machine while testing.**
- **If the machine does not pass one of the following tests, do not operate the machine. See your local KUBOTA Dealer.**
- **Sit on operator's seat for all tests except for Test 1.**

IMPORTANT :

- Check the following tests before operating the machine.

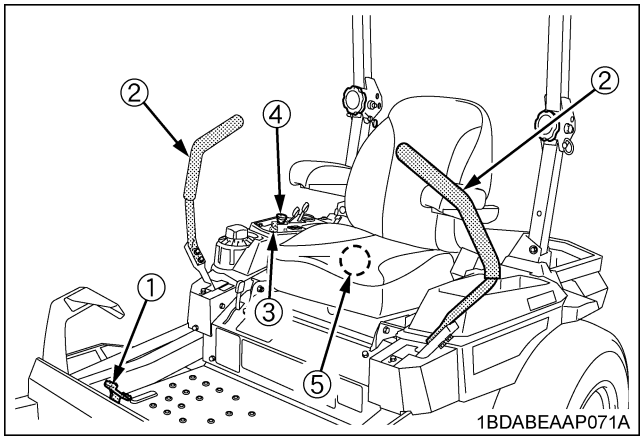

(1) Parking brake pedal
(2) Motion control lever
(3) Key switch
(4) PTO switch
(5) Seat switch

Test 1 (OPERATOR NOT ON THE SEAT)

1. Sit in seat and securely set the parking brake.
2. Set the PTO switch to "DISENGAGE" (OFF) position.
3. Set the motion control levers to the "NEUTRAL LOCK" position.
4. Stand up. (DO NOT GET OFF THE MACHINE.)
5. Turn the key switch to "START" position.
6. The engine must not crank.

Test 2 (OPERATOR ON THE SEAT)

1. Do not set the parking brake. (release it from test 1)
2. Set the PTO switch to "DISENGAGE" (OFF) position.
3. Set the motion control levers to the "NEUTRAL LOCK" position.
4. Turn the key switch to "START" position.
5. The engine must not crank.

Test 3 (OPERATOR ON THE SEAT)

1. Securely set the parking brake.
2. Set the PTO switch to "DISENGAGE" (OFF) position.
3. Grasp the motion control levers and move them inward from the "NEUTRAL LOCK" position to the "NEUTRAL" position.
4. Turn the key switch to "START" position.
5. The engine must not crank.

Test 4 (OPERATOR ON THE SEAT)

1. Securely set the parking brake.
2. Set the PTO switch to "ENGAGE" (ON) position.
3. Set the motion control levers to the "NEUTRAL LOCK" position.
4. Turn the key switch to "START" position.
5. The engine must not crank.

NOTE :

- If the engine cranks in Test 1 through 4, consult your local KUBOTA Dealer to have the unit checked before operation.

Test 5 (OPERATOR ON THE SEAT)

1. Start the engine.
2. Keep the parking brake securely set.
3. Set the PTO switch to "DISENGAGE" (OFF) position.
4. Grasp the motion control levers and move them inward from "NEUTRAL LOCK" position to "NEUTRAL" position.
5. The engine must shut off.

NOTE :

- If the engine remains running in Test 5, consult your local KUBOTA Dealer to have the unit checked before operation.

https://truckmanualshub.com/

■Checking OPC System

The OPC (Operator Presence Control) system in your machine are designed to protect you while operating. Please check these OPC system periodically. It is recommended to check the OPC system before daily operation.

WARNING

To avoid serious injury:

- **Do not allow anyone near the machine while testing.**
- **If the machine does not pass one of the following tests, do not operate the machine. See your local KUBOTA Dealer.**

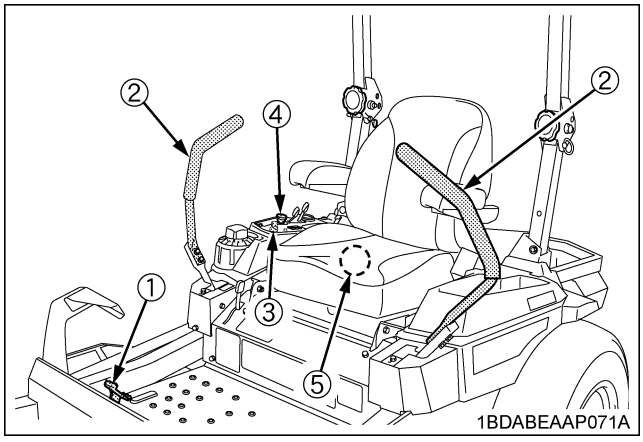

(1) Parking brake pedal
(2) Motion control lever
(3) Key switch
(4) PTO switch
(5) Seat switch

Test 1 (OPERATOR ON THE SEAT)

1. Start the engine.
2. Do not set the parking brake.
3. Set the PTO switch to "DISENGAGE" (OFF) position.
4. Stand up. (DO NOT GET OFF THE MACHINE.)
5. The engine must shut off.

Test 2 (OPERATOR ON THE SEAT)

1. Start the engine.
2. Do not set the parking brake.
3. Set the PTO switch to "ENGAGE" (ON) position.
4. Stand up. (DO NOT GET OFF THE MACHINE.)
5. The engine must shut off after 1 second.

NOTE :

- If the engine remains running in Test 1 or 2, consult your local KUBOTA Dealer to have the unit checked before operation.

■Greasing

WARNING

To avoid serious injury:

- **Be sure to stop the engine and remove the key before greasing.**

Apply a small amount of multipurpose grease to the following points every 50 hours:
If you operated the machine in extremely wet and muddy conditions, lubricate grease fittings more often.

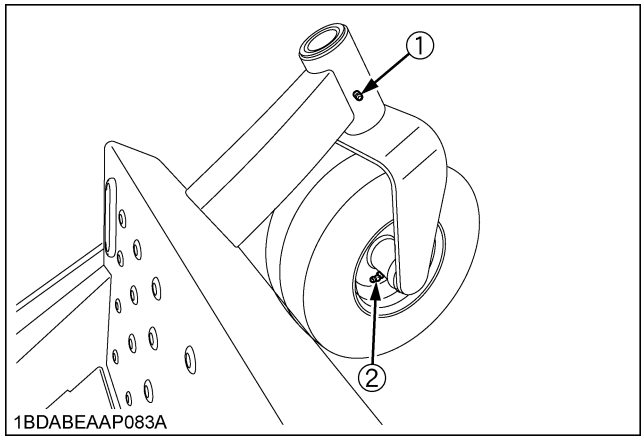

(1) Front axle (LH, RH)
(2) Front wheel (LH, RH)

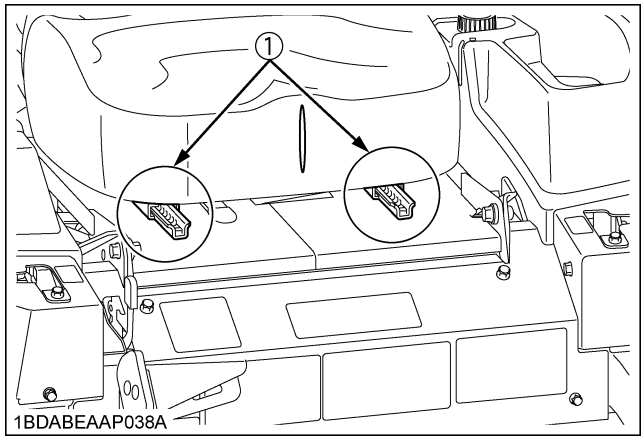

(1) Seat adjuster

https://truckmanualshub.com/

■Checking Muffler and Spark Arrester (if equipped)

The muffler and spark arrester should be checked every 50 hours operation or every 1 year, whichever comes first.

WARNING

Running engines produce heat. Engine parts, especially muffler, become extremely hot.
Severe thermal burns can occur on contact.
Combustible debris, such as leaves, grass, brush, etc. can catch fire.
To avoid serious injury:

- **Allow muffler, engine cylinder and fins to cool before touching.**
- **Remove accumulated debris from muffler area and cylinder area.**
- **It is a violation of California Public Resource Code, Section 4442, to use or operate the engine on any forest-covered, brush-covered, or grass-covered land unless the exhaust system is equipped with a spark arrester, as defined in Section 4442, maintained in effective working order. Other states or federal jurisdictions may have similar laws. Contact the original equipment manufacturer, retailer, or dealer to obtain a spark arrester designed for the exhaust system installed on this engine.**
- **Replacement parts must be of the same design and installed in the same position as the original parts. Other parts may not perform as well, may damage the unit, and may result in injury.**

Remove accumulated debris from muffler area and cylinder area. Inspect the muffler for cracks, corrosion, or other damage. Remove the spark arrester, if equipped, and inspect for damage or carbon blockage. If damage is found, install replacement parts before operating.

EVERY 100 HOURS

■Changing Engine Oil

The engine oil should be changed every 100 hours operation or every 1 year, whichever comes first.

WARNING

To avoid serious injury:

- **Be sure to stop the engine and remove the key before changing the oil.**
- **Allow engine to cool down sufficiently; oil can be hot and may cause burns.**

1. To change the used oil, use the drain valve connected to the engine block. To drain the oil, loosen the hex plug until oil begins to drain. Then, remove the oil level dipstick to allow the engine to vent.

NOTE :

- The used oil can be drained out more easily if the engine is warm.

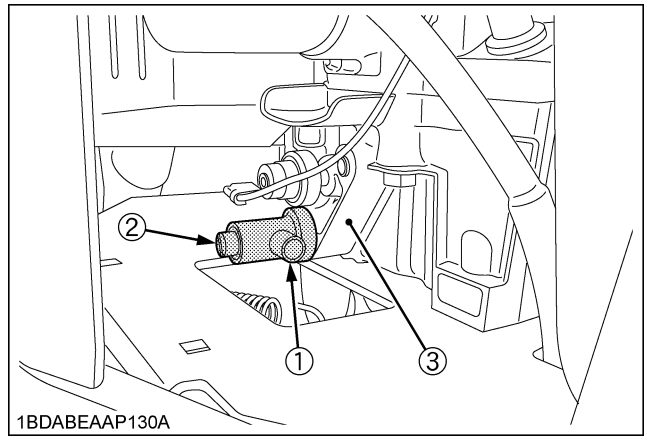

(1) Oil drain valve
(2) Plug bolt
(3) Engine block

https://truckmanualshub.com/

2. After all used oil has drained, reinstall the drain plug and return the hose to the hook.
3. Fill with new oil up to the upper level on the dipstick.

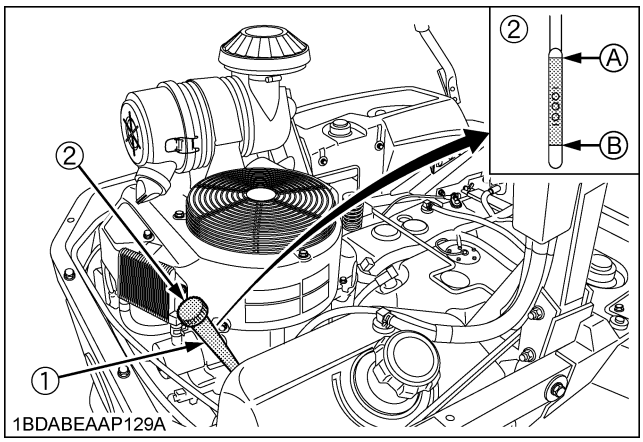

(1) Engine oil port *(A) "UPPER LEVEL"*
(2) Oil level dipstick *(B) "LOWER LEVEL"*

4. To check the oil level:
   Remove the dipstick, wipe it clean, insert it without screwing it in and draw it out again. Check to see that the oil level is between the 2 marks.

NOTE :
- Do not overfill.

■Checking Carbon Canister Air Filter

Check the carbon canister air filter every 100 hours of operation. (more often under extremely dusty or dirty conditions.)

WARNING

To avoid serious injury:
- **Always stop the engine, set the parking brake, remove the key, and disengage PTO.**

1. Remove the carbon canister.
2. Remove the carbon canister air filter.

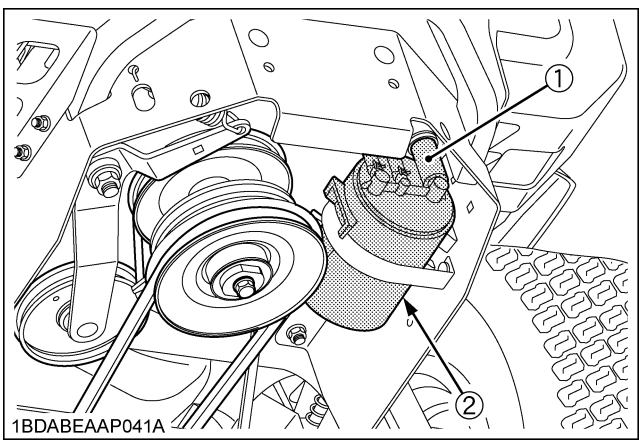

(1) Canister air filter
(2) Carbon canister

3. Check to see if the carbon canister air filter is worn out, damaged or dirty.
4. If the air filter is dirty, wash the air filter in warm water with detergent. Then rinse the air filter thoroughly until all traces of detergent are eliminated. Squeeze out excess water. (do not wring.) Allow the air filter to air dry. Do not use high pressure air to clean filter.
5. If the air filter is worn out, damaged or too dirty to wash clean, replace it with a new one.
6. Reinstall the carbon canister air filter.
7. Reinstall the carbon canister.

NOTE :
- Operating in dusty condition may require more frequent maintenance than above.

https://truckmanualshub.com/

■Checking Air Cleaner Outer Element

Check the air cleaner daily or before starting the engine. Check for a buildup of dirt and debris around the air cleaner system. Keep this area clean. Also check for loose or damaged components.
Check the air cleaner outer element every 100 hours of operation.

NOTE :
- Operating the engine with loose or damaged air cleaner components could allow unfiltered air into the engine causing premature wear and failure.

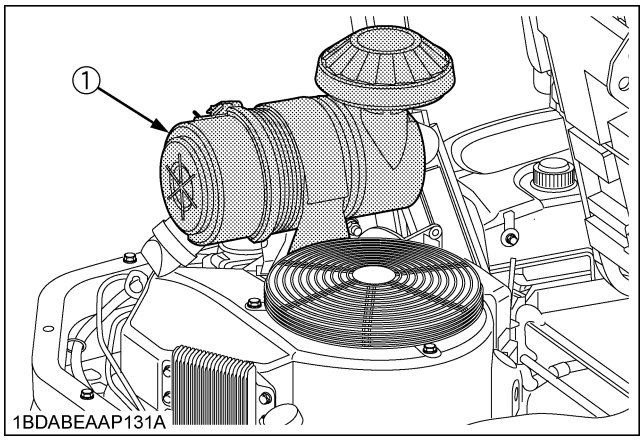

(1) Air cleaner

[Air Cleaner Components]

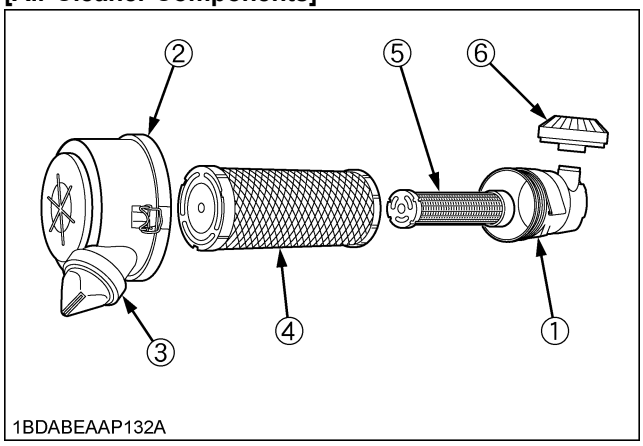

(1) Air cleaner housing
(2) End cap
(3) Rubber vent / Ejector area
(4) Outer element
(5) Inner element
(6) Rain cap

1. Unhook retaining clips and remove end caps.
2. Check inlet screen and clean if necessary.
3. Remove and check outer element. Replace if dirty.
4. If replacing outer element, remove and check inner element. Replace inner element if dirty.
5. Check all parts for wear, cracks, or damage, and that ejector area is clean.
6. After checking parts, reassemble the air cleaner. When installing the end cap, make sure the alignment arrow on the end cap and the alignment arrow on the air cleaner housing are aligned, showing correct installation.
7. Reinstall end caps with ejector area down with retaining clips.

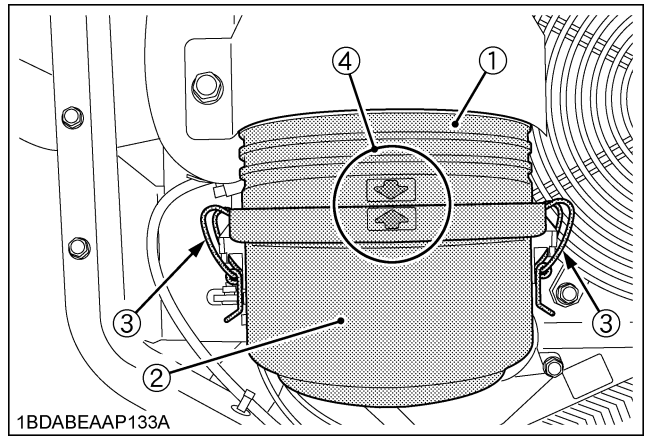

(1) Air cleaner housing
(2) End cap
(3) Retaining clips
(4) Alignment arrow

NOTE :
- Outer element cannot be cleaned with compressed air.

https://truckmanualshub.com/

■Checking Fuel Lines and Fuel Filter

WARNING

To avoid serious injury:

- **Be sure to stop the engine and remove the key when attempting to make the following checks and changes.**
- **Never fail to check the fuel lines periodically. The fuel lines are subject to wear and aging. Fuel may leak out onto the running engine, causing a fire.**

The fuel line connections should be checked **annually** or **every 100 hours of operation**, whichever occurs first.

1. The fuel line is made of rubber and ages regardless of service period.
2. If the fuel line, clamps and fuel filter are found damaged or deteriorated, replace them.
3. Check fuel filter, if they are clogged by debris or contaminated with water, replace it.
4. If the dust or chaff has accumulated around the fuel filter, remove them by hand or air blow.

IMPORTANT :

- When the fuel line is disconnected for maintenance or repair, close both ends of the fuel line with a piece of clean cloth or paper to prevent dust and dirt from entering. In addition, particular care must be taken not to admit dust and dirt into the fuel pump. Entrance of dust and dirt causes malfunction of the fuel pump.

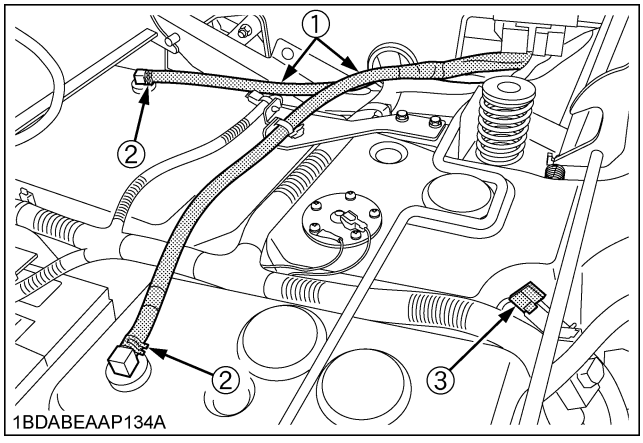

(1) Fuel line
(2) Pipe clamp
(3) Fuel valve

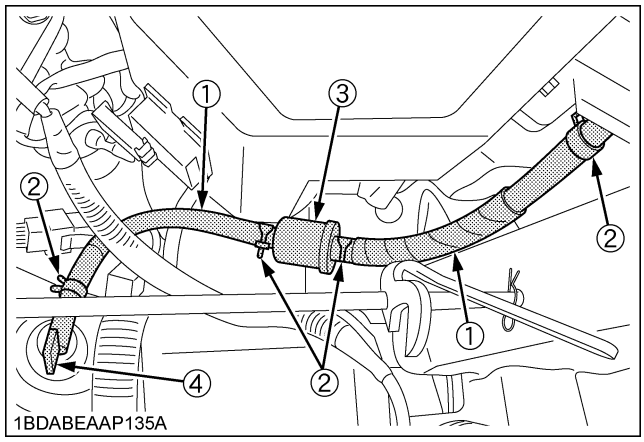

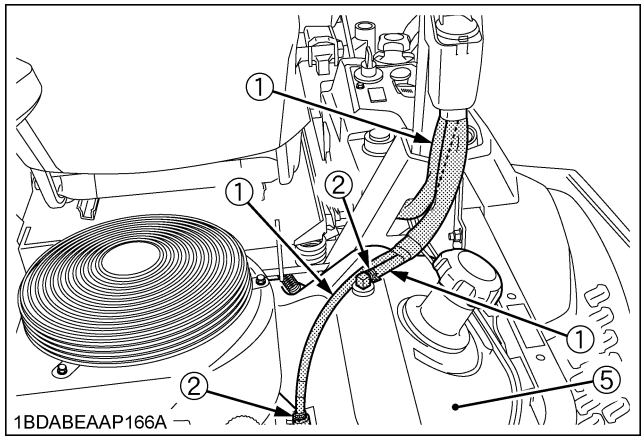

(1) Fuel line
(2) Pipe clamp
(3) Fuel filter
(4) Fuel valve
(5) Fuel tank

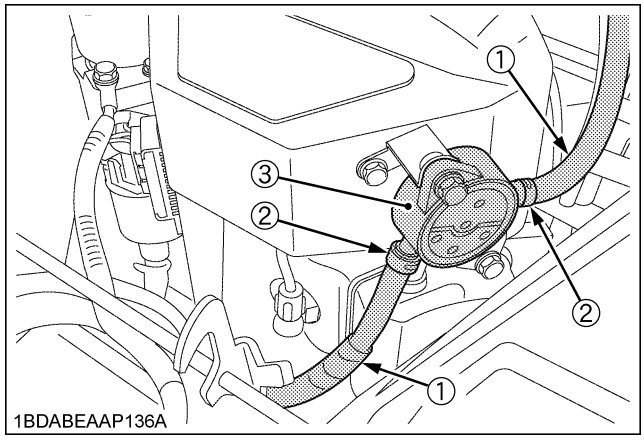

(1) Fuel line
(2) Pipe clamp
(3) Fuel pump

https://truckmanualshub.com/

■Adjusting Parking Brake

WARNING

To avoid serious injury:

- **Park the machine on a firm and level surface.**
- **Stop the engine and chock the wheels before checking or adjusting.**
- **Should be serviced by your local KUBOTA Dealer.**

IMPORTANT :

- Wrong adjustment may cause machine damage.

(1) Check brake spring

1. Place the motion control levers to the "NEUTRAL LOCK" position.
2. Be sure to chock the rear wheels.
3. Apply the parking brake to the lock position.
4. Check the length of the brake springs on both sides.

(A): Proper brake spring length with the brake applied to the lock position	114 to 115 mm (4.49 to 4.53 in.)

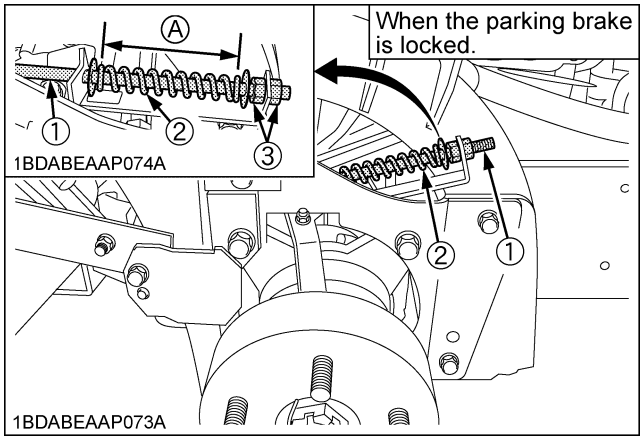

(1) Brake rod
(2) Brake spring
(3) Lock nut
(A) "Parking brake spring length"

5. If the length of the brake spring is not correct, adjust it. (See "Adjustment of brake spring length" in the next page.)
6. Release the parking brake completely.
7. Hold the brake rod lightly.
8. Check the brake spring play.

(B): Proper brake spring play	The spring must have play. Reference: 0.5 to 1.0 mm (0.02 to 0.04 in.)

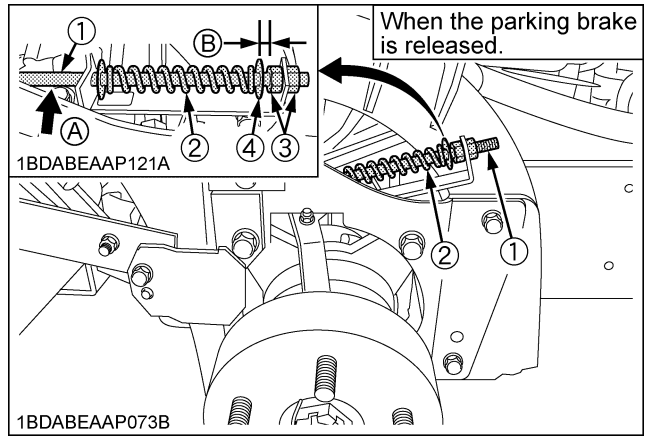

(1) Brake rod
(2) Brake spring
(3) Lock nut
(4) Plain washer
(A) "Hold the brake rod"
(B) "Parking brake spring play"

9. If the brake spring play is not correct, adjust it. (See "Adjustment of brake spring play" in the next page.)

https://truckmanualshub.com/

◆ **Adjustment of brake spring length**

1. Place the motion control lever to the "NEUTRAL LOCK" position.
2. Apply the parking brake to the lock position.
3. Loosen the lock nuts.
4. Adjust the spring length to the recommendation.
5. Lock the nuts.
6. Check the brake spring play to the recommendation. If there is no play, adjust the brake spring play again. (See "Adjustment of brake spring play" below.)
7. Adjust the other side spring to the same dimension.

◆ **Adjustment of brake spring play**

1. Place the motion control lever to the "NEUTRAL LOCK" position.
2. Be sure to chock the rear wheels.
3. Release the parking brake completely.
4. Loosen the lock nuts.
5. Hold the brake rod by hand.
6. Tighten the nut to the correct space between the end of the spring and the nut.
7. Lock the nuts.
8. Adjust the other side spring to the same dimension.

(2) Check on the slope

1. Place the machine on a 17° ramp.
2. Apply the parking brake.
3. Place the motion control levers in "NEUTRAL LOCK" position and shut off the engine.
4. Check that the machine does not move.
5. If the machine moves, consult your local KUBOTA dealer to have the unit checked before operation.

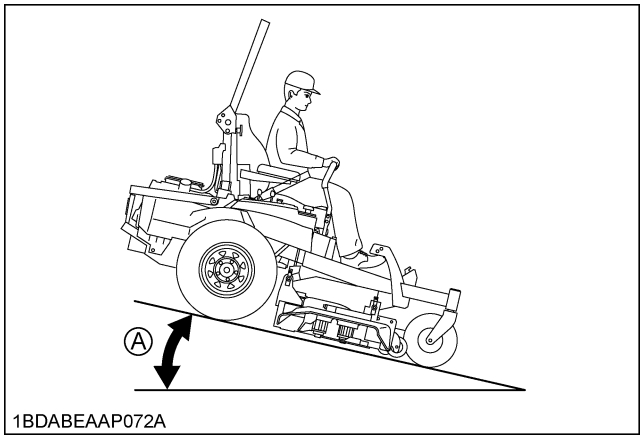

(A) 17° ramp

NOTE :

- For parking brake test purposes, only use 17° ramp.

■Checking Battery Condition

DANGER

To avoid the possibility of battery explosion:
For the refillable type battery, follow the instructions below.

- **Do not use or charge the refillable type battery if the fluid level is below the LOWER (lower limit level) mark. Otherwise, the battery component parts may prematurely deteriorate, which may shorten the battery's service life or cause an explosion. Check the fluid level regularly and add distilled water as required so that the fluid level is between the UPPER and LOWER levels.**

DANGER

To avoid serious injury or death:

- **When the battery is being activated, hydrogen and oxygen gases in the battery are extremely explosive. Keep open sparks and flames away from the battery at all times, especially when charging the battery.**

WARNING

To avoid serious injury:

- **Batteries, battery posts, terminals and related accessories contain lead and lead compounds, and other chemicals known to the State of California to cause cancer and birth defects or other reproductive harm. WASH HANDS AFTER HANDLING.**
- **Never remove the battery cap while the engine is running.**
- **Keep electrolyte away from eyes, hands and clothes. If you are spattered with it, wash it away completely with water immediately and get medical attention.**
- **Keep open sparks and flames away from the battery at all times. Hydrogen gas mixed with oxygen becomes very explosive.**
- **Wear eye protection and rubber gloves when working around battery.**

The factory-installed battery is of non-refillable type.
If the battery is weak, charge the battery or replace it with new one.

https://truckmanualshub.com/

IMPORTANT :

- Mishandling the battery shortens the service life and adds to maintenance costs.
  The original battery is maintenance free, but needs some servicing.
  If the battery is weak, the engine will be difficult to start and the lights will be dim. It is important to check the battery periodically.
- When exchanging an old battery for new one, use battery of equal specification in table below.

Battery Type	Volts (V)	Reserve Capacity (min)	Cold Cranking Amps	Normal Charging Rate(A)
U1-300	12	45	300	6.5

(For non-accessible maintenance-free type batteries.)
Maintenance-free, non-accessible batteries are designed to eliminate the need to add water. Yet the volume of electrolyte above plates may eventually become depleted due to abnormal conditions such as high heat or improper regulator setting. Use a voltmeter to check the state of charge. (See reference chart below to determine if charging is necessary.)

Battery voltage	Reference state of charge
12.6	100% (Full charge)
12.4	75%
12.2	50%
12.0	25%
11.8	0%

◆ **Battery Charging**

DANGER

To avoid serious injury or death:

- **When the battery is being activated, hydrogen and oxygen gases in the battery are extremely explosive. Keep open sparks and flames away from the battery at all times, especially when charging the battery.**

WARNING

To avoid serious injury:

- **When disconnecting the cable from the battery, start with the negative terminal first. When connecting the cable to the battery, start with the positive terminal first.**
- **Never check battery charge by placing a metal object across the posts.**
  Use a voltmeter or hydrometer.

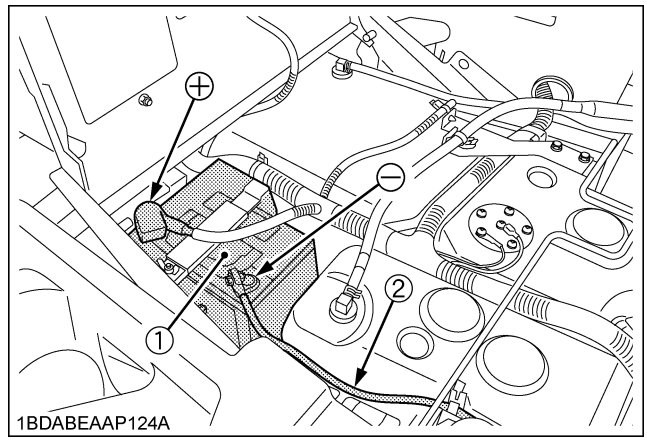

(1) Battery *(+): Positive terminal*
(2) Ground cable *(-): Negative terminal*

1. To slow charge the battery, connect the battery positive terminal to the charger positive terminal and the negative to the negative, then charge for at least 1 hour at 6.5 amperes.
2. A boost charge is only for emergencies. It will partially charge the battery at a high rate and in a short time.
   When using a boost-charged battery, it is necessary to recharge the battery as early as possible.
   Failure to do this will shorten the battery's service life.
3. When the specific gravity of electrolyte is between 1.27 and 1.29 the charging is completed.

◆ **Battery for storage**

1. When storing the machine for a long period, remove the battery from machine, adjust the electrolyte to the proper level and store in a dry place out of direct sunlight.
2. The battery self-discharges while it is stored.
   Recharge it once every 3 months in hot seasons and once every 6 months in cold seasons.

https://truckmanualshub.com/

■Adjusting Choke Cable

1. Move the choke lever to the OFF position.

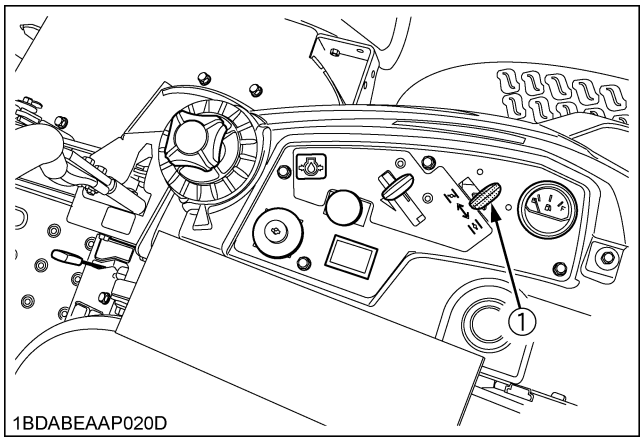

(1) Choke lever

2. Push choke bracket in direction of arrow (A).

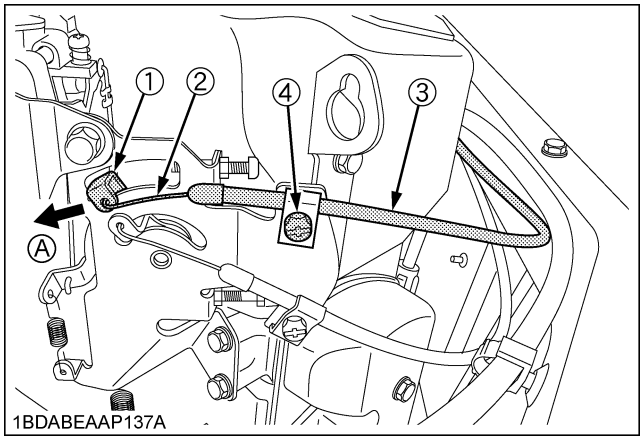

(1) Choke bracket
(2) Choke cable
(3) Choke cable sheath
(4) Bolt

3. If bracket can move in direction of arrow (A), loosen the bolt and pull the choke lever cable and sheath in the direction of arrow (A) until bracket can no longer move in direction of arrow (A). Then tighten the bolt.

■Adjusting Throttle Cable

1. Move the throttle lever to the "FAST" position.

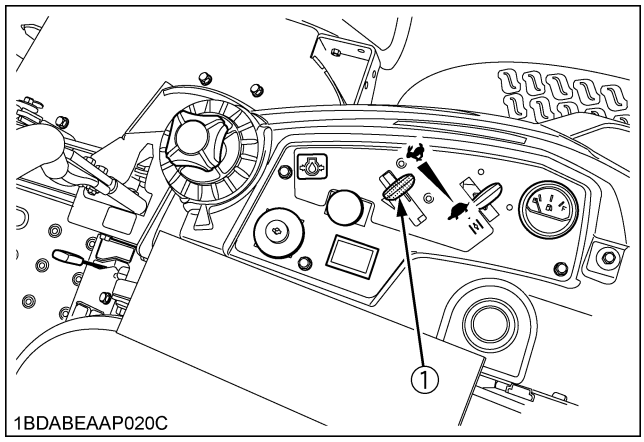

(1) Throttle lever

2. Make sure the throttle arm contacts the stopper bolt.

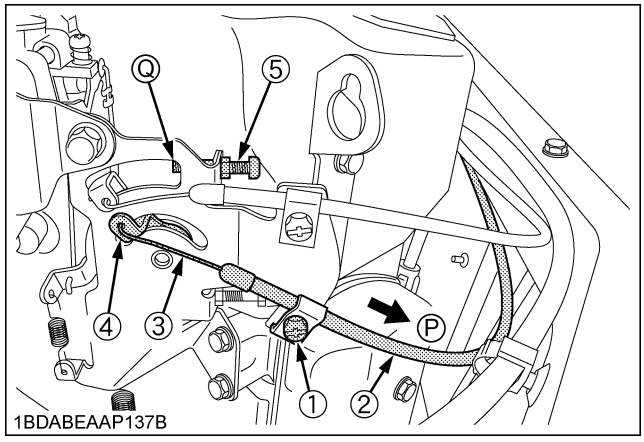

(1) Bolt
(2) Throttle cable sheath
(3) Throttle cable
(4) Throttle arm
(5) High idle stopper bolt
(P) "PULL"
(Q) "CONTACT"

3. If not possible, loosen the bolt and pull the throttle lever cable sheath in the direction of the arrow until throttle arm contacts the stopper bolt. And then tighten the bolt.

https://truckmanualshub.com/

■Cleaning Engine Cooling Areas

The engine cooling areas should be cleaned every 100 hours operation or every 1 year, whichever comes first.
The engine is equipped with blower housing clean out ports for periodic maintenance in between cleaning.

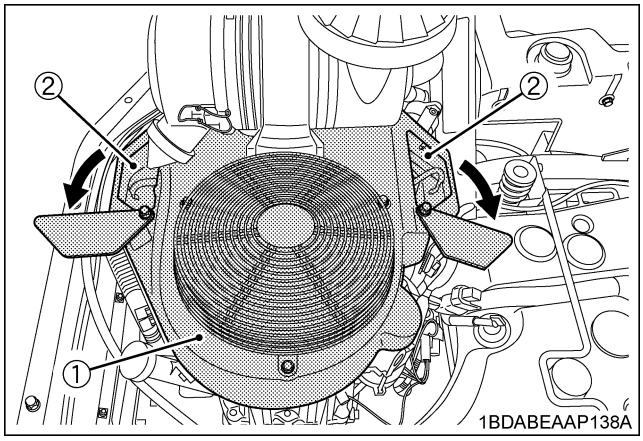

(1) Blower housing
(2) Blower housing clean out ports

WARNING

To avoid serious injury:

- **Make sure engine is cool to the touch before removing shrouds.**
- **Always shield eyes and face from air deposits and objects.**

NOTE :

- Consult your KUBOTA Dealer before disassembling engine.

1. Remove fan guard.
2. Remove oil cooler.
3. Remove fuel pump.
4. Unplug voltage regulator and remove ground bolt.
5. Remove air cleaner.
6. Remove blower housing.
7. Remove engine shrouds.
8. Clean all areas that were previously covered by the blower cover with compressed air. Remove all dust, dirt, and debris.
9. Reinstall all parts in the reverse order of the above procedure.

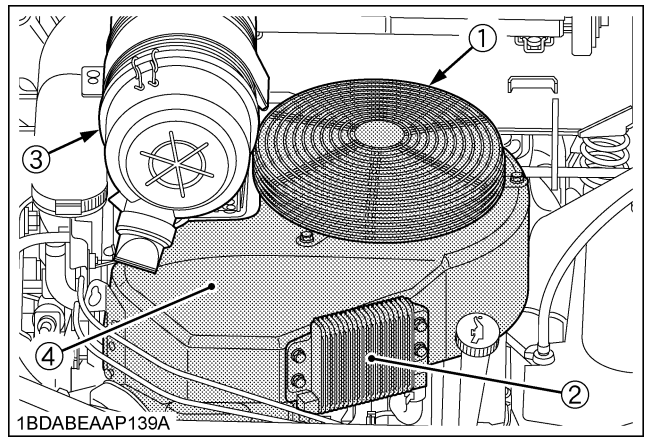

(1) Fan guard
(2) Oil cooler
(3) Air cleaner
(4) Blower housing

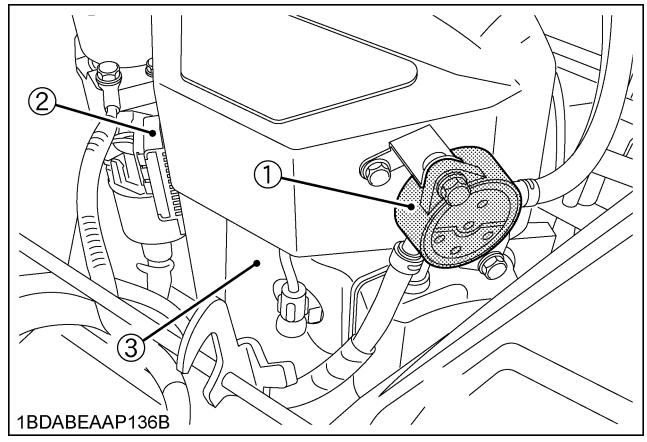

(1) Fuel pump
(2) Voltage regulator
(3) Engine shroud

NOTE :

- Refer to your Kawasaki engine manual, section "COOLING SYSTEM CLEANING" for more details.

https://truckmanualshub.com/

■Cleaning Engine Oil Cooler Fins (if equipped)

The engine oil cooler fins should be cleaned every 100 hours operation or every 1 year, whichever comes first.

This engine is equipped with an oil cooler. The style of the oil cooler is mounted on the blower housing. Pressure of compressed air must be under 205 kPa (2.1 kgf/cm^2, 30 psi).

WARNING

To avoid serious injury:

- **Make sure the engine is cool enough to touch before removing shrouds and other components.**
- **Always shield eyes and a face from air deposits and objects.**

1. Stop the engine and apply the parking brake.
2. Loosen the 4 bolts for the engine oil cooler.

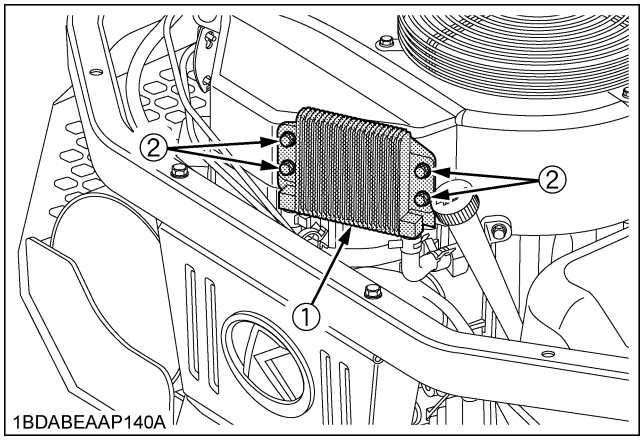

(1) Oil cooler
(2) Oil cooler bolts (x4)

3. Pull out the engine oil cooler.
4. Remove large debris from both sides of the engine oil cooler fin by hand, and then blow off small debris with the compressed air. Pressure of compressed air must be under 205 kPa (2.1 kgf/cm^2, 30 psi).
5. Put back the engine oil cooler in the original position and tighten bolts.

■Greasing

WARNING

To avoid serious injury:

- **Be sure to stop the engine and remove the key before greasing.**

Apply a small amount of multipurpose grease to the following points every 100 hours:
If you operated the machine in extremely wet and muddy conditions, lubricate grease fittings more often.

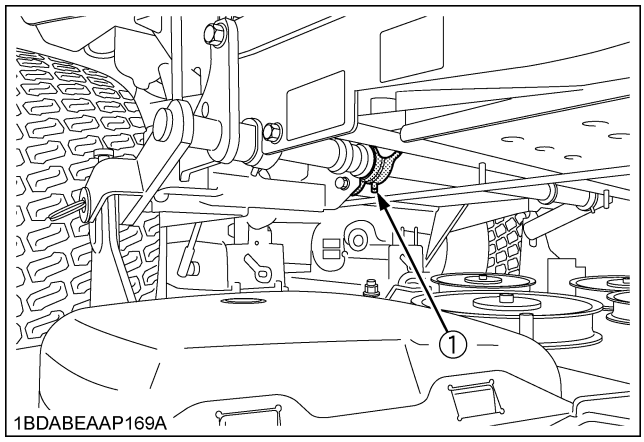

(1) Center mower link bushing

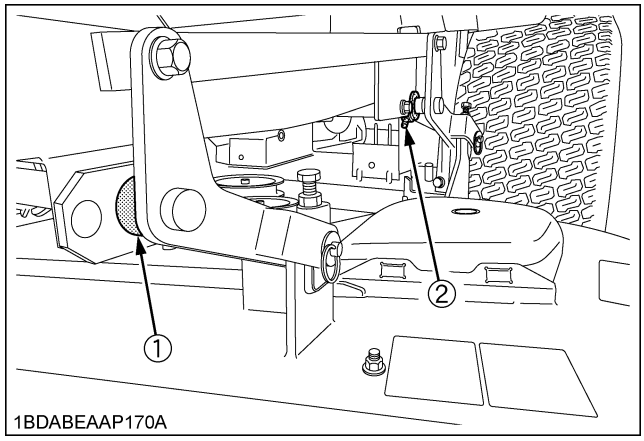

(1) Front mower link bushing (LH, RH)
(2) Rear mower link bushing (LH, RH)

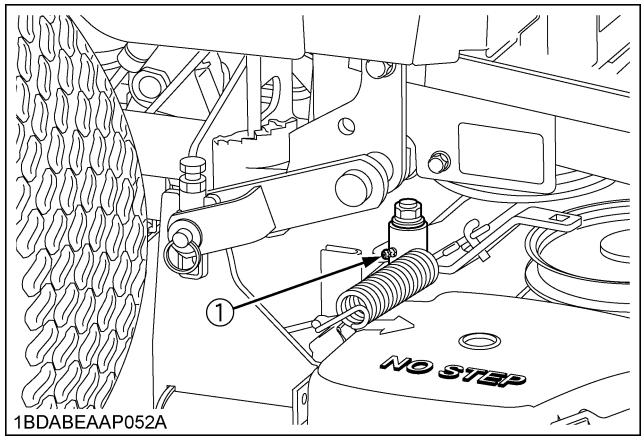

(1) Mower belt tension pivot

https://truckmanualshub.com/

■Checking Spark Plug Condition & Gap

Remove the spark plugs, check condition, and reset the gap or replace with new plugs as necessary.

1. Before removing spark plugs, clean the area around the base of the plug to keep dirt and debris out of the engine.
2. Disconnect the spark plug cap from spark plugs.
3. Use a spark plug wrench to remove the spark plugs.
4. Remove plugs and check its condition.
   Replace the plug if worn or reuse is questionable.
5. Inspect spark plugs for cracked porcelain, pitted electrodes, or other wear and damage. Replace the spark plug if necessary.

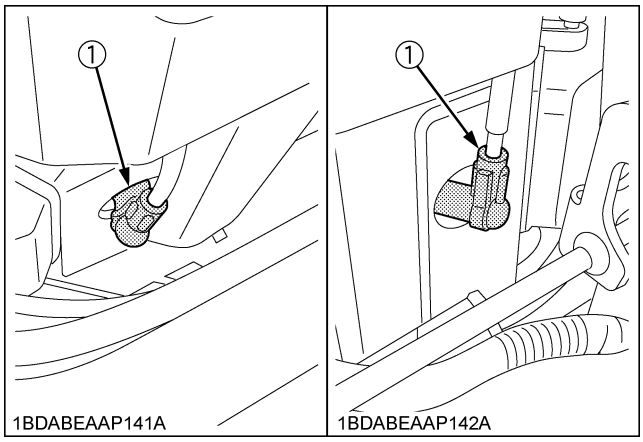

(1) Spark plug cap and spark plug

NOTE :

- Do not clean the spark plug in a machine using abrasive grit. Some grit could remain in the spark plug and enter the engine, which may cause extensive wear and damage.

Recommended spark plug	NGK BPR4ES

6. Check the gap using a wire feeler gauge. Adjust the gap to 0.75 mm (0.030 in.) by carefully bending the ground electrode.

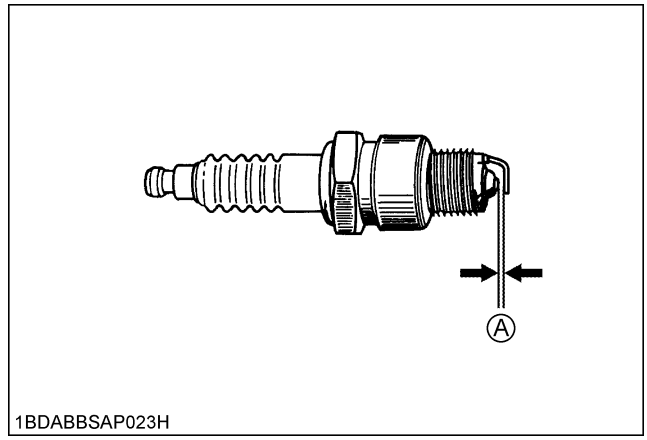

(A) 0.75 mm (0.030 in.)

7. Reinstall the spark plug into the cylinder head.

Tightening torque	22 N-m (16 lbf-ft)

https://truckmanualshub.com/

EVERY 200 HOURS

■Checking Hydraulic Hose

WARNING

To avoid serious injury:

- **Be sure to stop the engine, remove the key, and relieve pressure before checking and replacing the hydraulic hose.**
- **Allow the transmission case to cool down sufficiently; oil can be hot and may cause burns.**

Check to see if hydraulic hoses are properly fixed every 200 hours of operation.

1. Check to see that all lines and hose clamps are tight and not damaged.
2. If hoses and clamps are found worn or damaged, replace or repair them at once.

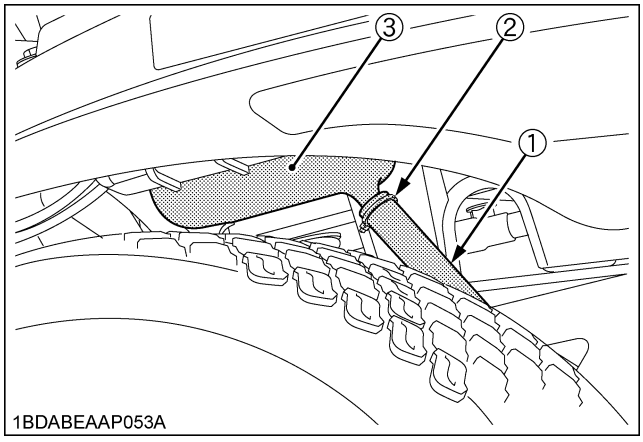

(1) Hydraulic hose (LH, RH)
(2) Hose clamp (LH, RH)
(3) Transaxle fluid expansion tank (LH, RH)

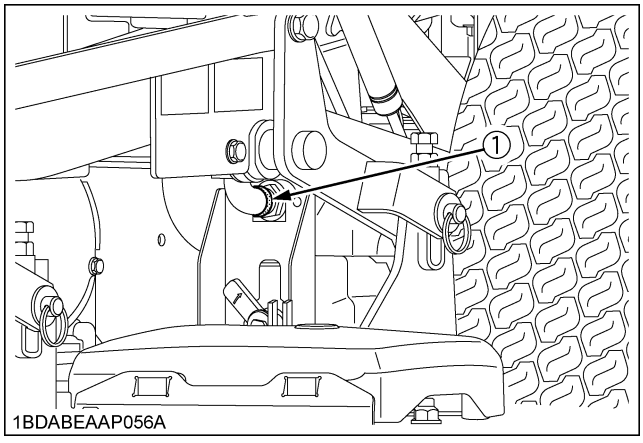

(1) Hose clamp (LH, RH)

■Replacing Engine Oil Filter

WARNING

To avoid serious injury:

- **Engine oil is a toxic substance. Dispose of used oil properly. Contact your local authorities for approved disposal methods or possible recycling.**

WARNING

To avoid serious injury:

- **Be sure to stop the engine and remove the key before changing the oil and the oil filter cartridge.**
- **Allow engine to cool down sufficiently; oil can be hot and may cause burns.**

The oil filter cartridge must be changed **every 200 service hours**.

Always use a genuine oil filter.

1. Drain the engine oil. (See step 1 and 2 in "Changing Engine Oil" in "EVERY 100 HOURS" in "PERIODIC SERVICE" section.)
2. Remove the old filter and wipe off the filter adapter with a clean cloth.
3. Place a new replacement filter in a shallow pan with the open end up. Pour new oil, of the proper type, in through the threaded center hole. Stop pouring when the oil reaches the bottom of the threads. Allow a minute or 2 for the oil to be absorbed by the filter material.
4. Apply a thin film of clean oil to the rubber gasket on the new oil filter.
5. Install the new oil filter to the filter adapter. Hand tighten the filter clockwise until the rubber gasket contacts the adapter, then tighten the filter an additional **2/3 turn**.
6. Fill the engine with the proper oil to the "FULL" or "F" mark on the dipstick. Always check the oil level with the dipstick before adding more oil.
7. Reinstall the oil fill cap/dipstick and tighten securely.
8. Start the engine and check for oil leaks. Recheck oil level before placing the engine into service.
   Stop the engine, correct any leaks, and allow a minute for the oil to drain down, then recheck the level on the dipstick.

NOTE :

- To prevent extensive engine wear or damage, always maintain the proper oil level in the crankcase. Never operate the engine with the oil level below the "ADD" or "L" mark or above the "FULL" or "F" mark on the dipstick.

https://truckmanualshub.com/

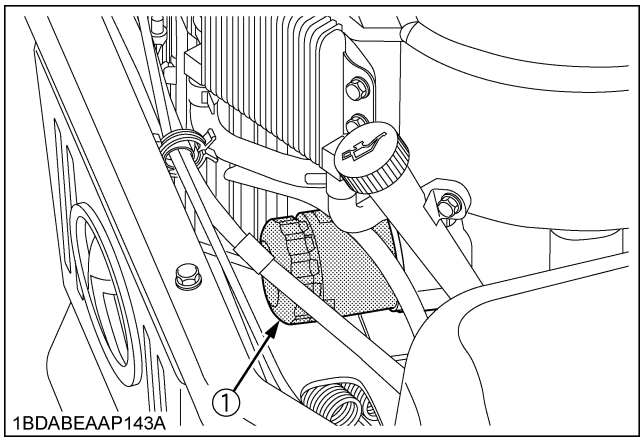

(1) Engine oil filter cartridge

■Replacing Fuel Filter

(See "Checking Fuel Lines and Fuel Filter" in "EVERY 100 HOURS" in "PERIODIC SERVICE" section.)

EVERY 250 HOURS

■Replacing Air Cleaner Outer Element

(See "Checking Air Cleaner Outer Element" in "EVERY 100 HOURS" in "PERIODIC SERVICE" section.)

■Checking Air Cleaner Inner Element

(See "Checking Air Cleaner Outer Element" in "EVERY 100 HOURS" in "PERIODIC SERVICE" section.)

EVERY 300 HOURS

■Cleaning Combustion Chamber

If you do not have the proper tools and/or are not mechanically proficient, consult your local KUBOTA Dealer for this service.

■Cleaning and Adjusting Valve Seat and Clearance

If you do not have the proper tools and/or are not mechanically proficient, consult your local KUBOTA Dealer for this service.

EVERY 500 HOURS AFTER 300 HOURS

■Replacing Transaxle Oil Filter Cartridge

WARNING

To avoid serious injury:

- **Park the machine on a firm and level surface.**
- **Apply the parking brake.**
- **Be sure to stop the engine and remove the key before changing or checking the oil.**
- **Allow transmission case to cool down sufficiently; oil can be hot and may cause burns.**

1. Clean any loose debris from around the oil drain plug, oil filter, expansion tank cap, and breather port plug.
2. Place an oil drain pan (8 qt. capacity minimum) beneath the oil drain plug. Remove the oil drain plug and washer and allow used oil to drain completely.

NOTE :

- Remove the expansion tank cap to speed up the draining process.

3. Remove the oil filter.

NOTE :

- Always replace the filter when performing any internal maintenance to the transaxle.

4. Wipe the oil filter mounting surface and apply a film of new oil to the new oil filter o-ring.
5. Install the new oil filter by hand.
6. After hand tightening, torque the oil filter to 13-15.2 N-m (9.60-11.2 lbf-ft).
7. Inspect oil drain plug and washer. Replace if damaged.
8. Reinstall the oil drain plug and washer. Torque to 5.7-8.4 N-m (4.2-6.1 lbf-ft).
9. Loosen breather port plug by 3 turns.

IMPORTANT :

- Always loosen the breather port plug when adding oil. If breather port plug is not loosened, air can remain in the transaxle and reduce performance.

10. Fill expansion tank with new oil and allow oil to drain into transaxle. Continue until oil just comes out from the breather port plug.
11. Tighten the breather port plug. Torque to 11.3-13.5 N-m (8.34-9.95 lbf-ft).
12. Continue to fill the transaxle through the expansion tank until the "MAX" line is reached on the expansion tank. (See "Checking Transaxle Fluid Level" in "DAILY CHECK" in "PERIODIC SERVICE" section.)
13. Reinstall the oil tank cap by hand. Do not overtighten.
14. Repeat steps 1-13 on the opposite side transaxle drive.
15. Purge any remaining air from the transaxles.

https://truckmanualshub.com/

◆ **Purging Procedure**

Before starting, make sure the transaxle is at the proper oil level. If it is not, fill to the specifications outlined in this manual.

The following procedures are best performed with the machine drive wheels off the ground, and then repeated under normal operating conditions. If this is not possible, perform this procedure in an open flat area free of any objects or bystanders.

1. Open the bypass valves of both transaxles with the bypass levers. (See "Hydrostatic Transaxle Bypass Lever" in "OPERATING THE MACHINE" section.)
2. Start the engine and disengage the parking brake.
3. Set the engine throttle to low idle.
4. Slowly move the motion control levers to the max forward position. Hold for 30 seconds.
5. Slowly move the motion control levers to the max reverse position. Hold for 30 seconds.
6. Place the motion control levers in neutral lock and apply the parking brake.
7. Close the bypass valves of both transaxles.
8. Set the engine throttle to high idle.
9. Disengage the parking brake.
10. Slowly move the motion control levers to the max forward position. Hold for 30 seconds.
11. Slowly move the motion control levers to the max reverse position. Hold for 30 seconds.
12. Place the motion control levers in neutral lock, apply the parking brake, and stop the engine.
13. Check the transaxle oil level. If oil level is below the "MIN" line, proceed to step 14. Otherwise, the purging process is complete.
14. Loosen breather port plug by 3 turns.
15. Fill expansion tank with new oil and allow oil to drain into transaxle. Continue until oil just comes out from the breather port plug.
16. Tighten the breather port plug. Torque to 11.3-13.5 N-m (8.34-9.95 lbf-ft).
17. Continue to fill the transaxle through the expansion tank until the "MAX" line is reached on the expansion tank. (See "Checking Transaxle Fluid Level" in "DAILY CHECK" in "PERIODIC SERVICE" section.)
18. Repeat steps 1 through 13 until all air is purged from the transaxles.

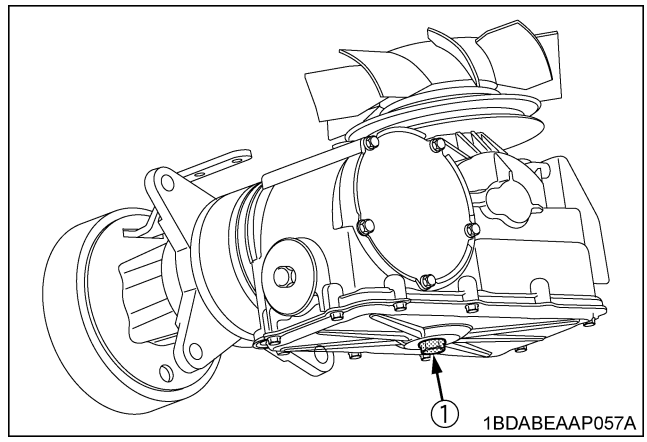

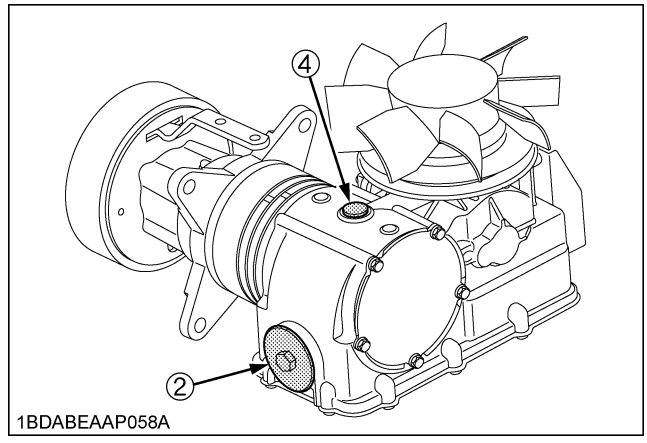

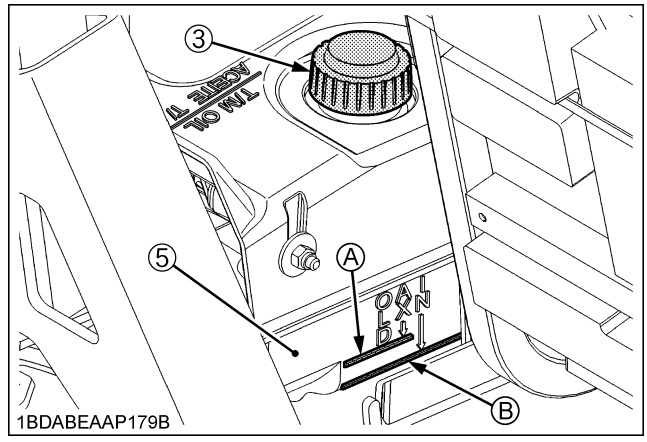

(1) Oil drain plug
(2) Oil filter
(3) Oil tank cap
(4) Breather port plug
(5) Transaxle fluid expansion tank
(A) MAX line
(B) MIN line

■Changing Transaxle Fluid

(See "Replacing Transaxle Oil Filter Cartridge" in "EVERY 500 HOURS AFTER 300 HOURS" in "PERIODIC SERVICE" section.)

https://truckmanualshub.com/

EVERY 500 HOURS

■Electric Clutch Adjustment

The electric clutch serves 2 functions in the operation of the mower. In addition to starting and stopping the power flow to the cutter blades, the clutch also acts as a brake to assist in stopping blade rotation when the PTO is switched off or the operator presence control is interrupted.

When the clutch is disengaged, the air gap between the armature and rotor should be less than 2.5 mm (0.100 in.) and more than 0.25 mm (0.010 in.). Perform the following procedure to check the electric clutch function.

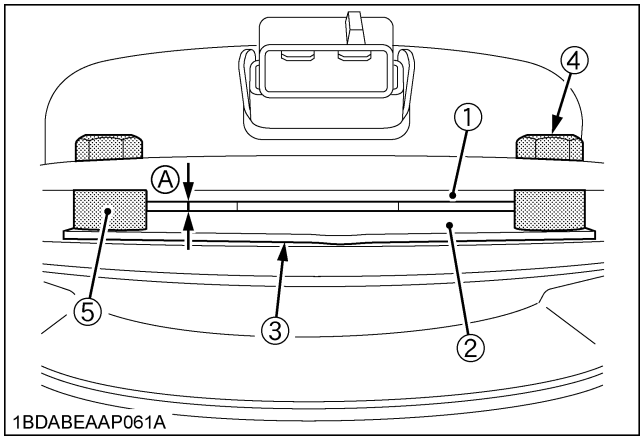

(1) Rotor
(2) Armature
(3) Shim
(4) Brake mounting bolt
(5) Aluminum spacers
(A) Air gap

1. Using a pneumatic line, blow out any debris from under the brake pole and around the aluminum spacers.
2. Check air gap between rotor and armature face on both sides of the brake pole. If air gap is 2.5 mm (0.100 in.) or greater, or if clutch is having trouble engaging when hot, proceed to Step 3. Otherwise, skip to Step 9.
3. Loosen both brake mounting bolts 1 full turn.
4. Use pliers or hand to remove the shim. Do not discard shim until proper clutch function has been confirmed.
5. Using a pneumatic line, blow out any debris from under the brake pole and around the aluminum spacers.
6. Tighten each brake mounting bolt. Torque to 13-14.2 N-m (9.5-10.5 lbf-ft).
7. Using a 0.25 mm (0.010 in.) thick feeler gage, verify that a gap is present between the rotor and armature face on both sides of the brake pole.

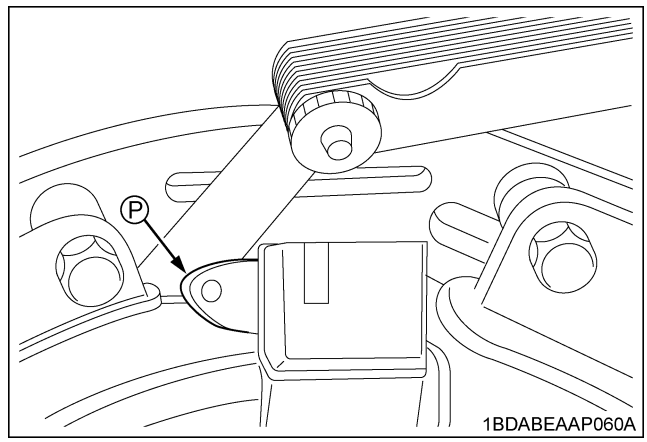

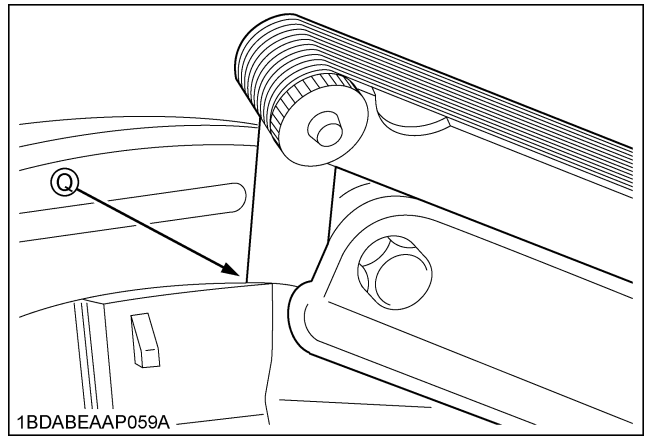

(P) Check gap on one side
(Q) Check gap on other side

8. If the gap is less than 0.25 mm (0.010 in.), reinstall the shim and see your Kubota Dealer. If gap is greater than 0.25 mm (0.010 in.), proceed to next step.
9. Verify tightness of clutch mounting bolt. Torque to 67-75 N-m (50-55 lbf-ft)

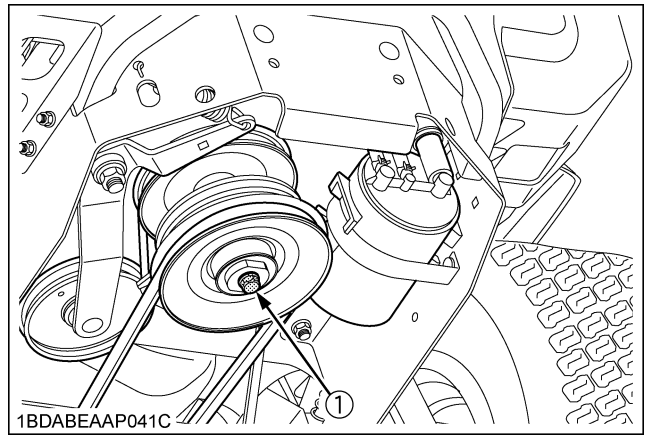

(1) Clutch mounting bolt

https://truckmanualshub.com/

10. With the engine running, verify clutch function by engaging and disengaging the clutch 10 consecutive times. If clutch does not engage, see your Kubota Dealer.

This adjustment should be done every 500 hours of operation or annually, whichever comes first. In cases where the machine is heavily used, air gap should be checked more often.

If the air gap is too narrow, the clutch armature may drag when disengaged, resulting in premature failure.

■Lubricating Crank shaft

The engine crank shaft should be lubricated every 500 hours to ensure that critical components such as the electric clutch, transaxle drive pulley, and engine can be removed if needed.

1. Remove the mower belt.
2. Remove the transaxle belt.
3. Remove the electric clutch and transaxle drive pulley.

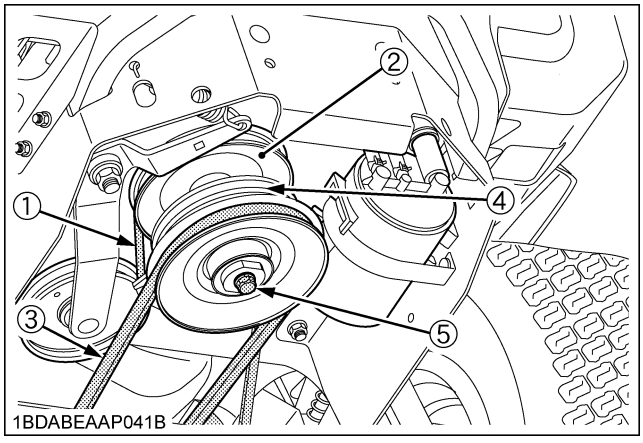

(1) Transaxle Belt
(2) Transaxle Drive Pulley
(3) Mower Belt
(4) Electric Clutch
(5) Clutch Mounting Bolt

4. Apply a light coating of copper-based Anti-Seize lubricant to engine crank shaft.

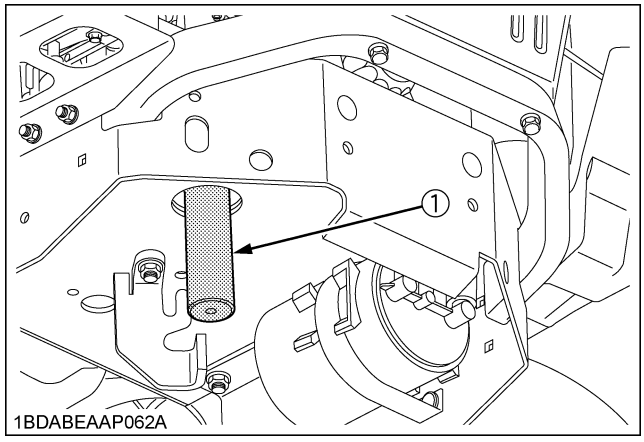

(1) Engine Crank shaft

5. Reinstall transaxle drive pulley, electric clutch, and clutch mounting bolt.
6. Torque clutch mounting bolt to 67-75 N-m (50-55 lbf-ft).
7. Reinstall transaxle belt.
8. Reinstall mower belt.

■Replacing Air Cleaner Inner Element

(See "Checking Air Cleaner Outer Element" in "EVERY 100 HOURS" in "PERIODIC SERVICE" section.)

■Replacing Spark Plugs

(See "Checking Sparking Plug Condition and Gap" in "EVERY 100 HOURS" in "PERIODIC SERVICE" section.)

https://truckmanualshub.com/

EVERY 1 YEAR

■Cleaning Engine Oil Cooler Fins

(See "Cleaning Engine Oil Cooler Fins" in "EVERY 100 HOURS" in "PERIODIC SERVICE" section.)

■Changing Engine Oil

(See "Changing Engine Oil" in "EVERY 100 HOURS" in "PERIODIC SERVICE" section.)

■Cleaning Engine Cooling Areas

(See "Cleaning Engine Cooling Areas" in "EVERY 100 HOURS" in "PERIODIC SERVICE" section.)

■Checking Muffler and Spark Arrester

(See "Checking Muffler and Spark Arrester" in "EVERY 50 HOURS" in "PERIODIC SERVICE" section.)

EVERY 2 YEARS

■Replacing Hydraulic Hose

Consult your local KUBOTA Dealer for this service.

■Replacing Fuel Lines

Consult your local KUBOTA Dealer for this service.

■Replacing Carbon Canister Air Filter

(See "Checking Carbon Canister Air Filter" in "EVERY 100 HOURS" in "PERIODIC SERVICE" section.)

SERVICE AS REQUIRED

■Replacing Fuses

Replacement of the fuse

1. Remove the blown fuse.
2. Place a new fuse of the same capacity in position.

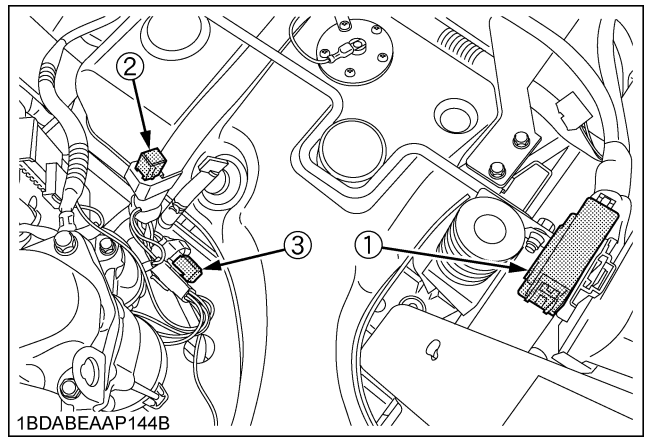

(1) Fuse location
(2) Slow blow fuse
(3) Slow blow fuse

IMPORTANT :

- If the new fuse happens to blow out within a short time, contact your dealer for inspection and repair. Never "jump" the fuse with wire or foil, or install a larger capacity fuse than is recommended.

◆ **Protected circuit**

FUSE NO.	CAPACITY (A)	Protected circuit
(1)	5	Operator control
	10	PTO clutch
	15	Accessories
	-	-
	-	-
(2)	Slow blow fuse 30	Check circuit against wrong battery connection
(3)	Slow blow fuse 30	Check circuit against wrong battery connection

https://truckmanualshub.com/

■Checking and Replacing Blade

WARNING

To avoid serious injury:

- **Be sure to stop the engine and remove the key.**
- **Blades may be sharp. When you handle blades, wear heavy gloves or wrap end of blade with a rag.**

◆ Checking

The blade cutting edges should be kept sharp at all times. Sharpen the cutting edges, if they resemble blade (B). Replace the blades if they appear similar to blade (C).

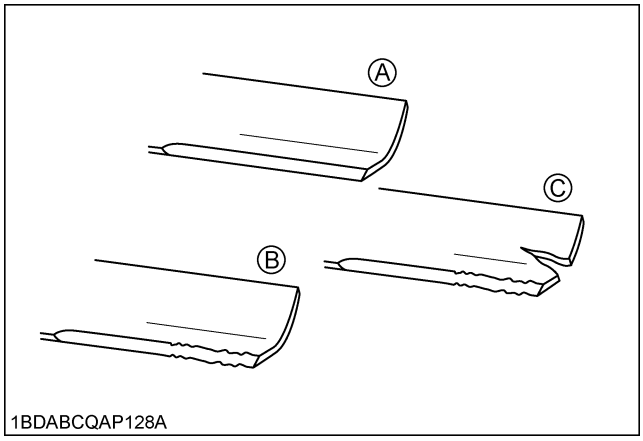

(A) New blade
(B) Worn blade
(C) Cracked blade

◆ Replacing

1. Dismount the mower deck from the machine.
   (See "DISMOUNTING THE MOWER DECK" in "MOWER MOUNTING" section.)
   Then turn it over to expose the blades.
2. Wedge a block of wood between the blade and mower housing or use a box wrench over the pulley nut to prevent the spindle from rotating while removing the blade bolts; loosen the blade bolt as illustrated.

IMPORTANT :

- Use the proper metric size box or socket wrench to tighten or loosen the blade mounting bolt.

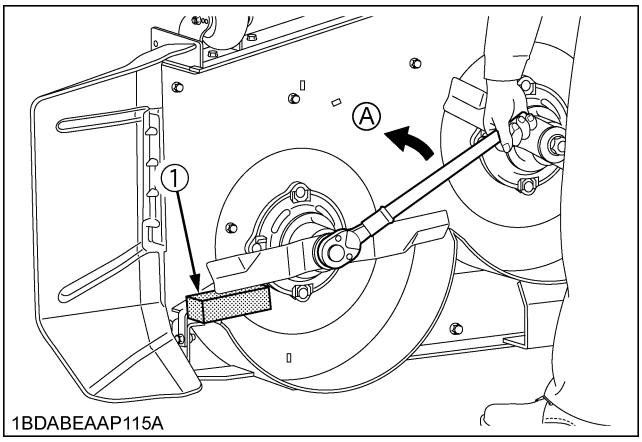

(1) Block *(A) "LOOSEN"*

3. To sharpen the blades yourself, clamp the blade securely in a vise.
   Use a large mill file and file along the original bevel until sharp.
4. To check the blade for balance, place a small rod through the center hole. If the blade is not balanced, file the heavy side of the blade until balance is achieved.
5. Pass the spline boss through the plate, blade and 2 cup washers, and tighten the bolt.

NOTE :

- Make sure that the cup washer is not flattened out or worn; this cause blade to slip excessively.
  Replace the 2 cup washers if either is damaged.

6. Before checking or replacing the blade, wipe grass and mud off the top and inside of the mower. Especially clean up the inside of the belt cover, because otherwise the belt life will be reduced.

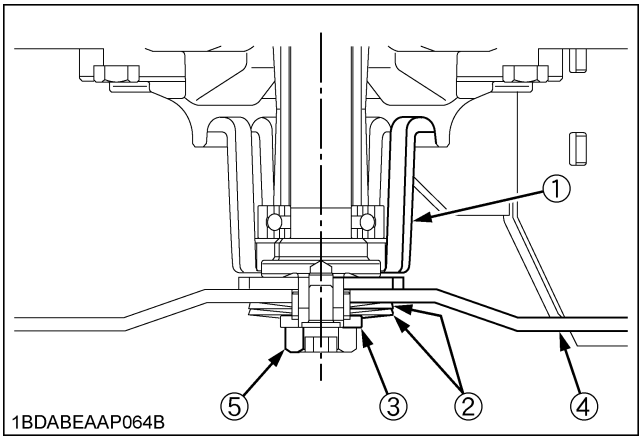

(1) Spindle holder
(2) 2-Cup washer
(3) Spline boss
(4) Blade
(5) Bolt

https://truckmanualshub.com/

IMPORTANT :
- Tighten the bolts of the blades from 103 to 118 N-m (76 to 87 lbf-ft) of torque.
- The blade bolts have Right hand threads. Turn them counterclockwise to loosen.
- To prolong the service life of the blades, reposition them as shown in the figure below periodically.

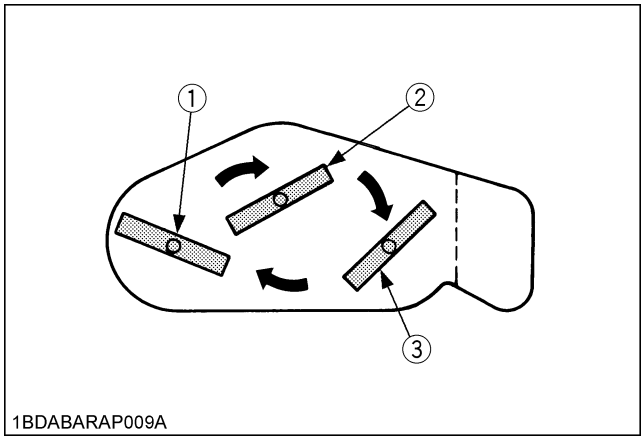

(1) LH blade
(2) Center blade
(3) RH blade

■Mower Belt Replacement

1. Remove the mower deck from the machine according to the procedure "DISMOUNTING THE MOWER DECK".
2. Remove the left and right hand shield from the mower deck.
3. Remove the belt.
4. To install a new belt, reverse the above procedure.

NOTE :
- Tighten the tension pulley bolt securely 77.6 to 90.2 N-m (8.0 to 9.2 kgf-m, 57.1 to 66.5 lbf-ft).

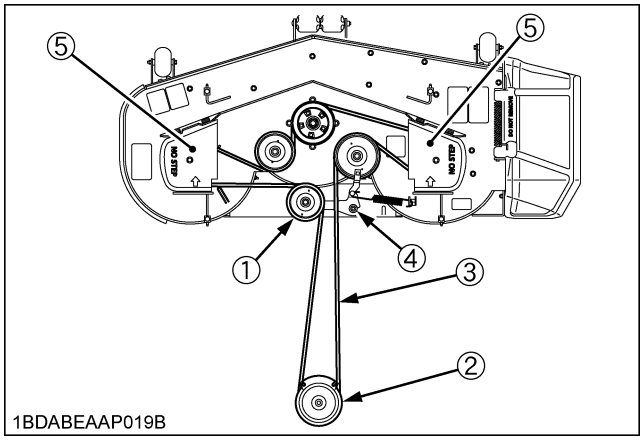

(1) Tension pulley
(2) PTO clutch pulley
(3) Mower belt
(4) Bolt
(5) Shield

https://truckmanualshub.com/

ADJUSTMENT

MOTION CONTROL LEVER

WARNING

To avoid serious injury:

- **Park the machine on a firm and level surface.**
- **If it is necessary to run the engine in an enclosed area, use a gas tight exhaust pipe extension to remove the fumes.**
- **Always try to work in a well-ventilated area.**
- **Lift up and secure with jack stands or blocking the rear of the machine, do not run the machine while adjusting.**
  Remove rear wheels.
- **Do not adjust only one of the following adjustments; exclude "MOTION CONTROL LEVER ALIGNMENT".**
  They are interlinked.
- **If you feel you are unable to make the following adjustments correctly and safely, please contact your local KUBOTA Dealer.**

IMPORTANT :

- Right and left motion control levers can be adjusted independently.

■HST NEUTRAL

1. Lift-up and secure the machine with jack stands or blocking the rear of the machine frame.
2. Remove both rear wheels.
3. Start the engine, and run at maximum speed.
4. Place the motion control lever in "NEUTRAL LOCK" position.
5. If the rear axle is still turning, follow the following steps to adjust the neutral position.
6. Put weight on the seat cushion.
7. Lengthen or shorten the rod by 1/2 turn and then tighten the lock nuts.

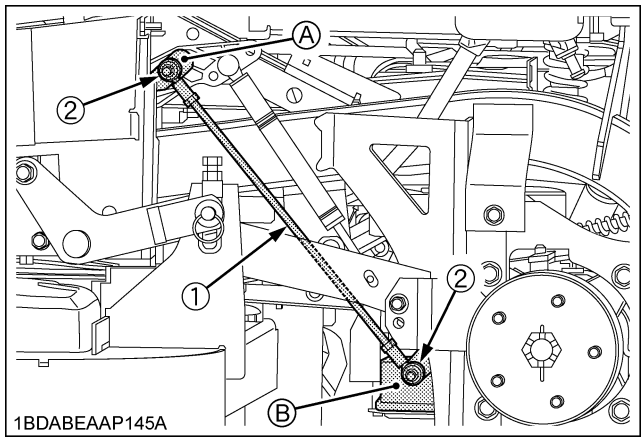

(1) Rod *(A) Lever*
(2) Flange bolt and nut *(B) Transaxle*

8. Place the motion control lever to the reverse position, then move it forward slowly.
   Place the lever in the "NEUTRAL LOCK" position, and check that the rear axle does not rotate.
   If the axle does not stop rotating, adjust the "HST NEUTRAL" again.
9. Adjust the other side "HST NEUTRAL" equally.
10. After adjustment, make sure to stop the engine immediately.
11. Push the motion control lever until it contacts the speed adjust plate and reaches the end of its range of motion. Then move the speed adjust plate 2-3 mm backward and tighten 2 front bolts securely.

Tightening torque	23.6 to 27.4 N-m (2.4 to 2.8 kgf-m, 17.4 to 20.2 lbf-ft)

https://truckmanualshub.com/

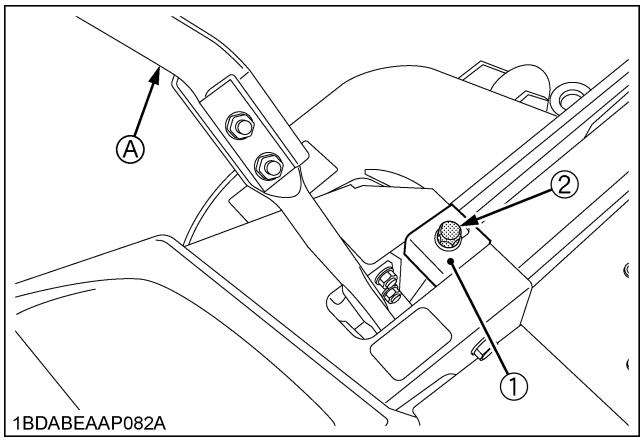

(1) Speed adjust plate *(A) Motion control lever*
(2) Bolt

12. If at full speed the machine pulls one direction or the other, it is an indication that one wheel is turning faster than the other.
    To adjust the condition, proceed as follows:
    (1) Park the machine on a firm and level surface.
    (2) Stop the engine.
    (3) Loosen the front bolt of faster side.
    (4) Move the speed adjust plate to backward.
    (5) Tighten the front bolt securely.

Tightening torque	23.6 to 27.4 N-m (2.4 to 2.8 kgf-m, 17.4 to 20.2 lbf-ft)

■MOTION CONTROL LEVER FORCE

The force required to move the motion control levers can be adjusted to one of 3 levels depending on operator preference.

IMPORTANT :
- Adjust the dampers after adjusting HST neutral.
- Adjusting the motion control lever force will affect the maneuverability.

1. Change the upper side of the damper to the desired hole location.
   Tighten the upper side damper nut.

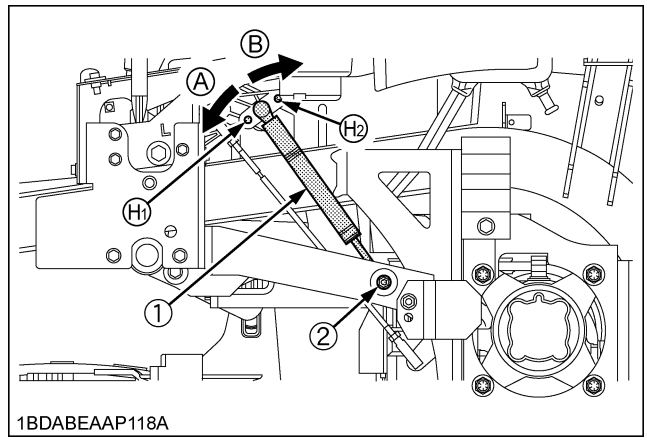

(1) Damper *(A) "LIGHTER"*
(2) Nut *(B) "HEAVIER"*
(H1) Hole for lighter setting
(H2) Hole for heavier setting

2. Loosen the nut on the bottom side of damper.
3. Move the motion control lever to the rearmost position and release the motion control lever.
4. After the motion control lever and damper have stopped moving, place motion control lever in "NEUTRAL LOCK" position.

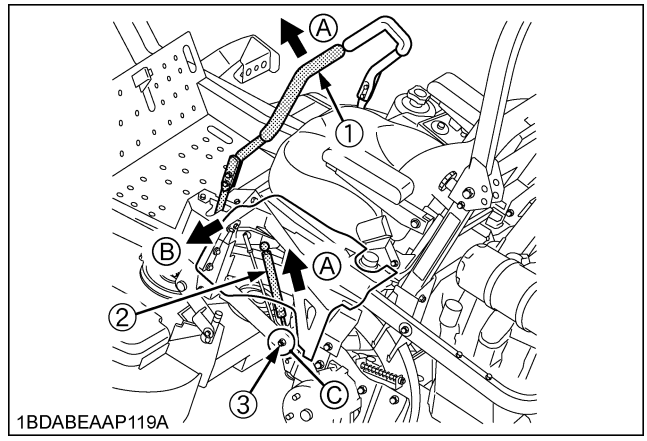

(1) Motion control lever *(A) "IT STOPS MOVING"*
(2) Damper *(B) "NEUTRAL LOCK" position*
(3) Nut *(C) "TIGHTEN"*

https://truckmanualshub.com/

5. Tighten the nut on the bottom side of damper.
6. Perform steps 1 through 5 for both motion control levers.

■MAXIMUM SPEED (FORWARD)

Consult your local KUBOTA Dealer for this service.

■MOTION CONTROL LEVER ALIGNMENT

◆ **Check the alignment**

Check the gap and space between the levers, at the maximum forward position.

Recommendation	Gap: 0 to 2 mm (0 to 0.08 in.)

If positions of the control levers are unequal, an adjustment is necessary.

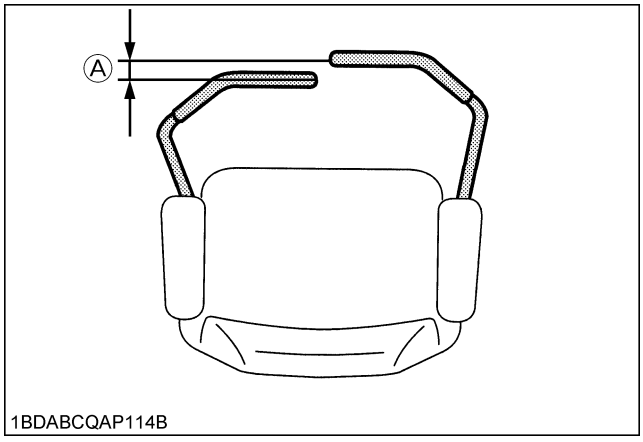

(A) "GAP"

WARNING

To avoid serious injury:

- **Park the machine on a firm and level surface.**
- **Stop the engine, remove the key and apply the parking brake.**

◆ **Aligning the control levers**

1. Stop the engine and apply the parking brake.

Lever position (High or Low)

2. Remove the bolts and select the motion control lever position, high or low.
3. Tighten the bolts.

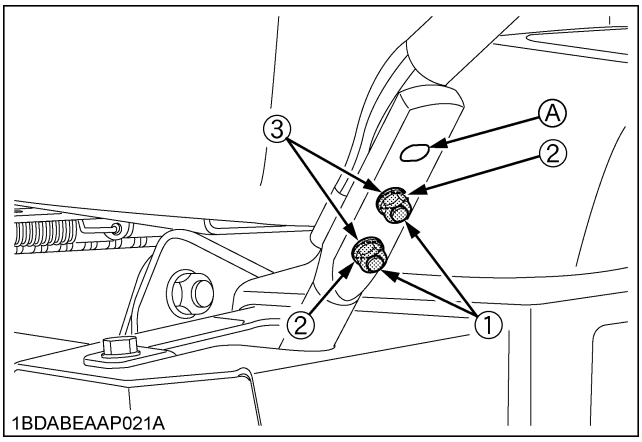

(1) Bolt
(2) Flange nut
(3) Tab slot
(A) High position

Lever alignment (Right and Left)

4. Loosen the bolts.
5. Slide both levers forward or rearward to the desired position within tab slots until levers are aligned.
6. Tighten the bolts.

https://truckmanualshub.com/

MOWER DECK LEVEL

■ANTI-SCALP ROLLERS

WARNING

To avoid serious injury:
- **Park the machine on a firm and level surface.**
- **Apply the parking brake.**
- **Stop the engine and remove the key.**
- **Wait for all moving parts to stop.**

IMPORTANT :
- The flattest cut can be achieved by having the anti-scalp rollers adjusted off the ground.
  Check anti-scalp roller adjustments each time the mower deck cutting height is changed.
  It is recommended that all the anti-scalp rollers be kept off the ground to minimize scuffing.

1. Check the machine tire pressure.
   Inflate tires to the correct pressure. (See "TIRES AND WHEELS" section.)
2. Start the engine.
3. Raise up the mower deck to the transport position. (Also the top end of the lift.)
4. Turn the cutting height control dial to adjust height.
5. Lower the mower deck.
6. Adjust the height of the front side anti-scalp roller to one of 3 positions to approximately 19 mm (3/4 in.) between rollers and the ground.
   Adjust 2 rollers to the same height.

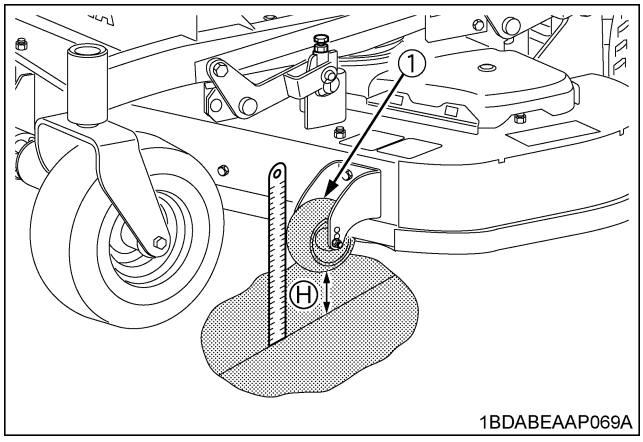

(1) Front side anti-scalp roller (H) 19 mm (3/4 in.)

7. Install the roller with attaching hardware.

■LEVEL MOWER DECK (Side-to-Side)

WARNING

To avoid serious injury:
- **Park the machine on a firm and level surface.**
- **Apply the parking brake.**
- **Disengage PTO (OFF).**
- **Stop the engine and remove the key while checking or adjusting the level of the mower deck.**

IMPORTANT :
- Check the machine tire pressure.
  Inflate tires to the correct pressure.
  (See "TIRES AND WHEELS" section.)

◆ **Checking level (Side-to-Side)**

NOTE :
- Mower deck anti-scalp rollers should not contact the ground.

1. Raise the mower deck to the transport position. (Also the top end).
2. Turn the cutting height set dial to the 3 in. cutting height position.
3. Lower the mower deck.
4. Position the right mower blade in the Side-to-Side position.
5. Measure from outside blade tip to the level surface with a short ruler or leveling gauge.

Reference

Height of the blade at the flat surface	76 mm (3 in.)

NOTE :
- There is a difference of the blade height between on the flat surface and ground.

6. Check that the left side blade is same height.
   The difference between both measurements should be less than 3 mm (1/8 in.).
7. If the Side-to-Side adjustment is not within the given tolerance, adjustment is necessary.

Side-to-Side adjustment	Less than 3 mm (1/8 in.)

https://truckmanualshub.com/

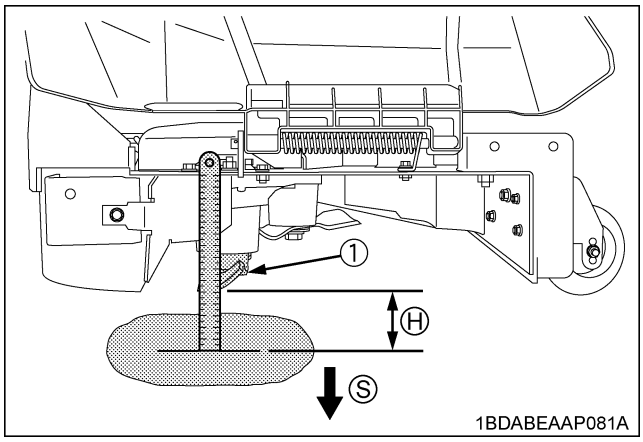

(1) Blade *(S) Blade in Side-to-Side position.*
(H) Height of blade

◆ **Adjusting level (Side-to-Side)**

1. Raise up the mower deck to the transport position. (Also the top end).
2. Turn the cutting height set dial to the 76 mm (3 in.) cutting height position.
3. Place 51 mm (2 in.) height wood blocks under each side of the mower deck.
   Anti-scalp rollers must not rest on the wood block.
4. Lower the mower deck.
5. Position mower blade in the Side-to-Side position.
6. Loosen the jam nuts of the right side of the machine.
7. Adjust the cutting height fine tuning bolts to set 76 mm (3 in.) blade height.
   Front and rear side bolts must be adjusted.
8. Tighten the jam nuts.
9. Adjust the left side equally.
10. Check the side-to-side level and if it is not level, adjustment is necessary.

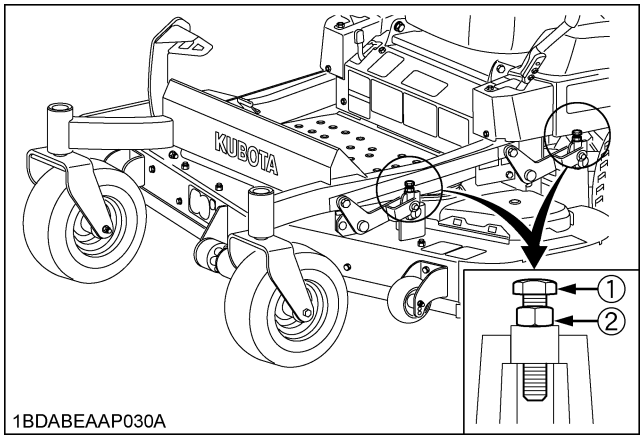

(1) Cutting height fine tuning bolt
(2) Jam nut

■LEVEL MOWER DECK (Front-to-Rear)

WARNING

To avoid serious injury:

- **Park the machine on a firm and level surface.**
- **Engage the parking brake.**
- **Disengage PTO.**
- **Stop the engine and remove the key while checking or adjusting the level of the mower deck.**

IMPORTANT :

- Check the machine tire pressure.
  Inflate tires to the correct pressure.
  (See "TIRES AND WHEELS" section.)

◆ **Checking level (Front-to-Rear)**

NOTE :

- Mower deck anti-scalp rollers should not contact the ground.

1. Raise the mower deck to the transport position. (Also the top end).
2. Turn the cutting height set dial to the 76 mm (3 in.) cutting height position.
3. Lower the mower deck.
4. Position the right mower blade in the Front-to-Rear position.
5. Measure from the right front blade tip to the level surface with a short ruler or leveling gauge.
6. Turn the blade 180° and measure from right rear blade tip to the level surface.
7. Check that the left side blade has the same dimension. The difference between both measurements should be less than 6 mm (1/4 in.).
   Front side must be lower than rear side.
8. If the Front-to-Rear adjustment is not within the given tolerance, adjustment is necessary.

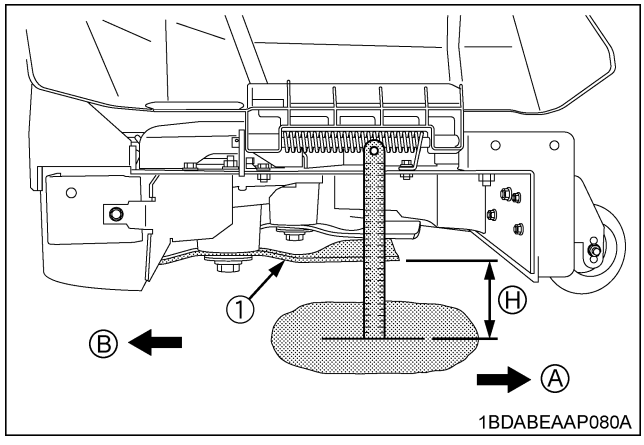

(1) Blade *(A) Front*
(B) Rear
(H) Height of blade

https://truckmanualshub.com/

Front-to-Rear adjustment	Less than 6 mm (1/4 in.) Front side must be lower than Rear side.

◆ **Adjusting level (Front-to-Rear)**

1. Raise up the mower deck to the transport position. (Also the top end).
2. Turn the cutting height set dial to the 76 mm (3 in.) cutting height position.
3. Place 51 mm (2 in.) height wood blocks under each side of the mower deck.
   Anti-scalp rollers must not rest on the wood block.
4. Lower the mower deck.
5. Loosen the jam nuts of the front side of the machine.
6. Adjust the cutting height fine tuning bolts to set 76 mm (3 in.) blade height.
   Both front side bolts must be adjusted.
7. Tighten the jam nuts.
8. Adjust the other side equally.

IMPORTANT :

- The difference between both measurements should be less than 6 mm (1/4 in.).
  Front side must be lower than rear side.

9. Check the front-to-rear level and if it is not level, adjustment is necessary.

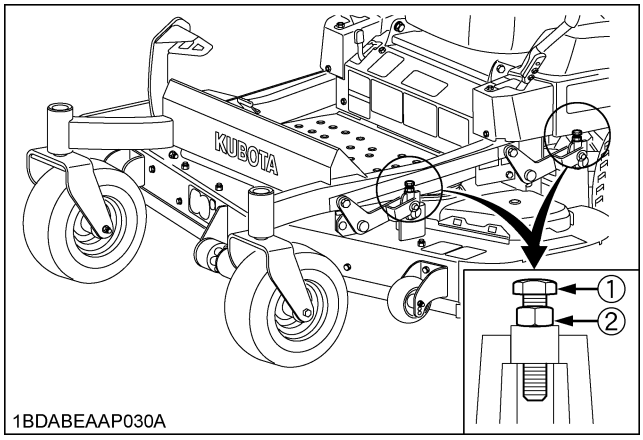

(1) Cutting height fine tuning bolt
(2) Jam nut

■MOWER LIFT PEDAL ADJUSTMENT

1. Stop the engine and apply the parking brake.
2. Loosen the nut and adjust the pedal position.

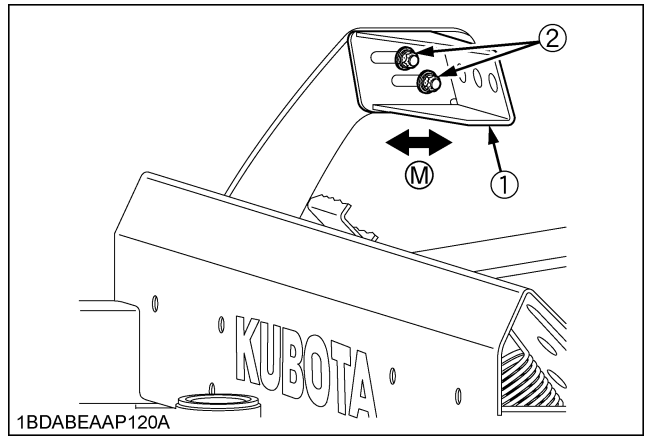

(1) Pedal *(M) "MOVE"*
(2) Nut (M8)

3. Tighten the nuts.

https://truckmanualshub.com/

GENERAL TORQUE SPECIFICATION

American standard cap screws with UNC or UNF threads				Metric cap screws			
SAE grade No.		GR.5	GR.8	Property class		Class 8.8	Class 10.9
1/4	(lbf-ft)	8 - 9.6	12 - 14.4	M6	(lbf-ft)	7.2 - 8.3	
	(N-m)	10.7 - 12.9	16.1 - 19.3		(N-m)	9.81 - 11.3	
	(kgf-m)	1.11 - 1.33	1.66 - 1.99		(kgf-m)	1.0 - 1.15	
5/16	(lbf-ft)	17 - 20.5	24 - 29	M8	(lbf-ft)	17.4 - 20.2	21.7 - 25.3
	(N-m)	23.1 - 27.8	32.5 - 39.3		(N-m)	23.6 - 27.4	29.4 - 34.3
	(kgf-m)	2.35 - 2.84	3.31 - 4.01		(kgf-m)	2.4 - 2.8	3.0 - 3.5
3/8	(lbf-ft)	35 - 42	45 - 54	M10	(lbf-ft)	35.5 - 41.2	44.9 - 52.1
	(N-m)	47.5 - 57.0	61.0 - 73.2		(N-m)	48.1 - 55.8	60.8 - 70.5
	(kgf-m)	4.84 - 5.82	6.22 - 7.47		(kgf-m)	4.9 - 5.7	6.2 - 7.2
1/2	(lbf-ft)	80 - 96	110 - 132	M12	(lbf-ft)	57.2 - 66.5	76.0 - 86.8
	(N-m)	108.5 - 130.2	149.2 - 179.0		(N-m)	77.5 - 90.1	103 - 117
	(kgf-m)	11.07 - 13.29	15.22 - 18.27		(kgf-m)	7.9 - 9.2	10.5 - 12.0
9/16	(lbf-ft)	110 - 132	160 - 192	M14	(lbf-ft)	91.2 - 108	123 - 144
	(N-m)	149.2 - 179.0	217.0 - 260.4		(N-m)	124 - 127	167 - 196
	(kgf-m)	15.22 - 18.27	22.14 - 26.57		(kgf-m)	12.6 - 15.0	17.0 - 20.0
5/8	(lbf-ft)	150 - 180	220 - 264	M16	(lbf-ft)	145 - 166	192 - 224
	(N-m)	203.4 - 244.1	298.3 - 358.0		(N-m)	196 - 225	260 - 303
	(kgf-m)	20.75 - 24.91	30.44 - 36.53		(kgf-m)	20.0 - 23.0	26.5 - 31.0

https://truckmanualshub.com/

TIGHTENING TORQUE CHART

Thread size d (mm)	Hexa-Bolt Head size B (mm)	No mark			7T		
		lbf-ft	N-m	kgf-m	lbf-ft	N-m	kgf-m
M8	12 or 13	**13.0 - 15.2** (14.1 ± 1.1)	**17.8 - 20.6** (19.2 ± 1.4)	**1.9 - 2.1** (2.0 ± 0.1)	**17.5 - 20.3** (18.9 ± 1.4)	**23.5 - 27.5** (25.5 ± 2.0)	**2.4 - 2.8** (2.6 ± 0.2)
M10	14 or 17	**28.9 - 33.3** (31.1 ± 2.2)	**39.3 - 45.1** (42.2 ± 2.9)	**4.0 - 4.6** (4.3 ± 0.3)	**35.4 - 41.2** (38.3 ± 2.9)	**48.1 - 55.9** (52.0 ± 3.9)	**4.9 - 5.7** (5.3 ± 0.4)
M12	17 or 19	**46.3 - 53.5** (49.9 ± 3.6)	**62.8 - 72.6** (67.7 ± 4.9)	**6.4 - 7.4** (6.9 ± 0.5)	**57.1 - 66.5** (61.8 ± 4.7)	**77.6 - 90.2** (83.9 ± 6.3)	**8.0 - 9.2** (8.6 ± 0.6)
M14	19 or 22	**79.6 - 92.6** (86.1 ± 6.5)	**107.9 - 125.5** (116.7 ± 8.8)	**11.0 - 12.8** (11.9 ± 0.9)	**91.1 - 108.5** (99.8 ± 8.7)	**123.6 - 147.0** (135.3 ± 11.7)	**12.6 - 15.0** (13.8 ± 1.2)

NOTE :
- Figure "7" on the top of the bolt indicates that the bolt is of special material.
- Before tightening, check the figure on the top of bolt.

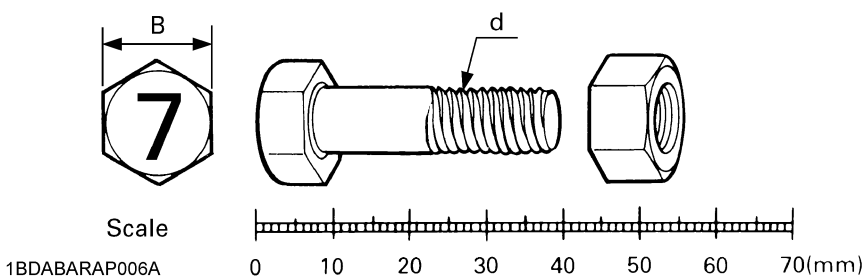

https://truckmanualshub.com/

STORAGE

WARNING

To avoid serious injury:

- **To reduce fire hazards, allow the engine and exhaust system to cool before storing the machine in an enclosed space or near combustible materials.**
- **To avoid the danger of exhaust fume poisoning, do not operate the engine in a closed building without proper ventilation.**
- **Do not clean the machine with engine running.**
- **To avoid fire hazards, Do not leave grass and leaves in the mower and the grass catcher.**
- **When storing, remove the key from the key switch to avoid operation by unauthorized persons.**

When the machine will not be operated for over 2 months, clean the machine and perform the following operations before storage.

1. Repair parts as necessary.
2. Check bolts and nuts and tighten as necessary.
3. Apply grease or engine oil to parts most likely to rust.
4. Inflate the tires to a little above the standard pressure levels. (Approximately 110%)
5. Lower the mower to the ground.
6. Remove the battery from the machine, recharge it, adjust the electrolyte to the proper level, and store in a cool dry place.
   The battery discharges over time even while in storage. Recharge it once a month in hot seasons and once every 2 months in cold seasons.
7. Drain fuel tank, fuel lines, and carburetor, or use a fuel stabilizer, to prevent deterioration of the gasoline. If you choose to use a fuel stabilizer, follow the manufacturers recommendations, and add the correct amount for the capacity of the fuel system. Fill the fuel tank with clean, fresh gasoline. Run the engine for 2 to 3 minutes to get stabilized fuel into the carburetor.
8. Store the machine where it is dry and sheltered from rain. Cover the machine with a vinyl tarp.
9. Moisture content in most grasses can damage the mower and grass catcher if these components are not properly cleaned after use.
   Make sure the mower and the grass catcher are clean and completely empty before storage.
10. Store the machine only on flat, level ground.

REMOVING THE MOWER FROM STORAGE

1. Check the tire inflation pressure and adjust as required.
2. Install the battery. Before installing the battery, be sure it is fully charged.
3. Do daily checking. (See "DAILY CHECK" in "PERIODIC SERVICE" section.)
4. Check all fluid levels. (engine oil, hydrostatic oil)
5. Start the engine. Shut the engine off and walk around the machine and make a visual inspection looking for evidence of oil or other fluids.
6. Run engine a couple of minutes before you put engine under load.

https://truckmanualshub.com/

TROUBLESHOOTING

ENGINE TROUBLESHOOTING

If something is wrong with the engine, refer to the table below for the cause and its corrective measure.

Symptom (If)	Cause	Remedy
Engine is difficult to start or will not start.	● No operator on the seat.	● Sit on the operator's seat.
	● Parking brake lever not in the proper position.	● Apply the parking brake.
	● PTO switch not in the proper position.	● Make sure PTO switch is in "DISENGAGED" (OFF) position.
	● Motion control levers not in the proper position.	● Make sure motion control levers are in "NEUTRAL LOCK" position.
	● Key switch is not in the proper position.	● Make sure key switch is in "ON" position.
	● No fuel.	● Replenish fuel.
	● Improper or stale fuel. (Fuel quality is poor.)	● Replace fuel and the fuel filter.
	● Water or dirt in the fuel system.	● Replace fuel and see your Kubota dealer.
	● Fuel hose or fuel filter clogged or damaged.	● Clean or replace fuel lines, and see your Kubota dealer.
	● Air cleaner is clogged.	● Clean or replace the air cleaner.
	● Spark plug defective.	● Adjust the spark plug gap or replace the spark plug.
		● Check the spark plug wire connection.
	● Fuse is blown.	● Replace the fuse.
	● Engine oil viscosity is wrong.	● Use oils of different viscosities, depending on ambient temperature.
	● Battery becomes weak and the engine does not turn over quick enough.	● Clean battery cables and terminals.
		● Charge the battery.
		● In cold weather, always remove the battery from the engine, charge and store it indoors. Install it on the machine only when the machine is going to be used.
	● Over choking or choke is adjusted incorrectly.	● Adjust choke cable.
Insufficient engine power.	● Insufficient or dirty fuel.	● Check the fuel system.
	● Fuel filter is clogged.	● Replace the fuel filter.
	● Air cleaner is clogged.	● Clean or replace the air cleaner.
	● Spark plug defective.	● Adjust the spark plug gap or replace it.

https://truckmanualshub.com/

Symptom (If)	Cause	Remedy
Engine stops suddenly.	● Insufficient fuel.	● Refuel. ● Check the fuel valve position. ● Check the carburetor fuel valve position.
Rough engine running.	● Spark plug defective.	● Adjust the spark plug gap or replace it.
	● Spark plug wire defective.	● See your Kubota dealer.
	● Carburetion problems.	● See your Kubota dealer.
	● Ignition coil defective.	● See your Kubota dealer.
	● Choke is adjusted incorrectly.	● Adjust choke cable.
	● Fuel hose or fuel filter clogged or damaged.	● Clean or replace fuel lines, and see your Kubota dealer.
	● Improper or stale fuel. (Fuel quality is poor.)	● Replace fuel and the fuel filter.
	● Air cleaner is clogged.	● Clean or replace the air cleaner.
Exhaust fumes are colored. (Black, Dark or Gray)	● Overload.	● Reduce load.
	● Low grade fuel is used.	● Use specified fuel.
	● Fuel filter is clogged.	● Replace the fuel filter.
	● Air cleaner is clogged.	● Clean or replace the air cleaner element.
	● Choke is not fully opened.	● Check the choke position.
Exhaust fumes are colored. (White or Blue)	● Excessive engine oil.	● Reduce to the specified oil level.
	● Piston ring is worn or stuck.	● See your Kubota dealer.
Engine overheats.	● Engine is overloaded.	● Lower speed or reduce load.
	● Engine oil is insufficient.	● Replenish engine oil.
	● Engine air intake screen and cooling fins are dirty.	● Clean the air intake screen and cooling fins.
	● Air cleaner element is plugged.	● Clean or replace the air cleaner element.
	● Engine speed is too low.	● Operate at the "FAST" speed.
	● Operating ground speed is too fast.	● Operate the machine at the slower ground speed.
Engine knocks.	● Stale or low octane fuel.	● Use specified fuel.
	● Engine overloaded.	● Lower ground speed or reduce load.
	● Engine speed is too low.	● Operate at the "FAST" speed.
Engine will not idle.	● Spark plug defective.	● Adjust the spark plug gap or replace it.
	● Faulty spark plug.	● Replace the spark plug.
	● Carburetion problem.	● See your Kubota dealer.

If you have any questions, contact your local KUBOTA Dealer.

https://truckmanualshub.com/

BATTERY TROUBLESHOOTING

Symptom (If)	Cause	Remedy	Preventive measure
Starter does not function.	● Battery overused until lights are dim.	● Charge battery sufficiently.	● Charge the battery properly.
	● Battery has not been recharged.		
	● Poor terminal connection.	● Clean the terminal and tighten securely.	● Keep the terminal clean and tight. Apply grease and treat with anti-corrosives.
	● Battery life expired.	● Replace battery.	
From beginning starter does not function, and lights soon become dim.	● Insufficient charging.	● Charge battery sufficiently.	● Battery must be serviced properly before initial use.
When viewed from top, the top of plates look whitish.	● Battery was used with an insufficient amount of electrolyte.	● Add distilled water and charge the battery.	● Regularly check the electrolyte level.
	● Battery was used too much without recharging.	● Charge battery sufficiently.	● Charge the battery properly.
Recharging is impossible.	● Battery life expired.	● Replace battery.	
Terminals are severely corroded and heat up.	● Poor terminal connection.	● Clean the terminal and tighten securely.	● Keep the terminal clean and tight. Apply grease and treat with anti-corrosives.
Battery electrolyte level drops rapidly.	● There is a crack or pin holes in the electrolytic cells.	● Replace battery.	
	● Charging system trouble.	● Contact your local KUBOTA Dealer.	

If you have any questions, contact your local KUBOTA Dealer.

https://truckmanualshub.com/

MACHINE TROUBLESHOOTING

Symptom (If)	Cause	Remedy
Machine operation is not smooth.	● Hydrostatic transaxle fluid is insufficient.	● Replenish oil.
	● Filter is clogged.	● Replace the filter.
	● Transaxle bypass lever is activated.	● Deactivate bypass lever.
Machine does not move while engine is running.	● Parking brake is on.	● Release the parking brake.
	● Transaxle fluid level is insufficient.	● Replenish oil.
	● Transaxle bypass lever is activated.	● Deactivate bypass lever.
Machine moves when motion control levers are in "NEUTRAL LOCK" position. (Engine is operated.)	● Hydrostatic lever linkage is not correctly adjusted.	● Ask your dealer for hydrostatic lever linkage adjustment.
	● Control linkage pivots are sticking.	● Full up and lubricate linkage.
Transaxle belt is slipping	● Weak tension spring	● Replace the tension spring.
	● Worn transaxle belt	● Replace the transaxle belt.

If you have any questions, contact your local KUBOTA Dealer.

MOWER TROUBLESHOOTING

Symptom (If)	Cause	Remedy
Blade does not rotate.	● PTO system is not normal: PTO system malfunctioning.	● See your Kubota Dealer.
	● PTO system is normal: Broken mower belt.	● Replace.
Mower belt slipping.	● Weaken tension spring.	● Replace.
	● Worn mower belt.	● Replace.
	● Mower plugged.	● Unplug and clean mower deck.
	● Debris in pulleys.	● Clean.
Discharge chute plugged.	● Grass too wet.	● Wait for grass to dry.
	● Grass too long.	● Raise cutting height and cut grass twice.
	● Cutting too low.	● Raise cutting height.
	● Engine rpm too low.	● Mow at full throttle.
	● Ground speed too fast.	● Slow down.
Streaking of grass uncut.	● Ground speed too fast.	● Slow down.
	● Engine rpm too low.	● Mow at full throttle, check and reset engine rpm.
	● Grass too long.	● Cut grass twice.
	● Blades dull or damaged.	● Replace blades or have blades sharpened.
	● Debris in mower deck.	● Clean mower deck.

https://truckmanualshub.com/

Symptom (If)	Cause	Remedy
Uneven cut.	● Mower deck not level.	● Level mower deck.
	● Ground speed too fast.	● Slow down.
	● Blades dull.	● Have blades sharpened.
	● Blades worn or damaged.	● Replace blades.
	● Low tire inflation.	● Add air to correct pressure.
	● Anti-scalp rollers not adjusted correctly.	● Adjust anti-scalp rollers.
	● Tires pressure not adjusted correctly.	● Set both tire pressure to the correct pressure. (See "TIRES" in "TIRES AND WHEELS" section.)
Blades scalping grass.	● Cutting height too low.	● Raise cutting height.
	● Turning speed too fast.	● Reduce speed on turns.
	● Ridges in terrain.	● Change mowing pattern.
	● Rough or uneven terrain.	● Adjust wheels pressure and anti-scalp rollers.
	● Anti-scalp rollers not adjusted correctly.	● Adjust wheels pressure and anti-scalp rollers.
	● Bent blade(s).	● Replace blade(s).
Excessive vibration.	● Debris on mower deck or in pulleys.	● Clean mower deck and pulleys.
	● Damaged mower belt.	● Replace mower belt.
	● Damaged pulleys.	● Replace pulleys.
	● Pulleys out of alignment.	● Check pulleys.
	● Blades out of balance.	● Have blades balanced.
Mower loads down machine.	● Engine rpm too low.	● Mow at full throttle, check and reset engine rpm.
	● Ground speed too fast.	● Slow down.
	● Debris wrapped around mower spindles.	● Clean mower.
	● Front of deck too low.	● Adjust mower deck. (See "MOWER DECK LEVEL" in "ADJUSTMENT" section.)

If you have any questions, contact your local KUBOTA Dealer.

https://truckmanualshub.com/

INDEX

Adjustment of Foldable ROPS 20
Air Cleaner Inner Element 58
Air Cleaner Inner Element 61
Air Cleaner Outer Element 48
Air Cleaner Outer Element 58
Air Intake Screen.....41
Amount of Fuel and Refueling.....40
ANTI-SCALP ROLLERS 68
Battery Condition.....51
Blade 63
Carbon Canister Air Filter.....47
Carbon Canister Air Filter.....62
Choke Cable.....53
Combustion Chamber 58
Dial Cam Rotation Force 43
Easy Checker (TM) 15
Electric Clutch Adjustment 60
Engine Cooling Areas.....54
Engine Cooling Areas.....62
Engine Oil.....44
Engine Oil.....46
Engine Oil.....62
Engine Oil Cooler Fins 62
Engine Oil Cooler Fins (if equipped) 55
Engine Oil Filter.....57
Engine Oil Level 40
Engine Start System.....44
Fuel Filter 58
Fuel Gauge.....15
Fuel Lines.....62
Fuel Lines and Fuel Filter.....49
Fuses.....62
Greasing.....45
Greasing.....55
Hour Meter 15
HST NEUTRAL 65
Hydraulic Hose 57
Hydraulic Hose 62
Hydrostatic Transaxle Bypass Lever.....27
Immediately Stop the Engine if:.....15
Inflation Pressure 32
Inflation Pressure 42
Key Switch.....14
LEVEL MOWER DECK (Front-to-Rear).....69
LEVEL MOWER DECK (Side-to-Side).....68
Lubricating Crank shaft 61
Lubricating Oil for New Machines.....18
Machine Break-in 18
MAXIMUM SPEED (FORWARD) 67
Motion Control Lever 23
MOTION CONTROL LEVER ALIGNMENT ... 67
MOTION CONTROL LEVER FORCE 66
Movable Parts..... 43
Mower Belt Replacement 64
Mower Lift Pedal..... 22
MOWER LIFT PEDAL ADJUSTMENT 70
Muffler and Spark Arrester 62
Muffler and Spark Arrester (if equipped) 46
OPC System..... 45
Operator's Seat..... 20
Parking Brake 50
Parking Brake Pedal..... 23
PTO Switch..... 31
Remove and Install Front Caster Wheels..... 33
Seat Belt 21
Spark Plug Condition & Gap..... 56
Spark Plugs 61
Starting 31
Step 38
Throttle Cable 53
Throttle Lever 23
Throttle Lever and Choke lever 14
Tire Pressure 42
To Fold the ROPS 19
To Raise the ROPS to Upright Position..... 20
Transaxle Fluid 59
Transaxle Fluid Level 43
Transaxle Oil Filter Cartridge..... 58
Valve Seat and Clearance..... 58
Warm-up and Transmission Oil in the Low Temperature Range 16