https://truckmanualshub.com/

Operation & Safety Manual

Original Instructions
Keep this manual with machine at all times.

Models
G10-55A
G12-55A

S/N 0160045636 & After including
0160045082, 0160045094,
0160045209, 0160045295,
0160045296, 0160045449

31200745

Revised
October 3, 2014

An Oshkosh Corporation Company

https://truckmanualshub.com/

CALIFORNIA PROPOSITION 65

BATTERY WARNING

Battery posts, terminals and related accessories contain lead and lead compounds, chemical known to the State of California to cause cancer and reproductive harm.

WASH HANDS AFTER HANDLING!

CALIFORNIA PROPOSITION 65

EXHAUST WARNING

Diesel Engine exhaust and some of its constituents are known to the State of California to cause cancer, birth defects and other reproductive harm.

https://truckmanualshub.com/

REVISION LOG

April 27, 2012 - A - Original Issue of Manual

October 3, 2014 - B - Revised pages 1-6,1-7, 1-13, 1-14, 1-15, 2-3 thru 2-7, 3-19, 4-10, 5-2, 5-9, 5-11, 5-12, 5-16, 5-17, 5-18, 6-2, 7-4 thru 7-9, 8-1, 8-2, 9-1, 9-3, 9-5, 9-6 & 9-7.

https://truckmanualshub.com/

This manual is a very important tool! Keep it with the machine at all times.

The purpose of this manual is to provide owners, users, operators, lessors, and lessees with the precautions and operating procedures essential for the safe and proper machine operation for its intended purpose.

Due to continuous product improvements, JLG Industries, Inc. reserves the right to make specification changes without prior notification. Contact JLG Industries, Inc. for updated information.

Operator Qualifications

The operator of the machine must not operate the machine until this manual has been read, training is accomplished and operation of the machine has been completed under the supervision of an experienced and qualified operator. Operation within the U.S.A. requires training per OSHA 1910.178.

Operators of this equipment must possess a valid, applicable driver's license, be in good physical and mental condition, have normal reflexes and reaction time, good vision and depth perception and normal hearing. Operator must not be using medication which could impair abilities nor be under the influence of alcohol or any other intoxicant during the work shift.

In addition, the operator must read, understand and comply with instructions contained in the following material furnished with the telehandler:

- This Operation & Safety Manual
- Telehandler Safety Manual (ANSI only)
- All instructional decals and plates
- Any optional equipment instructions furnished

The operator must also read, understand and comply with all applicable Employer, Industry and Governmental rules, standards and regulations.

Modifications

Modifications to this machine may affect compliance with Industry Standards and/or Governmental Regulations. Any modification must be approved by JLG.

https://truckmanualshub.com/

This product must comply with all safety related bulletins. Contact JLG Industries, Inc. or the local authorized JLG representative for information regarding safety-related bulletins which may have been issued for this product.

JLG Industries, Inc. sends safety related bulletins to the owner of record of this machine. Contact JLG Industries, Inc. to ensure that the current owner records are updated and accurate.

JLG Industries, Inc. must be notified immediately in all instances where JLG products have been involved in an accident involving bodily injury or death of personnel or when damage has occurred to personal property or the JLG product.

FOR:

- Accident Reporting and Product Safety Publications
- Current Owner Updates
- Questions Regarding Product Applications and Safety
- Standards and Regulations Compliance Information
- Questions Regarding Product Modifications

CONTACT:

Product Safety and Reliability Department
JLG Industries, Inc.
13224 Fountainhead Plaza
Hagerstown, MD 21742
USA

or Your Local JLG Office
(Addresses on back cover)

In USA:
Toll Free: 1-877-JLG-SAFE (1-877-554-7233)

Outside USA:
Phone: +1-717-485-6591

E-mail:
ProductSafety@JLG.com

https://truckmanualshub.com/

Other Publications Available

Service Manual.....31200795

Illustrated Parts Manual.....31200728

Note: *The following standards may be referenced in this manual:*
ANSI is compliant to ANSI/ITSDF B56.6
AUS is compliant to AS 1418.19
CE is compliant to EN1459
Refer to the machine Serial Number Plate to identify the applicable compliance standard.

Machine Configuration

Two configurations of each machine are included in this manual. Determine if machine is equipped with Ultra Low Sulfur Fuel Decal (**1**) as indicated below.

- If equipped with the Ultra Low Sulfur decal, all specific references to this machine configuration will be referred to as Ultra Low Sulfur (**ULS**) from this point forward.
- If **not** equipped with the Ultra Low Sulfur decal, all specific references to this machine configuration will be referred to as Low Sulfur (**LS**) from this point forward.

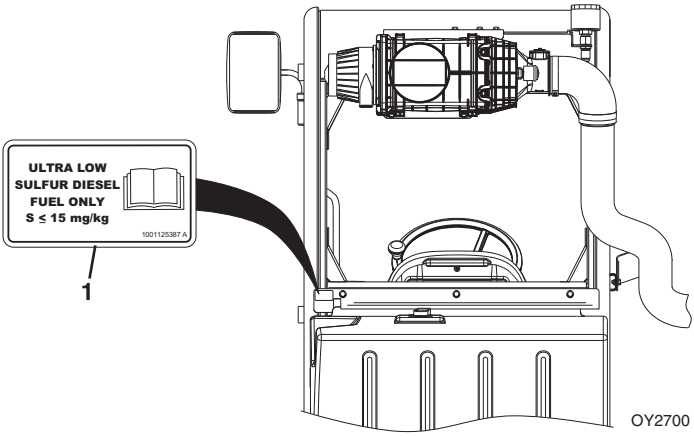

REAR VIEW OF CAB

https://truckmanualshub.com/

TABLE OF CONTENTS

Revision Log

Read This First

Operator Qualifications ..... b
Modifications ..... b
Other Publications Available ..... d
Machine Configuration ..... d

Table of Contents

Section 1 - General Safety Practices

1.1 Hazard Classification System 1-1
Safety Alert System and Safety Signal Words 1-1
1.2 General Precautions 1-1
1.3 Operation Safety 1-2
Electrical Hazards 1-2
Tip Over Hazard 1-3
Travel Hazard 1-6
Load Falling Hazard 1-7
Lifting Personnel 1-8
Driving Hazards on Slopes 1-9
Pinch Points and Crush Hazards 1-10
Fall Hazard 1-12
Chemical Hazards 1-13
1.4 ClearSky (if equipped) 1-14
Federal Communications Commission (FCC) Information for Users 1-14

Section 2 - Pre-Operation and Inspection

2.1 Pre-Operation Check and Inspection 2-1
2.2 Safety Decals 2-3
ANSI (If Equipped) 2-3
ISO (If Equipped) 2-6
2.3 Walk-Around Inspection 2-10
2.4 Warm-Up and Operational Checks 2-12
Warm-Up Check 2-12
Operational Check 2-12
2.5 Operator Cab 2-13
2.6 Windows 2-14
Cab Door Window (if equipped) 2-14

Section 3 - Controls and Indicators

3.1 General 3-1
3.2 Controls 3-2
Dash Controls and Indicators 3-4

https://truckmanualshub.com/

Ignition 3-6
Park Brake 3-7
Parking Procedure 3-7
Transmission Control Lever 3-8
Boom Joystick 3-10
Frame Level Joystick 3-11
Auxiliary Hydraulic Joystick 3-12
Outrigger Joysticks 3-13
Right Hand Panel 3-14
Accessory Control Lever (if equipped) 3-15
3.3 Steer Modes 3-16
Steer Mode Change 3-16
3.4 Operator Seat 3-17
Adjustments 3-17
Seat Belt 3-18
3.5 Reverse Sensor System (if Equipped) 3-19
3.6 Boom Angle and Extension Indicators 3-20

Section 4 - Operation

4.1 Engine 4-1
Starting the Engine 4-1
Extreme Cold Weather Starting (if equipped) 4-2
Battery Boosted Starting 4-3
Normal Engine Operation 4-4
Shut-Down Procedure 4-4
4.2 Operating with a Non-Suspended Load 4-5
Lift Load Safely 4-5
Picking Up a Load 4-5
Transporting a Load 4-6
Leveling Procedure 4-6
Placing a Load 4-7
Disengaging a Load 4-7
4.3 Operating with a Suspended Load 4-8
Lift Load Safely 4-8
Picking Up a Suspended Load 4-8
Transporting a Suspended Load 4-9
Leveling Procedure 4-9
Placing a Suspended Load 4-10
Disengaging a Suspended Load 4-10
4.4 Loading and Securing for Transport 4-11
Tiedown 4-11
Lifting 4-12

https://truckmanualshub.com/

Section 5 - Attachments

5.1 Approved Attachments 5-1
5.2 Unapproved Attachments 5-1
5.3 JLG Supplied Attachments 5-2
5.4 Telehandler/Attachment/Fork Capacity.....5-4
5.5 Use of the Capacity Chart.....5-5
Capacity Indicator Locations.....5-5
Sample Capacity Chart 5-6
Example 5-8
5.6 Attachment Installation 5-9
Mechanical Quick Switch 5-10
Hydraulic Quick Switch 5-11
Hydraulic Operated Attachment.....5-12
5.7 Adjusting/Moving Forks.....5-13
5.8 Attachment Operation 5-15
Carriage w/Forks.....5-16
Side Shift Carriage.....5-17
Side Tilt Carriage 5-19
Swing Carriage 5-21
Dual Fork Positioning Carriage 5-23
Fork Extension 5-25
Mast Carriage 5-27
Mast Carriage w/Side Tilt.....5-29
Fork Mounted Hook 5-31
Truss Boom.....5-33
Bucket 5-35
Grapple Bucket 5-37
Personnel Work Platform - Fork Mounted.....5-39

Section 6 - Emergency Procedures

6.1 Towing a Disabled Product.....6-1
Moving Short Distances 6-1
Moving Longer Distances 6-1
6.2 Emergency Lowering of Boom.....6-2
6.3 Emergency Exit from Enclosed Cab 6-2
Fixed Window (if equipped) 6-2
Latch Window (if equipped) 6-2

https://truckmanualshub.com/

Section 7 - Lubrication and Maintenance

7.1 Introduction 7-1
Clothing and Safety Gear 7-1
7.2 General Maintenance Instructions 7-2
7.3 Service and Maintenance Schedule 7-3
10 & 1st 50 and 50 Hour Maintenance Schedule 7-3
1st 250 & 250 Hour Maintenance Schedule 7-4
1st 500, 500 & 1000 Hour Maintenance Schedule 7-5
1500, 2000 & 5000 Hour Maintenance Schedule 7-6
7.4 Lubrication Schedules 7-8
50 Hour Lubrication Schedule 7-8
250 Hour Lubrication Schedule 7-10
1000 Hour Lubrication Schedule 7-11
7.5 Operator Maintenance Instructions 7-12
Fuel System 7-12
Air Intake System 7-14
Engine Oil 7-18
Hydraulic Oil 7-19
Tires 7-20
Transmission Oil 7-23
Engine Cooling System 7-24
Battery 7-25
Windshield Washer System (if equipped) 7-26

Section 8 - Additional Checks

8.1 General 8-1
8.2 Reverse Sensor System (if equipped) 8-1

Section 9 - Specifications

9.1 Product Specifications 9-1
Fluids 9-1
Capacities 9-4
Tires 9-5
Performance 9-6
Dimensions 9-7

Index

Inspection, Maintenance and Repair Log

https://truckmanualshub.com/

SECTION 1 - GENERAL SAFETY PRACTICES

1.1 HAZARD CLASSIFICATION SYSTEM

Safety Alert System and Safety Signal Words

DANGER OW0010

DANGER indicates an imminently hazardous situation which, if not avoided, will result in death or serious injury.

WARNING OW0021

WARNING indicates a potentially hazardous situation which, if not avoided, could result in death or serious injury.

CAUTION OW0031

CAUTION indicates a potentiality hazardous situation which, if not avoided, may result in minor or moderate injury.

1.2 GENERAL PRECAUTIONS

WARNING

Before operation, read and understand this manual. Failure to comply with the safety precautions listed in this manual could result in machine damage, property damage, personal injury or death.

https://truckmanualshub.com/

1.3 OPERATION SAFETY

Electrical Hazards

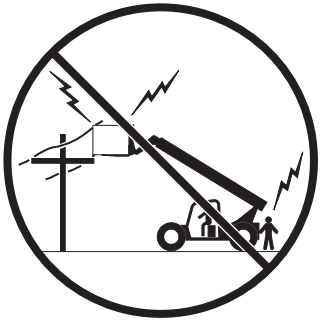

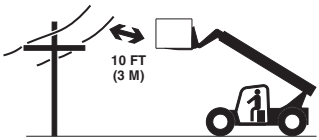

OW0040

- This machine is not insulated and does not provide protection from contact or being near electrical current.
- **NEVER** operate the telehandler in an area where overhead power lines, overhead or underground cables, or other power sources may exist without ensuring the appropriate power or utility company de-energizes the lines.
- Always check for power lines before raising the boom.
- Follow employer, local and governmental regulations for clearance from power lines.

https://truckmanualshub.com/

Tip Over Hazard

General

- For additional load requirements, refer to the appropriate capacity chart.

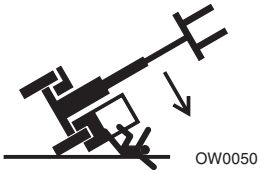

- Never use an attachment without the appropriate JLG approved capacity chart installed on the telehandler.
- Understand how to properly use the capacity charts located in cab.
- **DO NOT** exceed rated lift capacity.
- Be sure that the ground conditions are able to support the machine.

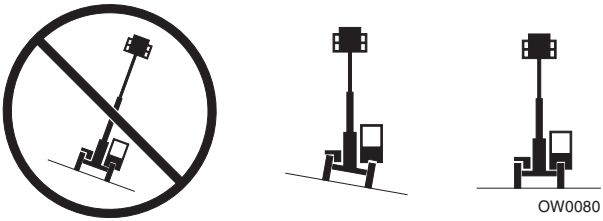

- **DO NOT** raise boom unless frame is level (0 degrees), unless otherwise noted on capacity chart.

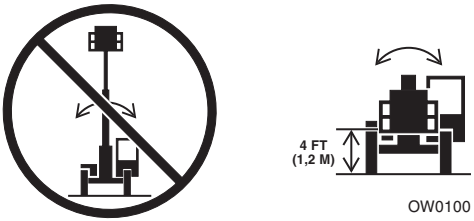

- **DO NOT** level machine with boom/attachment above 4 ft (1,2 m).
  (AUS - **DO NOT** level machine with load more than 11.8 in (300 mm) above ground surface.)

https://truckmanualshub.com/

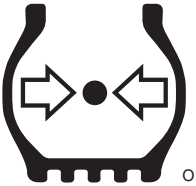
OH2291

- **MAINTAIN proper tire pressure** at all times. If proper tire pressures are not maintained, this machine could tip over.
- Refer to manufacturer's specifications for proper fill ratio and pressure requirements for tires equipped with ballast.

OH20911

- Always wear the seat belt.
- Keep head, arms, hands, legs and all other body parts inside operator's cab at all times.

OH2221

If the telehandler starts to tip over:

- **DO NOT** JUMP
- BRACE YOURSELF and STAY WITH THE MACHINE
- KEEP YOUR SEAT BELT FASTENED
- HOLD ON FIRMLY
- LEAN AWAY FROM THE POINT OF IMPACT

https://truckmanualshub.com/

Non-Suspended Load

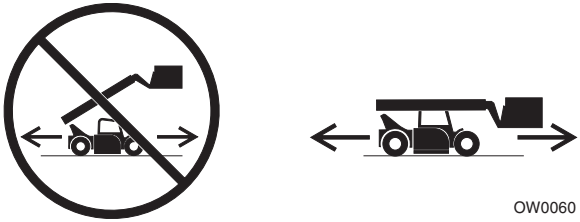

- **DO NOT** drive with boom raised.

Suspended Load

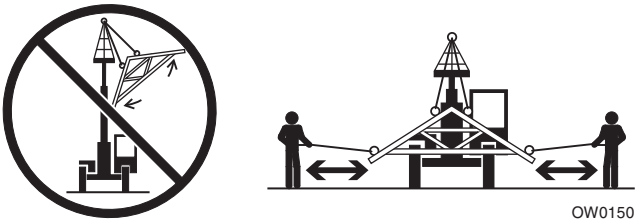

- Tether suspended loads to restrict movement.
- Weight of all rigging (slings, etc.) must be included as part of load.
- Beware of wind. Wind can cause a suspended load to swing and cause dangerous side loads - even with tag lines.
- **DO NOT** attempt to use telehandler frame-leveling to compensate for load swing.
- Keep heavy part of load closest to attachment.
- Never drag the load; lift vertically.

  When driving with a suspended load:
  - Start, travel, turn and stop slowly to prevent load from swinging.
  - **DO NOT** extend boom.
  - **DO NOT** raise the load more than 11.8 in (300 mm) above ground surface or the boom more than 45°.
  - **DO NOT** exceed walking speed.

https://truckmanualshub.com/

Travel Hazard

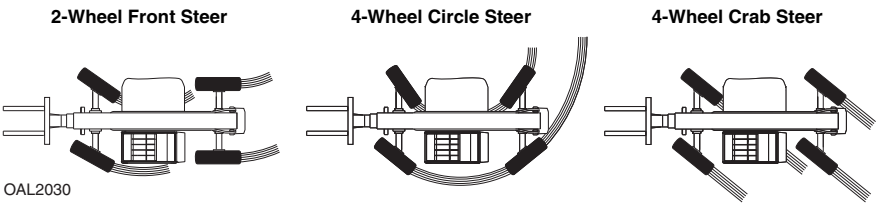

- Steering characteristics differ between steer modes. Identify the steer mode settings of the telehandler being operated.
- **DO NOT** change steer modes while traveling. Steer modes must be changed while telehandler is stationary.
- Visually verify proper wheel alignment after each steer mode change.
- Ensure that adequate clearance is provided for both rear tail swing and front fork swing.
- Look out for and avoid other personnel, machinery and vehicles in the area. Use a spotter if you DO NOT have a clear view.
- Before moving be sure of a clear path and sound horn.
- When driving, retract boom and keep boom/attachment as low as possible while maintaining visibility of mirrors and maximum visibility of path of travel.
- Always look in the direction of travel.
- Always check boom clearances carefully before driving underneath overhead obstructions. Position attachment/load to clear obstacles.
- When driving in high speed, use only front wheel steer (if steering modes are selectable).
- Telehandlers equipped with solid tires should not be used in applications requiring excessive roading or driving extended distances. In the event an application requires excessive roading or driving expanded distances, JLG recommends the use of telehandlers not equipped with solid tires.

https://truckmanualshub.com/

Load Falling Hazard

- Never suspend load from forks or other parts of carriage weldment. Use only JLG approved lift points.
- **DO NOT** burn or drill holes in fork(s).
- Forks must be centered under load and spaced apart as far as possible.

https://truckmanualshub.com/

Lifting Personnel

OW0170

- When lifting personnel, **USE ONLY** an approved personnel work platform, with proper capacity chart displayed in the cab.

OW0190

- **DO NOT** drive machine from cab when personnel are in platform.

https://truckmanualshub.com/

Driving Hazards on Slopes

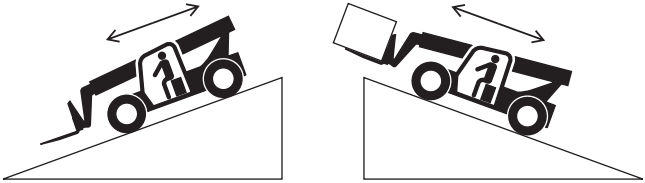

To maintain sufficient traction and braking capabilities, travel on slopes as follows:

- When unloaded, drive with forks pointed downhill.
- When loaded, drive with the forks pointed uphill.
- For additional travel requirements, refer to the appropriate capacity chart.
- To avoid overspeeding the engine and drivetrain when driving down slopes, downshift to a lower gear and use the service brake as necessary to maintain a slow speed. **DO NOT shift into neutral and coast downhill**.
- Avoid excessively steep slopes or unstable surfaces. To avoid tip over **DO NOT** drive across excessively steep slopes under *any* circumstances.
- Avoid turning on a slope. Never engage “inching” or shift to “Neutral” when going downhill.
- **DO NOT** park on a slope.

https://truckmanualshub.com/

Pinch Points and Crush Hazards

Stay clear of pinch points and rotating parts on the telehandler.

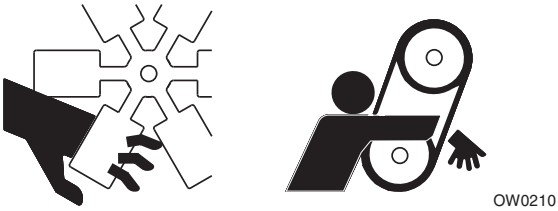

- Stay clear of moving parts while engine is running.

- Keep clear of steering tires and frame or other objects.

- Keep clear from under boom.

https://truckmanualshub.com/

- Keep clear of boom holes.

- Keep arms and hands clear of attachment tilt cylinder.

- Keep hands and fingers clear of carriage and forks.

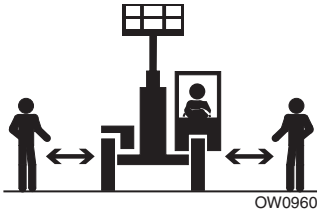

- Keep others away while operating.

https://truckmanualshub.com/

Fall Hazard

OW0280

- Enter using the proper hand holds and steps provided. Always maintain 3-point contact when mounting or dismounting. Never grab control levers or steering wheel when mounting or dismounting the machine.
- **DO NOT** get off the machine until the shutdown procedure on page 4-4 has been performed.

OW0290

- **DO NOT** carry riders. Riders could fall off machine causing death or serious injury.

https://truckmanualshub.com/

Chemical Hazards

Exhaust Fumes

- **DO NOT** operate machine in an enclosed area without proper ventilation.
- **DO NOT** operate the machine in hazardous environments unless approved for that purpose by JLG and site owner. Sparks from the electrical system and the engine exhaust can cause an explosion.

Flammable Fuel

OW0300

- **DO NOT** fill the fuel tank or service the fuel system near an open flame, sparks or smoking materials. Engine fuel is flammable and can cause a fire and/or explosion.

Hydraulic Fluid

OW0950

- **DO NOT** attempt to repair or tighten any hydraulic hoses or fittings while the engine is running or when the hydraulic system is under pressure.
- Stop engine and relieve trapped pressure. Fluid in the hydraulic system is under enough pressure that it can penetrate the skin.
- **DO NOT** use your hand to check for leaks. Use a piece of cardboard or paper to search for leaks. Wear gloves to protect hands from spraying fluid.

https://truckmanualshub.com/

1.4 CLEARSKY (IF EQUIPPED)

Federal Communications Commission (FCC) Information for Users

FCC Statement Regarding Interference

This equipment has been tested and found to comply with the limits for a Class B digital device, pursuant to Part 15 of the FCC Rules. These limits are designed to provide reasonable protection against harmful interference in a residential installation. This equipment generates, uses and can radiate radio frequency energy and, if not installed and used in accordance with the instructions, may cause harmful interference to radio communications. However, there is no guarantee that interference will not occur in a particular installation. If this equipment does cause harmful interference to radio or television reception, which can be determined by turning the equipment off and on, the user is encouraged to try to correct the interference by one or more of the following measures:

- Reorient or relocate the receiving antenna.
- Increase the separation between the equipment and receiver.
- Connect the equipment into an outlet on a circuit different from that to which the receiver is connected.
- Consult the dealer or an experienced radio/TV technician for help.

This device complies with Part 15 of the FCC Rules. Operation is subject to the following two conditions: (1) this device may not cause harmful interference, and (2) this device must accept any interference received, including interference that may cause undesired operation.

Changes or modifications not expressly approved by the party responsible for compliance could void the user’s authority to operate the equipment.

Notice Regarding Radio Frequency Radiation Exposure

Do not operate your unit when a person is within eight inches (20 centimeters) of the antenna. A person or object within eight inches (20 centimeters) of the antenna could impair call quality and may cause the unit to operate at a higher power level than necessary, as well as expose that person to RF energy in excess of that established by the FCC RF Exposure Guidelines.

Important: The unit must be installed in a manner that provides a minimum separation distance of eight inches (20 centimeters) or more between the antenna and persons and just not be co-located or operate in conjunction with any other antenna or transmitter in order to satisfy FCC RF exposure requirements for mobile transmitting devices.

Important: To comply with the FCC RF exposure limits and to satisfy the categorical exclusion requirements for mobile transmitters, the requirements described in the following section, “Antenna Installation”, must be met.

https://truckmanualshub.com/

Antenna Installation

A minimum separation distance of eight inches (20 centimeters) must be maintained between the antenna and all persons.

The combined cable loss and antenna gain must not exceed +7.5 dBi (850 band). The combined cable loss and antenna gain must not exceed +2.5 dBi and total system output must not exceed 2.0W EIRP in the PCS (1900) band in order to comply with the EIRP limit of 24.232 (b). OEM installers must be provided with antenna installation instruction and transmitter operating conditions for satisfying RF exposure compliance

https://truckmanualshub.com/

This Page Intentionally Left Blank

https://truckmanualshub.com/

SECTION 2 - PRE-OPERATION AND INSPECTION

2.1 PRE-OPERATION CHECK AND INSPECTION

Note: *Complete all required maintenance before operating unit.*

WARNING

FALL HAZARD. Use extreme caution when checking items beyond your normal reach. Use an approved ladder.

The pre-operation check and inspection, performed at beginning of each work shift or at each change of operator, should include the following:

1. **Cleanliness** - Check all surfaces for leakage (oil, fuel or battery fluid) or foreign objects. Report any leakage to the proper maintenance personnel.
2. **Structure** - Inspect the machine structure for dents, damage, weld or parent metal cracks or other discrepancies.

PARENT METAL CRACK **WELD CRACK**

3. **Safety Decals** - Ensure all safety decals are legible and in place. Clean or replace as required. See page 2-3 for details.
4. **Operation and Safety Manuals** - Operation & Safety Manual and AEM Safety Manual (ANSI only) are located in cab manual holder.
5. **Walk-Around Inspection** - See page 2-10 for details.
6. **Fluid Levels** - Check fluids, including fuel, hydraulic oil, engine oil, transmission fluid and coolant. When adding fluids, refer to Section 7 - Lubrication and Maintenance and Section 9 - Specifications to determine proper type and intervals. Before removing filler caps or fill plugs, wipe all dirt and grease away from the ports. If dirt enters these ports, it can severely reduce component life.
7. **Attachments/Accessories** - Ensure correct capacity charts are installed on the telehandler. If provided, reference the Operation & Safety Manual of each attachment or accessory installed for specific inspection, operation and maintenance instructions.

https://truckmanualshub.com/

8. **Operational Check** - Once the walk-around inspection is complete, perform a warm-up and operational check (see page 2-12) of all systems in an area free of overhead and ground level obstructions. See Section 3 - Controls and Indicators for more specific operating instructions.

WARNING

If telehandler does not operate properly, immediately bring machine to a stop, lower boom and attachment to ground and stop the engine. Determine cause and correct before continued use.

https://truckmanualshub.com/

2.2 SAFETY DECALS

Ensure all **DANGER**, **WARNING**, **CAUTION** and instructional decals and proper capacity charts are legible and in place. Clean and replace as required.

ANSI (If Equipped)

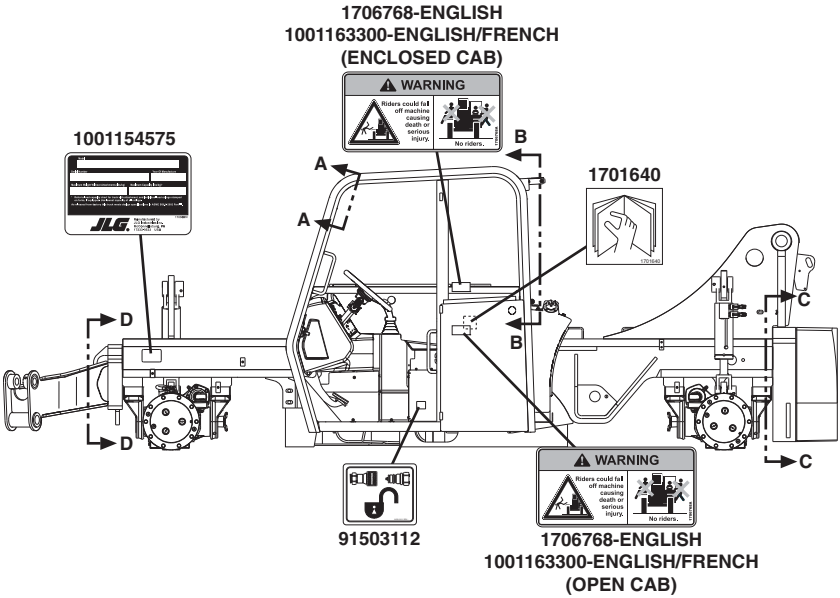

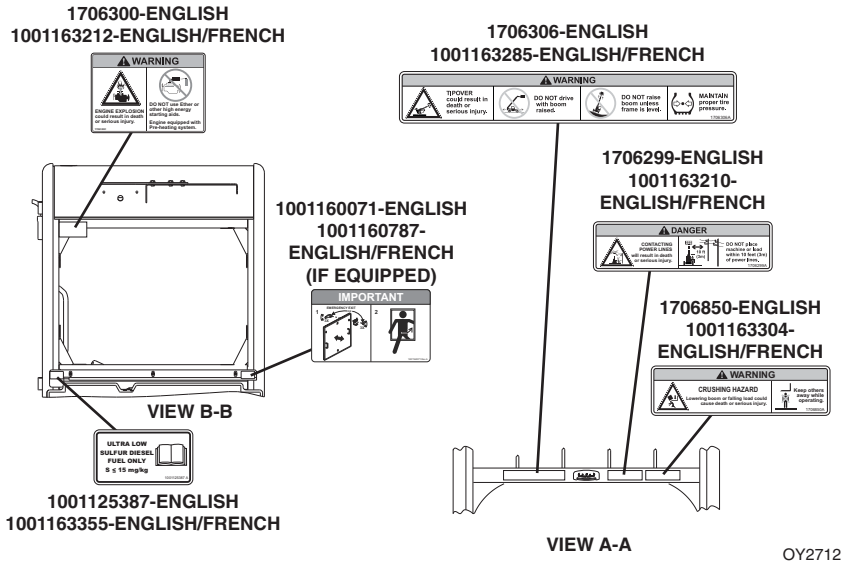

https://truckmanualshub.com/

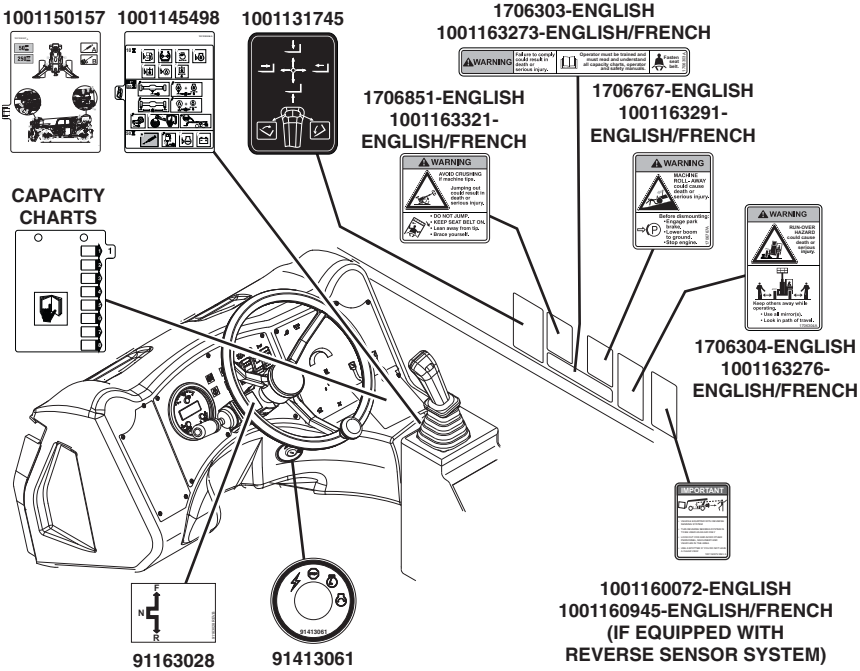

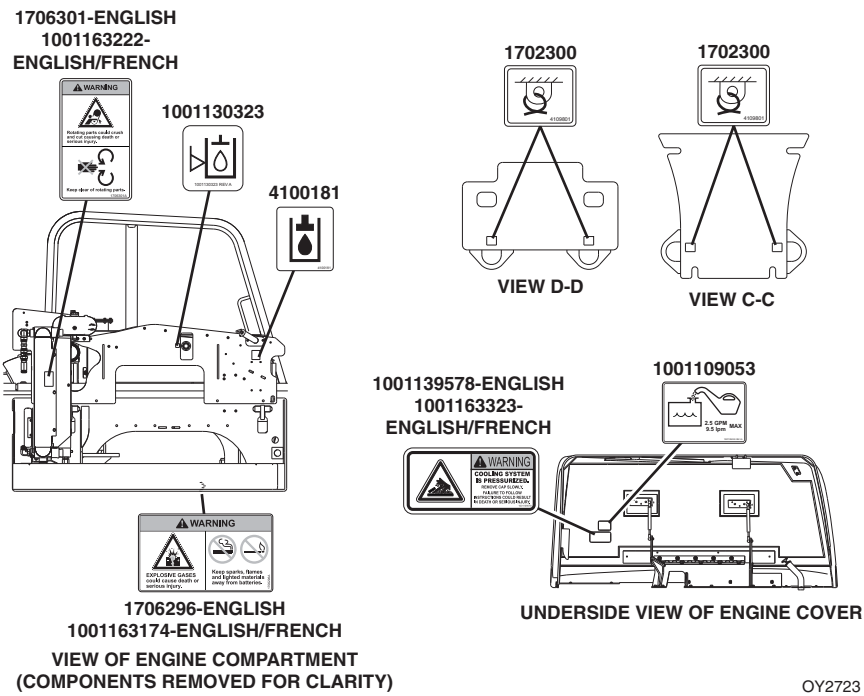

https://truckmanualshub.com/

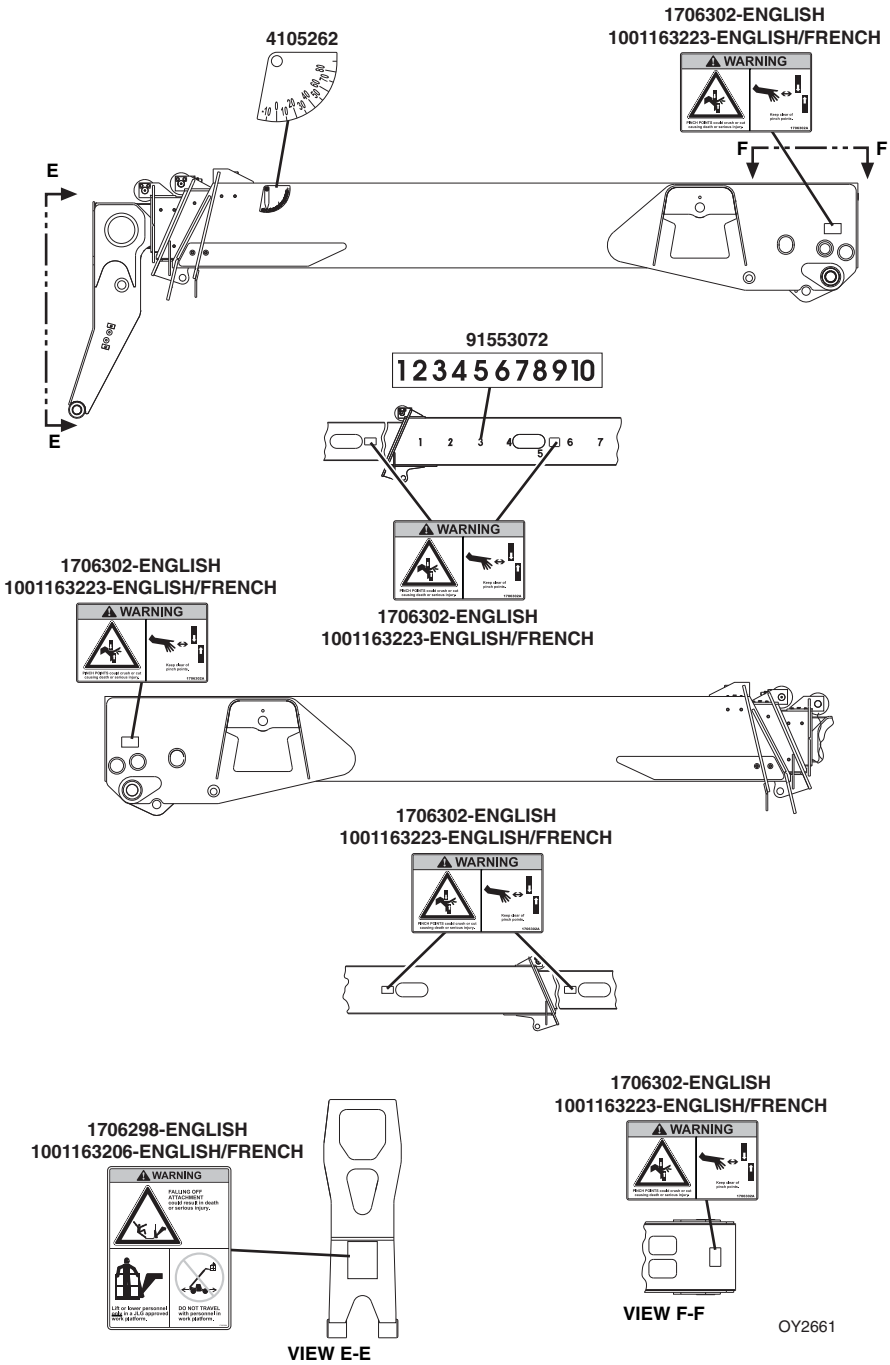

https://truckmanualshub.com/

ISO (If Equipped)

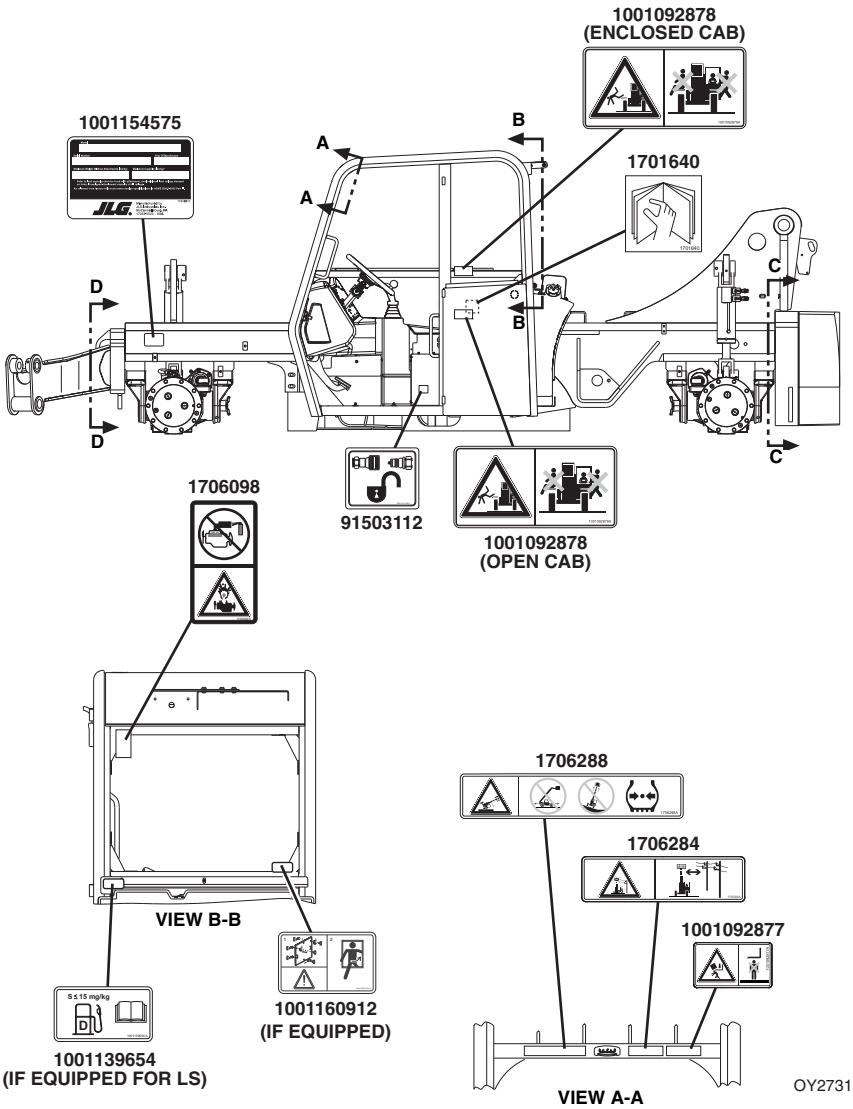

https://truckmanualshub.com/

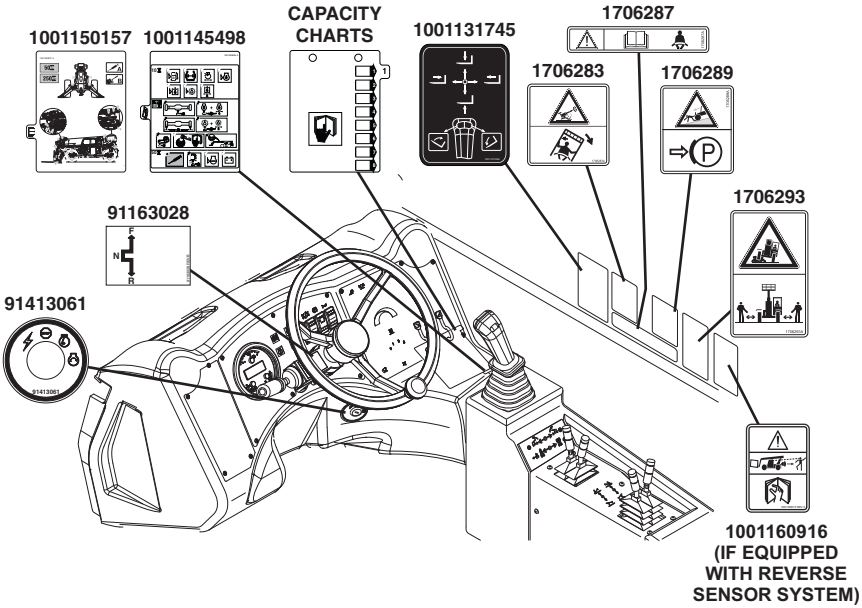

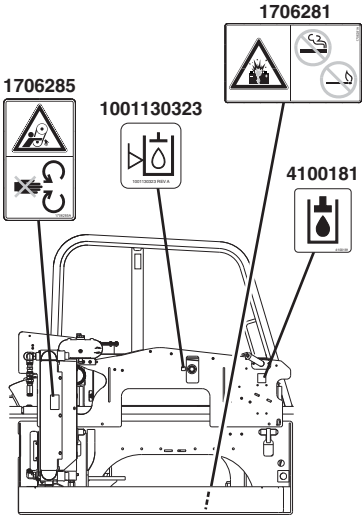

VIEW OF ENGINE COMPARTMENT
(COMPONENTS REMOVED FOR CLARITY)

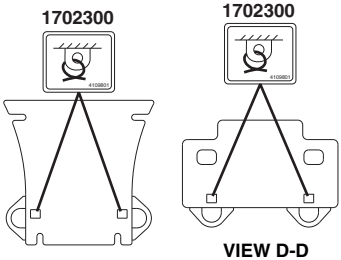

VIEW C-C

VIEW D-D

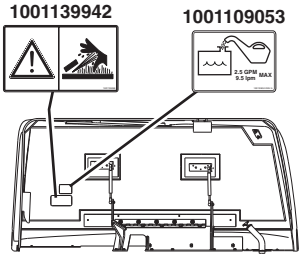

OY2741

UNDERSIDE VIEW OF ENGINE COVER

https://truckmanualshub.com/

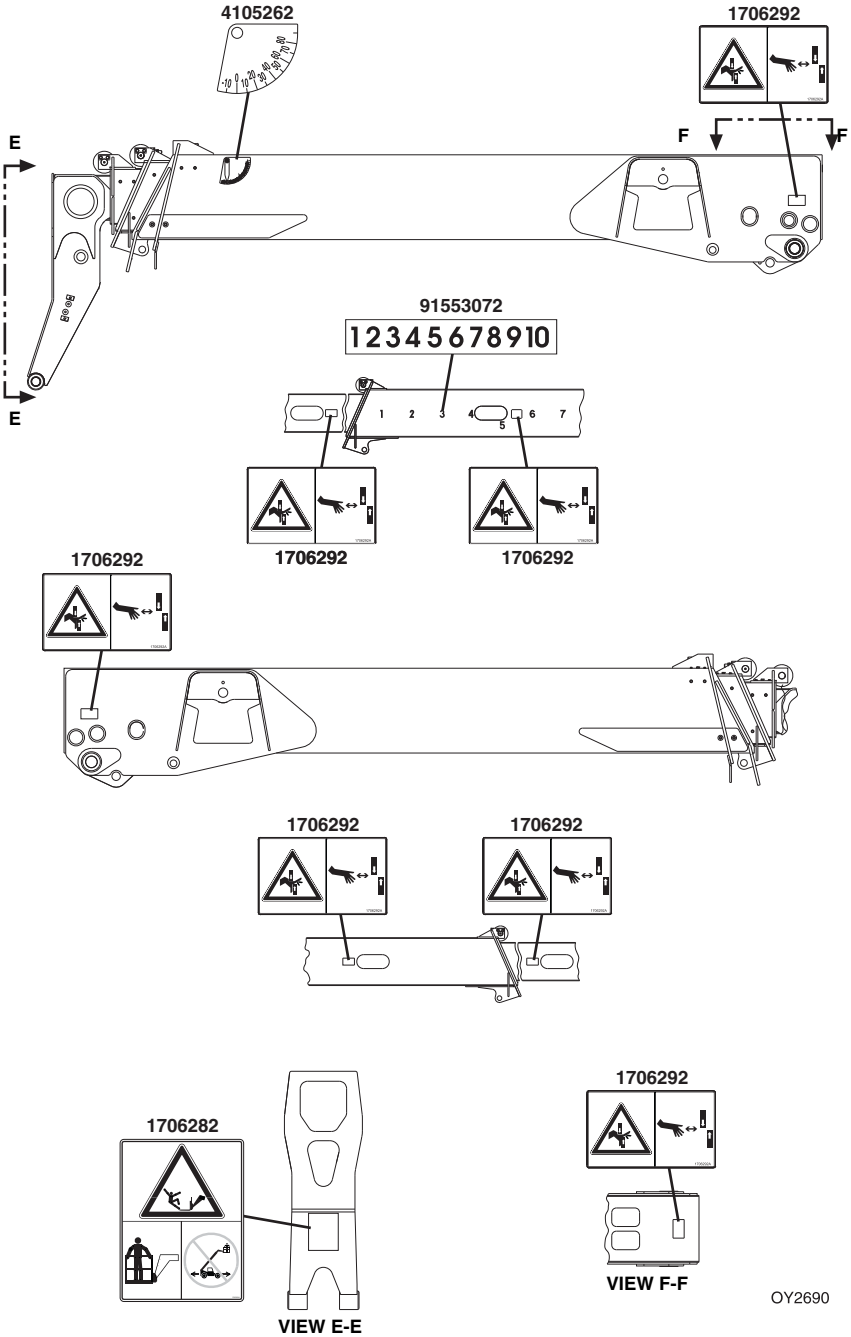

https://truckmanualshub.com/

This Page Intentionally Left Blank

https://truckmanualshub.com/

2.3 WALK-AROUND INSPECTION

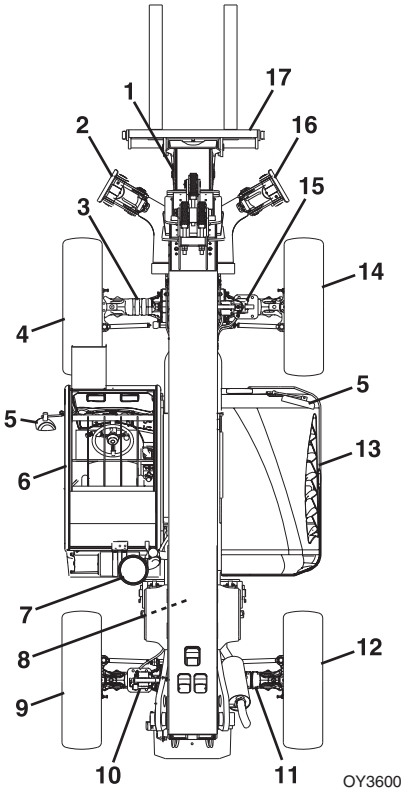

Begin your walk-around inspection at item 1, as noted below. Continue to your right (counterclockwise when viewed from top) checking each item in sequence.

INSPECTION NOTE: On all components, make sure there are no loose or missing parts, that they are securely fastened and no visible leaks or excessive wear exists in addition to any other criteria mentioned. Inspect all structural members including attachment for cracks, excessive corrosion and other damage.

1. Boom Sections and Lift, Tilt, Extend/Retract, Compensating (Slave) Cylinders -
   - Check front, top, side and rear wear pads for presence of grease.
   - Pivot pins secure; hydraulic hoses undamaged, not leaking.
2. Left Outrigger - Pins secure; hydraulic hoses and cylinder undamaged, not leaking.
3. Front Axle - Steer cylinders undamaged, not leaking; pivot pins secure; hydraulic hoses undamaged, not leaking.

https://truckmanualshub.com/

4. Wheel/Tire Assembly - Properly inflated and secured; no loose or missing lug nuts. Inspect for worn tread, cuts, tears or other discrepancies.
5. Mirrors - Clean and undamaged.
6. Cab and Electrical -
   - General appearance; no visible damage.
   - Frame level indicator and window glass undamaged and clean.
   - Gauges, switches, joysticks, foot controls and horn operational.
   - Emergency escape hammer in place (enclosed cab only).
   - Check seat belt for damage, replace belt if frayed or cut webbing, damaged buckles or loose mounting hardware.
7. Air Cleaner - Air cleaner element condition indicator, check for clogged condition. Replace element as required.
8. Main Control Valve - See Inspection Note.
9. Wheel/Tire Assembly - Properly inflated and secured; no loose or missing lug nuts. Inspect for worn tread, cuts, tears or other discrepancies.
10. Stabilizer Cylinder - Pins secure; hydraulic hoses undamaged, not leaking.
11. Rear Axle - Steer cylinders undamaged, not leaking; pivot pins secure; hydraulic hoses undamaged, not leaking.
12. Wheel/Tire Assembly - Properly inflated and secured; no loose or missing lug nuts. Inspect for worn tread, cuts, tears or other discrepancies.
13. Engine Compartment -
    - Drive belts, check condition and replace as required.
    - Engine mounts - See inspection note.
    - Battery cables tight, no visible damage or corrosion.
    - Engine cover properly secured.
14. Wheel/Tire Assembly - Properly inflated and secured; no loose or missing lug nuts. Inspect for worn tread, cuts, tears or other discrepancies.
15. Frame Level Cylinder - Pins secure; hydraulic hoses undamaged, not leaking.
16. Right Outrigger - Pins secure; hydraulic hoses and cylinder undamaged, not leaking.
17. Attachment - Properly installed, see See *“Attachment Installation”* on page 5-9.

https://truckmanualshub.com/

2.4 WARM-UP AND OPERATIONAL CHECKS

Warm-Up Check

During warm-up period, check:

1. Heater, defroster and windshield wiper (if equipped).
2. Check all lighting systems (if equipped) for proper operation.
3. Voltmeter should show 13.5 to 14 volts.
4. Adjust mirror(s) for maximum visibility.

WARNING

CUT/CRUSH/BURN HAZARD. Keep engine cover closed while engine is running except when checking transmission oil level and hydraulic filter condition indicator.

Operational Check

When engine warms, perform an operational check:

1. Service brake and parking brake operation.
2. Forward and reverse travel.
3. Each gear.
4. Steering in both directions with engine at low idle (steering lock to lock will not be reached). Check in each steering mode.
5. Horn and back-up alarm. Must be audible from inside operators cab with engine running.
6. All joystick functions - operate smoothly and correctly.
7. Perform any additional checks described in Section 8.

https://truckmanualshub.com/

2.5 OPERATOR CAB

The telehandler is equipped with an open or enclosed ROPS/FOPS cab.

WARNING

Never operate telehandler unless the overhead guard, cab structure and right side glass or screen are in good condition. Any modification to this machine must be approved by JLG to assure compliance with ROPS/FOPS certification for this cab/machine configuration. If the overhead guard or cab structure is damaged, the **CAB CANNOT BE REPAIRED**. It must be **REPLACED**.

https://truckmanualshub.com/

2.6 WINDOWS

Keep all windows and mirrors clean and unobstructed.

Cab Door Window (if equipped)

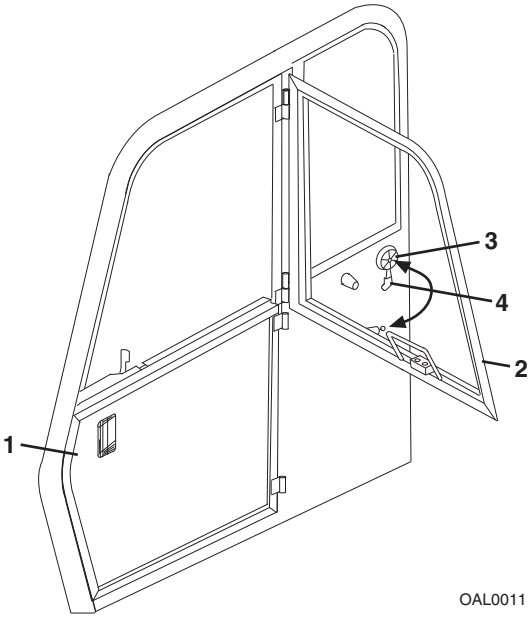

- Cab door (**1**) must be closed during operation.
- During operation the cab door window (**2**) must either be latched open or closed.
- Open the cab door window and secure it in the latch (**3**).
- Press latch release button inside the cab or pull on lever (**4**) outside the cab to unlatch the window.

https://truckmanualshub.com/

SECTION 3 - CONTROLS AND INDICATORS

3.1 GENERAL

This section provides the necessary information needed to understand control functions.

Note: *The manufacturer has no direct control over machine application and operation. The user and operator are responsible for conforming with good safety practices.*

https://truckmanualshub.com/

3.2 CONTROLS

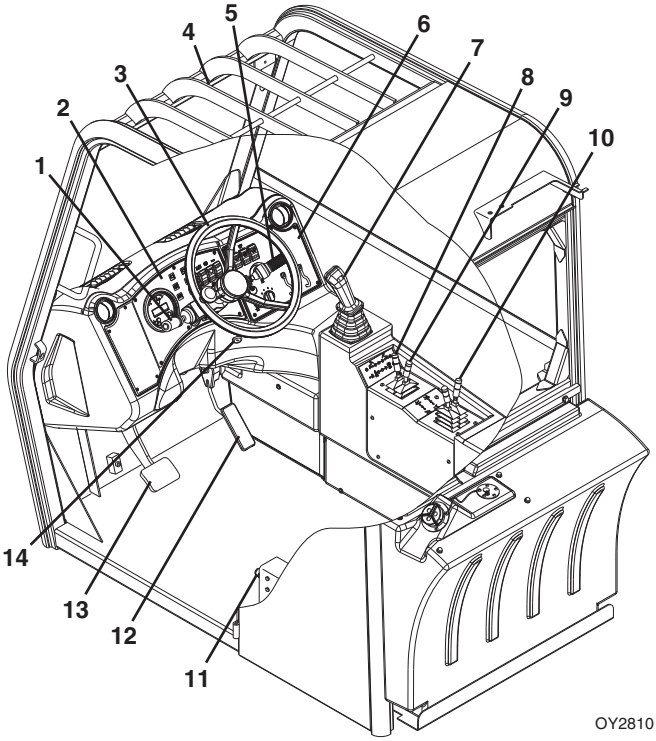

1. Transmission Control Lever: See page 3-8.
2. Instrument Panel: See page 3-4.
3. Steering Wheel: Turning the steering wheel to the left or right steers the machine in the corresponding direction. Three steering modes are available. See *"Steer Modes"* on page 3-16.
4. Frame Level Indicator: Enables the operator to determine the left to right level condition of the telehandler.
5. Accessory Control Lever (if equipped): See page 3-15.
6. Right Hand Panel: See page 3-14.
7. Boom Joystick: See page 3-10.
8. Frame Level Joystick: See page 3-11.
9. Auxiliary Hydraulic Joystick: See page 3-12.

https://truckmanualshub.com/

10. Outrigger Joysticks: See page 3-13.

11. Decompression Valve: Depress button to relieve pressure in auxiliary hydraulic circuit.

12. Accelerator Pedal: Pressing down the pedal increases engine and hydraulic speed.

13. Service Brake Pedal: The further the pedal is depressed, the slower the travel speed.

14. Ignition Switch: Key activated. See page 3-6.

https://truckmanualshub.com/

Dash Controls and Indicators

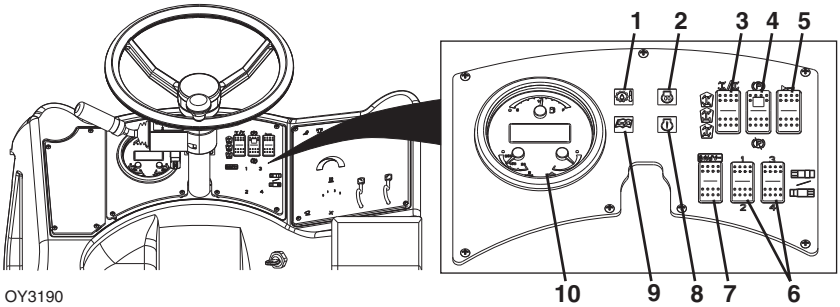

1. Transmission Temperature Indicator: Illuminates red when transmission temperature is too high. Immediately bring machine to a stop, retract and lower boom and stop the engine. Determine cause and correct before continued use.
2. Engine Pre-Heat Indicator: Illuminates yellow with ignition key in the “RUN” position. Indicator goes out when start temperature is reached.
3. Steer Select Switch: Three positions: 4-wheel circle steer, 4-wheel crab steer and 2-wheel steer. See page 3-16 for details.
4. Park Brake Switch: See page 3-7 for details.
5. Horn Button: Depress button to sound horn.
6. Auxiliary Electrics Switches (if equipped): Enables functions of attachments that require auxiliary electrics. See Section 5 - Attachments for approved attachments and control instructions.
7. Quick Switch Switch (if equipped): Use in conjunction with the auxiliary hydraulic joystick to hydraulically lock or unlock an attachment. See *“Hydraulic Quick Switch”* on page 5-11.
8. Engine Warning Indicator: Illuminates red when the engine is a critical state. Immediately bring machine to a stop, retract and lower boom and stop the engine. Determine cause and correct before continued use. Engine may derate.
9. Check Engine Indicator: Illuminates orange when maintenance is required. See Service Manual for details.
10. 3-in-1 Gauge and Display:
    a. Engine Coolant Temperature Gauge
    b. Engine Oil Pressure Gauge
    c. Fuel Gauge
    d. Display - Displays engine operating hours, battery voltage and engine rpm. Engine fault codes displayed when detected. See Service Manual for details.

https://truckmanualshub.com/

This Page Intentionally Left Blank

https://truckmanualshub.com/

Ignition

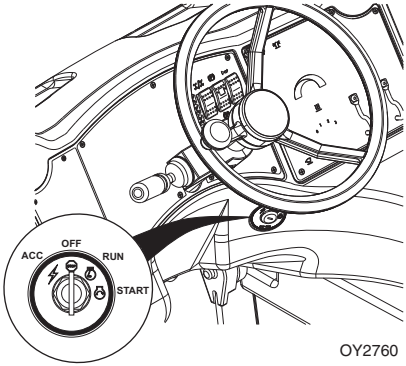

- In "ACC" or "RUN" position, voltage is available for all electrical functions.
- Full clockwise rotation to "START" engages starter motor.
- Counter-clockwise rotation to "OFF" stops engine and removes voltage from all electrical functions.

https://truckmanualshub.com/

Park Brake

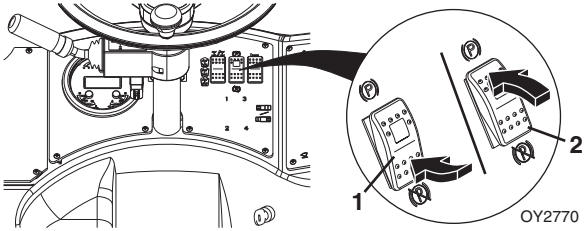

Park brake switch controls the application and release of the park brake. Indicator light on switch illuminates to indicate brake is applied.

- With the engine running and the park brake switch in "OFF" position (**1**), park brakes are disengaged.
- With switch in "ON" position (**2**), park brake is engaged and transmission will not engage forward or reverse.

WARNING

MACHINE ROLL-AWAY HAZARD. Always move park brake switch to "ON" position, lower boom to ground and stop engine before leaving cab.

WARNING

CRUSH HAZARD. Turning engine off applies the park brake. Applying park brake or turning engine off while traveling will cause unit to stop abruptly and could cause load loss. Either may be used in an emergency situation.

Parking Procedure

1. Using service brake, stop telehandler in an appropriate parking area.
2. Follow *“Shut-Down Procedure”* on page 4-4.

https://truckmanualshub.com/

Transmission Control Lever

Direction of Travel Selection

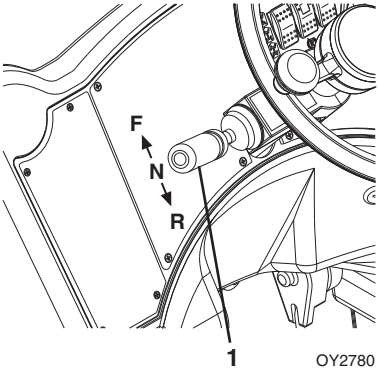

Transmission control lever (**1**) engages forward or reverse travel.

- Lift and push lever forward for forward travel; lift and pull lever rearward for reverse travel. Move lever to centered position for neutral.
- Forward or reverse travel can be selected while in any gear.
- When traveling in reverse, the back-up alarm will automatically sound.
- Drive in reverse and turn only at slow rates of speed.
- Do not increase engine speed with the transmission in forward or reverse and the service brake depressed in an attempt to get quicker hydraulic performances. This could cause unexpected machine movement.

WARNING

TIP OVER/CRUSH HAZARD. Bring telehandler to a complete stop before shifting transmission control lever. A sudden change in direction of travel could reduce stability and/or cause load to shift or fall.

https://truckmanualshub.com/

Gear Selection

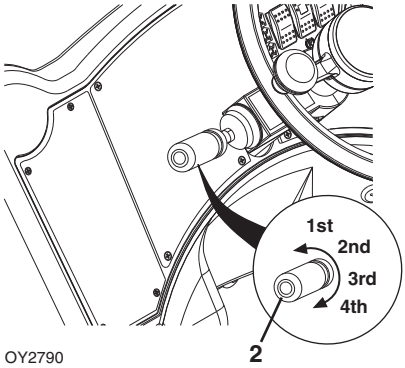

Gear selection is located on the twist grip handle (**2**) of transmission control lever.

- Twist hand grip to select gear.
- Select the appropriate gear for the task being performed. **Use a lower gear when transporting a load**. Use a higher gear only when driving unloaded for longer distances.
- Slow down prior to downshifting. **Do not downshift more than one gear at a time.**

https://truckmanualshub.com/

Boom Joystick

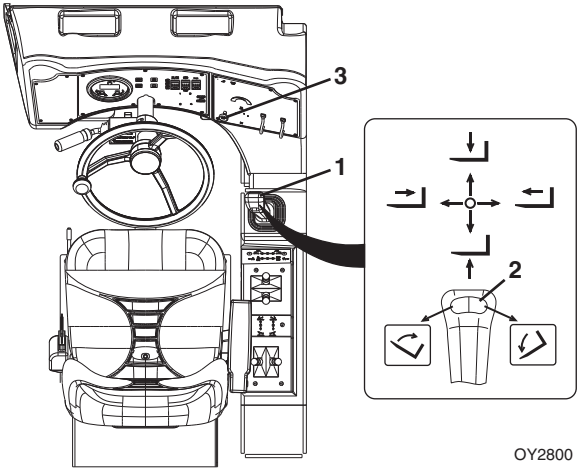

The boom joystick (**1**) controls the boom and attachment tilt functions.

Boom Functions

- Move the joystick back to lift boom; move joystick forward to lower boom; move joystick right to extend boom; move joystick left to retract boom.
- Speed of boom functions depends upon amount of joystick travel in corresponding direction. Increasing engine speed will also increase function speed.
- For two simultaneous boom functions, move the joystick between quadrants. For example; moving the joystick forward and to the left will lower and retract boom simultaneously.

Attachment Function

Tilt control is actuated by the switch (**2**).

- Depress left side of switch to tilt up; depress the right side of switch to tilt down.
- Use rotary switch (**3**) to regulate speed of the tilt. Rotate knob counter-clockwise to increase speed; rotate knob clockwise to decrease speed.

WARNING

TIP OVER/CRUSH HAZARD. Rapid, jerky operation of controls will cause rapid, jerky movement of the load. Such movements could cause the load to shift or fall or could cause the machine to tip over.

https://truckmanualshub.com/

Frame Level Joystick

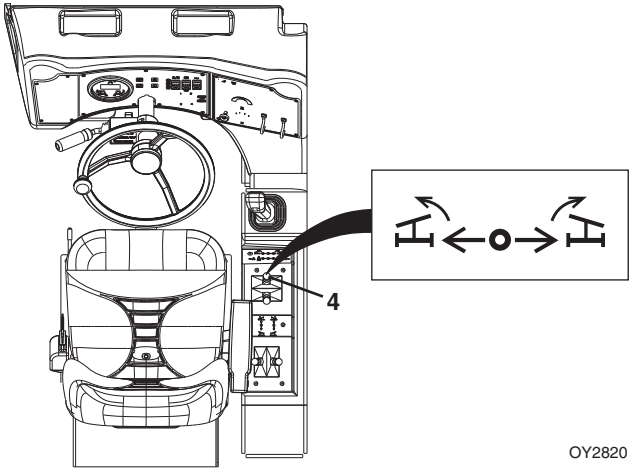

The frame level joystick (**4**) controls the left to right frame level.

- Move joystick left to rotate frame left, move joystick right to rotate frame right.
- A level indicator is located above the front cab window to permit operator to determine whether the telehandler frame is level.

WARNING

TIP OVER HAZARD. Always move boom as low as possible while allowing for best visibility of right hand mirror before leveling frame. Attempting to level machine with boom raised could cause it to tip over.

https://truckmanualshub.com/

Auxiliary Hydraulic Joystick

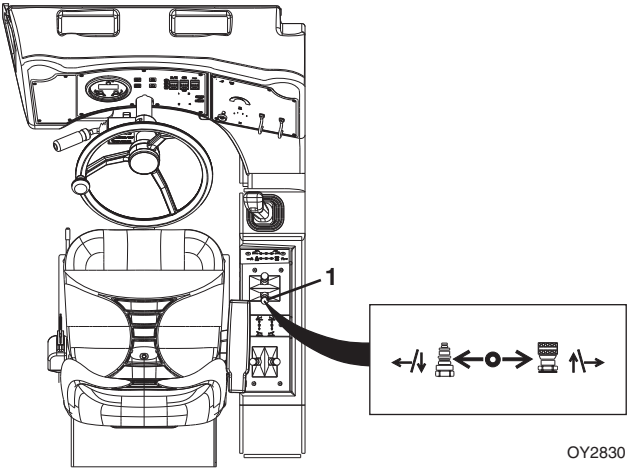

The auxiliary hydraulic joystick (**1**) controls function of attachments that require hydraulic supply for operation. See Section 5 - Attachments for approved attachments and control instructions.

https://truckmanualshub.com/

Outrigger Joysticks

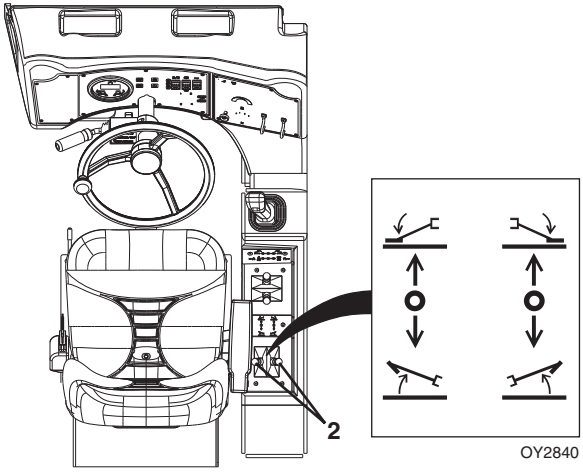

The rear joysticks (**2**) control the outriggers.

- Left joystick controls left outrigger and right joystick controls right outrigger.
- Push joysticks forward to lower outriggers; push joysticks back to raise outriggers.
- Use outriggers to increase stability and/or load capacity and in leveling the telehandler. Study capacity charts to determine maximum load capacities, with and without outriggers.

WARNING

TIP OVER HAZARD. Outriggers increase stability and load capacity only if they are used properly. Using outriggers on soft surfaces could cause telehandler to tip over. Always ensure surface can support telehandler and load.

https://truckmanualshub.com/

Right Hand Panel

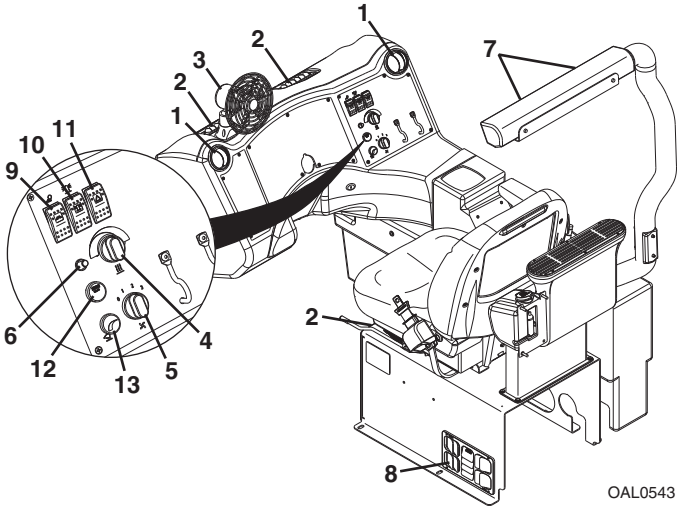

Heater and Air Conditioning Controls (if equipped)

1. Air Vent: Two individually adjustable round vents.
2. Air Louver: Three individually adjustable air louvers.
3. Defroster Fan: Two speed fan. Press fan switch down for slow speed; press switch up for fast speed. Return switch to middle position to turn off.
4. Temperature Control Switch: Adjustable rotary switch
5. Fan Speed: Four-position rotary switch.
6. Air Conditioning Switch: On/Off switch.
7. Air Louver: Two individually adjustable air louvers.
8. Recirculation Vent: Open louvers when operating heat. Close louvers when operating air conditioning.

Other Controls (if equipped)

9. Work Light Switch: On/Off switch.
10. Beacon Light Switch: On/Off switch.
11. Hazard Light Switch: On/Off switch.
12. Windshield Wiper and Washer Switch: Two speed rotary switch. Depress to activate washer. Return to first position to turn off wiper.
13. Attachment Tilt Speed Switch: See *“Boom Joystick”* on page 3-10.

https://truckmanualshub.com/

Accessory Control Lever (if equipped)

The accessory control lever (**1**) operates turn signals, parking lights and headlights.

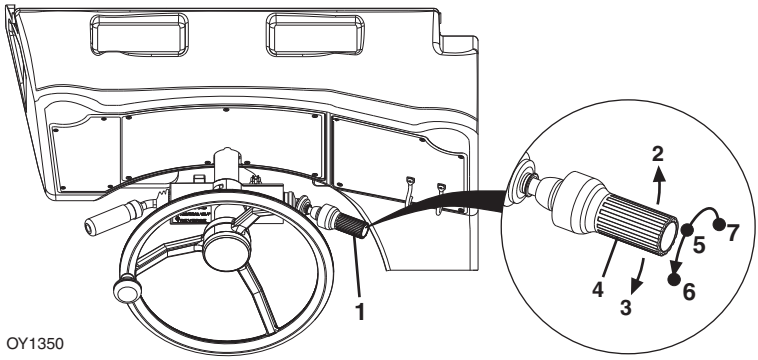

Turn Signals

- Push the lever forward (**2**) to activate the left turn signal.
- Pull the lever back (**3**) to activate the right turn signal.
- The lever must be manually returned to the center position to deactivate either turn signal. The lever will not cancel automatically after a turn.

Parking Lights and Headlights

- Turn the twist grip (**4**) of the lever counterclockwise to the first position (**5**) to turn on the parking lights.
- Turn the twist grip to the second position (**6**) to turn on the headlights.
- Raise/lower the lever to switch between low and high beam.
- Turn the twist grip clockwise to the OFF position (**7**) to turn all lights off.

https://truckmanualshub.com/

3.3 STEER MODES

Three steer modes are available for operator use.

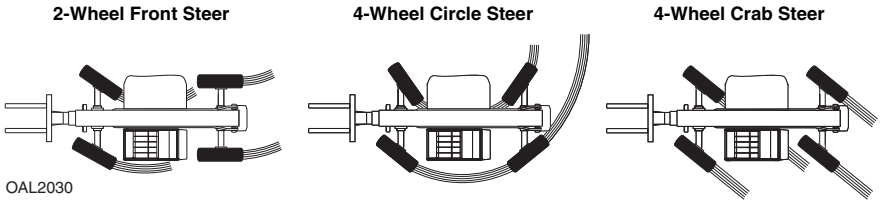

Note: *2-Wheel Front Steer mode is required for travel on public roads.*

Steer Mode Change

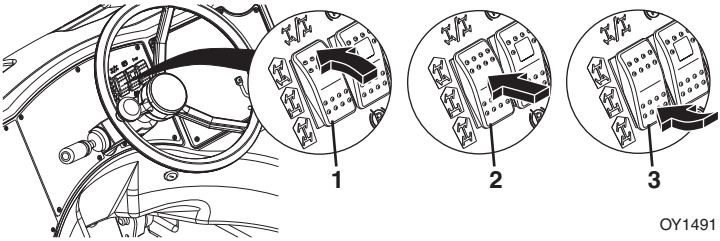

1. Bring machine to a stop using service brake while either circle steer mode (**1**) or crab steer mode (**3**) is selected.

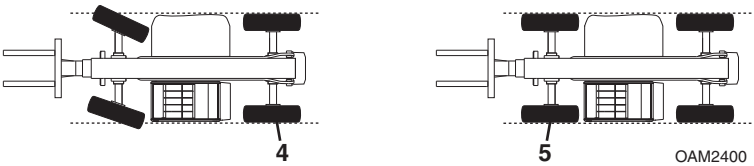

2. Turn the steering wheel until the left rear wheel (**4**) is aligned with the side of the machine.
3. Select front steer mode (**2**).
4. Turn the steering wheel until the left front wheel (**5**) is aligned with the side of the machine.
5. Wheels are now aligned. Select desired steer mode.

https://truckmanualshub.com/

3.4 OPERATOR SEAT

Adjustments

Prior to starting engine adjust seat for position and comfort.

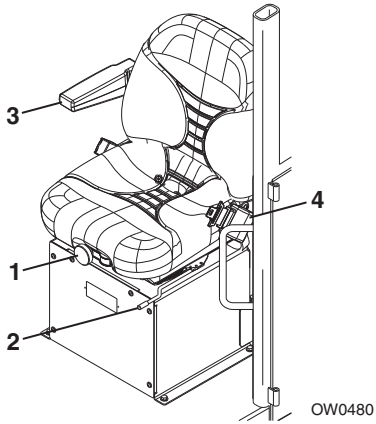

1. Suspension: Use knob to adjust suspension to the appropriate setting. Turn clockwise to increase stiffness. Turn counterclockwise to reduce stiffness.
2. Fore/Aft: Pull up on handle to move seat fore and aft.
3. Arm Rest: Arm rest can be moved up or down for comfort.
4. Seat Belt: Always fasten seat belt during operation. If required, a 3 in (76 mm) seat belt is available.

https://truckmanualshub.com/

Seat Belt

Fasten seat belt as follows:

1. Grasp both free ends of the belt making certain that belt webbing is not twisted or entangled.
2. With back straight in the seat, couple the retractable end (male end) of the belt into the receptacle (buckle) end of the belt.
3. With belt buckle positioned as low on the body as possible, pull the retractable end of the belt away from the buckle until it is tight across the lap.
4. To release belt latch, depress red button on buckle and pull free end from buckle.

https://truckmanualshub.com/

3.5 REVERSE SENSOR SYSTEM (IF EQUIPPED)

Reverse Sensor System provides audible indication of objects to rear of unit while in reverse gear.

- Alarm sounds signaling machine is placed in reverse gear.

Note: *Reverse Sensing System detects objects larger than 36 square inches (232.25 square centimeters) area and is functional when machine is moving in reverse direction.*

- No alarm when detection zone is clear of objects.
- Pulsing alarm sounds when an object is in range of Reverse Sensing System. Alarm increases in frequency as object becomes closer.
- If alarm sounds at a frequency of eight pulses per second (8 Hz) an object is detected within 5 feet (1.5 m). Stop reverse direction of machine by applying service brake. Perform *“Shut-Down Procedure”* on page 4-4. Check and clear area behind machine of objects before proceeding in a reverse direction.

https://truckmanualshub.com/

3.6 BOOM ANGLE AND EXTENSION INDICATORS

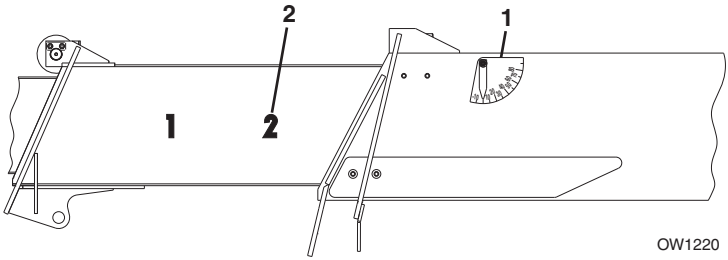

- The boom angle indicator (**1**) is located on the left side of the boom. Use this indicator to determine the boom angle when using the capacity chart (see *"Use of the Capacity Chart"* on page 5-5).
- The boom extension indicators (**2**) are located on the left side of the boom. Use these indicators to determine boom extension when using the capacity chart (see *"Use of the Capacity Chart"* on page 5-5).

https://truckmanualshub.com/

SECTION 4 - OPERATION

4.1 ENGINE

Starting the Engine

This machine can be operated under normal conditions in temperatures of 0°F to 104°F (-20°C to 40°C). Consult JLG for operation outside this range or under abnormal conditions.

If equipped for extreme cold weather, -40°F to 0°F (-40°C to -20°C), see page 4-2 for starting procedure.

1. Make sure all controls are in “Neutral” and all electrical components (lights, heater, defroster, etc.) are turned off. Apply parking brake.
2. Turn the ignition switch to “RUN” position and wait until engine pre-heat indicator goes out.
3. Turn ignition switch to “START” to engage starting motor. Release key immediately when engine starts. If engine fails to start within 20 seconds, release key and allow starting motor to cool for two minutes before trying again.

Note: *(If equipped for **ULS**) Engine is equipped with starter lockout feature and may prevent starter engagement under certain conditions. Fault code will appear on gauge display. Return ignition switch to “RUN” position for a minimum of two minutes to allow system to reset before trying to start again.*

4. After engine starts, observe oil pressure gauge. If gauge remains on zero for more than ten seconds, stop engine and determine cause before restarting engine.
5. Warm up engine at approximately 1/2 throttle.

Note: *Engine will not start unless transmission control lever is in “Neutral” and park brake switch is applied.*

WARNING

ENGINE EXPLOSION. Do not use ether for cold weather starting.

WARNING

UNEXPECTED MOVEMENT HAZARD. Always ensure that transmission control lever is in neutral and the service brake is applied before releasing park brake. Releasing park brake in either forward or reverse could cause the machine to move abruptly.

https://truckmanualshub.com/

Extreme Cold Weather Starting (if equipped)

If equipped with extreme cold weather components, machine can be operated in temperatures of -40°F to 0°F (-40° C to -20° C).

1. Machine must be equipped with heating components and extreme cold weather fluids. See Section 9 - Specifications for fluid details.
2. Locate the two yellow extension cords stored behind seat in cab.
3. Connect the oil pan and hydraulic tank heaters to one extension cord and the battery and block heaters to the other extension cord. Connect each extension cord to separate A/C power supplies with a minimum rating of 15 Amps each.
4. Allow heating components to operate a minimum of 12 hours prior to machine operation.

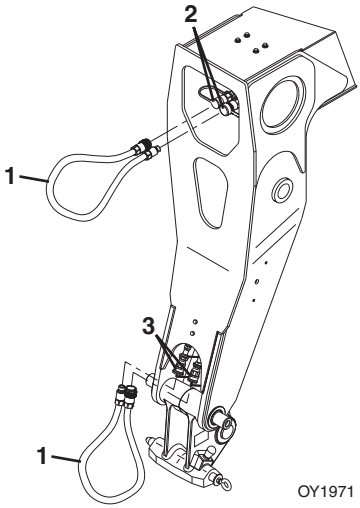

5. Locate recirculation hoses stored behind seat in cab.
6. Connect recirculation hose (**1**) to tilt circuit quick disconnects (**2**). Connect the other recirculation hose (**1**) to auxiliary hydraulic quick disconnects (**3**).
7. Follow start-up procedure on page 4-1 and allow engine to idle 20 minutes.
8. Operate tilt and auxiliary hydraulic functions continuously for five minutes to circulate the warm hydraulic fluid.
9. Operate all boom functions continuously for another five minutes.
10. Perform *“Shut-Down Procedure”* on page 4-4.
11. Disconnect recirculation hoses and A/C power supplies and place back in storage locations.
12. Machine is ready for operation.

https://truckmanualshub.com/

Battery Boosted Starting

If battery-boost starting (jump-start) is necessary, proceed as follows:

- Never allow vehicles to touch.
- Ensure boosting vehicle engine is running.
- Connect the positive (+) jumper cable to positive (+) post of discharged battery.
- Connect the opposite end of positive (+) jumper cable to positive (+) post of booster battery.
- Connect the negative (-) jumper cable to negative (-) post on booster battery.
- Connect opposite end of negative (-) jumper cable to ground point on machine away from discharged battery.
- Follow standard starting procedures.
- Remove cables in reverse order after machine has started.

⚠ WARNING

BATTERY EXPLOSION HAZARD. Never jump start or charge a frozen battery as it could explode. Keep sparks, flames and lighted smoking materials away from the battery. Lead acid batteries generate explosive gases when charging. Wear safety glasses.

https://truckmanualshub.com/

Normal Engine Operation

- Observe instrument panel frequently to be sure all systems are functioning properly.
- **Be alert for unusual noises or vibration.** When an unusual condition is noticed, park machine in safe position and perform shut-down procedure. Report condition to your supervisor or maintenance personnel.
- **Avoid prolonged idling.** If the engine is not being used, turn it off.

Shut-Down Procedure

When parking the telehandler, park in a safe location on flat level ground and away from other equipment and/or traffic lanes.

1. Apply the park brake.
2. Shift the transmission to “Neutral.”
3. Lower forks or attachment to the ground.
4. Operate engine at low idle for 3 to 5 minutes. **DO NOT over rev engine.**
5. Shut off engine and remove ignition key.
6. Exit telehandler properly.
7. Block wheels (if necessary).

https://truckmanualshub.com/

4.2 OPERATING WITH A NON-SUSPENDED LOAD

Lift Load Safely

- You must know the weight and load center of every load you lift. If you are not sure of the weight and load center, check with your supervisor or with the supplier of the material.

WARNING

TIP OVER HAZARD. Exceeding lift capacity of the telehandler could damage the equipment and/or cause tip over.

- Know the rated load capacities (see Section 5) of the telehandler to determine the operating range in which you can safely lift, transport and place a load.

Picking Up a Load

- Note the conditions of the terrain. Adjust travel speed and reduce amount of load if conditions warrant.
- Avoid lifting double-tiered loads.
- Make sure load is clear of any adjacent obstacles.
- Adjust spacing of forks so they engage the pallet or load at maximum width. See *“Adjusting/Moving Forks”* on page 5-13.
- Approach load slowly and squarely with fork tips straight and level. **NEVER** attempt to lift a load with just one fork.
- **NEVER** operate telehandler without a proper and legible capacity chart in the operator cab for the telehandler/attachment combination you are using.

https://truckmanualshub.com/

Transporting a Load

After engaging the load and resting it against the backrest, tilt the load back to position it for travel. Travel in accordance with the requirements set forth in Section 1 - General Safety Practices and Section 5 - Attachments.

Leveling Procedure

1. Position machine in best location to lift or place load.
2. Apply parking brake and move transmission control lever to NEUTRAL.
3. Observe level indicator to determine whether machine must be leveled prior to lifting load. Level machine with frame level joystick (see page 3-11) or outrigger joysticks (see page 3-13).
4. Move boom/attachment to 4 ft (1,2 m) off ground.
   (AUS - Move boom so forks are no more than 11.8 in (300 mm) above ground surface.)

Important things to remember:

- Never raise the boom/attachment more than 4 ft (1,2 m) above ground unless telehandler is level.
  (AUS - Never raise the forks more than 11.8 in (300 mm) above ground surface unless telehandler is level.)
- The combination of frame leveling and load could cause the telehandler to tip over.

https://truckmanualshub.com/

Placing a Load

Before placing any load be sure that:

- The landing point can safely support the weight of the load.
- The landing point is level; front to back and side to side.
- Use the capacity chart to determine safe boom extension range. See *“Use of the Capacity Chart”* on page 5-5.
- Align forks at the level load is to be placed, then extend boom slowly until load is just above area where it is to be placed.
- Lower the boom until the load rests in position and the forks are free to retract.

Disengaging a Load

Once the load has been placed safely at the landing point, proceed as follows:

1. With the forks free from the weight of the load, the boom can be retracted and/or the telehandler can be backed away from under the load if surface will not change level condition of telehandler.
2. Lower the carriage.
3. The telehandler can now be driven from the landing location to continue work.

https://truckmanualshub.com/

4.3 OPERATING WITH A SUSPENDED LOAD

Lift Load Safely

- You must know the weight and load center of every load you lift. If you are not sure of the weight and load center, check with your supervisor or with the supplier of the material.

WARNING

TIP OVER HAZARD. Exceeding lift capacity of the telehandler could damage the equipment and/or cause tip over.

- Know the rated load capacities (refer to Section 5) of the telehandler to determine the operating range in which you can safely lift, transport and place a load.

Picking Up a Suspended Load

- Note the conditions of the terrain. Adjust travel speed and reduce amount of load if conditions warrant.
- Avoid lifting double-tiered loads.
- Make sure load is clear of any adjacent obstacles.
- **NEVER** operate telehandler without a proper and legible capacity chart in the operator cab for the telehandler/attachment combination you are using.
- Only use approved lifting devices rated for the lifting of the load.
- Identify the proper lifting points of the load, taking into consideration the center of gravity and load stability.
- Ensure to always properly tether loads to restrict movement.
- Refer to See *“Use of the Capacity Chart”* on page 5-5. for proper lifting guidelines in addition to the appropriate capacity chart in the operator cab.

https://truckmanualshub.com/

Transporting a Suspended Load

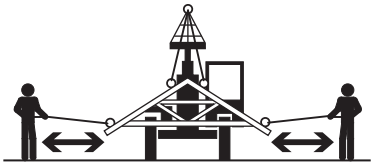
OZ3160

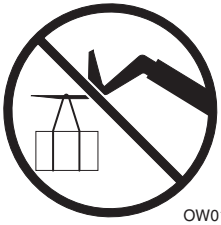
OW0130

- Travel in accordance with the requirements set forth in Section 1 - General Safety Practices and Section 5 - Attachments.
- For additional requirements, refer to the appropriate capacity chart in the operator cab.

Important things to remember:

- Ensure the boom is fully retracted.
- Never raise the load more than 11.8 in (300 mm) above ground surface or the boom more than 45°.
- The combination of frame leveling and load could cause the telehandler to tip over.
- The guide persons and operator must remain in constant communication (verbal or hand) and be in visual contact with the operator at all times.
- Never place the guide persons between the suspended load and the telehandler.
- Only transport the load at walking speed, 0.9 mph (0,4 m/s), or less.

Leveling Procedure

1. Position machine in best location to lift or place load.
2. Apply parking brake and move transmission control lever to NEUTRAL.
3. Observe level indicator to determine whether machine must be leveled prior to lifting load. Level machine with frame level joystick (see page 3-11) or outrigger joysticks (see page 3-13).
4. Move boom so load is no more than 11.8 in (300 mm) above ground surface and boom/or boom is raised no more than 45°.

https://truckmanualshub.com/

Placing a Suspended Load

Before placing any load be sure that:

- The landing point can safely support the weight of the load.
- The landing point is level; front to back and side to side.
- Use the capacity chart to determine safe boom extension range. See *"Use of the Capacity Chart"* on page 5-5.
- Align load at the level load is to be placed, then position boom slowly until load is just above area where it is to be placed.
- Ensure that the guide persons and operator remain in constant communication (verbal or hand) when placing the load.

Disengaging a Suspended Load

- Never place the guide persons between the suspended load and the telehandler.
- Once at load destination, bring telehandler to a complete stop and apply park brake prior to disengagement of lifting devices and tethers.

https://truckmanualshub.com/

4.4 LOADING AND SECURING FOR TRANSPORT

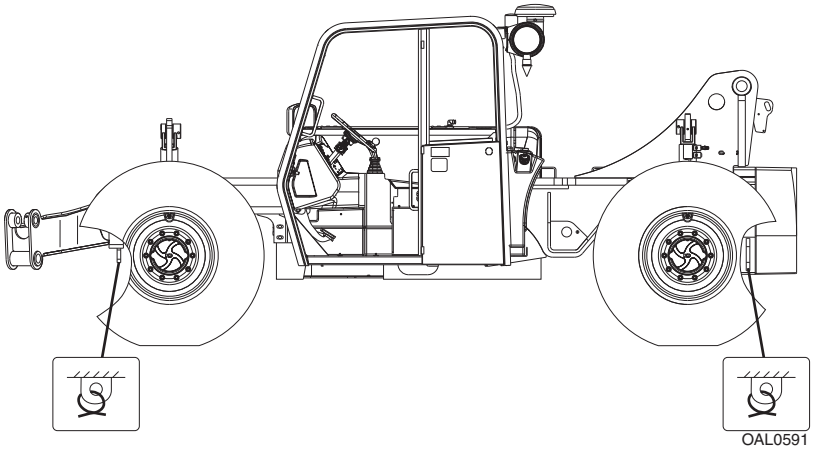

Tiedown

1. Level the telehandler prior to loading.
2. Using a spotter, load the telehandler with boom as low as possible.
3. Once loaded, apply parking brake and lower boom until boom or attachment is resting on deck. Move all controls to “Neutral,” stop engine and remove ignition key.
4. Secure machine to deck by passing chains through the designated tie down points as shown in the figure.
5. Do not tie down front of boom.

Note: *The user assumes all responsibility for choosing the proper method of transportation and tie-down devices, making sure the equipment used is capable of supporting the weight of the vehicle being transported and that all manufacturer’s instructions and warnings, regulations and safety rules of their employer, the Department of Transportation and/or any other local, state or federal/provincial laws are followed.*

⚠ WARNING

TELEHANDLER SLIDE HAZARD. Before loading telehandler for transport, make sure deck, ramps and telehandler wheels are free of mud, snow and ice. Failure to do so could cause telehandler to slide.

https://truckmanualshub.com/

Lifting

- When lifting machine, it is very important that the lifting device and equipment is attached only to designated lifting points. If machine is not equipped with lifting lugs contact JLG Product Safety for information.
- Make adjustments to the lifting device and equipment to ensure the machine will be level when elevated. The machine must remain level at all times while being lifted.
- Ensure that the lifting device and equipment is adequately rated and suitable for the intended purpose. See Section 9 - Specifications for machine weight.
- Remove all loose items from machine prior to lifting.
- Lift machine with smooth, even motion. Set machine down gently. Avoid quick or sudden motions that could cause shock loads to machine and/or lifting devices.

https://truckmanualshub.com/

SECTION 5 - ATTACHMENTS

5.1 APPROVED ATTACHMENTS

To determine if an attachment is approved for use on the specific telehandler you are using, perform the following prior to installation.

- The attachment type, weight, dimensions and load center must be equal to or less than the data shown on a capacity chart located in the operator cab.
- The model on the capacity chart must match the model telehandler being used.
- Hydraulically powered attachments must only be used on machines equipped with auxiliary hydraulics.
- Hydraulically powered attachments that require auxiliary electrics must only be used on machines equipped with auxiliary hydraulics and electrics.

If any of the above conditions are not met, do not use the attachment. The telehandler may not be equipped with the proper capacity chart or the attachment may not be approved for the model telehandler being used. Contact JLG or a local distributor for further information.

5.2 UNAPPROVED ATTACHMENTS

Do not use unapproved attachments for the following reasons:

- Range and capacity limitations for “will fit,” homemade, altered, or other non-approved attachments cannot be established.
- An overextended or overloaded telehandler can tip over with little or no warning and cause serious injury or death to the operator and/or those working nearby.
- The ability of a non-approved attachment to perform its intended function safely cannot be assured.

WARNING

Use only approved attachments. Attachments which have not been approved for use with your telehandler could cause machine damage or an accident.

https://truckmanualshub.com/

5.3 JLG SUPPLIED ATTACHMENTS

Attachment	Part Number	Applicable Model	
		G10-55A	G12-55A
Carriage, 50 in (1270 mm)	1170021	X	X
	1001146084	X	X
Carriage, 60 in (1524 mm)	1170024	X	X
	1001146086	X	X
Carriage, 72 in (1829 mm)	1001132514	X	X
	1001146088	X	X
Side Shift Carriage, 50 in (1270 mm)	1001142790	X	X
Side Tilt Carriage, 50 in (1270 mm)	1170054	X	X
Side Tilt Carriage, 60 in (1524 mm)	1001101956	X	X
Side Tilt Carriage, 72 in (1829 mm)	1170057	X	X
90° Swing Carriage, 72 in (1829 mm)	1001095418	X	X
Dual Fork Positioning Carriage, 50 in(1270 mm)	7301295	X	X
8 ft Mast Carriage, 50 in (1270 mm)	1001108668	X	X
8 ft Mast Carriage w/ Side Tilt, 50 in (1270 mm)	1001108669	X	X
Fork, Pallet 2.36x4x48 in(60x100x1220 mm)	2340045	X	X
Fork, Pallet 2.36x5x48 in(60x127x1220 mm)	2340038	X	X
Fork, Dual Taper 1.75x7x60 in (44x178x1524 mm)	2340046	X	X
Fork, Dual Taper 2.36x6x60 in (60x152x1524 mm)	2340039	X	X
Fork, Dual Taper 2x6x72 in(50x152x1830 mm)	1001092391	X	X
Fork, Block 2x2x48 in (50x50x1220 mm)	2340037	X	X
Fork Extension, 90 in (2286 mm)	1001137512	X	X
Bucket, 72 in–1.0 yd^3	1001100822	X	X
Bucket, 96 in–1.5 yd^3	1001100823	X	X
Bucket, 102 in –2.0 yd^3	1001100824	X	X
Grapple Bucket, 96 in–1.75 yd^3	0930020	X	X
Hook, Fork Mounted	91565094	X	X
	1001097205	X	X
Truss Boom, 12 ft (3658 mm)	1001099902	X	X
Truss Boom w/ Winch, 12 ft (3658 mm)	1001099351	X	X
Truss Boom, 15 ft (4572 mm)	1001099901	X	X
Platform, Fork Mounted (ASME)	1001103637	X	X
Platform, Fork Mounted (ASME - French)	1001103736	X	X
Platform, Fork Mounted (ISO)	1001103730	X	X

https://truckmanualshub.com/

This Page Intentionally Left Blank

https://truckmanualshub.com/

5.4 TELEHANDLER/ATTACHMENT/FORK CAPACITY

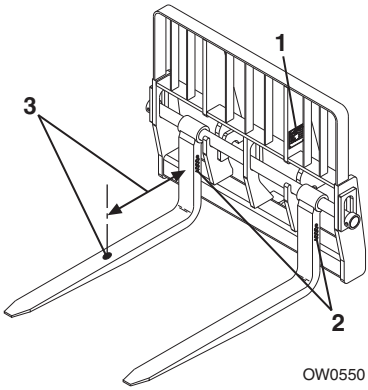

Prior to installing the attachment verify it is approved and the telehandler is equipped with the proper capacity chart. See *“Approved Attachments”* on page 5-1.

To determine the maximum capacity of the telehandler and attachment, use the **smallest** of the following capacities:

- Capacity stamped on the attachment identification plate (**1**).
- Fork capacities and load centers are stamped on the side of each fork (**2**) (if equipped). This rating specifies the maximum load capacity that the individual fork can safely carry at the maximum load center (**3**). Total attachment capacity is multiplied by the number of forks on the attachment (if equipped), up to the maximum capacity of the attachment.
- Maximum capacity as indicated on the proper capacity chart. See *“Approved Attachments”* on page 5-1.
- When the load rating of the telehandler differs from the capacity of the forks or attachment, the lower value becomes the overall load capacity.

Use the proper capacity chart to determine maximum capacity at various machine configurations. Lifting and placing a load may require use of more than one capacity chart based on machine configuration.

Other than block forks, all forks should be used in matched pairs, block forks used in matched sets.

⚠ WARNING

Never use an attachment without the appropriate JLG approved capacity chart installed on the telehandler.

https://truckmanualshub.com/

5.5 USE OF THE CAPACITY CHART

To properly use the capacity chart (see page 5-6), the operator must first determine and/or have the following:

1. An approved attachment. See *"Approved Attachments"* on page 5-1.
2. The proper Capacity Chart(s).
3. Weight of the load being lifted.
4. Load placement information:
   a. HEIGHT where the load is to be placed.
   b. DISTANCE from the front tires of the telehandler where the load is to be placed.
5. On the capacity chart, find the line for the height and follow it over to the distance.
6. The number in the load zone where the two cross is the maximum capacity for this lift. If the two cross at a division between zones, the smaller number must be used.

The number in the load zone must be equal to or greater than the weight of the load to be lifted. Determine the limits of the load zone on the capacity chart and keep within these limits.

Capacity Indicator Locations

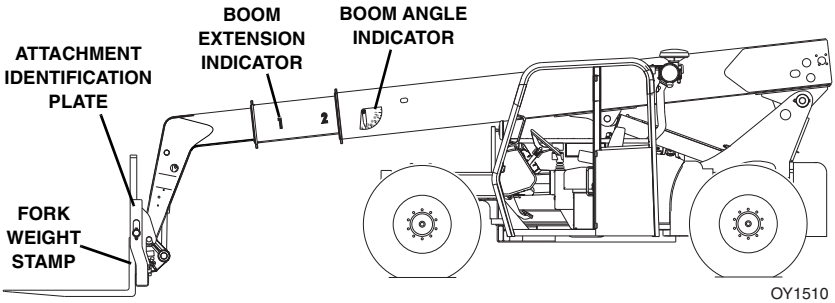

https://truckmanualshub.com/

Sample Capacity Chart

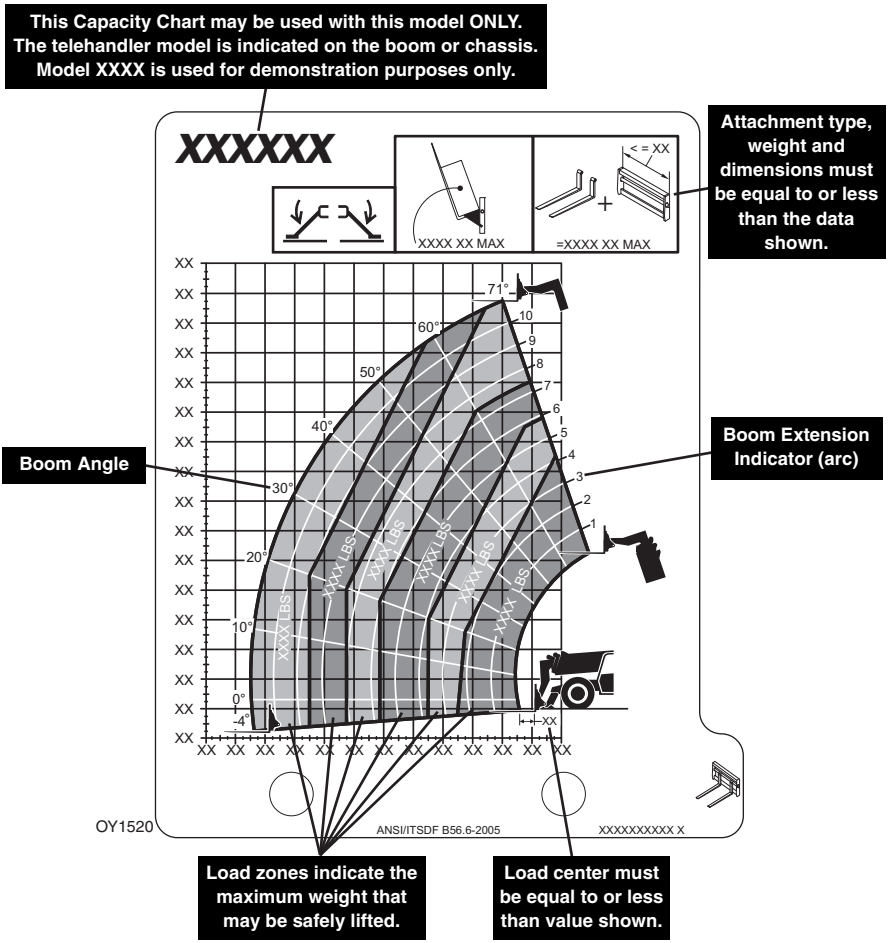

Note: *This is a sample capacity chart* ***only****!* ***DO NOT*** *use this chart, use the one located in your operator cab.*

WARNING

TIP OVER HAZARD. All loads shown on rated capacity chart are based on machine being on firm ground with frame level (see page 4-6); the forks being positioned evenly on carriage; the load being centered on forks; proper size tires being properly inflated; and the telehandler being in good operating condition.

https://truckmanualshub.com/

To identify the proper capacity chart on telehandlers equipped with outriggers, refer to the following icons which may be located on the capacity chart.

- Use when lifting a load with outriggers up.

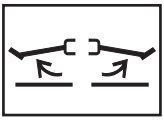

OAL1090

- Use when lifting a load with outriggers down.

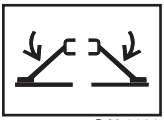

OAL1100

https://truckmanualshub.com/

Example

A contractor owns a model xxxxx telehandler with a fork carriage. He knows this attachment may be used with his model since:

- The attachment style, weight, dimensions and load center match the attachment data on the capacity chart.
- The capacity chart is clearly marked for model xxxxx and corresponds with machine configuration being used.

Below are examples with various conditions the contractor may encounter and whether or not the load may be lifted.

	Load Weight	Distance	Height	OK to Lift
1	6000 lb (2722 kg)	18 ft (5,5 m)	12 ft (3,7 m)	Yes
2	4000 lb (1814 kg)	30 ft (9,1 m)	26 ft (7,9 m)	NO
3	7500 lb (3402 kg)	8 ft (2,4 m)	24 ft (7,3 m)	Yes
4	5750 lb (2608 kg)	12 ft (3,7 m)	44 ft (13,4 m)	NO

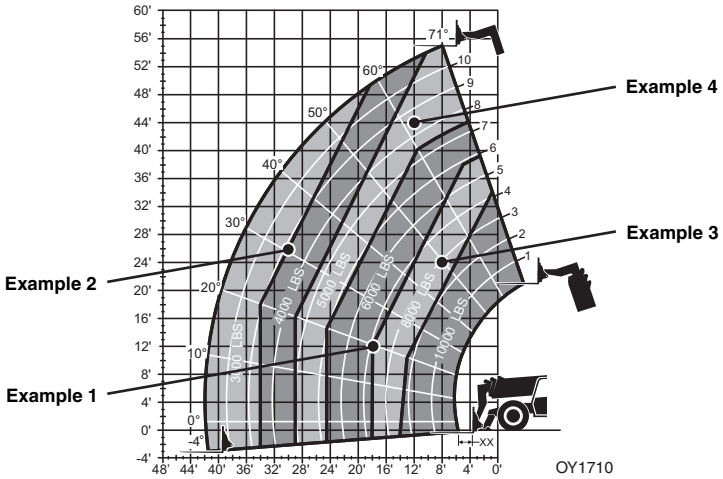

Note: *This is a sample capacity chart **only**! **DO NOT** use this chart, use the one located in your operator cab.*

https://truckmanualshub.com/

5.6 ATTACHMENT INSTALLATION

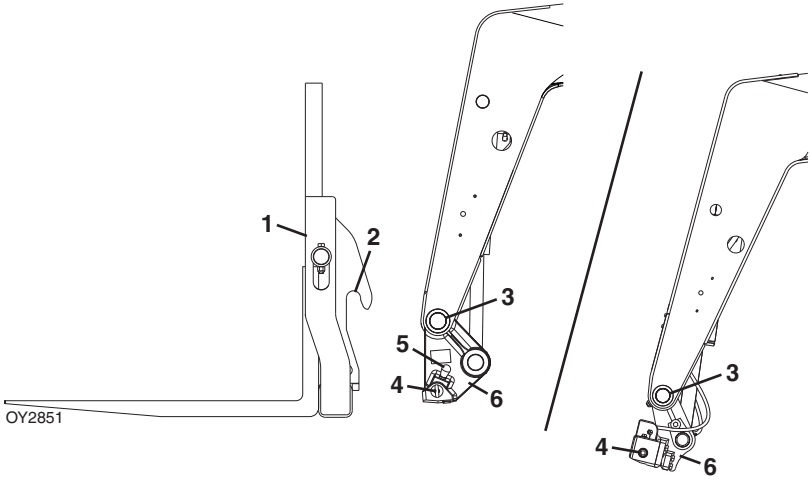

1. Attachment
2. Attachment Pin Recess
3. Attachment Pin
4. Lock Pin
5. Retaining Pin (mechanical quick switch)
6. Quick Switch (attachment tilt control in cab, see page 3-10)

WARNING

CRUSH HAZARD. Always be certain that carriage or attachment is properly positioned on boom and is secured by lock pin and retainer pin. Failure to ensure proper installation could permit carriage/attachment/load to disengage.

https://truckmanualshub.com/

Mechanical Quick Switch

This installation procedure is designed for one-person operation. Prior to exiting cab, perform *“Shut-Down Procedure”* on page 4-4.

1. Tilt quick switch back to provide clearance. Check to be sure lock pin is removed.

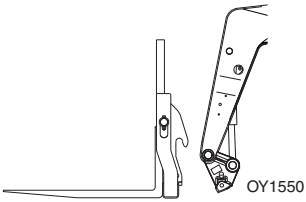

2. Align attachment pin with recess in attachment. Raise boom slightly to engage attachment pin in recess.

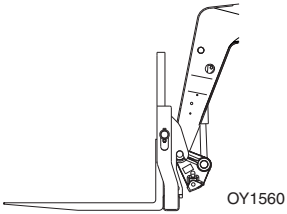

3. Tilt quick switch forward to engage attachment.

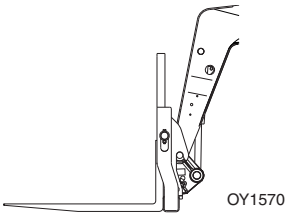

4. Lift retainer pin and insert lock pin completely through quick switch. Release retainer pin and ensure lock pin is secured.

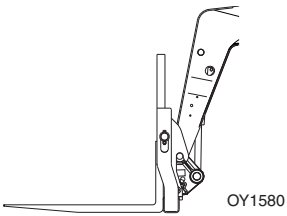

5. If equipped, connect auxiliary hydraulic hoses. See *“Hydraulic Operated Attachment”* on page 5-12.
6. If equipped, connect auxiliary electric harness.

https://truckmanualshub.com/

Hydraulic Quick Switch

This installation procedure is designed for one-person operation.

1. Tilt quick switch back to provide clearance.

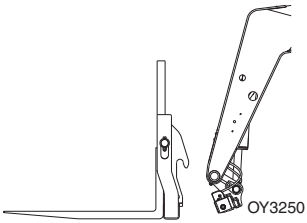

2. Align attachment pin with recess in attachment. Raise boom slightly to engage attachment pin in recess.

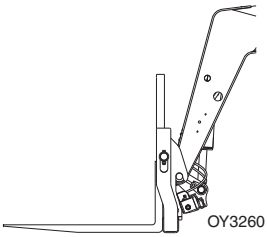

3. Check to be sure lock pin is disengaged. Tilt quick switch forward to engage attachment.

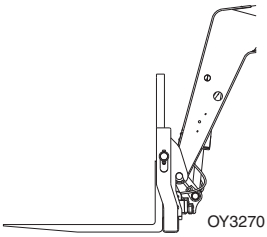

4. Press and hold quick switch switch (**1**). At the same time push auxiliary hydraulic joystick (**2**) left to engage lock pin. Push auxiliary hydraulic joystick right to disengage lock pin.

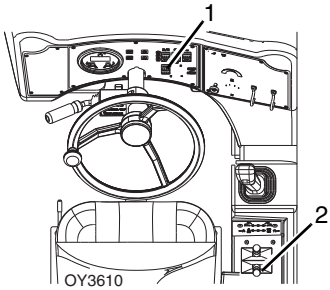

https://truckmanualshub.com/

5. Raise boom to eye level and visually check that the lock pins protrude through the holes on both sides of the quick switch. If the lock pins do not protrude through the holes, place the attachment on the ground and return to step 2.

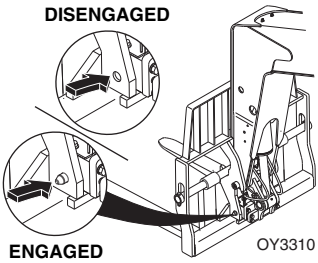

6. If attachment is equipped, connect auxiliary hydraulic hoses. See *"Hydraulic Operated Attachment"* on page 5-12.

Hydraulic Operated Attachment

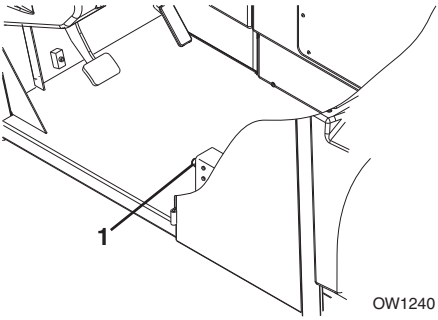

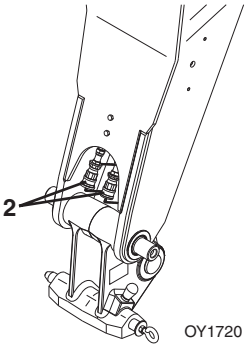

1. Install attachment (see page 5-9).
2. Lower attachment to ground and perform *"Shut-Down Procedure"* on page 4-4.
3. Press the decompression valve button (**1**) to relieve auxiliary hydraulic pressure.
4. Connect attachment hoses to both auxiliary fittings (**2**).

https://truckmanualshub.com/

5.7 ADJUSTING/MOVING FORKS

Carriages may have different locations where forks can be positioned. Two different methods can be used for repositioning, depending upon the carriage structure.

Note: *Apply a light coating of appropriate lubricant to ease sliding of forks or fork bar.*

To slide forks:

1. Ensure attachment is properly installed. See *"Attachment Installation"* on page 5-9.
2. Elevate attachment to approximately 5 ft (1,5 m) and tilt carriage forward until fork heel is free from attachment.
3. Stand at the side of the carriage. To slide fork toward the center of the carriage, push the fork near the fork eye. To slide fork toward the edge of the carriage, pull the fork near the fork eye. To avoid pinching, do not place fingers or thumb between the fork and carriage structure.

If removing fork bar is necessary:

1. Rest forks on ground.
2. Remove fork bar.
3. Reposition forks.
4. Reinstall the fork bar and fork bar retaining mechanism(s).

https://truckmanualshub.com/

This Page Intentionally Left Blank

https://truckmanualshub.com/

5.8 ATTACHMENT OPERATION

- Capacities and range limits for the telehandler change depending on the attachment in use.
- Separate attachment instructions must be kept in manual holder in cab with this Operation & Safety Manual. An additional copy must be kept with the attachment if it is equipped with a manual holder.

NOTICE

EQUIPMENT DAMAGE. Some attachments may contact the front tires or machine structure when the boom is retracted and the attachment is rotated. Improper use of attachment may result in attachment or machine structural damage.

NOTICE

EQUIPMENT DAMAGE. Avoid contact with any structure or object when lifting a load. Maintain clearance around boom structure and load. Failure to maintain clearance may result in attachment or machine structural damage.

https://truckmanualshub.com/

Carriage w/Forks

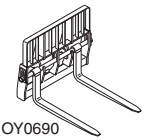
OY0690

Use Carriage Attachment Capacity Chart

To determine maximum capacity, refer to *"Telehandler/ Attachment/Fork Capacity"* on page 5-4.

Suspend loads in accordance with requirements set forth in Section 1 - General Safety Practices.

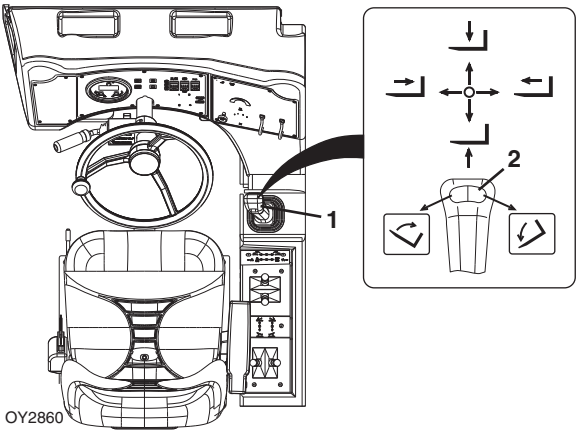

OY2860

The joystick (**1**) controls lift/lower and extend/retract movement of the boom.

The tilt switch (**2**) controls fork tilt.

- Press left side of switch to tilt up.
- Press right side of switch to tilt down.

Installation Procedure:

- Refer to *"Attachment Installation"* on page 5-9.

Operation:

- When utilizing lifting lug, weight of rigging must be included as part of total load lifted

Equipment Damage Precautions:

- Do not use forks as a lever to pry material. Excessive prying forces could damage forks or machine structure.
- Do not attempt to lift loads that are attached or connected to another object.

https://truckmanualshub.com/

Side Shift Carriage

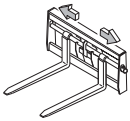
OAL1540

Use Side Shift Carriage Capacity Chart

To determine maximum capacity, refer to *“Telehandler/ Attachment/Fork Capacity”* on page 5-4.

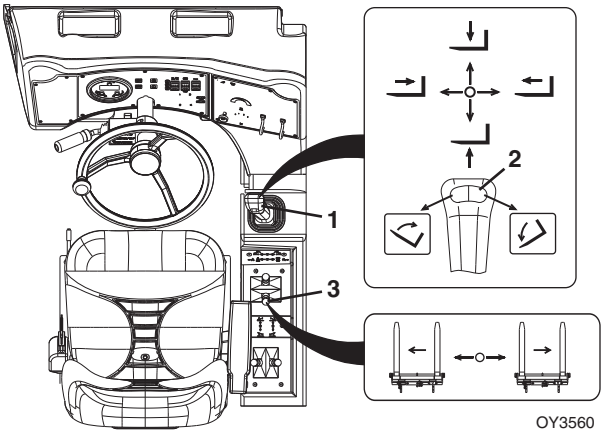

OY3560

The joystick (**1**) controls lift/lower and extend/retract movement of the boom.

The tilt roller switch (**2**) controls fork tilt.

- Press roller switch down to tilt up.
- Press roller switch up to tilt down.

To Side Shift:

The auxiliary hydraulic joystick (**3**) controls carriage side shift.

- Move joystick left to shift left.
- Move joystick right to shift right.

Installation Procedure:

- Refer to *“Attachment Installation”* on page 5-9.

https://truckmanualshub.com/

WARNING

CRUSH HAZARD. Do not use side shift to push or pull objects or load. Failure to comply could cause object or load to fall.

Equipment Damage Precautions:

- Do not use forks as a lever to pry material. Excessive prying forces could damage forks or machine structure.
- Do not attempt to lift loads that are attached or connected to another object.

https://truckmanualshub.com/

Side Tilt Carriage

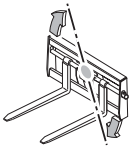
OAL1550

Use Side Tilt Carriage Capacity Chart

To determine maximum capacity, refer to *"Telehandler/ Attachment/Fork Capacity"* on page 5-4.

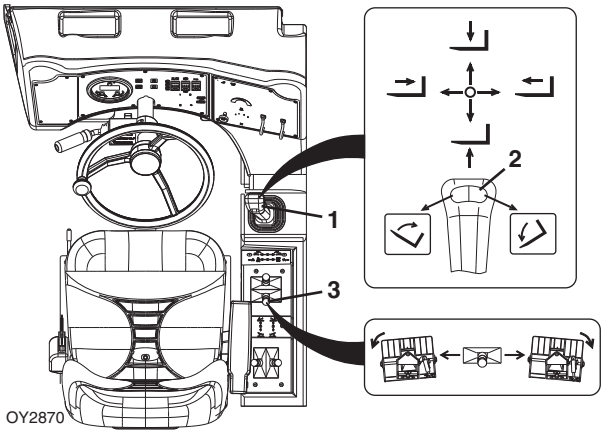

OY2870

The joystick (**1**) controls lift/lower and extend/retract movement of the boom.

The tilt switch (**2**) controls fork tilt.

- Press left side of switch to tilt up.
- Press right side of switch to tilt down.

To Side Tilt:

The auxiliary hydraulic joystick (**3**) controls the carriage side tilt.

- Move joystick left to (side) tilt left.
- Move joystick right to (side) tilt right.

Installation Procedure:

- Refer to *"Attachment Installation"* on page 5-9.

https://truckmanualshub.com/

WARNING

CRUSH HAZARD. Do not use side tilt to push or pull objects or load. Failure to comply could cause object or load to fall.

Operation:

- Approach load with forks centered on load and stop telehandler.
- Level telehandler before side tilting carriage to engage load.
- Side tilt carriage to left or right to align forks with load and engage load.
- Raise load slightly and level carriage side to side.
- Travel in accordance with the requirements set forth in Section 1 - General Safety Practices.

Equipment Damage Precautions:

- Do not use forks as a lever to pry material. Excessive prying forces could damage forks or machine structure.
- Do not attempt to lift loads that are attached or connected to another object.

https://truckmanualshub.com/

Swing Carriage

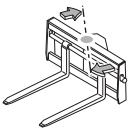
OU2150

Use Swing Carriage Capacity Chart

To determine maximum capacity, refer to *"Telehandler/ Attachment/Fork Capacity"* on page 5-4.

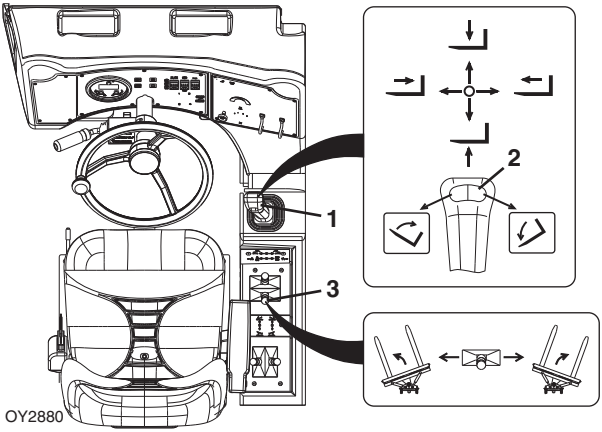

OY2880

The joystick (**1**) controls lift/lower and extend/retract movement of the boom.

The tilt switch (**2**) controls fork tilt.

- Press left side of switch to tilt up.
- Press right side of switch to tilt down.

To Swing:

The auxiliary hydraulic joystick (**3**) controls the swing function.

- Move joystick left to swing left.
- Move joystick right to swing right.

Installation Procedure:

- Refer to *"Attachment Installation"* on page 5-9.

https://truckmanualshub.com/

WARNING

CRUSH HAZARD. Always level forks (horizontally) and telehandler frame before swinging load to side. Swinging unlevel forks could cause load to slide off forks.

WARNING

CRUSH HAZARD. Do not use swing carriage to push or pull objects or load. Failure to comply could cause object or load to fall.

WARNING

CRUSH HAZARD. Use retaining pin (if equipped) for locking swing frame to fixed frame when carrying loads greater than 5000 lb. Failure to comply could cause object or load to fall.

Operation:

- To drive with a load, keep forks pointed forward and travel in accordance with the requirements set forth in Section 1 - General Safety Practices.

Equipment Damage Precautions:

- Do not use forks as a lever to pry material. Excessive prying forces could damage forks or machine structure.
- Do not attempt to lift loads that are attached or connected to another object.

https://truckmanualshub.com/

Dual Fork Positioning Carriage

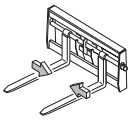
OZ3670

Use Carriage Load Chart

To determine maximum capacity, refer to *“Telehandler/ Attachment/Fork Capacity”* on page 5-4.

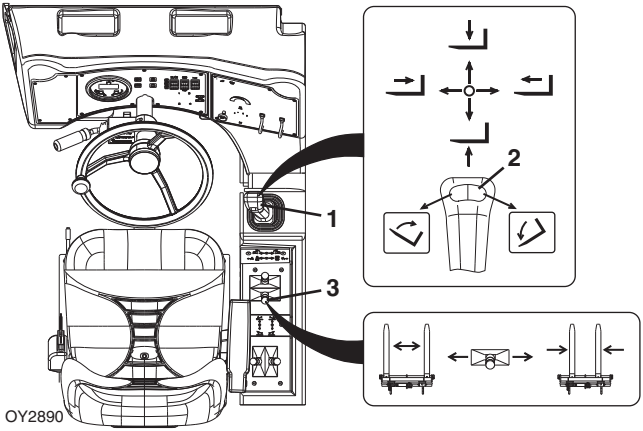

OY2890

The joystick (**1**) controls lift/lower and extend/retract movement of the boom.

The tilt switch (**2**) controls fork tilt.

- Press left side of switch to tilt up.
- Press right side of switch to tilt down.

To Fork Position:

The auxiliary hydraulic joystick (**3**) controls fork position.

- Move joystick left to shift forks in.
- Move joystick right to shift forks out.

Installation Procedure:

- Refer to *“Attachment Installation”* on page 5-9.

https://truckmanualshub.com/

WARNING

CRUSH HAZARD. Do not use fork positioning to push or pull objects or load. Failure to comply could cause object or load to fall.

Operation:

- Travel in accordance with the requirements set forth in Section 1 - General Safety Practices.

Equipment Damage Precautions:

- Do not use forks as a lever to pry material. Excessive prying forces could damage forks or machine structure.
- Do not attempt to lift loads that are attached or connected to another object.

https://truckmanualshub.com/

Fork Extension

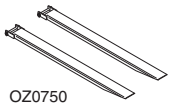

Use Appropriate Carriage Attachment Capacity Chart

To determine maximum capacity, refer to *“Telehandler/Attachment/Fork Capacity”* on page 5-4. The maximum capacity of the carriage when equipped with fork extensions may be reduced to the capacity indicated on the fork extensions. If the load exceeds the capacity of the fork extension contact JLG to obtain forks and/or fork extensions of the proper load rating and length.

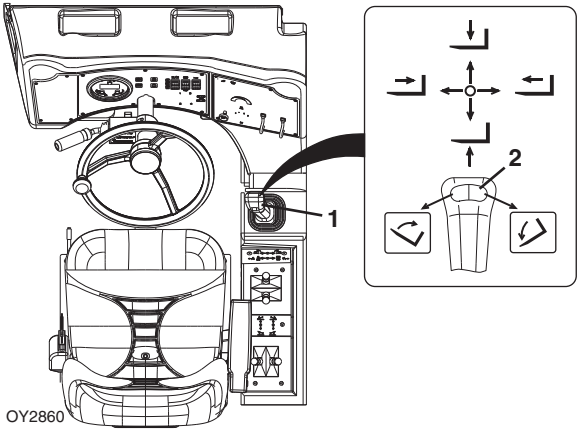

The joystick (**1**) controls lift/lower and extend/retract movement of the boom.

The tilt switch (**2**) controls fork tilt.

- Press left side of switch to tilt up.
- Press right side of switch to tilt down.

Installation Procedure:

- Ensure carriage is properly installed. Refer to *“Attachment Installation”* on page 5-9.
- Ensure length and cross section of the parent fork arm is equal to or exceeds the parent fork arm blade length stamped into the fork extension.
- Secure the fork extensions to the forks by sliding the fork extensions onto the parent forks and install the retaining pin behind the vertical shank of the fork.

https://truckmanualshub.com/

Operation:

- Heavy part of load must be against carriage backrest.
- Do not allow load center of gravity to be in front of tip of the supporting fork.
- Do not pick up a load or pry materials with tip of fork extensions.

https://truckmanualshub.com/

Mast Carriage

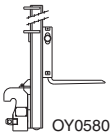

Use Mast Carriage Capacity Chart

To determine maximum capacity, refer to *"Telehandler/ Attachment/Fork Capacity"* on page 5-4.

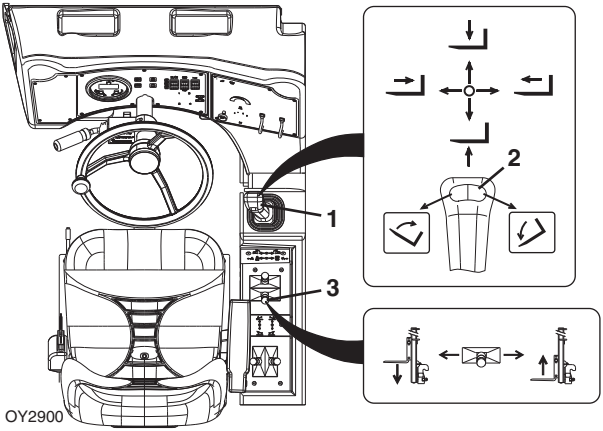

The joystick (**1**) controls lift/lower and extend/retract movement of the boom.

The tilt switch (**2**) controls mast tilt.

- Press left side of switch to tilt up.
- Press right side of switch to tilt down.

To Raise/Lower Mast:

The auxiliary hydraulic joystick (**3**) controls the raise/lower movement of the mast.

- Move joystick left to lower.
- Move joystick right to raise.

Installation Procedure:

- Refer to *"Attachment Installation"* on page 5-9.

https://truckmanualshub.com/

WARNING

CRUSH HAZARD. Do not use mast to push or pull objects or load. Failure to comply could cause object or load to fall.

Operation:

- Always lower forks fully in mast before engaging load.
- To drive with a load, lower forks fully in mast and travel in accordance with the requirements set forth in Section 1 - General Safety Practices.
- Use a signal person to assist in positioning of load if necessary.

Equipment Damage Precautions:

- Do not use forks as a lever to pry material. Excessive prying forces could damage forks or machine structure.
- Do not attempt to lift loads that are attached or connected to another object.

https://truckmanualshub.com/

Mast Carriage w/Side Tilt

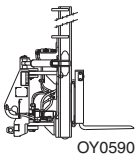

Use Mast Carriage Capacity Chart

To determine maximum capacity, refer to *“Telehandler/ Attachment/Fork Capacity”* on page 5-4.

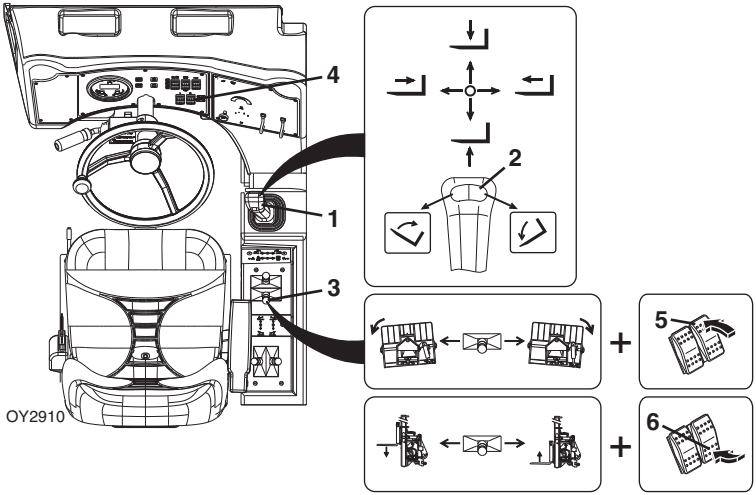

The joystick (**1**) controls lift/lower and extend/retract movement of the boom.

The tilt switch (**2**) controls mast tilt.

- Press left side of switch to tilt up.
- Press right side of switch to tilt down.

To Side Tilt:

Press Side Tilt Switch (**5**) located on dash panel (**4**) to activate Side Tilt function.

The auxiliary hydraulic joystick (**3**) controls the carriage side tilt.

- Move joystick left to (side) tilt left.
- Move joystick right to (side) tilt right.

https://truckmanualshub.com/

To Raise/Lower Mast:

Press Forks Raise/Lower Switch (**6**) located on dash panel to activate Forks Raise/Lower function.

The auxiliary hydraulic joystick controls the mast raise/lower function.

- Move joystick left to lower.
- Move joystick right to raise.

Installation Procedure:

- Refer to *"Attachment Installation"* on page 5-9.

WARNING

CRUSH HAZARD. Do not use mast to push or pull objects or load. Failure to comply could cause object or load to fall.

WARNING

CRUSH HAZARD. Do not use side tilt to push or pull objects or load. Failure to comply could cause object or load to fall.

Operation:

- Always lower forks fully in mast before engaging load.
- To drive with a load, lower forks fully in mast and travel in accordance with the requirements set forth in Section 1 - General Safety Practices.
- Use a signal person to assist in positioning load if necessary.

Equipment Damage Precautions:

- Do not use forks as a lever to pry material. Excessive prying forces could damage forks or machine structure.
- Do not attempt to lift loads that are attached or connected to another object.

https://truckmanualshub.com/

Fork Mounted Hook

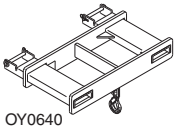

Use Appropriate Carriage Attachment Capacity Chart

To determine maximum capacity, refer to *"Telehandler/ Attachment/Fork Capacity"* on page 5-4.

Suspend loads in accordance with requirements set forth in Section 1 - General Safety Practices.

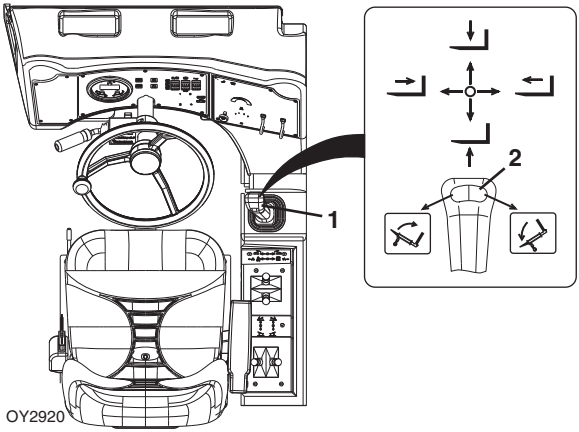

The joystick (**1**) controls lift/lower and extend/retract movement of the boom.

The tilt switch (**2**) controls fork tilt.

- Press left side of switch to tilt up.
- Press right side of switch to tilt down.

Installation Procedure:

- Ensure carriage is properly installed. Refer to *"Attachment Installation"* on page 5-9.
- Secure the fork mounted hook to the forks by sliding the fork mounted hook onto the parent forks and install the retaining pin behind the vertical shank of the fork.

https://truckmanualshub.com/

Operation:

- Pallet or lumber forks of an appropriate load rating must be used. Do not use with cubing or block forks.
- Weight of fork mounted hook and rigging must be included as part of total load being lifted.
- Do not use with mast carriage attachment.
- Do not use fork mounted hook with attachments capable of rotating (i.e. side tilt and swing carriages) without disabling the rotation feature(s).

https://truckmanualshub.com/

Truss Boom

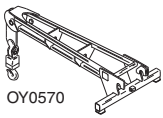
OY0570

Use Appropriate Truss Boom Capacity Chart

To determine maximum capacity, refer to *"Telehandler/ Attachment/Fork Capacity"* on page 5-4.

Suspend loads in accordance with requirements set forth in Section 1 - General Safety Practices.

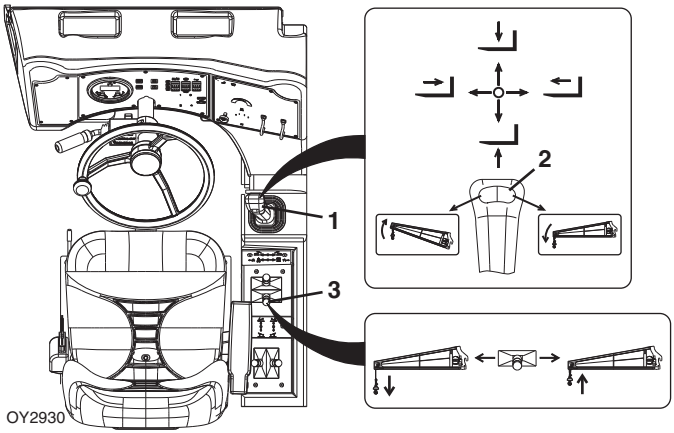

OY2930

The joystick (**1**) controls lift/lower and extend/retract movement of the boom.

The tilt switch (**2**) controls truss boom tilt.

- Press left side of switch to tilt up.
- Press right side of switch to tilt down.

Winch Control (if equipped):

The auxiliary hydraulic joystick (**3**) controls the truss boom mounted winch.

- Move joystick right to raise cable.
- Move joystick left to lower cable.

Installation Procedure:

- Refer to *"Attachment Installation"* on page 5-9.

https://truckmanualshub.com/

WARNING

CRUSH HAZARD. Maintain a minimum of three wraps of wire rope on the cable drum at all times. Failure to comply could cause object or load to fall.

Operation:

- Weight of rigging must be included as part of total load being lifted.

https://truckmanualshub.com/

Bucket

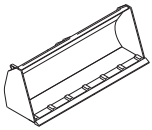
OZ0730

Use Appropriate Bucket Capacity Chart

To determine maximum capacity, refer to *“Telehandler/ Attachment/Fork Capacity”* on page 5-4.

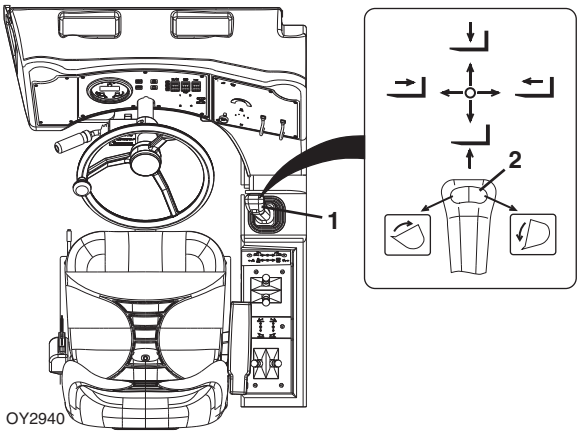

OY2940

The joystick (**1**) controls lift/lower and extend/retract movement of the boom.

The tilt switch (**2**) controls bucket tilt.

- Press left side of switch to tilt up.
- Press right side of switch to tilt down.

Installation Procedure:

- Refer to *“Attachment Installation”* on page 5-9.

Operation:

- Raise or lower boom to appropriate height for loading material from stockpile.
- Align telehandler with face of stockpile and drive slowly and smoothly into pile to load bucket.
- Tilt bucket up far enough to retain load and back away from pile.
- Travel in accordance with requirements set forth in Section 1 - General Safety Practices.
- Tilt bucket down to dump load.

https://truckmanualshub.com/

Equipment Damage Precautions

- Except for lifting or dumping a load, the boom must be fully retracted for all bucket operations.
- Do not corner-load bucket. Distribute material evenly within the bucket. Bucket capacity charts are for evenly distributed loads only.
- Do not use bucket as a lever to pry material. Excessive prying forces could damage bucket or machine structure.
- Do not attempt to load material which is hard or frozen. This could cause severe damage to quick switch or machine structure.
- Do not use bucket for "back dragging." This could cause severe damage to quick switch and retraction cables/chains.

https://truckmanualshub.com/

Grapple Bucket

OZ1450

Use Grapple Bucket Capacity Chart

To determine maximum capacity, refer to *“Telehandler/ Attachment/Fork Capacity”* on page 5-4.

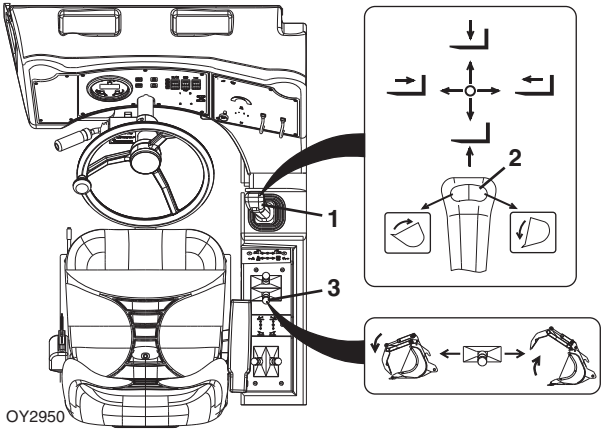

OY2950

The joystick (**1**) controls lift/lower and extend/retract movement of the boom.

The tilt switch (**2**) controls grapple bucket tilt.

- Press left side of switch to tilt up.
- Press right side of switch to tilt down.

To Open/Close Grapple:

The auxiliary hydraulic joystick (**3**) controls the open/close movement of the grapple.

- Move joystick right to open grapple.
- Move joystick left to close grapple.

Installation Procedure:

- Refer to *“Attachment Installation”* on page 5-9.

https://truckmanualshub.com/

Operation:

- Raise or lower boom to appropriate height and open grapple for loading material from stockpile.
- Align telehandler with face of stockpile and drive slowly and smoothly into pile to load bucket.
- Tilt bucket up far enough to retain load, close grapple and back away from pile.
- Travel in accordance with requirements set forth in Section 1 - General Safety Practices.
- Open grapple and tilt bucket down to dump load.

Equipment Damage Precautions

- Except for lifting or dumping a load, the boom must be fully retracted for all bucket operations.
- Do not corner-load bucket. Distribute material evenly within the bucket. Bucket capacity charts are for evenly distributed loads only.
- Do not use bucket as a lever to pry material. Excessive prying forces could damage bucket or machine structure.
- Do not attempt to load material which is hard or frozen. This could cause severe damage to quick switch or machine structure.
- Do not use bucket for "back dragging." This could cause severe damage to quick switch and retraction cables/chains.

https://truckmanualshub.com/

Personnel Work Platform - Fork Mounted

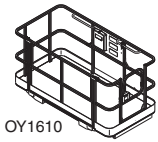

Use Appropriate Carriage Attachment Capacity Chart

To determine maximum capacity, refer to *"Telehandler/ Attachment/Fork Capacity"* on page 5-4.

The operator and personnel in platform must read and understand the separate personnel work platform manual prior to installing and using a platform.

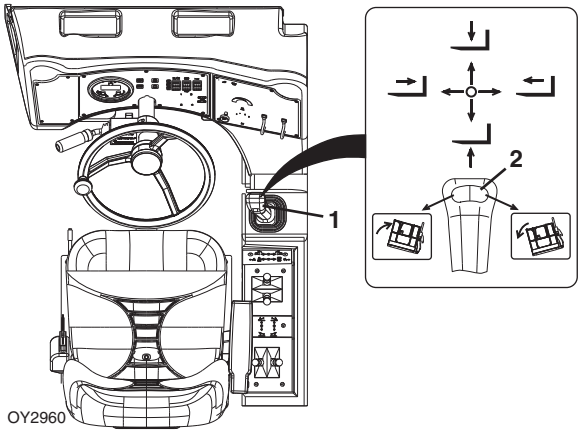

The joystick (**1**) controls lift/lower and extend/retract movement of the boom.

The tilt switch (**2**) controls platform tilt.

- Press left side of switch to tilt up.
- Press right side of switch to tilt down.

Installation Procedure:

- Ensure carriage is properly installed. Refer to *"Attachment Installation"* on page 5-9.
- Secure the fork mounted platform to the forks by sliding the fork mounted platform onto the parent forks and install the retaining pin behind the vertical shank of the fork.

https://truckmanualshub.com/

Preparation and Setup:

1. Ensure the telehandler is on a firm surface and is level.
2. Engage the park brake. Blocking the wheels is also recommended.
3. Level the platform, both side to side (frame level) and front to back (attachment tilt).
4. Keep area under platform free from personnel.
5. When personnel are on platform, the operator must remain seated in cab with personnel in direct line of sight.
6. **DO NOT** lift or carry persons in a bucket or on forks.

WARNING

FALL HAZARD. Never tilt the platform forward, rearward, or level the machine when the platform is occupied.

https://truckmanualshub.com/

SECTION 6 - EMERGENCY PROCEDURES

6.1 TOWING A DISABLED PRODUCT

The following information assumes the telehandler cannot be moved under its own power.

- Before moving the telehandler, read all of the following information to understand options available. Then select the appropriate method.
- Machine mounted retrieval devices provide suitable means to attach a tow rope, chain or tow bar only in the event the telehandler becomes stuck or disabled. Retrieval devices are not intended for trailer towing devices.
- The steering system permits manual steering if engine or power assist feature fails; however, **steering will be slow and will require much greater force.**
- **DO NOT** attempt to tow a telehandler that is loaded or the boom/attachment is raised above 4 ft (1,2 m).

Moving Short Distances

- If it is only necessary to move telehandler a short distance, less than 100 ft (30 m), it is permissible to use a vehicle of sufficient capacity to tow the unit with no previous preparation. Drive wheels will not roll.

Moving Longer Distances

- See Service Manual for information.

Contact a local Authorized Distributor for specific instructions if neither of these methods are applicable.

https://truckmanualshub.com/

6.2 EMERGENCY LOWERING OF BOOM

In the event of total loss of engine power or hydraulic pump failure with an elevated load, the situation must be properly evaluated and dealt with on an individual basis. **Contact a local Authorized Distributor for specific instructions.**

Secure the telehandler using the following procedures:

1. Clear the area around telehandler of all personnel.
2. Engage the parking brake. Place the transmission control lever in “NEUTRAL”.
3. Block all four wheels.
4. Section off a large area under the boom with string or tape to restrict any personnel from entering this area.

6.3 EMERGENCY EXIT FROM ENCLOSED CAB

Fixed Window (if equipped)

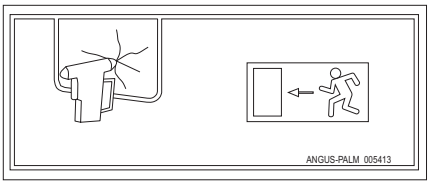

OWO740

- In an emergency, an escape hammer located directly below the rear window in an enclosed cab can be used to exit the telehandler.

Latch Window (if equipped)

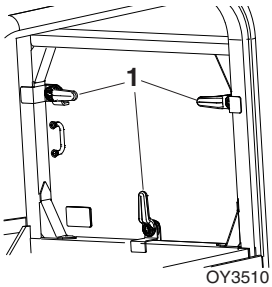

OY3510

- In an emergency, rear window can be removed to exit the telehandler by releasing hand latches (**1**).

https://truckmanualshub.com/

SECTION 7 - LUBRICATION AND MAINTENANCE

7.1 INTRODUCTION

Service the product in accordance with the maintenance schedule on the following pages.

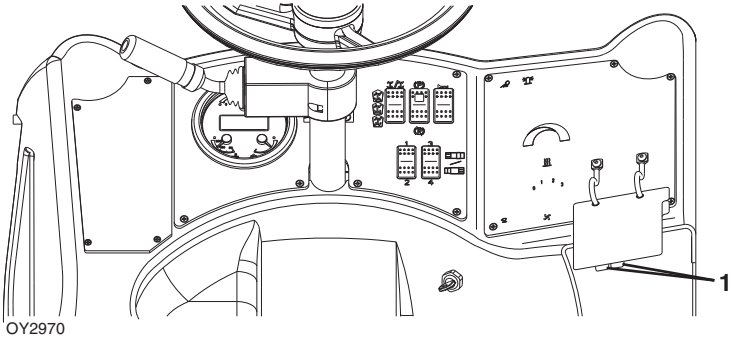

The lubrication and maintenance charts (**1**) contain instructions that must be followed to keep this product in good operating condition. The Operation & Safety Manual and Service Manual contain more detailed service information with specific instructions.

Clothing and Safety Gear

- Wear all the protective clothing and personal safety devices issued to you or called for by job conditions.
- **DO NOT** wear loose clothing or jewelry that can get caught on controls or moving parts.

https://truckmanualshub.com/

7.2 GENERAL MAINTENANCE INSTRUCTIONS

Prior to performing any service or maintenance on the telehandler, follow the shut-down procedure on page 4-4 unless otherwise instructed. Ensure telehandler is level, for proper fluid readings.

- Clean lubrication fittings before lubricating.
- After greasing telehandler, cycle all functions several times to distribute lubricants. Perform this maintenance procedure without attachment installed.
- Apply a light coating of engine oil to all linkage pivot points.
- Intervals shown are for normal usage and conditions. Adjust intervals for abnormal usage and conditions.
- Check all lubricant levels when lubricant is cool, with the exception of the transmission fluid. For ease of filling hydraulic reservoir, use a funnel with a hose or flexible tube for best results.

WARNING

CUT/CRUSH/BURN HAZARD. Do not perform service or maintenance on the machine with the engine running with the exception of the transmission fluid level check.

https://truckmanualshub.com/

7.3 SERVICE AND MAINTENANCE SCHEDULE

10 & 1st 50 and 50 Hour Maintenance Schedule

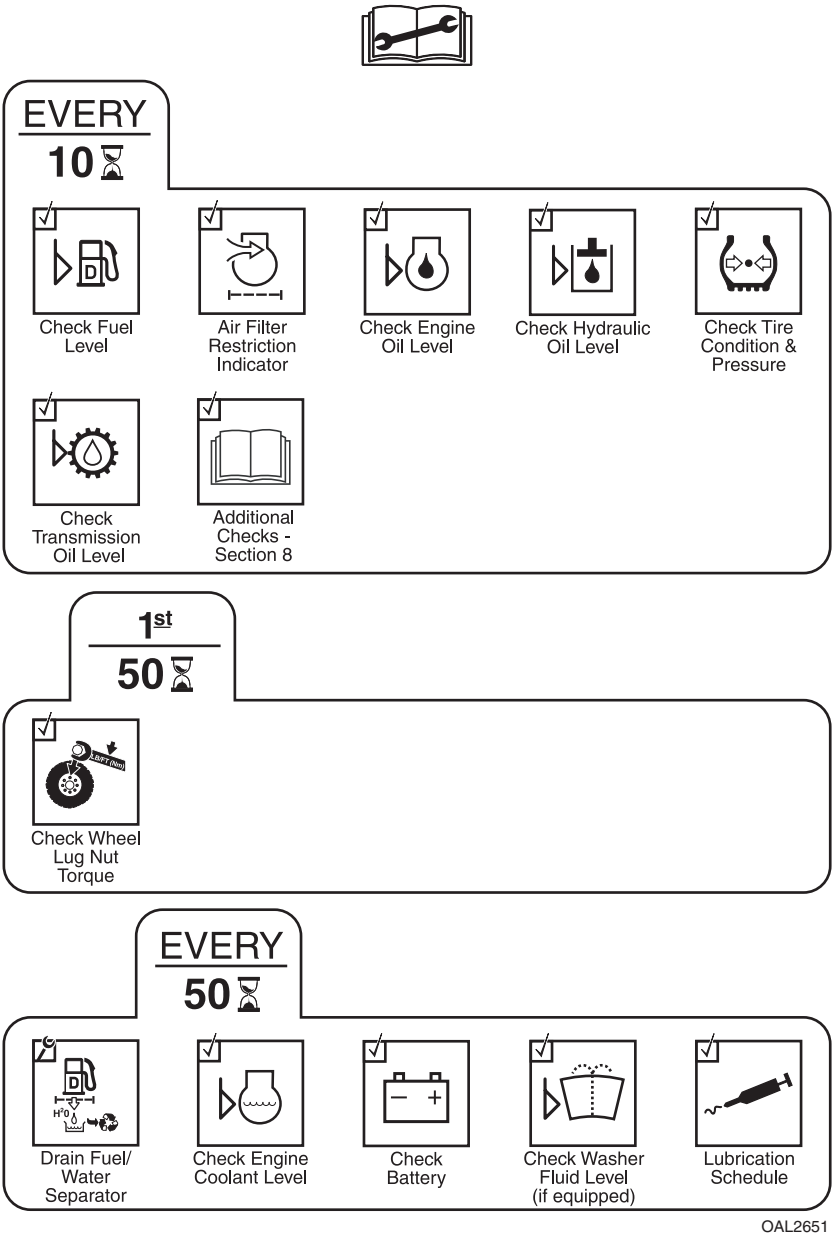

https://truckmanualshub.com/

1st 250 & 250 Hour Maintenance Schedule

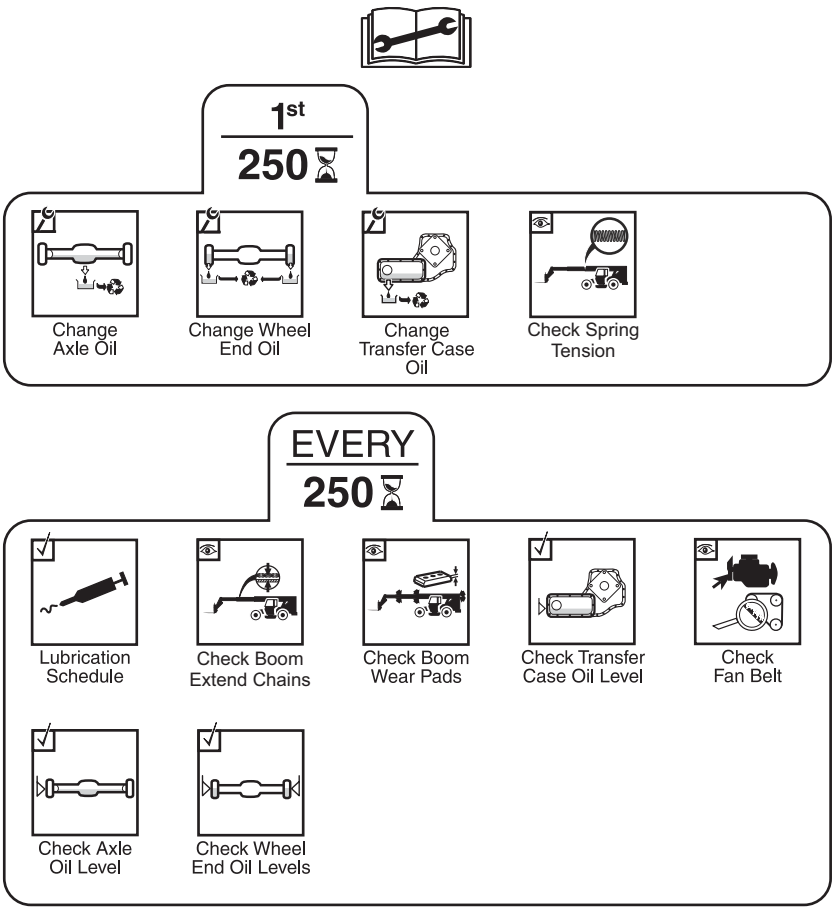

OY3570

https://truckmanualshub.com/

1st 500, 500 & 1000 Hour Maintenance Schedule

1st 500

Check Spring Tension

EVERY 500

Change Fuel Filters

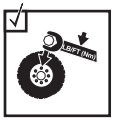

Check Wheel Lug Nut Torque

Change Engine Oil and Filter

EVERY 1000

Check Boom Retract Chains

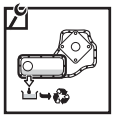

Change Transfer Case Oil

Check Air Intake System

Lubrication Schedule

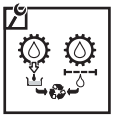

Change Transmission Oil & Filter

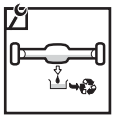

Change Axle Oil

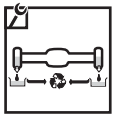

Change Wheel End Oil

OY3580

https://truckmanualshub.com/

1500, 2000 & 5000 Hour Maintenance Schedule

EVERY 1500

Change Engine Coolant

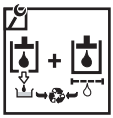
Change Hydraulic Fluid & Filters

Change Hydraulic Tank Breather

EVERY 2000

Change Crankcase Vent Filter (if equipped for **ULS**)

EVERY 5000

Engine Valve Lash Adjustment

OY3590

https://truckmanualshub.com/

This Page Intentionally Left Blank

https://truckmanualshub.com/

7.4 LUBRICATION SCHEDULES

50 Hour Lubrication Schedule

Before S/N 0160050017

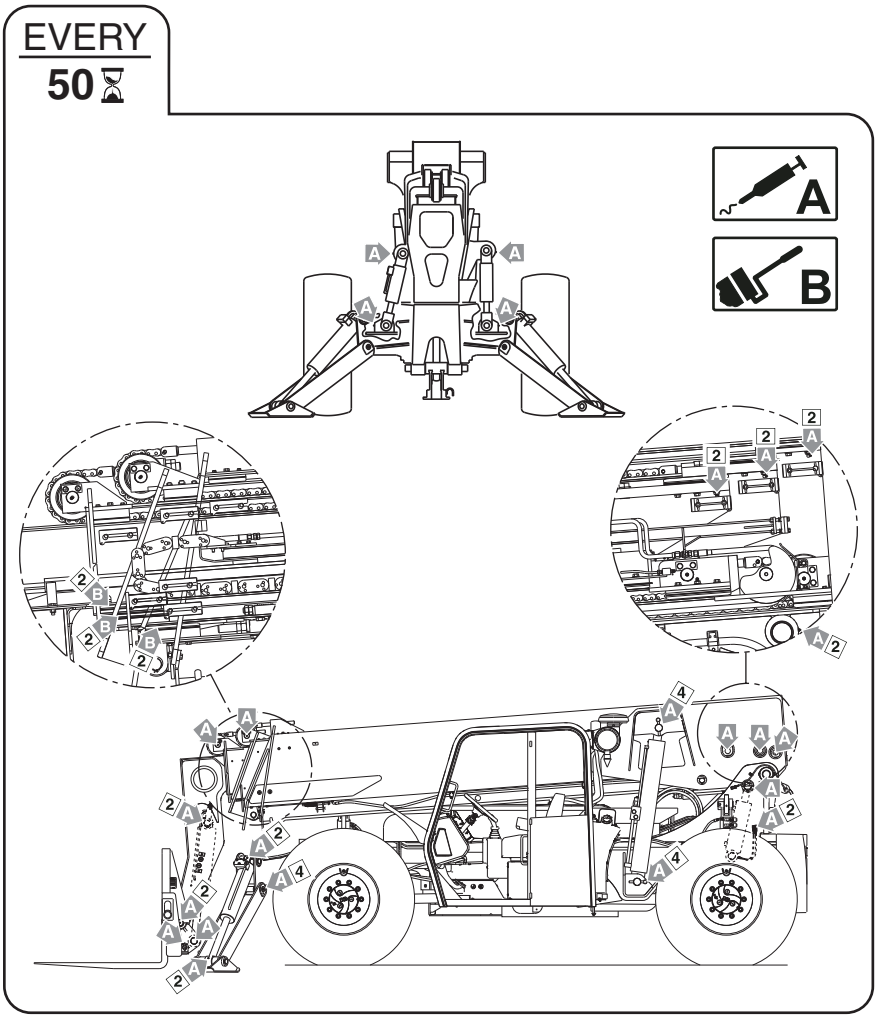

OAL0450

https://truckmanualshub.com/

S/N 0160050017 & After

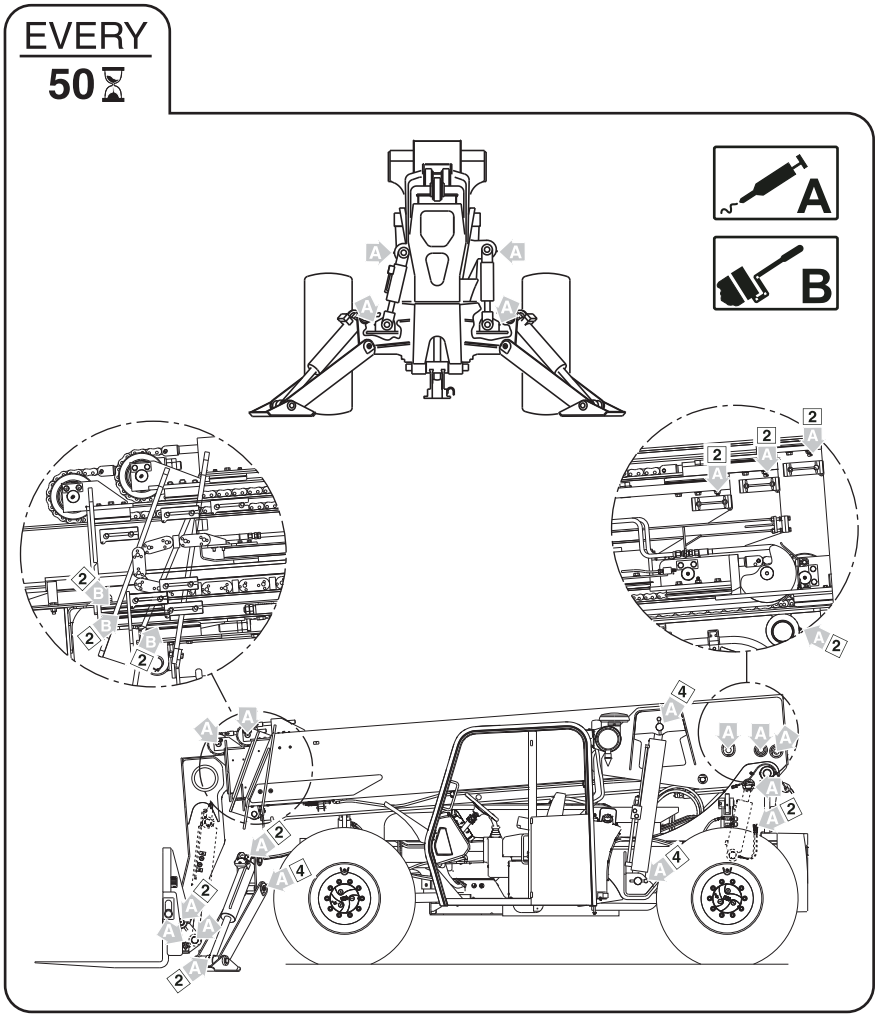

https://truckmanualshub.com/

250 Hour Lubrication Schedule

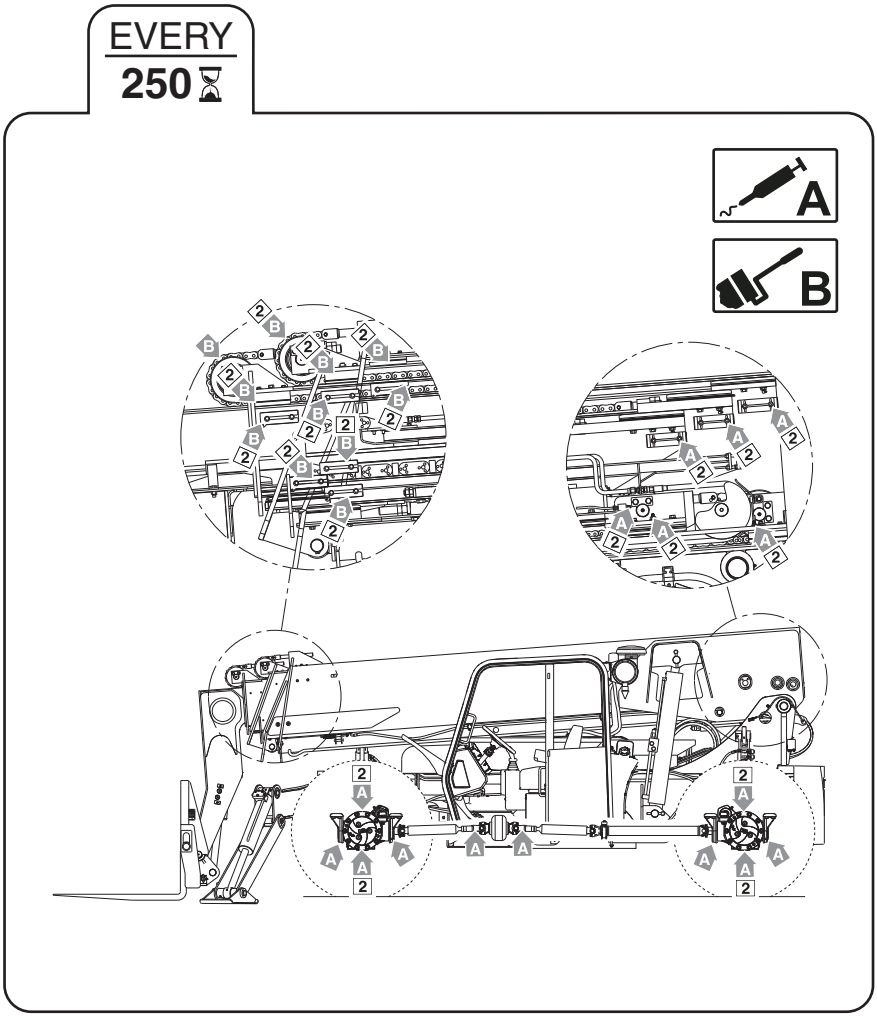

https://truckmanualshub.com/

1000 Hour Lubrication Schedule

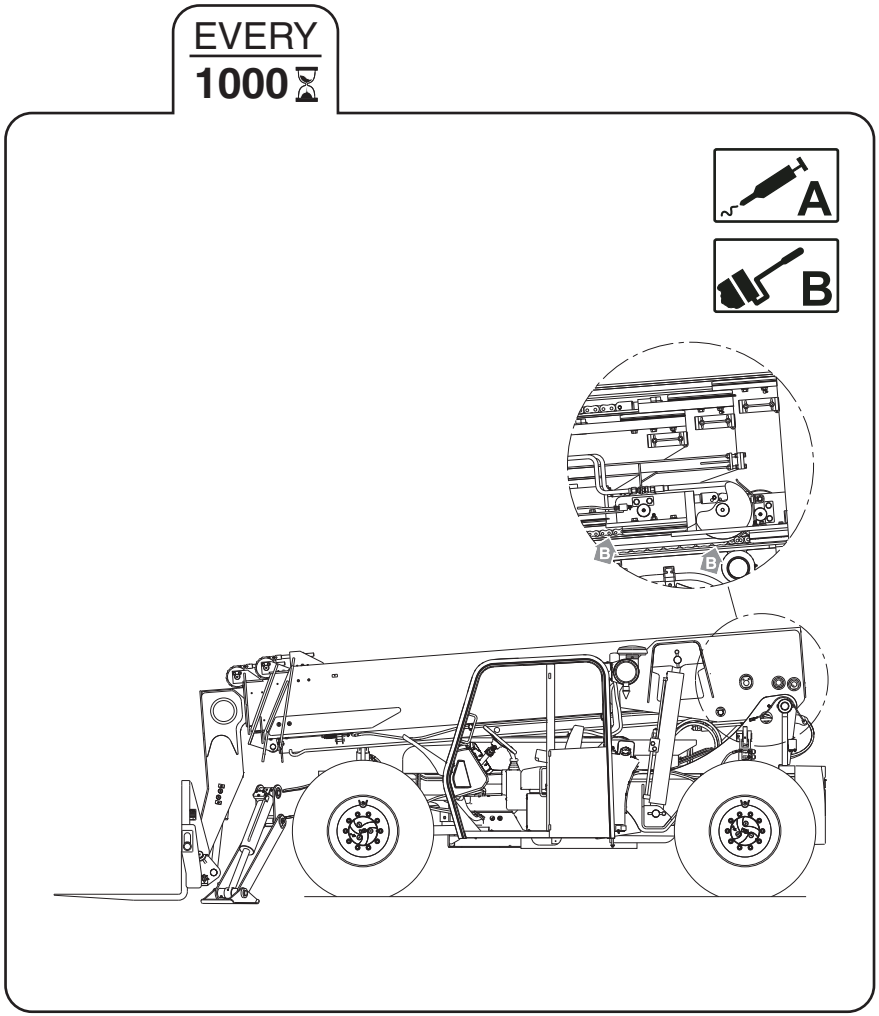

OY2080

https://truckmanualshub.com/

7.5 OPERATOR MAINTENANCE INSTRUCTIONS

Fuel System

A. Fuel Level Check

10 OW0970 OW0990

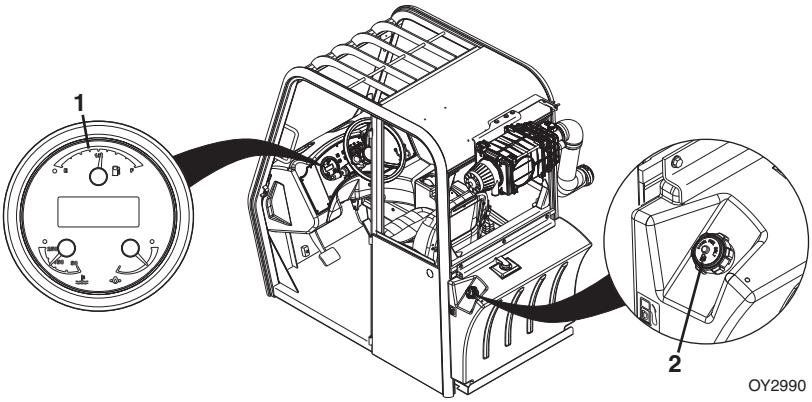

1. Check fuel gauge (**1**) located on instrument panel in cab.
2. If fuel is low, proceed to fuel source and perform *“Shut-Down Procedure”* on page 4-4.
3. Turn fuel tank cap (**2**) and remove from filler neck.
4. Add diesel fuel as needed.
5. Replace and secure fuel tank cap.

Note: *Replenish diesel fuel at end of each work shift to minimize condensation.*

NOTICE

EQUIPMENT DAMAGE. Do not allow machine to run out of fuel during operation. See Engine Operation & Maintenance Manual for details prior to servicing.

https://truckmanualshub.com/

B. Drain Fuel/Water Separator

50 OW0980 OW1000

IF EQUIPPED FOR ULS

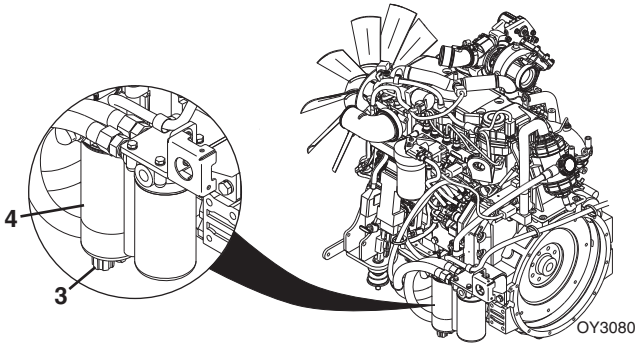

IF EQUIPPED FOR LS

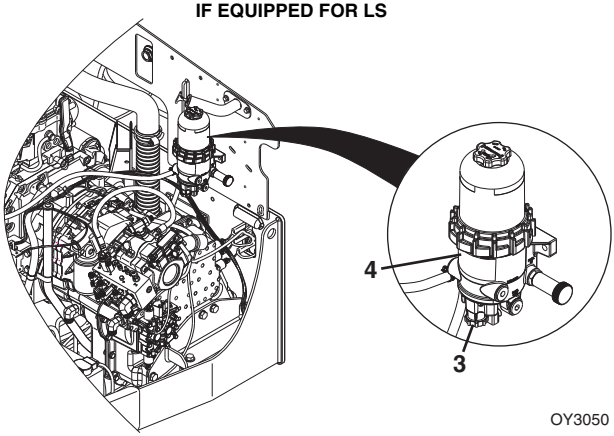

1. Perform *“Shut-Down Procedure”* on page 4-4.
2. Open the engine cover.
3. Loosen drain cock (**5**) on underside of fuel filter (**6**) and allow all water to drain into a glass until clear fuel is visible.
4. Tighten drain cock.
5. Close and secure the engine cover.

https://truckmanualshub.com/

Air Intake System

If Equipped for ULS

A. Air Filter Restriction Indicator Check

10 OW0970 OW1010

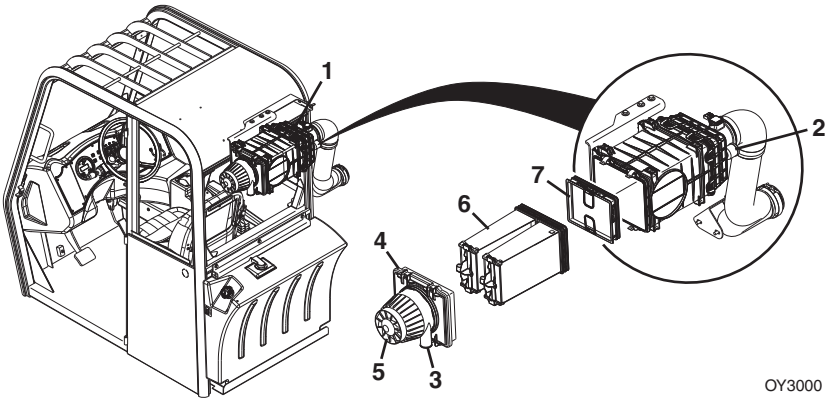

1. Perform *“Shut-Down Procedure”* on page 4-4.
2. Locate air cleaner (**1**) and check restriction indicator (**2**). If red band is visible, filter(s) must be replaced.
3. Remove dust from vacuator valve (**3**) by squeezing bottom of valve to allow loose particles to fall out.

Note: *Only remove canister cover to service the elements as restriction indicator indicates. Excessive access to check an element can lead to premature element failure.*

https://truckmanualshub.com/

B. Element Change (as restriction indicator indicates)

1. Perform *"Shut-Down Procedure"* on page 4-4.
2. Unlock air cleaner cover (**4**) and remove from air cleaner canister.
3. Lightly remove any loose dirt from cover and precleaner (**5**).
4. Remove outer primary element (**6**) and inspect for damage. Damaged elements should not be reused.
5. Thoroughly clean the interior of the air cleaner canister and vacuator valve.
6. Replace inner safety element (**7**) after every third primary element change. If replacing the inner safety element at this time, carefully slide the element out and replace with new element.
7. Slide the new primary element over the inner element making sure the sealing edge is flush with the base of the air cleaner.
8. Position air cleaner cover in place and lock into position.
9. Depress button on restriction indicator to reset.

Note: *An inner safety element should never be washed or reused. Always install a new element.*

https://truckmanualshub.com/

If Equipped for LS

A. Air Filter Restriction Indicator Check

10 OW0970 OW1010

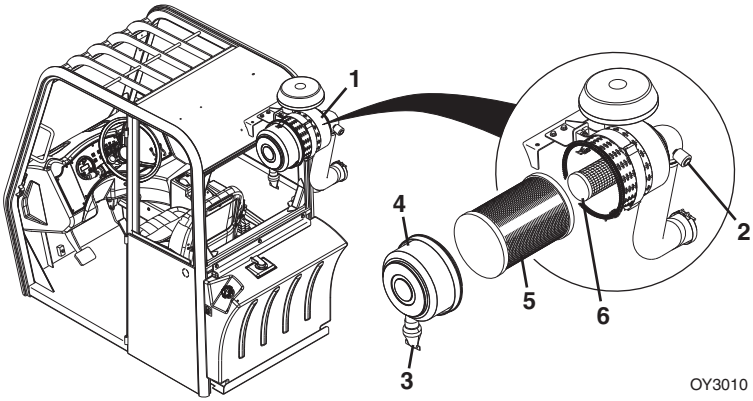

1. Perform *“Shut-Down Procedure”* on page 4-4.
2. Locate air cleaner (**1**) and check restriction indicator (**2**). If red band is visible, filter(s) must be replaced.
3. Remove dust from vacuator valve (**3**) by squeezing bottom of valve to allow loose particles to fall out.

Note: *Only remove canister cover to service the elements as restriction indicator indicates. Excessive access to check an element can lead to premature element failure.*

https://truckmanualshub.com/

B. Element Change (as restriction indicator indicates)

1. Perform *"Shut-Down Procedure"* on page 4-4.
2. Unlock air cleaner cover (**4**) and remove from air cleaner canister.
3. Remove outer primary element (**5**) and inspect for damage. Damaged elements should not be reused.
4. Thoroughly clean the interior of the air cleaner canister and vacuator valve.
5. Replace inner safety element (**6**) after every third primary element change. If replacing the inner safety element at this time, carefully slide the element out and replace with new element.
6. Slide the new primary element over the inner element making sure the sealing edge is flush with the base of the air cleaner.
7. Position air cleaner cover in place and lock into position.
8. Depress button on restriction indicator to reset.

Note: *An inner safety element should never be washed or reused. Always install a new element.*

https://truckmanualshub.com/

Engine Oil

A. Engine Oil Level Check

10 OW0970 OW1020

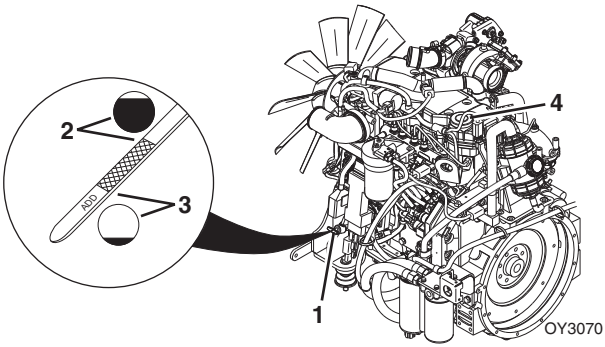

1. Perform *“Shut-Down Procedure”* on page 4-4.
2. Open the engine cover.
3. Remove dipstick (**1**) and check oil mark. The oil should be between the full (**2**) and add (**3**) marks within the crosshatched area of the dipstick.
4. If oil is low, remove oil fill cap (**4**) and add oil to bring oil up to the full mark in the crosshatch area.
5. Replace oil fill cap and dipstick.
6. Close and secure the engine cover.

https://truckmanualshub.com/

Hydraulic Oil

A. Hydraulic Oil Level Check

10 OW0970 OW1030

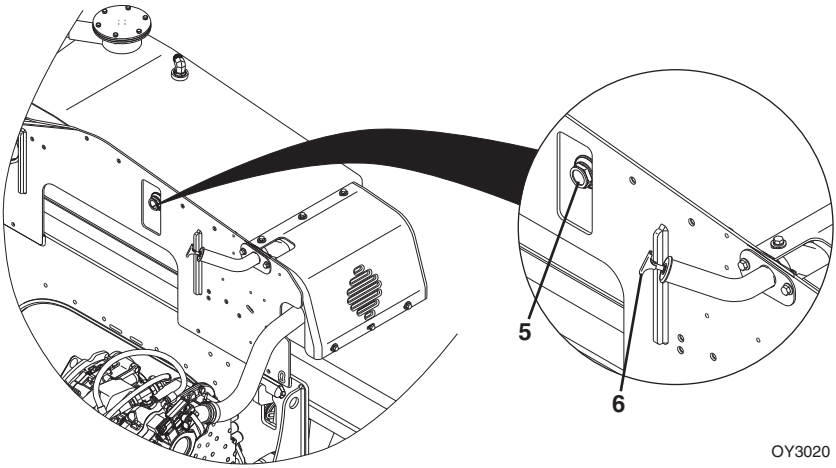

1. Be sure all cylinders are fully retracted and machine is level.
2. Perform *“Shut-Down Procedure”* on page 4-4.
3. Open the engine cover.
4. Check level of hydraulic oil at the sight gauge (**6**) on the hydraulic tank (**5**). The oil level should be visible in the sight gauge.
5. If hydraulic oil is low, remove oil fill cap (**7**) from filler neck. Add hydraulic fluid to bring oil up to the sight gauge.
6. Replace hydraulic oil fill cap.
7. Close and secure the engine cover.

https://truckmanualshub.com/

Tires

A. Tire Air Pressure Check

10 OW0970 OW1040

1. Perform *“Shut-Down Procedure”* on page 4-4.
2. Remove valve stem cap.
3. Check tire pressure.
4. Add air if required. See page 9-5 for tire pressures.
5. Replace valve stem cap.

B. Tire Damage

For pneumatic tires, when any cut, rip or tear is discovered that exposes sidewall or tread area cords in the tire, measures be taken to remove the product from service immediately. Arrangements must be made for replacement of the tire or tire assembly.

For polyurethane foam filled tires, when any of the following are discovered, measures must be taken to remove the product from service immediately. Arrangements must be made for replacement of the tire or tire assembly.

- a smooth even cut through the cord piles which exceeds 3 in (7,5 cm) in total length.
- any tears or rips (ragged edges) in the cord plies which exceeds 1 in (2,5 cm) in any direction
- any punctures which exceed 1 in (2,5 cm) in diameter.

If a tire is damaged but within the above noted criteria, the tire must be inspected daily to ensure the damage has not propagated beyond the allowable criteria.

https://truckmanualshub.com/

C. Tire and Wheel Replacement

It is recommended that a replacement tire to be the same size, ply and brand as originally installed. Refer to the appropriate parts manual for ordering information. If not using an approved replacement tire, the replacement tires must have the following characteristics:

- Equal or greater ply/load rating and size of original.
- Tire tread contact width equal or greater than original.
- Wheel diameter, width and offset dimensions equal to the original.
- Approved for the application by the tire manufacturer (including inflation pressure and maximum tire load).

Unless specifically approved by JLG, do not replace a foam filled or ballast filled tire assembly with a pneumatic tire. Due to size variations between tire brands, when selecting and installing a replacement tire ensure both tires on the axle are the same.

The rims installed have been designed for stability requirements which consist of track width, tire pressure and load capacity. Size changes such as rim width, center piece location, larger or smaller diameter, etc., without written factory recommendations, may result in unsafe condition regarding stability.

https://truckmanualshub.com/

E. Wheel Installation

Torque lug nuts after first 50 hours and after each wheel installation.

Note: *If machine is equipped with directional tire assemblies, the wheel and tire assemblies must be installed with the directional tread pattern "arrows" facing in the direction of forward travel.*

1. Start all nuts by hand to prevent cross threading. DO NOT use a lubricant on threads or nuts.
2. Tighten lug nuts in an alternating pattern as indicated in figure. See page 9-5 for tire torque values.

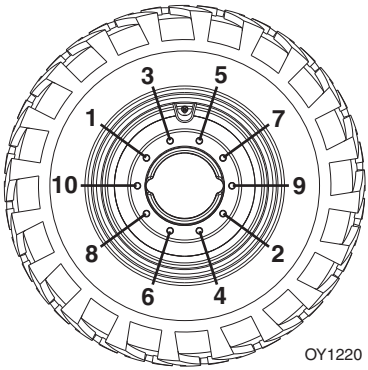

WARNING

TIP OVER HAZARD. Lug nuts must be installed and maintained at the proper torque to prevent loose wheels, broken studs and possible separation of wheel from the axle.

https://truckmanualshub.com/

Transmission Oil

A. Transmission Oil Level Check

10 OW0970 OW1050

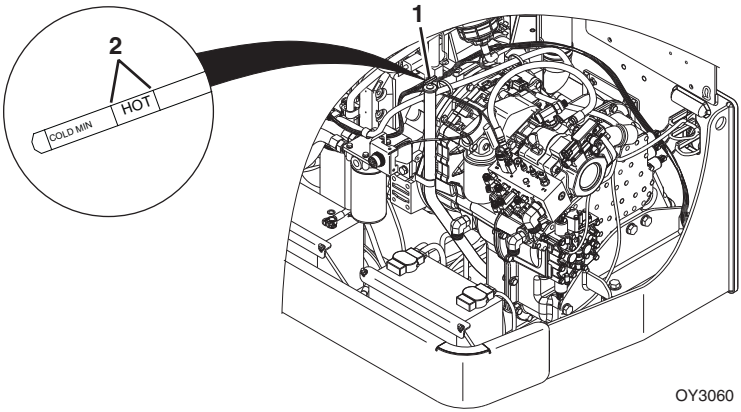

1. Apply park brake, shift transmission to "Neutral" and lower forks or attachment to the ground.
2. Check transmission oil level with engine at idle and oil at normal operating temperature.
3. Open the engine cover.
4. Remove the transmission dipstick (**1**) and check oil level. The oil level should be within the "HOT" zone (**2**).
5. If oil is low, add hydraulic fluid to bring oil up to the "HOT" zone.
6. Replace transmission dipstick.
7. Close and secure the engine cover.

https://truckmanualshub.com/

Engine Cooling System

A. Engine Coolant Level Check

50 OW0980 OW1070

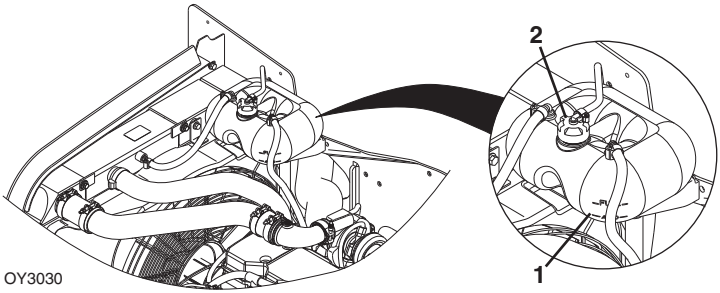

1. Perform *“Shut-Down Procedure”* on page 4-4.
2. Open the engine cover.
3. Check coolant level in surge tank (**1**). When coolant is hot, bottle should be 1/2 to 3/4 full. When coolant is cool, bottle should be 1/4 to 1/2 full.
4. If coolant is low, allow fluid to cool.
5. Remove surge tank cap (**2**) and add coolant as required.
6. Replace overflow bottle cap.
7. Close and secure the engine cover.

Note: *When filling with coolant, the maximum fill rate is 2.5 gallon per minute (9.5 liter per minute)*

https://truckmanualshub.com/

Battery

A. Battery Check

50 OW0980 OW1080

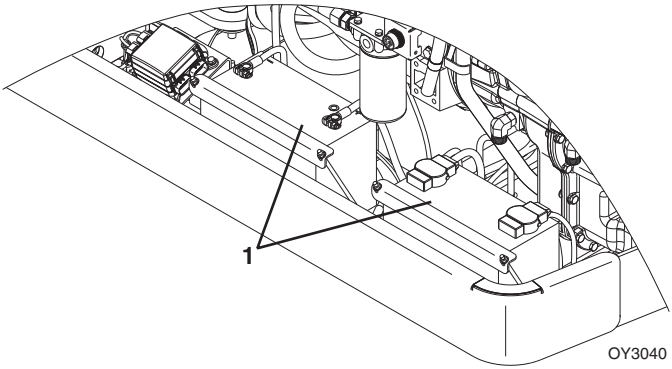

1. Perform *“Shut-Down Procedure”* on page 4-4.
2. Open the engine cover.
3. Wearing eye protection, visually inspect the batteries (**1**). Check terminals for corrosion. Replace battery if it has a cracked, melted or damaged case.
4. Close and secure the engine cover.

https://truckmanualshub.com/

Windshield Washer System (if equipped)

A. Windshield Washer Fluid Level Check

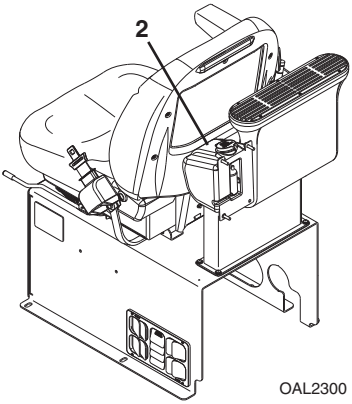

1. Perform *“Shut-Down Procedure”* on page 4-4.
2. The windshield washer fluid should be visible in the reservoir (**2**).
3. If washer fluid level is low, add fluid as needed.

https://truckmanualshub.com/

SECTION 8 - ADDITIONAL CHECKS

8.1 GENERAL

If any of the following test results cannot be achieved, the system is not functioning properly and the machine must be removed from service and repaired before continued operation.

8.2 REVERSE SENSOR SYSTEM (IF EQUIPPED)

A. Reverse Sensor System Check

Reverse Sensor System provides audible indication of objects to rear of unit while in reverse gear.

1. Clear all people and/or obstacles behind machine before performing Reverse Sensing System check.
2. Start machine and depress and hold brake. Place machine in reverse gear.
3. Verify alarm sounds upon system start up.

Note: *Reverse Sensing System detects objects of size more than 36 square inches (232.25 square centimeters) area and is functional when machine is moving in reverse direction.*

Note: *The use of a construction cone or similar object must be used to test the Reverse Sensing System.*

WARNING

Do not use a person to test the reverse sensing system.

https://truckmanualshub.com/

4. Verify operation with no objects in detection zone. No audible alarm.
5. Verify operation when object is in range of approximately 9 to 15 ft (2.7 to 4.5 m). Produces pulsing audible alarm at a frequency of one per second (1 Hz).
6. Verify operation when object is in range of approximately 7 to 9 ft (2.1 to 2.7 m). Produces pulsing audible alarm. Produces pulsing audible alarm at a frequency of two per second (2 Hz).
7. Verify operation when object is range of approximately 5 to 7 ft (1.5 to 2.1 m) Produces pulsing audible alarm at a frequency of four per second (4 Hz).
8. Verify operation when object is under approximately 5 ft (1.5 m) from machine. Produces pulsing audible alarm at a frequency of eight per second (8 Hz).

https://truckmanualshub.com/

SECTION 9 - SPECIFICATIONS

9.1 PRODUCT SPECIFICATIONS

Fluids

If Equipped for ULS

Compartment or System	Type and Classification	Viscosities	Ambient Temperature Range			
			°F		°C	
			Min	Max	Min	Max
Engine Crankcase	API CJ-4 Plus	SAE 15W-40	5	120	-15	49
		SAE 0W-40	-40	0	-40	-20
Transmission and Transfer Case	Mobilfluid 424	10W-30	0	104	-20	40
	Mobilfluid LT	75W-80	-40	0	-40	-20
Axle Differential and Wheel End	Mobilfluid 424*	10W-30	0	104	-20	40
	Mobilfluid LT*	75W-80	-40	0	-40	-20
	API GL4 with LS Additives or API GL5 with LS Additives	SAE140	50	122	10	50
		80W-140 85W-140	14	122	-10	50
		SAE90 SAE90LS	32	104	0	40
		80W-90 85W-90	-4	104	-20	40
		75W-90	-40	104	-40	40
		75W	-40	50	-40	10
Hydraulic System	Mobilfluid 424	10W-30	0	104	-20	40
	Exxon Univis HVI		-40	0	-40	-20
Boom Wear Pad Grease	Mystik Tetrimoly	NLGI Grade 2	-4	104	-20	40
Cylinder and Axle Grease	Multipurpose Grease	NLGI Grade 2	-22	104	-30	40
Boom Chain Lubricant	Schaffer 200S Silver Streak					
Engine Coolant	Ethylene Glycol and Water	50/50 Mix	Standard			
		60/40 Mix	Cold Weather			

https://truckmanualshub.com/

Compartment or System	Type and Classification	Viscosities	Ambient Temperature Range			
			° F		° C	
			Min	Max	Min	Max
Fuel	#2 Diesel	Ultra Low Sulfur (S ≤ 15 mg/kg)	Standard			
	B5 Biodiesel					
	Blend of #1 diesel and #2 diesel fuels ("winterized" #2)		Cold Weather			
	B5 Biodiesel with Winter Conditioner					

Note: *Friction Modifier may be added to front axle differential.*

https://truckmanualshub.com/

If Equipped for LS

Compartment or System	Type and Classification	Viscosities	Ambient Temperature Range			
			°F		°C	
			Min	Max	Min	Max
Engine Crankcase	API CI-4 Multigrade	SAE 15W-40	5	120	-15	49
		SAE 0W-40	-40	0	-40	-20
Transmission and Transfer Case	Mobilfluid 424	10W-30	0	104	-20	40
	Mobilfluid LT	75W-80	-40	0	-40	-20
Axle Differential and Wheel End	Mobilfluid 424*	10W-30	0	104	-20	40
	Mobilfluid LT*	75W-80	-40	0	-40	-20
	API GL4 with LS Additives or API GL5 with LS Additives	SAE140	50	122	10	50
		80W-140 85W-140	14	122	-10	50
		SAE90 SAE90LS	32	104	0	40
		80W-90 85W-90	-4	104	-20	40
		75W-90	-40	104	-40	40
		75W	-40	50	-40	10
Hydraulic System	Mobilfluid 424	10W-30	0	104	-20	40
	Exxon Univis HVI		-40	0	-40	-20
Boom Wear Pad Grease	Mystik Tetrimoly	NLGI Grade 2	-4	104	-20	40
Cylinder and Axle Grease	Multipurpose Grease	NLGI Grade 2	-22	104	-30	40
Boom Chain Lubricant	Schaffer 200S Silver Streak					
Engine Coolant	Ethylene Glycol and Water	50/50 Mix	Standard			
		60/40 Mix	Cold Weather			
Fuel	#2 Diesel	Low Sulfur (S ≤ 500 mg/kg)	Standard			
	B5 Biodiesel					
	Blend of #1 diesel and #2 diesel fuels ("winterized" #2)		Cold Weather			
	B5 Biodiesel with Winter Conditioner					

Note: *Friction Modifier may be added to front axle differential.*

https://truckmanualshub.com/

Capacities

Engine Crankcase Oil

Capacity with Filter Change..... 14.0 qt (13,3 L)

Fuel Tank

Capacity.....38 gal (144 L)

Cooling System

System Capacity..... 20.0 qt (18,9 L)

Hydraulic System

System Capacity.....60.5 gal (229 L)

Reservoir Capacity to Middle of Sight Gauge.....33 gal (125 L)

Auxiliary Hydraulic Circuit Max Flow .....10 gpm (37,9 lpm)

Transmission

Capacity with Filter Change..... 22.0 qt (20,8L)

Transfer Case

Capacity..... 1.8 qt (1,7 L)

Axles

Differential Housing Capacity (Front Axle) ..... 15.0 qt (14,2 L)

Differential Housing Capacity (Rear Axle) ..... 15.5 qt (14,7 L)

Friction Modifier—Front differential only
(May be added—Must be premixed with axle fluid)... Not to Exceed 24 oz (709,8 ml)

Wheel End Capacity ..... 2.0 qt (1,9 L)

Air Conditioning System (if equipped)

System Capacity.....2.5 lb (1134 g)

https://truckmanualshub.com/

Tires

14.00 x 24, G-2/L-2 Bias-Ply Traction - 12 Ply (G10-55A only)
Pneumatic.....65 psi (4,5 bar)
Foam .....Approx 720 lb (327 kg)

17.50 x 25, G-2/L-2 Bias-Ply Traction - 12 Ply
Pneumatic.....65 psi (4,0 bar)
Foam .....Approx 785 lb (356 kg)

400/75-28, 16 Ply
Pneumatic.....76 psi (5,2 bar)
Foam .....Approx 570 lb (259 kg)

Wheel Lug Nut

Torque .....350-400 lb-ft (475-542 Nm)

https://truckmanualshub.com/

Performance

Note: *Values shown are per machine as originally manufactured. Reference capacity charts in operator cab for specific model and attachment configuration values.*

Maximum Lift Capacity
- G10-55A ..... 10,000 lb (4536 kg)
- G12-55A ..... 12,000 lb (5443 kg)

Maximum Lift Height ..... 55 ft (16,8 m)

Capacity at Maximum Height
- Outriggers Engaged ..... 5,000 lb (2268 kg)
- Outriggers Not Engaged ..... 4,000 lb (1814 kg)

Maximum Forward Reach ..... 42 ft (12,8 m)

Capacity at Maximum Forward Reach
- Outriggers Engaged
  - G10-55A ..... 3,000 lb (1360 kg)
  - G12-55A ..... 3,500 lb (1588 kg)
- Outriggers Not Engaged ..... 0 lb (0 kg)

Reach at Maximum Height ..... 8.7 ft (2,6 m)

Maximum Travel Speed ..... 20.0 mph (32,1 kph)

Towing Capacity ..... 10,000 lb (4536 kg)

Frame Leveling ..... 10 degrees

Maximum Travel Grade
- Gradeability ..... 24 degrees (45%)
- Side Slope ..... 5 degrees (8.75%)

https://truckmanualshub.com/

Dimensions

Overall Height.....101 in (2565 mm)

Overall Width
G10-55A .....101 in (2565 mm)
G12-55A .....102 in (2591 mm)

Cab Width.....37 in (940 mm)

Track Width .....85.4 in (2169 mm)

Wheelbase .....144 in (3658 mm)

Length at Front Wheels.....201 in (5105 mm)

Overall Length (less Forks) .....254 in (6452 mm)

Ground Clearance
G10-55A .....18 in (457 mm)
G12-55A .....19 in (482 mm)

Turning Radius Over Tires .....174 in (4420 mm)

Turning Radius at Forks (48 inch forks-24 inch on center.....222 in (5639 mm)

Maximum Operating Weight (no attachment).....38,050 lb (17.259 kg)

Maximum Front Axle Weight (no attachment)
(boom level and fully retracted).....18,440 lb (8364 kg)

Maximum Rear Axle Weight (no attachment)
(boom level and fully retracted).....19,610 lb (8895 kg)

https://truckmanualshub.com/

Maximum Ground Bearing Pressure

G10-55A

14.00 x 24

Air Filled .....155 lb/in² (10,9 kg/cm²)

Foam Filled.....204 lb/in² (14,3 kg/cm²)

17.50 x 25

Air Filled .....161 lb/in² (11,3 kg/cm²)

Foam Filled.....207 lb/in² (14,6 kg/cm²)

400/75-28

Air Filled .....123 lb/in² (8,6 kg/cm²)

Foam Filled.....157 lb/in² (11,0 kg/cm²)

G12-55A

17.50 x 25

Air Filled .....166 lb/in² (11,7 kg/cm²)

Foam Filled.....218 lb/in² (15,3 kg/cm²)

400/75-28

Air Filled .....124 lb/in² (8,7 kg/cm²)

Foam Filled.....158 lb/in² (11,1 kg/cm²)

https://truckmanualshub.com/

A

Accessory Control Lever 3-15
Additional Checks..... 8-1
Adjusting/Moving Forks 5-13
Air Conditioning Controls..... 3-14
Attachment Installation 5-9
  Hydraulic Quick Switch 5-11
  Mechanical Quick Switch 5-10
Attachments
  Approved..... 5-1
  JLG Supplied 5-2
  Operation 5-15
  Unapproved 5-1
Auxiliary Hydraulic Joystick 3-12

B

Battery 7-25
Boom Indicator
  Angle..... 3-20
  Extension 3-20
Boom Joystick 3-10
Bucket 5-35

C

Capacities..... 9-3
  Air Conditioning System..... 9-4
  Axles 9-4
  Cooling System..... 9-4
  Engine Oil 9-4
  Fuel Tank..... 9-4
  Hydraulic System 9-4
  Transfer Case 9-4
  Transmission..... 9-4
Capacity 5-4
Capacity Chart
  Example 5-8
  Sample..... 5-6
Capacity Indicator Locations 5-5
Carriage w/Forks 5-16
Chemical Hazards 1-13
Controls 3-2

D

Dash Controls and Indicators.....3-4
Decals 2-3
  ANSI 2-3
  ISO 2-6
Dimensions 9-7
Disengaging a Load 4-7
Disengaging a Suspended Load.....4-10
Driving Hazards on Slopes 1-9
Dual Fork Positioning Carriage 5-23

E

Electrical Hazards 1-2
Emergency Exit from Enclosed Cab .6-2
Emergency Lowering of Boom.....6-2
Emergency Procedures 6-1
Engine
  Extreme Cold Weather Starting...4-2
  Normal Operation 4-4
  Starting 4-1
Engine Coolant Level.....7-24
Engine Oil Level.....7-18

F

Fall Hazard.....1-12
Fluids 9-1
Fork Extension 5-25
Fork Mounted Hook 5-31
Frame Level Joystick 3-11
Fuel Level 7-12
Fuel/Water Separator.....7-13

G

General Maintenance.....7-2
Grapple Bucket 5-37

https://truckmanualshub.com/

H

Hazard Classification System..... 1-1
Headlights..... 3-15
Heater Controls 3-14
Hydraulic Oil Level..... 7-19
Hydraulic Operated Attachment 5-12

I

Ignition 3-6

L

Leveling Procedure..... 4-6, 4-9
Lifting Personnel..... 1-8
Load Falling Hazard 1-7
Lubrication and Maintenance 7-1
Lubrication Schedule
1000 Hour 7-11
250 Hour 7-10
50 Hour 7-8

M

Mast Carriage 5-27
Mast Carriage w/Side Tilt 5-29

O

Operating with a Non-Suspended Load 4-5
Operating with a Suspended Load ... 4-8
Operation..... 4-1
Operational Check..... 2-12
Operator Cab..... 2-13
Operator Maintenance Instructions 7-12
Operator Seat..... 3-17
Outrigger Joysticks..... 3-13

P

Park Brake 3-7
Parking Lights 3-15
Parking Procedure 3-7
Performance.....9-6
Personnel Work Platform
Fork Mounted.....5-39
Picking Up a Load 4-5
Picking Up a Suspended Load.....4-8
Pinch Points and Crush Hazards 1-10
Placing a Load 4-7
Placing a Suspended Load 4-10
Pre-Operation Check and Inspection.....2-1

R

Restriction Indicator 7-14, 7-16
Right Hand Panel 3-14

S

Safety Practices 1-1
Safety Signal Words.....1-1
Seat Belt.....3-18
Service and Maintenance Schedule
10 Hour 7-3
1000 Hour 7-5
1st 250 Hour 7-4, 7-5
1st 50 Hour 7-3
250 Hour 7-4
50 Hour 7-3
5000 Hour 7-6
Shut-Down Procedure.....4-4
Side Shift Carriage 5-17
Side Tilt Carriage 5-19
Specifications 9-1
Steer Modes.....3-16
Swing Carriage.....5-21

https://truckmanualshub.com/

T

Tip Over Hazard 1-3
Tires 7-20, 9-5
Air Pressure 7-20
Damage 7-20
Replacement..... 7-21
Towing..... 6-1
Transmission Control Lever
Direction of Travel..... 3-8
Gear Selection 3-9
Transport
Lifting 4-12
Tiedown 4-11
Transporting a Load 4-6
Transporting a Suspended Load..... 4-9
Travel Hazard..... 1-6
Truss Boom..... 5-33
Turn Signals 3-15

W

Walk-Around Inspection 2-10
Warm-Up Check..... 2-12
Wheel Installation..... 7-22
Wheel Lug Nut..... 9-5
Wheel Replacement..... 7-21
Windows..... 2-14
Windshield Washer Fluid Level..... 7-26

https://truckmanualshub.com/

https://truckmanualshub.com/

Serial Number ______________________________

Date	Comments

https://truckmanualshub.com/

Inspection, Maintenance and Repair Log

Date	Comments

https://truckmanualshub.com/

An Oshkosh Corporation Company

TRANSFER OF OWNERSHIP

To Product Owner:

If you now own but ARE NOT the original purchaser of the product covered by this manual, we would like to know who you are. For the purpose of receiving safety-related bulletins, it is very important to keep JLG Industries, Inc. updated with the current ownership of all JLG products. JLG maintains owner information for each JLG product and uses this information in cases where owner notification is necessary.

Please use this form to provide JLG with updated information with regard to the current ownership of JLG products. Please return completed form to the JLG Product Safety & Reliability Department via facsimile or mail to address as specified below.

Thank You,
Product Safety & Reliability Department
JLG Industries, Inc.
13224 Fountainhead Plaza
Hagerstown, MD 21742
USA
Telephone: +1-717-485-6591
Fax: +1-301-745-3713

NOTE: Leased or rented units should not be included on this form.

Mfg. Model: _____

Serial Number: _____

Previous Owner: _____

Address: _____

_____

Country: _____ **Telephone: (_____)** _____

Date of Transfer: _____

Current Owner: _____

Address: _____

_____

Country: _____ **Telephone: (_____)** _____

Who in your organization should we notify?

Name: _____

Title: _____

https://truckmanualshub.com/

https://truckmanualshub.com/

Hand Signals

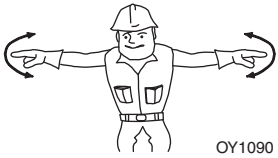 OY1090 EMERGENCY STOP - With both arms extended laterally, hands open downward, move arms back and forth.	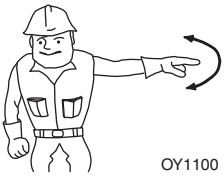 OY1100 STOP - With either arm extended laterally, hand open downward, move arm back and forth.	OY1110 STOP ENGINE - Draw thumb or forefinger across throat.
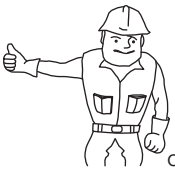 OY1120 RAISE BOOM - With either arm extended horizontally, fingers closed, point thumb upward.	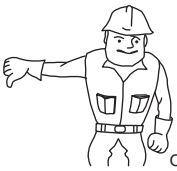 OY1130 LOWER BOOM - With either arm extended horizontally, fingers closed, point thumb downward.	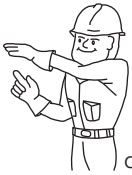 OY1140 MOVE SLOWLY - Place one hand motionless in front of hand giving motion signal. (Raise load slowly shown)
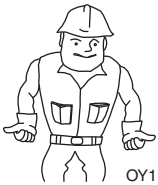 OY1150 EXTEND BOOM - With both hands clenched, point thumbs outward.	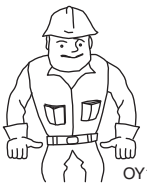 OY1160 RETRACT BOOM - With both hands clenched, point thumbs inward.	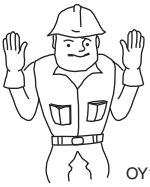 OY1170 THIS FAR TO GO - With hands raised and open inward, move hands laterally, indicating distance to go.
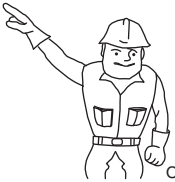 OY1180 TILT FORKS UP - With one arm held at side, extend other arm upward at about 45 degrees.	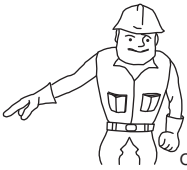 OY1190 TILT FORKS DOWN - With one arm held at side, extend other arm downward at about 45 degrees.	

Special Signals - When signals for auxiliary equipment functions or conditions not covered are required, they shall be agreed upon in advance by the operator and signalman.

https://truckmanualshub.com/

31200745

An Oshkosh Corporation Company

JLG Industries, Inc.
1 JLG Drive
McConnellsburg PA. 17233-9533
USA
Phone: +1-717-485-5161
Customer Support Toll Free: 1-877-554-5438
Fax: +1-717-485-6417

JLG Worldwide Locations

JLG Industries (Australia)
P.O. Box 5119
11 Bolwarra Road
Port Macquarie
N.S.W. 2444
Australia
Phone: +61 2 65811111
Fax: +61 2 65813058

JLG Latino Americana Ltda.
Rua Antonia Martins Luiz, 580
Distrito Industrial João Narezzi
13347-404 Indaiatuba - SP
Brazil
Phone: +55 19 3936 8870
Fax: +55 19 3935 2312

JLG Industries (UK) Ltd
Bentley House
Bentley Avenue
Middleton
Greater Manchester
M24 2GP - England
Phone: +44 (0)161 654 1000
Fax: +44 (0)161 654 1001

JLG France SAS
Z.I. de Baulieu
47400 Fauillet
France
Phone: +33 (0)5 53 88 31 70
Fax: +33 (0)5 53 88 31 79

JLG Deutschland GmbH
Max-Planck-Str. 21
D - 27721 Ritterhude-Ihlpohl
Germany
Phone: +49 (0)421 69 350 20
Fax: +49 (0)421 69 350 45

JLG Equipment Services Ltd.
Rm 1107 Landmark North
39 Lung Sum Avenue
Sheung Shui N.T.
Hong Kong
Phone: +852 2639 5783
Fax: +852 2639 5797

JLG Industries (Italia) s.r.l.
Via Po. 22
20010 Pregnana Milanese - MI
Italy
Phone: +39 029 359 5210
Fax: +39 029 359 5845

JLG Europe B.V.
Polaris Avenue 63
2132 JH Hoofddorp
The Netherlands
Phone: +31 (0)23 565 5665
Fax: +31 (0)23 557 2493

JLG Polska
Ul. Krolewska
00-060 Warsawa
Poland
Phone: +48 (0)914 320 245
Fax: +48 (0)914 358 200

Plataformas Elevadoras
JLG Iberica, S.L.
Trapadella, 2
P.I. Castellbisbal Sur
08755Castellbisbal, Barcelona
Spain
Phone: +34 93 772 4 700
Fax: +34 93 771 1762

JLG Sverige AB
Enkopingsvagen 150
Box 704
SE - 176 27 Jarfalla
Sweden
Phone: +46 (0)850 659 500
Fax: +46 (0)850 659 534

www.jlg.com