https://truckmanualshub.com/

Kubota

U.S.A. : **KUBOTA TRACTOR CORPORATION**
1000 Kubota Drive, Grapevine, TX 76051
Telephone : 888-4KUBOTA

Canada : **KUBOTA CANADA LTD.**
5900 14th Avenue, Markham, Ontario, L3S 4K4, Canada
Telephone : (905)294-7477

France : **KUBOTA EUROPE S.A.S**
19-25, Rue Jules Vercruysse, Z.I. BP88, 95101 Argenteuil Cedex, France
Telephone : (33)1-3426-3434

Italy : **KUBOTA EUROPE S.A.S Italy Branch**
Via Grandi, 29 20068 Peschiera Borrome (MI) Italy
Telephone : (39)02-51650377

Germany : **KUBOTA BAUMASCHINEN GmbH**
Steinhauser str, 100, 66482 Zweibrucken Rheinlandpfalz Germany
Telephone : (49)6332-4870100

U.K. : **KUBOTA (U.K.) LTD.**
Dormer Road, Thame, Oxfordshire, OX9 3UN, U.K.
Telephone : (44)1844-214500

Australia : **KUBOTA AUSTRALIA PTY LTD.**
25-29 Permas Way, Truganina, VIC 3029, Australia
Telephone : (61)-3-9394-4400

Malaysia : **KUBOTA MALAYSIA SDN. BHD.**
No.3 Jalan Sepadu 25/123 Taman Perindustrian Axis,
Seksyen 25, 40400 Shah Alam, Selangor Darul Ehsan Malaysia
Telephone : (60)3-736-1388

Philippines : **KUBOTA PHILIPPINES, INC.**
232 Quirino Highway, Baesa, Quezon City 1106, Philippines
Telephone : (63)2-422-3500

Taiwan : **SHIN TAIWAN AGRICULTURAL MACHINERY CO., LTD.**
16, Fengping 2nd Rd, Taliao Shiang Kaohsiung 83107, Taiwan R.O.C.
Telephone : (886)7-702-2333

Thailand : **SIAM KUBOTA CORPORATION CO., LTD.**
101/19-24 Moo 20, Navanakorn Industrial Estate, Tambon Khlongnueng, Amphur Khlongluang,
Pathumthani 12120, THAILAND
Telephone : (66)2-909-0300

Japan : **KUBOTA Corporation**
Farm & Industrial Machinery International Operations Headquarters
2-47, Shikitsuhigashi 1-chome, Naniwa-ku, Osaka, Japan 556-8601

English (Australia)
Code No. V0212-5811-2

SVL65-2

OPERATOR'S MANUAL

KUBOTA CTL

Compact Track Loader

MODEL SVL65-2

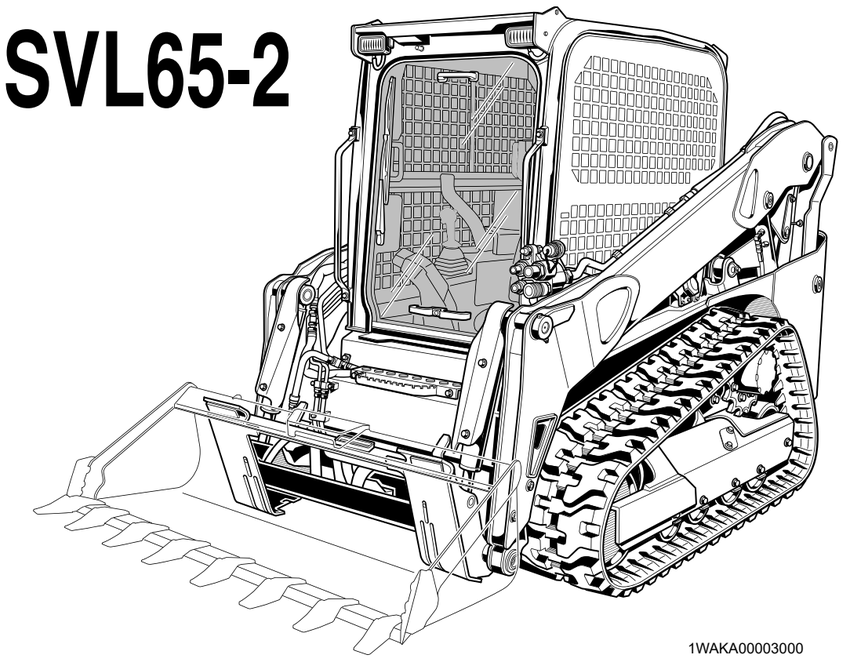

1WAKA00003000

READ AND SAVE THIS MANUAL

PRINTED IN JAPAN

© KUBOTA Corporation 2019

Kubota

https://truckmanualshub.com/

ABBREVIATION LIST

Abbreviations	Definitions
AFS	Air Flow Sensor
API	American Petroleum Institute
ASTM	American Society for Testing and Materials, USA
AUX	Auxiliary
CRS	Common Rail System
CTL	Compact Track Loader
DIN	Deutsches Institut für Normung, GERMANY
	(German Institute for Standardization)
DOC	Diesel Oxidation Catalyst
DPF	Diesel Particulate Filter
EGR	Exhaust Gas Re-circulation
EN	European Standard
FOPS	Falling Objects Protective Structure
ISO	International Organization for Standardization
JIS	Japanese Industry Standard
MAF	Mass Air Flow
MIL	Military Specification and Standard
OPC	Operator Presence Control
OSHA	Occupational Safety and Health Administration
P/L	Pressure Limiter
PCV	Positive Crankcase Ventilation
ROPS	Roll-Over Protective Structure
rpm	Revolutions Per Minute
rps	Revolutions Per Second
SAE	Society of Automotive Engineers, USA
SCV	Suction Control Valve
SMV	Slow Moving Vehicle

https://truckmanualshub.com/

UNIVERSAL SYMBOLS

As a guide to the operation of your machine, various universal symbols have been utilized on the instruments and controls. The symbols are shown below with an indication of their meaning.

- Caution
- Engine, Electrical Preheat
- Engine Lubricating Oil Pressure
- Coolant Temperature
- Hydraulic Oil Temperature
- Hydraulic Lock
- Hydraulic Unlock
- AUX Hydraulics
- High-Flow
- AUX Hold
- AUX Electrical Power
- Fuel
- Diesel Fuel
- Slow (Speed Indicator)
- Fast (Speed Indicator)
- Battery Charge
- DPF Standby / Regeneration
- Engine Rev up
- Inhibit DPF Regeneration
- Parking Brake
- Front Working Light
- Rear Working Light
- Lock
- Unlock
- Forward
- Backward
- Turn Right
- Turn Left
- Lift Arm Raise
- Lift Arm Lower
- Loader Bucket, Dump
- Loader Bucket, Rollback
- Loader Bucket, Float
- Quick Hitch Lock
- Horn
- AUX electrical mode change
- Loader bucket self leveling

https://truckmanualshub.com/

FOREWORD

You are now the proud owner of a KUBOTA CTL. This machine is a product of KUBOTA quality engineering and manufacturing. It is made of fine materials and under a rigid quality control system. It will give you long, satisfactory service. To obtain the best use of your machine, please read this manual carefully. It will help you become familiar with the operation of the machine and contains many helpful hints about machine maintenance. It is KUBOTA's policy to utilize as quickly as possible every advance in our research. The immediate use of new techniques in the manufacture of products may cause some sections of this manual to become outdated. KUBOTA distributors and dealers will have the most up-to-date information. Please do not hesitate to consult with them.

SAFETY FIRST

This symbol, the industry's "Safety Alert Symbol", is used throughout this manual and on labels on the machine itself to warn of the possibility of personal injury. Read these instructions carefully. It is essential that you read the instructions and safety regulations before you attempt to assemble or use this unit.

DANGER : Indicates an imminently hazardous situation which, if not avoided, will result in death or serious injury.

WARNING : Indicates a potentially hazardous situation which, if not avoided, could result in death or serious injury.

CAUTION : Indicates a potentially hazardous situation which, if not avoided, could result in minor or moderate injury.

IMPORTANT : Indicates that equipment or property damage could result if instructions are not followed.

NOTE : Gives helpful information.

https://truckmanualshub.com/

CONTENTS

SAFE OPERATION **7**

SERVICE OF THE MACHINE **25**
DEALER SERVICE 25
1. Warranty policy 25
2. Procedure for scrapping the machine 26

TECHNICAL DATA **27**
SPECIFICATION TABLE 27

MACHINE PARTS **28**
DESCRIPTION OF MACHINE PARTS 28

INSTRUMENT PANEL AND SWITCH **30**
INSTRUMENT PANEL 30
1. Fuel gauge indicator 31
2. Low fuel warning light 31
3. Coolant temperature gauge 31
3.1 Checking the coolant temperature gauge 32
4. Glow plug indicator 32
5. Parking brake warning light 32
6. Bucket-floating indicator 33
7. Master warning light 33
8. Engine oil pressure indicator 33
9. Battery charge warning light 33
10. Hydraulic oil temperature indicator 34
11. Hour meter 34
12. Diesel-particulate-filter (DPF) regeneration indicator 34
13. Engine rev up indicator 34
14. Air cleaning warning indicator 35
SWITCHES 36
1. Starter switch 37
2. Parking brake switch 37
3. Hydraulic unlock switch 37
4. Horn switch 38
5. Travel speed switch 38
6. Working light switch 38
7. Seat switch 39
8. Inhibit diesel particulate filter (DPF) regeneration switch 39
9. Float switch 39
10. AUX port switch 40
11. AUX port switch [High-Flow model only] 40
12. AUX port variable switch 41
13. AUX hold switch 41
14. AUX electrical control switch (option) 41
15. AUX electrical mode change switch (option) 41
16. Hydraulic quick switch [Hydraulic quick-hitch model only] 42
17. Self leveling switch 42

PEDAL AND LEVERS **43**
CONTROL PEDALS, LEVERS, AND ELECTRICAL OUTLET 43

SAFETY FEATURES **44**
HOW TO USE THE EMERGENCY EXIT 44
OPC FUNCTION 44
HOW TO USE AND CHECK THE FUNCTION OF THE ARMREST 44

https://truckmanualshub.com/

HOW TO USE AND CHECK THE SEAT FUNCTION 44
HOW TO CHECK THE REVERSE ALARM 44
HOW TO USE THE FORCED LIFT ARMS LOWERING DEVICE 45

EXHAUST AFTERTREATMENT DEVICE 46

CATALYST-CONTAINING DIESEL-PARTICULATE-FILTER (DPF) DEVICE 46
REGENERATION OF DIESEL-PARTICULATE-FILTER (DPF) 46

AIR CONDITIONER 48

ADJUSTING THE AIR FLOW OF THE AIR CONDITIONER 48
AIR CONTROL VENT 49
HOW TO USE THE CONTROL PANEL 49
OPERATING THE CONTROL PANEL 50

OPERATION 51

CAB TYPE MACHINE 51
1. Interior lamp 51
2. How to use the wiper/washer switch [Closed cab model] 51
3. Opening and closing the cab door [Closed cab model] 51
4. Opening and closing the side cab window [Closed cab model] 53
OPERATION OF THE ENGINE 53
1. Starting the engine 54
2. Checking the machine after starting the engine 55
3. Starting the engine under cold conditions 55
STOPPING THE ENGINE 55
1. Starting the engine with an auxiliary battery 55
OPERATION OF THE MACHINE 56
1. Running-in of the machine 56
2. Start of the machine 56
2.1 Adjusting the operator's seat 56
2.2 How to use the seat belt 57
2.3 How to use the armrest 58
3. Driving 58
3.1 Traveling forward and backward 58
4. Turning the machine 59
4.1 How to use pivot turn 59
4.2 How to use spin turn 60
5. Operating the lift arms 60
5.1 How to use the lift arm stopper 61
6. Operating the bucket 62

AUXILIARY HYDRAULIC 64

HOW TO USE THE AUXILIARY HYDRAULIC CONTROL 64
1. Operating the auxiliary hydraulic control 64
2. Operating the attachment control device (option) 65

QUICK-HITCH 67

HOW TO USE THE MECHANICAL QUICK-HITCH 67
HOW TO USE THE HYDRAULIC QUICK-HITCH 69

MACHINE PRECAUTION 71

IMPORTANT INFORMATION ON MACHINE OPERATION 71
1. Caution while traveling 71
2. Precaution when traveling in high speed 71
3. Precautions for use of machine near water 71
4. Precautions when traveling on inclines 72
5. Parking on an incline 72
6. Prohibited actions for the machine 73
7. Prevention of slippage of rubber tracks 73

https://truckmanualshub.com/

LIFTING **74**
LIFTING THE MACHINE 74
TRANSPORTING **77**
LOADING THE MACHINE ON A TRANSPORT VEHICLE 77
TOWING AN OPERABLE MACHINE 78
TOWING AN INOPERABLE MACHINE 79
MAINTENANCE **80**
MAINTENANCE INTERVALS 80
OPENING AND CLOSING OF COMPONENTS 82
1. Opening and closing the rear door 82
2. Opening the engine hood 82
3. Detaching the radiator and the oil cooler 83
4. Where to keep the operator's manual 84
5. Tilting up the cab 84
DISCHARGING MUD FROM OPERATOR CAB AND MAIN FRAME 86
1. Discharging mud from the operator CAB 86
2. Discharging mud from the main frame 86
DAILY CHECKS 86
1. Daily check items before starting the machine 86
2. Checking the coolant level 87
3. Checking the fuel level 87
4. Checking the engine oil level 87
5. Checking the hydraulic oil level 88
6. Lubrication points of the machine 88
7. Checking the radiator and the oil cooler 89
8. Checking and cleaning the engine and the electrical wiring 89
9. Precautions for checking the V-belt 89
10. Precautions for washing whole machine 90
11. Draining the water separator 90
12. Checking the evacuator valve 90
13. Checking the DPF (diesel-particulate-filter) muffler 90
14. Checking the washer liquid 91
15. Checking the battery condition 91
16. Cleaning the fuel tank cap 92
EVERY 50 SERVICE HOURS 93
1. Draining the water from the fuel tank 93
2. Checking the track tension 93
3. Checking the air cleaner element 94
4. Cleaning the air cleaner element 94
5. Cleaning the evacuator valve 95
EVERY 250 SERVICE HOURS 95
1. Checking the radiator hoses and the clamps 95
2. Checking the fuel line and the intake air line 96
3. Checking and adjusting the V-belt tension 96
3.1 Checking and adjusting the air-conditioner belt tension [Closed cab model] 97
4. Cleaning inside of the main frame 97
5. Replacing the air cleaner element 98
6. Cleaning the fresh air filter 98
7. Cleaning the inner air filter 98
8. Checking the air-conditioner condenser 99
9. Changing the engine oil 99
10. Replacing the engine oil filter cartridge 100
EVERY 500 SERVICE HOURS 100
1. Replacing the water separator filter element 100
2. Replacing the fuel filter cartridge 101
3. Changing the drive unit oil 101

https://truckmanualshub.com/

4. Changing the return filter ... 102
5. Replacing the breather filter ... 102
6. Replacing the hydraulic oil filter ... 102
EVERY 1000 SERVICE HOURS ... 102
1. Changing the hydraulic oil including replacing the suction filter and the return filter in the hydraulic tank ... 102
2. Hydraulic oil check with the hydraulic hammers ... 103
3. Adjusting the engine valve clearance ... 104
EVERY 1500 SERVICE HOURS ... 104
1. Checking the injector tip ... 104
2. Replacing the oil separator element ... 104
3. Checking the EGR cooler ... 104
EVERY 2000 SERVICE HOURS ... 104
1. Checking the alternator and the starter motor ... 104
EVERY 3000 SERVICE HOURS ... 104
1. Checking the EGR system ... 104
2. Checking the turbocharger ... 104
3. Cleaning the diesel-particulate-filter (DPF) ... 104
ANNUAL SERVICING ... 105
1. Checking the air-conditioner pipes and hoses ... 105
2. Checking the exhaust manifold for cracks, gas, leakage, and mounting screw ... 105
3. Checking the intake air line for air leaks ... 105
4. Checking the boost sensor and the AFS (air-flow-sensor) ... 105
5. Checking the condition of the diesel-particulate-filter (DPF) muffler ... 105
6. Checking the diesel-particulate-filter (DPF) differential pressure sensor and piping for gas leak ... 105
7. Checking the diesel-particulate-filter (DPF) exhaust gas temperature sensor ... 105
8. Checking the EGR piping for gas leak ... 105
9. Checking the antifrost heater for oil separator (CCV heater) ... 105
BIENNIAL SERVICING ... 105
1. Changing the radiator coolant ... 105
2. Replacing the fuel hose ... 106
3. Replacing the intake air line ... 107
4. Replacing the radiator hoses ... 107
5. Replacing the air-conditioner pipes and hoses ... 107
6. Replacing the closed breather related rubber piping ... 107
7. Replacing the diesel-particulate-filter (DPF) differential pressure sensor rubber piping (front and back) 107
8. Replacing the suction pipe downstream the AFS (air-flow-sensor) ... 107
9. Replacing the boost sensor pressure rubber piping ... 108
10. Replacing the EGR cooler hose ... 108
SERVICING AS REQUIRED ... 108
1. Checking the amount of refrigerant gas ... 108
2. Draining the water separator in case warning against water of the fuel filter ... 108
3. Purging of the fuel system ... 108

TRACK ... 109
ADJUSTING THE TRACKS ... 109

FUSE ... 111
FUSES ... 111
1. Replacing the fuse ... 111
2. Fuse capacities and circuits ... 111
3. Electrical outlet ... 112
4. Slow blow fuse ... 112
5. Replacing the bolted slow blow fuse ... 113

TROUBLESHOOTING ... 114
TROUBLESHOOTING OF THE ENGINE AND OTHER SYSTEMS ... 114
LIST OF THE ERROR CODE NUMBERS ... 116

https://truckmanualshub.com/

COLD WEATHER **122**
PREPARATION FOR OPERATION OF THE MACHINE IN COLD WEATHER 122
STORING THE MACHINE AFTER COMPLETION OF WORK IN COLD WEATHER 122
LONG STORAGE **123**
STORING THE MACHINE FOR A LONGER PERIOD OF TIME 123
OPERATING THE MACHINE AFTER STORING FOR A LONG PERIOD OF TIME 123
1. Periodic replacement of important component parts 123
RECOMMENDED OILS **125**
RECOMMENDED OILS, GREASES, AND FUELS 125
BIODIESEL FUEL (BDF) 127
APPENDICES **129**
MAIN DIMENSIONS OF THE MACHINE 129
INDEX **131**

https://truckmanualshub.com/

SAFE OPERATION

Careful operation is your best safeguard against an accident.
Read and understand the *Safe operation* section carefully, before operating the machine.
Every user, however experienced, should carefully read and understand the *Safe operation* section for the machine, the attachments, and the accessories before taking the machine into operation. The owner is obliged to inform the operators of instructions to the machine, the attachments, and the accessories in detail.
Keep this manual in the storage place.
(See Where to keep the operator's manual on page 84)

PRECAUTIONS BEFORE OPERATION OF THE MACHINE

1. General precautions

Know your equipment and its limitations. Read and understand this entire manual before starting and operating the machine.

- Obey the safety labels on the machine.
- Inspect the seat belt regularly and replace it if it is frayed or damaged.

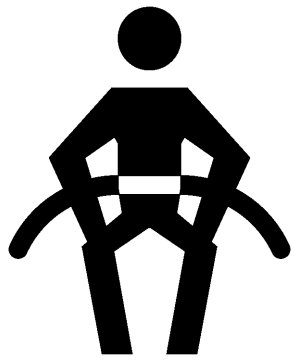

1RAPQ00002A01

- Always sit in the operator's seat when starting the engine or operating the levers or controls.
- Do not operate the machine while under the influence of alcohol, medication, controlled substances, or while fatigued.
- Check the surrounding area carefully before using the machine or when attachments are being connected.
  To avoid any danger of electrocution, never operate the machine near power lines before confirming the power is off and all local and national safety regulations. Never approach a machine or load that is contacting a power source such as power lines. Electrocution can occur by coming into contact with a machine that is near power lines.
- Check for buried pipes and cables before digging.
- Check for hidden holes, obstacles, soft underground, and overhangs. Do not enter soft ground.

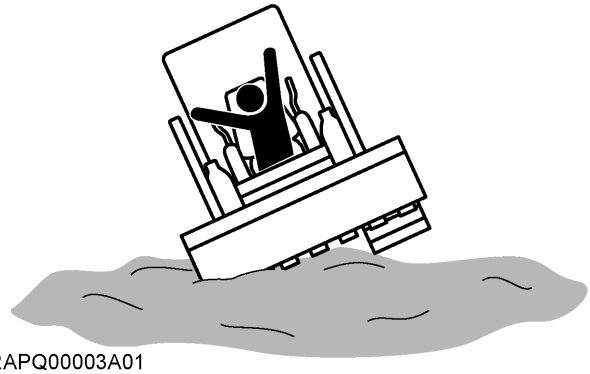

1RAPQ00003A01

  – During machine use, do not allow any persons within the working range.
- Do not allow anyone to use the machine until they have been informed of the work to be performed and they have read and understood the operator's manual.
- Do not wear baggy, torn, or oversized clothing when working with the machine. Baggy, torn, or oversized clothing can get caught in rotating parts or control elements which can cause accidents or injuries.
  Wear adequate safety clothing, for example safety helmet, safety shoes, eye protection, ear protection, working gloves, and so on, as necessary and as prescribed by law or statutes.

1RAPQ00004A01

- Do not allow passengers to ride on any part of the machine at any time. The operator must remain in the seat of the machine during operation.

- Check the levers, pedals, and mechanical parts for correct adjustments and wear. Replace worn or damaged parts immediately. Check the nuts and bolts regularly for correct torque.
- Keep your machine clean. Heavy soiling, grease, dust, and grass can cause fires, accidents, or injuries.
- Before starting the machine, be absolutely sure that the machine has been filled with fuel, lubricated, greased, and undergone all necessary maintenance.
- Do not modify the machine, otherwise it could lead to unforeseen safety problems.
- Make sure that the attachments, particularly those utilizing quick-hitch, are securely mounted. Use only attachments authorized by KUBOTA.

2. Precautions of ROPS and FOPS

Know your equipment and its limitations. Read and understand this entire manual before starting and operating the machine with the ROPS and FOPS.

- For your safety, KUBOTA installs a ROPS (roll-over-protective-structure) and a FOPS (falling-objects-protective-structure) with a seat belt. Always use the seat belt when the machine is equipped with the ROPS or the FOPS. Combination of the seat belt and the ROPS or the FOPS will reduce the risk of personal injury or death if the machine is upset.
  Do not modify structural members of the ROPS or FOPS by welding, drilling, bending, grinding, or cutting, as this may weaken the structure.

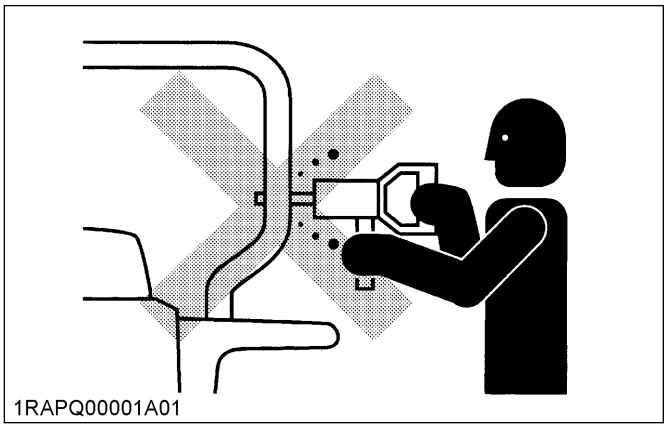
1RAPQ00001A01

  If any component is damaged, replace it. Do not repair the component.
  If the ROPS or FOPS is loosened or removed for any reason, make sure that all parts are reinstalled correctly. Tighten mounting bolts to proper torque.
- The ROPS and the FOPS structure complies with ISO 3471, ISO 3449, and OSHA regulations.

PRECAUTIONS FOR OPERATING THE MACHINE

- Mount and dismount the machine safely. Always face the machine. Always use handrails and available steps and keep yourself well balanced.
  Do not grab or hold any of the control levers and switches. Do not jump on or off the machine, whether stationary or in motion.
- Start and control the machine only from the operator's seat. The operator should not lean out of his or her seat when the engine is running.
- Before starting the engine, make sure that the armrests are in the raised position, the control levers are in their neutral position, and the seat belt is fastened correctly.
- Always thoroughly check the surrounding area for any possible conditions that could create a dangerous situation.
  - Make sure that you read the operator's manual to thoroughly understand the operating conditions and limitations of the machine.
  - To avoid damage and to prevent accidents, always use the buddy system and have the other person, check for clearances and other possible dangers that may be obstructed from view.
  - Never allow people to approach the vicinity of the turning radius of the machine.
  - Be cognizant of blind spots to the rear and always check behind you before backing up.
- Only operate the machine in well-ventilated area to avoid poisoning from carbon monoxide, an odorless, colorless gas that is deadly.

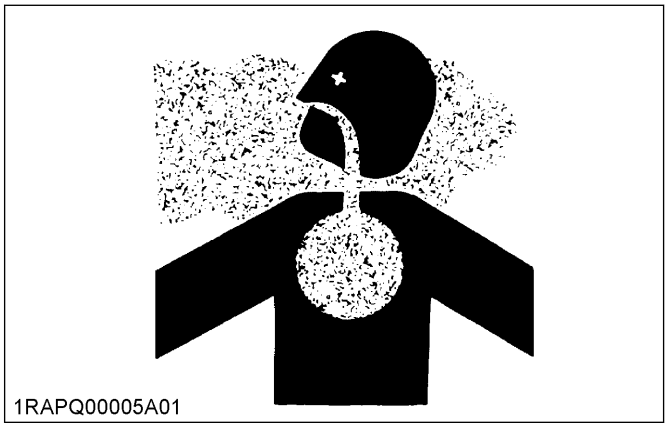
1RAPQ00005A01

- Never remove any of the safety features on the machine.
  - Make sure that all safety features, including guards, protective devices, doors, and cabin are functioning normally, properly secured, and in good condition.
    Repair and replace any lost or damaged protective features.
  - Carefully read the operator's manual in order to understand the proper use of safety features

such as armrest, seat belt, and other equipment.
Make sure that you use the armrest, the seat belt, and other equipment properly.
– Make sure that all safety features are in good operating condition and remove only when repair is needed.
– Make sure to use appropriate protective doors, windows, and screens (such as polycarbonate door), depending upon application. KUBOTA recommends the use of a polycarbonate door for high impact applications such as a hammer or mulcher.

- To avoid injury, always keep hands and body inside the protective structures such as ROPS and the FOPS whenever operating the machine.
  Never operate the machine using control levers from outside the operator's cabin while the machine is running.
- Always keep the heavy end of the machine up when traveling up or down an incline to avoid any possibility of rolling over of the machine.
- Place the bucket at the following distance from the ground when moving up or down an incline. Prepare to lower the bucket to the ground in case of emergency.

Distance between the bucket and ground	20 cm to 30 cm

- To avoid injury or accidents, always operate the machine or the equipment at slow speed when going up or down an incline by reducing the engine speed (rpm). Place the stroke of the left-control-lever at half speed or less when going down an incline.
  Traveling too fast down an incline can cause the operator to lose control of the machine.
- Avoid stopping the machine suddenly on an incline, which can cause the machine to become unstable and rollover.
- Never cross an incline horizontally or at an angle, which can cause the machine to rollover.
  Approach inclines vertically to avoid loss of control.
- Take care when moving the machine in slippery or unstable surfaces such as grass, fallen leaves, metal plates, or ice, as it may skid out of control. Do not allow the machine to be oriented diagonally to grass, fallen leaves, metal plates, or ice surfaces.
- Watch where you are going at all times. Watch for and avoid obstacles. Remain alert for trees, wires, and other obstructions.
- Avoid any sudden movements while moving and operating the machine such as stopping, starting or turning.
  Do not raise the armrests while the machine is in motion. Raise the armrests while the machine is in motion will cause the parking brake to engage and could cause an accident or injury.
- Avoid driving the machine over any obstacles, which could cause loss of control. If an obstacle cannot be avoided, always place the bucket close to the ground and move slowly over the obstacle.
  Do not approach an obstacle at an angle, which could cause the machine to rollover.
- Avoid performing any work with the machine when it is on an incline, which could cause the machine to become unbalanced and rollover.
  Always take care when moving the machine on an incline.
  Always make sure that the heavy end of the machine is facing up the incline when moving the machine up or down the incline.

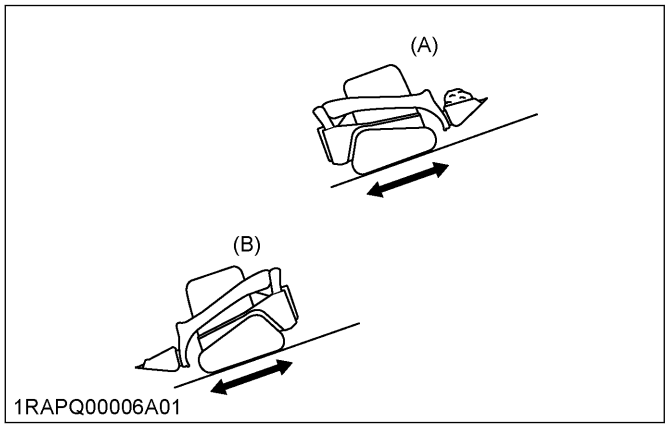

(A) With bucket full *(B) With bucket empty*

- Always use caution when floating the lift arms.
  – Always make sure that the bucket is lowered to the ground before floating the lift arms. Floating the lift arms when the bucket is raised could cause an accident or injury from the bucket falling.
  – Never move the machine forward when the lift arms are in the float position.
- Never dig or shovel at high speed, which could cause the operator to be thrown from the operator's cabin or cause injury from hitting something when the machine stops suddenly.
  Always operate the machine at low speed, carefully checking the area in front of the load which you will be moving.
- Never operate the machine with the bucket raised over the heads of people. Accident or injury may occur from objects falling from the bucket or the bucket itself falling.
- Beware of material falling from the bucket. Unstable material in the bucket such as round, cylindrical, or stacked items could fall from the bucket, causing injury.
  Always move an unstable load with the bucket lowered.
- Any sudden movements of the machine such as lowering or stopping of the attachment may cause it to recoil and rollover. Pay particular attention when the bucket is loaded.

- Never exceed the maximum loading capability of the bucket or put loads off-center of the bucket, which can cause the machine to become unstable and rollover.
- Never undercut a high embankment.
  Always carefully check the area for conditions that could cause the ground to cave-in.
  - Never operate in areas where there is a possibility of falling rock.
  - Never operate or drive the machine on unstable surfaces such as cliffs, shoulder of roads, deep trenches, and so on. The machine could lose stability from unstable ground or vibration underneath, causing the machine to rollover or fall.
    - Ground surfaces are especially unstable after heavy rain or explosions.
    - Embankments and trenches may cause instability of the ground around the area.
- Always operate the machine at safe, low speed, especially in congested or closed areas where there is a danger of hitting or running into something. Pay close attention to obstructions.
- Pay particular attention when passing through tunnels or moving the machine near high walls to avoid hitting the machine and causing accident or injury.
  Always check height and width dimensions of the machine against tunnels or any other narrow spaces through which the machine is to be moved in order to avoid accident or injury from hitting an obstruction.
- The machine is not designed for operation with hanging loads and has no safety features for such circumstances. Never operate in conjunction with a crane or other device, which could cause serious injury.

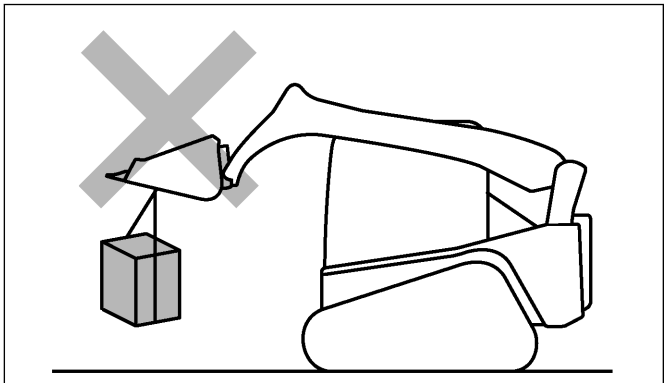

1RAPQ00007A01

1. Safety for children

Tragedy can occur if the operator is not alert to the presence of children. Children generally are attracted to machines and their work.

- Never assume that children will remain where you last saw them.
- Keep children out of the work area and under the watchful eye of another responsible adult.
- Be alert and shut your machine down if children enter the work area.
- Never carry children on your machine. There is not a safe place for them to ride. They may fall off and be run over or interfere with your control of the machine.
- Never allow children to operate the machine even under adult supervision.
- Never allow children to play on the machine or on the attachments.
- Use extra caution when backing up. Look behind and down to make sure that the area is clear before moving.

PARKING THE MACHINE

Before leaving the machine, follow the procedure.

1. Park the machine on a firm, flat and, level surface.
   If parking the machine on a firm, flat and, level surface is not possible, block the machine securely to prevent movement of the machine.

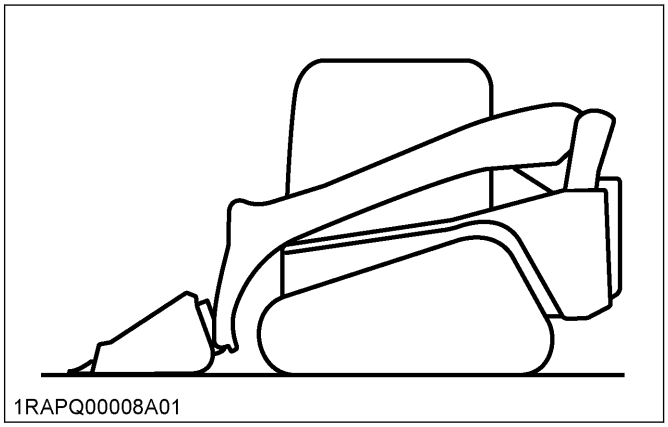

1RAPQ00008A01

2. Lower the attachments to the ground.
3. Stop the engine.
4. Remove the key.

PRECAUTIONS FOR SAFELY LOADING AND TRANSPORTING THE MACHINE

- Observe all regulations concerning the transport of the machine on public roads.
- Use adequately long and robust ramps when loading the machine. Block the ramps, and transport the machine appropriately.

If towing is required, use proper tow lines and attachment points.
For details, see LOADING THE MACHINE ON A TRANSPORT VEHICLE on page 77.

- To avoid tipping over, the heaviest end of the unit should proceed up the ramps first, do not change the running direction, and do not swing the attachment crosswise to the loading ramps.
- Lower the attachment on the loading bed and release the pressure from the hydraulic system.
  After loading the machine on the truck, secure the tracks with blocks and tie down the machine at the appropriate locations.

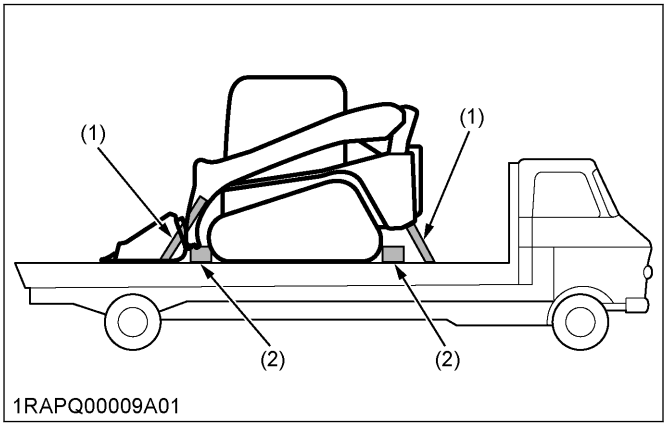

(1) Chain *(2) Block*

- Avoid abrupt braking of the vehicle with the machine loaded. Sudden braking could cause the machine to move and could cause a serious accident.

PRECAUTIONS FOR MAINTENANCE

1. Preparing maintenance

Before performing maintenance work on the machine, following the procedure.

1. Place the machine on a firm, flat, and level surface.
2. Lower the lift arms slowly to the ground.
3. Stop the engine.
4. Remove the key.

Start maintenance work carefully, for example, loosen the plug slowly so that oil will not squirt out.

2. Checking items for maintenance

- When dismantling hydraulic parts, make sure that the hydraulic oil has cooled down sufficiently to avoid burns.
- Let the machine cool down sufficiently before working on the engine, the exhaust system, the radiator and the hydraulic system.
- Turn off the engine at all times when filling with fuel. Avoid spilling and over-filling of fuel.
- Do not smoke while refueling or using the battery. Keep sparks and fire away from the fuel tank and the battery. Flammable gases escape from the battery, especially during charging.
- Make sure that the fueling system is properly grounded.
- Read and follow the directions of Starting the engine with an auxiliary battery on page 55 when starting with an auxiliary battery.
- Keep a first-aid box and extinguisher at hand at all times.
- Do not open the radiator cap before the radiator has cooled down sufficiently.
  1. First loosen the cap to the first stop and allow the system enough time to release the remaining pressure.
  2. Then loosen the cap completely.

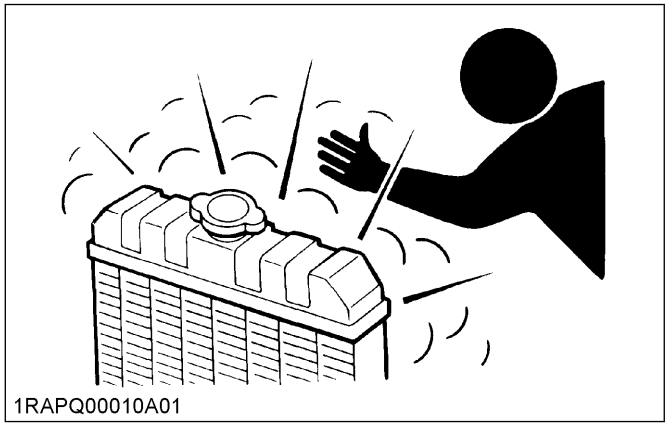

- To avoid short-circuiting the battery, always remove the ground cable first and attach the positive cable first.
- Oil under high pressure can penetrate the skin and may be harmful to your health if not treated immediately.
- Leaking hydraulic fluid has enough pressure to penetrate the skin and cause serious injuries. Leakages from pinholes can be totally invisible. Do not use hands for checking for leaks of hydraulic fluid. Always use a piece of wood or cardboard. It is strongly recommended to use a face mask or eye protection.
  If injuries occur with leaking hydraulic fluid, contact a doctor immediately. This fluid can cause gangrene or serious allergic reactions.

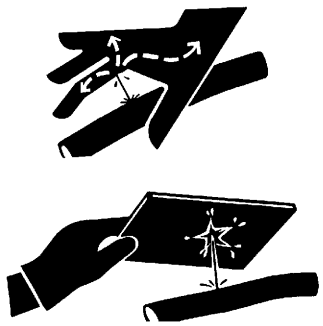

1RAPQ00011A01

- To avoid environmental damage from acid and heavy metals, dispose of the battery appropriately.
- Observe all laws and regulations concerning the disposal of used oil, coolants, solvents, hydraulic fluids, battery acids, and the batteries.
- To avoid fire, do not heat the hydraulic components (tanks, pipes, hoses, and cylinders) before they have been drained and washed.
- Use a face mask or eye protection to protect the eyes and respiratory system against dust and other foreign particles, as appropriate, or as mandated by federal, state or local laws or regulations.

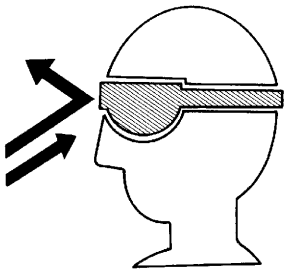

1RAPQ00012A01

- Securely support the machine with stands or suitable blocking before working underneath.
  For your safety, do not work under any hydraulically supported devices. Hydraulically supported devices can settle, suddenly leak down, or be accidentally lowered.
- Do not dismantle the spring of the track tensioner. If dismantling of the spring of the track tensioner is necessary, contact your KUBOTA dealer where the machine was purchased, or a competent service shop.
  When you assemble the product involved, follow the KUBOTA-workshop-manual (W.S.M.).
- Always attach a **[DO NOT OPERATE]** tag whenever performing any kind of maintenance or repair.
- Make sure that you have the proper tools on hand. Do not use flawed or damaged tools, gauges, or other devices. Always use tools that are appropriate for the task to be done.
- To prevent personal injury or death, be sure to use explosion-proof lighting when working on, inspecting, or using fuel, oil, coolant, battery fluid, and so on.
  If you do not use the explosion-proof lighting or if it should break, it can ignite and cause fire, injury, or death.
- Prohibit unauthorized persons from entering the work area to prevent injury caused by debris flying off of machine parts during grinding, welding, using a hammer, or other tasks.
- Make sure that the work area is clear and safe. Be sure to work on a firm, level surface with adequate lighting.
  Work in well-ventilated area if you work indoors. Make sure that the area is free from any potentially dangerous conditions such as obstacles, slippery surfaces, and so on.
- Be sure the machine is clean and free of debris.
  - Always remove debris from the machine and clean it before performing any maintenance or repair work.
  - Before using water to wash or clean the machine, stop engine and make sure that all electrical parts and devices are covered. Any water seepage into electrical wiring on the machine can cause a short circuit or malfunction of controls. Never wash the battery, sensors, connectors, or operator's cabin with water or steam.

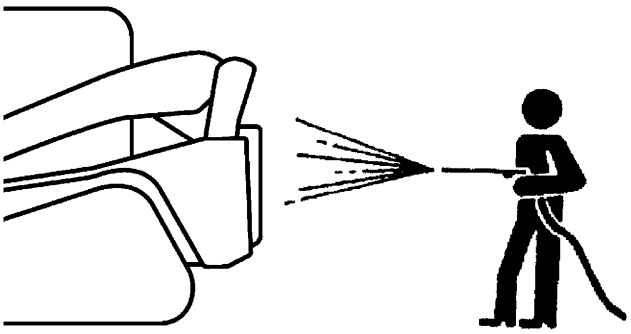

1RAPQ00013A01

- Always make sure that the engine is stopped before performing any maintenance or repairs.
  - Do not lubricate or mechanically adjust while the machine is in motion or while the engine is running even if stationary.
  - Always stay clear of moving parts. Clothing, hands, or other parts of the body can become caught in moving parts of the machine and cause personal injury or death.
  - Make sure to avoid any rotating fans, V-belt, and other moving parts. Never insert tools,

fingers, hands, and so on while these parts are running.

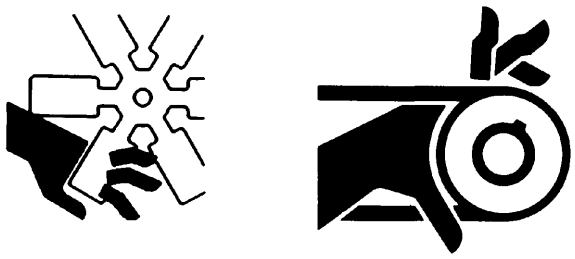

1RAPQ00014A01

- Be sure to place blocks around the machine and place a protection where components could fall.
  - Always make sure that the bucket is at the lowest possible position or on the ground before performing any maintenance or repairs under the machine.
  - Make sure that the tracks are securely blocked off.
  - Whenever performing maintenance or repairs when the lift arms are raised, always use the lift-arm-stopper.
  - Never work any kind under the machine or on the machine while it is hoisted on jack-stands or other rigid support devices unless they are well secured and stable.
- Make sure that the raised lift arms are properly and securely blocked.
  - Make sure that the lift-arm-stopper is properly engaged before performing any work beneath raised lift arms.
    Never work any kind or move under the lift arms when they are not properly supported.
  - Keep in mind that the lift arms may fall whenever hydraulic lines are disconnected, loosened, or removed. Any malfunction or failure in the hydraulics can also cause lift arms to drop.
  - Always perform the necessary repairs or service whenever the lift-arm-stopper becomes damaged or malfunctioned, or part(s) are missing. Damaged or malfunctioning lift-arm-stopper may cause the lift arms to fall causing personal injury or death.

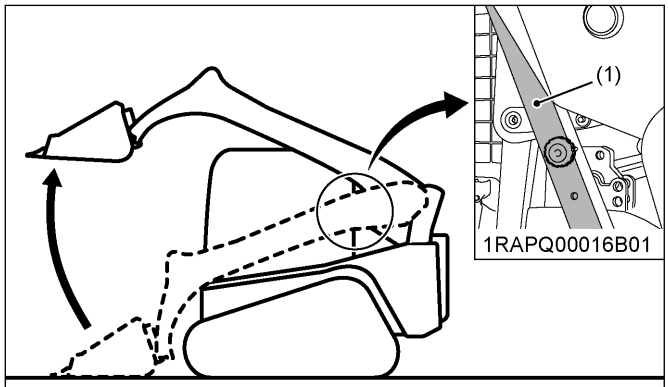

1RAPQ00015A01

(1) Lift arm stopper

- Always secure the rear door after opening it. Avoid opening the rear door when the machine is on an incline or in strong winds.
- Precaution on tilting the cabin:
  - Do not raise or lower the cabin while the engine is running as it may move, cause the machine to become unstable, resulting in personal injury or death. Always lower the working parts of the machine to the ground and stop the engine before attempting to raise or lower the cabin.
  - Make sure that the cabin is properly and securely supported with a stopper when tilted to prevent the cabin from falling and causing personal injury.
- Use care when refueling.
  - Never smoke cigarettes or permit the use of fire while refueling or in the vicinity of refueling.
  - Always make sure that the engine is off and cool before removing the fuel cap to refuel the tank. Avoid getting fuel on any hot components.
  - Keep control of the fuel-filler-nozzle while refueling.
  - Never overfill the tank with fuel. Leave room for thermal expansion.
  - Always remove any excess or spilled fuel immediately.
  - Always make sure that the fuel-tank-cap is securely reinstalled.
    Replace the fuel-tank-cap only with a manufacturer-approved cap whenever it becomes damaged. Use of the wrong type of cap may not allow for proper venting, causing pressure in the tank to build up.
  - Never use fuel to clean the machine.
  - Always use the correct type of fuel for the machine and the temperature in which it is being operated.
  - Always use a properly grounded fueling system.

1RAPQ00017A01

- Hoses
  - Leakage in any fuel, oil, or hydraulic line can cause fire or explosion.
  - Avoid any twisting, bending, or hitting of hoses that could cause damage to the line.
  - Make sure that any loose connections are secure properly before using the machine.
- Fire prevention
  Compact-track-loader and some attachments have components that are at high temperatures under normal operating conditions. The primary source of high temperatures is the engine and exhaust system. The electrical system, if damaged or incorrectly maintained, can be a source of arcing or sparks.
  The following fire-prevention-guidelines will help to keep your equipment up and running efficiently and keep the risk of fire to a minimum.
  - Blow off all accumulated debris near hot engine exhaust components such as the turbocharger and the exhaust manifold as well as the exhaust pipes and the muffler more frequently when working in severe conditions.
  - Clean out all accumulated flammable debris such as leaves, straw, pine needles, branches, bark, small wood chips, and any other combustible materials from inside the pans of belly of the machine or lower unit structures as well as from the area in proximity to the engine.
  - Inspect all fuel lines and hydraulic hoses for wear or for deterioration. Replace the fuel lines and the hydraulic hoses immediately if they begin to leak.
  - Examine electrical wiring and connectors frequently for damage. Repair any wires that are loose or frayed before operating the machine. Clean all electrical connections and tighten all electrical connections as necessary.
  - Inspect the exhaust system daily for any signs of leakage. Check for broken pipes and muffler, and for loose or missing bolts, nuts, and clamps.
    If you find any exhaust leaks or fractured parts, repair it completely prior to operation.
  - Always keep a multipurpose fire extinguisher on or near the machine. Be familiar with the operation of the fire extinguisher.
- Take care when working around hot and pressurized components.
  - Always allow the engine to cool sufficiently before performing any maintenance, inspection, or repairs.
  - Never touch any parts such as the engine, the muffler, the radiator, the hydraulic lines, the sliding parts, and so on as they may be very hot immediately after the machine has been running and can cause burning. Allow the engine, the muffler, the radiator, the hydraulic lines, the sliding parts, and so on to cool sufficiently before touching them.
  - Always use sufficient care whenever removing the caps and plugs on the coolant, oil, and hydraulic fluid as they are hot and pressurized and can causing burning and injury from spraying of hot fluid.

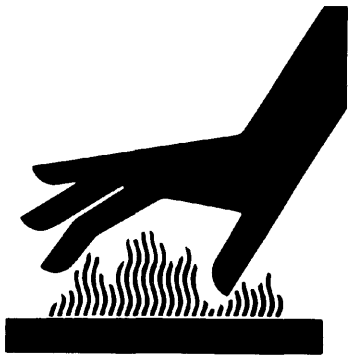

1RAPQ00018A01

- Make certain that pressure from all of systems is sufficiently released before performing any maintenance or repairs. Oil or other fluids could be released when caps or filters are removed before the pressure has been stabilized in the hydraulic system.
  - Gradually release internal pressure build-up by standing out of the line of any possible spray and slowly removing plugs, screws, or disconnect hoses.
- Always use care whenever using grease that is pressurized.
  - Always follow the proper procedure to adjust tension.
    Grease in the track adjuster is pressurized and improper release can cause the discharge valve to fly off, causing personal injury or death.
  - Always loosen the discharge valve for the grease slowly.
  - Avoid standing in front of, or putting any parts of the body in the line of the grease-discharge-valve.

– If no grease is released when the discharge valve is loosened, the machine has a malfunction. Do not repair any kind yourself and contact the nearest dealer for repairs. If no grease is released when the discharge valve is loosened, any operation of the machine can be very dangerous.

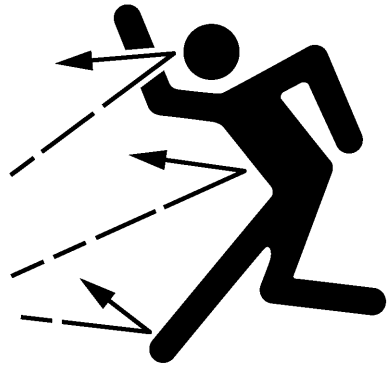

1RAPQ00019A01

- Always carefully check the machine after performing any maintenance or repairs.
  Confirm that no oil, water, and so on is leaking from any parts that had been serviced by carefully inspecting the parts.
  Gradually speed up the engine from a low speed to higher speed to check operation.
- Waste material
  – Always make sure that any material and waste products from the repair and maintenance of the machine are collected into proper containers using a funnel, or other device.
    Dispose of waste material properly to avoid pollution and contamination of the environment.
  – Consult local regulations and codes when disposing of oil, fuel, engine coolant, refrigerant, solvents, filters, batteries, and any other potentially harmful and hazardous material or substance.

1RAPQ00020A01

- To avoid the possibility of battery explosion, do not use or charge the refillable type battery if the fluid level is below the lower (lower limit level) mark. Check the fluid level regularly and add distilled water as required so that the fluid level is between the upper and the lower levels.
- To avoid sparks from an accidental short circuit, always disconnect the ground cable (-) of the battery first and reconnect it last.
- Do not open high-pressure fuel system. High-pressure fluid remaining in fuel lines can cause serious injury.
  Do not disconnect nor repair fuel lines, sensors, or any other components between the high-pressure-fuel-pump and the injectors on the engines with high-pressure-common-rail-fuel-system.
- To avoid hazardous high voltage, turn the key switch to the **[STOP]** position if it is necessary to check to repair the computer, harness, or connectors.
- When the diesel-particulate-filter (DPF) is in the regenerating cycle, the exhaust gas and the DPF muffler become hot. During regeneration, take into account that the muffler will be very hot and keep the machine away from other people, animals, plants, and flammable material. Also keep the area near the DPF muffler clean and away from flammable material.

SAFETY LABELS

(1) Part No. V0511-5735-2

1BCAAAAAP079E

(2) Part No. V0511-5740-2

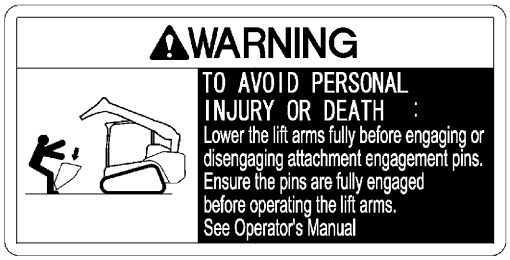

1BCAAAAAP071E

(3) Part No. V0511-5772-1

1BCAAAAAP221E

(4) Part No. V0211-5731-1

1WAKA00064A01

(5) Part No. V1311-5771-3 [High-Flow model only]

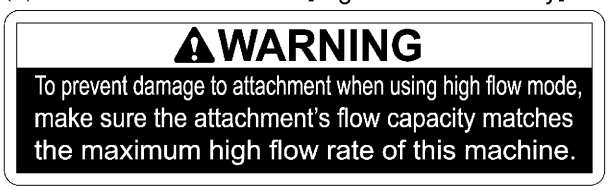

1BCAAAAAP306A

(6) Part No. V0631-5732-1

Do not operate without seat belt. You could be crash. Use the seat belt.

Read and understand Operator's Manual before operating this machine.

1BCAAAAAP307A

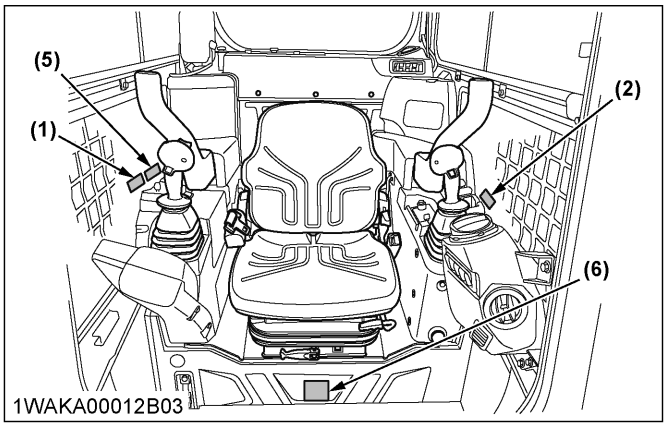

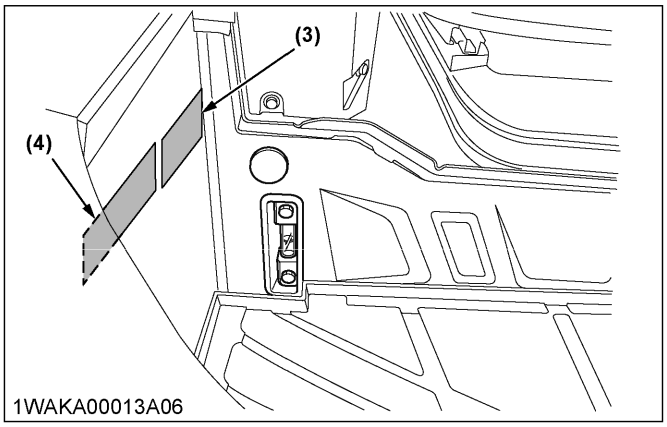

1AAMM00001A01enUS

(1) Part No. V1311-5734-1 [Both sides]
Do not allow hands within the working range.

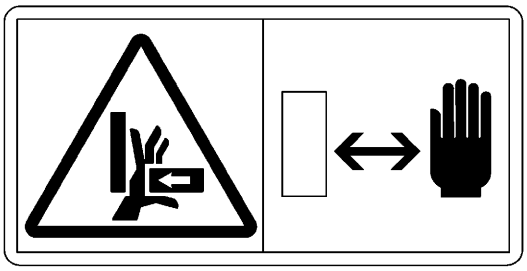

1BCAAAAAP308A

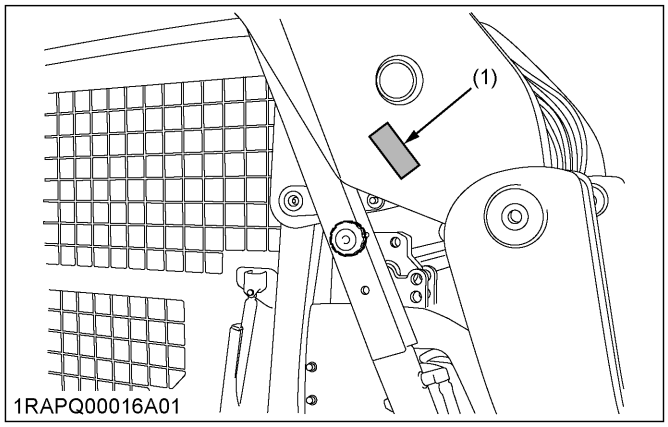

(2) Part No. V0511-5741-2

1BCAAAAAP078E

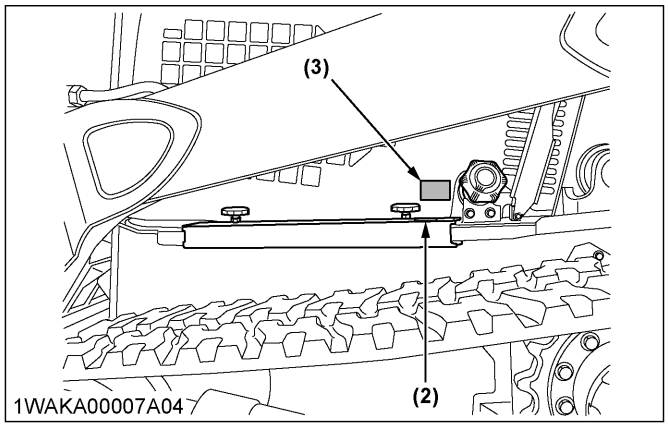

(3) Part No. RD358-5736-1
Diesel fuel only No fire

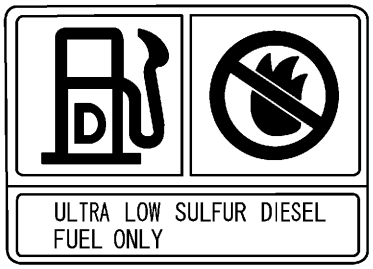

1BAAGAAAP1810

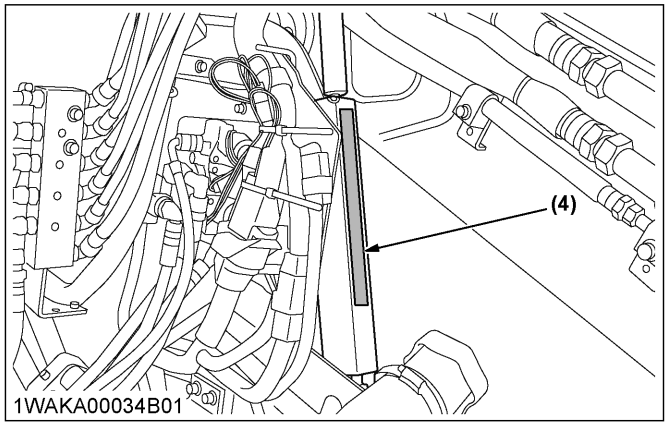

(4) Part No. V0511-5743-1

1BCAAAAAP137E

1WAKA00048A01enUS

(1) Part No. V0621-5748-1
Do not touch hot parts such as exhaust etc.

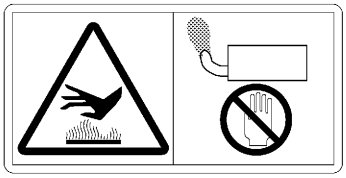

1BCAAAAAP072E

(2) Part No. V0511-5739-1
Keep away from fan and fan belt.

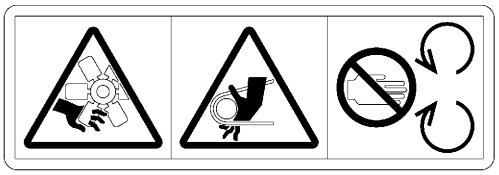

1BCAAAAAP073E

(3) Part No. V0521-5750-1
Do not open the caps when the radiator is hot.

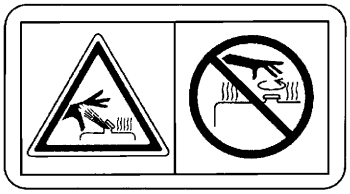

1BAABAGAP2650

(4) Part No. V0521-5744-1

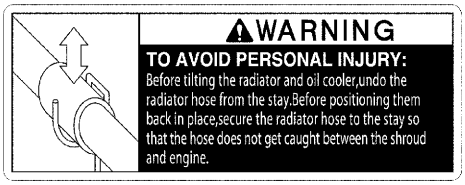

1BCAAAAAP378A

(5) Part No. TC660-9861-1

1AGAHAKAP051A

(6) Part No. V1311-5763-1

1BCAAAAAP315A

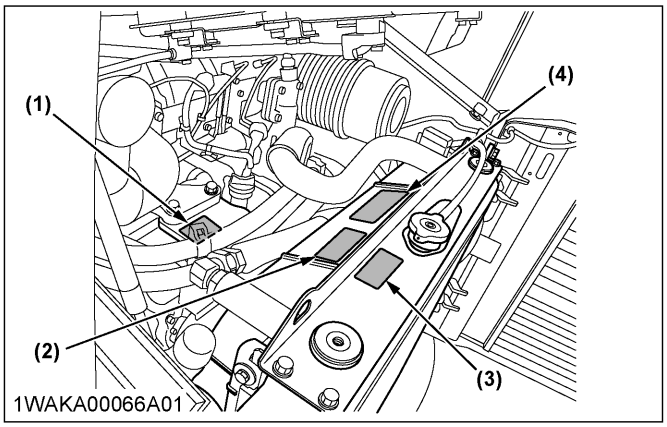

1WAKA00066A01

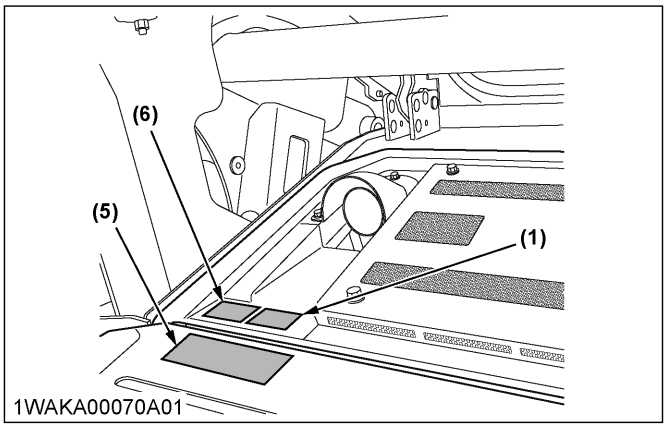

1WAKA00070A01

1WAKA00049A01enUS

(1) Part No. V0521-5773-1

Do not allow any persons on the bucket.

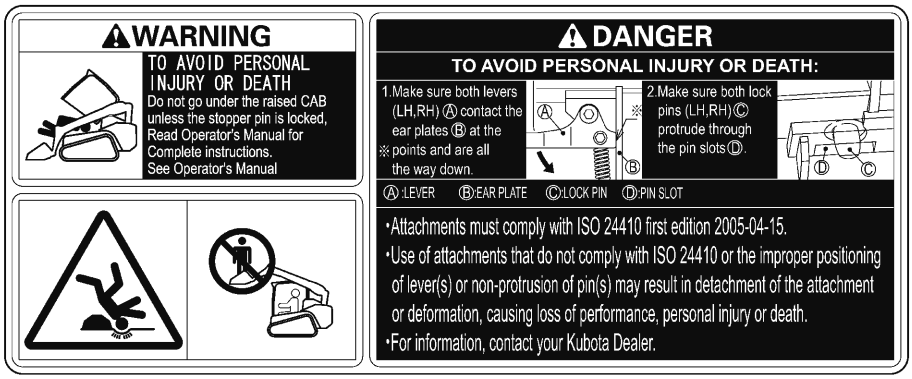

1BCAAAAAP454A

(2) Part No. V1311-5745-2 (Closed cab model)

1BCAAAAAP316A

(3) Part No. RB419-5793-2 (Closed cab model)

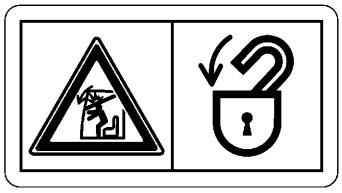

1BAAABYAP158E

After opening, lock in place by moving both lock pins to outside to prevent door from inadvertently falling.

(4) Part No. V0511-5736-2

1BCAAAAAP080E

(5) Part No. V0521-5746-1

1BAAACGAP009A

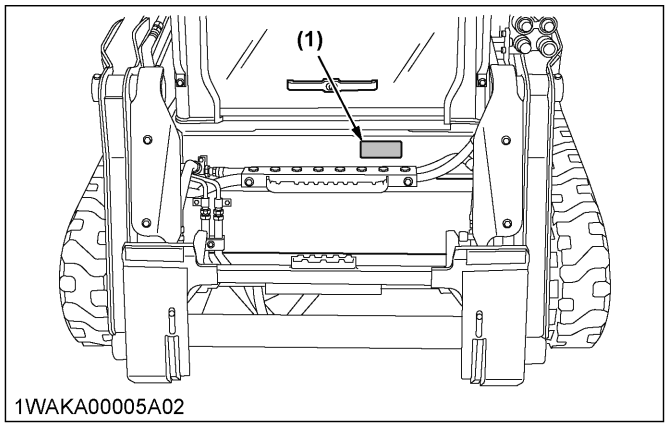

1WAKA00005A02

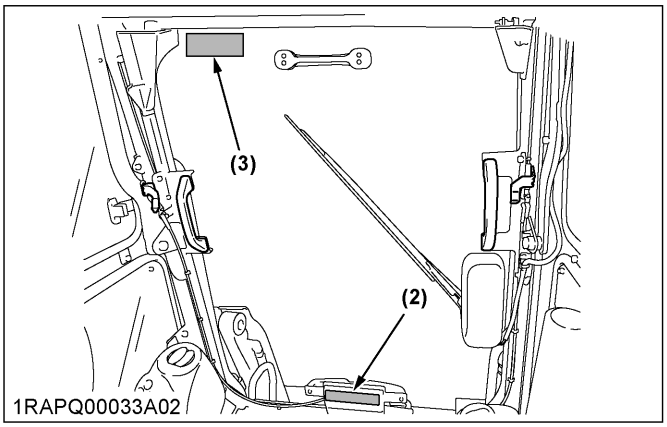

1RAPQ00033A02

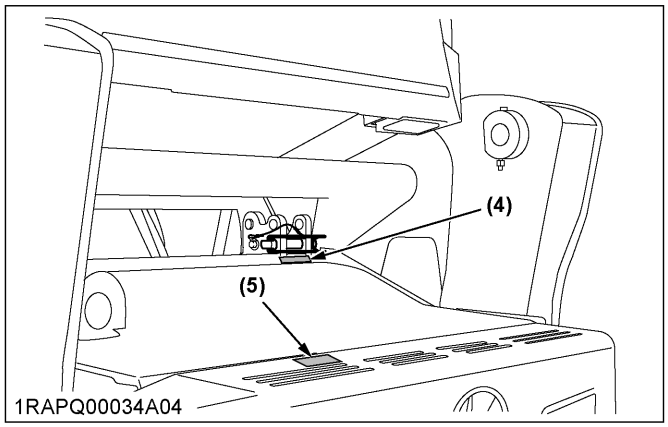

1RAPQ00034A04

1WAKA00050A01enUS

(1) Part No. V0511-5754-1

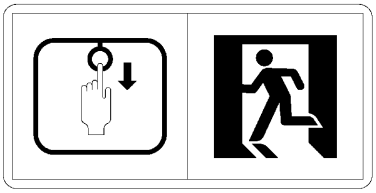

1BCAAAAAP070E

HOW TO USE THE EMERGENCY EXIT

If you should become trapped in the cab, you can remove the rear window to get out.

- The rear window in the machine serves as the primary alternate exit.
- You will need to remove the rear window in order to use the primary alternate exit.

1. Pull on the ring at the top of the rear window in order to remove the rear window.
   The ring will remove the seal that holds the rear window in place.
2. When the seal is taken out, remove the rear window and exit the cab.

(2) Part No. RB419-5796-2 [Both sides]

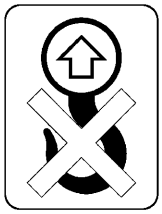

Forbidden lift point

1BAABAUAP2720

(3) Part No. 6C040-5559-1

DANGER EXPLOSIVE GASES
Cigarettes, flames or sparks could cause battery to explode. Always shield eyes and face from battery. Do not charge or use booster cables or adjust post connections without proper instruction and training.
KEEP VENT CAPS TIGHT AND LEVEL
POISON CAUSES SEVERE BURNS
Contains sulfuric acid. Avoid contact with skin, eyes or clothing. In event of accident flush with water and call a physician immediately.
KEEP OUT OF REACH OF CHILDREN

1BAAGAAAP0360

(4) Part No. V0511-5764-1 [Both sides]
Do not loosen the grease nipple completely or too quickly.

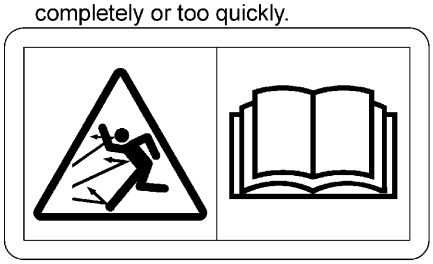

1BCAAAAAP128E
1WAKA00051A01enUS

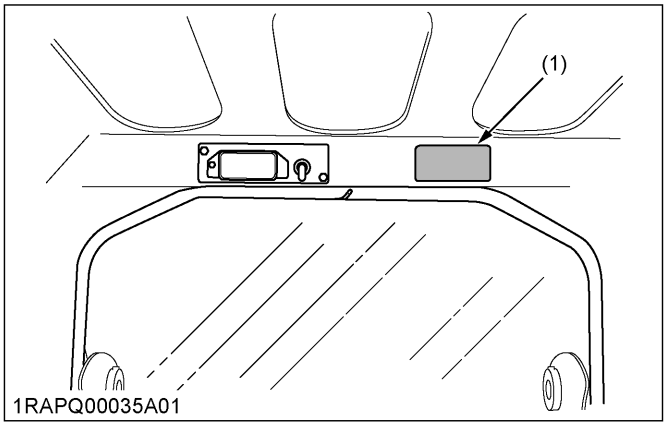

1RAPQ00035A01

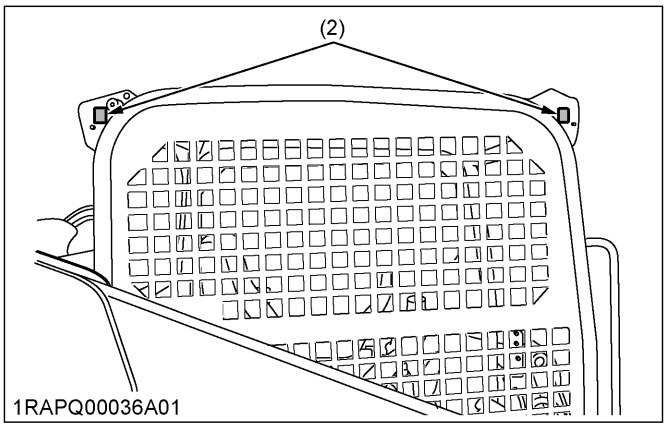

1RAPQ00036A01

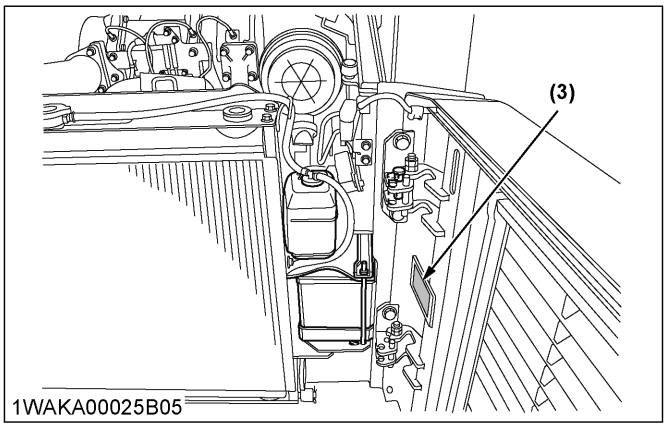

1WAKA00025B05

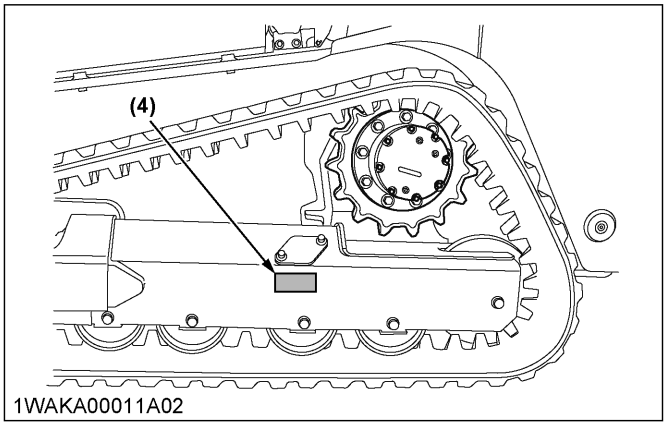

1WAKA00011A02

(1) Part No. V0512-5714-1

1BCAAAAAP242E

(2) Part No. V0512-5731-1

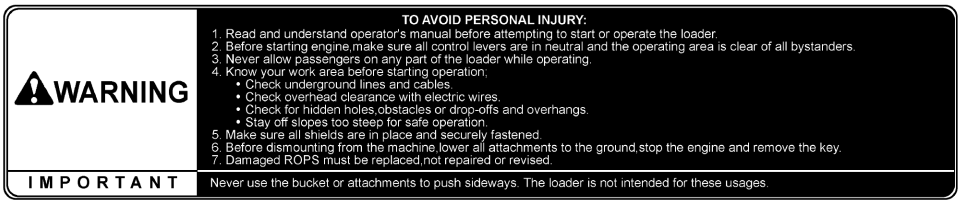

1BCAAAAAP243A

(3) Part No. V0512-5723-1

1BCAAAAAP244A

(4) Part No. V0212-5712-1

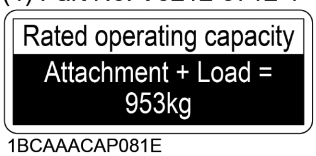

1BCAAACAP081E

(5) Part No. V0512-5713-1

Wear ear muffs, ear plugs or other protective ear pieces.

Wear eye protection or a face mask.

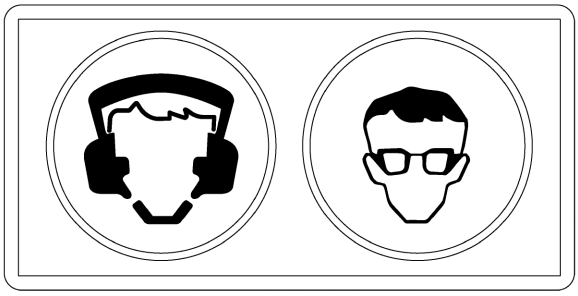

1BCAAAAAP394B

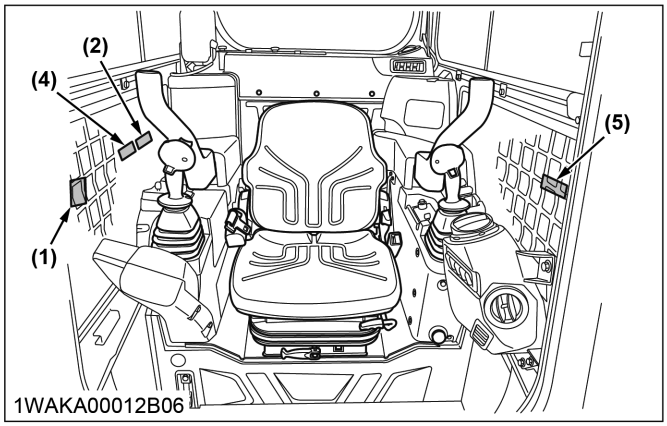

1WAKA00012B06

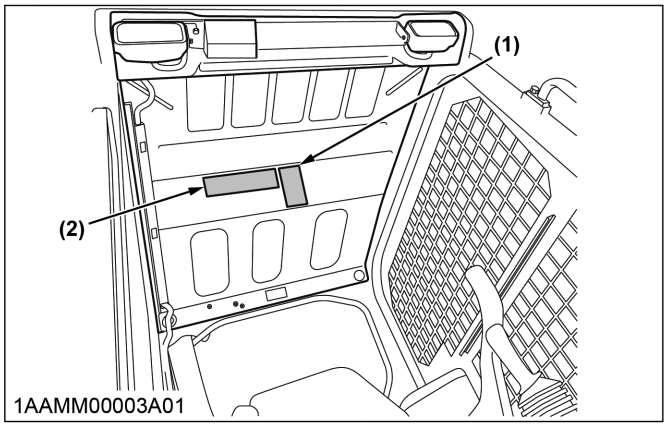

1AAMM00003A01

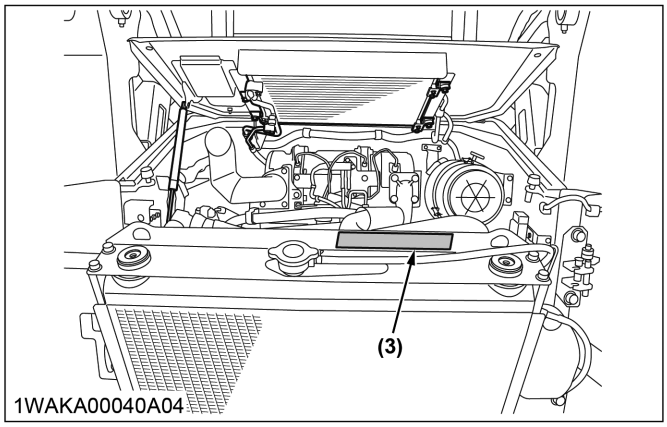

1WAKA00040A04

1AAMM00002A01enUS

(1) Part No. V0512-5701-1 [Both sides]

1BCAAAAAP245E

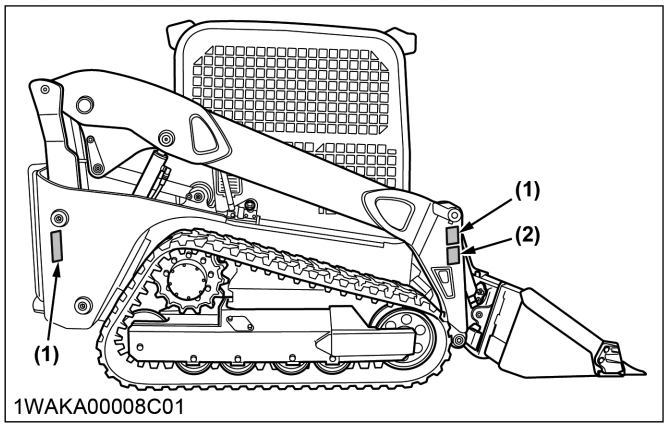

(2) Part No. V0512-5722-1 [Both sides]

1BCAAAAAP246A

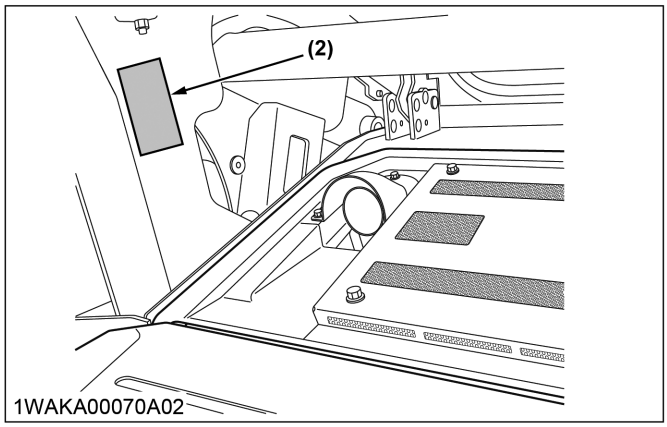

(3) Part No. V0512-5704-1

1BCAAAAAP247E

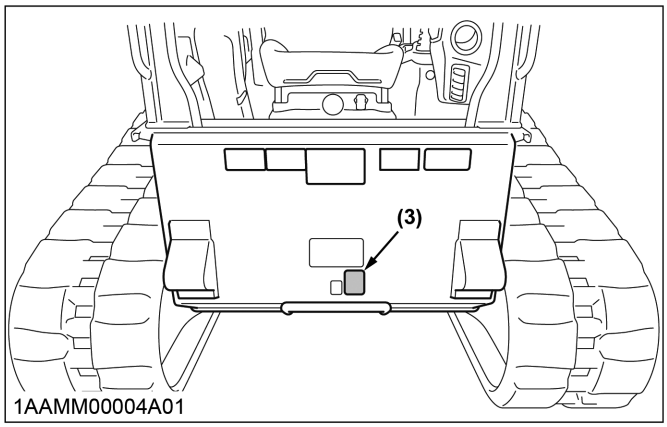

1AAMM00005A01enUS

1. Care for safety labels

- Keep safety labels clean and free from obstructing material.
- Clean safety labels with soap and water, dry with a soft cloth.
- Replace damaged or missing safety labels with new safety labels from your KUBOTA dealer.
- If a component with safety label(s) affixed is replaced with new part, make sure that new safety label(s) is (are) attached in the same location(s) as the replaced component.
- Mount new safety labels by applying on a clean, dry surface and pressing any bubbles to outside edge.

https://truckmanualshub.com/

SERVICE OF THE MACHINE

DEALER SERVICE

Your KUBOTA dealer is always ready to help you with problems with your machine and make sure that you get the most value from it.
After having carefully read these instructions, you will realize that you can perform much of the routine maintenance by yourself. For service, contact the KUBOTA Dealer shop from which you purchased your product, or your local KUBOTA dealer.
When ordering spare parts from your KUBOTA dealer, always mention the product identification number of the machine and the serial number of the engine.
Note the product identification number of the machine and the serial number of the engine right away in the supplied lines.

Machine Product identification number	
Dealer's name (To be filled in through the owner)	
Date of purchase	

	Model	Serial No.
Engine		

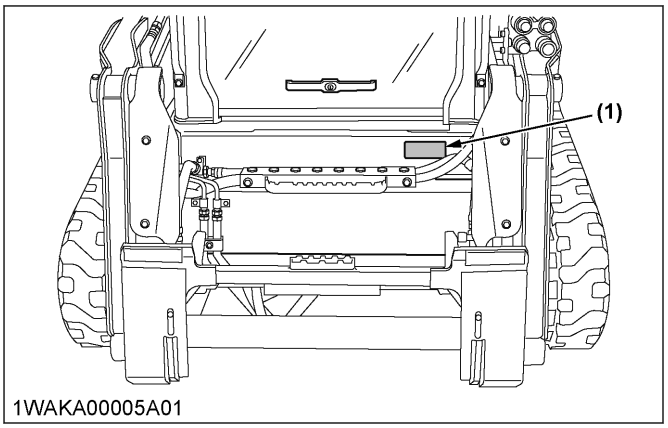

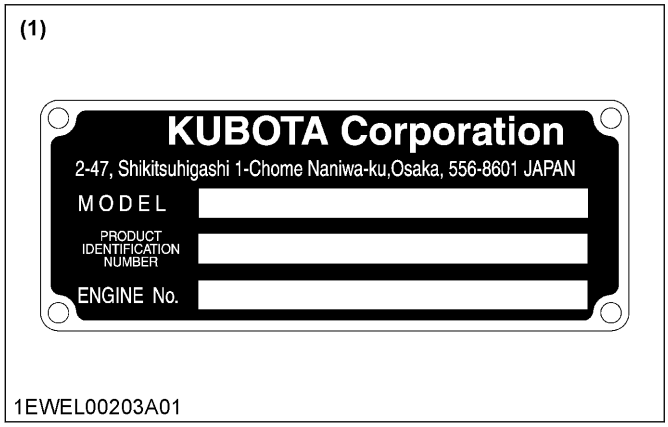

(1) Product identification number and engine number label

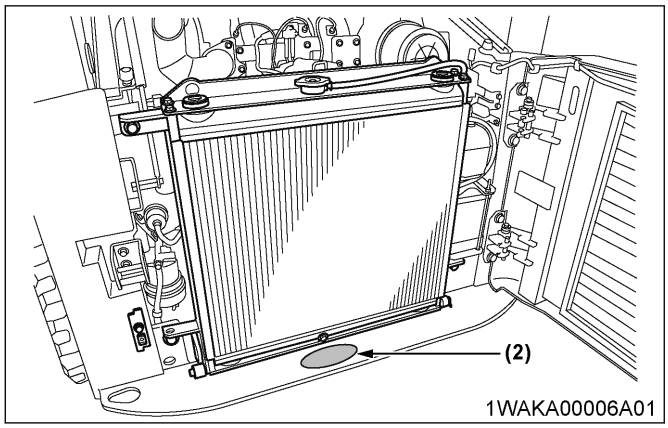

(2) Product identification number

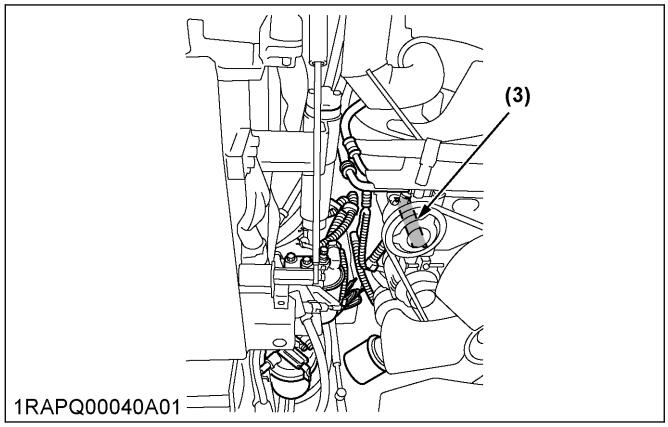

(3) Engine serial no.

1. Warranty policy

This machine is warranted under the *KUBOTA Limited Express Warranty*, a copy of which may be obtained from your selling dealer. No warranty shall, however, apply if the product has not been handled according to

https://truckmanualshub.com/

the instruction given in the Operator's Manual even it is within the warranty period.
The product(s) described in this operator's manual are designed and manufactured only for the country in which they are initially wholesaled by KUBOTA or one of its affiliated companies.
Neither KUBOTA Corporation nor its affiliated companies provide warranty for any product which is re-sold or retailed in any country other than the country for which the product(s) were designed or manufactured.

2. Procedure for scrapping the machine

To put the machine out of service, correctly follow the local rules and regulations of the country or territory where you reside.
If you ask questions, consult your local KUBOTA Dealer.

TECHNICAL DATA

SPECIFICATION TABLE

			KUBOTA CTL (Compact Track Loader)	
Model name			SVL65-2	
Type			Open Cab	Closed Cab
Operating weight including operator's weight			3660 kg	3885 kg
Engine	Type		Water cooled 4 cycle diesel engine with 4 cylinder EPA Tier 4	
	Model name		KUBOTA V2607-CR-TE4	
	Total displacement		2615 cc	
	Engine power	SAE J1995 gross	51 kW	
		SAE J1349 net	44.7 kW	
	Rated speed		2600 rpm	
	Low idling speed		1250 rpm	
Performance	Rated operating capacity		953 kg	
	Tipping load		2722 kg	
	Breakout force	Bucket	2093 kg	
		Lift arm	1935 kg	
	Travel speed	Fast	11.5 km/h	
		Slow	7.8 km/h	
	Ground pressure (With operator)		Standard track	Wide track
			34.0 kPa (0.35 kgf/cm^2)	30.4 kPa (0.31 kgf/cm^2)
Battery capacity			12V RC: 160 min, CCA 900A	
Pressure connection for attachments	Max. displacement (Theoretical)		Standard Flow	High-Flow
			65.8 L/ min	102.2 L/ min
	Max. pressure		22.5 MPa (230 kgf/ cm^2)	
Fuel tank capacity			82 L	

NOTE :
- **Specifications subject to change without notice.**

MACHINE PARTS

DESCRIPTION OF MACHINE PARTS

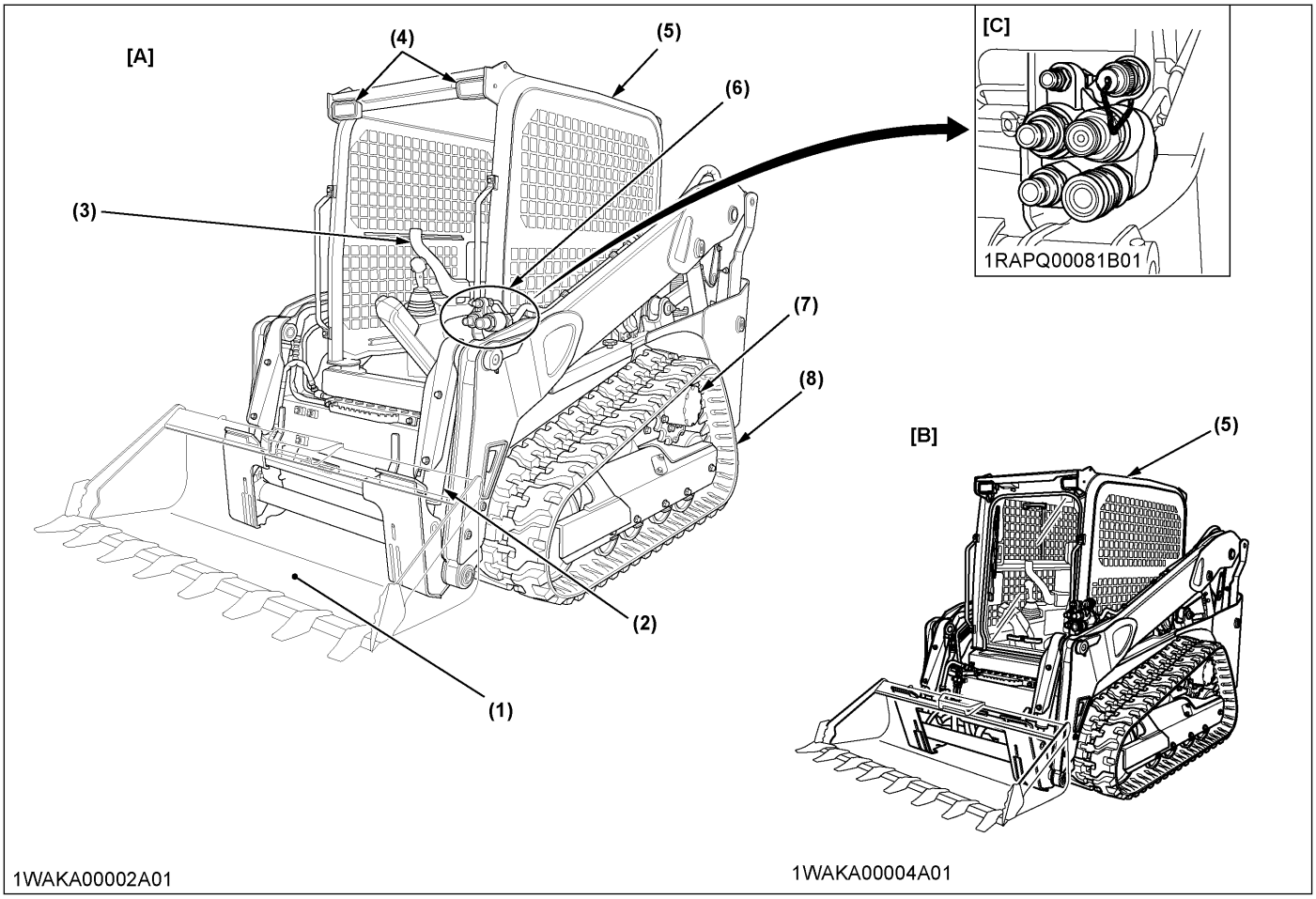

(1) Bucket
(2) Tilt cylinder
(3) Armrest
(4) Front working light
(5) Cab (open cab and closed cab)
(6) AUX supply port
(7) Drive motor
(8) Rubber track
[A] Open cab model
[B] Closed cab model
[C] High-Flow model

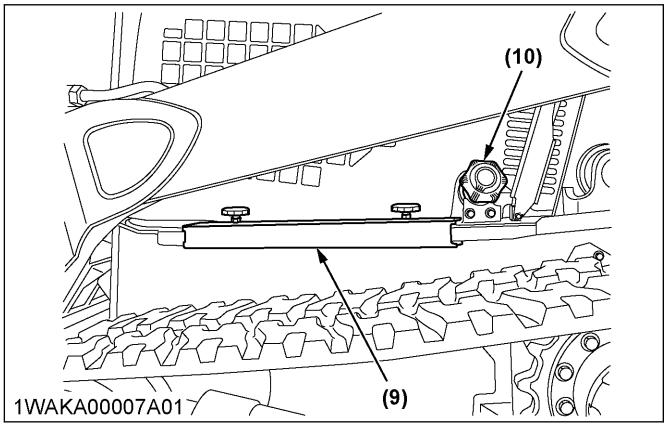

(9) Lift arm stopper
(10) Fuel tank cap

https://truckmanualshub.com/

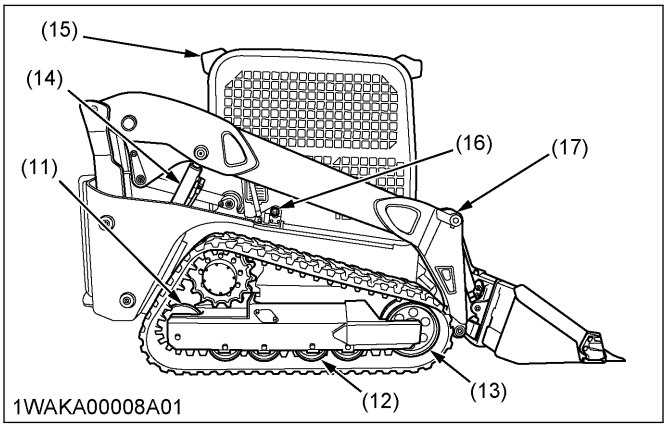

(11) Rear idler
(12) Track roller
(13) Front idler
(14) Lift arm cylinder
(15) Rear working light
(16) Hydraulic tank cap
(17) Lift arm

https://truckmanualshub.com/

INSTRUMENT PANEL AND SWITCH

INSTRUMENT PANEL

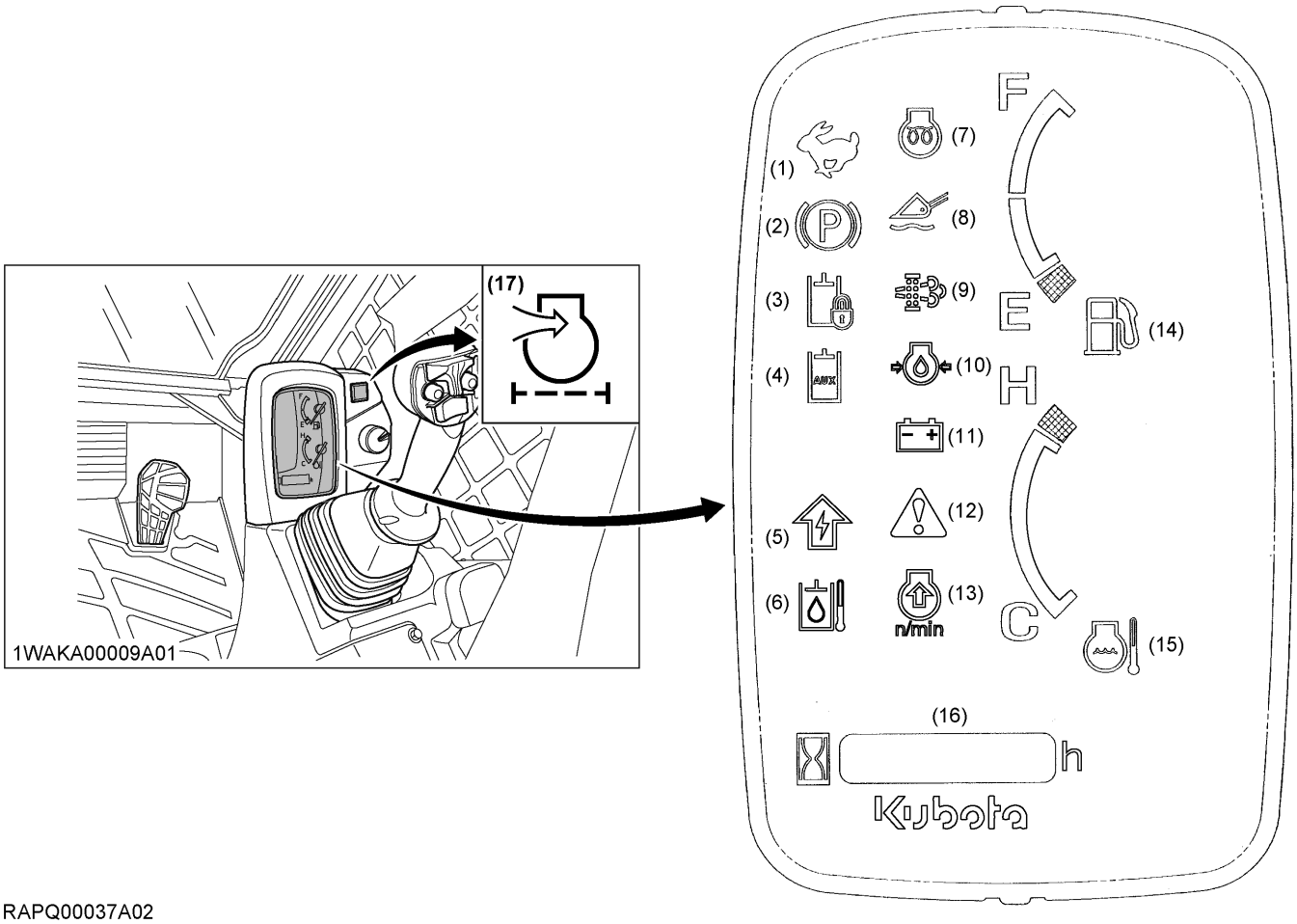

(1) Speed indicator light
(2) Parking brake warning light
(3) Hydraulic lock indicator
(4) AUX operation indicator
(5) AUX electrical mode change indicator
(6) Hydraulic oil temperature warning indicator
(7) Glow plug indicator
(8) Bucket-floating indicator
(9) DPF regeneration indicator
(10) Engine oil pressure indicator
(11) Battery charge warning light
(12) Master warning light
(13) Engine rev up indicator
(14) Fuel gauge indicator and Low fuel warning light
(15) Coolant temperature gauge and coolant temperature warning light
(16) Hour meter and error code number
(17) Air cleaner warning indicator

NOTE :

- **Error code indicates ⚠ and number.**
  For detail, see LIST OF THE ERROR CODE NUMBERS on page 116.

1. Fuel gauge indicator

With the starter key at the **[RUN]** position, the fuel-gauge-indicator indicates that the fuel remains in the fuel tank.

WARNING

To avoid personal injury or death:

- **Before adding fuel, be sure to stop the engine.**
- **Be sure to keep open flame away from the machine. Otherwise a fire may result.**
- **Make sure that fuel delivery system is grounded.**

IMPORTANT :

- **If the fuel-gauge-indicator is near the [E], add the fuel as soon as possible. If the fuel-gauge-indicator is near [E] and the machine runs on a slope, the engine may run out of the fuel and get interrupted.**
- **Be very attentive to the remaining fuel for the engine not to stall. If the engine stalls, it may fail to get restarted for a while to protect the emission-purifying-device.**

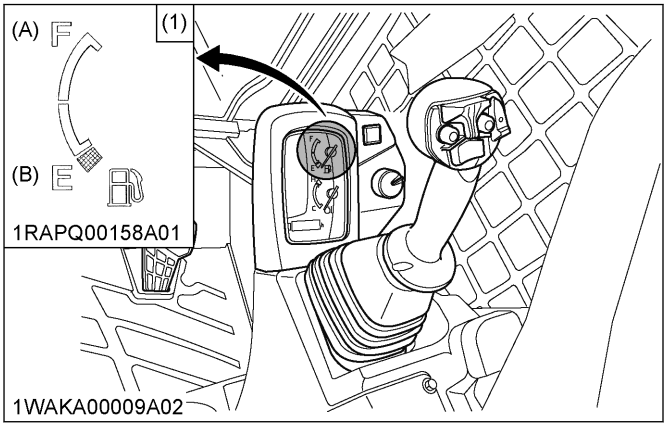

(1) Fuel gauge indicator *(A) Full* *(B) Empty*

If the fuel runs short, open the cap and refuel the tank.

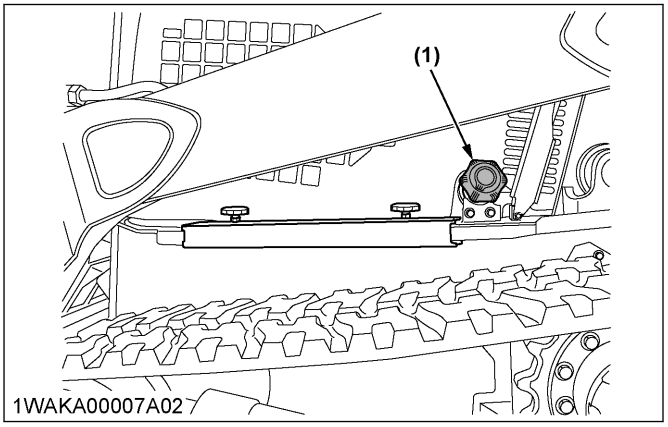

(1) Cap

NOTE :

- **To open the fuel cap, keep the starter key inserted.**

2. Low fuel warning light

If the fuel in the tank goes below the prescribed level, the low-fuel-warning-light will flash.

If the low-fuel-warning-light should flash during operation of the machine, refuel as soon as possible.

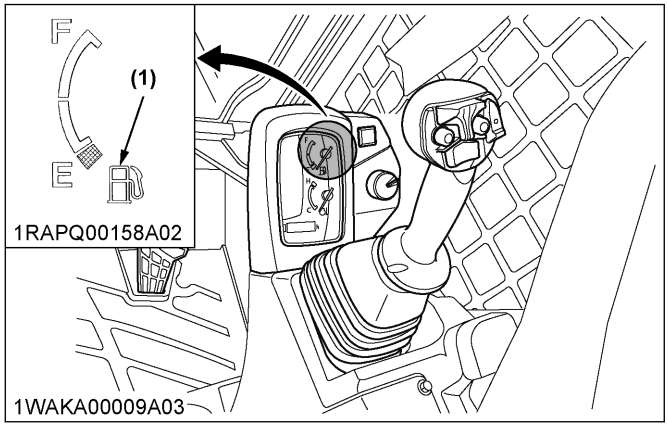

(1) Low fuel warning light

3. Coolant temperature gauge

WARNING

To avoid personal injury or death:

- **Do not open the radiator cap during or just after operation. Hot coolant may gush out and scald you. Wait for the coolant to cool down before opening the cap.**

With the starter key at the **[RUN]** position, the coolant-temperature-gauge indicates the coolant temperature.

If engine coolant rises above a specified temperature level, the indicator starts blinking and the buzzer starts beeping every six minutes for advance warning. If the coolant temperature further rises to the critical level, the blinking intervals become shorter and the buzzer keeps on beeping.

When the coolant temperature has dropped below specified temperature level or the starter key has been moved to the **[STOP]** position, the warning will cease.

If the coolant-temperature-gauge is near **[H]**, check the machine.

(See Checking the coolant temperature gauge on page 32)

https://truckmanualshub.com/

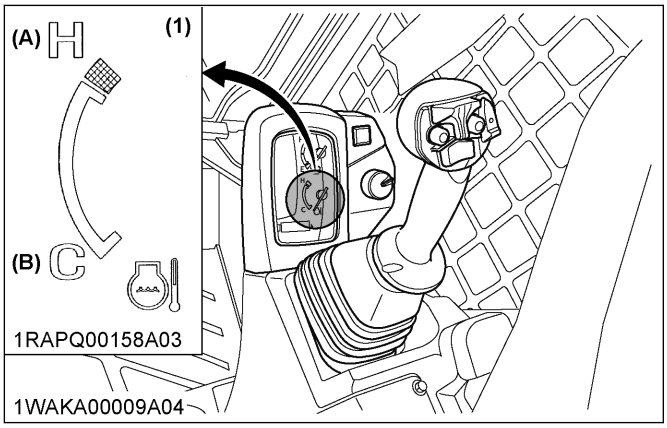

(1) Coolant temperature gauge (A) Hot (B) Cool

IMPORTANT :

- **If the emission alarm "E:9114" or "E:9115" is displayed, the EGR valve will begin to close and EGR system will not function. Interrupt the work and lower the engine rpm, which will reduce the coolant temperature.**

3.1 Checking the coolant temperature gauge

If the coolant-temperature-gauge is near **[H]**, take the following steps.

1. Discontinue the job.
2. Reduce the engine rpm to idle and keep it at idle for five minutes.
3. Stop the engine and check the following points.
   - Low coolant level or leak
   - Tension of the V-belt
   - Deposits of mud, dust, or chaff blocking the radiator or screen
   - Leak of the hydraulic oil

4. Glow plug indicator

The glow-plug-indicator is displayed when the starter key is turned to the **[RUN]** position but the engine requires preheating.
Wait until the glow-plug-indicator goes out, and then start the engine.

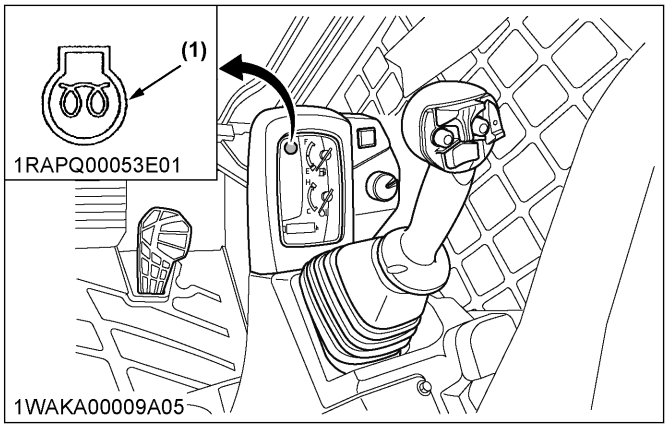

(1) Glow plug indicator

5. Parking brake warning light

When the parking-brake-switch is turned on, the parking-brake-warning-light on the instrument panel turns on.
(See Parking brake switch on page 37)

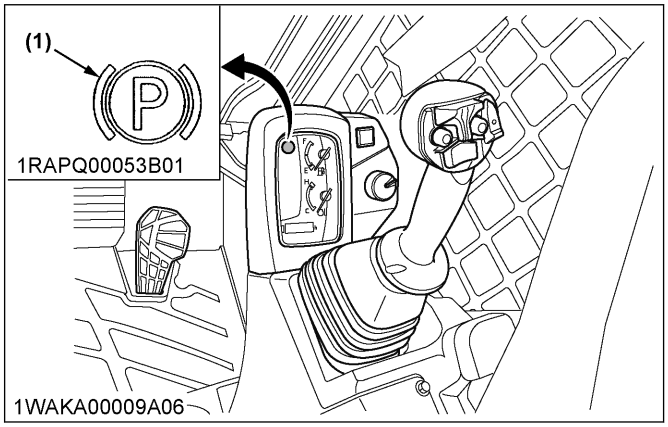

(1) Parking brake warning light

6. Bucket-floating indicator

While in the bucket-float mode, the mark on the instrument panel stays on.

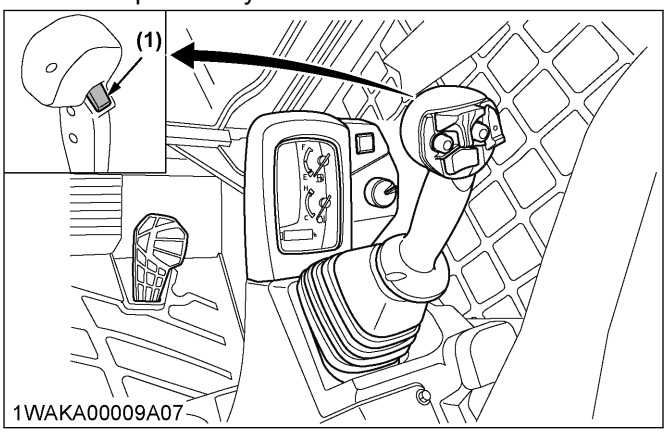

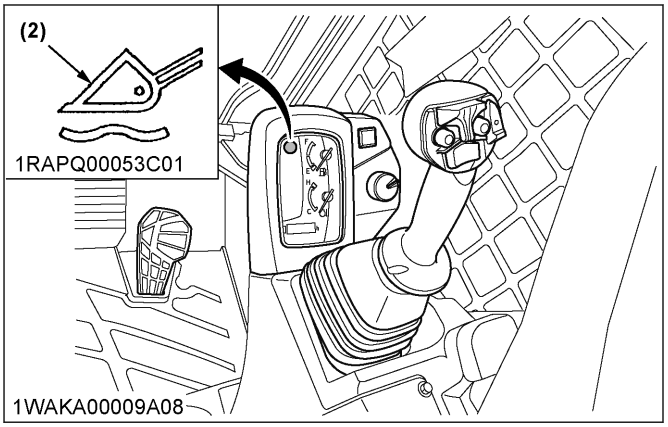

(1) Bucket-float switch *(2) Bucket-floating indicator*

7. Master warning light

The master-warning-light is used to indicate broken wire, short-circuit, and other problems.
The master-warning-light lights up to warn you of a detection of broken or short-circuited hydraulic-lock-solenoid (or hydraulic-unlock-solenoid), AUX-port-variable-switch, and other elements.

IMPORTANT :

- **If the master-warning-light lights up, consult your local KUBOTA dealer immediately.**

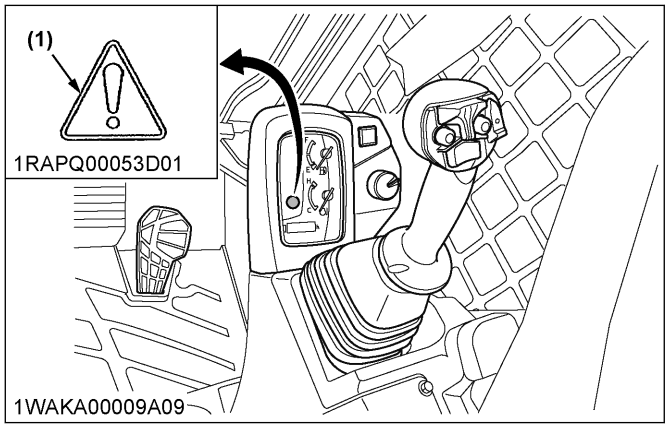

(1) Master warning light

8. Engine oil pressure indicator

The engine-oil-pressure-indicator lights up due to failure of the lubricating system with the engine running.
When the starter key is turned in **[RUN]** position with the engine off, the engine-oil-pressure-indicator lights up.
When the engine starts, the engine-oil-pressure-indicator goes out.
If the engine-oil-pressure-indicator stays on with the engine running, stop the engine and check the engine oil level.

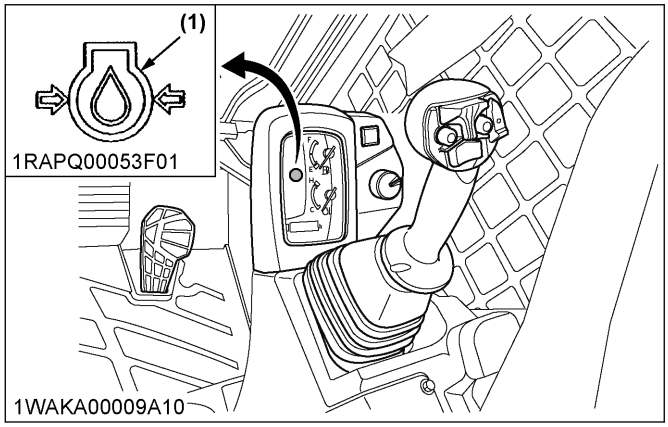

(1) Engine oil pressure indicator

9. Battery charge warning light

The battery-charge-warning-light lights up if the charging system fails with the engine running.
When the starter key is turned in **[RUN]** position with the engine off, the battery-charge-warning-light lights up.
When the engine starts, the battery-charge-warning-light goes out.
If the battery-charge-warning-light stays on with the engine running, stop the engine and check the V-belt.

https://truckmanualshub.com/

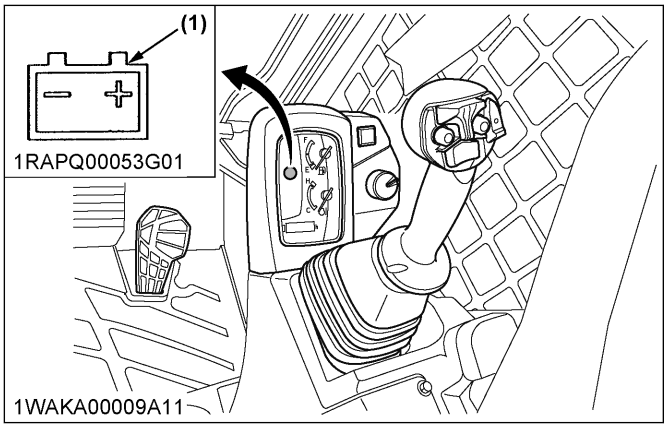

(1) Battery-charge-warning-light

10. Hydraulic oil temperature indicator

The hydraulic-oil-temperature-indicator starts blinking and the buzzer starts beeping if the hydraulic-oil-temperature has reached a specified level.
When the hydraulic-oil-temperature has dropped below the specified level or the starter key is turned off, the warning will cease.
Stop the engine and check for an unspecified level in the hydraulic-oil-tank and for leak of the hydraulic oil.

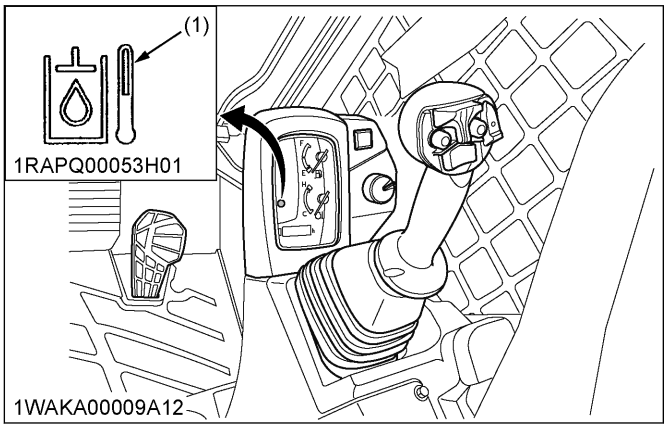

(1) Hydraulic oil temperature indicator

11. Hour meter

The hour meter indicates the total operating hours of the machine.

How the hour meter works

- The hour meter advances one hour after an hour of operation of the machine regardless of the engine rpm.

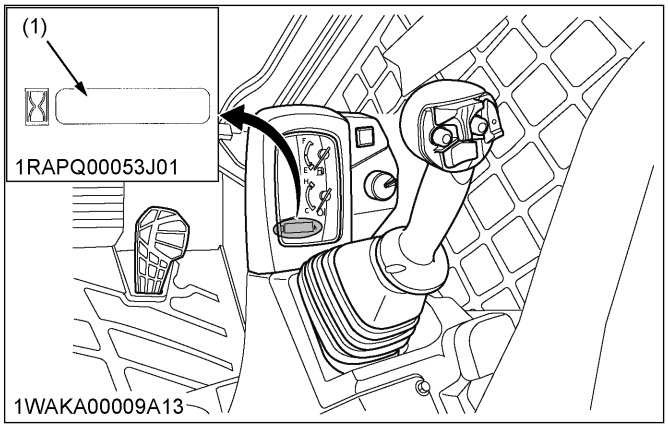

(1) Hour meter

12. Diesel-particulate-filter (DPF) regeneration indicator

As PM (particulate-matter) build up inside the DPF, the DPF regeneration cycle starts automatically to burn away PM. During DPF regeneration, the DPF-regeneration-indicator lights up and stays on and the beep tone keeps sounding to warn the operator.

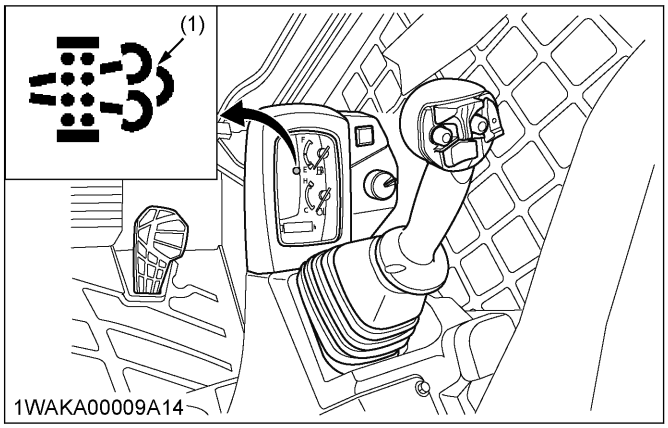

(1) DPF regeneration indicator

13. Engine rev up indicator

If the engine rpm is too low to start regeneration, the DPF-regeneration-indicator lights up and starts blinking, and the engine-rev-up-indicator lights up. In case that the DPF-regeneration-indicator lights up and starts blinking, rev up the engine until the engine-rev-up-indicator goes out, the DPF regeneration will automatically start.

https://truckmanualshub.com/

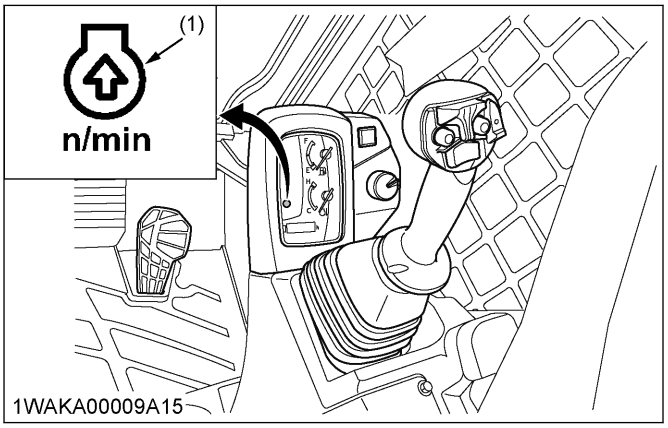

(1) Engine rev up indicator

14. Air cleaning warning indicator

If the air cleaner is clogged, the air cleaner warning indicator on the instrument panel will light up.
If this should happen at high engine rpm, stop the engine and clean the air cleaner element.
(See Checking the air cleaner element on page 94,Cleaning the air cleaner element on page 94 and Cleaning the evacuator valve on page 95.)

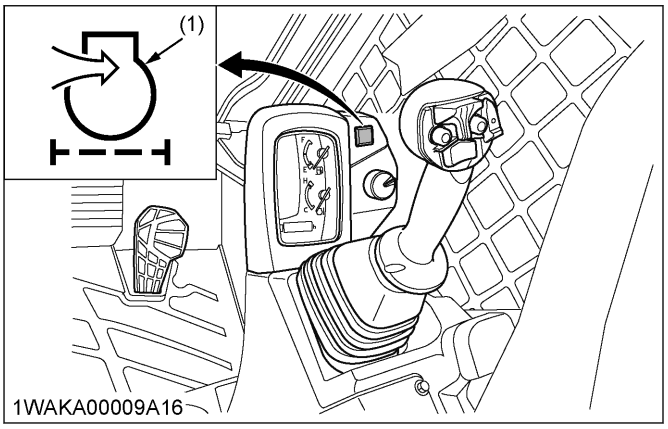

(1) Air cleaning warning indicator

https://truckmanualshub.com/

SWITCHES

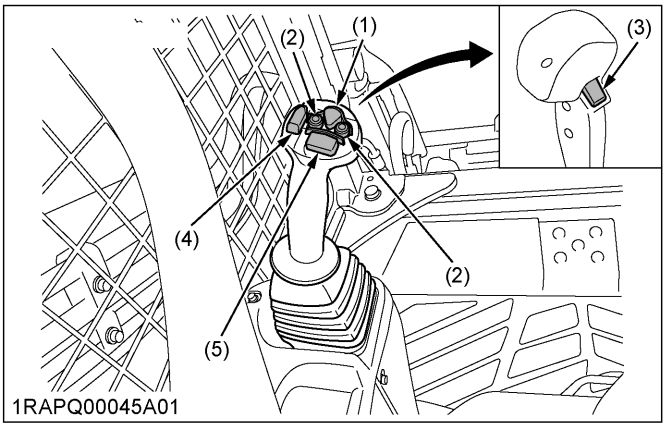

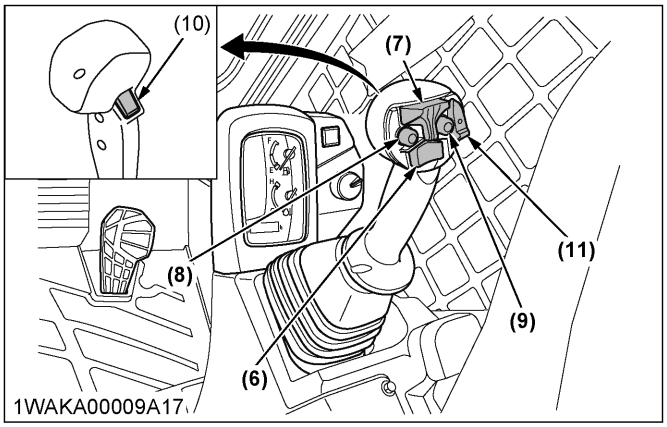

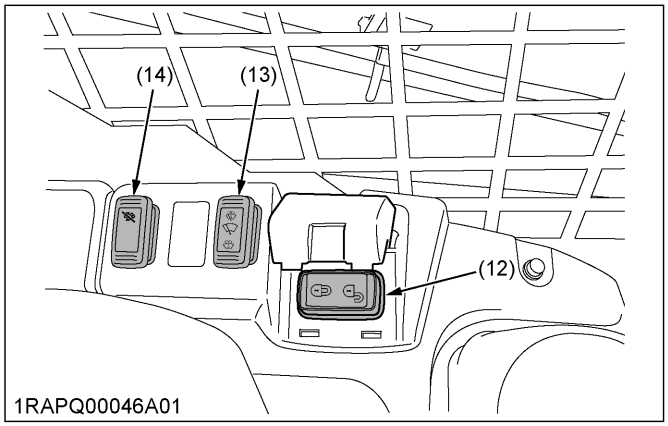

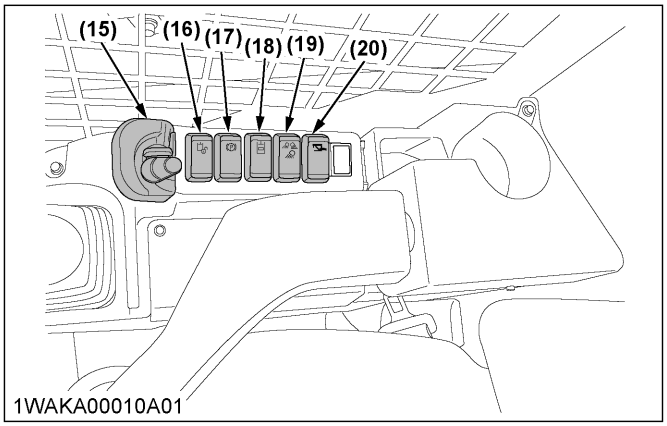

1WAKA00068A01

(1) Horn switch
(2) AUX electrical control switch
(3) Travel speed switch
(4) Blank
(5) AUX electrical control switch (Multi function model only)
(6) AUX electrical control switch
(7) AUX port variable switch
(8) AUX hold switch (left)
(9) AUX hold switch (right)
(10) Float switch
(11) AUX electrical mode change switch (Multi function model only)
(12) Hydraulic quick-hitch switch (hydraulic quick-hitch model only)
(13) Wiper / washer switch (closed cab model)
(14) Inhibit switch
(15) Starter switch
(16) Hydraulic unlock switch
(17) Parking brake switch
(18) AUX port switch
(19) Working light switch
(20) Self leveling switch

1. Starter switch

- **[STOP]**
  You can insert the starter key at the **[STOP]** position.
- **[RUN]**
  When turning the starter key one click from the **[STOP]** position to the **[RUN]** position, all the circuitry gets energized to start preheating and the glow-plug-indicator is displayed.
  Check for breakage of any light and indicator. The light or indicator lights up and stays on for about 1 second, if they are not broken.
- **[START]**
  1. When turning the starter key from the **[RUN]** position another click to the **[START]** position, the starter motor is activated to get the engine started.
  2. When releasing your hand from the starter key, the starter key returns itself to the **[RUN]** position.
     In other words, once the engine has started, be sure to release the starter key.

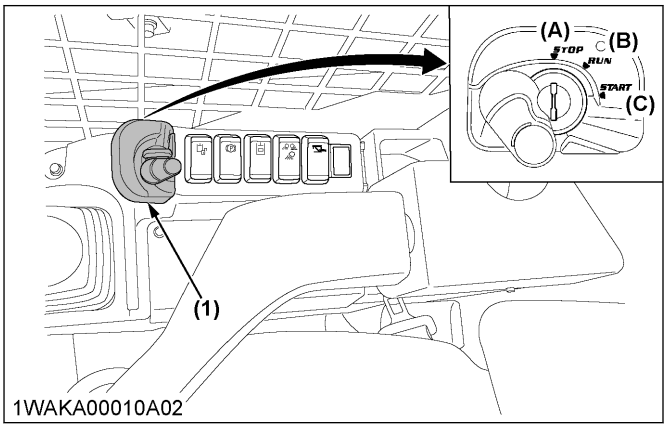

(1) Starter switch
(A) STOP
(B) RUN
(C) START

2. Parking brake switch

The parking brake is to be used when parking the machine.

⚠ WARNING
To avoid personal injury or death:
- **When dismounting the machine or when servicing or hauling, be sure to apply the parking brake.**

1. When the parking-brake-switch is pressed onto the (Ⓟ) marked side (the right side), the parking brake is applied and the (Ⓟ) mark on the instrument panel lights on.
2. When the switch is pressed onto the left side, the parking brake is released and the (Ⓟ) mark on the instrument panel lights off.

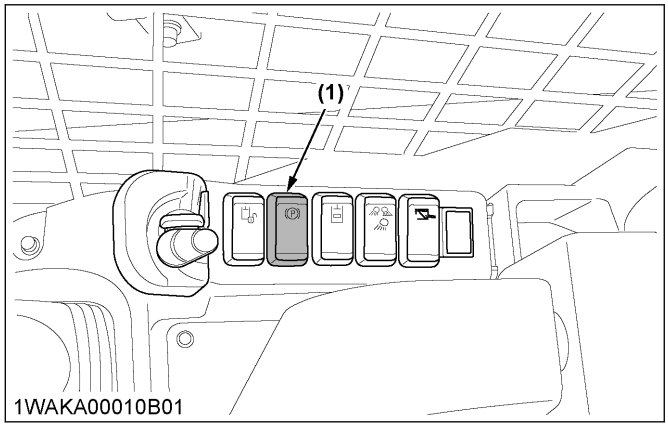

(1) Parking brake switch

NOTE :
- **Suppose that the parking brake switch is on ((Ⓟ) marked side depressed). Even if the hydraulic system gets unlocked, the travel system remains out of service and the brakes are still applied.**
  When the hydraulic system has been locked, the travel system gets locked too, and the brakes are applied.

3. Hydraulic unlock switch

The hydraulic-unlock-switch enables the hydraulic system.
The hydraulic-unlock-switch is intended to get ready for use of the hydraulic system (traveling and attachments), but does not equip the locking function.
To unlock the hydraulic system, meet the following requirements.
- The engine is running.
- The armrests are down.
- The operator is seated on the operator's seat.

When the hydraulic system has been unlocked, the hydraulic-lock-indicator on the instrument panel disappears.
If any of the preceding conditions is not met, the hydraulic system stays locked.

https://truckmanualshub.com/

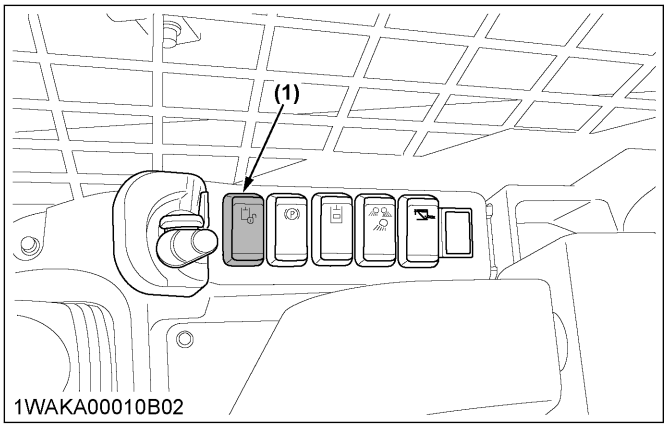

(1) Hydraulic unlock switch

4. Horn switch

When pressing the horn switch, the horn will beep.
The horn switch is operative even when the starter key is in the **[STOP]** position.

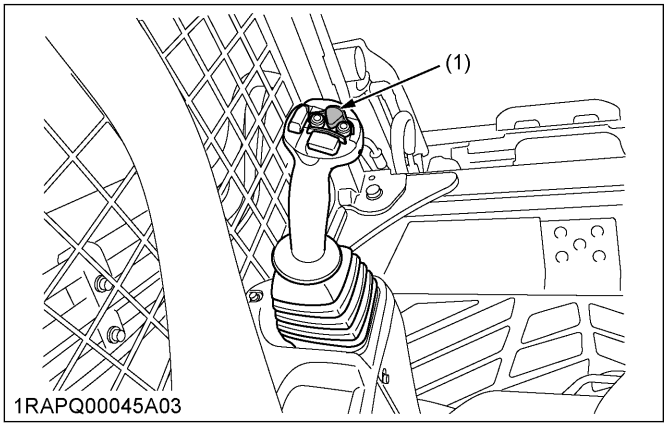

(1) Horn switch

5. Travel speed switch

Travel speed will increase when you press down the travel-speed-switch.
Switching the dual travel speed:

1. When pressing the travel-speed-switch, the buzzer beeps twice, the travel speed changes from low to high speed, and the symbol lights up.
2. When pressing the travel-speed-switch again, the buzzer beeps once, the travel speed changes from high to low speed, and the symbol goes out.

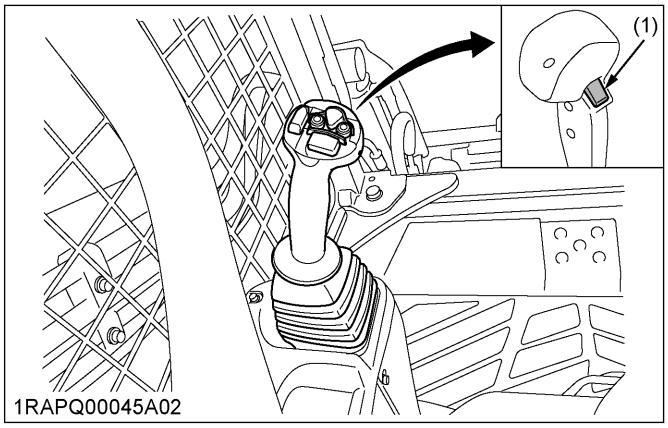

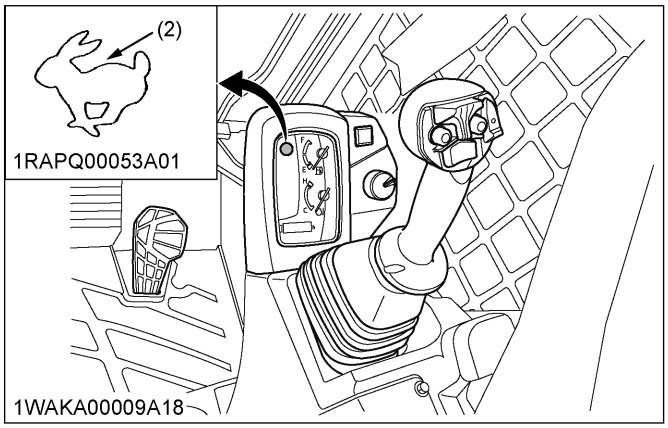

(1) Travel speed switch *(2) Speed indicator light*

NOTE :

- **When activating the travel-speed-switch, press it completely. The travel-speed-switch is operative only when the travel system is unlocked.**
- **Each time the travel-speed-switch is pressed, the travel speed is switched between high and low speed.**

6. Working light switch

The working-light-switch is operative with the starter key in the **[RUN]** position.
The working-light-switch has three positions.

1. When the working-light-switch is positioned on your side, the working lights stay off.
2. When moving the working-light-switch to the first position, the front working light turns on.
3. When moving the working-light-switch to the second position, both the front working light and the rear working light turn on.

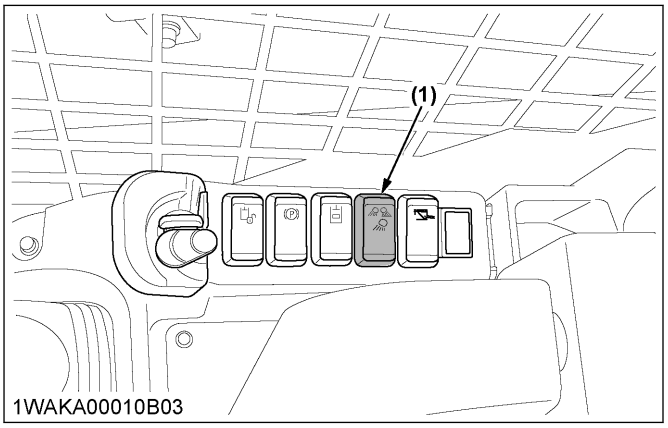

(1) Working light switch

Night operation

CAUTION

To avoid personal injury:

- **Visibility is reduced in darkness, therefore, in the event the working light alone does not provide sufficient visibility, use additional stationary artificial lighting. Observe all safety rules and any special regulations for night work.**

7. Seat switch

The seat switch is used to detect the operator sitting on the seat and to signal the hydraulic system that it can be unlocked.

When the operator sits on the operator's seat, the seat switch turns on and the hydraulic system can be unlocked.

8. Inhibit diesel particulate filter (DPF) regeneration switch

The inhibit-diesel-particulate-filter (DPF)-regeneration-switch (hereinafter called inhibit-DPF-regeneration-switch) disables the auto DPF regeneration cycle.

Activate the inhibit-DPF-regeneration-switch to turn off the auto DPF regeneration when working around people, animals, plants, and flammable materials. Certain work conditions may require the auto DPF regeneration cycle to be disabled.

1. When pressing the inhibit-DPF-regeneration-switch once, the automatic mode turns off.
2. When pressing the inhibit-DPF-regeneration-switch once again, the automatic mode returns from disable.

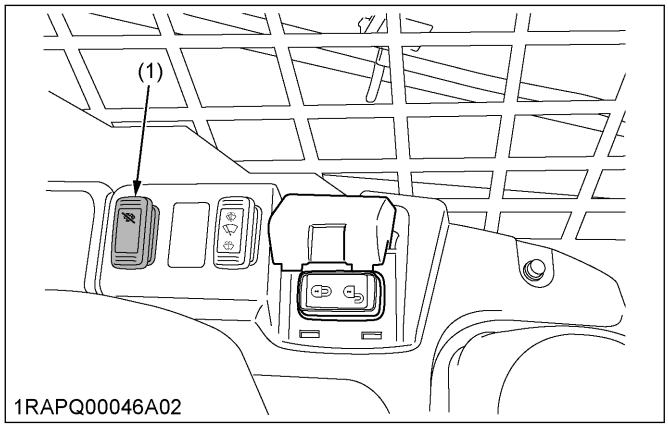

(1) Inhibit Switch

9. Float switch

WARNING

To avoid personal injury or death:

- **Make sure that the bucket is lowered to the ground before putting the lift arms in the float position. Putting the lift arms in the float position while they are off the ground will cause the bucket and the lift arms to fall and is extremely dangerous.**
- **Do not drive the machine forward with the lift arms in the float position.**

Entering the float mode

While moving down the lift arm by tilting the right-control-lever forward, press the float switch on the right-control-lever and release it no later than 1 second.

The float mode then turns on.

While in the float mode, the mark on the instrument panel stays on.

Exiting the float mode

While the machine is in the float mode, perform either of the following methods.

- Press the float switch on the right-control-lever.
- Move up the lift arm (pulling the right-control-lever backward).

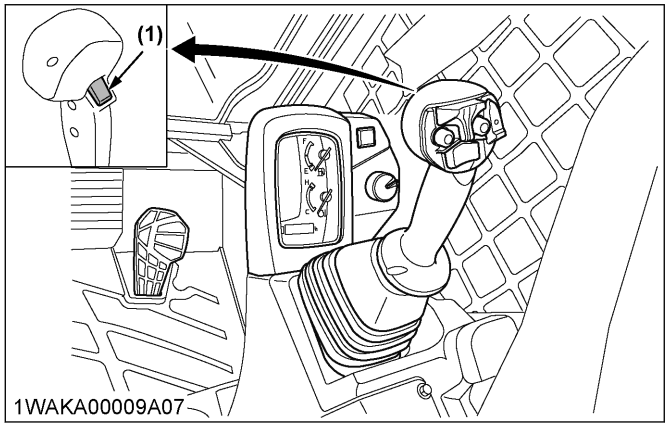

(1) Float switch

https://truckmanualshub.com/

10. AUX port switch

The AUX-port-switch is used to enable the AUX port.
The AUX-port-switch can be used only when the AUX-port-variable-switch on the right-control-lever is in the neutral position.

1. When pressing the AUX-port-switch once, the AUX port is unlocked and the AUX mark on the instrument panel lights up.
2. When pressing the AUX-port-switch again, the AUX port then gets locked.

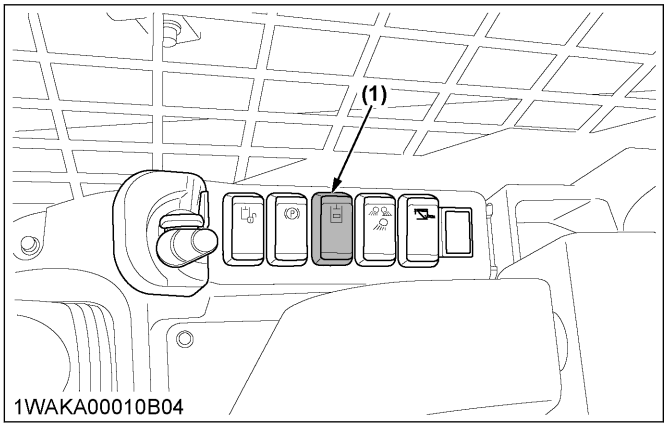

(1) AUX port switch

11. AUX port switch [High-Flow model only]

This switch is used to enable the AUX port and also to enable the High-Flow mode.

CAUTION
[High-Flow model only]
To avoid personal injury:

- **Be careful not to use any high-flow-incompatible attachment in the High-Flow mode. Otherwise the attachment may be damaged.**

Engaging and disengaging the AUX hydraulic low-flow mode system

To engage:
Press the AUX side of the AUX-port-switch one time. The AUX hydraulic low-flow port turns on and the AUX symbol on the instrument panel will appear.

To disengage:
Press the AUX side of the AUX-port-switch again. The AUX hydraulic low-flow port turns off and the AUX symbol on the instrument panel goes out.

Engaging the AUX hydraulic high-flow mode system
Make sure that the high-flow attachment can be properly used in the high-flow mode of this machine.

1. Press the AUX side of the AUX-port-switch.
2. Then press and hold the side of the AUX-port-switch for 3 seconds.
   The AUX hydraulic high-flow port turns on.

   NOTE :
   - **If you hold down the side of the AUX-port-switch longer than 6 seconds, the AUX lamp on the instrument panel will not blink and the AUX-hydraulic-flow will return to low-flow mode.**
     The AUX hydraulic High-Flow mode is only active when the AUX symbol blinks on the instrument panel.
3. After holding the side of the AUX-port-switch for at least 3 seconds, verify that the AUX symbol blinks on the instrument panel.
4. Then release the side of the AUX-port-switch.

The AUX hydraulic high-flow system of the machine is then activated.

Disengaging the AUX hydraulic high-flow mode system

1. Press the AUX side of the AUX-port-switch, the AUX high-flow mode port turns off.
2. Press the side of the AUX-port-switch again, the AUX high-flow mode port turns on.

Troubleshooting the AUX Hydraulic High-Flow mode system

1. If the preceding procedures did not active AUX hydraulic high-flow mode, press the AUX side of the AUX-port-switch to clear and turn off the system.
2. Then follow the preceding procedures to activate the appropriate AUX hydraulic mode.

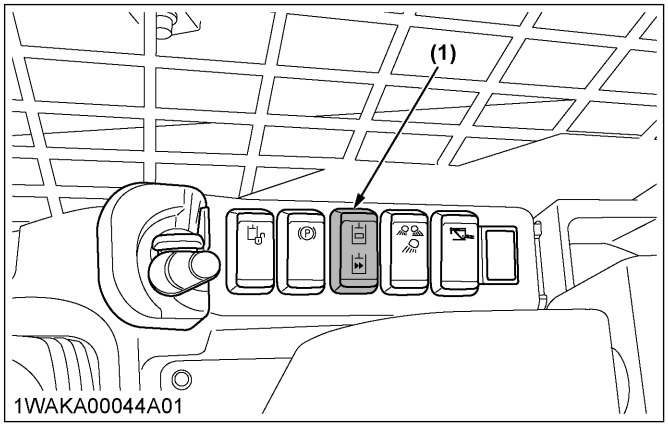

(1) AUX port switch [High-Flow model only]

12. AUX port variable switch

With the AUX port unlocked, the flow rate of the hydraulic oil varies depending on the tilt angle of the AUX-port-variable-switch.

- Right-hand control
  The flow rate of the hydraulic oil through the right-hand port (male) varies.
- Left-hand control
  The flow rate through the left-hand port (female) varies.

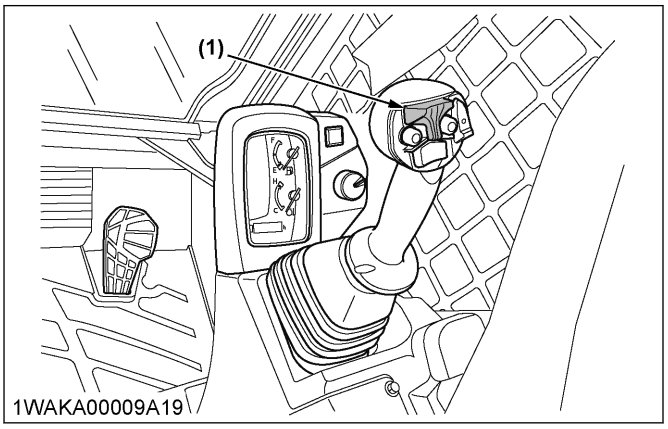

(1) AUX port variable switch

13. AUX hold switch

By pressing the right or left AUX-hold-switch, the flow rate of the hydraulic oil is maximized.

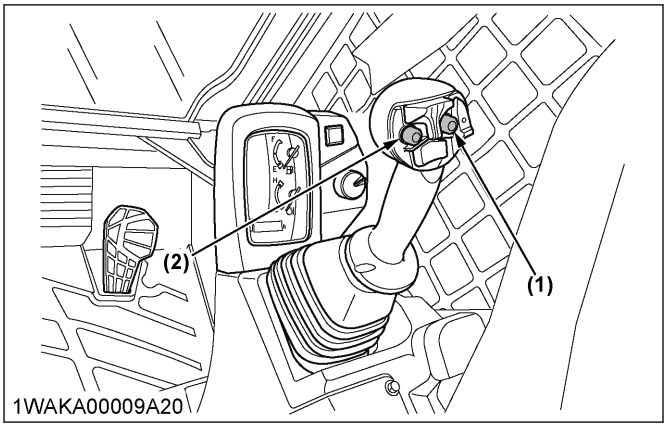

(1) AUX hold switch (Right) (2) AUX hold switch (Left)

14. AUX electrical control switch (option)

With the AUX port switch unlocked, the AUX-electrical-control-switch serves to feed electrical power to attachments.

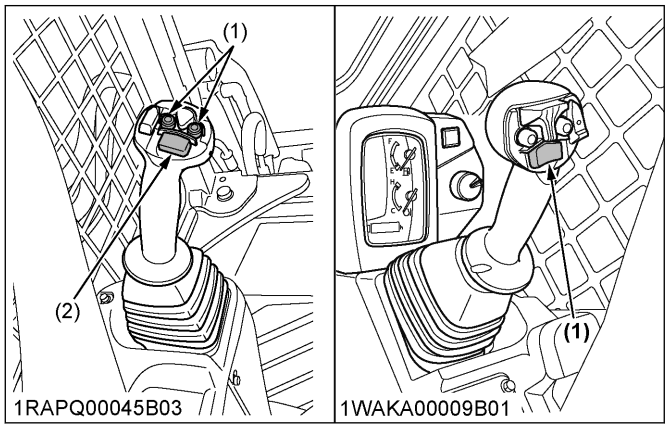

(1) AUX electrical control switch (2) AUX electrical control switch (Multi Function model only)

NOTE :

- **Using the AUX-electrical-control-switch requires the 14-pin coupler (option).**

15. AUX electrical mode change switch (option)

1. By pressing the AUX-electrical-mode-change-switch, the AUX-electrical-mode-change-function will turn on.
   The AUX-electrical-mode-change-indicator and a light on the AUX-electrical-mode-change-switch will light up.
2. By pressing the AUX-electrical-mode-switch again, the AUX-electrical-mode-change-function will turn off.
   The AUX-electrical-mode-change-indicator and the light on the AUX-electrical-mode-change-switch will go off.

https://truckmanualshub.com/

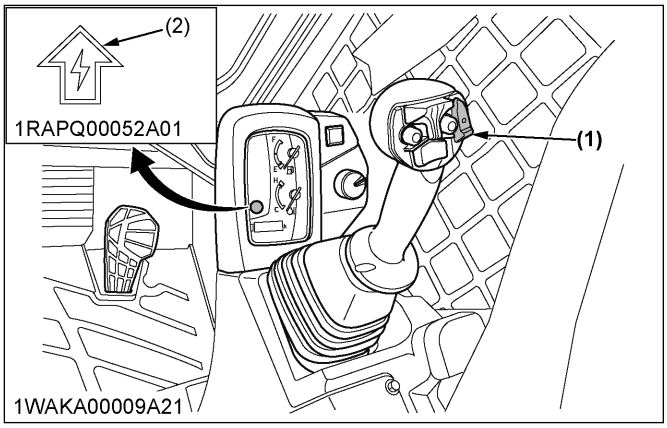

(1) AUX electrical mode change switch (Multi Function model only)
(2) AUX electrical mode change indicator

NOTE :
- **Using the AUX-electrical-mode-change-switch require the 14-pin coupler (option).**

16. Hydraulic quick switch [Hydraulic quick-hitch model only]

The hydraulic-quick-switch is used to attach and detach an attachment by activating the hydraulic quick-hitch.

WARNING

To avoid personal injury or death:
- **Make sure to close the cover when not activating the hydraulic quick-hitch.**

1. By moving the hydraulic-quick-switch to the (lock) mark, the hydraulic quick-hitch get locked.
   After cylinder is moved to locked position, always check to be sure both pins are engaged to the attachment.
2. By moving the hydraulic-quick-switch to the (unlock) marked position, the hydraulic quick-hitch get unlocked.
   After the hydraulic quick-hitch is unlocked, detach the bucket, for example.

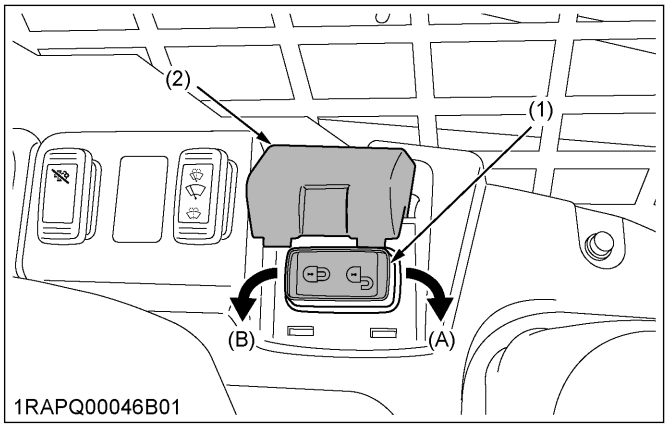

(1) Hydraulic quick-hitch switch
(2) Cover
(A) Unlock position
(B) Lock position

17. Self leveling switch

1. Press the self leveling switch to engage. Press the switch again to disengage.

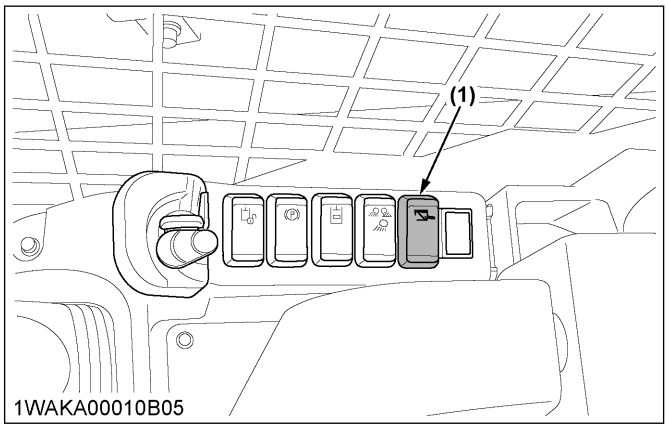

(1) Self leveling switch

NOTE :
- **Self leveling is only operational during the lift arms raise function.**

https://truckmanualshub.com/

PEDAL AND LEVERS

CONTROL PEDALS, LEVERS, AND ELECTRICAL OUTLET

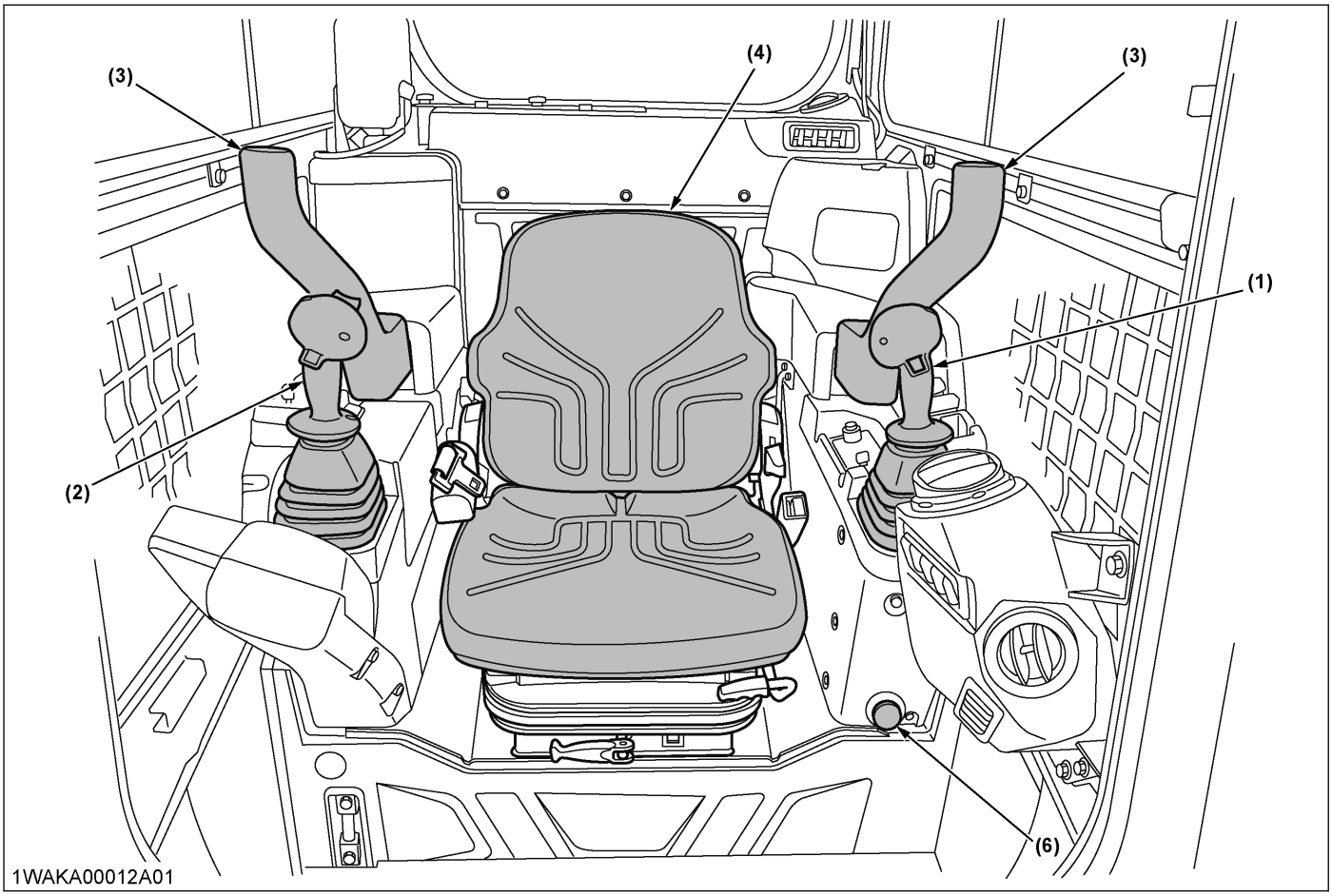

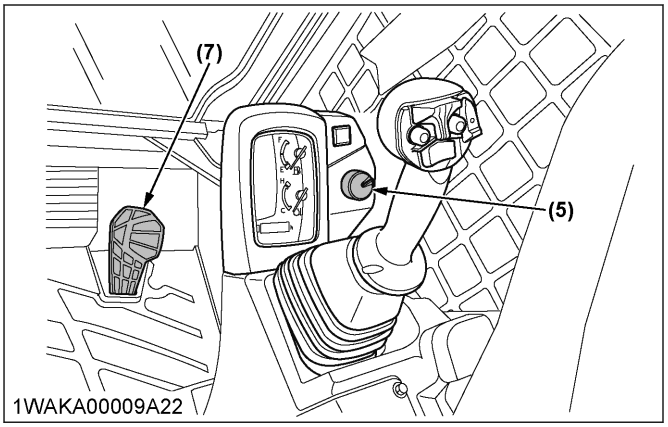

(1) Left control (traveling) lever
(2) Right control (front operating) lever
(3) Armrest
(4) Seat
(5) Engine speed control dial
(6) Electrical outlet
(7) Accelerator pedal

SAFETY FEATURES

WARNING

To avoid personal injury or death:

- **Place the machine on a firm, flat and level surface**
- **Before starting the engine, make sure that no one is near the machine.**

HOW TO USE THE EMERGENCY EXIT

If you should become trapped in the cab, you can remove the rear window to get out.

- The rear window in the machine serves as the primary alternate exit.
- You will need to remove the rear window in order to use the primary alternate exit.

1. Pull on the ring at the top of the rear window in order to remove the rear window.
   The ring will remove the seal that holds the rear window in place.
2. When the seal is taken out, remove the rear window and exit the cab.

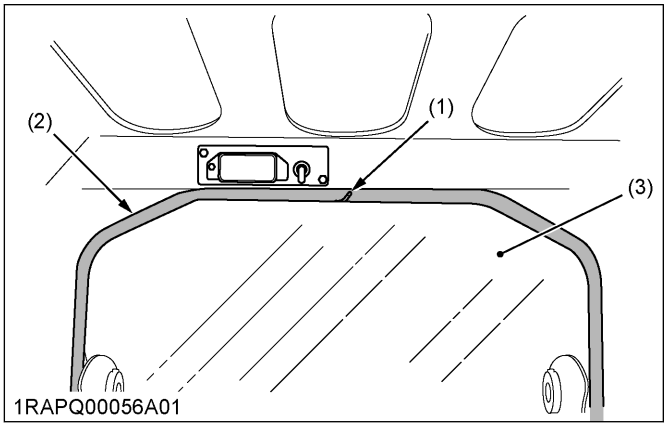

(1) Ring
(2) Seal
(3) Window

OPC FUNCTION

OPC function is used to detect the operator sitting on the seat and to signal the hydraulic system that it can be locked and unlocked.
When the operator sits on the operator's seat and lower the armrests, the hydraulic system can be unlocked.

HOW TO USE AND CHECK THE FUNCTION OF THE ARMREST

1. Sit in the operator's seat.
2. Fasten the seat belt.
3. Start the engine.
4. Push down both armrests.
5. Push on the hydraulic-unlock-switch, and make sure that the hydraulic-lock-indicator on the instrument panel goes out.
6. Move the right-control-lever (front-operating-lever) slowly, and make sure that the lift arms and bucket move slowly.
7. Raise the left armrest, and make sure that the hydraulic-lock-indicator on the instrument panel lights up.
8. Move the right-control-lever (front-operating-lever), and make sure that the lift arms and bucket do not operate.
9. Push down the left armrest.
10. Push on the hydraulic-unlock-switch, and make sure that the hydraulic-lock-indicator on the instrument panel goes out.
11. Raise the right armrest, and make sure that the hydraulic-lock-indicator on the instrument panel lights up.
12. Move the right-control-lever (front-operating-lever), and make sure that the lift arms and bucket do not operate.

When checking the function of the armrest, also check the OPC function.
(See HOW TO USE AND CHECK THE SEAT FUNCTION on page 44)

HOW TO USE AND CHECK THE SEAT FUNCTION

1. Sit in the operator's seat.
2. Start the engine.
3. Push down both the armrests.
4. Push on the hydraulic-unlock-switch, and make sure that the hydraulic-lock-indicator on the instrument panel goes out.

HOW TO CHECK THE REVERSE ALARM

1. Start the engine.

https://truckmanualshub.com/

2. If clear, engage hydraulics and start to reverse. Alarms should sound. If not, check by your KUBOTA dealer.

HOW TO USE THE FORCED LIFT ARMS LOWERING DEVICE

1. Start the engine.
2. Move the right-control-lever (front-operating-lever) until the lift arms come up to your eye level.
3. Stop the engine.
4. Slide the operator's seat all the way backward.
5. Remove the rubber cap.
6. Push the lever to make sure that the lift arms descend.
7. Release the lever to make sure that the lift arms stop descending.
8. Place the rubber cap back to its original position.

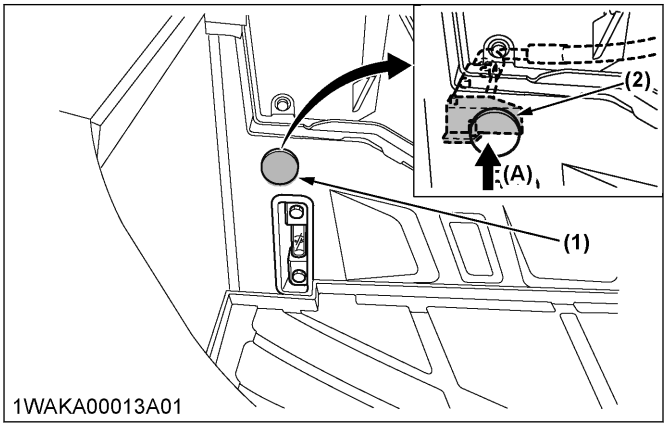

(1) Rubber cap
(2) Lever
(A) Push

https://truckmanualshub.com/

EXHAUST AFTERTREATMENT DEVICE

CATALYST-CONTAINING DIESEL-PARTICULATE-FILTER (DPF) DEVICE

The catalyst-containing-DPF-device has the following two functions.

- Reducing certain emissions, like hydrocarbon (HC) and carbon monoxide (CO), to harmless carbon dioxide (CO_2) and water.
- Trapping and eliminating PM (particulate-matter) through the filter at the same time.

To meet EPA regulations, it is necessary to service the DPF, such as renewing or cleaning the filter at regular intervals.

Be sure to carefully read the following items before using the machine. The machine owner and operator are responsible for using the catalyst-containing-DPF-device correctly to protect the environment and to prevent damage to the DPF, and comply with federal and state regulations.

Use instructions

IMPORTANT :

- **If you fail to use the specified fuel or engine oil, the cleaning interval of the DPF cannot be secured and the DPF will clog after a shorter operating time than expected.**

The cleaning interval of the DPF	3000 hours

- **Fuel**
  Be sure to use the following fuel.
  Use of other diesel fuel other than the following fuel may adversely affect the engine and the emission-control-device and may damage them.

Fuel	ULTRA LOW SULFUR FUEL (S15)

- **Engine oil**
  Use the following engine oil.

Engine oil	DPF-compatible engine oil (CJ-4)

  Any unspecified oil may damage the DPF earlier than expected and lower fuel economy.

Prohibited unnecessary idling

Generally speaking, the lower the engine rpm is, the lower the exhaust gas temperature is. It is more difficult to burn PM (particulate-matter) in the DPF at low rpm. With this in mind, do not keep the engine idling unnecessarily.

If you leave the machine with the engine running, to protect the DPF, the engine may automatically stop.

DPF regeneration system

On the Kubota CTL, the ECU prompts the DPF-regeneration cycle. When starting the engine, auto-regeneration-mode is set by default. When all the conditions are met, regeneration automatically starts, unless the inhibit switch is engaged.

REGENERATION OF DIESEL-PARTICULATE-FILTER (DPF)

⚠ WARNING

To avoid personal injury or death:

- **When the DPF is in the regenerating mode, the exhaust gas and the DPF muffler become hot. During the DPF regeneration, take into account that the DPF muffler will be very hot and keep the machine away from other people, animals, plants, and flammable material. Also keep the area near the DPF muffler clean and away from flammable material.**
- **Do not leave the machine during DPF regeneration.**

Indicator symbol and buzzer indicate the DPF level of PM during operation of the machine.

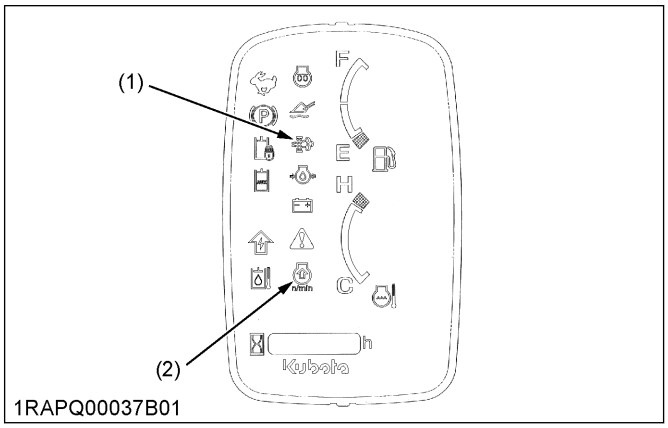

(1) DPF regeneration indicator (2) Engine rev up indicator

NOTE :

- **During DPF regeneration cycle, keep the surrounding environment in mind. Do not allow the ambient temperature to rise excessively due to heat from the DPF regeneration. If the ambient temperature rises excessively, activate the inhibit switch.**

https://truckmanualshub.com/

- **The DPF regeneration cycle only starts in the following conditions. If any of the conditions are not met, the DPF regeneration cycle may be interrupted.**

Coolant temperature	above 65 ℃
DPF temperature	above 250 ℃
Engine rpm	above 1200 rpm

- **The DPF regeneration usually takes about the following times.**

DPF regeneration time	15 minutes to 20 minutes

The DPF regeneration time depends, however, on the outside air temperature, exhaust gas temperature and filter PM level.

- **Do not interrupt the DPF regeneration cycle unnecessarily.**

https://truckmanualshub.com/

AIR CONDITIONER

ADJUSTING THE AIR FLOW OF THE AIR CONDITIONER

IMPORTANT :

- **Do not allow water to enter the fresh-air-inlet when washing the machine.**

NOTE :

- **The rear-air-outlet-port is for cool air only. No warm air is blown out from the rear-air-outlet-port.**
- **When heating, do not keep the inlet-selector-knob at the inside-air-recirculation position for a long time. The windshield can easily fog.**
- **To raise the air flow rate from the rear-air-outlet-port, set the inlet-selector-knob to the inside-air-recirculation position.**
- **While working in a dusty condition, keep the inlet-selector-knob at the fresh-air-inlet position. Keeping the inlet-selector-knob at the fresh-air-inlet position increases the pressure in the cab, which helps prevent dust from coming into the cab.**

- Adjust the six air-outlet-ports to obtain the desired air flow.
  The air flow in the cab and the fresh air flow into the cab flow is shown in the following figure.

Front air outlet port

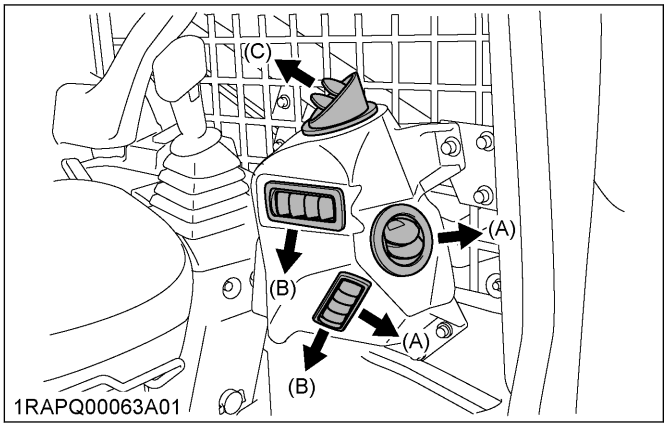

Rear air outlet port (for cool air only)

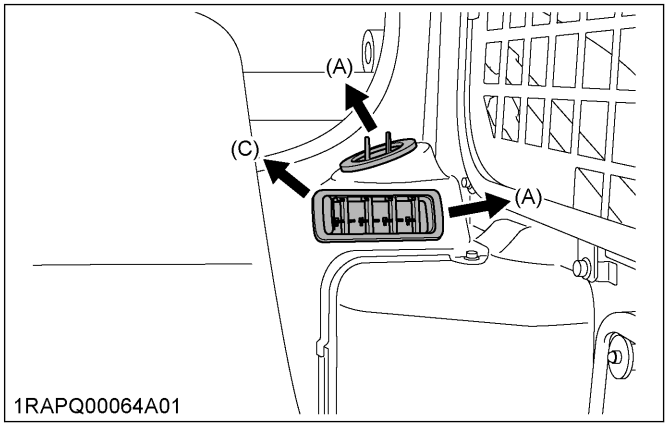

(A) Windshield
(B) Foot area
(C) Chest area

- Position the inlet-selector-knob to the desired position.

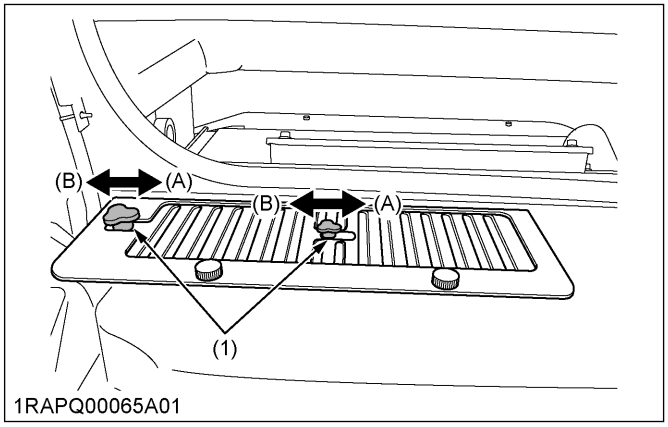

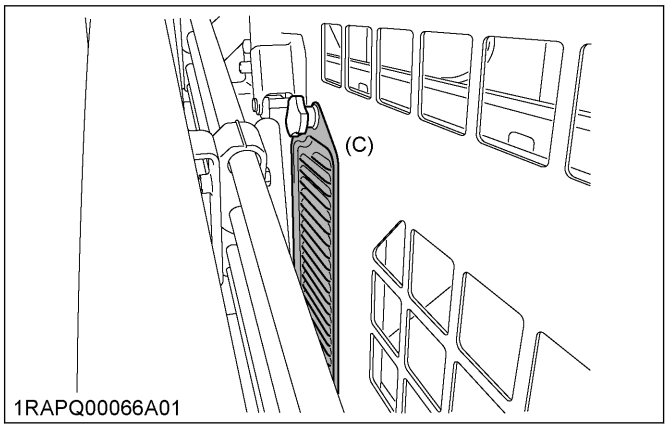

(1) Inlet selector knob
(A) Fresh air inlet position
(B) Inside air recirculation position
(C) Fresh air inlet

AIR CONTROL VENT

CAUTION

To avoid personal injury:

- **Replace the hoses of the air-conditioner every two years.**
- **Inspect the air control vent daily.**
  Have the machine repaired immediately if any of the following flaws are discovered.
  The following flaws may cause burns or injury, and they may also cause engine failure and serious damage.
  - **Scratches, cracks, or swelling in the hoses of the air-conditioner.**
  - **Water leaks at joints or connecting points.**
  - **Missing or damaged the hoses-protective sleeve or grommet of the air-conditioner.**
  - **Loose mounting bolt and damaged bracket.**
- **Do not touch the hoses of the air-conditioner or the heater with your hand. You may get burned.**
- **If the window fails to defrost in extreme conditions or becomes cloudy when dehumidifying the cab, remove moisture with soft cloth.**
- **Never block all of the air outlets because the system malfunction may occur.**

Air outlet

You can adjust the air-outlet-ports as required independently.

To defrost the windshield, set the inlet-selector-knob to the fresh-air-inlet position and rotate the air-outlet-ports toward the windshield.

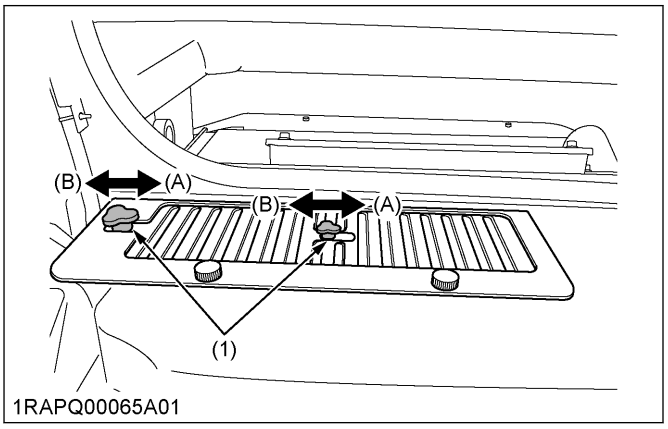

Front air outlet port

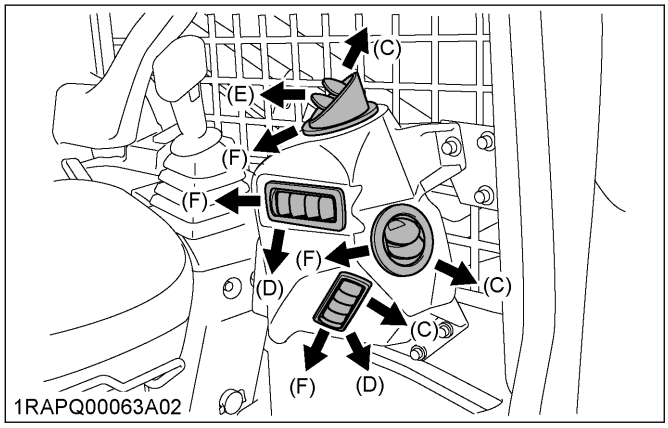

Front air outlet port

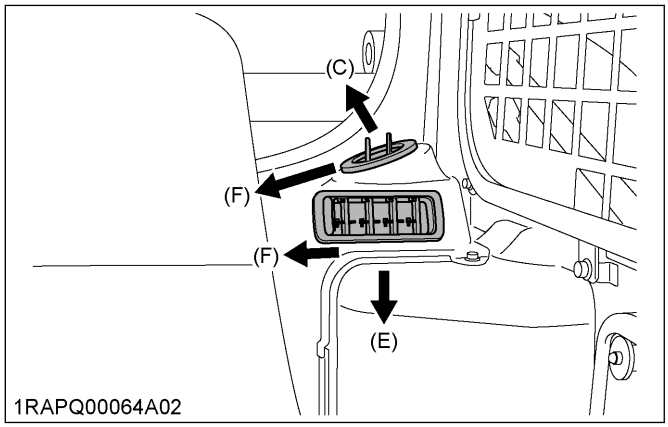

(1) Inlet selector knob

(A) Fresh air inlet position
(B) Inside air recirculation position
(C) Windshield
(D) Foot area
(E) Chest area
(F) Closed

HOW TO USE THE CONTROL PANEL

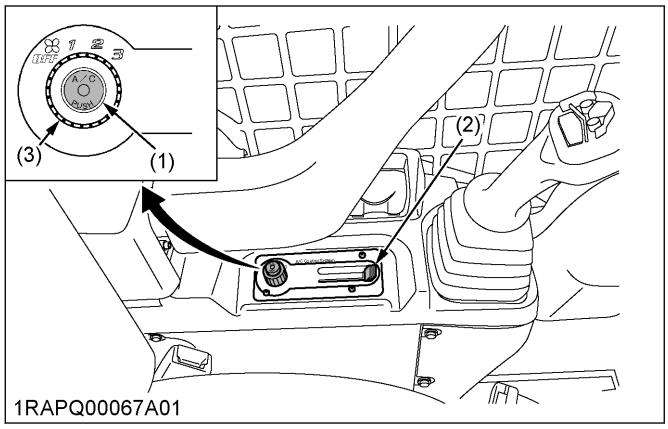

(1) Air-conditioner switch with indicator light

(2) Temperature control lever
(3) Blower switch

https://truckmanualshub.com/

Air-conditioner switch and indicator light

1. Push the air-conditioner-switch to activate the air-conditioner.
   An indicator light will light up when the air-conditioner-switch is set to on.
2. Push the air-conditioner-switch again to turn the air-conditioner off, in which case the indicator light will go off.

NOTE :

- **The air-conditioner is operable only during engine operation.**

Temperature control lever

1. Set the temperature-control-lever at the desired position to obtain the desired air temperature.
   - Move the temperature-control-lever to the right to obtain cooler air.
   - Move the temperature-control-lever to the left to obtain warmer air.

Blower switch

The air flow (fan speed) equips three levels. At the **[3]** position, you can obtain the largest air flow.

1. Set the blower switch at the desired position to obtain the desired air flow (fan speed).

OPERATING THE CONTROL PANEL

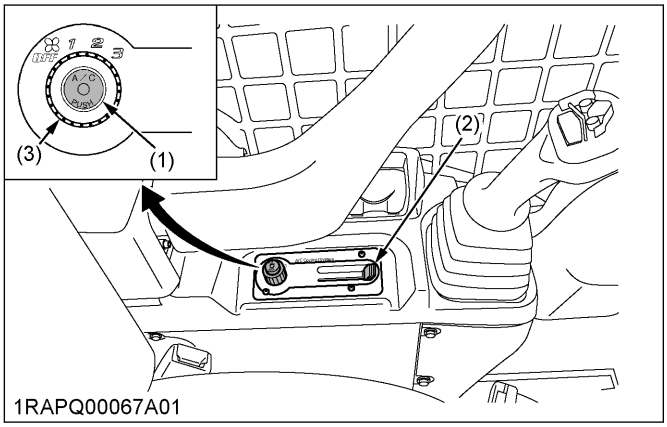

(1) Air-conditioner switch with indicator light
(2) Temperature control lever
(3) Blower switch

Heating air

1. Adjust the blower switch **[1]**, **[2]**, and **[3]** and the temperature-control-lever to achieve the desired temperature level.

NOTE :

- **In summer, when the heater is not used, keep the temperature-control-lever at the cool (rightmost) position. Otherwise, hot air will raise the temperature in the cab.**

Dehumidifying-heating

1. Press and turn on the air-conditioner-switch.
2. Turn the blower switch on **[1]**, **[2]**, or **[3]**.
3. Adjust the temperature-control-lever to the cool (rightmost) or an intermediate position to achieve the desired temperature level.

NOTE :

- **Be sure to close the door while the air-conditioner is on.**

Cooling

1. Press and turn on the air-conditioner-switch.
2. Turn the blower switch on **[1]**, **[2]**, or **[3]**.
3. Adjust the temperature-control-lever to the cool (rightmost) or an intermediate position to achieve the desired temperature level.

NOTE :

- **Be sure to close the door while the air-conditioner is on.**

Defrosting or demisting

To defrost or demist the windshield, take the following steps.

1. Open the front-air-outlet and direct it to the windshield.
2. Set the blower switch to the **[3]** position and set the temperature-control-lever to **[warm]** (leftmost) position.

https://truckmanualshub.com/

OPERATION

CAB TYPE MACHINE

1. Interior lamp

The interior-lamp-switch is operative even when the starter key is in the **[STOP]** position.

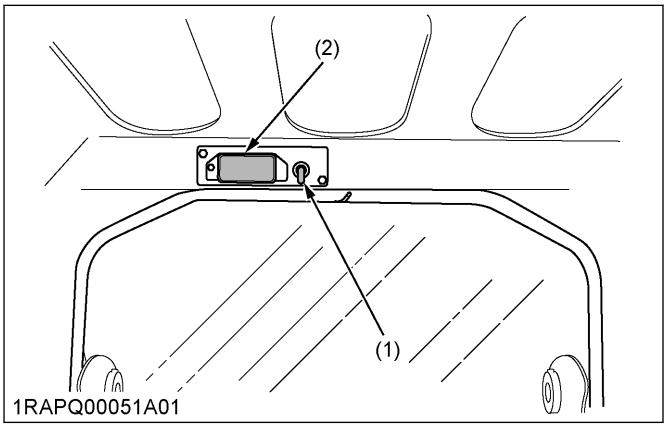

(1) Interior lamp switch *(2) Interior lamp*

2. How to use the wiper/washer switch [Closed cab model]

IMPORTANT :

- **Do not activate the washer switch if the tank for the cleaning fluid is empty because the pump can be damaged.**
- **Do not activate the wiper switch if the window is dry. In this case, make sure that the cleaning fluid is applied to the pane before activating the wiper.**
- **In freezing conditions, make sure that the wiper blade is not frozen to the glass before switching-on of the wiper switch. The motor can be damaged if the wiper system is used under freezing conditions.**

NOTE :

- **Wiper and washer are operable only during engine operation.**

Wiper switch

1. Move the wiper/washer switch to the wiper position when the starter key is in **[RUN]** position.
   The wiper starts.
2. Further push on the wiper/washer switch to the wiper position when spraying the cleaning fluid.
   The washer system will also be activated.

Washer switch

1. Move the wiper/washer switch to the washer position.
   The washer system sprays the cleaning fluid to the pane.

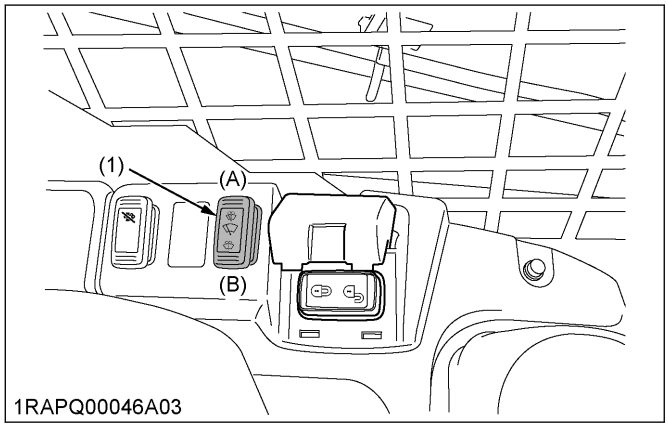

(1) Wiper/washer switch *(A) Wiper* *(B) Washer*

3. Opening and closing the cab door [Closed cab model]

WARNING

To avoid personal injury or death:

- **Keep hands and feet away from the area between the cab door and the cab frame. Otherwise the risks of serious injuries by pinching or crushing to the operator increase.**
- **Other persons should stay away when opening the cab door.**
- **Do not use the lock lever at the bottom of the cab door from inside.**
- **Use caution and both hands to open/close the cab door to avoid contact with your head.**

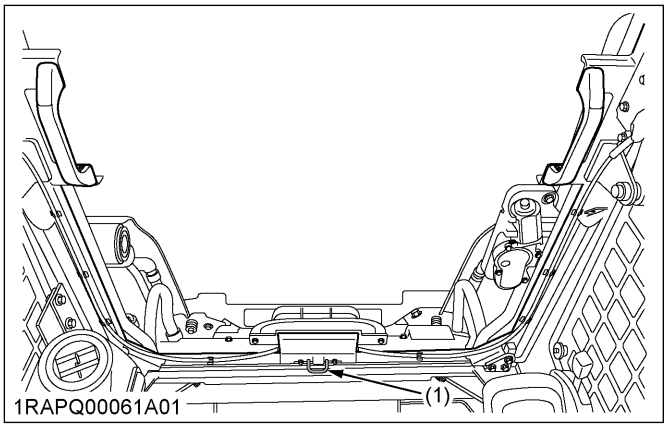

(1) Lock lever (bottom)

Opening the cab door from outside

1. Unlock the cab door and push the button.
   The cab door will open upward.

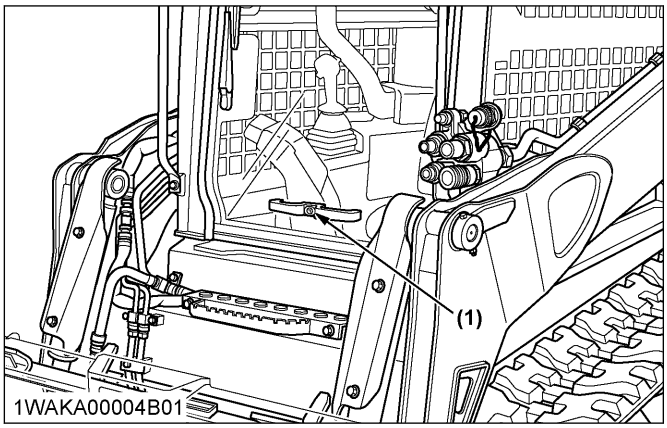

(1) Button

2. Push the cab door all the way up until it locks to the top of the cab.
3. After opening of the cab door, lock in place by moving both lock pins to outside to prevent the cab door from inadvertently falling.

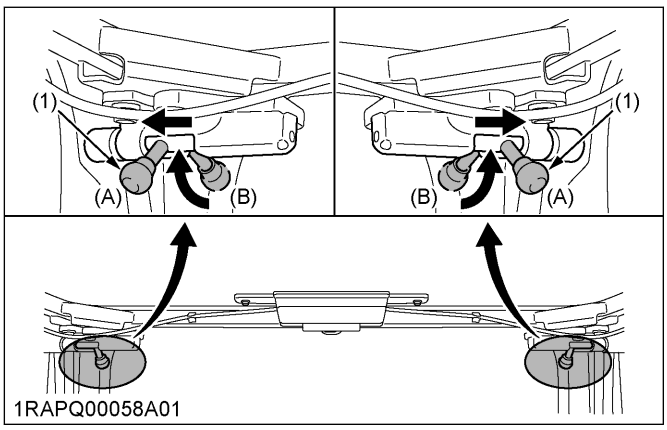

(1) Lock pin
(A) Lock
(B) Unlock

Closing the cab door from outside

1. Before closing, unlock the cab door in place by moving both lock pins to inside.
2. Push the lock lever at the bottom of the cab door, and slowly lower the cab door half way.

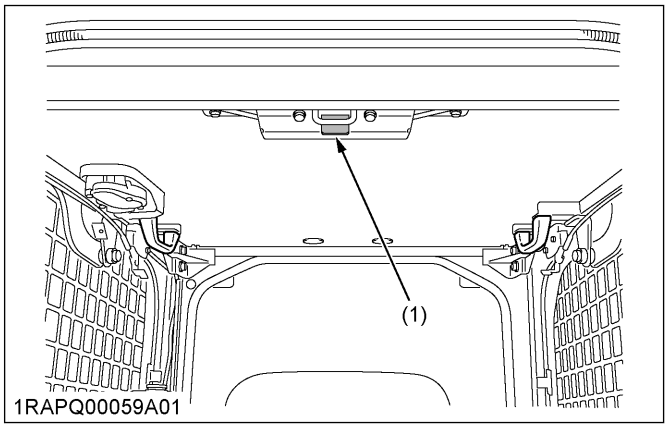

(1) Lock lever (bottom)

3. Grasp the top handle and pull it toward yourself to latch the cab door.

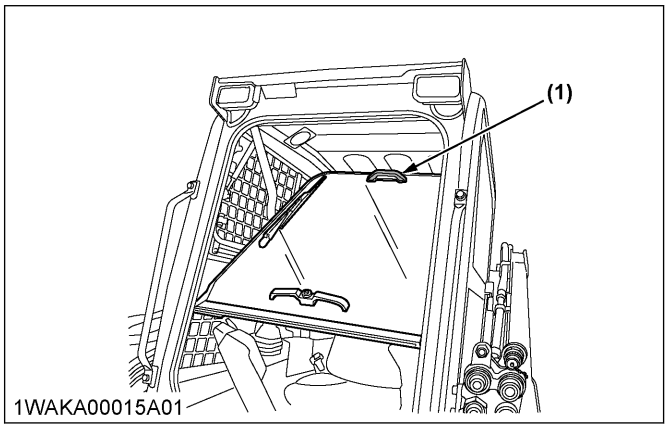

(1) Top handle

4. When leaving the machine, always lock the cab door.

Opening the cab door from inside

1. Hold the handles tightly with both hands, and push the lock levers beside the handles.

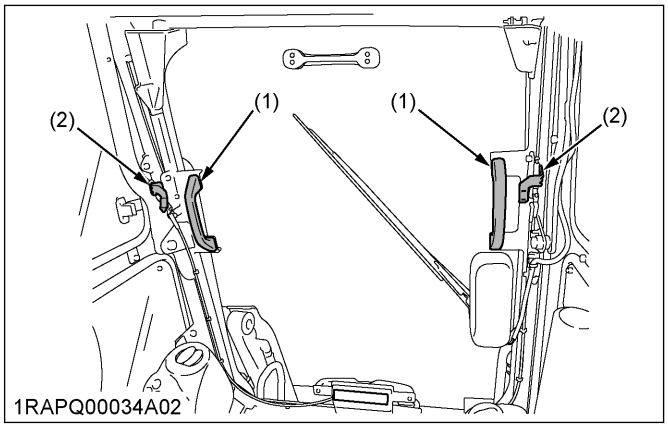

(1) Handle
(2) Lock lever

2. Pull the handles slightly upward and toward yourself to let the cab door slide inward.

3. Pull the cab door all the way to the lock at the back of cab.

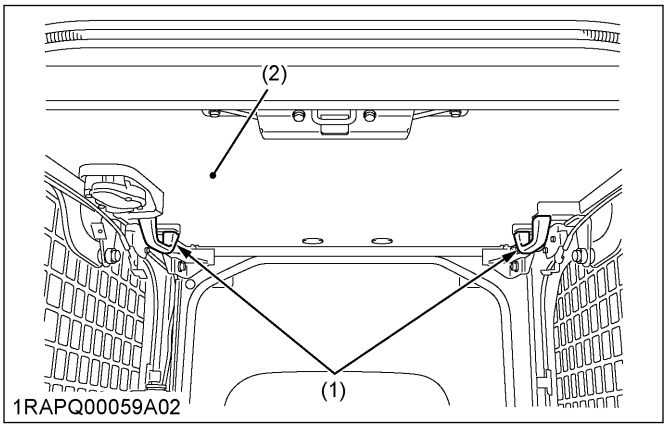

(1) Handle *(2) Cab door*

4. After opening the cab door, lock it in place by moving both lock pins to outside to prevent the cab door from inadvertently falling.

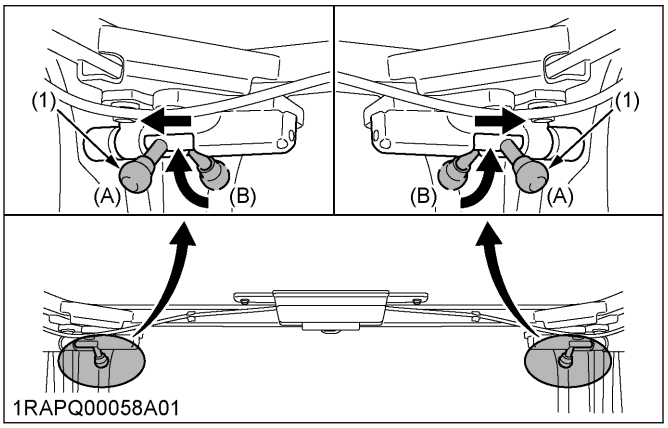

(1) Lock pin *(A) Lock*
(B) Unlock

Closing the cab door from inside

1. Before closing the cab door, unlock it in place by moving both lock pins to inside.
2. Hold the handles tightly with both hands.
3. Pull the handles down and forward to move the cab door from the horizontal to the vertical position.
4. Push the cab door until it is latched in the cab door opening.

4. Opening and closing the side cab window [Closed cab model]

1. Pull the grip to release the lock, and pull side cab window to open it to the rear or to the front.
2. To close the side window, slide it forward or backward until the lock snaps into the window frame.

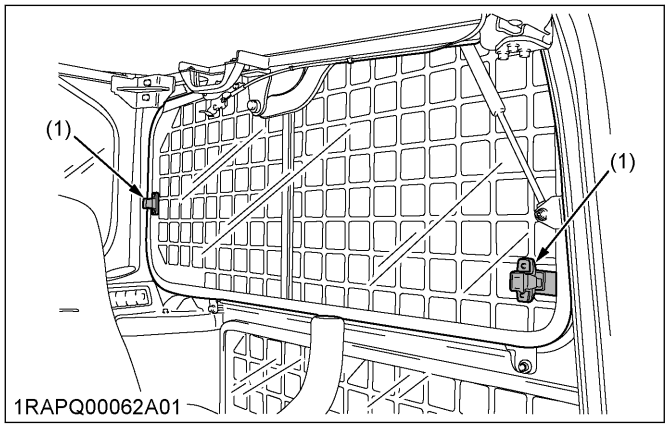

(1) Grip

OPERATION OF THE ENGINE

⚠ WARNING

To avoid personal injury or death:

- **To avoid the danger of exhaust-fumes-poisoning, do not operate the machine in a closed building without proper ventilation.**
- **Always start the engine from the operator's seat. Do not start the engine while standing next to the machine. Before starting the engine, sound the horn to get the attention of persons standing nearby.**

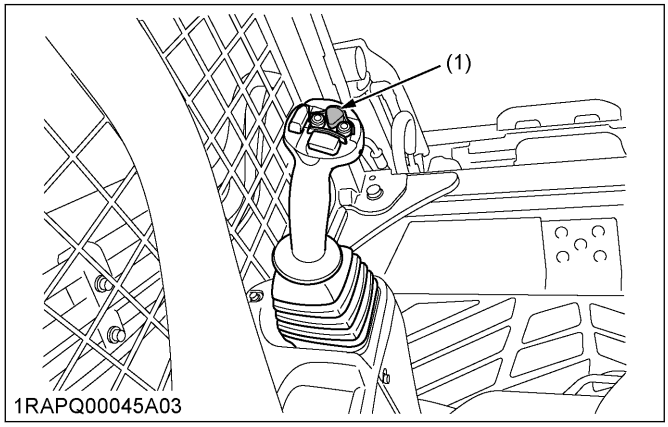

(1) Horn switch

IMPORTANT :

- **Do not use starting fluid or ether.**
- **In order not to overload the battery and starter, avoid engaging the starter for more than 10 seconds.**
- **If the engine does not start in 10 seconds, please wait 20 seconds or more, before restarting.**

1. Starting the engine

CAUTION

To avoid personal injury:

- **The operator should not depend solely on the warning lights, but should always conduct the routine checks section.**

(See MAINTENANCE INTERVALS on page 80)

IMPORTANT :

- **The starter motor consumes large current. Avoid running it longer than 10 seconds continuously.**
  If the engine fails to start within 10 seconds, follow the following procedure.
  1. **Once set the key to the [STOP] position.**
  2. **Wait for 20 seconds or longer.**
  3. **Repeat the following step 2. through step 5..**
- **If the battery is dead and must be connected to another battery with jumper cable, be sure to use a 12 V battery. Never use any 24 V batteries.**

Before starting the engine, make sure that the armrests are in the raised position, the control levers are in their neutral position, and the seat belt is fastened correctly.

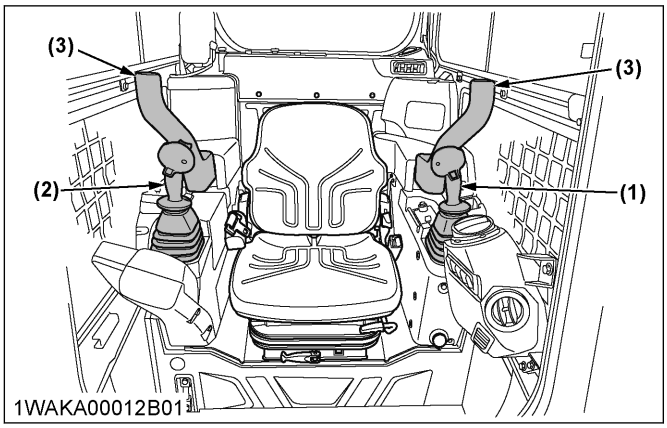

(1) Left control (traveling) lever (3) Armrest
(2) Right (front operating) lever

Start the engine in the following manner:

1. Set the engine-speed-control-dial to 1/2 position and keep the accelerator pedal free.

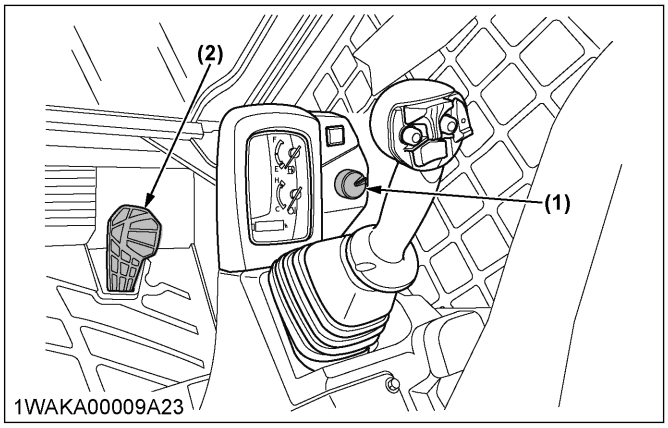

(1) Engine speed control dial (2) Accelerator pedal

2. Insert the key into the starter switch and turn it to the **[RUN]** position.

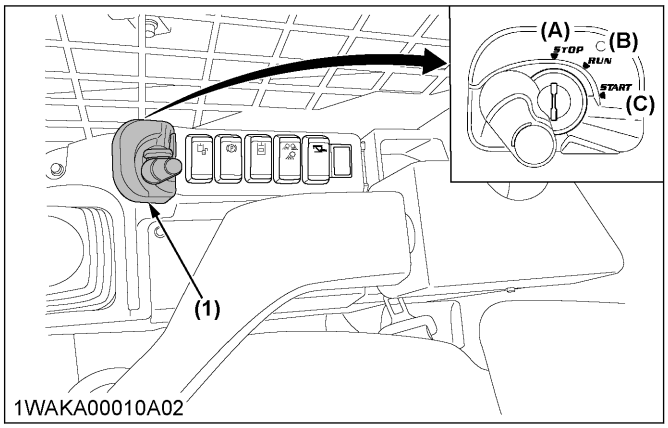

(1) Starter switch
(A) STOP
(B) RUN
(C) START

The glow-plug-indicator will light up while the engine is preheated and will go out automatically after preheating is finished.

3. Make sure that the and marks appear on the instrument panel.
   If not, the system is malfunctioned. Contact your local KUBOTA dealer.

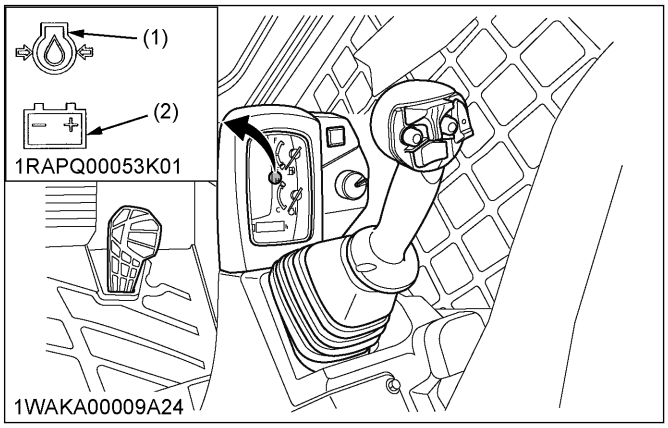

(1) Engine oil pressure indicator (2) Battery charge warning light

4. Turn the key to the **[START]** position and release after the engine has started.
5. Check if all warning lights (except the hydraulic-lock-indicator and the parking-brake-warning-light) have gone out. If a warning light still be lit up, stop the engine and then remove the key, and check for the cause.

2. Checking the machine after starting the engine

After starting the engine, but before starting operation of the machine, check the machine conditions.

1. Idle the engine. (warm up)
   The engine idle allows the engine lubricant to warm up and penetrate every part of the engine.
2. Once the engine has warmed up, check the following items.
   - The engine-oil-pressure-indicator has gone out.
   - The battery-charge-warning-light goes out when engine speed is increased.
   - The color of the exhaust is normal.
   - You do not hear abnormal noises and do not feel vibrations.
   - No fluid is leaking from pipes or hoses.
3. If any following conditions occur, stop the engine immediately.
   - The engine rpm increases or decreases suddenly.
   - You hear abnormal noises suddenly.
   - Exhaust is black.
   - The engine-oil-pressure-indicator lights up during operation of the machine.

   IMPORTANT :
   - **If any preceding conditions occur, check the machine and consult your local KUBOTA dealer for service of the machine.**

3. Starting the engine under cold conditions

CAUTION

To avoid personal injury:
- **Make sure that the armrests are in the raised position during warm-up.**

Start the engine in the following manner.

1. Turn the starter switch to the **[RUN]** position (glow position) and hold it until the glow-plug-indicator has gone out.
2. Move the starter switch to the **[START]** position. to crank and start the engine.
3. Release the starter switch after the engine has started.
   The starter switch will automatically return to the **[RUN]** position.

IMPORTANT :
- **Let the engine warm up after start-up for approx. 10 minutes under no load conditions. If the hydraulic-fluid-temperature is too low, it will affect the operations or the function of the pressure sensors.**
  Do not operate the machine under full load before the engine has thoroughly warmed up.

STOPPING THE ENGINE

WARNING

To avoid personal injury or death:
- **Lower the bucket or attachments to avoid a person accidentally touching levers and causing a serious accident.**

1. After slowing the engine to idle, turn the key to **[STOP]** position.
2. Remove the key.

   IMPORTANT :
   - **Do not stop the engine by shutting down the battery power directly.**
     Doing so may cause failure or malfunction.

1. Starting the engine with an auxiliary battery

Follow the guidelines in this section when starting the engine with an auxiliary battery.

WARNING

To avoid personal injury or death:
- **Battery gases can explode.**
  Do not smoke and keep sparks and flames away.
- **Do not start the engine with an auxiliary battery if machine battery is frozen.**
- **Do not connect the black jumper cable to the negative (-) terminal of the machine battery.**

1. Bring the helping machine with the same battery voltage as near as possible to the machine.

   IMPORTANT :
   - **The machines must not come in contact with each other.**
2. Bring the levers and pedal of both machines in the neutral position.
3. Wear eye protection and rubber gloves.
4. Make sure that the vent caps are securely in place if equipped.

https://truckmanualshub.com/

5. Connect the terminal of the red jumper cable with the plus (+) terminal of the low battery and connect the other end of the red cable to the plus (+) terminal of the auxiliary battery.
6. Connect the black negative cable to the minus (-) terminal of the auxiliary battery.
7. Connect the other end of the black cable coming from the auxiliary battery to the conductive part of the machine frame as far away as possible from the low battery.
8. Start the engine of the helping machine and let it run for a while.
9. Start the machine with the low battery.
10. Disconnect the jumper cables in the reverse sequence.

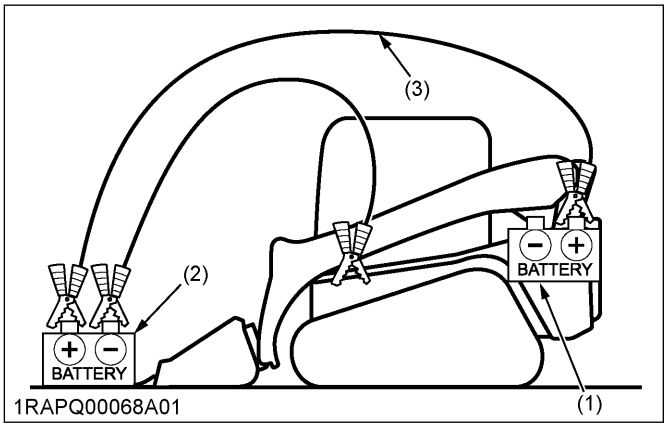

(1) Low battery
(2) Auxiliary battery
(3) Jumper cables

IMPORTANT :
- **This machine is equipped with a negative (-) ground 12 Volt starting system.**
- **Only use the same voltage when using an auxiliary battery.**
- **Using a higher voltage will cause serious damage to the electrical system. When using an auxiliary battery, only the compatible (same) voltage is permissible.**

OPERATION OF THE MACHINE

1. Running-in of the machine

It is most important to run-in your machine properly in order to achieve its full performance and longevity.
The operation and care of the new machine influence its life span. Your new machine has been carefully checked and tested before leaving the factory. In spite of careful check and test, all movable components must be run-in during the first 50 work hours. Do not work with full rpm and full loads during the first 50 work hours.
During the running-in period, adhere to the following points in all cases.

Do not work with full engine rpm or full loads during the first 50 working hours
- Let the engine warm up sufficiently in the cold season.
- Do not let the engine rev-up more than necessary.

Oil change in the run-in stage
The lubrication oil plays a specific and important role during the run-in phase of the machine.
The numerous movable parts are not yet run-in, so many fine metal particles can be generated and may cause damage and shorten the life of many components.
Pay attention to the oil-change intervals and complete them sooner than later.
See Changing the engine oil on page 99 for more details on the oil-change intervals.

2. Start of the machine

WARNING
To avoid personal injury or death:
- **Mount the machine and dismount the machine only at locations that have steps and/or handholds.**
  Before you mount the machine, clean the steps and the handholds.
- **Start the machine only from the operator's seat.**
  Never short across the starter terminals or across the batteries.
  Shorting could damage the electrical system by bypassing the engine-neutral-start-system.
- **Inspect the condition of the seat belt and the mounting hardware.**
  Replace any parts that are worn or damaged.
  Do not use a seat belt extension on a retractable seat belt.
- **Adjust the seat so that full pedal travel can be achieved with the operator's body against back of the seat.**
- **Make sure that the machine is equipped with a lighting system that is adequate for the job conditions.**
  Make sure that all machine lights are working properly.
- **Before you start the engine and before you move the machine, make sure that no one is underneath, or on or close to the machine.**

2.1 Adjusting the operator's seat

WARNING
To avoid personal injury or death:
- **Replace the operator's seat with the new one if it is damaged and got holes. Water or dust**

https://truckmanualshub.com/

could penetrate the hole and it causes the erroneous seat switch operation.

CAUTION

To avoid personal injury:

- **Make sure that the seat is completely secured after each adjustment.**

Suspension seat

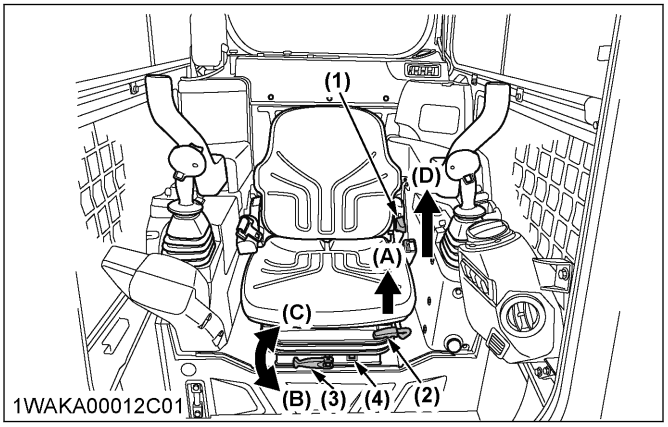

(1) Backrest tilt adjust lever
(2) Travel adjust lever
(3) Weight adjust lever
(4) Ride indicator
(A) Unlock
(B) To raise the seat
(C) To lower the seat
(D) Unlock

Travel adjustment

1. Pull the travel-adjust-lever in the direction of unlock (A) and slide the seat backward or forward, as required.
   The seat will lock in position when the lever is released.

Weight adjustment

1. Turn the weight-adjust-lever to achieve the optimum suspension setting.
2. Make sure that the ride indicator shows green. If red, readjust the suspension setting.

Height adjustment

1. Lift the operator's seat to the desired height of the three available positions.
2. Adjust the seat to the desired position after lifting the operator's seat to the highest position in case lowering the operator's seat.

Tilt adjustment

1. Pull the backrest-tilt-adjust-lever in the direction of unlock (D) and move the backrest to the desired angle.

2.2 How to use the seat belt

WARNING

To avoid personal injury or death:

- **Always use the seat belt with a ROPS and FOPS protection structure. Adjust the operator's seat to the optimal position and buckle it up.**
- **Always fasten the seat belt securely before starting the engine.**

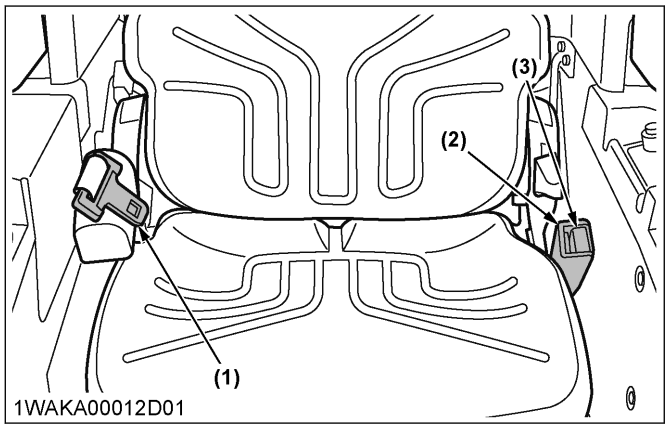

(1) Seat belt
(2) Socket
(3) Button

Fastening the seat belt

1. Pull the seat belt from the retractable (right) side of the operator's seat.
2. Insert the fixture of the seat belt into the socket at the left side of the operator's seat until the fixture clicks deep into position.

Releasing the seat belt

1. Press the red button of the socket to release the seat belt.
   The seat belt reels itself and gets retracted to the right side.

https://truckmanualshub.com/

2.3 How to use the armrest

1. Move the armrests to the raised position to lock out the hydraulic and electric systems.

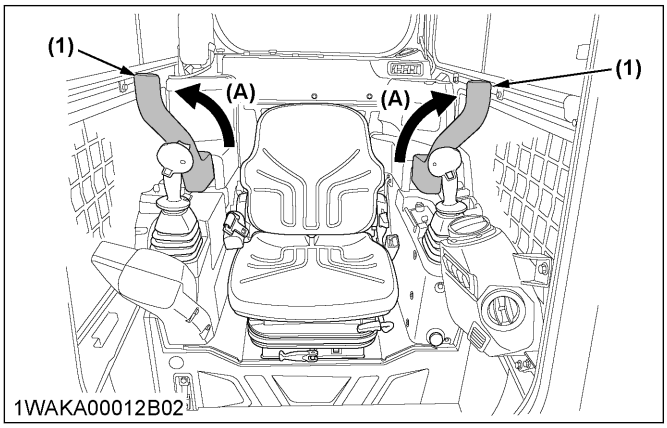

(1) Armrest *(A) Raise*

NOTE :

- **When the armrests are moved to the raised position, the parking brake will engage and the hydraulic and operation system will be locked.**
  Move the armrests to the lowered position and push the hydraulic-unlock-switch in order to activate the hydraulic controls.
- **When you start the engine, disengage the hydraulic lock so that the hydraulic controls are activated.**
  If the armrests are raised and then lowered during the operation, you must disengage the hydraulic lock so that the hydraulic controls are activated.

3. Driving

WARNING

To avoid personal injury or death:

- **Before starting the engine, make sure that no one is near the machine.**

3.1 Traveling forward and backward

To move forward

1. Push the left-control-lever (traveling lever) forward.

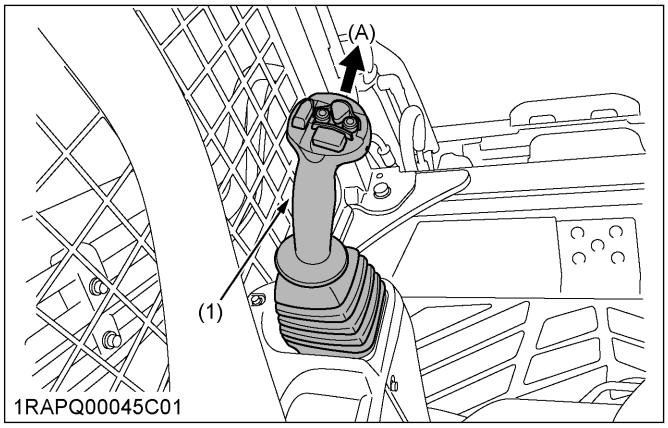

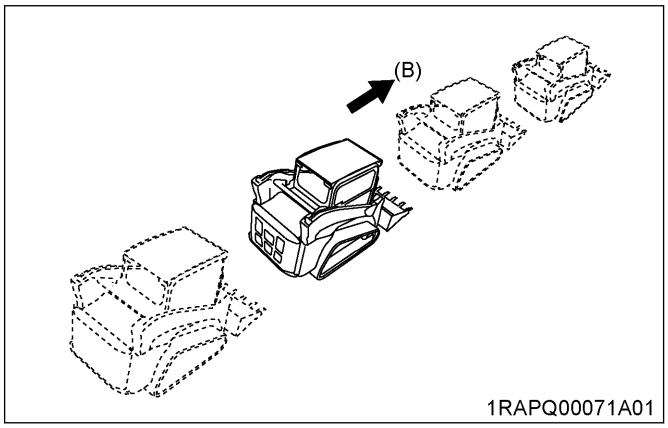

(1) Left control lever (traveling lever) *(A) Push* *(B) Forward*

To move backward

1. Pull the left-control-lever (traveling lever) backward.

https://truckmanualshub.com/

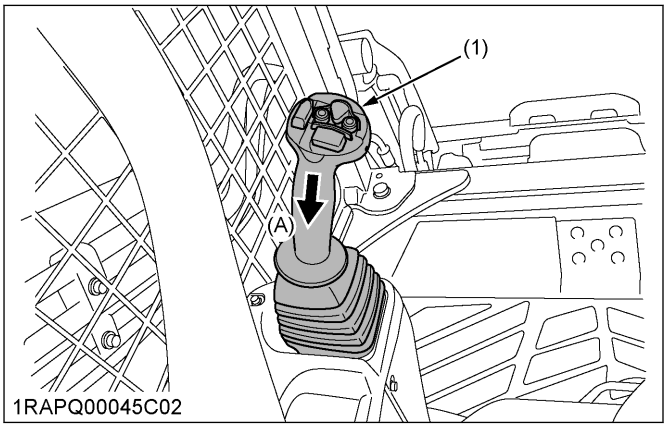

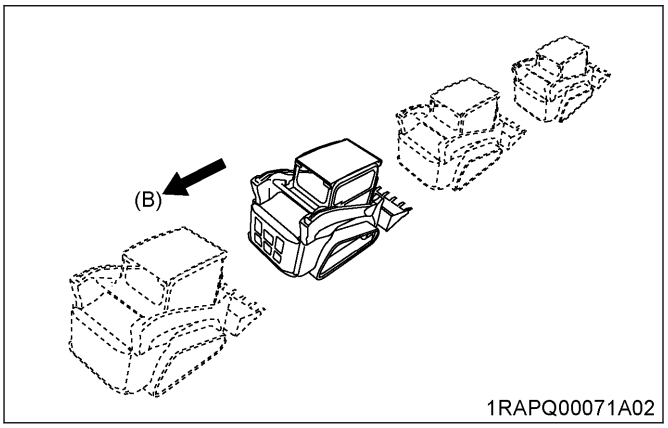

(1) Left control lever (traveling lever)
(A) Pull
(B) Backward

NOTE :

- **When the machine begins to travel backward, the reverse alarm starts sounding.**

IMPORTANT :

- **If the temperature of the hydraulic oil is too low, the reverse alarm may start sounding when switching from the backward to the forward travel. This alarm is not a problem.**
  Just run for warm-up, and then the hydraulic oil temperature rises, this will stop the alarm. If the alarm still keeps sounding, contact your local dealer.

4. Turning the machine

⚠ CAUTION

To avoid personal injury:

- **Before changing direction of the the machine, beware of people in the work area.**
- **Make sure that the bucket or attachment is lowered on the ground.**

4.1 How to use pivot turn

To turn the machine forward to the left

1. Tilt the left-control-lever (traveling lever) forward to the left.

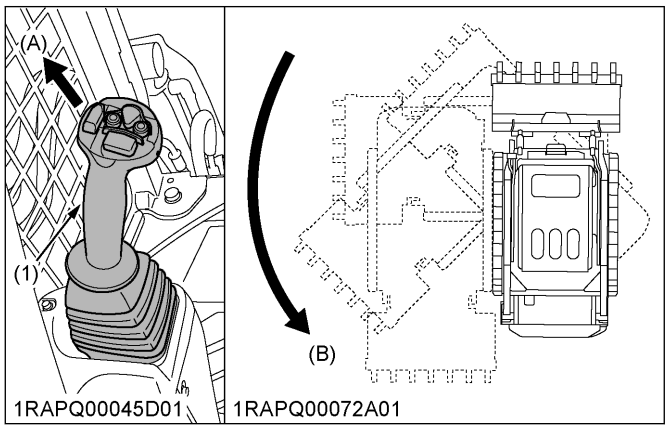

(1) Left control lever (traveling lever)
(A) Tilt
(B) Forward to the left

To turn machine backward to the left

1. Tilt the left-control-lever (traveling lever) lever backward to the left.

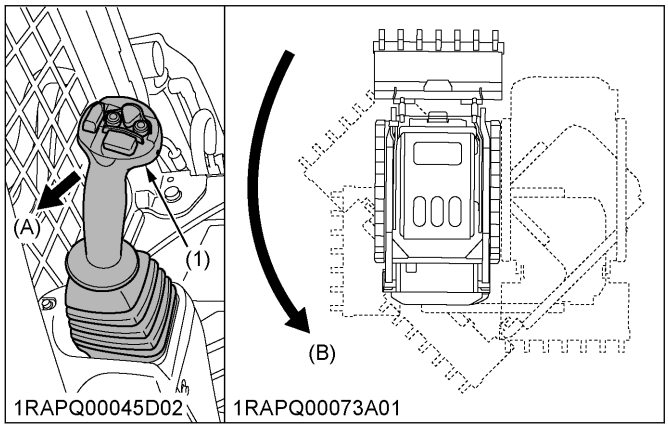

(1) Left control lever (traveling lever)
(A) Tilt
(B) Backward to the left

To turn machine forward to the right

1. Tilt the left-control-lever (traveling lever) forward to the right.

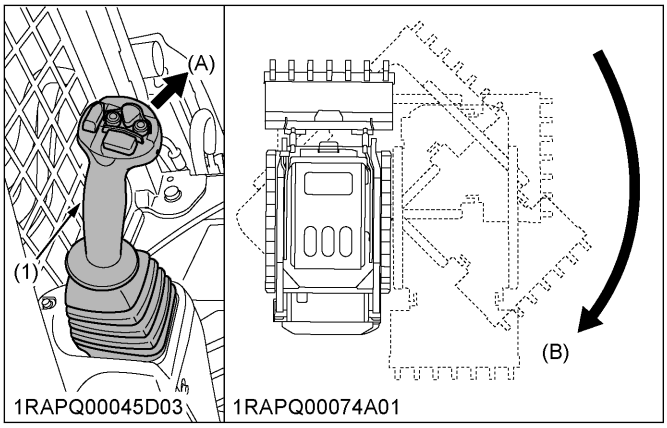

(1) Left control lever (traveling lever)
(A) Tilt
(B) Forward to the right

To turn machine backward to the right

1. Tilt the left-control-lever (traveling lever) lever backward to the right.

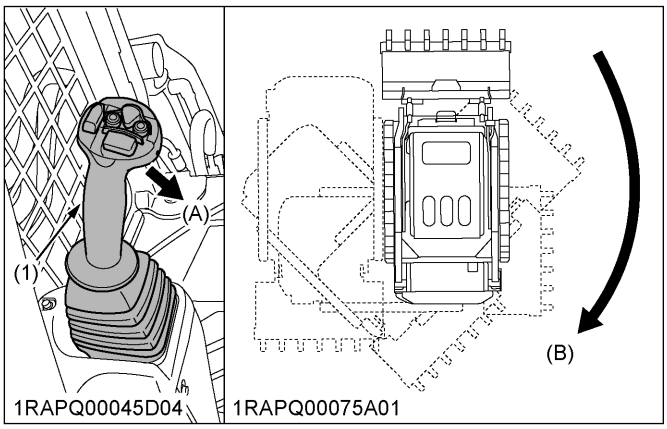

(1) Left control lever (traveling lever)
(A) Tilt
(B) Backward to the right

4.2 How to use spin turn

To spin the machine left

1. Tilt the left-control-lever (traveling lever) to the left.

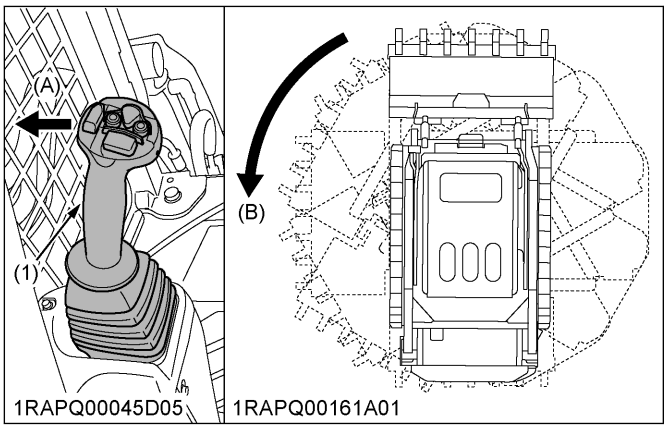

(1) Left control lever (traveling lever)
(A) Tilt
(B) Left

To spin the machine right

1. Tilt the left-control-lever (traveling lever) to the right.

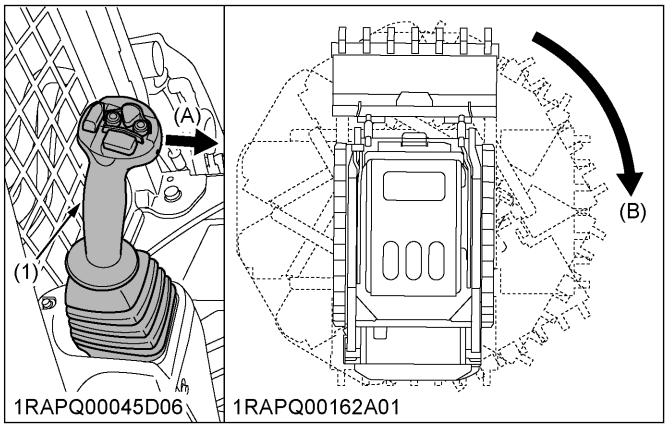

(1) Left control lever (traveling lever)
(A) Tilt
(B) Right

5. Operating the lift arms

WARNING

To avoid personal injury or death:

- **Do not exceed the rated operating capacity of the unit. If loads exceed the rated operating capacity, the unit can experience a hydraulic imbalance when half or medium "lift arms raise" and "bucket roll back" or "auxiliary hydraulic control" commands are input together, which can result in the lift arms lowering slowly. If you begin to experience a hydraulic imbalance, either place the lift arms control in neutral or input full raise control, and lift arms lowering will cease.**

To lower the lift arms

1. Push the right-control-lever (front-operating-lever) forward.

https://truckmanualshub.com/

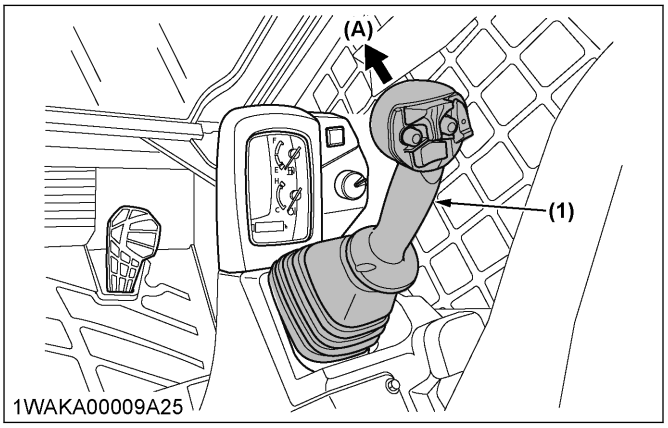

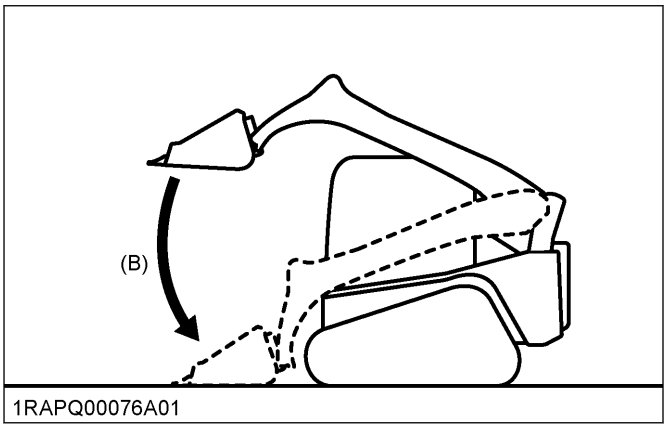

(1) Right control lever (front operating lever)
(A) Push
(B) Lower

To raise the lift arms

1. Pull the right-control-lever (front-operating-lever) backward.

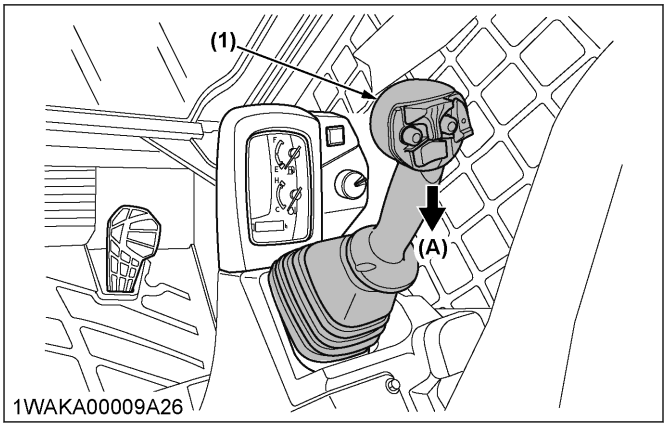

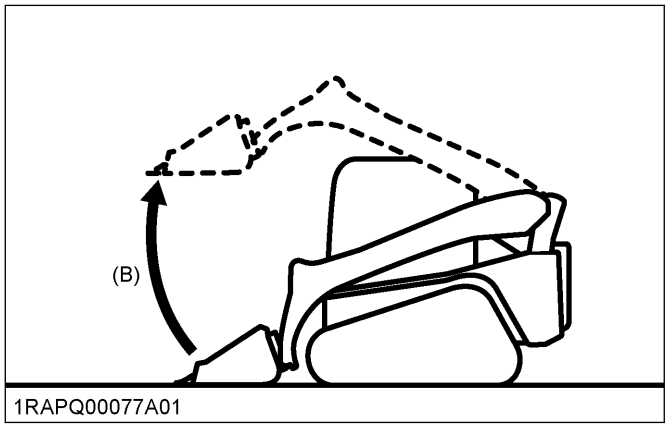

(1) Right control lever (front operating lever)
(A) Pull
(B) Raise

NOTE :

- **To stop the lift arm operation, return the right-control-lever (front-operating-lever) to the neutral position.**

5.1 How to use the lift arm stopper

⚠ WARNING

To avoid personal injury or death:

- **Never work on a machine with the lift arms up unless the lift arms are secured by an approved lift-arm-stopper.**

The lift-arm-stopper prevents the lift arms from falling when servicing the machine.

Installing

1. Park the machine on level and firm ground, and lower the lift arms fully to the ground.
2. Remove the front attachment.
3. Stop the engine.
4. Ask the second person to remove the lift-arm-stopper from the storage position.

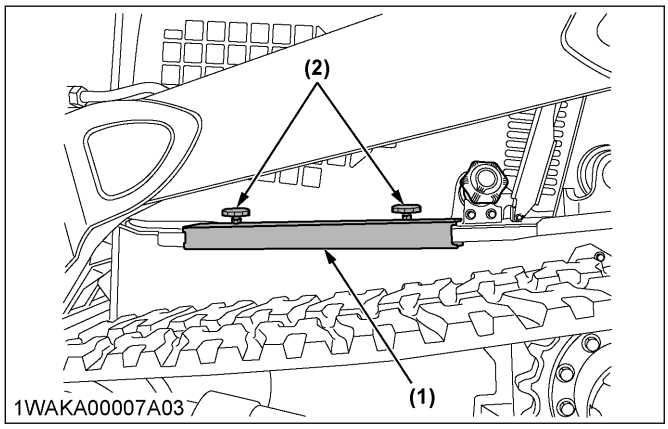

(1) Lift arm stopper
(2) Knob bolt

5. Start the engine.
6. Set the parking-brake-switch to the parking position.

7. Slowly raise the lift arms to the maximum height.
8. Stop the engine.
   Operator must stay in the operator's seat with the seat belt fastened.
9. Ask the second person to install the lift-arm-stopper.
10. Place the top (dented) of lift-arm-stopper upward, and cover the rod with the lift-arm-stopper from front.
    Using one of the knob bolts, secure the lift-arm-stopper in position.

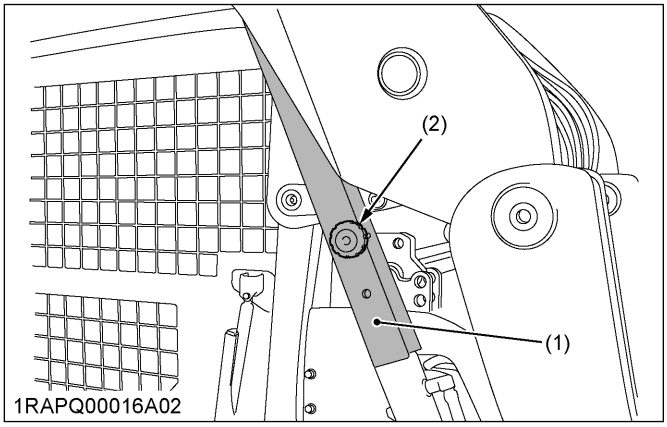

(1) Lift arm stopper *(2) Knob bolt*

IMPORTANT :
- **Make sure that the dent on top of the lift-arm-stopper fits the round part of the lift arm and that the flat bottom of lift-arm-stopper fits the flat top of the arm-cylinder-tube. Do not allow any gap in both locations top and bottom of the lift-arm-stopper.**

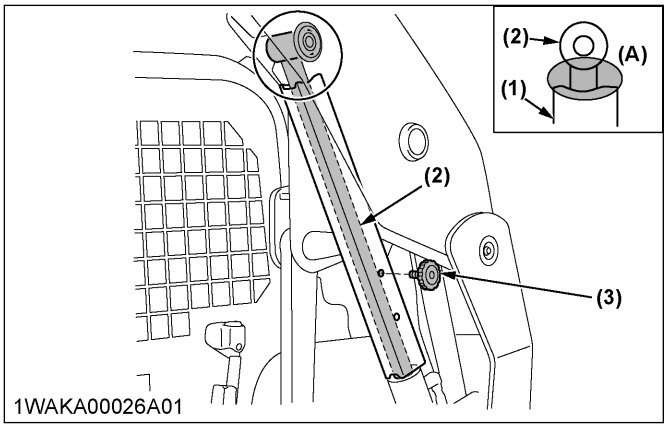

(1) Lift arm stopper *(A) Fit*
(2) Arm cylinder tube
(3) Knob bolt

11. Start the engine.
12. Set the parking brake switch to the parking position.
13. Slowly lower the lift arms against the lift-arm-stopper.

Removing
1. Sit in the operator's seat with the seat belt fastened.
2. Start the engine.
3. Set the parking-brake-switch to the parking position.
4. Slowly raise the lift arms to the maximum height.
5. Stop the engine.
6. Ask the second person to remove the lift-arm-stopper.
7. Start the engine.
8. Lower the lift arms fully to the ground.
9. Stop the engine.
10. Return the lift-arm-stopper to the storage position and secure it with two knob bolts.

6. Operating the bucket

⚠ WARNING

To avoid personal injury or death:
- **Do not exceed the rated operating capacity of the unit. If loads exceed the rated operating capacity, the unit can experience a hydraulic imbalance when half or medium "lift arms raise" and "bucket roll back" or "auxiliary hydraulic control" commands are input together, which can result in the lift arms lowering slowly. If you begin to experience a hydraulic imbalance, either place the lift arms control in neutral or input full raise control, and lift arms lowering will cease.**

To roll the bucket back
1. Tilt the right-control-lever (front-operating-lever) to the left.

https://truckmanualshub.com/

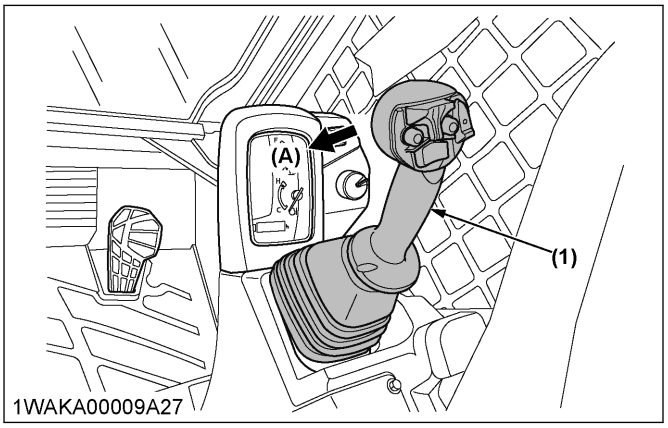

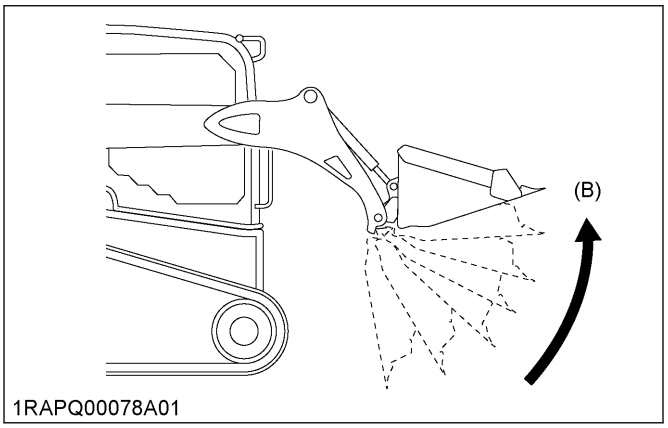

(1) Right control lever (front operating lever)
(A) Tilt
(B) Roll back

To dump the bucket

1. Tilt the right-control-lever (front-operating-lever) to the right.

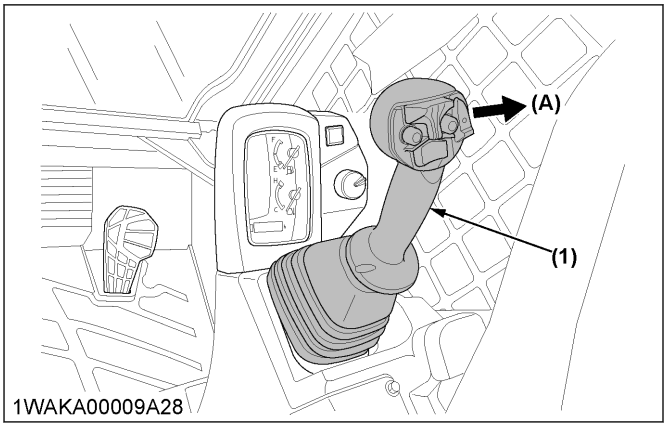

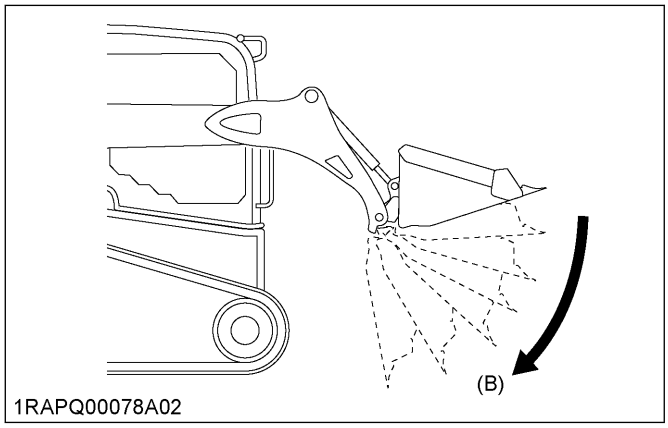

(1) Right control lever (front operating lever)
(A) Tilt
(B) Dump

NOTE :

- **To stop the bucket operation, return the right-control-lever (front-operating-lever) to the neutral position.**

https://truckmanualshub.com/

AUXILIARY HYDRAULIC

HOW TO USE THE AUXILIARY HYDRAULIC CONTROL

WARNING

To avoid personal injury or death:

- **Do not exceed the rated operating capacity of the unit. If loads exceed the rated operating capacity, the unit can experience a hydraulic imbalance when half or medium "lift arms raise" and "bucket roll back" or "auxiliary hydraulic control" commands are input together, which can result in the lift arms lowering slowly. If you begin to experience a hydraulic imbalance, either place the lift arms control in neutral or input full raise control, and lift arms lowering will cease.**
- **Stop the engine and relieve pressure before connecting or disconnecting lines.**
- **Do not use your hand to check for leaks.**

Connecting

1. Remove dirt or debris from the surface of both the male and female couplers, and from the outside diameter of the male coupler.
2. Visually check the couplers for corroding, cracking, damage, or excessive wear. If any of these conditions exist, the coupler must be replaced.
3. Push the quick couplers tightly and hold for a few seconds, the pressure is relieved automatically. (Pressure relief system.)
4. Connect the couplers.

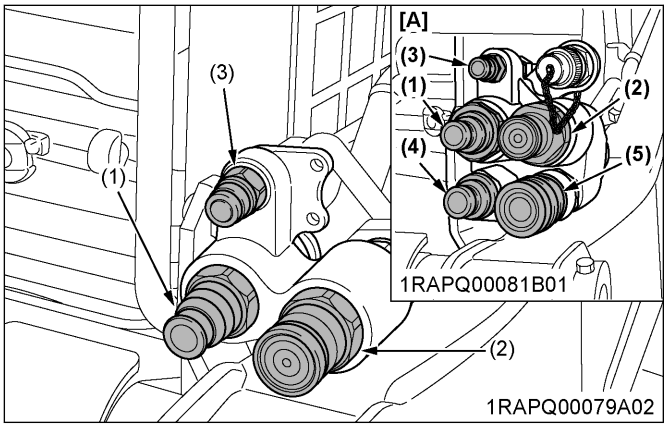

(1) Male coupler (small)
(2) Female coupler (small)
(3) Male case drain coupler
(4) Male coupler (large)
(5) Female coupler (large)
[A] High-Flow model

IMPORTANT :

- **Use long enough hoses when connecting the attachment. Otherwise the couplers could be damaged due to the frequent side load and impact to them during working.**

IMPORTANT :
[High-Flow model only]

- **When relieving pressure, use the couplers of (1) and (2) in the preceding figure.**
- **Depending on the attachment coupler size and flow rate, select the proper coupler socket size, large or small in diameter.**
- **The standard-flow mode functions in a bidirectional way, whereas the High-Flow mode runs in one way.**
- **When an attachment is connected, Keep in mind that oil flows through the male port in the High-Flow mode.**

Disconnecting

1. Push the quick couplers tightly and hold it for a few seconds, the pressure is relieved automatically (Pressure relief system).
2. Detach the couplers.

1. Operating the auxiliary hydraulic control

CAUTION

[High-Flow model only]
To avoid personal injury:

- **Be careful not to use any High-Flow-incompatible attachment in the High-Flow mode. Otherwise the attachment may be damaged.**
- **Certain high-flow attachments may require the use of a protective door (polycarbonate) such as a hammer or mulcher.**

If you use a High-Flow model, see AUX port switch [High-Flow model only] on page 40.

1. Start the engine.
   (See Starting the engine on page 54 and Start of the machine on page 56)
2. Press the hydraulic-unlock-switch.

https://truckmanualshub.com/

3. Press the AUX port switch [High-Flow model only].

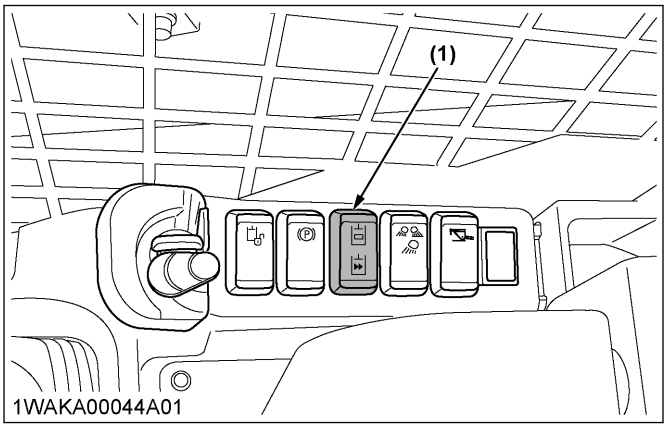

(1) AUX port switch (High-Flow model only)

4. Tilt the AUX-port-variable-switch toward side (A) or press the right AUX-hold-switch.
   Oil starts flowing out of the male port.
5. Tilt the AUX-port-variable-switch toward side (B) or press the left AUX-hold-switch.
   Oil starts flowing out of the female port.

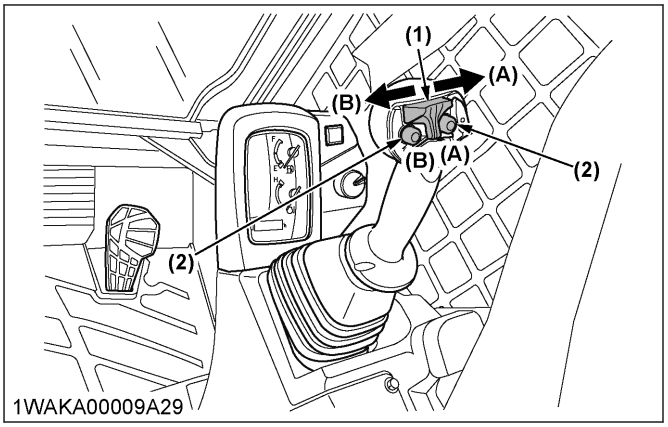

(1) AUX port variable switch
(2) AUX hold switch
(A) Male port
(B) Female port

IMPORTANT :

[High-Flow mode only]

- **In the High-Flow mode, operate the machine with the male-port-switch (A) of the right-control-lever.**
- **When operating the machine with the female-port-switch (B) of the right-control-lever, standard-flow oil passes through the female port.**

NOTE :

- **The oil flow rate responds to the tilt of the AUX-port-variable-switch.**
- **Press the AUX-hold-switch, and the oil continues to flow at its highest flow rate. To interrupt the oil flow, press AUX-hold-switch again.**

6. If the tank must be drained, depending on an attachment in use, use the male-case-drain-port.

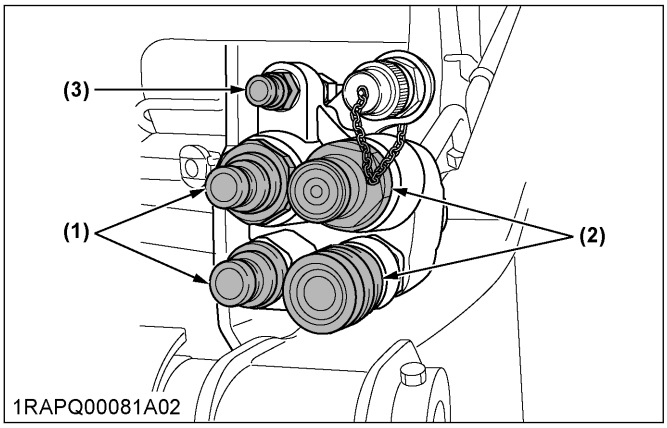

(1) Male port
(2) Female port
(3) Male case drain port

2. Operating the attachment control device (option)

You can use the attachment-control-device to feed electrical power for an attachment. For instance, to drive a valve.
With the AUX port ready for use, you can supply power. Use K (+12 V) and B (GND) of the 14-pin coupler attached on the arm. See the following figures and table.

NOTE :

- **The K (+12 V) of the 14-pin coupler turns on when the starter switch is in [RUN] position.**

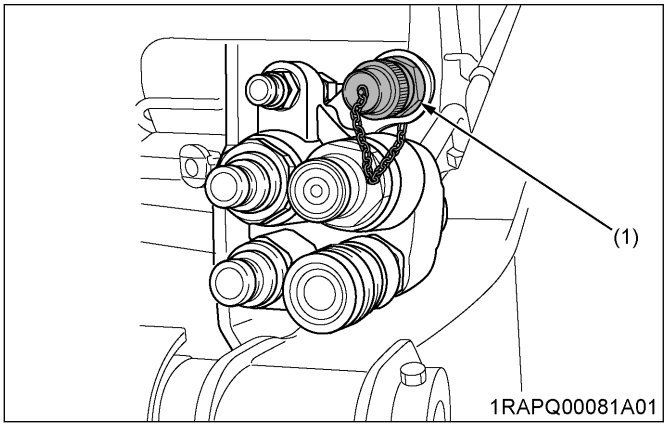

(1) 14-pin coupler

https://truckmanualshub.com/

1. Press the numbered electrical control switch on the left or right lever that corresponds with the desired valve function, to be powered at +12V.

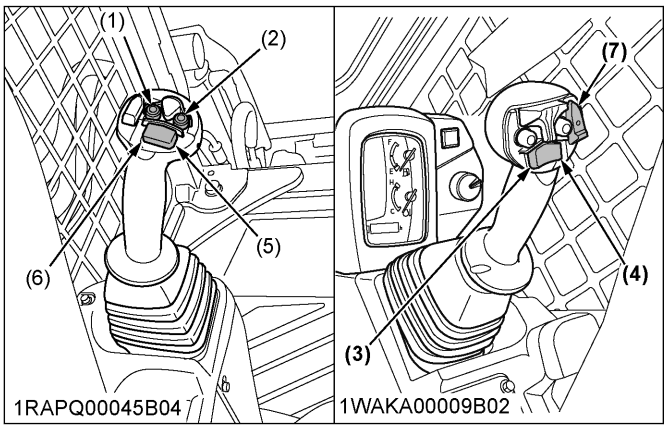

(1) Ref. no. 1
(2) Ref. no. 2
(3) Ref. no. 3
(4) Ref. no. 4
(5) Ref. no. 5
(6) Ref. no. 6
(7) Ref. no. 7

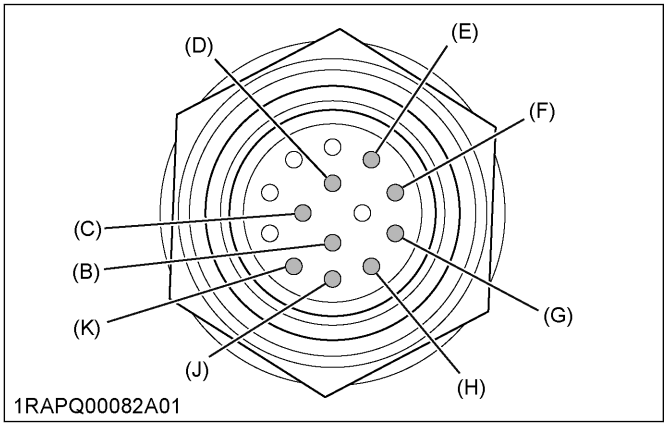

(B) Pin port-B
(C) Pin port-C
(D) Pin port-D
(E) Pin port-E
(F) Pin port-F
(G) Pin port-G
(H) Pin port-H
(J) Pin port-J
(K) Pin port-K

14-pin coupler harness connection chart

Ref. no.	Pin port	Remarks
-	B	GND
1	C	AUX 1st func.
2	D	AUX 1st func.
3	E	AUX 2nd func.
4	F	AUX 2nd func.
5	G	AUX 3rd func.
6	H	AUX 3rd func.
7	J	AUX electrical mode change
-	K	+12 V

NOTE :
- **AUX 3rd func. is momentary action.**
- **AUX electrical mode change is alternate action.**

https://truckmanualshub.com/

QUICK-HITCH

HOW TO USE THE MECHANICAL QUICK-HITCH

This machine utilizes a quick-hitch for easy connection and disconnection of various attachments. By replacing the front attachments, you can use this machine in agriculture, raising stock, landscaping, gardening, and snow removal as well as general civil engineering and construction work.

DANGER

To avoid personal injury or death:

- **Use of attachments that do not comply with ISO24410, the improper positioning of lever(s), or non-protrusion of pin(s) may result in detachment of the attachment or deformation, causing loss of performance, personal injury, or death.**

WARNING

To avoid personal injury, death or machine damage:

- **Never operate or transport attachments which are not attached completely.**
- **Always replace damaged hardware immediately.**

NOTE :

- **Locate the attachments on a level, firm surface when attaching and detaching them from the quick-hitch.**

Attaching attachments

1. To mount an attachment, pull the levers of the quick-hitch lock pins to the unlocked position.
   Pull the quick-hitch levers all the way up to ensure that the lock pins are fully retracted.
2. Position the machine squarely in front of the attachment and tilt the quick-hitch forward with the tilt cylinders.

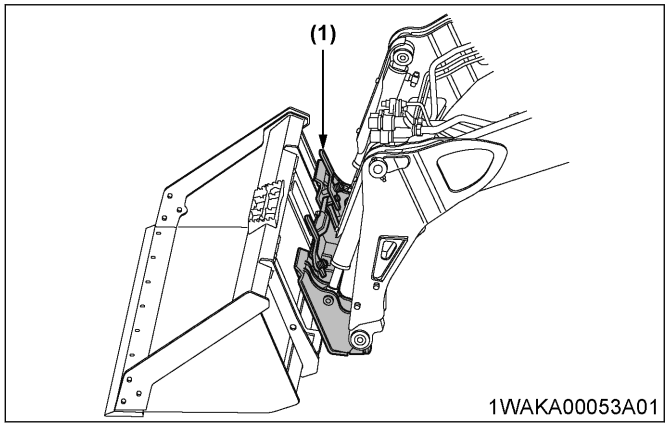

(1) Quick-hitch

3. Ease the quick-hitch mounting plate into the saddle of the attachment.
4. Roll the quick-hitch back using the tilt cylinders and raise the lift arms slightly.
   The back of the attachment should rest against the front of the quick-hitch mounting plate, and you should support the weight of the attachment by the lift arms.

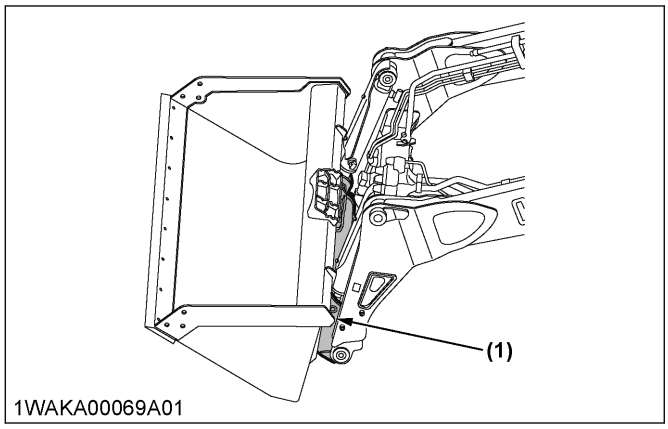

(1) Quick-hitch

5. When the attachment is properly seated in the saddle of the attachment and against the front of the quick-hitch mounting plate, turn off the engine and set the parking brake.
6. Push the quick-hitch levers to the fully locked position.

https://truckmanualshub.com/

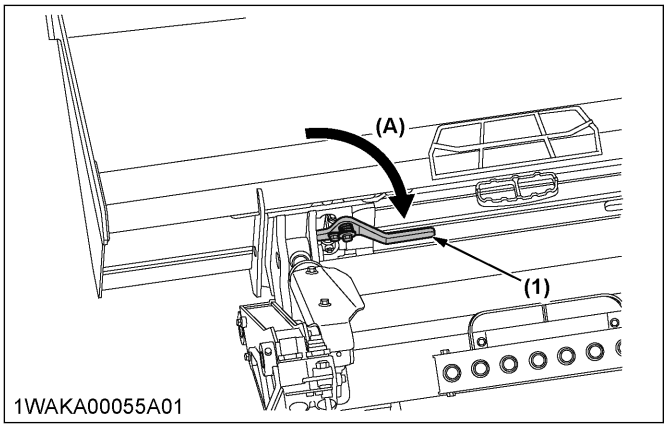

(1) Quick-hitch lever *(A) Lock*

7. Verify that both lock pins are completely engaged in the base of the attachment.
8. With an attachment in place, lift the lift arms and empty out the bucket.
9. Tilt the bucket downwards and verify that the lock pins are fully engaged.

DANGER

To avoid personal injury or death:

- **The following engagement points are critical.**
  - **The lock pins of the quick-hitch have to protrude into and through the pin slots of the attachment on both sides.**
    It is critical that the pins are in good condition and without visible signs of wear or damage and that the operator align the quick-hitch with the attachment to allow the pins to go through the pin slots.
  - **You have to push down both levers until the levers contact the ear plates near the points where the pin bolt goes through the lever, as (A) of the following figure.**
- **Do not operate the machine or attachment unless all of the preceding conditions are met.**

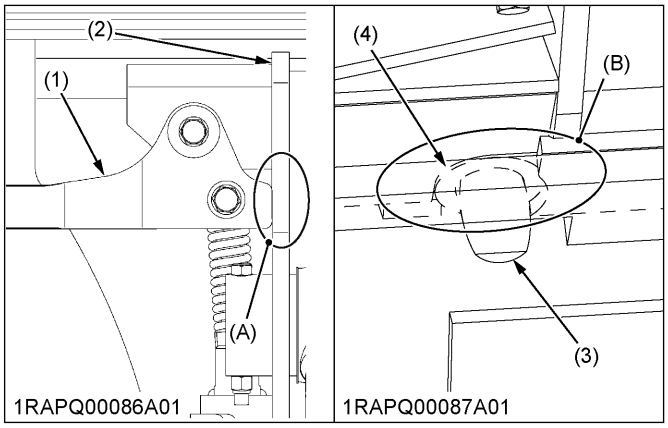

(1) Lever
(2) Ear plate
(3) Lock pin
(4) Pin slot
(A) The lever contacts the ear plate at the points
(B) The pin protrudes through the slot

10. When pushing the quick-hitch levers into the locked position, visually verify that the lock pins protrude through the slot.
11. When attaching different attachments, visually inspect for broken or damaged pins. If broken or damaged pins are found, replace them before using.
    Use of broken pins may result in detachment or deformation, causing loss of performance, personal injury or death.

You are now ready to use the attachment.

WARNING

To avoid personal injury or death:

- **After attaching the attachments of mechanical quick-hitch, make sure that the attachment is securely attached to the quick-hitch, or the attachment may be detached.**
- **When handling the control lever, you should make sure that the attachment is securely attached to the quick-hitch after setting the change lever to the neutral position, setting the parking-brake-switch to the parking position, lowering the lift arm, and locking all control levers in the neutral position.**

Detaching the attachments

1. Lower the attachment to ground level with the attachment slightly in the rolled back position.
2. Stop the engine.
   The parking brake automatically engages.
3. Disconnect the electrical harness and hydraulic lines of the attachment from the lift arms if equipped.
4. Pull the quick-hitch lever up to the unlocked position to release the lock pins.
5. While sitting in the machine operator's seat, start the engine and slowly move the right-control-lever (front-operating-lever) to the dump position until the attachment is pushed away from the quick-hitch.

https://truckmanualshub.com/

6. Lower the lift arms so that the quick-hitch mounting plate clears the saddle of the attachment.
7. Back the machine away from the attachment slowly.
8. If an attachment is not going to be attached to the quick-hitch immediately, push the lever of the quick-hitch to the locked position to prevent damage to the lever assembly.

HOW TO USE THE HYDRAULIC QUICK-HITCH

WARNING

To avoid personal injury, death or machine damage:

- **Never operate or transport attachments which are not attached completely.**
- **Always replace damaged hardware immediately.**

NOTE :

- **Locate the attachments on a level, firm surface when attaching and detaching them from the quick-hitch.**

Attaching attachments

1. Push the hydraulic quick-hitch switch in the unlocked position and hold it to make sure that the quick-hitch levers are up (unlocked position).

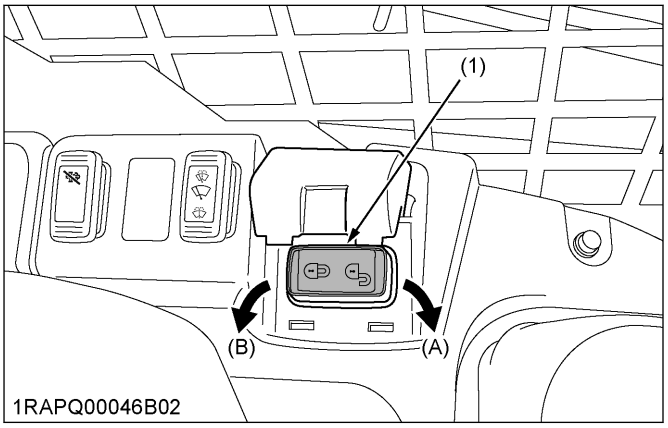

(1) Hydraulic quick-hitch switch (A) Unlock position (B) Lock position

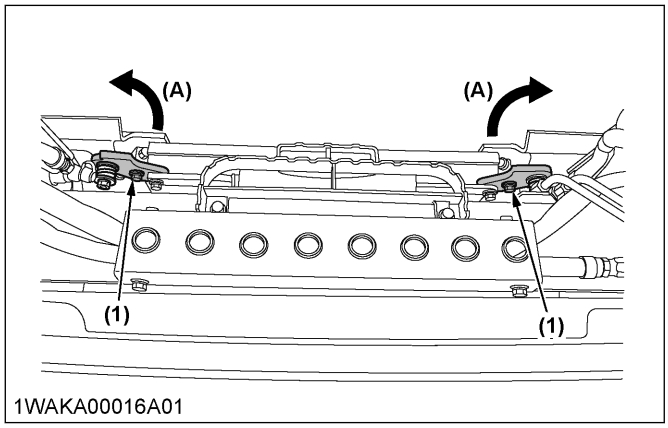

(1) Quick-hitch lever (A) Unlock

2. Position the machine squarely in front of the attachment and tilt the quick-hitch forward with the tilt cylinders.

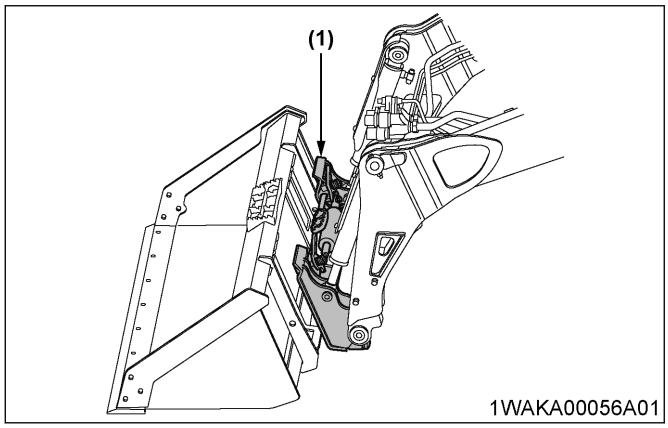

(1) Quick-hitch

3. Ease the quick-hitch mounting plate into the saddle of the attachment.
4. Roll the quick-hitch back using the tilt cylinders and raise the lift arms slightly.
   The back of the attachment should rest against the front of the quick-hitch mounting plate and you should support the weight of the attachment by the lift arms.

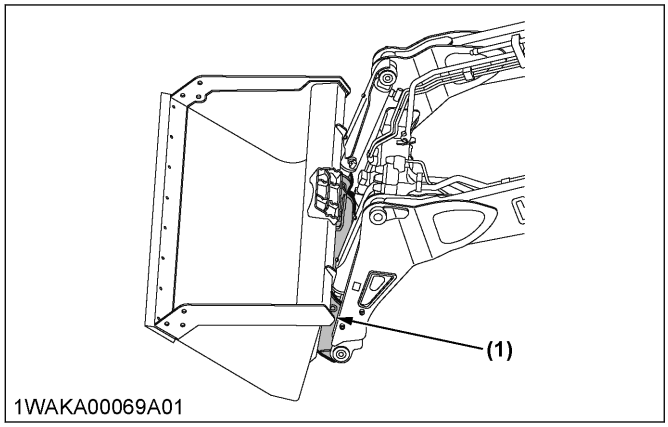

(1) Quick-hitch

5. When the attachment is properly seated in the saddle of the attachment and against the front of

https://truckmanualshub.com/

the quick-hitch mounting plate, push and hold the hydraulic quick-hitch switch in the locked position until the quick-hitch levers are fully in locked position.

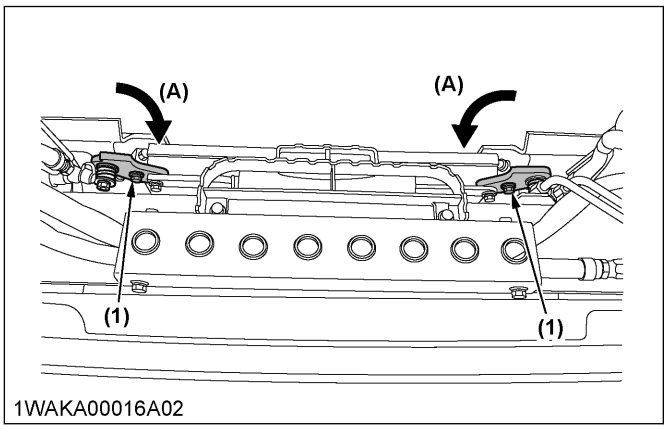

(1) Quick-hitch lever *(A) Lock*

6. Verify that both lock pins are completely engaged in the base of the attachment.
7. With an attachment in place, lift the lift arms and empty out the bucket.
8. Tilt the bucket downwards and verify that the lock pins are fully engaged.

⚠ DANGER

To avoid personal injury or death:

- **The following engagement points are critical.**
  - **The lock pins of the quick-hitch have to protrude into and through the pin slots of the attachment on both sides.**
    It is critical that the pins are in good condition and without visible signs of wear or damage and that the operator align the quick-hitch with the attachment to allow the pins to go through the pin slots.
  - **You have to push down both levers until the levers contact the ear plates near the points where the pin bolt goes through the lever, as (A) of the following figure.**
- **Do not operate the machine or attachment unless all of the preceding conditions are met.**

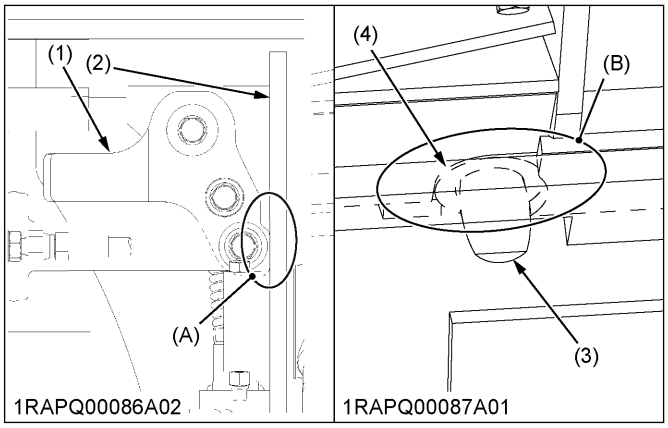

(1) Lever
(2) Ear plate
(3) Lock pin
(4) Pin slot
(A) The lever contacts the ear plate at the points.
(B) The pin protrudes through the slot.

9. When pushing the quick-hitch levers into the locked position, visually verify that the lock pins protrude through the slot.
10. When attaching different attachments, visually inspect for broken or damaged pins. If broken or damaged pins are found, replace them before using.
    Use of broken pins may result in detachment or deformation, causing loss of performance, personal injury or death.

You are now ready to use the attachment.

Detaching attachments

1. Lower the attachment to ground level with the attachment slightly in the rolled back position.
2. Stop the engine.
   The parking brake automatically engages.
3. Disconnect the electrical harness and hydraulic lines of the attachment from the lift arms if equipped.
4. Start the engine and push the hydraulic quick-hitch switch in the unlocked position. Hold the hydraulic quick-hitch switch in the unlocked position to make sure that the quick-hitch levers are up.
5. While sitting in the operator's seat, slowly move the right-control-lever (front-operating-lever) to the dump position until the attachment is pushed away from the quick-hitch.
6. Lower the lift arms so that the quick-hitch mounting plate clears the saddle of the attachment.
7. Back the machine away from the attachment slowly.

https://truckmanualshub.com/

MACHINE PRECAUTION

IMPORTANT INFORMATION ON MACHINE OPERATION

- Do not operate the machine on loose rock or gravel (hard or soft).
- Avoid moving the machine when the lift arms and the bucket are in the raised position. If you must move the machine when the lift arms and the bucket are raised, take care to travel at low speeds in order to maintain control of the machine at all times.
- Always avoid working on an incline as the machine can become unstable and rollover, causing serious injury or death.
- Whenever the machine is in motion, keep the bucket as close to the ground as possible.
  Never change directions when the bucket is in the raised position.
- Always move the machine at speeds that are appropriate to the conditions.
  Take particular care if you are ever moving through areas where view may be obstructed or when transporting hazardous material.
- Never operate the machine in the vicinity of explosive gases. Always keep exhaust from machine away from any combustible material.
- Never turn or spin the machine at high speed.
- Never approach an incline horizontally, which can cause the track to slide off and cause excessive wearing of tracks.
- Never exceed the operating capacity of the machine.
- Never use the machine to move material or perform work that exceeds the capacity of the bucket or attachments.
- Never use the bucket as a hammer to drive poles or studs into the ground.
- Never dig too deeply with the bucket, which can damage the bucket or the lift arms.
- Avoid hitting the bucket against rocks or similar solid material, which will damage the bucket or the bucket cylinder.
- Never fully extend cylinders to perform an operation. Working while cylinders are fully extended can cause damage from excessive force.
- Never scoop or grade areas while the tilt cylinders are fully extended.
  Extremely heavy loads apply excessive traction force to the bucket cylinders and can cause damage. Avoid loads that are too heavy.

1. Caution while traveling

- Running over large debris as rocks, stumps, blocks, and so on may cause such debris to fly up and damage the machine. Avoid debris whenever possible.
- If obstacles cannot be avoided, travel slowly over them with the bucket in the lowered position. Approach the obstacles so that it is at the center of the tracks.

2. Precaution when traveling in high speed

- Whenever traveling over uneven ground surfaces, travel at low speed. Avoid any sudden movements with the machine such as accelerating, stopping, or turning quickly.

3. Precautions for use of machine near water

- Whenever working near water, pay particular attention not to submerge any part of the machine especially the rear where the radiator fan could be exposed to water. Exposing the radiator fan to water could damage the parts of machine. Always take care to keep working machine parts out of water, especially when coming out of a shoreline, for example, at a sharp angle.

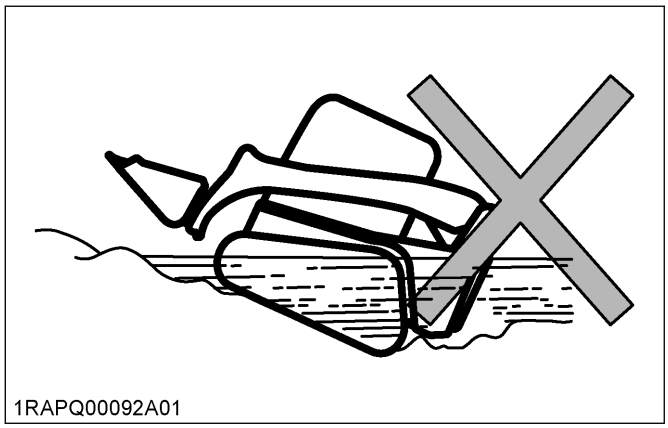
1RAPQ00092A01

- **Permissible water depth**
  Never allow the machine to become submerged in water above the bottom of the body.

https://truckmanualshub.com/

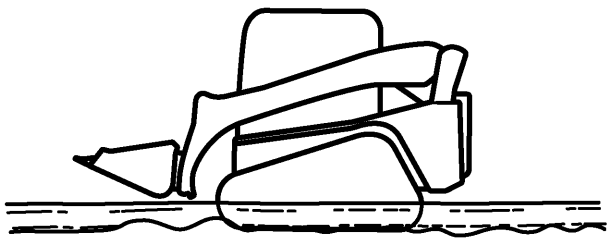
1RAPQ00093A01

- If parts that require lubrication are exposed to water for long periods of time, make sure that they are re-lubricated with grease to remove old grease.
- After working in the mud and in the water, make sure that there is no invasion of the soil inside the frame. If soil is deposited, clean the internal frame. (See Cleaning inside of the main frame on page 97)
- Never allow the main body of the machine to become submerged in water or sand. Contact your KUBOTA Dealer or Service Outlet if the main body of the machine is exposed to water.

4. Precautions when traveling on inclines

WARNING

To avoid personal injury or death:

- **Know and understand the machine capabilities and operating conditions, and never exceed any of these conditions. Keep in mind that poor or difficult working conditions may reduce the capability of the machine, requiring a reduction in speed to maintain stability.**

- Always lower the bucket to the following height from the ground whenever traveling on an incline. Lower the bucket completely to the ground and stop the machine in case of emergency.

Bucket height	20 cm to 30 cm

- Always travel at low speed when moving on an incline. When moving down a incline, reduce the engine speed (rpm) and set the engine stroke to half or less using the left control lever.
  Traveling too fast down an incline can lead to loss of control and accident or injury.
- Always make sure that the heavy end of the machine is facing up the incline when traveling either direction on a hill inclined at the following angle or more.

Gradient of a hill	15 degrees

- Whenever traveling on an incline, be careful of the possibility of sliding sideways or rolling over.
- Never travel down an incline in reverse.
- Never approach an incline horizontally or diagonally. Always return to a flat surface and redirect the machine.
- Beware of unstable and slippery surfaces such as grass, leaves, wet metal, or ice. The machine can slide very easily even on low grade inclines.

Orientation of machine when traveling on an incline

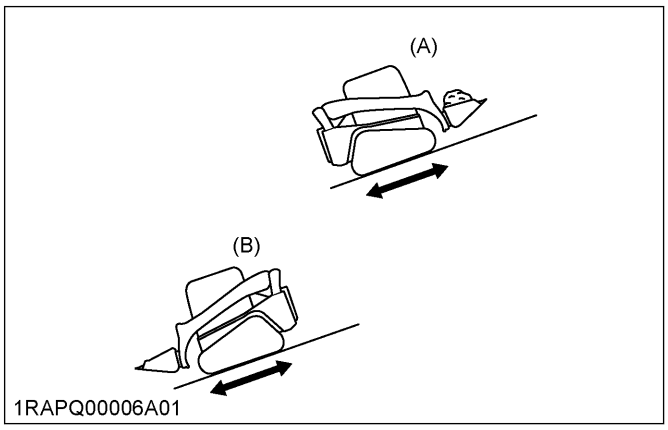

1RAPQ00006A01

(A) With bucket full *(B) With bucket empty*

- Braking is automatic with the HST system when the left-control-lever is in the neutral position. Raise the armrests for parking brake.

What to do when engine stops suddenly

- If the engine stops suddenly when moving down an incline, follow the following procedure.

1. Put the control levers into the neutral position.
2. Stop the machine.
3. Then restart the machine in the normal manner.

5. Parking on an incline

- It is best to park the machine on firm, level ground using the parking brake. But if you must park the machine on an incline, make sure that you block the tracks to prevent any movement.
- Make sure that the machine is highly visible when parking near streets by using barriers, appropriate caution signs, lights, and so on to avoid any accident or collision with other vehicles.
- Always raise the armrests to the raised position and stop the engine before leaving the operator's seat.
- Never leave the machine running unattended or with the lift arms raised. Whenever the lift arms are raised, always restrain them using the lift-arm-stopper.

Whenever leaving the machine, perform the following procedure.

1. Put the control levers into the neutral position.

https://truckmanualshub.com/

2. Reduce the engine speed using the engine-speed-control-dial.
3. Lower the bucket to the ground.
4. Move the armrest in the raised position.
5. Turn off the engine and remove the key.

6. Prohibited actions for the machine

CAUTION

To avoid personal injury:

- **Whenever operating the machine, adhere to the following:**
  - **Always avoid sudden changes in direction or spinning on concrete surfaces. Excessive friction on the tracks will cause them to wear out or become damaged.**
  - **Always avoid sudden impact to the tracks such as allowing the machine to drop down or hit objects.**
  - **Chemical such as salt, potassium chloride, ammonium sulfate, potassium sulfate, triple-super phosphate of lime, and so on can damage the track belts. If the tracks are exposed to any of chemical such as salt, potassium chloride, ammonium sulfate, potassium sulfate, triple-super phosphate of lime, and so on, immediately wash thoroughly with water.**
  - **Avoid scraping the rubber tracks along concrete and other rough surfaces.**
  - **Take particular care when operating, transporting material, or traveling in snowy conditions or on ice because tracks may slip.**
  - **Operate the machine between the following temperature for proper functioning of rubber track belts.**
  - **If machine must be stored for three months or longer, keep it indoors and out of direct sunlight and prevent exposure to the elements to prevent wear on the rubber tracks.**

Temperature for proper functioning of rubber track belts	-20 ℃ and +50 ℃

Actions that must not be performed with the machine

- Never move, transport material, or operate the machine in the following places: mud, broken stone, jagged or unstable base rock, iron beams, iron scrapes, iron sheets, and so on.
  Navigating, turning, and moving the machine over sharp material may damage or break the tracks.
- When traveling on riverbeds and other areas where loose gravel can get into the tracks, gravel can cause the tracks to slip off or become damaged.
- Do not use near the oceanfront where salt water can corrode the various parts of the machine.
- Always prevent fuel, oil, salt, or other chemical agents from getting into the tracks, which can cause corrosion to the metal track cores. If the track and its parts are exposed to such material, immediately remove by using water.
- Always avoid traveling on roads directly after they have been resurfaced or on other hot surfaces such fire or metal surfaces under direct sunlight. Excessive heat can cause irregular wear and damage to tracks.
- Do not move material where the surface is unstable and could cause slippage in the tracks. Unnecessary and excessive slipping of tracks will damage and cause abnormal wearing of the tracks.

7. Prevention of slippage of rubber tracks

Always follow the following to prevent slippage of rubber tracks.

- Make sure that the tracks are kept at the proper tension.
  Never change directions when there is excessive slack in the track belts.
- When ascending an incline, never change direction at the base of the incline.
- Always avoid operating the machine with one track on a different surface than the other track, or with one track partially on an incline. Make sure that both tracks are on stable, firm surfaces when in motion.

LIFTING

LIFTING THE MACHINE

DANGER

To avoid personal injury or death:

- **The instructions for safe lifting are described in the *Lifting the machine* section. Read instructions in the *Lifting the machine* section carefully before lifting the machine. Make sure that the operating personnel read the operator's manual carefully before lifting.**

WARNING

To avoid personal injury or death:

- **Do not use damaged chains and lifting hardware.**

IMPORTANT :

- **Follow the procedure so the unit cannot roll.**
  1. **Select a firm, level surface.**
  2. **Lower the working equipment to the ground.**
  3. **Stop the engine.**
  4. **Set the arm rest to the locked position.**
  5. **Apply the parking brake switch.**
- **Do not lift loads that exceed the maximum rated capacity of the hoist and attaching hardware.**
- **Refer to the specifications for attaching hardware and choose hardware suitable for the weight, size, and configuration of the load.**
- **Assess the center of gravity of the load, position the hook directly over the load, and lift the load so that it remains horizontal.**
- **Do not enter and do not allow others to enter the working area under the suspended load, and do not move the load over people. Only move the load in an area where the equilibrium can be maintained.**
- **Always inspect the attaching hardware, including chains, hooks, and master links before each use. Do not use any worn or damaged attaching hardware or if the safety latch is missing.**
- **Do not use attaching hardware, including chains, hooks, and master links, in extreme temperature or other environmental conditions that exceed the manufacturer's specifications.**
- **Disengagement of the load can cause severe injury or death. The use of a hook with a safety latch or other master link device does not preclude inadvertent detachment of a slack sling load from the hook or master link. Visually verify proper engagement of hook or shackle in all instances.**
- **Comply with all federal, state, and local regulations and safety standards before lifting the machine.**
- **Do not use the holes on the roof structure to lift the machine.**
- **Make sure that the lifting chains, hooks, and master links are strong enough to withstand the load being lifted.**
- **Be sure that the hooks have safety latch.**
- **Before lifting the machine, be sure that attachments are properly attached.**

Preparations

- Lifting chains (with hook at each end)

Approximate overall length	3.58 m
	2 pc.
Approximate overall length	8.84 m
	1 pc.

- Pads (to protect the machine and lifting chain)
- Master links, 2pc.

Model name	SVL 65-2	
Model type	Open Cab	Closed Cab
CTL weight*1	3660 kg*2	3885 kg*3
Recommended chain working load limit > 2565 kg*4	3/8 in. lifting grade 80 alloy	
Recommended master link working load limit > 5125 kg*4	Size not specified	
Recommended attachment hardware working load limit > 2565 kg*4	Size not specified	

*1 SVL weight with standard (non-hydraulic) bucket

*2 CTL weight shown with standard track (320 mm).

*3 CTL weight shown with wide track (380 mm).

*4 Recommended chain, master link, and attachment hardware shall meet OSHA regulations and applicable ANSI (American-national-standards-institute), NACM (national-association-of-chain-manufacturers), and federal standards

Procedure for connecting chains

1. **Locate the chain and position the hook.**
   - **Front of the machine**
     Pass the chain between the front idler and the front track roller, under the machine on each side, as shown in Fig. 1 and Fig. 2.

https://truckmanualshub.com/

Fig. 1 (Chain location at front of the machine)

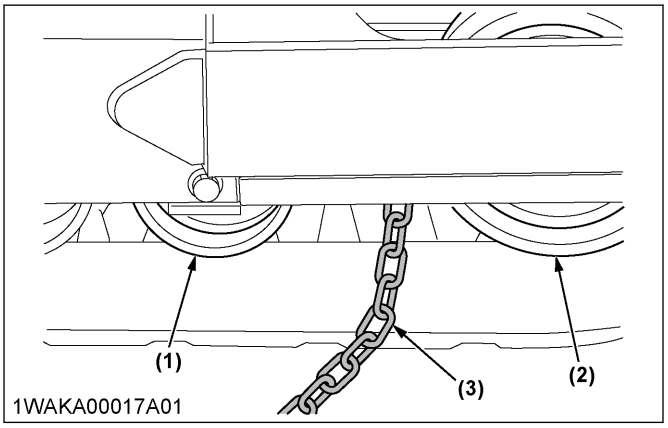

(1) Front track roller
(2) Front idler
(3) Front lifting chain

Fig. 2 (Front view)

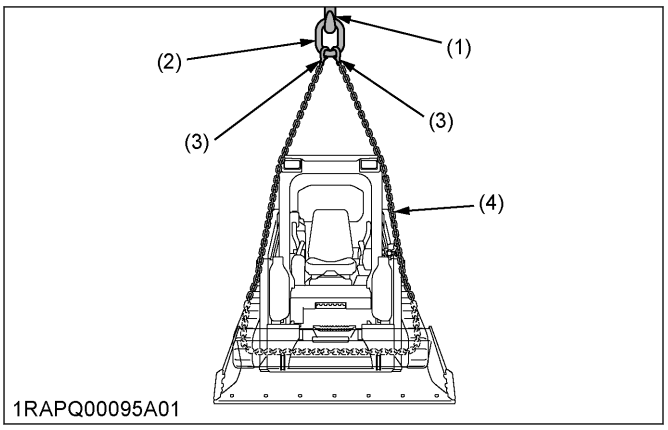

(1) Hoist hook
(2) Front master link
(3) Hook
(4) Front lifting chain

- **Hook positions at rear of the machine**
  Lifting fixture mount at rear corners of the machine.

Fig. 3 (Hook positions at rear of the machine)

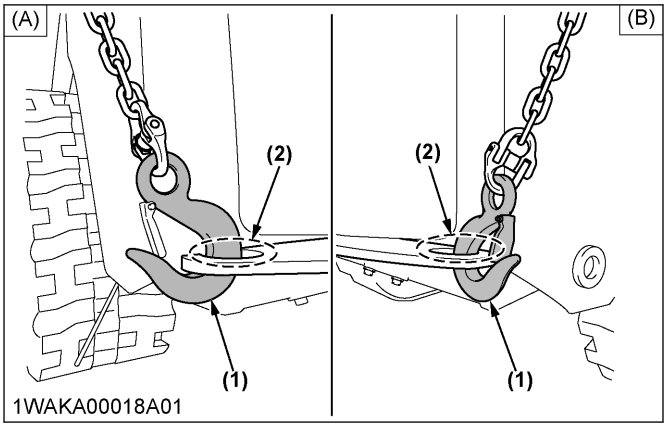

(1) Hook
(2) Lifting fixture mount (Rear tie down point)
(A) LH
(B) RH

2. **Connect the hook.**
   - At the front of the machine, use the following chain length.

Chain length	8.84 m

     a. Pass the lifting chain and the hook between the front-track-roller and the front idler under machine.
     b. Pass the lifting chain and the hook again between front track roller and front idler at other side.
   - Connect both hooks to the front-master-link, and connect the master link to the hoist hook as shown in Fig. 4.
   - At the rear of the machine, use the following chain length.

Chain length	3.58 m

     a. Attach one end at the rear-lifting-fixture-mount and attach the other hook to master link.
     b. Then connect the master link to the hoist hook as shown in Fig. 3 and Fig. 4.

Fig. 4 (Hoist hook and master links)

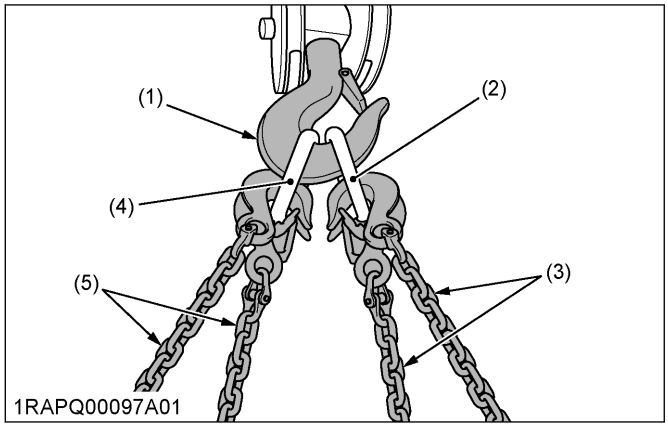

(1) Hoist hook
(2) Front master link
(3) Front lifting chain
(4) Rear master link
(5) Rear lifting chain

IMPORTANT :
- **Be sure to pass the rear-lifting-chains to the sides of the machine body as shown in Fig. 3 and Fig. 5.**

3. **Apply the pads.**
   Apply the pads at locations shown in Fig. 5 and Fig. 6, where the chains come in contact with the machine to reduce damage of the machine and the chains.
   - **Locations to apply the pads**
     – Cab top
     – Lift arm
     – Track
     – Track frames

https://truckmanualshub.com/

– Rear lifting chains contact locations (frame and lift arm)

Fig. 5 (Lifting chain with pads)

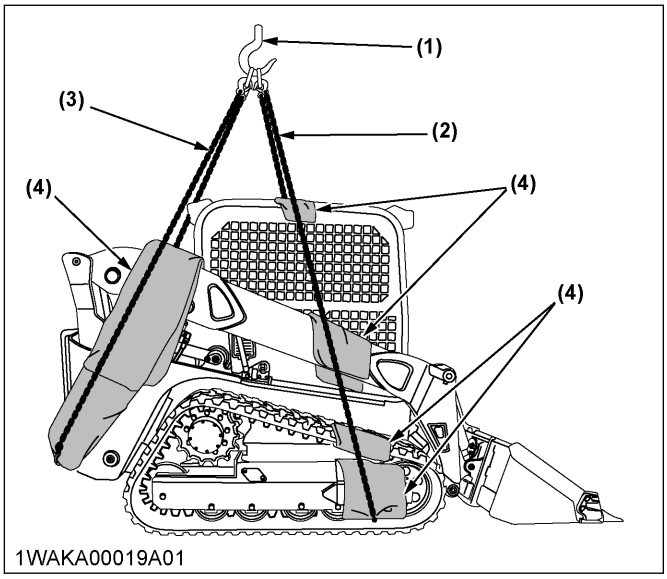

Fig. 6 (Front lifting chain location)

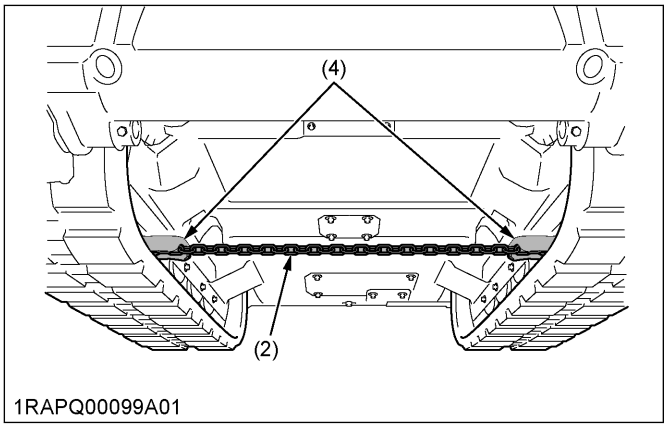

(1) Hoist hook
(2) Front lifting chain
(3) Rear lifting chain
(4) Pads

Front lifting chain (2)	8.84 m
Rear lifting chain (3)	3.58 m

4. Before lifting the machine, locate the hoist hook at the point which is shown in Fig. 5 and Fig. 6.

IMPORTANT :
- **Never put yourself around the machine when it is lifted.**
- **Never lift the machine with person in operator station or on the attachment.**

Procedure for lifting the machine
1. Lift the machine slowly and vertically.
2. Move the machine slowly into place.

https://truckmanualshub.com/

TRANSPORTING

DANGER

To avoid personal injury or death:

- **Make sure that the load capacity of the ramps is greater than the machine and attachment weight.**
- **Make sure that the ramps are clean, not damaged, and properly secured to the transport bed.**
- **Position the machine so that the heaviest end of the machine is going up the ramps first.**
- **Do not change directions when the machine is on the ramp. If a change of direction be necessary, drive off the ramp completely and turn the machine.**
- **When the machine reaches the point between the ramps and the bed, move the machine very slowly until it reaches the horizontal position on the bed.**

LOADING THE MACHINE ON A TRANSPORT VEHICLE

WARNING

To avoid personal injury or death:

- **When preparing to load or unload the machine, follow the steps in the *"Loading the machine on a transport vehicle"* section.**
- **Use a truck or trailer with sufficient size and weight capacity to transport the machine with attachment. Use of truck or trailer with an underrated capacity can cause unpredictable handling and loss of control. Always comply with government transportation laws and regulations.**

1. Apply the parking brakes on the truck, and block the drive wheels both sides as shown in the following figure.

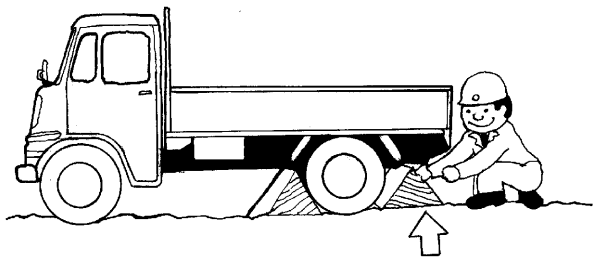

1RAPQ00100A01

2. Use the mounting brackets to secure the ramps properly to the truck or the trailer.
3. Determine and use the correct length of the ramps to avoid a steep angle of approach as shown in the following figure.

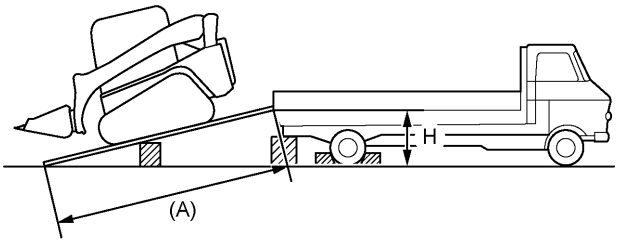

1RAPQ00101A01

(A) 4×H or more

4. If necessary, support the rear end of the bed to prevent front of the truck or trailer from rising.
5. Align the machine with the ramps before traveling on ramps. If the ramps are wet, use caution during loading the machine.
6. Load the machine with empty bucket or no attachment installed, and with the rear of machine going up the ramp first.
7. If the bucket or attachment is installed, avoid the bucket or attachment contact with ramps during travel.
8. Once the machine is loaded, lower the bucket or attachment completely.
9. Stop the engine, remove the key, and set the parking brake.

https://truckmanualshub.com/

10. Block the tracks and tie down the machine using two tie-downs at the front and two tie-downs at the rear.

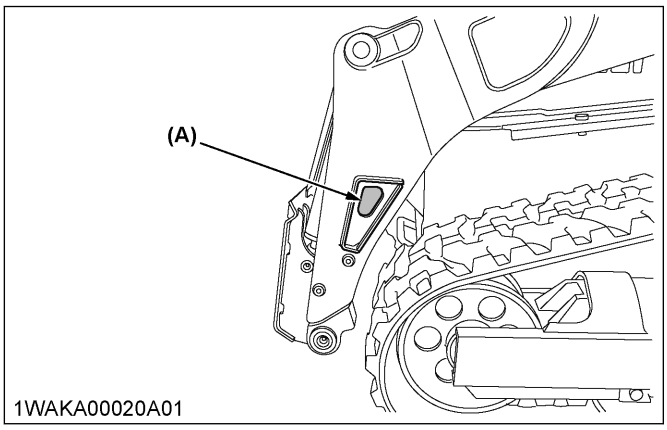

(A) Front tie-down locations (both sides)

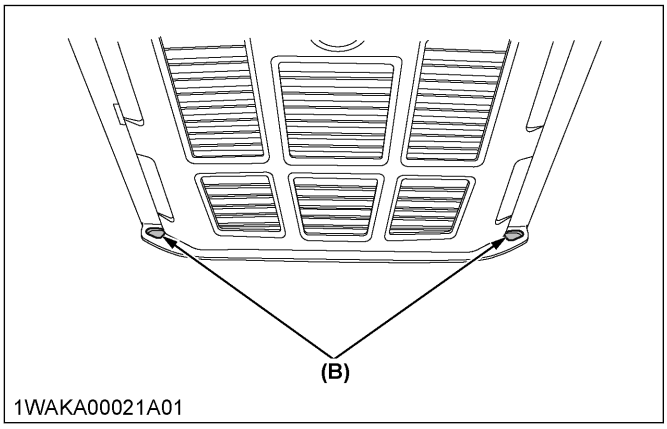

(B) Rear tie-down locations

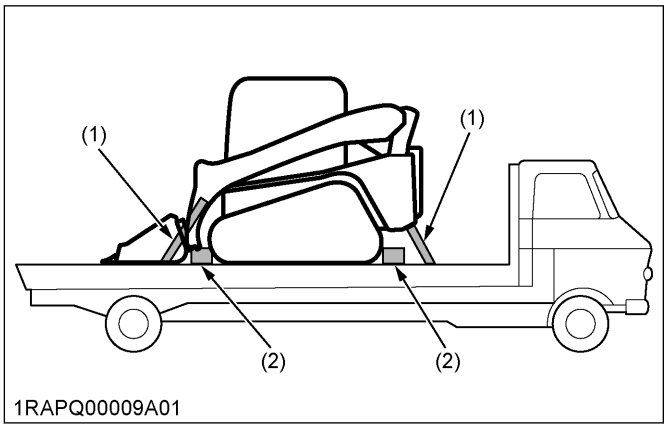

(1) Chain or strap *(2) Blocks*

11. Depending on the attachment installed, the loader arms may not come in contact with rest stop. Therefore it may be necessary to use the alternate front center tie-down for securement of the machine. Use two separate straps or chains as shown in the following figure and secure the attachment with a separate strap or chain. Consult your government transportation laws and regulations.

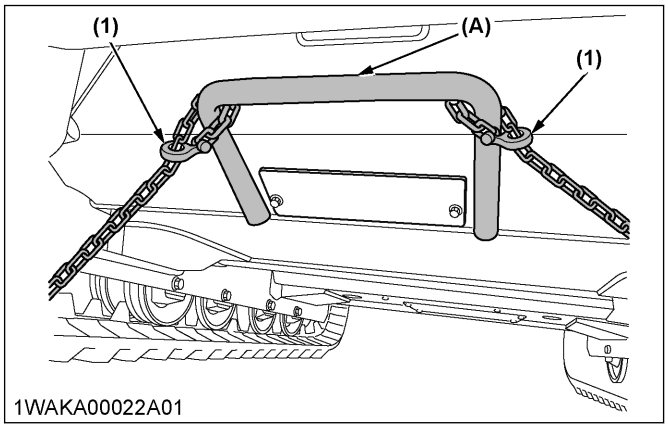

(1) Chain or strap *(A) Alternate front tie-down*

12. When installing the chains or the strap from tie-down location of the machine to tie-down points of the truck or trailer, maintain proper angles to provide lateral and downward securement.
13. When using alternate or standard tie-down points, be sure to also tie-down the attachment in addition to the machine.

TOWING AN OPERABLE MACHINE

⚠ WARNING

To avoid personal injury or death:

- **Tow only from both rear tie-downs as shown in the figure.**
- **Towing is only allowed for a short distance at walking speed.**
- **Use a tow chain or rope and hardware that is rated at least 1.5 times the machine weight. See the *Technical data* section in this operator's manual to find machine weight.**

(See SPECIFICATION TABLE on page 27)

⚠ CAUTION

To avoid personal injury:

- **Do not tow the machine using the front tie-down points of the attachment located on each side of the lift arms or tie-down point at center of machine.**

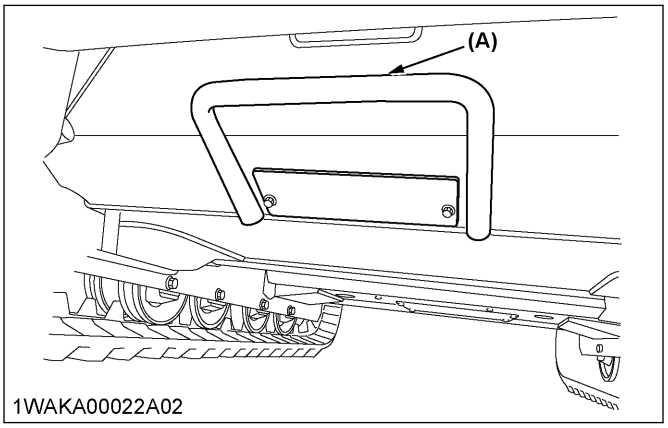

(A) Tie-down point (Do not tow here.)

1. Attach towing hardware using both rear tow points and to the towing machine as shown in the following figure.

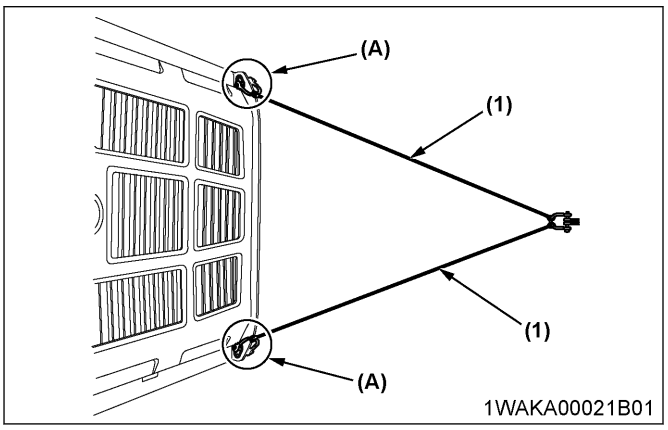

(1) Chain or strap

(A) Rear tow and tie-down points

2. Sit on the operator's seated in the towed machine with the seat belt connected during the recovery process, and assist when towed using the machine movement in the direction of towing. Keep the parking brake released while towing.
3. Tow slowly at a walking pace with recovery machine and towed machine, avoid abrupt loads while towing.

TOWING AN INOPERABLE MACHINE

WARNING

To avoid personal injury or death:

- **Towing an inoperable machine will damage the hydraulic drive or track system. Contact your local KUBOTA dealer for towing an inoperable machine.**

MAINTENANCE

WARNING

To avoid personal injury or death:

- **Before performing maintenance on the machine, place the machine on a firm, flat, and level surface, lower the lift arms slowly to the ground, and stop the engine.**

Whether the machine is properly lubricated and maintained directly determines the trouble frequency and service life of the machine. Periodically check and maintain your machine, and you will find in the long run that the jobs can be finished earlier and more economically.

MAINTENANCE INTERVALS

Shown in the Service Interval Chart below are the hours indicated on the hour meter, practically, it will be convenient to schedule the time of inspection and maintenance according to the calendar (day, week, snd month) on the basis of the chart. If the machine is used in harder-than-usual working conditions, check and maintain the machine at shorter intervals.

No.	Check points		Measures	Hour meter indicator							Interval	Ref. page	
				50	250	500	1000	1500	2000	3000			
1	Coolant		check	Daily check							(every 10 hrs)	87	
			change								every 2 years	105	
2	Fuel		check	Daily check							(every 10 hrs)	87	
3	Engine oil		check	Daily check							(every 10 hrs)	87	
			change		○	○	○	○	○	○	every 250 hrs	99	
4	Hydraulic oil		check	Daily check							(every 10 hrs)	88	
			change				○		○	○	every 1000 hrs	102	*1
5	Greasing		grease	Daily check							(every 10 hrs)	88	
6	Radiator and oil cooler		check	Daily check							(every 10 hrs)	89	
7	Engine and electrical wiring		check	Daily check							(every 10 hrs)	89	
8	V-belt tension		check	Daily check							(every 10 hrs)	89	
			adjust		○	○	○	○	○	○	every 250 hrs	96	
9	Water separator		drain	Daily check							(every 10 hrs)	90	
10	Evacuator valve		check	Daily check							(every 10 hrs)	90	
			clean	○	○	○	○	○	○	○	every 50 hrs	95	
11	DPF muffler		check	Daily check							(every 10 hrs)	90	
12	Washer liquid		check	Daily check							(every 10 hrs)	91	
13	Battery condition		check	Daily check							(every 10 hrs)	91	
14	Fuel tank cap		clean	Daily check							(every 10 hrs)	92	
15	Fuel tank		drain	○	○	○	○	○	○	○	every 50 hrs	86	
16	Track tension		check	○	○	○	○	○	○	○	every 50 hrs	93	
17	Air cleaner element	Outer element	clean	○	○	○	○	○	○	○	every 50 hrs	94	*2
			replace		○	○	○	○	○	○	every 250 hrs	98	*2
		Inner element	replace		○	○	○	○	○	○	every 250 hrs	98	*2
18	Radiator hoses and clamps		check		○	○	○	○	○	○	every 250 hrs	95	
			replace								every 2 years	107	

(Continued)

https://truckmanualshub.com/

No.	Check points	Measures	Hour meter indicator							Interval	Ref. page	
			50	250	500	1000	1500	2000	3000			
19	Fuel line and intake air line	check		○	○	○	○	○	○	every 250 hrs	96	
		replace								every 2 years	107	
20	Inside of main frame	clean		○	○	○	○	○	○	every 250 hrs	97	
21	Engine oil filter cartridge	replace		○	○	○	○	○	○	every 250 hrs	100	
22	Water separator filter element	replace			○	○	○	○	○	every 500 hrs	100	
23	Fuel filter cartridge	replace			○	○	○	○	○	every 500 hrs	101	
24	Drive unit oil	change		◎	○	○	○	○	○	every 500 hrs	101	
25	Hydraulic return filter	replace		◎	○	○	○	○	○	every 500 hrs	102	
26	Breather filter	replace			○	○	○	○	○	every 500 hrs	102	
27	Hydraulic oil filter	replace	◎		○	○	○	○	○	every 500 hrs	102	
28	Hydraulic suction filter	replace				○		○	○	every 1000 hrs	102	
29	Engine valve clearance	adjust				○		○	○	every 1000 hrs	104	*3
30	Injector tip	check					○		○	every 1500 hrs	104	*3
31	Oil separator element	replace					○		○	every 1500 hrs	104	
32	EGR cooler	check					○		○	every 1500 hrs	104	*3
33	Alternator and starter motor	check						○		every 2000 hrs	104	
34	EGR system	check							○	every 3000 hrs	104	*3
35	Turbo charger	check							○	every 3000 hrs	104	*3
36	DPF	clean							○	every 3000 hrs	104	*3
37	Exhaust manifold (crack, gas, leakage and mounting screw)	check								every 1 year	105	*3
38	Intake air line for air leaks	check								every 1 year	105	*3
39	Boost sensor and AFS (Air flow sensor)	check								every 1 year	105	*3
40	Condition of DPF muffler	check								every 1 year	105	*3
41	DPF differential pressure sensor and piping for gas leak	check								every 1 year	105	*3
42	DPF exhaust gas temperature sensor	check								every 1 year	105	*3
43	EGR and piping for gas leak	check								every 1 year	105	*3
44	Antifrost heater for oil separator (CCV heater)	check								every 1 year	105	*3
45	Radiator system	rinse								every 2 years	105	
46	Closed breather related rubber piping	replace								every 2 years	107	*3
47	DPF differential pressure sensor rubber piping (Front and back)	replace								every 2 years	107	*3
48	Suction pipe downstream the AFS (Air flow sensor)	replace								every 2 years	107	*3
49	Boost sensor pressure rubber piping	replace								every 2 years	108	*3
50	EGR cooler hose	replace								every 2 years	108	*3

IMPORTANT :
- **Perform the job indicated by ◎ at the first operation.**
- **When using biodiesel, be sure to check the maintenance requirements of biodiesel fuel as the intervals will change in some of the items.**

*1 When using a hydraulic hammer, change hydraulic oil and return filter according to the table on Changing the hydraulic oil including replacing the suction filter and the return filter in the hydraulic tank on page 102.

*2 Clean and replace the air cleaner element more frequently if used under dusty conditions. When the filter is very dirty from dusty conditions, replace the filter.

*3 Consult your local KUBOTA dealer for this service.

https://truckmanualshub.com/

Air-conditioner

No.	Check points	Measures	Hour meter indicator							Interval	Ref. page	
			50	250	500	1000	1500	2000	3000			
1	Air filter	clean		○	○	○	○	○	○	every 250 hrs	98	*1
		replace				○		○	○	every 1000 hrs	—	*1
2	Air-conditioner condenser	check		○	○	○	○	○	○	every 250 hrs	99	
3	Air-conditioner pipes and hose	check								every 1 year	105	
		replace								every 2 years	107	
4	Refrigerant (gas)	check								service as required	108	

*1 Clean and replace the air cleaner element more frequently if used under dusty conditions. When the filter is very dirty from dusty conditions, replace the filter.

OPENING AND CLOSING OF COMPONENTS

1. Opening and closing the rear door

WARNING

To avoid personal injury or death:

- **When opening the rear door, open it firmly to the locked position.**
- **When opening and closing the rear door, be careful not to get your hands or other parts of your body caught.**

Opening

1. Pull the lever and open the rear door.
2. Insert the pin into the locked position to fix the rear door.

Closing

1. Be sure to close the engine hood before closing the rear door.
2. Support the rear door by hand, remove the pin from the locked position, and insert it into original position.
3. Close the rear door firmly until the lever is fully returned.

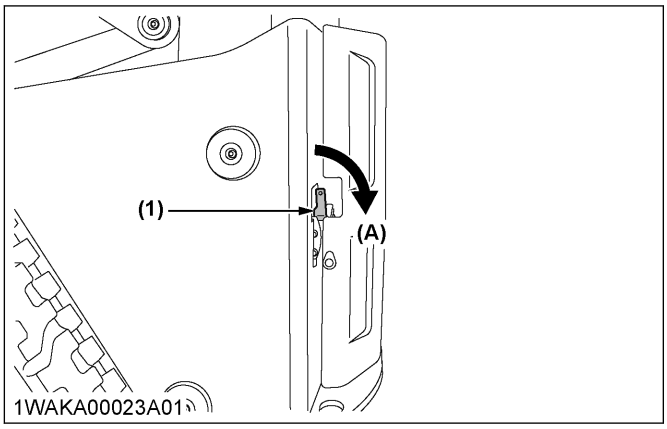

(1) Lever *(A) Pull*

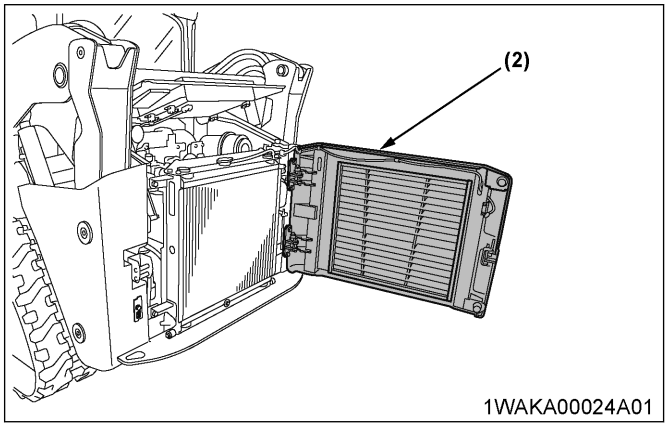

(2) Rear door

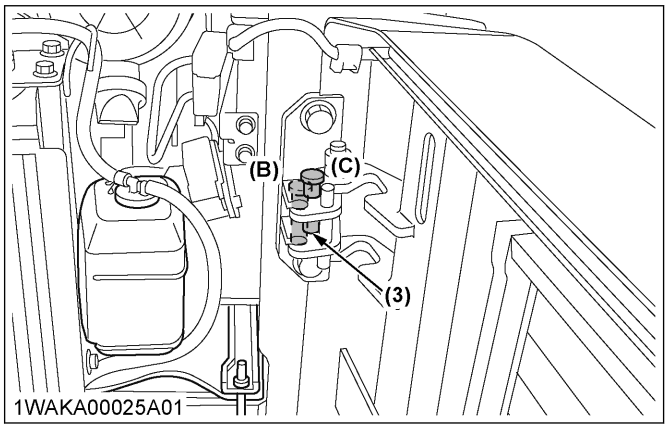

(3) Pin *(B) Original position* *(C) Locked position*

2. Opening the engine hood

WARNING

To avoid personal injury or death from contact with moving parts:

- **Never open the engine cover while the engine is running.**
- **Do not touch the muffler or the exhaust pipes while they are hot. Severe burns could result.**

https://truckmanualshub.com/

- **When opening and closing the engine hood, be careful not to get your hands pinched or other parts of your body caught.**

1. Hold up the engine hood and fix it with the stay rod.

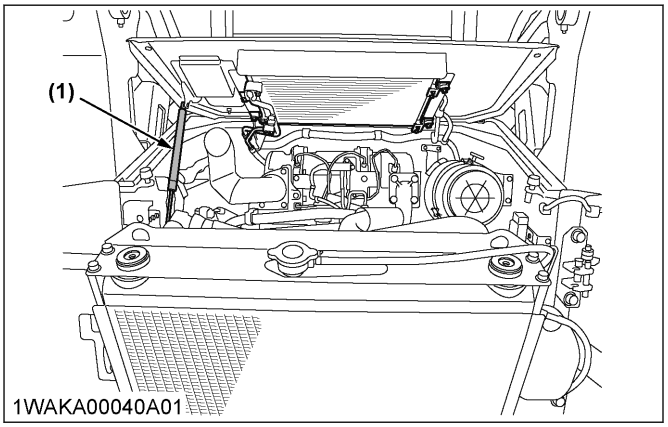

(1) Stay rod

3. Detaching the radiator and the oil cooler

WARNING

To avoid personal injury or death:

- **Always stop the engine and remove the key before checking the radiator and the oil cooler.**
- **Wear the eye protection when cleaning with compressed air.**

1. Remove the four bolts and detach the radiator and the oil-cooler-tilt-stopper.

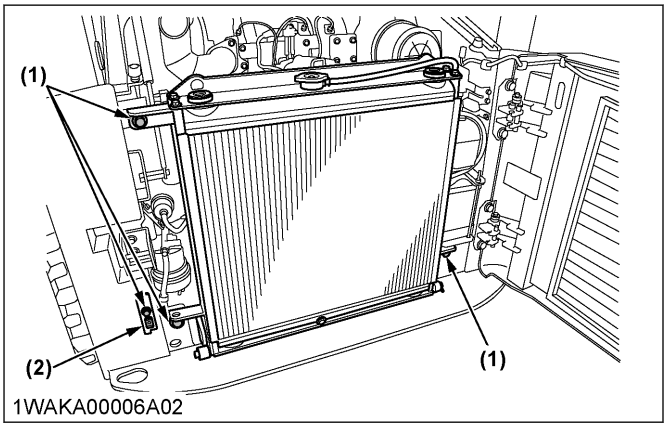

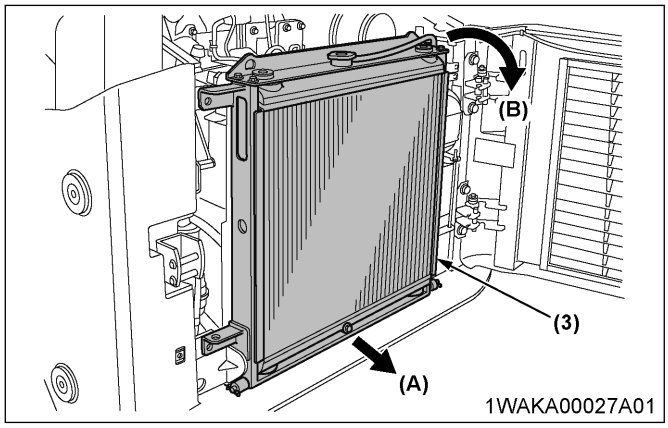

(1) Bolts
(2) Radiator and oil cooler tilt stopper
(3) Radiator and oil cooler
(A) Pull backward
(B) Tilt down

a. At first pull the radiator and the oil cooler backward (A).
b. Tilt it down (B).

IMPORTANT :

- **Before tilting the radiator and the oil cooler, unhook the radiator hose from the stay. Before positioning the radiator and oil cooler back in place, secure the radiator hose to the stay so that the hose does not get caught between the shroud and the engine.**

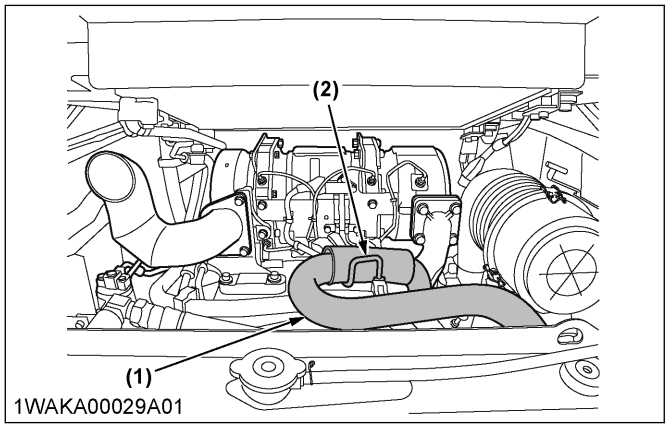

(1) Radiator hose
(2) Stay

2. Place the radiator and the oil-cooler-tilt-stopper to prevent the tilted radiator and oil cooler from falling forward.

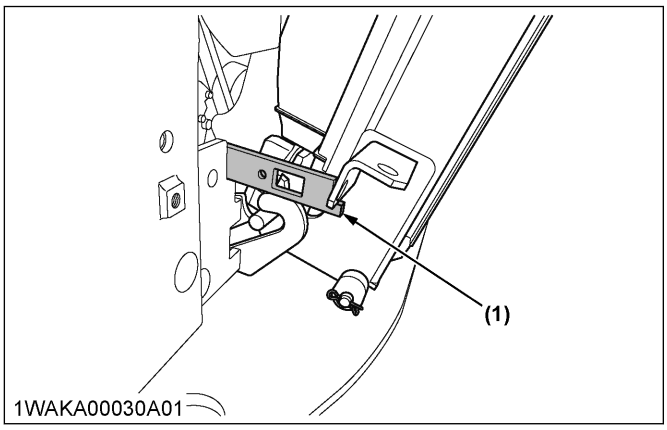

(1) Radiator and oil cooler tilt stopper

4. Where to keep the operator's manual

Keep the operator's manual in the operator's-manual-storage-box at the back of the operator's seat.

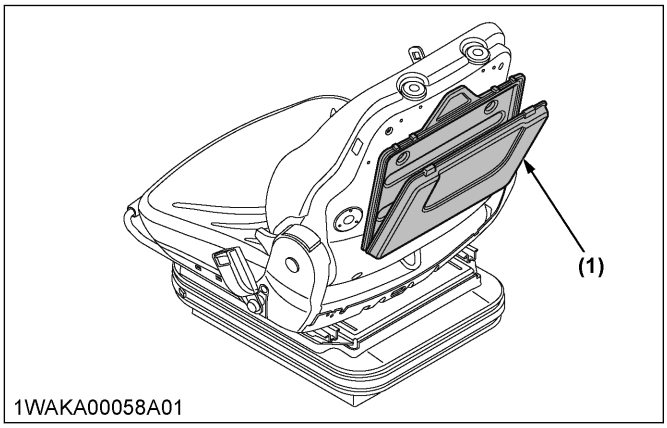

(1) Operator's manual storage box

5. Tilting up the cab

WARNING

To avoid personal injury or death:

- **Raising or lowering the cab while the engine is running may cause the machine to move, and cause personal injury or death. Place the machine on a firm, flat and level surface, lower the lift arms slowly to the ground and stop the engine before raising or lowering the cab.**
- **When tilting the cab up, support it firmly with the stopper pin to prevent it from falling.**
- **Do not enter beneath the cab, while raising or lowering the cab.**
- **More than one person may be needed to tilt the cab.**

For inspection and maintenance, the cab is designed so that you can tilt up it.

Raising (Tilt up)

1. Select a firm, level surface, lower the lift arms fully to the ground, and stop the engine.
2. Set the armrest to the raised position.
3. Remove the stopper pin from rear of the machine and remove the lock bolts from the front of the machine.

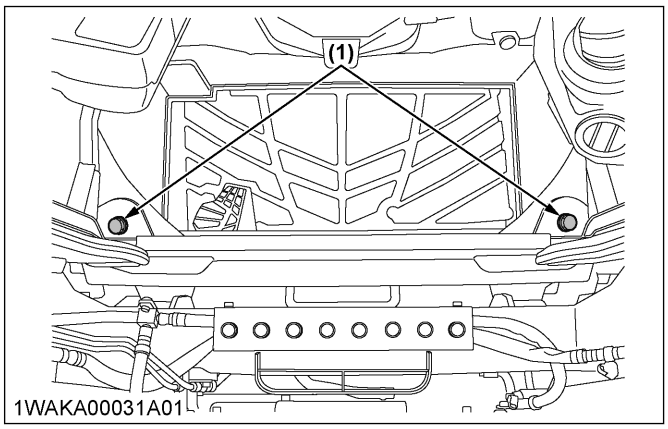

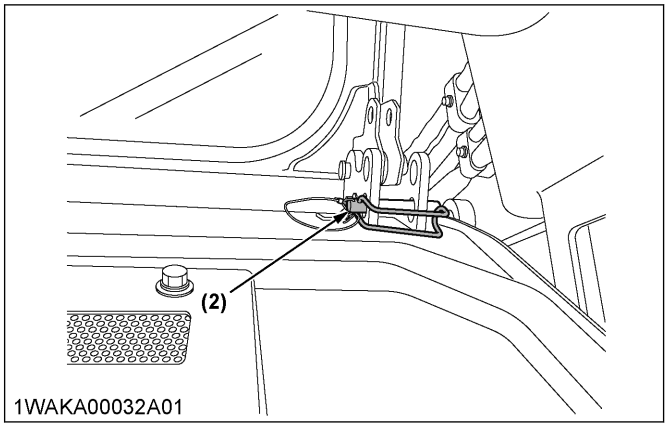

(1) Lock bolt *(2) Stopper pin*

4. Slowly raise the cab until the cab is all the way up and the latching mechanism engages.

https://truckmanualshub.com/

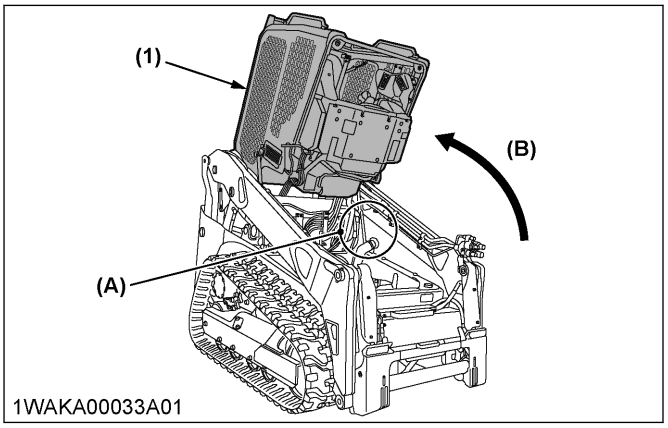

(1) Cab *(A) Fig [A]*
(B) Raise

Fig [A]

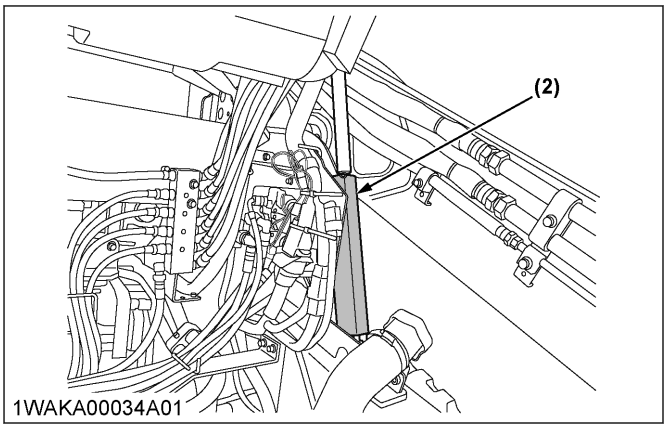

(2) Latching mechanism

5. Insert the stopper pin into the locked position to fix the cab.

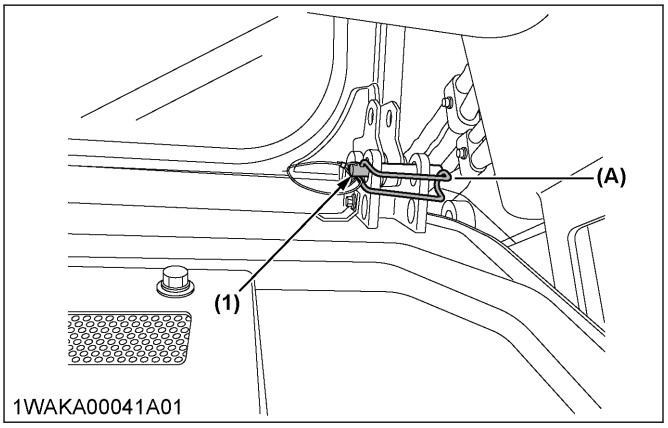

(1) Stopper pin *(A) Locked position*

Lowering (Tilt down)

1. Remove the stopper pin.
2. Support the cab and release the latching mechanism.

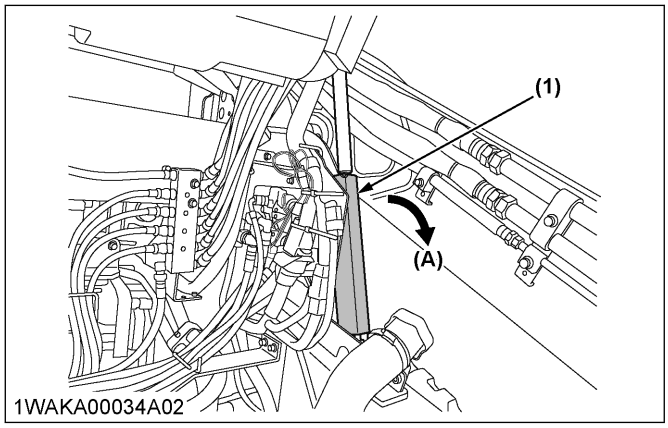

(1) Latching mechanism *(A) Release*

3. Lower the cab slowly all the way down.
4. Tighten the lock bolts with correct tightening torque, and reinsert the stopper pin into the storage position.

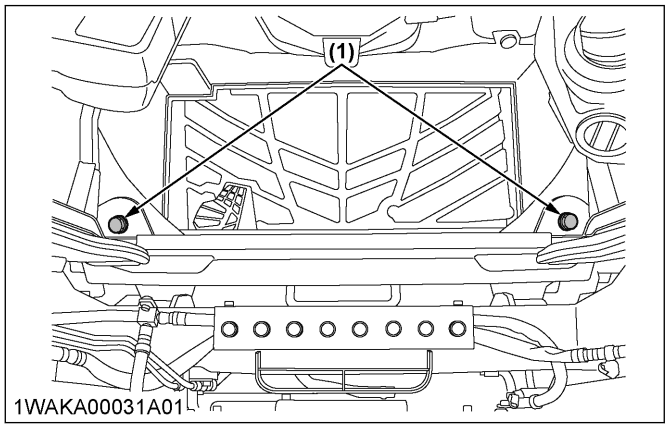

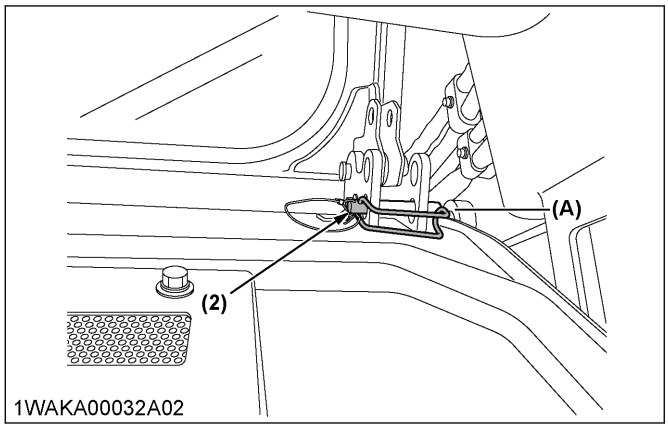

(1) Lock bolt *(A) Storage position*
(2) Stopper pin

Tightening torque	77.5 N·m to 90.2 N·m

https://truckmanualshub.com/

DISCHARGING MUD FROM OPERATOR CAB AND MAIN FRAME

1. Discharging mud from the operator CAB

1. With loosening the bolts, remove the floor outlet.

Open cab

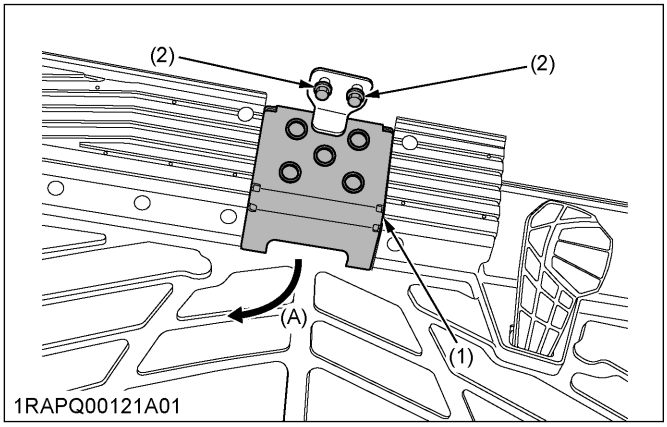

(1) Floor outlet *(A) Remove*
(2) Bolts

Closed cab

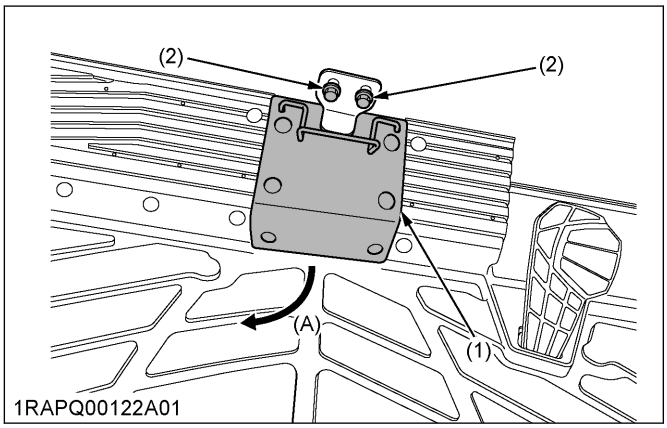

(1) Floor outlet *(A) Remove*
(2) Bolts

2. Discharge mud on the floor through the hole.

2. Discharging mud from the main frame

WARNING

To avoid personal injury or death:

- **Before entering underneath the machine, check your surroundings, ensure its safety and remove the key.**
- **The plate on the bottom of the main frame may get heavy with accumulated mud. In case plate of the bottom of the main frame suddenly falls, do not get under the plate and remove with much care.**

1. Tilt the cab.
2. Open the rear door and tilt the radiator.
3. Open the plates on the bottom of the main frame.

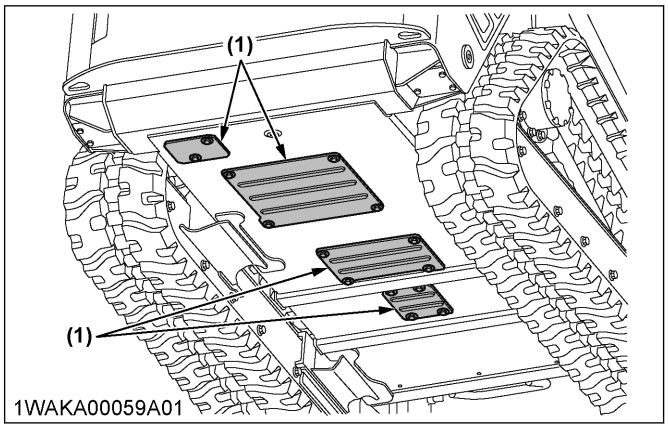

(1) Plates

4. Discharge mud on the main frame to the hole.

DAILY CHECKS

For your own safety and to assure the long life of your machine, carry out a careful check before each operation.

1. Daily check items before starting the machine

In order to avoid damage, it is important to check the condition of the machine before starting.

WARNING

To avoid personal injury or death:

- **Perform the maintenance work on the machine only on level ground with the engine off and the armrest in the raised position.**

Checks

- Go around the machine and check for visual damage and wear.
- Check the coolant level.
  (See Checking the coolant level on page 87)
- Check the fuel level.
- Check the engine oil level.
- Check the hydraulic fluid level.
- Check the air cleaner warning indicator.
- Check all control lamps, indicators, and the hour meter.
- Check the light system.
- Check the seat belt and the ROPS and FOPS safety device.
- Check the diesel-particulate-filter (DPF) muffler.
- Check the condition of the safety labels.
  (See Care for safety labels on page 23)

2. Checking the coolant level

WARNING

To avoid personal injury or death:

- **Place the machine on a firm, flat, and level surface, lower the lift arms slowly to the ground, and stop the engine.**
- **Do not open the radiator cap right after the engine has been stopped. Serious burns can occur from contact with escaping hot coolant fluid.**
- **Check the coolant level in the recovery tank only after the engine has cooled down.**
- **Remove the radiator cap only if absolutely necessary.**

1. Check to see that the coolant level is between the **[FULL]** and **[LOW]** marks of recovery tank.
   When the coolant level drops due to evaporation, add water only up to the full level.
   In case of leakage, add antifreeze and water in the specified mixing ratio up to the full level.

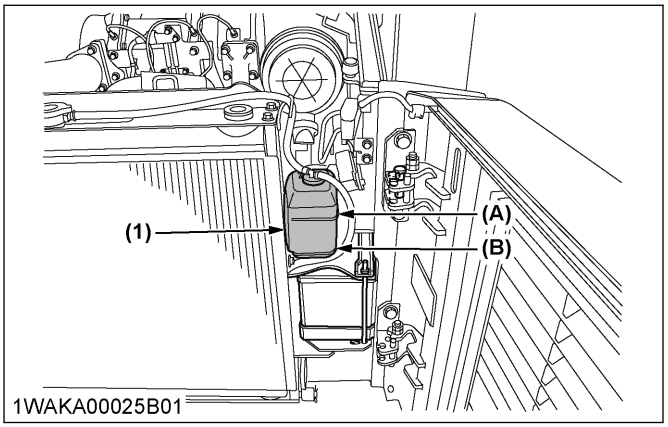

(1) Recovery tank *(A) FULL* *(B) LOW*

IMPORTANT :

- **Do not fill the recovery tank over the [FULL] marking.**
- **Do not fill with dirty or salty water.**

3. Checking the fuel level

WARNING

To avoid personal injury or death:

- **Stop the engine and remove the key before fueling.**
- **Do not smoke while fueling.**

IMPORTANT :

- **According to the temperatures, use the proper diesel fuel as follows.**

Temperatures	Diesel fuel
Over -5 ℃	No.2-D diesel fuel
Under -5 ℃	No.1-D diesel fuel

- **Make sure that the fuel tank will not run empty. Air will enter the fuel system, and must be purged before restarting engine.**
- **Be very attentive to the remaining fuel for the engine not to stall. If the engine stalls, it may not restart for some time to protect the emission purifying device.**
- **See Purging of the fuel system on page 108.**
- **To prevent condensation (water) accumulations in the fuel tank, fill the fuel tank full before parking overnight.**

1. Turn the starter key to the **[RUN]** position.
2. Check the fuel level by the fuel gauge indicator.

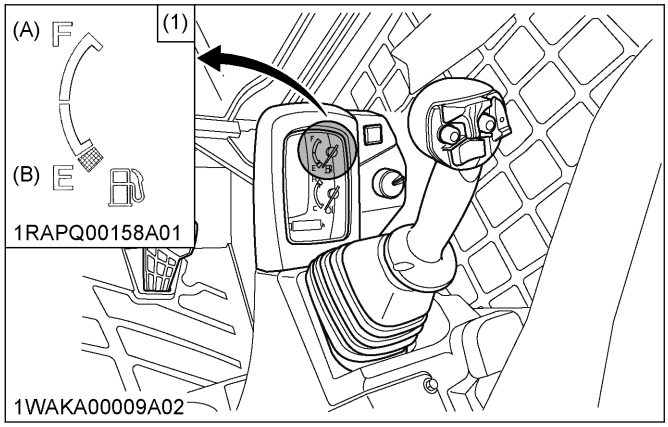

(1) Fuel gauge indicator *(A) Full* *(B) Empty*

3. If necessary, open the fuel tank cap with the starter key and fill the fuel.
   (See Fuel gauge indicator on page 31)

Fuel tank capacity	82 L

4. Checking the engine oil level

WARNING

To avoid personal injury or death:

- **Stop the engine and remove the key before checking the oil level.**

IMPORTANT :

- **Use the engine oil with the correct viscosity according to the outside temperature.**
- **After stopping the engine and remove the key, wait five minutes, then check the oil level. Park the machine on level ground.**

- **A small amount of fuel that is used for the DPF-regeneration may get mixed with the engine oil, which can increase the oil level slightly.**
- **Do not repeat or interrupt the DPF-regeneration process unnecessarily. Repetition and interruption of the process may increase the small amount of fuel that gets mixed with the engine oil, thereby degrading it.**
- **If the oil rises above the oil level gauge upper limit, it means that the oil has been diluted too much, resulting in a trouble. In such case, immediately change the oil for new one.**

To check the oil level, follow the following procedure.
1. Draw out the dipstick.
2. Wipe the dipstick clean.
3. Replace the dipstick.
4. Draw the dipstick out again.
5. Check to see that the oil level lies between the two notches.
6. If the level is too low, add new oil to the prescribed level at the oil filling port.

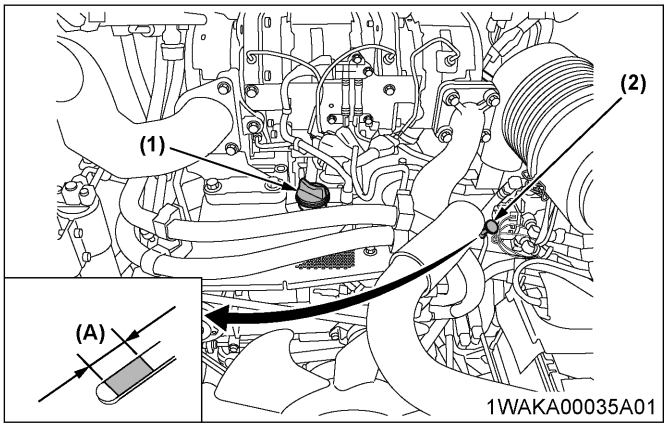

(1) Oil filling port
(2) Engine oil dipstick
(A) Required oil level range

5. Checking the hydraulic oil level

WARNING
To avoid personal injury or death:
- **Stop the engine and remove the key before checking the oil level.**

IMPORTANT :
- **Before filling oil, wipe away all sand and dust from around the oil port. Make sure to use an identical type of hydraulic fluid.**
- **The machine has been filled with hydraulic fluid before delivery.**
  (See RECOMMENDED OILS, GREASES, AND FUELS on page 125)
  Do not mix different oils.

1. Park the machine on a firm, flat, and level surface.
2. Lower the lift arms slowly to the ground.
3. Tilt down the attachments.
4. Stop the engine.
5. Check the oil level as to whether it lies on the center of the gauge at normal temperature.

Normal temperature	10 ℃ to 30 ℃

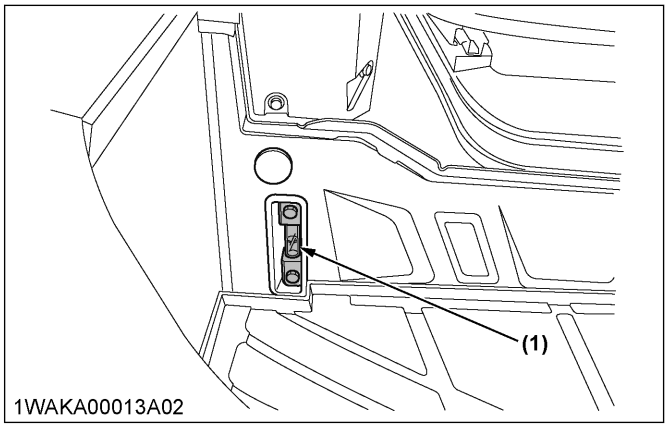

(1) Gauge

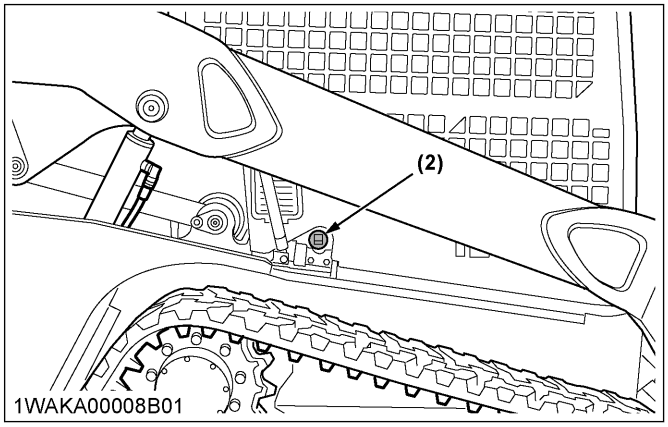

(2) Hydraulic tank cap (Oil filling port)

Enough oil is present if the oil level lies near the center of the gauge.
6. If the oil level is too low, fill up with oil through the oil port before starting the engine.
   This step is important for the protection of the hydraulic system.

6. Lubrication points of the machine

WARNING
To avoid personal injury or death:
- **First lower all attachments on the ground, and then stop the engine and remove the key.**

IMPORTANT :

- **When using the loader in water, generously grease the following points. After ending work with the loader, grease again.**

Grease the marked grease fittings (both sides) shown by arrows in the following illustration.

Lubrication points

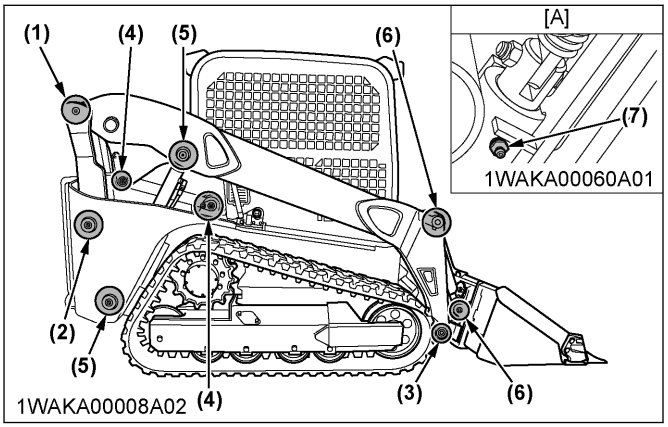

(1) Lift arm linkage
(2) Link 1
(3) Bucket link pin
(4) Control link
(5) Lift arm cylinder boss
(6) Tilt cylinder boss
(7) Quick-hitch pin
[A] Quick-hitch model

(1)	Lift arm linkage	1 place
(2)	Link 1	1 place
(3)	Bucket link pin	1 place
(4)	Control link	2 places
(5)	Lift arm cylinder boss	2 places
(6)	Tilt cylinder boss	2 places
(7)	Quick-hitch pin	1 place

7. Checking the radiator and the oil cooler

WARNING

To avoid personal injury or death:

- **Always stop the engine and remove the key before checking the radiator and the oil cooler.**
- **Wear eye protection when cleaning the radiator and the oil cooler with compressed air.**

- Check if the fins and ribs of the radiator and oil cooler are clogged.
  If the fins and ribs of the radiator and oil cooler are clogged, clean them with compressed air or steam.
- Check the rubber hoses for damage and replace them if they are cracked or old. Check if the hose clamps are tight enough.

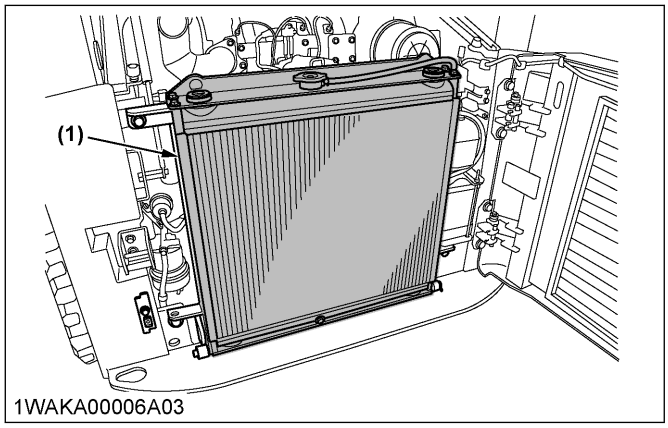

(1) Radiator and oil cooler

IMPORTANT :

- **Keep the fins and ribs of the radiator and oil cooler clean in order not to overheat the engine and not to allow free flow of air through the cooling elements.**
- **Keep the pressure of compressed air under the following values.**

Pressure of compressed air	205 kPa (2.1 kgf/cm^2)

- **When cleaning the radiator and oil cooler with compressed air, the fins can be damaged. Pay attention not to damage the fins of the radiator and oil cooler.**

8. Checking and cleaning the engine and the electrical wiring

WARNING

To avoid personal injury or death:

- **Always stop the engine and remove the key before cleaning the wiring, the cables, and the engine.**

- Before starting the machine, check whether flammable substances have gathered on the battery, the cables and wiring, the muffler, or the engine. Remove the flammable substances thoroughly.
- Check the electrical circuitry for disconnections, shorts, or loose terminals.

9. Precautions for checking the V-belt

WARNING

To avoid personal injury or death:

- **Stop the engine and remove the key before checking the V-belt.**

- **Check the V-belt for cracks and proper tension. See the *Adjusting the V-belt tension* section.**

(See Checking and adjusting the V-belt tension on page 96)

10. Precautions for washing whole machine

IMPORTANT :
- **Do not wash the machine with the engine running. Water could enter the air cleaner and damage the engine.**
  Make sure that the air cleaner is kept dry.
- **Remove the mud before washing the machine.**

11. Draining the water separator

IMPORTANT :
- **When water is collected, the red float goes up. When the float has reached the specified line, immediately drain the water separator.**
- **If the water-separator-error-code ("E:9120") appears on the meter panel, immediately drain the water separator.**

1. Open the rear door.
2. When the separated water is entering the sediment cup, the red float moves upwards. If the float is one inch above the bottom, close the shutoff-valve so that no fuel can run out.
3. Then loosen the drain plug and let out water until the float drops down to the bottom.
4. Finally, tighten the drain plug and turn the shutoff-valve back to its original position.

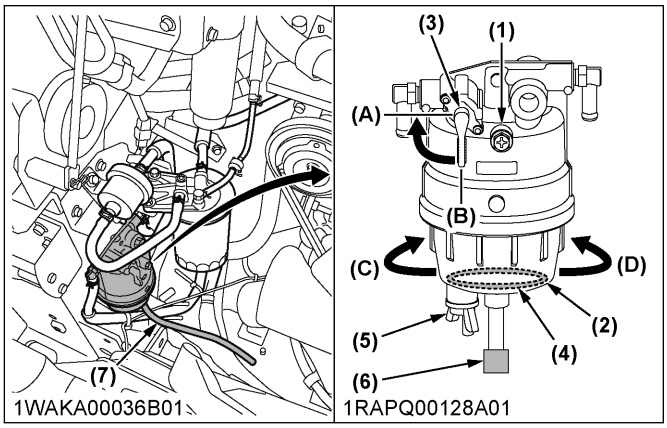

(1) Screw
(2) Cup
(3) Shutoff-valve
(4) Float
(5) Drain plug
(6) Connector of water level sensor
(7) Hose

(A) Close
(B) Open
(C) Loosen
(D) Tighten

IMPORTANT :
- **In reattaching the water separator, be careful to keep off dust and dirt.**
- **Be sure to purge the fuel system before getting the machine restarted.**
  (See Purging of the fuel system on page 108)

12. Checking the evacuator valve

1. Open the evacuator valve.
2. Get rid of large particles of dust and dirt.

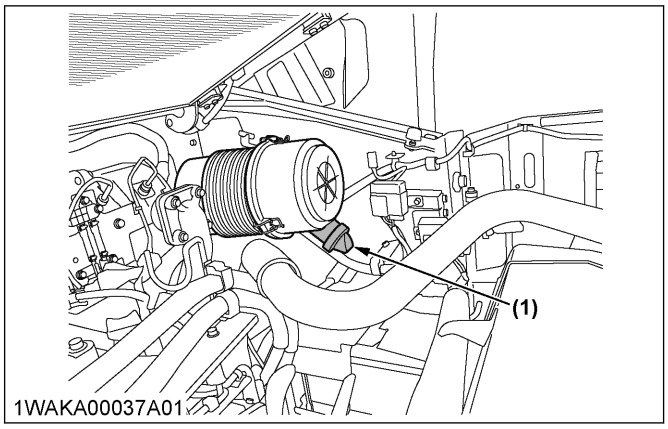

(1) Evacuator valve

NOTE :
- **If the evacuator valve is missing or damaged, the air cleaner does not function properly. Accordingly, its element's service life will get shorter.**

13. Checking the DPF (diesel-particulate-filter) muffler

WARNING

To avoid personal injury or death:
- **Before checking or cleaning the DPF muffler, stop the engine and wait long enough until it is cooled down.**

1. Check to see if flammable material is deposited around the DPF muffler.
   If so, clean it out, otherwise a fire may result.

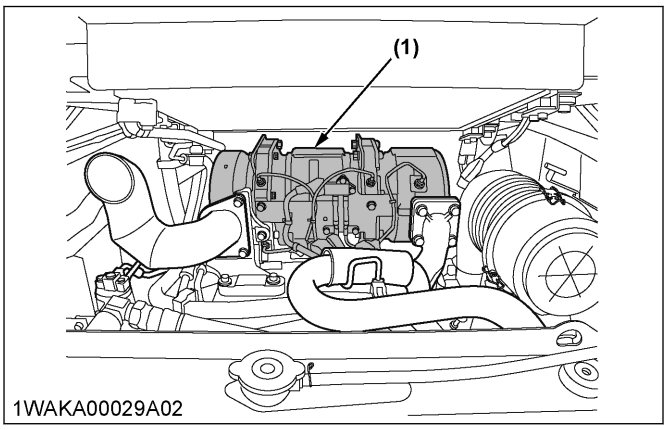

(1) DPF muffler

14. Checking the washer liquid

If the window washer is switched on with the washer liquid tank empty, the motor may be damaged. Always keep the tank filled.

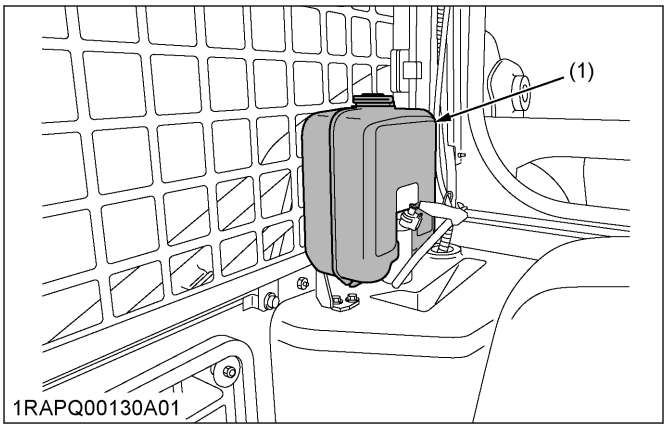

(1) Washer liquid tank

IMPORTANT :

- **The washer-liquid-tank should be half filled before working on a slope or a rough ground, otherwise the liquid may leak out when the machine bounces.**

Half filled of the washer-liquid-tank	about 0.8 liter

15. Checking the battery condition

DANGER

To avoid the possibility of a battery explosion: For refillable type battery, follow the following instructions.

- **Do not use or charge the refillable type battery if the fluid level is below the [LOWER] (lower limit level) mark. Otherwise, the component parts of the battery may prematurely deteriorate, which may shorten the service life of the battery or cause an explosion. Check the fluid level regularly and add distilled water as required so that the fluid level is between the [UPPER] and [LOWER] levels.**

WARNING

To avoid personal injury or death:

- **Never remove the vent caps while the engine is running.**
- **Keep electrolyte away from eyes, hands, and clothes. If you are spattered with electrolyte, wash it away completely with water immediately and get medical attention.**
- **Wear eye protection and rubber gloves when working around the battery.**
- **Before inspection or dismounting the battery, be sure to turn off the engine and turn the starter switch to the off position.**
- **When removing the battery, always disconnect the negative ground cable first. When installing a battery, always connect the ground cable last. Connecting and disconnecting the cables in proper order prevents a possible explosion caused by sparks.**
- **Always wear eye protection when working with the battery.**

IMPORTANT :

- **The battery of non-refillable type is factory-installed. If the indicator turns white, do not quick charge the battery but replace it with new one.**

Mishandling the battery shortens the service life of it and adds to maintenance costs.
The original battery is maintenance free, but must be checked periodically.
If the battery is weak, the engine will be difficult to start and the lights will be dim. It is important to check the battery periodically.

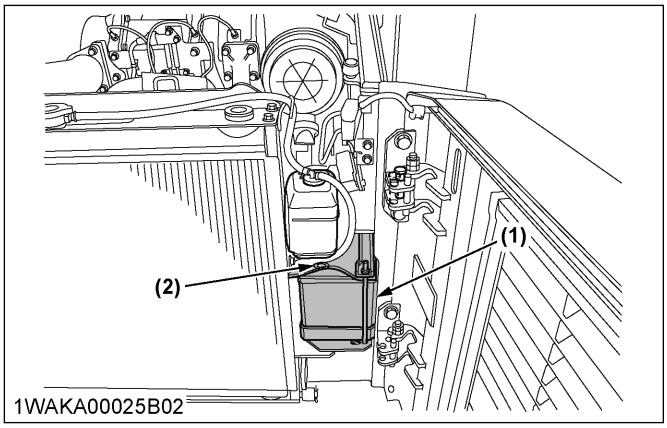

(1) Battery *(2) Indicator*

How to read the indicator

Check the battery condition by reading the indicator.

State of indicator display	
Green	Specific gravity of electrolyte and quality of electrolyte are both in good condition.
Black	Needs charging battery.
White	Needs replacing battery.

Battery charging

WARNING

To avoid personal injury or death:

- **When the battery is being activated, hydrogen and oxygen gases in the battery are extremely explosive. Keep open sparks and flames away from the battery at all times, especially when charging the battery.**
- **When charging the battery, ensure that the vent caps are securely in place if equipped.**
- **When disconnecting the cable from the battery, start with the negative terminal first.**
  When connecting the cable to the battery, start with the positive terminal first.
- **Never check the battery charge by placing a metal object across the posts.**
  Use a voltmeter or hydrometer.

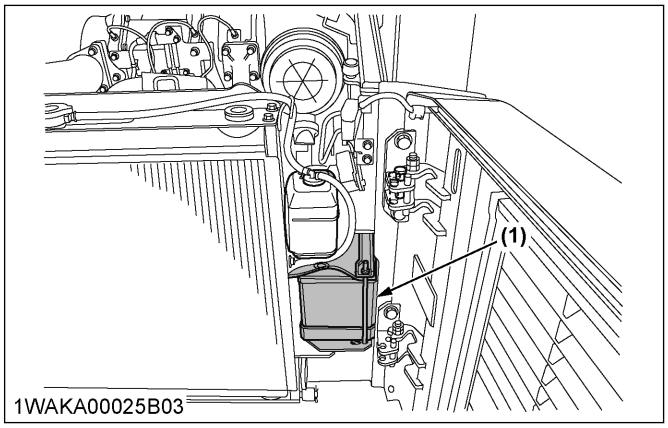

(1) Battery

- To slow charge the battery, connect the battery positive terminal to the charger positive terminal and the negative to the negative, then recharge in the standard fashion.
- A boost charge is only for emergencies. The boost charge will partially charge the battery at a high rate and in a short time.
  When using a boost-charged battery, it is necessary to recharge the battery as early as possible.
  Failure to recharge may shorten the battery's service life.
- The battery is charged if the display of the indicator turns green from black.
- When exchanging an old battery for a new one, use a battery of equal specification.

Battery Type	Volts	Capacity
GP31 (105E41R)	12 V	85.3 A.H (at 5H.R)

Battery Type	Reserve capacity	Cold cranking amps	Normal charging rate
GP31 (105E41R)	160 min	900	11 A

Direction for storage

- When storing the machine for long periods of time, follow the following procedure.
  1. Remove the battery from machine.
  2. Adjust the electrolyte to the proper level.
     Store the battery in a dry place out of direct sunlight.
- The battery self-discharges while it is stored.
  Recharge the battery once every three months in hot seasons and once every six months in cold seasons.

16. Cleaning the fuel tank cap

WARNING

To avoid personal injury or death:

- **Stop the engine and remove the key before fueling.**
- **Do not smoke while fueling.**

1. Remove the fuel tank cap.
2. Using compressed air, brush or the like, remove dust and dirt off the back of the fuel tank cap.
3. Reinstall the fuel tank cap.

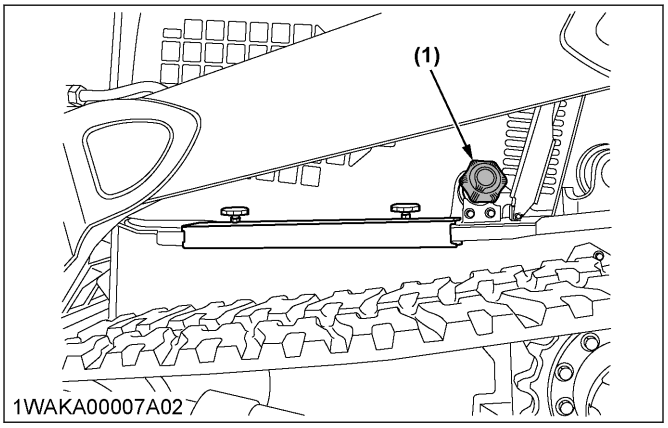

(1) Fuel tank cap

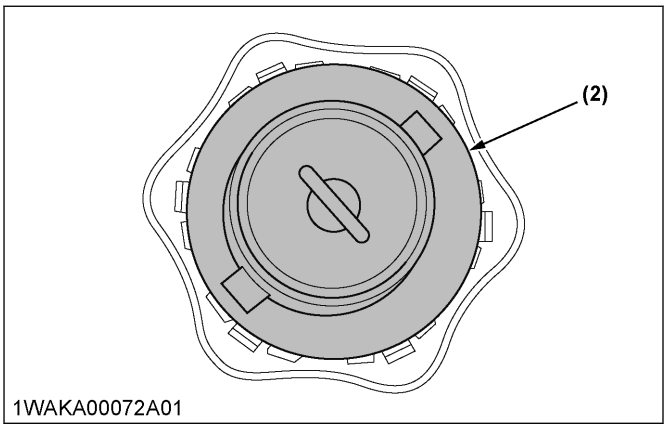

(2) Fuel tank cap (Back side)

IMPORTANT :
- **If dust or dirt is stuck in the fuel tank cap, the fuel tank may fail to allow in air, possibly getting deformed.**
- **While cleaning, be careful not to allow dust or dirt into the fuel tank.**

EVERY 50 SERVICE HOURS

1. Draining the water from the fuel tank

WARNING
To avoid personal injury or death:
- **Before draining the water from the fuel tank, be sure to stop the engine and remove the key.**
- **Do not smoke during inspection.**

1. Open the cover.
2. Open the drain plug.
3. Drain the water from the fuel tank.

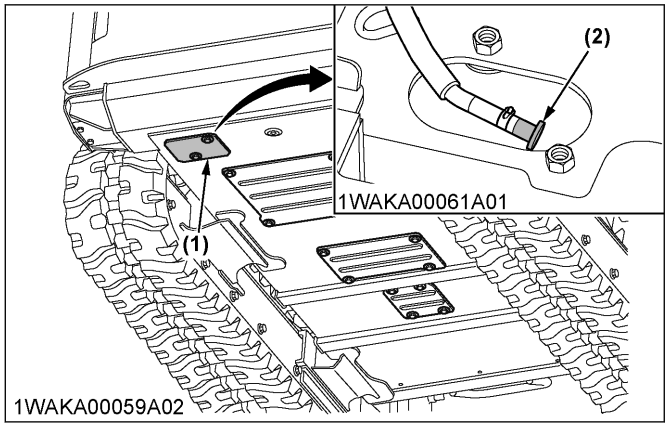

(1) Cover *(2) Drain plug*

2. Checking the track tension

WARNING
To avoid personal injury or death:
- **When lifting the machine itself with an attachment, place the jack stands under the main frame to prevent the machine from turning over.**

IMPORTANT :
- **Make sure that no obstacles such as stones are caught in the track. Remove obstacles such as stones before adjusting the track tension.**
  (See ADJUSTING THE TRACKS on page 109)

1. To check the track tension, put the machine on the jack stand.

DANGER
To avoid personal injury or death:
- **Do not work under the machine when putting the machine on the jack stand.**
- **For your safety, do not rely on hydraulically supported devices. They may leak down and suddenly drop or be accidentally lowered.**

2. Lift the track from the ground as shown.

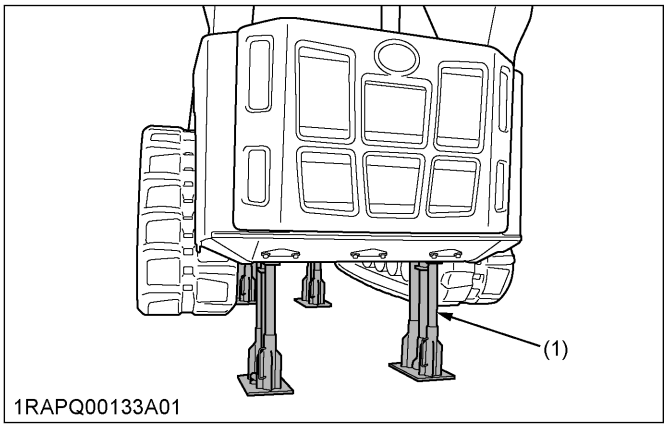

(1) Jack stand

3. If necessary, adjust the track tension.
   The track tension is correct if the distance of clearance between the outer end of the track roller and the track interior surface (A) corresponds to the dimension specified in the following table.

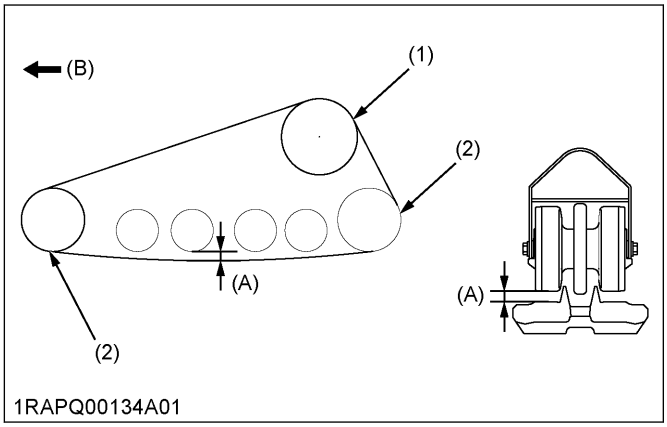

(1) Drive sprocket
(2) Idler
(A) Clearance between outer end of track roller and track interior surface
(B) Front

Clearance between outer end of track roller and track interior surface (A)	20 mm to 30 mm

3. Checking the air cleaner element

IMPORTANT :

- **If the machine is used in extremely dusty areas, inspect and clean the air-cleaner-element more frequently than in the specified maintenance periods.**
- **As some elements of air cleaner must be dry, keep them free from oil.**
- **Do not run the engine without the air cleaner.**
- **Once every 250 hours or after every sixth cleaning, whichever comes first, replace the air cleaner elements.**
- **Do not remove the inner element. If removed, replace it with new one.**
  (See Replacing the air cleaner element on page 98.)
- **Clean up the case inside with clean wet cloth. After cleaning, wipe it dry with clean dry cloth.**
- **Do not blow air to clean the case inside. It allows dust come into the inner element.**

1. Open the rear door and remove the dust-cover.
2. Remove only outer element.
   Do not remove the inner element.
3. Clean the outer element, the case inside and the evacuator valve.
4. Wipe the case inside.
5. Reassemble the outer element.
   During reassembly, take care to install the dust-cover so that its top-indicating-mark (arrow) faces up-wards.

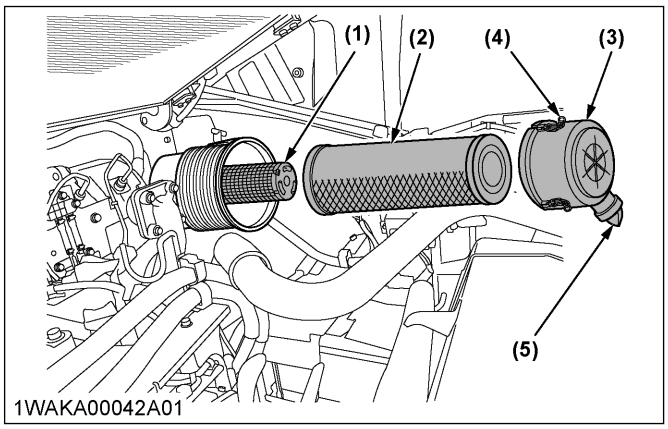

(1) Inner element
(2) Outer element
(3) Dust-cover
(4) Clamps
(5) Evacuator valve

4. Cleaning the air cleaner element

⚠ WARNING

To avoid personal injury or death:

- **Wear eye protection.**

https://truckmanualshub.com/

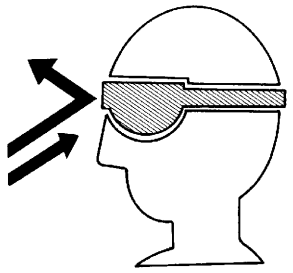

1RAPQ00012A01

IMPORTANT :

- **Clean the air cleaner element regularly or foreign materials will accumulate, which will shorten the DPF filter cleaning interval (3000 hours).**

The quickest and safest method of maintenance is the exchange of the element. However, there are different methods for cleaning the element.

Cleaning with compressed air

1. Blow the element clean from the inside to the outside until the dust deposits are noticeably reduced.

Keep the pressure of compressed air as follows.

Pressure of compressed air	Under 205 kPa (2.1 kgf/ cm^2)

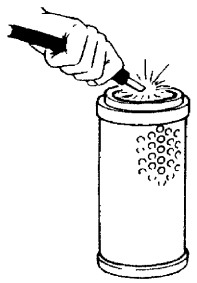

1RAPQ00136A01

IMPORTANT :

- **If the air suction is still inadequate or the color of the exhaust gases is abnormal even after the cleaning, replace the air-cleaner-element.**
- **Do not tap-clean the element. The element may get deformed, which may adversely affect the air cleaner performance.**

5. Cleaning the evacuator valve

WARNING

To avoid personal injury or death:

- **Wear eye protection.**
- **While cleaning, foreign matters may drop out of the evacuator valve.**

1. Open the rear door and engine hood.
2. Remove the dust-cover.
3. From behind the dust-cover, remove foreign matter from the evacuator valve.

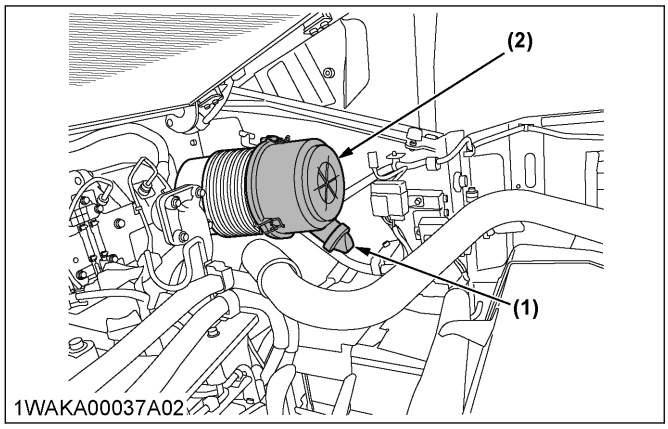

1WAKA00037A02

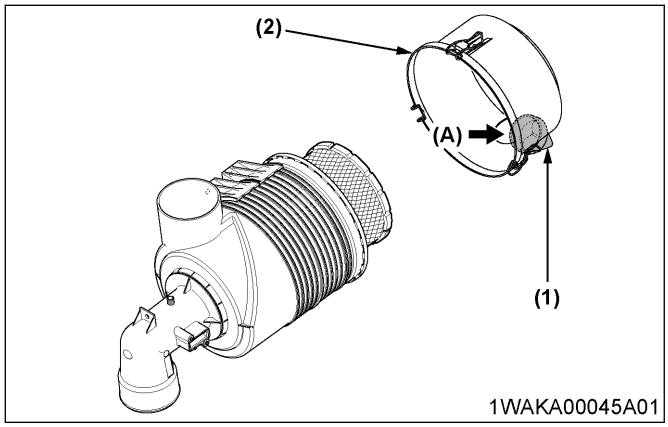

1WAKA00045A01

(1) Evacuator valve
(2) Dust cover
(A) Clean from behind

IMPORTANT :

- **Failure to clean the evacuator valve may shorten the air cleaner element's service life.**

EVERY 250 SERVICE HOURS

Carry out all 50 hour servicing at the same time.

1. Checking the radiator hoses and the clamps

Check the water hoses for proper connection.

WARNING

To avoid personal injury or death:

- **Wait long enough for the radiator coolant to cool down.**

Carry out the check of the radiator hoses and the clamps of every 250 hours or every six months, whichever comes first.

1. Tilt the radiator.
2. If the hose clamps become loose or water leaks, tighten the hose clamps properly.
3. If the radiator hoses become swollen, aged, or cracked, replace the radiator hoses and re-tighten the hose clamps properly.

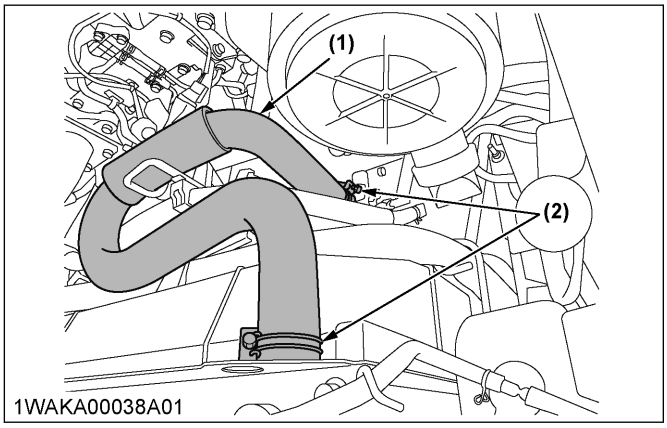

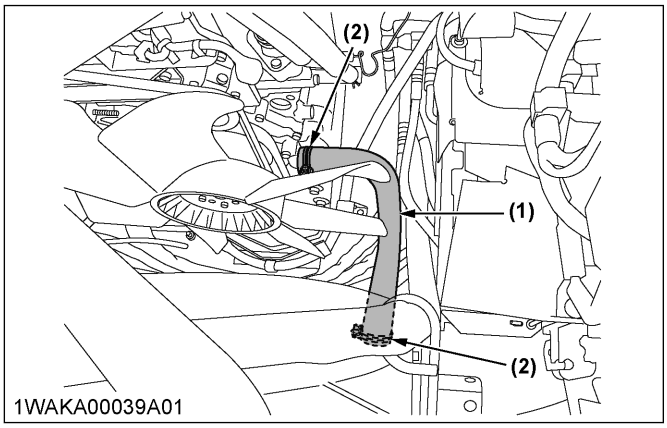

(1) Radiator hose *(2) Hose clamps*

2. Checking the fuel line and the intake air line

1. Check to see that all fuel lines and hose clamps are tightened and not damaged.
2. If hoses and clamps are found worn or damaged, replace or repair them at once.

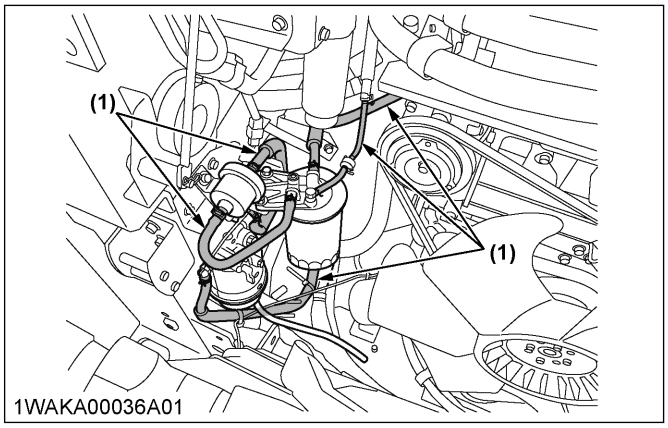

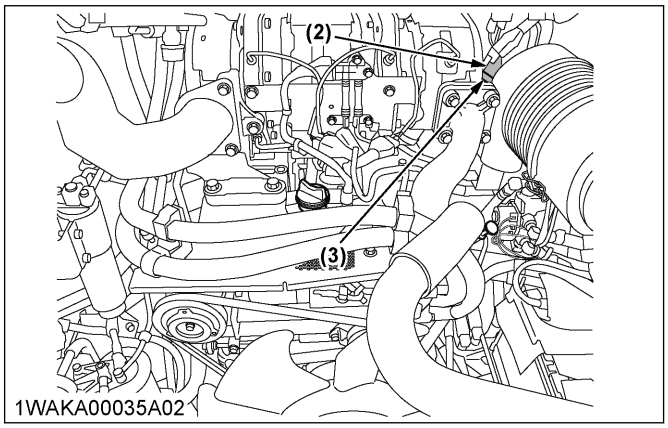

(1) Fuel lines *(3) Hose clamps*
(2) Hose

3. Checking and adjusting the V-belt tension

⚠ WARNING

To avoid personal injury or death:

- **First stop the engine and remove the key.**
- **After servicing, make sure to replace the belt cover in its original position.**

IMPORTANT :

- **If the engine is run with a loose alternator belt, the belt could slip and cause insufficient battery charging. Check V-belt tension regularly.**
- **If the alternator belt breaks or jumps off, the indicator light for battery charge will light up. Stop the engine and remove the key immediately.**

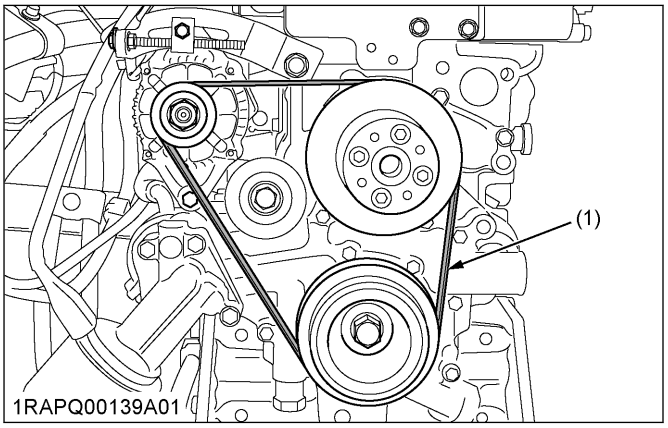

(1) V-belt

1. Press the V-belt (5) down in the middle, with the following force.

Pressing force (B)	Approx. 50 N to 60 N

The belt tension is correct if it deflects the following length.

Belt deflection (A)	About 4.0 mm to 5.0 mm

2. If the belt tension is not correct, loosen bolt (1), (2), and (3) and shift the alternator (4) in the direction shown by the arrow in the following figure.

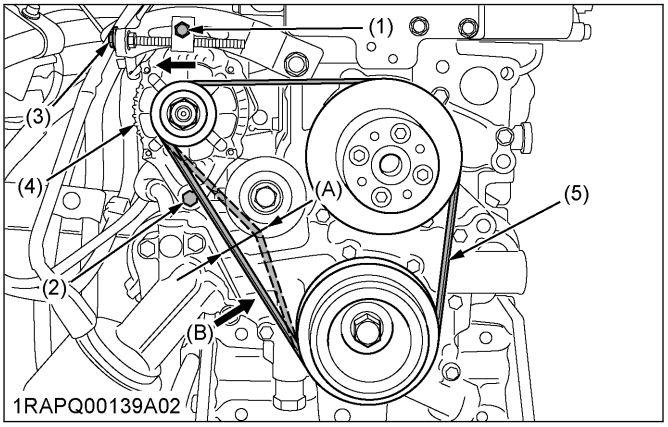

(1) Bolt
(2) Bolt
(3) Adjuster bolt
(4) Alternator
(5) V-belt
(A) Belt deflection
(B) Pressing force

3. After adjustment of the V-belt tension, tighten all the bolts.
4. Replace the V-belt if worn out, cracked, or torn.

3.1 Checking and adjusting the air-conditioner belt tension [Closed cab model]

1. Press the air-conditioner belt down in the middle, with the following force.

Pressing force	Approx. 50 N to 60 N

The belt tension is correct if it deflects the following length.

Belt deflection (A)	About 7 mm to 9 mm

2. If the belt tension is not correct, loosen bolt of the tension pulley and shift the tension pulley in the direction shown by the arrow in the following figure.

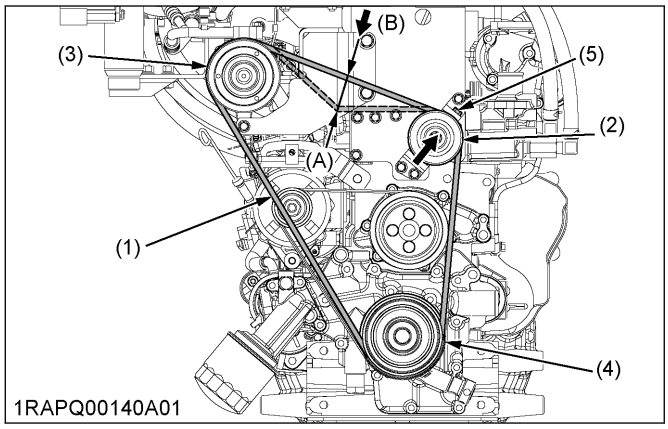

(1) Air-conditioner belt
(2) Tension pulley
(3) Air-conditioner compressor
(4) Pulley
(5) Bolt
(A) Belt deflection
(B) Press

3. Replace the air-conditioner belt if worn out, cracked, or torn.

4. Cleaning inside of the main frame

If mud, leaves, or any debris are accumulated inside of the main frame, it may cause damage on parts of the main frame.

1. Open the plates of the bottom of the main frame. (See Discharging mud from the main frame on page 86 for detail procedure)
2. Remove mud, leaves, and any debris from the inside of the main frame.

3. After removing mud, leaves, and any debris, close the plates of the bottom of the main frame.

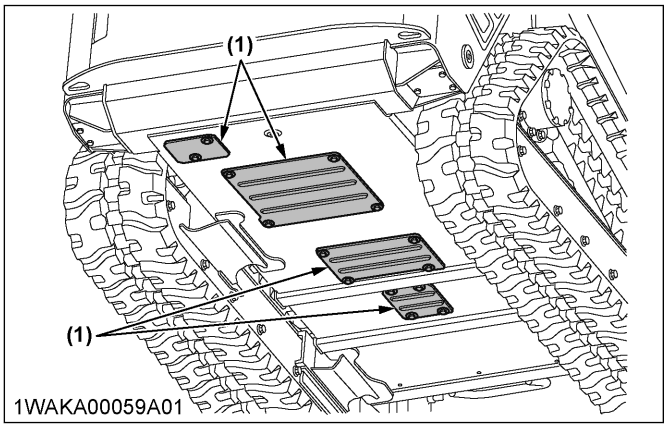

(1) Plate

5. Replacing the air cleaner element

IMPORTANT :

- **Shorten the replacement period if the machine is used in dusty or sandy areas.**
- **Replace the air cleaner element regularly or foreign materials will accumulate, which will shorten the DPF filter cleaning interval (3000 hours).**
- **Use KUBOTA genuine inner and outer element.**
- **Do not blow air to clean the case inside. It allows dust come into the inner element.**
- **Clean up the case inside with clean wet cloth. After cleaning, wipe it dry with clean dry cloth.**

1. Open the rear door and the engine hood.
2. Remove the dust-cover.
3. Remove and replace the outer element and the inner element with new them.
   When reassembling, install the dust-cover so that its top-indicating-mark (arrow) faces up-wards.

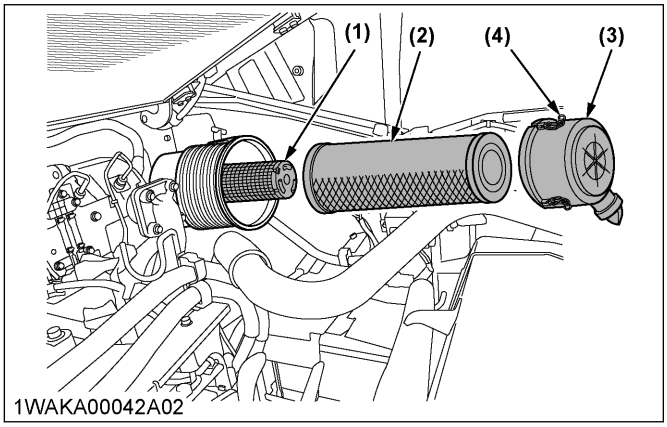

(1) Inner element
(2) Outer element
(3) Dust-cover
(4) Clamps

6. Cleaning the fresh air filter

1. Remove the fresh-air-filter.
2. Blow air from the direction opposite to the normal air flow of the fresh-air-filter.
   Keep pressure of compressed air as follows.

Pressure of compressed air	Under 205 kPa (2.1 kgf/cm^2)

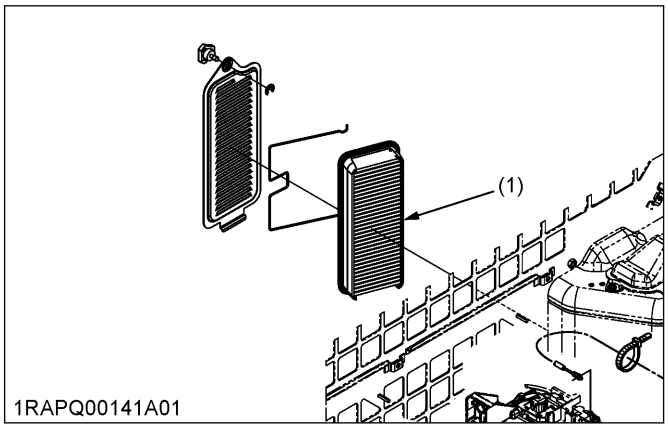

(1) Fresh air filter

7. Cleaning the inner air filter

⚠ WARNING

To avoid personal injury or death:

- **When removing and attaching the inner-air-filter, apply parking brake, stop the engine, and remove the key.**

Remove the thumbscrews and pull out the inner-air-filter.

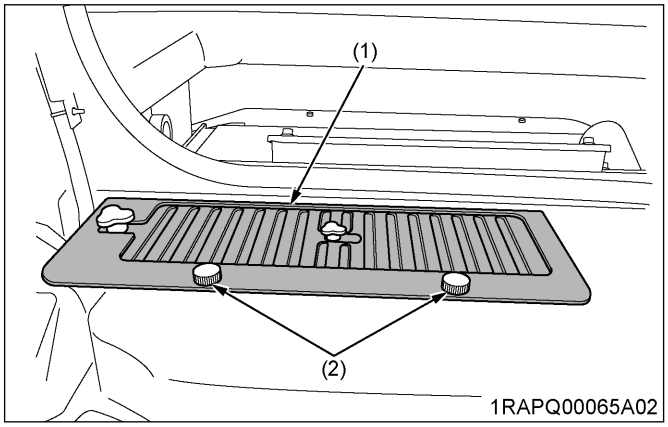

(1) Cover *(2) Thumbscrew*

Normal use

1. Blow air from the opposite direction to the normal air flow of the inner-air-filter.
   Keep pressure of compressed air as follows.

Pressure of compressed air	Under 205 kPa (2.1 kgf/cm^2)

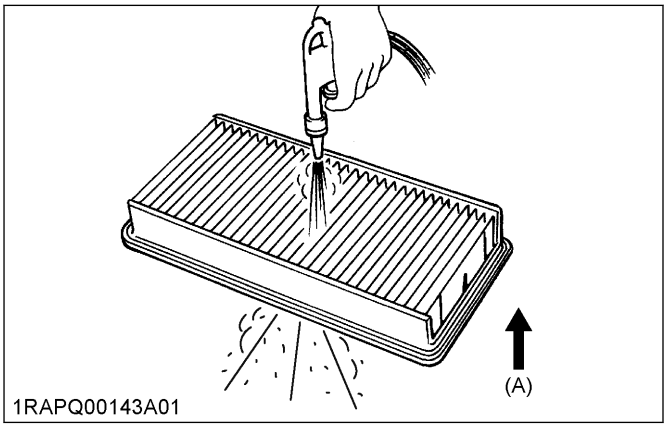

(A) Airflow of air conditioner

IMPORTANT :

- **Do not hit the inner-air-filter. If the inner-air-filter becomes deformed, dust may enter into the air-conditioner, which may cause damage and malfunction for the machine.**
- **Do not use gasoline, thinner, or similar chemicals to clean the inner-air-filter because damage to it may occur.**
- **Using gasoline, thinner, or similar chemicals to clean the inner-air-filter may also cause an unpleasant odor in the cab when the system is used next time.**

Attach the filter and the cover as the following illustration.

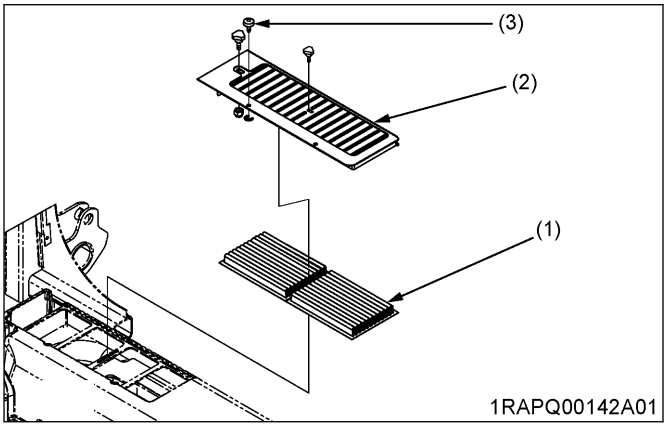

(1) Inner air filter *(3) Thumbscrew*
(2) Cover

8. Checking the air-conditioner condenser

1. Check the air-conditioner condenser to be sure that it is clean from debris.

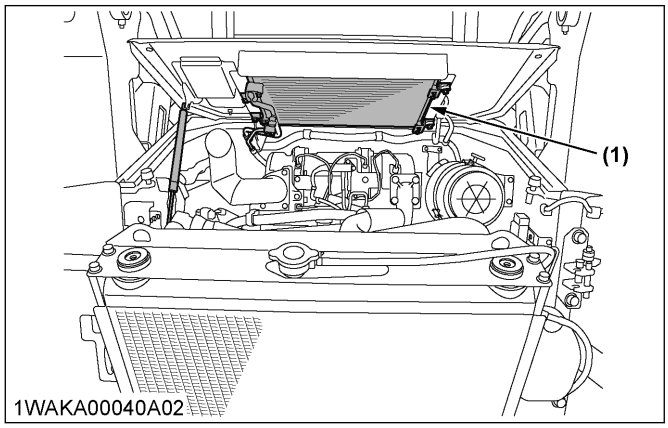

(1) Air-conditioner condenser

NOTE :

- **Air flows from the outside to the inside, so debris would accumulate on the outside. If necessary, remove the outside cover to help clean the air-conditioner condenser.**

9. Changing the engine oil

WARNING

To avoid personal injury or death:

- **First stop the engine, and then remove the key and wait long enough for the oil to cool down.**

1. Remove the under cover on the bottom of the frame.
2. Remove the drain plug on the underside of the engine and drain all oil.

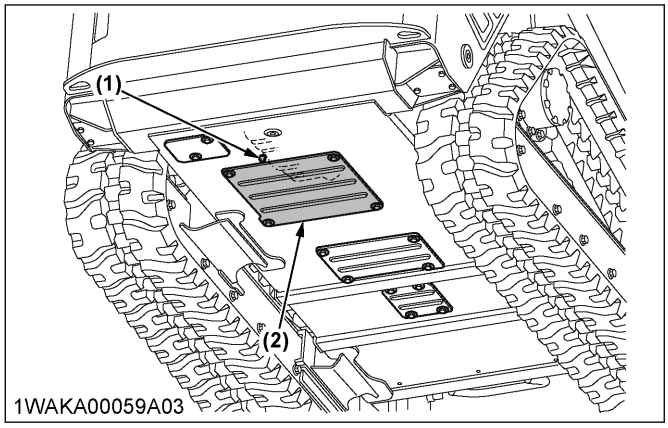

(1) Drain plug *(2) Under cover*

3. Re-tighten the drain plug, and attach the under cover.

4. Fill up with new oil through the filling port to the specified level.

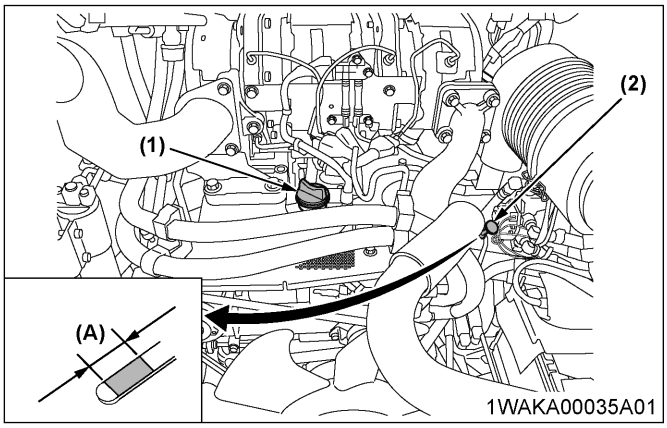

(1) Oil filling port
(2) Engine oil dipstick
(A) Required oil level range

Engine oil volumes with engine oil filter	8.5 L

10. Replacing the engine oil filter cartridge

1. Remove the under cover on the bottom of the frame to drain the spilled engine oil from the engine-oil-filter-cartridge.

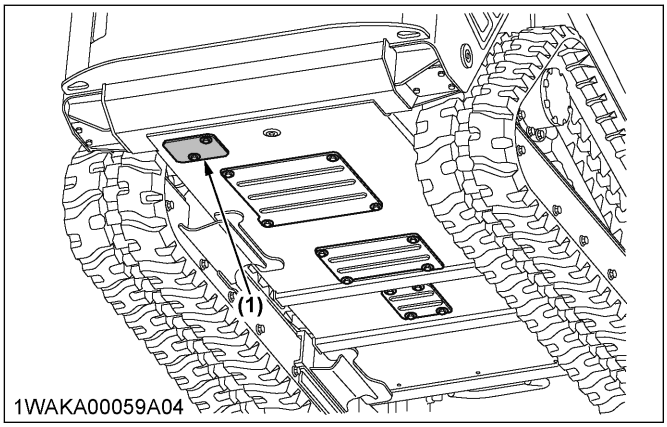

(1) Under cover

2. Replace the engine-oil-filter-cartridge at the same time as changing the engine oil.
   a. Remove the engine-oil-filter-cartridge with the filter wrench.
   b. Oil the O-ring of the new engine-oil-filter-cartridge lightly.
   c. Then tighten the engine-oil-filter-cartridge by hand.
   d. Fill engine oil to the specified level.
   e. Let the engine run for approx. five min. and make sure that the low-fuel-warning-light does not light up.
   The engine oil level is reduced by the amount of the filter capacity after the engine is started. It is necessary to add the engine oil.
   f. Then stop the engine and remove the key.

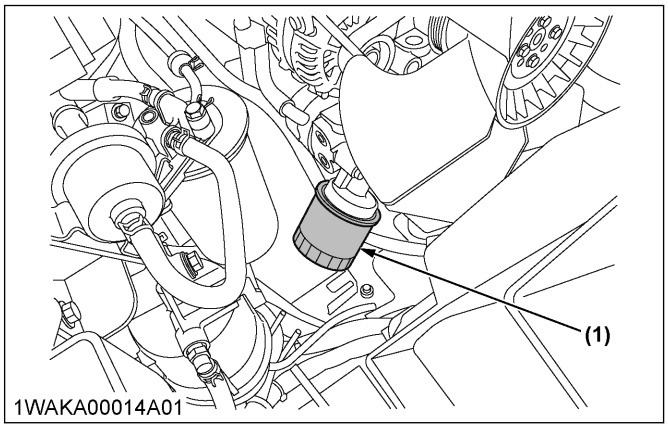

(1) Engine oil filter cartridge

3. Attach the under cover.

IMPORTANT :
- **Always check the engine oil level after having exchanged the filter.**

EVERY 500 SERVICE HOURS

Carry out all 50, 100, and 250 hour servicing at the same time.

1. Replacing the water separator filter element

1. Set the shutoff-valve of the water separator to the close position.
2. Loosen and remove the cup properly and replace the filter element.
3. Check the condition of the O-ring and replace if necessary.
4. Tighten up the cup properly.

https://truckmanualshub.com/

5. Set the shutoff-valve to the open position.

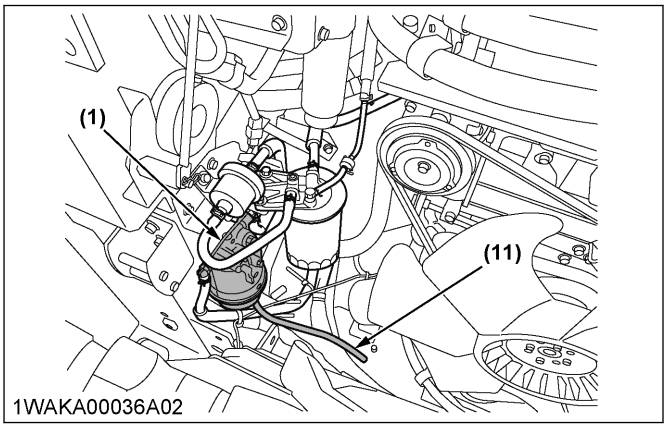

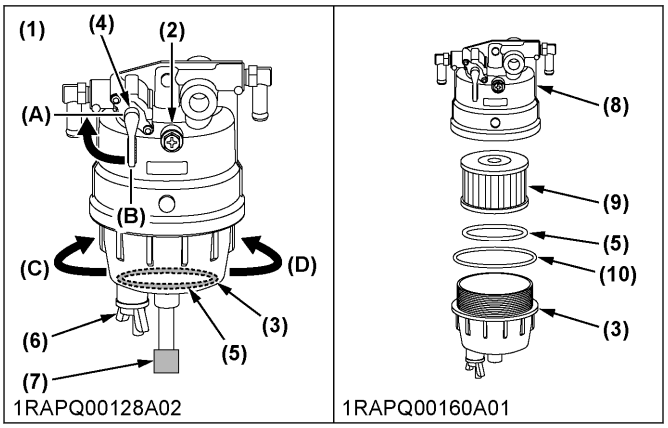

(1) Water separator
(2) Screw
(3) Cup
(4) Shutoff-valve
(5) Float
(6) Drain plug
(7) Connector of water level sensor
(8) Head cover
(9) Filter element
(10) O-ring
(11) Hose

(A) Close
(B) Open
(C) Loosen
(D) Tighten

IMPORTANT :
- **In reattaching the water separator, be careful to keep off dust and dirt.**
- **Be sure to purge the fuel system before getting the machine restarted.**
  (See Purging of the fuel system on page 108)

2. Replacing the fuel filter cartridge

WARNING
To avoid personal injury or death:
- **Keep fire away.**

IMPORTANT :
- **If you do not replace the fuel-filter-cartridge regularly, the cleaning efficiency of the DPF (3000 hours) will be reduced and the DPF longevity will be shorter than expected.**

1. Tilt the radiator.
2. Remove the fuel-filter-cartridge with the filter wrench.
3. Apply a small amount of fuel on the gasket of the replacement filter and tighten the gasket by hand.

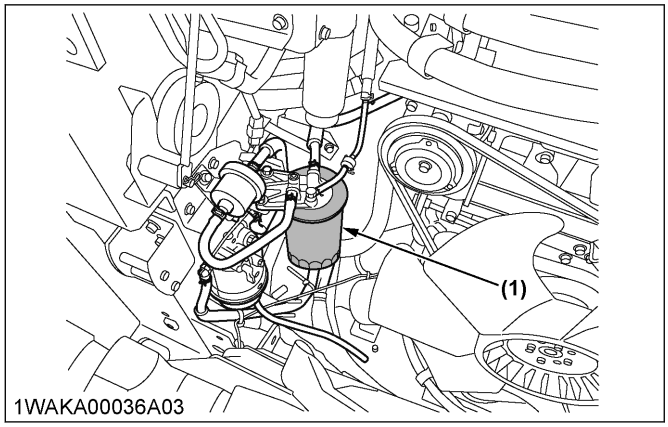

(1) Fuel filter cartridge

IMPORTANT :
- **After exchange of the filter, purge the fuel system of air.**

3. Changing the drive unit oil

WARNING
To avoid personal injury or death:
- **Lower the lift arms to the ground, stop the engine, and remove the key before undertaking the gear oil change of the drive unit.**

First change of the gear oil of the drive unit is 250 service hours.

1. Rotate the track so that the drain plug of the drive unit is in the bottom position.
2. Remove the drain plug to let the gear oil run out.
3. Screw in and tighten the drain plug again.

4. Fill the drive unit with the gear oil through the oil-filler-port.
   Fill the gear oil until it overflows out of the oil inspection port.
   Use prescribed gear oil SAE 90.

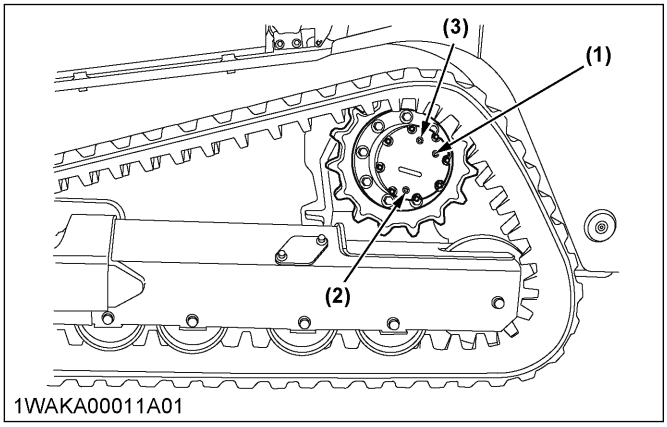

(1) Oil inspection port *(3) Oil filler port*
(2) Drain plug

Gear oil volume	Approx. 1.0 L

4. Changing the return filter

First change of the return filter is 250 service hours.

1. Change the return filter according to Changing the hydraulic oil including replacing the suction filter and the return filter in the hydraulic tank on page 102.

5. Replacing the breather filter

The breather filter for the hydraulic tank is located above the hydraulic tank.

1. Raise the cab.
   (See Tilting up the cab on page 84 for detail)
2. Open the cap of the filter cover.
3. Remove the breather filter and replace with the new one.
4. Tighten the cap of the filter cover.

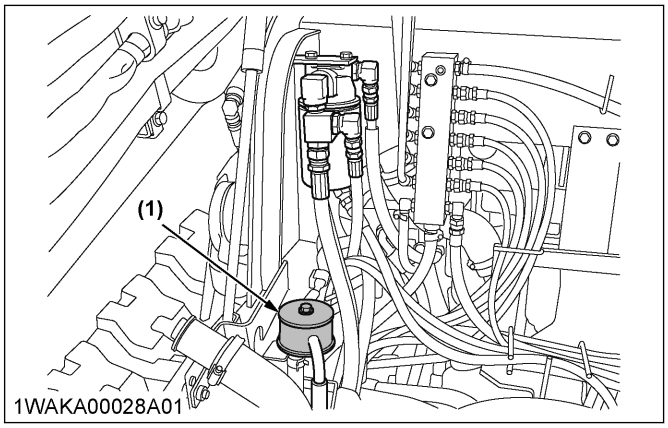

(1) Breather filter

6. Replacing the hydraulic oil filter

First change of the hydraulic-oil-filter is 50 service hours.

1. Raise the cab.
   (See Tilting up the cab on page 84 for detail)
2. Open the cap of the filter cover.
3. Remove the hydraulic-oil-filter with the wrench and replace with the new one.
4. Tighten the cap of the filter cover.

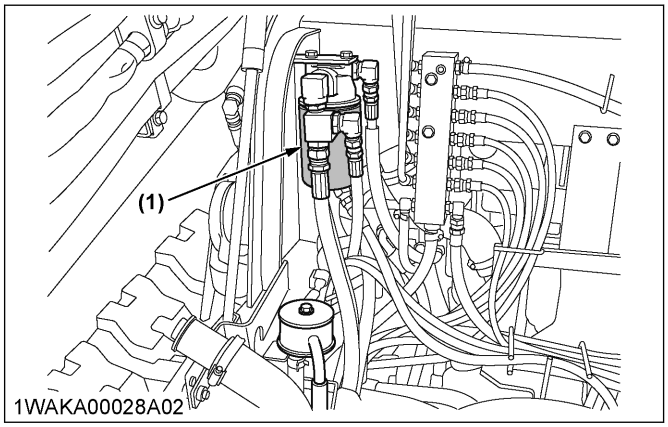

(1) Hydraulic oil filter

EVERY 1000 SERVICE HOURS

Carry out all 50, 100, 200, 250, and 500 hour servicing at the same time.

1. Changing the hydraulic oil including replacing the suction filter and the return filter in the hydraulic tank

WARNING
To avoid personal injury or death:

https://truckmanualshub.com/

- **Wait long enough for the hydraulic oil to cool down. Then change the hydraulic oil.**

1. Park the machine on a firm, flat, and level surface.
2. Lower the lift arms to the ground, and stop the engine.

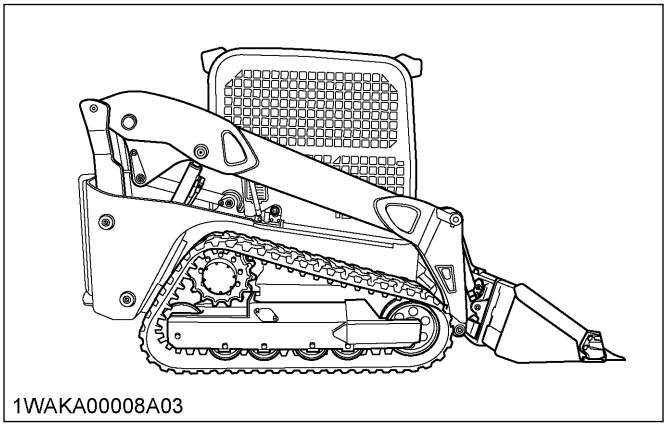
1WAKA00008A03

3. Remove the cover with drain plug in front of the machine, and drain the hydraulic oil.

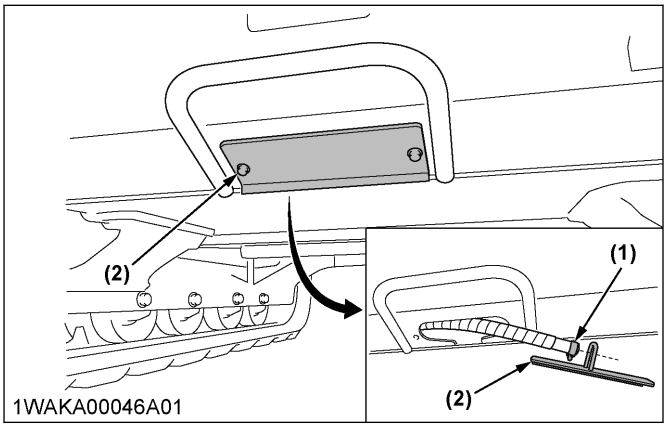

1WAKA00046A01

(1) Drain plug *(2) Cover*

4. Loosen the bolt, and remove the tank cover.
5. Remove the suction filter and replace with new one.
6. Loosen the set bolt first. Then remove the return filter and replace with new one.
7. Install the hydraulic cover.
8. Retighten the drain plug.

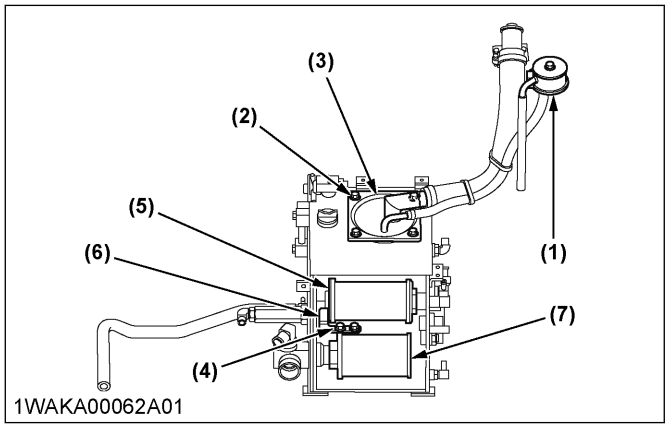

1WAKA00062A01

(1) Breather filter
(2) Bolt
(3) Cover
(4) Set bolt
(5) Return filter
(6) Filter stopper
(7) Suction filter

9. Fill the hydraulic oil through the oil-filling-plug opening on the top side of the tank pipe.
10. Let the engine run, and operate the lift arm and the bucket.
11. Then lower the lift arms slowly to the ground, and stop the engine.
12. Fill the hydraulic oil again up to the center of the gauge.

Hydraulic oil volumes	Hydraulic tank	20 L
	Whole oil volumes	48 L

13. Tighten the oil-filling-plug.

2. Hydraulic oil check with the hydraulic hammers

Changing the hydraulic oil after 1000 operating hours in the operator's manual is based on normal work. The following inspection measures are valid when using the hydraulic hammers.

- Changing and filling up of the hydraulic oil
  - Change the hydraulic oil more often when using the hydraulic hammers because the machine is subject to harder conditions than normal work.
  - Use only the recommended hydraulic oils that are mentioned in the operator's manual when changing or filling with the hydraulic oil.
  - When adding the hydraulic oil, do not mix oils of different makes
- Changing the return filter and the hydraulic oil
  - Change the return filter more often because of contamination resulting from the frequent assembly and disassembly of the hoses.
  - Use the correct replacement filter.
  - Change oil according to operating hours.

https://truckmanualshub.com/

		Hydraulic oil	Return filter	Suction filter
Normal work		every 1000 Hrs.	every 500 Hrs. (250 Hrs. after first operation)	every 1000 Hrs.
Hammer work portion	20%	every 800 Hrs.	every 300 Hrs.	
	40%	every 400 Hrs.		
	60%	every 300 Hrs.	every 100 Hrs.	
	more	every 200 Hrs.		

3. Adjusting the engine valve clearance

- Consult your local KUBOTA dealer for adjusting the engine valve clearance.

EVERY 1500 SERVICE HOURS

Carry out all 50, 100, 250, and 500 hour servicing at the same time.

1. Checking the injector tip

- Consult your local KUBOTA dealer for checking the injector tip.

2. Replacing the oil separator element

WARNING

To avoid personal injury or death:

- **Be sure to stop the engine before replacing the oil-separator-element.**

1. Remove the cover, and remove the oil-separator-element.
2. Wipe off the oil and the carbon in the case with a clean rag.
3. Fit a new oil-separator-element and new gasket.
4. Tighten the cover until a cover comes in contact with body.

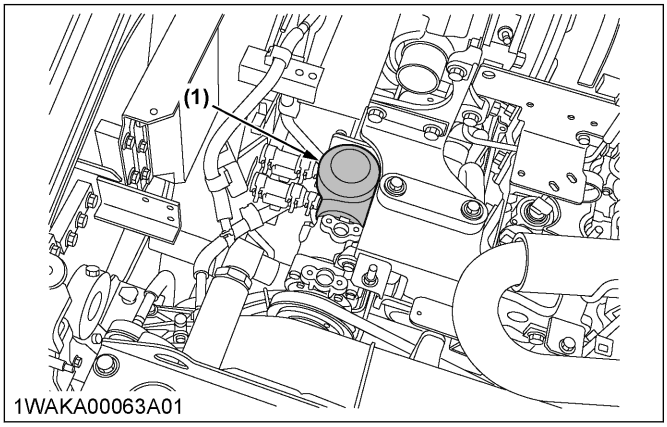

(1) Oil separator

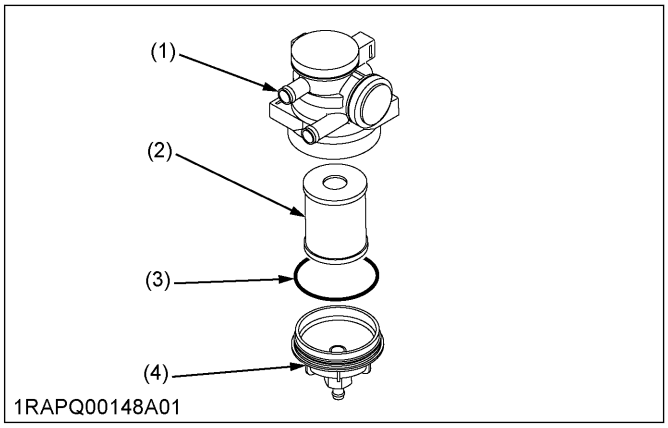

(1) Body
(2) Oil separator element
(3) Gasket
(4) Cover

3. Checking the EGR cooler

- Consult your local KUBOTA dealer for checking the EGR cooler.

EVERY 2000 SERVICE HOURS

Carry out all 50, 100. 200, 250, 500, and 1000 hour servicing at the same time.

1. Checking the alternator and the starter motor

- Consult your local KUBOTA dealer for checking the alternator and the starter motor.

EVERY 3000 SERVICE HOURS

Carry out all 50, 100, 200, 250, 500, 1000, and 1500 hour servicing at the same time.

1. Checking the EGR system

- Consult your local KUBOTA dealer for checking the EGR system.

2. Checking the turbocharger

- Consult your local KUBOTA dealer for checking the turbocharger.

3. Cleaning the diesel-particulate-filter (DPF)

IMPORTANT :

- **To clean up the DPF, a specific machine is required. Do not clean the DPF in any other way, such as disassembling, shaking, and heating as toxic chemicals may be present inside of the DPF.**

The longer operating the DPF, the more ash (burnt residue) is collected in the DPF. Too much ash build-up adversely affects the DPF performance.

- Consult your local KUBOTA dealer to clean up the DPF.

ANNUAL SERVICING

1. Checking the air-conditioner pipes and hoses

WARNING

To avoid personal injury or death:

- **Do not touch the air-conditioner hoses or the heater with your hand. You may get burned.**

1. Check to see that all lines and hose clamps are tight and not damaged.
2. If hoses and clamps are found worn or damaged, replace or repair them at once.
   Consult your local KUBOTA dealer for checking the air-conditioner pipes and hoses.

2. Checking the exhaust manifold for cracks, gas, leakage, and mounting screw

- Consult your local KUBOTA dealer for checking the exhaust manifold for cracks, gas, leakage, and mounting screw.

3. Checking the intake air line for air leaks

- Consult your local KUBOTA dealer for checking the intake air line for air leaks.

4. Checking the boost sensor and the AFS (air-flow-sensor)

- Consult your local KUBOTA dealer for checking the boost sensor and the AFS.

5. Checking the condition of the diesel-particulate-filter (DPF) muffler

- Consult your local KUBOTA dealer for checking the condition of the DPF muffler.

6. Checking the diesel-particulate-filter (DPF) differential pressure sensor and piping for gas leak

- Consult your local KUBOTA dealer for checking the DPF differential pressure sensor and the DPF piping for gas leak.

7. Checking the diesel-particulate-filter (DPF) exhaust gas temperature sensor

- Consult your local KUBOTA dealer for checking the DPF exhaust gas temperature sensor.

8. Checking the EGR piping for gas leak

- Consult your local KUBOTA dealer for checking the EGR piping for gas leak.

9. Checking the antifrost heater for oil separator (CCV heater)

- Consult your local KUBOTA Dealer for checking the antifrost heater for oil separator (CCV heater).

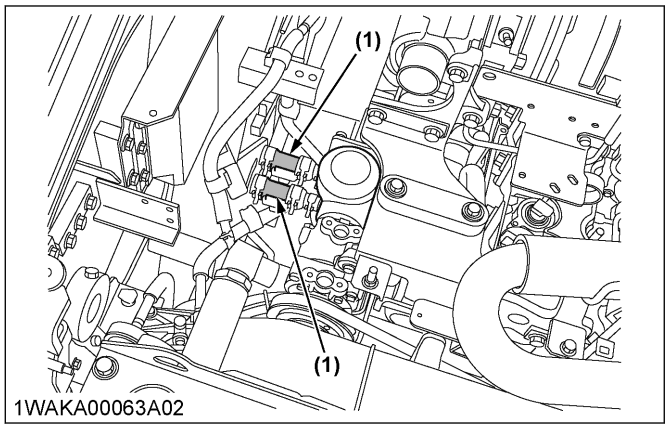

(1) CCV heater

BIENNIAL SERVICING

1. Changing the radiator coolant

WARNING

To avoid personal injury or death:

- **When using the antifreeze, use protective clothing such as rubber gloves (antifreeze contains poison).**
- **If you have swallowed the antifreeze, seek medical attention at once.**
- **When the antifreeze comes in contact with the skin or clothing, wash it off immediately.**

- **Do not mix different types of antifreeze. The mixture can produce a chemical reaction causing harmful substances or vapors.**
- **Antifreeze is extremely flammable and explosive under certain conditions. Keep fire and children away from the antifreeze.**
- **When draining fluids from the engine, collect fluids with a some container underneath the engine body.**
- **Do not pour waste onto the grounds, down a drain, or into any water source.**
- **Follow the relevant environmental-protection-regulations when disposing of the antifreeze.**
- **Antifreeze if swallowed is poisonous to people, animals, and birds.**

1. Park the machine on a firm, flat and, level surface.
2. Lower the lift arms to the ground.
3. Stop the engine
4. Then remove the key and wait until the engine has cooled down completely.

1. Tilt the radiator.
2. Open the drain plug on the bottom of the radiator and drain coolant completely. if a recovery tank is equipped, disconnect the line from the tank floor and then open the drain shutoff-valve.
3. To clean, rinse the radiator with water.
4. Close the drain plug and fill the radiator and the recovery tank with coolant fluid.
5. Let the engine idle for about five min..
6. Stop the engine and remove the key.
7. Check the coolant level of recovery tank and add the coolant if necessary.
   The machine has been shipped filled with 50% antifreeze solution.

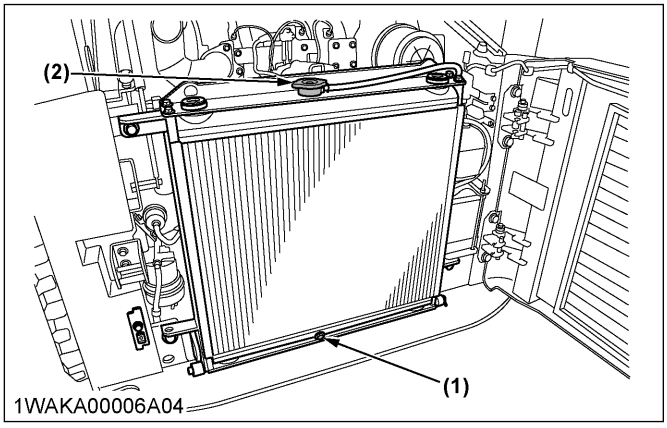

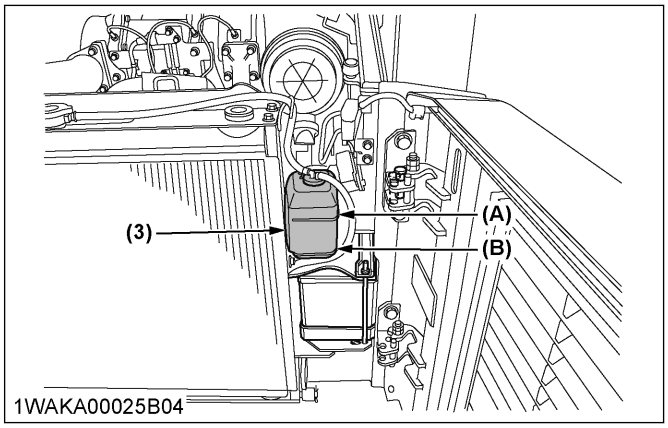

(1) Drain plug
(2) Radiator cap
(3) Recovery tank
(A) FULL
(B) LOW

Cooling water	9.5 L

IMPORTANT :
- **Do not operate the engine without coolant.**
- **To fill the radiator system and the recovery tank, use fresh water and antifreeze fluid.**
- **When the antifreeze is mixed with water, the antifreeze mixing ratio must be less than 50%.**
- **Tighten the radiator cap properly. If the cap is loosely or not properly fitted, overheating of the engine can result due to coolant fluid loss.**

2. Replacing the fuel hose

1. Replace the hoses and clamps according to Checking the fuel line and the intake air line on page 96.

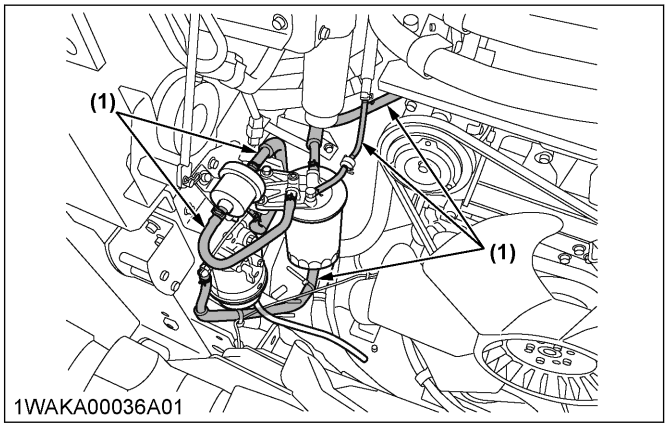

(1) Fuel lines

3. Replacing the intake air line

1. Replace the hose and clamps according to Checking the fuel line and the intake air line on page 96.

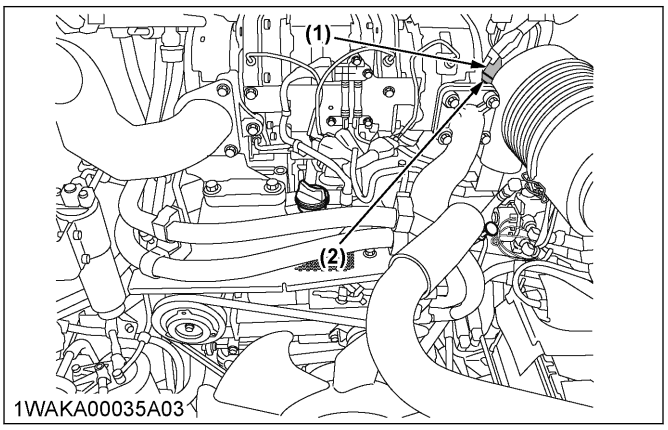

(1) Hose *(2) Hose clamps*

4. Replacing the radiator hoses

WARNING

To avoid personal injury or death:

- **Replace the radiator hoses and the hose clamps every two years. If the hoses are swollen, hard, or cracked, you must replace them earlier than specified (earlier than 2 years).**

1. Replace the radiator hoses according to the following figure.

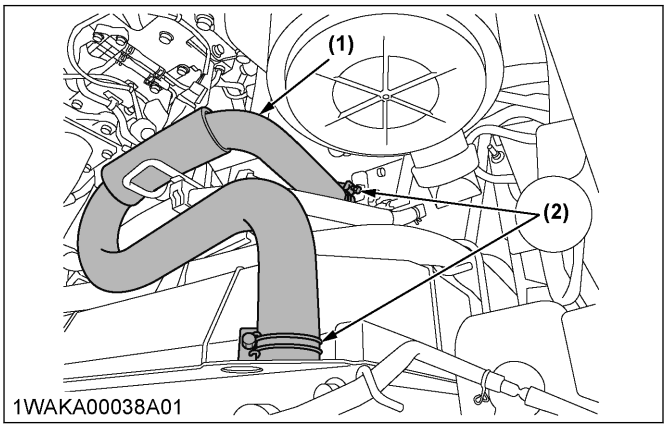

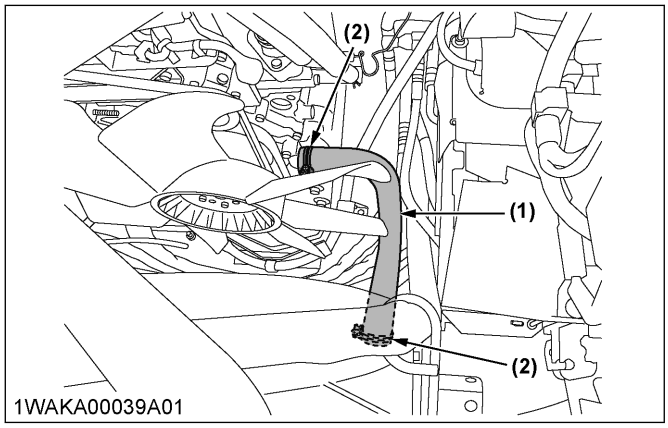

(1) Radiator hose *(2) Hose clamps*

5. Replacing the air-conditioner pipes and hoses

WARNING

To avoid personal injury or death:

- **Do not touch the water hoses or the heater with your hand. You may get burned.**

Replace air-conditioner pipes and hoses every two years.

1. If the hoses or pipes of the air-conditioner are swollen, hard or cracked, replace them.
   Consult your local KUBOTA dealer for replacing the pipes and hoses of the air-conditioner.

6. Replacing the closed breather related rubber piping

- Consult your local KUBOTA dealer for replacing the closed-breather-related-rubber-piping.

7. Replacing the diesel-particulate-filter (DPF) differential pressure sensor rubber piping (front and back)

- Consult your local KUBOTA dealer for the DPF-differential-pressure-sensor-rubber-piping (front and back).

8. Replacing the suction pipe downstream the AFS (air-flow-sensor)

- Consult your local KUBOTA dealer for replacing the suction pipe downstream the AFS.

9. Replacing the boost sensor pressure rubber piping

- Consult your local KUBOTA dealer for replacing the boost-sensor-pressure-rubber-piping.

10. Replacing the EGR cooler hose

- Consult your local KUBOTA dealer for replacing the EGR-cooler-hose.

SERVICING AS REQUIRED

1. Checking the amount of refrigerant gas

WARNING

To avoid personal injury or death:

- **Liquid contact with eyes or skin may cause frostbite.**
- **In the event of a leakage, wear safety goggles. Escaping refrigerant can cause severe injuries to eyes.**
- **In contact with a flame, R134a refrigerant emits a toxic gas.**
- **Do not disconnect any part of the refrigeration circuit of the air-conditioning system. Consult your local KUBOTA dealer for assistance and service of refrigerant.**

If the air-conditioner performance is reduced, check the following points 1.-2.

1. Air-conditioner condenser is clogged.
2. Air-conditioner belt is loosened.

If there is nothing unusual with the above points, a shortage of refrigerant is possible. Too short refrigerant may cause a poor performance of the air-conditioner. Consult your local KUBOTA dealer for servicing and replenishment.

2. Draining the water separator in case warning against water of the fuel filter

1. If the error code **[E:9120]** of the water separator appears on the meter panel, immediately drain the water separator according to the detailed procedure in Draining the water separator on page 90.

   IMPORTANT :
   - **If you don't drain the water separator immediately after the alarm, the engine may be seriously damaged.**
   - **Without the water separator drained, the cleaning efficiency of the DPF (3000 hours) will be reduced and the DPF longevity will be shorter than expected.**

3. Purging of the fuel system

1. Fill up the machine with fuel.
2. Turn the starter key to the **[RUN]** position.
   The fuel system will automatically be purged of air within one minute.

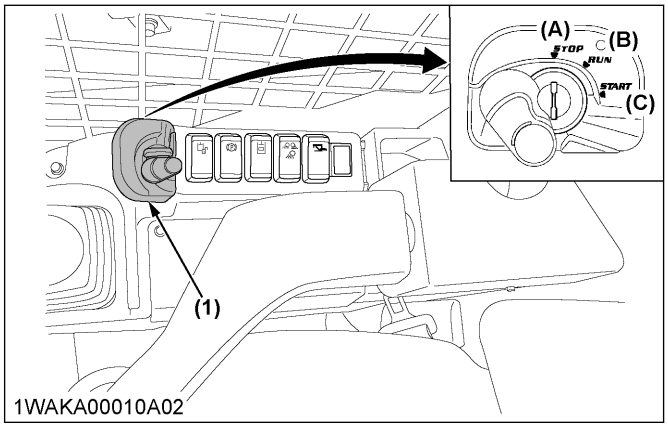

(1) Starter switch
(A) STOP
(B) RUN
(C) START

IMPORTANT :

- **If the purging was insufficient, the engine dies after starting. In this case repeat step 2. again.**

TRACK

ADJUSTING THE TRACKS

IMPORTANT :

- **Make sure that no obstacles such as stones are caught in the track. Remove obstacles such as stones before adjusting the track tension.**

1. Adjust the track tension properly.
   - **To loosen the tracks**

WARNING

To avoid personal injury or death:

- **Do not loosen the grease fitting completely or too quickly. Otherwise grease under high pressure in the tension cylinder could squirt out.**
- **Do not work under the machine.**

   a. Loosen the bolts, and remove the cover.
   b. Using a socket wrench, loosen the grease fitting a few turns.
   - **To tension the tracks**
   a. Loosen the bolt, and remove the cover.
   b. Apply grease into the grease fitting.

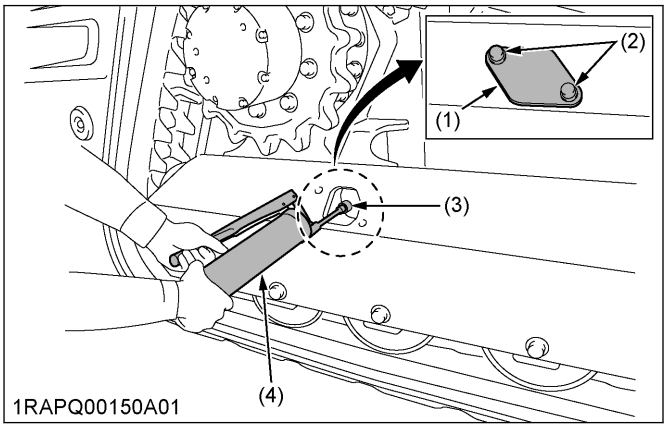

(1) Cover
(2) Bolt
(3) Grease fitting
(4) Grease gun

2. Check the track tension.

WARNING

To avoid personal injury or death:

- **When lifting the machine itself with an attachment, place the jack stands under the main frame to prevent the machine from turning over.**

   a. Put the machine on the jack stand.

DANGER

To avoid personal injury or death:

- **Do not work under the machine when putting the machine on the jack stand.**
- **For your safety, do not rely on hydraulically supported devices. They may leak down and suddenly drop or be accidentally lowered.**

   b. Lift the track from the ground as shown in the following figure.

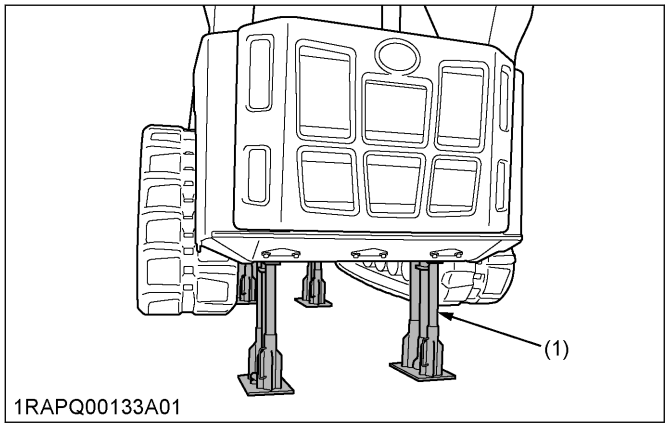

(1) Jack stand

   c. The track tension is correct if the distance of clearance between the outer end of the track roller and the track interior surface (A) corresponds to the dimension specified in the following table.

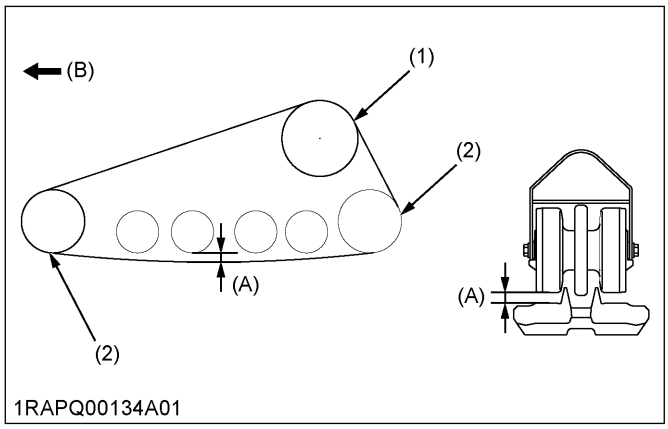

(1) Drive sprocket
(2) Idler
(A) Clearance between outer end of track roller and track interior surface
(B) Front

Clearance between outer end of track roller and track interior surface (A)	20 mm to 30 mm

https://truckmanualshub.com/

IMPORTANT :
- **If the tracks are too tight, wear is increased.**
- **If the tracks are too loose, the track pads may collide with the sprocket and wear is increased.**
  The track may dislocate or come off.
- **If the track tension is high due to sticking mud, remove mud from the track.**

3. After adjustment is completed, tighten the grease fitting using the socket wrench.
   You must keep the tightening torque as follows.

Tightening torque	Between 98 N·m to 108 N·m

IMPORTANT :
If the seam of the track is positioned incorrectly, the tracks will be tensioned too loosely, and a further readjustment will be necessary.
1. **Rotate the track after adjustment one to two times to check the tension.**
2. **Additionally follow the following points when adjusting rubber tracks.**
   - **Check track tension 50 hours after initial use and readjust if necessary.**
   - **Check and adjust thereafter every 50 service hours.**

IMPORTANT :
- **Clean the track after every use.**

FUSE

FUSES

WARNING

To avoid personal injury or death:

- **When changing fuse, stop the engine and turn the key in the [STOP] position.**

1. Replacing the fuse

1. Detach the cover, and remove the cover of the fuse box.
2. Replace the burnt out fuse with a fuse of the same capacity.

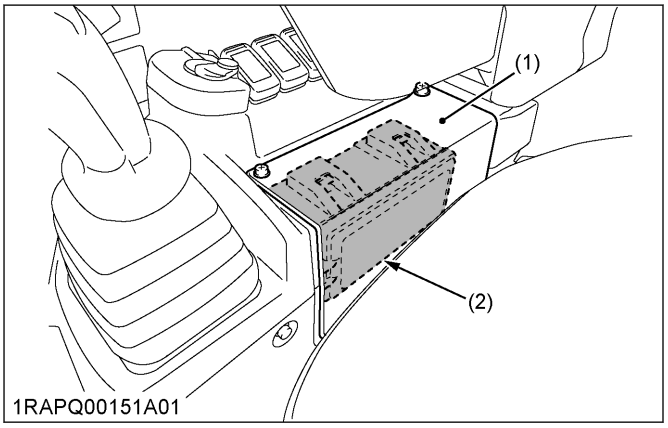

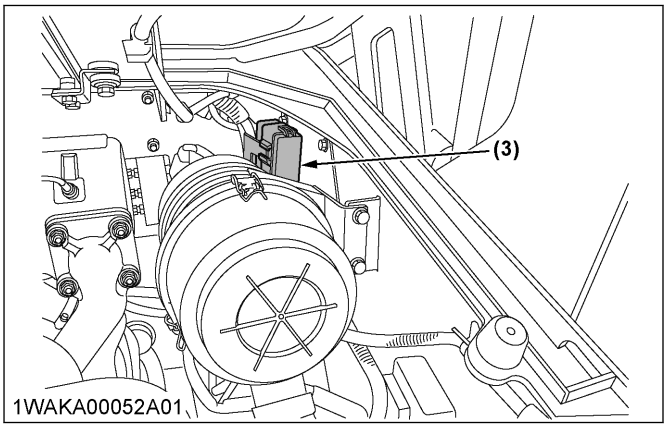

(1) Cover
(2) Fuse box
(3) Fuse and relay box

2. Fuse capacities and circuits

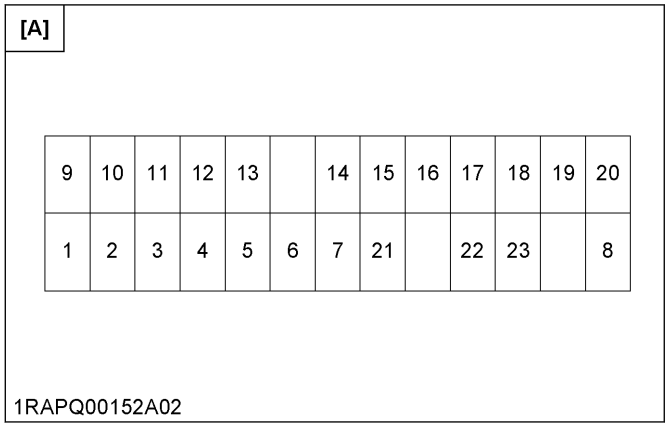

[A] Fuse box

No.	Protected circuit	Capacity
1	Room light / Strobe light	5 A
2	Front work lights	20 A
3	Rear work lights	15 A
4	Horn	5 A
5	Instrument panel (+B)	5 A
6	AUX electrical power	15 A
7	ECU (+B)	5 A
8	Starter	5 A
9	Indicator (Air cleaner)	5 A
10	Switch (AC)	5 A
11	ECU (AC)	20 A
12	Fuel pump	5 A
13	Control element	5 A
14	Arm harness	20 A
15	Electrical outlet	15 A
16	Attachments-1	-
17	Attachments-2	20 A
18	Air ride seat	20 A
19	Backup alarm	5 A
20	Engine ECU(AC)	5 A

[Closed cab model]

No.	Protected circuit	Capacity
21	Blower motor	20 A
22	Wiper	15 A
23	Compressor clutch	10 A

NOTE :

- **The fuse of No.16 is not set at the factory. When using the attachments-1, contact your KUBOTA dealer.**

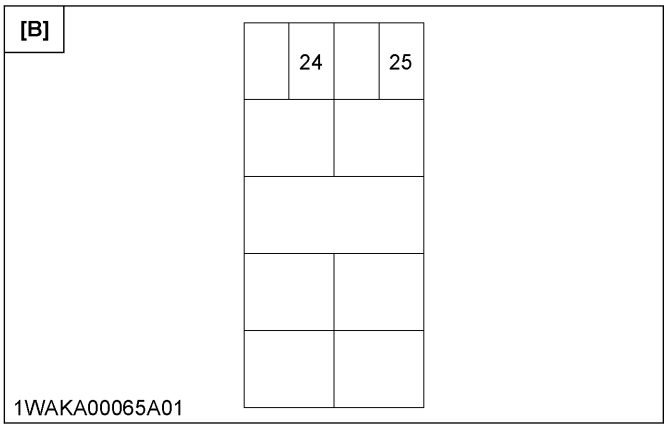

[B] Fuse and relay box

No.	Protected circuit	Capacity
24	CCV heater	20 A
25	Engine elements	10 A

3. Electrical outlet

Max power is less than 120 W.
If you need another auxiliary electric, contact your KUBOTA dealer for details.

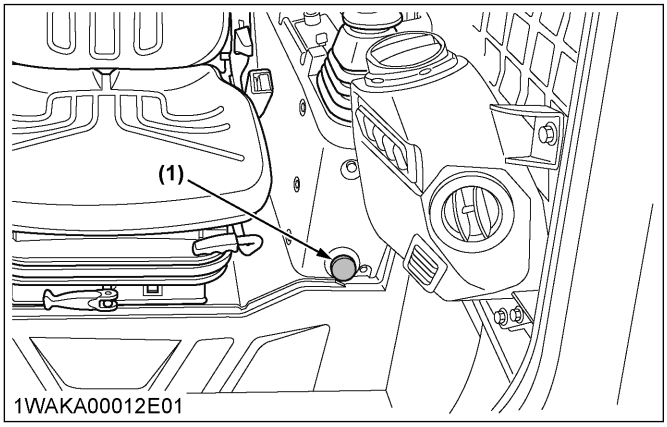

(1) Electrical outlet

4. Slow blow fuse

Slow-blow-fuse protects the electrical circuits.

If the slow-blow-fuse is blown, check the electrical circuits for trouble and then replace with a new compatible slow-blow-fuse.
(See Replacing the bolted slow blow fuse on page 113)

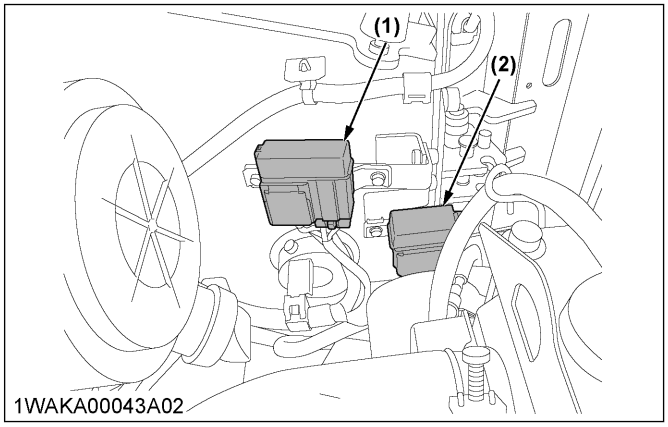

(1) Slow blow fuse A *(2) Slow blow fuse B*

Slow blow fuse A

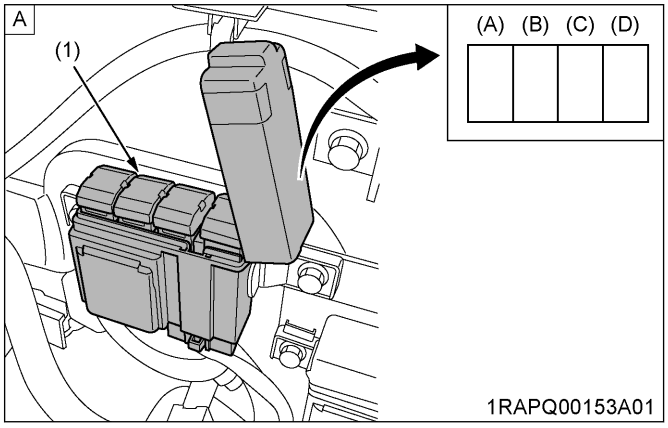

(1) Slow blow fuse A

[Open cab model]

No.	Protected circuit	Capacity	Fuse type
(A)	Engine	30 A	Bolted
(B)	Main	60 A	Bolted
(C)	CCV heater	30 A	Plug-in
(D)	(Blank)	-	-

[Closed cab model]

No.	Protected circuit	Capacity	Fuse type
(A)	Engine	30 A	Bolted
(B)	Main	60 A	Bolted
(C)	Closed cab	50 A	Plug-in
(D)	Condenser motor	20 A	Plug-in

Slow blow fuse B

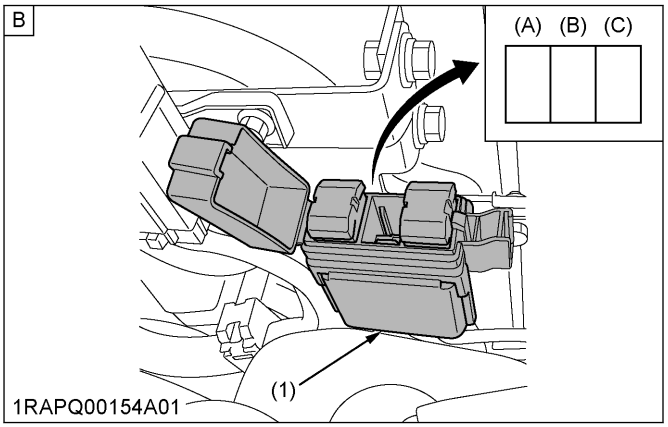

(1) Slow blow fuse A

No.	Protected circuit	Capacity	Fuse type
(A)	Glow plugs	60 A	Bolted
(B)	(Blank)	-	-
(C)	Alternator	100 A	Bolted

5. Replacing the bolted slow blow fuse

1. Disconnect the negative cord of the battery.
2. Remove the slow-blow-fuse-case.

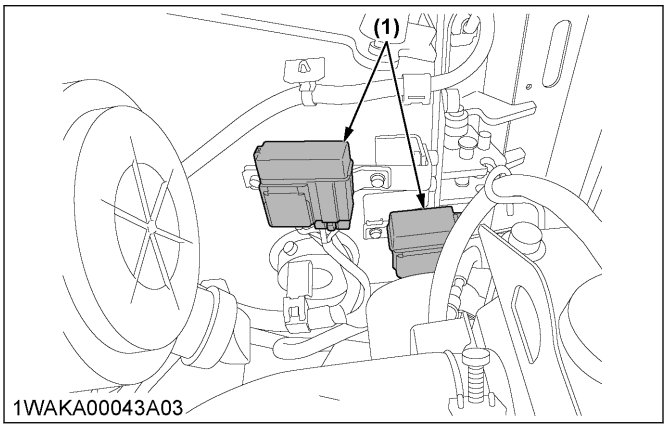

(1) Slow blow fuse case

3. Open the slow-blow-fuse-case-cap and the cover, and then remove the bolts and draw out the bolted-slow-blow-fuse.

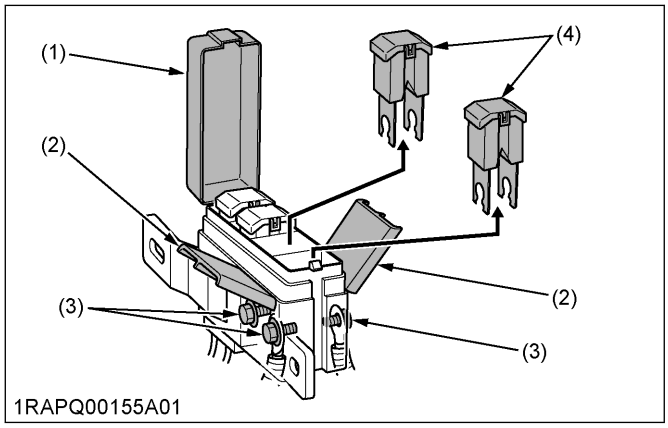

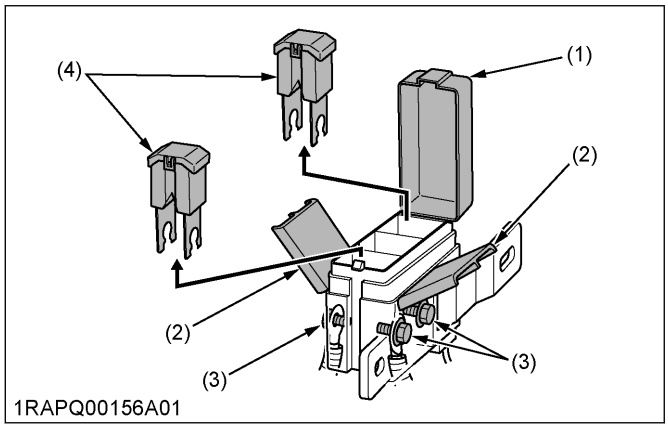

(1) Slow blow fuse case cap
(2) Cover
(3) Bolt
(4) Bolted slow blow fuse

https://truckmanualshub.com/

TROUBLESHOOTING

TROUBLESHOOTING OF THE ENGINE AND OTHER SYSTEMS

If the machine does not perform as expected, or if trouble arises, see the following table and undertake appropriate measures.

Trouble		Cause	Countermeasure
Engine	Starting difficulties	Fuel is too viscous.	• Check the fuel tank and the filter. • Remove the impurities and the water. • If necessary, replace the filter.
		Air or water in the fuel system	• Remove the water from the fuel tank. • Check the fuel-pipe-joint-bolts and nuts for looseness. • Purging of the fuel system as the fuel filter and the supply pump. See Purging of the fuel system on page 108.
		Fuse is blown out.	• Check the fuse and replace it with a same-capacity one as required.
		Oil viscosity is too high the engine runs sluggishly in winter.	• Use the engine block heater (option).
		Battery is almost dead causing insufficient compression.	• Recharge the battery.
	Insufficient engine power	Low fuel level	• Check the fuel and add it if necessary.
		Clogged air cleaner	• Clean the air-cleaner-element.
	Engine suddenly stops.	Low fuel level	• Check the fuel and add it if necessary. • Purge the fuel system.
	Abnormal exhaust gas color	Use of poor fuel	• Use the prescribed fuel.
		Too much engine oil	• Drain engine oil to prescribed level.
	Water temperature in red zone (Overheating)	Flawed seal of the water pump	• Replace the seal of the water pump.
		Worn or torn V-belt	• Adjust or replace the V-belt.
		Thermostat is flawed.	• Replace the thermostat.
		Coolant level too low	• Fill the recovery tank with the coolant to prescribed level.
		Radiator grill or fins are clogged.	• Clean the radiator grill or fins.
		Coolant is contaminated with rust from the cylinder head or crank case.	• Replace coolant fluid and add anti-rust.
		Flawed radiator cap (Evaporation)	• Replace the radiator cap.
		Corroded coolant pipes	• Clean or replace the coolant pipes.
		Continuous operation under full load	• Reduce the load.
		Cylinder-head-gasket is damaged (Coolant loss).	• Replace the cylinder-head-gasket.
		Engine oil level too low	• Fill the engine with the engine oil to prescribed level.
		Maladjustment of the fuel injection	• Readjust the fuel injection in ignition timing.
		Use of poor fuel	• Use the prescribed fuel.
Hydraulic System	Lift arms, bucket, or drive unit power is too low.	Hydraulic oil level too low	• Add the hydraulic oil to the prescribed level.
		Leakages of the hoses and / or the joints	• Replace the hose and/or the joint.
		Clogged oil filter	• Replace the oil filter.
	Lift arms, bucket, or drive unit can not move.	Armrest is in the raised position.	• Lower the armrests.
		Operator is not in the operator's seat.	• Sit in the operator's seat.

(Continued)

https://truckmanualshub.com/

Trouble		Cause	Countermeasure
Hydraulic System	Lift arms, bucket, or drive unit can not move.	Hydraulic-unlock-switch is not pressed.	• Press the hydraulic-unlock-switch.
Drive System	Deviation of drive direction	Blocked through the stones	• Remove the stones.
		Track too loose or too tight	• Adjust the track accordingly.
Electric system	⚠ mark appears in the instrument panel.	Electric system is malfunctioning.	• Check the error code number of LIST OF THE ERROR CODE NUMBERS on page 116 and contact your local dealer.

https://truckmanualshub.com/

LIST OF THE ERROR CODE NUMBERS

◎: Sure to happen
○: May happen

Error Code Number	Problem or Failure	Machine condition				Provisional measure and Correction
		Engine performance			Machine performance	
		Acceleration limited	Engine output limited	Engine stopped		
E:001	CAN communication	-	-	-	-	Immediately contact your local dealer.
E:004	Hydraulic oil temperature advance warning	-	-	-	-	Stop the engine and check the level in the hydraulic oil tank, for a hydraulic oil leak and grill or oil cooler is clogged. Fill to proper level.
E:005	Hydraulic oil temperature has reached a specified level.	◎	-	-	-	Stop the engine and check the level in the hydraulic-oil-tank and for a hydraulic oil leak. Fill the hydraulic-oil-tank with the hydraulic oil to proper level. If the error code number "E:005" still appears,immediately contact your local dealer.
E:008	Fuel sensor system	-	-	-	The fuel level indicator does not appear on the meter. The other functions of the machine are still operative.	Immediately contact your local dealer.
E:009	Acceleration system (hand)	◎	-	-	The accelerator fails, but the other functions of the machine are still operative. The machine is operative at the low idling rpm.	Move the machine to a place suited for repair. Immediately contact your local dealer.
E:010	High-speed switching system	-	-	-	The machine still runs at low speed without switching to high speed. The other functions of the machine are still operative.	Immediately contact your local dealer.
E:011	Parking brake system	-	-	-	The machine fails to move.	Immediately contact your local dealer.
E:012	Float switching system	-	-	-	The float mode is not turned on. The other functions of the machine are still operative.	Immediately contact your local dealer.
E:013	Hydraulic lock system	-	-	-	The attachment fails to function, but the machine can move.	Move the machine to a place suited for repair. Immediately contact your local dealer.
E:014	Hydraulic oil temperature is below a specified level.	-	-	-	The AUX high flow range is not available.	Raise the hydraulic oil temperature. Then if the error code number "E:014" is not solved, immediately contact your local dealer.
E:015	Hydraulic quick-hitch system	-	-	-	The hydraulic quick-hitch system is not turned on. The other functions of the machine are still operative.	Immediately contact your local dealer.

(Continued)

https://truckmanualshub.com/

Error Code Number	Problem or Failure	Machine condition				Provisional measure and Correction
		Engine performance			Machine performance	
		Acceleration limited	Engine output limited	Engine stopped		
E:016	Auxiliary hydraulic control system (Control switch on the knob)	-	-	-	The auxiliary-hydraulic-control-system is not turned on. The other functions of the machine are still operative.	Immediately contact your local dealer.
E:018	Auxiliary hydraulic control system (Solenoid valve for Rightward SW)	-	-	-	The auxiliary-hydraulic-control-system is not turned on. The other functions of the machine are still operative.	Immediately contact your local dealer.
E:019	Auxiliary hydraulic control system (Solenoid valve for Leftward SW)	-	-	-	The auxiliary-hydraulic-control-system is not turned on. The other functions of the machine are still operative.	Immediately contact your local dealer.
E:020	Electronic travel torque management system	-	-	-	The machine fails to move.	Immediately contact your local dealer.
E:021	5 V power supply of the sensor is short-circuited.	-	-	-	The majority of systems fail. • The engine may be started and the machine may move. Do not try any jobs. Just move the machine to a safe place.	Immediately contact your local dealer.
E:023	Error code number "E:023" appears if a jumper cable is connected to a 24 V battery or improper device to jump start the engine	-	-	-	Immediately stop using connected device, and disconnect the 24 V battery. When the engine gets restarted and is running with no error code number appearing, it means there is no problem.	If the error code number "E:023" still appears, immediately contact your local dealer.
E:024	Hydraulic temperature sensor	-	-	-	The AUX high flow mode is not available.	Immediately contact your local dealer.
E:026	CRS CAN communication	○	○	-	-	Immediately contact your local dealer.
E:028	Acceleration system (foot)	◎	-	-	The accelerator fails, but the machine's other functions are still operative. The machine is operative at the idling rpm.	Move the machine to a place suited for repair. Immediately contact your local dealer.
E:9000	Requirement for the DPF regeneration.	-	-	-	DPF must be regenerated, but low engine rpm is unable to start the DPF regeneration.	Rev up the engine rpm and start the DPF regeneration. If the error code number "E:9000" still appears, immediately contact your local dealer.
E:9001	Requirement for the DPF regeneration.	-	◎	○	DPF must be regenerated, but low engine rpm is unable to start the DPF regeneration. If you leave the machine with the hydraulic locked, the engine can stop automatically.	Rev up the engine rpm and start the DPF regeneration. If the error code number "E:9001" still appears, immediately contact your local dealer.
E:9002	DPF is regenerated.	-	◎	-	-	-
E:9003	Requirement for the DPF regeneration.	-	◎	-	DPF must be regenerated, but unable to start the DPF regeneration.	Immediately contact your local dealer.
E:9004	Requirement for the DPF replacement.	-	◎	-	You must replace the DPF.	Immediately contact your local dealer.

(Continued)

https://truckmanualshub.com/

Error Code Number	Problem or Failure	Machine condition				Provisional measure and Correction
		Engine performance			Machine performance	
		Acceleration limited	Engine output limited	Engine stopped		
E:9006	Requirement for the DPF regeneration.	-	-	-	DPF must be regenerated, but unable to start the DPF regeneration because the inhibit switch is activated.	Move the machine to a safe place and release the inhibit switch to start the DPF regeneration. If the error code number "E:9006" still appears,immediately contact your local dealer.
E:9007	Requirement for the DPF regeneration.	-	◎	○	DPF must be regenerated, but unable to start the DPF regeneration because the inhibit switch is activated. If you leave the machine with the hydraulic locked, the engine can stop automatically.	Restart the engine, move the machine to a safe place, and release the inhibit switch to start the DPF regeneration. If the error code number "E:9007" still appears, immediately contact your local dealer.
E:9010	Engine stop for DPF	-	-	◎	The DPF regeneration fails to function. Leave the machine with the hydraulic system locked, by which the engine stops itself.	Restart the engine, move the machine to a safe place, and release the inhibit switch to start the DPF regeneration. If the error code number "E:9010" still appears, immediately contact your local dealer.
E:9100	Rpm sensor system	○	○	-	-	Immediately contact your local dealer.
E:9101	Fuel or rail pressure system	◎	◎	◎	-	Immediately contact your local dealer.
E:9102	SCV system	◎	◎	-	-	Immediately contact your local dealer.
E:9103	Intake air temperature sensor system	-	-	-	-	Immediately contact your local dealer.
E:9104	Coolant temperature system	◎	◎	-	-	Immediately contact your local dealer.
E:9105	Fuel temperature sensor system	-	-	-	-	Immediately contact your local dealer.
E:9106	Injector system	◎	◎	○	-	Immediately contact your local dealer.
E:9107	Intake air pressure sensor system	-	○	-	-	Immediately contact your local dealer.
E:9108	Battery voltage system	◎	◎	○	-	Immediately contact your local dealer.
E:9109	Sensor voltage system	◎	◎	○	-	Immediately contact your local dealer.
E:9110	Main relay system	-	-	-	-	Immediately contact your local dealer.
E:9112	Atmospheric pressure sensor system	-	○	-	-	Immediately contact your local dealer.
E:9113	EGR valve system	-	◎	-	-	Immediately contact your local dealer.

(Continued)

https://truckmanualshub.com/

Error Code Number	Problem or Failure	Machine condition				Provisional measure and Correction
		Engine performance			Machine performance	
		Acceleration limited	Engine output limited	Engine stopped		
E:9114	Pre overheat	-	◎	-	-	For correction, see Coolant temperature gauge on page 31. Stop the engine and check the grill or oil cooler is clogged. If the error code number "E:9114" still appears, immediately contact your local dealer.
E:9115	Engine overheat warning and Emission level caution	-	◎	-	-	For correction, see Coolant temperature gauge on page 31. If the error code number "E:9115" still appears, immediately contact your local dealer.
E:9117	Air heater system	-	-	-	-	Immediately contact your local dealer.
E:9118	Engine oil pressure system	-	-	-	-	Stop the engine and check the engine oil level. If the error code number "E:9118" still appears, immediately contact your local dealer.
E:9119	Charging system failure	-	-	-	-	Stop the engine and check the V-belt. If the error code number "E:9119" still appears, immediately contact your local dealer.
E:9120	Water separator warning	-	-	-	-	Stop the engine and check and drain the water separator. If the error code number "E:9120" still appears, immediately contact your local dealer.
E:9121	Engine ECU	○	○	○	-	Immediately contact your local dealer.
E:9122	ECU communication failure	○	○	-	-	Immediately contact your local dealer.
E:9200	Mass air flow sensor system	-	○	-	-	Immediately contact your local dealer.
E:9203	Intake air throttle	-	-	-	-	Immediately contact your local dealer.
E:9204	Differential pressure sensor system	-	-	-	-	Immediately contact your local dealer.
E:9205	Exhaust temperature sensor (DOC inlet)	-	-	-	-	Immediately contact your local dealer.
E:9206	Exhaust temperature sensor (DOC outlet)	-	-	-	-	Immediately contact your local dealer.
E:9207	Exhaust temperature sensor (DPF outlet)	-	-	-	-	Immediately contact your local dealer.
E:9208	All the exhaust temperature sensors break down at once.	-	-	-	-	Immediately contact your local dealer.

(Continued)

https://truckmanualshub.com/

Error Code Number	Problem or Failure	Machine condition				Provisional measure and Correction
		Engine performance			Machine performance	
		Acceleration limited	Engine output limited	Engine stopped		
E:9211	DOC response is unusual.	◎	◎	-	-	Immediately contact your local dealer.
E:9212	DPF regeneration timeout	-	-	-	-	Immediately contact your local dealer.
E:9213	DPF regeneration Error (Water temperature is low)	-	-	-	-	Immediately contact your local dealer.
E:9214	DPF regeneration cycle occurs too often.	-	◎	-	-	Immediately contact your local dealer.
E:9300	Engine fuel system (P/L)	◎	◎	-	-	Check the fuel level and see if the fuel filter is clogged. If the error code number "E:9300" still appears, immediately contact your local dealer.
E:9301	Engine fuel system (rail pressure)	◎	◎	-	-	Check the fuel level and see if the fuel filter is clogged. If the error code number "E:9301" still appears, immediately contact your local dealer.
E:9302	Engine fuel system (leakage)	◎	◎	-	-	Check the fuel level and see if the fuel filter is clogged. If the error code number "E:9302" still appears, immediately contact your local dealer.
E:9303	Engine fuel system (SCV)	◎	◎	-	-	Check the fuel level and see if the fuel filter is clogged. If the error code number "E:9303" still appears, immediately contact your local dealer.
E:9304	Engine fuel system (supply pump).	◎	◎	-	-	Check the fuel level and see if the fuel filter is clogged. If the error code number "E:9304" still appears, immediately contact your local dealer.
E:9305	Engine air intake system (poor air intake)	◎	◎	-	-	Check to see if any air-intake hose is disconnected and if the air-cleaner-element is clogged. If the error code number "E:9305" still appears, immediately contact your local dealer.
E:9306	Engine air intake system (boost pressure too low)	◎	◎	-	-	Check to see if any air-intake hose is disconnected and if the air-cleaner-element is clogged. If the error code number "E:9306" still appears, immediately contact your local dealer.

(Continued)

https://truckmanualshub.com/

Error Code Number	Problem or Failure	Machine condition				Provisional measure and Correction
		Engine performance			Machine performance	
		Acceleration limited	Engine output limited	Engine stopped		
E:9307	Engine exhaust temperature (DOC inlet) is not as specified.	-	-	◎	-	Check the fuel level and see if the fuel filter is clogged. Check to see if any air-intake hose is disconnected and if the air-cleaner-element is clogged. If the error code number "E:9307" still appears, immediately contact your local dealer.
E:9308	Engine exhaust temperature (DOC outlet) is not as specified.	-	-	◎	-	Check the fuel level and see if the fuel filter is clogged. Check to see if any air-intake hose is disconnected and if the air-cleaner-element is clogged. If the error code number "E:9308" still appears, immediately contact your local dealer.
E:9309	Engine exhaust temperature (DPF outlet) is not as specified.	-	-	◎	-	Check the fuel level and see if the fuel filter is clogged. Check to see if any air-intake hose is disconnected and if the air-cleaner-element is clogged. If the error code number "E:9309" still appears, immediately contact your local dealer.
E:9310	Starter turn-on limited	-	-	◎	-	The starter is limited for its activation in response to any other error
E:9400	Other failures	○	○	○	-	Immediately contact your local dealer.

https://truckmanualshub.com/

COLD WEATHER

Operation of the machine under cold weather conditions

PREPARATION FOR OPERATION OF THE MACHINE IN COLD WEATHER

- Replace the engine oil and hydraulic oil with those of viscosity suitable for cold weather.
- In cold weather, the battery power drops, and the battery fluid may freeze if the battery is not sufficiently charged. To prevent the battery fluid from freezing, be sure to keep the battery charged at least 80% or more of its capacity after operation of the machine.
  To ease next start of the machine, it is recommended to keep the battery stored in closed or heated rooms.
- Add anti-freeze to coolant in the radiator and recovery tank, if the ambient temperature is expected to drop as follows.

Ambient temperature	below 0 ℃

Mixing ratio of water and anti-freeze depends on the expected ambient temperature.
When mixing, stir anti-freeze up well, and then fill it into the radiator.

Mixing ratio between water and antifreeze

Ambient temperature	℃	-5	-10	-15	-20	-25	-30	-35
Antifreeze	%	30	30	30	35	40	45	50
Water	%	70	70	70	65	60	55	50

IMPORTANT :
- **Use permanent anti-freeze or long-life coolant.**
- **Drain the coolant completely and clean the inside of the radiator, then fill with the water and anti-freeze mixture.**
- **The anti-freeze acts as an anti-corrosive, it is not necessary to add an additive to the water and antifreeze mixture.**
- **See Checking the coolant level on page 87 for radiator fill volumes.**
- **See Starting the engine under cold conditions on page 55.**

STORING THE MACHINE AFTER COMPLETION OF WORK IN COLD WEATHER

1. Clean the machine thoroughly after work, and wipe dry.
   Otherwise mud and earth on the tracks could freeze if the ambient temperature drops as follows. Operation of the machine is then not possible.

Ambient temperature	below 0 ℃

2. Store the machine in a dry place. If you can not store the machine in a dry place, store it on wooden planks or on mats.
   If the machine is kept on damp or muddy ground, the tracks could freeze overnight. Operation of the machine is then not possible. Furthermore the reduction gear may be damaged.
3. Additionally, rub the piston rods of the hydraulic cylinders to dry them.
   Otherwise severe damage could occur to the piston rods of the hydraulic cylinders if dirty water seeps through the seals.

https://truckmanualshub.com/

LONG STORAGE

WARNING

To avoid personal injury or death:

- **Do not clean the machine with the engine running.**
- **To avoid the danger of exhaust fume poisoning, do not operate the engine in a closed building or any areas without proper ventilation.**
- **When storing the machine, remove the key from the starter switch to avoid unauthorized persons from operating the machine and getting injured.**
- **Bring the machine on a firm, flat, and level surface. Lower the lift arms on the ground.**

STORING THE MACHINE FOR A LONGER PERIOD OF TIME

If the machine be stored for a longer period of time, follow the following procedures.

1. Clean the whole machine thoroughly and in all cases store it indoors.
   If you have to keep the machine outdoors, follow the following procedure.
   a. Lay out wooden planks on even ground.
   b. Place the machine on the planks.
   c. Cover the machine completely.
2. Change the oil and grease the machine.
3. Heavily grease the visible section of the cylinder rods.
4. Remove the battery and store it indoors.
5. If it is expected that the ambient temperature will drop as follows, add the antifreeze or drain coolant completely.

Ambient temperature	below 0 ℃

IMPORTANT :

- **Wash the machine after stopping the engine. If you wash the machine while running the engine, splashing water gets into the air cleaner through its intake and cause engine damage.**
  Carefully, wash and do not splash water over the air cleaner while the engine is running.

OPERATING THE MACHINE AFTER STORING FOR A LONG PERIOD OF TIME

Follow the following procedures when operating the machine storing for a long period of time.

1. Wipe off the grease from the hydraulic cylinder rods.
2. Turn on the engine, and operate the attachments and the drive mechanisms under no load in order to circulate the hydraulic oil.

If the machine is stored for longer than one month, perform steps 1. and 2. once every month.

1. Periodic replacement of important component parts

To ensure safety in operation, you are strongly requested to inspect and service the machine at regular intervals. For added safety, ask your KUBOTA dealer to replace the following important component parts.
The following important component parts are prone to degradation in material or subject to wear and tear with time. It is difficult to judge how much they have been affected at regular inspection. It is therefore necessary to replace the following component parts with new ones, whether wear is visible or not after a specified time of use.
If any parts are found worn even before the specified use, repair or replace them in the same way as other parts.
If any of the hose clamps is found deformed or cracked, also replace the hose clamp.
For the hydraulic hoses other than the ones to be replaced periodically, inspect them for the following points. If found unusual, tighten them up or replace them.
When replacing the hydraulic hoses, change their O rings and sealings with new ones.
For replacement of the important parts, contact your KUBOTA dealer.

NOTE :

- **At the following periodic inspections, check the fuel hoses and hydraulic hoses as well.**

https://truckmanualshub.com/

Inspection Interval	Check points
Daily Checks	Oil leak at the fuel and hydraulic hose connections and points
Every month	Oil leak at the fuel and hydraulic hose connections and points Damages at the fuel and the hydraulic hose (cracks, chafing)
Every year	Oil leak at the fuel and hydraulic hose connections and points Interference, deformation, degradation, twist, and other damages (cracks, chafing) of the fuel and hydraulic hoses

List of important component parts

No.	Component parts	Period
1	Fuel hose	Every 2 years or 4000 hours
2	Hydraulic hose	
3	Radiator hose	
4	Closed breather related rubber piping	
5	DPF differential pressure sensor rubber piping (front and back)	
6	Suction pipe downstream the AFS (air-flow-sensor)	
7	Boost sensor pressure rubber piping	
8	Intake air line	

To prevent serious damage to the hydraulic system, use only a KUBOTA genuine hydraulic hose.

https://truckmanualshub.com/

RECOMMENDED OILS

RECOMMENDED OILS, GREASES, AND FUELS

IMPORTANT :
- **Before delivery the hydraulic oil is Idemitsu Daphne Super Hydro 46ST.**
- **Use the engine oil API service classification CJ-4.**
- **Use SAE 90 (API, GL-4, GL-5) as the drive-unit-oil for all seasons.**

	Application	Viscosity	Shell	ExxonMobil	MIL-Standard
Engine oil	In winter or by low temperatures	SAE 10W	Shell Rotella T10W Shell Rimula 10W		MIL-L-2104C MIL-L-2104D
		SAE 20W	Shell Rotella T20W-2 Shell Rimula 20W-2		
	In summer or by high ambient tempera-tures	SAE 30	Shell Rotella T30 Shell Rimula 30		
		SAE 40	Shell Rotella T40 Shell Rimula 40		
		SAE 50	Shell Rimula 50		
	All-Season engine oil	Multi-purpose	Shell Rotella T15W-40		
Gear oil	In winter or by low temperatures	SAE 75		Mobilube HD Plus 80W-90	MIL-L-2105C
			Shell Oil S8643		
		SAE 80			MIL-L-2105C
			Shell Spirax HD80W		
	In summer or by high ambient tempera-tures	SAE 90			MIL-L-2105
			Shell Spirax HD90		MIL-L-2105C
		SAE 140			MIL-L-2105C
			Shell Spirax HD140		
	All-Season gear oil	Multi-purpose	Shell Spirax HD80W Shell Spirax HD85W		MIL-L-2105C
Hydraulic oil	In winter or by low temperatures	ISO 32	Shell Tellus S2M32	Mobil DTE 10 Excel 32	
		ISO 46	Shell Tellus S2M46		
	In summer or by high ambient tempera-tures	ISO 68	Shell Tellus S2M68	Mobil DTE 10 Excel 46	
Grease			Shell Alvania EP2	Mobilux EP2	
Fuel			Light oil No. 2-D (ASTM D975)		
Fuel under 5 ℃			Light oil No. 1-D (ASTM D975)		

NOTE :
- **Engine oil**
  - **Use the engine oil of suitable American-petroleum-institute (API) service classification and with proper SAE Engine oil standards according to the ambient temperatures.**

Above 25 ℃	SAE 30 or SAE 10W-30, SAE 15W-40
0 ℃ to 25 ℃	SAE 20 or SAE 10W-30, SAE 15W-40
Below 0 ℃ (32 ℉)	SAE 10W or SAE 10W-30

  - **See the following table for the suitable API classification engine oil and the fuel.**

https://truckmanualshub.com/

Fuel used	Engine oil classification (API classification)
	Oil class of engines except external DPF
Ultra Low Sulfur Fuel [＜ 0.0015% (15 ppm)]	CJ-4

- **Fuel:**
  - **Use the ultra low sulfur diesel fuel only for these engines.**

Ultra low sulfur diesel fuel	below 0.0015% (15 ppm)

  - **Cetane number of 45 minimum. Cetane number greater than 50 is preferred, especially for the following temperatures or elevations.**

Temperatures	Below -20 ℃
Elevations	Above 1500 m

  - **Diesel fuels that are specified to EN 590 or ASTM D975 are recommended.**
  - **No. 2-D is a distillate fuel of lower volatility for engines in industrial and heavy mobile service (SAE J313 JUN87).**
- **Indicated capacities of water and oil are manufacture's estimate.**

IMPORTANT :
- **If you use different fuel or engine oil, the cleaning efficiency of the DPF (3000 hours) will be reduced and the DPF longevity will be shorter than expected.**
- **Filters must trap fuel and lubricant sulfate additives (Zn, Pb, Na, K, Ca, Mg, Cu, Ba, P, etc.) as ash during combustion.**
  You must control the fuel carefully to prevent the additives being mixed into fuel such as the fuel tank anti-oxidants, the water remover, the antifreeze, and so on.

https://truckmanualshub.com/

BIODIESEL FUEL (BDF)

B0-B20 Biodiesel fuels (BDF): mixed diesel fuels containing 20% or less biodiesel can be utilized under the following conditions.

IMPORTANT :

- **Refueling and handling fuel should be done with caution in order to avoid contact with the fuel and spillage that could create a potential environmental or fire hazard. Wear appropriate protective equipment when refueling.**

Applicable BDF:

1. Blended diesel fuels containing 6% thru 20% BDF (B6 - B20) which comply with American Society for Testing and Materials (ASTM) D7467 Standard, as revised, can be used without adversely affecting the performance and durability of the engine and fuel system components.
2. Any mineral oil diesel fuel, if used, must conform to ASTM D975 (or the European EN590) Standard, as revised. B100 fuel used to make Biodiesel blended fuels must meet ASTM D6751 (or EN14214) Standard, as revised. The final blended fuel B20 must conform to ASTM D7467 Standard, as revised. Straight vegetable oil is NOT allowed in any blended fuel.
3. Allowable blended fuel is mineral oil diesel fuel blended with B100 (i.e. 100% BDF). The blended fuel ratio shall be less than 20% B100 and 80% or more diesel fuel. The B100 source used for Biodiesel blends must be purchased from an accredited BQ-9000 marketer or producer. More information about qualified marketer(s) and producer(s) can be found at http://www.bq-9000.org .

Preparation:

1. Before using BDF concentrations greater than B5, you are advised to replace the engine oil, engine oil filter and fuel filter with new oil and filters. For replacement procedures, refer to the "MAINTENANCE" section.

Product Warranty, Emission and Other Precautions:

1. The engine emission control system was certified according to current regulations based on the use of non-BDF. When using BDF, the owner is advised to check applicable local and federal emission regulations and comply with all of them.
2. BDF may cause restricted or clogged fuel filters during cold weather conditions, resulting in the engine not operating properly.
3. BDF encourages the growth of microorganisms which may cause degradation of the fuel. This in turn may cause fuel line corrosion or reduce fuel filter flow earlier than expected.
4. BDF inherently absorbs moisture which may cause degradation of the fuel earlier than expected. To avoid this, drain the water separator and fuel filter port often.
5. Do not use Biodiesel concentrations higher than 20% (i.e. greater than B20). Engine performance and fuel consumption will be affected, and degradation of the fuel system components may occur.
6. Do not readjust the engine fuel control system as this will violate emission control levels for which the equipment was approved.
7. Compared with soybean-based and rapeseed-based feedstock, palm oil-based feedstock has a thicker consistency (i.e. higher viscosity) at lower temperatures. Consequently, fuel filter performance may be reduced, particularly during cold weather conditions.
8. The Kubota Warranty, as specified in the Owner's Warranty Information Guide, only covers defects in product materials and workmanship. Accordingly, any problems that may arise due to the use of poor quality fuels that fail to meet the above requirements, whether biodiesel or mineral oil based, are not covered by the Kubota Warranty.

Routine handling:

1. Avoid spilling BDF onto painted surfaces as this may damage the finish. If fuel is spilled immediately wipe clean and flush with soapy water to avoid permanent damage.
2. When using BDF, you are advised to maintain a full tank of fuel, especially overnight and during short term storage, to reduce condensation within the tank. Be sure to tighten the fuel cap after refueling to prevent moisture build up within the tank. Water in the Biodiesel mixture will damage fuel filters and may damage engine components.

Maintenance Requirements when using BDF B0 thru B5:

Follow the oil change intervals recommended by referring to the "MAINTENANCE" section. Extended oil change intervals may result in premature wear or engine damage.

Maintenance Requirements when using BDF B6 thru B20:

The maintenance interval for fuel related parts changes.
See the table below for the new maintenance interval.

https://truckmanualshub.com/

Items		Interval	Remarks
Water separator filter element	Replace	Every 250 hrs	
Fuel filter cartridge	Replace	Every 250 hrs	
Fuel line	Check	Every 125 hrs	
	Replace	Every 1 year	Consult your local KUBOTA Dealer for this service.

Long Term Storage:

1. BDF easily deteriorates due to oxygen, water, heat and foreign substances. Do not store B6 thru B20 longer than 1 month and B5 longer than 3 months.
2. When using B6 thru B20 and storing the machine longer than 1 month, drain the fuel from the tanks and replace with light mineral oil diesel fuel. Subsequently, run the engine at least 30 minutes to remove all of the Biodiesel from the fuel lines.
3. When using B5 fuel and storing machine longer than 3 months, drain the fuel from the tanks and replace with light mineral oil diesel fuel. Subsequently, run the engine at least 30 minutes to remove all of the Biodiesel from the fuel lines.

https://truckmanualshub.com/

APPENDICES

MAIN DIMENSIONS OF THE MACHINE

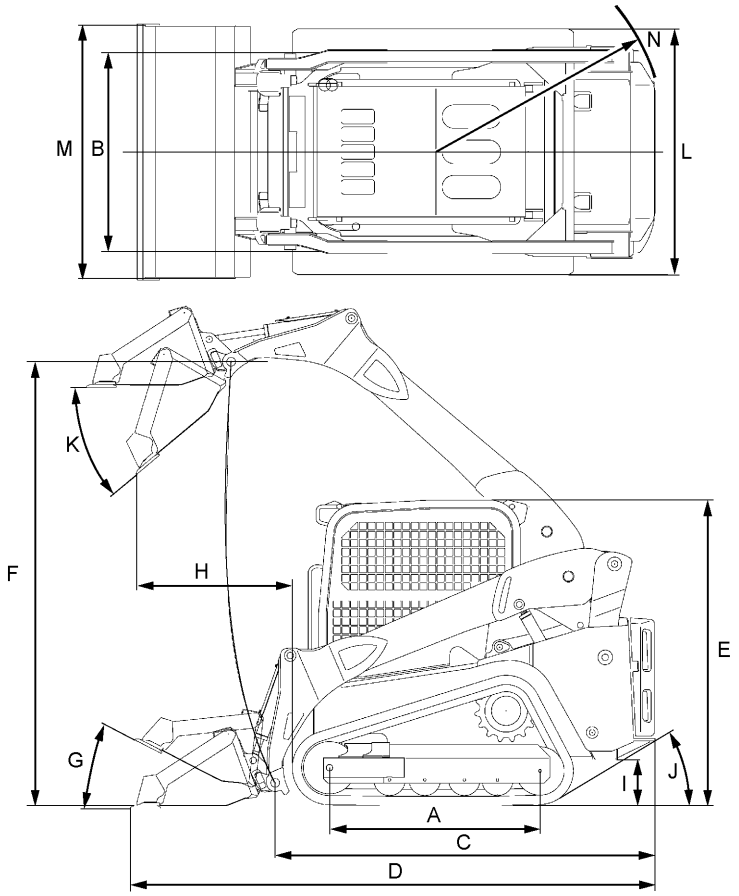

1RAPQ00157A01

https://truckmanualshub.com/

Model		SVL65-2	
		Standard track	Wide track
A	Length of track on ground	1470 mm	
B	Track gauge	1337 mm	
C	Length w/o bucket	2725 mm	
D	Length w/bucket on ground	3465 mm	
E	Height to top of cab	2029 mm	
F	Bucket hinge pin height at max. lift	3010 mm	
G	Rollback angle at carry position	30 degree	
H	Reach at max. lift and dump	886 mm	
I	Ground clearance	233 mm	
J	Departure angle	30 degree	
K	Max. dump angle	40 degree	
L	Vehicle width	1657 mm	1717 mm
M	Width with bucket	1727 mm	1880 mm
N	Turning radius from center-machine rear	1451 mm	

NOTE :
- **Dimensions are based on the machine with KUBOTA standard bucket.**
- **Dimensions are based on the machine with KUBOTA standard rubber track.**
- **Specifications are subject to change without notice.**

https://truckmanualshub.com/

INDEX

A

AFS (air flow sensor)
checking....105
air cleaner element
checking....94
cleaning....94
replacing....98
air cleaning warning indicator....35
air conditioner
adjusting the air flow....48
air control vent....49
air flow sensor (AFS)
checking....105
air-conditioner belt [closed cab model]
adjusting tension....97
checking tension....97
air-conditioner condenser
checking....99
air-conditioner hose
replacing....107
air-conditioner hoses
checking....105
air-conditioner pipe
replacing....107
air-conditioner pipes
checking....105
air-conditioner switch....49
operating....50
alternator
checking....104
antifrost heater....105
armrest....44,58
attachment control device (option)
operating....65
AUX electrical control switch (option)....41
AUX hold switch....41
AUX port switch....40
AUX port switch [High-Flow model only]....40
AUX port variable switch....41
auxiliary hydraulic control....64
auxiliary hydraulic control operation
operating....64

B

battery charge warning light....33
battery condition....91
BDF (biodiesel fuel)....127
biodiesel fuel (BDF)....127
blower switch....49
operating....50
boost sensor
checking....105
boost sensor pressure rubber piping
replacing....108
breather filter
replacing....102
bucket....62
bucket-floating indicator....33

C

cab
tilting up....84
cab door [closed cab model]
closing....51
opening....51
catalyst-containing diesel-particulate-filter (DPF) device
....46
catalyst-containing DPF (diesel-particulate-filter) device
....46
caution while traveling....71
CCV heater....105
checkpoints after starting the engine....55
clamps
checking....95
cleaning
cleaning fuel tank cap....92
closed breather related rubber piping
replacing....107
closed cab model
air-conditioner belt....97
cab door....51
side cab window....53
wiper/washer switch....51
control panel....49
operating....50
control pedals....43
coolant level
checking....87
coolant temperature gauge....31
checking....32

D

daily check items
before starting the machine....86
dealer service....25
diesel particulate filter (DPF)
cleaning....104
diesel particulate filter (DPF) differential pressure sensor
checking for gas leak....105
diesel particulate filter (DPF) exhaust gas temperature sensor
checking....105
diesel particulate filter (DPF) muffler
checking condition....105

https://truckmanualshub.com/

diesel particulate filter (DPF) piping
checking for gas leak..... 105
diesel-particulate-filter (DPF) differential pressure sensor rubber piping (front and back)
replacing.....107
diesel-particulate-filter (DPF) muffler
checking.....90
diesel-particulate-filter (DPF) regeneration indicator...34
DPF (diesel particulate filter)
cleaning.....104
DPF (diesel particulate filter) differential pressure sensor
checking for gas leak..... 105
DPF (diesel particulate filter) exhaust gas temperature sensor
checking.....105
DPF (diesel particulate filter) muffler
checking condition.....105
DPF (diesel particulate filter) piping
checking for gas leak..... 105
DPF (diesel-particulate-filter) differential pressure sensor rubber piping (front and back)
replacing.....107
DPF (diesel-particulate-filter) muffler
checking.....90
DPF (diesel-particulate-filter) regeneration indicator...34
drive unit oil
changing.....101
driving.....58

E

EGR cooler
checking.....104
EGR cooler hose
replacing.....108
EGR piping
checking for gas leak..... 105
EGR system
checking.....104
electrical outlet.....43,112
electrical wiring
checking and cleaning.....89
emergency exit.....44
engine
checking and cleaning.....89
operation..... 53
starting..... 54
starting with auxiliary battery.....55
stopping.....55
starting under cold conditions..... 55
engine hood
opening..... 82
engine oil
changing.....99
engine oil filter cartridge
replacing.....100
engine oil level
checking.....87
engine oil pressure indicator..... 33
engine rev up indicator.....34
engine valve clearance
adjusting.....104
error code numbers..... 116
evacuator valve
checking.....90
cleaning.....95
exhaust manifold
checking.....105

F

float switch..... 39
fresh air filter
cleaning.....98
fuel
recommended..... 125
fuel filter cartridge
replacing.....101
fuel gauge indicator.....31
fuel hose
replacing.....106
fuel level
checking.....87
fuel line
checking.....96
fuel system
purging..... 108
fuel tank
draining the water.....93
fuel tank cap.....92
fuse..... 111
replacing..... 111
fuse capacities..... 111
fuse circuits.....111

G

glow plug indicator..... 32
grease
recommended..... 125

H

High-Flow model
AUX port switch.....40
horn switch.....38
hour meter.....34
hydraulic oil
changing.....102
checking level.....88
checking with hydraulic hammers..... 103
hydraulic oil filter
replacing.....102
hydraulic oil temperature gauge.....34

https://truckmanualshub.com/

hydraulic quick switch [hydraulic quick-hitch model only]....42
hydraulic quick-hitch....69
hydraulic quick-hitch model only
Hydraulic quick switch....42
hydraulic tank
return filter....102
suction filter....102
hydraulic unlock switch....37

I

important component parts
periodic replacement....123
important information on machine operation....71
indicator light....49
operating....50
inhibit diesel particulate filter (DPF) regeneration switch 39
injector tip
checking....104
inner air filter
cleaning....98
instrument panel....30
intake air line
checking....96
checking for air leaks....105
replacing....107
interior lamp....51

L

levers....43
lift arm
lowering....45
lift arm stopper....61
lift arms
operating....60
loader
lifting....74
main dimensions....129
precautions for operating....8
precautions when traveling on inclines....72
preparation for operation in cold weather....122
prohibited action....73
storing after completion of work in cold weather. 122
storing for a longer period of time....123
loading on a transport vehicle....77
low fuel warning light....31
lubrication point....88

M

machine parts....28
main frame
cleaning inside....97
discharging mud....86
maintenance
checking items....11
preparing....11
maintenance intervals....80
master warning light....33
mechanical quick-hitch....67

O

oil
recommended....125
oil cooler....83
checking....89
oil separator element
replacing....104
OPC function....44
operating the machine
after storing for a long period of time....123
operator CAB
discharging mud....86
operator's manual
Where to keep....84
operator's seat
adjusting....56
option
attachment control device....65
AUX electrical control switch....41

P

parking brake switch....37
parking brake warning light....32
parking on an incline....72
parking the machine....10
pivot turn....59
precaution
checking the battery condition....91
checking the V-belt....89
checking the washer liquid....91
FOPS....8
general....7
ROPS....8
safely loading the machine....10
safely transporting the machine....10
safety for children....10
traveling in high speed....71
use of machine near water....71
washing whole machine....90
prevention of slippage of rubber tracks....73

R

radiator....83
checking....89
radiator coolant
changing....105
radiator hoses
checking....95
replacing....107
rear door....82

https://truckmanualshub.com/

rear window
emergency exit....44
refrigerant gas
checking....108
regeneration of diesel-particulate-filter (DPF).... 46
regeneration of DPF (diesel-particulate-filter).... 46
return filter
changing....102
suction and return filter....102
reverse alarm
checking....44
running-in of the machine....56

S

safety label.... 16
care.... 23
scrapping....26
seat belt....57
seat switch.... 39
self leveling switch.... 42
side cab window [closed cab model]....53
slow blow fuse.... 112
replacing....113
Specification table....27
spin turn.... 60
start of the machine....56
starter motor
checking....104
starter switch....37
suction filter
replacing....102
suction pipe downstream the AFS (air-flow-sensor)
replacing....107
switches.... 36

T

temperature control lever.... 49
operating.... 50
towing an inoperable machine.... 79
towing an operable machine.... 78
track
adjusting....109
track tension
checking....93
travel speed switch
use.... 38
traveling....58
troubleshooting
engine and other systems.... 114
turbocharger
checking....104

V

v-belt
adjusting tension.... 96
checking tension.... 96

W

warranty policy.... 25
washer liquid
checking....91
water separator
drain.... 90
draining in case warning against water of the fuel filter.... 108
water separator filter element
replacing....100
wiper/washer switch [closed cab model].... 51
working light switch.... 38