https://truckmanualshub.com/

FOREWORD

We would like to take this opportunity to thank you for choosing a TATA DAEWOO product and assure you for our continuing interest in your motoring pleasure and satisfaction.

This manual has been prepared to acquaint you with the operation and maintenance of your new TATA DAEWOO TRUCK and to provide important safety information. We urge you to read it carefully and follow the recommendation to help assure the most enjoyable, safe and trouble-free operation of your vehicle.

When it comes to service, remember that your TATA DAEWOO dealer knows your vehicle best and is interested in your full satisfaction.

This manual should be considered as a permanent part of your vehicle, and must remain with the vehicle at the time of resale.

All information, illustrations and specifications contained in this manual are based on the latest product information available at the time of publication.

The right is reserved to make changes at any time without notice.

TATA DAEWOO COMMERCIAL VEHICLE

https://www.truck-manuals.net/
https://www.truck-manuals.net/

TABLE OF CONTENTS

1. HOW TO HANDLE THE VEHICLE
2. DRIVING
3. INSPECTION AND MAINTENANCE
4. TROUBLE SHOOTING AND CORRECTIONS
5. MISCELLANEOUS CONTROLS AND OPTIONS
6. SPECIFICATIONS AND SERVICE

https://www.truck-manuals.net/

1

HOW TO HANDLE THE VEHICLE

1. OPERATION OF NEW VEHICLE
2. OPERATION OF CAB TILT
3. OPENING OR CLOSING OF FRONT LID
4. INSTRUMENTS AND CONTROLS
   1) Attachments of steering column
   2) Peripheral devices of steering column
   3) Instruments and indicator lamps
   4) Controls of center console
   5) Miscellaneous controls

https://www.truck-manuals.net/

1. OPERATION OF NEW VEHICLE

MTA0011

It is important to follow the instructions as outlined here, because careful breaking-in of your vehicle will greatly increase its life and performance.

Engine type	Service intervals for changing engine oil and filter
DE DV	At end of first 1,000km Short distance travel(in city): every 10,000km Long distance travel(at high speed): every 15,000km
DDC	Every 15,000km

* Oil must be replaced at least every 6 months.

1) Follow oil change interval.

* For further information, refer to "Recommended Lubricants".
When this vehicle was released, engine oil added with abrasive material was used for its diesel engine(DE/DV). So, make sure to change the engine oil after the first 1,000 km.

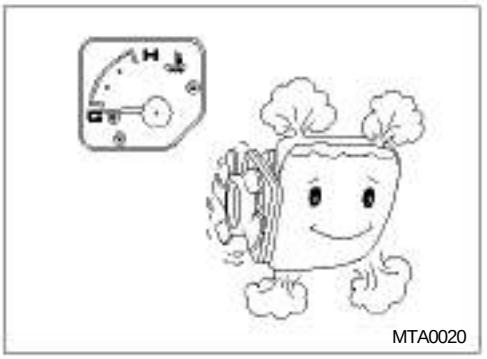
MTA0020

2) Follow the instructions on how to operate the new vehicle.

It is necessary to allow the moving parts of the new vehicle to break in for the first 4,000 km.

(1) Warm up the engine after starting it. In cold weather, especially, warm up the engine sufficiently before starting off.

(2) Do not abruptly increase rev during idling.

MTA0031

(3) Avoid jack-rabbit starts, abrupt acceleration, or sudden stops.

https://www.truck-manuals.net/

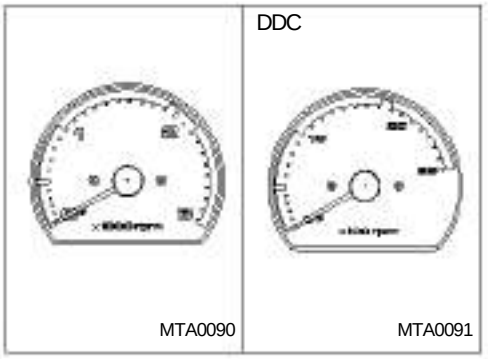

(4) During the first 4,000 km, limit engine speed to 70 percent of the maximum allowance, and frequently watch tachometer to prevent engine over-running while driving your vehicle.

Maximum allowable engine speed (rpm)

Engine	First 4,000 km	After 4,000 km
DE12TI	1,470	2,100
DE12TIS	1,470	2,100
DV15T	1,600	2,300
DV15TI	1,470	2,100
DV15TIS	1,470	2,100
DDC	1,260	1,800

3) Through check should be performed according to "CONTROLS AND INSTRUMENTS" and "BEFORE DRIVING OFF".

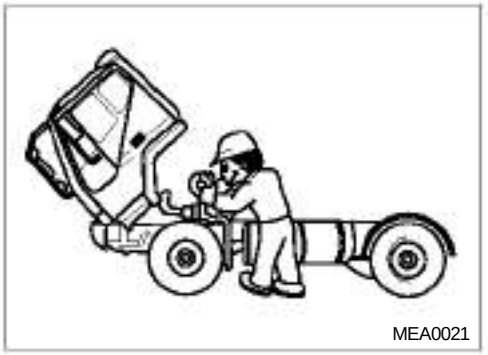

4) In order to operate your vehicle safely and dependably, it is imperative to perform necessary inspection and adjustment as outlined in "INSPECTION AND MAINTENANCE".

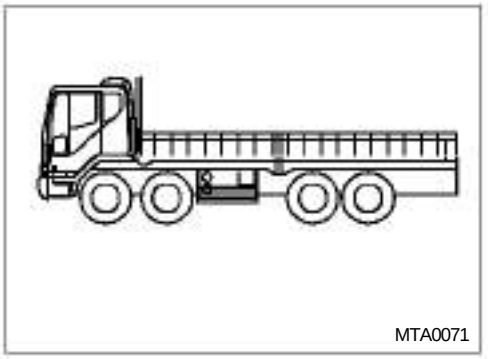

5) Overloading may not only shorten the service life of your vehicle but also cause serious problems against your safety. The weight of the payload must be within the GVW rating and distributed over the front and rear axles so as not to exceed their axle capacities. Refer to "SPECIFICATIONS AND SERVICE DATA" for GVW and Axle capacity.

https://www.truck-manuals.net/

MTA0041

6) How to Handle the vehicle(for DDC engine)

(1) IDLE SHUT DOWN function

1) Engine automatically stops after 5 minutes passed when engine is idling for reducing fuel consumption and air pollution
2) Restart engine for driving after engine has stopped automatically

Caution

1. Limit idling time within 10% (1 hour approximately) of during initial driving of 15 hours.
2. Unnecessary idling during initial operation could damage electrical fuel injection system(ECU)
- *3 minutes of engine warming-up is enough in winter time.*

MTA0042

(2) Cautions for engine abnormalities during driving

1) Check Engine indicator : indicates engine's malfunction, power is limited to 70% of total level automatically.
2) Stop Engine indicator : indicates serious problems on engine, power is limited to 40% of total level, Move the truck to safe place within the time before engine automatically stops after 30 seconds of indication. Press the switch within 25 seconds after indicator came up for extending operation time as much as 30 seconds. (refer to page 45, "Engine diagnosis switch")

https://www.truck-manuals.net/

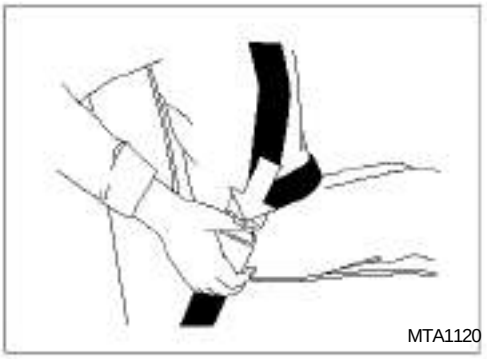

6) Seat belts

Always fasten your seat belts when driving over long distance or in downtown. Passengers not wearing their seat belts may endanger your safe driving.

* The seat belt warning lamp comes on when the ignition switch is placed in the "ON" position unless the driver's seat belts are securely fastened.

WARNING

1. Never use a belt for more than one person at a time.
2. Never wear the belts twisted.
3. Make sure seat belts or their attachments not to be thrusted in metal parts of the seat or the door.
4. Seat belts should be adjusted as firmly as possible.
5. Do not wear seat belts low under your shoulder.
6. If you replace your seat belts incorrectly, you may be injured by hardwares of the belts at sudden stops.
7. Do not wear your seat belts with hard or breakable objects such as glasses, pens, etc. put into the pocket of your upper garment.

CARE OF BELTS

1. Periodically inspect all parts of the belts and replace any damaged parts.
2. Make sure that the belts are not to be damaged by sharp edged objects.
3. The belts should be changed if webbing has become frayed or damaged.
4. Check if fixing bolts have been firmly installed to the floor.
5. Always keep the seat belts clean and dry.
6. Clean only with tepid soapy water. 7. Do not bleach or dye seat belts.

https://www.truck-manuals.net/

2. OPERATION OF CAB TILT

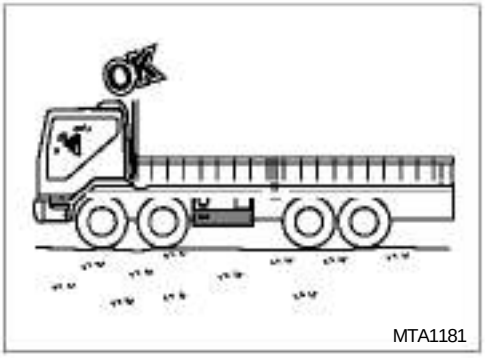

MTA1181

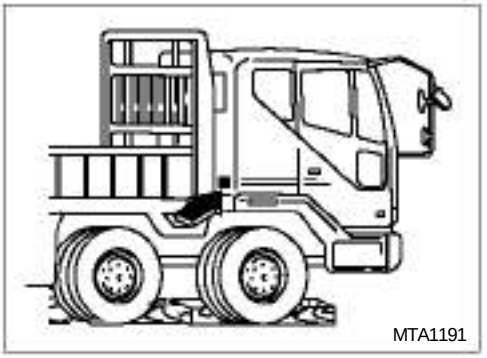
MTA1191

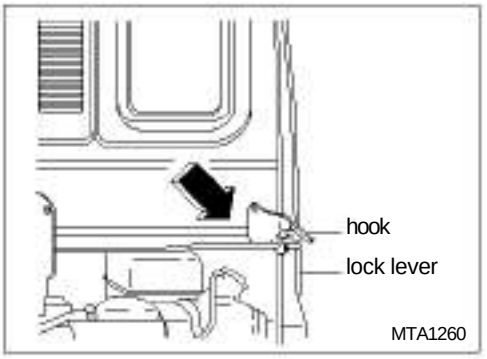

MTA1260

MTA1250

1) Preparation for cab tilting

(1) Place the vehicle on level ground and ensure that there is a sufficient space in front of and above the cab. And then, position starter switch "ON".
(2) Set the parking brake firmly.
(3) Set the gearshift lever to neutral position.
(4) Keep interior of the cab free from fragile articles. Close the doors securely.
(5) All the wheels should be choked.
(6) Re-check if there is any person in the cab.
(7) Open the cab according to the following instructions.

Note

Read thoroughly "CAB TILT OPERATING INSTRUCTIONS" affixed at the rear right-hand side of the cab before manipulating it.

- **Recommended cab tilt oil**
  Specifications : EQUIVIS ZS15(manufactured by ISU)

Caution

Be sure to use recommended cab tilt oil replenishment.

2) How to lift the cab

(1) Pull forward lock lever located at the lower right-hand side of the rear of the cab while lifting the hook to release lock.(Except for the vehicle that the hydraulic cab lock option system is applied)
(2) Turn the direction change lever installed onto the pump located at the rear lower right-hand side of the cab to set it to "U" position.
(3) If you insert cab tilt lever into pump socket and move it up and down, the cab will ascend.

Note

Although hydraulic pump does not work at the first time, continue the manifulation as above, then the cap will be tilted.

https://www.truck-manuals.net/

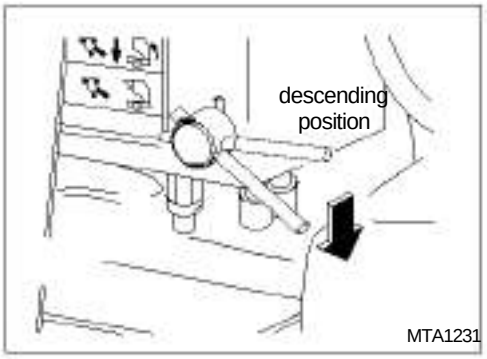

3) How to lower the cab

(1) Position the direction change lever in "D" position.

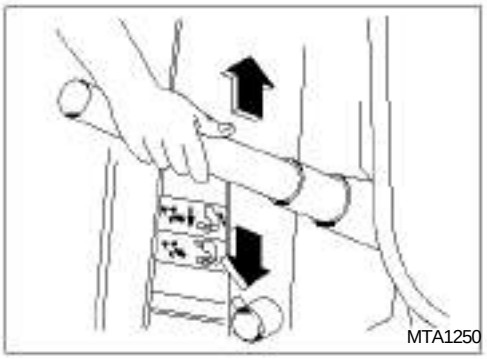

(2) If you insert cap tilt lever into pump socket and move it up and down, cab will descend.
(3) Make sure that lock lever is locked into hook. (Except for the vehicle that the hydraulic cab lock option system is applied)

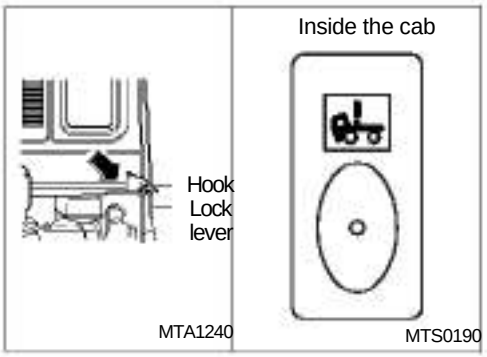

4) How to lift the cab (Hydraulic cab latch : option)

(1) Pull forward lock lever located at the lower right-hand side of the rear of the cab while lifting the hook, and then the lock will be released.

Push cab tilt enable switch to "ON" position located in instrument panel inside the cab in case of the hydraulic cab lock option system is applied in the vehicle.

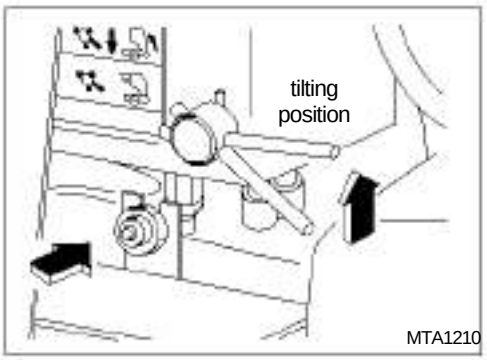

(2) Turn the direction change lever installed onto the pump located at the rear lower right-hand side of the cab to set it to "U" position.
(3) Press the switch as shown, and then the pump works and the cab starts to ascend.

https://www.truck-manuals.net/

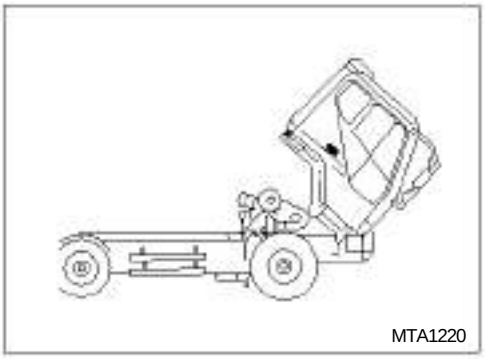
MTA1220

(4) Cab is ascending while pushing the cab-tilt switch. You can manipulate the switch to adjust open angle of the cab as desired. Stop pushing the switch when the cab is tilted over than the cab weight center, if you keep pushing the switch on the noise will be increased.

Caution

1. If you want to stop ascending the cab, you should position the direction change lever in "D" position.
2. Do not work without tilting the cab completly.
3. Do not start engine when the cab does not tilted completly or while descending.
4. Never tilt the cab at a sloped hill.

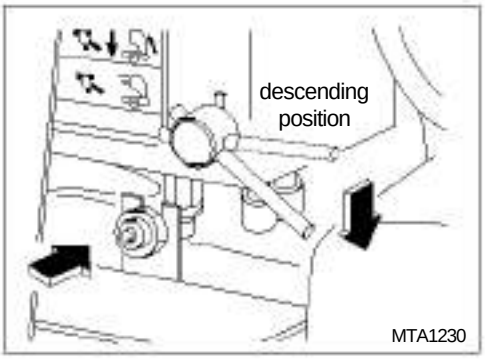

MTA1230

5) How to lower the cab (Hydraulic cab latch : option)

(1) Position the direction change lever in "D" position.
(2) Press the switch as shown, and then the pump works and the cab starts to descend.
(3) Once the cab descended completly, stop pushing the switch.

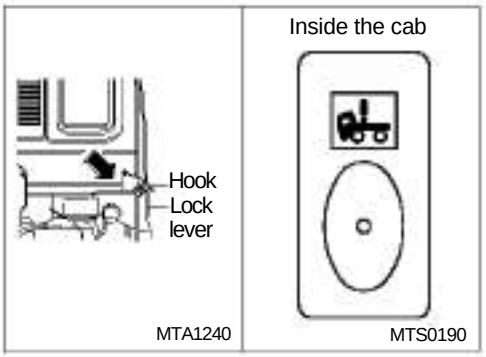

MTA1240 MTS0190

(4) Once the cab descends completely, check that the lever located at the rear lower right hand side of the cab is locked into hook.
For hydraulic cabin latch type vehicle, Make sure that release cab tilt switch to "OFF" and warning lamp is off before driving.

Caution

1. While driving you should set the direction change lever in "D" position.
2. Be sure to check that the lock lever is locked in hook. In the event of troubles with cab tilting system, call for check and necessary services of your nearest Daewoo dealer.

https://www.truck-manuals.net/

3. OPENING OR CLOSING OF FRONT LID

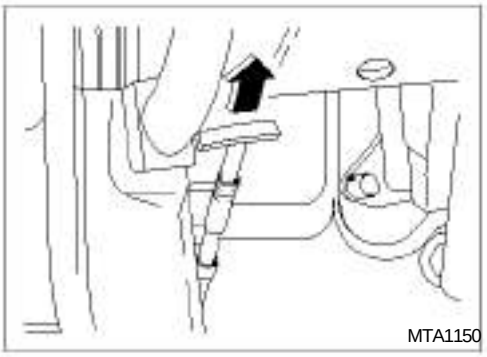

1) Opening procedure

(1) Pull forward the front lid lever located at lower left-hand side of the instrument panel.

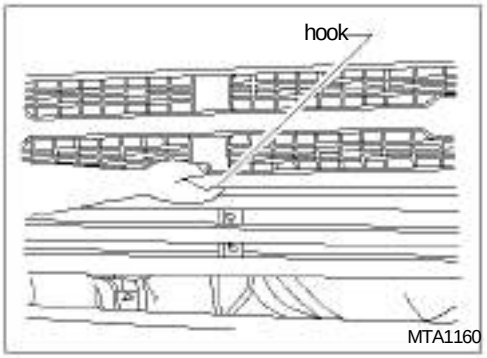

(2) Put your hand between the front lid and radiator grille to pull forward the hook located in the middle of the front part, and then the front lid becomes unlocked.
(3) Pull the front lid to open.

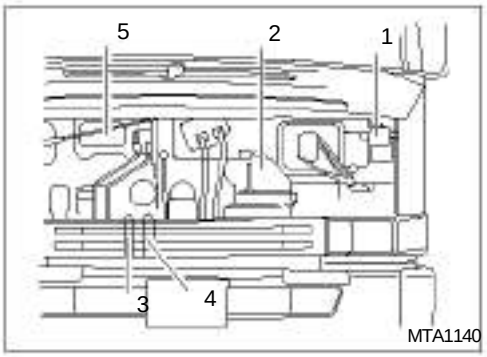

(4) Opening the front lid enables you to easily check, top-up, or clean the following parts.
1. Clutch fluid reservoir
2. Washer fluid tank
3. Engine oil level gauge
4. Engine oil filler
5. Air filter

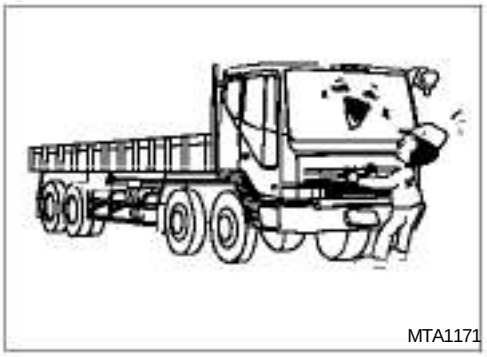

2) Closing procedure

(1) Push the front lid slowly to close. Keep pushing it until a "click" is heard from its lower part.
(2) Make sure that it is locked securely.

https://www.truck-manuals.net/

4. INSTRUMENTS AND CONTROLS

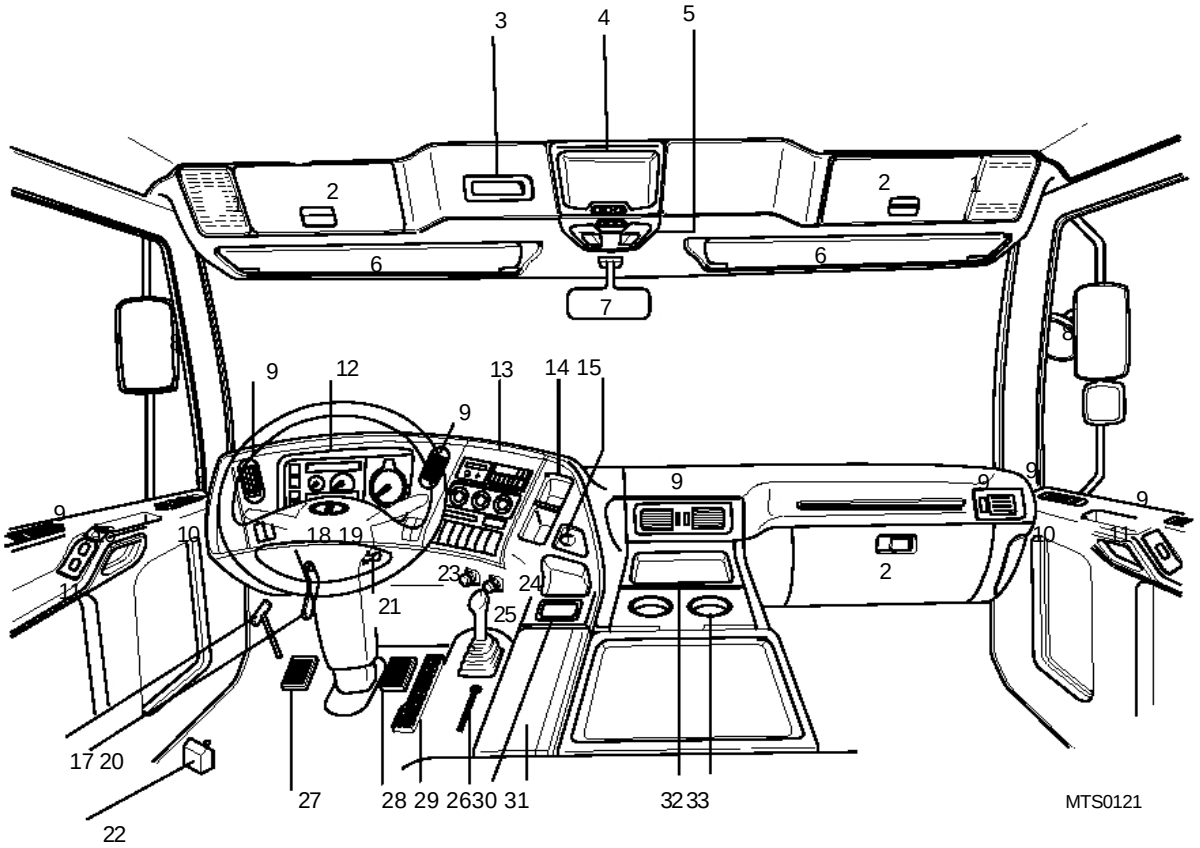

1. Speaker
2. Overhead stowage
3. Digital clock
4. Fluorescent room lamp
5. Spot lamp
6. Sunvisor
7. Inside rearview mirror
8. Side mirror
9. Ventilation vents
10. Door inside knob
11. Power window switch
12. Instrument panel
13. Controls of center console
14. Radio and cassette tape holder
15. Cigarette lighter
16. Side mirror adjusting switch (option)
17. Front lid opening lever
18. Combination switch
19. Wiper and exhaust brake switch
20. Steering wheel adjusting lever
21. Starter switch
22. Dump control lever
23. Air parking brake valve
24. Idle control knob(DE/DV Engine)
25. Transmission gearshift lever
26. Trailer hand brake (tractor, pull cargo)
27. Clutch pedal
28. Brake pedal
29. Accelerator pedal
30. Ash tray
31. Consent (12V : option)
32. Fuse and relay box
33. Cup holder

https://www.truck-manuals.net/

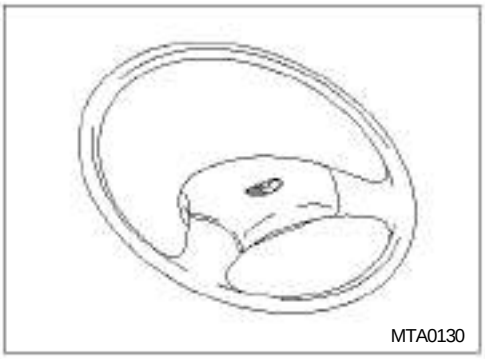

1) Attachments of steering column

- **Steering wheel and horn button**
  The steering wheel should not be turned while the vehicle is stationary as it adversely affects the tires and steering system.
  Horn button is equipped on the middle of steering wheel.

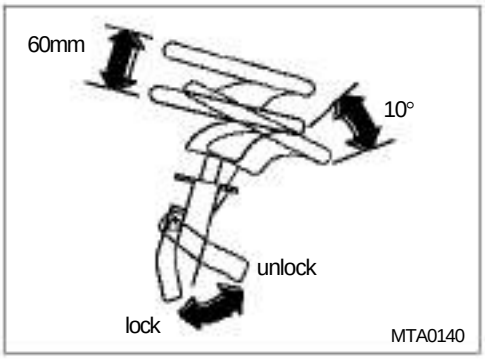

- **Steering wheel adjustment**
  Adjust the steering wheel to the desired position after pulling lock lever.

  Adjusting angle: 10°
  Travel: 60mm

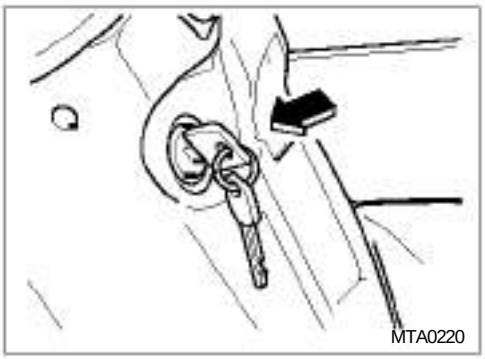

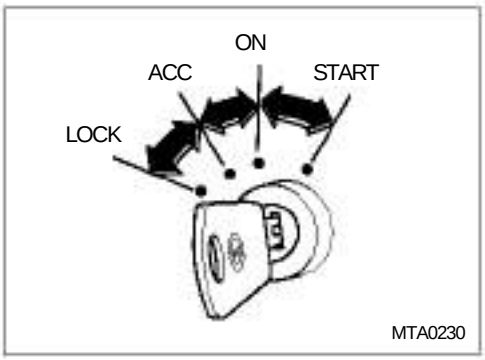

- **Starter switch**
  Starter switch operates in the 4 stages as follows:
  (1) **LOCK**: The key can be inserted or removed only when the switch is in this position.
  (2) **ACC** : This position turns on the radio, digital clock, cigarette lighter and consent.
  (3) **ON** : This position turns on the electrical equipment. During the vehicle operation, hold the key in this position.
  (4) **START** : Once the engine is started, it is preheated automatically according to outdoor temperature(DE: for 20 sec., DV: for 6 min, or until coolant temp, rises to 25°C). This improves the engine condition.

Caution

- *Once the engine is started, release the key immediately.*
- *Do not exceed 10 seconds for the operation of starter.*
- *Gearshift lever should be in neutral position when attempting to start the engine.*

https://www.truck-manuals.net/

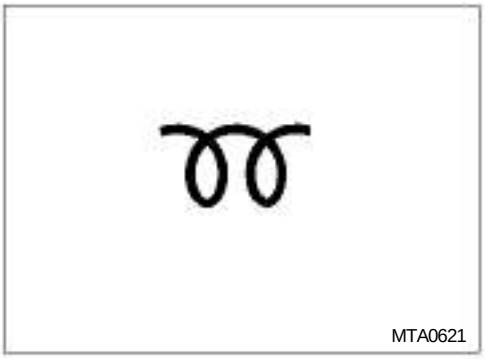
MTA0621

Caution

1. Daewoo heavy trucks are equipped with the preheating and postheating systems designed to improve engine starting and to reduce the generation of white smoke.
2. With the starting key positioned "On", it is automatically preheated according to the temperature of coolant. In 0.3 second(in hot season) or 18 seconds(in cold season), the preheating indicator lamp goes out, indicating that preheating is complete.
- *hot season: above 10°C of coolant tem-perature(DE engine), or above 25°C(DV engine)*
- *cold season: below 10°C of coolant tem-perature(DE engine), or below 25°C(DV engine)*

3. If you start the engine before the preheater warning lamp goes out, the postheating system would not work, resulting in increase in white smoke.
4. For 24ton dump truck, the engine is preheated by Electronic Control Module (ECM)

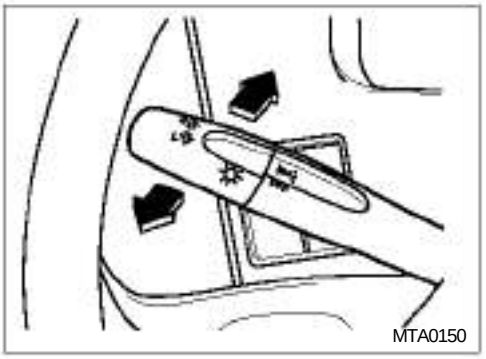
MTA0150

- **Turn signal switch**
  Move this combination switch lever in the desired direction so that the corresponding turn signal lamp operates and causes the turn signal indicator lamp on the instrument panel to flash. The switch lever returns automatically to the neutral position when the steering wheel is returned to the reverse direction. When head lamp switch is in 2nd stage simultaneously with turn signal lamp "ON", cornering lamp also comes on.

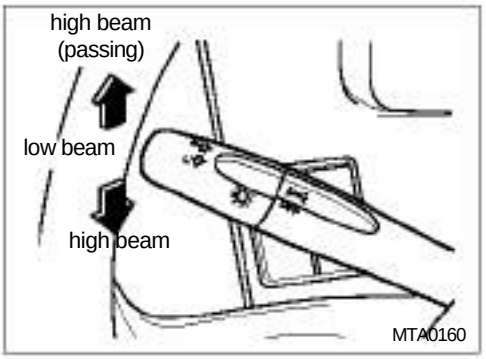

MTA0160

- **High beam switch**
  When the head lamps are on, pulling the lever down lights up not only the head lamps with high beam but also the high beam indicator lamp. When pulling it up, head lamps with low beam are on.

- **Passing lamp switch**
  To light up passing lamps at any time, pull up the lever towards the steering wheel. The lever will return to the OFF position when released.

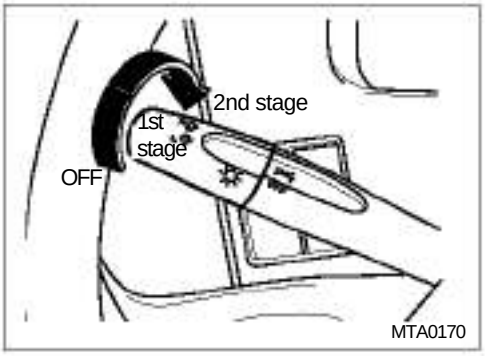

MTA0170

- **Lamp switch(turn type)**
  Lamp switch operates in two stages as follows:
  1st stage: tail lamp, license plate lamp, instrument panel lamp, clearance lamp
  2nd stage: tail lamp, license plate lamp, instrument panel lamp, clearance lamp, head lamp, cornering lamp (simulaneously with turn signal lamp "ON")

https://www.truck-manuals.net/

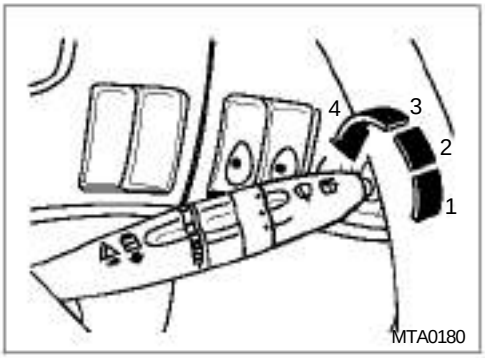

- **Windshield wiper switch**
  The windshield wiper switch has 3 positions to control the windshield wiper.
  1. OFF = Off
  2. INT = Intermittent wipe
  3. LO = Continuous wipe, slow speed
  4. HI = Continuous wipe, fast speed

Caution

Do not operate the wipers when the windshield remains dry. They may scratch the windshield glass. Do not operate the wipers if they are covered with snow or ice as this may damage the wiper system.

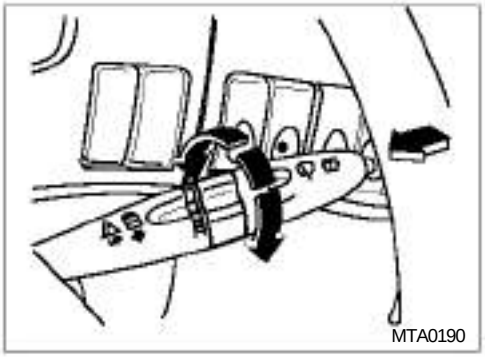

- **Wiper speed control switch**
  The desired intermittent operation time can be controlled by turning the knob when the wiper switch is in "INT" position.

- **Windshield washer switch**
  To let washer fluid spray on the windshield, press and hold the center button of switch. And the windshield wipers are simultaneously operated for 2-3 cycles.

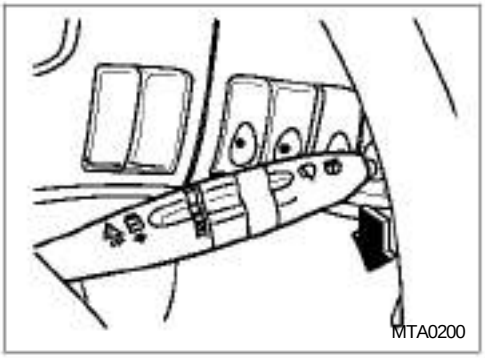

- **Exhaust brake switch**
  The exhaust brake system is designed to shut off exhaust pipe when the engine brake is applied, resulting in assisting brake action. When the switch lever is pushed downward, and clutch and accelerator pedals are released, the indicator lamp comes on showing that the ex-haust brake is in operation. When the clutch and accelerator pedals are depressed, the exhaust brake stops working.
  * In the case of 24ton dump truck, this operation is done by using the Jake Brake switch. For detail, refer to "Jake brake switch" .

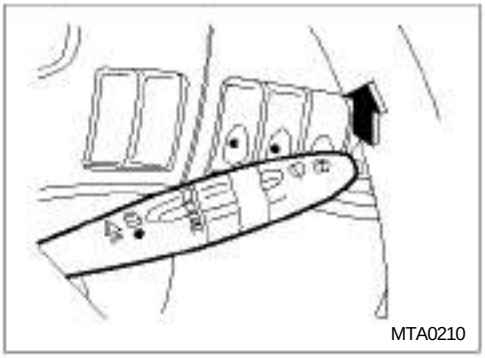

- **Hazard warning flasher switch**
  When the right-hand lever is pushed upward, all the turn signal lamps are made to flash regardless of the turn signal switch position. The hazard warning flasher switch is to be used when your vehicle gets in a traffic hazard or is parked in the darkness.

https://www.truck-manuals.net/

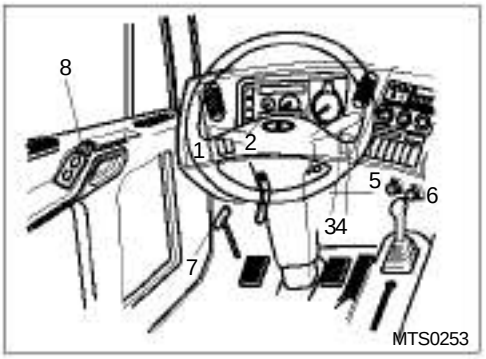

MTS0253

2) Peripheral devices of steering column

(1) Differential lock switch(FRT/RR)
(2) Differential lock switch(L/R)
(3) Air conditioning switch
(4) Fog lamp switch
(5) Air parking brake valve
(6) Idle control Knob(for DE/DV Engine)
(7) Front lid opening lever
(8) Side mirror adjusting switch(option)

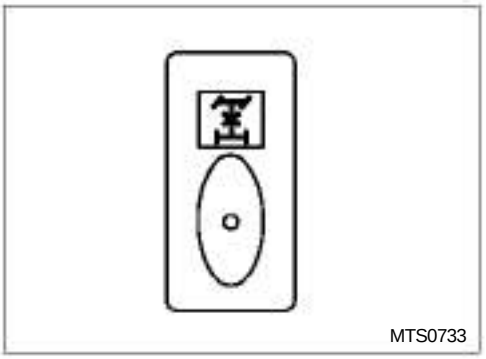
MTS0733

(1) Differential lock switch(FRT/RR)

In the case of two rear axle drive type vehicle, if either rear axle falls in the mire to cause slip-page, you must first stop your vehicle and then place differential lock switch to "ON" position in order to easily get out of the mire. The warning buzzer keeps sounding all the while differential lock is in operation.

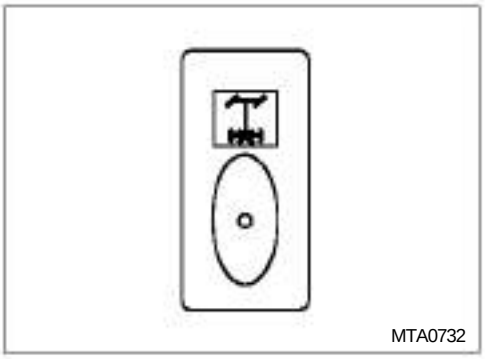
MTA0732

(2) Differential lock switch(L/R)

If it is difficult to get your vehicle out of the mire even by using the differential lock switch which distributes power to both front and rear axles, operate the differential lock switch(left/right). If all the differential lock switches are energized simultaneously, your vehicle will show a ten-dency to travel straight. Be careful of this.

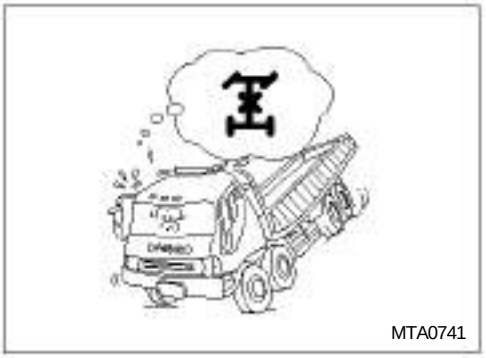
MTA0741

Tips for using differential lock system

* This system cannot be used if the wheels in connection with the two rear axles are idled simultaneously.

Caution

Do not exceed 30 seconds for one time use of this system. If it is not possible to get out of the mire even by using this system once or twice, do not use it any more. Your vehicle requires towing. Continuous use of differential lock system may cause defects to ring gear set of rear axles and other drive systems.

https://www.truck-manuals.net/

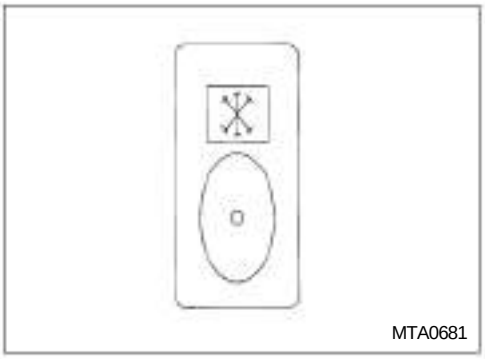

(3) Air donditioning switch

Pressing this switch turns on the air conditioer and indicator lamp simultaneously.

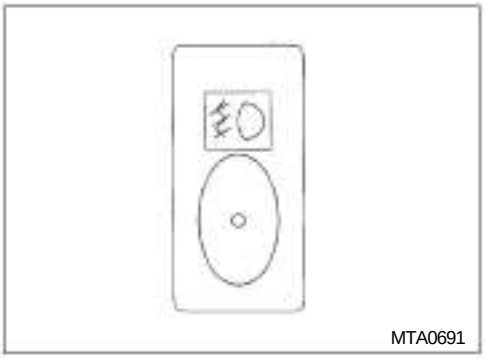

(4) Fog lamp switch

Fog lamps provide auxiliary illumination and improve your vision in fog or snow.

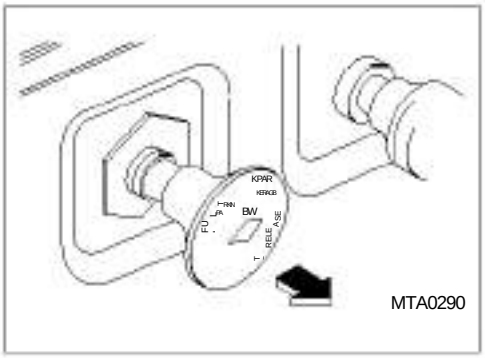

(5) Air parking brake valve

When the valve knob is pulled, the parking brake is actuated to cause the indicator lamp to come on. Pushing in the valve knob releases the brake. Make sure that the indicator lamp is off before driving off.

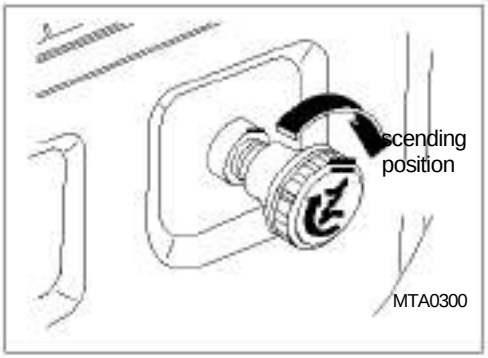

(6) Idle control knob(For DE/DV engine)

Turning the knob clockwise after cold starting of the engine will increase idling speed and thus facilitate quick normalization of the engine coolant temperature.

Always drive with the knob turned back home.

Caution

1. Do not use this knob to stop the engine.

2. For DDC engine, as idle speed is controlled automatically, you need no special operation.

https://www.truck-manuals.net/

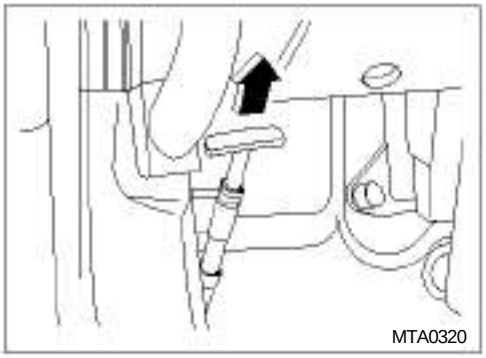

(7) Front lid opening lever

When this lever is pulled up, front lid is released from locking to be ready to open. The levels of engine oil, clutch fluid, and washer fluid can be checked from inside the front lid.

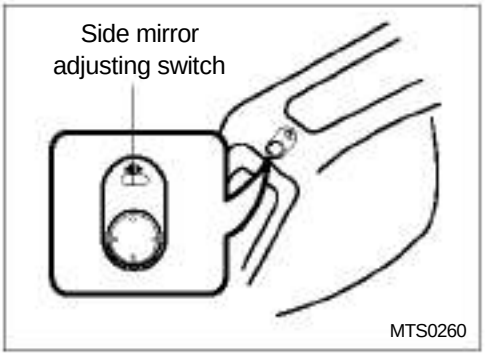

(8) Side mirror adjusting switch(option)

Side mirrors can be adjusted by using this switch from inside your vehicle.
Press the angle adjust button with arrow marks to adjust the mirror angles.

Caution

Adjust mirror angles before driving.

1. Side mirror selection switch
   ◀: left ▶: right
2. Side mirror four way control switch. To adjust the outside mirrors turn the ignition "ON"

https://www.truck-manuals.net/

3) Instruments and indicator lamps

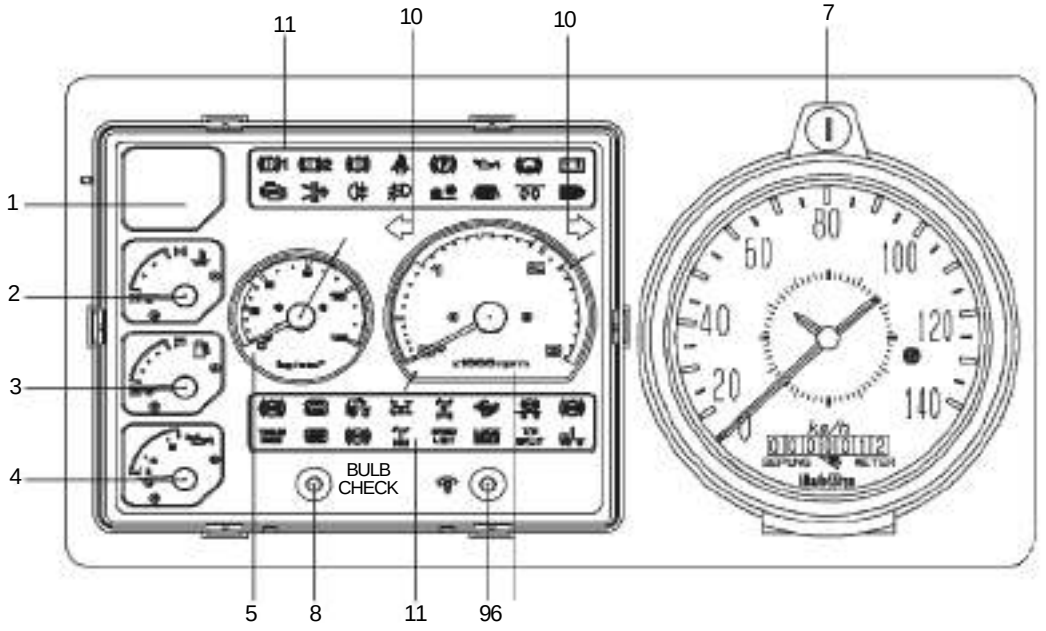

MTD0590

1. Blank
2. Temperature gauge
3. Fuel gauge
4. Engine oil pressure gauge
5. Air pressure gauge
6. Engine tachometer
7. Tachograph
8. Bulb check switch
9. Illumination control switch
10. Turn signal/hazard warning indicator
11. Miscellaneous indicator lamps and warning lamps

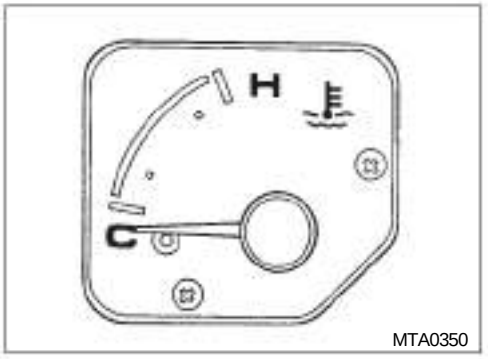

MTA0350

(1) Temperature gauge

The gauge indicates the engine coolant temperature. If the gauge needle stands below the red colored zone, it means that engine coolant temperature is normal.
If the needle stands in "H"(overheating), stop the vehicle and run the engine at a moderately fast idle speed or put the gear in lower position to reduce engine load. If the vehicle is operated in abnormal condition, engine performance will be reduced and fuel consumption will be increased.

https://www.truck-manuals.net/

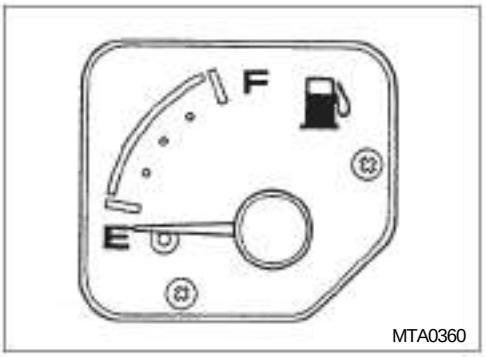

MTA0360

(2) Fuel gauge

This gauge indicates fuel level of the fuel tank all the time regardless of the starter switch position.

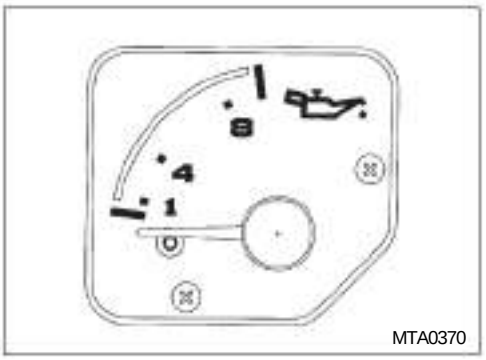

MTA0370

(3) Oil pressure gauge

This gauge indicates oil pressure in the engine lubricating system. The indication of the gauge should be 1-3kg/cm^2 when the engine is at idle; it should be 3-6.5kg/cm^2 when the engine is running at medium speed.

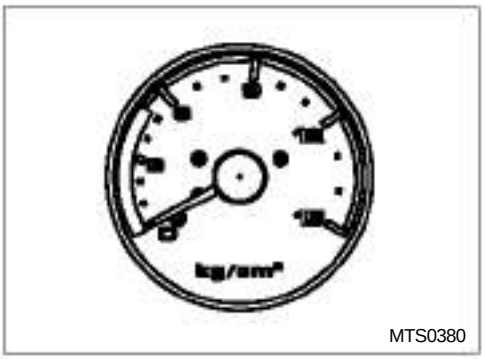

MTS0380

(4) Air pressure gauge

Air pressure gauge indicates air pressure in the air tanks. While driving, the gauge needle must be within the range of 5.3-8.2kg/cm^2.
Be habitual of watching the gauge, while driving, to make sure the gauge needle indicates the normal condition.

Caution

If the gauge needle stands in the red zone, warning lamp comes on and alarm buzzer sounds. Immediately stop the vehicle, check for unusual conditions, run the engine at a moderately fast idle speed to increase air pressure, then drive off.

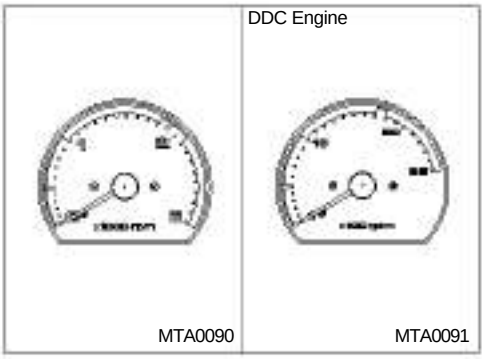

MTA0090 MTA0091

(5) Engine tachometer

The tachometer indicates the engine speed in revolutions per minute(rpm) and red colored zone represents critical engine speed.
Excessively high engine rpm(red colored zone) may cause damage to the engine. To drive economically, keep the engine within 1,000-2,000(1,000-1,700:for DDC engine) rpm.
Maximum allowable engine speed:
DE12TI Engine : 2,100 rpm
DE12TIS Engine : 2,100 rpm
DV15T Engine : 2,300 rpm
DV15TI Engine : 2,100 rpm
DV15TIS Engine : 2,100 rpm
DDC Engine : 1,800 rpm

https://www.truck-manuals.net/

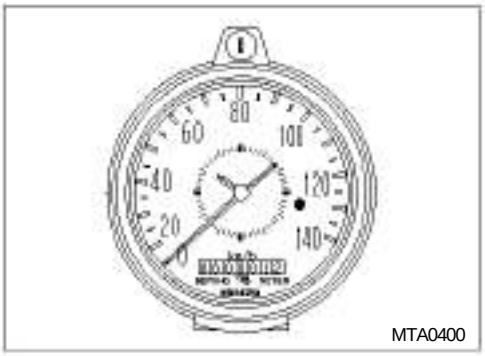

(6) Tachograph

The tachograph is consisted of speedometer, odometer and clock. The vehicle speed and running distances are registered in a single chart. The speedmeter indicates the vehicle speed in kilometer per hour(km/h). The odometer indicates individual trip distances. The odometer records the total distance in km. The unit of registered distance is loom.

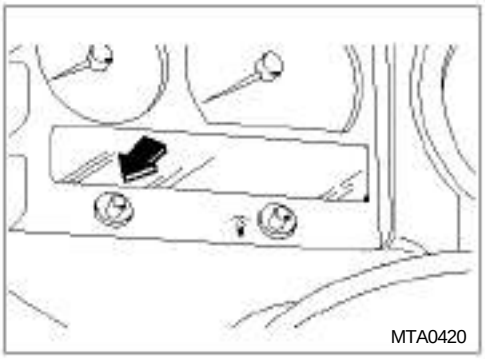

(7) Bulb check switch

When bulb check switch is pressed, warning lamp on instrument panel comes on. And also the warning buzzer sounds.

Before driving, use this switch to check that all warning lamps and their circuits are operating normally.

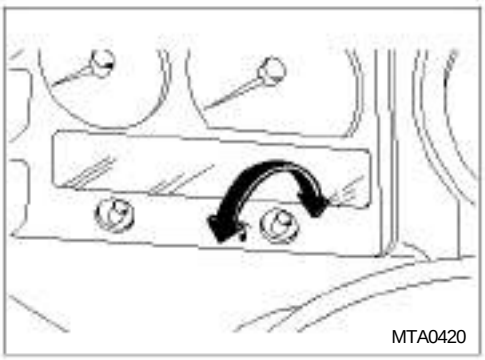

(8) Illumination control switch

The instrument panel illuminations can be controlled by turning the control knob; clockwise for brighter, and counterclockwise for dimmer.

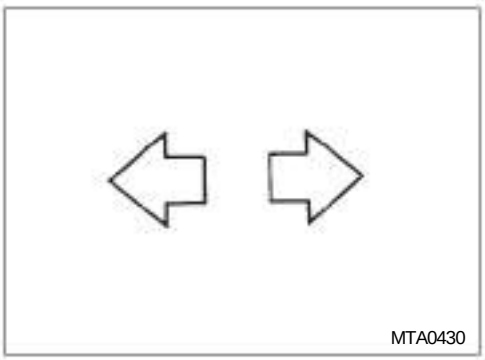

(9)Turn signal indicator lamp

When the turn signal switch or hazard warning flasher switch is turned on, the turn signal indicator lamp flashes to indicate the operation of the external turn signal lamps or hazard warning flashers.

https://www.truck-manuals.net/

(10) Miscellaneous indicator lamps and warning lamps

Indicator lamps come on when corresponding control levers or switches are in operation.When a warning lamp is lit while driving, immediately pull up your vehicle in the roadside, check to locate the cause of trouble, and take proper measures. In the case of serious trouble, call for check and proper services of your nearest Daewoo dealer.

*** DE/DV Engine**

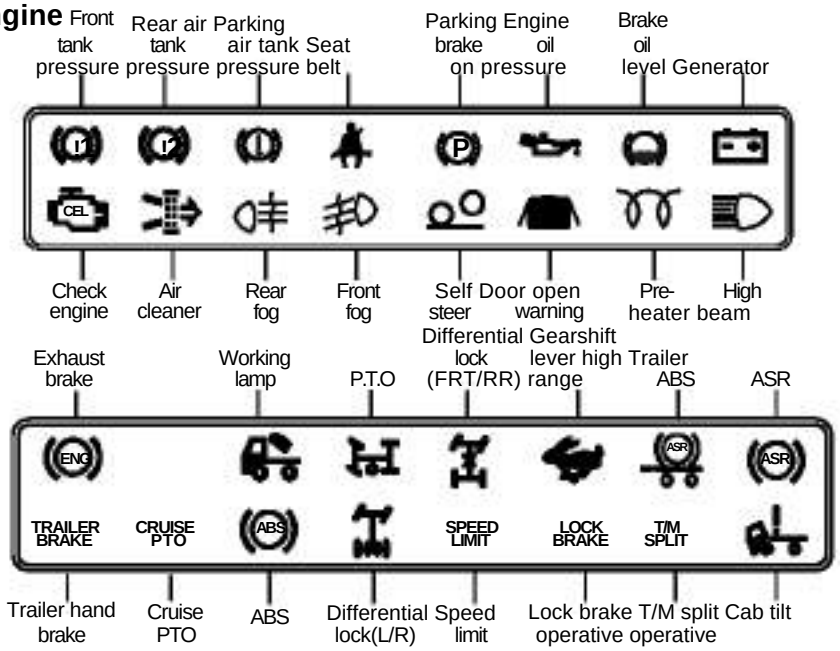

MTD0591

MTD0592

*** DDC Engine**

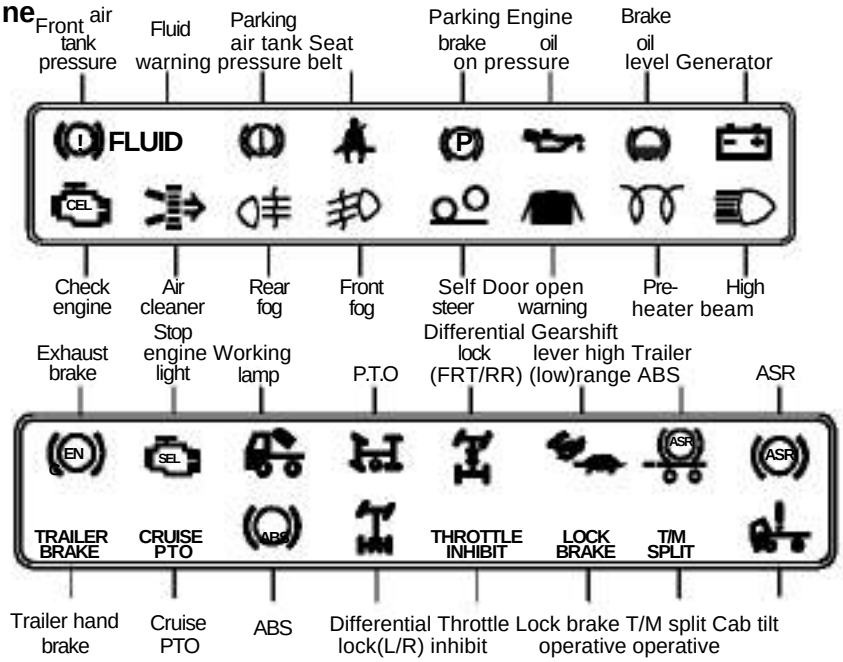

MTD0593

MTD0594

https://www.truck-manuals.net/

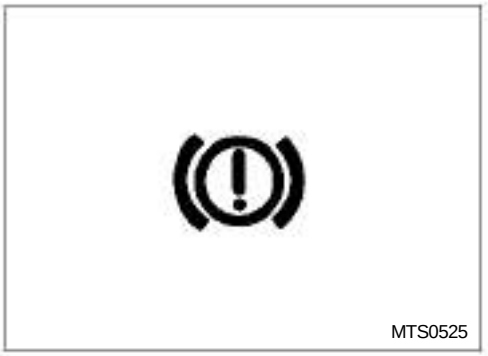

- **Low air pressure warning signal for parking brake circuit**
  When air pressure in parking tank falls to the "cut-in" pressure (around 5.3bar), the low air pressure warning signal comes on. After that, if it continues to fall to 4.2bar, the low air pressure warning lamp blinks. At this moment, for your safety, do not drive until the air reservoir holds enough air to allow the brake to be used.

- **Seat belt warning lamp**
  The seat belt warning lamp comes on when the ignition switch is placed in the "ON" position unless the driver's seat belt is securely fastened.

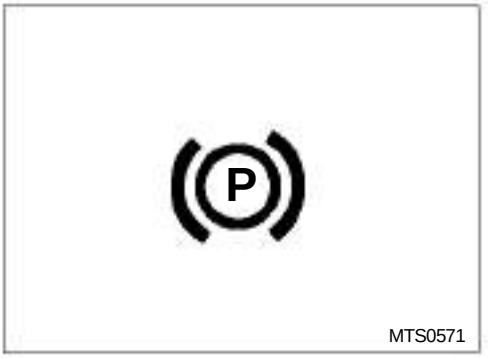

- **Parking brake indicator lamp**
  The parking brake indicator lamp comes on when the parking brake lever is pulled with the starter switch "ON".
  Before moving your vehicle, be sure to check that the parking brake indicator lamp is off.

- **Engine oil pressure warning lamp**
  This warning lamp comes on when oil level is improperly low or lubricating system is out of order. At this time, immediately stop the vehicle and check the engine oil level and lubricating system.

https://www.truck-manuals.net/

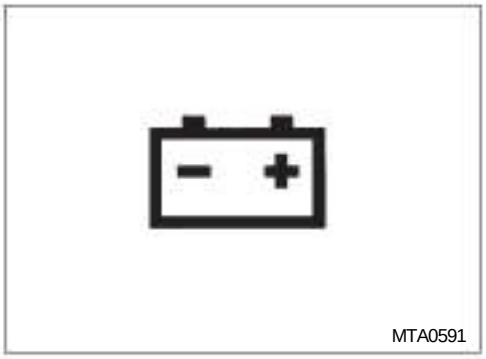

- **Generator indicator lamp**
  The generator indicator lamp comes on when the starter switch is turned to "ON" position. If the generator indicator lamp keeps lighting up while driving, have the generator circuit checked by your nearest Daewoo dealer.

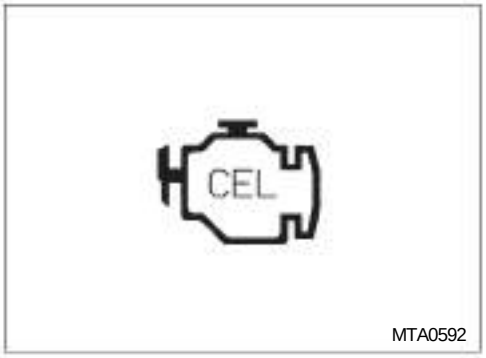

Caution

- ***Inactive codes***
  These codes will be flashed on the "Check Engine" light(CEL). When code flashing is initiated, it means that your vehicle can be operated but the engine has a problem. Therefore, you must contact immediately the nearest Daewoo Service Center for proper service.

- **Check Engine indicator lamp**

1) Indicates that engine may have malfunction if it turns on during driving.

Caution

Move to your nearest service center for check up and repair within the earliest possible even engine still operates.

2) For DDC engine
   Press engine diagnosis switch while ignition key positioned ON when engine problem occurs. Such problems are to be displayed by codes through Check Engine Indicator in chronological order.
3) For DE12TIS engine
   (1) Check Engine Indicator comes on while ignition key positioned ON when engine problem occurs. Such problems are to be displayed by the codes.
   (2) 1 pin connector in white can be a substitute for engine diagnosis switch on ECU connector.

Caution

Do not remove lead seal of 1 pin connector in black, Memory clear connector. Warranty conditions are not to be effective in this case.

https://www.truck-manuals.net/

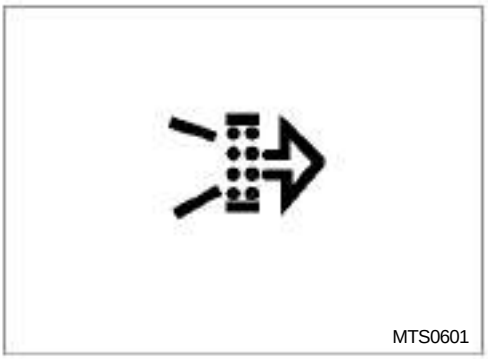

- **Air cleaner dust indicator lamp**
  The air cleaner indicator lamp comes on when the air cleaner element has been restricted. At this time, clean or replace the element, as required.

- **Rear fog lamp(euro option)**
  The rear fog lamp indicator and external fog lamps are turned on when the rear fog lamp switch is pressed "ON"

- **Front fog lamp indicator lamp**
  The fog lamp indicator and external fog lamps are turned on when the fog lamp switch is pressed "ON".

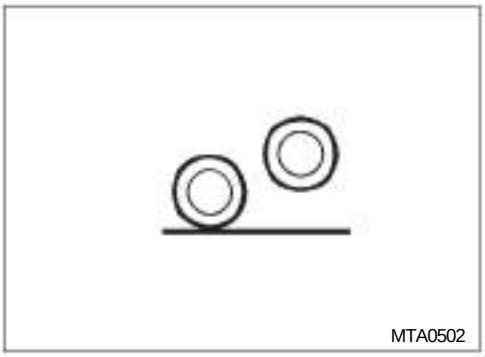

- **Self-steer indicator lamp(for 25ton cargo truck)**
  When the self-steer switch is turned to the "ON" position, the indicator lamp comes on and the self-steer comes up.

https://www.truck-manuals.net/

MTA0641

- **Door open warning lamp**
  This lamp comes on when a door is either opened or closed insecurely. Before moving your vehicle, check that the warning lamp is off.

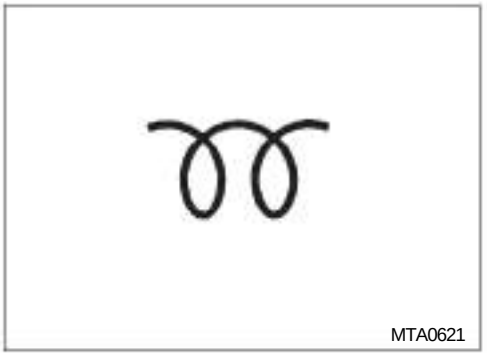
MTA0621

- **Pre-heater warning lamp**
  This lamp is designed to indicate pre-heating of the engine. It comes on when starter switch is positioned "ON", while it goes out when the preheating is completed.

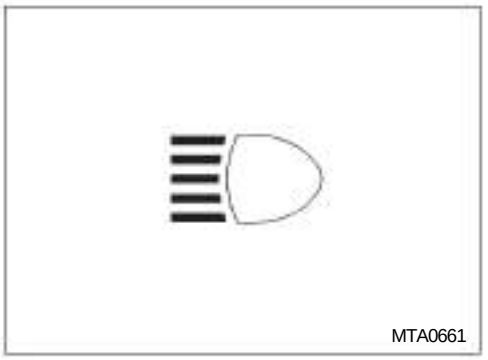
MTA0661

- **High beam indicator lamp**
  The high beam indicator lamp comes on when head lamps with high beam are in use.

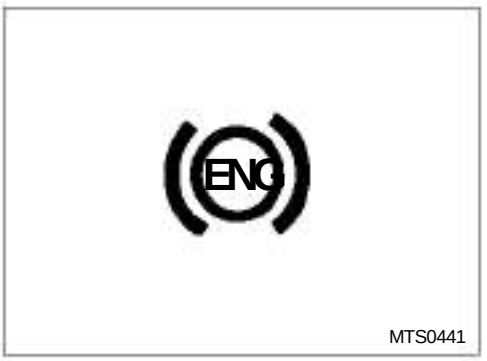

MTS0441

- **Exhaust brake indicator lamp**
  This indicator lamp is turned on when the exhaust brake switch is operated, indicating that the exhaust brake system is in operation.

  The DDC engine vehicle is turned on when the jake brake switch is operated, indicating that the jake brake system is in operation.

https://www.truck-manuals.net/

MTA0501

- **Trailer hand brake indicator lamp (tractor and pull cargo truck)**
  The trailer hand brake indicator lamp comes on when the trailer hand brake lever is operated.

MTS0461

- **Working lamp indicator lamp(for tractor, special purpose vehicles)**
  When positioning the working lamp switch "ON", the working lamp indicator lamp comes on.

MTA0511

- **ABS indicator lamp**
  This is a device designed to shorten braking distance and to prevent slippage on a rain wet road, ice-covered road, or road of abnormal condition. It is lit when there is an irregularity within ABS.

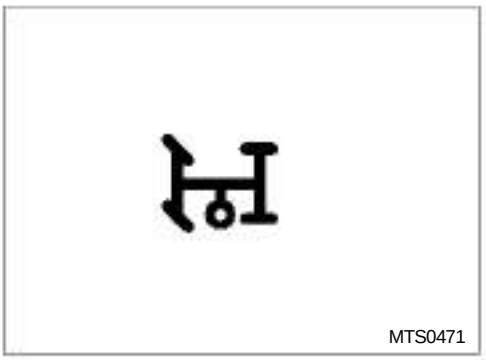
MTS0471

- **Power take-off indicator lamp (for dump, special purpose vehicles)**
  This indicator lamp comes on when the power take-off control switch is operated, indicating that the power take-off device is in operative condition. And also the warning buzzer sounds.

https://www.truck-manuals.net/

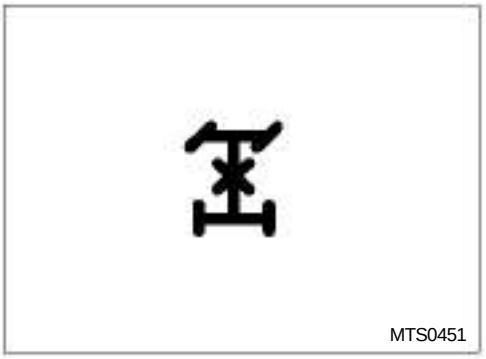
MTS0451

- **Differential lock indicator lamp(FRT/RR)**
  When differential lock switch is set to"ON" position, the corresponding indicator lamp comes on and the warning buzzer goes off, which indicates that the two rear axles are not in differential operation.

  Caution

  Before operating your vehicle, be sure to check that differential lock switch has been set "OFF".

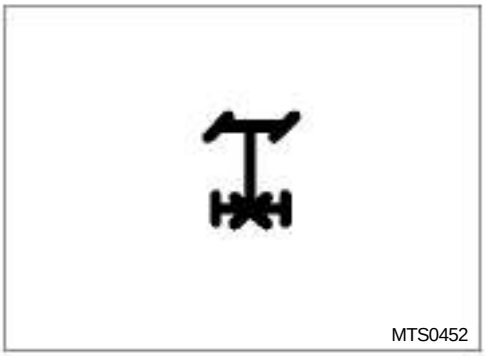
MTS0452

- **Differential lock indicator lamp(L/R)**
  When the differential lock switch is turned to the "ON" position, the corresponding indicator lamp comes on and the warning buzzer goes off, which indicates that both left and right axles are in differential operation.

  Caution

  Before operating your vehicle under normal condition, be sure to check that the differential lock switch (left and right) has been placed to "OFF".

MTA0524

- **Speed limit indicator lamp (option)**
  If the vehicle speed exceeds 80km/h, the lamp is lit to actuate the speed limit device to reduce the speed to maximum 80km/h. (24ton dump DV15TIS vehicle : 100km/h)

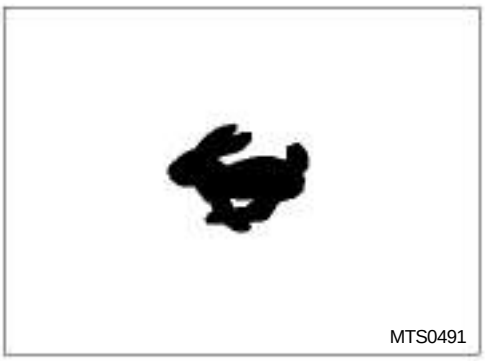
MTS0491

- **Shifting lever range HIGH indicator(for TIS engine)**
  Indicator turns on when gear position is high range between 5th to 8th gear.

https://www.truck-manuals.net/

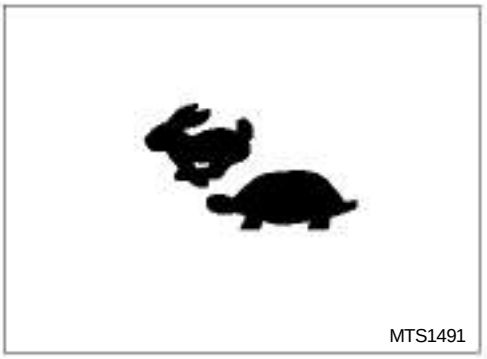

- **Shifting lever range HIGH indicator(for DDC and Cummins engine)**
  Indicator turns on when gear position is high range between 5th to 8th gear, except for 24ton dump of which turns on in low range.

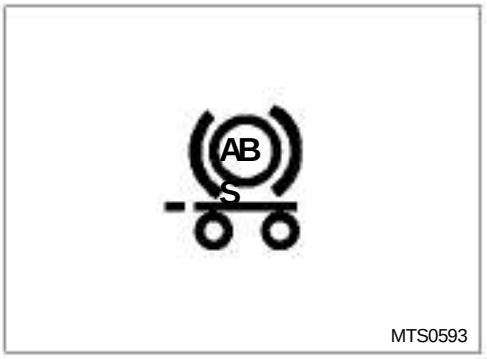

- **Trailer ABS indicator lamp (for tractor and pull cargo truck)**
  This is a device designed to shorten braking distance and to prevent slippage on a rain wet road, ice-covered road, or road of abnormal condition. It is lit when there is an irregularity within TRAILER ABS.

- **ASR indicator lamp**
  When the vehicle is accelerated on the slippery road or uphill, ASR optimize the adhesion between tire and road. When ASR system comes into operation, or abnormal condition ASR indicator lamp is automatically switched on. Also ASR indicator lamp start to blink when ASR off-road switch is switched on.

- **Splitter indicator lamp(for ZF transmission)**
  When the range-change switch attached to the gearshift lever knob is placed in the "HI" position, the indicator lamp comes on.

https://www.truck-manuals.net/

MTS0631

- **Cab tilt warning lamp**
  This lamp comes on when the cap is lifted or locking device for cab tilting is defective. Be sure to check the warning lamp before driving, and check the locking device if the lamp is on.

MTA0532

- **Stop engine warning lamp(DDC engine)**
  Indicates that engine may have serious problems, engine will stop in 30 seconds. Move the truck to safe place immediately, Press the switch within 30 seconds after indicator came up for extending operation time as much as 30 seconds for the maximum 5 times.

Caution

- ***Active codes***
  These codes will be flashed on the "Stop Engine" light(SEL). When code flashing is initiated, it means severe engine problem. In this case, take a proper measure for the engine before continuing engine operation.

Caution

1. *Contact the nearest dealer or service center for the check up or repair.*
2. *Re-staring of engine is not enabled once after it stopped automatically after the warning lamp came on.*
3. *Repeated use of engine diagnosis switch can result in serious defect on engine, Use the switch only in emergency.*
4. *Number of switch use is recorded in ECM.*

CRUISE
PTO

MTS8200

- **CRUISE PTO indicator lamp(DDC engine)**
  This indicator shows CRUISE control is activated, indicator comes on when CRUISE PTO switch is turned 'on'.

https://www.truck-manuals.net/

4) Controls of center console

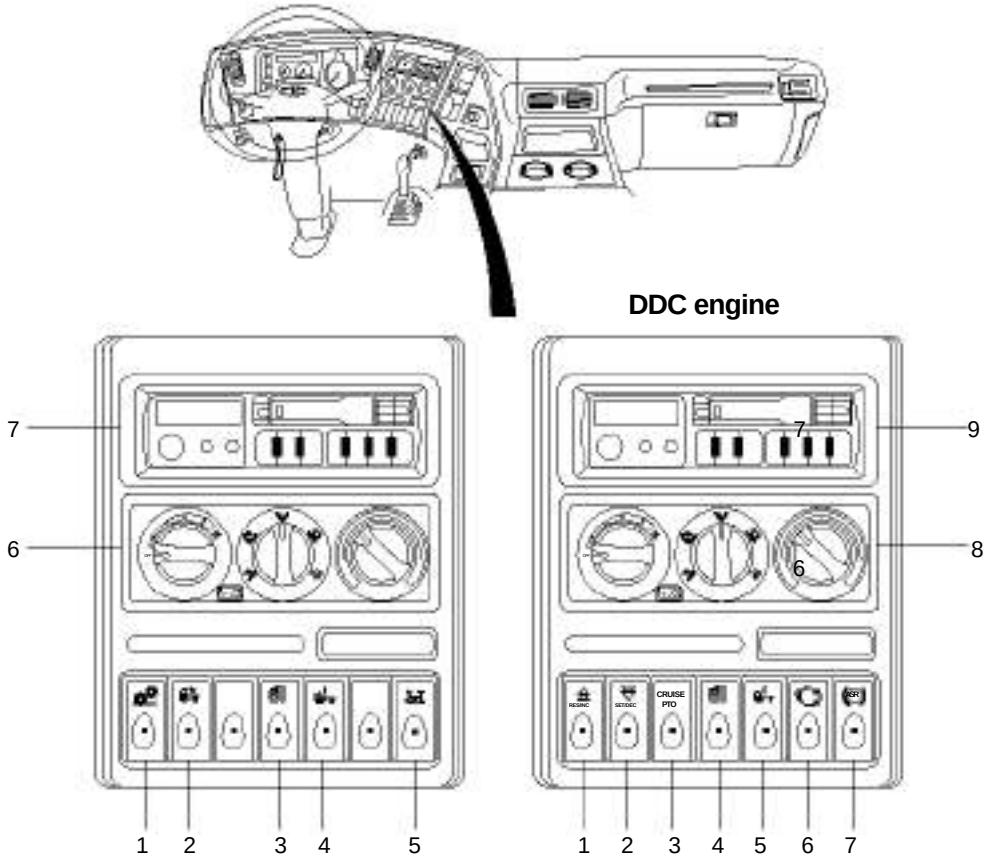

MTD0673

1. Self steer switch
   (for 20.5ton/21ton/22.5ton/24ton/25ton cargo truck)
2. Working lamp switch
   (for tractor, special purpose truck)
   Rear fog lamp switch (euro option)
3. Side mirror defroster switch
4. Cab tilt enable switch
   (The vehicle that the hydraulic cab lock option system is applied)
5. Power take-off switch
6. Heating and air conditioning control
7. Radio and cassette tape player

1. RES/INC switch(for DDC engine)
2. SET/DEC switch(for DDC engine)
3. CRUISE PTO switch(for DDC engine)
4. Side mirror defroster switch
   /Fuel preheating switch
5. Cab tilt enable switch
6. Diagnostic switch
7. Jake brake switch (for DDC engine)
8. Heating and air conditioning control
9. Radio and cassette tape player

https://www.truck-manuals.net/

MTA0715

(1) Self-steer switch
(for 20.5ton/21ton/22.5ton/25ton cargo truck)
Before attempting to travel, lower the selfsteer(with the self-steer switch turned to"OFF") when loading materials onto your vehicle so that the weight of the payload can be distributed evenly. In an unloaded state, raise the self-steer before attempting to travel.
Time required for tire lift to descend
*1) When the lift ascends : 8~9 seconds
2) When the lift descend : 30~40 seconds

Caution

1. for 25ton cargo truck actuating the reversing gear with the self-steer lowered will raise the selfsteer.
2. When laden a cargo, refer to the figure of pressure adjustment for the application pressure of a air spring of the self steer.

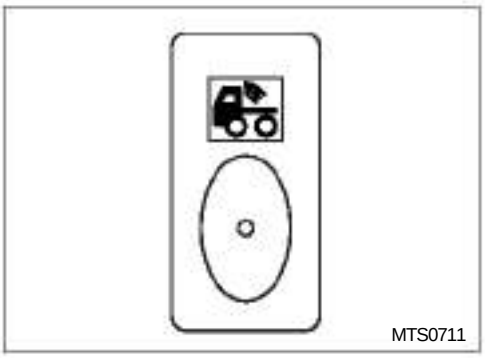
MTS0711

(2) Working lamp switch(for tractor, special purpose truck)
This switch is used to facilitate night working. Indicator lamp and working lamp are turned on when pressing this switch.

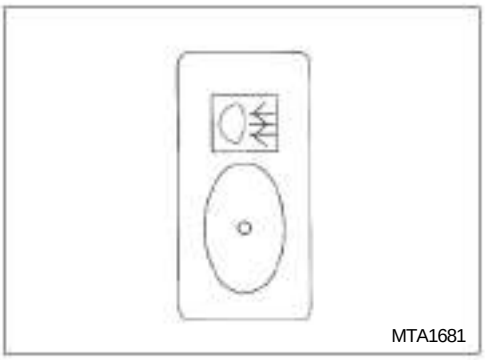
MTA1681

(3) Rear fog lamp switch (euro option)
Fog lamps provide auxiliary illumination and improve your vision in fog or snow.

https://www.truck-manuals.net/

MTA0271

(4) Side mirror defroster/Fuel preheating switch

Pressing this switch will actuate the defroster installed in the side view to remove moisture or frost.

The heating coil will actuate automatically for 15 minutes, and switch is not locked during operating time and is "OFF" automatically in time. Pressing the DDC engine truck's switch operates mirror heating coil and preheating of fuel tank simultaneously, for can use for fuel unfreezing in the winter.

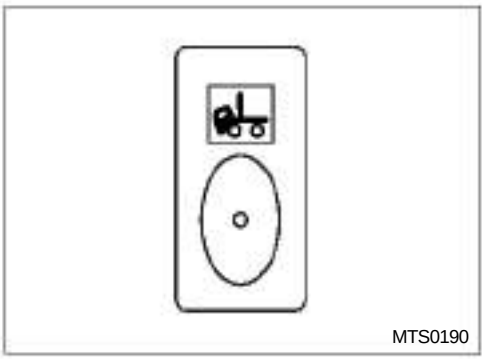
MTS0190

(5) Cab tilt enable switch(The vehicle that the hydraulic cab lock option system is applied.)

Before you tilt the cab, press this switch and release cab lock at first. And then lift the cab by pressing the switch located outside cab. While this switch is pressed to "ON", cab tilt indicator lamp on the instrument panel is turned on and warning buzzer is sounded.

Caution

Before driving, push the cab-tilt switch again to make "OFF" and check the indicator lamp "OFF".

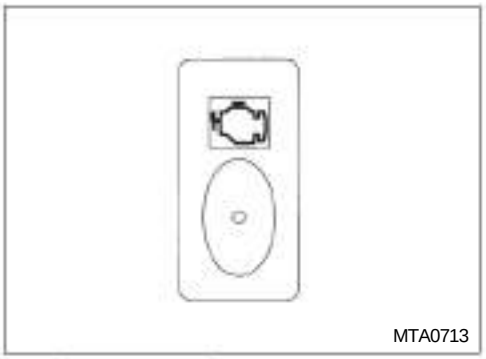
MTA0713

Caution

- ***Active codes***
  These codes will be flashed on the "Stop Engine" light(SEL). When code flashing is initiated, it means severe engine problem. In this case, take a proper measure for the engine before continuing engine operation.
- ***Inactive codes***
  These codes will be flashed on the "Check Engine" light(CEL). When code flashing is initiated, it means that your vehicle can be operated but the engine has a problem. Therefore, you must contact immediately the nearest Daewoo Service Center for proper service.

(6) Diagnostic switch

1) DDC Engine

1. As another feature of the engine diagnostic switch, if this switch is pressed with the starting key positioned "ON" when engine problem occurs, SEL ("Stop Engine"light:for ac- tive codes) and CEL ("Check Engine" light:for inactive codes) will be flashing in the order of most recent to least recent occurrence based on engine hours so as to indicate engine problems by codes.
2. When the automatic stop engine sequence is begun during travel(with the "Stop Engine" light on), the operator must continue to press the "Stop Engine Override" switch at intervals of approximately 15 to 20 seconds until a safe stop can be made. Each time this switch is pressed, the engine is driven for additional 30 seconds with power limited.

Caution

If you operate the engine for extended period of time by extending the engine driving using the engine diagnostic switch continuously, severe engine damage may result. Therefore, you must stop your vehicle somewhere near by.

https://www.truck-manuals.net

* DDC Engine

1. How to read engine diagnostic codes

The active code will be flashed on the SEL(code "25" if there is no malfunction code). Then the inactive code will be flashed on the CEL(code "25" if there is no malfunction code).
The process of flashing all the inactive codes will repeat until the conditions for code flashing are no longer satisfied.

2. Engine diagnostic codes

Codes	Description	Codes	Description
11	VSG sensor input voltage low	48	Fuel or air inlet pressure low
12	VSG sensor input voltage high	52	ECM A/D conversion fault
13	Coolant level sensor input voltage low	53	ECM non volatile memory fault
14	Oil, coolant, or intercooler, temp. sensor input voltage high	54	Vehicle speed sensor fault
15	Oil, coolant, or intercooler, temp. sensor input voltage low	55	J1939 data link fault 56 J1587 data link fault 57
16	Coolant level sensor input voltage high		J1922 data link fault
17	Bypass or throttle, valve position sensor input voltage	58	Torque overload
18	high Bypass or throttle, valve position sensor input	61	Injector response time long
21	voltage low	62	Aux. output short to battery(+) or open circuit, or mech. fault
22	TPS input voltage high TPS input voltage low	63	PWM drive short to battery(+) or open circuit.
23	Fuel temp. sensor input voltage high Fuel	64	Turbo speed sensor input fault
24	temp. sensor input voltage low	65	Throttle valve position input fault 66 Engine knock
25	No active codes		sensor input fault
26	Aux. engine shutdown #1, or #2, input active	67	Coolant or air inlet, pressure sensor input voltage fault
27	Air inlet or intake air, temp. sensor input voltage high	68	TPS idle validation switch open circuit or short to ground
28	Air inlet or intake air, temp. sensor input voltage low	71	Injector response time short
31	Aux. high side output open circuit or short to ground	72	vehicle overspeed
32	CEL or SEL short to battery(+) or open circuit	73	Gas valve position input fault or ESS fault 74
33	Turbo boost sensor input voltage high Turbo		Optimized idle safety loop short to ground
34	boost sensor input voltage low Oil pressure	75	ECM battery voltage high
35	sensor input voltage high Oil pressure sensor	76	Engine overspeed with engine brake
36	input voltage low	77	Fuel temperature high
37	Fuel pressure sensor input voltage high Fuel	81	Oil level, crankcase prs, dual fuel BOI, or exh. temp. volt high
38	pressure sensor input voltage low	82	Oil level, crankcase prs, dual fuel BOI, or exh. temp. volt low
41	Too may SRS (missing TRS) Too few SRS(missing	83	Oil level, crankcase prs, exhaust temp.,or external pump
42	SRS)		prs.,high
43	Coolant level low	84	Oil level or crankcase pressure, low
44	Oil, coolant, intercooler or intake air, temp. high	85	Engine overspeed
45	Oil pressure low	86	External pump or barometer, pressure sensor input voltage high
46	ECM battery voltage low	87	External pump or barometer, pressure sensor input voltage low
47	Fuel, air inlet, or turbo boost, pressure high	88	Coolant pressure low

https://www.truck-manuals.net/

2) DE12TIS Engine

1. Check Engine Indicator comes on while ignition key positioned ON when engine problem occurs. Such problems are to be displayed by the codes.
2. 1 pin connector in white can be a substitute for engine diagnosis switch on ECU connector.

Caution

Do not remove lead seal of 1 pin connector in black, Memory clear connector. Warranty conditions are not to be effective in this case.

*** DE12TIS Engine**

1. How to read engine diagnostic codes

Code 21(CEL → Inactive codes)

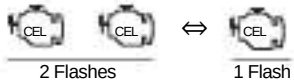

The process of flashing all the inactive codes will repeat until the conditions for code flashing are no longer satisfied.

2. Engine diagnostic codes

Codes	Description
15	Prestroke acutuator power error
21	Coolant temperator sensor error
22	Fuel Rack sensor error
23	Intake air heater error
16	Engine speed sensor error
14	Prestroke offset learning error
13	Prestroke sensor error
12	Prestroke control servo error
11	No inactive codes

https://www.truck-manuals.net/

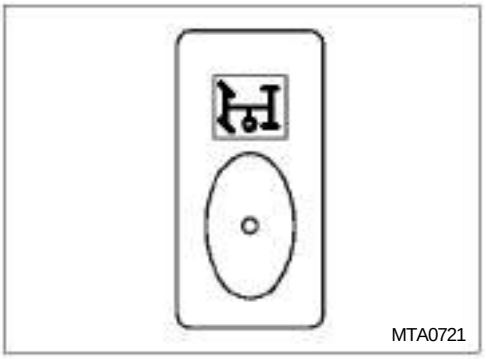
MTA0721

(7) Power take-off switch(for dump, special purpose truck)

This switch is used to operate the power take-off device. When the switch is pressed to "ON", the P.T.O. device starts working, P.T.O. indicator lamp on the instrument panel is turned on, and warning buzzer sounds all the while P.T.O. works. When the deck is raised, warning buzzer sounds continuously even though the P.T.O. switch is turned to "OFF".

Caution

Stop the vehicle and depress the clutch pedal all the way to the floor before operating this switch.

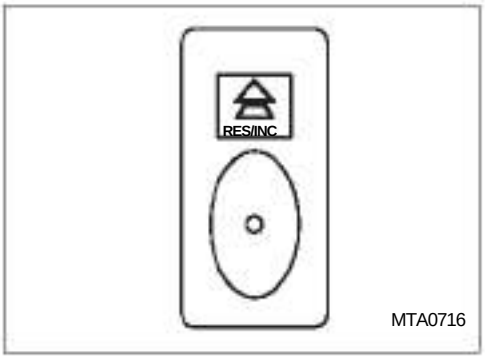

MTA0716

(8) RES/INC switch(DDC engine)

Pressing this switch while CRUISE/PTO switch is activated results in increase of vehicle speed, Vehicle speed will be maintained constantly when de-pressing the switch. Pressing brake or clutch pedal will disengage cruise control function. Repress the switch will maintain the vehicle speed at which the pedal pressed.

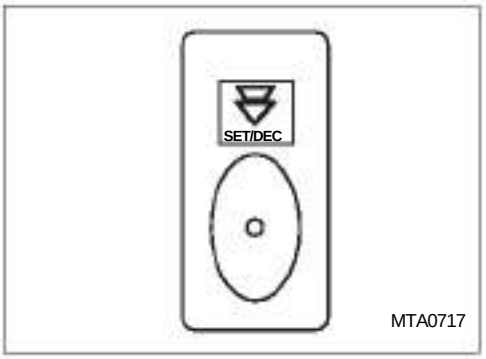

MTA0717

(9) SET/DEC switch (DDC engine)

Pressing this switch while CRUISE/PTO switch is activated results in constant vehicle speed, Vehicle speed will be decreased if this switch is pressed when CRUISE CONTROL is activated. De-press the switch will maintain the vehicle speed again.

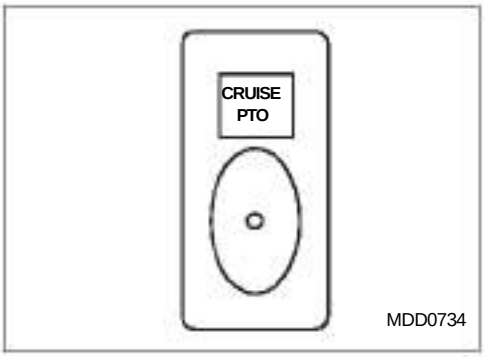

MDD0734

(10) CRUISE/PTO switch(DDC engine)

CRUISE CONTROL function controls fuel flows and set vehicle speed at which the operator requires. Pressing CRUISE CONTROL activates the function.

https://www.truck-manuals.net/

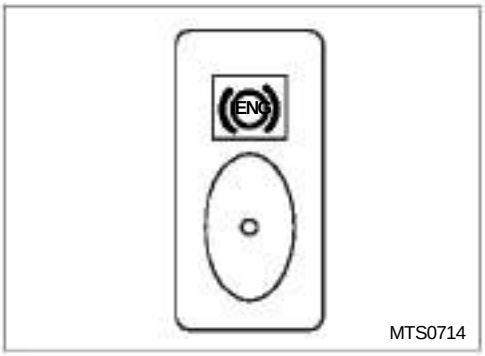

(11) Jake Brake switch(for DDC engine)

This switch is used in conjunction with the right lever of the combination switch. Pressing this switch will actuate the Jake Brake and light up indicator lamps on the instrument panel light up. Unlike exhaust brake system, Jake Brake system isolates fuel from entering the cylinder and opens cylinder exhaust valves to release compressed air, the effect reducing a net energy loss and preventing the engine from being overstrained.

Lowering the right lever of combination switch actuates 4 Jake Brake cylinders, while turning the switch on console box to "ON" actuates 2 Jake Brake cylinders. The operator is required to elect the Jake Brake correctly according to the road condition.

The Jake Brake is actuated only in such a state that both accelerator pedal and clutch pedal are not depressed. If either of accelerator pedal or clutch pedal is depressed, the Jake Brake is disengaged.

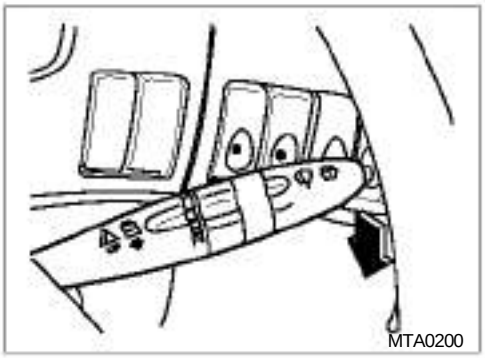

Caution

If both switches are actuated simultaneously, compressed air is released from the 6-cylinder and actuate the Jake Brake. Be careful of this.

Description / Range	1st position	2nd position	3rd position
NO.of jake brake cylinder energized	3 and 4	1,2,3 and 4	1 through 6
Effciency of Jake Brake at each position	33%	67%	100%

https://www.truck-manuals.net/

(12) Heating and air conditioning control(option)

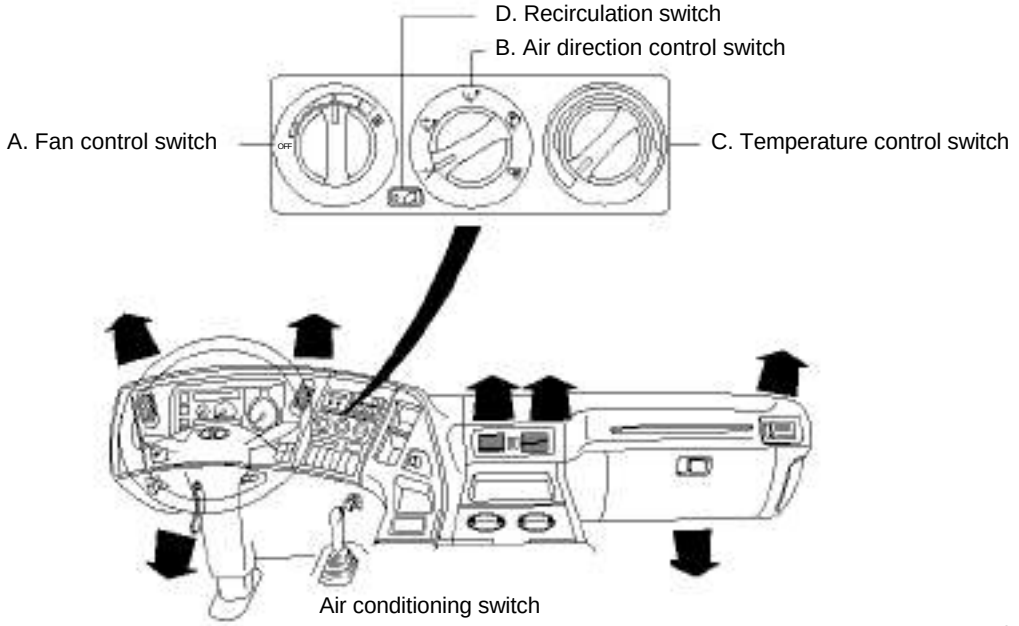

MTA0750

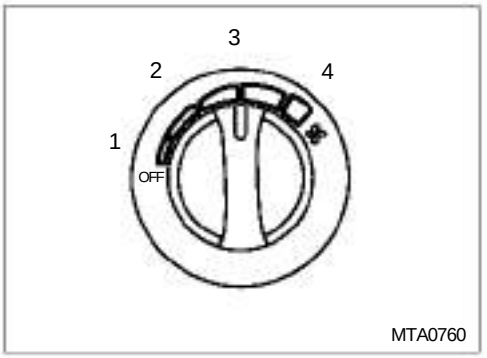

MTA0760

A. Fan control switch

The fan control switch can control the speed of air flow in 4 steps.

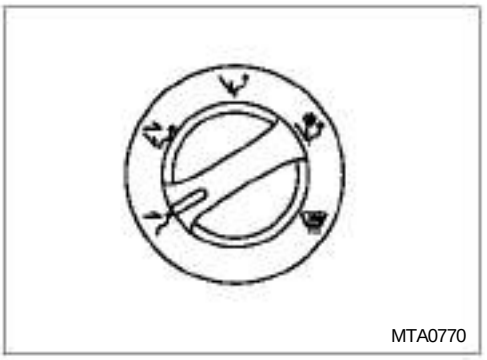

MTA0770

B. Air direction control switch

This switch allows you to change the direction of air flow.

: Air flows in through the center and side air vents. :

Air flows in through the center, side and foot vents.

: Air flows in through the foot vent.

: Air flows in through the foot vent to defrost windshield and side windows.

: Defrosting the windshield and side windows.

https://www.truck-manuals.net/

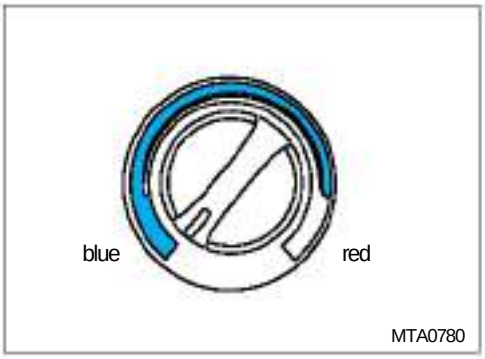

C. Temperature control switch

This switch is used to adjust the flow of the engine coolant to control indoor temperature.

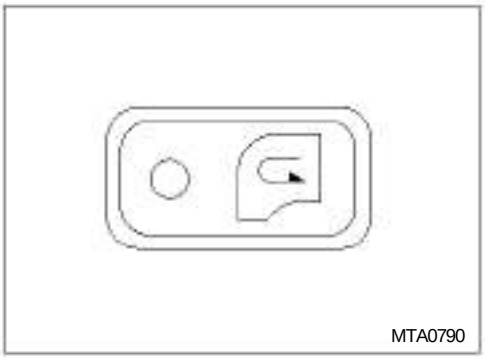

D. Recirculation switch

Press this switch when driving in dusty conditions or traffic fumes, and also when quick cooling or heating is required, and the inside air will be recirculated in the vehicle.

Recirculation: switch position (ON)

Circulation : switch position (OFF)

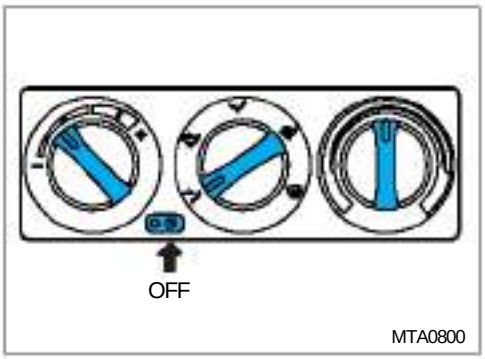

- **Ventilation**

  Air conditioning switch: "OFF"
  Recirculation switch: "OFF"
  Temperature switch: As required
  Fan control switch: As required

  Press this switch again will draw outside air into the cab so that the cab can be ventilated.

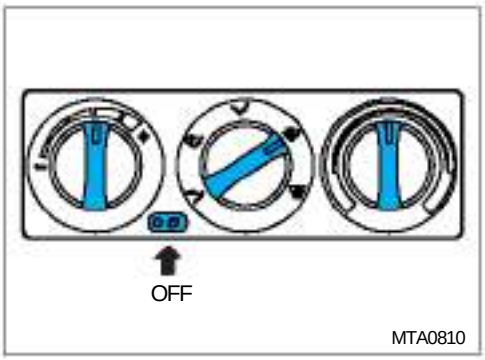

- **Defrosting**

  Air conditioning switch: "ON"
  Recirculation switch : "OFF"
  Temperature switch : As required
  Fan control switch : As required
  Air direction switch: or

  Use this procedure to defrost the windshield and side windows.

https://www.truck-manuals.net/

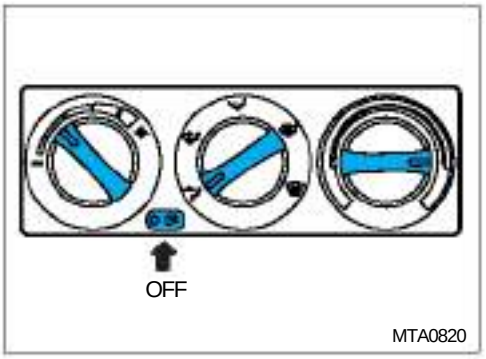

- **Normal heating**
  Air conditioning switch: "OFF"
  Recirculation switch: "OFF"
  Temperature switch: As required
  (in red colored zone)
  Fan control : As required

  Use this procedure to adjust inside temperature in cold weather.

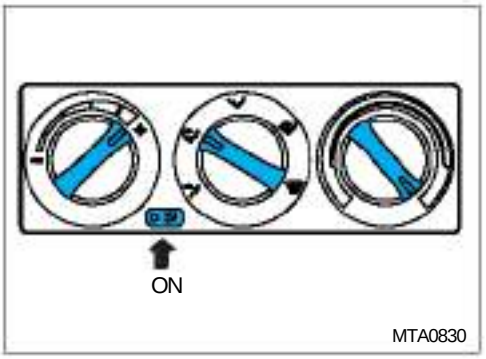

- **Maximum heating**
  Air conditioning switch : "OFF"
  Recirculation switch : "ON"
  Temperature switch: right-end(in red colored zone)
  Fan control switch: 4 steps

  Using this function for extended time is not good for your health as only inside air is circulated. And when the vehicle is forced to slow down due to traffic jam or for any other reasons, a long-time use of this operation may cause battery discharge.

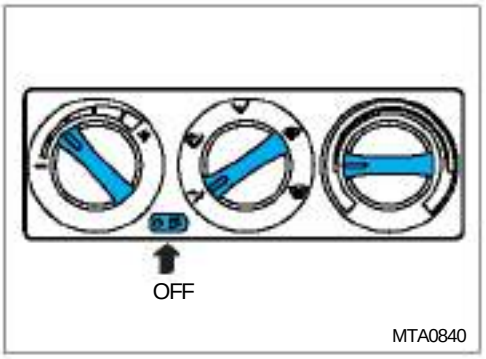

- **Normal cooling**
  Air conditioning switch: "ON"
  Recirculation switch: "OFF"
  Temperature switch: As required
  (in blue colored zone)
  Fan control switch: As required

  Use this procedure to enhance your motoring pleasure on a long-distance journey in hot weather.

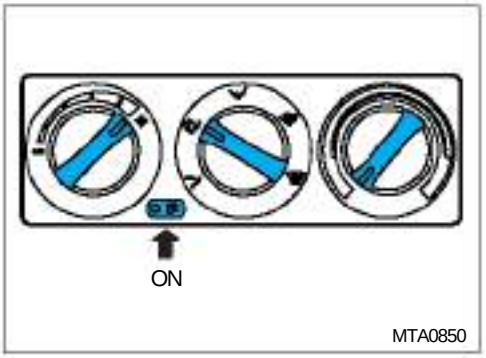

- **Maximum cooling**
  Air conditioning switch: "ON"
  Recirculation switch: "ON"
  Temperature switch: left-end(in blue colored zone)
  Fan control switch: 4 steps

  Using this function for extended time is not good for your health as only inside air is circulated. And when the vehicle is forced to slow down due to traffic jam or for any other reasons, a long-time use of this operation may cause battery discharge.

https://www.truck-manuals.net/

(13) Radio and cassette tape player(SCE-4084: option)

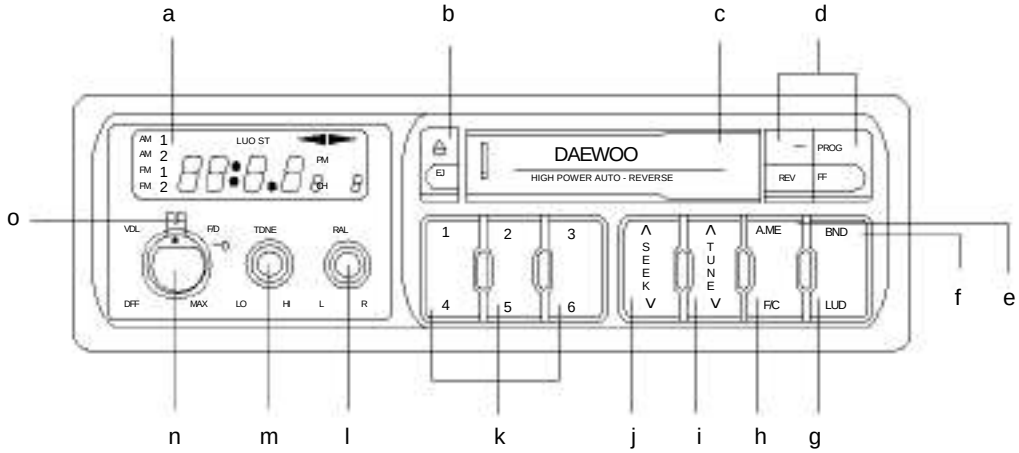

MTA0860

a. Liquid crystal display(LCD)

b. EJECT button

c. Tape insertion

d. Program switching button
(Fast forward/rewind button)

e. Seek/Preset(A.ME) button

f. Band seek button

g. LOUD button

h. Frequency/current time(F/C) selection button

i. Tuning button

j. Seek button

k. Preset button

l. Balance control

m. Tone control

n. Power ON-OFF/Volume control

o. Fader control

https://www.truck-manuals.net/

* FUNCTIONS

a. Liquid crystal display(LCD)
This panel displays the radio or tape playback function, and time.

b. EJECT button
Pressing " ▲ " button ejects the tape and automatically switches to radio function.

c. Tape insertion
Inserting a tape into the tape deck will stop the radio and automatically switch to the tape playback function.

d. PROG switching button
Press both "REW" and "FF" buttons simultaneously to play the reverse side of tape. Tape advancing direction is indicated on the LCD display.

Fast Forward/Rewind button
* Press "FF" button for last winding of the tape in the tape advancing drection. For fast winding in reverse direction, press "REW" button.

e. Seek/Preset(A.ME) button
Press this button for less than 2 seconds for PS state, and for more than 2 seconds for AS state.

f. BAND seek button
Press the BAND button(AM or FM) to select the desired band. The band is displayed on the LCD panel in the order of FM1, FM2, AM1 and AM2.

g. LOUD button
Press this button to enhance the bass or treble sound during the radio or tape playback function.

h. Frequency/current time(F/C) selection button
Pressing this button indicates the frequency of the radio which you are listening to or the current time.

i. Tuning button
Press " "(or " ") button to manually select the desired frequency.

j. Seek button
Press this button to automatically seek for the next available station. (Press " " to obtain higher frequency, and " " to obtain lower frequency.)

k. Preset button
Use buttons No. 1~6 to store the desired broadcasting stations or select the stored stations.

l. Balance control
Turn this knob left or right to control the volume of left or right speaker.

m. Tone control
Turning this knob left decreases TREBLE.

n. Power ON-OFF/Volume control
Turn this knob clockwise to turn on the power and increase the volume; counterclockwise to decrease the volume and turn off the power.

o. Fader control
Turn the fader knob clockwise to increase the front speaker volume, and turn it counter-clockwise to increase the rear speaker volume.

https://www.truck-manuals.net/

✱ SELECTING THE DESIRED STATION

1. Tuning button

Either press this button once to adjust frequency by each step or press and hold for quick adjustment.

2. SEEK button

Press this button to automatically seek for the next available station.

3. SEEK function using A.ME button

1) Press this button for less than 2 seconds to scan through every station stored in the memory. Scanning stops at each station for 5 seconds. While each station is scanned through, the corresponding channel(1-6) blinks on the LCD panel. After remaining for 5 seconds at each station, it will be switched to the next station. When the desired frequency is received, press this button again to continue listening to it.
2) Press and hold this button for more than 2 seconds. Including the currently tuned station, the next six stations in the selected band are stored in the preset buttons(1-6). (Auto memory function)

4. Selecting a station using the preset button

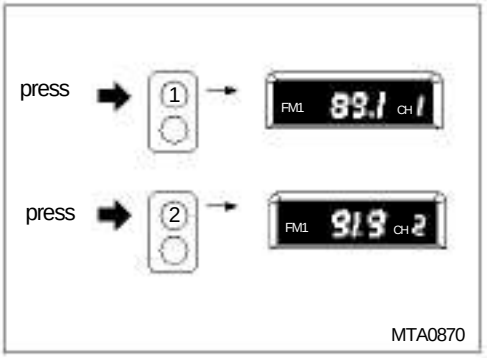

Press the button to which the desired frequency is stored(Channel number and frequency appear on the LCD panel).

- **Storing the desired station in the memory**
  After selecting the desired station, press and hold the preset button (a desired number among 1-6) for more than 2 seconds to automatically store the selected station.
  Ex) To store 89.1 MHz at #1 preset button, select the frequency(89.1 MHz) and then press #1 button for more than 2 seconds.

- **Confirming the memory state of preset button**
  1) Press and hold the desired preset button for more than 2 seconds. Radio sound will be interrupted momentarily.
  2) Press the memorised preset button again. The corresponding frequency and channel will appear on the LCD panel.

5. How to adjust time

1) It may be necessary to adjust current time following battery change or repair. To adjust the current time, perform the following procedure:
2) Make sure the LCD panel displays time. (If frequency is displayed, press F/C selection button. Time will appear on the LCD panel.)

https://www.truck-manuals.net/

3) To adjust HOUR, press " " of TUNING button while pressing F/C button.
4) To adjust MINUTE, press " " of TUNING button while pressing F/C button.
5) For faster adjustment, keep pressing F/C button and " "(or " ") of TUNING button.

✱ LISTENING ON THE RADIO

1. Turn the knob to the right to turn on the power. Frequency will appear on the LCD panel. If a tape remains in the tape deck, radio does not operate. Therefore, eject the tape by pressing the EJECT button.
2. Press the AM/FM(BAND) selection button to select the desired band. 3. Select the desired station.
4. Use the VOLUME and TONE control knob to select the desired sound.

✱ LISTENING ON THE TAPE PLAYER

1. Turn the knob to the right side to turn on the power.
2. Use the VOLUME and TONE control knob to select the desired sound.
3. Insert the tape into the tape deck while pointing the tapehead to the right-hand side. Radio function will be switched to tape function.
   - In case of loose tape, insert a pencil into the wheel and turn it to tighten the tape.

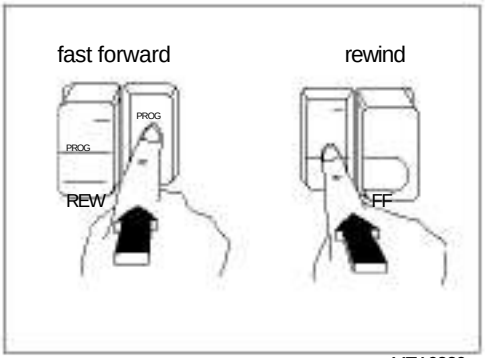

MTA0880

4. Fast Forward and Fast Rewind
5. To stop playback of the tape, press the " "(EJECT) button. The tape will stop and be ejected from the tape deck.

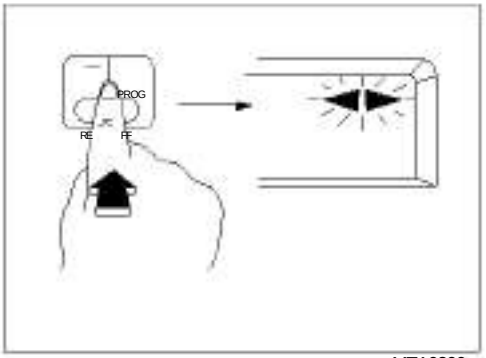

MTA0890

6. Program switching button
   Press "REW" and "FF" buttons simultaneously to listen to the opposite side while replaying the tape. (Tape advancing direction indicated on the LCD panel will be changed.)
7. When the end of the tape is reached, it is automatically switched to the opposite direction and begins playback. (AUTO REVERSE function)

https://www.truck-manuals.net/

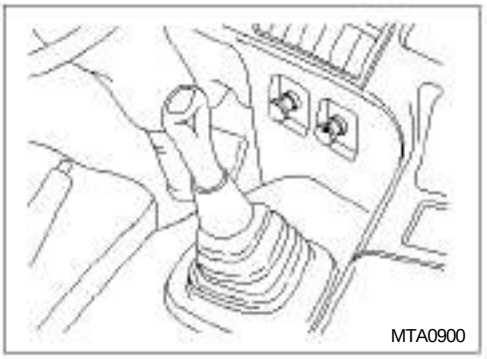

5) Miscellaneous controls

- **Gearshift lever**
  When shifting the gear, fully depress the clutch pedal. When preparing to back up, you must stop the vehicle completely and then shift to reverse position.

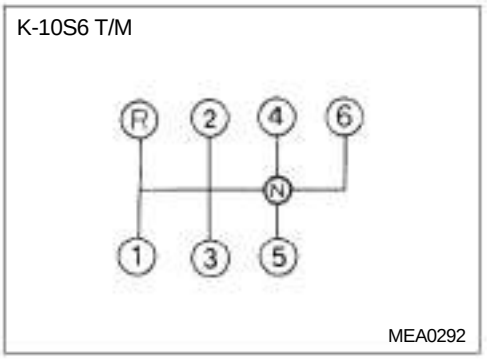

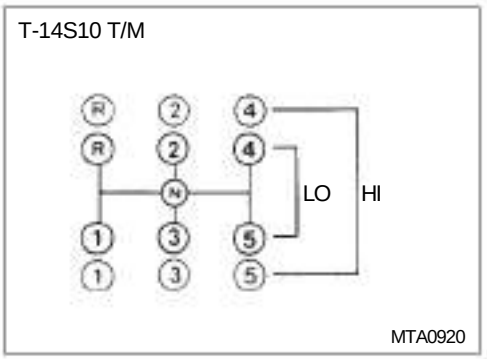

- After manipulating the HI-LO adjusting switch attached to knob without changing the position of gearshift lever, depress the clutch and then release it to change gears.

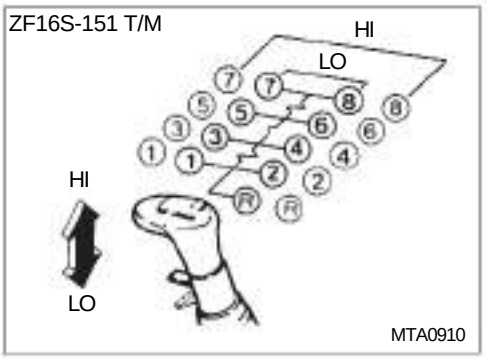

* In the case of ZF 16S-151 transmission, when preparing to shfit from 4th position to 5th position, disconnect the gearshift lever from 4th position and snap it lightly toward the right-hand side to put it into 5th position.

https://www.truck-manuals.net/

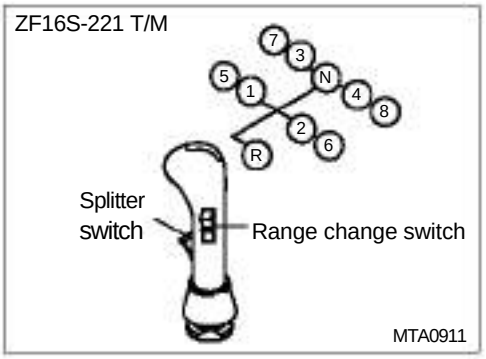

* In the case of ZF16S-221 transmission, when preparing to shift from 4th to 5th position, press the upper edge of the range change switch and then depress the clutch pedal and push the gearshift lever into the 1st position. When shifting from 5th to 4th position, reverse this procedure.

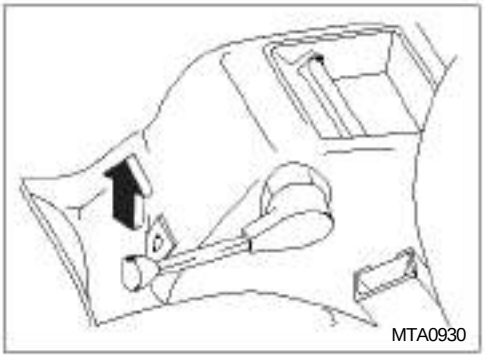

- **Trailer hand brake lever (for tractor and pull cargo)**
  Use this brake lever when preparing to reduce only trailer speed on a downhill.

- **Accelerator pedal**
  To avoid unnecessary increase in fuel consumption, the accelerator pedal should be operated smoothly and reasonably. Make sure that injection pump lever reaches maximum speed stopper when pressing accelerator pedal fully. If the lever won't reach the stopper, use accelerator pedal cable adjusting nut to adjust the cable length.

- **Brake pedal**
  When stopping your vehicle, do not press the pedal forcibly but try to press it repeatedly. On a downhill, use this pedal together with exhaust brake as required.

https://www.truck-manuals.net/

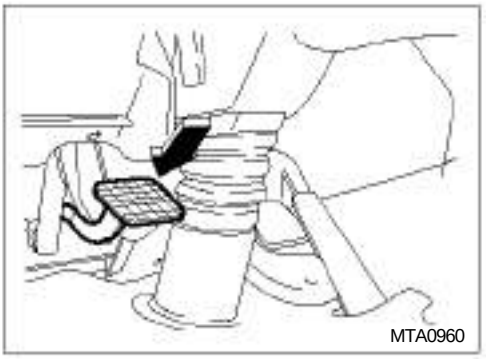

- **Clutch pedal**
  Fully depress the clutch pedal when changing gears. Do not rest your foot on the pedal when the clutch is not in use. Premature wear of the clutch will result.

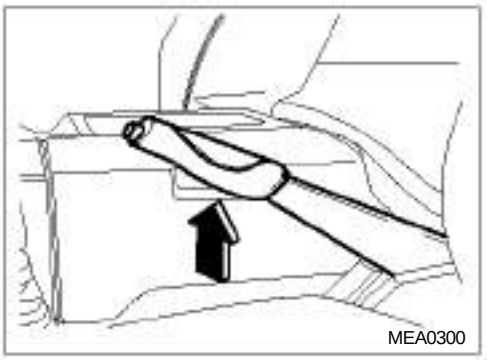

- **Parking brake lever**
  To set the parking brake, pull up the lever(normal notch: 9). To release, pull up the lever slightly and push it down completely with the button on end of lever depressed fully.

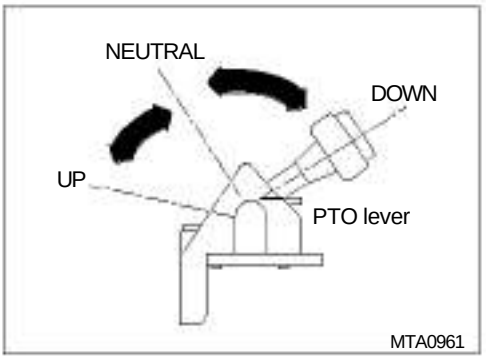

- **Dump control lever(for 19/24ton dump truck)**
  If the dump control lever is placed into the "UP" or "DOWN" position after the PTO lever is pulled up(at this time the dump control lever returns to the "NEUTRAL" position simultaneously), the deck will move up or down.

Caution

- *If the dump control lever is moved from the NEUTRAL position to the DOWN position, the PTO lever also is pulled down.*
- *At time of maintenance or when the deck is to be raised for a long time, make sure that the lever in the cab is placed in "UP" and moves down the PTO lever.*

https://www.truck-manuals.net/

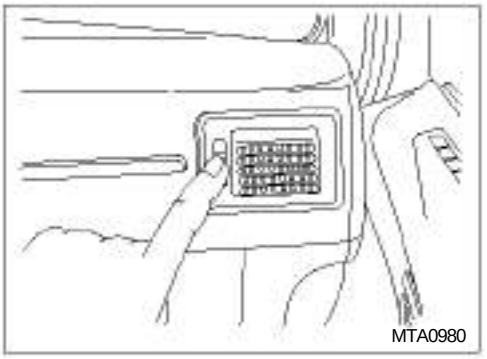

- **Vents**
  Outdoor air can be directed into the cab through these vents. Airflow and air direction can be adjusted as desired.

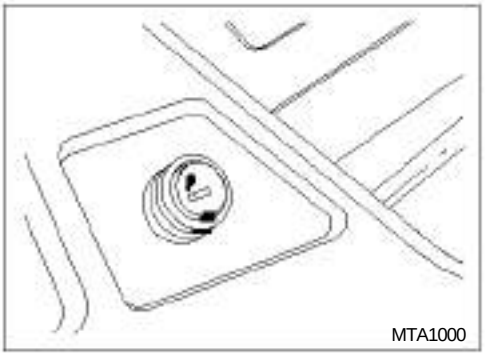

- **Cigarette lighter**
  Push in this lighter and wait about 15 seconds until it is heated, then it will pop out.
  If it won't pop out within 20 seconds, pull it back to the original position as it has been faulty. Do not keep pushing it or leave the vehicle without removing it. If overheated, it may cause a fire.

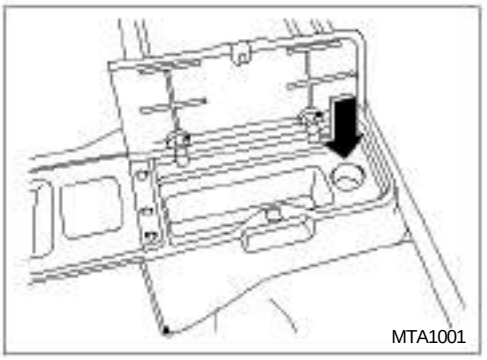

- **Consent(12V:option)**
  Use this consent for other convenience electric appliances.

Caution

Be sure to switch off these convenience electric appliances when leaving your vehicle, as leaving the vehicle with them in operation and unattended may cause overload resulting in a fire.

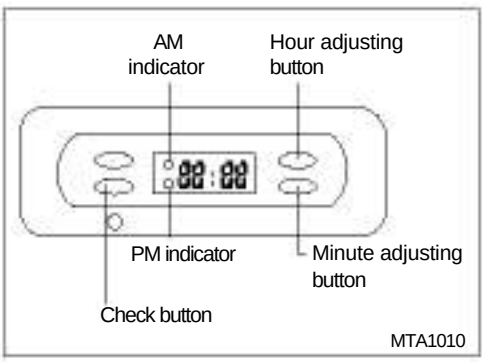

- **Digital clock(deluxe)**
  Press hour and minute setting buttons to adjust hour and minute digits. It turn on the P.M indicator lamp in the afternoon and the A.M indicator lamp in the morning.

https://www.truck-manuals.net/

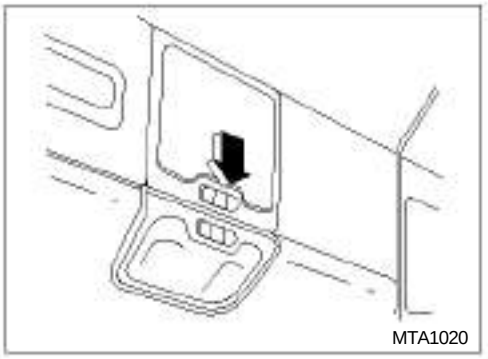

- **Fluorescent room lamp**
  Press fluorescent room lamp switch to illuminate the vehicle cab. Press again this switch to put out the fluorescent lamp.

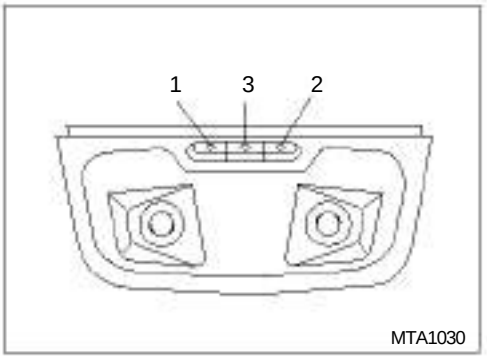

- **Spot lamps**
  (1) Left lamp "ON", "OFF"
  (2) Right lamp "ON", "OFF"
  (3) Center lamp "ON", "OFF"(The light is turned on when a door remains open.)

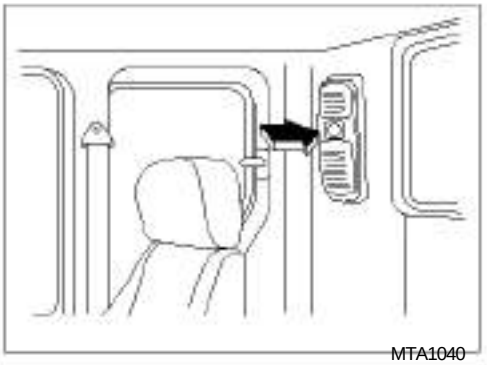

- **Reading lamp**
  The reading lamp switch is located at the rear upper side of the cab. It is used to illuminate the cab while in bed.
  * Reading lamp can be turned on regardless of starter switch position, i.e., "ON" or "OFF".

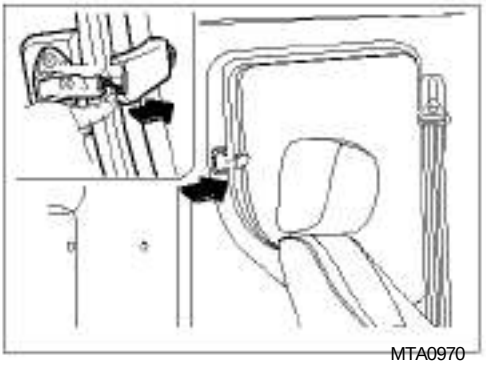

- **Cab side window**
  For ventilation, unlock the window opening lever to open the cab side window.

https://www.truck-manuals.net/

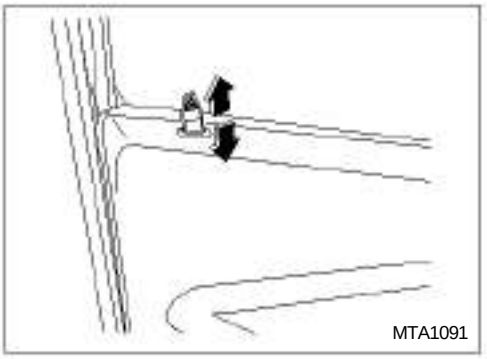
MTA1091

- **Door**
  (1) Using the starter key, open and close the door on the driver's seat side or the fellow driver's seat side.
  (2) Pressing the door lock button up and down, open and close each door.

Caution

Ensure that all the doors are closed firmly before travel. If any door is opened during travel, danger will follow.

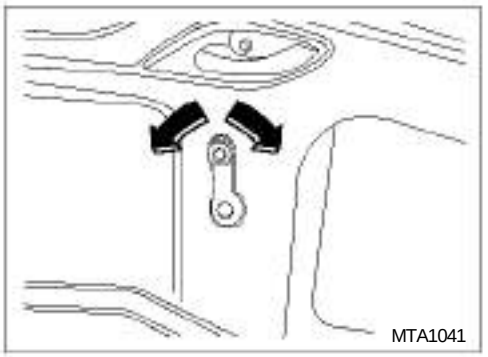
MTA1041

- **When opening and closing door window**
  Turning a door knob, open and close the appropriate door window.

Caution

When closing a door window, exercise care so that your hand or head is not caught in it.

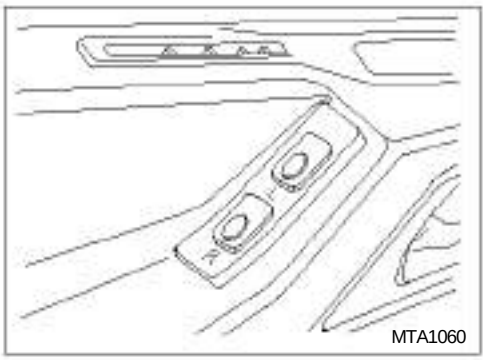
MTA1060

- **Power window switches(one touch:option)**
  These switches can open or close side windows. Once either switch is pressed, the correspon-ding side window is completely opened or closed. While pressing a switch, adjust the position of the corresponding window as desired.

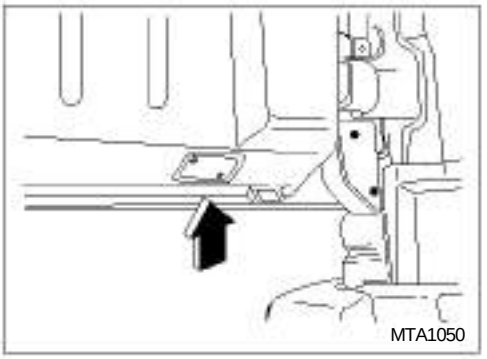
MTA1050

- **Step lamp**
  When opening the driver side door, the step lamp equipped on the lower face of the door is turned on.

https://www.truck-manuals.net/

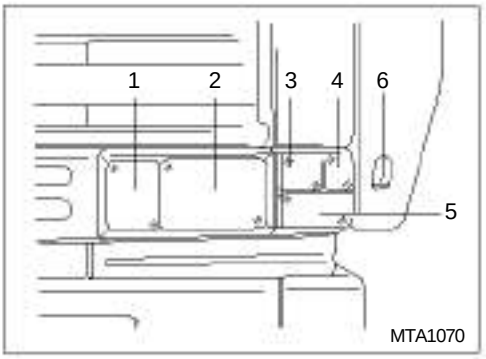

- **Front lamp**
  (1) Fog lamp
  (2) Head lamp
  (3) Turn signal lamp
  (4) Parking lamp
  (5) Clearance lamp and cornering lamp
  (6) Sub turn signal lamp

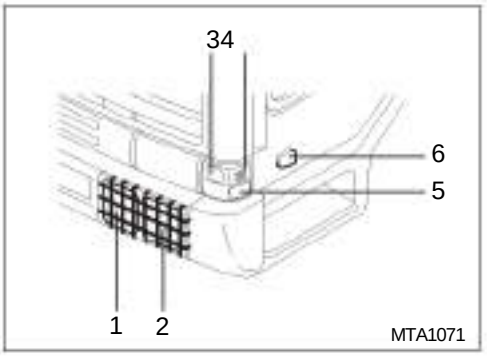

- **Front lamp(dump truck)**
  (1) Fog lamp
  (2) Head lamp
  (3) Trun signal lamp
  (4) Parking lmap
  (5) Clearancel lamp and conering lamp
  (6) Sub trun signal lamp

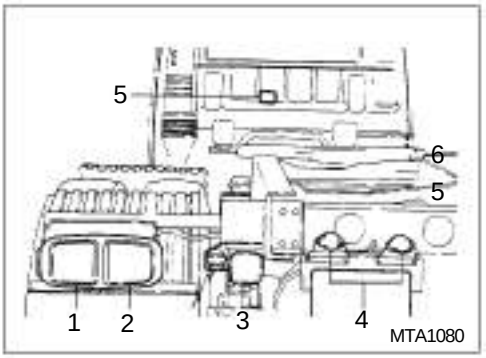

- **Rear lamp(tractor)**
  (1) Turn signal lamp
  (2) Parking lamp, clearance lamp, and stop lamp
  (3) Back up lamp
  (4) License plate lamp
  (5) Working lamp

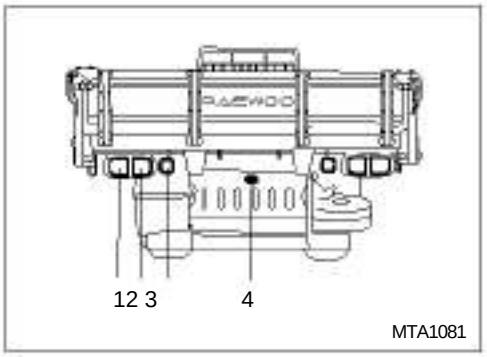

- **Rear lamp(cargo truck)**
  (1) Turn signal lamp
  (2) Parking lamp, clearance lamp, and stop lamp
  (3) Back up lamp
  (4) License plate lamp

https://www.truck-manuals.net

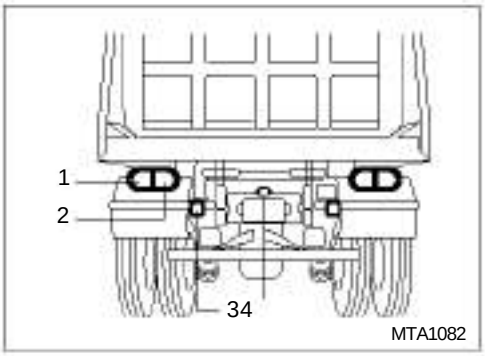

- **Rear lamp(dump truck)**
  (1) Turn signal lamp
  (2) Parking lamp, clearance lamp, and stop lamp
  (3) Back up lamp
  (4) License plate lamp

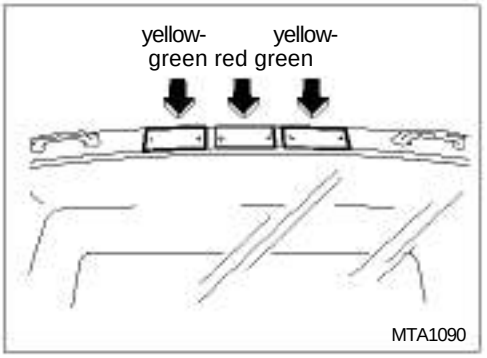

- **Speed indicator lamp(option)**

Vehicle speed	No. of lamps	Order of lighting	Color of light
0-50km/h	1	left	Yellow-green
51-80km/h	2	right	Yellow-green
above 81km/h	3	middle	Red

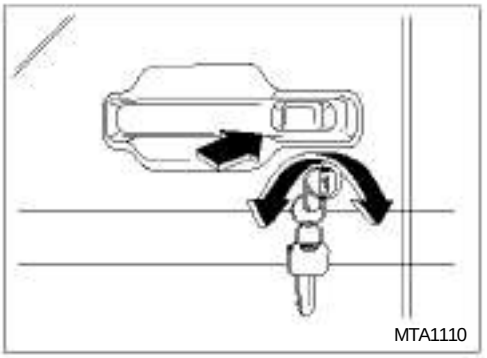

- **Auto door lock switch(deluxe)**
  This switch locks or opens both the driver's door and co-driver's door simultaneously.

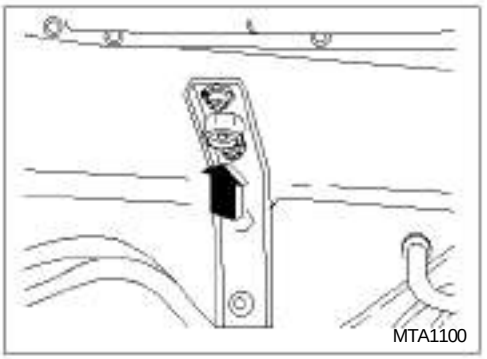

- **Remote starter switch**
  This switch can operate the engine when attempting to check the engine with cab tilted,

Caution

Before using this switch to start the engine, always be sure to place gearshift lever in neutral position and to apply the parking brake. And also starter key must be positioned "ON".

https://www.truck-manuals.net/

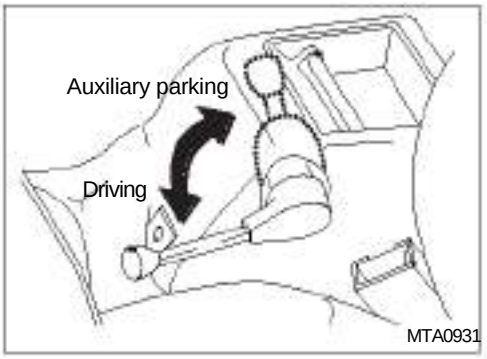

- **Auxiliary parking brake (20.5/21/22.5ton Cargo with self steer axle)**
  Use this lever for additional parking brake force.

Caution

1. This brake alone shall not be used for the purpose of parking.
2. Activate air parking brake valve before operating this lever.
3. Air pressure is subject to drop by leakage after long hours when engine is off.
(Activated when air pressure is higher than 3 bar).
4. Chock the wheel to park the loaded vehicle for a long hour.

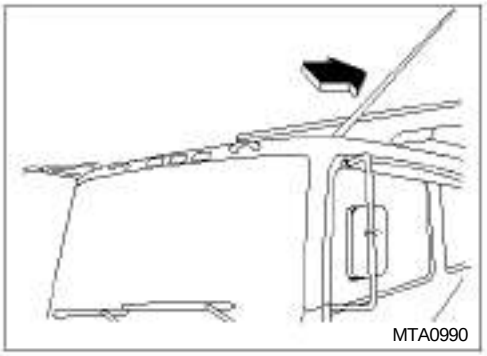

- **Antenna**
  Place the antenna as upright as possible to obtain good radio reception.

https://www.truck-manuals.net/

2

DRIVING

1. BEFORE STARTING THE ENGINE
2. STARTING AND STOPPING THE ENGINE
3. BEFORE DRIVING OFF
4. WHEN DRIVING OFF
5. DRIVING FOR ECONOMY
6. WHILE TRAVELING
7. TRAVEL ON HIGHWAY
8. OPERATION AND CARE IN HOT WEATHER
9. OPERATION AND CARE IN COLD WEATHER

https://www.truck-manuals.net/

1. BEFORE STARTING THE ENGINE

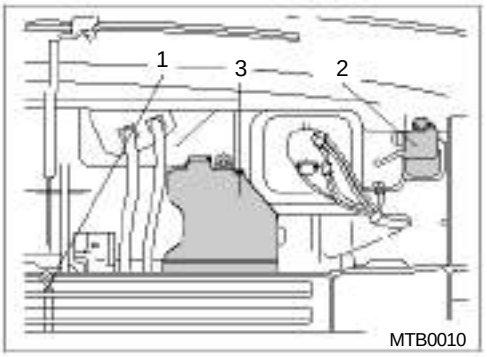

1) Check items for the inside of front lid

(1) Engine oil level
(2) Clutch fluid level
(3) Windshield washer fluid level

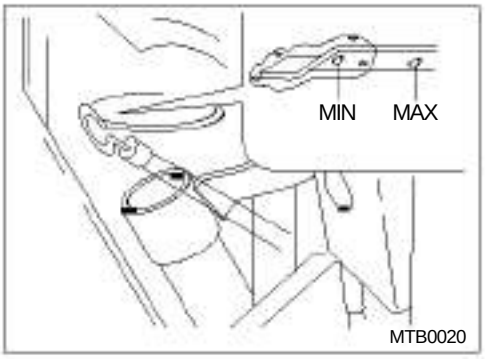

(1) Engine oil level

1. Pull out the oil level gauge(oil dipstick) to check if the oil tank has been filled up to the specified level.
2. When the oil level is low, add the same brand oil according to "RECOMMENDED LUBRICANTS" and wait a while to check the level again. Also check for purity and viscosity of the oil before replenishing it.
3. Always check the oil level with the vehicle parked on level ground and the engine stopped.

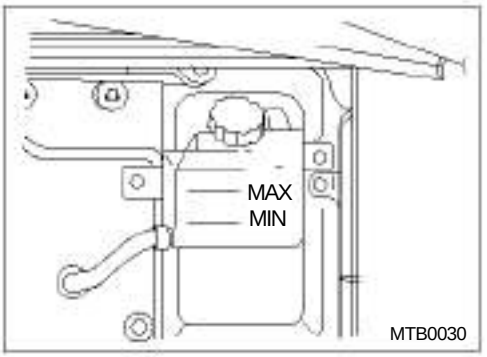

(2) Clutch fluid level

1. Check the clutch fluid tank for fluid level and contamination
2. If the level of clutch fluid in the tank is too low, replenish upto the MAX mark.
3. Check the clutch fluid tank for fluid leakage.

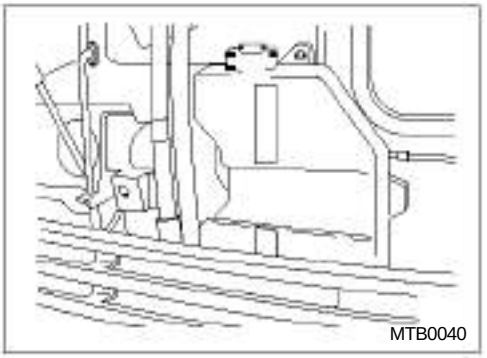

(3) Windshield washer fluid level

Check the fluid level in the tank and replenish as necessary.

https://www.truck-manuals.net/

MTA0011

2) Check items the outside of vehicle

(1) Tire
(2) Chassis spring
(3) Draining of air tank
(4) Battery
(5) Power steering fluid level
(6) Coolant level
(7) Fan belt tension (8)
Brake fluid level

MTB0060

(1) Tire

1. Check inflation pressure of the tires with a tire air gauge and add compressed air if necessary.
2. Improper inflation pressure affects adversely tire service life, reduces motoring comfort, and, in the worst case, may cause tires to be overheated and consequently exploded.
3. Check also the wheel pin nuts on the wheel for looseness.

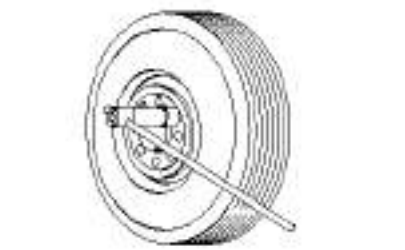

MTB0070

Caution

Tighten to specified torque(60~65kg.m) as excessive tightening torque may cause damage to the wheel pin.

Tire size	Normal inflation pressure
10.00-20-16PR 11.00-20-16PR 12.00-20-18PR	Single: 8.1kg/cm^2(115 PSI) Dual: 7.4kg/cm^2(105 PSI)
11.00R20-16PR 11R22.5-16PR 12R22.5-16PR	Single: 8.4kg/cm^2(119 PSI) Dual: 7.7kg/cm^2(110 PSI)
385/65R22.5-18PR	Single: 8.5kg/cm^2(121 PSI)
315/80R22.5-20PR	Single: 9.1kg/cm^2(130 PSI)

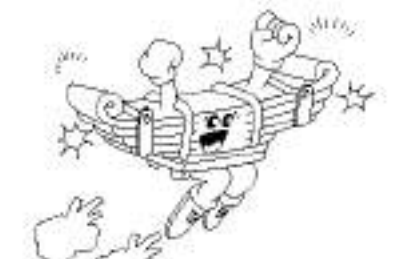

MTB0080

(2) Chassis spring

Check chassis springs for damage and tightening condition of "U" bolt.

https://www.truck-manuals.net/

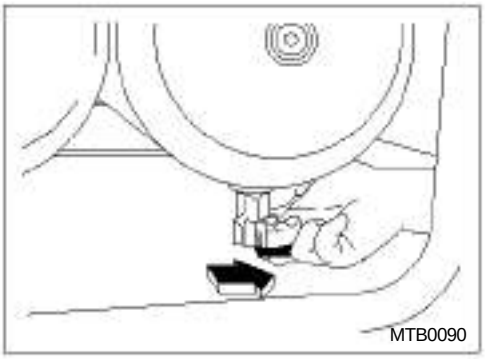

(3) Draining of air tank

From time to time, pull forward the drain cock installed underneath the air tank to drain off condensates produced in it.

* When opening the drain cock, pull it forward as shown.

Caution

Water of the tank inside may cause heavy damage to brake system.

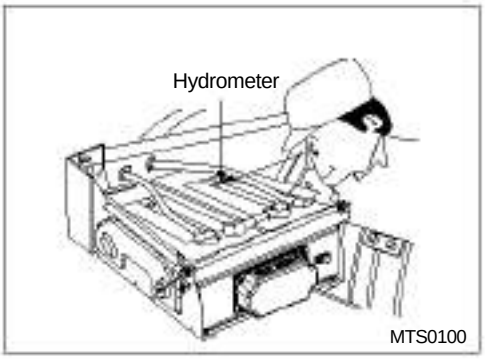

(4) Battery

1. This battery needs no periodic maintenance as long as it is used properly.
2. Check the state of charge by the test indicator installed on the face of the battery.

Test indicator	State of charge	Correction
Green	Normal	Use
Black	Low charge level	Recharge
Transparent	Low electrolyte level	Replace

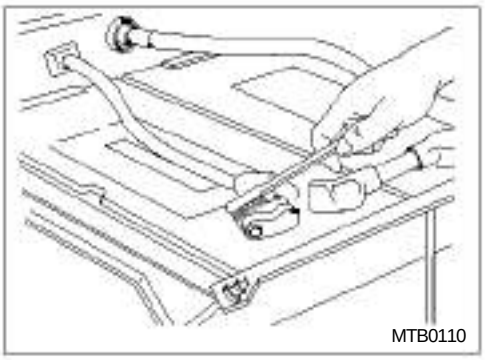

3. If the external part of the battery is found foul, clean it with tepid water. Apply a thin coat of vaseline or grease to the battery terminals to prevent corrosion.

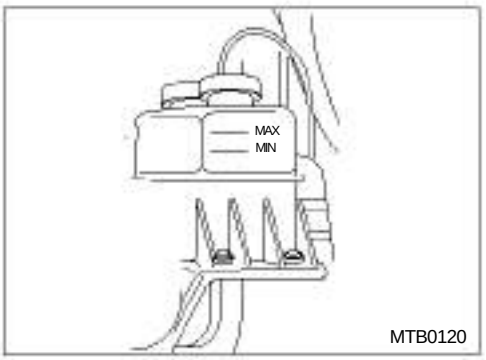

(5) Power steering fluid level

1. Check the fluid level and replenish as necessary.
2. Check the pipe joints for fluid leakage.

Caution

We strongly urge you to use Daewoo-recommended power steering fluid for replenishment.

https://www.truck-manuals.net/

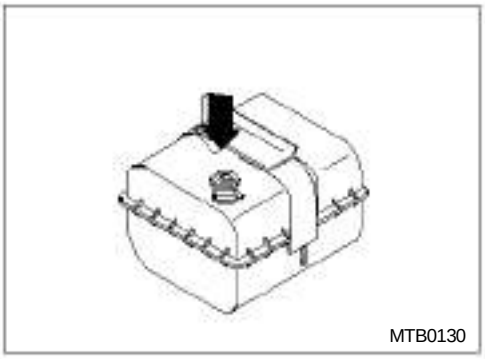
MTB0130

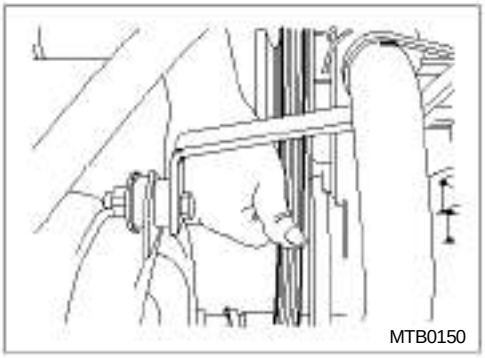
MTB0150

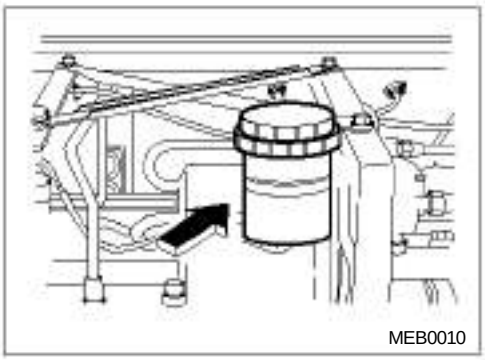
MEB0010

(6) Coolant level

The level of coolant in the surge tank should be maintained between "MIN" and "MAX" marks. When the coolant level is found to be lower than "MIN" mark, check the cooling system for leaks, and then top it up to the "MAX" mark.

Caution

1. Do not remove the coolant surge tank cap when the engine and radiator are hot. Scalding hot coolant and steam may be blown out under pressure, which could cause serious injuries.
2. Replenishing the surge tank with cold water abruptly when coolant is hot may affect adversely the cylinder block or cylinder head. Therefore, allow a few minutes for the coolant to cool down before replenishing.

(7) Fan belt tension

Loose belt can adversely affect the alternator charging system and cause engine overheating or premature wear to the belt. On the other hand, A fan belt which is too tight can cause premature damage to the bearings of its peripheral devices. Follow these procedures to adjust the fan belt tension:

1. 1 DE Engine: First, loosen the air-con compressor bolt, then adjust the belt tension by turning the nuts fit to the adjust bolts.
   2 DV Engine: Loosen the nut fit to the idle pulley, then adjust the belt tension by turning the nuts fit to the adjust bolts.
2. The tension of the belt must be such that there is a deflection of 10~15mm when the midpoints between air-con compressor pulley and crankshaft pulley, between crankshaft pulley and alternator pulley, and between crankshaft pulley and fan clutch pulley are depressed with force of about 10kg. In the event of DDC engine, adjust the belt tension so that a firm push with the thumb, at a point midway between crankshaft pulley and fan pulley, will depress the belt 12~19mm.
3. The belts should be replaced as a set even when either of them is found defective.

(8) Break fluid level

Check break fluid level in the reservoir and top up as necessary.

https://www.truck-manuals.net/

2. STARTING AND STOPPING THE ENGINE

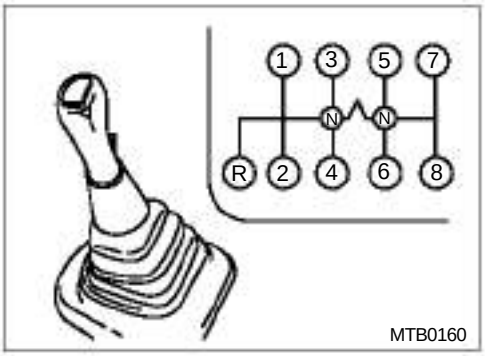

MTB0160

1) starting the engine(DE, DV engine)

(1) Apply the parking brake so that the vehicle is not moved and move the gearshift lever to NEUTRAL position.

(2) Turn the starter key to "ON".

Caution

To start the engine, the gearshift lever should be positioned to NEUTRAL.

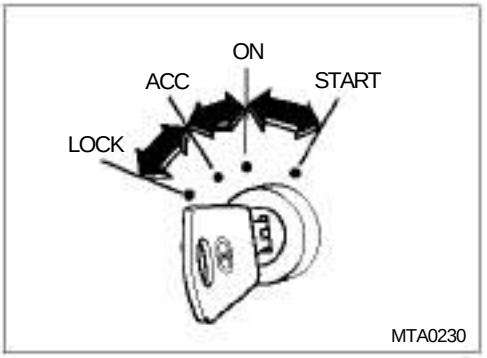

MTA0230

(3) Turn the starter key to START position.

Caution

Avoid excessive starter cranking(in excess of 10 seconds) to prevent any possible damage to starter motor or batteries. If the engine fails to start, wait about 30 seconds before again attempting to start your vehicle.

MTB0180

(4) Use the idle control knob to idle the engine at the normal speed(rpm) until the normal operating temperature is reached.

Caution

1. Avoid unnecessary idling as prolonged idling may accelerate wear of valves, pistons, and piston rings, shorten engine life, and bring about waste of fuel and a large quantity of air pollutants due to incomplete combustion of fuel. (Idling for heavy trucks: about 10 minute)

2. Do not overrun the engine when the normal operating temperature is not yet obtained. This may shorten the engine life and increase fuel consumption.

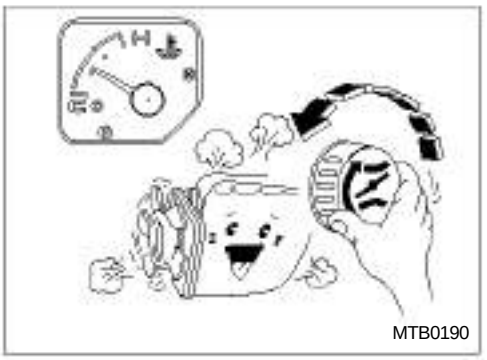
MTB0190

* Take exceptional care to adjust idle speed when the engine temperature is low.

* If you attempted to start the engine with no fuel in the fuel tank, you should bleed the fuel system. With no bleeding operation, you cannot start the engine even though you refill the fuel tank. (Refer to "Air bleeding of fuel system").

https://www.truck-manuals.net/

MTB0191

2) Starting the engine(DDC)

1. Don't step on accelerator pedal. ECM is not able to recognize the idle status of engine.
2. Don't step on clutch pedal.

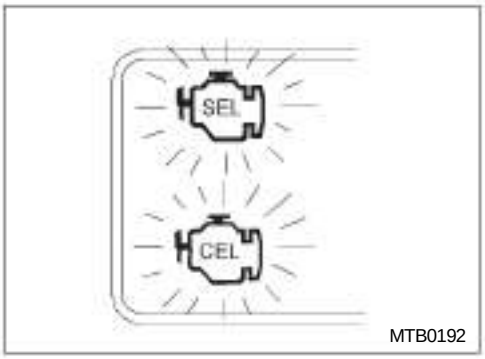

MTB0192

3. Turning the key position at'on' will light up (yellow:Engine check indicator) and (red:Engine stop warning) for 2 to 5 seconds.

Caution

1. Start the engine after the warning lamp goes out.
2. Warning lamp keeps coming on when engine system has trouble. At this time, consult your nearest Daewoo dealer for necessary services.

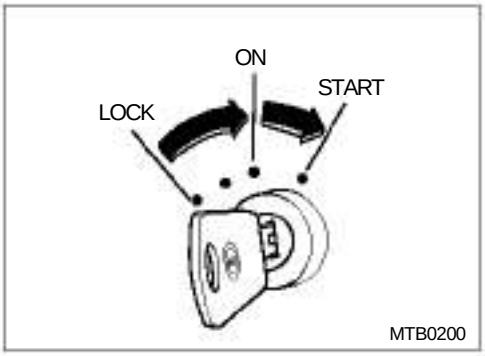

MTB0200

4. Turn the starter key to START position.

Caution

1. Make sure that transmission lever is in neutral polsition with parking brake applied before stating the engine.
2. ECM automatically controls idling RPM, considering ambient air, oil, coolant temperature. Manual adjustment is not necessary.

5. Pre/After heating system injects ether alcohol into air intake system, mixed with diesel, results in combustion.

Note

1. Ether alcohol is controlled by injection relay inside stowage in front of passenger seaat, injected into intake manifold for 3 seconds for preheating(In case of ambient temperature-40 degree in Celsius), for 30 seconds in maximum for after-heating.
2. Idling RPM can rise up to 800-900 rpm when engine is cold. Do not control idle speed knob as white smoke is controlled by ECM(during 20 up to 40 seconds.)

https://www.truck-manuals.net/

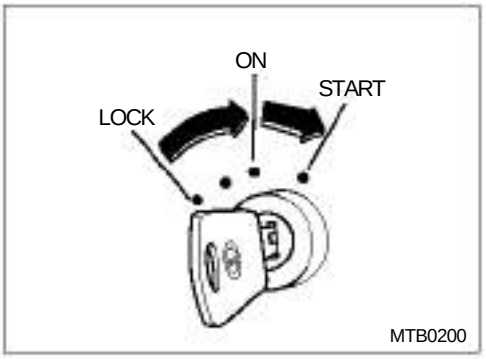

3) Starting the engine in cold weather

(1) With the switch in the "ON" position the indicator lamp will light up showing the engine is preheated automatically. After pre-heating is completed, the indicator lamp will go out.
(2) After pre-heating is completed, press the clutch pedal and accelerator pedal to start the engine.
(3) Use the idle control knob to idle the engine at a moderately fast speed.
Normal idle speed: 550~600 rpm
(4) For DDC engine, as idle speed is controlled by means of ECM automatically, you need no special operation
(5) Avoid unnecessary idling of the engine when it reaches normal temperature.

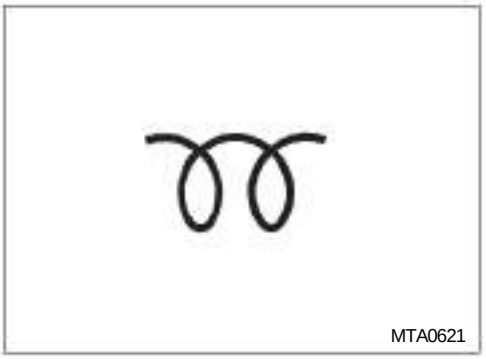

Caution

Abrupt start during warming-up operation may shorten the engine life.

(6) After warming up the engine, bring the idle control knob back to its original position.

4) Stopping the engine

* Sudden stopping of the engine with full load or after ascending a slope causes overflow of coolant. In this case, idle the engine for 1 or 2 minutes(DDC Engine : for 4 or 5 minutes) before stopping it.

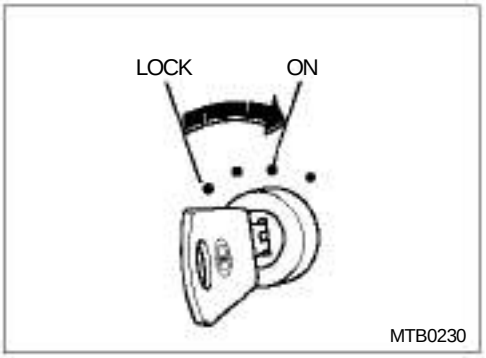

* Diesel engine is apt to keep running even after the starter switch is off. If it continues to run even after the starter switch is off, place the starter key again in "ON" position to start the engine. Otherwise, alternator circuit may fail.

https://www.truck-manuals.net/

3. BEFORE DRIVING OFF

MTB0240

1) Steering wheel free play

Check the amount of the steering wheel free play by gently turning the wheel in both directions. The free play should be within the range of 30~50mm at the periphery of the wheel when checked with the front wheels positioned straight ahead.

Caution

Check steering wheel for free play with the engine running. Power steering pump may be burned, if more then 10 seconds have passed under turning the streeing wheel fully to the right or left on engine idle.

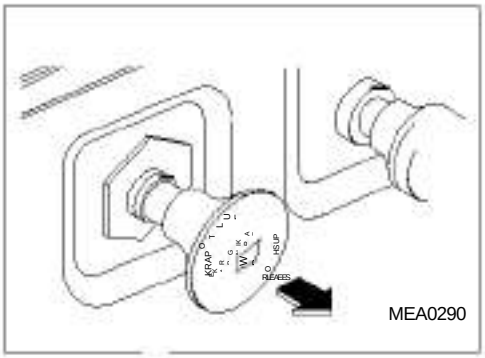
MEA0290

2) Parking brake

Before travel, manipulate the parking brake valve to check for its motion. If the valve is pressed, the vehicle is in "travel" condition.

MTB0260

3) Windshield wipers

Check the operation of windshield wipers and keep them clean all the time.

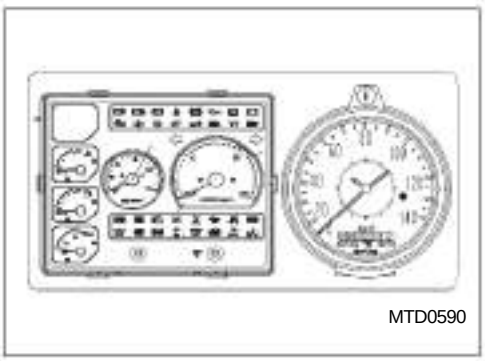
MTD0590

4) Instrument panel and indicator lamps

Check the operation of instrument panel, indicator and warning lamps with the starter switch "ON".

https://www.truck-manuals.net/

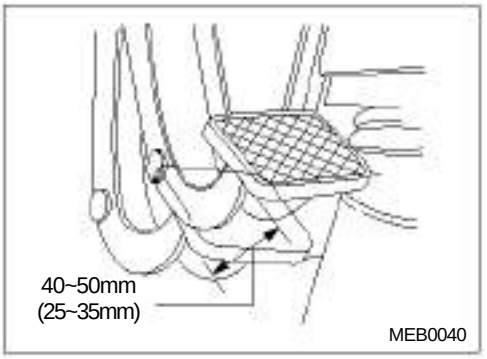

5) Clutch pedal free play

Pedal free play should be within the range of 40~50mm.(ZF T/M : 25~35mm)

Transmission model	Vehicle	Free play
LOCAL	Deluxe Super deluxe	40~50mm
	Ultra	25~35mm
ZF	All	25~35mm

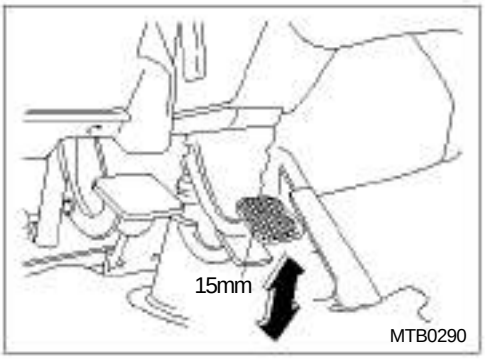

6) Brake pedal free play

Pedal free play should be 15mm. Make brake pedal adjustment by using the adjusting bolt fitted to the pedal. Also check the brake warning lamp switch for its electrical contact.

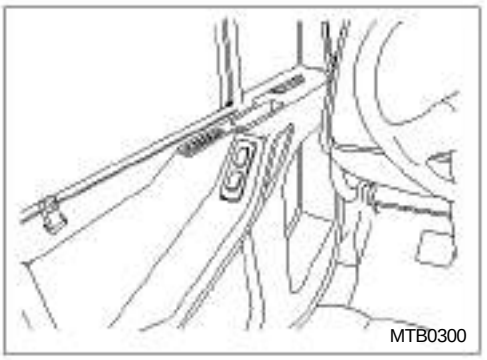

7) Door lock

Check the operation of door locking mechanism.

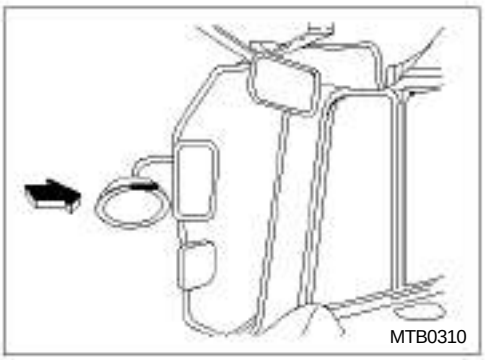

8) Exterior mirrors

Adjust side and under mirrors for best rearward and forward visibility.
Adjust the room mirror to have a clear sight behind the vehicle.

https://www.truck-manuals.net/

4. WHEN DRIVING OFF

MDB0321

1) Check if the needle of air pressure gauge indicates 5.3kg/cm^2 or above. If the gauge indicates below this range of air pressure, keep the engine running at fast idle until the gauge needle points to the rated pressure.
2) Release the parking brake and check the parking brake indicator lamp goes out.
3) Let the engine idle until it is fully warmed up and start the vehicle with the shift lever in 1st position.

MTB0330

Caution

1. Service life of the clutch could be reduced when keeping it in a partially engaged condition.
2. Don't start the vehicle when the level of collant, engine oil and powersteering oil lowers beyond the "MIN" marked level.

5. DRIVING FOR ECONOMY

MDA0020

*** It is more economic to keep below contents during driving**

1) Check the checking points before starting the engine and periodic inspection chart.
2) Avoid hard idling, sudden acceleration and sudden stops.

MDB0442

3) When accelerating, don't shift into excess engine rpm.
4) Use air conditioner if only necessary.
5) Slow down when driving on rough roads.
6) Keep standard tire inflation pressure.
7) Do not carry unnecessary weight in the vehicle.

https://www.truck-manuals.net/

6. WHILE TRAVELING

MTB0341

1) Avoid overrunning the engine during break-in period of new vehicle.
2) If unusual sound or smell becomes noticeable while driving, stop the engine and check to locate the cause of trouble.

MTB0350

3) Warning lamps on instrument panel should be turned off while driving. When either red warning lamps come on or warning buzzer sounds, stop the vehicle and check to locate the cause of trouble.
   * If the cause of trouble was not located, check at your nearest Daewoo dealer.

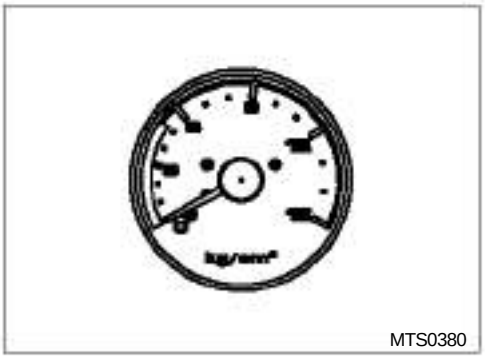
MTS0380

4) If the air pressure falls below 5.3kg/cm^2, stop the engine and check to locate the cause of trouble.

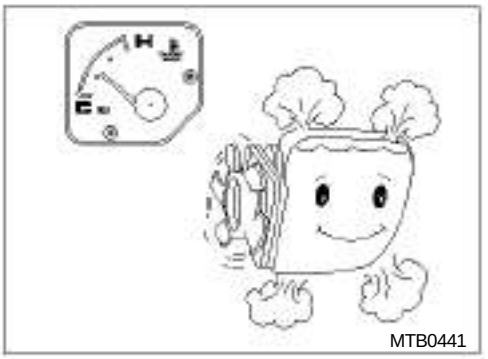
MTB0441

5) The engine coolant temperature gauge needle should indicate below the red point. If the gauge indicates above red point, stop the vehicle and keep the engine running at idle, and check the engine coolant level.

Caution

Severe burns to the skin can result from removing the pressure cap from a hot radiator. Wait until the engine temperature goes down and use rags to remove the cap for check-up and refilling operations.

https://www.truck-manuals.net/

MTA0031

6) Avoid engine racing, unnecssary sudden acceleration, or sudden stops.

TMB0390

7) Do not drive with your foot resting on the clutch pedal as it produces a partially disengaged condition, causing premature wear of clutch facing.

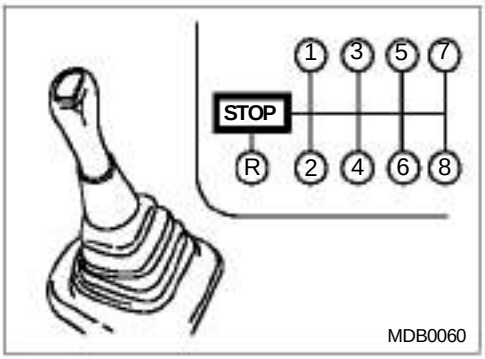

MDB0060

8) Stop your vehicle completely when attempting to shift into reverse.

Note

When change to 1st or reverse gear, would better change gears after 3 seconds, depress the clutch pedal.

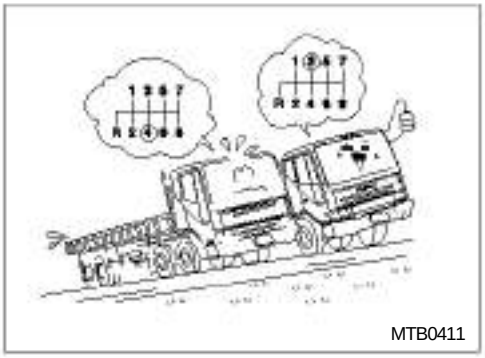
MTB0411

9) When ascending a slope, shift to lower gear to relieve the engine from overload.

https://www.truck-manuals.net/

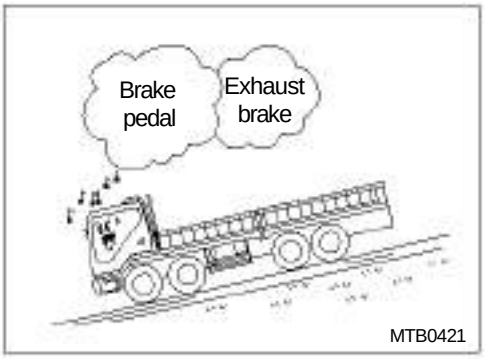

7. TRAVEL ON HIGHWAY

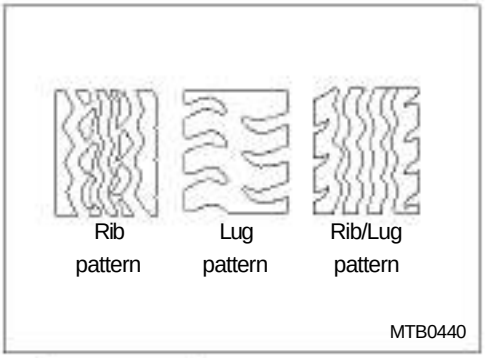

Caution

It is dangerous to drive your vehicle with tires whose treads have been worn out excessively, because the vehicle may lose traction.
Limit of use : The depth of the tread grooves should be more than 3.2mm.

Note

You must fully understand vehicle features in traveling on highway.

1. Acceleration
   As running resistance increases greatly while traveling on highway, the vehicle should be accelerated with allowance for its engine power.
2. Grade ability
   Maintain suitable engine rpm taking into account the relation of grade and maximum speed at each gearshift position.
3. Fuel consumption
   Check fuel level before long distance travel.

10) When descending a slope, shift to lower gear to gain retardation effect of the engine. It is avisable to use the exhaust brake and engine brake in combination when descending a slope. Frequent use of foot brakes while descending a long slope will cause brake drum overheating and consequential malfunction of the brake.

Caution

Special care should be taken when descending a slope, particularly when shifting down into lower gear, as the engine is liable to overrun. Excess engine rpm may result in trouble with each part of the engine, especially possible breakage of valve spring and push rod.

The following checks should be performed to maintain safe and dependable vehicle operation.

1) Check before driving

More special care should be taken to drive on highway than on urban road. Make the thorough inspection according to "DAILY CHECK BEFORE DRIVING".

2) Tire

Heat generation depends on vehicle speeds and load weights. For the vehicle which travels frequently on highway, rib pattern tires are preferable.

3) Check while traveling on highway

Generally, since driving on highway is more dangerous than on the urban road, you should be more alert and also have a composed and calm attitude.

(1) Speed perception

On highway, driver's speed perception is liable to become dull because its road surface is even and commands a wider prospect than urban road does. Always watch speedometer readings for vehicle speeds.

https://www.truck-manuals.net/

(2) Braking distance

Braking efficiency is the most important thing when driving on highway. When recognizing the hazard ahead and preparing to apply the brake, your reaction time will take about one second. This means that your vehicle, if assumed to have run at speed of 80km/h, will travel additional 20 to 30m the moment you applied the brake. Therefore, you should maintain a safe following distance.

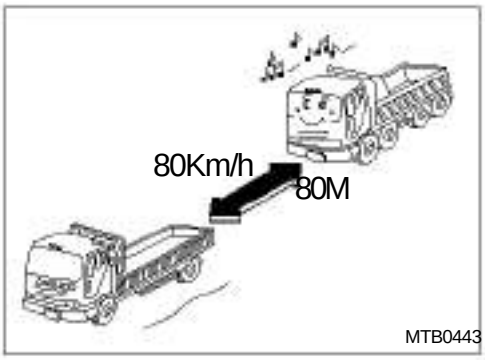

MTB0443

(3) Distance between vehicles

Normally, the following distance between your vehicle and the vehicle ahead depends on vehicle speeds. A safe following distance of about 80m should be maintained in 80km/h traffic.

(4) Passing

To pass, increase your vehicle's speed by at least 10km/h greater than the speed of the vehicle ahead. Before preparing to pass, be sure to check the traffic behind you and then pull out into the left lane promptly with turn signal "ON".

MTB0442

(5) Turning on a curve

Generally curves of highway are given grade on their either side. With a light movement of the steering wheel the vehicle turns very easily. Therefore, be careful of tire slippage when applying the brake on a curve, especially in rainy weather or on an icy road.

(6) Others

1. To enhance braking efficiency, use the exhaust and engine brakes in combination.
2. Reckless steering may cause danger not only to your own vehicle but also oncoming vehicles.
3. In the event that a tire was punctured during driving, hold the steering wheel firmly and employ exhaust brake to slow down. Abrupt braking can cause damage to tires.

https://www.truck-manuals.net/

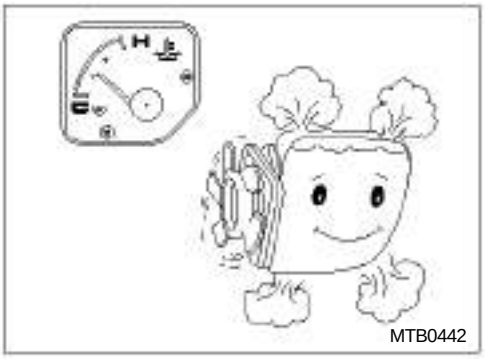

MTB0442

4) Necessary actions after parking and operation

- **Engine stopping and parking**
  1. If there is an indication of engine overheating, do not stop the engine immediately and, instead, keep it running at idle for a while.
  2. To park, place the shift lever in NEUTRAL position and set the parking brake securely.

- **Servicing after operation**
  After operating the vehicle, always clean it thoroughly and check the following points:
  1. Re-check the troubles found during the previous operation and take necessary corrective actions. For such troubles difficult to correct, contact your nearest Daewoo dealer.
  2. Inspect and clean each part, and check for leakage and oil levels.

8. OPERATION AND CARE IN HOT WEATHER

How to wash off cooling system

Open the drain cock of radiator to drain off the remaining coolant and to inject soft water into it. In about 30 minutes, drive the engine and again drain out the soft water. Repeat this operation until the washings become clean.

1) Cooling system

Scale or rust in the cooling system may cause engine overheating. Carefully follow the **"How to wash off cooling system"** as described in the left box, and also wash off the cooling system before or after using antifreeze.

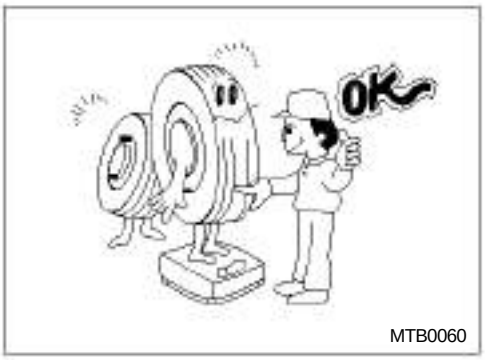

MTB0060

2) Engine oil and gear oil

Always use the specified oil. (Refer to " RECOMMENDED LUBRICANT")

3) Tire inflation pressure

Tire inflation pressure should be checked more frequently than ever.

https://www.truck-manuals.net/

9. OPERATION AND CARE IN COLD WEATHER

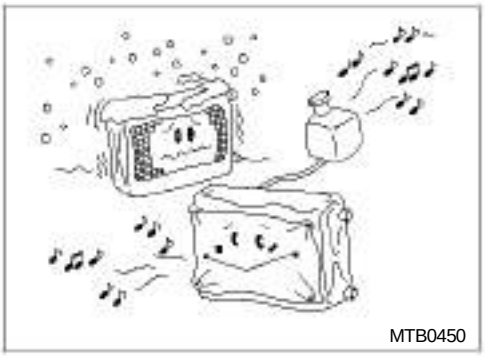
MTB0450

1) Protection of the engine against freezing

When operating the vehicle in cold places, be sure to install radiator curtain to protect the engine from freezing. Overcooled engine not only accelerates wear of its vital parts but also reduces fuel economy.When the radiator curtain is used, watch the tem- perature gauge frequently to prevent engine over- heating.

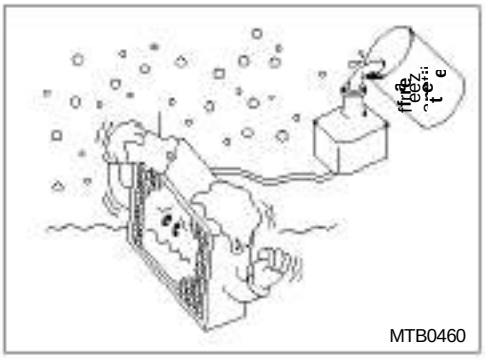
MTB0460

2) Use of antifreeze

To prevent freezing and corrosion of the engine when operating the vehicle in extremely cold places, be sure to add a specified amount of antifreeze to coolant. It is strongly recommended to use Daewoo-approved antifreeze.

* Fill up the coolant circulation system with a 50/50 mixture of specified antifreeze and water in all seasons.

MTB0470

3) Precautions when using antifreeze

(1) Wash off the inside of the cooling system in- cluding the radiator before using anti-freeze.
(2) Replace any damaged rubber hoses. If there is just a hair crack on these hoses, antifreeze is liable to leak.
(3) Antifreeze should be handled with extreme care as it can cause damage to coated surfaces of peripheral components.

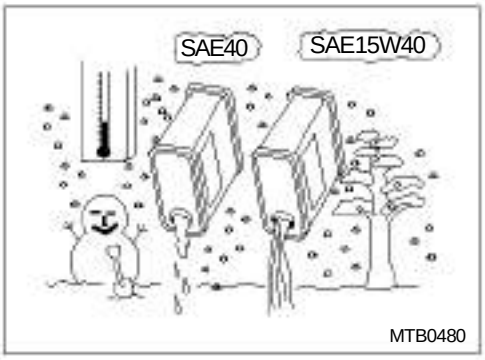

MTB0480

4) Engine oil

Engine oil tends to harden when the ambient temperature falls in cold weather. Use the specified engine oil having proper viscosity.

5) Batteries

Battery condition tends to get worse with drop in ambient temperature. In extremely cold weather, maintain the battery in a full charge state.

https://www.truck-manuals.net/

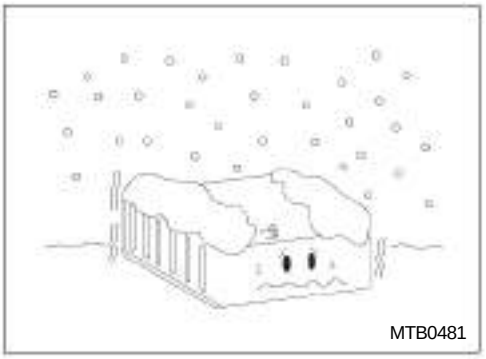
MTB0481

6) Use of light oil in winter

(1) Paraffin composition included fuel may cause troubles to fuel lines. Due to solidification at the below zero temperature.
(2) In cold climates, use winter-fuels supplied by the oil companies.

7) Use of light oil in hard winter

A hard winter (below -15 ℃) may cause troubles due to the solidification of paraffin even though winter fuel is used.
At that time, use a 80:20 mixture of light oil and kerosene.

Caution

1. Increase of smoke and engine noise is caused by exessive fill of petroleum.
2. In the winter, water may be generated in fuel tank, because of different temperature between the atmosphere and inside of fuel tnak. Drain the water in the fuel tank and the fuel filter more than two times a month as sedimetal water can make engine end fuel lines damaged.

MTB0491

8) Driving on ice or snow

- It is advisable that chains or snow tires be used when traveling on an icy or snow-covered road. If you apply the brake hard on a slippy road, your vehicle is apt to lose its traction, resulting in losing the control of steering wheel.

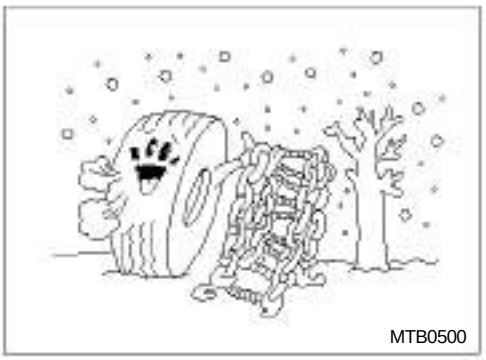
MTB0500

* Carefully fit chains on your tires so that the chain band may not scratch the other parts or interrupt their movements.
(1) Be sure to use the chain of the same dimensions as the target tire.
(2) Fit the chains on the rear tires and tighten them so that motions of the other parts may not be interrupted.

https://www.truck-manuals.net/

3

INSPECTION AND MAINTENANCE

1. DAILY CHECK BEFORE DRIVING
2. PERIODIC INSPECTION AND MAINTE-NANCE
3. PERIODIC INSPECTION CHART
4. IN CASE OF EMERGENCY
5. VEHICLE REPAIR

https://www.truck-manuals.net/

1. DAILY CHECK BEFORE DRIVING

In order to maintain safety and dependable operation, following checks should be performed daily before driving:

System	Check item	Check point
1) Steering	• Steering wheel and system	1. Vibrations or shimmy of steering wheel 2. Hard steering or sticky 3. Damage or looseness of component parts
2) Brake	• Brake pedal • Brake and clutch oil Exhaust brake Parking brake • Air tank and pressure	1. Air mixed in brake circuit 2. Free play, stroke and force of pedal • Oil level • • Function • • Function • Moisture in tank and fluctuation of air pressure
3) Running	• Wheels and tires	1. Damage or looseness of bolts and nuts 2. Damage or severe wear of wheels and tires, and tire inflation pressure
4) Suspension	• Chassis spring	• Damage of spring, and tightening state of U-bolts and nuts
5) Engine	• Engine	1. Engine starting 2. Leakage of fuel, lubricants and coolants 3. Cleanliness or damage of air cleaner element 4. Exhaust gas 5. Damage of fan belt 6. Engine oil level
6) Power train	• Clutch • Transmission • Propeller shaft and rear axle	• Clutch pedal free play, stroke and function • Function and oil leakage • Vibration of propeller shaft, oil leakage in rear axle
7) Dump truck, tractor and other special prupose vehicles	• Control lever • P.T.O. • Others	• Function • Switch, function • Replenishment of grease and dump function

https://www.truck-manuals.net/

2. PERIODIC INSPECTION AND MAINTENANCE

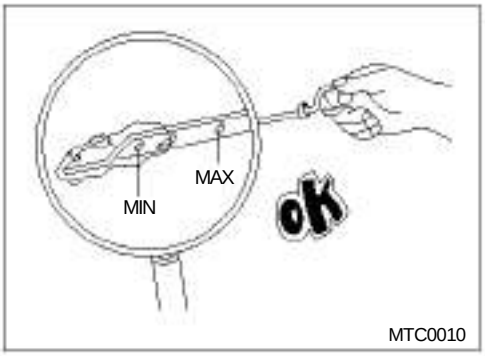

MTC0010

1) Engine oil

(1) Oil level check

Check oil level and replenish if required.

(2) Type of oil

Specifications: API CF-4, SAE 15W40

* When changing oil, warm up the engine sufficiently to remove moisture contained in oil. Thoroughly remove metal any fine metal particles that may have accumulated on drain plug.

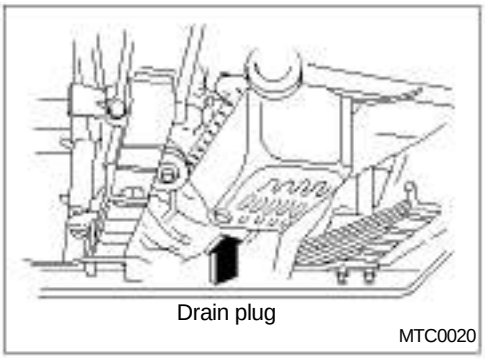
Drain plug
MTC0020

Model	Change intervals	Capacity
DE	At end of first 1,000km Short distance travel(in city): every 10,000km, Long distance travel(at high speed): every 15,000km	20L
DV		24L
DDC	Every 15,000km	30L

* Above oil capacity standard level when changing to gether with oil filters.

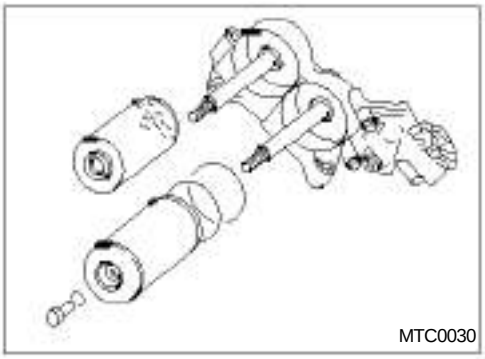
MTC0030

Caution

It is strongly advisable to use genuine Daewoo oil filter element.

2) Engine oil filter

Engine oil filter element should be changed together with engine oil at the same time.(DE engine is of cartridge type)

(1) To drain oil, remove the drain plug installed on the lower part of oil filter body. Remove any fine metal particles that may have accumulated on drain plug, check gasket and replace as necessary.

(2) Loosen the center bolt and remove the filter body together with the element.

(3) Clean the inside of filter body and replace with the new filter element.

* Clean the element with diesel fuel and visually check gaskets installed on the upper and lower sides of element for damage and hardening, and replace as necessary.

https://www.truck-manuals.net/

- **DDC Engine oil filter**

(1) Remove the spin-on filter cartridges using strap wrench, drive socket wrench, and extension, and then drain the used oil completely.
(2) Clean the filter adaptor with a clean, lint-free colth.
(3) Lightly coat the filter gaskets with clean engine oil.
(4) Start the new filters on the adaptor and tighten by hand until the gaskets touch the mounting adaptor head. Then rotate additional one-half turn by hands.

Caution

Overtightenting may distort or crack the filter adaptor.

Model	Change intervals	No. of filters
DE	At end of first 1,000km Short distance travel(in city): every 10,000km, Long distance travel(at high speed): every 15,000km	1
DV		2
DDC	Every 15,000km	2

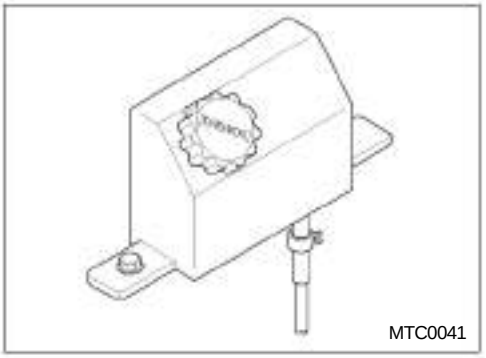

3) Change lever actuator oil

(1) Oil level check

24ton dump truck is applied with hydraulic shifting system and oil is supplied to the actuator of the change lever. Therefore, it is necessary to check oil level from time to time, and add oil if the level of oil is below MIN mark.

(2) Required oil

Specifications: KS M 2141 Class 3
(DOT3/SAE J1703)
Oil capacity : Max - 270cc
Min - 210cc

https://www.truck-manuals.net/

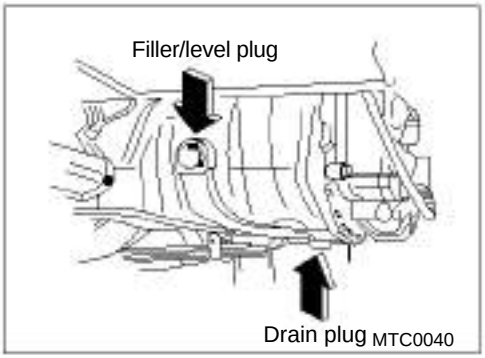

4) Transmission oil

(1) Oil level check

At end of first 1,000km and thereafter at every 4,000km driving, check oil level and replenish if oil remains below the level plug.

(2) Oil or oil filter change

Specifications: API GL-4, SAE 80W90
Tropical region specifications:
API GL4, SAE85W140(thermostat-open 71°C)
Engine oil API CD/CE/CF/SF/SG,SAE 30(ZF T/M)

* Drain the oil while it is hot.

Model	Change intervals	Capacity
T10S6	At end of first 4,000km, Every 24,000km or 6months	14L(PTO:15L)
T14S10		18L(PTO:19L)
ZF 16S-151	At end of first 1,000km, Every 45,000km or every 12 months	11L
ZF 16S-221		13L

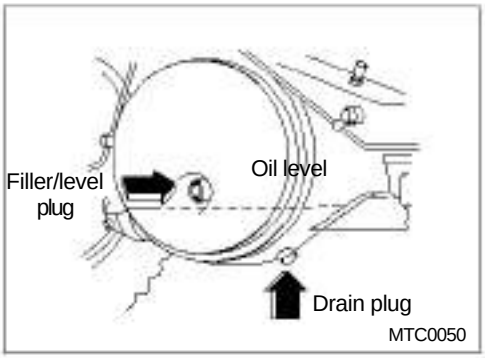

5) Rear axle oil

(1) Oil level check

Check oil level at end of first 1,000km and thereafter every 4,000km for new vehicle, and replenish if the oil remains below the level plug.

(2) Type of oil

Specifications: API GL-5, SAE 80W90
Tropical region specifications:
API GL5, SAE85W140 (thermostat-open 71°C)

* When changing oil for the forward rear axle, be sure to change oil for inter-differential (about 2L)(Tong-il inter-differential: 1.5L) at the same time.

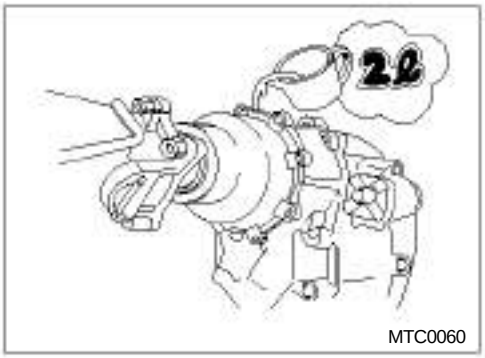

Model		Change intervals	Capacity
Hyundai dymos	R185HT	At end of first 4,000km, Every 24,000km or 6months	Front:20L, Rear:12L
	R178HT		
Tong-il	T12H		15L
	T15HT		Front:13L, Rear:10L
	T14HT		
	THR20ST		Front:14L, Rear:12L Wheel hubs:2.5L
RABA		At end of first 5,000km, Every 30,000km	↑
Meritor	RS26-163		22.5L
	RS26-185		22L

https://www.truck-manuals.net/

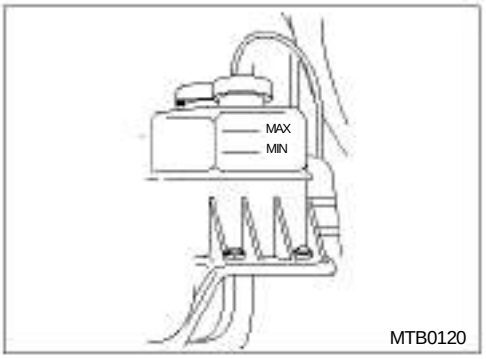

6) Power steering oil and oil filter

(1) Oil level check

At end of first 1,000km and thereafter every 4,000km operation, keep the front wheels straight ahead and check oil level with level mark on oil tank.

(2) Type of oil

Specifications: ATF(DEXRON II-D)

(3) Oil change

Change oil at end of first 1,000km and thereafter every 48,000km for new vehicle.

* Tank capacity
- 4x2, 6x4 series : 6L
- 8x4, 10x4 series : 7.3L
- 24ton dump truck : 9L

1. To drain the steering oil, jack up the front wheels to raise from the ground with the engine stopped, loosen the two joint bolts fitted to the upper face of steering unit and turn the steering wheel slowly in both direction.
2. Tighten the joint bolts securely and fill the oil tank to the specified level with the specifed fluid.
3. After 2~3 minutes, lower the front wheels to ground, and idle the engine for 2~3 minutes.
4. Recheck the oil level while the engine is idling and replenish as necessary.
5. After filling, if unusual sound is heard when the steering wheel is turned, perform air-bleeding operation.

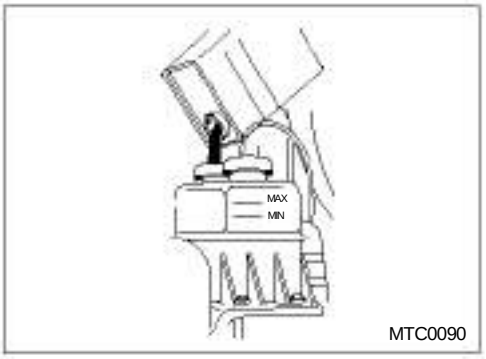

Caution

When topping up the oil tank, ensure the strainer is installed in the filler port. Replenishing oil through the filler port without strainer will cause foreign matters to come in the tank.

(4) Air bleeding of steering unit

1. After stopping the engine, jack up the front wheels clear of the ground and remove the air bleeder cap installed on the upper face of the steering unit.

https://www.truck-manuals.net/

MTC0100

2. Connect a vinyl tube to air bleeder and insert the other end of the vinyl tube into a transparent container.
3. Bleed the circuit by loosening the bleeder with the steering wheel turned to lock in the right direction. Fully tighten the bleeder as soon as fluid and air bubbles are forced out. Then repeat the above procedure with the steering wheel turned to lock in the left direction.
4. When air is removed completely, install the cap on the bleeder and check fluid level. Lower the wheels to ground and check the system for fluid leakage.
   Before running, check the steering wheel works smoothly and unusual sound is not heard.

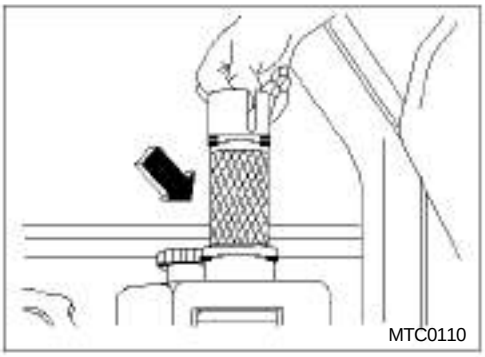
MTC0110

(5) Change of oil filter element

Oil filter element of paper type shall be changed at the same time when oil is changed, except first 1,000km running.
Replace the oil filter element at every 48,000km driving thereafter.
After draining the oil, remove oil filter cap of oil tank, and replace oil filter element.

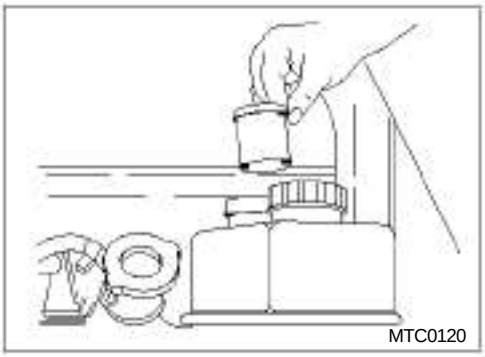
MTC0120

(6) Cleaning oil strainer

Prior to changing steering oil or filter element, oil strainer installed in the filler of oil tank shall be cleaned. Remove dust or other foreign matters from the oil strainer before reinstalling it.

Caution

It is strongly advisable to use genuine Daewoo oil filter element.

https://www.truck-manuals.net/

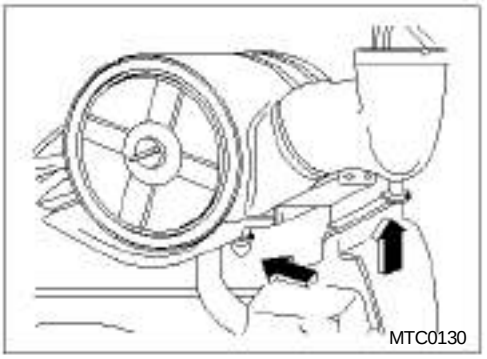

7) Air cleaner(dry type)

(1) Replacement or cleaning of element

A partially blocked air cleaner will restrict the flow of air to the engine. Restricted air flow will decrease the performance of the engine and increase the fuel consumption and discharging of black smoke. The air cleaner dust indicator lamp comes on when the element is restricted.

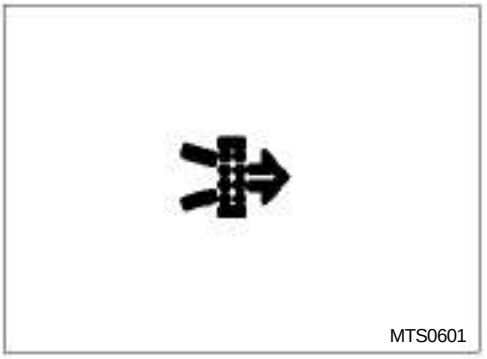

(2) Cleaning

The element should be cleaned at scheduled intervals, especially when the air cleaner dust indicator lamp comes on, and if the engine is operating in dusty areas or on dirt road, it should be checked more frequently. Replace when the element has been clogged severely with dust particles.

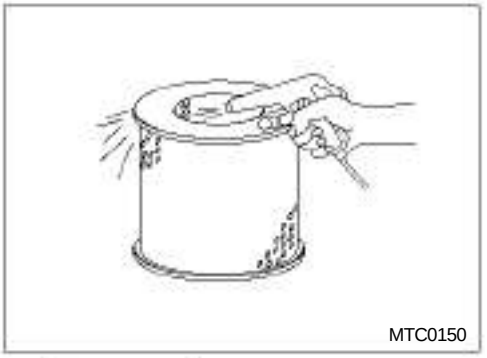

1. Loosen the wing nut to remove the top cover. Remove the wing nut retaining the element and take out the element. Handle the element carefully so as not to cause damage to it.
2. Blow the dust particle away by directing compressed air to the inner face of element.

Caution

For the dump truck, avoid loosening the wing nut fixing the inner element.
Only clean the outer element. Replace both the outer and inner elements simultaneously.

Caution

Pressure of compressed air should be 7kg/cm^2(100 psi) or lower. The stream of compressed air should be directed from the inside of element to its outside. Blowing compressed air in a direction opposite to this will pollute the inside of element. Use only compressed air, as applying a shock to the outside of element to remove dust particles will cause damage to it.
When the rubber valve designed to remove foreign matters has fallen off, do not block up the valve hole with a piece of vinyl but RENEW it. Blocking up the hole with a piece of vinyl can cause damage to the combustion system or lubricating system.

https://www.truck-manuals.net/

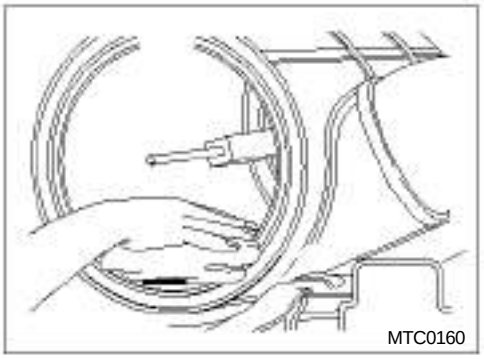
MTC0160

3. Thoroughly clean the inside of air cleaner housing and outer cover to remove dust particles before refitting the element.
4. Attach the element horizontally, tighten the element retaining wing nuts, refit the outer cover, and then tighten the wing nuts to retain the air cleaner securely.

Caution

It is strongly advisable to use genuine Daewoo air cleaner element.

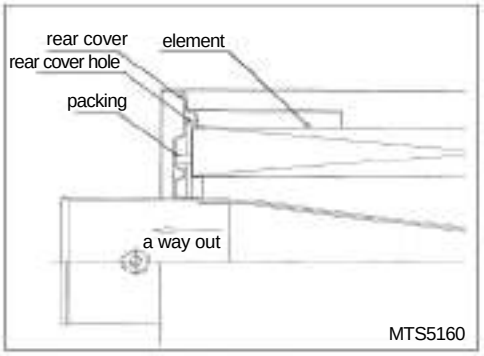

MTS5160

Caution

Be sure to match element to rear cover inside keeping horizontality to prevent the dirt from inflowing. If not, it may cause engine burn.

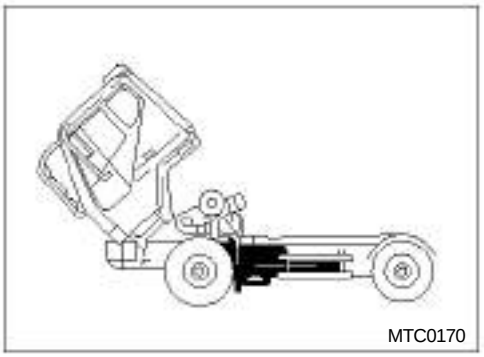
MTC0170

(3) Replacement

Replacement intervals for air cleaner depend on the conditions of working area(dust, earth, or sand) and contamination or deformation of the element. Replace in a timely manner.
Be sure to replace it every 48,000km driving.

(4) Other cautions

1. When refitting the element after cleaning or replacing it, hold it horizontally and be sure to fit wing nuts to retain the air cleaner housing and element securely.
   When replacing the inner element, do not forget to tighten the inner element with the wing nut.
2. When washing off the vehicle with the cab tilted, be careful to prevent the entry of water into the air cleaner housing. Otherwise, the air cleaner will get wet and not perform its functions. If water comes into the engine, critical trouble will result.
3. Inner element is available for dump truck only.

https://www.truck-manuals.net/

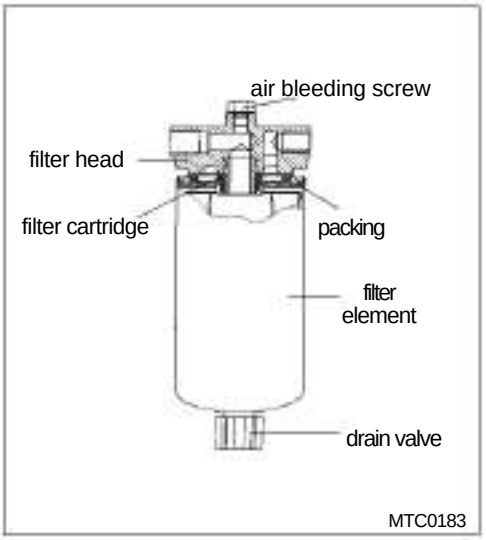

8) Fuel filter

(1) Change

Every 20,000km
- Replaced at every 6 months.

(2) Water draining

1. Every 10,000km(if possible daily) drain the water and sediment from the fuel-water separator.
2. Shut off the engine. use your hand to open the drain valve.
   Turn the valve counter clockwise approximately 2~3 turns until draining occurs. Drain the filter sump of water until close fuel is visible.
3. Turn the value clockwise to close the drain valve. Do not over tighten the value, over tightening can damage the threads.

Caution

It is strongly advisable to use genuine Daewoo fuel filter element.

(3) Replacement

1. Clean the area around fuel filter head.
2. Remove the fuel filter.
3. Remove the fuel filterthread adapter seal ring. Use a clean lint free cloth to clean the gasket surface of the filter head.
4. Install the new thread adapter seal ring supplied with the new filter. Use clean oil to lubricate the filter with clean fuel.
5. Install the filter on the filter head. Tighten the filter until the gasket contacts the filter head surface. Tighten the filter on additional one-half to 3~4 of a turn, on as specified by the filter manufacturer.

Caution

Mechanical over tightening of the filter can distort the thread or damage the filter element seal.

https://www.truck-manuals.net/

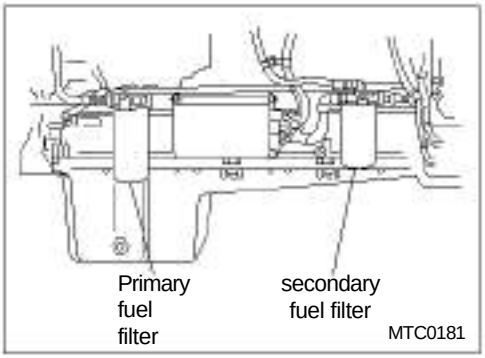

(4) Fuel filter (for DDC engine)

1) Every 6 month or every 15,000km change together first and secondary filter.

2) How to replace the fuel filters
   1. With the engine shut down, place a suitable container under the filter.
   2. Using a suitable band type filter wrench, remove the primary and secondary fuel filters.
   3. Fill new replacement filters with clean fuel oil and coat the gaskets lightly with clean fuel oil.
   4. Thread the new filters onto the adaptors until they make full contact with the gasket and no side movement is evident. Then rotate an additional one-half turn by hand.

Caution

Overtingtening may crack or distort the adaptors.

   5. Turn the handle on the shutoff valve to the open position
   6. Start the engine and check for leaks.

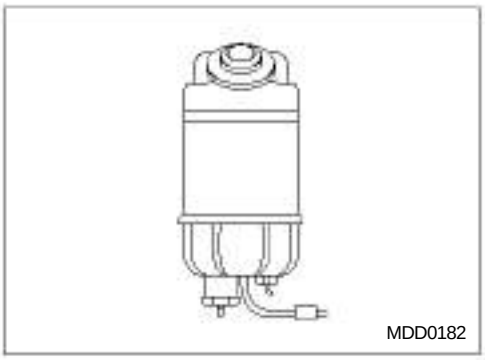

(5) DDC engine fuel heater

Paraffin generated in fuel system by decrease of temperature in cold winter, blocks supply of fuel, results in poor engine starting. With this reason, heating the fuel for the supperession of paraffin generation, activate circulation of fuel flow and enables engine to start well.

https://www.truck-manuals.net/

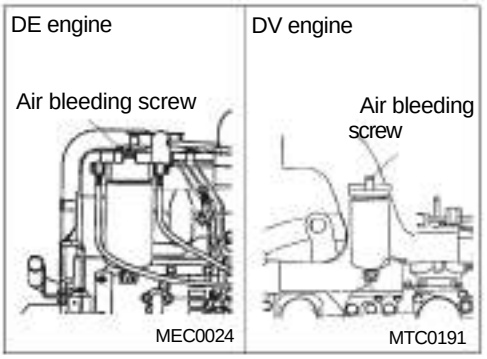

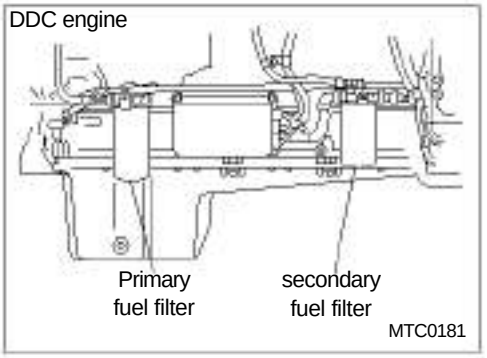

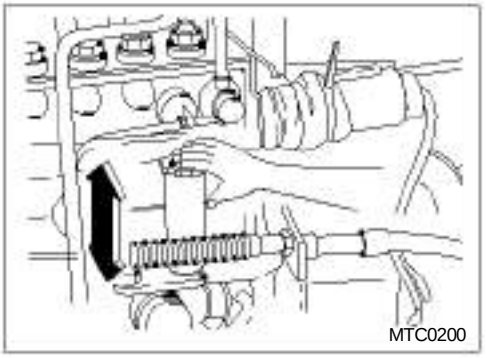

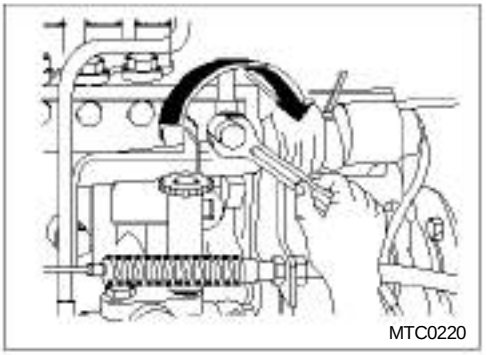

9) Air bleeding of fuel system

Bleeding to fuel system must be performed when fuel filter has been removed to clean or when the engine has been stopped due to lack of fuel.

Air bleeding procedure

* (1) Turn the feed pump cap anti-clockwise.
(2) Loosen the bleeder screws of the fuel filter.
(3) Hold down and then pull up the feed pump cap repeatedly until fuel without air bubbles comes out through the air bleeder screws.
(4) After air has been drained out completely, tighten the air bleeder screw of fuel filter.
(5) Hold down and then pull up the fuel pump cap repeatedly to check fuel supply resistance. To close the cap, press it firmly down and turn it clockwise.
(6) After air-bleeding work, start the engine and check up the leakage of fuel arround air bleeder screws.

* Air bleeding procedure(DDC engine)
Hold up and down repeatedly the priming pump on the primary filter to check up the fuel feeding resistance

Caution

When fueling, take special care in keeping cleanliness of the fuel. Dirty fuel will cause fuel system problems or premature wear of injection pump or injection nozzle. Therefore, thoroughly remove sediments in the fuel tank regularly.

https://www.truck-manuals.net/

Fuel system diagram(DE engine)

*

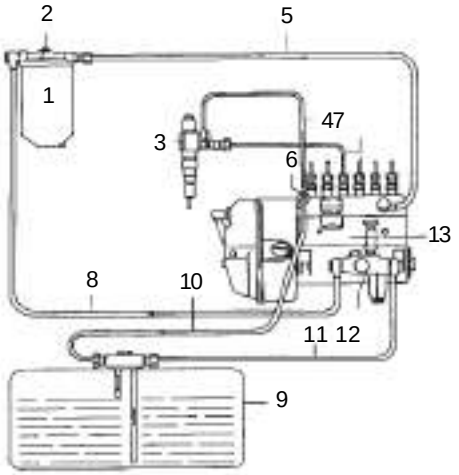

1. Fuel filter
2. Air bleeder screw
3. Injection nozzle
4. Fuel return pipe
5. Fuel feed pipe (filter→pump)
6. Overflow valve
7. Injection pipe
8. Fuel feed pipe (pump→filter)
9. Fuel tank
10. Fuel return pipe
11. Fuel suction pipe
12. Fuel feed pump
13. Injection pump

MDC0071

Fuel system diagram(DV engine)

*

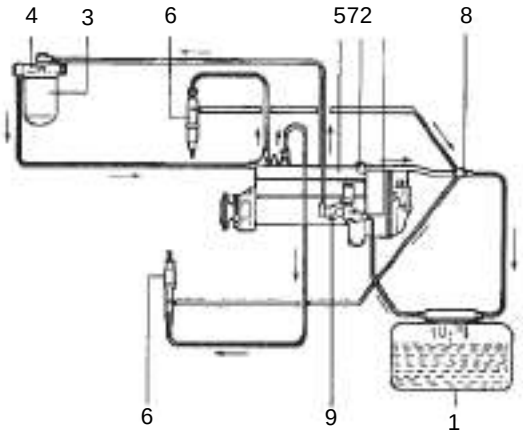

1. Fuel tank
2. Strainer
3. Fuel filter
4. Air bleeder screw
5. Injection pump
6. Injection nozzle
7. Relief valve
8. Fuel return pipe
9. Fuel feed pump

MDC0072

Fuel system diagram(DDC engine)

*

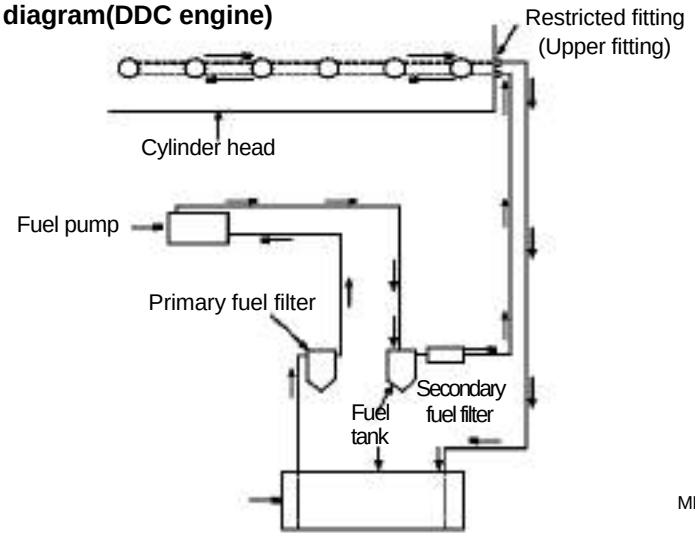

MDC0073

https://www.truck-manuals.net/

10) Valve clearance adjustment

(1) Adjustment intervals

Engine model	Adjustment intervals
DE DV	At end of first 1,000km, Every 10,000km
DDC	Every 192,000km

(2) Rated valve clearance(cold)

Engine model	Valve clearance
DE	Intake: 0.3mm Exhaust: 0.3mm
DV	Intake: 0.25mm Exhaust: 0.35mm
DDC	Intake: 0.203mm Exhaust: 0.660mm

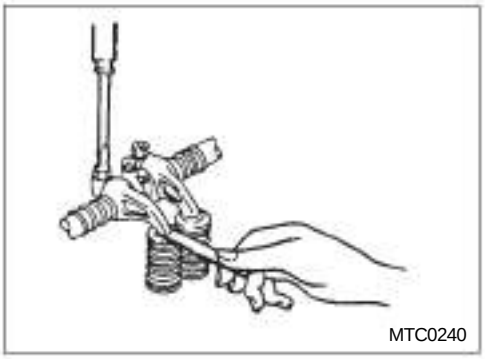
MTC0240

(3) Adjustment of valve clearance

Loosen the lock nut of rocker arm adjusting screw, insert a rated clearance gauge in between the rocker arm and valve stem, adjust the clearance with the adjusting screw, and then tighten the lock nut.

DE Engine

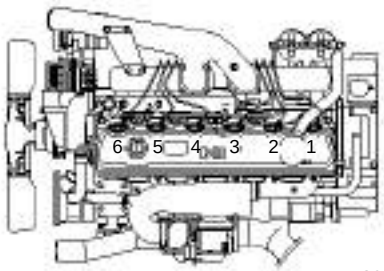

MDC0080

(4) Valve clearance adjustment chart

- DE Engine

Cyl. No.	1		2		3		4		5		6	
Valve	in	ex	in	ex	in	ex	in	ex	in	ex	in	ex
No. 1	○	○	○			○	○			○		
No. 6				◎	◎			◎	◎		◎	◎

https://www.truck-manuals.net/

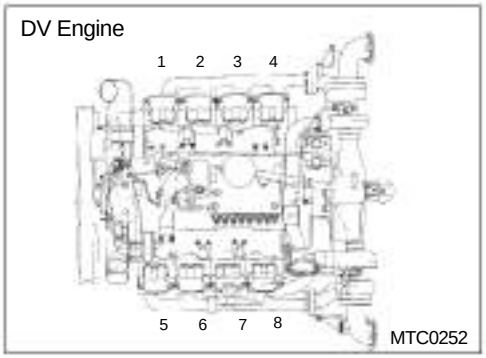

- DV Engine

Cyl. No.	1		2		3		4		5		6		7		8	
Valve	in	ex	in	ex	in	ex	in	ex	in	ex	in	ex	in	ex	in	ex
No. 6	○	○					○			○				○	○	
No. 1			◎	◎	◎	◎		◎	◎		◎	◎	◎			◎

In the above charts, with the intake and exhaust valves of No. 6 cylinder overlapped, adjust the valve clearance marked " " and then turn the crank shaft by 360° to adjust the valve clearance marked " "

Valve overlapping state

* This is a state where intake valve starts opening before exhaust valve is completely closed at the end of exhaust stroke, and accordingly the intake and exhaust valves of the same cylinder are working.

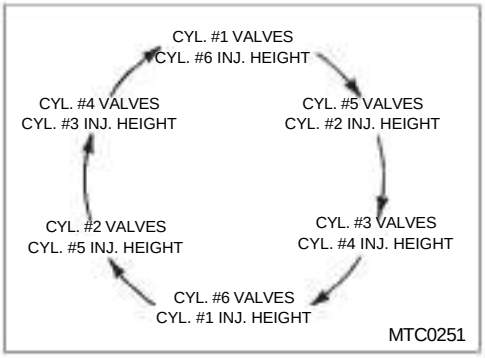

Caution

Be sure not to adjust valve clearance and injector height at discretion.

(5) Adjustment of valve clearance(for DDC engine)

1. Bar the engine over until one of the fuel injectors just starts in downward stroke.

Caution

Never set the valves and injector of the same cylinder at the same time. Doing this will result in engine damage.

2. Adjust all valves(two intake, two exhaust) at this cylinder position and set the fuel injector height on the companion cylinder, which is shown on the Timing Circle Chart in Figure MTC0251.

3. Bar the engine over in clockwise position until the fuel injector for the next cylinder shown in the Timing Circle Chart Figure MTC0251 just begins its downward stroke.

4. Adjust the valves for this cylinder, and set the fuel injector height for the companion cylinder(shown in parentheses) on the Timing Circle Chart Figure MTC0251.

5. Continue around the clock until all six fuel injectors and sets of valves have been adjusted.

https://www.truck-manuals.net/

Engine model	Injection pressure
DE12TI	220/160 kg/cm²
DE12TIS	220 kg/cm²
DV15T	210 kg/cm²
DV15TI	204 kg/cm²
DV15TIS	250 kg/cm²
DDC	352 kg/cm²

11) Injection nozzle

At end of first 5,000km and thereafter at every 10,000km (DDC engine:192,000km) for new vehicle, check injection pressure and spray condition of injection nozzle. As nozzle test is required to make such inspection, contact your nearest Daewoo dealer for nozzle test.

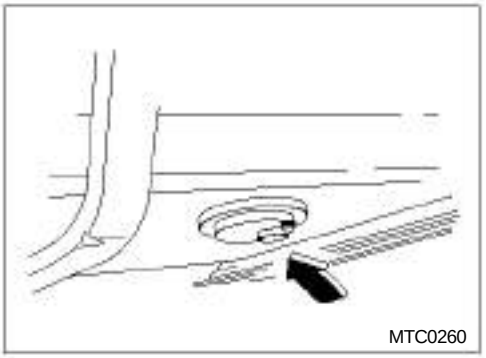
MTC0260

12) Fuel tank

Remove drain plug from fuel tank, and take out the strainer to clean it at every 8,000km.
Clean the inside of the fuel tank and drain water and sediments at every 24,000km.

MTB0470

13) Change of coolants

Drain the coolant by opening the radiator drain cock, engine water drain cock and oil cooler cover plug. After completely draining off, close the drain cock and fill with water. Run the engine for about 10 minutes and then recheck the coolant level. In the case that antifreeze is added to coolant, it is advisable to clean the inside of the radiator and engine water jacket 2 times a year(in spring and autumn).

Specifications: EDS M - 8207

Engine model	Coolant volume
DE12TI	39.6L
DE12TIS	39L
DV15T	38.6L
DV15TI	39.6L
DV15TIS	40L 45L
DDC	

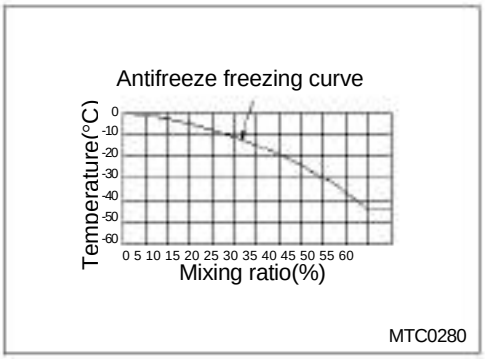

MTC0280

* Antifreeze and water mixing ratio: 50/50 for all around the year
* Operation and care in cold weather.

https://www.truck-manuals.net/

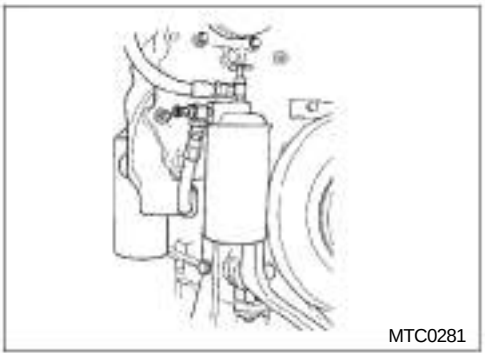
MTC0281

14) Coolant Filter(for DDC engine)

The engine cooling system filter is a compact by-pass type unit with a replaceable spin-on type element.

Any impurities such as sand and rust particles suspended in the cooling system will be removed by the straining action of the element. The removal of these impurities will contribute to longer water pump life and proper operation of the thermostat.

- Element change intervals

  Coolant filter elements must be replaced with new ones every 24,000km operation.

- How to replace elements
  1. Close the coolant filter inlet and outlet shut off valves.
  2. Remove and discard the element.
  3. Clean the filter adapter with a clean, lint-free cloth.
  4. Lightly coat the new coolant filter seal with clean engine oil.
  5. Install the new element. Tighten the element until the seal contacts the filter adapter. Tighten an additional 2/3 of a turn.
  6. Open the coolant filter and outlet shut off valves.
  7. Run the engine, and check for leaks.
  8. Add coolant, if required.

Caution

Be sure to keep change period to prevent the engine cavitation since the coolant filter has the component for anti corrosion.

https://www.truck-manuals.net/

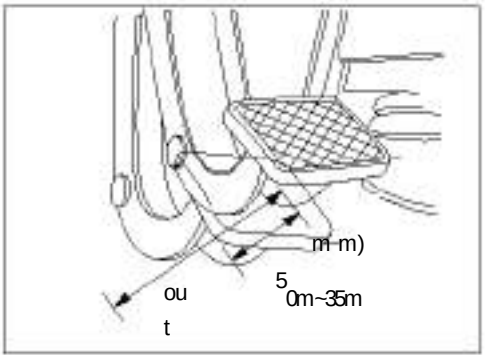

Ab 5mm
16 (40~M:25
Z /
FT

MEC0040

15) Inspection and adjustment of clutch pedal

The clutch pedal free play decreases as wear develops in the clutch driven plate. The clutch pedal free play should be adjusted at every 4,000km, or when the amount of play becomes less than the standards, since the use of the vehicle without making an adjustment will result in clutch slippage.

• Free play		
Transmission model	Vehicle	Free play
	Deluxe	
LOCAL	Super deluxe	40~50 mm
	Ultra	25~35 mm
ZF	All	25~35 mm

(1) Inspection of free play

To check the amount of pedal free play, release air completely from the main air tank and depress the clutch pedal carefully by hand until a strong resistance is felt, and then take the distance between the initial position of the pedal and the point where a strong resistance is felt.

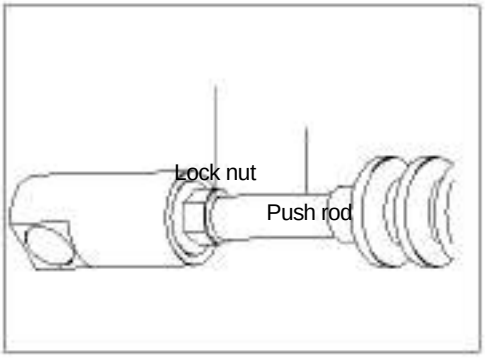

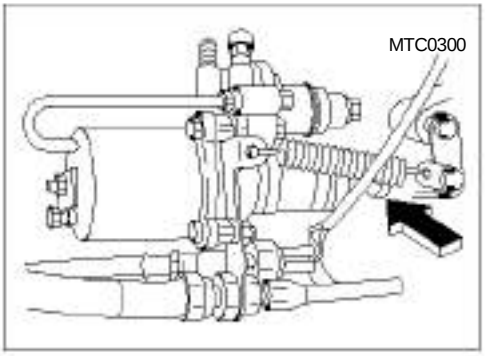

MEC0050

(2) Adjustment of free play

1. Master cylinder
   a. Disconnect the clutch pedal return spring.
   b. Loosen the lock nut.
   c. Turn the push rod until its end is brought into contact with the piston lightly, back off the rod 1/2(about 0.5mm) of a turn and tighten the lock nut.
2. Booster(manual type)
   a. Remove boot and disconnect return spring.
   b. Use a wrench to loosen push rod by turning it slowly until resistance increases, then back off the push rod 3 turns.(But, in case of 8 ton truck, back off the push rod 2 turns)
   c. Tighten the rock and intall the boot and return spring.
3. Booster(auto type)
   Adjust only clutch master free play as the booster of ZF transmission can be automatically adjusted.
4. After completing the above operations, adjust air pressure to 0 kg/cm^2 and check the pedal free play when the pedal starts to meet the resistance.

https://www.truck-manuals.net/

Caution

Frequently check the check hole of back plate for the amount of brake lining abrasion.

16) Adjustment and control of brake

The use of brake system with excessive brake lining clearance is dangerous as the brake performance decreases with an increase in the lining clearance.
The brake lining clearance should be checked and adjusted regularly(every 40,000km).

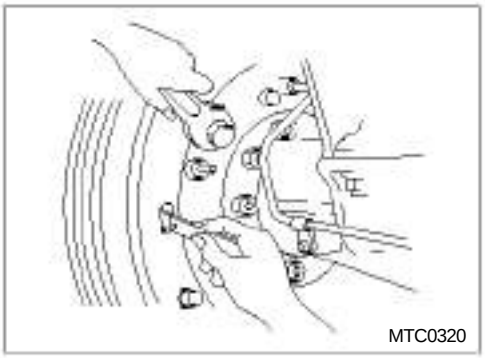
MTC0320

(1) Inspection of brake lining wear

1. Check the brake linings for wear through the check hole.
2. If the section of the brake linings becomes semicircular, it indicates excessive wear beyond the limit. Frequently check and replace them, and contact your nearest Daewoo dealer, if necessary.

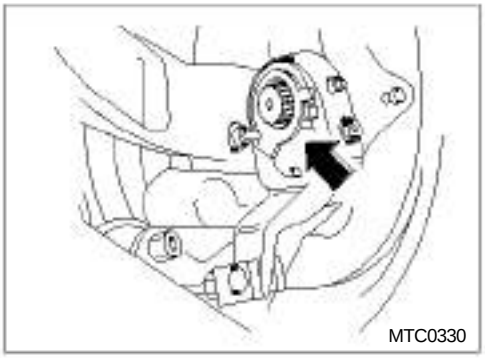
MTC0330

(2) Adjustment of brake lining clearance

- Full air type
  Insert a 0.3mm feeler gauge into the lining clearance through the check hole and adjust with the slack adjuster connected to the power chamber or spring chamber, so that the feeler gauge fits snugly into the clearance.

Lining clearance	0.3mm

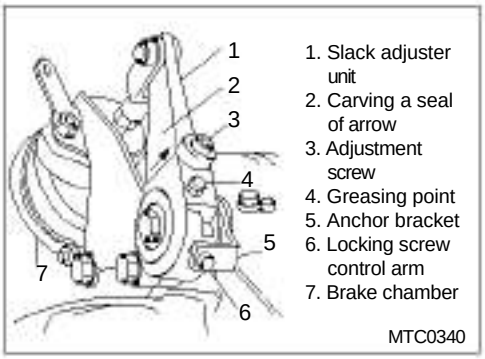

1. Slack adjuster unit
2. Carving a seal of arrow
3. Adjustment screw
4. Greasing point
5. Anchor bracket
6. Locking screw control arm
7. Brake chamber

MTC0340

(3) Auto lining clearance adjustment device

Auto lining clearance adjuster is designed to automatically adjust brake lining clearance.

Item		All vehicles	24 ton dump
Lining Clearance	Front	0.6~0.9mm	0.5~1mm
	Rear		0.3~0.6mm

https://www.truck-manuals.net/

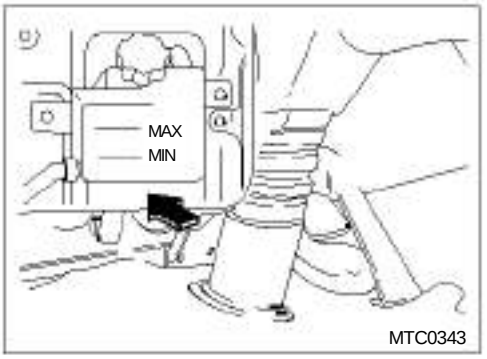

17) Air Bleeding of clutch hydraulic circuits

1) Fill the clutch fluid reservoir to the specified level with clutch fluid and keep it filled during bleeding operation.

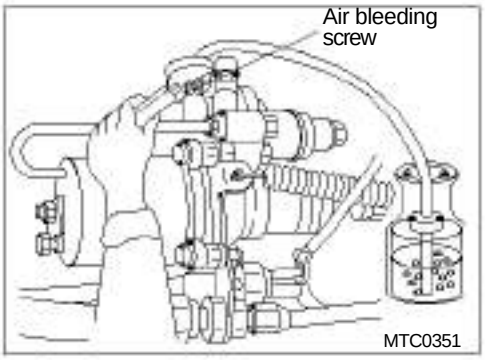

2) Remove bleeder rubber cap and connect a vinyl pipe to the bleeder and hold free end of the pipe in a transparent container filled with clutch fluid.
3) Pump the clutch pedal several times and hold the pedal depressed.
4) With the pedal depressed, loosen the bleeder half a turn to discharge air-mixed clutch fluid and tighten it immediately.

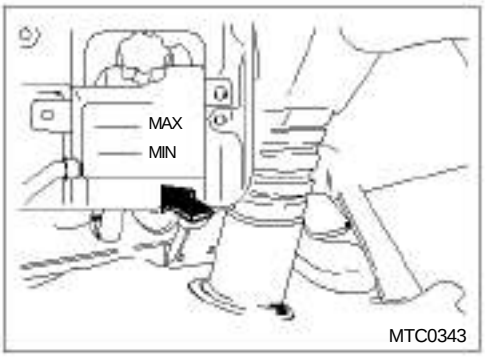

5) Repeat the above steps of operation until air bubbles disappear completely from the fluid being forced out.
6) After the completion of bleeding operation, check for pedal free play and clutch operation, then check that the level of clutch fluid in the reservoir is normal.

Caution

Don't need additional adjustment of pedal free play as fixed in the factory. But before the air bleeding, check the pedal free play because master cylinder has no clearance, that is, booster is continusously pushing the clutch master cylinder.

https://www.truck-manuals.net/

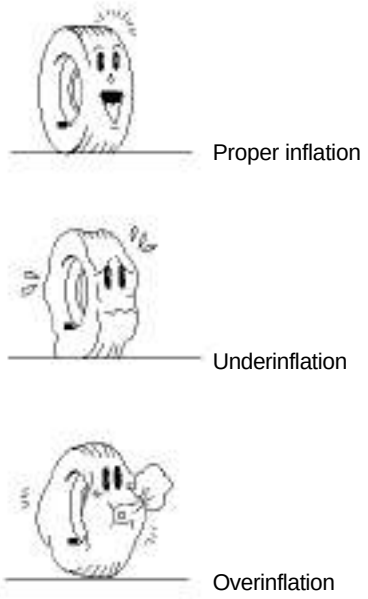

MTC0370

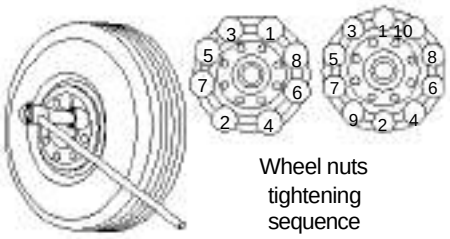

Wheel nuts tightening sequence

MTC0380

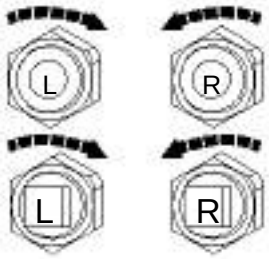

Nut loosening directions

MTC0390

18) Tires

(1) Tire pressure inspection

Check tire pressure with a tire air gauge and add compressed air if required. Improper inflation will adversely affect the life of tire, especially underinflation is a major contributor to overheating of tire, resulting in explosion.

- **Tire air pressure**

Tire size	Normal inflation pressure
10.00-20-16PR 11.00-20-16PR 12.00-20-18PR	Single: 8.1kg/cm^2(115 PSI) Dual: 7.4kg/cm^2(110 PSI)
11.00R20-16PR 11R22.5-16PR 12R22.5-16PR	Single: 8.4kg/cm^2(119 PSI) Dual: 7.7kg/cm^2(110 PSI)
385/65R22.5-18PR	Single:8.5kg/cm^2(121 PSI)
315/80R22.5-20PR	Single:9.1kg/cm^2(130 PSI)

(2) Tire rotation

Tire wear depends on tire position, road conditions, or a habit of applying brakes. To avoid unbalanced wear of your tires and to prolong their lives, rotate tires periodically (every 5,000km normally).

Caution

After rotating tires, be sure to re-tighten the wheel nuts to specified torque at end of 50~100km running. (Torque: 60~65 kg·m)

Follow these instructions with care when rotaitng tires.

1. The wheel nuts on the right side wheels have right-hand threads and the wheel nuts on the left side wheels have left-hand threads.
   Wheel nuts for the 10 studs wheel pin type are of right hand thread regardless of wheel locations.

Caution

Never use a recapped tire.

https://www.truck-manuals.net/

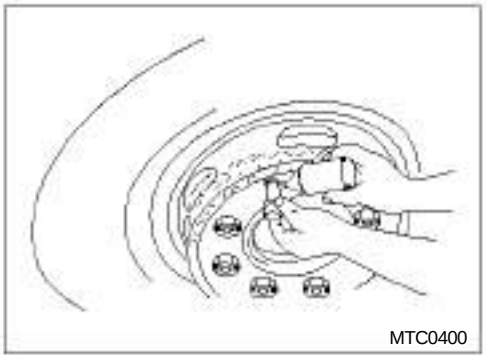

2. Clean the wheel pins and nuts and apply oil to the threads.

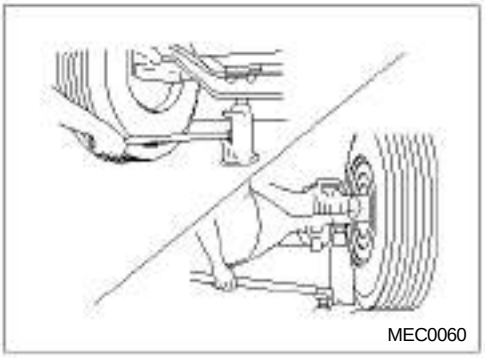

3. Place an oil jack as shown.

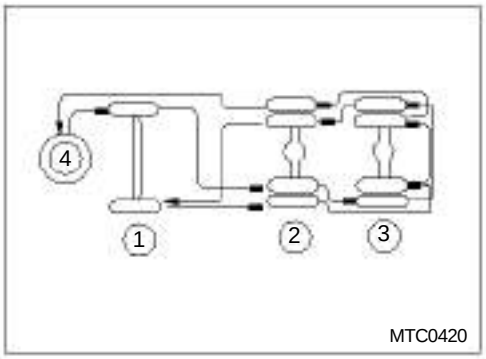

- 6x4 series
  1. Front wheel
  2. Rear front wheel 3. Rear rear wheel
  4. Spare tire

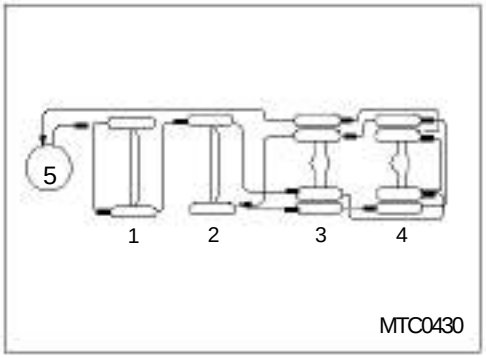

- 19ton cargo, 19ton dump vehicle
  1. Front front wheel(1st shaft)
  2. Front rear wheel(2nd shaft) 3. Rear front wheel(3rd shaft) 4. Rear rear wheel(4th shaft)
  5. Spare tire

https://www.truck-manuals.net/

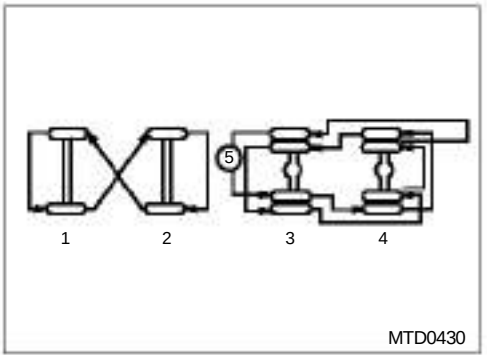

- 20.5ton/21ton/22.5ton cargo, 24ton dump vehicles
  1. Front front wheel(1st shaft) 2.
  Front rear wheel(2nd shaft) 3.
  Rear front wheel(3rd shaft) 4.
  Rear rear wheel(4th shaft)
  5. Spare tire

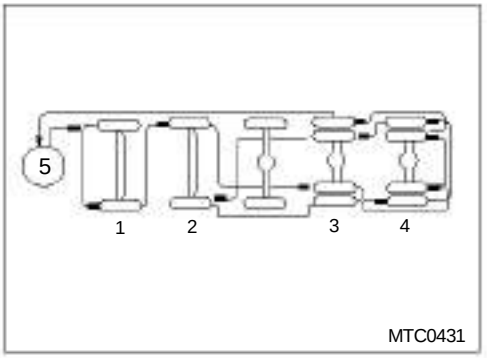

- 10x4 series
  1. Front front wheel(1st shaft) 2.
  Front rear wheel(2nd shaft) 3.
  Self steer wheel(3rd shaft) 4.
  Rear front wheel(4th shaft) 5.
  Rear rear wheel(5th shaft)
  6. Spare tire

https://www.truck-manuals.net/

19) Greasing points

(1) 4x2 series chassis greasing point diagram

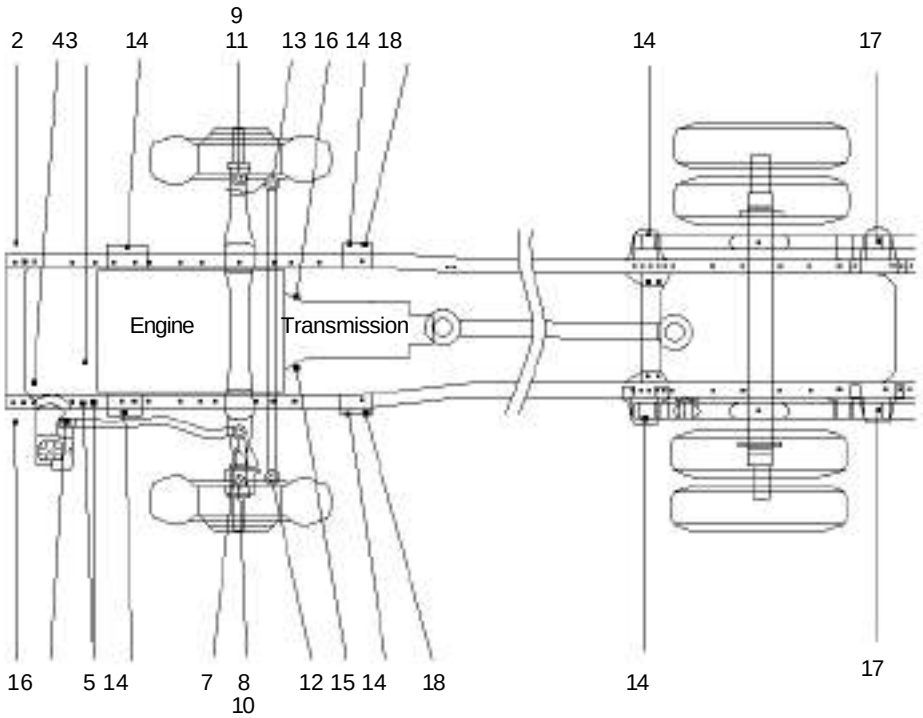

MEC0080

1. Bracket support cap sus. upper, left
2. Bracket support cap sus. upper, right
3. Change lever
4. 1st relay
5. 2nd relay
6. Drag link, front
7. Drag link, rear
8. King pin, left, upper
9. King pin, right, upper
10. King pin, left, lower
11. King pin, right, lower
12. Tie rod, left
13. Tie rod, right
14. Spring pin, front
15. Transmission release bearing
16. Transmission release bearing
17. Bracket spring
18. Shackle

https://www.truck-manuals.net/

(2) 6x4 series chassis greasing point diagram

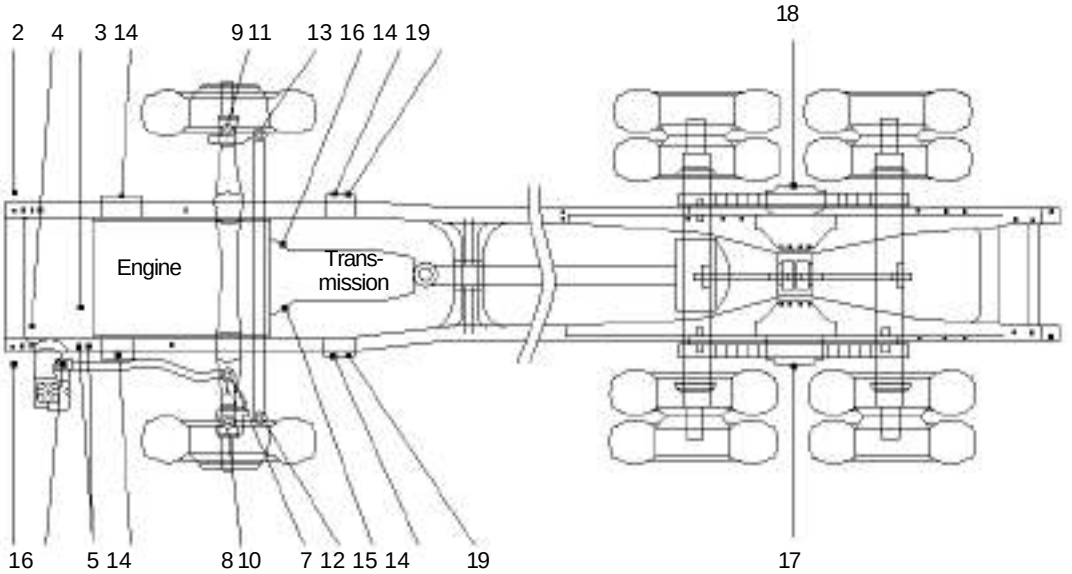

MDC0130

1. Bracket support cap sus. upper, left
2. Bracket support cap sus. upper, right
3. Change lever
4. 1st relay
5. 2nd relay
6. Drag link, front
7. Drag link, rear
8. King pin, left, upper
9. King pin, right, upper
10. King pin, left, lower
11. King pin, right, lower
12. Tie rod, left
13. Tie rod, right
14. Spring pin, front
15. Transmission release bearing
16. Transmission release bearing
17. Spring seat, left
18. Spring seat, right
19. Shackle

https://www.truck-manuals.net/

(3) 8x4 series chassis greasing point diagram

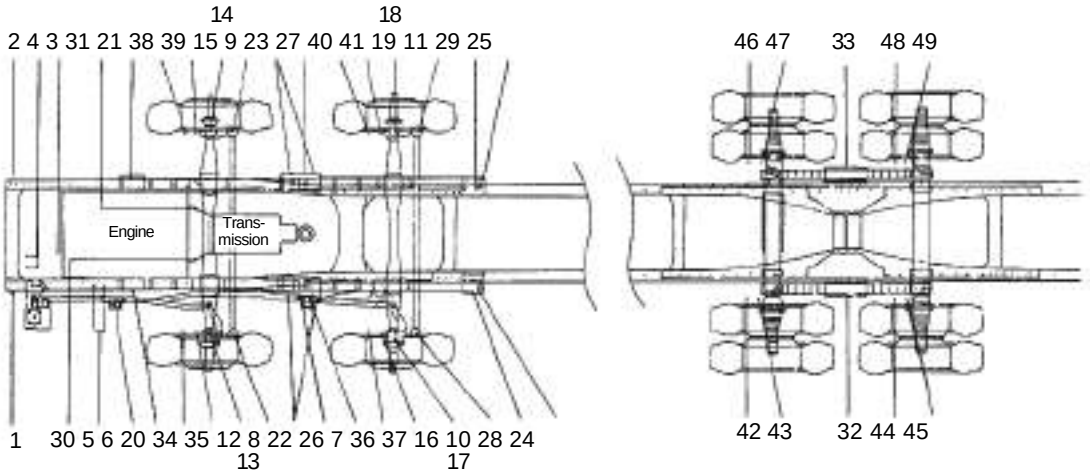

MTC0610

1. Bracket support cap sus. upper, left
2. Bracket support cap sus. upper, right
3. Change lever
4. 1st relay 5.
2nd relay
6. Idle arm
7. Relay arm
8. 1st tie rod, left
9. 1st tie rod, right
10. 2nd tie rod, left
11. 2nd tie rod, right
12. King pin, front left, upper
13. King pin, front left, lower
14. King pin, front right, upper
15. King pin, front right, lower
16. King pin, rear left, uppering
17. King pin, rear left, lower
18. King pin, rear right, upper
19. King pin, rear right, lower
20. Spring pin, front, left
21. Spring pin, front, right
22. Spring pin, inter, left
23. Spring pin, inter, right
24. Spring pin, rear, left
25. Spring pin, rear, right
26. Shackle, front, left
27. Shackle, front, right
28. Shackle, rear, left
29. Shackle, rear, right
30. Transmission release bearing
31. Transmission release bearing
32. Spring seat, left
33. Spring seat, right
34. Brake cam shaft, forward front, left
35. Slack adjuster, forward front, left
36. Brake cam shaft, forward rear, left
37. Slack adjuster, forward rear, left
38. Brake cam shaft, forward front, right
39. Slack adjuster, forward front, right
40. Brake cam shaft, forward rear, right
41. Slack adjuster, forward rear, right
42. Brake cam shaft, rearward front, left
43. Slack adjuster, rearward front, left
44. Brake cam shaft, rearward rear, left
45. Slack adjuster, rearward rear, left
46. Brake cam shaft, rearward front, right
47. Slack adjuster, rearward front, right
48. Brake cam shaft rearward rear, right
49. Slack adjuster, rearward rear, right

https://www.truck-manuals.net/

(4) 10x4 series(self steer axle), chassis greasing point diagram

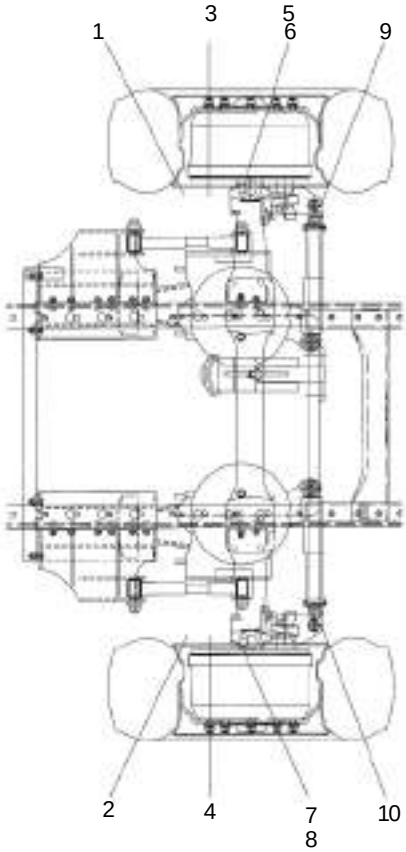

MTC0601

1. Brake cam shaft, right
2. Brake cam shaft, left
3. Slack adjuster, right
4. Slack adjuster,left
5. King pin, right, upper
6. King pin, right, lower
7. King pin, right, upper
8. King pin, right, lower
9. Tie rod, right
10. Tie rod, left

* Other 10x4 vehicle's drawing for greasing is same as 8x4 vehicles.

https://www.truck-manuals.net/

(5) Greasing points(nipples)

Use a greasing pump to inject every 15,000km of grease to each nipple.

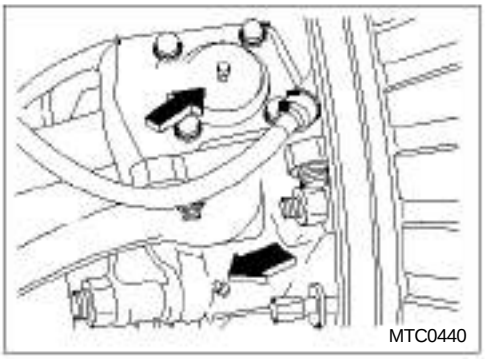
MTC0440

- **King pin**

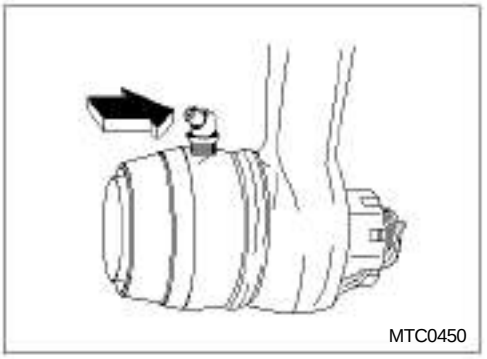
MTC0450

- **Drag link**

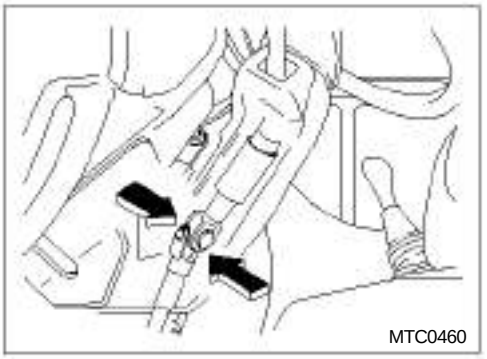
MTC0460

- **Inside spline shaft of steering column**

https://www.truck-manuals.net/

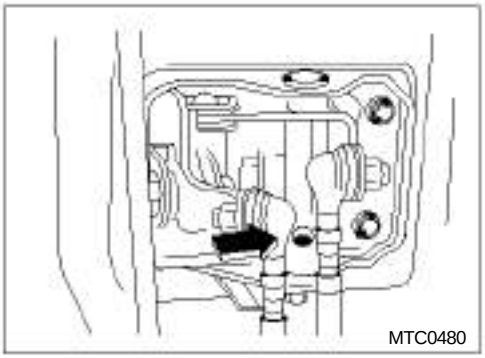

- **Gearshift control rod (to gearshift lever)**

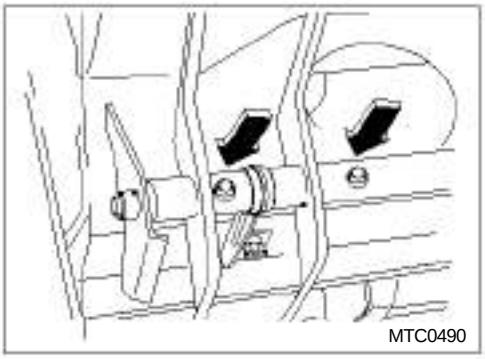

- **Gearshift control rod (to cab lower)**

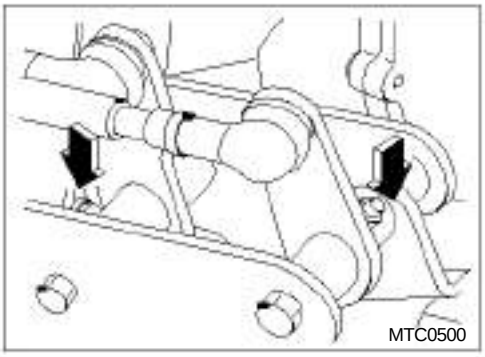

- **Gearshift control rod(to frame)**

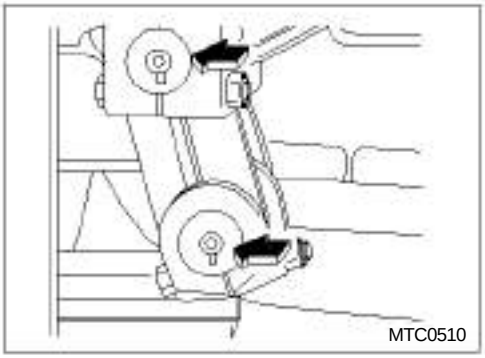

- **Spring pins and shackle pins**

https://www.truck-manuals.net/

- **Spring pads**

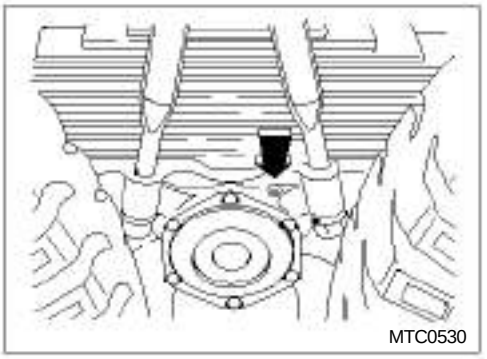

- **Trunnion shaft**

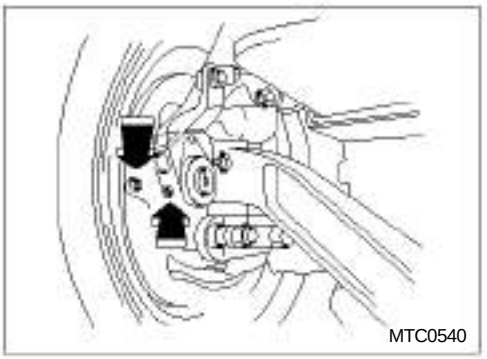

- **Front wheel brake chamber and slack adjuster**

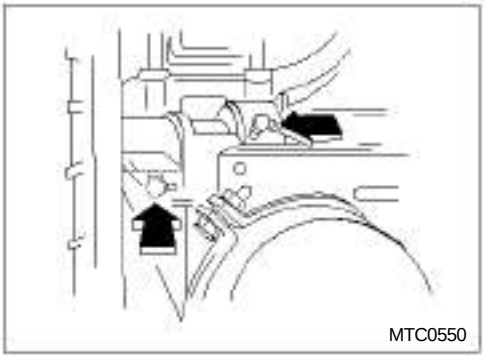

- **Rear wheel brake chamber and slack adjuster**

https://www.truck-manuals.net/

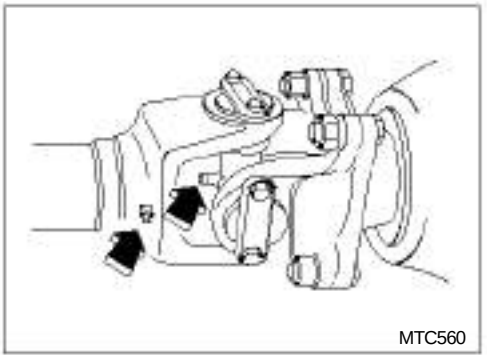

- **Propeller shaft universal joints and sliding sleeve**

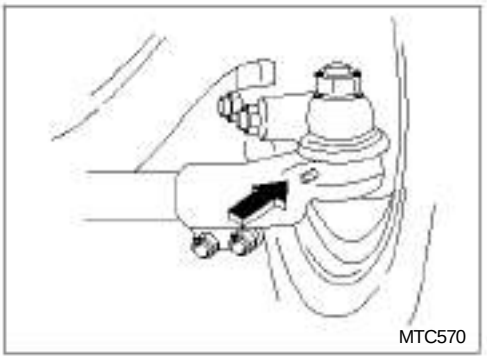

- **Tie rod ends**

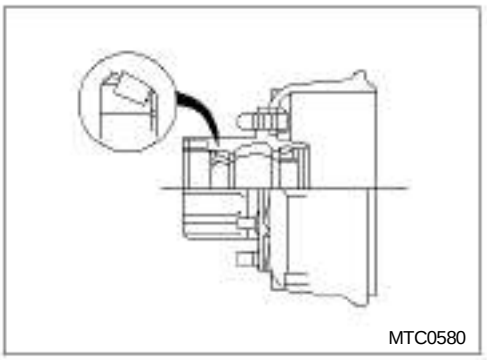

- **Front and rear hubs**

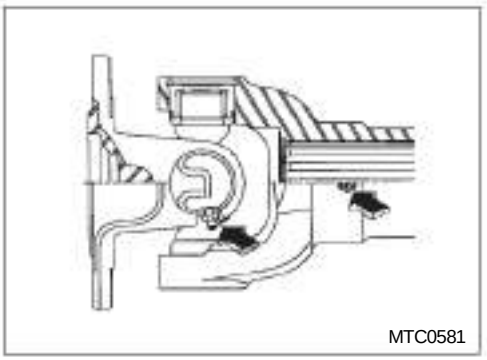

- **P.T.O Drive shaft**

https://www.truck-manuals.net/

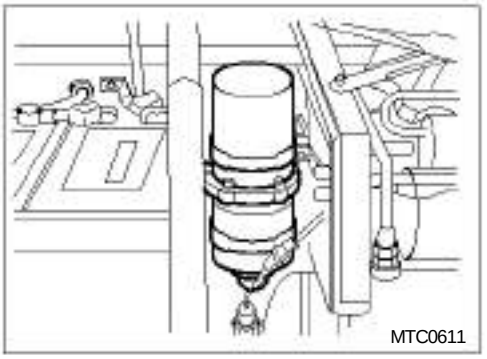

- **DR-5(Full air type)**

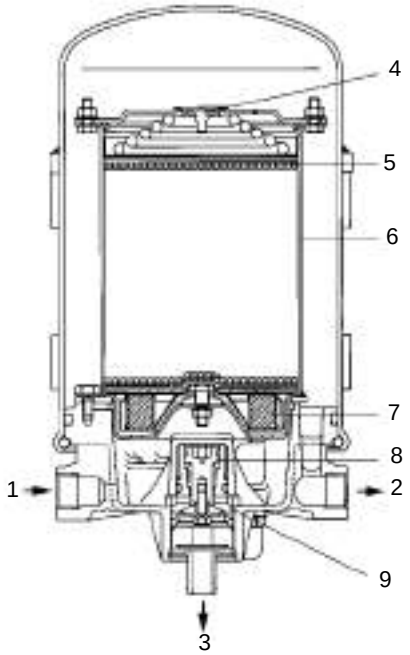

1. Inlet port(inflow from air compressor)
2. Outlet port(to main tank via the purge tank)
3. Exhaust port(discharging a large amount of water and foreign substances)
4. Check valve
5. Desiccant
6. Desiccant case
7. Oil filter
8. Control plunger
9. Exhaust valve

MTC0614

18) Air dryer

(1) Function of air dryer

Since moisture contained in the atmosphere is compressed and warmed by the air compressor, the amount of moisture is in proportion to that of compressed air. This hot and humid air is cooled down in fluid tanks or pipings to form condensation. This conden-sation washes away lubricants from the moving parts of various devices or equipment, resulting in unsatisfactory actions of these devices or equipment. In addition, impurities contained in the condensation accelerates rusting action to shorten the lives of related devices or equipment. In cold weather, this condensation can be frozen and immobilize various devices and equipment.Therefore, it is essential to remove moisture from compressed air in order to extend the service lives of devices, to enhance reliability, and to prevent possible damage or breaks.

(2) Features of air dryer

1. Excellent performance in dehumidification
2. Designed to remove particles, oil or dust, too.
3. Of simple structure and so easy to conduct servicing or maintenance

(3) Specifications

Item	DR-5
Max. air pressure	9.8kg/cm^2
Normal air pressure	5~9.8kg/cm^2
Vehicle air pressure	8.9kg/cm^2
Temperature range	-30℃+70℃
Operation fluid	Air
Remaking time	50 sec
Heater capacity	24V 100W
Thermostat temp.	4±4℃
Weight	About 8.6 kg

https://www.truck-manuals.net/

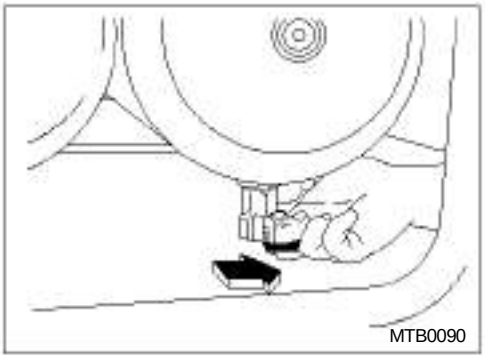

(4) Inspection of air dryer

1. At end of every 15,000km or 2 months operation
   Check for the drain amount and outflow of oil when draining condensation and dirts from air tank. (When oil is detected, check compressor.)
2. At end of every 45,000km or 6 months operation
   Disassemble air dryer and check if dessicant has been moistened by dirts. If the dessicant is found to be wet for about more than 1/5 of all, change it. (In wet condition, the capacity drops.)
3. At end of every 90,000km or 1 year operation
   - Disassemble air dryer and change dessicant, oil filter, cloth filter and whole rubber parts.
   - Check air tubing and wiring connections.

(5) Operation of air dryer

Season	Descriptions
Spring, Summer, Autumn (warm or hot weather)	1. Before driving, always check the air pressure(DR-5:8.9kg/cm^2) in air tank. 2. When parking, check the amount of drained water and foreign substances in water.
Winter (cold weather)	1. As thermostat is installed in air dryer, when the sensing temperature is above 4±4°C, the electric current to heater is cut off automatically. 2. Before or after the operation, always follow the above instructions 1 and 2 to care for air tank.

* In the case that temperature drop in air tank exceeds 16°C, a small amount of water may be drained.

https://www.truck-manuals.net/

(6) Troubleshooting for air dryer

Daily inspection and periodic inspections will prevent the greater portion of air dryer troubles. In the event of troubles or complaints as listed, follow the correction precedures to correct the difficulty.

Complaints	Cause	Correction
Water comes out from main tank.	1. Desiccant has been saturated.	Check and drain the main tank until the desiccant is dried up.
	2. Cut-off pressure of governor is so low that purge valve won't open.	Increase pressure for governor to 6.45 (DR- 5: 7.2) kg/cm^2 or higher.
	3. Failure to change desiccant or oil filter within scheduled period.	Change desiccant kit at end of every 12 months or 90,000km operation.
	4. As the purge time is less than the rated time(50 seconds), desiccant is not recovered sufficiently.	1) If cut-off pressure of governor and closing pressure of relief valve are low, purge time also is shortened, resulting in failure in recovery of the desiccant. 2) In the case of purge by relief valve, if cut-off pressure of governor and closing pressure of relief valve are low, purge time also is shortened, resulting in failure in recovery of the desiccant.
Drain valve fails to drain.	1. Freezing of air dryer due to heater trouble	1) Change faulty heater. 2) When the trouble is located in thermostat, change it.
	2. Failure to regularly change desiccant	Change desiccant kit at end of every 12 months or 90,000km operation.
	3. No operation of purge valve due to the entry of foreign substances into drain valve	Disassemble and check the valve, and replace the valve, if necessary.
Inside of air dryer has been frozen.	1. Misattached dryer body or exposed to cold weather at -30°C while traveling	Correct the position of dryer body or install a wind screen.
	2. Heater has been short-circuited and no heating	1) Use a tester to check the heater for short-circuit. 2) If heater has been short out, change it with a new one.
	3. Thermostat has been short, resulting in failure of heater.	Leave thermostat at temperature of 0°C or below and use a tester to check it. Add heat to thermostat by hand to check for OFF state and change it if required.
	4. The dryer's temperature drops significantly due to ice or snow stuck to its body	Remove ice or snow so carefully as not to cause damage to dryer body and electrical wiring connections for heater.
	5. No operation of heater due to disconnection of the electrical wiring for heater or thermostat	Check heater and thermostat for connection.
Air leaks from drain valve	1. Poor contact of valve seat due to the entry of foreign substances into valve	Disassemble and check the valve, and change the valve kit if required. When damage is found at the wet moving part of valve body, change the valve.
Excessively low pressure of main tank	1. When the check valve of main tank fails to perform backward flow checking operation with compressor in unload cycle, air can be leaked through the main tank drain.	Disassemble and check the check valve located between main tank and purge tank, and change it if required.

https://www.truck-manuals.net/

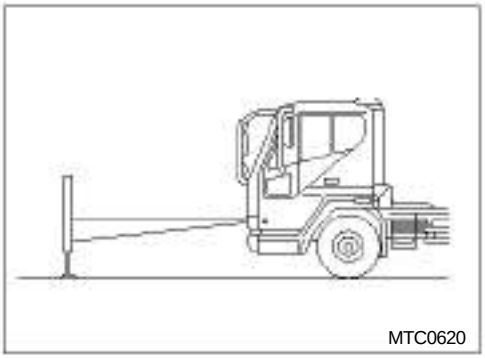

19) Electrical

(1) Headlamp aiming

1. Be sure to have the headlamps be aimed correctly after changing or refitting sealed beam.
2. Use a head lamp tester or aimer to aim the headlamps.
3. Use the 3 aiming screws to make low or high beam adjustment.

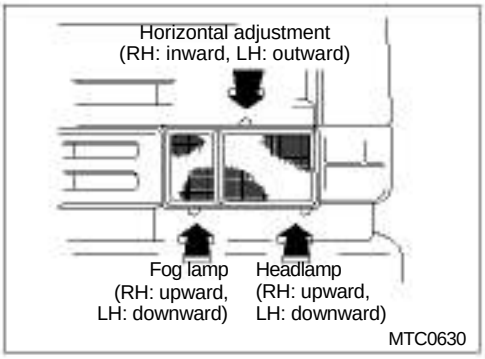

(2) Bulb replacement and kinds

Follow these instructions when changing bulbs, and always use the specified bulbs.

1. Loosen the lens retaining screws to remove the lens.
2. Press straight the bulb and turn it left to remove the existing bulb, and then fit the new one.
3. When changing halogen bulb(for fog lamps or headlamps), never touch the surface of the new halogen bulb by hand.

Bulbs	Description	Wattage	Model	Number	Remarks
Front combination lamp	Fog lamp	55W	Halogen	2	
	Head lamp	75/70W	Halogen	22	
	Turn signal lamp	25W	Single	22	
	Parking lamp	5W	Single	22	
	Cornering/clearance lamp	25/10W	Combination	2	
Rear combination lamp	Turn signal lamp	25W	Single		
	Stop/clearance lamp	25/10W	Combination		
	Parking lamp	5W	Single		
Fluorescent room lamp		27W	Fluorescent	1	
Spot lamp	Left lamp	12W	Single	1	
	Center lamp	12W	Single	1	
	Right lamp	12W	Single	1	
Reading lamp		10W	Single	1	Festoon bulb
Mode lamp		10W	Single	1	Festoon bulb
Glove box lamp		10W	Single	1	Festoon bulb
Step lamp		10W	Single	1	Festoon bulb
Sub turn signal lamp		12W	Single	2	
Speed indicator lamp		12W	Single	3	
Reverse lamp		21W	Single	2	
Licence plate lamp		12W	Single	2	
Working lamp		40W	Single	1	Tractor

https://www.truck-manuals.net/

(3) Fuse and relay box (Inside the cab)

1) Fuse, relay and unit positions

( ):DDC engine

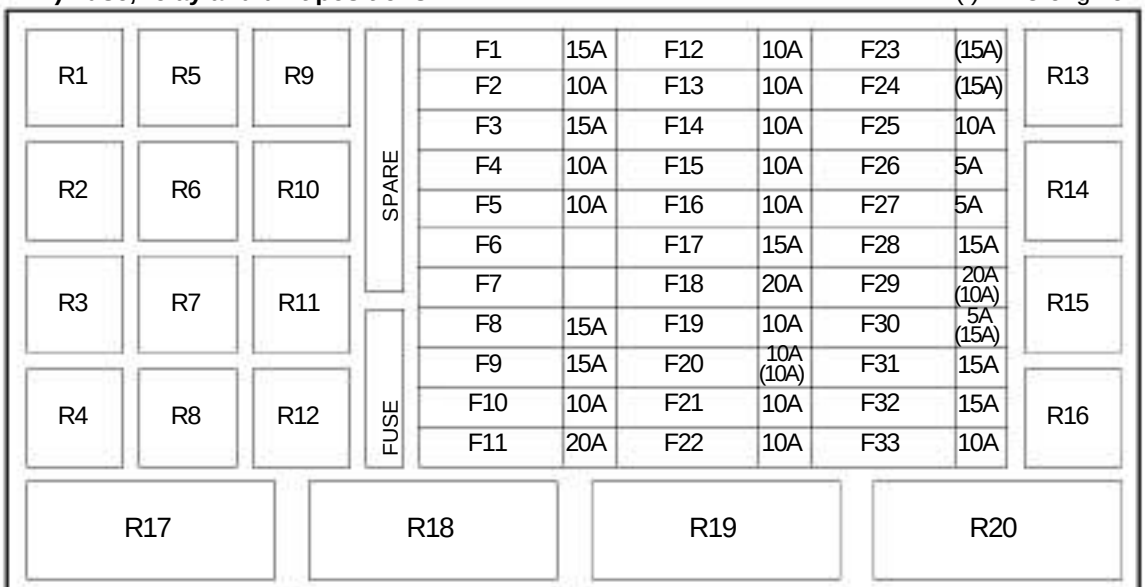

Fuse and relay position diagram

* The starter relay are located on the external part of the cab. Pre-heater unit, chime bell unit, DE12TIS ECU unit, power relay unit, and Keyless entry system with antitheft function are located in the glove box near the co-driver seat.

* Power window control unit are installed in the back of the assistant driver's seat.

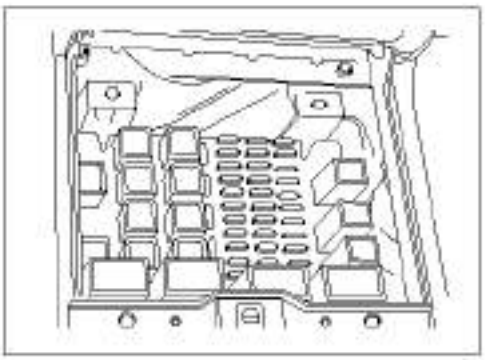

2) Fuses corresponding to each position of the starter key

* Fuse: "F", Relay and unit: "R"

Position of starter key	Fuse No.
"OFF" (Constant power source)	F1, F2, F3, F4, F5, F7, F8, F9, F10, F11, F31, F32, F33
"ACC"	F21, F22
"ON"	F12, F13, F14, F15, F16, F17, F18, F19, F20, F23, F24, F25, F26, F27, F28, F29, F30,

* Position of engine key	Fuse No.
DDC	F1, F2, F3, F4, F5, F7, F8, F9, F10, F23, F24
of starter	F11
"OFF" (Constant power source) "ACC"	

https://www.truck-manuals.net/

3) Designations of fuse, relay and unit

1. Designations of fuses

( ) : DDC engine

No.	Capa.	Use	No.	Capa.	Use	No.	Capa.	Use
F1	15A	Ignition switch/Meter	F12	10A	Mirror heat/Auto-mirror	F23	(15A)	User's(ENG. ECM)
F2	10A	Room lamp	F13	10A	Axle lift P.T.O	F24	(15A)	User's(ENG. ECM)
F3	15A	DC-DC converter	F14	10A	Speed limiter/Lock brake/Diff lock	F25	10A	Auto grease
F4	10A	Clock	F15	10A	Stop lamp	F26	5A	ABS
F5	10A	Engine stop (Ether start)	F16	10A	Back-up lamp	F27	5A	Trailer ABS (User's)
F6		ABS	F17	15A	Working lamp	F28	15A	Wiper system
F7		ABS	F18	20A	Air con	F29	(10A) 20A	E.C.U power (Meter power)
F8	15A	Turn signal and hazard warning lamps	F19	10A	Cab tilt			E.C.U power (Fuel heat)
F9	15A	Door lock	F20	10A (10A)	Preheat/Unit (Start signal)	F30	(15A) 5A	Headlamp with high beam
						F31	15A	Headlamp with low beam
F10	10A	Fog lamp	F21	10A	Reciver clock	F32	15A	
F11	20A	Power window	F22	10A	Bed heater	F33	10A	Tail lamps and instrument panel lamps

Caution

When the fuses "F5" and "F26" are used simultaneously, all electrical devices are actuated even with the starter key placed in "OFF". Be careful of this.

2. Designations of relays

( ) : DDC engine

No.	Use	No.	Use
R1	ABS relay	R11	E.C.U relay (Ignition)
R2	Headlamp with low beam relay	R12	Tail lamp relay
R3	Horn relay	R13	Back-up lamp relay (Delay)
R4	Headlamp with high beam relay	R14	Blinker unit
R5	ABS relay	R15	Working lamp relay (Fuel heat)
R6	Accessory relay	R16	Stop lamp relay
R7	Converter relay	R17	Wiper Intermittent relay
R8	Fog lamp relay	R18	Timer unit
R9	Wiper high relay	R19	Auto-door lock unit
R10	Wiper low relay	R20	Mirror heat unit

https://www.truck-manuals.net/

4) Auxiliary fuse and relay box

1. Fuse, relay and unit positions

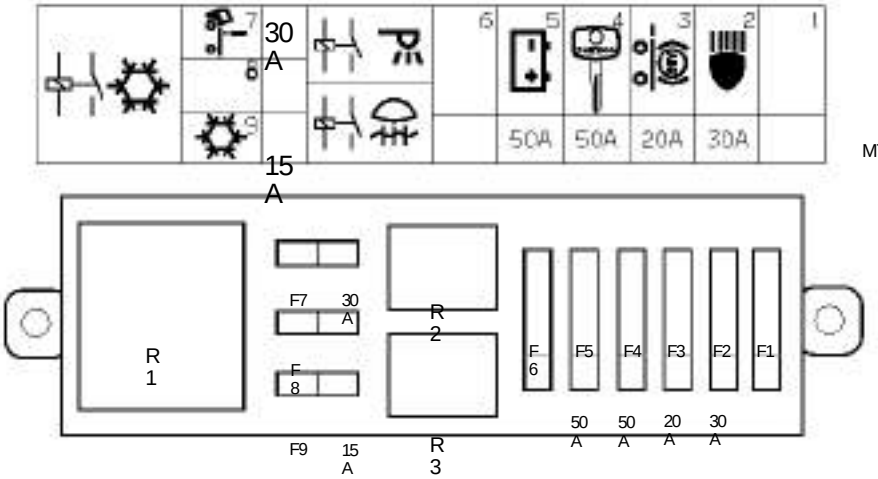

MTS0112

2. Fuses corresponding to each position of the starter key

MTS0111

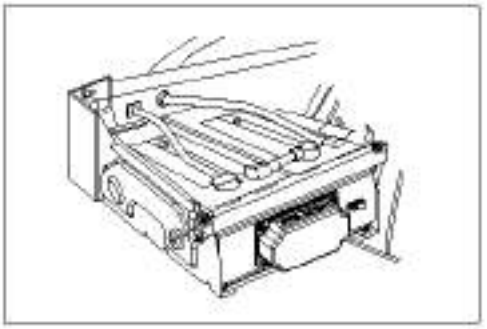

Position of starter key	Fuse No.
"OFF" (Constant power source)	F2, F3, F4, F5, F8
"ACC"	-
"ON"	F7, F9

3. Designations of fuses

No.	Capa	Use	No.	Capa	Use
F1	-	-	F6	-	-
F2	30A	Headlamp with high beam/Headlamp with low beam,Tail lamps and instrument panel lamps	F7	30A	Cab tilt
F3	20A	Trailer ABS	F8	-	-
F4	50A	Power supply to cabin in key on position	F9	10A	Air con
F5	50A	Constant power supply to cabin	-	-	-

4. Designations of relays

No.	Use
R1	-
R2	Parking lamp relay
R3	Fan motor relay

https://www.truck-manuals.net/

Caution

1. Be sure to set the ignition switch to "OFF" position before attempting to disconnect battery terminals.
2. Never disconnect battery terminals while the engine is running, since failure to do this will cause severe damage to the electrical system.
3. Engine does not starting due to discharge of battery (Dose not charging from current of alternater to battery due to the contact failure of fuse blink installed to rear part of alternater)
1)When the battery discharge, check surely the contact state of fuse blink installed to rear part of alternater.
2)After check the contact state of fuse blink, should be review whether recharging or not.

Caution

1. Using batteries when electrolyte is insufficient may generate too much gas, results in detonation.
2. Be sure to let the batteries not exposed to open flames, static electricity, unnecessary spark/short or it can detonate.

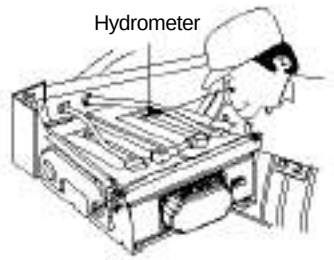

MTS0100

22) Battery care

(1) Battery checks(PT Battery)

1. Your vehicle is equipped with maintenance free(PT) batteries, which do not require periodic maintenance as long as they are used properly.
2. Check the state of charge by the hydraumeter(test indicator) installed on the face of the battery.

Test indicator	State of charge	Correction
Green	Normal	Use
Black	Low charge level	Recharge
Transparent	Low electrolyte level	Replace

3. If you do not operate your vehicle for extended period of time, start the engine every 15 days to recharge the batteries.
4. Battery Checks

- Tear aluminum sealing, inject electrolyte until carefully it reaches maximum indication line (or injector indication line), Install the batteries onto the vehicle after at least 20 minutes.
- Check the state of batteries biweekly, fill up pure water until it reaches maximum indication line (or injector indication line) in case electrolyte is insufficient and always keep the hole clean.

https://www.truck-manuals.net/

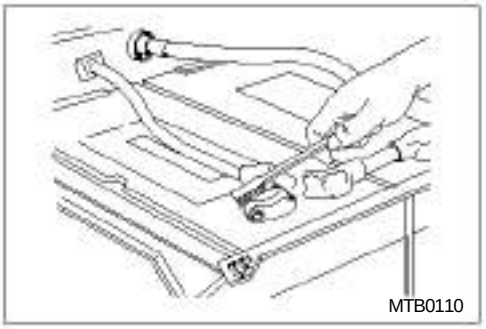
MTB0110

(2) Cautions when handling batteries

1. Wipe the battery terminals thoroughly and carefully with a soft brush and baking soda to remove corrosion around them. Then, wipe them again with hot water-soaked rag and apply vaseline or grease to them.
2. Never have the batteries exposed to open flames or electric sparks.
3. If electrolyte(sulfuric acid) contacts your skin, eyes, clothing or vehicle body, immediately flush with water.
4. To avoid short circuits, remove all jewelry and watches and do not permit any metal tools to make contact between the positive battery terminal and other metal on the vehicle.
5. When installing the battery, do not incline it above 45°.

Caution

Be sure to remove battery cable from terminal at the time of arc welding, or all control units(ABS, autogreaser, chimebell, speed limiter)may be broken.

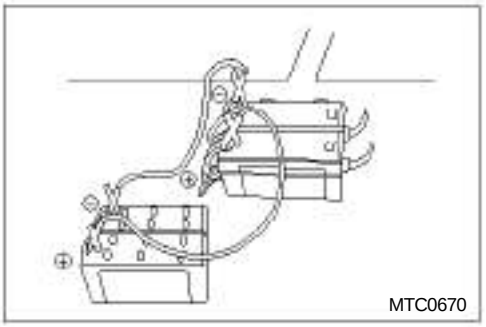
MTC0670

(3) How to use battery jumper cables

Ensure that the jumper cable to be used has sufficient capacity. Be sure to pair the same signs, namely (+) cable with (+) terminal and (-) cable with (-) terminal.

- When removing the jumper cables, start by removing the negative(-) cable. When connecting them, start by connecting the positive(+) cable.
- Never permit the positive(+) cable to contact the negative(-) cable.

https://www.truck-manuals.net/

Caution

1. Ether is highly flammable and explosive.
2. Do not smoke when servicing ether system.
3. Work in well ventilated area.
4. Do not work near open flames, pilot flames(gas or heaters), or sparks.
5. Do not carry an open flame near the ether system if you smell ether or otherwise suspect a leak.

23) Ether start system(DDC engine)

Ether start system is an engine starting system designed to spray ether into the air intake system before and after cranking at low temperatures by means of the Electronic Control Module(ECM). In addition, this system is actuated automatically by the ECM and therefore, you need no special operation, otherwise.

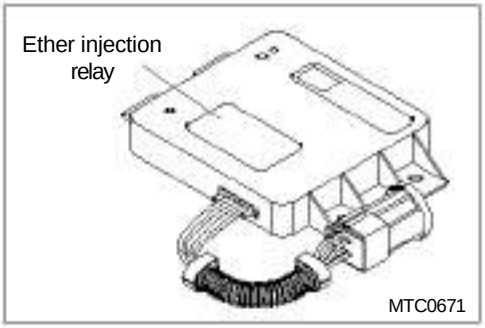

(1) Principle of operation

1) The ECM transmits electrical signal to the ether injection relay located in the glove box near the assistant driver's seat.
2) Then, the solenoid valve is energized to allow ether pressurized within the ether cylinder to spray through valve, metering orifice, tubing, and nozzle fitted onto intake manifold.
3) If ether in the cylinder is consumed up, the LCI on the ether injection relay lights up. At this time, you must replace the fluid of the cylinder.

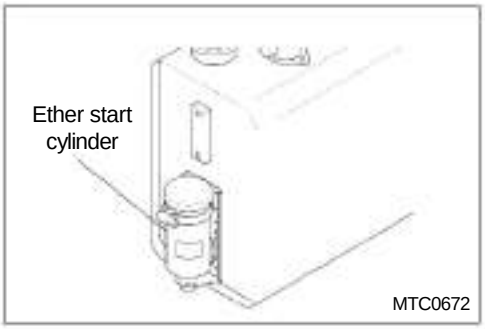

(2) Cylinder replacement and check

1) Clean all dirt from the neck of the cylinder and top of valve before removing the cylinder. Install the protective cap to protect the top of the valve from dirt during removal.
2) Weight the cylinder to determine the amount of fluid remaining. Subtract the empty net weight, and convert the difference into liquid volume of fluid remaining using 39 ml/oz weight(1.4 ml/g).

Cylinder weight	Empty netweight fluid cylinder	Full fluid cylinder weight
21 oz	16 oz (454 g)	37 oz (1,049 g)
8 oz	10 oz (283 g)	18 oz (510 g)

3) Ensure the cylinder is pressurized. Minimum is 120 lb/in^2 (827.37 kPa) at 68°F(20°C).

https://www.truck-manuals.net/

4. Remove the old gasket from the valve and discard. Check that only one gasket is used.
5. Coat the new cylinder's threads with clean engine oil.
6. Install the starting fluid cylinder by turning the cylinder in the direction of the arrow (clockwise), until the cylinder dirt and moisture seal O-ring contacts the valve.

Caution

Do not over tighten the cylinder. Overtightening may damage the valve or the cylinder.

7. Tighten an additional 11/2 turns(540°). Retighten the cylinder clamp.
8. Reset the LCI by passing a magnet over the designated reset area 3 or 4 times. The lamp should flash indicating a reset.

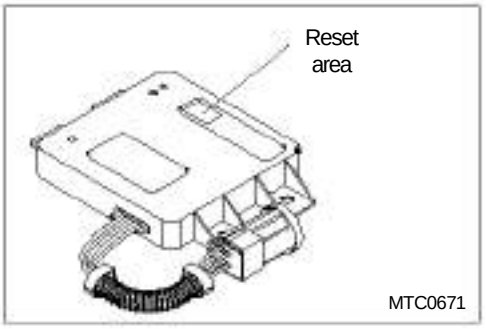

Caution

The contents of the cylinder should be allowed to settle back down before a system is operated. This takes approximately 15 to 20 minutes. Failure to allow this settling often causes premature clogging of the system and necessitates cleaning or replace- ment of the valves BLOCKOR® metering orifice filter. This also applies to a system being installed.

https://www.truck-manuals.net/

3. PERIODIC INSPECTION CHART

To ensure driving safety and maximum operating economy, periodic inspection and maintenance should be performed in accordance with the maintenance schedules as shown in the following chart. More frequent maintenance is required under severe conditions such as repeated short trip, driving on rough or dusty roads, driving in extremely cold weather, or driving on salted roads.

Check item \ Service intervals(mileage x 1,000km)	First 1,000km	4	8	12	16	20	24	28	32	36	40	44	48		
• ENGINE (DE/DV)															
Dry type air cleaner-Clean	As required			●				●				●			●
Dry type air cleaner element-Replace	When														●
Wet type air cleaner oil-Change	contaminated	Every 5,000Km													
Valve clearance-Check/adjust	When ●	Every 10,000Km													
Engine oil and filter change	contaminated ●	Short distance travel(in city): every 10,000km, Long distance travel(at high speed): every 15,000km													
Fuel filter-Drain		Every 10,000km													
fuel filter-Change		Every 20,000km													
Nozzle injection pressure/injection conditions		First 5,000km , Every 10,000km													
Injection timing-Check								●							●
Function of air compressor															●
Looseness in exhaust pipings		●	●	●	●	●	●	●	●	●	●	●	●		●
Fuel tank-drain/Strainer-Clean			●		●			●		●		●			●
Fuel tank-Inside wash								●							●
Coolant change(Include artifreeze)/Inside wash		Every 6 months change													
• CLUTCH															
Functions		●	●	●	●	●	●	●	●	●	●	●	●		
Pedal free play & stroke		●	●	●	●	●	●	●	●	●	●	●	●		
Booster(mini-pack) exhaust cover-clean		●	●	●	●	●	●	●	●	●	●	●	●		
Clutch fluid-Change		Inspection and supplement: Every 4,000Km Change: Every 24,000Km or 12 months													
• TRANSMISSION															
Oil leakage	●	●	●	●	●	●	●	●	●	●	●	●	●		
Oil change(Except ZF T/M)		First 4,000Km, Every 24,000Km or 6 months													
Oil-Change(ZF Transmission)		First 5,000Km, Every 45,000Km or 12 months													
Looseness of gear controller															●
• PROPELLER SHAFT															
Loose connection check				●				●				●			●
Wear of universal joint and spline															●
Looseness in bearing and related parts															●
• FRONT AND REAR AXLES															
Looseness in front wheel bearing				●				●				●			●
Looseness in rear wheel bearing								●							●
Looseness in axle shaft clamp bolt		●	●	●	●	●	●	●	●	●	●	●	●		
Axle oil leakage	●	●	●	●	●	●	●	●	●	●	●	●	●		
Rear axle oil change		First 4,000Km, Every 24,000Km or 6 months													
Rear axle oil change(RABA, Meritor)		First 5,000Km, Every 30,000Km													
Front alxe inspection-Crack,Damage,Wrench												●			

https://www.truck-manuals.net/

Check item \ Service intervals(mileage x 1,000km)	First 1,000km	4	8	12	16	20	24	28	32	36	40	44	48		
• SUSPENSION															
U-bolt nuts-Tighten	●							●							●
Spring damage		●	●	●	●	●	●	●	●	●	●	●	●	●	●
Looseness or damage of mountings		●	●	●	●	●	●	●	●	●	●	●	●	●	●
Oil leakage from and damage of shock absorber				●				●				●			●
• WHEELS															
Wheel nuts-Tighten	●	●	●	●	●	●	●	●	●	●	●	●	●	●	●
wheel disk damage		●	●	●	●	●	●	●	●	●	●	●	●	●	●
• STEERING SYSTEM															
Looseness and excessive play		●	●	●	●	●	●	●	●	●	●	●	●	●	●
Looseness of mounting portion				●				●				●			●
Steering linkage damage				●				●				●			●
Wheel alignment		First 8,000Km, Every 48,000Km													
Oil leakage from gear box		●	●	●	●	●	●	●	●	●	●	●	●	●	●
Power steering oil change	●														●
• SERVICE BRAKE															
Brake function-Check	●	●	●	●	●	●	●	●	●	●	●	●	●	●	●
Brake pedal free play-Check	●	●	●	●	●	●	●	●	●	●	●	●	●	●	●
Air leakage from brake system		●	●	●	●	●	●	●	●	●	●	●	●	●	●
Wear of linings													●		
Wear and damage of brake drum													●		
Leakage and damage of hoses and pipings		●	●	●	●	●	●	●	●	●	●	●	●	●	●
Wheel cylinder-Check		Every 12 months or 40,000Km													
Brake fluid-Check		●	●	●	●	●	●	●	●	●	●	●	●	●	●
Brake fluid-Change		First 1,000Km, Every 12 months or 40,000Km													
Brake fluid surface-Check		●	●	●	●	●	●	●	●	●	●	●	●	●	●
Brake air master operate-Check		Every 12 months or 40,000Km													
• PARKING BRAKE & SPRING BRAKE															
Brake function-Check		●	●	●	●	●	●	●	●	●	●	●	●	●	●
• ELECTRICAL EQUIPMENT															
Battery charge-Check	●	●	●	●	●	●	●	●	●	●	●	●	●	●	●
Starting motor function-Check				●				●				●			●
Alternator and regulator functions-Check				●				●				●			●
Damage of wiring-Check		●	●	●	●	●	●	●	●	●	●	●	●	●	●
Light-Check •		●	●	●	●	●	●	●	●	●	●	●	●	●	●
OTHERS															
Bolts and nuts-Check and tighten	●	●	●	●	●	●	●	●	●	●	●	●	●	●	●

https://www.truck-manuals.net/

DDC engine inspection

ITEM	Months	6	12	18	24	30	36	42	48	54	60
	Mileage x 1,000km	24	48	72	96	120	144	168	182	216	240
Lubricating oil-Replace		Every 15,000km									
Fuel tank			●		●		●		●		●
Cooling system					●				●		
Tachometer drive		●	●	●	●	●	●	●	●	●	●
Drive Belts		●	●	●	●	●	●	●	●	●	●
Air compressor		●	●	●	●	●	●	●	●	●	●
Lubricating oil filter-Replace		Every 15,000km									
Fuel filter-Replace		Every 15,000km(1st, 2nd fuel filter)									
Coolant filter/inhibitor level-Replace		●	●	●	●	●	●	●	●	●	●
Air system		●	●	●	●	●	●	●	●	●	●
Exhaust system		●	●	●	●	●	●	●	●	●	●
Engine (steam clean)			●		●		●		●		●
Radiator & air-to-air intercooler			●		●		●		●		●
Oil pressure					●				●		
Battery charging alternator			●		●		●		●		●
Engine & transmission mounts					●				●		
Crankcase pressure					●				●		
Fan hub									●		
Thermostats & seals					●				●		
Crankcase breather					●				●		
Engine tune-up					●				●		

https://www.truck-manuals.net/

4. IN CASE OF EMERGENCY

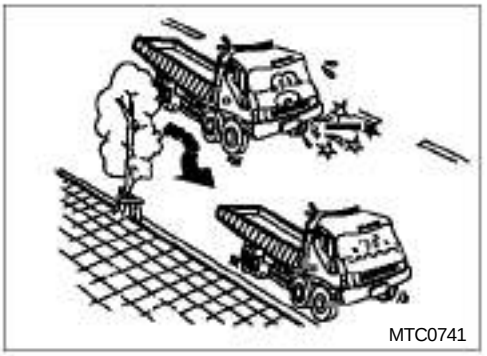
MTC0741

1) Emergency stopping

(1) In case of vehicle trouble or emergency stopping, pull up the vehicle to the roadside as early as possible.

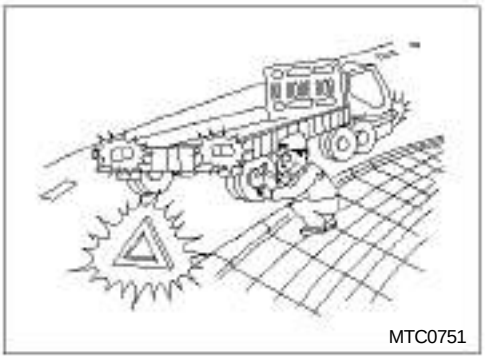
MTC0751

(2) Set the parking brake and turn on the emergency warning lamp to prevent possible safety hazard.

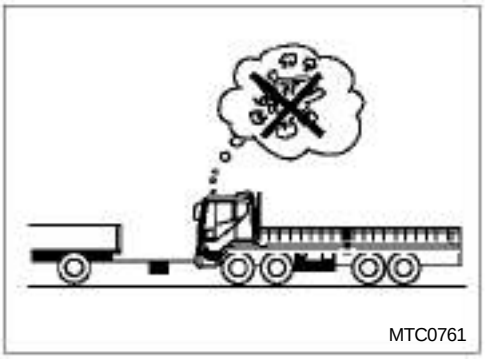
MTC0761

2) Emergency starting

(1) Avoid starting the engine while your vehicle is being towed as it may collide with the towing vehicle.

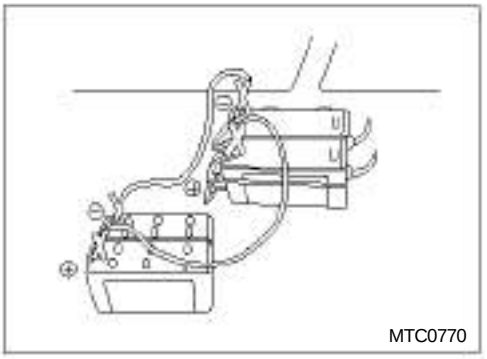
MTC0770

(2) Battery jumping
In the case that the battery has been "dead", refer to "BATTERY CARE" in this manual and make an emergency start as illustrated.

https://www.truck-manuals.net/

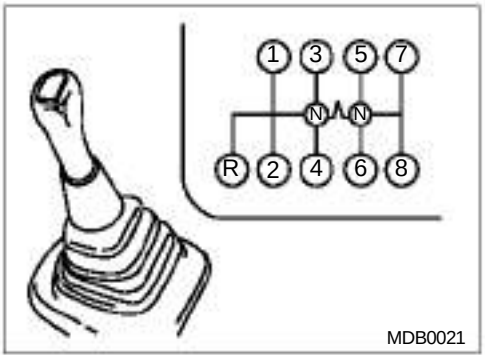

MDB0021

3) Cautions when being towed

(1) Put the gearshift lever in the NEUTRAL position.

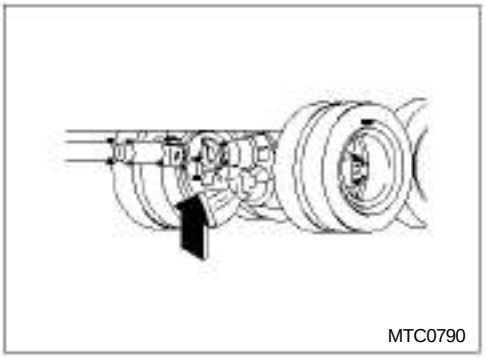
MTC0790

(2) When the transmission is found to have been bound into gear, disconnect completely propeller shaft from rear axle flange to tightly fix the propeller shaft to the frame.

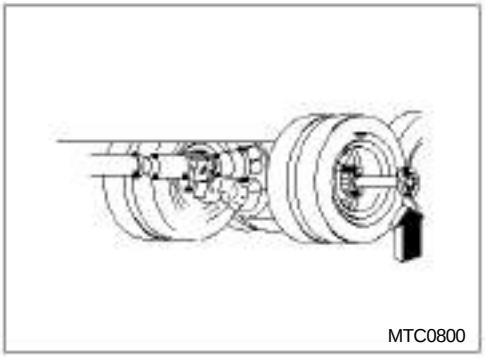
MTC0800

(3) When damage is found at the differential gear or rear axle gear, remove the rear axle shaft before your vehicle is towed.

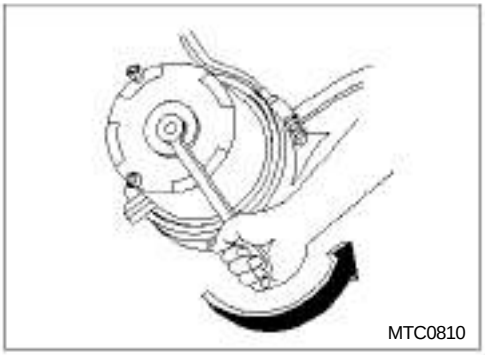
MTC0810

(4) Full air brake
In case of defects in the air feed system, the spring brake is engaged automatically. At this time loosen the nuts on the back of the spring brake chamber anti-clockwise to fully release the brake.

https://www.truck-manuals.net/

5. VEHICLE REPAIR

MTC0820

For the maintaining the proper performance and operations for the long hours, refer to the follows.

Vehicle cleaning

1) Remove dust while sprinkling water on the cabin, tires, fenders, etc.
2) Remove any cleaner on the surface with water, then wipe off with the piece of sponge.

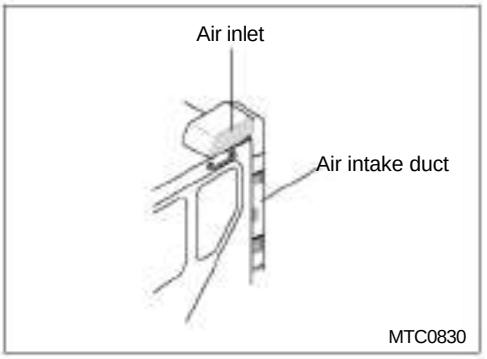

MTC0830

Caution

1. Avoid pouring water to electrical devices, connectors, air hose etc.
2. Wash off water on the door to prevent it from being frozen, making it unable to open in the cold area.
3. Do not apply thinner or gasoline for the cleaning of plastic parts.
4. Avoid pouring water into the inlet of air intake duct when water hose is used.
5. Make sure to clean the vehicle after running of the vehicle near the coast or on the road where snow remover is sprayed.

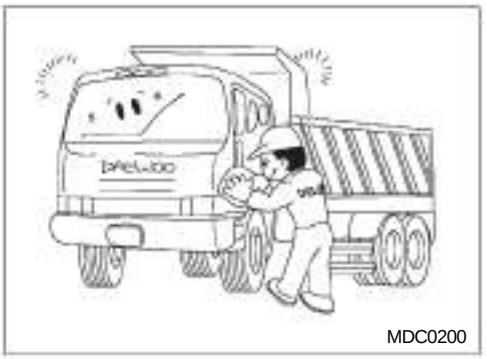

MDC0200

Polishing

1) Apply wax once in a month or so.
2) Wax should be used in the shade after cleaned when the surface of body is cool.

https://www.truck-manuals.net/

4

TROUBLESHOOTING AND CORRECTIONS

1. ENGINE AND RELATED PARTS
2. CHASSIS AND RELATED PARTS
3. ELECTRICAL
4. DUMP

https://www.truck-manuals.net/

1. ENGINE AND RELATED PARTS

- **Starter motor won't turn over or turns over slowly.**

Cause	Correction
Irregular action of contact point of battery relay	Place battery main switch in "ON" position.
Dead or weak battery	Recharge or replace battery.
Battery terminals disconnected, loosened, or corroded	After trimming the corrosion with a file, connect terminals securely.
Poor ground connection	Tighten connections.
Too high oil viscosity	Change with oil having proper viscosity.

- **Starter motor turns over but engine won't start.**

Cause	Correction
Fuel tank empty	Replenish
Insufficient pre-heating	Pre-heat again.
Air in fuel injection lines	Bleed
Air cleaner element restricted	Clean or change element.

- **Engine stops easily at low rpm.**

Cause	Correction
Too low idle rpm	Adjust idle rpm.
Air cleaner element restricted	Clean or change air cleaner element.
Engine overcooling	Cover radiator with curtain.

- **Engine lacks power.**

Cause	Correction
No parking brake release	Operate parking brake repeatedly.
Air cleaner element restricted	Clean or change element.
Brake pedal cramped	Adjust brake lining clearance.

- **Black exhaust smoke**

Cause	Correction
Air cleaner restricted	Clean or change element.

- **Engine overheating**

Cause	Correction
Radiator covered with curtain	Remove curtain.
Lack of coolant	Replenish coolant. Check for coolant leakage and ensure radiator cap should be closed tightly.
Dirts deposited in radiator	Clean radiator.
Rust and dirts in coolant	Clean radiator or change coolant.
Fan belt slipping or damaged	Adjust tension or change belt.

- **High fuel consumption**

Cause	Correction
Fuel leaks	Check fuel system. Re-tighten loose parts.
Air cleaner element restricted	Clean or change air cleaner element.
Tire underinflated	Correct
Engine overcooling	Cover radiator with curtain.

- **High oil consumption**

Cause	Correction
Poor quality oil	Change with the specified oil.
Too high oil level maintained	Maintain oil level as specified.
Oil leaks	Check lubrication system and tighten loosened parts.
Failure to observe oil changing intervals	Follow the scheduled intervals.
Negligence in engine warming up	Perform engine warming up as instructed.

- **Low engine oil pressure**

Cause	Correction
Lack of engine oil	Replenish
Oil leakage	Inspect lubrication system and retighten loosened parts.
Improper oil viscosity	Change with oil having proper viscosity.

https://www.truck-manuals.net/

2. CHASSIS AND RELATED PARTS

- **Abnormal noise in transmission or differential**

Cause	Correction
Lack of gear oil	Replenish

- **Hard steering**

Cause	Correction
Underinflated front tires	Inflate to specified air pressure.
Lack of power steering oil	Replenish

- **Steering wheel fails to return to its position.**

Cause	Correction
Lack of grease in each steering unit	Inject grease.

- **Steering wheel shimmy**

Cause	Correction
Loose hub nuts	Tighten to regular torque.
Left and right hand tires are different in inflation pressure.	Adjust the pressure uniformly.
Irregular tire wear	Change

- **Poor brake action**

Cause	Correction
Tire overinflation	Adjust to specified air pressure.
Air leakage in brake circuit	Check brake lines.
Too large brake lining clearance	Adjust clearance exactly.

- **One-sided brake action**

Cause	Correction
Left and right hand tires are different in inflation Irregular tire wear	Adjust the pressure uniformly. pressure. Change

- **Brake dragging**

Cause	Correction
Irregular brake lining clearance	Adjust braks lining clearance exactly.

3. ELECTRICAL

- **Battery discharge**

Cause	Correction
Battery terminals disconnected, loosened, or corroded	After trimming the corrosion with a file, connect terminals securely.
Low charge level	Recharge
Lamp switch remains on.	Turn off the switch.

- **Lamps won't turn on.**

Cause	Correction
Faulty lamp	Change
Fuse burnt out	Change
Poor ground connection	Tighten connections.

4. DUMP

Cause	Correction
Vessel doesn't raise to its maximum height	Bleed air and replenish oil
Not smooth vessel raising	Bleed air and replenish oil
Air entering in oil line	Bleed air for long times
Abnormal noise in connection	Inject chassis grease

https://www.truck-manuals.net/

5

MISCELLANEOUS CONTROLS AND OPTIONS

1. TACHOGRAPH
2. AIR SUSPENSION SEAT
3. AUTO GREASER
4. TURBO CHARGER
5. ZF TRANSMISSION
6. OPERATION OF DUMP SYSTEM
7. OPERATION OF TRACTOR-TRAILER
8. BULK CEMENT TRACTOR
9. SELF STEER
10. HYDRAULIC DEVICE FOR CAR CARRIER
11. TOOL LIST
12. SERVICE ELECTRIC EQUIPMENTS FOR USER

https://www.truck-manuals.net/

1. TACHOGRAPH(option)

1) Construction

FIG 1

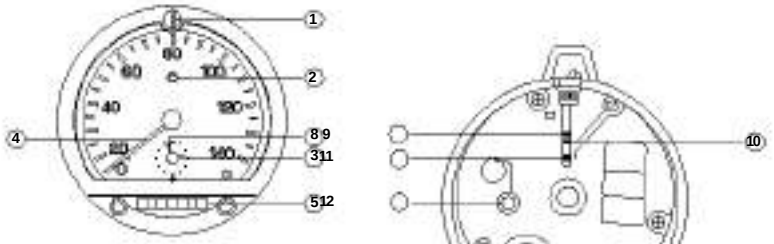

FIG 2

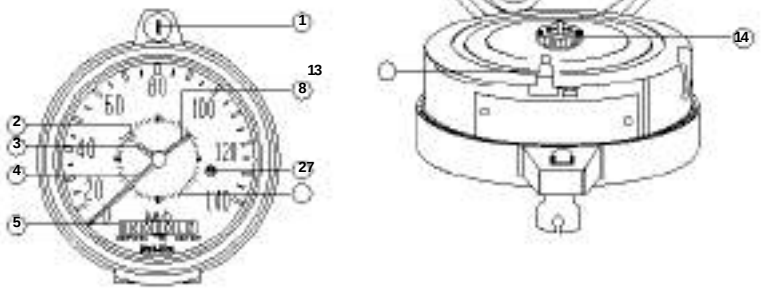

FIG 3

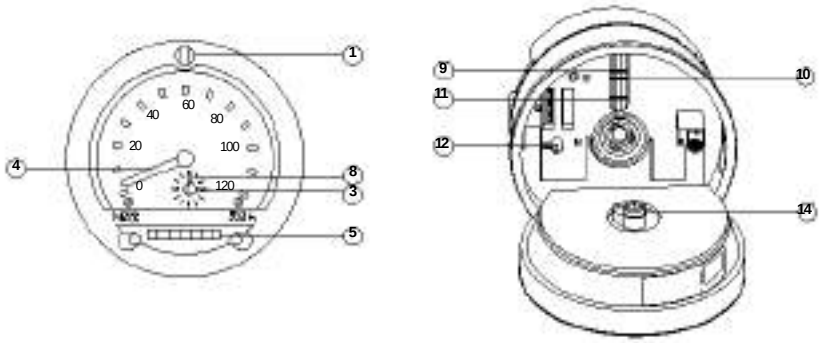

MTF0011

1. Key hole
2. Speed indicator lamp
3. Hour hand
4. Speedometer needle
5. Odometer
6. Clock check window
7. Clock graduations
8. Minute hand
9. Speed recording needle
10. Vibration recording meedle
11. Running distance recording needle
12. Speed indicator lamp setting screw
13. Chart paper cutter
14. Chart paper retaining ring

https://www.truck-manuals.net/

2) How to read tachograph records

FIG 1,2

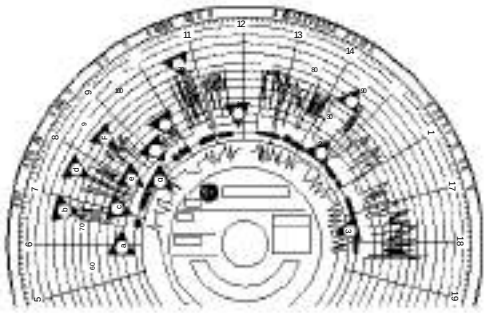

FIG 3

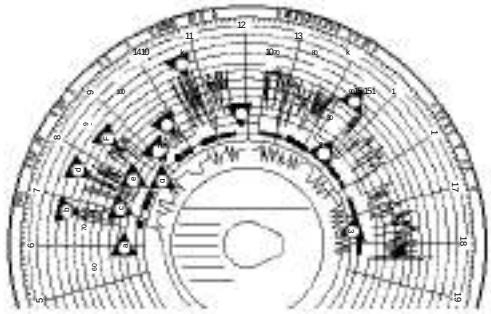

MTF0020

1. Speeds at which the vehicle is driven and duration of each trip
2. Time and duration of each stop
3. Distance travelled for each trip
4. Example: The following is a recording example to contain vehicle running information.
   a. 06:15 Insertion of recording chart or opening or closing of the cover b.
   06:38-06:54 Trip to a cargo loading point. Travelled distance: 11.5km
   c. 06:54-07:19 Time spent for loading
   d. Trip record during cargo delivery: It is shown that the vehicle was frequently driven at high speeds to travel a short distance. This will result in uneconomical operation. e.
   The vehicle was put to stop for 20 minutes.
   f. A trip to the neighboring town, showing a very stable and economical driving. g.
   The distance travelled is 25km.
   h. Parking for 30 minutes
   i. Record on cargo delivery. It is known that the vehicle speed was more economical than in the case of (b) above, despite that short distance trips were made repeatedly.
   j. It is shown that the vehicle was stopped, and the cover was opened at 11:50 and closed at 12:12. k.
   Record on returning trip shows what is the most uneconomical driving habit.

https://www.truck-manuals.net/

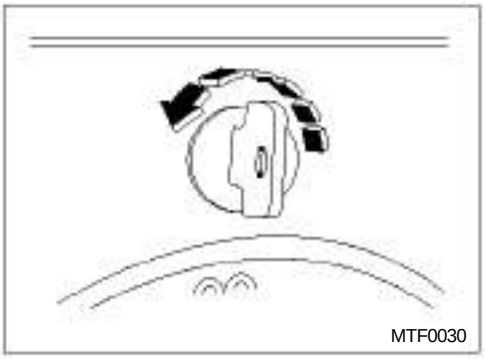
MTF0030

3) How to handle tachograph

(1) Open the cover

Turn the lock anti-clockwise with the key, then open the cover carefully.
Do not jerk the cover or impose a heavy load on it, or a trouble will result.

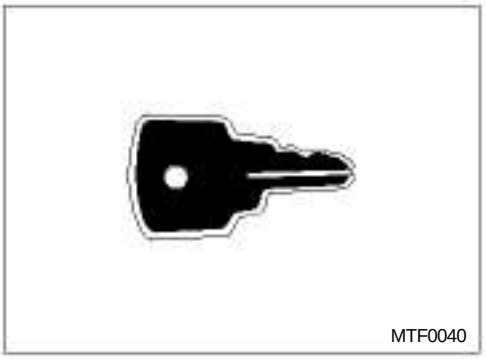
MTF0040

(2) Key

Used for locking or unlocking the cover.

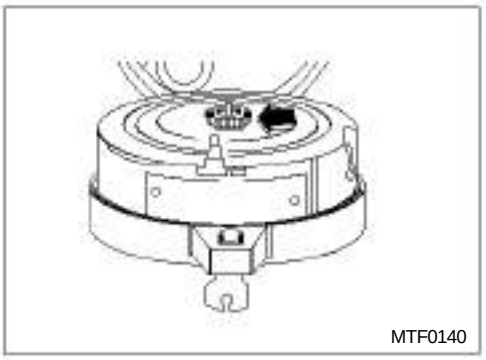
MTF0140

(3) Remove the recording chart paper set by depressing and turing the retaining ring anti-clockwise. (Fig 1,2)

If the paper is handled roughly at the time of removal, the chart paper cutter will be distorted and become useless for further operation.

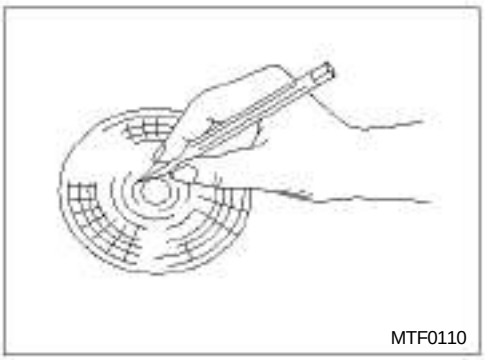
MTF0110

(4) Filling out of recording chart paper

Before setting the recording chart paper in position, fill out necessay items on the recording chart paper, exercising care not to scratch the paper.

https://www.truck-manuals.net/

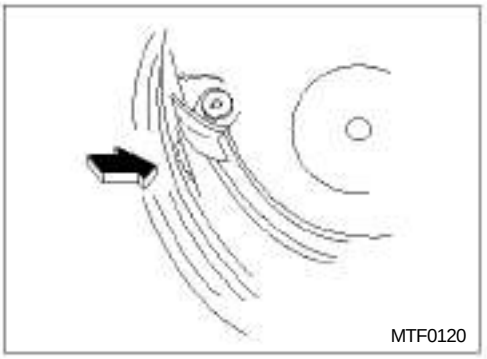

(5) Setting of clock

Set the time by turning the time setting knob as necessary.

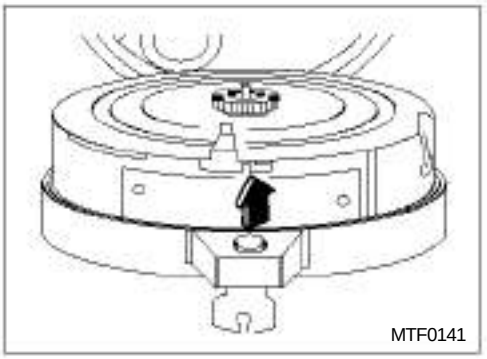

(6) Setting of recording chart paper set

- Position the recording chart paper set under the knife, then align the time on the paper with the red color mark near the knife. Install the retaining ring by turning it clockwise while depressing it. (Fig1,2)

- Open the lid, and then put the recording chart paper after alignment the hole of recording chart paper with the hole of tachograph.(Fig3)

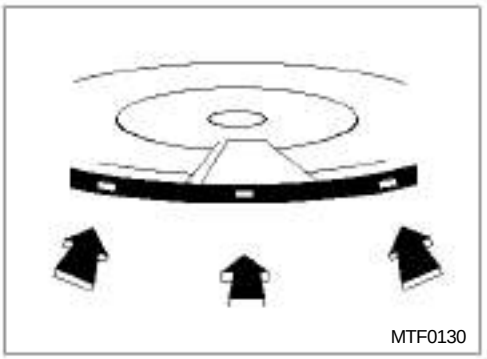

(7) Replacement of 7-days recording chart paper set

Check to see if the tape wound around the recording chart paper set has not been cut off. If the tape is found to be cut off, replace the entire paper set with a new one. (Fig1,2)
The 7-days recording chart paper set should be replaced weekly. (Fig 1,2,3)

https://www.truck-manuals.net/

2. AIR SUSPENSION SEAT(option)

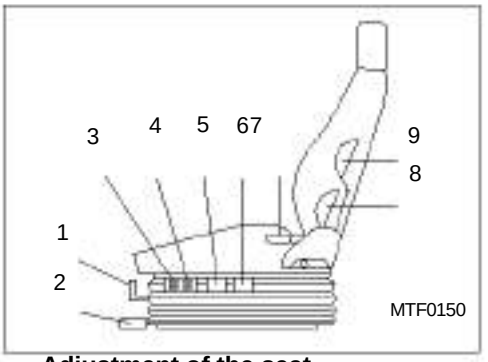

1. Seat lock lever
2. Slide adjustment lever
3. Lumbar support adjustment buttons(or lever)
4. Lumbar support adjustment buttons(or lever)
5. Height and tilt adjustment lever(forward)
6. Height and tilt adjustment lever(backward)
7. Back angle adjustment lever
8. Lumbar support air pack(lower)
9. Lumbar support air pack(upper)

*** Adjustment of the seat**

1. Seat lock lever: Use it when you need to secure the seat.
2. Slide adjustment lever: This lever is used for moving the seat forward or backward.

Caution

If the lever 3, 4, 5, or 6 is manipulated after the seat lock lever has been locked, the seat lock lever is put under overload. To release it, depress the brake pedal to release air from the air tank, then manipulate the seat lock lever.

3, 4. Lumbar support adjustment buttons: These buttons are used for properly adjusting the seat to your posture.
Manipulating of the buttons 3: Use the upper button when supplying air for the air pack 8, and use the lower button when releasing air from it.
Manipulating of the buttons 4: Use the upper button when supplying air for the air pack 9, and use the lower button when releasing air from it.

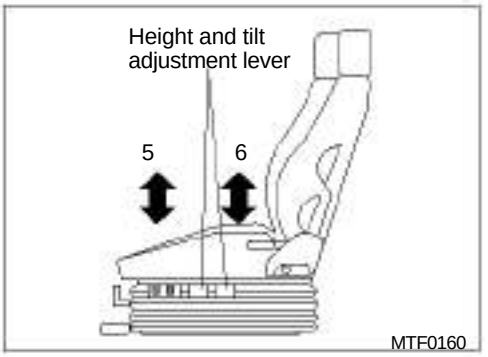

5, 6. Height and tilt adjustment lever(5: forward, 6: backward)
Lifting up of the lever will adjust the seat as shown; pulling down of the lever will bring it back to its original position.

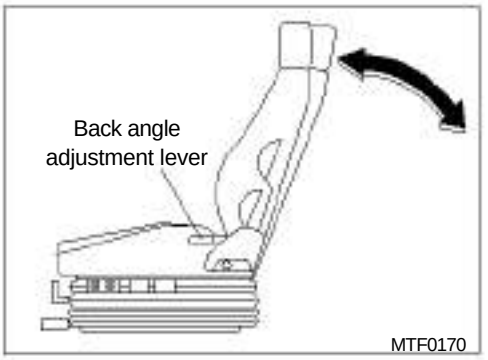

7. Back angle adjustment lever
This lever is used for adjusting the seat back to obtain the desired back angle.

https://www.truck-manuals.net/

3. AUTO GREASER(option)

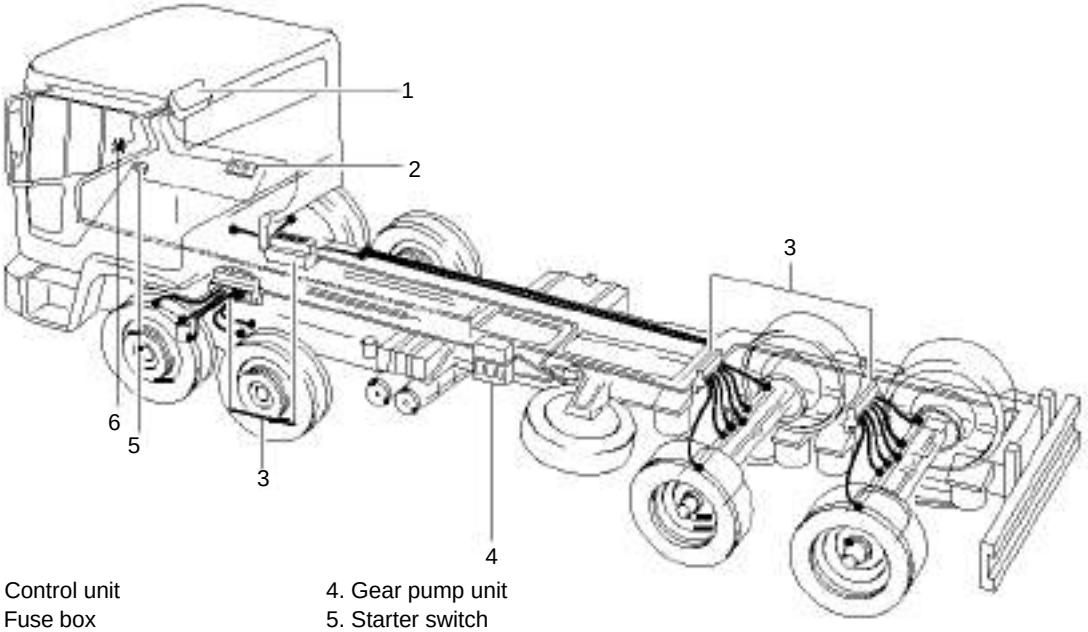

1. Control unit
2. Fuse box
3.Distributor
4. Gear pump unit
5. Starter switch
6.Indicator lamp

MTF0180

Basic rules of operation

- **Gear pump unit**
  This unit keeps operating for 154 seconds at pressure of 37.5 bar and supply oil for the bypass through the main line.
  - Interval of oil supply: 0.5~11 hours
  - Manual operation can be performed. But do not re-operate it within 5 minutes after each operation.
- **Distributor**
  This receives grease from the gear pump and feeds the grease to individual oil fillers at pressure of 5 bar after the gear pump stops working.
  - The size of nipple depends on oil fill capacity. (0.1, 0.2, 0.4, 0.6cc)

Note

When any trouble is met with the automatic oil distribution system, do not hesitate to contact your nearest workshop or service center of the manufacturer(Vogel).

- **Control unit**
  This is an electronic device designed to detect the internal part of the system for its functions and troubles and to control its operation. Care should be taken to prevent the entry of water or moisture. When the key is set to the "ON" position, the pump starts its operation and the indicator lamp is on for 3 seconds. If the indicator lamp would not go out 3 seconds after the key is set to "ON", or it is turned on while in operation, it means that the system has been in trouble.
- **Pressure switch**
  This is installed to the bypass located farthestfrom the pump. When the residual pressure
  rating inside the grease line is within 25±2.5 bar, the indicator lamp comes on. (It can detect oil leakage from the pump and grease
- line.)
  Grease replenishment intervals
  Specifications of grease: NLGI GRADE 000,00
  - The oil reservoire should be filled with fresh grease up to the MAX line every 2 months.

https://www.truck-manuals.net/

4. TURBO CHARGER

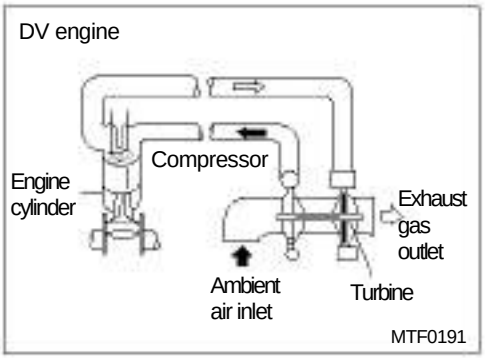

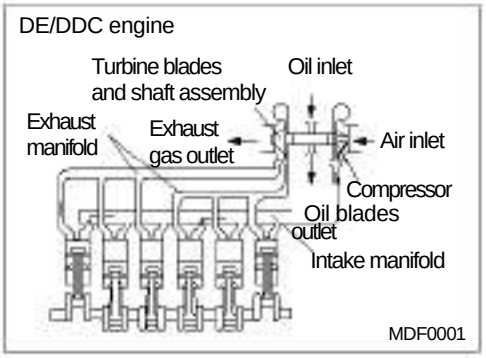

1) Basic rules of operation

When the turbine blades installed at exhaust gas outlet are rotated at high speed by the high pressure and heat energy of exhaust gas discharged after combustion in the engine, the compressor blades connected integrally with the turbine shaft start rotating at the same speed, so that an ample amount of fresh air flows into the engine cylinder. A sufficient supply of fresh air enables complete combustion, resulting in decrease in fuel consumption and increase in output.

2) Type of turbo charger

Type	Engine	No.
TBP45 (Allied signal)	DE	1
TB4122 (Allied signal)	DV	2
TV45 (Garrett brand)	DDC	1

3) Tips for vehicle operation

As the turbo charger rotates at high speed, failure to replenish engine oil within scheduled period or lack of engine oil may cause damage to bearings, etc.
Be sure to observe how to start and the operation instructions before or after operation.

(1) Starting

Start the engine and check if the engine oil pressure warning lamp is turned on and then go out. Also, check if engine oil pressure is normal when idling the engine.
After starting the engine, revolve the engine at low speed(600~650 rpm) for about 1 minute, increase the idle speed to approximately 900~1000 rpm to achieve further engine revolution for 3~4 minutes, then drive off the vehicle.

Caution

Be sure to follow the instructions on "(1) Starting" after oil and oil filter are changed or in winter where oil viscosity becomes higher, or the engine is left unattended over prolonged time(1 week or more). (However, limit the starting key working time to 10 seconds or less, and perform re-starting operation, if needed, in about 30 seconds from the initial operation.

https://www.truck-manuals.net/

MTF0200

The low speed idling for first 1 minute forms hydraulic pressure in the engine lubrication system. Then, if increasing the idle speed for 3~4 minutes, engine oil can be distributed from the oil pump sufficiently up to the individual lubricating points of the turbo charger installed considerably high above the other engine components.

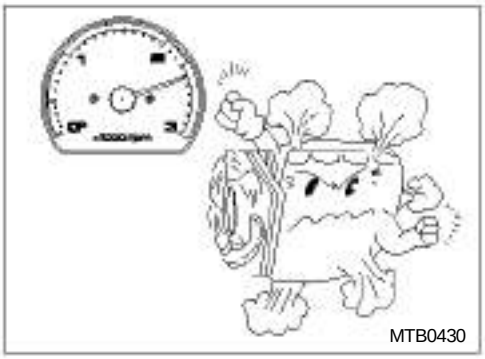
MTB0430

If the engine is accelerated with the lubricating points of the turbo charger supplied insufficiently with engine oil, intense heat generated by high speed revolution(100,000 rpm) of the turbo charger may cause burns to bearings and the rotating part of the shaft.

MTF0221

(2) When parking the vehicle for prolonged time

If the engine is idled at low speed of 600~650 rpm for prolonged time, a sufficient amount of oil cannot be distributed to the turbo charger, resulting in premature wear of the rotating part due to lack of lubrication. Therefore, when it is unavoidable to park the vehicle for 30 minutes or longer with the engine started, increase engine idle speed to 900~1,000 rpm so that the turbo charger can be supplied with a sufficient amount of oil.

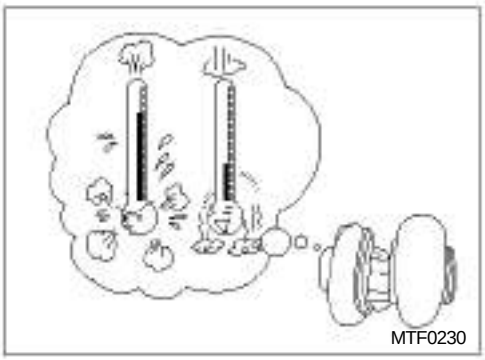
MTF0230

(3) After driving off

Avoid stopping the engine immediately after driving off the vehicle. If the engine is stopped immediately after the vehicle is driven off with full load, the turbo charger fails to immediately stop its revolution due to rotative inertia force so that engine oil remaining on rotating part can be completely burnt by the intense heat generated from the turbo charger heated during the operation of the vehicle, resulting in damage to rotating part.

https://www.truck-manuals.net/

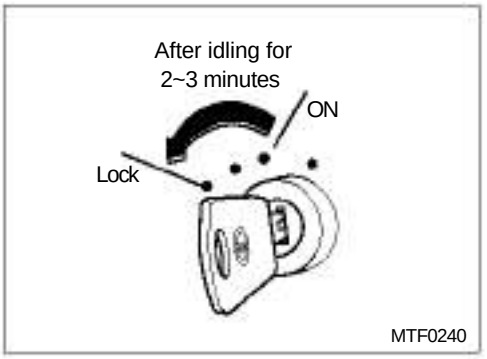

In addition, thermal stress resulting from quick cooling of the turbo charger will lower the durability of engine components and accelerate consumption of coolant. Accordingly, idle the engine for 2~3 minutes after finishing the operation of the vehicle, so that the turbo charger may be cooled down slowly and complete burn of engine oil may be prevented.

4) Care of turbo charger

As the turbo charger revolves at very fast speed(100,000 rpm or more), it is very sensitive to foreign substances carried in the air, fouled engine oil, and lack of oil supply. So, exceptional care is needed for it.

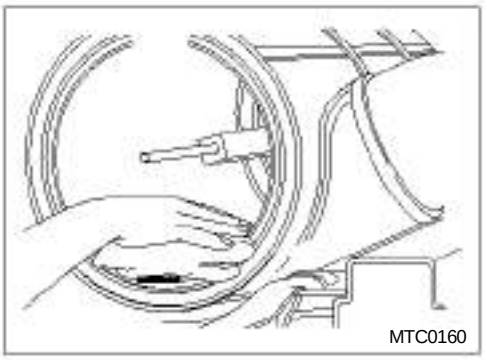

(1) Care of air cleaner

Clean or change the air cleaner element as required to prevent premature wear and damage to the compressor blades and drive portion of the turbo charger due to the entry of foreign substances such as dust or dirts. It is also needed to check the hose coupling the air cleaner and turbo charger for irregularities.

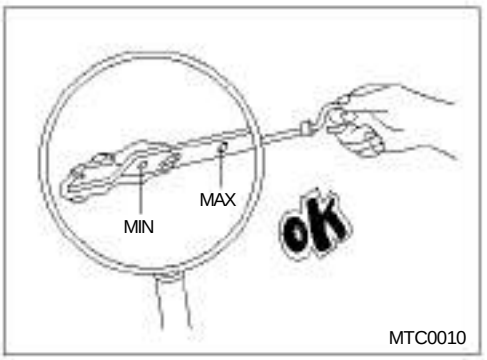

(2) Care of engine oil

Fouled engine oil may cause wear or damage to the bearings of the turbo charger, rotating shaft, and internal part of bearing housing, resulting in premature deterioration of performance of both the turbo charger and engine. This situation will lead to reduction of engine output as well as increase in discharge of black smoke and abnormal noise. Be sure to use specified oil and oil filters and observe replacement intervals.

https://www.truck-manuals.net/

5) Diagnosis chart

Complaints / Cause	Lack of engine output	Discharge of black smoke	Excessive consumption of engine oil	Discharge of blue smoke	Unusual sound from turbo charger	Repeated generation of high and low unusual sound from turbo charger	Oil leakage from compressor sealing	Oil leakage from turbine sealing
Restricted element of air cleaner	○	○		○	○		○	
Obstructions in air intake channel		○	○	○	○	○	○	
Obstructions in air exhaust channel from compressor housing to intake manifold	○	○			○			
Obstructions in intake manifold	○	○			○			
Air leak from some point between air cleaner and compressor housing					○			
Air leak from some point between compressor housing and intake manifold	○	○	○	○	○			
Air leak from some point between intake manifold and engine cylinder	○	○	○	○	○			
Obstructions in intake manifold	○	○	○	○	○		○	
Obstructions in muffler or exhaust pipe	○	○					○	
Gas leak from exhaust manifold	○	○			○		○	
Gas leak from the turbine inlet positioned at exhaust manifold coupling portion	○	○			○		○	
Gas leak from the outlet channel of turbine housing					○			
Obstructions in oil discharge pipe of turbo charger			○	○			○	○
Restricted ventilation channel of engine crank case			○	○			○	○
Entry of foreign substances into turbo charger bearing housing			○	○			○	○
Poor fuel injection	○	○						
Irregularities in injection timing or valve clearance	○	○						
Excess wear of engine piston ring or liner	○	○	○	○			○	○
Troubles inside the engine(valves, piston, etc.)	○	○	○	○			○	○
Foreign substances scaled on compressor blades	○	○	○	○	○	○	○	○
Damage of turbo charger	○	○	○	○	○		○	○

https://www.truck-manuals.net/

5. ZF TRANSMISSION

1) Construction and power flow diagram

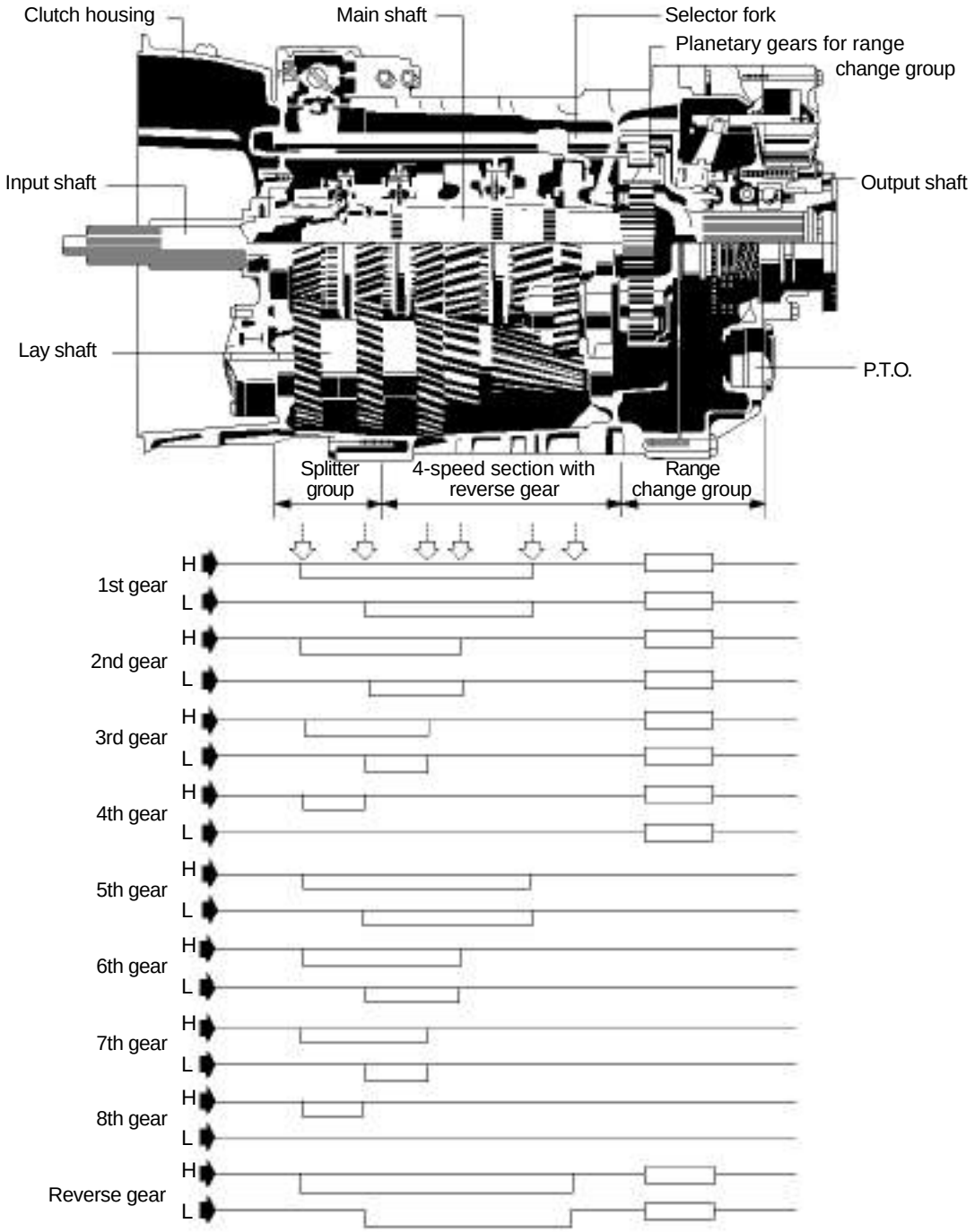

https://www.truck-manuals.net/

2) Connection diagram for pneumatic control(ZF 16S-151)

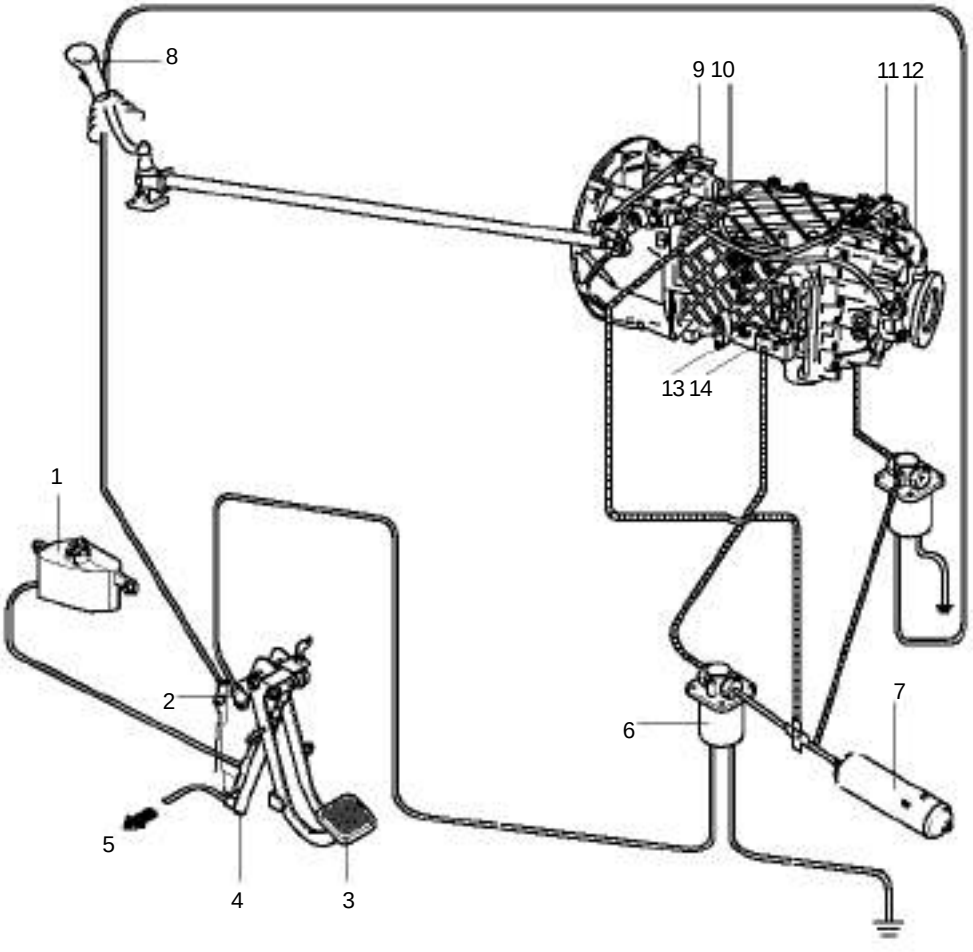

1. Clutch fluid reservoir
2. Hi-Low switch
3. Clutch pedal
4. Master cylinder for hydraulic clutch actuation
5. To clutch slave cylinder
6. Magnetic valve
7. Air tank
8. Splitter group preselector valve
9. Indicator switch for neutral position
10. Indicator switch of range-change group
11. Intergrated shift cylinder for range-change group
12. Splitter group relay valve
13. Splitter indicator lamp switch
14. Splitter relay valve

https://www.truck-manuals.net/

3) Connection diagram for pneumatic control(ZF 16S-221)

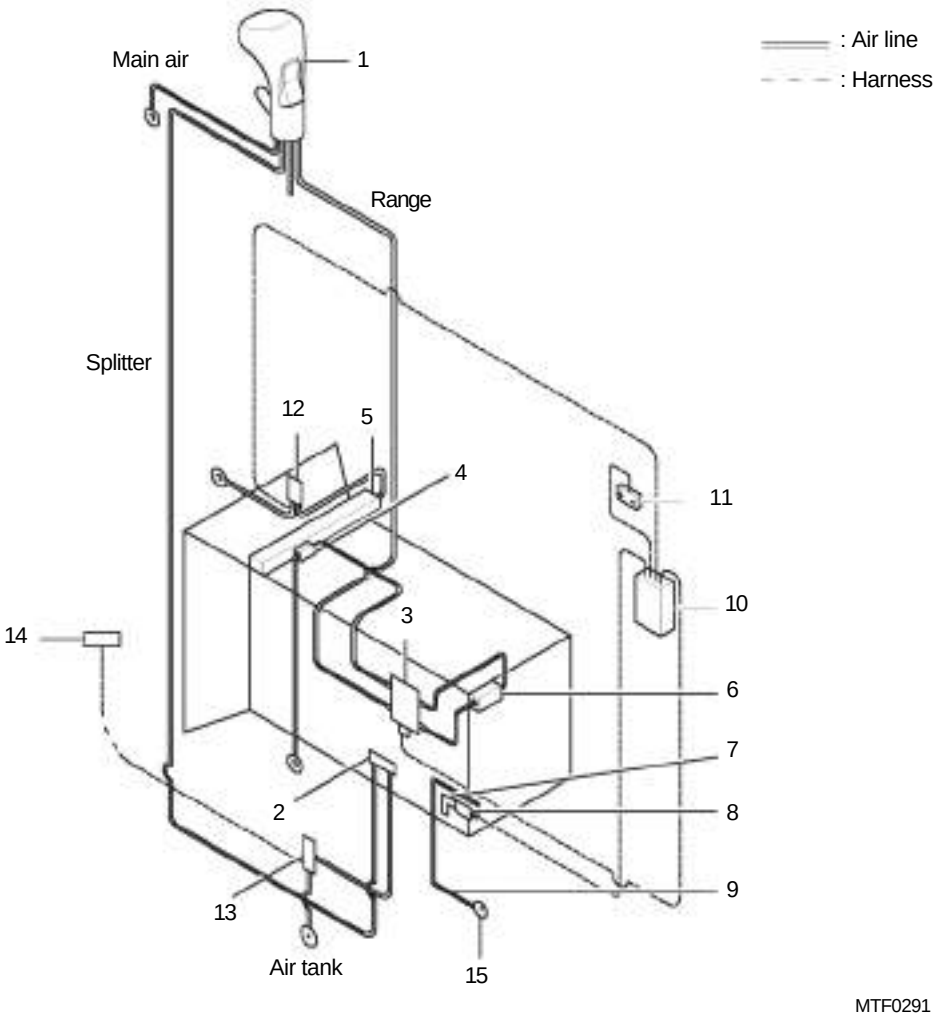

1. Knob
2. Splitter group relay valve
3. 4/2 way valve
4. Cut-off valve
5. Shift housing
6. Intergated shift cylinder for range-change group
7. Speed L-joint
8. Speed limiter
9. Speed meter cable
10. ECU
11. Battery
12. 3/2 way valve
13. Magnetic valve
14. Clutch pedal
15. Tacho meter

https://www.truck-manuals.net/

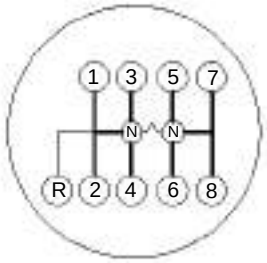

Double "H" gearshift pattern

MTF0300

4) Operation

As ZF transmission is of synchro mesh change gear type, gear shifting can be performed with no need to use double clutch, and so it is very easy to manipulate it.

(1) How to range change group(ZF16S-151 T/M)

Double "H" gearshift pattern provides 8 forward gearshifts and reverse gearshift. The neutral position of gearshift lever is obtained on the shaft for the 3rd and 4th gears in LOW RANGE, while it is on the shaft for the 5th and 6th gears in HIGH RANGE. Namely, there are two neutral positions available. Therefore, when changing gears from high range to low range or vice versa, it is necessary to quickly change gears so that the engine speed may not be reduced abruptly. In addition, as the reverse gear is of dog clutch type, when attempting to change to reverse gear, do so after the vehicle is stopped completely. Otherwise, gears may be damaged.
If gears are abruptly changed to low range at high engine rpm, or especially, when gears are changed abruptly from high range to low range, damage may be caused to the clutch, engine, or transmission.

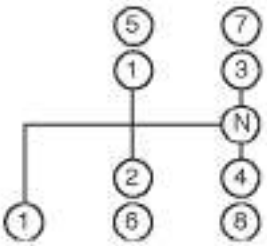

MTF0301

(2) How to range change group(ZF16S-221 T/M)

Single "H" gearshift provides 8 forward gearshifts and reverse gearshift. The neutral position of gearshift lever is obtained on the shaft for either the 3rd and 4th gears or the 7th and 8th gears. Changing gears from high range to low range or vice versa can be made by actuating the range change switch.

Low range control system

The transmission is equipped with a low range control system designed to protect the engine. If you change gears from high range to low range by toggling down the range change switch when your vehicle speed is 25km/h or over, the vehicle speed is reduced enough to prevent the inside of the transmis- sion from changing to low range until the engine is no longer affected adversely.

https://www.truck-manuals.net/

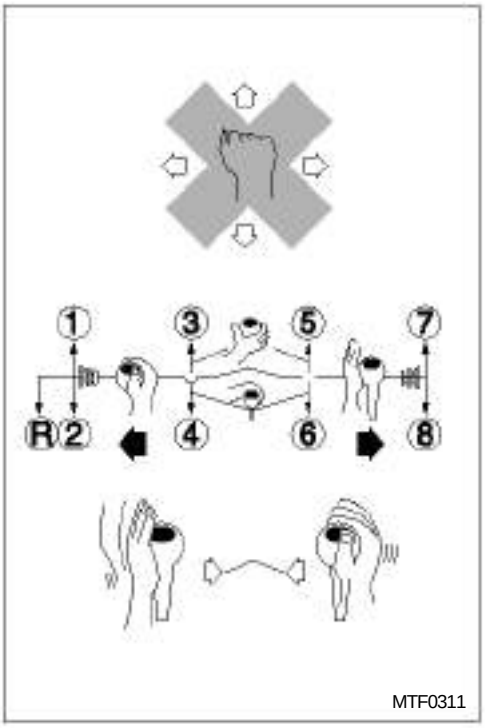

(3) How to change ranges(ZF 16S-151 T/M)

a. As ZF transmission is of synchro mesh change gear type, avoid changing gears forcibly.

b. When changing ranges in the neutral section, lightly tap to right or left with the palm for gear changing operation.

c. Namely, when changing gears from the fourth to the fifth, draw back the gearshift lever(to the neutral position between 3rd and 4th gears), then lightly tap to right with the palm. And then, lightly push forward the gearshift lever which has been in the neutral position between 5th and 6th gears to change to the 5th gear.

Note

You may feel a slight resistance when changing gears for the first time. It indicates that the synchro meshes are being engaged synchronously. At this time, do not apply unnecessary force to change gears.

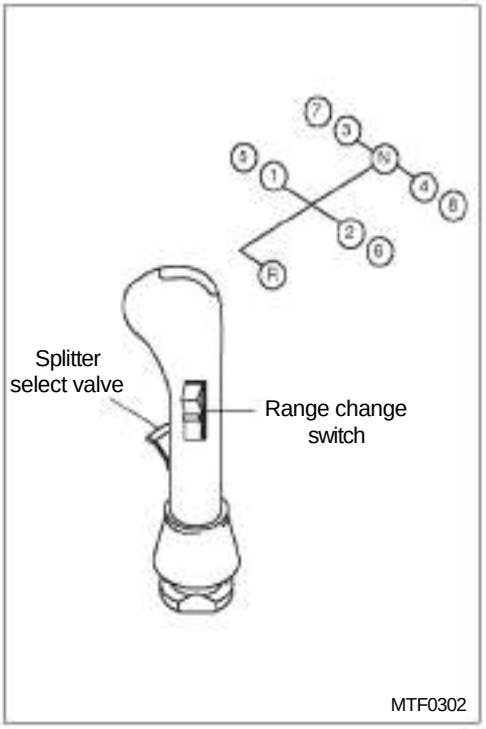

(4) How to change ranges(ZF 16S-221 T/M)

a. In low range(1st~4th gears), change ranges in the same manner as for typical transmission with the range change switch toggled down.

b. In the 4th position, do not move the gearshift lever but toggle up the range change switch first.

c. Depress the clutch pedal and move the gearshift lever to the 1st position via the neutral position, and the 5th gear is actuated, because the range gear in the transmission is changed to high range automatically when the gearshift lever passes the neutral position.
The gearshift lever stays on the neutral position while switching low range from/to high range.

Caution

When attempting to operate the gearshift lever to change to high gear, stop it for a moment in the neutral position and then change to higher position.

https://www.truck-manuals.net/

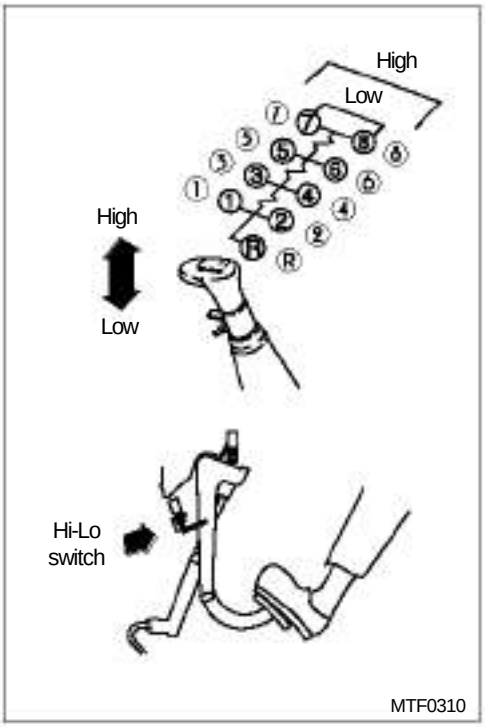

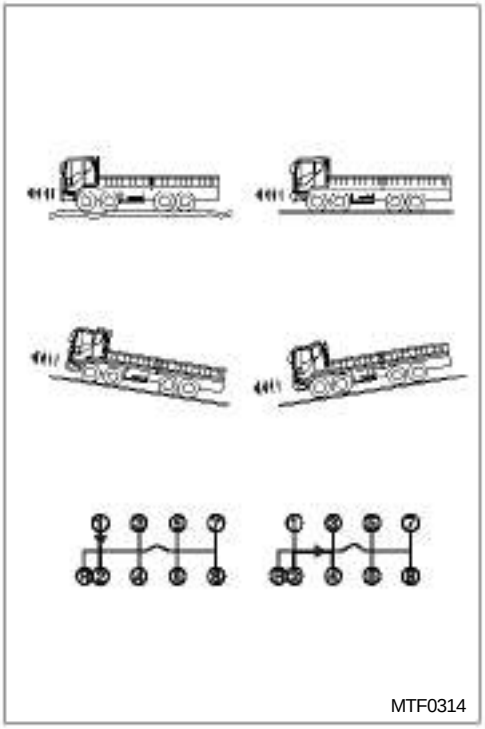

(5) Operation of the splitter

As high and low ranges are provided at each gearshift position, the splitter offers diverse gear ratios to ensure economical operation of the vehicle and to increase in traction efficiency.

a. Select the HI or LO swtich installed on the gearshift lever knob depending on traffic condition.

b. After the proper swtich, depress the clutch pedal gently all the way without changing the position of the gearshift lever, then release it.

Advantages of the splitter select valve

* - Loss of engine power and excessive engine turning due to gear changes can be prevented.

- Optimum operation economy can be obtained.

Examples of the use of splitter

* - To produce sufficient engine output when passing a vehicle ahead or driving on an uphill or it is difficult to raise the speed after driving off the vehicle.

- For a vehicle towing a heavy cargo on a pavement, the splitter can be used to achieve economical operation such as reduction of fuel consumption.

(6) Gear jump

a. ZF transmission has the change range from HIGH 8th gear to LOW 8th gear and can be manipulated as desired, irrespective of road condition.

b. In the case of bad road condition or running on slope, apply gears in stage like "3rd gear → 4th gear → 5th gear".

c. When running on a level ground or on the downgrade, carry out gear jump like "3rd LOW → 4th HIGH → 5th HIGH → 7th LOW → 8th HIGH" to reach high gear with 4 gear change activities.

https://www.truck-manuals.net/

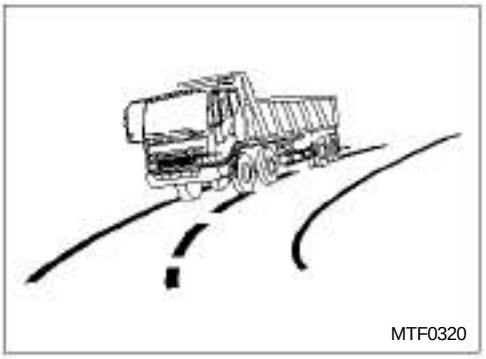
MTF0320

(7) How to operate

a. When operating the vehicle, be plainly dressed, and make sure of the route in advance keeping busy or smooth traffic sections and obstacles in mind.

b. On slopes, gear down appropriately in advance. On the downgrade, use the same change group as that for slopes.

c. Namely, if running up a slope with the 5th gear applied, use the 5th gear on the downgrade, too and do not use a high gear(8th gear).

(8) Operating of the clutch

The clutch pedal must always be depressed fully for each gear shift movement.
If the clutch is not engaged or disengaged completely, or if the clutch discs have been excessively worn, gearshift problems will occur. In addition, wear on the synchronizers and at the gear teeth and dogs will be greatly increased.

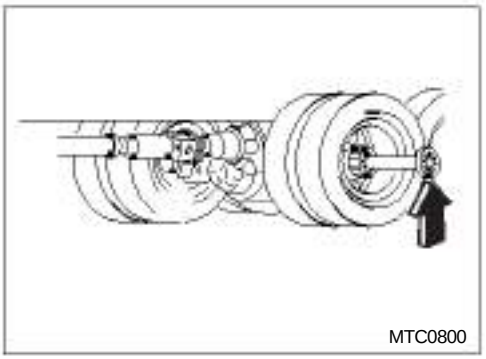
MTC0800

(9) Towing away

If the vehicle suffers a breakdown and has to be towed away, note the following precautions.

a. If the towing distance is 50km or less
Put the gearshift lever in the neutral position(on the shaft for the 5th and 6th gears) in the HIGH range and keep the towing speed within 60 km per hour. If the gearshift lever would not be put in the neutral position,disconnect the rear axle shaft before having your vehicle towed.

b. If the towing distance is more than 50km
Separate the propeller shaft from the rear axle.

https://www.truck-manuals.net/

(10) Adjustment of HI-LO switch at the rear of clutch pedal

For the trouble-free shifting of the splitter group, it is alsolutely necessary that the HI/LO electrical switch at the rear of the clutch pedal is correctly adjusted.

If HIGH-LOW gears are used when the clutch discs do not separate completely or the HI-LO electrical switch is not correctly adjusted, the synchronizer may suffer damage.

a: Position "clutch fully engaged".
b: Position "clutch fully disengaged".
c: Excess travel range of clutch
d: Final stop
e: Operating position of HI-LO switch
1. Clutch master cylinder
2. HI-LO electrical switch

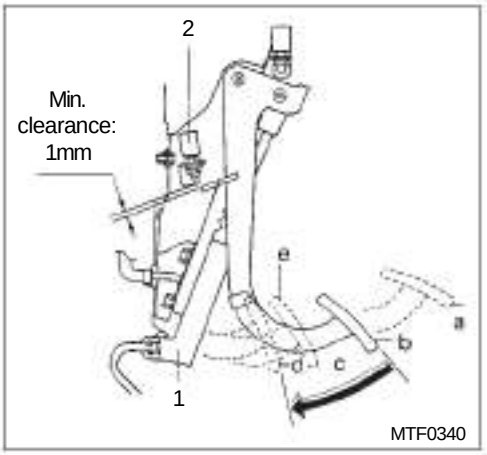

* **Inspection for the clearance of HIGH-LOW switch**

The HI-LO electrical switch must be operated between the position b and d as shown.

Namely, it should be operated at the position e.

a. How to identify the point where the clutch is completely disengaged:
With the engine on and the vehicle being stationary, apply the reverse gear until "bawl" is heard. (The reverse gear is not of synchronizer type.) Then depress the clutch until the "bawl" is not heard any longer. The very point is the point where the clutch is completely disengaged.

b. Adjustment of HI-LO switch clearance
The HI-LO switch should be operated when the clutch pedal is depressed slightly deeper(by about 5mm) from the point where the clutch is completely disengaged. Namely, it should be operated at the position e.

c. Therefore, the clearance between the stopper interlocked with the clutch pedal and HIGH-LOW electrical switch 2 should be minimum 1mm at the point b.

d. The clearance of the HI-LO switch should be checked periodically and each time the clutch is adjusted.

https://www.truck-manuals.net/

1. Regular oil level check
2. Regular oil change
3. Using the recommended lubricants

5) Care

(1) Using the recommended lubricants

Specifications: Engine oil API CD/CE/CF/SF/SG, SAE 30

Refer to "RECOMMENDED LUBRICANTS".

* Capacity: 11L(ZF 16S-151)
  13L(ZF 16S-221)

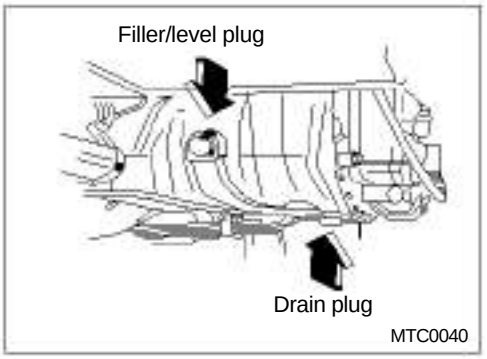

(2) Oil level check and oil change

a. Check oil level at end of first 1,000km operation and thereafter every 4,000km. Park the vehicle on a level ground and allow some length of time to pass, then open the level plug for check and fill the tank as required.

b. Oil change

Change oil at end of first 1,000km and thereafter every 45,000km. Oil should be changed once or more a year.

There are 3 oil drain plugs. When draining oil, use the drain plug located on the 4-speed section.

When you want to drain the tank quickly or you cannot unscrew the plug located on the 4-speed section, open the plugs located on range change section and splitter section to drain oil.

(3) Breather

The breather installed on the upper side of transmission is designed to relieve the pressure generated inside the transmission during the operation of the vehicle. Therefore, it is desirable to always keep the breather clean so that it can perform satisfactorily all the time.

(4) Inspection of oil system

Air under pressure condenses into moisture in some degree depending on changes in atmospheric temperature and atmospheric pressure.

Air under pressure in the air tank should be relieved once or more a week. Especially, in cold weather, relieve the air every day so that rust, foreign substances, or moisture may not enter the air pipe.

The entry of foreign substances into the air pipe will cause not only damage or malfunction to the range change and splitter cylinder seal but also harm to the brake system.

https://www.truck-manuals.net/

6) Inspection and adjustment of the clutch pedal

Items	How to adjust
a. The clutch would not be dis-engaged even though it has been fully depressed.	a. Check the oil tank for the clutch master cylinder for clutch oil level.
b. No resistance is felt on the clutch pedal even though it has been depressed.	b. Bleed air through the air bleeder installed on the clutch booster. c. In the event of no effect obtained from the above operations, check if the sealing cup inside the clutch master cylinder has been damaged, and replace the clutch master cylinder as required.

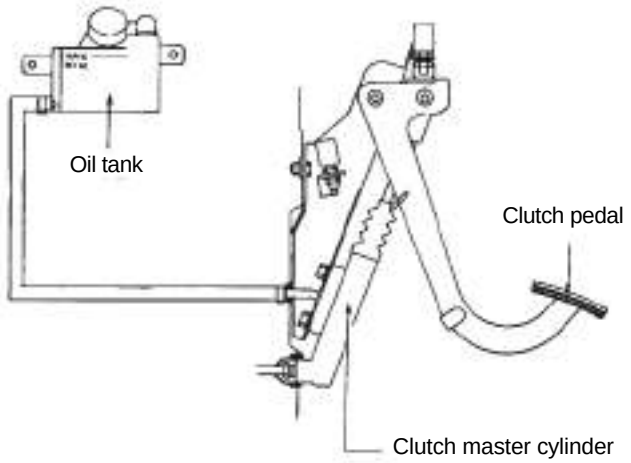

MTF0370

https://www.truck-manuals.net/

6. OPERATION OF DUMP SYSTEM

The dump system is operated hydraulically and controlled by manipulating the P.T.O. lever and control lever which are installed at the left-hand side of the driver's seat.

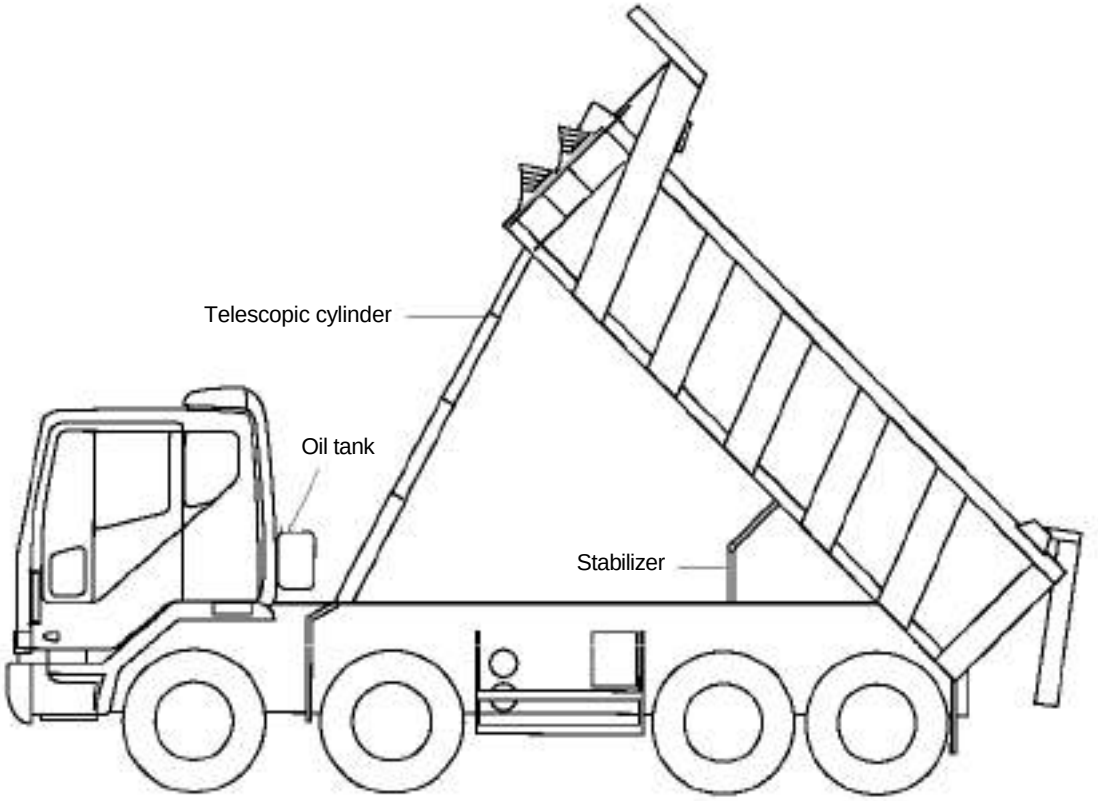

MTF0580

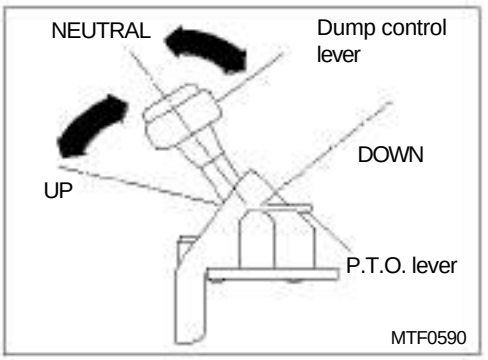

* When operating the vehicle, lower the P.T.O. lever and place the dump control lever in "NEUTRAL" position all the time.

https://www.truck-manuals.net/

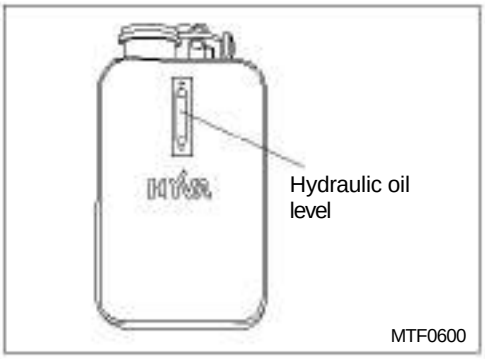

1) Inspection prior to operation

Check the hydraulic oil level in the oil tank. The hydraulic oil level should be normally brought to the high level on the oil tank gauge with the deck lowered fully.

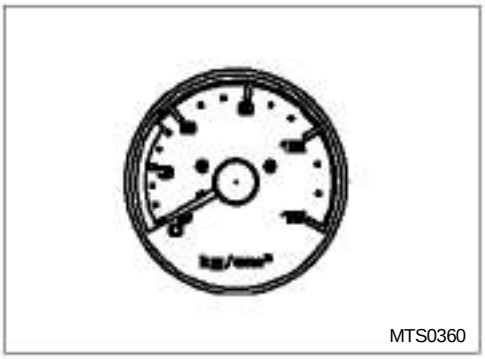

2) When raising the deck

(1) Check to see that the air pressure gauge indicates air pressure of 6kg/cm^2 or more.

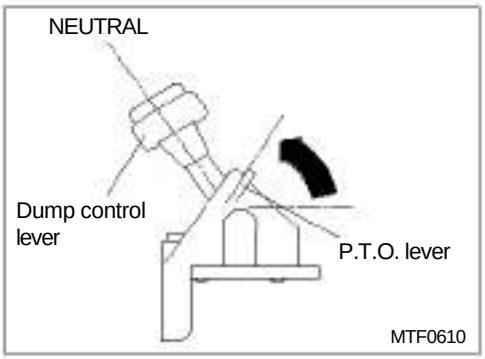

(2) If the clutch is depressed and the PTO lever is pushed up with the engine at idle and gearshift lever in the neutral position, the dump control lever is turned to "Neutral" position simultaneously and the PTO indicator is lighted up, with the result that the PTO gears are engaged. If the PTO gears are engaged, release the foot from the clutch pedal slowly.

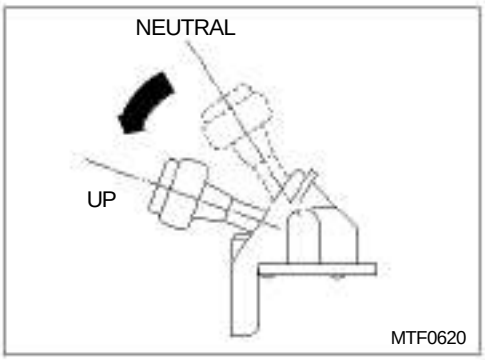

(3) If the dump control lever is pulled to the "UP" position and the accelerator pedal is depressed slowly, the deck starts to ascend. Then the rear gate is opened automatically so that the materials in the deck are unloaded. Accelerate the engine up to 1,000~1,500 rpm gradually.

https://www.truck-manuals.net/

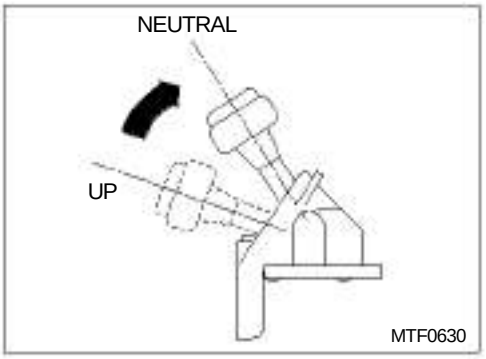

(4) Place the control lever in the "NEUTRAL" position immediately after raising the deck to unload the materials.

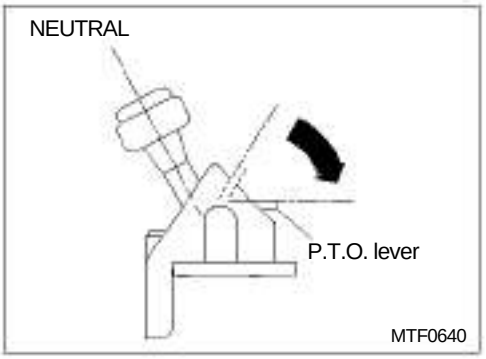

3) When attempting to stop the deck halfway

(1) When attempting to stop the deck for a short interval in the middle of ascending or descending, place the control lever in the "NEUTRAL" position. (The control lever and deck operate, irrespectively of gear pump rotation.)

(2) When attempting to stop the deck for a long interval in the middle of ascending or desending, switch off the PTO and place the control lever in the "NEUTRAL" position.

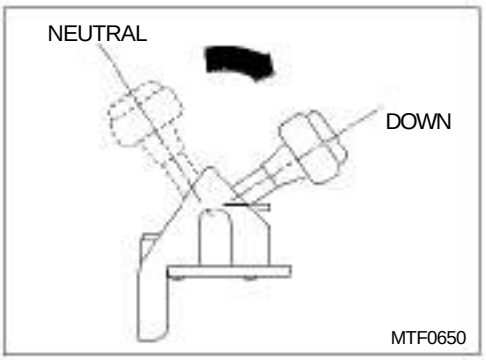

4) When attempting to lower the deck

(1) Place the dump control lever in the "DOWN" position.

Note

1. If the dump control lever is placed in the "DOWN" position, the PTO lever also comes down.
2. The deck descents by its own weight.

https://www.truck-manuals.net/

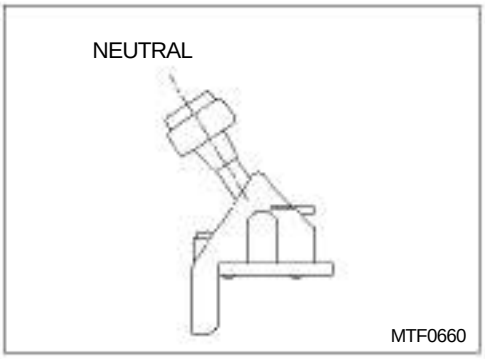

(2) Place the dump control lever in the "NEUTRAL" position immediately after the deck comes down completely.

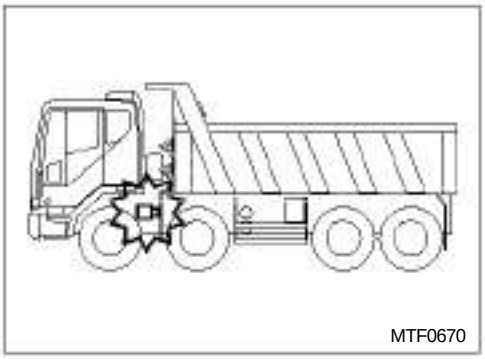

5) Cautions

(1) With the PTO lever being in operation, driving of the vehicle over a prolonged time may cause damage to PTO and gear pump. Lowering the deck while running the vehicle will cause damage to the dump system.

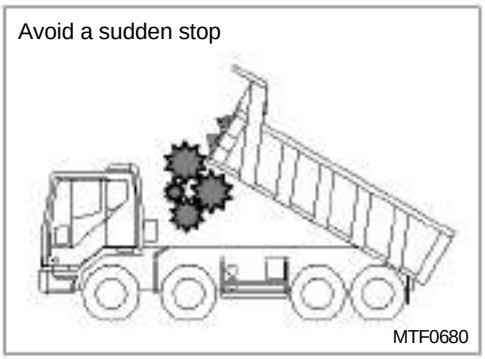

(2) Applying a sudden stop to the vehicle with the deck raised, or stopping suddenly the deck in the middle of descending, may cause damage to dump system and, in the worst case, even to the deck frame or main frame of the vehicle. For the same reason, avoid a sudden stop while running with the deck loaded with materials.

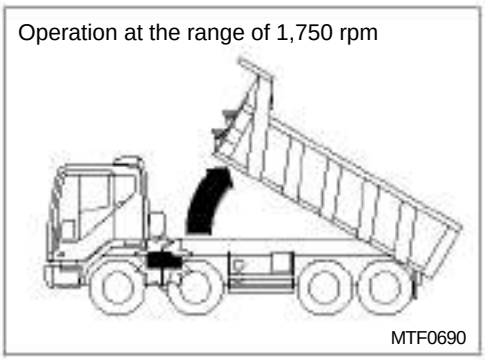

(3) Raising the deck with the engine accelerated at 1,750 rpm or more will cause damage to the components of the gear pump.

Caution

Your WARRANTY shall not apply to any defects caused by non-compliance with the above cautions or overloading exceeding the pay load.

https://www.truck-manuals.net/

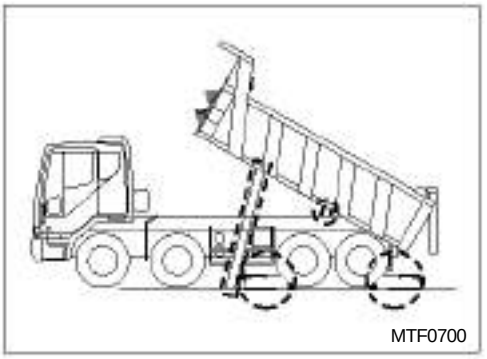
MTF0700

(4) When changing oil or replenishing grease with the deck raised, be sure to support it with safety posts and chock the wheels for your safety.

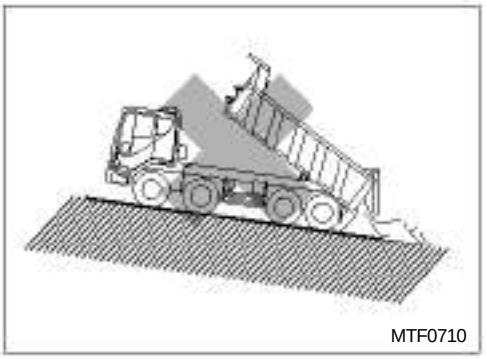
MTF0710

(5) Avoid raising the deck on a downward slope.

MTF0720

(6) Avoid raising the deck on a unpaved road or in the swamp.

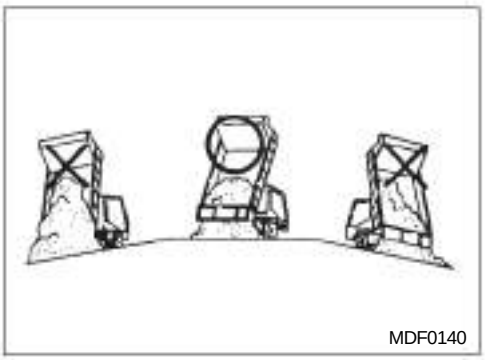
MDF0140

(7) Avoid unloading operation on a slope.

https://www.truck-manuals.net/

Suggested hydraulic oil

Manufacturer	Suggested oil
Esoo Chemical	AZOLA ZS 32
Mobil Korea	HYDRAULIC 28
Yukong	HARMONY AW 32
Korea Shell	TELLAS 32
Honam Refinery	RANDO 32

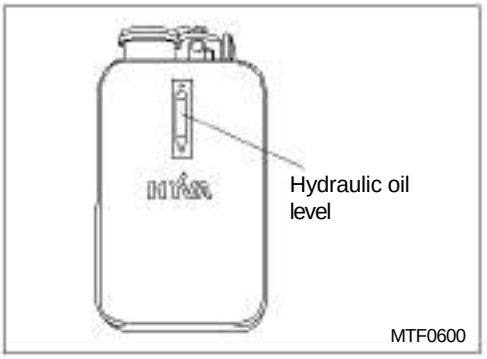

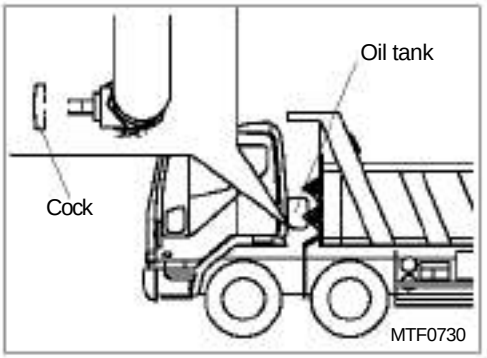

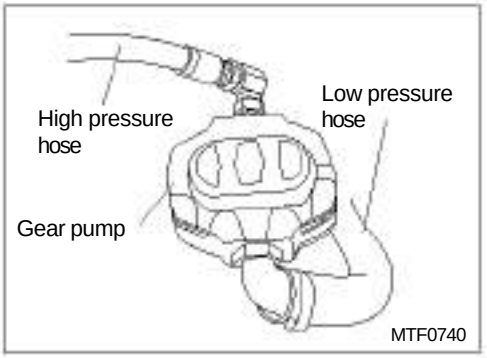

6) Checking and changing of hydraulic oil

(1) Specification of hydraulic oil

- ISO VG 32(hydraulic oil)

(2) Checking the hydraulic oil level(with the engine stopped)

Always check the hydraulic oil level prior to operation of the dump system and add the same brand oil if necessary. Check the hydraulic oil level through the transparent sight glass installed on the oil tank. If the hydraulic oil level reaches the high level of the sight glass with the dump control lever placed in the "DOWN" position and the deck lowered completely, it is normal.

(3) Changing of hydraulic oil(with the engine stopped)

Check the hydraulic oil for contamination and change the oil if necessary after one week since the brand-new vehicle was released. Change the hydraulic oil every six(6) months thereafter. Close the cock installed beneath the oil tank, place an oil container under the gear pump, release the clamp(on the gear pump side) of the low pressure hose connected to the cock, then drain out the old hydraulic oil by removing the cock. Hydraulic oil change should be performed with the deck lowered completely, engine stopped, and the dump control lever placed in the "DOWN" position.

Fill capacity: 80L(19 ton dump truck)
98L, 120L(24 ton dump truck)

https://www.truck-manuals.net/

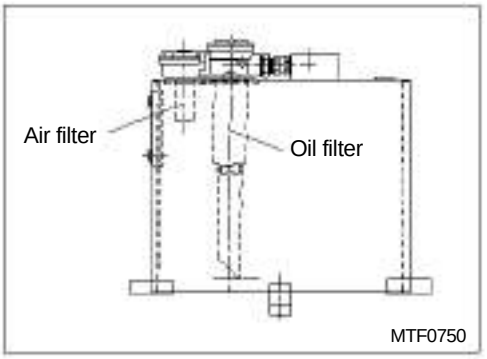

(4) Changing of air filter and oil filter(with engine stopped)

Replace the air filter and oil filter concurrently with hydraulic oil change.

The air filter is a paper type filter installed within the oil filler, while the oil filter is a paper type filter installed on the line through which the hydraulic oil returns to the oil tank from the hoist cylinder. The air filter and oil filter are installed on tope of the oil tank separately.

Caution

Be sure to use genuine HYVA filter elements for air filter and oil filter. Your WARRANTY shall not apply to any defects or damage caused to the dump system by reason of using non-genuine parts.

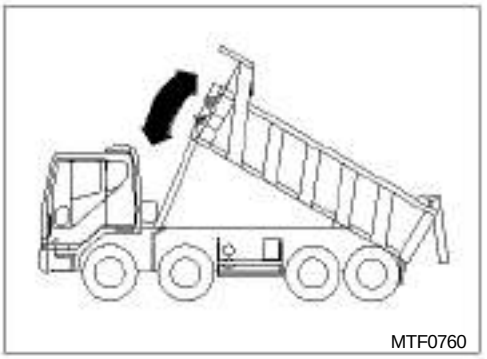

7) Air bleeding of dump system

The dump system has no specific screw for air bleeding. When a slight amount of air has entered the hoist cylinder, perform the deck ascending and descending operation several times to remove the air through the oil tank. If a large amount of air has entered after servicing the dump system or changing hydraulic oil and even the deck ascending and descending operation has no effect on air bleeding with unusual sound and vibration of the hydraulic hose produced, bleed the air in the following procedure:

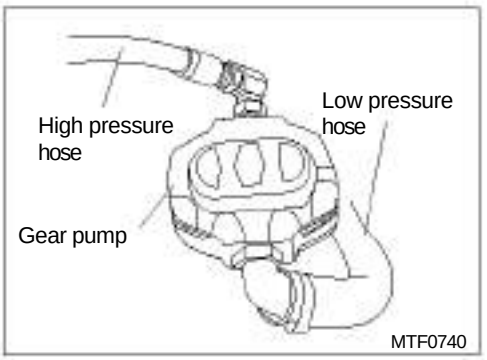

(1) Stop the engine and loosen the high pressure hose on gear pump side slightly, then the gear pump and low pressure hose linking the oil tank to the gear pump will be bled and filled up with hydraulic oil. If the hydraulic oil starts to flow out, retighten the high pressure hose.

https://www.truck-manuals.net/

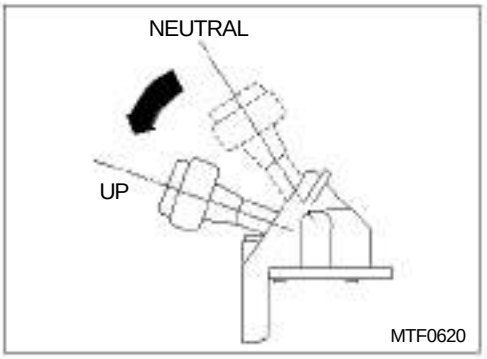

(2) Restarts the engine and turn the gear pump at the minimum speed to place the tipping valve in the "UP" position. Slightly loosen and then retighten the high pressure hose on the gear pump side until the air is not seen in the hydraulic oil which is flowing out. In the same manner, slightly loosen and then retighten the hose on the hoist cylinder side.

Caution

Check each joint on the dump system, then perform bleeding operation.
If the dump system has abnormality even after performing the air bleeding operation, bring the vehicle the nearest maintenance shop for inspection and maintenance.

(3) Operate the deck several times to bleed the air remaining in the hoist cylinder through the oil tank.

(4) Recheck the hydraulic oil level and top up if necessary.

https://www.truck-manuals.net/

8) Greasing points

Greasing should be performed once a week. The greasing points are illustrated as follows:

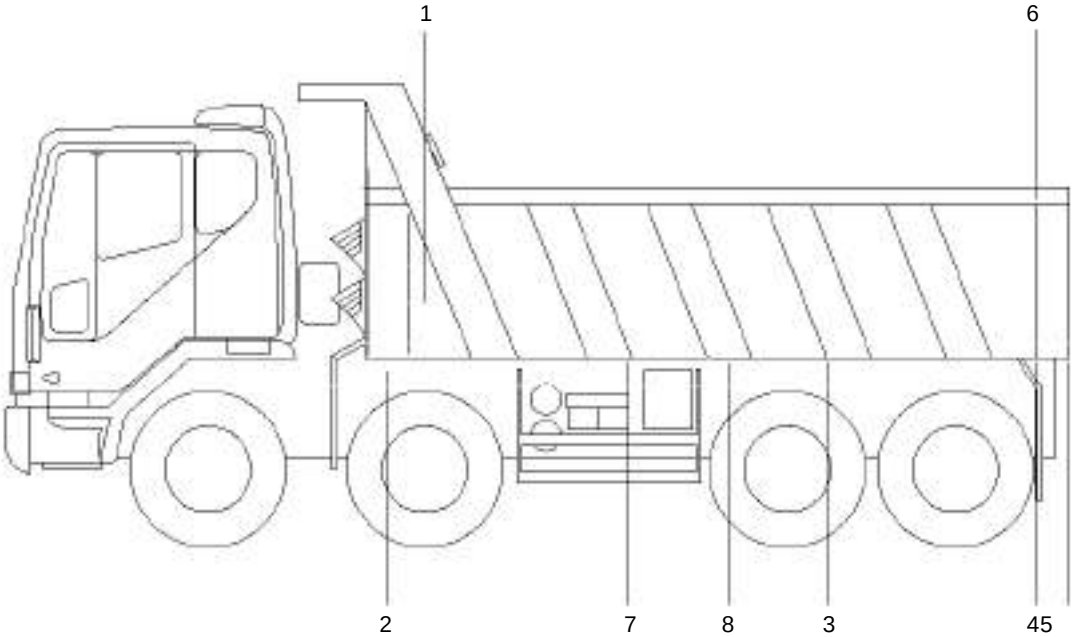

MTF0770

No.	Greasing points	The number
1	Lifting bracket, right and left	2
2	Chassis bracket, right and left	224
3	Rear gate locking device, right and left	521
4	Deck hinge, right and left	8
5	Rear gate locking device rod	
6	Rear gate pivot, right and left	
7	High picks	
8	Stabilizer, right and left	

https://www.truck-manuals.net/

7. OPERATION OF TRACTOR-TRAILER

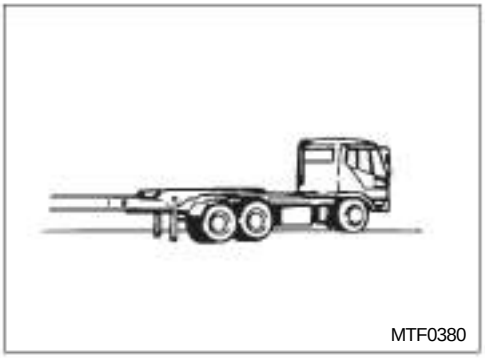
MTF0380

1) Driving of tractor-trailer

Much more care should be taken when driving tractor-trailer than when driving tractor only.
Observe the following inspection and operation methods.

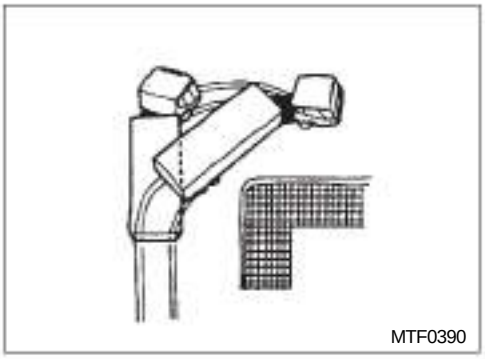
MTF0390

(1) Turning of tractor-trailer

1. When turning your tractor-trailer, note the trailer's running track and gradient.
2. On the turning track of the trailer, the trailer's rear section enters the inside of the turning direction in a large way. Watch out behind you through the rear-view mirror while turning your tractor-trailer.

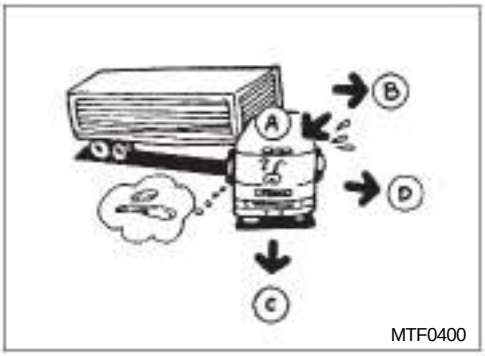

MTF0400

(2) Jack knife phenomenon

Jack knife phenomenon will occur if the trailer would not comply with the movement of the tractor when driving down a hill or turning the wheel abruptly or applying quick braking.

(3) Plow out

This is a phenomenon where the front wheel of the tractor is locked and consequently the tractor and the trailer stand at right angles to each other.

(4) Trailer swing

This is a phenomenon where the rear wheel of the trailer is locked and consequently the trailer swings.

https://www.truck-manuals.net/

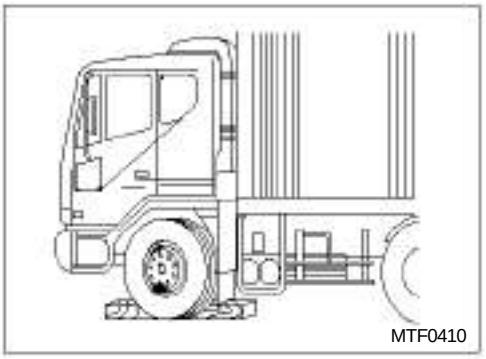
MTF0410

2) Connection of trailer with tractor

- The trailer should be connected with the tractor on a level ground.
- The tires of the trailer should be choked.

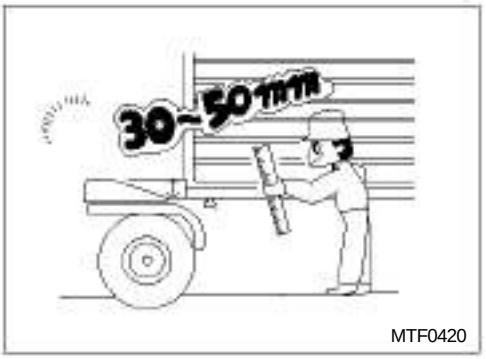

MTF0420

(1) Cautions when connecting

1. Ensure that the trailer king pin is fitted 30~50 mm lower than the upper face of coupler.

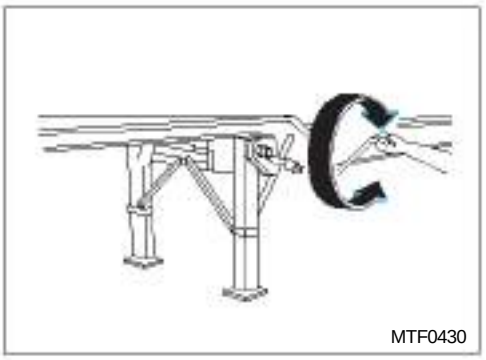
MTF0430

Caution

If the king pin plate is fitted higher than the upper face of the coupler and there is clearance between them, unsatisfactory connection or damage to the coupler or king pin will be experienced.

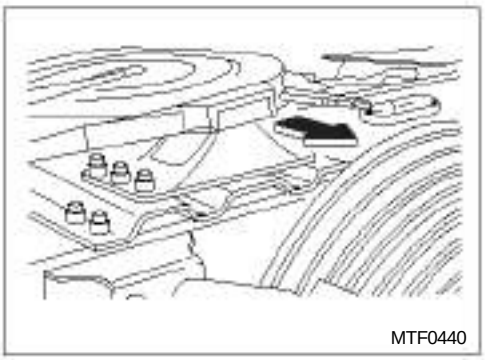
MTF0440

2. Unscrew the spring lock with the hand, pull out the coupler manipulating handle, back up the tractor slowly, then connect the trailer.

https://www.tractor-manuals.net/

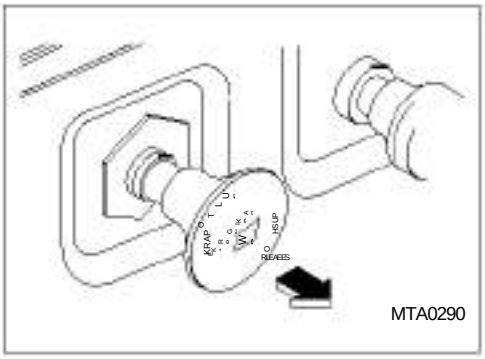

3. Pull the parking brake valve of the tractor before connecting the air hoses.
   * Pull the parking brake valve of the tractor, and the trailer will be subjected to braking force when connecting the air hoses.

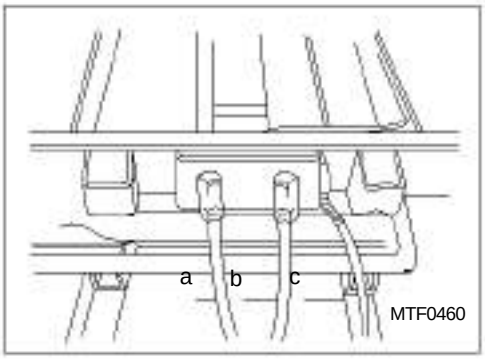

4. Be sure to connect the air hoses of the same color.
   a. Blue: Service brake line
   b. Red: Emergency brake line
   c. Jumper cable: Harness
   * If air leaks is found from the connecting sections after connecting the air hoses, do again the connecting operation.

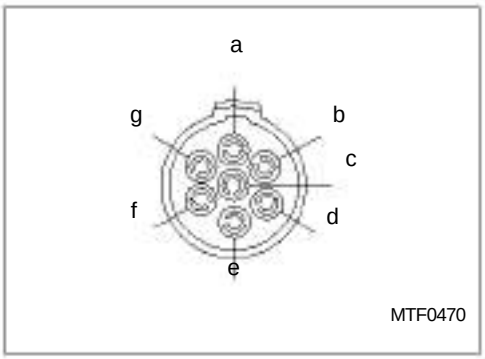

5. Jumper cable(Harness)
   a. White: Earth b.
   Black: Spare
   c. Yellow: Turn signal lamp(left side)
   d. Red: Stop lamp
   e. Green: Turn signal lamp(right side)
   f . Brown: Tail/license plate lamp
   g. Blue: Back up lamp

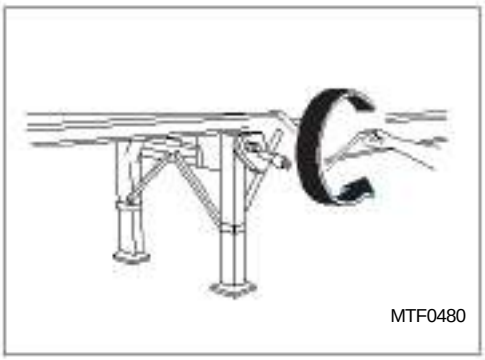

6. Turn the lag gear crank handle anti-clockwise to insert support leg(in the case that the trailer is not of a mechanical type).

https://www.truck-manuals.net/

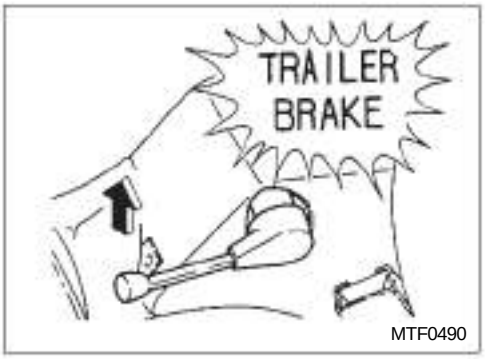

MTF0490

(2) Checks after coupling up

1. Checking the connection state
   a. Pull the brake lever of the trailer to apply the brake only to the trailer. Then, start up the tractor with gears being put in 1st or 2nd position.
   b. Repeat the above munipulation 2 to 3 times. Then, if you feel as if you float greatly with the driver's seat, it means the tractor and trailer have been connected satisfactorily with each other.

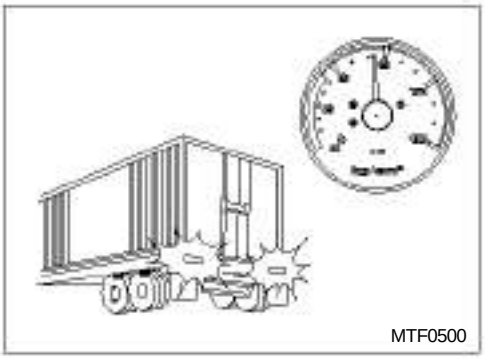
MTF0500

2. Make sure that all the lamps on the trailer operate properly.
3. Operate the engine to check if the oil pressure is normal(8.2kg/cm^2).

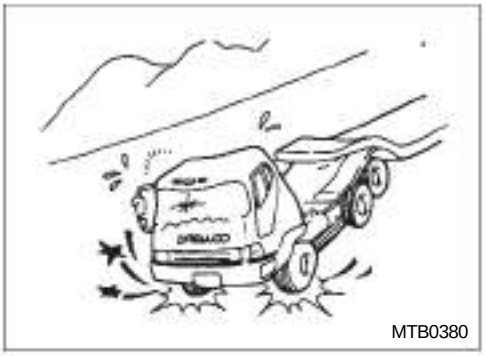
MTB0380

3) Driving precautions

(1) Avoid hard acceleration, hard stops and sharp steering since they creat not only hazardous conditions but also give on adverse affect over the vehicle.

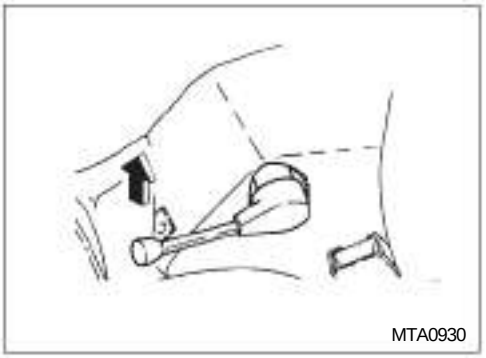
MTA0930

(2) Pull the brake lever of trailer to apply the brake only to the trailer when descending a zig zag slope or an indented road.

https://www.truck-manuals.net/

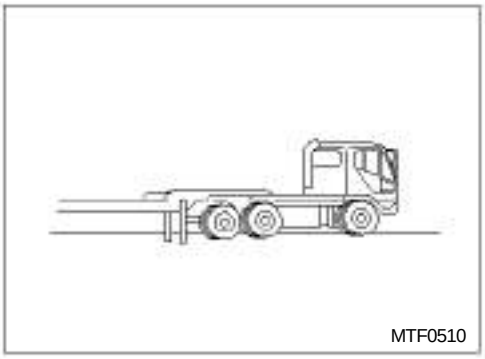
MTF0510

4) Caution when disconnecting

Park the vehicle on a level ground when dis-connecting the trailer from the tractor.

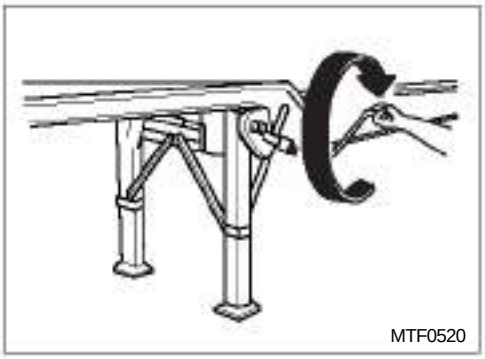
MTF0520

(1) Turn the lag gear crank handle anti-clockwise to lower the support leg on ground surface(in the case that the trailer is not of a mechanical type).

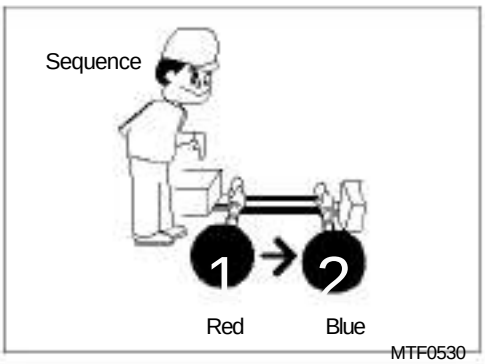

MTF0530

(2) When disconnecting the air hoses, first separate the emergency line(red).
* Separating the emergency line will bring the trailer under braking force.

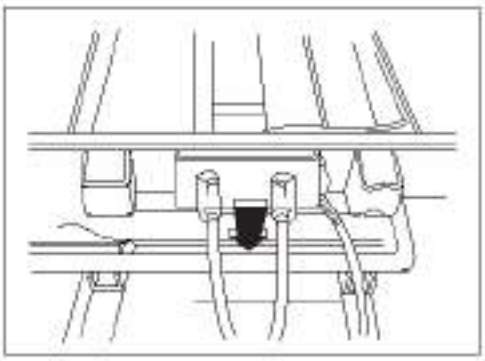
MTF0540

(3) Hold the plug body with the hand to disconnect the jumper cable.
* Holding the cable to pull it out may cause short circuit.

https://www.truck-manuals.net/

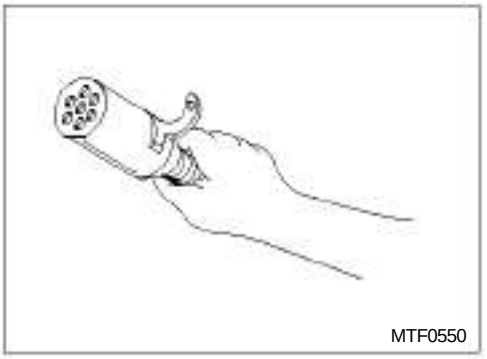
MTF0550

(4) After disconnecting the air hoses and jumper cable, fit the anti-dust cap(dust cover) in the coupler of the trailer, and store the air hoses and jumper cable in the place designated at the rear side of the cap.

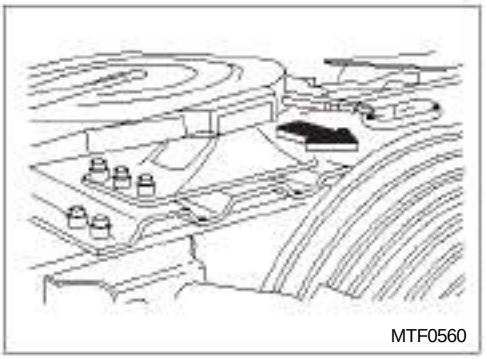
MTF0560

(5) Unscrew the spring lock with the hand, pull out the coupler manipulating handle, move the vehicle forward slowly, and the tractor and the trailer will be disconnected from each other.

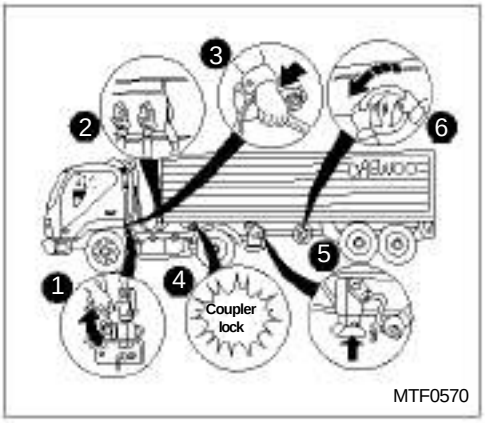

MTF0570

5) Checking after connecting the tractor and trailer

After completing the connection of the tractor and trailer, check again the following items.

(1) Has the air cock been opened fully?
(2) Have the air hoses for service line and emergency line been correctly connected?
(3) Has the air coupling been perfectly connected to prevent air leaks?
(4) Has the coupler lock been secured?
(5) Have the trailer legs been completely housed?
(6) Has the parking brake of the trailer been completely released?

https://www.truck-manuals.net/

6) Caution for operation (DU20BS Coupler)

(1) Coupler greasing

Greasing point	Oil
Upper face of base	Graphite grease
Sliding surface of jaw and yoke (left, right)	Graphite grease or chassis grease
Bushing of beam shaft (left, right)	Graphite grease or chassis grease

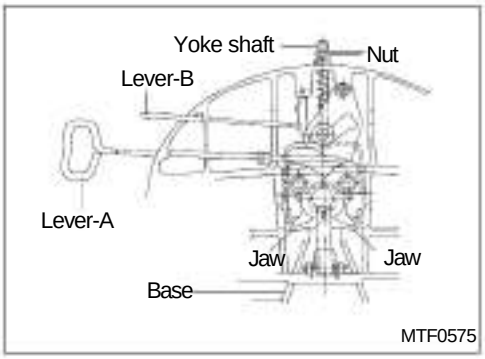

(2) Caution when coupling up and uncoupling

1. Ensure the yoke is compltely fixed between the base and jaws. Also the end of yoke shaft(protrusion from base) should be engaged into the base, and adjust nut and base should contact together via cushion rubber. At the same time, the lever-A and lever-B should be positioned as shown in Fig. MTF0575.
2. Check the sliding face of the base for sand, gravel or other foreign substances and remove if any.
3. Align the centers of coupler and king pin accurately before coupling up.
4. Be sure to apply the parking brake of the trailer both at coupling up and uncoupling.
5. Apply grease sufficiently for smooth operation of each part.

https://www.truck-manuals.net/

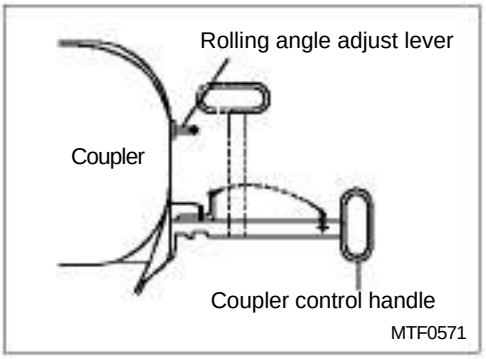

7) Jost coupler angle adjustment(JSK 37G Coupler)

(1) Range of rolling angle adjustment
- For travel at high speed: 0°
- For travel on rough road: 3°, 7°

Caution

Excepting unusual things, don't adjust rolling angle to 7° for safety if possible because trailer can be turned over.

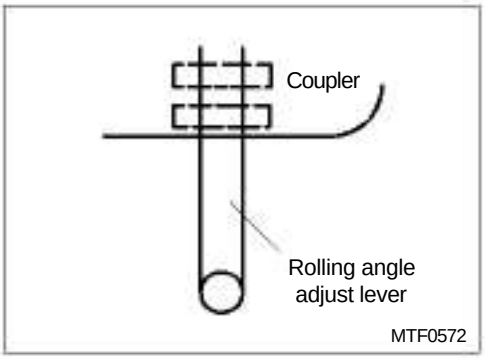

(2) How to adjust rolling angle

1. At 0° of rolling angle

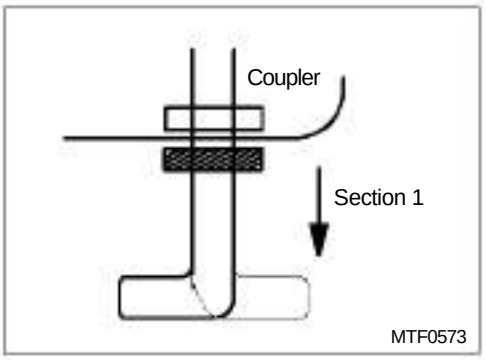

2. At 3° of rolling angle
   Pull back the rolling angle adjust lever to section 1, then turn it 90° in any direction.

Caution

- *Be sure to match both right and left rolling angles to each other when adjusting the rolling angle.*
- *When travelling, fold the coupler control handle so that it faces forward.*

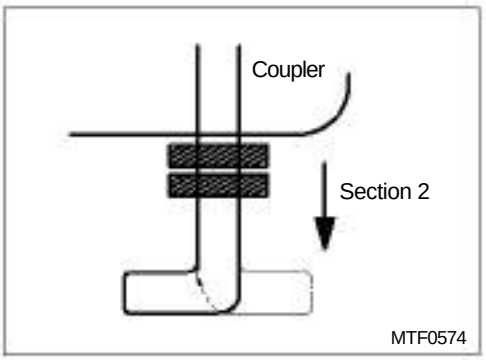

3. At 7° of rolling angle
   Pull back the rolling angle adjust lever to section 2, then turn it 90° in any direction.

Caution

- *Be sure to match both right and left rolling angles to each other when adjusting the rolling angle.*
- *When travelling, fold the coupler control handle so that it faces forward.*

https://www.truck-manuals.net/

8. BULK CEMENT TRACTOR

External view of BCT

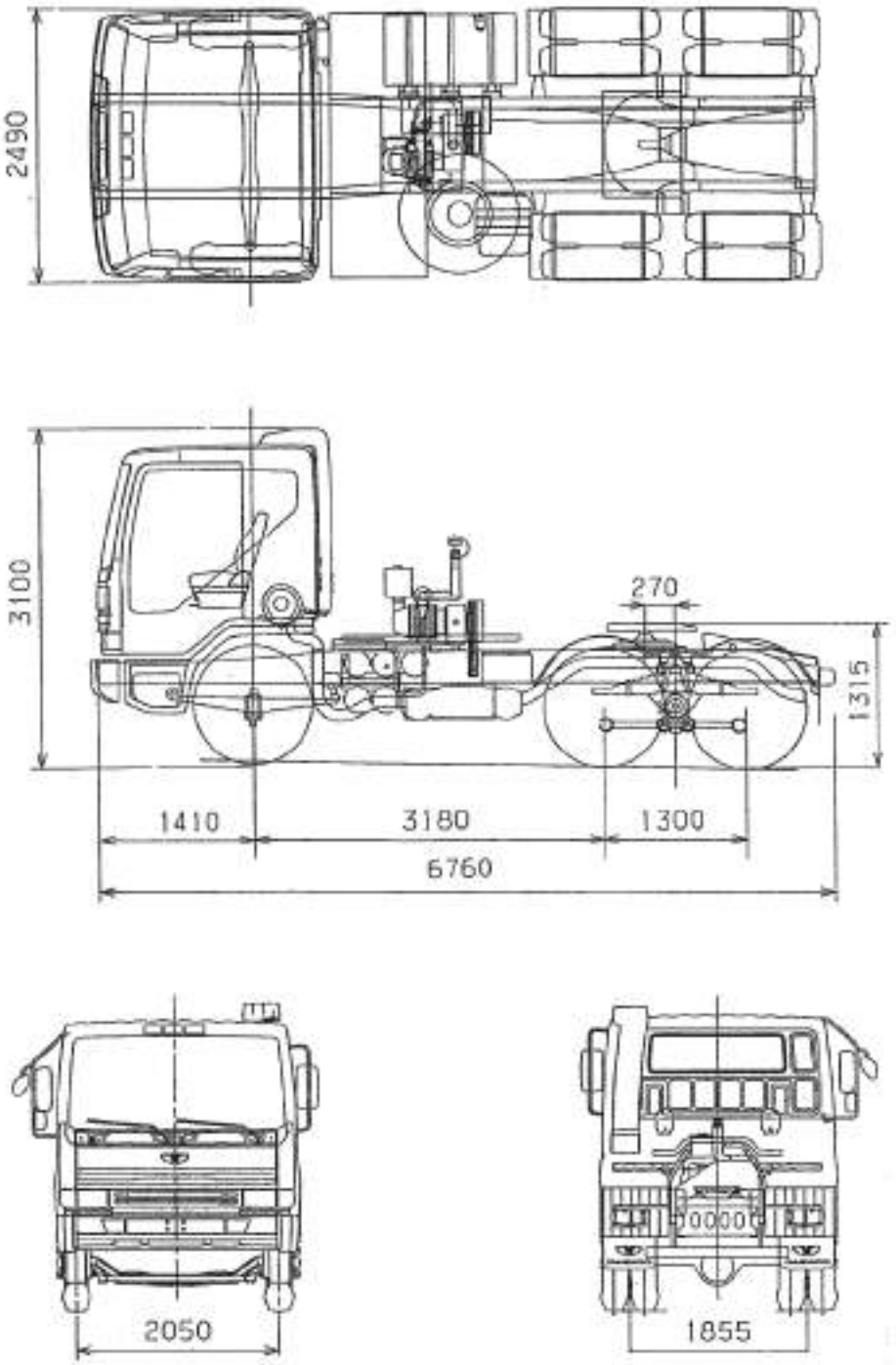

MTF0780

https://www.truck-manuals.net/

External view of compressor

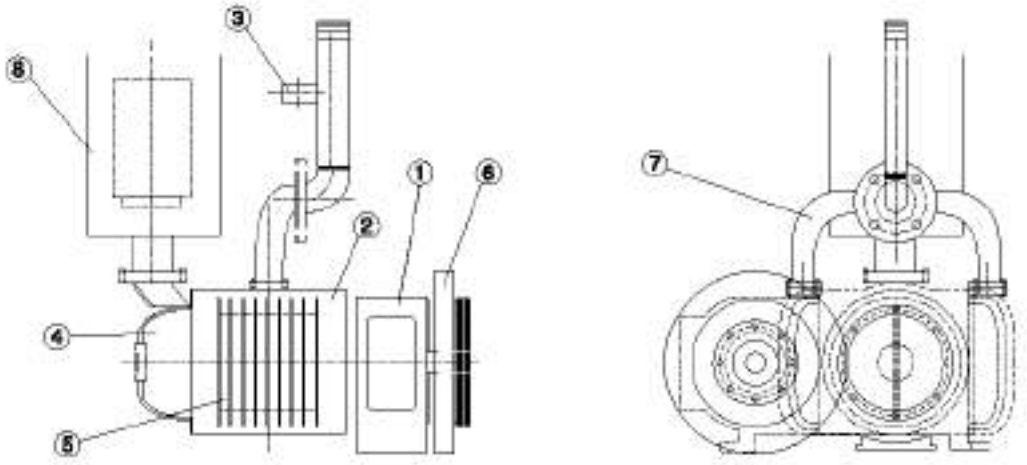

1. Oil box
   Cylinder
3. Check valve
   Intake cover
5. Delivery cover 2.
6. Wheel
7. Delivery pipe 4.
8. Air cleaner

MTF0780

Specifications of compressor

Descriptions / Items	Specifications
Model	VS - 715
Type	Air cooling, oil-free
Delivery capacity	10m³/min
Working pressure	1.9kg/cm²
RPM	800 RPM
Flow rate	3.5L~4.0L
Overall height/Weight	868mm/250kg
Overall length/Overall width	830/839mm

https://www.tractor-manuals.net/

Drive system diagram

Driving force applied using the transmission PTO of tractor is transmitted through belt pulley to the compressor, as shown in the following diagram. The rotor which draws in and discharges air reciprocates at 90 degrees.

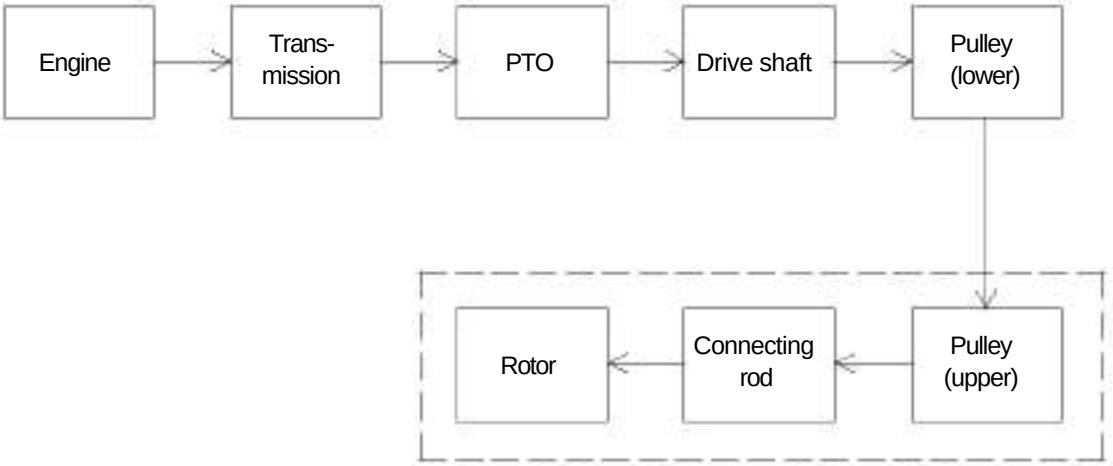

Detail sketch of compressor

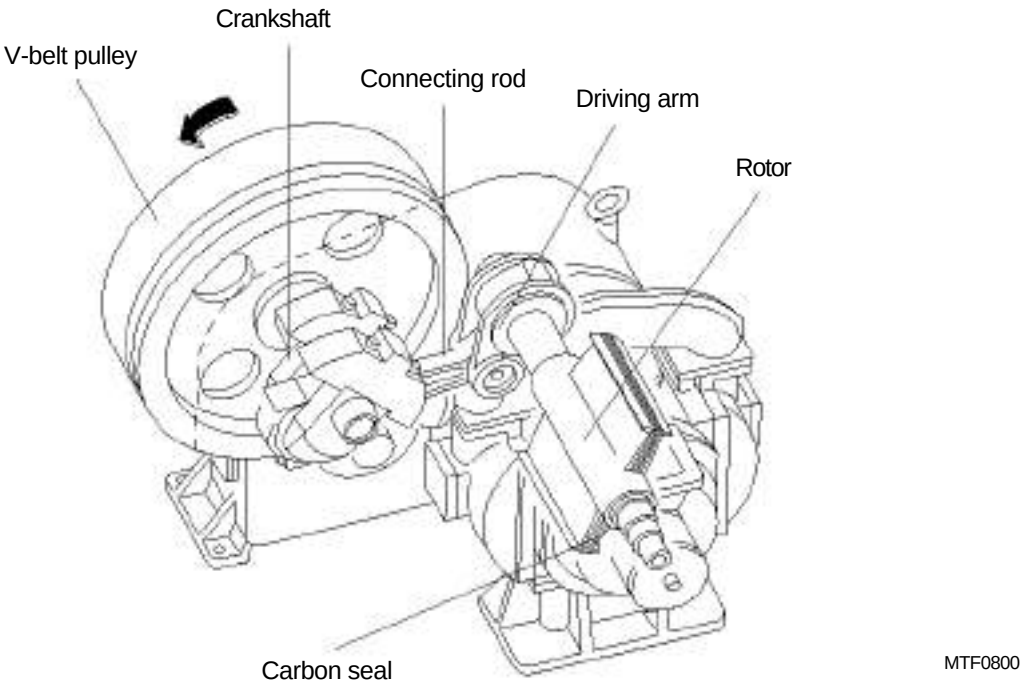

https://www.truck-manuals.net/

Caution during operation

1) The engine clutch must be operated in sequence. If the clutch pedal is released instantaneously, power is transmitted instantaneously to affect PTO, crank components, and rotating parts, resulting in damage to the related parts.

2) Do not increase or decrease compressor RPM using the accelerator pedal in the cab. When cleaning or servicing the pipe or adjusting RPM after completing operation, if an abrupt change is given to the related parts, damage to them may result.

3) Do not apply overload to the compressor when the engine RPM is at low idle at each pre-operation stage. Engine overload affects the engine adversely or causes resonance phenomenon. If this situation occurs, first open the exhaust valve to discharge air and relieve overload.

4) Caution when stopping: If the compressor is stopped with pressure remaining in the tank, cement in it enters the cylinder, causing various damage to the compressor.

5) If water enters the air breather on the crankcase when cleaning the compressor, lubricating functionality is disabled.

6) Intake filter element: If the filter element is filled with dust, the amount of incoming air decreases and also performance efficiency is reduced. Therefore, clean the filter element every month. If dust settles inside the filter element, replace it. Generally as dust settles at the bottom of the filter case around the inlet port, use a damp cloth in order to prevent the settlement of dust on the inlet port. (Interval of replacement: every 250~500 hours(3~4 months)

How to operate the compressor

1) Depress the clutch pedal, press the PTO to "ON" position, and then slowly release the pedal to operate the compressor. (When completing operation, depress the clutch slowly and press the PTO switch to "OFF" position.)

2) Adjust the control lever to obtain proper RPM(800 RPM) for operating the compressor. Bring and hold the lever to the gauge scale of 800 rpm.

Caution

Do not rotate the compressor at 750 rpm or less, or over 850 rpm, because it may be damaged.

https://www.truck-manuals.net/

Troubleshooting

(1) Much vibration

Cause: Loose compression mounting bolts

(2) Abnormal noise(Noise is generated mainly from the circumference of the cylinder or case.)

1) Cause: Loose connection between rotor and driving arm

In this case, the driving arm is loosened and causes the valve base to be in contact with the rotor, generating a great noise.

Correction: Loosen the driving arm from the rotor, and clean the inside surface of the hole and external surface of the shaft as if removing oil, insert the arm again, and then tighten swivel nuts.

2) Cause: Damaged connecting rod(small end metal) or piston pin

Correction: Unscrew and remove the connecting rod from the crankshaft and replace the metal and piston pin. Remove oil completely from the inside of crankcase and add new oil.

3) Cause: Damaged connecting rod

Correction: Oil being supplied will not damage the connecting rod. Therefore, causes for damage are as follows:

- Restricted oil filter obstructing oil flow. •

Restricted tube for the oil injection port

- Air existing in the tube for the oil injection port

4) Cause: Damaged taper roller of crankshaft

Correction: Replace both outer and inner races with a new set and change the oil in the crankcase with new oil

5) Cause: Loose axial direction of the taper roll bearings for the crankshaft

6) Cause: Rotor in contact with other parts inside the cylinder

7) Cause: Damaged needle bearing of the rotor

Correction: Check and see if both outer and inner races are in contact with other parts before replacing them, then insert a new outer race. At this time it is desirable to replace the inner race also.

8) Cause: Damaged single low deep ball bearing at the end of the rotor

Correction: As grease has been consumed, replace the bearing together with the oil seal. As each of the rotor and side wall is in contact with other parts, inspect their surface cautiously. Otherwise, damage will result.

https://www.truck-manuals.net/

(3) Oil pressure does not increase.

1) Cause: Restricted oil strainer

Correction: Open the top cover of the crankcase to check and clean.

2) Cause: Malfunction of oil pump

Correction: Disconnect the pump to check for defects and replace, if necessary.

3) Cause: Viscosity of oil is so high that oil cannot be absorbed.

Correction: Inject oil equivalent to SAE #30 grade.

(4) Air pressure does not increase or the amount of air decreases.

It is necessary to measure the time taken to obtain the specified air pressure after the valve on the air discharge section of the compressor tank.

1) Cause: Damaged intake valve and/or exhaust valve~Replace

2) Cause: Detached carbon~Adhere the carbon.

3) Cause: Carbon sticked

4) Cause: Load applied to suction filter~Replace

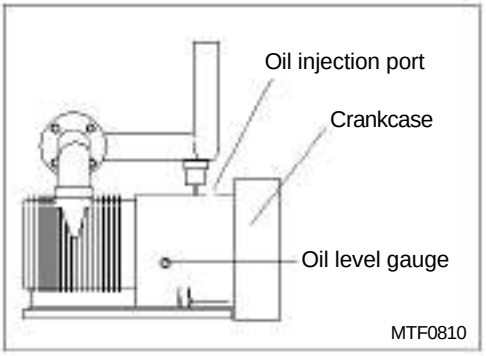

Lubricating oil change

(1) Check for oil level

Check for oil level and change lubricating oil in 1 month of initial operation and thereafter every 3~4 months of operation.

(2) Usable oil

- ISO VG 220
- Motor Oil SAE 30

(3) Oil capacity: Approximately 4.0L

(4) How to change oil

1) Remove the plug beneath the crankcase and remove oil from the inside of the crankcase.
2) Clean the inside of the crankcase and the oil strainer.
3) Inject oil until it reaches the top side of the center mark on the oil level gauge.

Caution

1. Always inject oil with the compressor turned off.
2. Use care to prevent the entry of dust in oil.

https://www.truck-manuals.net/

Periodical Inspection Chart

Check items		Daily inspection	Service intervals						
			1 month	3 months	6 months	9 months	1 year	2 years	3 years
Compressor	Unusual sound	○							
	Abnormal vibration	○							
	Compressor RPM	○							
	Operation of safety valve		○						
	Oil level in oil case		○						
	Suction filter element			○					
	Oil change			○					
	Strainer cleaning						○		
	Loose mounting bolts		○						
	V-belt check and replacement				○				
Driving and operation	Belt crank of drive shaft PTO			○					
	Chain box oil (grease) changing			○					

https://www.truck-manuals.net/

9. SELF STEER

1) Maintenance

Items	Inspection
Busings	Check for excessive wear & movement every 30 days.
Air leaks	Check for air leaks daily before using.
Bolt torque	Check unit for bolt torque per instruction given in section 10.
Brake operation	Check for proper operation daily before moving and using the unit in any manner.
Structural	Inspect daily for signs of structural damage, cracks or wear in all components of suspension parts(arms, hangers, axle seats & etc.) inform manufacturer immediately of any structural damage of any kind.

2) Troubleshooting

Items	Possible cause	Remedy
Not getting the desired load on axle	Not having the proper air pressure to load bags.	Increase or decrease air pressure at regulator valve
	Air control system not properly installed	Check piping of air system
	Mounted too high	Shim axle area, may require arm replacement
Insufficient air pressure to system	Defective brake protection valve or truck compressor	Replace brake protection valve and check air compressor
Unit not getting the correct lift	Lift air gags not getting proper air pressure	1. Check systems pressure. 2. Check air system piping drawing refer to control schematic
	Interference with chassis drive line other chassis and components	Inspect for interference
	Unit not installed properly	Check installation with factory installation drawing
	Arm being restricted from full retraction	Contact factory
Pusher steering opposite direction than truck	Improper caster setting	Readjust caster

https://www.truck-manuals.net/

3) Adjusting air pressure

(1) Adjustment of pressure

Do not run under the normal pressure when usualy running

- **New vehicle's air pressure**

VEHICLE \ SELF STEER MARKER		WASTON (OLD)	SAMWOO (NEW)
21TON CARGO		90psi(6.2 TON)	0.37Mpa(6TON)
20.5TON/ 22.5TON CARGO	DECK:9,100mm	75psi(5.2 TON)	0.53Mpa(8TON)
	DECK:9,500mm	-	0.53Mpa(8TON)
	DECK:10,100mm	-	0.53Mpa(8TON)
24TON CARGO		100psi(6.3 TON)	-
25TON CARGO	6.3TON	100psi(6.3 TON)	-
	9TON	71psi(8TON)	0.65Mpa(8TON)

1) Improvements over the previous version

1. Improved operation time.
   - Speed increased by the adapting relay valve and enlarged nylon tube.
2. Increased Air tank volume
   - 8x4 with lifting axle : 811(221x4EA)
   - 10x4 Cargo : 961
3. Securing parking brake ability(8x4 with lifting axle)
   - Secured parking brake ability with lock brake
4. Lifting Axle load control when key-off
   -When key-off, Automatic axle descending for anti-theft and axle load controlled to 3 tons.

2) Pressure control(22.5ton Cargo)

Lifting Axle load	Control Valve pressure in the cabin
5,000 kg	0.29Mpa(2.9bar)
6,000 kg	0.37Mpa(3.7bar)
7,000 kg	0.45Mpa(4.5bar)
8,000 kg	0.53Mpa(5.3bar)
9,000 kg	0.63Mpa(6.3bar)
10,000 kg	0.76Mpa(7.6bar)

Note

Above data is measured value when load was evenly distributed on the 22.5ton cargo with the deck of 9,100mm, different result may be caused when the load is not distributed evenly.

https://www.truck-manuals.net/

10. HYDRAULIC DEVICE OF CAR CARRIER

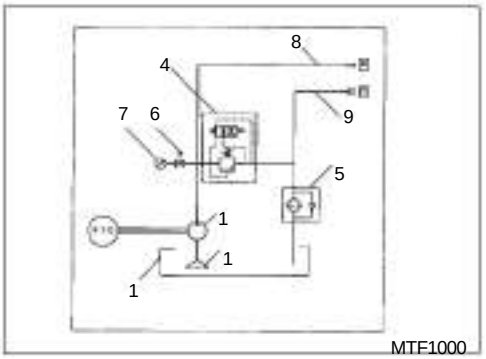

MTF1000

Circuit diagram

1. Oil tank
2. Suction strainer
3. Gear pump
4. Solenoid relief valve
5. Return valve
6. Stopping valve
7. Pressure gauge
8. Oil hose - Socket
9. Oil hose - Plug

Operation

Hydraulic pressure is generated by gear pump driven by PTO. Oil with high pressure is then transferred to the unit of the car carrier and its pressure is maintained below(4) solenoid relief valve preset pressure (100kg/cm^2). Operation of solenoid valve is activated by a switch on car-carrier unit with a PTO switch while the key is 'ON'.

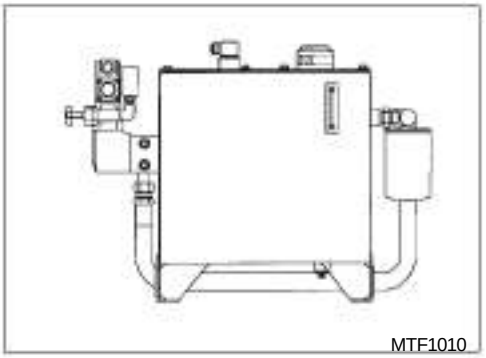
MTF1010

Oil tank

1. Oil capacity : 301 (up to the indication mark of gauge)
2. Suction strainer : Passing by flow : 501/min(mesh 150)
3. Oil type : ISO VG 32
4. Interval for replacement : Every 1 year after initial change at 3 months.
   (Suction strainer needs to be replaced at the same time)

https://www.truck-manuals.net/

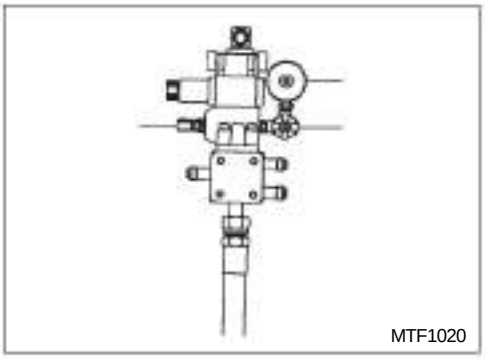

Solenoid relief valve

This controls pressure of a circuit and oil flow to car-carrier unit

(1) Pressure control bolt : Clockwise - ascending, Counter Clockwise - descending
Initial Preset pressure : 100kg/cm^2

(2) Stopping valve : Always let it be closed except for checking of oil pressure

(3) Pressure gauge

Caution

Do not increase oil pressure higher than 140kg/cm^2 when controlling the pressure of a circuit.

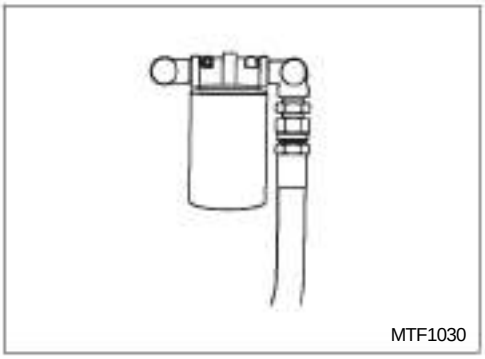

Return filter

(1) Filter element

(2) Capacity

(3) Interval for Replacement Every 1 year after initial change at 3 months. (Replace it with the oil)

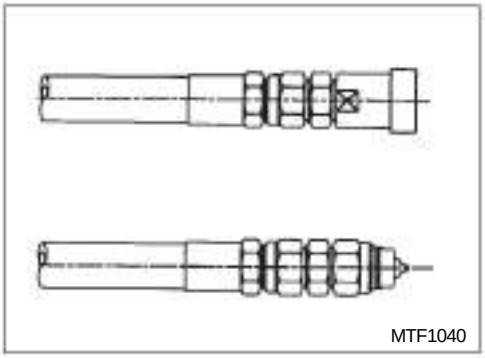

Hydraulic hose for connection

(1) This is connecting to the plug and socket coupler on the car-carrier unit, which supplies hydraulic pressure generated to the car-carrier unit.

(2) Specification of one-touch type coupler : double closed type 3/8"

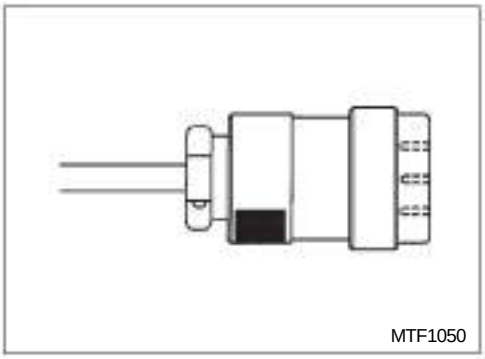

Connection of electricity supply for solenoid control

(1) This is for connection to the connector installed on the car-carrier unit.

(2) Power is supplied when the PTO switch is activated while the key is at 'ON' position.

Caution

Make sure that hydraulic hose and power connector is firmly connected before driving the vehicle.

https://www.truck-manuals.net/

11. TOOL LIST

No.	Tool	Name	Q'ty	Vehicle model
1	MTF0820	Handle - S/Tire Carrier 100x200x610	1	All vehicles other than dump trucks
2	MTF0830	Oil jack asm w/lever	1	All vehicles
3	MTF0840	Plier	1	All vehicles
4	MTF0850	Wrench monkey	1	All vehicles
5	MTF0860	Spanner 7x8	1	All vehicles
6	MTF0870	Spanner 10x12	1	All vehicles
7	MTF0880	Spanner 14x17	1	All vehicles
8	MTF0890	Spanner 19x22	1	All vehicles

https://www.truck-manuals.net/

No.	Tool	Name	Q'ty	Vehicle model
9	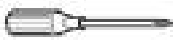 MTF0920		1	All vehicles
10	MTF0940	Wrench – Wheel nut ϕ41xϕ24	1	All vehicles
11	MTF0950	Handle-wrench wheel nut	1	All vehicles
12	MTF0960	Cab tilt lever	1	19ton/19.5ton/20.5ton/21ton/22.5ton/ 25ton cargo, 19ton/24ton dump All vehicles except above vehicles :Use the oil lever
13	MTF0980	Tool bag	1	All vehicles
14	MTF0990		1	All vehicles

https://www.truck-manuals.net/

8. SERVICE ELECTRIC EQUIPMENTS FOR USER

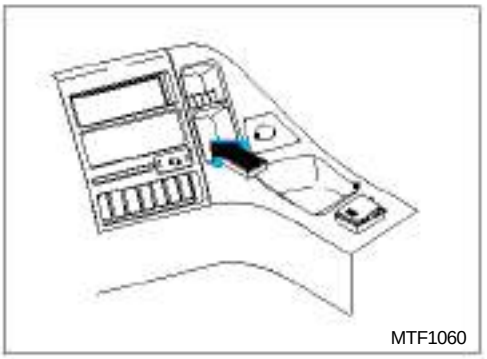

1) Consent for cellular phone charger (12V: Super deluxe)

If do you want to use of cellular phone charger, you can connect it to the consent installed below the cassette tape holder.

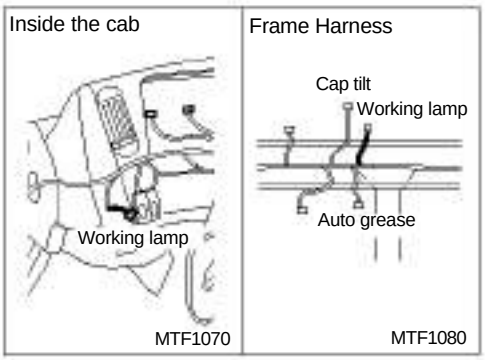

2) Harness for working lamp mounting

There is special harness available for working lamp at the inside and outside of cab.

(1) Fuse: F30, 15A
(2) Special harness available for working lamp switch is located at the inside pannel of black-out lamp switch.
(3) Special harness available for working lamp is located at the inside right frame of cab rear.

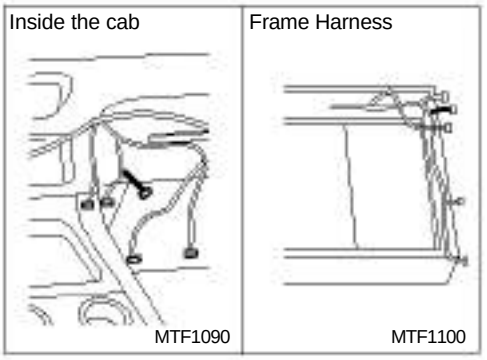

3) Harness for auto cover of dump (option)

There is special harness available for auto cover of dump at the inside and outside of cab.

(1) Fuse: F28, 20A
(2) Special harness available for auto cover switch is covered by an electric tape on the main harness at the inside of glove box.
(3) Special harness is located at the right inside end of frame.

https://www.truck-manuals.net/

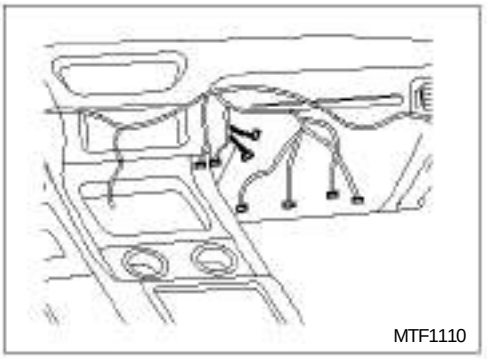

4) Harness for transceiver

Special harness is located at the inside glove box.

Caution

In the case that customer will use electric equipments mounted to other position beside harness for customers.
Ask service center autorized by Daewoo because it is caused of trouble of fire to various electric equipments.

https://www.truck-manuals.net/

6

SPECIFICATIONS AND SERVICE DATA

1. LOCATION OF CHASSIS NUMBER AND ENGINE NUMBER

2. MAIN DATA

3. RECOMMENDED LUBRICANTS

https://www.truck-manuals.net/

1. LOCATION OF CHASSIS NUMBER AND ENGINE NUMBER

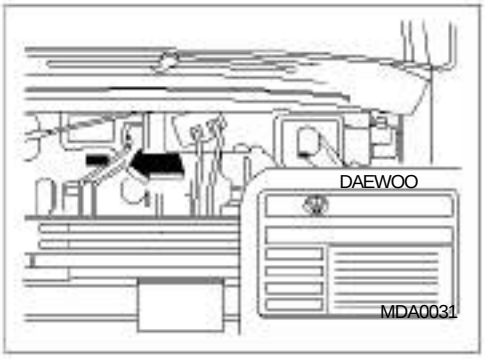

Vehicle identification number

The vehicle identification number plate is affixed to the center of the inside of the front lid.

* Always refer to this information when ordering parts or servicing.

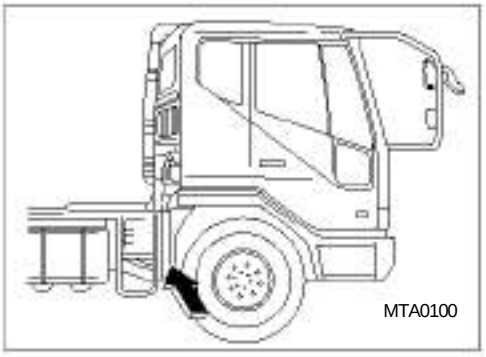

Chassis number

The chassis number is stamped on the front face of the right-hand chassis frame.

DE Engine

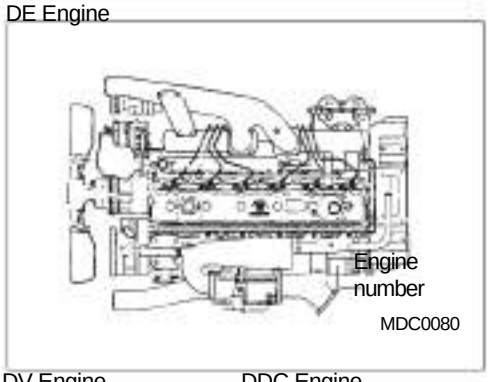

Engine number

1. DE/DV Engine
   The engine number is stamped on the rear left upper face of the cylinder block.

2. DDC Engine
   The engine number is stamped on the lower face of the lower intake manifold.

DV Engine

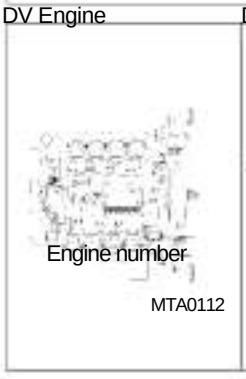

DDC Engine

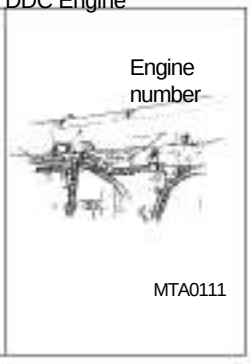

https://truckmanualshub.com/

GENERAL

CARGO F3CBF

1. MAIN DATA

DIAGRAM

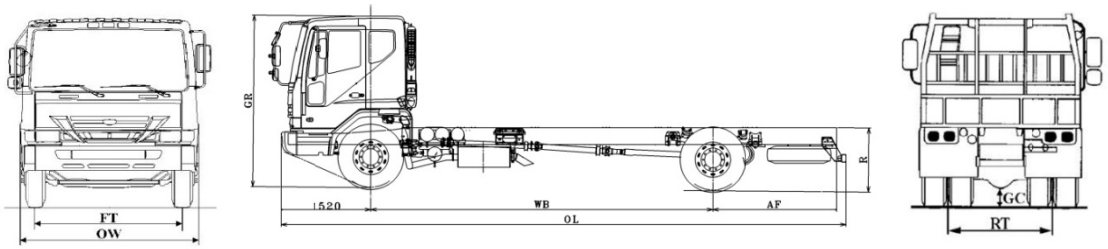

DIMENSIONS (mm)	Overall	Length	OL	7,150
		Width	OW	2,495
		Height	OH	2,915
	Tread	Front	FT	2,050
		Rear	RT	1,855
	Wheelbase		WB	4,030
	Rear axle to frame		AF	1,600
	Ground to roof		GR	2,905
	Frame-ground above bogie		R	1,070
	Usable cab to axle		CA	3,280
	Min. ground clearance			265
WEIGHTS (kg)	Chassis weight	Front		3,730
		Rear		1,850
		Total		5,580
	Curb weight			5,580
	Axle load	Front		6,500
		Rear		11,500
	Permissible G.V.W			18,000
PERFORMANCE	Max. speed		(km/h)	111
	Max. gradeability		(%)	30.9
	Min. turning radius		(m)	7.1

https://truckmanualshub.com/

POWER TRAIN

CARGO F3CBF

ENGINE	Manufacturer	DOOSAN INFRACORE
	Model	DE08TIS
	Emission certificate	EURO Ⅱ
	Type	Turbo intercooled, diesel engine
	Maximum power	225ps (165kw)/ 2,300rpm
	Maximum torque	82kg.m (804N.m)/ 1,200rpm
	No. of cylinder	In Line 6- cylinder
	Bore×Stroke	111×139(mm)
	Displacement	8,071cc
	Controller type	Mechanical
	Air cleaner	Dry paper elements
CLUTCH	Type	Hydraulic control with air assisted Dry single plate with diaphragm
	Plate diameter	Outside diameter : 430mm(17 ″)
TRANSMISSION	Model	T9S6
	Speed	6 Forward / 1 Reverse
	Gear ratio	1st 7.076
		2nd 4.777
		3rd 2.640
		4th 1.575
		5th 1.000
		6th 0.744
		Reverse 6.720
FRONT AXLE	Type	Reverse elliot “I” beam
	Axle capacity	6,500kg
REAR AXLE	Type	Banjo single reduction
	Final drive ratio	5.571
	Axle capacity	11,500kg
TIRE & WHEEL (Standard)	Tire	12R22.5-16PR
	Disc wheel	8.25V×22.5
	No. of wheel studs	10

https://truckmanualshub.com/

CHASSIS

CARGO F3CBF

FRAME	Type	Ladder type, single channel
	Size (H×W×T)	286×90 ×7 mm
		Frame width behind cab : 850mm
	Towing hook	Equipped front & rear
STEERING	Handle position	Left-hand drive
	Type	Recirculating ball with integral power assisted by oil
	Steering column	Tilt & Telescopic
	Steering wheel	2-spoke wheel with horn button
FRONT SUSPENSION	Type	Semi-elliptical leaf spring
	Size (L×W)	1,500mm×90mm
REAR SUSPENSION	Type	Semi-elliptical leaf spring
	Size (L×W)	1,420mm×100mm
BRAKE	Service brake	Full air brake with dual circuit
	Drum diameter	410mm
	Lining Front	414mm×155mm
	Rear	414mm×203mm
	Material	Non-asbestos
	Parking brake	Spring actuator at rear wheels
	Auxiliary brake	Exhaust brake
	Air dryer	One equipped
FUEL TANK	Volume	200 ℓ
	Material	Made of pressing steel
	Cap	Equipped key lock
ELECTRICAL SYSTEM	Battery	12V - 150Ah×2
	Alternator	24V - 80A
	Starter	24V - 4.5kw
EXHAUST SYSTEM	Type	Mounted at frame side

https://truckmanualshub.com/

CAB

CARGO F3CBF

CAB	Type	All –welded cab of tilt type Hydraulic Tilt. Tilt angle 50 °
	Number of crew	2
	Cab suspension	Coil spring & shock absorber
INSTRUMENTATION	Gauges & meters	Speedometer Water temperature gauge Air pressure gauge, fuel gauge Engine tachometer gauge
SEAT & BED	Driver seat	Height adjustable, rigid seat Sliding & reclining, Equipped with head rest
	Passenger seat	Rigid type, full folding & reclining
	Bed	Equipped one bed
	Covering	Tricot
WIPER	Type	Two blade, 3-speed wiper with electrical washer
HEATING		Heater & Defroster
GLASS & MIRROR	Windshield	Laminated safety glass
	Door glass	Tempered safety glass
	Outside mirror	Convex mirror
LAMP	Front	Head & fog lamp, turn signal lamp Position lamp
	Rear	Position, stop, turn signal lamp Reverse lamp License plate lamp
TOOLS	Tools	Hydraulic Jack, Wrench monkey Wrench & Handle-Wheel nut Driver, Spare tire handle, etc
	Spare tire	One with mounting bracket

https://truckmanualshub.com/

GENERAL

CARGO F4CEF

DIAGRAM

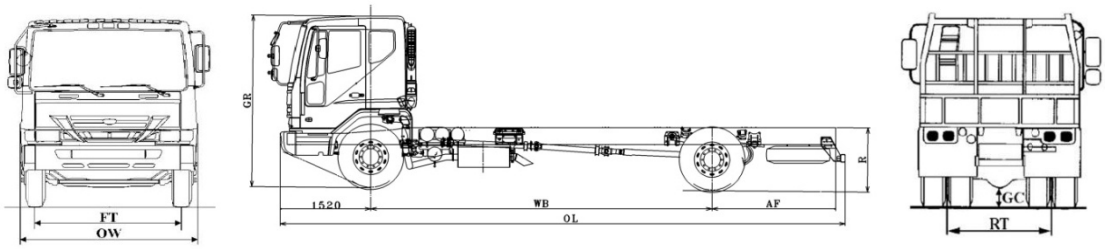

DIMENSIONS (mm)	Overall	Length	OL	7,960
		Width	OW	2,495
		Height	OH	2,915
	Tread	Front	FT	2,050
		Rear	RT	1,855
	Wheelbase		WB	4,650
	Rear axle to frame		AF	1,790
	Ground to roof		GR	2,905
	Frame-ground above bogie		R	1,070
	Usable cab to axle		CA	3,900
	Min. ground clearance			260
WEIGHTS (kg)	Chassis weight	Front		3,835
		Rear		2,075
		Total		5,910
	Curb weight			5,910
	Axle load	Front		6,500
		Rear		11,500
	Permissible G.V.W			18,000
PERFORMANCE	Max. speed		(km/h)	99
	Max. gradeability		(%)	51.1
	Min. turning radius		(m)	8.5

https://www.truck-manuals.net/

POWER TRAIN

CARGO F4CEF

ENGINE	Manufacturer	DOOSAN INFRACORE
	Model	DE12TIS
	Emission certificate	EURO Ⅱ
	Type	Turbo intercooled, diesel engine
	Maximum power	320ps (235kw)/ 2,100rpm
	Maximum torque	135kg.m (1323N.m)/ 1,260rpm
	No. of cylinder	In Line 6- cylinder
	Bore×Stroke	121×155(mm)
	Displacement	11,051cc
	Controller type	Mechanical
	Air cleaner	Dry paper elements
CLUTCH	Type	Hydraulic control with air assisted Dry single plate with diaphragm
	Plate diameter	Outside diameter : 430mm(17 ″)
TRANSMISSION	Model	T10S6
	Speed	6 Forward / 1 Reverse
	Gear ratio	1st 7.077
		2nd 4.100
		3rd 2.370
		4th 1.576
		5th 1.000
		6th 0.744
		Reverse 6.720
FRONT AXLE	Type	Reverse elliot “I” beam
	Axle capacity	6,500kg
REAR AXLE	Type	Banjo single reduction
	Final drive ratio	5.571
	Axle capacity	11,500kg
TIRE & WHEEL (Standard)	Tire	12R22.5-16PR
	Disc wheel	8.25V×22.5
	No. of wheel studs	10

https://truckmanualshub.com/

CHASSIS

CARGO F4CEF

FRAME	Type	Ladder type, single channel
	Size (H×W×T)	286×90 ×7 mm
		Frame width behind cab : 850mm
	Towing hook	Equipped front & rear
STEERING	Handle position	Left-hand drive
	Type	Recirculating ball with integral power assisted by oil
	Steering column	Tilt & Telescopic
	Steering wheel	2-spoke wheel with horn button
FRONT SUSPENSION	Type	Semi-elliptical leaf spring
	Size (L×W)	1,500mm×90mm
REAR SUSPENSION	Type	Semi-elliptical leaf spring
	Size (L×W)	1,420mm×100mm
BRAKE	Service brake	Full air brake with dual circuit
	Drum diameter	410mm
	Lining Front	414mm×155mm
	Rear	414mm×203mm
	Material	Non-asbestos
	Parking brake	Spring actuator at rear wheels
	Auxiliary brake	Exhaust brake
	Air dryer	One equipped
FUEL TANK	Volume	200 ℓ
	Material	Made of pressing steel
	Cap	Equipped key lock
ELECTRICAL SYSTEM	Battery	12V - 150Ah×2
	Alternator	24V - 80A
	Starter	24V – 6.0kw
EXHAUST SYSTEM	Type	Mounted at frame side

https://truckmanualshub.com/

CAB

CARGO F4CEF

CAB	Type	All –welded cab of tilt type Hydraulic Tilt. Tilt angle 50 °
	Number of crew	2
	Cab suspension	Coil spring & shock absorber
INSTRUMENTATION	Gauges & meters	Speedometer Water temperature gauge Air pressure gauge, fuel gauge Engine tachometer gauge
SEAT & BED	Driver seat	Height adjustable, rigid seat Sliding & reclining, Equipped with head rest
	Passenger seat	Rigid type, full folding & reclining
	Bed	Equipped one bed
	Covering	Tricot
WIPER	Type	Two blade, 3-speed wiper with electrical washer
HEATING		Heater & Defroster
GLASS & MIRROR	Windshield	Laminated safety glass
	Door glass	Tempered safety glass
	Outside mirror	Convex mirror
LAMP	Front	Head & fog lamp, turn signal lamp Position lamp
	Rear	Position, stop, turn signal lamp Reverse lamp License plate lamp
TOOLS	Tools	Hydraulic Jack, Wrench monkey Wrench & Handle-Wheel nut Driver, Spare tire handle, etc
	Spare tire	One with mounting bracket

https://truckmanualshub.com/

GENERAL

CARGO F8CEF

DIAGRAM

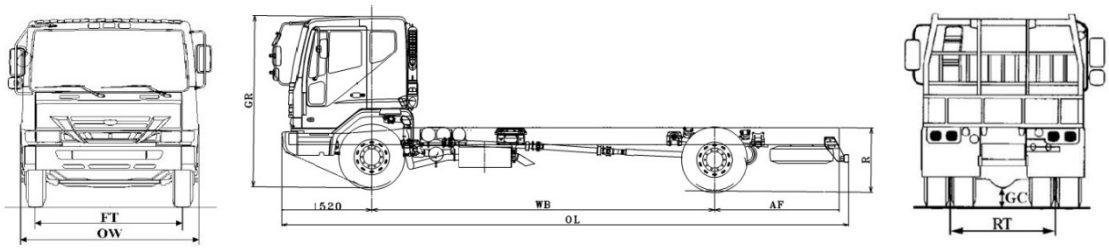

DIMENSIONS (mm)	Overall	Length	OL	10,285
		Width	OW	2,495
		Height	OH	2,915
	Tread	Front	FT	2,050
		Rear	RT	1,855
	Wheelbase		WB	6,150
	Rear axle to frame		AF	2,460
	Ground to roof		GR	2,905
	Frame-ground above bogie		R	1,070
	Usable cab to axle		CA	5,375
	Min. ground clearance			265
WEIGHTS (kg)	Chassis weight	Front		4,250
		Rear		2,180
		Total		6,430
	Curb weight			6,430
	Axle load	Front		6,500
		Rear		11,500
	Permissible G.V.W			18,000
PERFORMANCE	Max. speed		(km/h)	99
	Max. gradeability		(%)	51.1
	Min. turning radius		(m)	10.2

https://truckmanualshub.com/

POWER TRAIN

CARGO F8CEF

ENGINE	Manufacturer	DOOSAN INFRACORE
	Model	DE12TIS
	Emission certificate	EURO Ⅱ
	Type	Turbo intercooled, diesel engine
	Maximum power	320ps (235kw)/ 2,100rpm
	Maximum torque	135kg.m (1323N.m)/ 1,260rpm
	No. of cylinder	In Line 6- cylinder
	Bore×Stroke	121×155(mm)
	Displacement	11,051cc
	Controller type	Mechanical
	Air cleaner	Dry paper elements
CLUTCH	Type	Hydraulic control with air assisted Dry single plate with diaphragm
	Plate diameter	Outside diameter : 430mm(17 ˝)
TRANSMISSION	Model	T10S6
	Speed	6 Forward / 1 Reverse
	Gear ratio	1st 7.077
		2nd 4.100
		3rd 2.370
		4th 1.576
		5th 1.000
		6th 0.744
		Reverse 6.720
FRONT AXLE	Type	Reverse elliot “I” beam
	Axle capacity	6,500kg
REAR AXLE	Type	Banjo single reduction
	Final drive ratio	5.571
	Axle capacity	11,500kg
TIRE & WHEEL (Standard)	Tire	12R22.5-16PR
	Disc wheel	8.25V×22.5
	No. of wheel studs	10

https://truckmanualshub.com/

CHASSIS

CARGO F8CEF

FRAME	Type	Ladder type, single channel
	Size (H×W×T)	286×90 ×7 mm
		Frame width behind cab : 850mm
	Towing hook	Equipped front & rear
STEERING	Handle position	Left-hand drive
	Type	Recirculating ball with integral power assisted by oil
	Steering column	Tilt & Telescopic
	Steering wheel	2-spoke wheel with horn button
FRONT SUSPENSION	Type	Semi-elliptical leaf spring
	Size (L×W)	1,500mm×90mm
REAR SUSPENSION	Type	Semi-elliptical leaf spring
	Size (L×W)	1,420mm×100mm
BRAKE	Service brake	Full air brake with dual circuit
	Drum diameter	410mm
	Lining Front	414mm×155mm
	Rear	414mm×203mm
	Material	Non-asbestos
	Parking brake	Spring actuator at rear wheels
	Auxiliary brake	Exhaust brake
	Air dryer	One equipped
FUEL TANK	Volume	200 ℓ
	Material	Made of pressing steel
	Cap	Equipped key lock
ELECTRICAL SYSTEM	Battery	12V - 150Ah×2
	Alternator	24V - 80A
	Starter	24V – 6.0kw
EXHAUST SYSTEM	Type	Mounted at frame side

https://truckmanualshub.com/

CAB

CARGO F8CEF

CAB	Type	All –welded cab of tilt type Hydraulic Tilt. Tilt angle 50 °
	Number of crew	2
	Cab suspension	Coil spring & shock absorber
INSTRUMENTATION	Gauges & meters	Speedometer Water temperature gauge Air pressure gauge, fuel gauge Engine tachometer gauge
SEAT & BED	Driver seat	Height adjustable, rigid seat Sliding & reclining, Equipped with head rest
	Passenger seat	Rigid type, full folding & reclining
	Bed	Equipped one bed
	Covering	Tricot
WIPER	Type	Two blade, 3-speed wiper with electrical washer
HEATING		Heater & Defroster
GLASS & MIRROR	Windshield	Laminated safety glass
	Door glass	Tempered safety glass
	Outside mirror	Convex mirror
LAMP	Front	Head & fog lamp, turn signal lamp Position lamp
	Rear	Position, stop, turn signal lamp Reverse lamp License plate lamp
TOOLS	Tools	Hydraulic Jack, Wrench monkey Wrench & Handle-Wheel nut Driver, Spare tire handle, etc
	Spare tire	One with mounting bracket

https://truckmanualshub.com/

GENERAL CARGO K7CEF

DIAGRAM

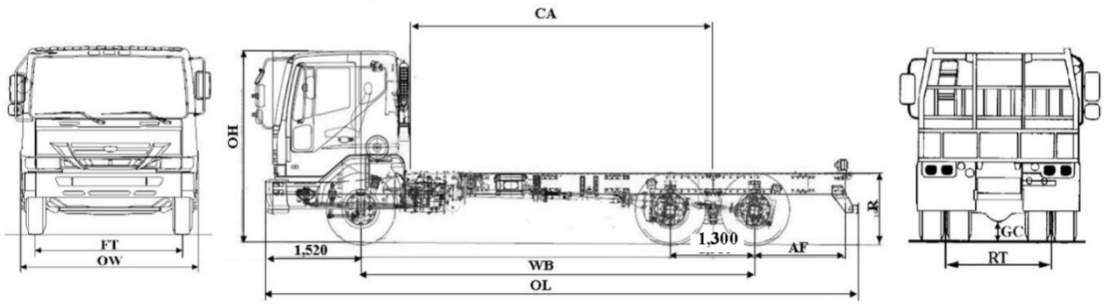

DIMENSIONS (mm)	Overall	Length	OL	9,830
		Width	OW	2,495
		Height	OH	2,915
	Tread	Front	FT	2,050
		Rear	RT	1,855
	Wheelbase		WB	5,800
	Rear axle to frame		AF	2,510
	Ground to roof		GR	2,915
	Frame-ground above bogie		R	1,110
	Usable cab to axle		CA	4,400
	Min. ground clearance			270

WEIGHTS (kg)	Chassis weight	Front	3,980
		Rear	3,820
		Total	7,800
	Curb weight		7,800
	Axle load	Front	6,500
		Rear	23,000
	Permissible G.V.W		29,500

PERFORMANCE	Max. speed	(km/h)	99
	Max. gradeability	(%)	34.4
	Min. turning radius	(m)	9.1

https://truckmanualshub.com/

POWER TRAIN

CARGO K7CEF

ENGINE	Manufacturer	DOOSAN INFRACORE
	Model	DE12TIS
	Emission certificate	EURO Ⅱ
	Type	Turbo intercooled, diesel engine
	Maximum power	340ps (250kw)/ 2,100rpm
	Maximum torque	145kg.m (1421N.m)/ 1,260rpm
	No. of cylinder	In Line 6- cylinder
	Bore×Stroke	123×155(mm)
	Displacement	11,051cc
	Controller type	Mechanical
	Air cleaner	Dry paper elements
CLUTCH	Type	Hydraulic control with air assisted Dry single plate with diaphragm
	Plate diameter	Outside diameter : 430mm(17 ″)
TRANSMISSION	Model	T15S6
	Speed	6 Forward / 1 Reverse
	Gear ratio	1st 7.263
		2nd 4.207
		3rd 2.526
		4th 1.569
		5th 1.000
		6th 0.699
		Reverse 6.857
FRONT AXLE	Type	Reverse elliot "I" beam
	Axle capacity	6,500kg
REAR AXLE	Type	Banjo single reduction
	Final drive ratio	5.571
	Axle capacity	23,000kg
TIRE & WHEEL (Standard)	Tire	12R22.5-16PR
	Disc wheel	8.25V×22.5
	No. of wheel studs	10

https://truckmanualshub.com/

CHASSIS

CARGO K7CEF

FRAME	Type	Ladder type, single channel
	Size (H×W×T)	320×90 ×8 mm
		Frame width behind cab : 850mm
	Towing hook	Equipped front & rear
STEERING	Handle position	Left-hand drive
	Type	Recirculating ball with integral power assisted by oil
	Steering column	Tilt & Telescopic
	Steering wheel	2-spoke wheel with horn button
FRONT SUSPENSION	Type	Semi-elliptical leaf spring
	Size (L×W)	1,500mm×90mm
REAR SUSPENSION	Type	Semi-elliptical leaf spring
	Size (L×W)	1,300mm×90mm
BRAKE	Service brake	Full air brake with dual circuit
	Drum diameter	410mm
	Lining Front	414mm×155mm
	Rear	414mm×203mm
	Material	Non-asbestos
	Parking brake	Spring actuator at rear wheels
	Auxiliary brake	Exhaust brake
	Air dryer	One equipped
FUEL TANK	Volume	400 ℓ
	Material	Made of pressing steel
	Cap	Equipped key lock
ELECTRICAL SYSTEM	Battery	12V - 150Ah×2
	Alternator	24V - 80A
	Starter	24V - 6.0kw
EXHAUST SYSTEM	Type	Mounted at frame side

https://truckmanualshub.com/

CAB

CARGO K7CEF

CAB	Type	All –welded cab of tilt type Hydraulic Tilt. Tilt angle 50 °
	Number of crew	2
	Cab suspension	Coil spring & shock absorber
INSTRUMENTATION	Gauges & meters	Speedometer Water temperature gauge Air pressure gauge, fuel gauge Engine tachometer gauge
SEAT & BED	Driver seat	Height adjustable, rigid seat Sliding & reclining, Equipped with head rest
	Passenger seat	Rigid type, full folding & reclining
	Bed	Equipped one bed
	Covering	Tricot
WIPER	Type	Two blade, 3-speed wiper with electrical washer
HEATING		Heater & Defroster
GLASS & MIRROR	Windshield	Laminated safety glass
	Door glass	Tempered safety glass
	Outside mirror	Convex mirror
LAMP	Front	Head & fog lamp, turn signal lamp Position lamp
	Rear	Position, stop, turn signal lamp Reverse lamp License plate lamp
TOOLS	Tools	Hydraulic Jack, Wrench monkey Wrench & Handle-Wheel nut Driver, Spare tire handle, etc
	Spare tire	One with mounting bracket

https://truckmanualshub.com/

GENERAL

CARGO K9KEF

DIAGRAM

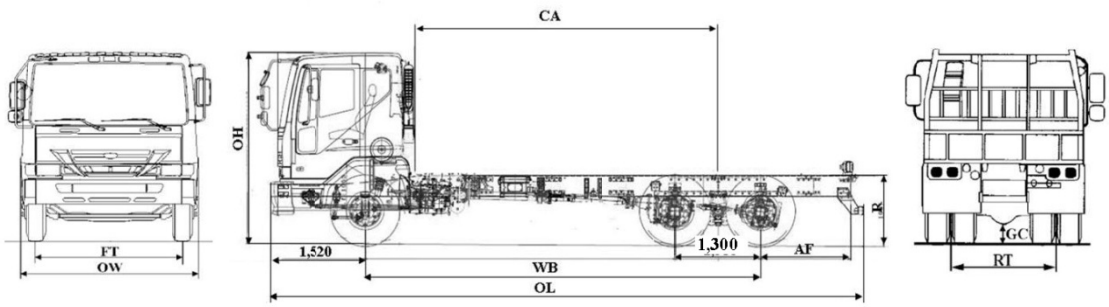

DIMENSIONS (mm)

Overall	Length	OL	11,750
	Width	OW	2,495
	Height	OH	2,915
Tread	Front	FT	2,050
	Rear	RT	1,855
Wheelbase		WB	7,000
Rear axle to frame		AF	3,070
Ground to roof		GR	2,915
Frame-ground above bogie		R	1,100
Usable cab to axle		CA	5,625
Min. ground clearance			245

WEIGHTS (kg)

Chassis weight	Front	3,935
	Rear	5,060
	Total	8,995
Curb weight		8,995
Axle load	Front	6,500
	Rear	23,000
Permissible G.V.W		29,500

PERFORMANCE

Max. speed	(km/h)	108
Max. gradeability	(%)	34.7
Min. turning radius	(m)	11.4

https://truckmanualshub.com/

POWER TRAIN

CARGO K9KEF

ENGINE	Manufacturer	DOOSAN INFRACORE
	Model	DE12TIS
	Emission certificate	EURO Ⅱ
	Type	Turbo intercooled, diesel engine
	Maximum power	340ps (250kw)/ 2,100rpm
	Maximum torque	145kg.m (1421N.m)/ 1,260rpm
	No. of cylinder	In Line 6- cylinder
	Bore×Stroke	123×155(mm)
	Displacement	11,051cc
	Controller type	Mechanical
	Air cleaner	Dry paper elements
CLUTCH	Type	Hydraulic control with air assisted Dry single plate with diaphragm
	Plate diameter	Outside diameter : 430mm(17 ″)
TRANSMISSION	Model	T15S6
	Speed	6 Forward / 1 Reverse
	Gear ratio	1st 7.263
		2nd 4.207
		3rd 2.526
		4th 1.569
		5th 1.000
		6th 0.699
		Reverse 6.857
FRONT AXLE	Type	Reverse elliot “I” beam
	Axle capacity	6,500kg
REAR AXLE	Type	Banjo single reduction
	Final drive ratio	5.571
	Axle capacity	23,000kg
TIRE & WHEEL (Standard)	Tire	12R22.5-16PR
	Disc wheel	8.25V×22.5
	No. of wheel studs	10

https://truckmanualshub.com/

CHASSIS

CARGO K9KEF

FRAME	Type	Ladder type, single channel
	Size (H×W×T)	320×90 ×8 mm
		Frame width behind cab : 850mm
	Towing hook	Equipped front & rear
STEERING	Handle position	Left-hand drive
	Type	Recirculating ball with integral power assisted by oil
	Steering column	Tilt & Telescopic
	Steering wheel	2-spoke wheel with horn button
FRONT SUSPENSION	Type	Semi-elliptical leaf spring
	Size (L×W)	1,500mm×90mm
REAR SUSPENSION	Type	Semi-elliptical leaf spring
	Size (L×W)	1,300mm×90mm
BRAKE	Service brake	Full air brake with dual circuit
	Drum diameter	410mm
	Lining Front	414mm×155mm
	Rear	414mm×203mm
	Material	Non-asbestos
	Parking brake	Spring actuator at rear wheels
	Auxiliary brake	Exhaust brake
	Air dryer	One equipped
FUEL TANK	Volume	400 ℓ
	Material	Made of pressing steel
	Cap	Equipped key lock
ELECTRICAL SYSTEM	Battery	12V - 150Ah×2
	Alternator	24V - 80A
	Starter	24V - 6.0kw
EXHAUST SYSTEM	Type	Mounted at frame side

https://truckmanualshub.com/

CAB

CARGO K9KEF

CAB	Type	All –welded cab of tilt type Hydraulic Tilt. Tilt angle 50 °
	Number of crew	2
	Cab suspension	Coil spring & shock absorber
INSTRUMENTATION	Gauges & meters	Speedometer Water temperature gauge Air pressure gauge, fuel gauge Engine tachometer gauge
SEAT & BED	Driver seat	Height adjustable, rigid seat Sliding & reclining, Equipped with head rest
	Passenger seat	Rigid type, full folding & reclining
	Bed	Equipped one bed
	Covering	Tricot
WIPER	Type	Two blade, 3-speed wiper with electrical washer
HEATING		Heater & Defroster
GLASS & MIRROR	Windshield	Laminated safety glass
	Door glass	Tempered safety glass
	Outside mirror	Convex mirror
LAMP	Front	Head & fog lamp, turn signal lamp Position lamp
	Rear	Position, stop, turn signal lamp Reverse lamp License plate lamp
TOOLS	Tools	Hydraulic Jack, Wrench monkey Wrench & Handle-Wheel nut Driver, Spare tire handle, etc
	Spare tire	One with mounting bracket

https://truckmanualshub.com/

GENERAL

CARGO K9LEF

DIAGRAM

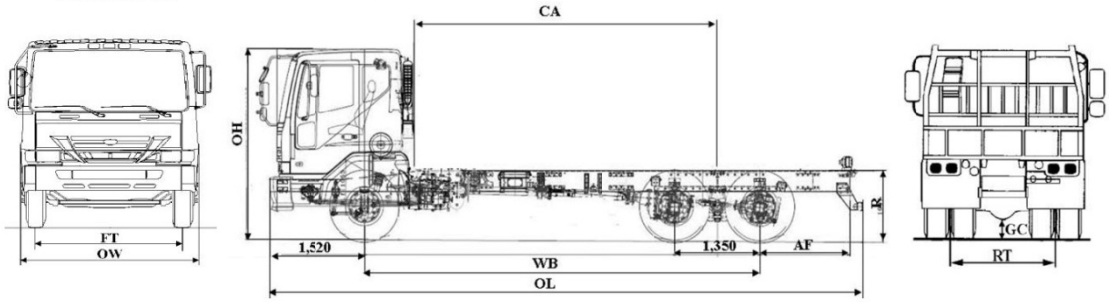

DIMENSIONS (mm)

Overall	Length	OL	12,105
	Width	OW	2,495
	Height	OH	2,915
Tread	Front	FR	2,060
	Rear	RT	1,850
Wheelbase		WB	7,535
Rear axle to frame		AF	2,885
Frame-ground above bogie		R	1,100
Usable cab to axle		CA	6,070
Min. ground clearance			235

WEIGHTS (kg)

Chassis weight	Front	4,035
	Rear	5,175
	Total	9,210
Curb Weight		9,210
Axle load	Front	8,100
	Rear	23,000
Permissible G.V.W		31,100

PERFORMANCE

Max. speed	(km/h)	108
Max. gradeability	(%)	33.4
Min. turning radius	(m)	11.1

https://truckmanualshub.com/

POWER TRAIN

CARGO K9LEF

ENGINE	Manufacturer		Doosan Infracore
	Model		DE12TiS
	Emission certificate		EURO II
	Type		Turbo intercooler, diesel engine
	Maximum power		340ps (250kw)/ 2,100rpm
	Maximum torque		145kg.m (1421N.m)/ 1,260rpm
	No. of cylinder		In line 6- cylinder
	Bore × Stroke		123 × 155(mm)
	Displacement		11,051cc
	Controller type		Mechanical
	Air cleaner		Dry paper elements
CLUTCH	Type		Hydraulic control with air assisted Dry single plate with diaphragm
	Plate diameter		Outside diameter : 430mm
TRANSMISSION	Model		T15S6
	Speed		6 Forward / 1 Reverse
	Gear ratio		7.263/4.207/2.526/1.569/1.000/ 0.699/6.857(R)
FRONT AXLE	Type		Reverse elliot "I" beam
	Axle capacity		8,100kg
REAR AXLE	Type		Banjo single reduction
	Final drive ratio		5.571
	Axle capacity		23,000kg
TIRE & WHEEL (STANDARD)	Tire	Front	315/80R22.5-18PR
		Rear	12R22.5-16PR
	Disc wheel	Front	9.0x22.5
		Rear	8.25 × 22.5
	No. of wheel studs		10

https://truckmanualshub.com/

CHASSIS

CARGO K9LEF

FRAME	Type	Ladder type, single channel
	Size (H×W×T)	320×90×8 (mm)
		Frame width behind cab : 850mm
	Towing hook	Equipped front & rear
STEERING	Driving position	Left-hand drive
	Type	Recirculating ball with integral power assisted by oil
	Steering column	Tilt & Telescopic
	Steering wheel	2-spoke wheel with horn button
FRONT SUSPENSION	Type	Semi-elliptical leaf spring
	Size (L×W)	1,500mm×90mm
REAR SUSPENSION	Type	Semi-elliptical leaf spring
	Size (L×W)	1,350mm×90mm
BRAKE	Service brake	Full air brake with dual circuit
	Drum diameter	410mm
	Lining Front	414mm ×155mm
	Rear	414mm ×203mm
	Material	Non-Asbestos
	Parking brake	Acting on spring actuator at rear wheels
	Auxiliary brake	Exhaust brake
	Air dryer	One equipped
FUEL TANK	Volume	400 ℓ
	Material	Made of pressing steel
	Cap	Equipped key lock
ELECTRICAL SYSTEM	Battery	12V - 150Ah×2
	Alternator	24V - 80A
	Starter	24V - 6.0kw
EXHAUST SYSTEM	Type	Mounted longitudinal

https://truckmanualshub.com/

CAB

CARGO K9LEF

CAB	Type	All –welded cab of tilt type Hydraulic Tilt. Tilt angle 50 °
	Number of crew	2
	Cab suspension	Coil spring & shock absorber
INSTRUMENTATION	Gauges & meters	Speedometer Water temperature gauge Air pressure gauge, fuel gauge Engine tachometer gauge
SEAT & BED	Driver seat	Height adjustable, Air Suspension, Sliding & reclining, Equipped with head rest
	Passenger seat	Rigid type, full folding & reclining
	Bed	Equipped one bed
	Covering	Tricot
WIPER	Type	Two blade, 3-speed wiper with electrical washer
HEATING		Heater & Defroster
GLASS & MIRROR	Windshield	Laminated safety glass
	Door glass	Tempered safety glass
	Outside mirror	Convex mirror
LAMP	Front	Head & fog lamp, turn signal lamp Position lamp
	Rear	Position, stop, turn signal lamp Reverse lamp License plate lamp
TOOLS	Tools	Hydraulic Jack, Wrench monkey Wrench & Handle-Wheel nut Driver, Spare tire handle, etc

https://truckmanualshub.com/

GENERAL

CARGO M8AEF

DIAGRAM

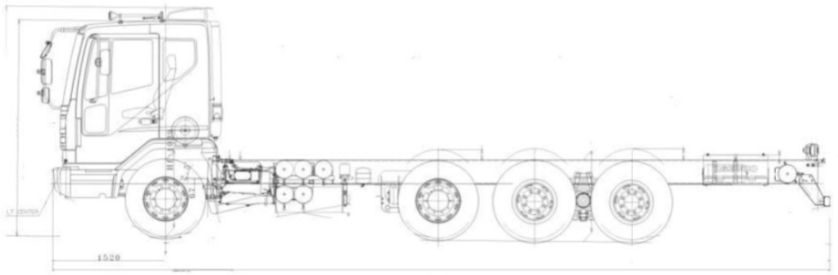

DIMENSIONS (mm)

Overall	Length	OL	10,280
	Width	OW	2,495
	Height	OH	2,915
Tread	Front	FT	2,050
	Rear	RT	1,855
Wheelbase		WB	6,250
Rear axle to frame		AF	2,510
Ground to roof		GR	2,915
Frame-ground above bogie		R	1,110
Usable cab to axle		CA	4,875
Ground to deck floor		GD	1,430
Min. ground clearance			270

WEIGHTS (kg)

Chassis weight	Front	4,770
	Rear	4,800
	Total	9,570
Curb weight		9,570
Axle load	Front	7,500
	Pusher	7,500
	Rear	23,000
Permissible G.V.W		38,000

PERFORMANCE

Max. speed	(km/h)	101
Max. gradeability	(%)	48.2
Min. turning radius	(m)	10.2

https://truckmanualshub.com/

POWER TRAIN CARGO M8AEF

ENGINE	Manufacturer	DOOSAN INFRACORE
	Model	DE12TIS
	Emission certificate	EURO Ⅱ
	Type	Turbo intercooler, diesel engine
	Maximum power	340ps (250kw)/ 2,100rpm
	Maximum torque	145kg.m (1421N.m)/ 1,260rpm
	No. of cylinder	In line 6- cylinder
	Bore×Stroke	123×155(mm)
	Displacement	11,051cc
	Controller type	Mechanical
	Air cleaner	Dry paper elements
CLUTCH	Type	Hydraulic control with air assisted Dry single plate with diaphragm
	Plate diameter	Outside diameter : 430mm(17 ″)
TRANSMISSION	Model	16S151
	Speed	16 Forward / 2 Reverse
	Gear ratio	13.80/11.54/9.490/7.930/6.530/ 5.460/4.570/3.820/3.020/2.530/ 2.080/1.740/1.430/1.200/1.000/ 0.840/12.92(R)/10.80(R)
FRONT AXLE	Type	Reverse elliot “I” beam
	Axle capacity	7,500kg
PUSHER AXLE	Type	Self steering, equipped with air spring lifting system
	Axle capacity	7,500kg
REAR AXLE	Type	Banjo single reduction
	Final drive ratio	5.571
	Axle capacity	23,000kg
TIRE & WHEEL (FRT & MID)	Tire	315/80R22.5-18PR / 20PR
	Disc wheel	9.0 x 22.5
	No. of wheel studs	10
TIRE & WHEEL (REAR)	Tire	12R22.5-16PR
	Disc wheel	8.25V x 22.5
	No. of wheel studs	10

https://truckmanualshub.com/

CHASSIS

CARGO M8AEF

FRAME	Type	Ladder type, single channel
	Size (H×W×T)	320×90×8 mm
		Frame width behind cab : 850mm
	Towing hook	Equipped front & rear
STEERING	Handle position	Left-hand drive
	Type	Recirculating ball with integral power assisted by oil
	Steering column	Tilt & Telescopic
	Steering wheel	2-spoke wheel with horn button
FRONT SUSPENSION	Type	Semi-elliptical leaf spring
	Size (L×W)	1,500mm×90mm
REAR SUSPENSION	Type	Semi-elliptical leaf spring
	Size (L×W)	1,300mm×90mm
BRAKE	Service brake	Full air brake dual circuit
	Drum diameter	410mm
	Lining Front	414mm×155mm
	Rear	414mm×203mm
	Material	Non - Asbestos
	Parking brake	Spring actuator at rear wheels
	Auxiliary brake	Exhaust brake
	Air dryer	One equipped
FUEL TANK	Volume	400 ℓ
	Material	Made of pressing steel
	Cap	Equipped key lock
ELECTRICAL SYSTEM	Battery	12V - 150Ah×2
	Alternator	24V - 80A
	Starter	24V - 6.0kw
EXHAUST SYSTEM	Type	Mounted longitudinal

https://truckmanualshub.com/

CAB

CARGO M8AEF

CAB	Type	All –welded cab of tilt type Hydraulic Tilt. Tilt angle 50 °
	Number of crew	2
	Cab suspension	Coil spring & shock absorber
	Exterior color	Alaskan white
INSTRUMENTATION	Gauges & meters	Speedometer, Water temperature gauge Air pressure gauge, fuel gauge Engine tachometer gauge
SEAT & BED	Driver seat	Height adjustable, rigid seat Sliding & reclining, Equipped with head rest
	Passenger seat	Rigid type, full folding & reclining
	Bed	Equipped one bed
	Covering	Tricot
WIPER	Type	Two blade, 3-speed wiper with electrical washer
HEATING		Heater & Defroster
GLASS & MIRROR	Windshield	Laminated safety glass
	Door glass	Tempered safety glass
	Outside mirror	Convex mirror
LAMP	Front	Head & fog lamp, turn signal lamp Position lamp
	Rear	Position, stop, turn signal lamp Reverse lamp License plate lamp
TOOLS	Tools	Hydraulic Jack, Wrench monkey Wrench & Handle-Wheel nut Driver, Spare tire handle, etc
	Spare tire	One equipped with mounting bracket

https://truckmanualshub.com/

GENERAL

CARGO M9AVF

DIAGRAM

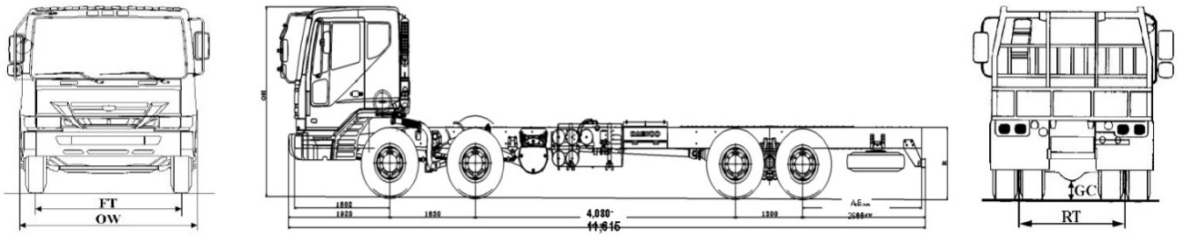

DIMENSIONS (mm)	Overall	Length	OL	11,590
		Width	OW	2,495
		Height	OH	2,915
	Tread	Front	FT	2,050
		Rear	RT	1,855
	Wheelbase		WB	7,010
	Rear axle to frame		AF	2,480
	Ground to roof		GR	2,915
	Frame-ground above bogie		R	1,110
	Min. ground clearance			270

WEIGHTS (kg)	Chassis weight	Front	6,140
		Rear	4,030
		Total	10,170
	Curb weight		10,170
	Axle load	Front	13,000
		Rear	23,000
	Permissible G.V.W		36,000

PERFORMANCE	Max. speed	(km/h)	110
	Max. gradeability	(%)	56.4
	Min. turning radius	(m)	10.7

https://truckmanualshub.com/

POWER TRAIN

CARGO M9AVF

ENGINE	Manufacturer	DOOSAN INFRACORE
	Model	DV15TIS
	Emission certificate	EURO Ⅱ
	Type	Turbo intercooled, diesel engine
	Maximum power	420ps (308kw)/ 2,100rpm
	Maximum torque	170kg.m (1666N.m)/ 1,200rpm
	No. of cylinder	Vee-90 ° 8 cylinder
	Bore × Stroke	128 × 142(mm)
	Displacement	14,618cc
	Controller type	Mechanical
	Air cleaner	Dry paper elements
CLUTCH	Type	Hydraulic control with air assisted Dry single plate with diaphragm
	Plate diameter	Outside diameter : 430mm(17 ″)
TRANSMISSION	Model	ZF16S1820TO
	Speed	16 Forward / 2 Reverse
	Gear ratio	1st 13.80 / 11.54
		2nd 9.490 / 7.930
		3rd 6.530 / 5.460
		4th 4.570 / 3.820
		5th 3.020 / 2.530
		6th 2.080 / 1.740
		7th 1.430 / 1.200
		8th 1.000 / 0.840
		Reverse 12.92 / 10.80
FRONT AXLE	Type	Reverse elliot "I" beam
	Axle capacity	13,000kg
REAR AXLE	Type	Banjo single reduction
	Final drive ratio	4.444
	Axle capacity	23,000kg
TIRE & WHEEL (STANDARD)	Tire	12R22.5-16PR
	Disc wheel	8.25V × 22.5
	No. of wheel studs	10

https://truckmanualshub.com/

CHASSIS

CARGO M9AVF

FRAME	Type	Ladder type, double channel
	Size (H×W×T)	320×90×(8 + 7) mm
		Frame width behind cab : 850mm
	Towing hook	Equipped front & rear
STEERING	Handle position	Left-hand drive
	Type	Recirculating ball with integral power assisted by oil
	Steering column	Tilt & Telescopic
	Steering wheel	2-spoke wheel with horn button
FRONT SUSPENSION	Type	Semi-elliptical leaf spring
	Size (L×W)	1,500mm×90mm
REAR SUSPENSION	Type	Semi-elliptical leaf spring
	Size (L×W)	1,300mm×90mm
BRAKE	Service brake	Full air brake with dual circuit
	Drum diameter	410mm
	Lining Front	414mm×155mm
	Rear	414mm×203mm
	Material	Non-asbestos
	Parking brake	Spring actuator at rear wheels
	Auxiliary brake	Exhaust brake
	Air dryer	One equipped
FUEL TANK	Volume	400 ℓ
	Material	Made of pressing steel
	Cap	Equipped key lock
ELECTRICAL SYSTEM	Battery	12V - 150Ah×2
	Alternator	24V - 80A
	Starter	24V - 7.0kw
EXHAUST SYSTEM	Type	Mounted at frame side

https://truckmanualshub.com/

CAB

CARGO M9AVF

CAB	Type	All –welded cab of tilt type Hydraulic Tilt. Tilt angle 50 °
	Number of crew	2
	Cab suspension	Coil spring & shock absorber
INSTRUMENTATION	Gauges & meters	Speedometer Water temperature gauge Air pressure gauge, fuel gauge Engine tachometer gauge
SEAT & BED	Driver seat	Height adjustable, rigid seat Sliding & reclining, Equipped with head rest
	Passenger seat	Rigid type, full folding & reclining
	Bed	Equipped one bed
	Covering	Tricot
WIPER	Type	Two blade, 3-speed wiper with electrical washer
HEATING		Heater & Defroster
GLASS & MIRROR	Windshield	Laminated safety glass
	Door glass	Tempered safety glass
	Outside mirror	Convex mirror
LAMP	Front	Head & fog lamp, turn signal lamp Position lamp
	Rear	Position, stop, turn signal lamp Reverse lamp License plate lamp
TOOLS	Tools	Hydraulic Jack, Wrench monkey Wrench & Handle-Wheel nut Driver, Spare tire handle, etc
	Spare tire	One with mounting bracket

https://truckmanualshub.com/

GENERAL

CARGO M9CEF

DIAGRAM

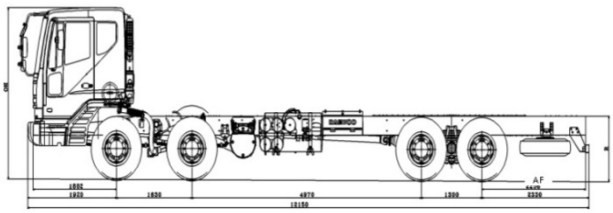

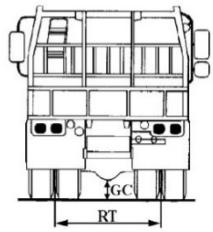

DIMENSIONS (mm)

Overall	Length	OL	12,150
	Width	OW	2,495
	Height	OH	2,915
Tread	Front	FT	2,080
	Rear	RT	1,850
Wheelbase		WB	7,900
Rear axle to frame		AF	2,295
Ground to roof		GR	2,915
Frame-ground above bogie		R	1,105
Usable cab to axle		CA	7,050
Min. ground clearance			260

WEIGHTS (kg)

Chassis weight	Front	6,320
	Rear	4,420
	Total	10,740
Curb weight		10,740
Axle load	Front	13,000
	Rear	23,000
Permissible G.V.W		36,000

PERFORMANCE

Max. speed	(km/h)	97
Max. gradeability	(%)	37.9
Min. turning radius	(m)	11.8

https://truckmanualshub.com/

POWER TRAIN

CARGO M9CEF

ENGINE	Manufacturer	DOOSAN INFRACORE
	Model	DE12TIS
	Emission certificate	EURO Ⅱ
	Type	Turbo intercooled, diesel engine
	Maximum power	340ps (313kw)/ 2,100rpm
	Maximum torque	145kg.m (1421N.m)/ 1,260rpm
	No. of cylinder	In line 6 Cylinder
	Bore×Stroke	123×155(mm)
	Displacement	11,051cc
	Controller type	Mechanical
	Air cleaner	Dry paper elements
CLUTCH	Type	Hydraulic control with air assisted Dry single plate with diaphragm
	Plate diameter	Outside diameter : 430mm(17 ″)
TRANSMISSION	Model	T14S10
	Speed	10 Forward / 2 Reverse
	Gear ratio	1st 9.555 / 7.428
		2nd 4.664 / 3.625
		3rd 2.730 / 2.122
		4th 1.658 / 1.289
		5th 1.000 / 0.777
		Reverse 9.668/ 7.516
FRONT AXLE	Type	Reverse elliot "I" beam
	Axle capacity	13,000kg
REAR AXLE	Type	Banjo single reduction
	Final drive ratio	5.571
	Axle capacity	23,000kg
TIRE & WHEEL (STANDARD)	Tire	12R22.5-16PR
	Disc wheel	8.25V×22.5
	No. of wheel studs	10

https://truckmanualshub.com/

CHASSIS

CARGO M9CEF

FRAME	Type	Ladder type, double channel
	Size (H×W×T)	320×90×(8 + 7) mm
		Frame width behind cab : 850mm
	Towing hook	Equipped front & rear
STEERING	Handle position	Left-hand drive
	Type	Recirculating ball with integral power assisted by oil
	Steering column	Tilt & Telescopic
	Steering wheel	2-spoke wheel with horn button
FRONT SUSPENSION	Type	Semi-elliptical leaf spring
	Size (L×W)	1,500mm×90mm
REAR SUSPENSION	Type	Semi-elliptical leaf spring
	Size (L×W)	1,300mm×90mm
BRAKE	Service brake	Full air brake with dual circuit
	Drum diameter	410mm
	Lining Front	414mm×155mm
	Rear	414mm×203mm
	Material	Non-asbestos
	Parking brake	Spring actuator at rear wheels
	Auxiliary brake	Exhaust brake
	Air dryer	One equipped
FUEL TANK	Volume	400 ℓ
	Material	Made of pressing steel
	Cap	Equipped key lock
ELECTRICAL SYSTEM	Battery	12V - 150Ah×2
	Alternator	24V - 80A
	Starter	24V - 6.0kw
EXHAUST SYSTEM	Type	Mounted at frame side

https://truckmanualshub.com/

CAB

CARGO M9CEF

CAB	Type	All –welded cab of tilt type Hydraulic Tilt. Tilt angle 50 °
	Number of crew	2
	Cab suspension	Coil spring & shock absorber
INSTRUMENTATION	Gauges & meters	Speedometer Water temperature gauge Air pressure gauge, fuel gauge Engine tachometer gauge
SEAT & BED	Driver seat	Height adjustable, rigid seat Sliding & reclining, Equipped with head rest
	Passenger seat	Rigid type, full folding & reclining
	Bed	Equipped one bed
	Covering	Tricot
WIPER	Type	Two blade, 3-speed wiper with electrical washer
HEATING		Heater & Defroster
GLASS & MIRROR	Windshield	Laminated safety glass
	Door glass	Tempered safety glass
	Outside mirror	Convex mirror
LAMP	Front	Head & fog lamp, turn signal lamp Position lamp
	Rear	Position, stop, turn signal lamp Reverse lamp License plate lamp
TOOLS	Tools	Hydraulic Jack, Wrench monkey Wrench & Handle-Wheel nut Driver, Spare tire handle, etc
	Spare tire	One with mounting bracket

https://truckmanualshub.com/

GENERAL

CARGO M9CVF

DIAGRAM

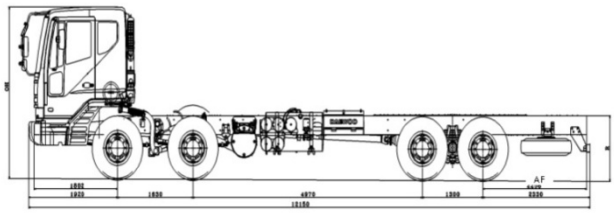

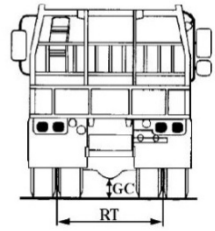

DIMENSIONS (mm)	Overall	Length	OL	12,150
		Width	OW	2,495
		Height	OH	2,915
	Tread	Front	FT	2,050
		Rear	RT	1,855
	Wheelbase		WB	7,900
	Rear axle to frame		AF	2,435
	Ground to roof		GR	2,915
	Frame-ground above bogie		R	1,110
	Usable cab to axle		CA	7,025
	Min. ground clearance			270

WEIGHTS (kg)	Chassis weight	Front	6,170
		Rear	4,010
		Total	10,180
	Curb weight		10,180
	Axle load	Front	13,000
		Rear	23,000
	Permissible G.V.W		36,000

PERFORMANCE	Max. speed	(km/h)	110
	Max. gradeability	(%)	56.4
	Min. turning radius	(m)	11.8

https://truckmanualshub.com/

POWER TRAIN

CARGO M9CVF

ENGINE	Manufacturer	DOOSAN INFRACORE
	Model	DV15TIS
	Emission certificate	EURO Ⅱ
	Type	Turbo intercooled, diesel engine
	Maximum power	420ps (308kw)/ 2,100rpm
	Maximum torque	170kg.m (1666N.m)/ 1,200rpm
	No. of cylinder	Vee-90 ° 8 cylinder
	Bore × Stroke	128 × 142(mm)
	Displacement	14,618cc
	Controller type	Mechanical
	Air cleaner	Dry paper elements
CLUTCH	Type	Hydraulic control with air assisted Dry single plate with diaphragm
	Plate diameter	Outside diameter : 430mm(17 ″)
TRANSMISSION	Model	ZF16S1820TO
	Speed	16 Forward / 2 Reverse
	Gear ratio	1st 13.80 / 11.54
		2nd 9.490 / 7.930
		3rd 6.530 / 5.460
		4th 4.570 / 3.820
		5th 3.020 / 2.530
		6th 2.080 / 1.740
		7th 1.430 / 1.200
		8th 1.000 / 0.840
		Reverse 12.92 / 10.80
FRONT AXLE	Type	Reverse elliot "I" beam
	Axle capacity	13,000kg
REAR AXLE	Type	Banjo single reduction
	Final drive ratio	4.444
	Axle capacity	23,000kg
TIRE & WHEEL (STANDARD)	Tire	12R22.5-16PR
	Disc wheel	8.25V × 22.5
	No. of wheel studs	10

https://truckmanualshub.com/

CHASSIS

CARGO M9CVF

FRAME	Type	Ladder type, double channel
	Size (H×W×T)	320×90×(8 + 7) mm
		Frame width behind cab : 850mm
	Towing hook	Equipped front & rear
STEERING	Handle position	Left-hand drive
	Type	Recirculating ball with integral power assisted by oil
	Steering column	Tilt & Telescopic
	Steering wheel	2-spoke wheel with horn button
FRONT SUSPENSION	Type	Semi-elliptical leaf spring
	Size (L×W)	1,500mm×90mm
REAR SUSPENSION	Type	Semi-elliptical leaf spring
	Size (L×W)	1,300mm×90mm
BRAKE	Service brake	Full air brake with dual circuit
	Drum diameter	410mm
	Lining Front	414mm×155mm
	Rear	414mm×203mm
	Material	Non-asbestos
	Parking brake	Spring actuator at rear wheels
	Auxiliary brake	Exhaust brake
	Air dryer	One equipped
FUEL TANK	Volume	400 ℓ
	Material	Made of pressing steel
	Cap	Equipped key lock
ELECTRICAL SYSTEM	Battery	12V - 150Ah×2
	Alternator	24V - 80A
	Starter	24V - 7.0kw
EXHAUST SYSTEM	Type	Mounted at frame side

https://truckmanualshub.com/

CAB

CARGO M9CVF

CAB	Type	All –welded cab of tilt type Hydraulic Tilt. Tilt angle 50 °
	Number of crew	2
	Cab suspension	Coil spring & shock absorber
INSTRUMENTATION	Gauges & meters	Speedometer Water temperature gauge Air pressure gauge, fuel gauge Engine tachometer gauge
SEAT & BED	Driver seat	Height adjustable, rigid seat Sliding & reclining, Equipped with head rest
	Passenger seat	Rigid type, full folding & reclining
	Bed	Equipped one bed
	Covering	Tricot
WIPER	Type	Two blade, 3-speed wiper with electrical washer
HEATING		Heater & Defroster
GLASS & MIRROR	Windshield	Laminated safety glass
	Door glass	Tempered safety glass
	Outside mirror	Convex mirror
LAMP	Front	Head & fog lamp, turn signal lamp Position lamp
	Rear	Position, stop, turn signal lamp Reverse lamp License plate lamp
TOOLS	Tools	Hydraulic Jack, Wrench monkey Wrench & Handle-Wheel nut Driver, Spare tire handle, etc
	Spare tire	One with mounting bracket

https://truckmanualshub.com/

GENERAL

CARGO P9CVF

DIAGRAM

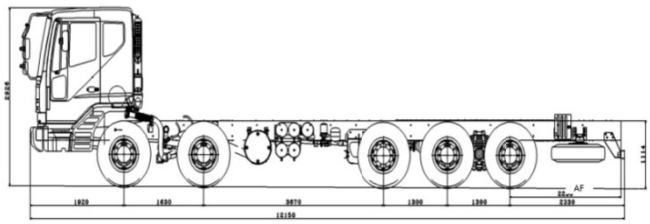

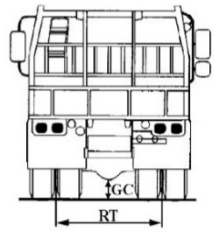

DIMENSIONS (mm)	Overall	Length	OL	12,150
		Width	OW	2,495
		Height	OH	2,915
	Tread	Front	FT	2,050
		Rear	RT	1,855
	Wheelbase		WB	7,900
	Rear axle to frame		AF	2,435
	Ground to roof		GR	2,915
	Frame-ground above bogie		R	1,110
	Usable cab to axle		CA	7,025
	Min. ground clearance			270

WEIGHTS (kg)	Chassis weight	Front	6,530
		Rear	4,880
		Total	11,410
	Curb weight		11,410
	Axle load	Front	13,400
		Middle	9,000
		Rear	23,000
	Permissible G.V.W		45,400

PERFORMANCE	Max. speed	(km/h)	110
	Max. gradeability	(%)	42.6
	Min. turning radius	(m)	11.9

https://truckmanualshub.com/

POWER TRAIN

CARGO P9CVF

ENGINE	Manufacturer	DOOSAN INFRACORE
	Model	DV15TIS
	Emission certificate	EURO Ⅱ
	Type	Turbo intercooled, diesel engine
	Maximum power	420ps (308kw)/ 2,100rpm
	Maximum torque	170kg.m (1666N.m)/ 1,200rpm
	No. of cylinder	Vee-90 ° 8 cylinder
	Bore×Stroke	128×142(mm)
	Displacement	14,618cc
	Controller type	Mechanical
	Air cleaner	Dry paper elements
CLUTCH	Type	Hydraulic control with air assisted Dry single plate with diaphragm
	Plate diameter	Outside diameter : 430mm(17 ″)
TRANSMISSION	Model	ZF16S1820TO
	Speed	16 Forward / 2 Reverse
	Gear ratio	1st 13.80 / 11.54
		2nd 9.490 / 7.930
		3rd 6.530 / 5.460
		4th 4.570 / 3.820
		5th 3.020 / 2.530
		6th 2.080 / 1.740
		7th 1.430 / 1.200
		8th 1.000 / 0.840
		Reverse 12.92 / 10.80
FRONT AXLE	Type	Reverse elliot "I" beam
	Axle capacity	13,400kg
REAR AXLE	Type	Banjo single reduction
	Axle capacity	4.444
	Final drive ratio	23,000kg
MIDDLE AXLE	Type	Air spring
	Axle capacity	9,000kg
TIRE & WHEEL		
- FRONT & REAR	Tire	12R22.5-16PR
	Disc wheel	8.25V×22.5
	No. of wheel studs	10
- MIDDLE	Tire	385/65R22.5-18PR
	Disc wheel	11.75×22.5
	No. of wheel studs	10

https://truckmanualshub.com/

CHASSIS

CARGO P9CVF

FRAME	Type	Ladder type, double channel
	Size (H×W×T)	320×90×(8 + 7) mm
		Frame width behind cab : 850mm
	Towing hook	Equipped front & rear
STEERING	Handle position	Left-hand drive
	Type	Recirculating ball with integral power assisted by oil
	Steering column	Tilt & Telescopic
	Steering wheel	2-spoke wheel with horn button
FRONT SUSPENSION	Type	Semi-elliptical leaf spring
	Size (L×W)	1,500mm×90mm
REAR SUSPENSION	Type	Semi-elliptical leaf spring
	Size (L×W)	1,300mm×90mm
BRAKE	Service brake	Full air brake with dual circuit
	Drum diameter	410mm
	Lining Front	414mm×155mm
	Rear	414mm×203mm
	Material	Non-asbestos
	Parking brake	Spring actuator at rear wheels
	Auxiliary brake	Exhaust brake
	Air dryer	One equipped
FUEL TANK	Volume	400 ℓ
	Material	Made of pressing steel
	Cap	Equipped key lock
ELECTRICAL SYSTEM	Battery	12V - 150Ah×2
	Alternator	24V - 80A
	Starter	24V - 7.0kw
EXHAUST SYSTEM	Type	Mounted at frame side

https://truckmanualshub.com/

CAB

CARGO P9CVF

CAB	Type	All –welded cab of tilt type Hydraulic Tilt. Tilt angle 50 °
	Number of crew	2
	Cab suspension	Coil spring & shock absorber
INSTRUMENTATION	Gauges & meters	Speedometer Water temperature gauge Air pressure gauge, fuel gauge Engine tachometer gauge
SEAT & BED	Driver seat	Height adjustable, rigid seat Sliding & reclining, Equipped with head rest
	Passenger seat	Rigid type, full folding & reclining
	Bed	Equipped one bed
	Covering	Tricot
WIPER	Type	Two blade, 3-speed wiper with electrical washer
HEATING		Heater & Defroster
GLASS & MIRROR	Windshield	Laminated safety glass
	Door glass	Tempered safety glass
	Outside mirror	Convex mirror
LAMP	Front	Head & fog lamp, turn signal lamp Position lamp
	Rear	Position, stop, turn signal lamp Reverse lamp License plate lamp
TOOLS	Tools	Hydraulic Jack, Wrench monkey Wrench & Handle-Wheel nut Driver, Spare tire handle, etc
	Spare tire	One with mounting bracket

https://www.truck-manuals.net/

GENERAL K4DEF

❑ DIAGRAM

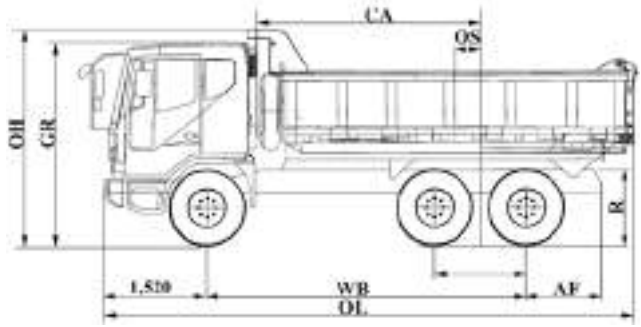

❑ DIMENSIONS (mm)

Overall	Length	OL	7,745
	Width	OW	2,495
	Height	OH	3,060
Tread	Front	FT	2,050
	Rear	RT	1,855
Wheelbase		WB	4,605
Rear axle to frame		AF	1,080
Ground to roof		GR	2,930
Frame-ground above bogie		R	1,100
Usable cab to axle		CA	3,170
Deck offset		OS	290
Deck inside	Length		4,900
	Width		2,300
	Height		900
	Volume (m^3)		10
Min. ground clearance			270

❑ WEIGHTS (kg)

Chassis weight	Front	4,280
	Rear	3,910
	Total	8,190
Curb weight		11,170
Nominal Payload		15,000
Axle load Front		6,500
Rear		23,000
Permissible G.V.W		29,500

❑ PERFORMANCE

Max. speed	(km/h)	96
Max. gradeability	(%)	39.9
Min. turning radius (m)		7.5
Dumping angle	(。)	53

https://www.truck-manuals.net/

POWER TRAIN

K4DEF

❑ **ENGINE**	Manufacturer	DOOSAN INFRACORE
	Model	DE12TIS
	Emission certificate	EURO Ⅱ
	Type	Turbo intercooler, diesel engine
	Maximum power	340ps (250kw)/ 2,100rpm
	Maximum torque	145kg.m (1421N.m)/ 1,260rpm
	No. of cylinder	In line 6- cylinder
	Bore×Stroke	123×155(mm)
	Displacement	11,051cc
	Controller type	Mechanical
	Air cleaner	Dry paper elements
❑ **CLUTCH**	Type	Hydraulic control with air assisted
	Plate diameter	Dry single plate with diaphragm Outside diameter : 430mm(17 ″)
❑ **TRANSMISSION**	Model	T15S6
	Speed	6 Forward / 1 Reverse
	Gear ratio	7.263/4.207/2.526/1.569/1.000/ 0.699/6.857(R)
❑ **FRONT AXLE**	Type	Reverse elliot “I” beam
	Axle capacity	6,500kg
❑ **REAR AXLE**	Type	Banjo single reduction
	Final drive ratio	6.166
	Axle capacity	23,000kg
❑ **TIRE & WHEEL**	Tire	12R22.5-16PR
	Disc wheel	8.25V×22.5
	No. of wheel studs	10

https://www.truck-manuals.net/

CHASSIS

K4DEF

❑ **FRAME**	Type		Ladder type, double channel
	Size (H × W × T)		320 × 90 × (8+7) (mm)
			Frame width behind cab: 850mm
	Towing hook		Equipped front & rear
❑ **STEERING**	Handle position		Left-hand drive
	Type		Recirculating ball with integral power assisted by oil
	Steering column		Tilt & Telescopic
	Steering wheel		2-spoke wheel with horn button
❑ **FRONT SUSPENSION**	Type		Semi-elliptical leaf spring
	Size (L × W)		1,500mm × 90mm
❑ **REAR SUSPENSION**	Type		Semi-elliptical leaf spring
	Size (L × W)		1,300mm × 90mm
❑ **BRAKE**	Service brake		Full air brake with dual circuit
	Drum diameter		410mm
	Lining	Front	414mm × 155mm
		Rear	414mm × 203mm
	Material		Non Asbestos
	Parking brake		Control by spring actuator at rear wheel
	Auxiliary brake		Exhaust brake
	Air dryer		One equipped
❑ **FUEL TANK**	Volume		400 ℓ
	Material		Made of pressing steel
	Cap		Equipped key lock
❑ **ELECTRICAL SYSTEM**	Battery		12V - 150Ah × 2
	Alternator		24V - 80A
	Starter		24V – 6.0kw
❑ **EXHAUST SYSTEM**	Type		Mounted longitudinal
❑ **DUMPING MECHANISM**	Type		Marrel
	Dumping capacity		22 ton
❑ **DECK**	Thickness	Floor	5.0mm
		Side	4.0mm

https://www.truck-manuals.net/

CAB K4DEF

❑ **CAB**	Type	All –welded cab of tilt type Hydraulic Tilt. Tilt angle 50 °
	Number of crew	2
	Cab suspension	Coil spring & shock absorber
❑ **INSTRUMENTATION**	Gauges & meters	Speedometer Water temperature gauge Air pressure gauge, fuel gauge Engine tachometer gauge
❑ **SEAT & BED**	Driver seat	Height adjustable, rigid seat Sliding & reclining, Equipped with head rest
	Passenger seat	Rigid type,semi folding & reclining
	Bed	Equipped one bed
	Covering	Tricot
❑ **WIPER**	Type	Two blade, 3-speed wiper with electrical washer
❑ **HEATING**		Heater & Defroster
❑ **GLASS & MIRROR**	Windshield	Laminated safety glass
	Door glass	Tempered safety glass
	Outside mirror	Convex mirror
❑ **LAMP**	Front	Head & fog lamp, turn signal lamp Position lamp
	Rear	Position, stop, turn signal lamp Reverse lamp License plate lamp
❑ **TOOLS**	Tools	Hydraulic Jack, Wrench monkey Wrench & Handle-Wheel nut Driver, Spare tire handle, etc
	Spare tire	One with mounting bracket

https://www.truck-manuals.net/

GENERAL K4DVF

❑ DIAGRAM

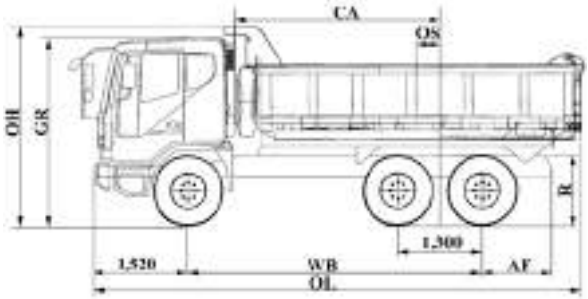

❑ DIMENSIONS (mm)

Overall	Length	OL	7,745
	Width	OW	2,495
	Height	OH	3,080
Tread	Front	FT	2,050
	Rear	RT	1,855
Wheelbase		WB	4,605
Rear axle to frame		AF	1,080
Ground to roof		GR	2,930
Frame-ground above bogie		R	1,070
Usable cab to axle		CA	3,205
Deck offset		OS	290
Deck inside	Length		4,900
	Width		2,300
	Height		900
	Volume (m^3)		10
Min. ground clearance			275

❑ WEIGHTS (kg)

Chassis weight	Front	4,685
	Rear	4,305
	Total	8,985
Curb weight		11,965
Nominal Payload		15,000
Axle load	Front	7,500
	Rear	26,000
Permissible G.V.W.		33,500

❑ PERFORMANCE

Max. speed	(km/h)	93
Max. gradeability	(%)	39.7
Min. turning radius	(m)	7.5
Dumping angle	(。)	53

https://www.truck-manuals.net/

POWER TRAIN

K4DVF

❑ **ENGINE**	Manufacturer	DOOSAN INFRACORE
	Model	DV15TIS
	Emission certificate	EURO Ⅱ
	Type	Turbo intercooler, diesel engine
	Maximum power	390ps (287kw)/ 2,100rpm
	Maximum torque	160kg.m (1569N.m)/ 1,200rpm
	No. of cylinder	Vee 8 cylinder
	Bore×Stroke	128×142(mm)
	Displacement	14,618cc
	Controller type	Mechanical
	Air cleaner	Dry paper elements
❑ **CLUTCH**	Type	Hydraulic control with air assisted Dry single plate with diaphragm
	Plate diameter	diameter : 430mm(17 ″)
❑ **TRANSMISSION**	Model	T16S6
	Speed	6 Forward / 1 Reverse
	Gear ratio	7.263/4.207/2.526/1.569/1.000/ 0.699/6.857(R)
❑ **FRONT AXLE**	Type	Reverse elliot “I” beam
	Axle capacity	7,500kg
❑ **REAR AXLE**	Type	Banjo single reduction
	Final drive ratio	6.166
	Axle capacity	26,000kg
❑ **TIRE & WHEEL**	Tire	12R22.5-16PR
	Wheel	8.25 x 11.25
	No. of wheel studs	10

https://truckmanualshub.com/

CHASSIS

DUMP K4DVF

FRAME	Type	Ladder type, double channel
	Size (H×W×T)	320×90×(8+7) (mm) Frame width behind cab : 850mm
	Towing hook	Equipped front & rear
STEERING	Handle position	Left-hand drive
	Type	Recirculating ball with integral power assisted by oil
	Steering column	Tilt & Telescopic
	Steering wheel	2-spoke wheel with horn button
FRONT SUSPENSION	Type	Semi-elliptical leaf spring
	Size (L×W)	1,500mm×90mm
REAR SUSPENSION	Type	Semi-elliptical leaf spring
	Size (L×W)	1,300mm×90mm
BRAKE	Service brake	Full air brake with dual circuit
	Drum diameter	410mm
	Lining Front	414mm×155mm
	Rear	414mm×203mm
	Material	Non Asbestos
	Parking brake	Control by spring actuator at rear wheel
	Auxiliary brake	Exhaust brake
	Air dryer	One equipped
FUEL TANK	Volume	400 ℓ
	Material	Made of pressing steel
	Cap	Equipped key lock
ELECTRICAL SYSTEM	Battery	12V - 150Ah×2
	Alternator	24V - 80A
	Starter	24V – 7.0kw
EXHAUST SYSTEM	Type	Mounted longitudinal
DUMPING MECHANISM	Type	Marrel
	Dumping capacity	22 ton
DECK	Thickness Floor	5.0mm
	Side	4.0mm

https://truckmanualshub.com/

CAB

DUMP K4DVF

CAB	Type	All –welded cab of tilt type Hydraulic Tilt. Tilt angle 50 °
	Number of crew	2
	Cab suspension	Coil spring & shock absorber
INSTRUMENTATION	Gauges & meters	Speedometer Water temperature gauge Air pressure gauge, fuel gauge Engine tachometer gauge
SEAT & BED	Driver seat	Height adjustable, rigid seat Sliding & reclining, Equipped with head rest
	Passenger seat	Rigid type,semi folding & reclining
	Bed	Equipped one bed
	Covering	Tricot
WIPER	Type	Two blade, 3-speed wiper with electrical washer
HEATING		Heater & Defroster
GLASS & MIRROR	Windshield	Laminated safety glass
	Door glass	Tempered safety glass
	Outside mirror	Convex mirror
LAMP	Front	Head & fog lamp, turn signal lamp Position lamp
	Rear	Position, stop, turn signal lamp Reverse lamp License plate lamp
TOOLS	Tools	Hydraulic Jack, Wrench monkey Wrench & Handle-Wheel nut Driver, Spare tire handle, etc
	Spare tire	One with mounting bracket

https://truckmanualshub.com/

GENERAL

DUMP N7DVF

DIAGRAM

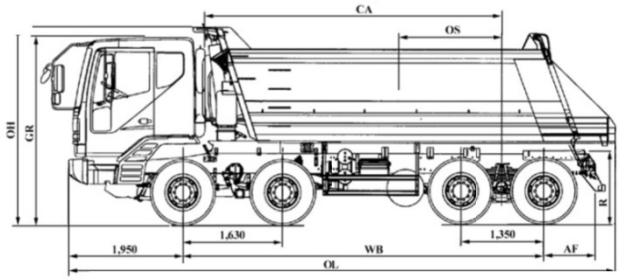

DIMENSIONS (mm)	Overall	Length	OL	8,960
		Width	OW	2,495
		Height	OH	3,170
	Tread	Front	FT	2,055
		Rear	RT	1,820
	Wheelbase		WB	5,890
	Rear axle to frame		AF	782
	Ground to roof		GR	3,075
	Frame-ground above bogie		R	1,230
	Usable cab to axle		CA	4,915
	Deck offset		OS	1,700
	Deck inside	Length		5,145
		Width		2,305
		Height		1,480
		Volume (m^3)		16
	Min. ground clearance			285
WEIGHTS (kg)	Chassis weight	Front		6,970
		Rear		3,650
		Total		10,620
	Curb weight			14,465
	Nominal Payload			24,000
	Axle load	Front		18,000
		Rear		26,000
	Permissible G.V.W			44,000
PERFORMANCE	Max. speed		(km/h)	115
	Max. gradeability		(%)	41.3
	Min. turning radius		(m)	11
	Dumping angle		(。)	48

https://truckmanualshub.com/

POWER TRAIN

DUMP N7DVF

ENGINE	Manufacturer	DOOSAN INFRACORE
	Model	DV15TIS
	Emission certificate	EURO Ⅱ
	Type	Turbo intercooled, diesel engine
	Maximum power	420ps (308kw)/ 2,100rpm
	Maximum torque	170kg.m (1666N.m)/ 1,200rpm
	No. of cylinder	Vee-90 ° 8 cylinder
	Bore × Stroke	128 × 142(mm)
	Displacement	14,618cc
	Controller type	Mechanical
	Air cleaner	Dry paper elements
CLUTCH	Type	Hydraulic control with air assisted Dry single plate with diaphragm
	Plate diameter	Outside diameter : 430mm(17 ″)
TRANSMISSION	Model	ZF16S1820TO
	Speed	16 Forward / 2 Reverse
	Gear ratio	13.80/11.55/9.590/8.020/6.810/ 5.700/4.580/3.840/3.010/2.520/ 2.090/1.750/1.490/1.240/1.000/ 0.840/13.17(R)/11.03(R)
FRONT AXLE	Type	Reverse elliot "I" beam
	Axle capacity	18,000kg
REAR AXLE	Type	Hub reduction
	Final drive ratio	4.248
	Axle capacity	26,000kg
TIRE & WHEEL	Tire & disc Front	385/65R22.5-18PR, 11.75 × 22.5
	Rear	12R22.5-16PR, 8.25V × 22.5
	No. of wheel studs	10

https://truckmanualshub.com/

CHASSIS

DUMP N7DVF

FRAME	Type	Ladder type, double channel
	Size (H×W×T)	320×90×(8+4.5) (mm) Frame width behind cab : 770mm
	Towing hook	Equipped front & rear
STEERING	Handle position	Left-hand drive
	Type	Recirculating ball with integral power assisted by oil
	Steering column	Tilt & Telescopic
	Steering wheel	2-spoke wheel with horn button
FRONT SUSPENSION	Type	Tapered leaf spring
	Size (L×W)	1,500mm×90mm
REAR SUSPENSION	Type	Tapered leaf spring
	Size (L×W)	1,350mm×100mm
BRAKE	Service brake	Full air brake dual circuit
	Drum diameter	Front-419mm, Rear-410mm
	Lining Front	406mm×178mm
	Rear	415mm×220mm
	Material	Non-asbestos
	Parking brake	Spring actuator at rear wheels
	Auxiliary brake	Exhaust brake
FUEL TANK	Volume	400 ℓ
	Material	Made of pressing steel
	Cap	Equipped key lock
ELECTRICAL SYSTEM	Battery	12V - 150Ah×2
	Alternator	24V - 80A
	Starter	24V – 7.0kw
EXHAUST SYSTEM	Type	Mounted longitudinal
DUMPING MECHANISM	Type	Telescopic
	Dumping capacity	35 ton
DECK	Thickness Floor	8.0mm
	Side	6.0mm

https://truckmanualshub.com/

CAB

DUMP N7DVF

CAB	Type	All –welded cab of tilt type Hydraulic Tilt. Tilt angle 50°
	Number of crew	2
	Cab suspension	Coil spring & shock absorber
INSTRUMENTATION	Gauges & meters	Speedometer Water temperature gauge Air pressure gauge, fuel gauge Engine tachometer gauge
SEAT & BED	Driver seat	Height adjustable, rigid seat Sliding & reclining, Equipped with head rest
	Passenger seat	Rigid type, full folding & reclining
	Bed	Equipped one bed
	Covering	Tricot
WIPER	Type	Two blade, 3-speed wiper with electrical washer
HEATING		Heater & Defroster
GLASS & MIRROR	Windshield	Laminated safety glass
	Door glass	Tempered safety glass
	Outside mirror	Convex mirror
LAMP	Front	Head & fog lamp, turn signal lamp Position lamp
	Rear	Position, stop, turn signal lamp Reverse lamp License plate lamp
TOOLS	Tools	Hydraulic Jack, Wrench monkey Wrench & Handle-Wheel nut Driver, Spare tire handle, etc
	Spare tire	One with mounting bracket

https://truckmanualshub.com/

GENERAL

MIXER K4MVF

DIAGRAM

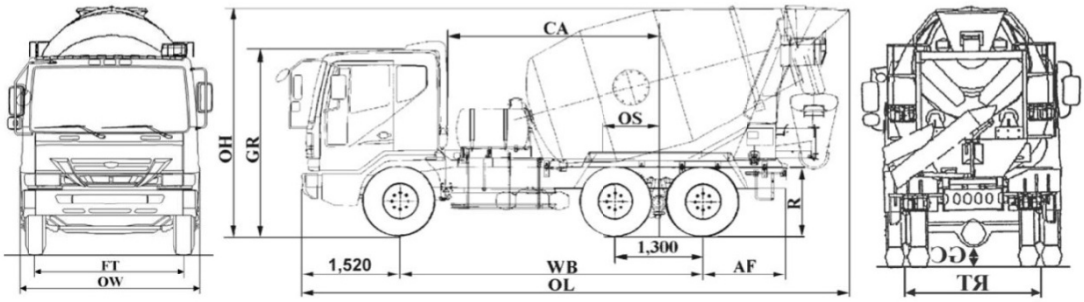

DIMENSIONS (mm)	Overall	Length	OL	8,275
		Width	OW	2,495
		Height	OH	3,720
	Tread	Front	FT	2,050
		Rear	RT	1,855
	Wheelbase		WB	4,580
	Rear axle to frame		AF	1,110
	Ground to roof		GR	2,930
	Frame-ground above bogie		R	1,070
	Usable cab to axle		CA	3,205
	Min. ground clearance			270
	Drum volume (m^3)			10.7
	Mixing capacity(m^3)			7
WEIGHTS (kg)	Chassis weight	Front		4,500
		Rear		4,000
		Total		8,500
	Curb weight			11,420
	Axle load	Front		6,500
		Rear		23,000
	Permissible G.V.W			29,500
PERFORMANCE	Max. speed		(km/h)	95
	Max. gradeability		(%)	40.0
	Min. turning radius		(m)	7.5

https://truckmanualshub.com/

POWER TRAIN

MIXER K4MVF

ENGINE	Manufacturer	DOOSAN INFRACORE
	Model	DV15TIS
	Emission certificate	EURO Ⅱ
	Type	Turbo intercooler charged, diesel engine
	Maximum power	390ps (287kw)/ 2,100rpm
	Maximum torque	160kg.m (1569N.m)/ 1,200rpm
	No. of cylinder	Vee-90 ° 8 cylinder
	Bore × Stroke	128 × 142(mm)
	Displacement	14,618cc
	Controller type	Mechanical
	Air cleaner	Dry paper elements
CLUTCH	Type	Hydraulic control with air assisted Dry single plate with diaphragm
	Plate diameter	Outside diameter : 430mm
TRANSMISSION	Manufacturer	S&T
	Model	T16S6
	Speed	6 Forward / 1 Reverse
	Gear ratio	7.263/4.207/2.526/1.569/1.000/ 0.699/ 6.857(R)
FRONT AXLE	Type	Reverse elliot "I" beam
	Axle capacity	6,500kg
REAR AXLE	Type	Banjo single reduction
	Final drive ratio	6.143
	Axle capacity	26,000kg
TIRE & WHEEL	Tire	12R22.5-16PR
	Disc wheel	8.25V × 22.5
	No. of wheel studs	10

https://truckmanualshub.com/

CHASSIS

MIXER K4MVF

FRAME	Type	Ladder type, double channel
	Size (H×W×T)	320×90×(8+7) (mm)
		Frame width behind cab : 850mm
	Towing hook	Equipped front & rear
STEERING	Handle position	Right-hand drive
	Type	Recirculating ball with integral power assisted by oil
	Steering column	Tilt & Telescopic
	Steering wheel	2-spoke wheel with horn button
FRONT SUSPENSION	Type	Semi-elliptical leaf spring
	Size (L×W)	1,500mm×90mm
REAR SUSPENSION	Type	Semi-elliptical leaf spring
	Size (L×W)	1,300mm×90mm
BRAKE	Service brake	Full air brake with dual circuit
	Drum diameter	410mm
	Lining Front	414mm×155mm
	Rear	414mm×203mm
	Material	Non-Asbestos
	Parking brake	Acting on spring actuator on Rear wheels
	Auxiliary brake	Exhaust brake
FUEL TANK	Volume	300 ℓ
	Material	Made of pressed steel
	Cap	Equipped key lock
ELECTRICAL SYSTEM	Battery	12V - 150Ah×2
	Alternator	24V - 80A
	Starter	24V – 7.0kw
EXHAUST SYSTEM	Type	Mounted longitudinal
MIXER DEVICE	Hydraulic system	Reduction gear & motor
	Water supply	Water pump type

https://truckmanualshub.com/

CAB

MIXER K4MVF

CAB	Type	All –welded cab of tilt type Hydraulic Tilt. Tilt angle 50°
	Number of crew	2
	Cab suspension	Coil spring & shock absorber
INSTRUMENTATION	Gauges & meters	Speedometer Water temperature gauge Air pressure gauge, fuel gauge Engine tachometer gauge
SEAT & BED	Driver seat	Height adjustable, rigid seat Sliding & reclining, Equipped with head rest
	Passenger seat	Rigid type, full folding & reclining
	Bed	Equipped one bed
	Covering	Tricot
WIPER	Type	Two blade, 3-speed wiper with electrical washer
HEATING		Heater & Defroster
GLASS & MIRROR	Windshield	Laminated safety glass
	Door glass	Tempered safety glass
	Outside mirror	Convex mirror
LAMP	Front	Head & fog lamp, turn signal lamp Position lamp
	Rear	Position, stop, turn signal lamp Reverse lamp License plate lamp
TOOLS	Tools	Hydraulic Jack, Wrench monkey Wrench & Handle-Wheel nut Driver, Spare tire handle, etc
	Spare tire	One equipped with mounting bracket

https://www.truck-manuals.net/

GENERAL

M2SEF

❑ DIAGRAM

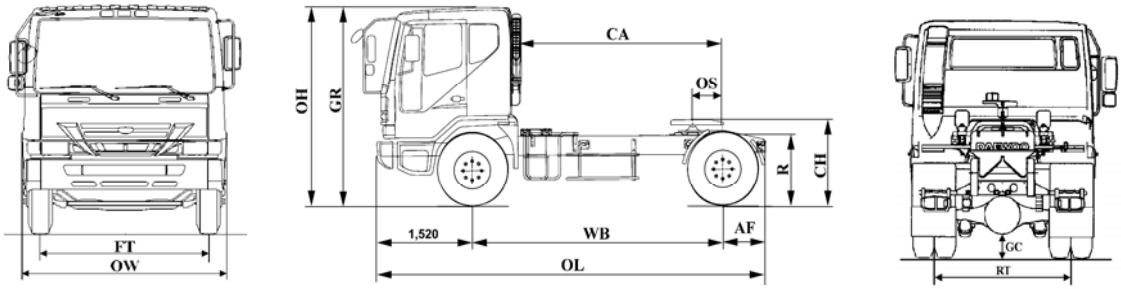

❑ **DIMENSIONS (mm)**	Overall	Length	OL	6,190
		Width	OW	2,495
		Height	OH	2,915
	Tread	Front	FT	2,050
		Rear	RT	1,855
	Wheelbase		WB	3,700
	Rear axle to frame		AF	960
	Ground to roof		GR	2,915
	Frame-ground above bogie		R	1,065
	Usable cab to axle		CA	2,710
	Coupler offset		OS	500
	Coupler height		CH	1,270 (Opt.
	Min. ground clearance			1,328)
	Swing radius	Forward		260
		Rearward		1,875
				1,635

❑ **WEIGHTS (kg)**	Curb Weight	Front	4,390
		Rear	2,440
		Total	6,830
	Axle load	Front	7,500
		Rear	13,000
	Permissible Gross Vehicle Weight		20,500
	Permissible Gross Combination Weight		45,000

❑ **PERFORMANCE**	Max. speed	(km/h)	110
	Max. gradeability	(%)	25.1
	Min. turning radius	(m)	6.5

https://truckmanualshub.com/

POWER TRAIN — TRACTOR M2SEF

ENGINE	Manufacturer	Doosan Infracore
	Model	DE12TIS
	Emission certificate	EURO Ⅱ
	Type	Turbo intercooler, diesel engine
	Maximum power	340ps (250kw)/ 2,100rpm
	Maximum torque	145kg.m (1450N.m)/ 1,260rpm
	No. of cylinder	In line 6- cylinder
	Bore × Stroke	123 × 155(mm)
	Displacement	11,051cc
	Controller type	Mechnical
	Air cleaner	Dry paper elements
CLUTCH	Type	Hydraulic control with air assisted Dry single plate with diaphragm
	Plate diameter	Outside diameter : 430mm(17 ″)
TRANSMISSION	Model	T14S10
	Speed	10 Forward / 2 Reverse
	Gear ratio	1st 9.555 / 7.428
		2nd 4.664 / 3.625
		3rd 2.730 / 2.122
		4th 1.638 / 1.289
		5th 1.000 / 0.777
		Reverse 9.668 / 7.516
FRONT AXLE	Type	Reverse elliot "I" beam
	Axle capacity	7,500kg
REAR AXLE	Type	Banjo single reduction
	Final drive ratio	4.875
	Axle capacity	13,000kg
TIRE & WHEEL (STANDARD)	Tire	12R22.5-16PR
	Disc wheel	8.25V × 22.5
	No. of wheel studs	10

https://truckmanualshub.com/

CHASSIS

TRACTOR M2SEF

FRAME	Type	Ladder type, single channel
	Size (H×W×T)	286×90×7 (mm)
		Frame width behind cab : 850mm
	Towing hook	Equipped front
STEERING	Handle position	Left-hand drive
	Type	Recirculating ball with integral power assisted by oil
	Steering column	Tilt & Telescopic
	Steering wheel	2-spoke wheel with horn button
FRONT SUSPENSION	Type	Semi-elliptical leaf spring
	Size (L×W)	1,500mm×90mm
REAR SUSPENSION	Type	Semi-elliptical leaf spring
	Size (L×W)	1,420mm×100mm
BRAKE	Service brake	Full air brake dual circuit
	Drum diameter	410mm
	Lining Front	414mm×155mm
	Rear	414mm×203mm
	Material	Non-asbestos
	Parking brake	Spring actuator at rear wheels
	Auxiliary brake	Exhaust brake
	Air dryer	One equipped
FUEL TANK	Volume	400 ℓ
	Material	Made of pressing steel
	Cap	Equipped key lock
ELECTRICAL SYSTEM	Battery	12V - 150Ah×2
	Alternator	24V - 80A
	Starter	24V - 6.0kw
EXHAUST SYSTEM	Type	Mounted longitudinal
COUPLER	Manufacturer	GF
	Type / King Pin Size	Rollingless / 2 inch
	Load capacity	20,000kg
	Manufacturer	DONG A
	Type / King Pin Size	Universal / 2 inch
	Load capacity	25,000kg

https://truckmanualshub.com/

CAB

TRACTOR M2SEF

CAB	Type	All –welded cab of tilt type Hydraulic Tilt. Tilt angle 50 °
	Number of crew	2
	Cab suspension	Coil spring & shock absorber
INSTRUMENTATION	Gauges & meters	Speedometer, voltage gauge Water temperature gauge Air pressure gauge, fuel gauge Engine tachometer gauge
SEAT & BED	Driver seat	Height adjustable, rigid seat Sliding & reclining, Equipped with head rest
	Passenger seat	Rigid type,semi folding & reclining
	Bed	Equipped one bed
	Covering	Tricot
WIPER	Type	Two blade, 3-speed wiper with electrical washer
HEATING		Heater & Defroster
GLASS & MIRROR	Windshield	Laminated safety glass
	Door glass	Tempered safety glass
	Outside mirror	Convex mirror
LAMP	Front	Head & fog lamp, turn signal lamp Position lamp
	Rear	Position, stop, turn signal lamp Reverse lamp License plate lamp
TOOLS	Tools	Hydraulic Jack, Wrench monkey Wrench & Handle-Wheel nut Driver, Spare tire handle, etc
	Spare tire	One with mounting bracket

https://www.truck-manuals.net/

GENERAL

V3TEF

❑ DIAGRAM

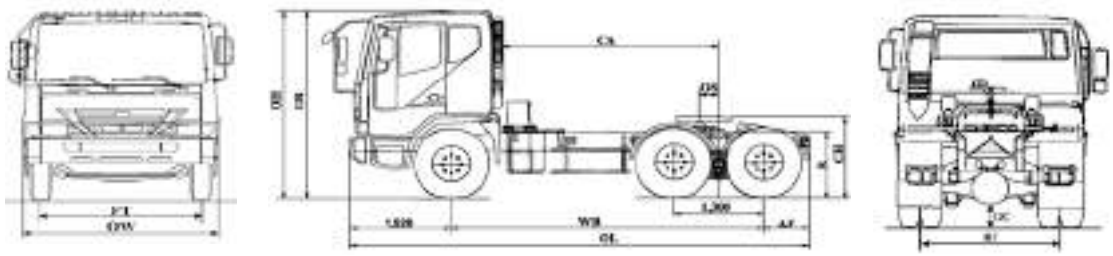

❑ DIMENSIONS (mm)

Overall	Length	OL	6,925
	Width	OW	2,495
	Height	OH	2,915
Tread	Front	FT	2,050
	Rear	RT	1,850
Wheelbase		WB	4,540
Rear axle to frame		AF	710
Ground to roof		GR	2,915
Frame-ground above bogie		R	1,075
Usable cab to axle		CA	3,100
Coupler offset		OS	270
Coupler height		CH	1,295 (Opt. 1,355)
Min. ground clearance			275
Swing radius	Forward		2,480
	Rearward		2,070

❑ WEIGHTS (kg)

Curb Weight	Front	4,500
	Rear	4,300
	Total	8,800
Axle load	Front	7,500
	Rear	26,000
Permissible Gross Vehicle Weight		33,500
Permissible Gross Combination Weight		75,000

❑ PERFORMANCE

Max. speed	(km/h)	110
Max. gradeability	(%)	14.2
Min. turning radius	(m)	6.8

https://truckmanualshub.com/

POWER TRAIN — TRACTOR V3TEF

ENGINE	Manufacturer	Doosan Infracore
	Model	DE12TIS
	Emission certificate	EURO Ⅱ
	Type	Turbo intercooler, diesel engine
	Maximum power	340ps (250kw)/ 2,100rpm
	Maximum torque	145kg.m (1450N.m)/ 1,260rpm
	No. of cylinder	In line 6- cylinder
	Bore × Stroke	123 × 155(mm)
	Displacement	11,051cc
	Controller type	Mechnical
	Air cleaner	Dry paper elements
CLUTCH	Type	Hydraulic control with air assisted Dry single plate with coil spring
	Plate diameter	Outside diameter : 430mm(17 ″)
TRANSMISSION	Model	T14S10
	Speed	10 Forward / 2 Reverse
	Gear ratio	1st 9.555 / 7.428
		2nd 4.664 / 3.625
		3rd 2.730 / 2.122
		4th 1.638 / 1.289
		5th 1.000 / 0.777
		Reverse 7.980 / 7.516
FRONT AXLE	Type	Reverse elliot "I" beam
	Axle capacity	7,500kg
REAR AXLE	Type	Banjo single reduction
	Final drive ratio	4.875
	Axle capacity	26,000kg
TIRE & WHEEL (STANDARD)	Tire	12R22.5-16PR
	Disc wheel	8.25V × 22.5
	No. of wheel studs	10

https://truckmanualshub.com/

CHASSIS

TRACTOR V3TEF

FRAME	Type	Ladder type, single channel
	Size (H×W×T)	286×90×7 (mm)
		Frame width behind cab : 850mm
	Towing hook	Equipped front
STEERING	Handle position	Left-hand drive
	Type	Recirculating ball with integral power assisted by oil
	Steering column	Tilt & Telescopic
	Steering wheel	2-spoke wheel with horn button
FRONT SUSPENSION	Type	Semi-elliptical leaf spring
	Size (L×W)	1,500mm×90mm
REAR SUSPENSION	Type	Semi-elliptical leaf spring
	Size (L×W)	1,300mm×90mm
BRAKE	Service brake	Full air brake dual circuit
	Drum diameter	410mm
	Lining Front	414mm×155mm
	Rear	414mm×203mm
	Material	Non-asbestos
	Parking brake	Spring actuator at rear wheels
	Auxiliary brake	Exhaust brake
	Air dryer	One equipped
FUEL TANK	Volume	400 ℓ
	Material	Made of pressing steel
	Cap	Equipped key lock
ELECTRICAL SYSTEM	Battery	12V - 150Ah×2
	Alternator	24V - 80A
	Starter	24V - 6.0kw
EXHAUST SYSTEM	Type	Mounted longitudinal
COUPLER		
- Standard	Manufacturer	GF
	Type / King Pin Size	Rollingless / 2inch
	Load capacity	20,000kg
- Option	Manufacturer	DONG-A
	Type / King Pin Size	Universal / 2inch
	Load capacity	25,000kg

https://truckmanualshub.com/

CAB

TRACTOR V3TEF

CAB	Type	All –welded cab of tilt type Hydraulic Tilt. Tilt angle 50 °
	Number of crew	2
	Cab suspension	Coil spring & shock absorber
INSTRUMENTATION	Gauges & meters	Speedometer, voltage gauge Water temperature gauge Air pressure gauge, fuel gauge Engine tachometer gauge
SEAT & BED	Driver seat	Height adjustable, rigid seat Sliding & reclining, Equipped with head rest
	Passenger seat	Rigid type,semi folding & reclining
	Bed	Equipped one bed
	Covering	Tricot
WIPER	Type	Two blade, 3-speed wiper with electrical washer
HEATING		Heater & Defroster
GLASS & MIRROR	Windshield	Laminated safety glass
	Door glass	Tempered safety glass
	Outside mirror	Convex mirror
LAMP	Front	Head & fog lamp, turn signal lamp Position lamp
	Rear	Position, stop, turn signal lamp Reverse lamp License plate lamp
TOOLS	Tools	Hydraulic Jack, Wrench monkey Wrench & Handle-Wheel nut Driver, Spare tire handle, etc
	Spare tire	One with mounting bracket

https://www.truck-manuals.net/

GENERAL

V3TVF

❑ DIAGRAM

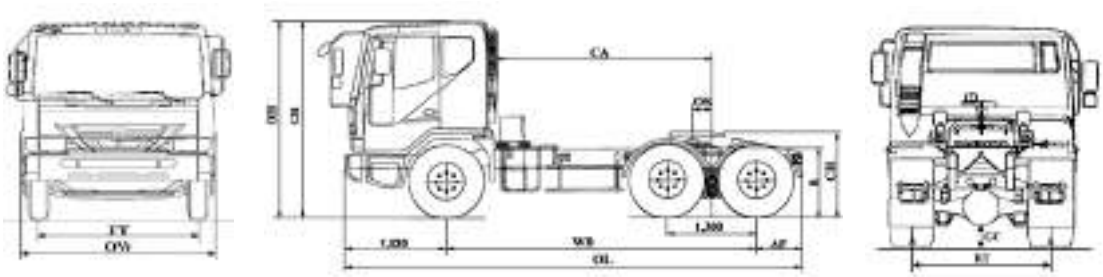

❑ DIMENSIONS (mm)

Overall	Length	OL	6,925
	Width	OW	2,495
	Height	OH	2,915
Tread	Front	FT	2,050
	Rear	RT	1,850
Wheelbase		WB	4,540
Rear axle to frame		AF	710
Ground to roof		GR	2,915
Frame-ground above bogie		R	1,075
Usable cab to axle		CA	3,100
Coupler offset		OS	270
Coupler height		CH	1,305 (Opt. 1,365)
Min. ground clearance			275
Swing radius	Forward		2,480
	Rearward		2,070

❑ WEIGHTS (kg)

Curb Weight	Front	4,560
	Rear	4,350
	Total	8,910
Axle load	Front	7,500
	Rear	26,000
Permissible Gross Vehicle Weight		33,500
Permissible Gross Combination Weight		75,000

❑ PERFORMANCE

Max. speed	(km/h)	112
Max. gradeability	(%)	23.0
Min. turning radius	(m)	6.8

https://truckmanualshub.com/

POWER TRAIN — TRACTOR V3TVF

ENGINE	Manufacturer	Doosan Infracore
	Model	DV15TIS
	Emission certificate	EURO Ⅱ
	Type	Turbo intercooler, diesel engine
	Maximum power	420ps (308kw)/ 2,100rpm
	Maximum torque	170kg.m (1666N.m)/ 1,200rpm
	No. of cylinder	Vee Type 8- cylinder
	Bore × Stroke	128 × 142(mm)
	Displacement	14,618cc
	Controller type	Mechnical
	Air cleaner	Dry paper elements
CLUTCH	Type	Hydraulic control with air assisted Dry single plate with coil spring
	Plate diameter	Outside diameter : 430mm(17 ″)
TRANSMISSION	Model	ZF16S1820TO
	Speed	16 Forward / 2 Reverse
	Gear ratio	1st 13.80 / 11.54
		2nd 9.490 / 7.930
		3rd 6.530 / 5.460
		4th 4.570 / 3.820
		5th 3.020 / 2.530
		6th 2.080 / 1.740
		7th 1.430 / 1.200
		8th 1.000 / 0.840
		Reverse 12.92 / 10.80
FRONT AXLE	Type	Reverse elliot “I” beam
	Axle capacity	7,500kg
REAR AXLE	Type	Banjo single reduction
	Final drive ratio	4.444
	Axle capacity	26,000kg
TIRE & WHEEL (STANDARD)	Tire	12R22.5-16PR
	Disc wheel	8.25V × 22.5
	No. of wheel studs	10

https://truckmanualshub.com/

CHASSIS

TRACTOR V3TVF

FRAME	Type	Ladder type, single channel
	Size (H×W×T)	286×90×7 (mm) Frame width behind cab : 850mm
	Towing hook	Equipped front
STEERING	Handle position	Left-hand drive
	Type	Recirculating ball with integral power assisted by oil
	Steering column	Tilt & Telescopic
	Steering wheel	2-spoke wheel with horn button
FRONT SUSPENSION	Type	Semi-elliptical leaf spring
	Size (L×W)	1,500mm×90mm
REAR SUSPENSION	Type	Semi-elliptical leaf spring
	Size (L×W)	1,300mm×90mm
BRAKE	Service brake	Full air brake dual circuit
	Drum diameter	410mm
	Lining Front	414mm×155mm
	Rear	414mm×203mm
	Material	Non-asbestos
	Parking brake	Spring actuator at rear wheels
	Auxiliary brake	Exhaust brake
	Air dryer	One equipped
FUEL TANK	Volume	400 ℓ
	Material	Made of pressing steel
	Cap	Equipped key lock
ELECTRICAL SYSTEM	Battery	12V - 150Ah×2
	Alternator	24V - 80A
	Starter	24V - 7.0kw
EXHAUST SYSTEM	Type	Mounted longitudinal
COUPLER		
- Standard	Manufacturer	GF
	Type / King Pin Size	Rollingless / 2inch
	Load capacity	20,000kg
- Option	Manufacturer	DONG-A
	Type / King Pin Size	Universal / 2inch
	Load capacity	25,000kg

https://truckmanualshub.com/

CAB

TRACTOR V3TVF

CAB	Type	All –welded cab of tilt type Hydraulic Tilt. Tilt angle 50 °
	Number of crew	2
	Cab suspension	Coil spring & shock absorber
INSTRUMENTATION	Gauges & meters	Speedometer, voltage gauge Water temperature gauge Air pressure gauge, fuel gauge Engine tachometer gauge
SEAT & BED	Driver seat	Height adjustable, rigid seat Sliding & reclining, Equipped with head rest
	Passenger seat	Rigid type,semi folding & reclining
	Bed	Equipped one bed
	Covering	Tricot
WIPER	Type	Two blade, 3-speed wiper with electrical washer
HEATING		Heater & Defroster
GLASS & MIRROR	Windshield	Laminated safety glass
	Door glass	Tempered safety glass
	Outside mirror	Convex mirror
LAMP	Front	Head & fog lamp, turn signal lamp Position lamp
	Rear	Position, stop, turn signal lamp Reverse lamp License plate lamp
TOOLS	Tools	Hydraulic Jack, Wrench monkey Wrench & Handle-Wheel nut Driver, Spare tire handle, etc
	Spare tire	One with mounting bracket

https://truckmanualshub.com/

Engine specifications

Model	DE12TI	DE12TIS	DV15T	DV15TI	DV15TIS	DDC
Type	In-line, 4-stroke, vertical type	←	V-type 90°, 4-stroke, diesel engine	←	←	In-line, 4-stroke, vertical type
Cylinder bore x stroke - No. of cylinders	123mmx155 - 6	←	128mmx142 - 8	←	←	130mmx139 - 6
Total displacement	11,051cc	←	14,618cc	←	←	11,070cc
Compression ratio	16.5:1	16.8	16.5:1	←	17.4:1	16.0:1
Maximum power(PS)	340ps/2,100rpm	←	370ps/2,300rpm	410ps/2,100rpm	420ps/2,100rpm	370ps/1,800rpm
Maximum torque ratings	135kg•m/1,260rpm	145kg•m/1,260rpm	145kg•m/1,300rpm	170kg•m/1,200rpm	←	187kg•m/1,200rpm
Injection timing	BTDC 12°	BTDC 1°	BTDC 7°	BTDC 11°	BTDC 5.5°	BTDC 21°
Firing order	1-5-3-6-2-4	←	1-5-7-2-6-3-4-8	←	←	1-5-3-6-2-4
Injection nozzle type	5-ø0.33	8-ø1.22	5-ø0.313	4-ø0.39	5-ø0.313	8-ø1.22
Oil pump type	Gear	←	←	←	←	←
Oil cooler type	Water-cooled	←	←	←	←	←
Fuel filter type	Full flow	Felt-filter	Full flow	←	←	Felt-filter
Thermostat type	Wax-pallet	←	←	←	←	←
Oil capacity	20L	←	24L	←	←	30L
Water capacity	39.6L	←	38.6L	39.6L	←	45L
Starter voltage-output	24V-6.0kw	←	24V-6.6kw	←	24V-7.0kW	24V-7.3kW
Alternator	24V-45A	←	←	←	←	←

https://www.truck-manuals.net/

3. RECOMMENDED LUBRICANTS

Lubricating point	Fluid	Type & fill capacities	Recommended oil
Engine	Engine oil	DE Engine:20L DV Engine:24L DDC:36L	API CH-4, SAE 15W40
Transmission	Engine oil	ZF16S-151:11L ZF16S-221:13L	API CD/CE/CF/SF/SG, SAE 30
	Gear oil	T14S10:18L(PTO:19L) T10S6:14L(PTO:15L)	API GL-4, SAE 80W90 Tropical region specifications:API GL-4,SAE 85W 140 (thermostat - open 71°C)
Transmission control	Brake fluid	As required	SSK201
Rear axle	Gear oil	KPC:R185HT,R178HT (FRT:20L,RR:12L) TonghiT15HT,T14HT (FRT:13L, RR:10L) TonghiT12H(15L) TonghiTHR20ST (FRT:14L,RR:12L, Wheel hubs:2.5L) RABA:(FRT:14L,RR:12L, Wheel hubs:2.5L) Meritor:RS26-163(22.5L) RS26-185(22L)	API GL-5, SAE 80W90 Tropical region specifications:API GL-5,SAE 85W 140 (thermostat - open 71°C)
Dump hoist	Machine oil	19ton dump:80L 24ton dump:120L	ISO VG 32
Power steering	Power steering oil	4x2, 6x4series truck:6L 8x4,10x4series truck:7.3L 24ton dump truck:9L	AFT (DEXRON II-D)
Wheel bearing and chassis	Grease	As required	Viscosity (NLGI grade) 000,00 grease
Brake & clutch	Brake fluid	As required	SSK 201(SAE JI703, DOT3)
Coolant	Antifreeze	As required (concentration:50%)	EDS M-8207
Cap tilting oil	Shipping oil	As required	MIL-H-24459

Caution

1. *Above periodic oil change is under the normal conditions so in case of severe driving conditions, more frequent maintenance is required.*
2. *It is oil capacity of dry condition so it is variable at the time of change.*
3. *Use only genuine Daewoo part oil filters and in order to use no recommended oil, must be confirmed above specification before use.*