https://truckmanualshub.com/

TRACTOR 4233

THE LITTLE GIANT

Isodiametric Tractor 4233 (same size wheels) is small in size, making it ideal for heavy duty crop working, requiring compact equipment with comfort and safety for the operator.

AGRALE

www.agrale.com.br
agraleSA

- Better performance and safety in steep areas
- 4WD Traction
-

AGRALUB PARTS & SERVICES WARRANTY

TRACTOR 4233

https://truckmanualshub.com/

Generated on 17/07/2022 11:59:25

ENGINE	
Brand / model	Agrale M790
No. of Cylinders	2 / 1270 cm
Aspiration	Natural
Power	30 CV (22 KW) @ 3.000 rpm (NBR ISO 1585)
Maximum Torque	6,9 daNm - 7,0 kgf.m @ 2.550 rpm (NBR ISO 1585)
DRIVING TRANSMISSION	
Type	Mechanical, with sliding gears
No. of Gears	8 Front/ 4 Reverse
Differential lock	Mechanical foot pedal and automatic disengaging
Front axle	Combined with the transmission
CLUTCH	
Type	Simple dry disc
Drive	Mechanical
POWER TAKEOFF	
Drive	Mechanical
Type / drive	Dependent
Nominal Speed	540 rpm at 2.600 rpm (engine) or ground PTO
HYDRAULIC SYSTEM	
Pressure	120 kgf/cm
Maximum Flow	24 L/min @ 3.000 engine rpm
Remote control	2 way single command
Hitch	Cat I
Lift capacity	1050kg

BRAKES	
Service Brake	Rear Drum Brake
Parking Brake	Manual lever
STEERING WHEEL	
Type	Hydrostatic
WHEELSETS	
Standard Front Tires	7,50L x 15 R1
Standard Rear Tires	7,50 x 15 R1
ELECTRIC SYSTEM	
Battery	12V 55 A.h
Alternator	14V 55 A
CAPACITIES	
Fuel Tank	35 L
DIMENSIONS	
Width	1.120 / 1.280 mm
WEIGHTS	
Shipping weight	1.080 kg
Operating weight (curb weight)	1.300 kg
OPTIONAL ITEMS	
License plate kit and reverse light	
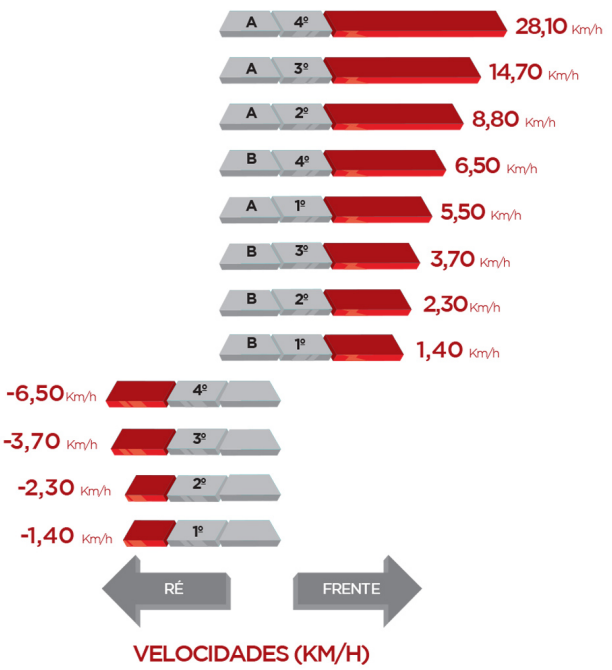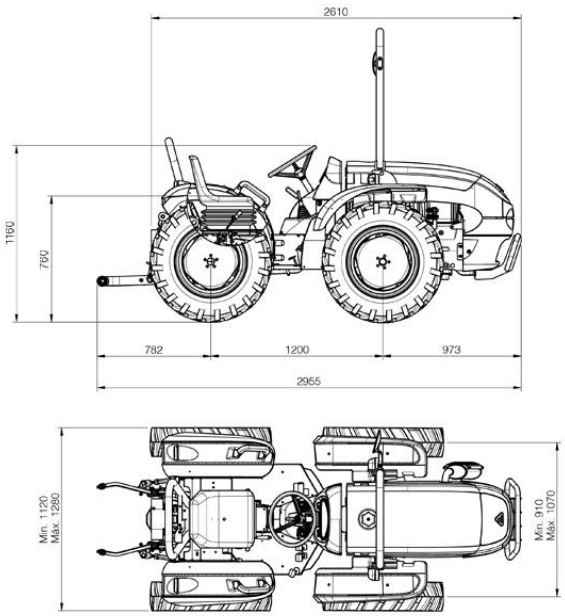
STANDARD 8X4
(MOTOR A 3000RPM - PNEUS STANDARD)