https://truckmanualshub.com/

Operator's Manual PMOM-4021

736-744-936-944-1032-1144-1157
T944-T1157

https://truckmanualshub.com/

https://truckmanualshub.com/

CONTENTS

SAFETY....1
Safety Rules....1
Safety Statements....1
Safety Messages....2
Operator Qualifications....5
Safe Operating Practices....5
Transporting Safely....8
Parking the Machine....8
Safety Decals....10
Decal Locations....11
Main Decal Kit, LL-7858....11
0L1-10298-000, USE BOTH HANDS....12
FL-10561, SERVICE BRAKE....12
LL-1803-499, ACCUMULATOR....12
LL-4780, TRANSMISSION OIL FILL....12
LL-6163, MOTOR OIL....12
LL-7932, ASSEMBLED IN USA....12
LL-6173-1, OPERATOR MANUAL WITHIN....13
LL-7700, WELDING AND MODIFICATION....13
LL-7605, HYDRAULIC OIL ONLY....13
LL-6455, DIESEL FUEL ONLY....13
LL-6456, COMBUSTIBLE AND FLAMMABLE FLUIDS....14
LL-7984, SAFE OPERATION CHECK LIST....14
LL-6462-6, EXCESSIVE HYDRAULIC PRESSURE....15
LL-6463, MACHINE ROLL AWAY....15

https://truckmanualshub.com/

LL-6465, ELECTROCUTION HAZARD 15
LL-6466, EXPLOSION HAZARD 15
LL-6467, HOT AND PRESSURIZED 16
LL-6468, NO RIDING 16
LL-6469, MOVING BELTS AND SPINNING BLADES 16
LL-6470, MACHINE TIP-OVER 17
LL-6471, HOT EXHAUST PIPE 17
LL-6472, PERSONAL INJURY 17
LL-6474, BACKWARD TIP-OVER 17
LL-6475, MACHINE TIP-OVER 18
LL-6476, WATCH YOUR STEP 18
LL-6477, NO STEP 18
LL-6480, PINCH POINT 18
LL-6482, NO RIDING 18
LL-6489, FALLING BOOM OR LOAD 18
LL-6490, FALL HAZARD 18
LL-6492, CARBON MONOXIDE 19
LL-6494, HIGH PRESSURE HYDRAULIC FLUID 19
LL-6497, UNTRAINED PERSONNEL 19
LL-7405, FASTEN SEAT BELT 20
LL-7406, FORWARD & REVERSE 20
LL-7430, FALLING LOAD 20
LL-7474, CALIFORNIA PROPOSITION 65 WARNING 20
LL-7534, ELEVATE PERSONNEL 20
LL-7535, ELEVATE PERSONNEL 20
LL-7536, LIFTING PREP & SETUP 21
LL-7537, UNCONTROLLED MACHINE 21
LL-7539, OSHA TRAINED 21
LL-7566, HYD. OIL FILL PROCEDURE 22
LL-7599, PRE-START MAINTENANCE 22
BL-9969, ANGLE INDICATOR 23
00L-09870-000, NO RIDING 23
Decal Add-On Kits 28
GENERAL INFORMATION 33
Material Safety Data Sheets (MSDS) 33
Directional Reference 34
Identification 35
Forklift Description 35
Forklift Identification Plate 35
Standard Engine Description 35

https://truckmanualshub.com/

Engine Identification Plate 35
Transmission Description 36
Transmission Identification Plate 36
Axle Description 36
Axle Identification Plate 36
Work Platform Reference Guide 36
Preparation and Prevention 37
Using a Personnel Platform Attachment 37
Options and Accessories 38
Ordering Parts 38
FORKLIFT OPERATION 39
Operational Safety 39
Forklift Description 41
Safe Operating Practices 41
Pre-Startup Inspections 42
Walk-Around Inspection 42
Check Engine Oil 42
Check Transmission Oil 42
Check Radiator Coolant Level 42
Check Hydraulic Fluid Level 43
Tires and Rims 44
Inspection for Leaks 44
Hydraulic Fluid Level 44
Entering the Operator's Compartment 44
Operator's Seat 44
Seat Position Adjustment 44
Arm Rest 44
Seat Suspension Adjustment 44
Seat Belt 45
Instrument Panel 45
Fuel Gauge 45
Engine Coolant Temperature Gauge 45
Engine Hour Meter 45
Transmission Temperature Gauge 45
Transmission Oil Pressure Gauge 46
Inclinometer 46
Parking Brake Switch 46
Clutch Cut-off Switch 47
Rear Axle Lock Warning Light 47
Rear Axle Restricted Mode 47

https://truckmanualshub.com/

Brake Oil Pressure Warning Light 47
Parking Brake Indicator Light 48
Low Voltage Warning Light 48
Engine Oil Pressure Warning Light 48
Ignition Switch 48
Steering Selector 48
Fixed Boom Hydraulic Controls 49
Remote Control Joystick 49
Function 49
Traversing Boom Hydraulic Controls 50
Remote Control Joystick 50
Function 51
Throttle and Brake Controls 51
Brake Pedal 52
Throttle Pedal 52
Transmission Controls 52
Powershift Transmission Controls 52
Twist Grip Gear Shifter/Directional Selector 52
Steering Wheel 52
Boom Features 52
Fork Leveling 52
Frame Tilt (Sway) 52
Gauges and Indicators 52
Changes in Performance 52
Start-up and Driving 53
Weight and Distance 55
Location of Load Range Capacity Charts 55
Raising the Load 84
Transporting the Load 84
Inclines and Unstable Surfaces 84
Landing the Load 84
Shutdown 85
Emergency Operations 85
MAINTENANCE 87
Safety While Servicing the Machine 87
Maintenance and Service Kits 89
Routine Maintenance 90
DAILY (or 8 hours) 90
WEEKLY (or 30 hours) 91
Fluids and Lubricants 91

https://truckmanualshub.com/

Filter Kits 91
Grease Fitting Location Charts 92
7K Models Fixed Grease Fittings 92
9K Models Fixed Grease Fittings 93
9-11K Models Fixed Grease Fittings 94
1157 Models Grease Fittings 95
7K Traversing Models 96
9K Traversing Models 97
11K Traversing Models 98
Replace Fuel Filter Elements 99
Service Air Cleaner 100
Drain and Refill Cooling System 101
Thermostat Test 102
Drive Belt Tension Adjustment 102
Battery Replacement 102
Fuse Replacement 103
Engine Oil Change 103
Transmission Oil Change 104
Transmission Filter Element Replacement 104
Axle Lubricant Change 104
Required Scheduled Maintenance Log 105
50 Hours of Operation 106
250 Hours of Operation 106
500 Hours of Operation, or 6 Months 106
750 Hours of Operation 106
1000 Hours of Operation, or 1 Year 107
1250 Hours of Operation 107
1500 Hours of Operation, or 18 Months 107
1750 Hours of Operation 107
2000 Hours of Operation, or 2 Years 108
Operation Under Severe Conditions 108
Service Maintenance Chart 109
Specifications 110
Tire Pressures 110
Hydraulic Oil 110
Diesel Fuel 110

https://truckmanualshub.com/

https://truckmanualshub.com/

SAFETY

SAFETY RULES

Most accidents involving machine operation and maintenance can be avoided by following basic rules and precautions. Read and understand all the safety messages in this manual, and the safety signs on the machine before operating or servicing. See the dealer for any questions. Failure to read and follow these instructions could result in death, serious injury or damage to the machine.

READ THIS MANUAL COMPLETELY and be sure to understand the speed, stability and steering characteristics of this machine. Do not remove this manual from the machine. This manual must remain with the machine at all times. The manual storage box is located inside the operator's compartment, behind the operator's seat. See your dealer or contact Pettibone/Traverse Lift, LLC for additional manuals.

The safety information given in this manual does not replace safety codes, insurance regulations or federal, state and local laws. Be sure the machine has the correct equipment according to these rules or laws. Safety messages in this section point out situations that can be encountered during the normal operation and maintenance of your machine. These safety messages also give possible ways of dealing with these conditions. Additional safety messages are used in the text of the manual to show specific safety hazards.

SAFETY STATEMENTS

This is the safety alert symbol. It is used to alert you to potential personal injury hazards. Obey all safety messages that follow this symbol to avoid possible injury or death.

A DANGER

Indicates a hazardous situation which, if not avoided, will result in death or serious injury.

A WARNING

Indicates a hazardous situation which, if not avoided, could result in death or serious injury.

A CAUTION

Indicates a hazardous situation which, if not avoided, could result in minor or moderate injury.

NOTICE

Indicates a situation which, if not avoided, can cause damage to the machine, personal property and/or the environment or cause the equipment to operate improperly.

Note: Provides additional information.

https://truckmanualshub.com/

SAFETY MESSAGES

A DANGER

The safety messages that follow have DANGER level hazards. These safety messages describe a hazardous situation which, if not avoided, will result in death or serious injury.

Electrocution Hazard

- Avoid contact with high voltage power lines and underground cables.
- Before driving or operating in an area with high voltage lines or cables that are not terminated or completely installed, isolate the power source and turn the voltage OFF.
- Know the location of and keep a safe working distance from any high voltage power equipment.
- Observe federal, state/provincial and local safety codes and regulations that apply to the job site.

A WARNING

The safety messages that follow have WARNING level hazards. These safety messages describe a hazardous situation which, if not avoided, could result in death or serious injury.

Tip Hazard

- Determine if weather, road or earth conditions will permit safe operation on a hill, ramp or rough ground.
- Stay away from hazardous areas such as ditches and overhangs.
- Walk around the work area before starting the forklift and look for hazards.

Crush Hazard

- No personnel should ever walk or stand under a raised boom or walk alongside a moving forklift.
- Be alert and always know the location of all workers in the area.
- Keep all other persons completely away from the machine.
- Do not attempt to remove a load from the forks by stopping the forklift suddenly.

https://truckmanualshub.com/

A WARNING

Fire and Explosion Hazard

Sparks or flame can cause the hydrogen gas in a battery to explode.

To prevent an explosion when disconnecting the battery cables, disconnect the negative (-) cable first. When connecting battery cables, connect the negative (-) cable last. When connecting jumper cables to start the engine, connect the negative (-) cable last and disconnect the negative (-) cable first after the engine starts.

- Do not short circuit the battery posts with metal items.
- Do not weld, grind, or smoke near a battery.
- Sparks from the electrical system or engine exhaust can cause an explosion and fire. DO NOT operate this machine in an area with flammable dust or vapors. Use proper ventilation to remove the flammable dust or vapors prior to starting the machine.
- Engine fuel can cause an explosion or fire. Do not fill the fuel tank with the engine running or near open flames or sparks.
- Use nonflammable cleaning solvent to clean parts.
- Always have a fire extinguisher near or on the machine. Make certain the fire extinguisher is serviced according to the manufacturer's instructions. If a fire extinguisher has been used, always recharge or replace the fire extinguisher before operating the machine.
- Check the electrical system for loose connections or frayed insulation. Repair or replace the loose or damaged parts.
- Clean the entire machine to reduce risk of fire hazard before welding or using a torch on the machine. Refer to the Advanced Maintenance Manual for precautions.
- If the battery electrolyte freezes, the battery may explode if:
  - Attempting to charge the battery
  - Jump-starting the battery

Alcohol and Drug Hazard

Do not operate this machine while under the influence of alcohol, drugs or if feeling ill.

Flying Debris Hazard

- Remove all trash or debris from the machine each day. Double check the engine area and exhaust system.
- Check that all guards and covers are installed correctly.

Entanglement Hazard

Avoid loose fitting clothing, loose or uncovered long hair, jewelry or loose personal articles.

Fall Hazard

- Foreign material or grease on the step or hand rail can cause an accident. Keep the step and hand rail clean.
- If the machine has an oil, fuel or hydraulic leak, always repair the leak and clean the area before operating.
- Always face the machine and use the hand rail and step when climbing aboard. Do not rush and do not jump from the machine.
- Before starting the engine, always properly fasten and securely tighten the seat belt, and always keep the seat belt fastened while operating the machine.
- Do not allow anyone to ride on the machine.
- Do not use the machine to lift personnel or any type of personnel carrier, including platforms. The machine operator may not have control over such a carrier device. Refer to "Work Platform Reference Guide" on page 36.

https://truckmanualshub.com/

A WARNING

Exhaust Hazard

- Engine exhaust fumes can cause death. If you operate this machine in an enclosed area, use proper ventilation to replace the exhaust fumes with fresh air.
- Starting fluid (ether) can cause death or serious injury.
- Do not inhale starting fluid vapors. Wear face protection when removing or installing a starting fluid container or when using aerosol spray starting fluid.
- Use starting fluid according to the instructions in this manual.
- Do not operate the forklift in a closed building. Always operate in a well-ventilated area.

Transport Hazard

- Attach a red flag attachment on furthest projection of machine for safety.
- Know the dimensions of the machine when mounted on truck.
- Be sure machine is within proper size and weight limits for highway transporting.
- Check route to ensure sufficient clearances.
- Check bridges for adequate weight limits.
- Make sure the machine is securely tied down whenever transporting.

Chemical Burn Hazard

- Batteries contain sulfuric acid. Avoid contact with skin, eyes or clothing.
- Antidote:
  - EXTERNAL: Flush with water.
  - INTERNAL: Drink large quantities of water or milk. Follow with milk of magnesia, beaten egg or vegetable oil.
  - EYE: Flush with water for 15 minutes and get prompt medical attention.
- Call a doctor immediately.

Burn Hazard

- Hot coolant can spray out when the radiator cap is removed.
- Let the cooling system cool down.
- Turn cap to the first notch.
- Wait until the pressure is released.
- Remove the radiator cap.
- Do not touch exhaust system components when engine is running.

Structural Integrity Hazard

- Do not weld on any structural member unless specifically authorized by Pettibone/ Traverse Lift, LLC. Before welding or using a torch on the machine, disconnect the Engine and Transmission ECU.
- Any unauthorized welding may weaken the structural temper and will void the warranty.

https://truckmanualshub.com/

A CAUTION

The safety messages that follow have CAUTION level hazards. These safety messages describe a hazardous situation which, if not avoided, could result in minor or moderate injury.

Exposure Hazard

- Different jobs will require different protective equipment.
- Items such as hard hats, protective shoes, heavy gloves, reflector type vests, respirators and ear protection may be required.
- Know and use the equipment that is required before starting the job.

Be prepared for emergencies. Always have a first aid kit and a properly working fire extinguisher. Know how to use both.

OPERATOR QUALIFICATIONS

Only qualified personnel who have received OSHA-required training should operate this forklift.

Note: Effective December 31, 1999, OSHA requires all forklift operators to be trained and certified according to rule 29CFR1910.178(l).

SAFE OPERATING PRACTICES

- Never allow anyone that is not trained or qualified to operate this machine.
- Read and understand this operation manual before you operate or service this machine to ensure that you follow safe operating practices and maintenance procedures.
- Machine safety signs, labels and decals are additional reminders of safe operating and maintenance techniques.
- Know the hand signals used on the job. Follow the instructions of the flag man, signs, etc.
- Make sure all persons are away from the machine and give a warning before starting the engine.
- Remove all loose objects from the operator's compartment and from the machine. Loose objects can jam controls and cause accidents.
- Before operating at night, check that all lamps illuminate.
- Operate the machine controls from the operator's seat only.
- Check all controls while parked in a clear area and make sure the machine is operating correctly.
- Dust, fog, smoke, etc. can decrease your vision and cause an accident. Stop the machine and decrease the speed until visibility increases.

See Pettibone/Traverse Lift, LLC for additional training.

https://truckmanualshub.com/

Transmission Computer Disconnect before welding or any modifications!

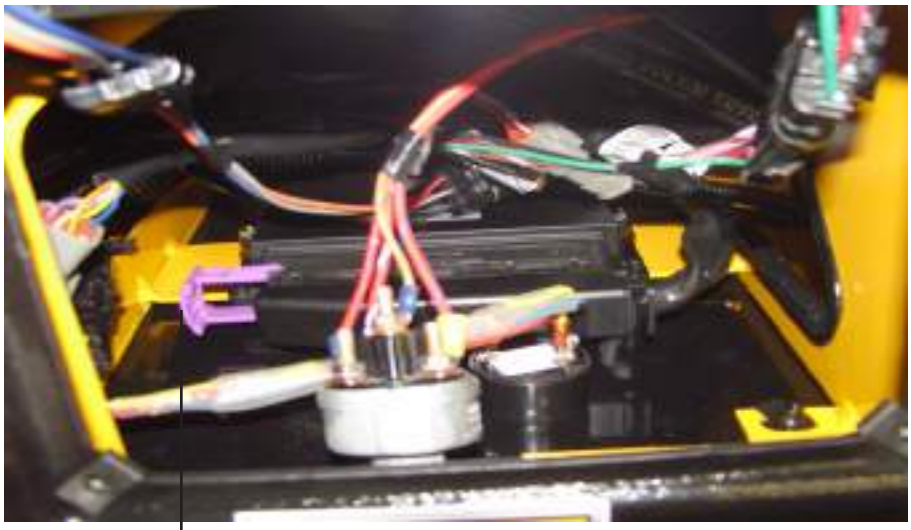

Figure 1. Transmission Computer

1

1 - Pull Tab before welding.

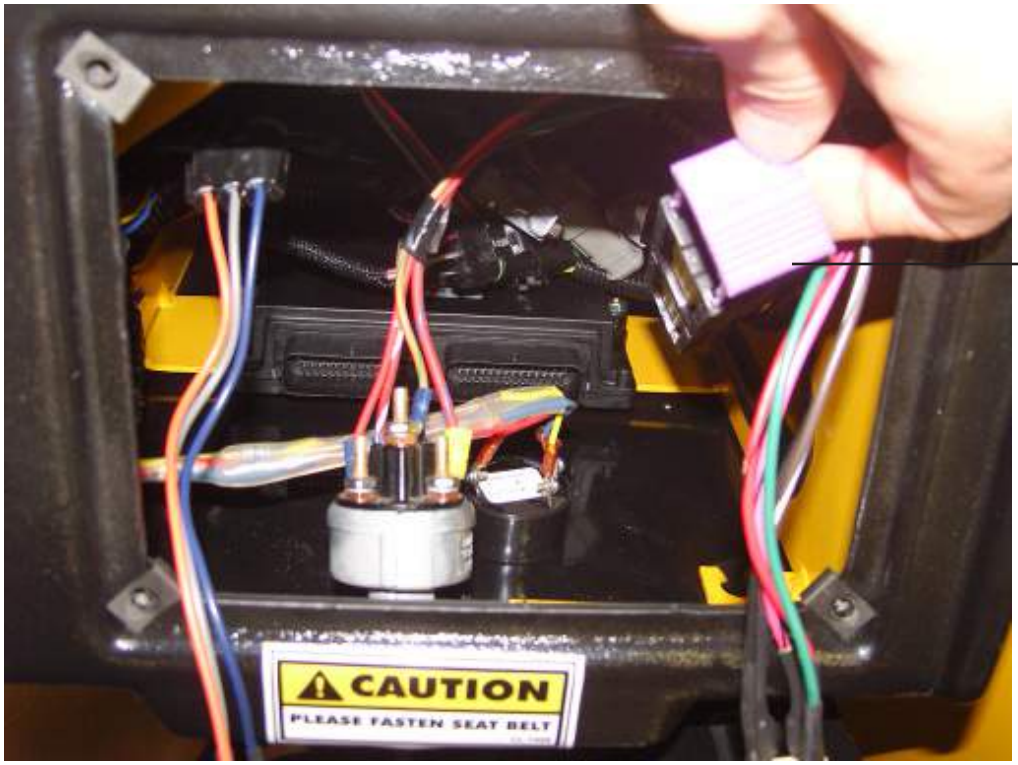

2

2 - Disconnect this plug before welding.

Figure 2. Transmission Computer plug.

https://truckmanualshub.com/

Engine Computer Disconnect before welding or any modifications!

Figure 1 Engine Computer

1

Disconnect these plugs before welding.

https://truckmanualshub.com/

TRANSPORTING SAFELY

When correctly loaded on the flatbed of a tractor-trailer, this machine is designed to be safely transported between local work sites.

- Know the rules, laws and safety equipment necessary for transporting this machine on public roadways.
- Know which warnings must be placed on machine for highway travel and whether an escort is needed.
- Always shut down machine engine when transporting.
- Do not put chains over or against hydraulic lines or hoses. NOTICE: Always cap exhaust pipe or cover the opening with tape to prevent air from spinning the turbocharger while vehicle is transported at highway speeds. The turbochargers depend upon engine oil pressure to lubricate shaft bearings and may be damaged if spun dry.
- Be sure to remove tape after transporting machine and before starting engine.

PARKING THE MACHINE

1. Bring the forklift to a complete stop.
2. Engage the parking brake by flipping the switch located on the right side of the dashboard.
3. Lower the forks to the ground.
4. Place the transmission in NEUTRAL.
5. Allow the engine to idle for 1-3 minutes.
6. Shut the engine off.
7. Remove the ignition key from the switch.
8. Unfasten seat belt. WARNING! Fall Hazard. Use hand rail and step. Climb carefully from cab.
9. Block wheels of forklift if the machine is on an incline.

https://truckmanualshub.com/

HYDRAULIC PRESSURE WARNING SHEET

A WARNING

OBSERVE ALL MAXIMUM HYDRAULIC SYSTEM PRESSURE WARNINGS AND DECALS FOR THIS MACHINE.

SETTINGS HIGHER THAN POSTED PRESSURES MAY RESULT IN DEATH, SEVERE INJURY OR PROPERTY DAMAGE.

In many instances, we have learned that the hydraulic relief valves of this equipment have been reset, thereby increasing the maximum pressures and, with this, the load the unit will lift before the relief valve opens. In some instances, the consequences of increasing this setting have been serious. The function of the relief valve is to provide a fuse action to protect the machine and the operator from overloading. When overloaded, different portions of the machine can become stressed to a level that causes components to fracture and fail. Never reset hydraulic pressures above factory settings.

Accordingly, you are advised that the settings of these valves are set to the maximum. Pressure settings in excess of this level render each and all Pettibone/Traverse Lift, LLC warranties null and void, and constitute an obvious misuse and abuse of our product.

Pettibone/Traverse Lift, LLC

https://truckmanualshub.com/

SAFETY DECALS

The decals shown were accurate when this publication was printed. Pettibone/Traverse Lift, LLC reserves the right to add additional safety decals to the machine as necessary to ensure operator safety. It is the operator's responsibility to follow the instruction decals on the particular machine being operated.

- Immediately replace any missing or damaged safety decal(s), and keep all safety decals clean and legible.
- Contact an authorized dealer or Pettibone/ Traverse Lift, LLC for new safety decals.
- Be sure to read all safety decals and all instruction decals.
- Check these decals daily. Keep these decals clean. To clean the decals, use only a cloth, water and soap. Do not use solvents, gasoline, etc.
- If a decal is on a part that is replaced, install a new decal on the replacement part.

https://truckmanualshub.com/

Decal Locations

Larger-size illustrations of these decals, along with descriptions of each decal's location, are shown beginning on page 12 in this manual.

Main Decal Kit, LL-7858

Qty	Part No.	Description
1	0L1-10298-000	USE BOTH HANDS
1	FL-10561	SERVICE BRAKE
1	LL-1803-499	ACCUMULATOR
1	LL-4780	TRANSMISSION OIL FILL
2	LL-6039	MADE IN USA
2	LL-6163	MOTOR OIL
1	LL-6173-1	OPERATOR MANUAL WITHIN
1	LL-7700	WELDING AND MODIFICATION
1	LL-7605	HYDRAULIC OIL ONLY
1	LL-6455	DIESEL FUEL ONLY
1	LL-6456	COMBUSTIBLE AND FLAMMABLE FLUIDS
1	LL-7984	SAFE OPERATION CHECK LIST
1	LL-7599	PRE-START MAINTENANCE
1	LL-6458	SAFE OPERATION CHECK LIST
1	LL-6462-6	EXCESSIVE HYDRAULIC PRESSURE
1	LL-6463	MACHINE ROLL AWAY
1	LL-6465	ELECTROCUTION HAZARD
1	LL-6466	EXPLOSION HAZARD
1	LL-6467	HOT AND PRESSURIZED
3	LL-6468	NO RIDING
2	LL-6469	MOVING BELTS AND SPINNING BLADES
1	LL-6470	MACHINE TIP-OVER
1	LL-6471	HOT EXHAUST PIPE
1	LL-6472	PERSONAL INJURY
1	LL-6474	BACKWARD TIP-OVER
1	LL-6475	MACHINE TIP-OVER
1	LL-6476	WATCH YOUR STEP
1	LL-6477	NO STEP

Qty	Part No.	Description
6	LL-6480	PINCH POINT
2	LL-6482	NO RIDING
1	LL-6489	FALLING BOOM OR LOAD
1	LL-6490	FALL HAZARD
1	LL-6492	CARBON MONOXIDE
1	LL-6494	HIGH PRESSURE HYD. FLUID
1	LL-6497	UNTRAINED PERSONNEL
1	LL-7405	FASTEN SEAT BELT
1	LL-7406	FORWARD & REVERSE
1	LL-7430	FALLING LOAD
1	LL-7474	CALIFORNIA PROPOSITION 65 WARNING
1	LL-7534	ELEVATE PERSONNEL
1	LL-7535	ELEVATE PERSONNEL
1	LL-7536	LIFTING PREP & SETUP
1	LL-7537	UNCONTROLLED MACHINE
1	LL-7539	OSHA TRAINED
1	LL-7566	HYD. OIL FILL PROCEDURE
1	BL-9969	ANGLE INDICATOR
1	00L-09870-000	NO RIDING

https://truckmanualshub.com/

0L1-10298-000, USE BOTH HANDS

This is the top decal on the rear of the left side of the cab.

FL-10561, SERVICE BRAKE

Located on the outer left side of the dash, beside the OSHA decal

LL-1803-499, ACCUMULATOR

Located under the hood cover on the accumulator

LL-4780, TRANSMISSION OIL FILL

Located on the cover on the right side of the machine and centered above the back side of the hydraulic tank and the frame

LL-6163, MOTOR OIL

Located on the right side of the cover and centered above the latch

LL-7932, ASSEMBLED IN USA

Located on the back left side of the boom, below the boom shaft

https://truckmanualshub.com/

LL-6173-1, OPERATOR MANUAL WITHIN

Located in the center on the top of the black plastic box behind the operator's seat

OPERATOR MANUAL WITHIN

LL-7700, WELDING AND MODIFICATION

Located on the left side of the joystick console near the top and closest to the seat

WARNING

WELDING AND MODIFICATION HAZARD

CAN CAUSE DEATH OR SEVERE INJURY.

WELDING MAY CAUSE ELECTRICAL OR STRUCTURAL DAMAGE TO MACHINE.

DISCONNECT BATTERY CABLES, ALTERNATOR CONNECTIONS AND TRANSMISSION EQUIPMENT BEFORE WELDING ON MACHINE.

DO NOT WELD IN ANY STRUCTURAL MEMBER OR MAKE MODIFICATIONS WITHOUT FACTORY AUTHORIZATION.

MODIFICATIONS WITHOUT FACTORY AUTHORIZATION WILL VOID WARRANTY.

LL-7605, HYDRAULIC OIL ONLY

Located on the right edge of the top front side of the hydraulic tank

CAUTION

HYDRAULIC OIL ONLY.

Must meet following standards to avoid machine damage:

Hydraulic System Operating Temperature Range*	ISO Viscosity Grade
-5 to 140°F (-21 to 60°C)	22
5 to 170°F (-15 to 77°C)	32
15 to 190°F (-9 to 88°C)	46
30 to 210°F (-1 to 99°C)	68

*Temperatures shown are cold (ambient) start-up to maximum operating.

LL-6455, DIESEL FUEL ONLY

Located on the left side of the top side of the fuel tank

CAUTION

DIESEL FUEL ONLY.

Must meet following standards to avoid machine damage:

AMBIENT CONDITIONS	GRADE
Below 32°F (0°C)	Winterized No. 2-D
Above 32°F (0°C)	ASTM D975 Grade No. 2-D

https://truckmanualshub.com/

LL-6456, COMBUSTIBLE AND FLAMMABLE FLUIDS

Located on the top of the left side of tank

LL-7984, SAFE OPERATION CHECK LIST

Located on the front left frame of the cab assembly, between the welded handle

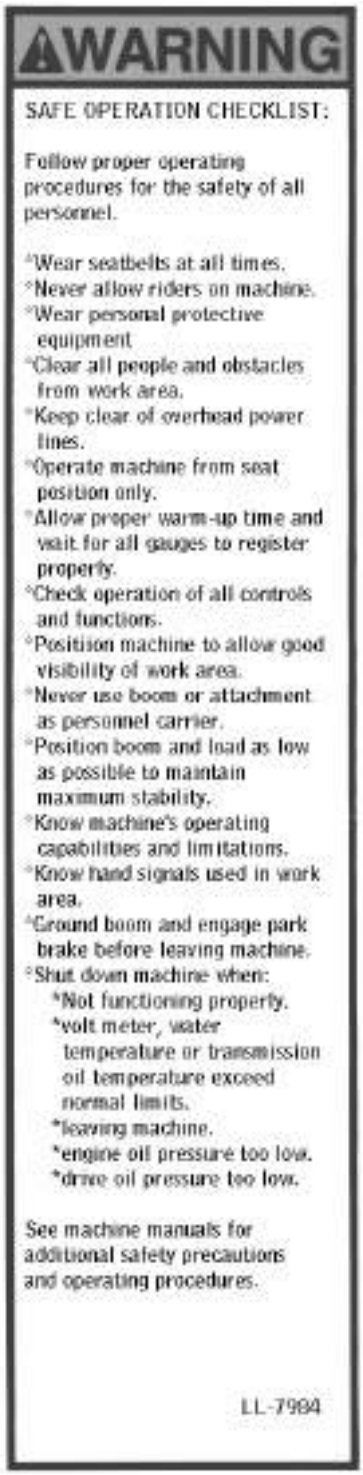

WARNING

SAFE OPERATION CHECKLIST:

Follow proper operating procedures for the safety of all personnel.

- Wear seatbelts at all times.
- Never allow riders on machine.
- Wear personal protective equipment
- Clear all people and obstacles from work area.
- Keep clear of overhead power lines.
- Operate machine from seat position only.
- Allow proper warm-up time and wait for all gauges to register properly.
- Check operation of all controls and functions.
- Position machine to allow good visibility of work area.
- Never use boom or attachment as personnel carrier.
- Position boom and load as low as possible to maintain maximum stability.
- Know machine's operating capabilities and limitations.
- Know hand signals used in work area.
- Ground boom and engage park brake before leaving machine.
- Shut down machine when:
  - *Not functioning properly.
  - *volt meter, water temperature or transmission oil temperature exceed normal limits.
  - *leaving machine.
  - *engine oil pressure too low.
  - *drive oil pressure too low.

See machine manuals for additional safety precautions and operating procedures.

LL-7984

https://truckmanualshub.com/

LL-6462-6, EXCESSIVE HYDRAULIC PRESSURE

Located on the front side of the top of the hydraulic tank, closest to the cab

LL-6463, MACHINE ROLL AWAY

Located on the front, left frame of the cab assembly above the welded handle

LL-6465, ELECTROCUTION HAZARD

Located on the right side of the dash underneath the steering selector switch

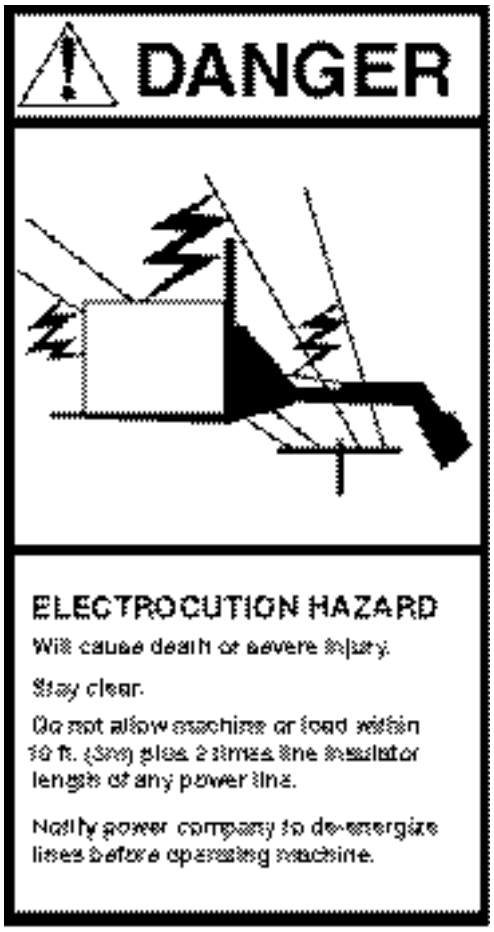

LL-6466, EXPLOSION HAZARD

Located on the inside of the frame in the front next to the battery

https://truckmanualshub.com/

LL-6467, HOT AND PRESSURIZED

Located on the top rear cover, next to the radiator cap

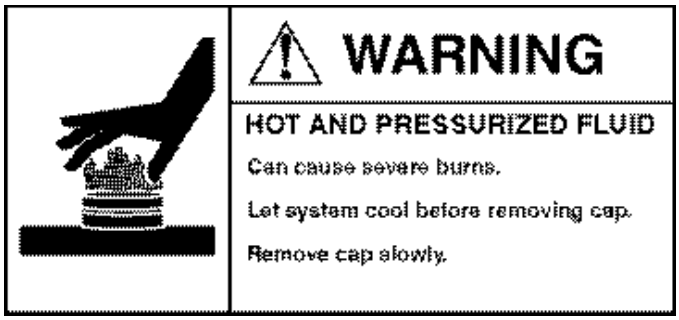

LL-6468, NO RIDING

One located on each side of fork frame

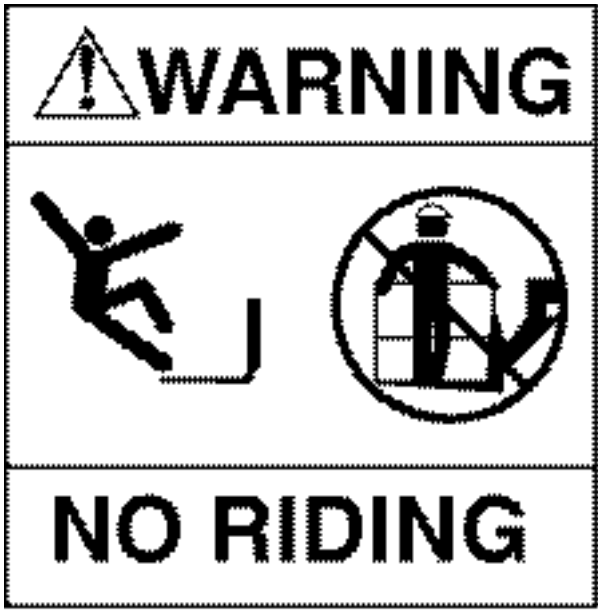

LL-6469, MOVING BELTS AND SPINNING BLADES

One located on the right side of the cover above the motor oil decal and one next to the air cleaner pipe on the left side of the frame

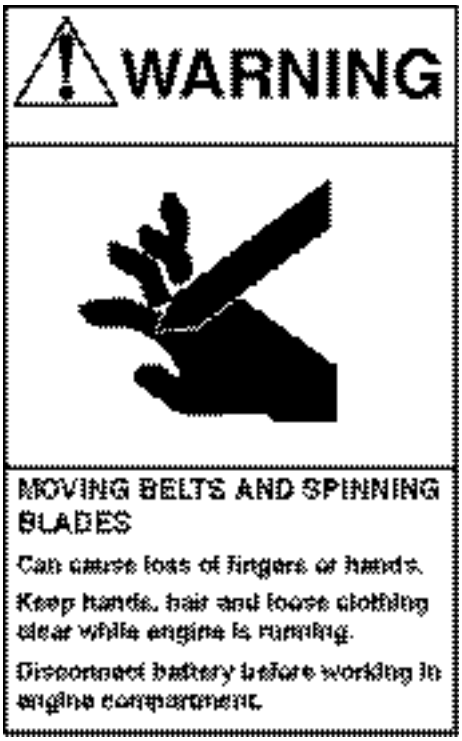

https://truckmanualshub.com/

LL-6470, MACHINE TIP-OVER

Located on the left side of the joystick console, below the backward tipover and falling boom decals

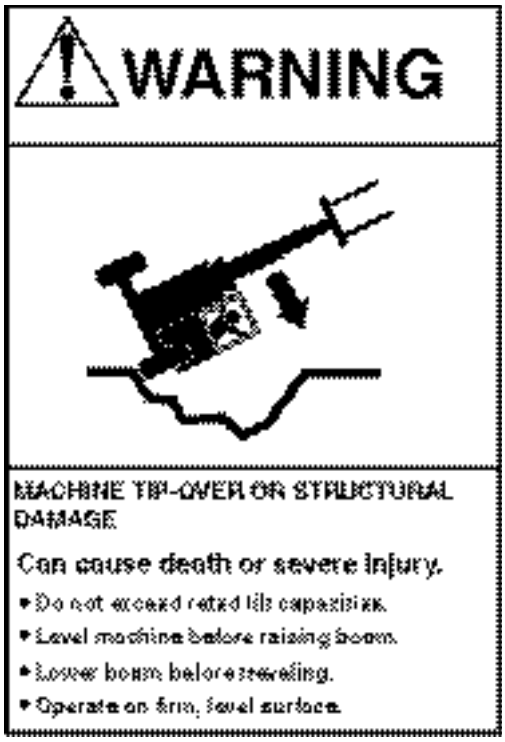

LL-6471, HOT EXHAUST PIPE

Located on the left side of the frame, by the fuel tank and muffler

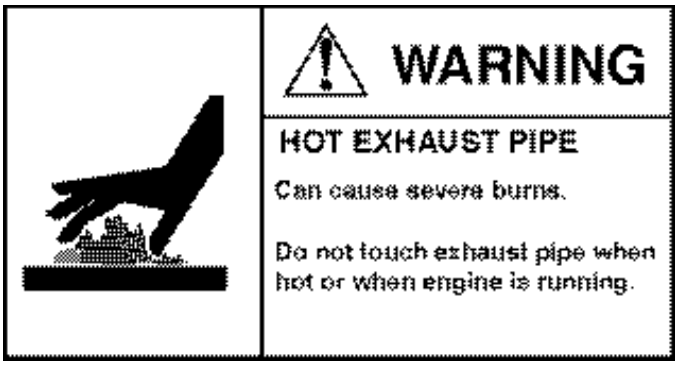

LL-6472, PERSONAL INJURY

Located on the left side of the dash between the no riding and fall hazard warning decals

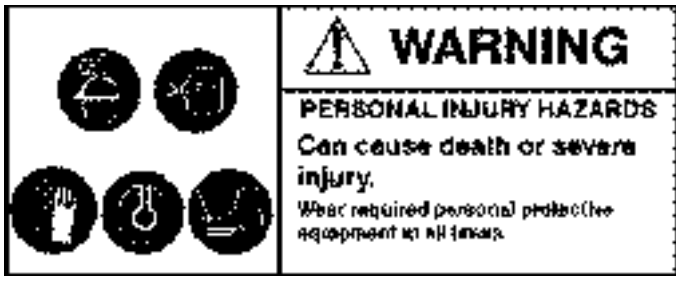

LL-6474, BACKWARD TIP-OVER

Located on the left side of the joystick console, between the machine tip-over and falling boom decals

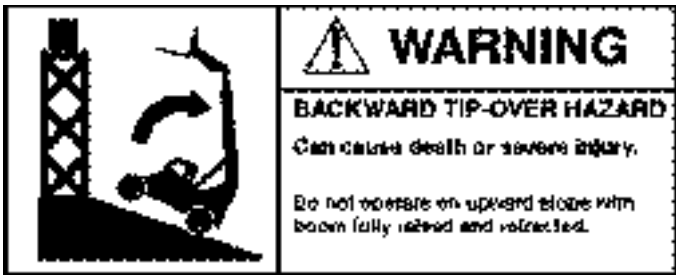

https://truckmanualshub.com/

LL-6475, MACHINE TIP-OVER

Located on the left side of the joystick console

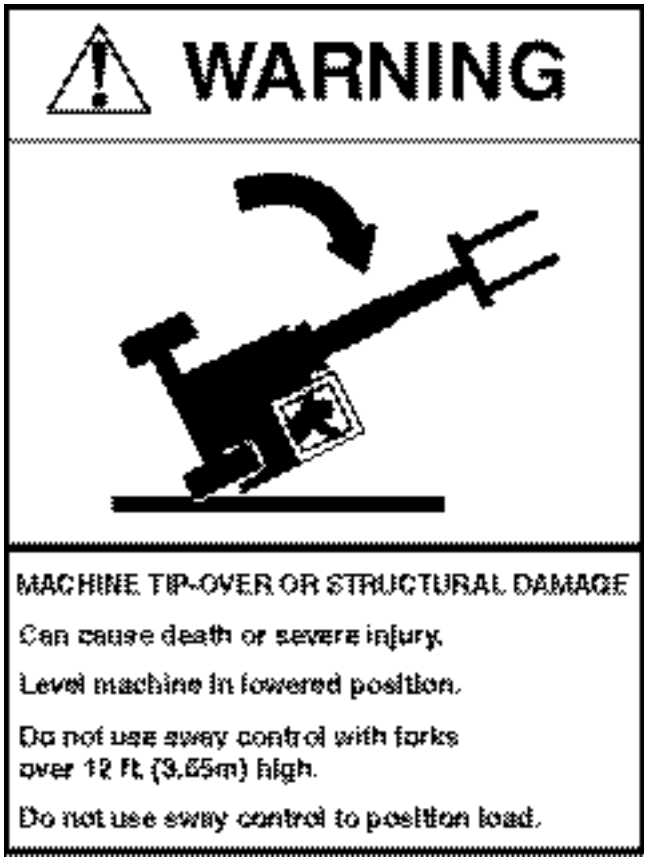

LL-6476, WATCH YOUR STEP

Located on the left side of the cab frame in the center of the bottom opening

LL-6477, NO STEP

Located on the front top side of the frame in front of the cover

LL-6480, PINCH POINT

One located on the underside of each of the lift cylinders, one inside the cab next to the cover and one beside each axle on the frame

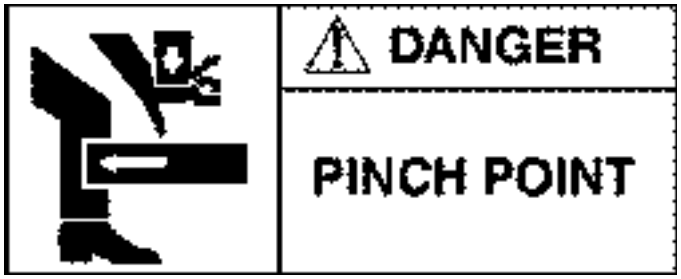

LL-6482, NO RIDING

Located on the left side of the dash, above the personal injury hazards and fall hazard warning decals

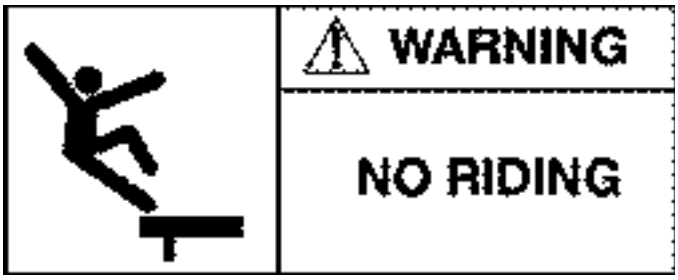

LL-6489, FALLING BOOM OR LOAD

Located on the left side of the joystick console, above the machine tip-over and backward tip-over decals

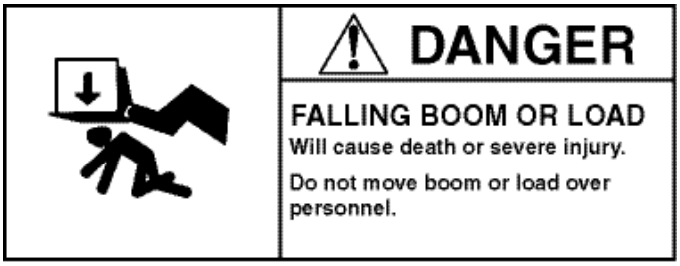

LL-6490, FALL HAZARD

Located on the left side of the dash

https://truckmanualshub.com/

LL-6492, CARBON MONOXIDE

Located on the right side of the frame by the exhaust pipe

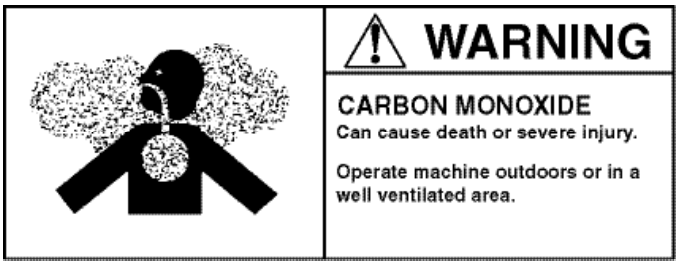

LL-6494, HIGH PRESSURE HYDRAULIC FLUID

Located on the left side of the frame, inside the rear grill

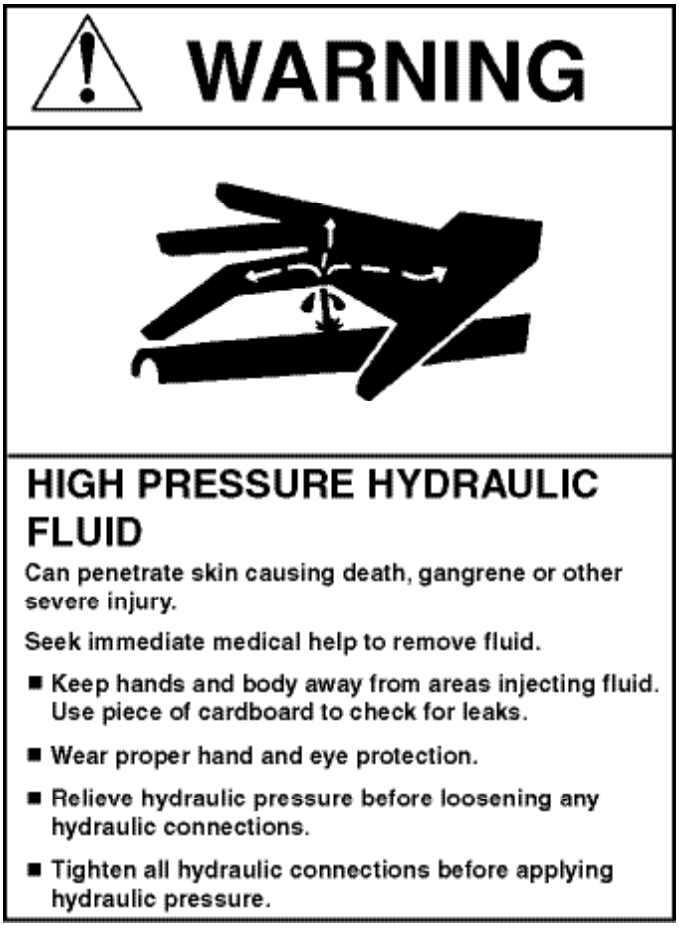

LL-6497, UNTRAINED PERSONNEL

Located on the left, front side of the cab assembly

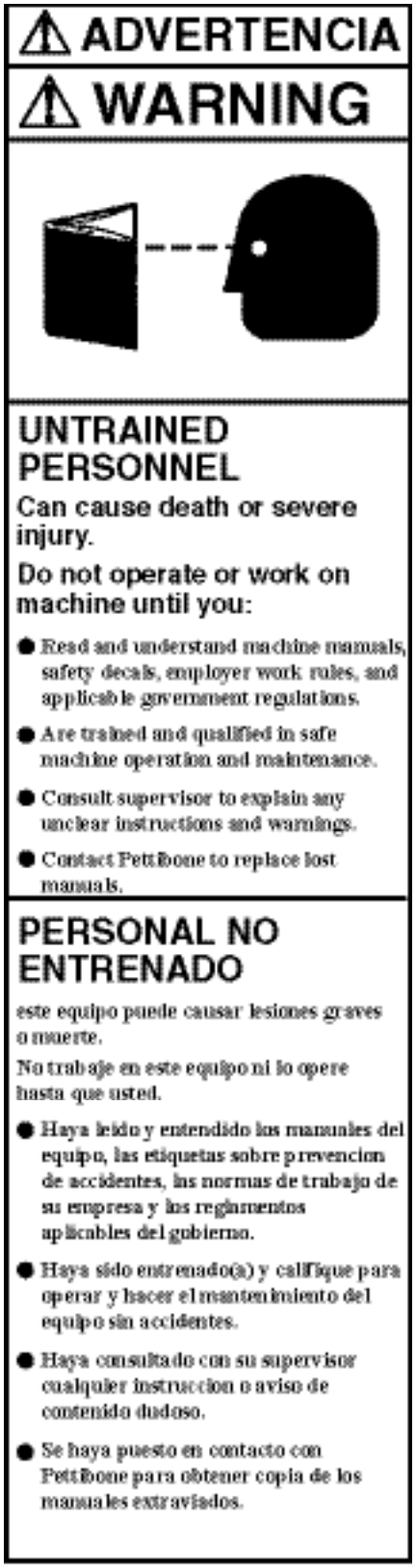

https://truckmanualshub.com/

LL-7405, FASTEN SEAT BELT

Located on the right side of the dash, next to the steering selector switch

LL-7406, FORWARD & REVERSE

Located on the steering selector

LL-7430, FALLING LOAD

Located on the bottom side in the center of the boom

LL-7474, CALIFORNIA PROPOSITION 65 WARNING

Located on the center of the dash below the brake light decal

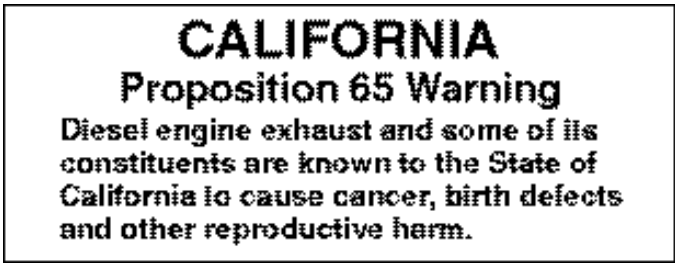

LL-7534, ELEVATE PERSONNEL

Located on the front side of the boom tip in the center

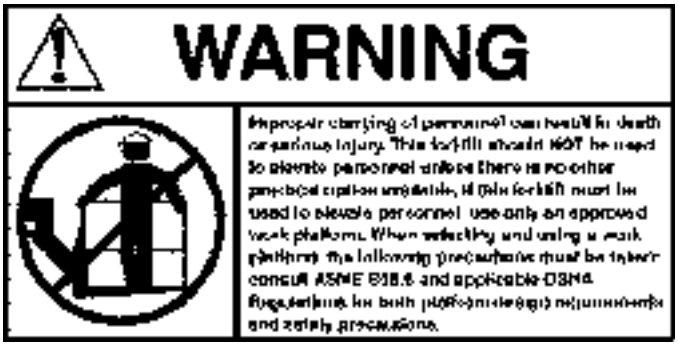

LL-7535, ELEVATE PERSONNEL

Located on the left side of the cab assembly on the back panel below the safety instruction decal

https://truckmanualshub.com/

LL-7536, LIFTING PREP & SETUP

Located on the left side of the cab assembly on the back panel above the work platform decal

WARNING

SAFETY INSTRUCTIONS

Preparation and Setup when using a work platform.

1. Make sure that the work platform is securely attached to the boom and forks. Follow the platform manufacturer's instructions for attachment.
2. Make sure that the platform, carriage, and forks are secured to prevent them from pivoting side to side.
3. Ensure that the forklift has a firm footing and is level.
4. Place the travel select lever in (N) neutral.
5. Engage the emergency brake switch. Blocking the forklift wheels is also recommended.
6. Level the platform in both the side to side and front to back directions before use.
7. Never use frame sway or side tilting carriage controls or on load leveling stabilizers on this forklift while the platform is in use.
8. Be sure to check load requirements when using a work platform.
9. Consult work platform reference guideline dated 5/25/01.

LL-7537, UNCONTROLLED MACHINE

Located on the left side of the cab assembly on the back panel below the safety instruction decal

WARNING

UNCONTROLLED MACHINE MOTION AND ENERGY
Can cause death or sever injury.

Follow shut-down procedures before leaving machine:

- Ground boom and attachment.
- Set direction control to neutral position.
- Engage transmission neutral lock if equipped.
- Engage parking break.
- Shut down engine.
- Remove key from ignition.
- Set wheel chocks.

Follow above steps and applicable lockout/tagout procedures before service or maintenance:

- Allow machine to cool.
- Relieve all hydraulic pressure.
- Disconnect battery.
- Ensure machine is not supported on props.
- Remove, block or guard against bodily contact with any other type of hazardous energy.

LL-7539, OSHA TRAINED

Located on the left side of the dash, closest to the steering column, next to the service brake warning and below the alarm must sound decals

WARNING

Only personnel trained according to Occupational Safety and Health Administration (OSHA) Rule 29CFR 1910.178(l) may be allowed to operate this machine.

Read Owner/Operator Manual before operating or servicing machine.

https://truckmanualshub.com/

LL-7566, HYD. OIL FILL PROCEDURE

Located next to the sight gauge on the hydraulic tank

HYDRAULIC OIL FILL PROCEDURE

Fill tank initially to full level line. After running, level must read between HI & LOW marks with all cylinders retracted.

LL-7599, PRE-START MAINTENANCE

Located on the front, right frame of the cab assembly

⚠ CAUTION

PRE-START MAINTENANCE CHECKLIST:

Conduct pre-start maintenance inspections daily to ensure machine is in proper and safe operating condition.

Water drained from fuel/water separator?

Battery and electrical system wires and connections?

Engine air cleaner free of restrictions or damage?

Seat belt and mounts free of damage or wear?

Engine oil level, leaks?

Fuel level, leaks?

Transmission fluid level, leaks?

Fan belts, loose or worn?

Guards in place?

Hydraulic oil level, leaks?

Antifreeze level, leaks?

Structural components and attachments, damaged or loose?

Safety decals clean and legible?

Floor of cab free of dirt, oil and unsecured items?

Tire condition, proper inflation, cuts, bulges?

See operator manual for additional maintenance recommendations.

https://truckmanualshub.com/

BL-9969, ANGLE INDICATOR

Located on the left side of the boom

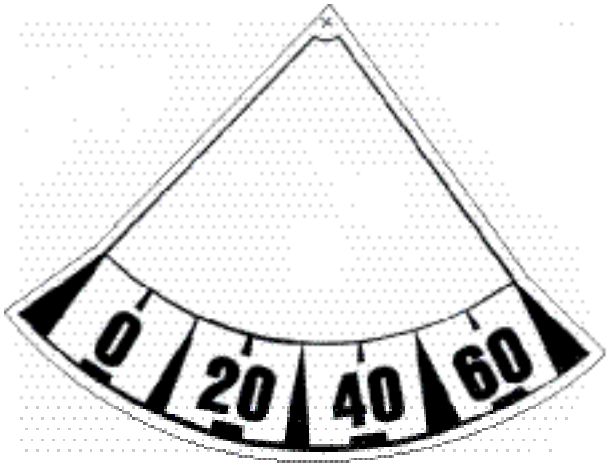

00L-09870-000, NO RIDING

Centered on the top of the counterweight on the rear of the machine

https://truckmanualshub.com/

Part #: LL-7938
15″ Boom Fade with White Strip

PART #: LL-7941
18.5” BOOM FADE WITH WHITE STRIP
*FOR 1157, T1157 & 1530 MACHINES ONLY.

Part #: LL-7942
Pettibone Flag with guides (L)
• used with 15″ boom fade decal

PETTIBONE®

Part #: LL-7943
Pettibone Flag with guides (R)
• used with 15″ boom fade decal

PETTIBONE®

https://truckmanualshub.com/

Part #: LL-7944
Pettibone Flag with guides (L)
*used with 18.5” boom fade decal, only 1157, T1157 & 1530

Part #: LL-7945
Pettibone Flag with guides (R)
*uded with 18.5” boom fade decal: only 1157, T1157 & 1530

https://truckmanualshub.com/

Part #: LL-7946
Extendo 744 Black Vinyl Decal

744

Part #: LL-7947
Extendo 944 Black Vinyl Decal

944

Part #: LL-7948
Extendo 1032 Black Vinyl Decal

1032

Part #: LL-7949
1144 Black Vinyl Decal

1144

Part #: LL-7950
1157 Black Vinyl Decal

1157

Part #: LL-7951
T944 Black Vinyl Decal

T944

Part #: LL-7952
T1157 Black Vinyl Decal

T1157

https://truckmanualshub.com/

Part #: LL-7953
Extendo Series Black Vinyl Strip (L)

Part #: LL-7954
Extendo Series Black Vinyl Strip (R)

Part #: LL-7955
Traverse Series Black Vinyl Strip (L)

Part #: LL-7956
Traverse Series Black Vinyl Strip (R)

Part #: LL-7957
T1157 Black Vinyl Strip

Part #: LL-7958
T1157 Black Vinyl Strip

https://truckmanualshub.com/

Decal Add-On Kits

Qty	Part No.	Description
LL-7959-1, Kit - Decal 944 Add-On		
1	LL-7831	PRESSURE
1	FL-15556	DECAL, LUBE CHART 944/1144
2	LL-7947	944 MODEL DECAL
1	BL-10558-6	BOOM LENGTH 44FT
1	LL-7378-4	DECAL, FR JSTK, NEW EXT
1	LL-7378-2	DECAL, REAR JSTK
1	LL-7942	PETTIBONE FLAG WITH GUIDES (LH)
1	LL-7943	PETTIBONE FLAG WITH GUIDES (RH)
2	LL-7938	15' BOOM FADE WITH WHITE STRIP
1	LL-7953	EXTENDO SERIES BLACK VINYL STRIP (LH)
2	LL-7954	EXTENDO SERIES BLACK VINYL STRIP (RH)
LL-7959-2, Kit - Decal 744 Add-On		
1	FL-13385	PRESSURE
1	FL-15591	DECAL, LUBE CHART 736/744
2	LL-7946	744 MODEL DECAL
1	BL-10558-6	BOOM LENGTH 44FT
1	LL-7378-4	DECAL, FR JSTK, NEW EXT
1	LL-7378-2	DECAL, REAR JSTK
1	LL-7942	PETTIBONE FLAG WITH GUIDES (LH)
1	LL-7943	PETTIBONE FLAG WITH GUIDES (RH)
2	LL-7938	15' BOOM FADE WITH WHITE STRIP
1	LL-7953	EXTENDO SERIES BLACK VINYL STRIP (LH)
1	LL-7954	EXTENDO SERIES BLACK VINYL STRIP (RH)
LL-7959-3, Kit - Decal 736 Add-On		
1	FL-13384	PRESSURE
1	FL-15591	DECAL, LUBE CHART, 736/744
2	LL-7960	736 MODEL DECAL
1	LL-7884	BOOM LENGTH 36FT
1	LL-7378-4	DECAL, FR JSTK, NEW EXT
1	LL-7378-2	DECAL, REAR JSTK
1	LL-7942	PETTIBONE FLAG WITH GUIDES (LH)
1	LL-7943	PETTIBONE FLAG WITH GUIDES (RH)
2	LL-7938	15' BOOM FADE WITH WHITE STRIP
1	LL-7953	EXTENDO SERIES BLACK VINYL STRIP (LH)
2	LL-7954	EXTENDO SERIES BLACK VINYL STRIP (RH)

https://truckmanualshub.com/

Qty	Part No.	Description
LL-7959-4, Kit - Decal 936 Add-On		
1	LL-7831	PRESSURE
1	FL-15592	DECAL, LUBE CHART, 936
2	LL-7961	936 MODEL DECAL
1	LL-7884	BOOM LENGTH 36FT
1	LL-7378-4	DECAL, FR JSTK, NEW EXT
1	LL-7378-2	DECAL, REAR JSTK
1	LL-7942	PETTIBONE FLAG WITH GUIDES (LH)
1	LL-7943	PETTIBONE FLAG WITH GUIDES (RH)
2	LL-7938	15' BOOM FADE WITH WHITE STRIP
1	LL-7953	EXTENDO SERIES BLACK VINYL STRIP (LH)
1	LL-7954	EXTENDO SERIES BLACK VINYL STRIP (RH)
LL-7959-5, Kit - Decal 1144 Add-On		
1	FL-13385	PRESSURE
1	FL-15556	DECAL, LUBE CHART, 944/1144
2	LL-7949	1144 MODEL DECAL
1	BL-10558-6	BOOM LENGTH 44FT
1	LL-7378-4	DECAL, FR JSTK, NEW EXT
1	LL-7378-2	DECAL, REAR JSTK
1	LL-7942	PETTIBONE FLAG WITH GUIDES (LH)
1	LL-7943	PETTIBONE FLAG WITH GUIDES (RH)
2	LL-7938	15' BOOM FADE WITH WHITE STRIP
1	LL-7953	EXTENDO SERIES BLACK VINYL STRIP (LH)
1	LL-7954	EXTENDO SERIES BLACK VINYL STRIP (RH)
LL-7959-6, Kit - Decal 1157 Add-On		
1	FL-13385	PRESSURE
1	FL-15594	DECAL, LUBE CHART, 1157
2	LL-7950	1157 MODEL DECAL
1	LL-7881	BOOM LENGTH
1	LL-7378-4	DECAL, FR JSTK, NEW EXT
1	LL-7378-2	DECAL, REAR JSTK
1	LL-7944	PETTIBONE FLAG WITH GUIDES (LH)
1	LL-7945	PETTIBONE FLAG WITH GUIDES (RH)
1	LL-7437	OUTRIGGER-UP/DOWN
4	LL-7875	FOAM FILLED TIRES-REQUIRED
2	LL-7941	18.5' BOOM FADE WITH WHITE STRIP
1	LL-7953	EXTENDO SERIES BLACK VINYL STRIP (LH)
1	LL-7954	EXTENDO SERIES BLACK VINYL STRIP (RH)

https://truckmanualshub.com/

Qty	Part No.	Description
LL-7959-7, Kit - Decal T944 Add-On		
1	LL-7831	PRESSURE
1	FL-15593	DECAL, LUBE CHART, T936/T944
2	LL-7951	T944 MODEL DECAL
1	BL-10558-6	BOOM LENGTH 44FT
1	LL-7378-11	DECAL-TRAVERSE JOYSTICK
1	LL-7942	PETTIBONE FLAG WITH GUIDES (LH)
1	LL-7943	PETTIBONE FLAG WITH GUIDES (RH)
2	LL-7938	15' BOOM FADE WITH WHITE STRIP
1	LL-7955	TRAVERSE SERIES BLACK VINYL STRIP (LH)
1	LL-7956	TRAVERSE SERIES BLACK VINYL STRIP (RH)
LL-7959-11, Kit - Decal 1032 Add-On		
1	FL-13385	PRESSURE
1	FL-15603	DECAL, LUBE CHART, 1032
2	LL-7948	1032 MODEL DECAL
1	LL-7890	BOOM LENGTH 32FT
1	LL-7378-17	DECAL, FR JSTK, BALER
1	LL-7378-2	DECAL, REAR JSTK
1	LL-7942	PETTIBONE FLAG WITH GUIDES (LH)
1	LL-7943	PETTIBONE FLAG WITH GUIDES (RH)
2	LL-7938	15' BOOM FADE WITH WHITE STRIP
1	LL-7953	EXTENDO SERIES BLACK VINYL STRIP (LH)
1	LL-7954	EXTENDO SERIES BLACK VINYL STRIP (RH)
4	LL-6461-1	CLOSING JAWS DECAL
LL-7959-12, Kit - Decal T1157 Add-On		
1	FL-13385	PRESSURE
1	FL-15602	DECAL, LUBE CHART, T1157
2	LL-7952	T1157 MODEL DECAL
1	LL-7881	BOOM LENGTH
1	LL-7378-11	DECAL-TRAVERSE JOYSTICK
1	LL-7944	PETTIBONE FLAG WITH GUIDES (LH)
1	LL-7945	PETTIBONE FLAG WITH GUIDES (RH)
2	LL-7941	18.5" BOOM FADE WITH WHITE STRIP
1	LL-7957	TRAVERSE SERIES BLACK VINYL STRIP (LH)
1	LL-7958	TRAVERSE SERIES BLACK VINYL STRIP (RH)
1	LL-7437	OUTRIGGER - UP/DOWN

https://truckmanualshub.com/

Qty	Part No.	Description
LL-7959-13, Kit - Decal 944 with Outriggers Add-On		
1	LL-7831	PRESSURE
1	FL-15556	DECAL, LUBE CHART, 944/1144
2	LL-7947	944 MODEL DECAL
1	BL-10558-6	BOOM LENGTH 44FT
1	LL-7378-4	DECAL, FR JSTK, NEW EXT
1	LL-7378-2	DECAL, REAR JSTK
1	LL-7942	PETTIBONE FLAG WITH GUIDES (LH)
1	LL-7943	PETTIBONE FLAG WITH GUIDES (RH)
2	LL-7938	15' BOOM FADE WITH WHITE STRIP
1	LL-7953	EXTENDO SERIES BLACK VINYL STRIP (LH)
1	LL-7954	EXTENDO SERIES BLACK VINYL STRIP (RH)
1	LL-7437	OUTRIGGER - UP/DOWN
LL-7959-14, Kit - Decal 1144 with Outriggers Add-On		
1	FL-13385	PRESSURE
1	FL-15556	DECAL, LUBE CHART, 944/1144
2	LL-7949	1144 MODEL DECAL
1	BL-10558-6	BOOM LENGTH 44FT
1	LL-7378-4	DECAL, FR JSTK, NEW EXT
1	LL-7378-2	DECAL, REAR JSTK
1	LL-7942	PETTIBONE FLAG WITH GUIDES (LH)
1	LL-7943	PETTIBONE FLAG WITH GUIDES (RH)
2	LL-7938	15' BOOM FADE WITH WHITE STRIP
1	LL-7953	EXTENDO SERIES BLACK VINYL STRIP (LH)
1	LL-7954	EXTENDO SERIES BLACK VINYL STRIP (RH)
1	LL-7437	OUTRIGGER - UP/DOWN
LL-7959-15, Kit - Decal T944 with Outriggers Add-On		
1	LL-7831	PRESSURE
1	FL-15593	DECAL, LUBE CHART, T944
2	LL-7951	T944 MODEL DECAL
1	BL-10558-6	BOOM LENGTH 44FT
1	LL-7378-11	DECAL-TRAVERSE JOYSTICK
1	LL-7942	PETTIBONE FLAG WITH GUIDES (LH)
1	LL-7943	PETTIBONE FLAG WITH GUIDES (RH)
2	LL-7938	15' BOOM FADE WITH WHITE STRIP
1	LL-7955	TRAVERSE SERIES BLACK VINYL STRIP (LH)
1	LL-7956	TRAVERSE SERIES BLACK VINYL STRIP (RH)
1	LL-7437	OUTRIGGER - UP/DOWN

https://truckmanualshub.com/

This Page Intentionally Left Blank

https://truckmanualshub.com/

GENERAL INFORMATION

This rough terrain forklift is manufactured by Pettibone/Traverse Lift, LLC, a subsidiary of Pettibone, LLC. The machine is designed to provide years of reliable operation with normal maintenance. This manual instructs the owner/operator in the correct operation of the Pettibone/Traverse Lift Rough Terrain Forklifts. The location and operation of all controls are explained in this manual. It also contains lubrication tables, which indicate the recommended servicing intervals for all fluids and greased components.

This manual should be considered a permanent part of your vehicle. It should stay with the vehicle, if sold, to provide the next owner with required operating instructions.

All instructions, illustrations and specifications contained herein are based upon the latest product information available at the time of printing. Pettibone/Traverse Lift, LLC reserves the right to change specifications without prior notice in order to follow its policy of constantly striving to manufacture a better product without incurring any liability while providing these new features on any units previously manufactured.

MATERIAL SAFETY DATA SHEETS (MSDS)

The Federal Occupational, Safety and Health Administration (OSHA) Standard 29 CFR 1910.1200 and, in some cases, state and local Right-To-Know laws, may require that specific Material Safety Data Sheets be available to employees prior to operating this equipment. These sheets include information on substances contained in the equipment, such as antifreeze, battery acid, diesel fuel, engine oil, grease and hydraulic oil.

Upon written request, Pettibone/Traverse Lift, LLC will provide the Material Safety Data Sheets applicable to our product line, at no extra cost. Write to:

Pettibone/Traverse Lift, LLC
1100 Superior Ave
Baraga, MI 49908

Phone: 906-353-6611
Fax: 906-353-6044

The customer's return address, machine model and serial number must be included to ensure a prompt response.

https://truckmanualshub.com/

DIRECTIONAL REFERENCE

All directional references (right, left, front and rear) used in this manual are as seen from the operator's seat.

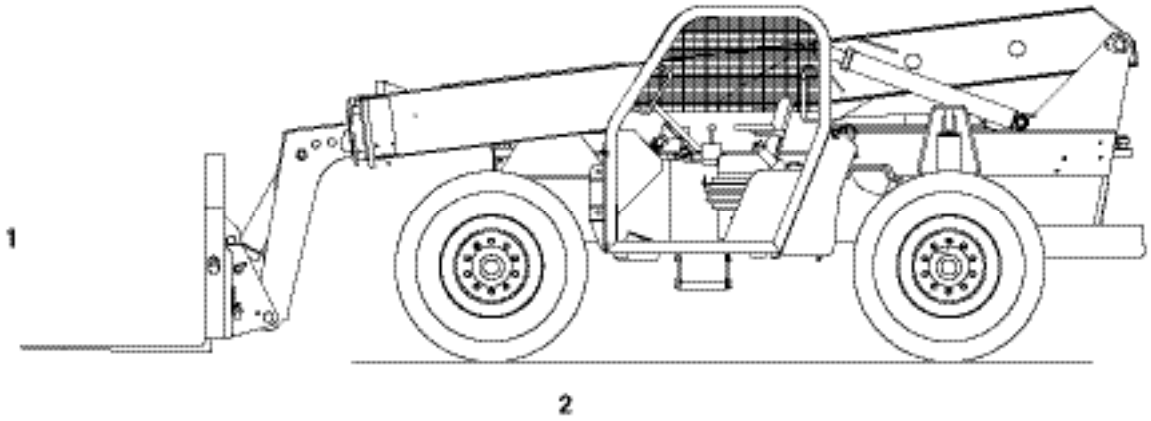

1 – Front of Machine

2 – Left Side of Traversing Model Machine Shown

Figure 1. Directional Reference - Left Side

https://truckmanualshub.com/

IDENTIFICATION

Forklift Description

This machine is a low profile, rough-terrain forklift with a vehicle weight of 20,000 to 39,500 pounds (depending on the options used) and a lifting capacity of 7,000 to 11,000 pounds. This machine is equipped with four-wheel drive and a steering system that is capable of two-wheel steering, four-wheel steering and oblique (crab) steering, as selected by the operator.

Forklift Identification Plate

The forklift identification plate is located behind the seat in the operator compartment. It contains the equipment model number, serial number and gross vehicle weight (GVW). USE NUMBERS IN CORRESPONDENCE: It is important that the model designation, serial number and assembly part number be referred to when seeking service information or ordering parts.

Figure 2. Forklift Identification Plate

Standard Engine Description

Machines are equipped with a Cummins Model QSB4.5 engine. This engine is a liquid-cooled, four-cylinder, four stroke, diesel engine with a displacement of 275 cubic inches (4.5 L). The engine is fuel injected and turbocharged with a rated output of 110 horsepower at 2500 rpm or 115 horsepower at 2300 rpm.

Engine Identification Plate

The Cummins engine identification plate is located on the top of the engine.

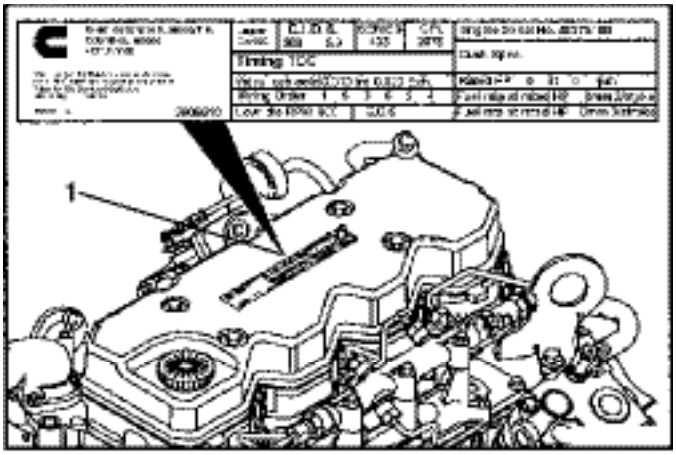

1 – Engine Identification

Figure 3. Engine Left View

https://truckmanualshub.com/

Transmission Description

The transmission has four forward speeds and three reverse speeds.

Transmission Identification Plate

The transmission identification plate is located on the right side of the transmission housing, centered in front of the engine. It contains the model, specification number and serial number.

1 – Transmission Identification

Figure 4. Transmission Right View

Axle Description

The forklift is equipped with two steerable drive axles. Both axles are equipped with internal, wet-type disc brakes.

Axle Identification Plate

The axle identification plate is located on the driveshaft side of the axle, to the right of the differential. The axle identification plate contains the axle part number, the serial number and the build date.

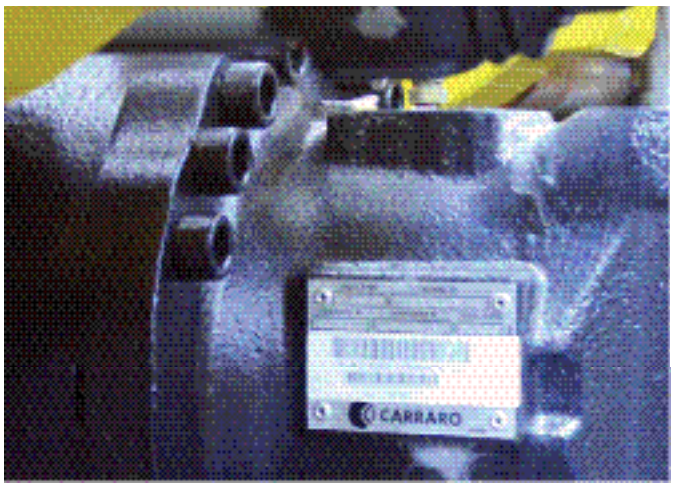

Figure 5. Axle Identification Plate Location

Work Platform Reference Guide

Pettibone/Traverse Lift, LLC does not recommend the use of its rough terrain forklifts for lifting personnel and currently does not offer any type of work platform, personnel basket or other attachments for use with its forklift product lines to lift, support or carry personnel.

It has been brought to the company's attention by certain dealers that personnel work platforms are required for certain field operations by such dealers' customers.

The American Society of Mechanical Engineers (ASME) B56.6, a voluntary standard for rough terrain forklift trucks, does not recommend the use of such platforms on a rough terrain forklift; however, it does include specific requirements for the construction and limited use of work platforms.

https://truckmanualshub.com/

Note: ASME B56.6 – 2002, Section 5.15 "Elevating Personnel" sets out specific guidelines and precautions if a rough terrain forklift must be used to lift personnel and pursuant to ASME B56.6 – 2002, Section 8.24 "Platforms for Elevating Personnel" sets out the design requirements for such personnel platforms.

Pettibone/Traverse Lift, LLC must recognize the ever changing field requirements of the users of such equipment. In an effort to do so and to make clear its position, the company adopts the requirements of ASME B56.6 in the event the user determines that there is no other practical option. The user must comply with ASME B56.6 and all relevant OSHA requirements. This assumes that the user's decision to use the forklift to elevate personnel does not otherwise violate any local code or regulation or is not contrary to any job-related contract requirements.

We urge that all dealers and the customers who require such use thoroughly review ASME B56.6 and the relevant OSHA requirements prior to doing so. You will note that in undertaking such an operation, the responsibility rests directly with the user and operator of the equipment to understand that such safe operation is their sole responsibility. An effective operator must be properly trained, abide by such safety rules and procedures and thoroughly understand the operation as well as the functional characteristics and limitations of the particular forklift as it relates to the environment and conditions in which it is required to work on any given day.

Note: Pettibone/Traverse Lift, LLC does not endorse or authorize use of its forklifts for the TRANSPORTATION of personnel. RIDERS ARE NOT PERMITTED. Only the operator is permitted in the cab during movement and placement of the forklift.

Although we cannot anticipate all field usages and conditions under which the forklift must operate, it is important that your users/operators receive a copy of this bulletin and review and understand its contents as a part of any safe operation program or training.

The following are submitted as examples only and should be used as a part of the user's/operator's total training resource materials, including, but not limited to, ASME B56.6 and OSHA regulations.

Preparation and Prevention

In the event a decision is made to use a personnel platform, user shall:

- Be a trained and certified rough terrain forklift operator.
- Use an approved work platform to lift or lower personnel.
- Obtain the requisite safety instructions and decals from the platform manufacturer and attach same to the operator's compartment. It is assumed that the platform attachment will also contain such decals. Attach platform per manufacturer's instructions.
- Read operator's manual for the platform and forklift before operating.
- Know the location and function and operating characteristics of all machine controls, generally, and as they relate to a work platform.
- Fasten seat belt.
- Allow no riders.

Using a Personnel Platform Attachment

The general rule is that any attachment used on this forklift must be intended for the function of lifting only.

This forklift is not designed to PULL, TOW or DRAG other objects or to transport personnel.

DO NOT use attachments that perform these functions with this forklift.

The personnel platform attachments should come with a capacity chart that is to be affixed to the forklift near the original capacity chart for operator reference. Obtain capacity ratings for these types of attachments from the third party source.

https://truckmanualshub.com/

The company makes no representations or warranties, express or implied, as to the design, manufacture or fitness for use with this forklift of any third party source attachments. This forklift is not intended to be used and should not be used with any attachment that would alter the center of gravity/stability of this forklift. The company assumes no liability for any third party attachment that would alter the center of gravity/stability.

The standard capacity chart for this forklift is for lifting materials.

The combined mass (weight in pounds or Kg) of the platform, load and personnel shall not exceed one-third the capacity of the related load certified position indicated on the capacity chart, located in the operator's compartment. Also refer to "Using the Capacity Chart" in the forklift manual.

STOP! Do not use forklift if you cannot locate the load chart applicable to this machine!

Contact your dealer to obtain the requisite decal capacity load chart and lifting information from the forklift manual. Hydraulically actuated attachments also have a maximum hydraulic pressure rating. Make sure that the maximum hydraulic pressure rating of the attachment is equal to or slightly greater than the machines main relief pressure setting, which is the maximum available hydraulic pressure of this forklift. NOTICE: If the maximum pressure of the forklift exceeds the pressure rating of the attachment, the attachment's hydraulic components could burst. If the maximum pressure of the forklift is much lower than the pressure rating of the attachment, the attachment may not work properly.

If the platform is attached mechanically only, be certain the operator understands that the boom's rate of speed must be adjusted downward from that rate used for lifting materials only.

- Consult platform manufacturer for its recommended safe operational rate of travel of boom with platform attached.
- Obtain and secure such operational instruction/warning in cab of forklift.
- Ensure each operator is fully trained in proper raising and lowering of personnel in platform selected prior to its use in the field.

Options and Accessories

Your Pettibone/Traverse Lift, LLC dealer offers a wide assortment of options for this forklift, including a variety of forks, carriages, buckets and more. Contact your dealer for additional information and prices.

Ordering Parts

Order all replacement parts from your dealer. The Parts Book lists replacement parts, service kits and subassemblies. Furnish complete nameplate information with each order.

https://truckmanualshub.com/

FORKLIFT OPERATION

OPERATIONAL SAFETY

Before operating this machine, read the following safety information and review the Safety section on page 1.

A DANGER

The safety messages that follow have DANGER level hazards. These safety messages describe a hazardous situation which, if not avoided, will result in death or serious injury.

Electrocution Hazard

Raise the boom only if there is sufficient overhead clearance from all power lines.

A WARNING

The safety messages that follow have WARNING level hazards. These safety messages describe a hazardous situation which, if not avoided, could result in death or serious injury.

Fire and Explosion Hazard

- Before starting the engine, walk around the machine and check for oil, fuel or other fluid leaks.
- Never use a shop rag to wipe up excess fuel. Vapors from the rag are flammable and explosive.
- Gas pipes, water pipes, sewers and other underground objects can be ruptured and/or ignited. Learn the location of underground hazards before operating the machine in a new area.

https://truckmanualshub.com/

A WARNING

Crush Hazard

- Make certain that the load is stable before transporting. Do not transport or lift loads that are questionable or obviously unsafe.
- Make certain that the load is positioned squarely and evenly on both (or all) forks before lifting.
- Never land a load in such a way that it may topple. Always land the load squarely on a solid, level landing area, never on an uneven surface. Stacking loads is not advisable; however, if stacking is unavoidable, exercise extreme caution.
- When landing a load, be constantly aware of all personnel in the area.
- Sound the horn when moving as a warning to others.
- Make certain that all personnel in the area are far enough away to avoid injury should the load fall.
- The top of a stacked load may not be visible to the operator. If the load is too tall, it should be transported in two or more moves.
- If you cannot see over the load, transport the load using reverse.
- Do not make sudden stops while transporting loads.

Tip Hazard

- Do not attempt to raise or land loads that exceed the forklift's capacity. Refer to the Specifications Table or the Load Chart located in the operator's compartment.
- Always pick up a load with consideration to its center of gravity. Position the load on the forks accordingly.

Fall Hazard

- Always wear the seat belt when operating the forklift, making sure that the seat belt is properly fastened and securely tightened.
- Do not allow riders on the forklift.

Uncontrolled Movement Hazard

- Do not drive faster than conditions allow.
- Do not make adjustments to the seat or objects in the cab while moving.

NOTICE

These notices describe a situation which, if not avoided, could cause damage to the machine, personal property and/or the environment, or cause the equipment to operate improperly.

Replace all broken or missing parts and perform the required lubrication and maintenance as shown in this manual. Clean all trash and debris from the machine.

https://truckmanualshub.com/

Forklift Description

This machine is a rough-terrain forklift designed for lifting construction materials up to floor levels with its telescopic boom. The boom can also reach out and down to lower materials below ground level. This chapter describes, locates, illustrates and furnishes the operator or driver with sufficient information about the various controls and instruments used for the proper operation of the machine. Vehicle operator's controls are also illustrated in the following pages.

This section describes the location and function of each gauge and control in the operator's compartment. With the engine off, practice reaching for these controls as you read about them. This should help you become familiar with their location.

Safe Operating Practices

- Understand the function of each and every control before operating forklift.
- Do not operate the forklift or handle loads in a reckless manner.
- When driving, do not make any sudden stops or turns.
- Keep the forks low when moving around the work area and be careful when raising the load.
- Before operating the equipment where visibility is reduced, such as next to a building, install safety markers to warn others of possible danger.
- Always be aware of the machine and load width and the width of the path in which you are operating.
- Position the load no higher than eye level when transporting.
- Do not operate a forklift that is in need of maintenance.
- Make sure a "Do Not Operate" lockout tag is placed on a forklift in need of maintenance
- Prior to starting the forklift, warn all personnel in the area.
- When possible, do not park the forklift on an incline. If parking on an incline is unavoidable, apply the parking brake and chock the wheels.
- When leaving the operator's compartment, always lower the forks to the ground, apply the parking brake, stop the engine and turn the key to OFF.

https://truckmanualshub.com/

Pre-Startup Inspections

The following checks and services are to be performed before forklift operation:

Walk-Around Inspection

Perform a walk-around inspection of the forklift, looking for loose items (tools, shop towels, etc.) that may have been left on forklift. Remove any such items.

Check Engine Oil

1. With engine off, pull the engine oil dipstick from the engine and wipe it clean.
2. Insert the dipstick back into its position in the engine block and withdraw it again.
3. Check the oil level, and add oil as needed.

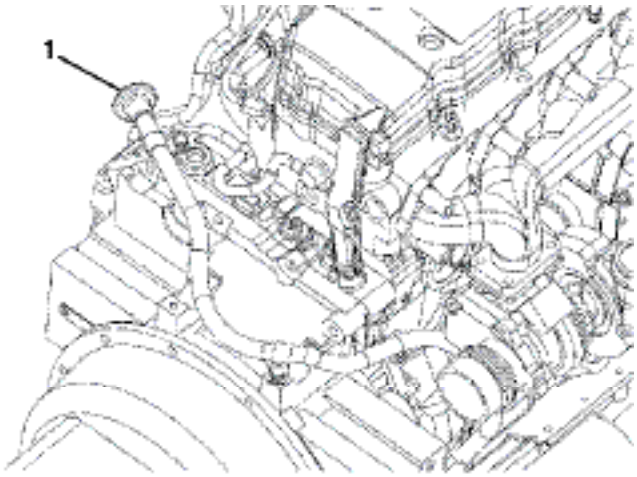

1 – Engine Oil Dipstick

Figure 6. Cummins Engine Oil Dipstick

Check Transmission Oil

1. Start the engine and allow it to idle with the transmission in NEUTRAL until the transmission reaches operating temperature.
2. Remove the transmission dipstick and check the oil level on the dipstick.
3. Remove the breather, add transmission oil as needed and insert the dipstick back into the transmission. Reinstall the breather.

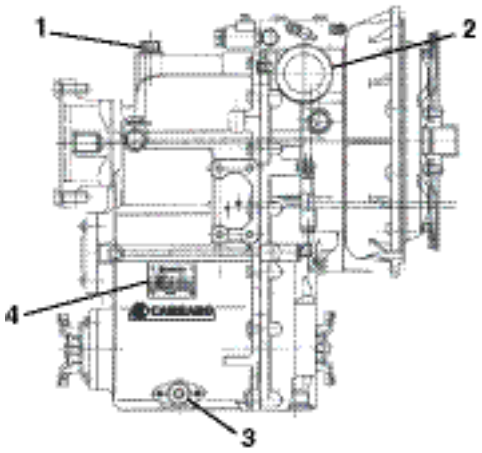

1 – Breather Plug
2 – Filter Element
3 – Drain Plug
4 – Identification Plate

Figure 7. Transmission Service Points

Check Radiator Coolant Level

1. With the engine off and cold, look into the radiator filler neck to check the coolant level. The proper level is approximately 3/4" below the bottom of the radiator filler neck. Add coolant as needed.
2. Replace the radiator cap by pressing down while turning it clockwise.

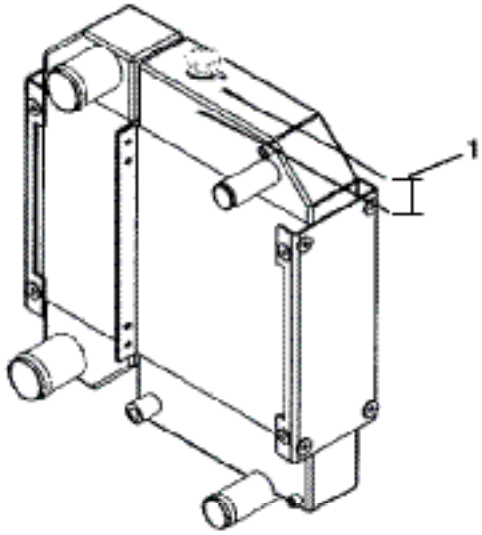

1 – 3/4"

Figure 8. Radiator Coolant Level Check

https://truckmanualshub.com/

Check Hydraulic Fluid Level

Make sure the boom is in the DOWN position and fully retracted, and the frame level. Check hydraulic fluid level as indicated on the sight glass, located on the side of the hydraulic tank. Add hydraulic oil as needed. Do not overfill hydraulic tank.

To fill hydraulic tank:

1. Turn machine off with boom down (frame level), and fully retracted.
2. Remove fill plug and breather.
3. Pour oil into fill plug hole.

Note: Oil must pass through return filters to get to the suction area of tank. The sight glass level will "lag" behind oil level in filter housing.

4. Allow level to equalize between filter housing and sight glass. Add oil until a "full" level on the sight glass is attained.
5. Reinstall breather and fill plug and fill cylinder by exercising each cylinder to its full stroke.
6. Repeat steps 1-5 as needed. NOTICE: With cylinders retracted, oil should always be between HI and LOW levels as indicated on sight glass.

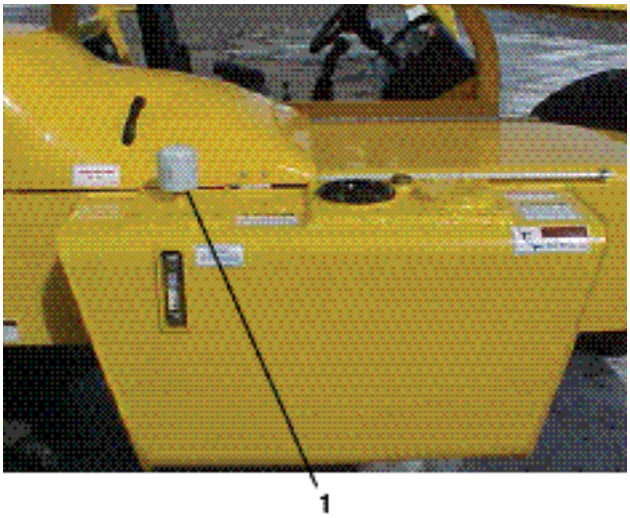

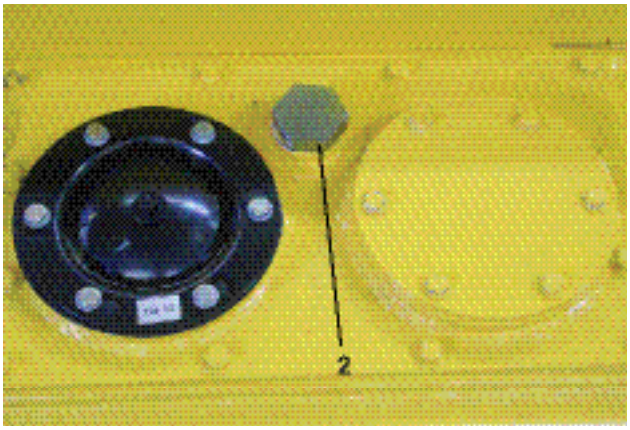

1 – Breather

2 – #20 Fill Plug Hole

Figure 9. Hydraulic Tank

Figure 10. Full Level on Gauge

https://truckmanualshub.com/

Tires and Rims

Inspect the tires for punctures, wear and if applicable, proper tire pressure. Check the rims for missing lug nuts and wheel studs. NOTICE: The tire specifications of this forklift apply to the machine as it was tested in accordance with ASME B56.6A-1994. Any replacement of tires must meet or exceed these specifications for sidewall stiffness.

Note: Because this machine is full-time 4-wheel drive, when tires become worn substantially, they should be replaced with a matched set of four (4). This will ensure better tread life and reduce the wear on power train components.

Inspection for Leaks

Visually inspect the area beneath the forklift for puddles, indicating a leak. Locate the cause of the leak and correct the problem before operating the forklift. Recheck all fluid levels at this point.

Hydraulic Fluid Level

Perform a daily check of the hydraulic oil level and temperature as indicated on the sight glass, located on the side of the hydraulic tank. Add hydraulic oil if necessary.

Entering the Operator's Compartment

WARNING! Fall Hazard. Do not use the steering wheel or arm rest as a grab handle. Proper care should be used whenever entering or leaving the operator's compartment. Use the step and grab handle provided and always keep them clear of debris.

Operator's Seat

The operator's seat can be adjusted to move forward or back. The horizontal adjustment lock lever is located under the front of the seat.

Seat Position Adjustment

WARNING! Uncontrolled Movement Hazard. Do not adjust the driver's seat while the vehicle is moving. Move the lock lever to the left and hold.

1. Slide the seat forward or back to your desired position.
2. Release lever to lock.

Arm Rest

Raise the arm rest for safe entering or exiting of the operator's compartment.

Figure 11. Arm Rest

Seat Suspension Adjustment

The adjustment for the suspension is located under the front of the operator's seat.

- To adjust for a firmer ride, rotate the knob clockwise.
- To adjust for a softer ride, rotate the knob counterclockwise.

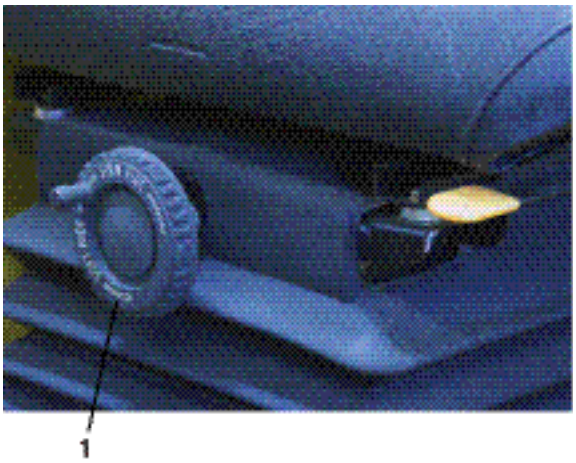

1 – Location of the seat adjustments

Figure 12. Seat Adjustments

https://truckmanualshub.com/

Seat Belt

Fasten the seat belt as follows:

1. Position the belt across your waist as low on the hips as possible. This is necessary to spread the force of the belt over the hip bone instead of across the abdomen.
2. Insert latch plate into buckle until a "click" is heard. Hold tab and pull on strap so it fits snugly.

Figure 13. Seat Belt Fastening

3. To unlock the seat belt, press button on the buckle and pull latch plate from buckle.

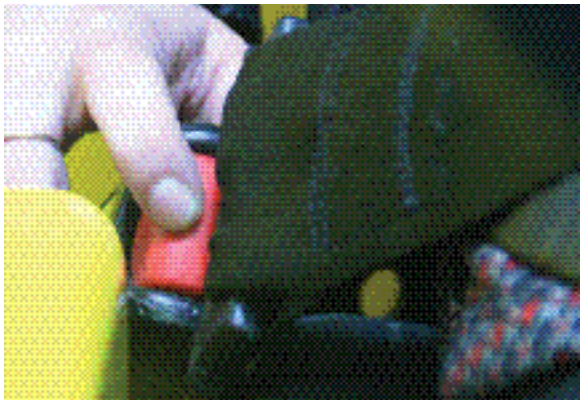

Figure 14. Seat Belt Release

- Make sure that seat belt fits snugly across your waist with a minimal amount of slack. If the belt has too much slack, it may not be able to restrain you in an accident.
- Never wear a twisted seat belt.

Pettibone/Traverse Lift, LLC recommends that operators use the seat belt at all times when driving this machine and will not be held responsible if the operator does not use the safety restraints available.

Instrument Panel

The instrument panel indicates the location of each standard and optional gauge, warning light and control.

Figure 15. Instrument Panel

Fuel Gauge

The fuel gauge indicates the level of diesel fuel in the fuel tank. The fuel gauge is electrically operated and registers only with the ignition switch in the ON or START position.

Engine Coolant Temperature Gauge

This gauge indicates the temperature of the fluid in the engine cooling system. Normal coolant temperature for the Cummins QSB4.5 engine is 160-194°F (70-90°C). NOTICE: Do not operate engine if coolant temperature exceeds 225°F (107°C).

Engine Hour Meter

Indicates the actual hours of engine operation. It records up to 9,999.9 hours and then restarts at zero.

Transmission Temperature Gauge

This gauge indicates the temperature of the transmission oil.

Normal Operating Range: 180-220°F (82-106°C)

Red Line Temperature: 250°F (121°C)

https://truckmanualshub.com/

Transmission Oil Pressure Gauge

This gauge indicates the pressure of the transmission oil.

Normal Operating Range: 247-319 PSI @2200 RPM (1700-2200 kPa)

Figure 16. Instrument Panel Composite

Figure 17. Gauges as pictured left to right: Transmission Oil Pressure, Transmission Temperature, Hour Meter, Coolant Temperature, Fuel Gauge

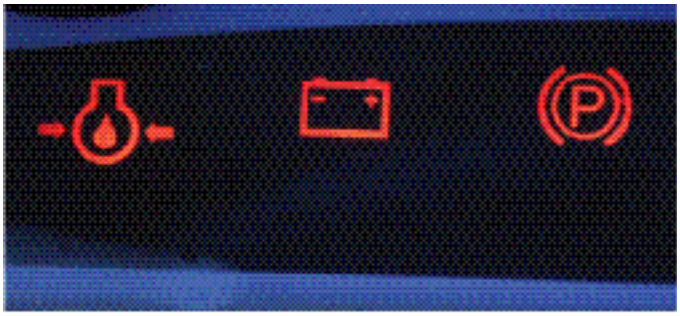

Figure 18. Warning Lights as pictured left to right: Oil Pressure, Low Battery, Parking Brake

Inclinometer

This instrument shows the angle (left or right) of the machine frame relative to ground level. It helps you keep your load level when operating over uneven terrain. The frame is approximately level when the inclinometer indicates 0° deviation.

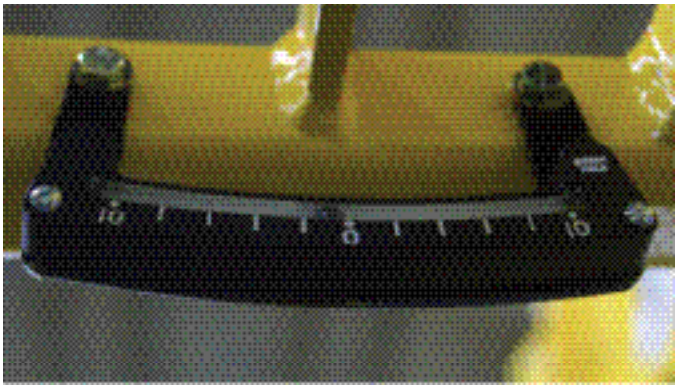

Figure 19. Inclinometer

Parking Brake Switch

This switch activates the parking brake when it is in the UP postition, and releases it when it is in the DOWN position.

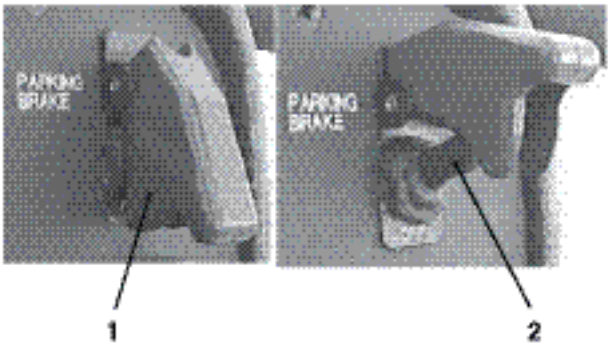

1 – Brake Off

2 – Brake On

Figure 20. Parking Brake Switch

https://truckmanualshub.com/

Clutch Cut-off Switch

This toggle switch disengages the transmission when you apply the service brake pedal.

Figure 21. Clutch Cut-off Switch

Rear Axle Lock Warning Light

This light glows orange when the vehicle is in axle lock mode (boom above 25° with the parking brake on).

Figure 22. Rear Axle Lock Warning Light

Rear Axle Restricted Mode

This light glows orange when the vehicle is in axle restricted mode (boom above 25° with the parking brake off).

Figure 23. Rear Axle Restricted Warning Light

Brake Oil Pressure Warning Light

This light glows red and activates a warning buzzer if there is low hydraulic brake oil pressure. (Normally, light should come on at engine start-up.)

Figure 24. Brake Oil Pressure Warning Light

https://truckmanualshub.com/

Parking Brake Indicator Light

This light glows red when the parking brake is applied and goes out when brake is released. WARNING! Uncontrolled Movement Hazard. Set the parking brake whenever any maintenance is performed.

Figure 25. Parking Brake Indicator Light

Low Voltage Warning Light

This light glows red if there is a malfunction of the charging system. It is normal for light to come on at engine start-up until electrical system reaches normal level.

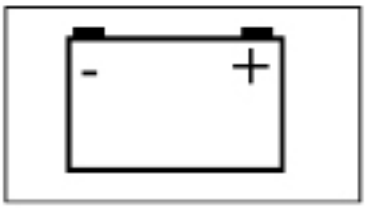

Figure 26. Low Voltage Warning Light

Engine Oil Pressure Warning Light

This light glows red and activates warning buzzer if the engine oil pressure drops below normal. (Light should come on at engine start-up and go out when oil pressure rises to normal.)

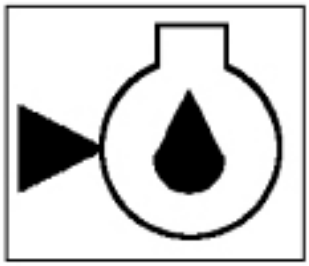

Figure 27. Engine Oil Pressure Warning Light

Ignition Switch

The ignition switch has four positions: ACC, OFF, ON and START.

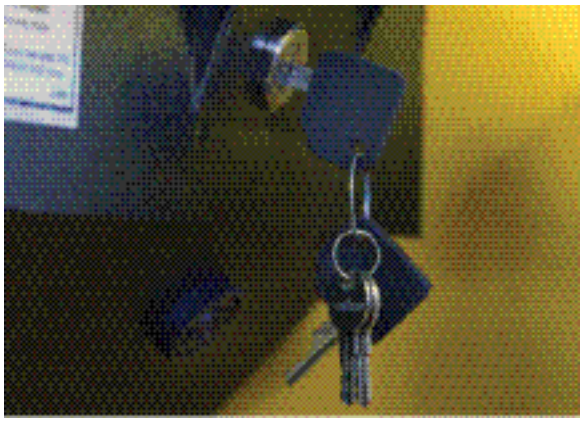

Figure 28. Ignition Switch

Steering Selector

This lever controls the steering modes: Crab, 2-wheel or 4-wheel.

Figure 29. Steering Selector

https://truckmanualshub.com/

Fixed Boom Hydraulic Controls

Remote Control Joystick

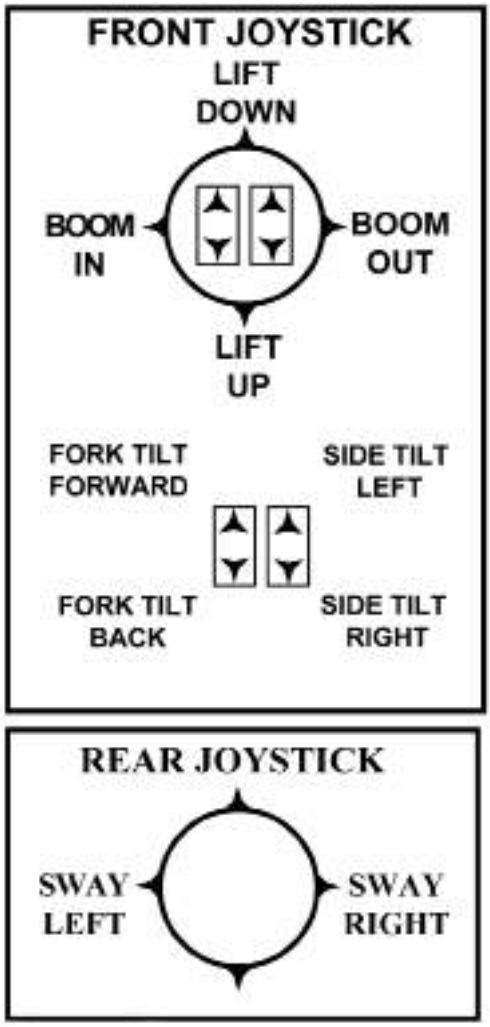

Figure 30. Remote Control Joystick - Fixed Boom

Function

All hydraulic controls are self-centering to NEUTRAL. Releasing handle returns them to their center (NEUTRAL) positions.

Both joysticks are located on a console to your right. They control the following boom, fork carriage and machine frame motions:

- Raise boom
- Lower boom
- Extend boom
- Retract boom
- Fork tilt up
- Fork tilt down
- Fork side tilt left (optional)
- Fork side tilt right (optional)
- Frame sway right
- Frame sway left

https://truckmanualshub.com/

As shown, the boom and fork functions are controlled by the front joystick and the machine sway functions are controlled by the rear joystick. The fork carriage side tilt function is operated by pressing and holding the right button up to tilt the fork frame left and the right button down to tilt the fork frame right. The left button up will tilt the fork frame forward and the left button down will tilt the fork frame back. Pushing the rear joystick to the right will sway the machine to the right and pushing it to the left will sway the machine to the left.

Figure 31. Joystick Functions

Traversing Boom Hydraulic Controls

Remote Control Joystick

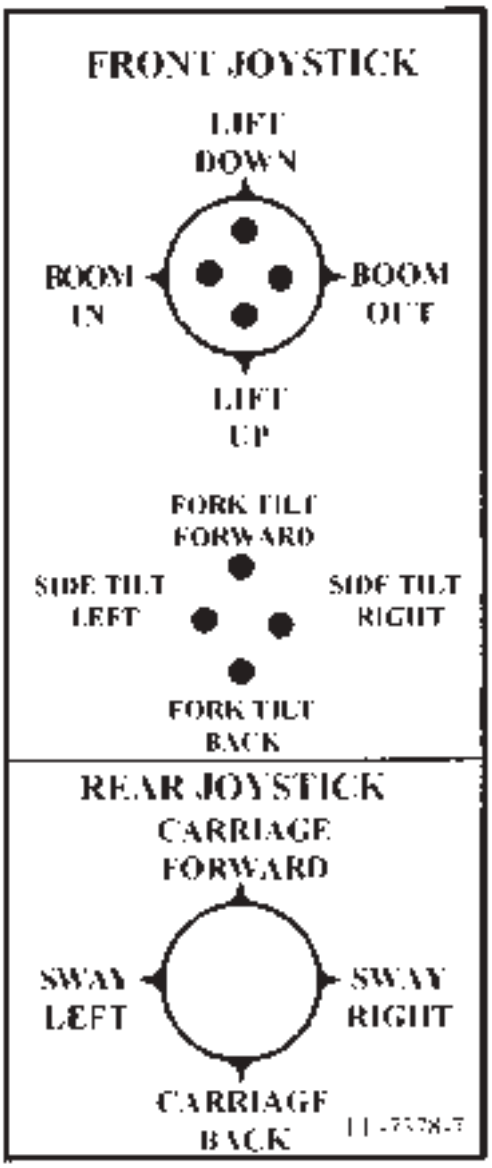

Figure 32. Remote Control Joystick - Traversing Boom

https://truckmanualshub.com/

Function

All hydraulic controls are self-centering to NEUTRAL. Releasing handle returns them to their center (NEUTRAL) positions.

Both joysticks are located on a console to your right. They control the following boom, fork frame, machine frame and traversing motions:

- Raise boom
- Lower boom
- Extend boom
- Retract boom
- Fork tilt up
- Fork tilt down
- Fork side tilt left (optional)
- Fork side tilt right (optional)
- Frame sway right
- Frame sway left
- Carriage forward
- Carriage back

As shown, the boom and fork frame functions are controlled by the front joystick and the machine sway and traversing functions are controlled by the rear joystick. The fork frame side tilt function is operated by pressing and holding the right button up to tilt the fork frame left and the right button down to tilt the fork frame right. The left button up will tilt the fork frame forward and the left button down will tilt the fork frame back. Pushing the rear joystick to the right will sway the machine to the right and pushing it to the left will sway the machine to the left. Pushing the rear joystick forward moves the traversing carriage forward and pulling it back moves the traversing carriage back.

Figure 33. Joystick Functions

Throttle and Brake Controls

The throttle and brake controls are shown below.

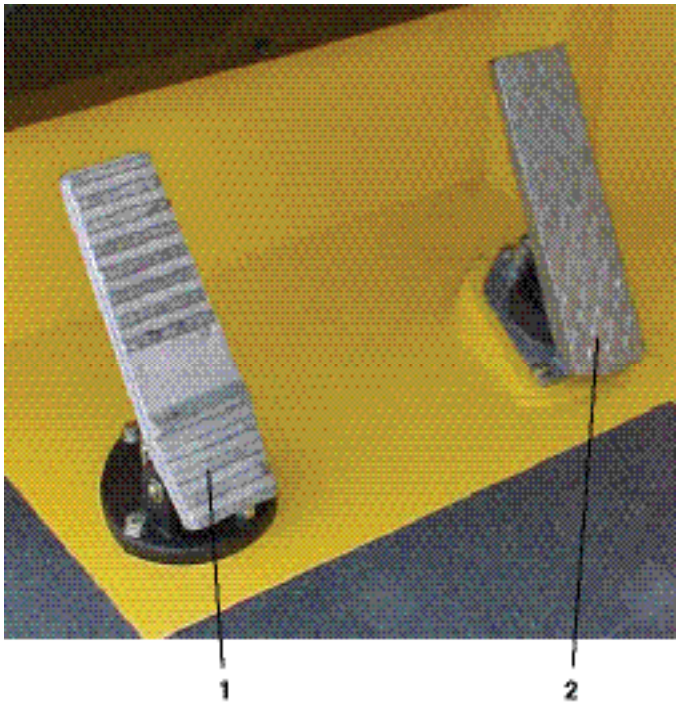

1 – Brake

2 – Throttle

Figure 34. Throttle and Brake Controls

https://truckmanualshub.com/

Brake Pedal

Depress this pedal to apply brakes to all four wheels.

Throttle Pedal

Depress this pedal to increase engine speed.

Transmission Controls

Powershift Transmission Controls

This machine is equipped with a 4 speed forward, 4 speed reverse, Powershift Transmission.

Twist Grip Gear Shifter/Directional Selector

The twist grip on the control lever selects the transmission ranges and also selects the direction.

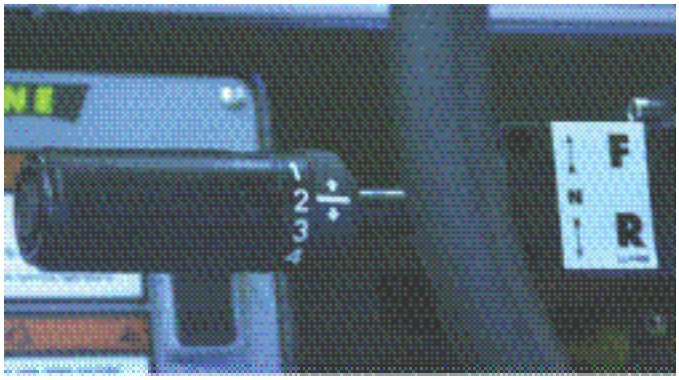

Figure 35. Twist Grip Gear Shifter/ Directional Selector

Steering Wheel

The steering wheel and gear are of the conventional type. Turning the wheel clockwise turns the vehicle to the right; turning the wheel counterclockwise turns the vehicle to the left.

Boom Features

The boom consists of multiple sections and features telescopic action. During boom extension, the smaller sections telescope out from the stationary section.

The boom length is controlled by a hydraulic cylinder. The smaller sections telescope outward simultaneously when the cylinder extends, and telescope inward when it retracts. The forks achieve maximum lift height when the boom is fully raised and extended. This telescopic action allows you to place loads at different heights and distances from the machine.

Fork Leveling

The forklift maintains a level load with automatic fork leveling and a manually-operated frame tilt feature. The automatic fork leveling feature keeps the forks at a constant angle as the boom is raised and lowered.

Frame Tilt (Sway)

The manually-operated sway feature tilts the frame of the machine so you can keep your load level while operating on non-level terrain. A single hydraulic cylinder (mounted on the right side of the frame) controls the tilting action. The chassis tilts left when the cylinder extends and tilts right when the cylinder retracts.

Gauges and Indicators

Observe all gauges and indicators and be prepared to halt operation in the event of any abnormal indication. Be constantly aware of the fuel level, engine coolant temperature, transmission oil temperature and electrical system voltage.

Changes in Performance

Be constantly alert to changes in the equipment's operating characteristics. Such changes in performance are sometimes an indication of a malfunction.

https://truckmanualshub.com/

Start-up and Driving

To start the engine:

1. Apply the parking brake.
2. Place the transmission in NEUTRAL. NOTICE: Never operate the starter for more than 20 seconds continuously. Allow 2 minutes between starting efforts. If using starting fluid for a cold weather start, inject the starting fluid only while the engine is cranking. Insert the ignition key into the switch, turn clockwise and hold. Release the key when the engine starts. NOTICE: The forklift must be standing still when selecting any steering mode. Equipment damage will occur if the mode is selected while the forklift is moving.
3. Determine the steering mode.
   a. CRAB STEERING (up to 2 mph). In this position, all four wheels will turn in the same direction.

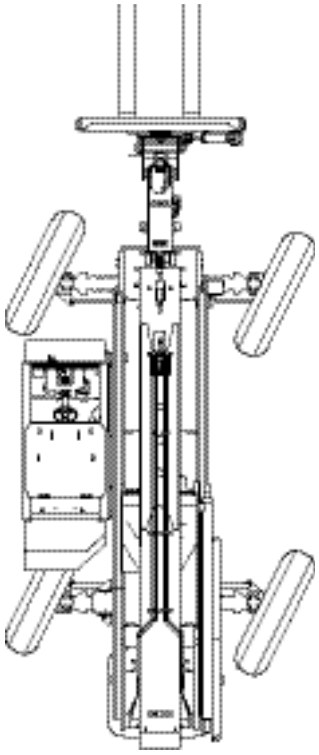

Figure 36. Crab Steering

   b. 4-WHEEL STEERING (up to 10 mph). In this mode, the rear wheels will turn in the opposite direction from the front wheels. This provides the shortest turn radius.

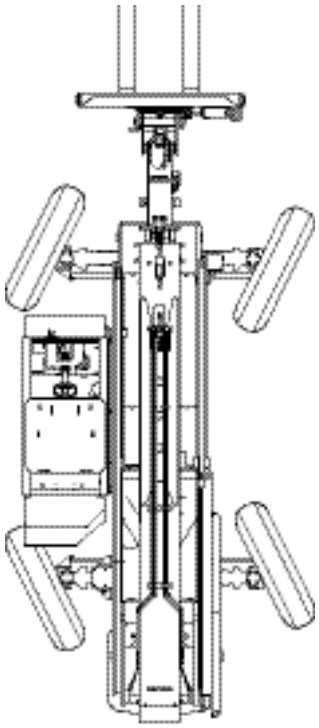

Figure 37. 4-Wheel Steering

Note: Before selecting this mode, the rear wheels must be turned straight using the 4-WHEEL STEERING mode, if necessary.

   c. 2-WHEEL STEERING (10 mph or more). In this position, only the front wheels will steer.

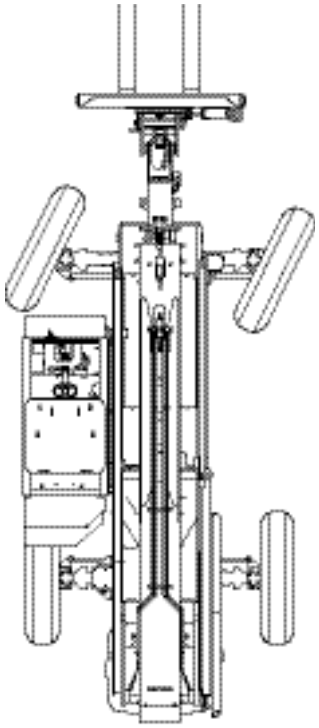

Figure 38. 2-Wheel Steering

https://truckmanualshub.com/

4. Position the steering selector switch in the desired steering mode.
5. Raise the forks by pulling the front joystick to the rear until a safe travel height is reached.
6. Depress the brake pedal and hold. Move the transmission selection lever forward (F) to move forward or back (R) to move in reverse. Rotate the twist grip on the transmission selection lever to first gear (1), second gear (2), third gear (3) or fourth gear (4).
7. Continue to hold the brake pedal down and release the parking brake switch. WARNING! Uncontrolled Movement Hazard. Select your intended direction. In 2-WHEEL STEERING mode, this forklift is capable of moving at 20 MPH in Forward and 20 MPH in Reverse. WARNING! Crush Hazard. Clear the area. Drive the forklift by carefully releasing the brake pedal while depressing the throttle pedal as required.

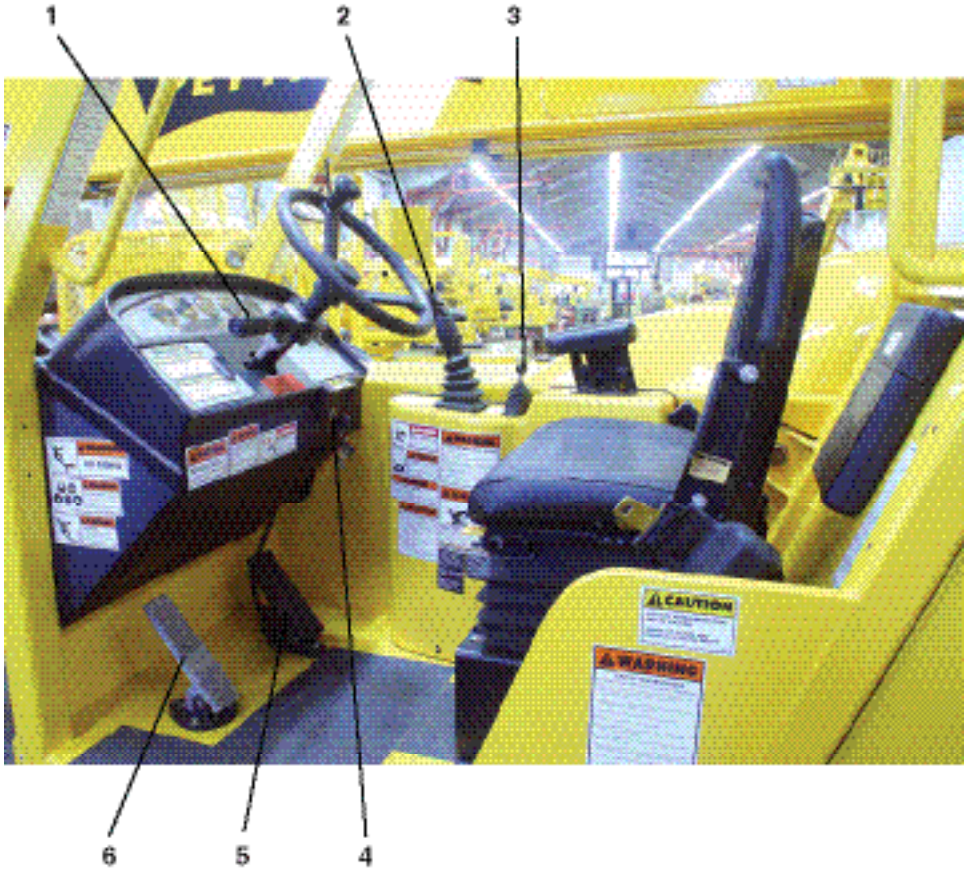

1 – Transmission Selector
2 – Joystick
3 – Frame Sway
4 – Ignition Switch
5 – Accelerator
6 – Brake Pedal

Figure 39. Fixed Boom

https://truckmanualshub.com/

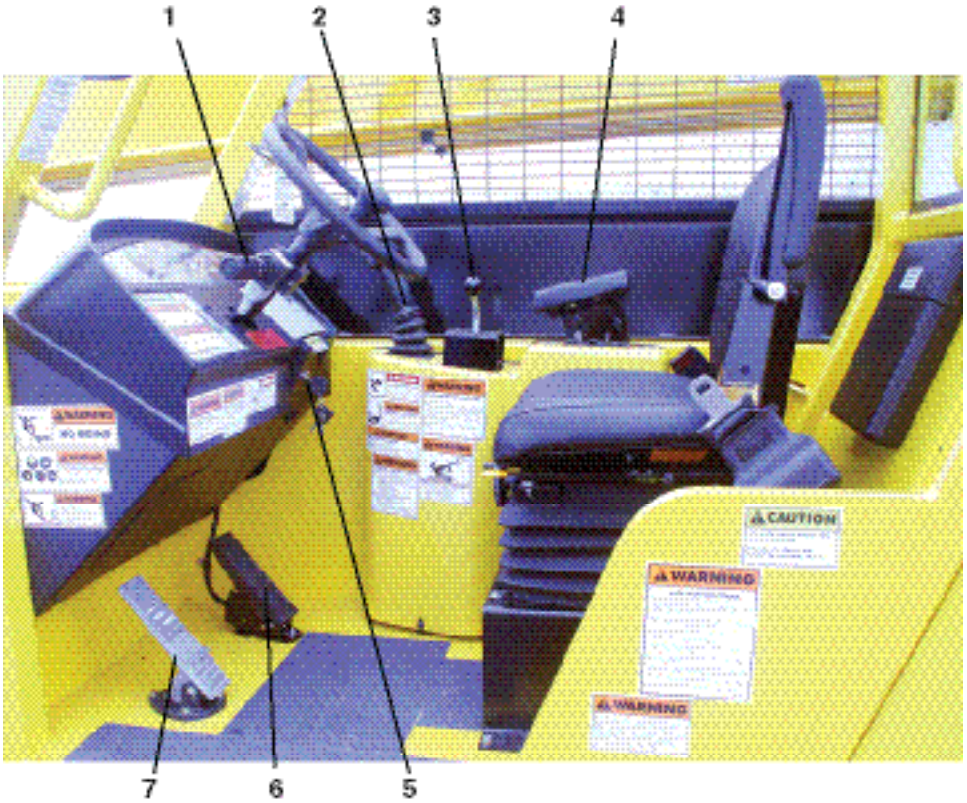

1 – Transmission Selector
2 – Joystick
3 – Frame Sway/Traversing Joystick
4 – Arm Rest
5 – Ignition Switch
6 – Accelerator
7 – Brake Pedal

Figure 40. Traversing Boom

Weight and Distance

It is easy to understand that a fully extended boom cannot lift as much weight as one that is completely retracted. Too much weight too far forward will cause the rear tires to rise off the ground. This can be sensed very quickly by an operator and can be stopped before dangerously affecting the stability of the forklift. However, a load that is safely raised with the boom retracted gains tremendous leverage as it is extended up and away from the center of vehicle gravity. If the weight is too much, trouble isn't usually felt until it's too late. Always judge the weight of a safe load by the distance it must be extended.

Location of Load Range Capacity Charts

WARNING! Tip Hazard. Refer to the Load Range and Lift Capacity Chart located on the operator's informational data plates.

Always determine if the load is within the load capacity of this machine.

https://truckmanualshub.com/

Load Chart Kit, 944, LL-7829

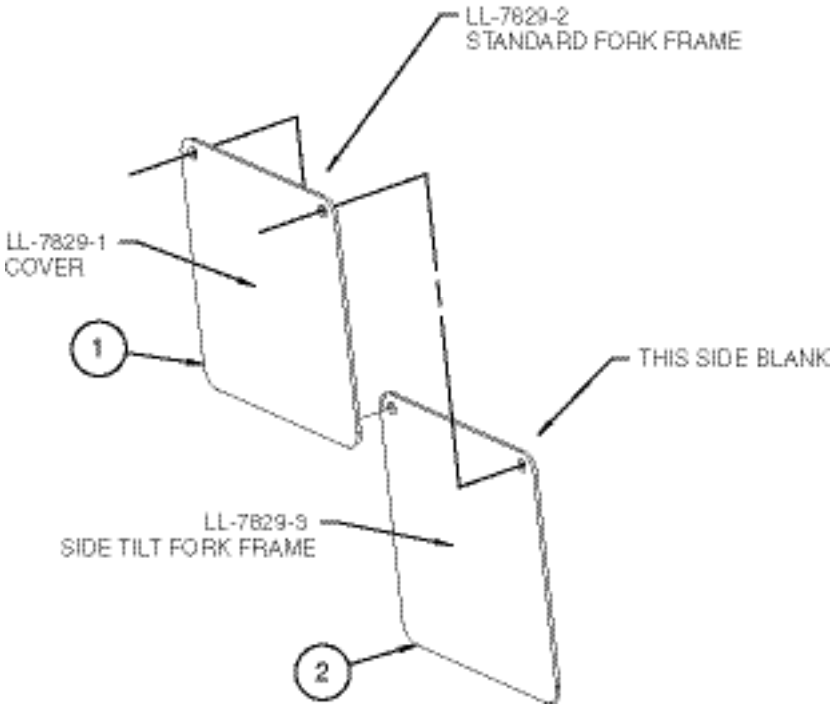

944 KIT LL-7829

WARNING

MACHINE TIP-OVER OR STRUCTURAL DAMAGE can cause severe injury or death. Do not exceed rated lift capacities. Lift capacity ratings are based on the following operating conditions:

1. 24" (610mm) Load Center
2. 4' x 4' x 4' (1.2m x 1.2m x1.2m) load size
3. Machine on firm level surface
4. Use of factory-authorized attachments
5. Properly inflated tires
6. Always level machine prior to raising boom.

Operate at reduced lift capacity rating if above conditions are not met (i.e. extended load centers, oversized loads,etc.) or if other operating conditions exist which may adversely affect lift capacity or stability. Use only factory-authorized attachments.

WARNING

FALLING LOAD HAZARD can cause severe injury or death. Do not allow load in restricted area indicated on capacity chart. Do not rely on overhead cab guard alone for personal protection. Use safe and proper load handling techniques.

TRUSS BOOM CAPACITIES:	8'	AL-12154/FL-12021	1700#
	12'	AL-11804/FL-12022	1380#
	15'	AL-11805/FL-11976	1180#

https://truckmanualshub.com/

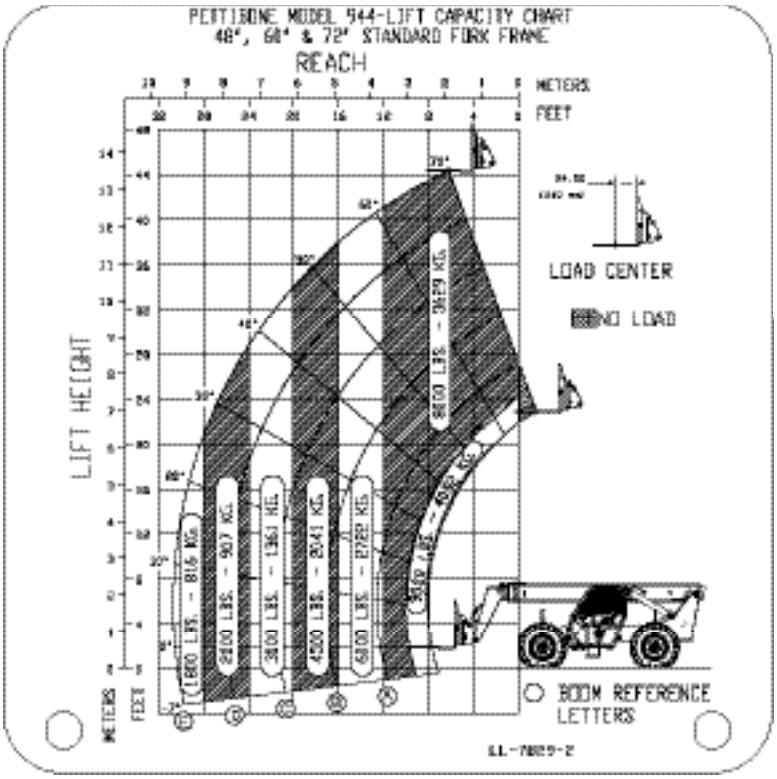

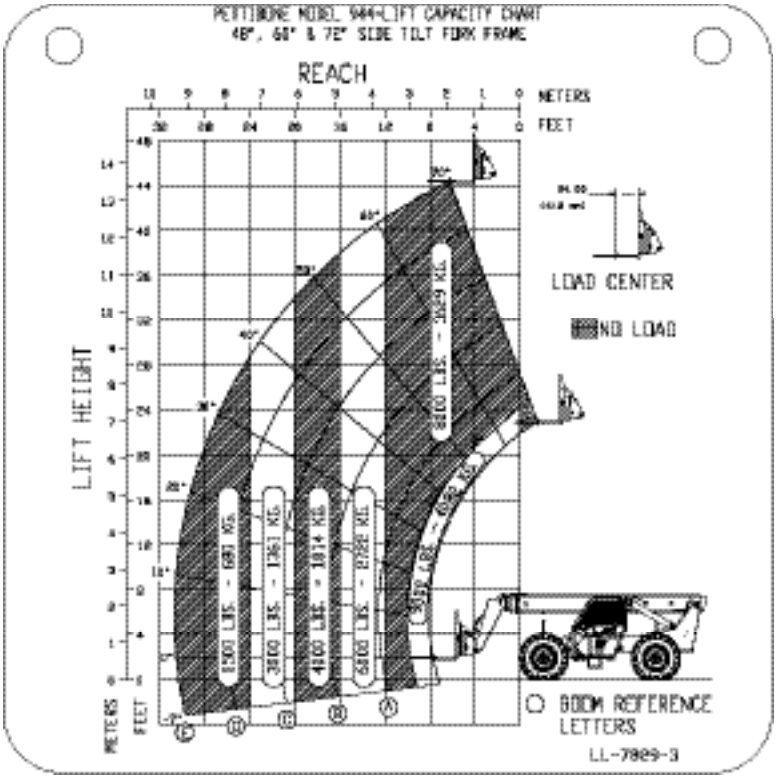

https://truckmanualshub.com/

Load Chart Kit, T944, LL-7835

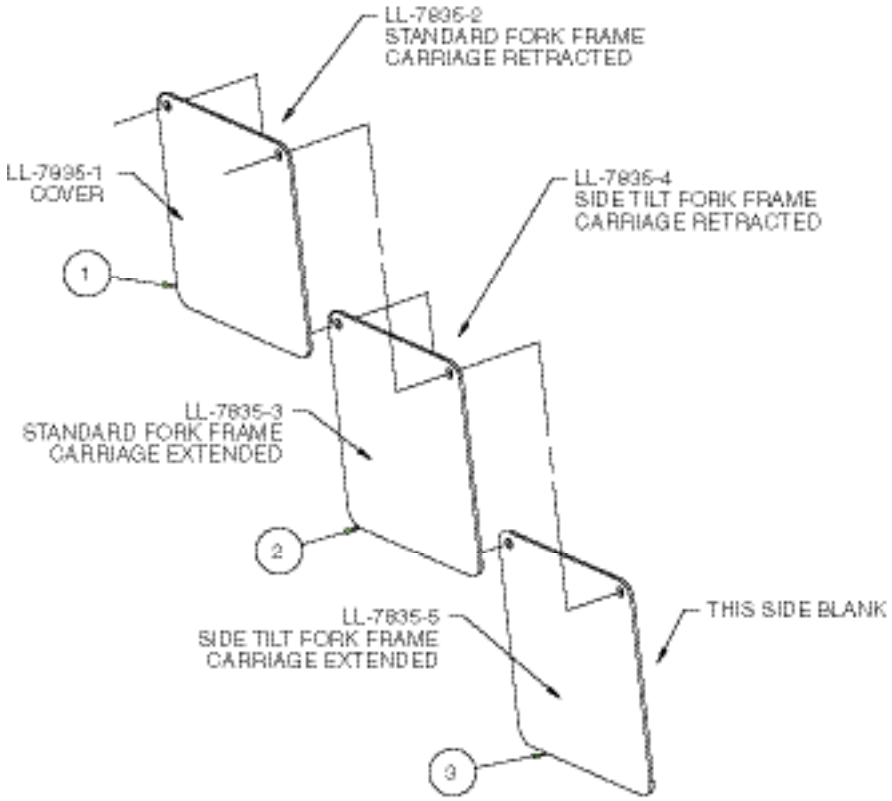

T944 KIT LL-7835

WARNING

MACHINE TIP-OVER OR STRUCTURAL DAMAGE can cause severe injury or death. Do not exceed rated lift capacities. Lift capacity ratings are based on the following operating conditions:

1. 24" (610mm) Load Center
2. 4' x 4' x 4' (1.2m x 1.2m x1.2m) load size
3. Machine on firm level surface
4. Use of factory-authorized attachments
5. Properly inflated tires
6. Always level machine prior to raising boom.

Operate at reduced lift capacity rating if above conditions are not met (i.e. extended load centers, oversized loads, etc.) or if other operating conditions exist which may adversly affect lift capacity or stability. Use only factory-authorized attachments.

WARNING

FALLING LOAD HAZARD can cause severe injury or death. Do not allow load in restricted area indicated on capacity chart. Do not rely on overhead cab guard alone for personal protection. Use safe and proper load handling techniques.

TRUSS BOOM CAPACITIES:	8'	AL-12154/FL-12021	1700#	
	12'	AL-11804/FL-12022	1300#	
	15'	AL-11805/FL-11976	1100#	LL-7835-L

https://truckmanualshub.com/

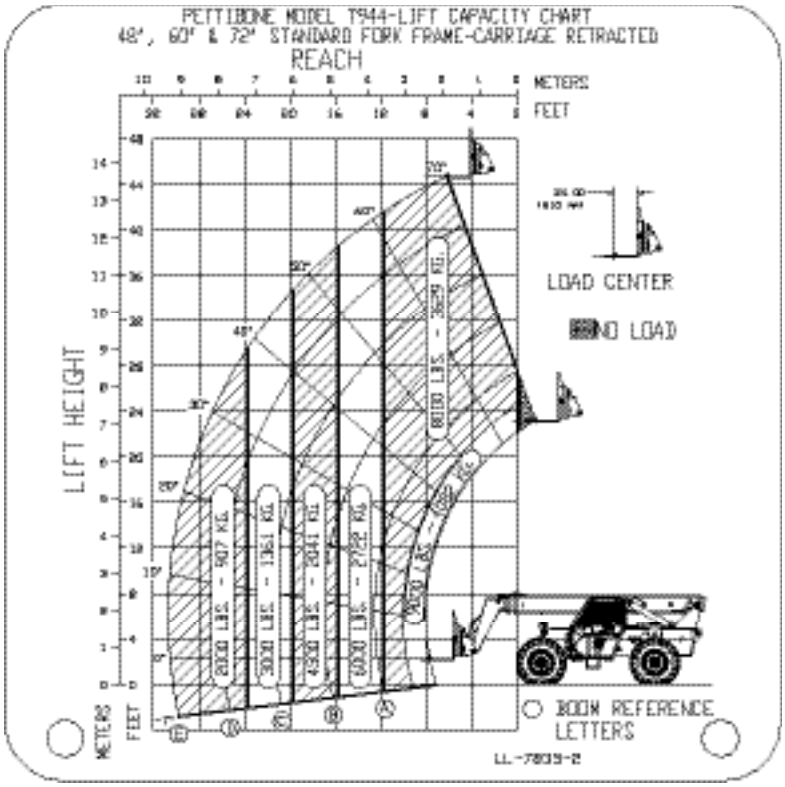

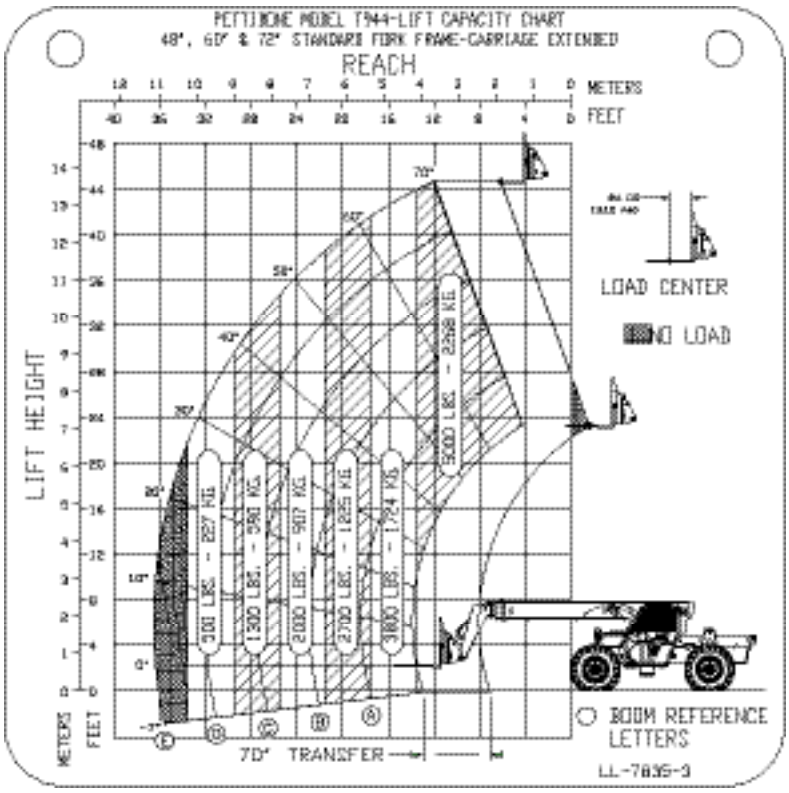

https://truckmanualshub.com/

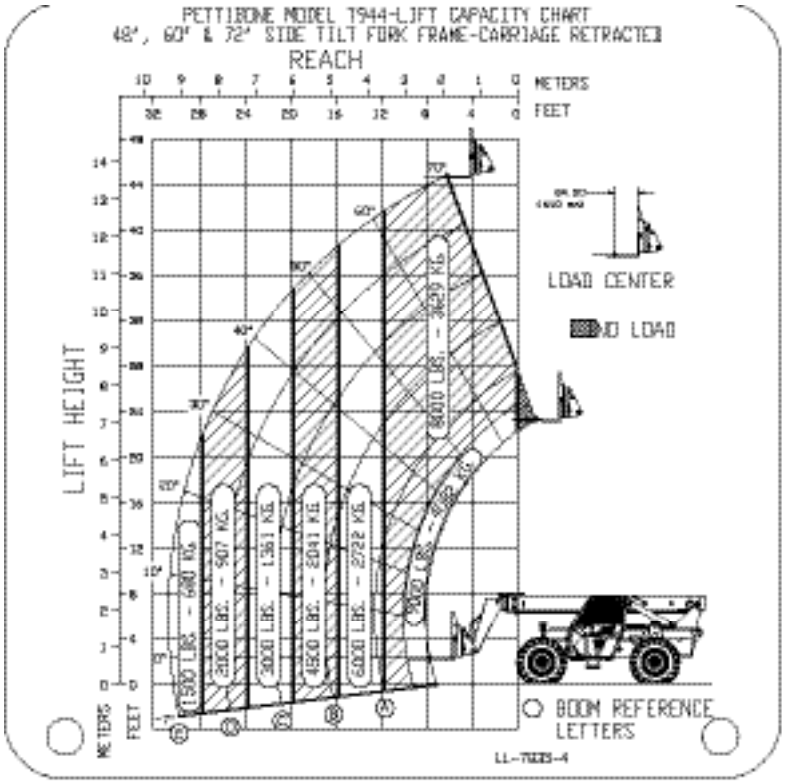

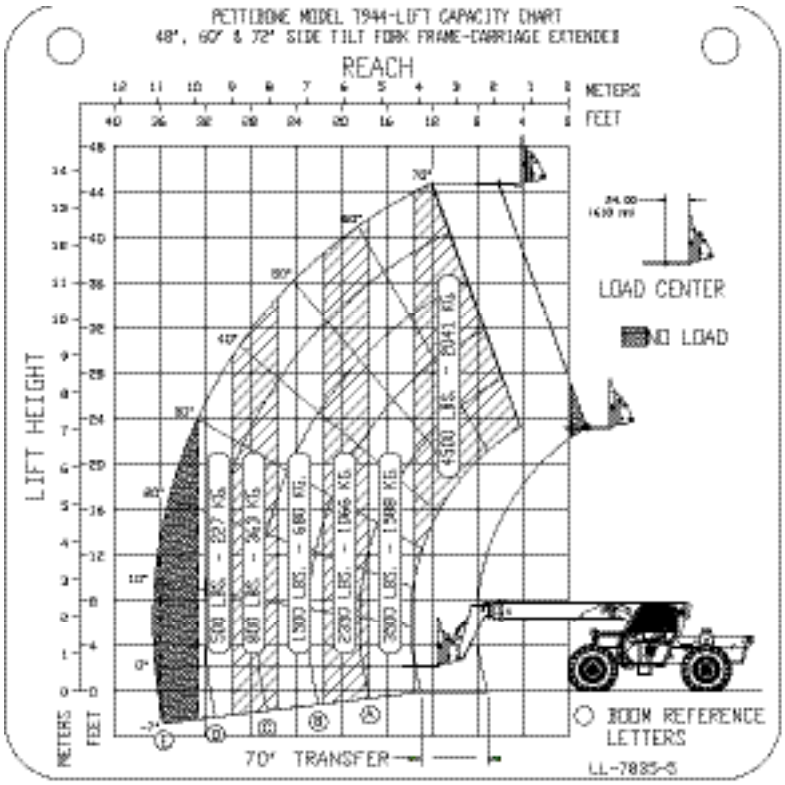

https://truckmanualshub.com/

Load Chart Kit, 944, LL-7836

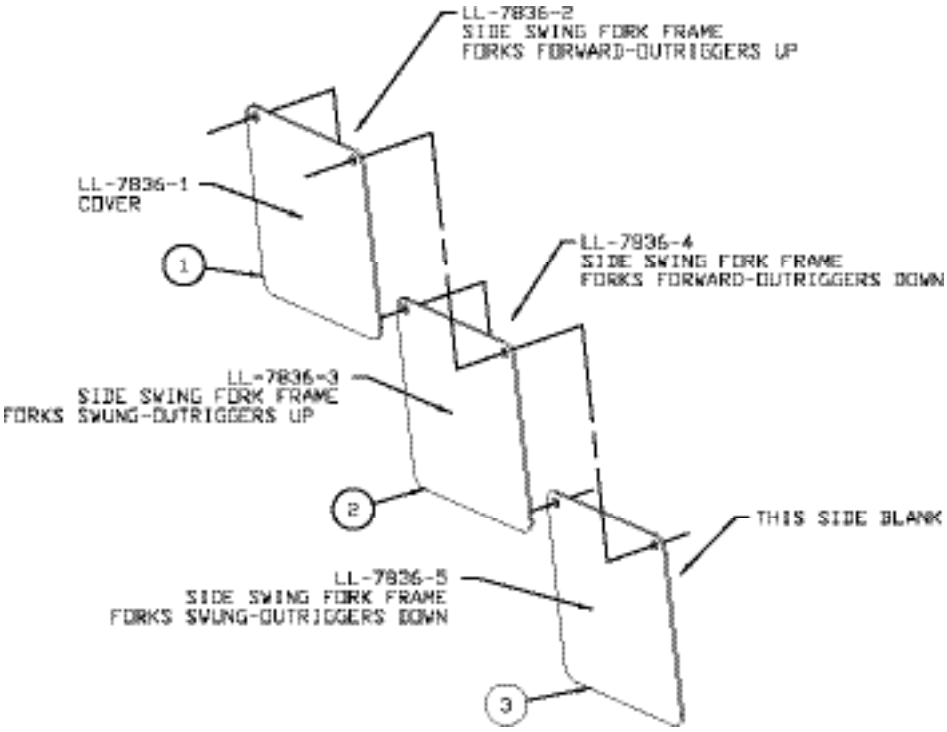

944 KIT LL-7836

WARNING

MACHINE TIP-OVER OR STRUCTURAL DAMAGE can cause severe injury or death. Do not exceed rated lift capacities. Lift capacity ratings are based on the following operating conditions:

1. 24" (610mm) Load Center
2. 4' x 4' x 4' (1.2m x 1.2m x1.2m) load size
3. Machine on firm level surface
4. Use of factory-authorized attachments
5. Properly inflated tires
6. Always level machine prior to raising boom.

Operate at reduced lift capacity rating if above conditions are not met (i.e. extended load centers, oversized loads,etc.) or if other operating conditions exist which may adversely affect lift capacity or stability. Use only factory-authorized attachments.

WARNING

FALLING LOAD HAZARD can cause severe injury or death. Do not allow load in restricted area indicated on capacity chart. Do not rely on overhead cab guard alone for personal protection. Use safe and proper load handling techniques.

TRUSS BOOM CAPACITIES:	8'	AL-12154/FL-12021	17800	
	12'	AL-11814/FL-12022	13800	
	15'	AL-11815/FL-11976	11800	LL-7836-1

https://truckmanualshub.com/

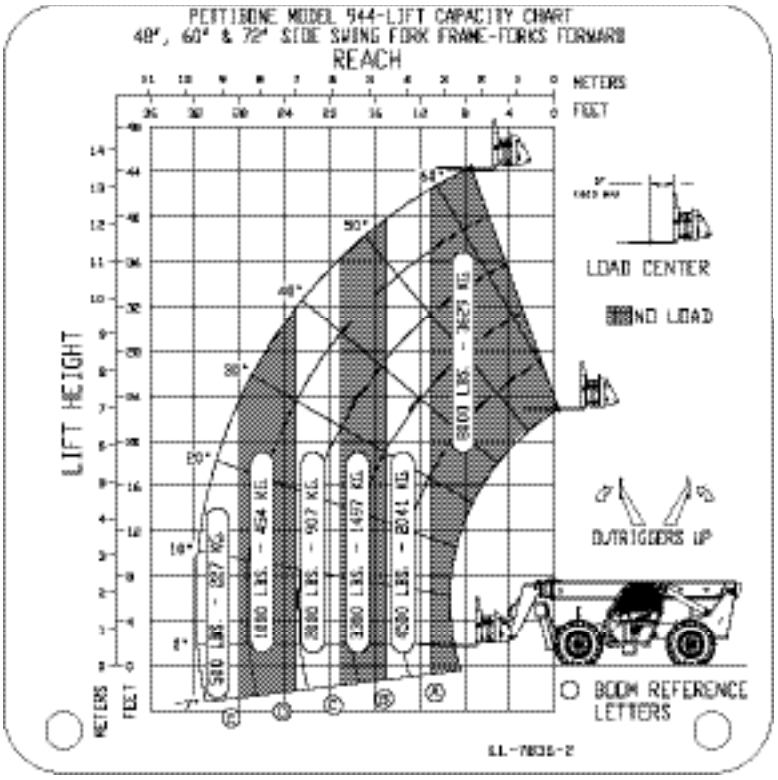

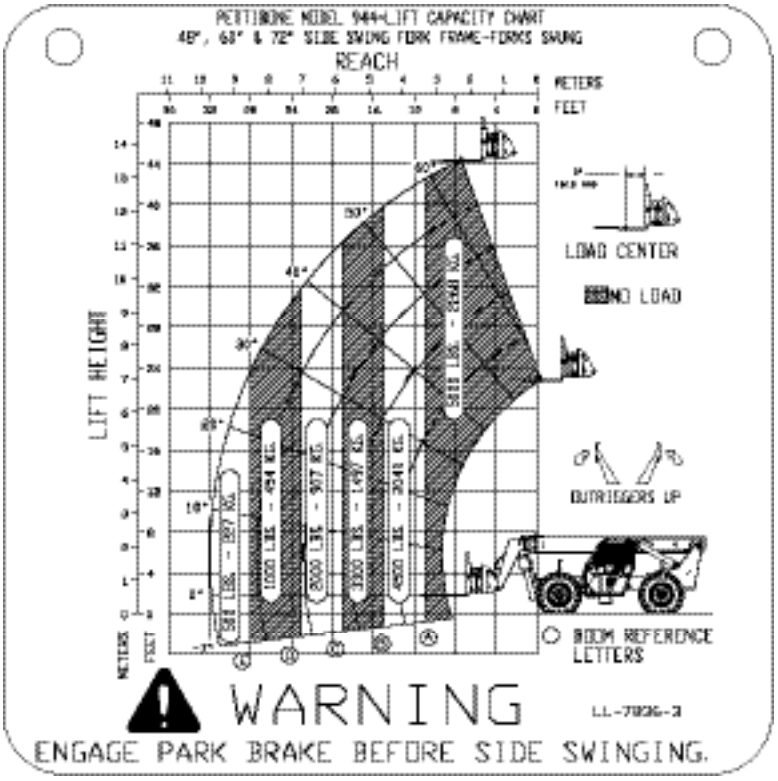

https://truckmanualshub.com/

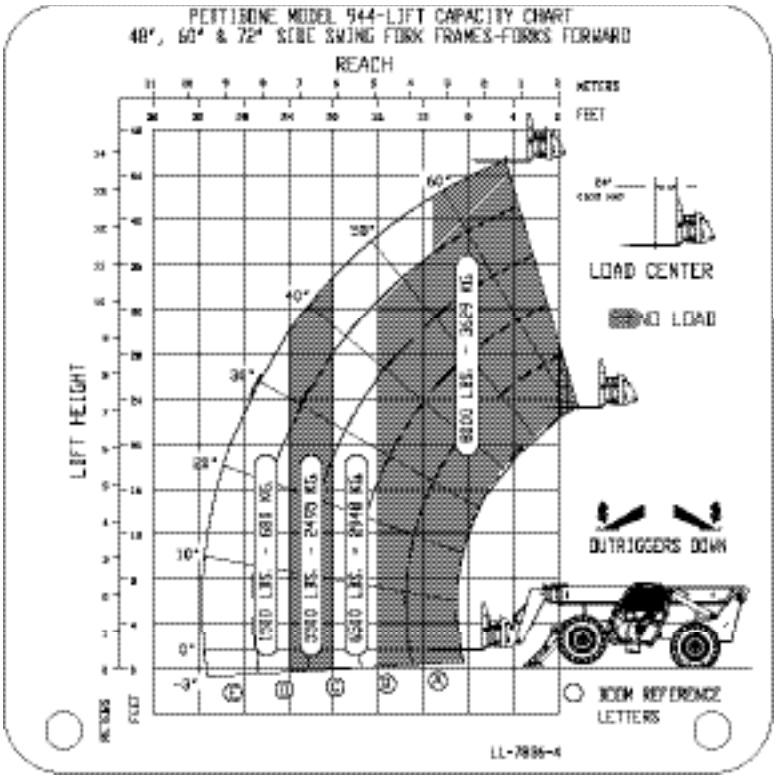

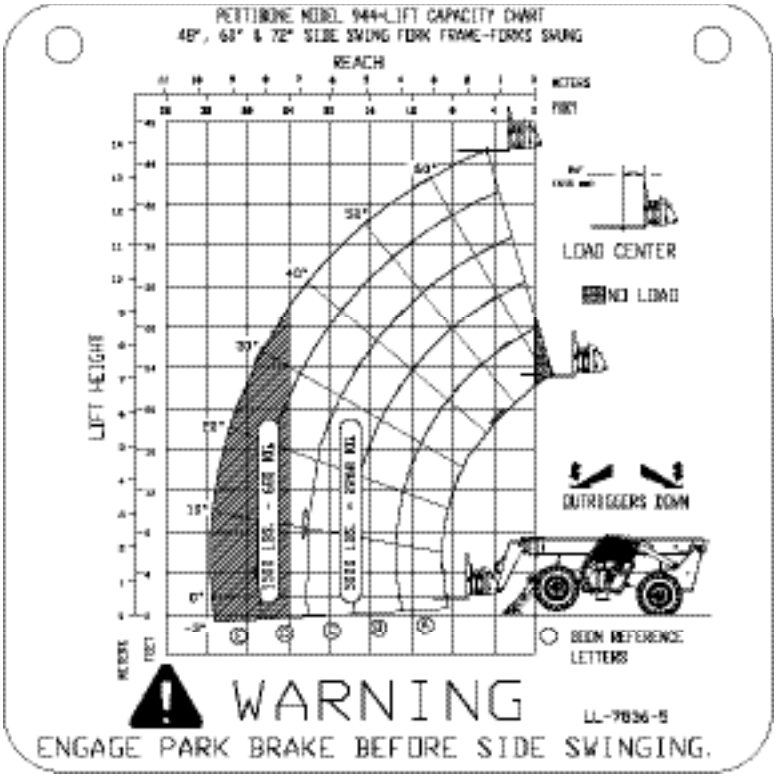

https://truckmanualshub.com/

Load Chart Kit, 944, LL-7837

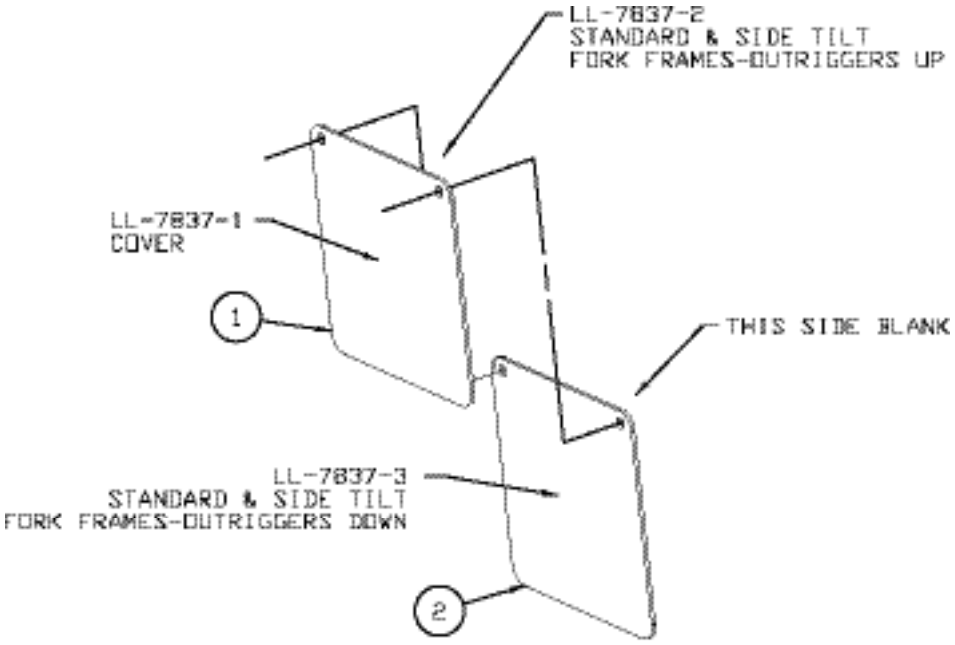

944 KIT LL-7837

WARNING

MACHINE TIP-OVER OR STRUCTURAL DAMAGE can cause severe injury or death. Do not exceed rated lift capacities. Lift capacity ratings are based on the following operating conditions:

1. 24" (610mm) Load Center
2. 4' x 4' x 4' (1.2m x 1.2m x1.2m) load size
3. Machine on Firm level surface
4. Use of factory-authorized attachments
5. Properly inflated tires
6. Always level machine prior to raising boom.

Operate at reduced lift capacity rating if above conditions are not met (i.e. extended load centers, oversized loads,etc.) or if other operating conditions exist which may adversely affect lift capacity or stability. Use only factory-authorized attachments.

WARNING

FALLING LOAD HAZARD can cause severe injury or death. Do not allow load in restricted area indicated on capacity chart. Do not rely on overhead cab guard alone for personal protection. Use safe and proper load handling techniques.

TRUSS BOOM CAPACITIES:	8'	AL-12154/FL-12021	1700#	
	12'	AL-11804/FL-12022	1380#	
	15'	AL-11805/FL-11976	1180#	LL-7837-1

https://truckmanualshub.com/

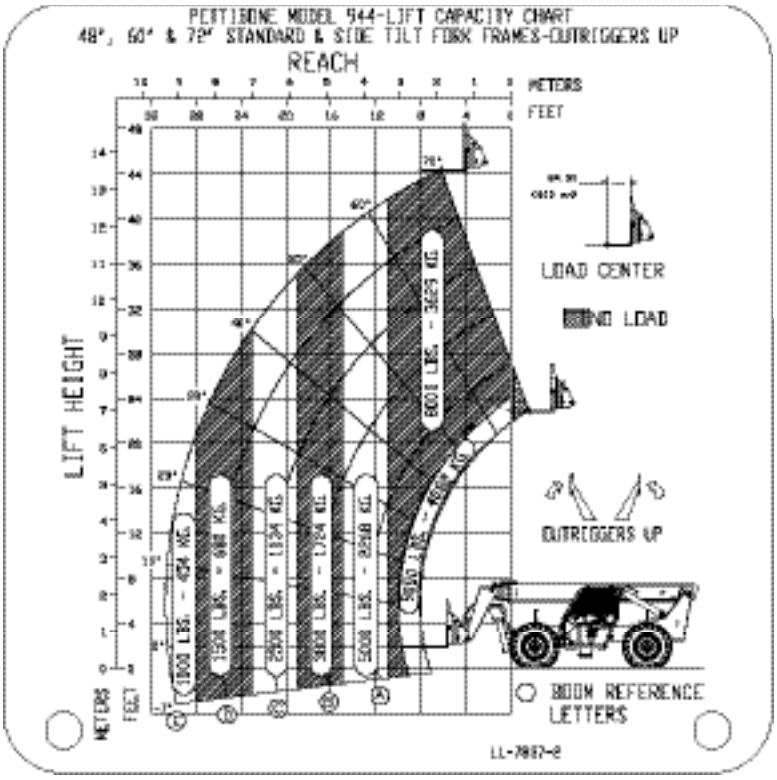

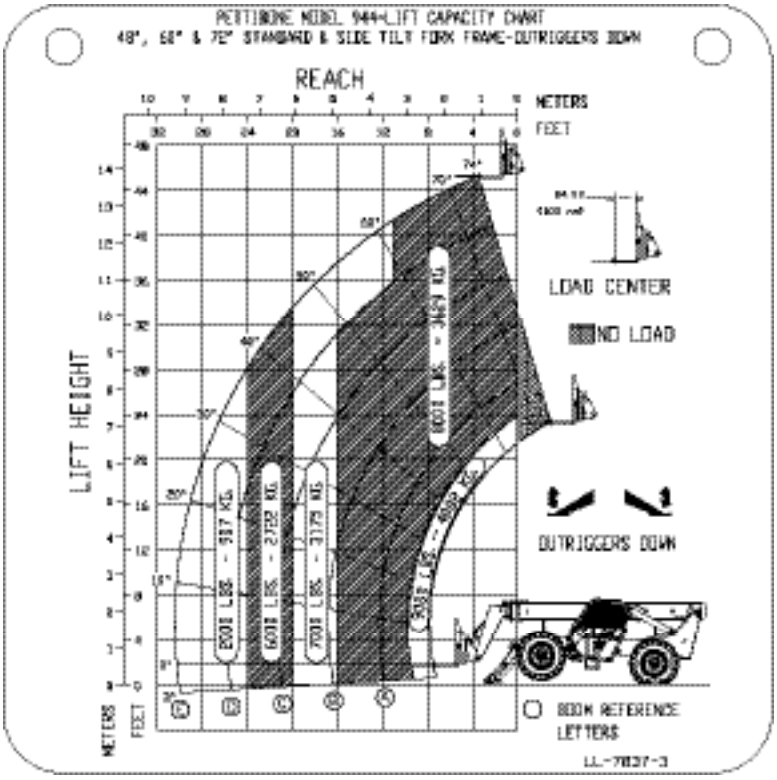

https://truckmanualshub.com/

Load Chart Kit, 936, LL-7841

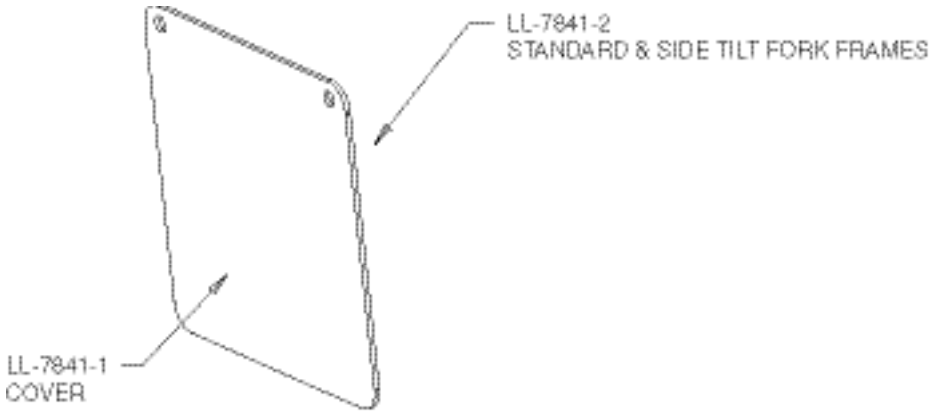

936 KIT LL-7841

WARNING

MACHINE TIP-OVER OR STRUCTURAL DAMAGE can cause severe injury or death. Do not exceed rated lift capacities. Lift capacity ratings are based on the following operating conditions:

1. 24" (610mm) Load Center
2. 4' x 4' x 4' (1.2m x 1.2m x1.2m) load size
3. Machine on firm level surface
4. Use of factory-authorized attachments
5. Properly inflated tires
6. Always level machine prior to raising boom.

Operate at reduced lift capacity rating if above conditions are not met (i.e. extended load centers, oversized loads,etc.) or if other operating conditions exist which may adversly affect lift capacity or stability. Use only factory-authorized attachments.

WARNING

FALLING LOAD HAZARD can cause severe injury or death. Do not allow load in restricted area indicated on capacity chart. Do not rely on overhead cab guard alone for personal protection. Use safe and proper load handling techniques.

TRUSS BOOM CAPACITIES	8'	AL-12154/FL-12021	1700#	
	12'	AL-11804/FL-12082	1300#	
	15'	AL-11805/FL-11976	1100#	LL-7841-1

https://truckmanualshub.com/

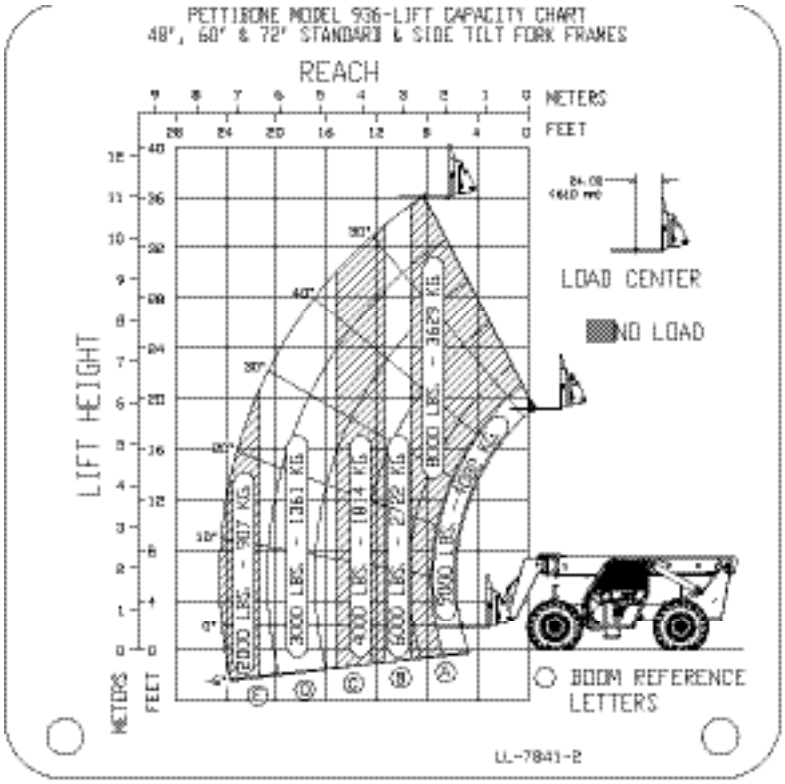

https://truckmanualshub.com/

Load Chart Kit, T944, LL-7842

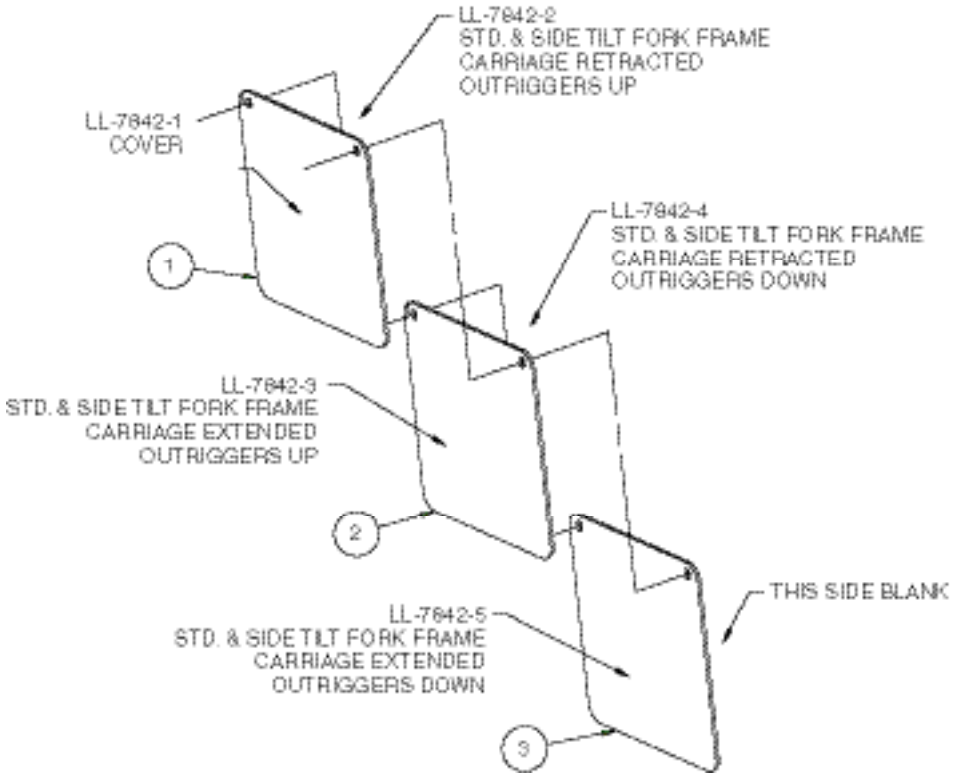

T944 KIT LL-7842

WARNING

MACHINE TIP-OVER OR STRUCTURAL DAMAGE can cause severe injury or death. Do not exceed rated lift capacities. Lift capacity ratings are based on the following operating conditions:

1. 24" (610mm) Load Center
2. 4' x 4' x 4' (1.2m x 1.2m x1.2m) load size
3. Machine on firm level surface
4. Use of factory-authorized attachments
5. Properly inflated tires
6. Always level machine prior to raising boom.

Operate at reduced lift capacity rating if above conditions are not met (i.e. extended load centers, oversized loads,etc.) or if other operating conditions exist which may adversly affect lift capacity or stability. Use only factory-authorized attachments.

WARNING

FALLING LOAD HAZARD can cause severe injury or death. Do not allow load in restricted area indicated on capacity chart. Do not rely on overhead cab guard alone for personal protection. Use safe and proper load handling techniques.

TRUSS BOOM CAPACITIES	8'	AL-12154/FL-12021	1700#	
	12'	AL-11804/FL-12082	1300#	
	15'	AL-11805/FL-11976	1100#	LL-7842-1

https://truckmanualshub.com/

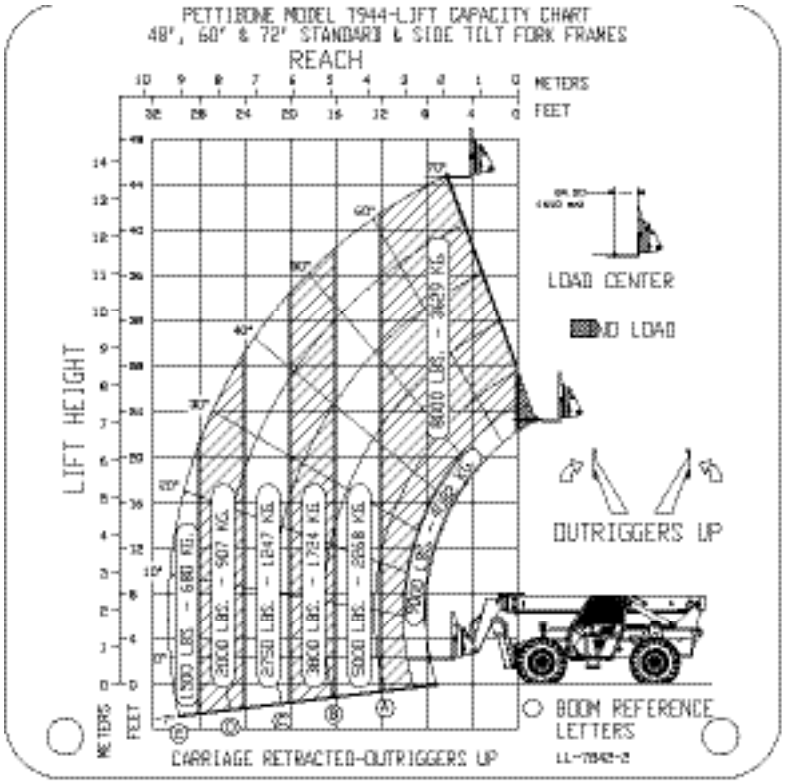

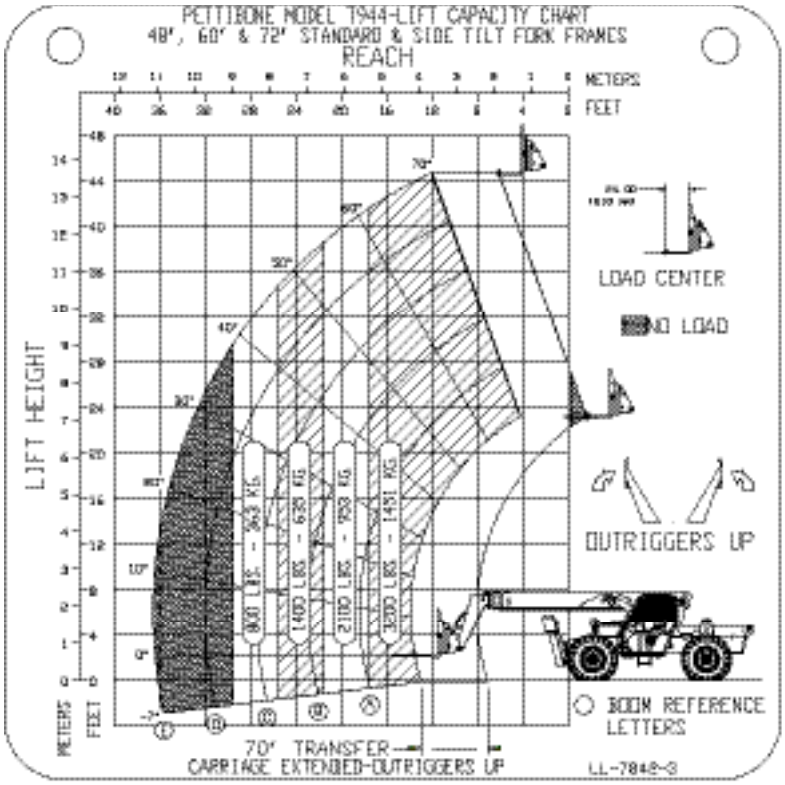

https://truckmanualshub.com/

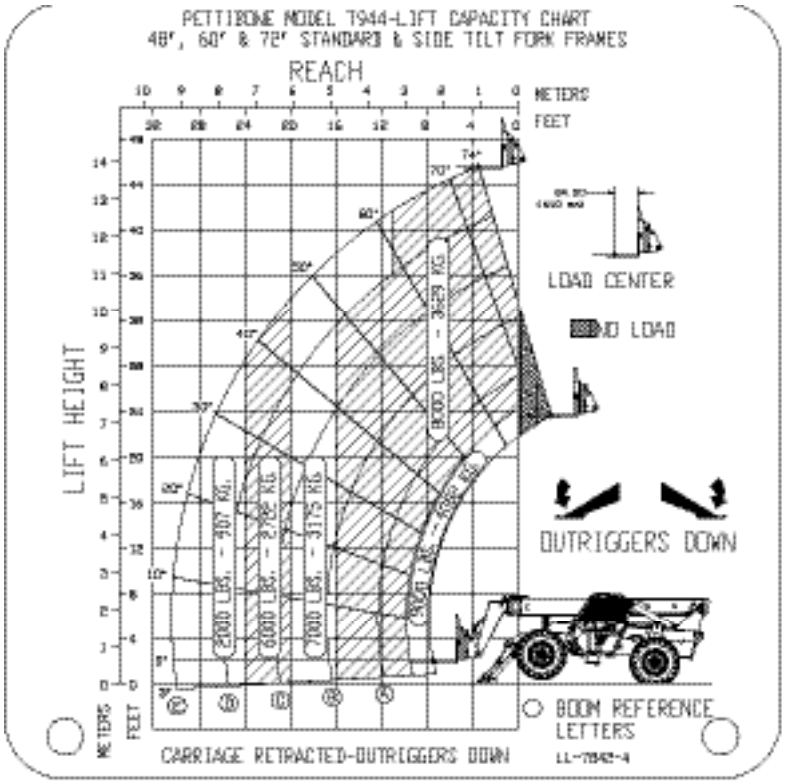

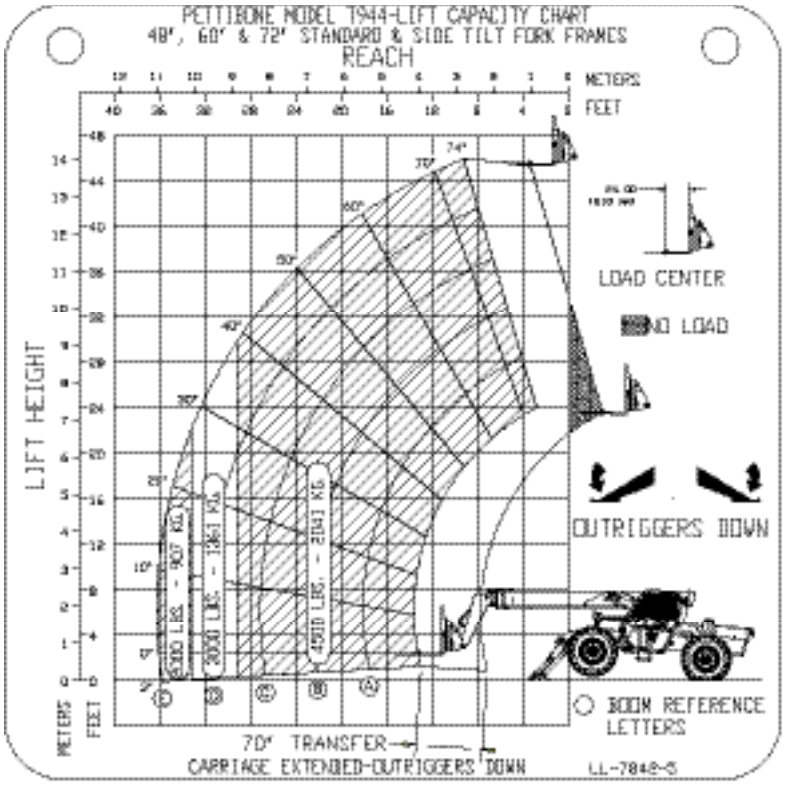

https://truckmanualshub.com/

Load Chart Kit, 1157, LL-7850

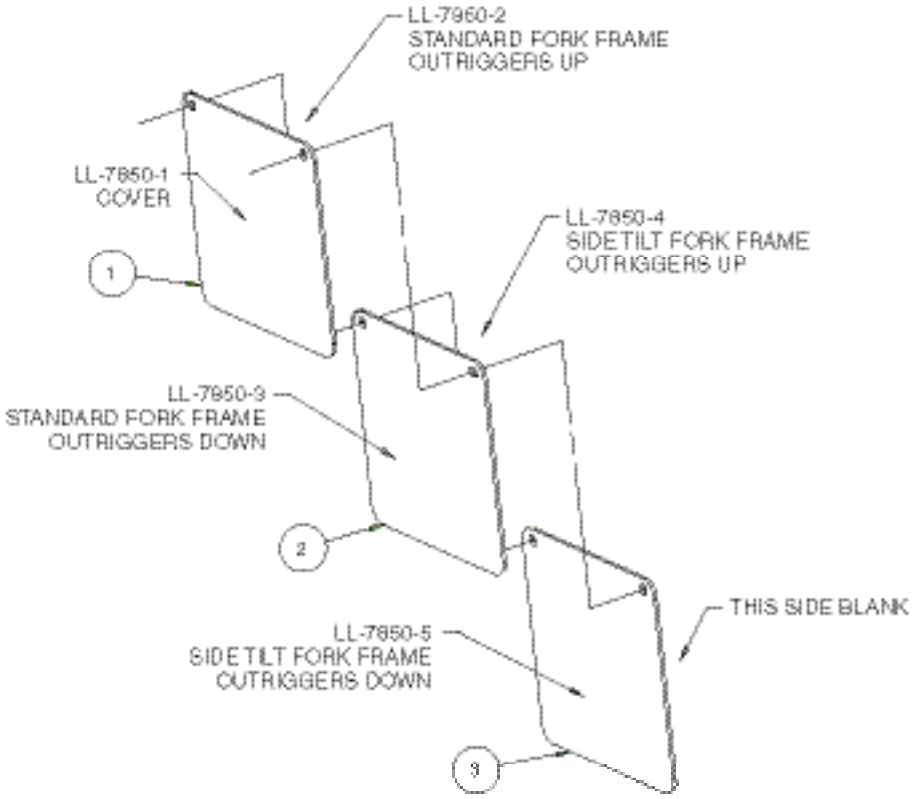

1157 KIT LL-7850

WARNING

MACHINE TIP-OVER OR STRUCTURAL DAMAGE can cause severe injury or death. Do not exceed rated lift capacities. Lift capacity ratings are based on the following operating conditions:

1. 24" (610mm) Load Center
2. 4' x 4' x 4' (1.2m x 1.2m x1.2m) load size
3. Machine on firm level surface
4. Use of factory-authorized attachments
5. Properly inflated tires
6. Always level machine prior to raising boom.

Operate at reduced lift capacity rating if above conditions are not met (i.e. extended load centers, oversized loads, etc.) or if other operating conditions exist which may adversly affect lift capacity or stability. Use only factory-authorized attachments.

WARNING

FALLING LOAD HAZARD can cause severe injury or death. Do not allow load in restricted area indicated on capacity chart. Do not rely on overhead cab guard alone for personal protection. Use safe and proper load handling techniques.

TRUSS BOOM CAPACITIES	8'	AL-12154/FL-12021	1700#	
	12'	AL-11804/FL-12022	1300#	
	15'	AL-11805/FL-11976	1100#	LL-7850-1

https://truckmanualshub.com/

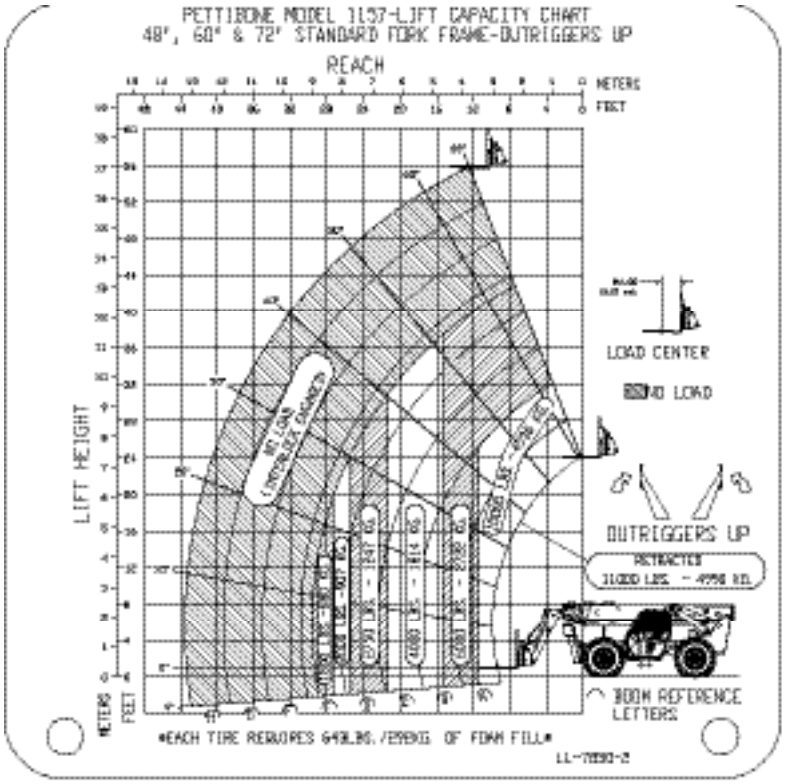

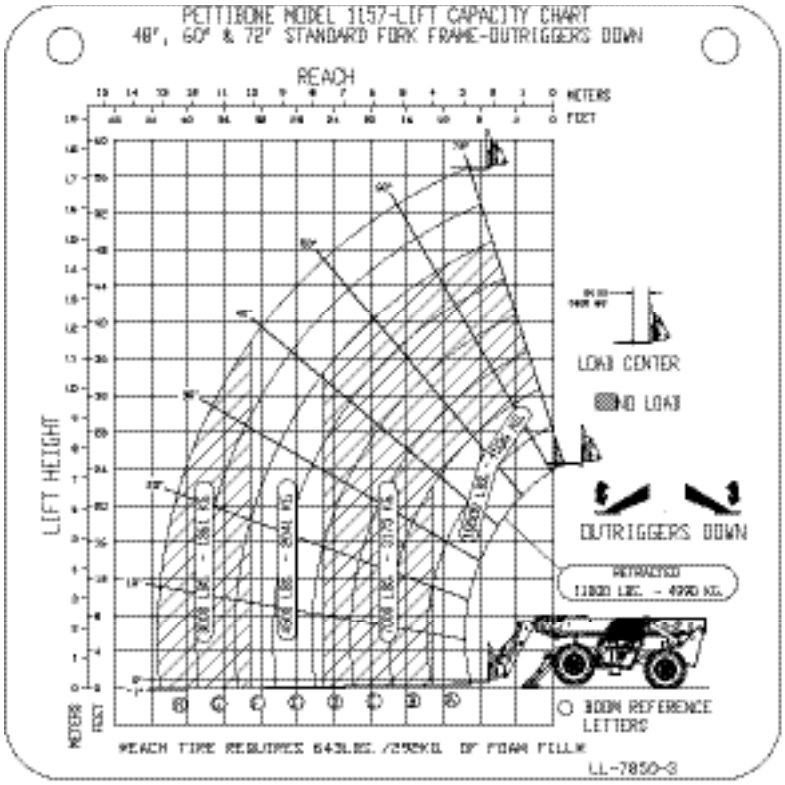

https://truckmanualshub.com/

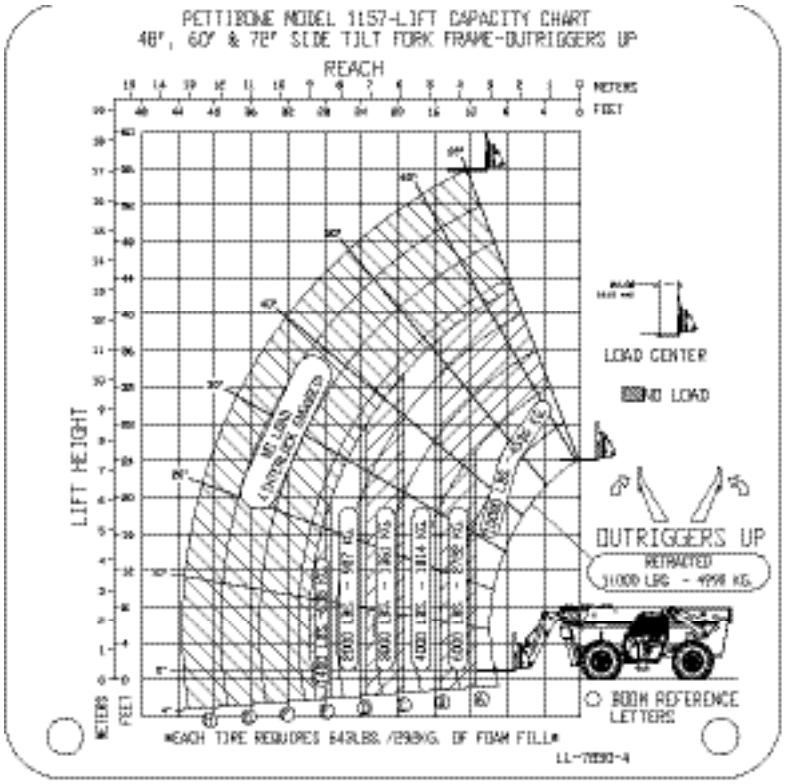

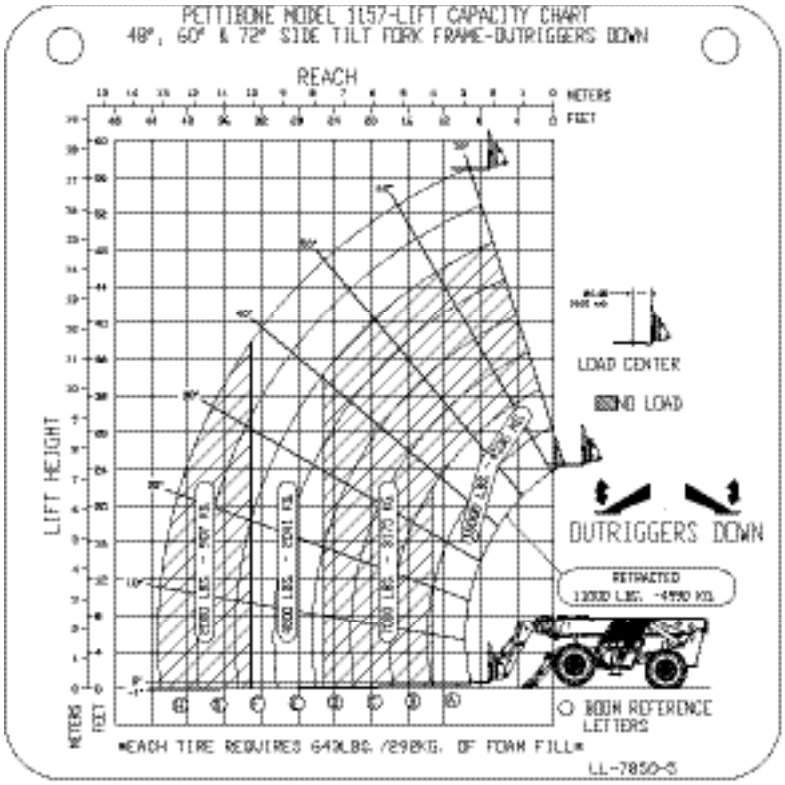

https://truckmanualshub.com/

Load Chart Kit, 1144, LL-7859

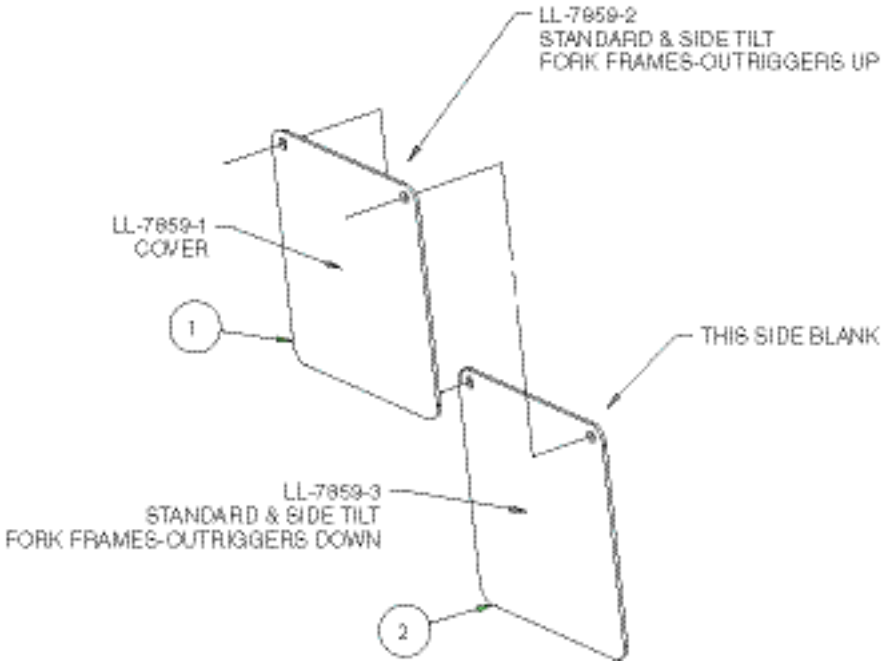

1144 KIT LL-7859

WARNING

MACHINE TIP-OVER OR STRUCTURAL DAMAGE can cause severe injury or death. Do not exceed rated lift capacities. Lift capacity ratings are based on the following operating conditions:

1. 24" (610mm) Load Center
2. 4' x 4' x 4' (1.2m x 1.2m x1.2m) load size
3. Machine on firm level surface
4. Use of factory-authorized attachments
5. Properly inflated tires
6. Always level machine prior to raising boom.

Operate at reduced lift capacity rating if above conditions are not met (i.e. extended load centers, oversized loads,etc.) or if other operating conditions exist which may adversly affect lift capacity or stability. Use only factory-authorized attachments.

WARNING

FALLING LOAD HAZARD can cause severe injury or death. Do not allow load in restricted area indicated on capacity chart. Do not rely on overhead cab guard alone for personal protection. Use safe and proper load handling techniques.

TRUSS BOOM CAPACITIES	8'	AL-12154/FL-12021	1700#	
	12'	AL-11804/FL-12082	1300#	
	15'	AL-11805/FL-11976	1100#	LL-7859-1

https://truckmanualshub.com/

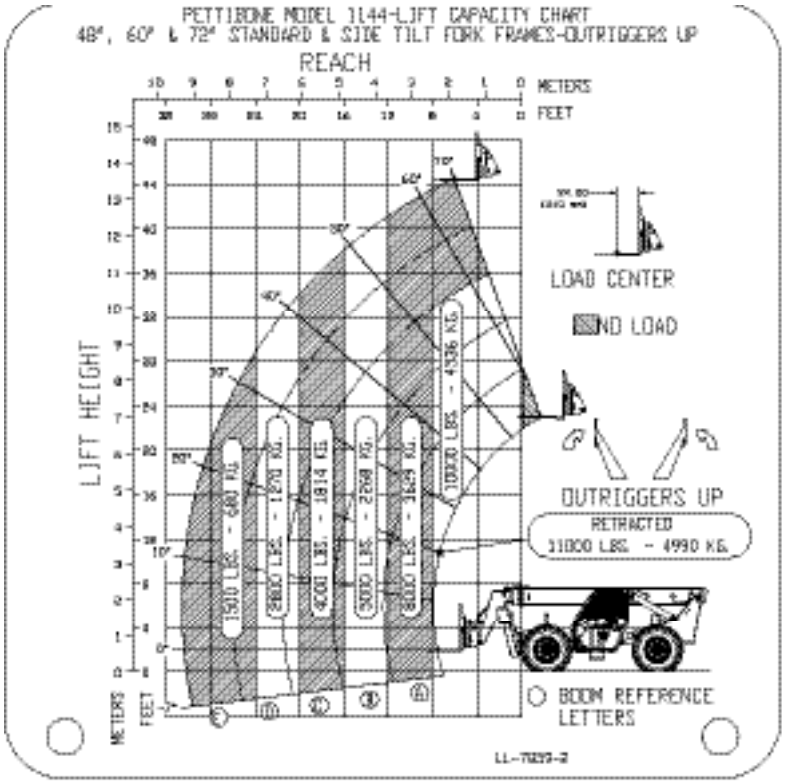

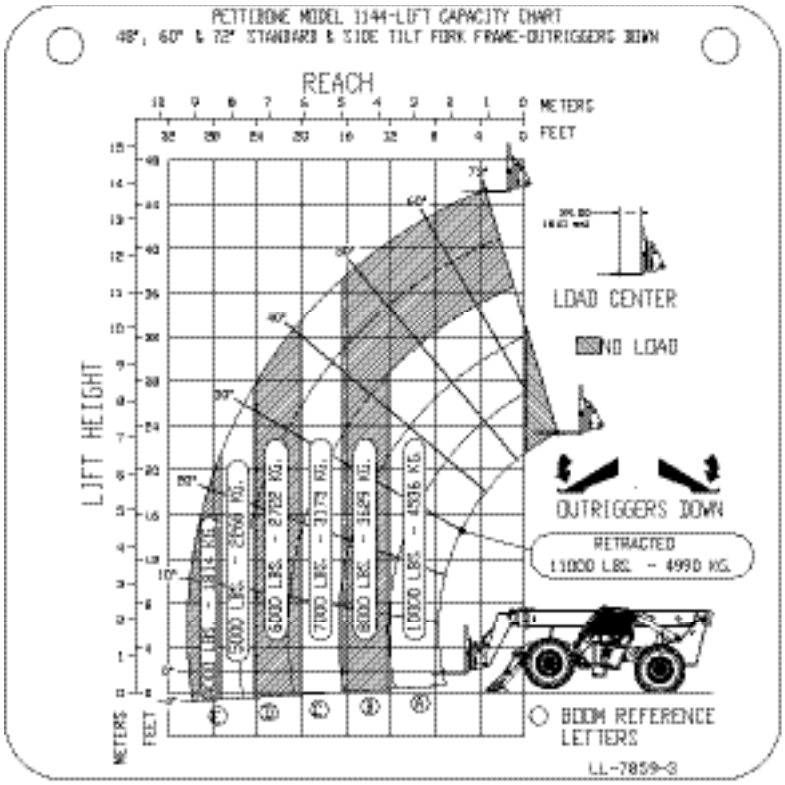

https://truckmanualshub.com/

Load Chart Kit, 1144, LL-7860

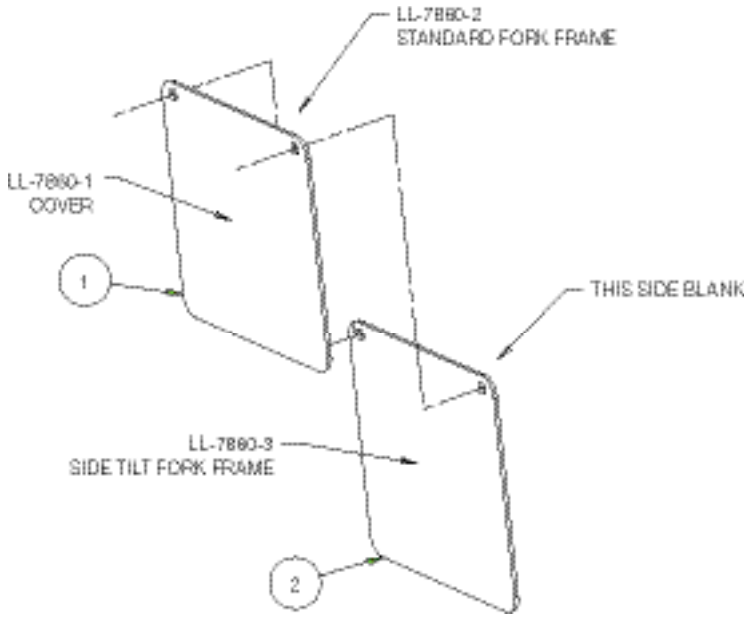

1144 KIT LL-7860

WARNING

MACHINE TIP-OVER OR STRUCTURAL DAMAGE can cause severe injury or death. Do not exceed rated lift capacities. Lift capacity ratings are based on the following operating conditions:

1. 24" (610mm) Load Center
2. 4' x 4' x 4' (1.2m x 1.2m x1.2m) load size
3. Machine on Firm level surface
4. Use of factory-authorized attachments
5. Properly inflated tires
6. Always level machine prior to raising boom.

Operate at reduced lift capacity rating if above conditions are not met (i.e. extended load centers, oversized loads,etc.) or if other operating conditions exist which may adversly affect lift capacity or stability. Use only factory-authorized attachments.

WARNING

FALLING LOAD HAZARD can cause severe injury or death. Do not allow load in restricted area indicated on capacity chart. Do not rely on overhead cab guard alone for personal protection. Use safe and proper load handling techniques.

TRUSS BOOM CAPACITIES	8'	AL-12154/FL-12021	1700#	
	12'	AL-11804/FL-18022	1300#	
	15'	AL-11805/FL-11976	1100#	LL-7860-1

https://truckmanualshub.com/

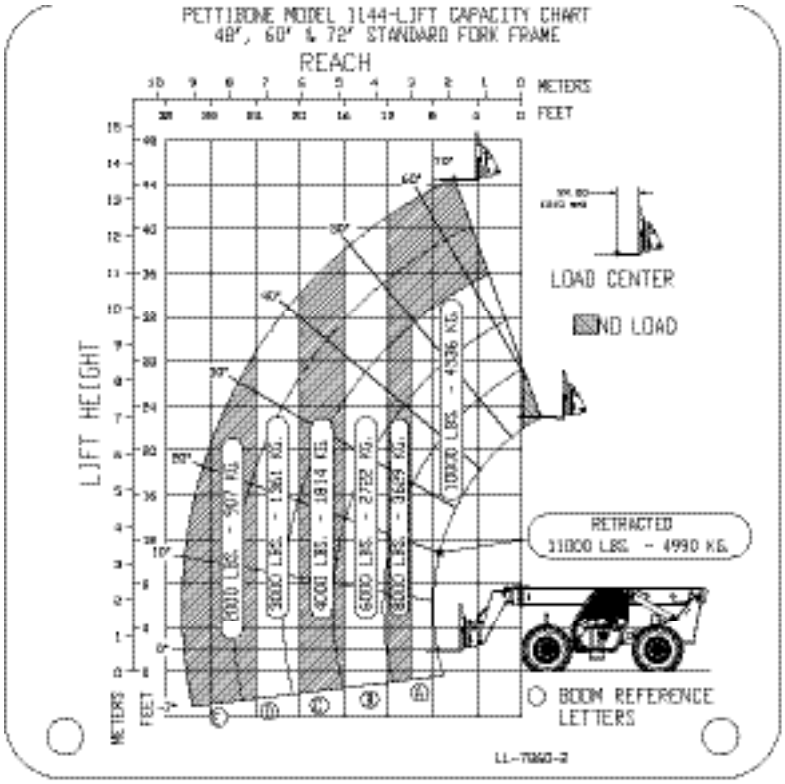

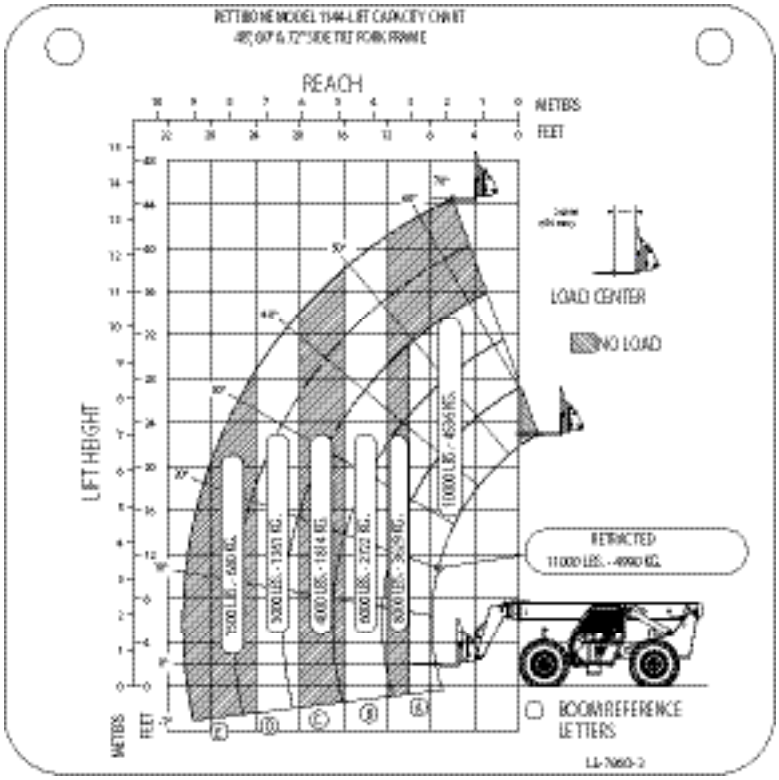

https://truckmanualshub.com/

Load Chart Kit, 736, LL-7861

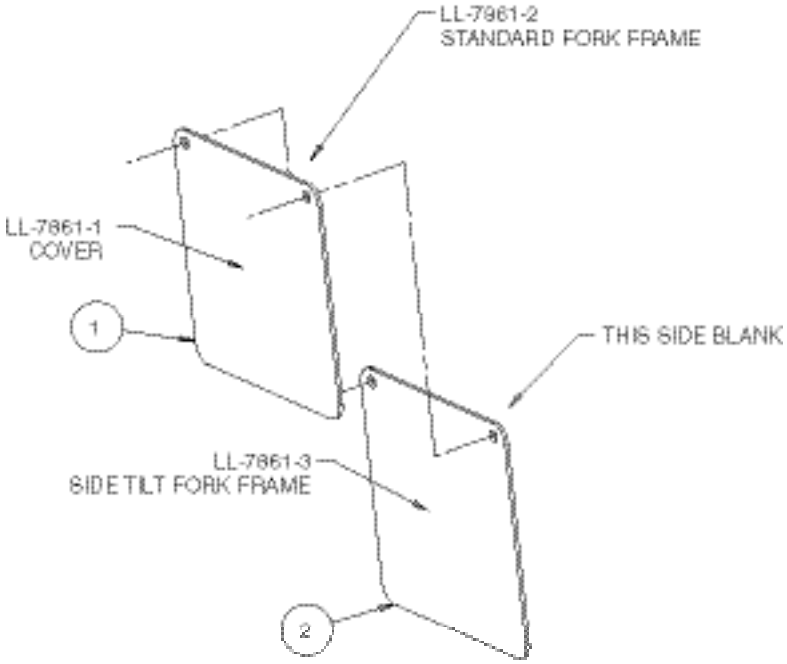

736 KIT LL-7861

WARNING

MACHINE TIP-OVER OR STRUCTURAL DAMAGE can cause severe injury or death. Do not exceed rated lift capacities. Lift capacity ratings are based on the following operating conditions:

1. 24" (610mm) Load Center
2. 4' x 4' x 4' (1.2m x 1.2m x1.2m) load size
3. Machine on firm level surface
4. Use of factory-authorized attachments
5. Properly inflated tires
6. Always level machine prior to raising boom.

Operate at reduced lift capacity rating if above conditions are not met (i.e. extended load centers, oversized loads,etc.) or if other operating conditions exist which may adversly affect lift capacity or stability. Use only factory-authorized attachments.

WARNING

FALLING LOAD HAZARD can cause severe injury or death. Do not allow load in restricted area indicated on capacity chart. Do not rely on overhead cab guard alone for personal protection. Use safe and proper load handling techniques.

TRUSS BOOM CAPACITIES	8'	AL-12154/FL-12021	1700#	
	12'	AL-11804/FL-12082	1300#	
	15'	AL-11805/FL-11976	1100#	LL-7861-1

https://truckmanualshub.com/

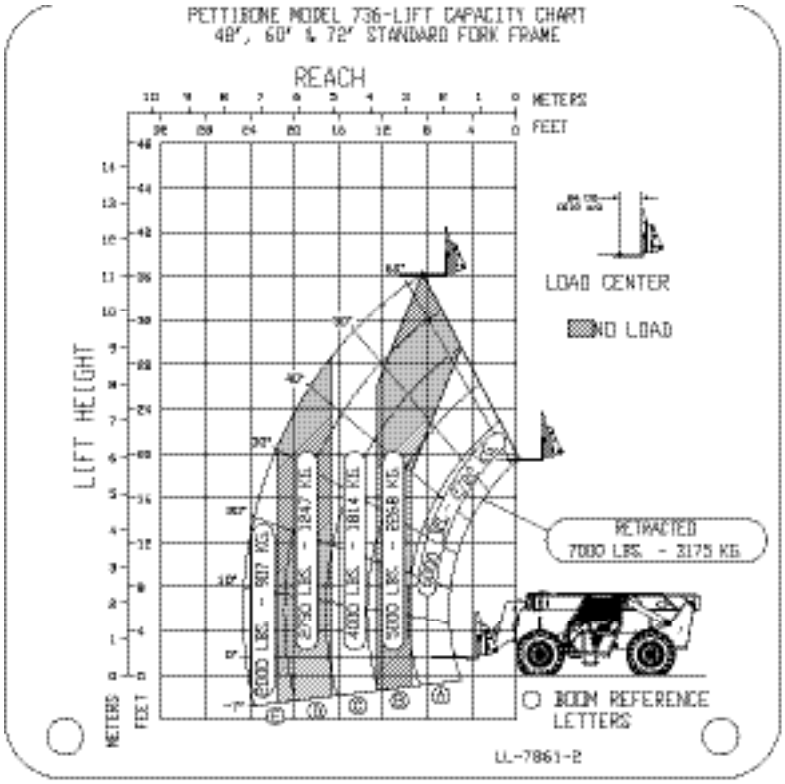

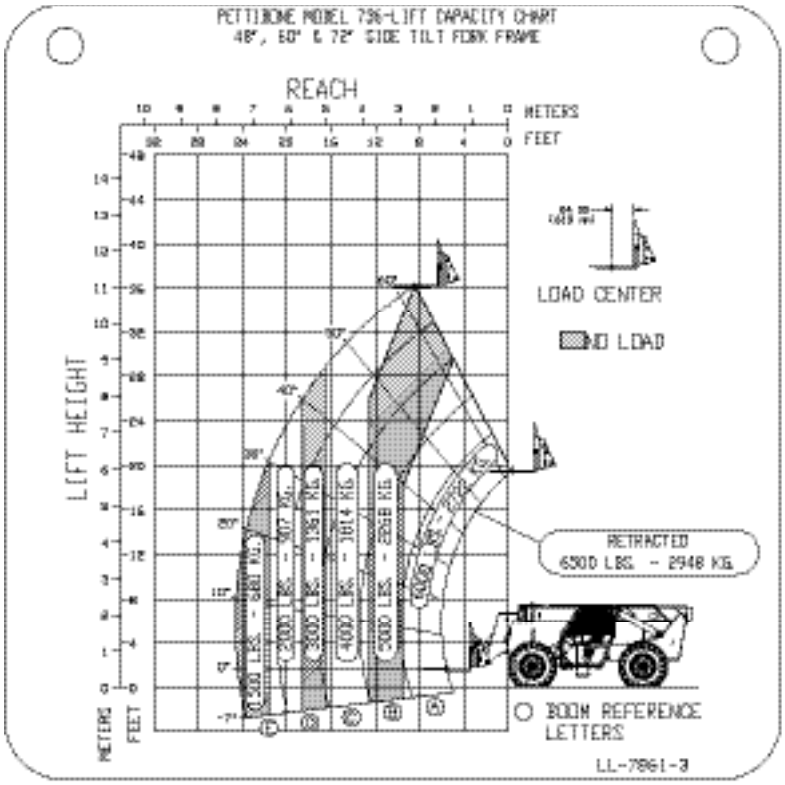

https://truckmanualshub.com/

Load Chart Kit, 744, LL-7862

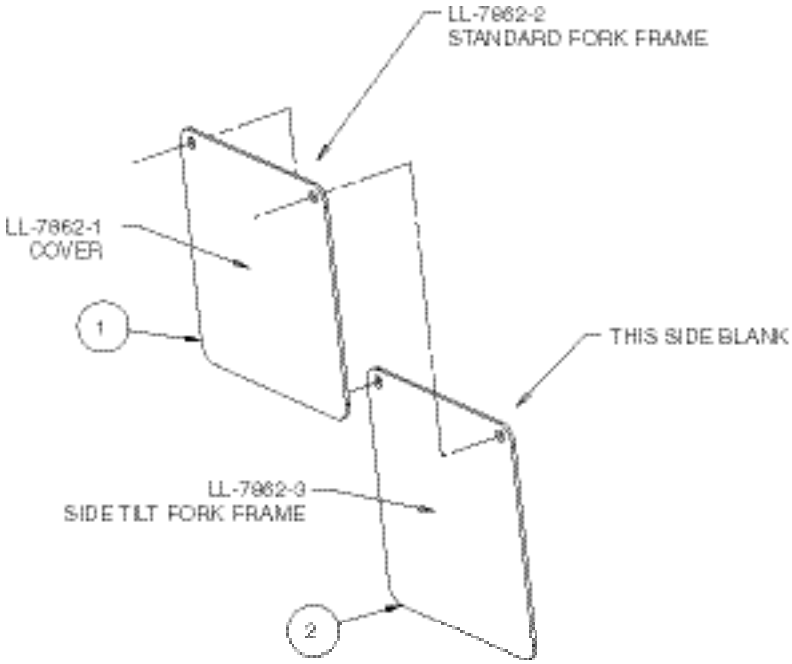

744 KIT LL-7862

WARNING

MACHINE TIP-OVER OR STRUCTURAL DAMAGE can cause severe injury or death. Do not exceed rated lift capacities. Lift capacity ratings are based on the following operating conditions:

1. 24" (610mm) Load Center
2. 4' x 4' x 4' (1.2m x 1.2m x1.2m) load size
3. Machine on firm level surface
4. Use of factory-authorized attachments
5. Properly inflated tires
6. Always level machine prior to raising boom.

Operate at reduced lift capacity rating if above conditions are not met (i.e. extended load centers, oversized loads,etc.) or if other operating conditions exist which may adversly affect lift capacity or stability. Use only factory-authorized attachments.

WARNING

FALLING LOAD HAZARD can cause severe injury or death. Do not allow load in restricted area indicated on capacity chart. Do not rely on overhead cab guard alone for personal protection. Use safe and proper load handling techniques.

TRUSS BOOM CAPACITIES	8'	AL-12154/FL-12021	1700#	
	12'	AL-11804/FL-12082	1300#	
	15'	AL-11805/FL-11976	1100#	LL-7862-1

https://truckmanualshub.com/

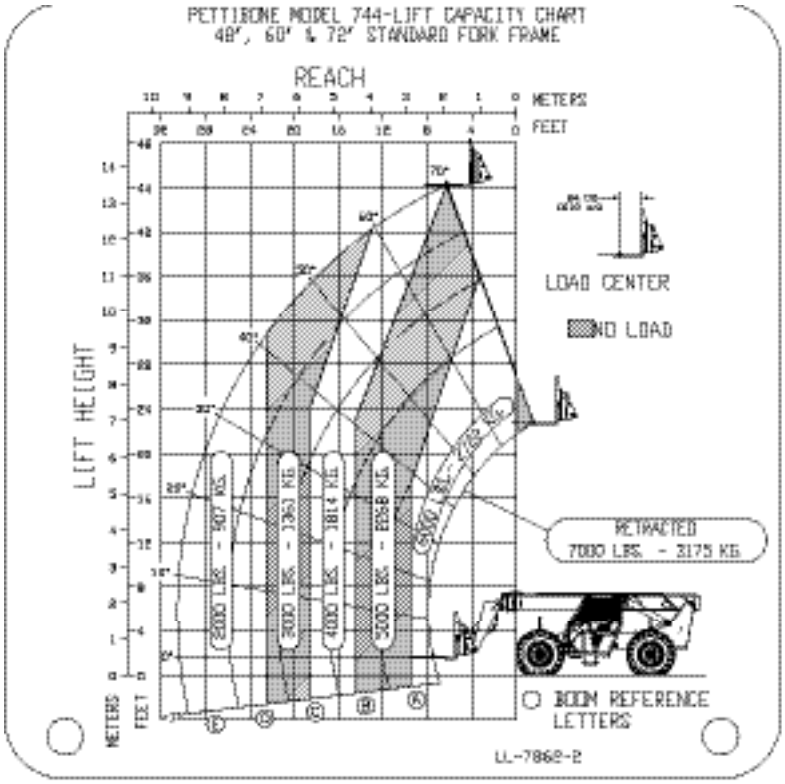

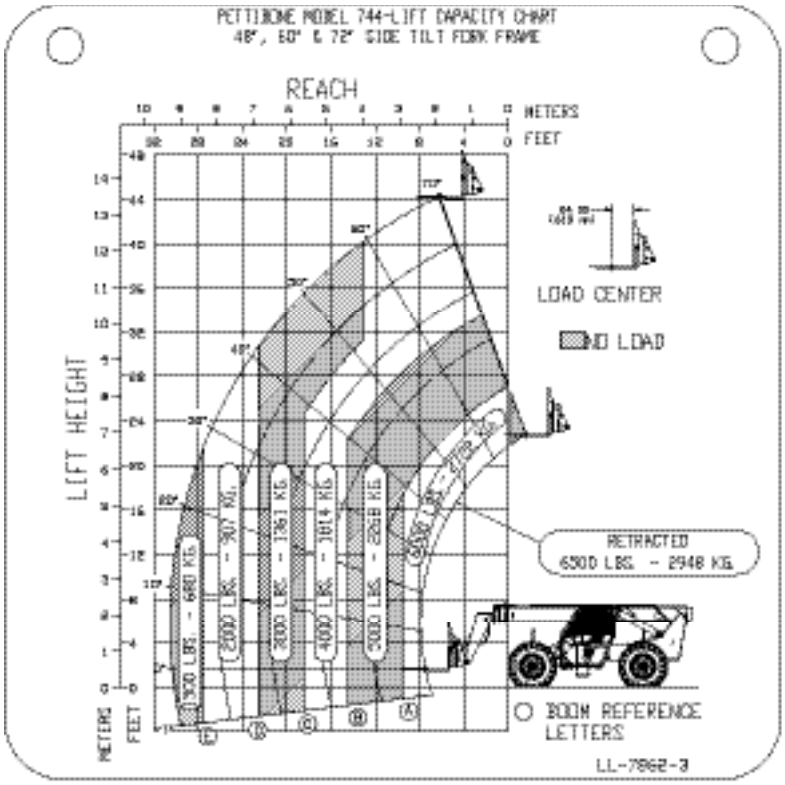

https://truckmanualshub.com/

Load Chart Kit, T-1157, LL-7886

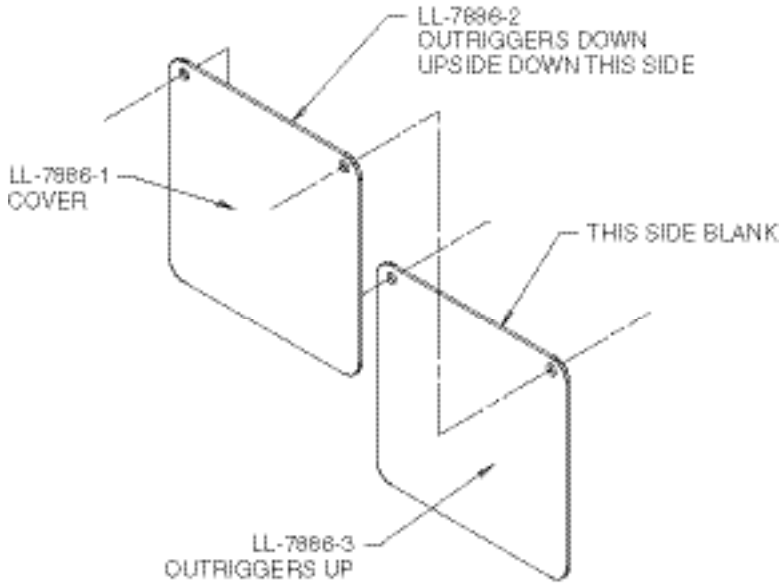

T-1157 KIT LL-7886

WARNING

MACHINE TIP-OVER OR STRUCTURAL DAMAGE can cause severe injury or death. Do not exceed rated lift capacities. Lift capacity ratings are based on the following operating conditions:

1. 24" (610mm) Load Center
2. 4' x 4' x 4' (1.2m x 1.2m x1.2m) load size
3. Machine on firm level surface
4. Use of factory-authorized attachments
5. Properly inflated tires
6. Always level machine prior to raising boom.

Operate at reduced lift capacity rating if above conditions are not met (i.e. extended load centers, oversized loads,etc.) or if other operating conditions exist which may adversly affect lift capacity or stability. Use only factory-authorized attachments.

WARNING

FALLING LOAD HAZARD can cause severe injury or death. Do not allow load in restricted area indicated on capacity chart. Do not rely on overhead cab guard alone for personal protection. Use safe and proper load handling techniques.

TRUSS BOOM CAPACITIES	8'	AL-12154/FL-12021	1700#	
	12'	AL-11804/FL-12082	1300#	
	15'	AL-11805/FL-11976	1100#	LL-7886-1

https://truckmanualshub.com/

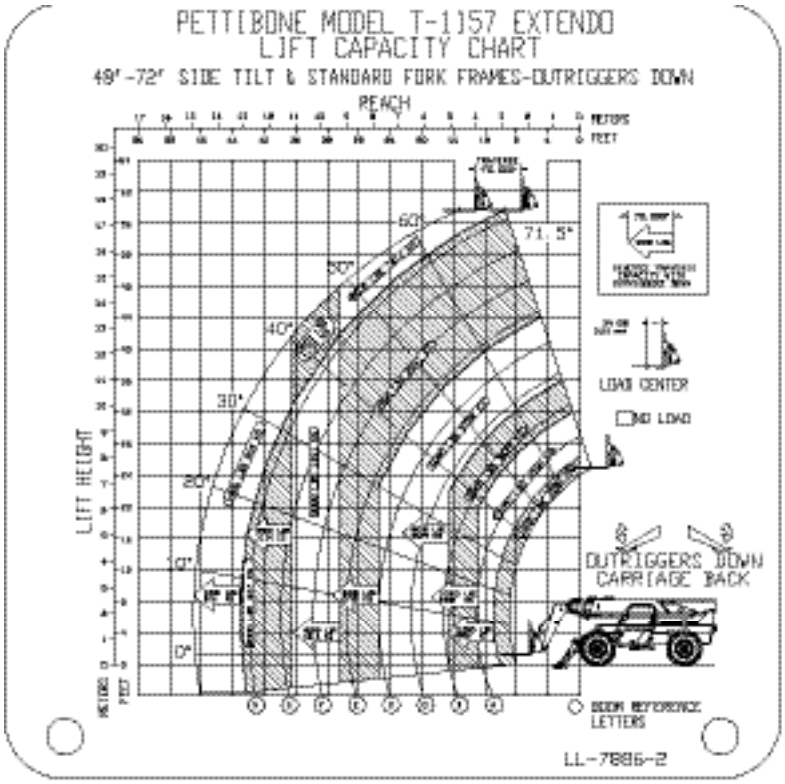

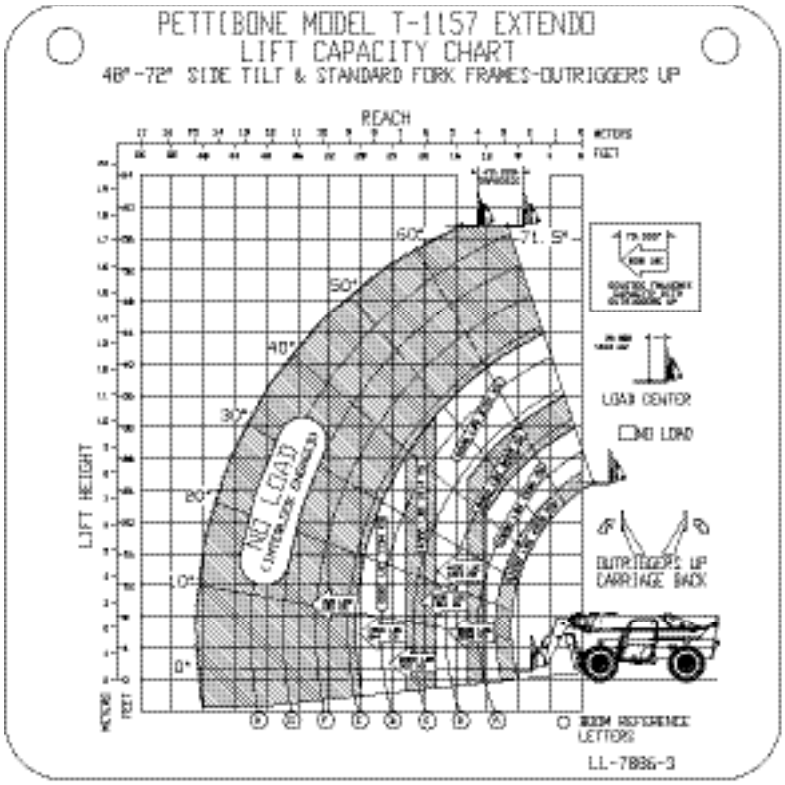

https://truckmanualshub.com/

Raising the Load

WARNING! Tip Hazard. Do not lift loads that exceed specifications in the Load Range and Lift Capacity Chart. Inspect every load before attempting to lift. Make certain the loads are properly bound and will not fall apart while lifting and transporting.

1. Position the forklift directly and squarely in front of the load.
2. Lower the boom by pushing the front joystick forward until the forks are at the necessary level to engage the load.
3. Level the forks by depressing and holding the right button on the front joystick either up or down (if equipped).
4. Manually adjust the width of the forks to accommodate the load, if necessary. WARNING! Crush Hazard. Do not transport stacked loads. Tilt the forks back by depressing the left button down on the front joystick.
5. Pull the front joystick back to lift the load only enough to clear obstacles. Keep the top of the load below eye level.
6. Retract the boom by moving the front joystick to the left, holding until a safe traveling position is accomplished. The load is now ready to transport.

Note: If you cannot see over the load, transport the load using reverse.

Transporting the Load

1. Always observe the path ahead and be sure there is adequate clearance to transport the load and/or the forklift.
2. Be constantly aware of the area overhead and make sure, before entering an area with limited overhead, that the forklift will fit. DANGER! Electrocution Hazard. Stay clear of power lines.
3. Keep the load as close to the ground as possible when moving and avoid sudden stops. Approach turns and uneven and/or slippery surfaces very slowly. Use a flagman, sound horn and drive slowly in congested areas. WARNING! Crush Hazard. Never attempt to drive across (parallel to) an excessively steep incline, regardless of circumstances.

Inclines and Unstable Surfaces

Driving on inclines or unstable surfaces is not recommended, but sometimes unavoidable. If driving on an incline cannot be avoided, level the forklift with the rear joystick sway function as follows:

1. Pull lever to the left to sway the forklift carriage to the left.
2. Push the lever to the right to sway the forklift carriage to the right.
   a. If transporting a load, approach the incline with the forks pointed uphill. (Forks should also be pointed uphill when backing down an incline with a load.)
   b. If empty, approach the incline with the forks pointed downhill. WARNING! Tip Hazard. Do not approach an incline at an angle. Drive straight up or straight down an incline. Drive forward to go down an incline and use reverse to go up an incline.

Landing the Load

1. Keep the load low and position the forklift as close to the landing point as possible. Tilt the machine to level by using the rear joystick before raising the load. WARNING! Crush Hazard. Clear the area.
2. Pull back on the boom control joystick to raise the load to the proper height, and move the control to the right to extend as needed.
3. Carefully lower the load to the landing area by using the boom control joystick to extend, retract, lower, lift, tilt forward, and/or backward as needed until the load rests firmly in the landing area. On traversing forklifts, the carriage forward and carriage back feature on the rear joystick may also be used. Position the forks so that they are not contacting the load or the landing area.
4. Due to variation in worksite terrain, removing the forks from under the load may require the use of all boom control joystick features. On Traversing Forklifts, the carriage back feature can also be used.
5. Retract boom and lower forks before backing away.

https://truckmanualshub.com/

Shutdown

1. Bring the forklift to a complete stop.
2. Engage the parking brake by flipping the switch located on the right side of the dashboard.
3. Lower the forks to the ground.
4. Place the transmission in NEUTRAL.
5. Allow the engine to idle for 1-3 minutes.
6. Shut the engine off.
7. Remove the ignition key from the switch.
8. Unfasten seat belt. WARNING! Fall Hazard. Use hand rail and step. Climb carefully from cab.
9. Block wheels of forklift if the machine is on an incline.

Emergency Operations

In the event of any system failure (hydraulic pump, hydraulic line, engine, etc.) that involves an extended load or boom, contact Pettibone Service Department at 1-877-685-5982 or 1-(800) GOPETTIBONE for immediate emergency assistance in the procedures required to lower the load and/or boom.

https://truckmanualshub.com/

This Page Intentionally Left Blank

https://truckmanualshub.com/

MAINTENANCE

SAFETY WHILE SERVICING THE MACHINE

Safety while servicing this machine is the owner's responsibility. Only qualified and authorized personnel should be permitted to maintain, repair, adjust and inspect the machine.

Read and understand warnings and safety precautions in this section and elsewhere in this manual before performing any service on machine.

A DANGER

The safety messages that follow have DANGER level hazards. These safety messages describe a hazardous situation which, if not avoided, will result in death or serious injury.

Electrocution Hazard

- Raise the boom only if there is sufficient overhead clearance from all power lines.
- Make sure all electrical maintenance equipment is functioning properly and correctly installed.
- Make sure that boom and attachments are grounded to avoid electrical shock.

A WARNING

The safety messages that follow have WARNING level hazards. These safety messages describe a hazardous situation which, if not avoided, could result in death or serious injury.

Exposure Hazard

- Different jobs will require different protective equipment.
- Items such as hard hats, protective shoes, heavy gloves, reflector type vests, respirators and ear protection may be required.
- Know and use the equipment that is required before starting the job.
- When servicing this machine, always wear safety protection, including, but not limited to, hard hat, work shoes and safety glasses.
- Be prepared for emergencies. Always have a first aid kit and a properly working fire extinguisher. Know how to use both.

Alcohol and Drug Hazard

Do not work on this machine while under the influence of alcohol, drugs or if feeling ill.

https://truckmanualshub.com/

A WARNING

Flying Debris Hazard

- Remove all trash and debris when work projects are completed.
- Double check the engine area and exhaust system.
- Check that all guards and covers are installed correctly.
- Metal chips or debris can cause eye injury. Always wear eye or face protection when using a hammer on this machine. Use a hammer with a soft face, such as brass, to drive hardened pins.
- Do not leave loose tools and rags on the machine.

Entanglement Hazard

Avoid loose fitting clothing, loose or uncovered long hair, jewelry or loose personal articles.

Fire and Explosion Hazard

- Before starting electrical equipment, walk around the machine and check for oil, fuel or other fluid leaks.
- Never use a shop rag to wipe up excess fuel. Vapors from the rag are flammable and explosive.
- Dispose of all flammable liquids in approved containers.
- Disconnect battery.
- Handle fuel carefully. Do not smoke while filling fuel tank or working near fuel.

Crush Hazard

- Lower boom to ground, shut down machine to a zero energy state and remove key from ignition before beginning work.
- Do not support the machine, the boom, or any attachments on cinder blocks, hollow tiles or props that may crumble under a load.
- Do not work under a machine that is supported solely by a jack.

Injection Hazard

- Relieve all hydraulic pressure in the hydraulic reservoir by removing the hex plug on the top of the tank before breaking any hydraulic connection or before opening the reservoir access cover.
- Keep hands and body away from any pressurized leak.

Burn Hazard

Allow machine to cool before beginning work.

Fall Hazard

Make sure that all walking and climbing surfaces are clean.

Uncontrolled Movement Hazard

- Before servicing the machine, put a “DO NOT OPERATE” tag on the instrument panel.
- If it is necessary to have the engine running while servicing the machine, have another person assist with the procedure.
- Do not leave the operator’s seat with the engine running.

https://truckmanualshub.com/

A WARNING

Structural Integrity Hazard

- Do not make any modifications to this machine or weld on any structural member unless specifically authorized by Pettibone/Traverse Lift, LLC. Before welding or using a torch on the machine, disconnect the Engine and Transmission ECU.
- Any unauthorized welding may weaken the structural temper and will void the warranty.

MAINTENANCE AND SERVICE KITS

The following section gives suggested guidelines for operational maintenance on your machine.

Check the hour meter regularly to determine when the machine needs periodic maintenance. In severe conditions (extreme dust, heat, cold, humidity, etc.), you will need to service your machine more often. Your experience may dictate a more severe servicing program.

Please read the complete text of the Operator's Manual carefully to receive the full benefit of this program.

Use this maintenance schedule as a guide, throughout the life of the unit, to ensure the unit's performance, safety and reliability.

Service kits containing the filters and breathers that are required at specific intervals are available through the parts department. These kits are a convenient way to ensure the serviceman has the right parts for the job.

Components and/or structures are not covered by this warranty if they fail due to:

- Overloading
- Lack of maintenance
- Abuse
- Corrosion
- Contamination
- Use of attachments or fluids that are not factory-approved in writing
- Normal wear and tear
- Adjustments or modifications made without factory authorization

https://truckmanualshub.com/

Protection of the warranty coverage is dependent upon the following:

- Use of the unit in a manner consistent with normal and approved operation
- Performance of the routine maintenance listed in this guide
- Documentation of compliance with the scheduled maintenance requirements
- The use of fluids, filters and breathers that meet factory specifications

ROUTINE MAINTENANCE

This section pertains to those items that require daily or weekly checks and/or service during the regular use of the unit. The intervals are based on operation under normal conditions. When the unit is operated under more severe conditions, such as extreme temperatures (high or low), extreme dust or more than one shift per day, adjust the service intervals accordingly.

Units operated under extremely dusty conditions require the filters and breathers be serviced more often, and monitored closely. Damage caused by contamination is not covered by the warranty. It is the responsibility of the owner to ensure that the filters and breathers are maintained and replaced when needed with genuine Pettibone parts. These genuine Pettibone parts are designed to protect the internal components with specific filtering levels and are very important to proper operation and long service life.

DAILY (or 8 hours)

- Drain water from the fuel/water separator.
- Check engine oil level.
- Check transmission fluid level.
- Check hydraulic oil level.
- Check tire pressure and tire condition.
- Check engine belt and fan condition.
- Check coolant level.
- Check the forks or attachment for damage or wear.
- Check the seat belt and hardware for damage or wear.
- Check the service brake for proper operation.
- Check the crankcase breather.
- Check the gauges, horn, back-up alarm and lighting for proper operation.

https://truckmanualshub.com/

WEEKLY (or 30 hours)

- Grease all fittings. (Refer to "Grease Fitting Location Charts" on pages 86 - 92.)
- Clean the axle breathers.
- Inspect the boom's wear pads and mounting bolts.
- Inspect all pin retaining bolts.
- Check the axle lube levels.
- Clean the radiator and transmission cooler fins.
- Inspect all hydraulic hoses, tubes, valves and cylinders for leaks or damage.
- Check the fuel lines for leaks or damage.
- Check the parking brake for proper operation.
- Check the steering operation in all modes.
- Check the service brake for proper operation.
- Check the gauges, horn, back-up alarm, seat belt and lighting for proper operation.

Fluids and Lubricants

Refer to the "Lubricants" table when replacing oils, fluids or filling fuel tank.

Filter Kits

Maintenance Interval	Kit(s) Used
@ 50 hours of operation	engine oil filter
@ 250 hours	Kit #1 + Kit #2
@ 500 hours	Kit #1 + Kit #3
@ 750 hours	Kit #1
@ 1000 hours	Kit #1 + Kit #2 + Kit #3
@ 1250 hours	Kit #1
@ 1500 hours	Kit #1 + Kit #3
@ 1750 hours	Kit #1
@ 2000 hours	Kit #1 + Kit #2 + Kit #3

Filter Kit Descriptions:

Kit #1	LL-7863	1 pc. LL-1189-387	Engine oil filter
		1 pc. LL-2011-1093	Hydraulic tank breather
Kit #2	LL-7864	2 pcs. LL-1803-566	Hydraulic return filters
		1 pc. LL-7160-88	Transmission filter
Kit #3	LL-7865	1 pc. LL-847-489	Engine air filter
		1 pc. LL-847-490	Engine air safety
		1 pc. LL-1189-375	Fuel filter
		1 pc. LL-1189-373	Pre-filter (WIF)

https://truckmanualshub.com/

Grease Fitting Location Charts

7K Models Fixed Grease Fittings

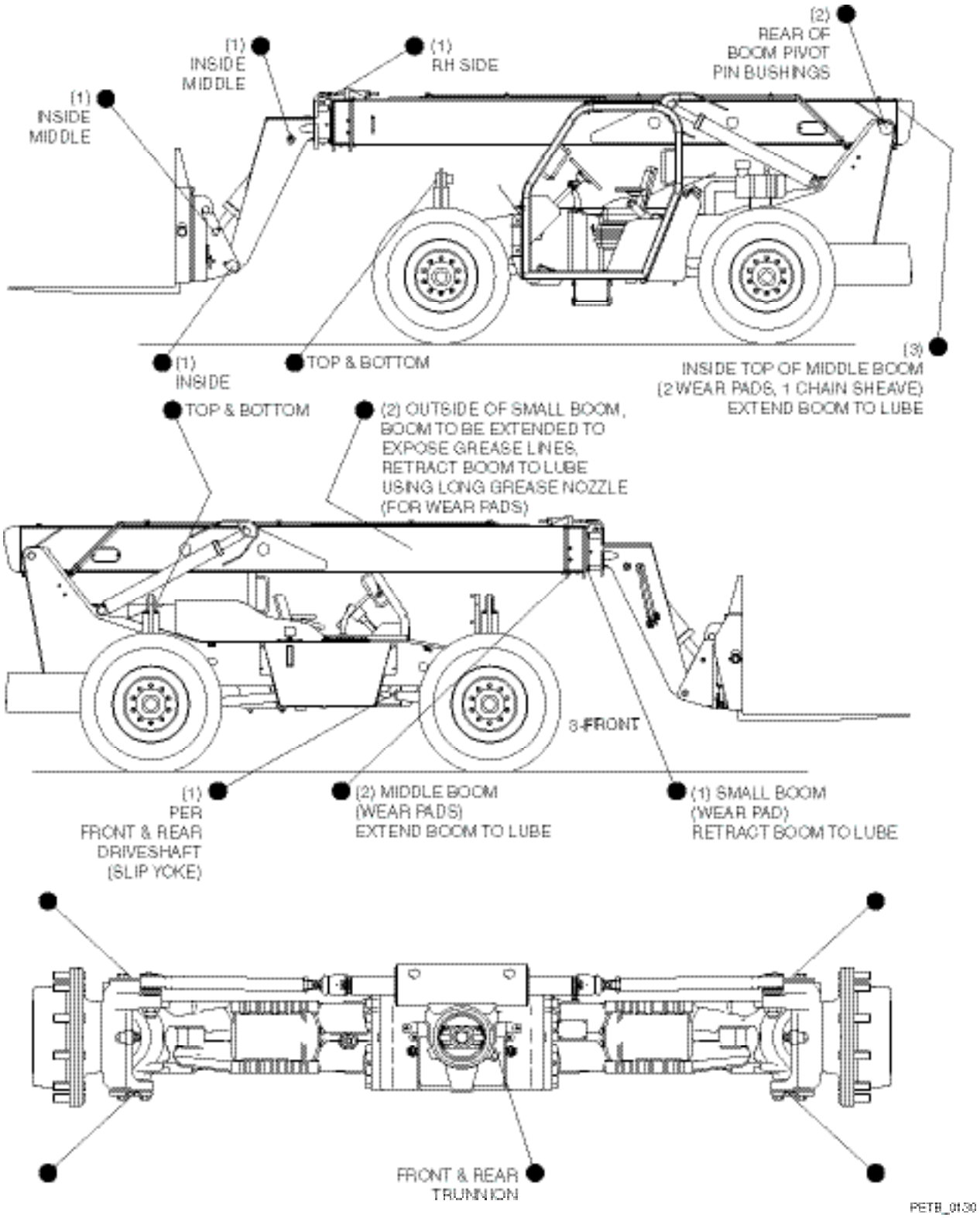

Figure 41. 7K Models Fixed Grease Fittings

https://truckmanualshub.com/

9K Models Fixed Grease Fittings

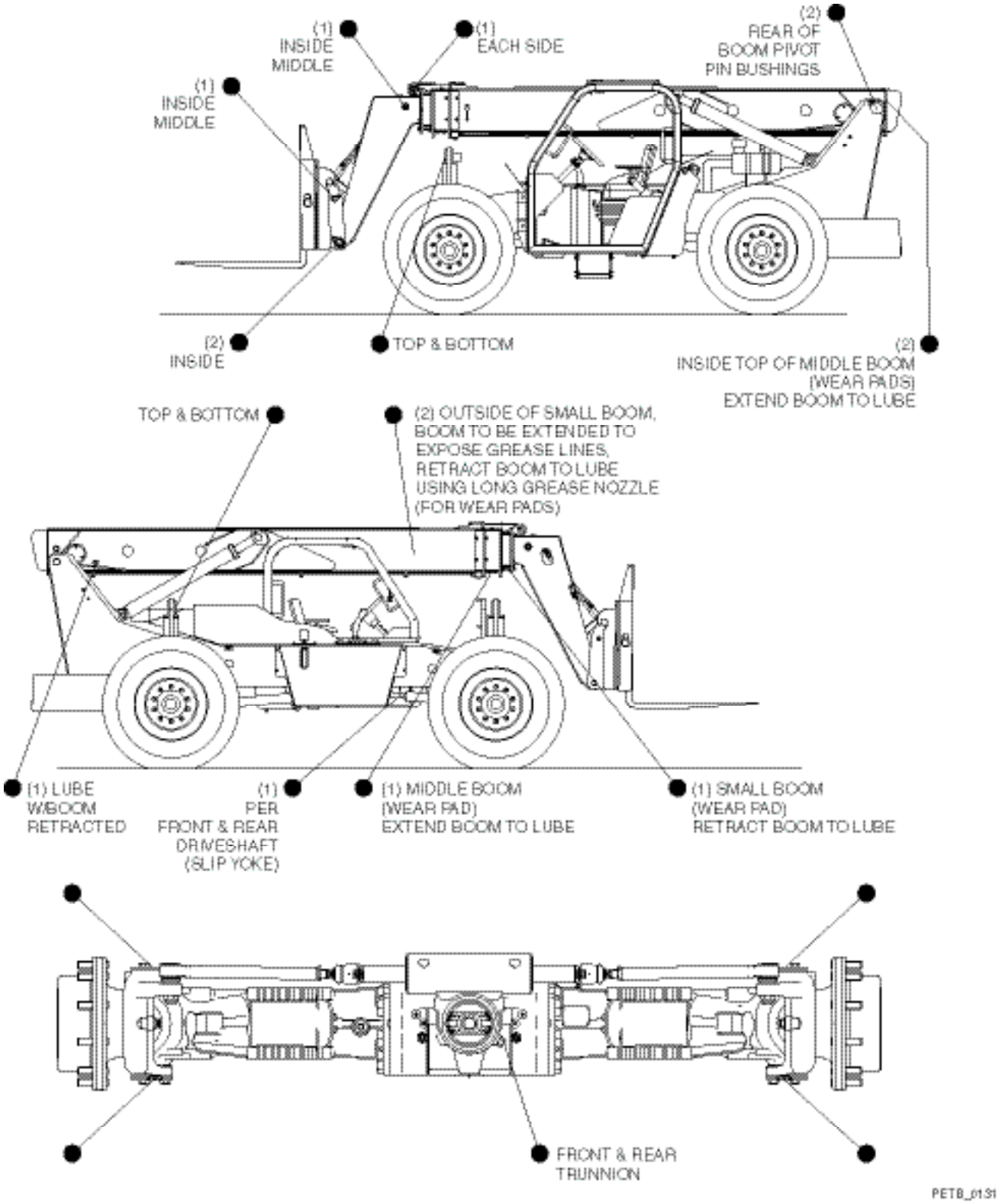

Figure 42. 9K Models Fixed Grease Fittings

https://truckmanualshub.com/

9-11K Models Fixed Grease Fittings

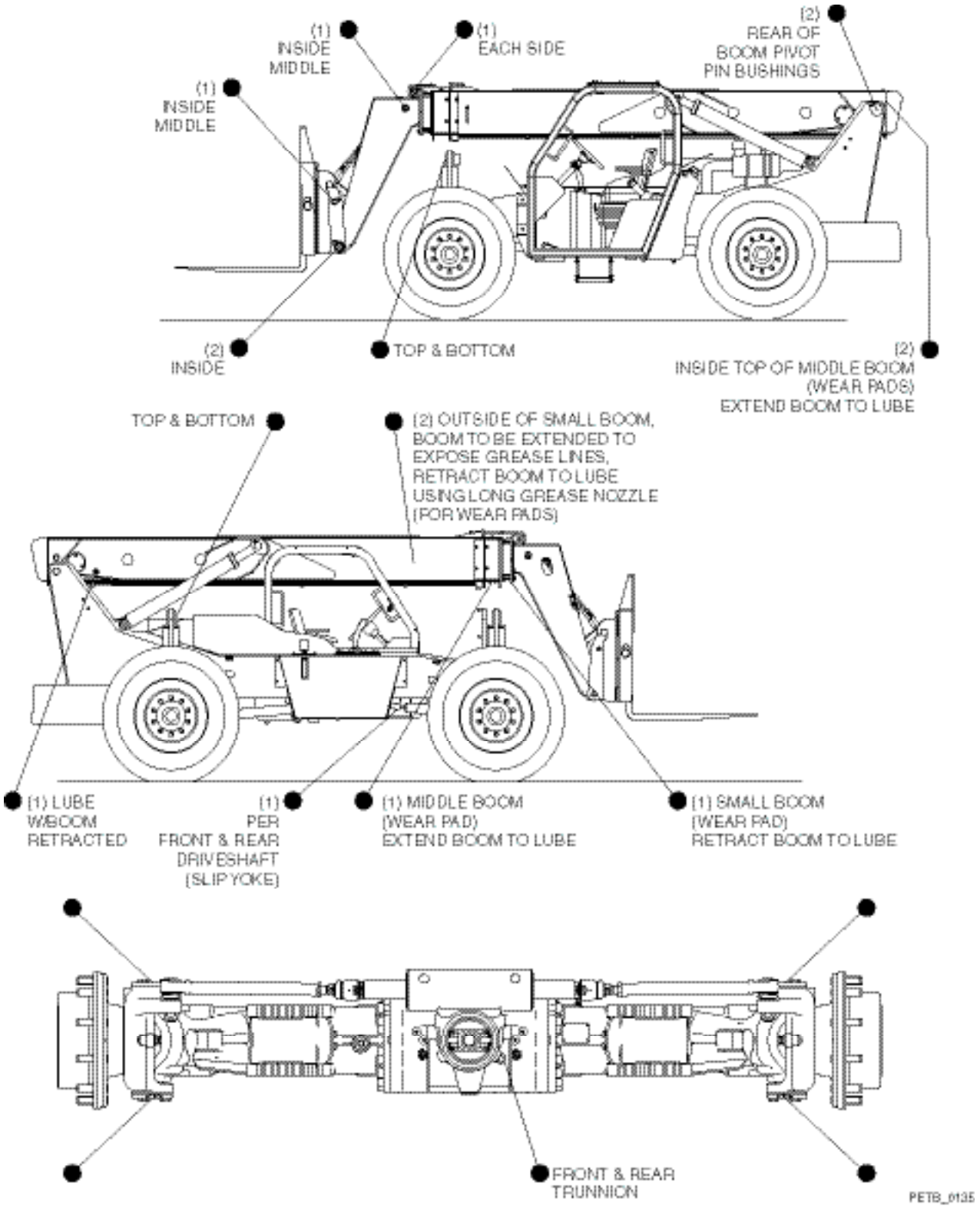

Figure 43. 9-11K Models Fixed Grease Fittings

https://truckmanualshub.com/

1157 Models Grease Fittings

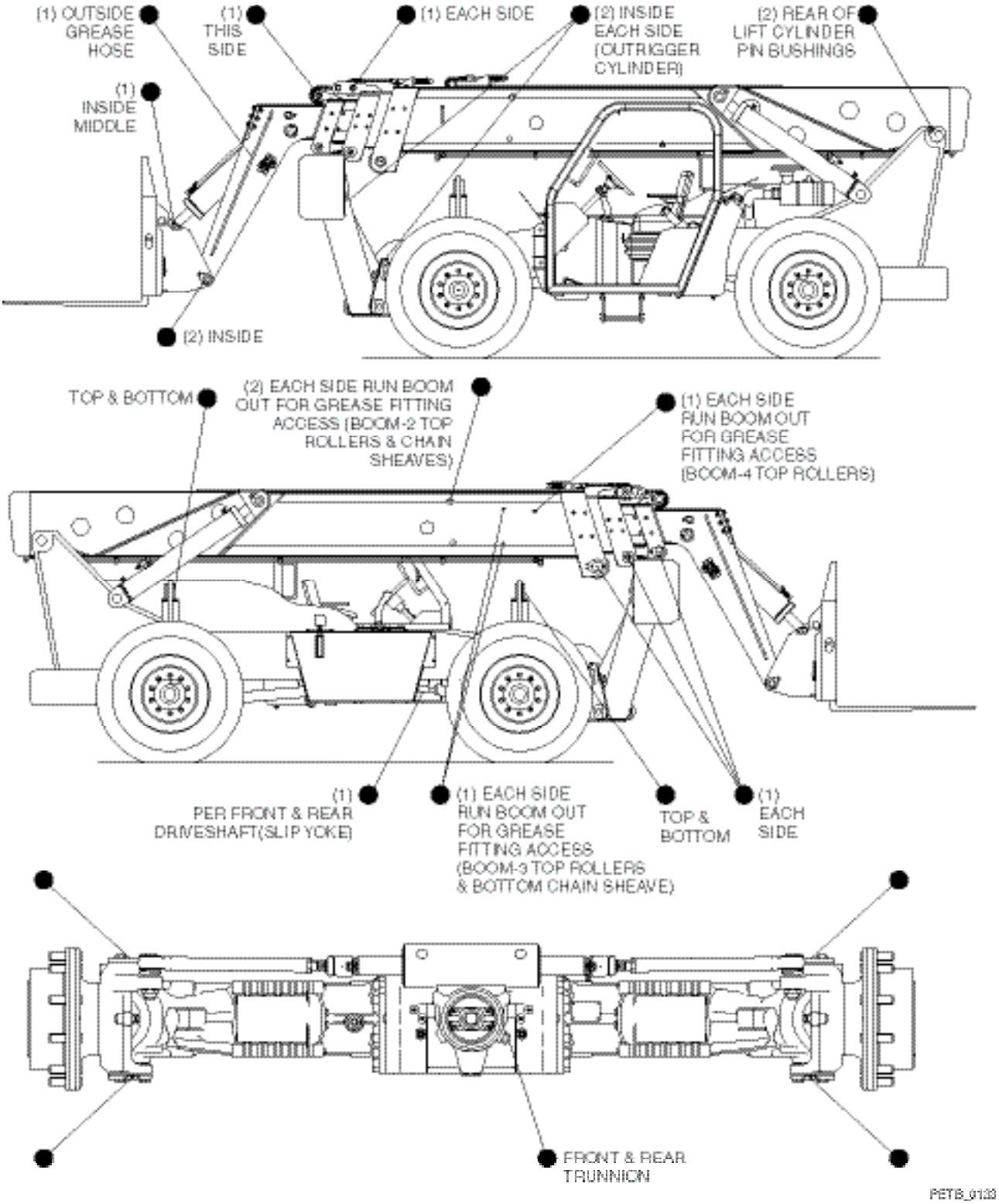

Figure 44. 1157 Models Grease Fittings

https://truckmanualshub.com/

7K Traversing Models

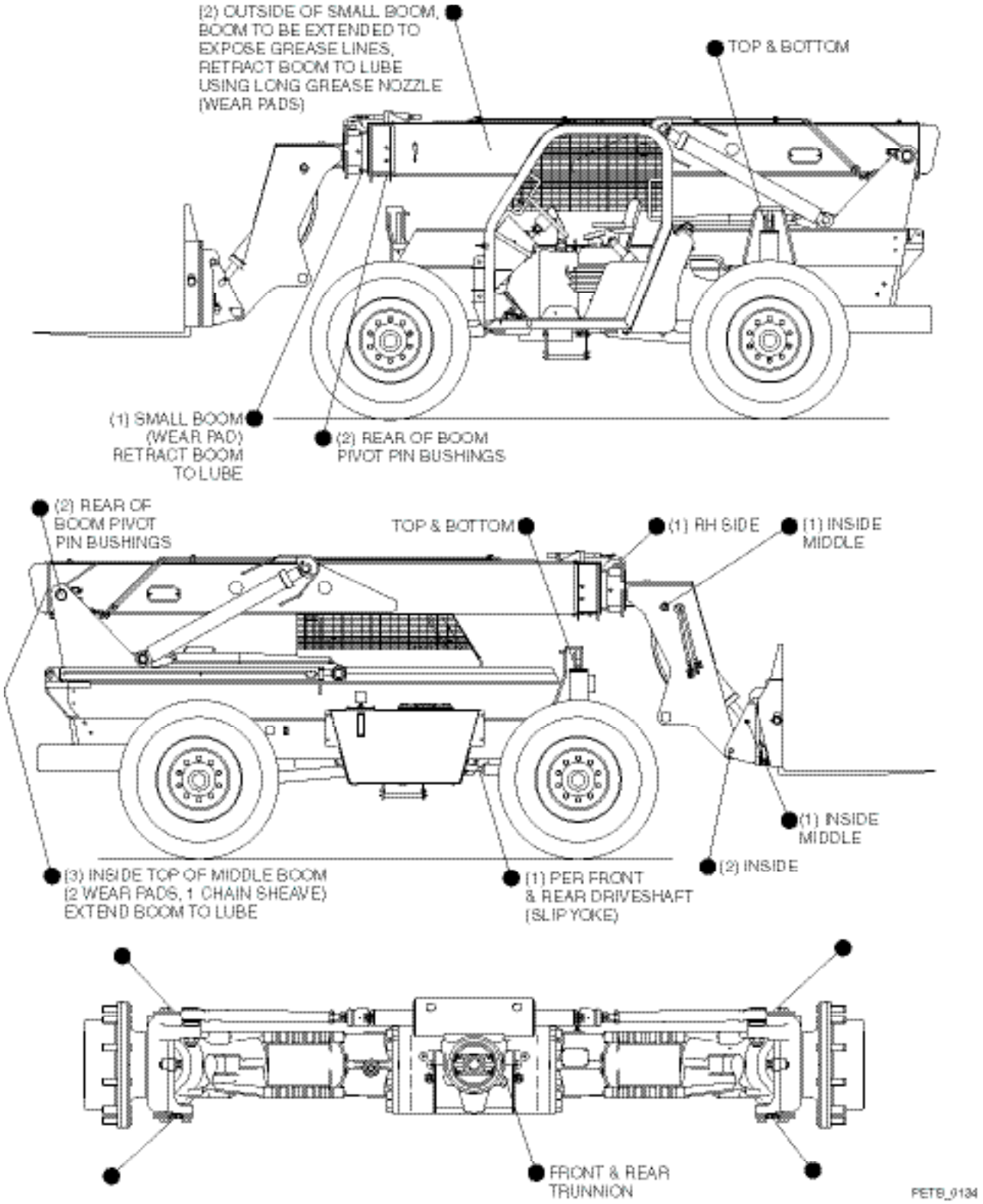

Figure 45. 7K Traversing Models

https://truckmanualshub.com/

9K Traversing Models

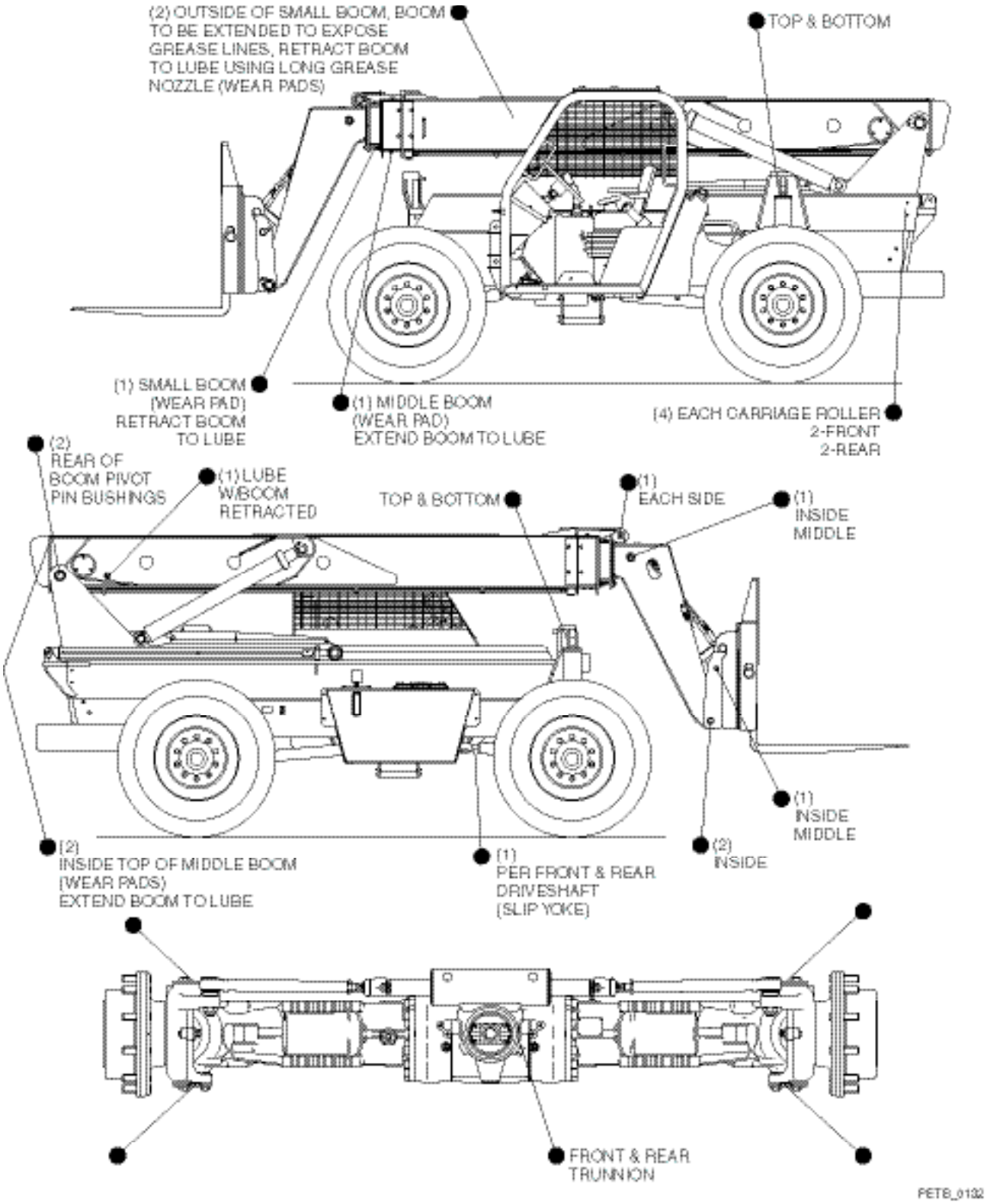

Figure 46. 9K Traversing Models

https://truckmanualshub.com/

11K Traversing Models

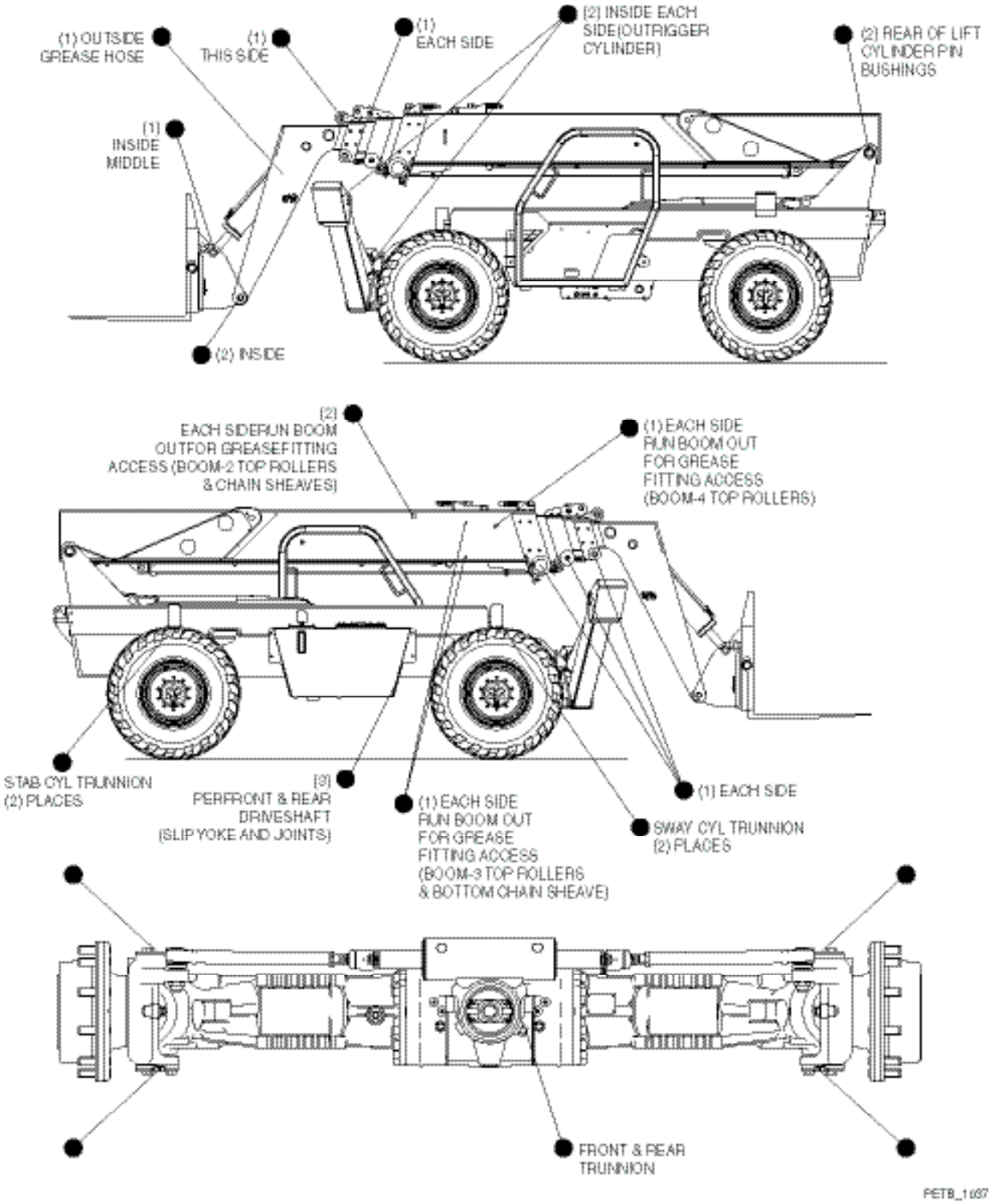

Figure 47. 11K Traversing Models

https://truckmanualshub.com/

Procedures included in the following paragraphs cover those that can normally be achieved by the owner or operator, using common hand tools. For more complex maintenance, see Advanced Maintenance Manual or contact an authorized dealer or service representative.

Replace Fuel Filter Elements

(At 500, 1000, 1500 and 2000 hours)

1. Working through the right side engine compartment opening, clean the filter head to prevent fuel contamination during filter element replacement.
2. Using a filter wrench, remove the filter element.
3. Apply a light film of oil to the seal of the new element.
4. Install the filter. Hand tighten the element only. DO NOT OVER TIGHTEN.
5. Prime the fuel system.
6. Start the engine and allow it to idle while checking for leaks. Correct leaks if found.

Figure 48. Fuel Filter

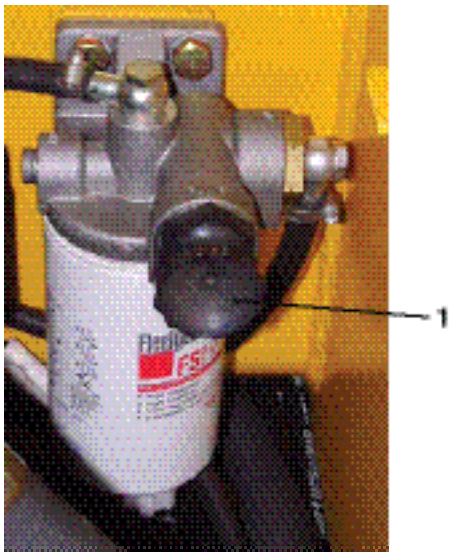

1 – Priming Pump
2 – Water Drain
3 – WIF Sensor

Figure 49. Pre-Filter

https://truckmanualshub.com/

Service Air Cleaner

1. Loosen the cup assembly retaining clamp and remove the cup assembly from the air cleaner housing.

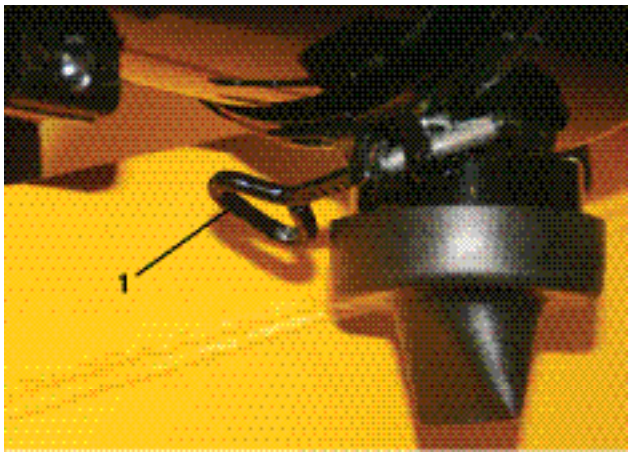

1 – Retaining Clamp

Figure 50. Removing Cup Assembly

2. Remove the primary filter element. CAUTION: Remove the safety element only if it is to be replaced. Do not attempt to clean the safety element. If the safety element is to be replaced, immediately install a new element in its place to prevent contaminants from entering the engine.

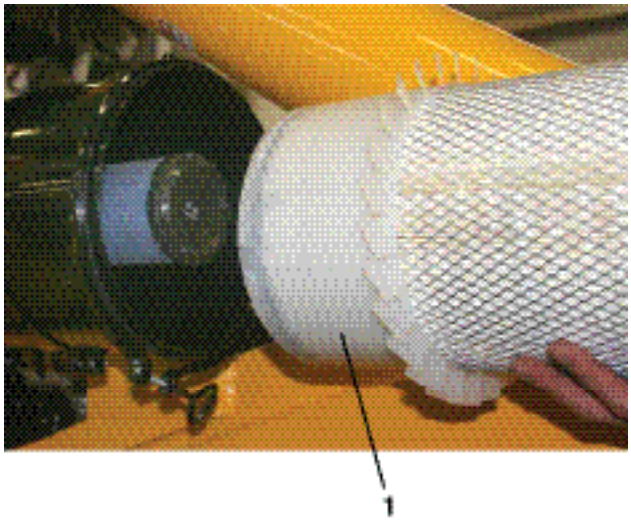

1 – Primary Filter Element

Figure 51. Removing Primary Filter Element

3. Remove the safety element.

4. Install the safety element immediately by positioning it in the air cleaner housing.

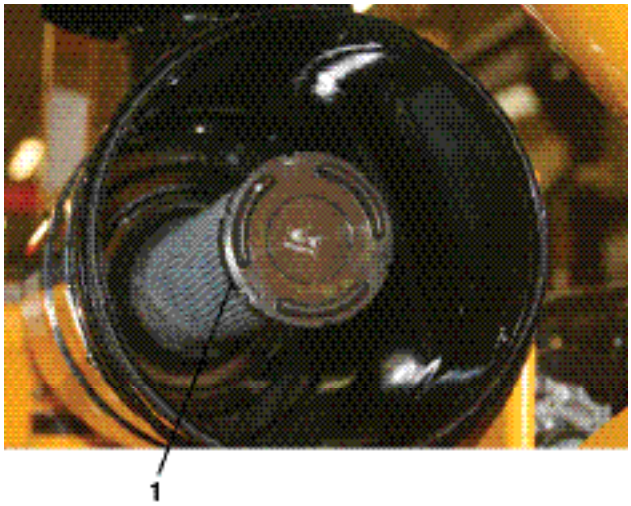

1 – Safety Element

Figure 52. Installing Safety Element

5. Gently pat the sides of the primary element to loosen dirt. Do not tap the element against a hard surface. CAUTION: When using compressed air to clean the element, make certain the air pressure is less than 30 psi. Clear the area of bystanders, guard against flying chips and wear proper protective safety equipment, including eye protection.

6. Clean the primary element from the inside with compressed air. Hold the nozzle next to the inner surface and move up and down pleats. Repeat as necessary until clean.

7. Inspect the primary element as follows:

   a. Hold a bright light inside the filter element and check it for holes. Discard the filter element if holes are found.

   b. Inspect the outer screen for dents. Discard the element if dented.

   c. Check the filter gasket for nicks and distortions. Replace the element if the gasket is nicked, distorted or damaged.

https://truckmanualshub.com/

8. Install the primary filter element as follows:
   a. Position the primary element over the safety element, inside the canister.

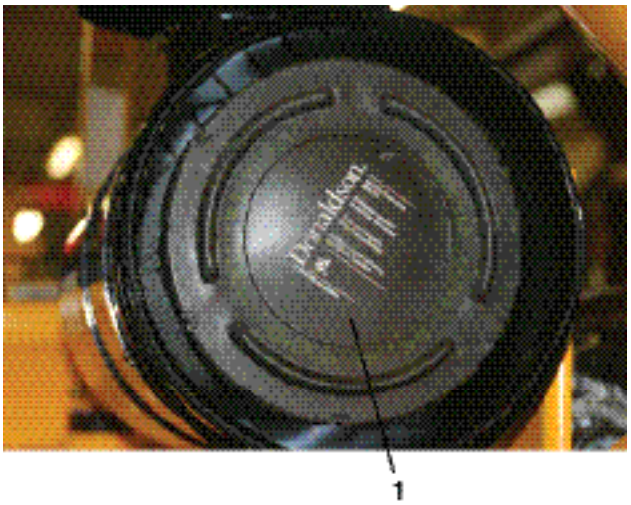

1 – Primary Filter Element

Figure 53. Positioning Primary Element over Safety Element

   b. Position the cup assembly on the air cleaner housing.
   c. Install the cup assembly retaining clamp and tighten.

1 – Retaining Clamp

Figure 54. Installing Cup Assembly Retaining Clamp

Drain and Refill Cooling System

1. Place a drain pan beneath the radiator drain valve.
2. Remove the radiator cap, open the drain valve and allow the radiator coolant to drain.
3. Position a drain pan beneath the engine coolant drain plug, located on the underside of the engine water inlet.
4. While holding a long-spout funnel beneath the water inlet, remove the drain plug and allow coolant to drain into the pan.
5. Install the drain plug after the coolant has drained.
6. Close the radiator drain valve. WARNING! Exposure Hazard. Wear rubber gloves. Fill the radiator with a mixture of 50% ethylene glycol antifreeze and 50% water.
7. Install the radiator cap and operate the engine until it reaches a temperature of 180°F (82°C) and check for leaks. Correct any leaks found.

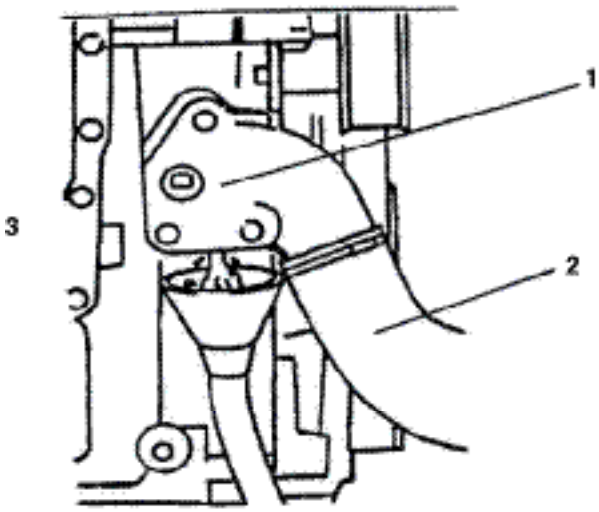

1 – Engine Water Inlet
2 – Radiator Hose
3 – Located in Left Rear of Engine Compartment

Figure 55. Draining and Refilling Cooling System

https://truckmanualshub.com/

Thermostat Test

1. Place the thermostat in a pot of water and position a thermometer to indicate water temperature. WARNING! Burn Hazard. Wear protective equipment.
2. Heat the water on a burner while observing the thermometer.
3. The thermostat should open when the thermometer indicates a water temperature of 180°F (82°C). If not, replace the thermostat.

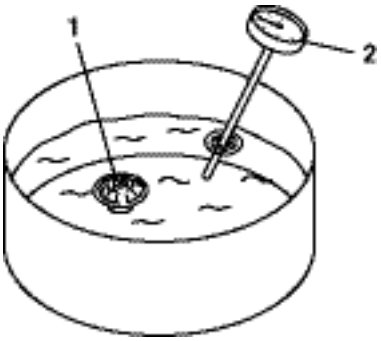

1 – Thermostat

2 – Thermometer

Figure 56. Thermostat Test

Drive Belt Tension Adjustment

The Cummins engine is equipped with a spring-loaded tensioning device and requires no drive belt adjustment.

Battery Replacement

Note: The Environmental Protection Agency has established guidelines for the disposal of batteries. Make certain that EPA requirements are met when disposing of batteries.

WARNING! Chemical Burn Hazard. Wear eye protection and rubber gloves.

1. Unfasten the hold down strap and remove the lid from battery box.
2. Remove the nut from each battery post.
3. Remove the battery ground cable from the negative (-) battery post, then remove the positive cable from the positive (+) battery post.
4. Loosen the two battery clamp nuts and lift the hold-down clamp from the battery.
5. Remove the battery box from the forklift.
6. Position the new battery in the battery box.
7. Replace the battery box in the machine.
8. Place the battery hold-down clamp on the battery with the threaded rods of the clamp hooked into the slots provided.
9. Tighten the hold-down clamp nuts.
10. Position the battery cables on the posts in the following order: first the red cable to the positive (+) post and then the black cable to the negative (-) post.
11. Install a nut on each battery post.
12. Replace the battery box lid and securely refasten hold-down strap.
13. Dispose of the old battery in a manner approved by the EPA.

https://truckmanualshub.com/

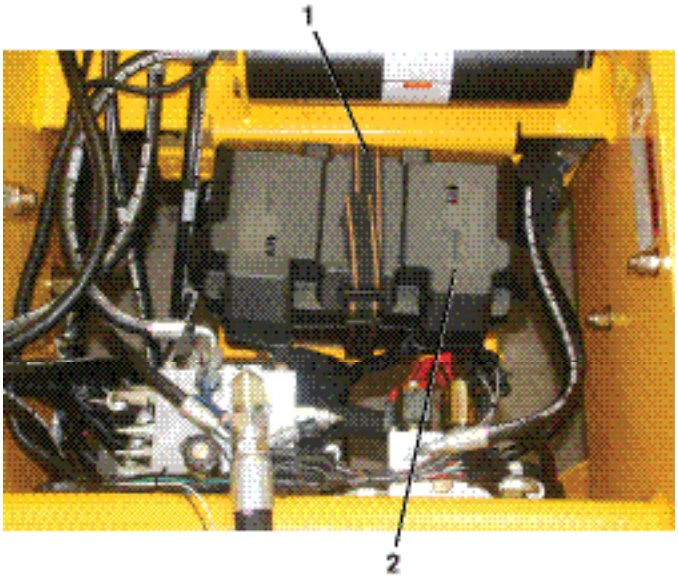

1 – Hold Down Strap

2 – Battery Box Lid

Figure 57. Battery Box

Fuse Replacement

1. Remove the four screws on the fuse panel cover, which is located below the operator's panel on the left.
2. Remove the panel cover to reveal the fuse panel at the lower left.
3. Replace fuses with the amperage value specified. If new fuse fails, troubleshoot and correct circuit failure.
4. Replace the panel cover and refasten the screws.

Engine Oil Change

Note: Never dispose of engine oil by pouring it on the ground or down a drain. Contact the local EPA or Cummins distributor for information.

1. Operate the engine until the engine water temperature reaches 140°F (60°C).
2. Position a drain pan beneath the engine oil pan drain plug. WARNING! Burn Hazard. Wear protective equipment.
3. Remove the oil pan drain plug and allow the oil to drain into the drain pan.
4. Using a filter wrench, remove the filter element.
5. Apply a light film of oil to the new filter element gasket and fill the filter element with engine oil. Install and hand tighten the element only. DO NOT OVER TIGHTEN.
6. Install and tighten the engine oil drain plug.
7. Fill the engine crankcase with oil to the proper level as indicated on the oil dipstick.
8. Start the engine and allow the oil pressure to come up to operating pressure. Check for and correct any oil leaks.

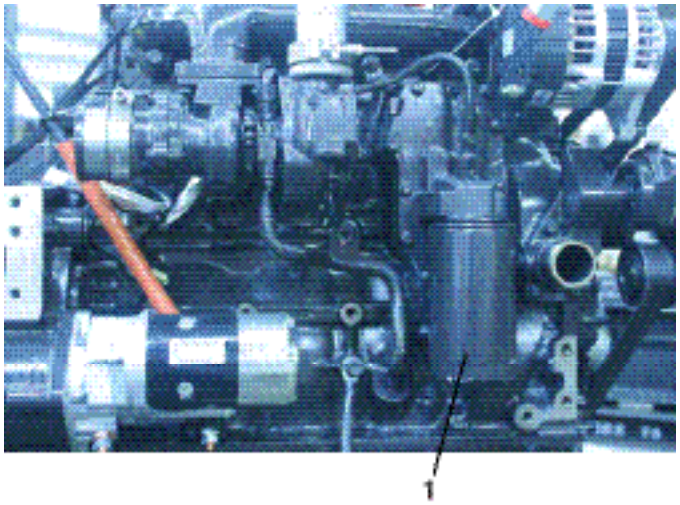

1 – Engine Oil Filter

Figure 58. Changing Engine Oil

https://truckmanualshub.com/

Transmission Oil Change

Note: Transmission oil should be changed with the transmission warm. Never dispose of transmission oil by pouring it out on the ground or pouring it down a drain. Contact the local EPA office or the nearest dealer for proper disposal information.

1. Position a container beneath the oil drain plug, located on the center of the side of the transmission.
2. Remove the plug and allow the oil to drain into the container. Install the drain plug.
3. Fill the transmission to the proper level shown on the dipstick.
4. With the transmission in NEUTRAL, start the engine and check the oil level on the transmission dipstick.
5. Dispose of transmission oil in a manner prescribed by the EPA.

1 – Transmission Drain Plug

Figure 59. Changing Transmission Oil

Transmission Filter Element Replacement

1. With the engine shut off, place a container beneath the transmission filter, located at the right front of the engine compartment.
2. Using a filter wrench, remove the filter element.
3. Apply a light coat of transmission fluid to the surface of the element's gasket.
4. Install element onto filter base and hand tighten only.
5. Start engine and check for leaks. Tighten element if leaking.

Axle Lubricant Change

NOTICE: The Environmental Protection Agency has established guidelines for lubricant disposal. Contact the local office of the EPA or the nearest axle manufacturer distributor for the proper disposal procedure.

1. Position a container beneath the differential drain plug, located on the underside, center of the axle.
2. Remove the drain plug and allow lubricant to drain into the container.
3. After the axle has drained, install the drain plug and remove both of the high lubricant level inspection plugs.
4. Fill the axle through both of the high lubricant level plug openings until the lubricant level is even with the bottom of the opening. Install the plugs.

To drain a planetary:

1. Park the forklift so that the drain plug on the planetary is in the lowest position.
2. Remove the plug and allow the planetary to drain.

https://truckmanualshub.com/

After draining:

WARNING! Crush Hazard. Clear the area.

1. Move the forklift so that the arrow, located on the face of the planetary hub, is horizontal.
2. Fill the planetary to a level even with the bottom of the drain plug opening.
3. Install the drain plug.
4. Repeat this step for each planetary.

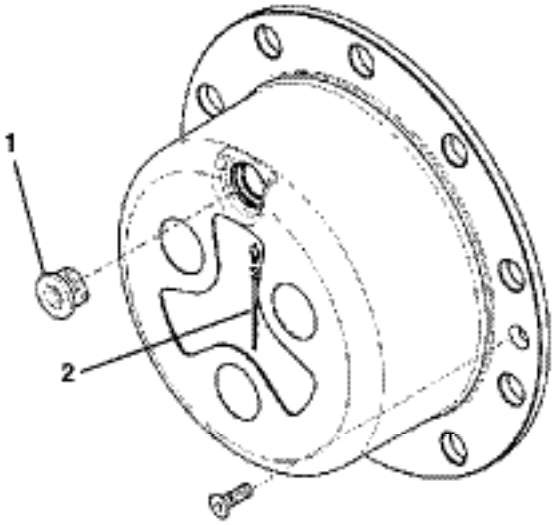

1 – Planetary (Drain Plug)

2 – Oil Level

Figure 60. Planetary (Drain Plug)

REQUIRED SCHEDULED MAINTENANCE LOG

To improve our warranty coverage, decrease the per hour costs to operate and extend the usable service life of Pettibone/Traverse Lift, LLC units, we established this service and maintenance log to assist our customers in the care and service of our products.

This section specifies the maintenance schedule for each machine when operated under normal conditions. Please refer to the "Operation Under Severe Conditions" section for the recommended adjustments to the service intervals.

The dealer is required to perform a Pre-Delivery Inspection Report and a 30-day Inspection for each new machine put into service. This does not change the maintenance requirements for your machine. Many customers elect to have the dealer perform the scheduled maintenance for their machine. It is the owner's responsibility to see that the service is performed on time, and that the required documentation is provided. This will assure the continuation of the warranty coverage.

Model: _____ Serial #: _____

Hours on unit at delivery:

Date unit was put into service: ____/____/____

YOUR MACHINE MUST BE MAINTAINED PER THE INTERVALS IN THIS LOG TO QUALIFY FOR WARRANTY COVERAGE.

Pettibone/Traverse Lift, LLC

https://truckmanualshub.com/

50 Hours of Operation

- ❑ Change engine oil and filter. (Refer to the engine manual.)
- ❑ Re-torque the wheel lug nuts (310 ft-lb).
- ❑ Re-torque the axle mounting bolts (300 ft-lb).
- ❑ Grease all fittings. (Refer to "Grease Fitting Location Charts" on page 92.)
- ❑ Change the hydraulic return filter and check the fluid level.
- ❑ Change fluid in planetary hubs.

Service performed by: _____

Date: ____/____/____ Hours: _____

250 Hours of Operation

- ❑ Change engine oil and filter. (Refer to the engine manual.)
- ❑ Change hydraulic return filters.
- ❑ Change transmission fluid and filter. (Refer to the transmission manual.)
- ❑ Check/correct air intake system and filter. (Check service indicator.)
- ❑ Check the boom chain adjustments. (Refer to the service manual.)
- ❑ Check the axle mounting bolt torque (300 ft-lb).
- ❑ Check the lug nut torque (310 ft-lb).
- ❑ Test the coolant protection level. (Refer to the engine manual.)
- ❑ Replace the hydraulic tank breather.

Service performed by: _____

Date: ____/____/____ Hours: _____

500 Hours of Operation, or 6 Months

- ❑ Change engine oil and filter.
- ❑ Check/correct air intake system and filter.
- ❑ Check the boom chain adjustments.
- ❑ Check the lug nut torque (310 ft-lb).
- ❑ Test the coolant protection level.
- ❑ Replace the hydraulic tank breather.
- ❑ Replace both fuel filters.

Service performed by: _____

Date: ____/____/____ Hours: _____

750 Hours of Operation

- ❑ Change engine oil and filter.
- ❑ Check/correct air intake system and filter.
- ❑ Check the boom chain adjustments.
- ❑ Check the lug nut torque (310 ft-lb).
- ❑ Test the coolant protection level.
- ❑ Replace the hydraulic tank breather.

Service performed by: _____

Date: ____/____/____ Hours: _____

https://truckmanualshub.com/

1000 Hours of Operation, or 1 Year

- ❑ Change engine oil and filter.
- ❑ Check/correct air intake system and filter.
- ❑ Check the boom chain adjustments.
- ❑ Check the axle mounting bolt torque (300 ft-lb).
- ❑ Check the lug nut torque (310 ft-lb).
- ❑ Test the coolant protection level.
- ❑ Replace the hydraulic tank breather.
- ❑ Change transmission fluid and filter.
- ❑ Change hydraulic oil filters.
- ❑ Change fluid in axle differential and planetary hub.
- ❑ Adjust engine valve lash. (Contact engine manufacturer.)
- ❑ Check all engine belt drive components.
- ❑ Replace both fuel filters.
- ❑ Inspect all boom wear pads and shim or replace as needed.

Service performed by: _____

Date: ____/____/____ Hours: _____

1250 Hours of Operation

- ❑ Change engine oil and filter.
- ❑ Check/correct air intake system and filter.
- ❑ Check the boom chain adjustments. (Refer to the service manual.)
- ❑ Check the lug nut torque (310 ft-lb).
- ❑ Test the coolant protection level.
- ❑ Replace the hydraulic tank breather.

Service performed by: _____

Date: ____/____/____ Hours: _____

1500 Hours of Operation, or 18 Months

- ❑ Change engine oil and filter.
- ❑ Check/correct air intake system and filter.
- ❑ Check the boom chain adjustments. (Refer to the service manual.)
- ❑ Check the lug nut torque (310 ft-lb).
- ❑ Test the coolant protection level.
- ❑ Replace the hydraulic tank breather.
- ❑ Replace both fuel filters.

Service performed by: _____

Date: ____/____/____ Hours: _____

1750 Hours of Operation

- ❑ Change engine oil and filter.
- ❑ Check/correct air intake system and filter.
- ❑ Check the boom chain adjustments. (Refer to the service manual.)
- ❑ Check the lug nut torque (310 ft-lb).
- ❑ Test the coolant protection level.
- ❑ Replace the hydraulic tank breather.

Service performed by: _____

Date: ____/____/____ Hours: _____

https://truckmanualshub.com/

2000 Hours of Operation, or 2 Years

- ❑ Change engine oil and filters.
- ❑ Check/correct air intake system and filter.
- ❑ Check the boom chain adjustments.
- ❑ Check the axle mounting bolt torque (300 ft-lb).
- ❑ Check the lug nut torque (310 ft-lb).
- ❑ Replace the hydraulic tank breather.
- ❑ Change transmission fluid and filter.
- ❑ Change the hydraulic oil and filter.
- ❑ Change fluid in axle differential and planetary hub.
- ❑ Adjust engine valve lash. (Contact engine manufacturer.)
- ❑ Check all engine belt drive components.
- ❑ Change engine coolant and test the protection level.
- ❑ Change engine belt.
- ❑ Replace both fuel filters.
- ❑ Inspect the boom wear pads and shim or replace as required.

Operation Under Severe Conditions

If the unit is operated under any of the following conditions, the customer should adjust the service intervals to half of the hours or dates listed in the Scheduled Maintenance section.

1. Operated consistently in below-freezing or over 90°F (32°C) weather
2. Used in an extremely dusty environment
3. Used on more than one regular work shift per day
4. Used regularly on severe grades while loaded

Consistent service with high quality filters and fluids, daily inspections, and operator training in the proper use of your unit are the best ways to ensure that your unit will continue to perform at optimum levels and at the lowest cost per hour.

This manual has been furnished by Pettibone/Traverse Lift, LLC to be used as a guide for equipment operation and maintenance. Remember, this machine can be extremely dangerous when operated recklessly. The most important safety feature of the machine is the operator.

This forklift is designed to encourage daily, routine maintenance by locating maintenance points in easily accessible locations. Constant adherence to the maintenance schedules listed herein will serve to lengthen the usable life of this machine. Should a problem arise which you cannot resolve, contact your servicing dealer immediately, or call us at (906) 353-6611: We're here to ensure your satisfaction with Pettibone/Traverse Lift, LLC products.

THANK YOU FOR CHOOSING PETTIBONE/TRAVERSE LIFT.

Pettibone/Traverse Lift, LLC
P.O. Box 368
Baraga, MI 49908

https://truckmanualshub.com/

Service Maintenance Chart

Service Interval (Hours)	50	250	500	750	1000	1250	1500	1750	2000
Engine Oil	CF	CF	CF	CF	CF	CF	CF	CF	CF
Engine Oil Filter	RF	RF	RF	RF	RF	RF	RF	RF	RF
Fuel Filter	-	-	RF	-	RF	-	RF	-	RF
Crankcase Breather	X	X	X	X	C	X	X	X	C
Alternator Belt	X	X	X	X	X	X	X	X	X
Transmission Fluid	X	CF	X	X	CF	X	X	X	CF
Transmission Filter	X	RF	X	X	RF	X	X	X	RF
Hydraulic Fluid	X	X	X	X	CF	X	X	X	CF
Hydraulic Filter	-	RF	X	X	RF	X	X	X	RF
Hyd. Tank Breather	-	RF	RF	RF	RF	RF	RF	RF	RF
Air Cleaner Element	X	X	RF	X	RF	X	RF	X	RF
Radiator Coolant	X	T	T	T	T	T	T	T	CF
Battery	X	X	X	X	X	X	X	X	X
Axle Differential	-	X	-	-	CF	-	X	-	CF
Planetary Hubs	CF	X	-	-	CF	-	X	-	CF

C = Clean

CF = Change fluid

RF = Replace filter

T = Test

X = Check

https://truckmanualshub.com/

Specifications

Tire Pressures

Model	Size	Ply Rating	Front	Rear
10-11k	14 x 24	16	81 psi	81 psi
7-9k	13:00 x 24	14	80 psi	80 psi

Hydraulic Oil

Hydraulic Oil Operating Temperature Range	ISO Viscosity Grade
-5 to 140°F (-21 to 60°C)	22
5 to 170°F (-15 to 77°C)	32
15 to 190°F (-9 to 88°C)	46
30 to 210°F (-1 to 99°C)	68

Diesel Fuel

Ambient Conditions	Grade
Below 32°F (0°C)	Winterized No. 2-D
Above 32°F (0°C)	ASTM D975 Grade No. 2-D

https://truckmanualshub.com/

https://truckmanualshub.com/

1100 Superior Ave.
Baraga, MI 49908

Phone: 1-800-Go-Pettibone
Fax: 906-353-6325

www.gopettibone.com