https://truckmanualshub.com/

Kubota

U.S.A. : **KUBOTA TRACTOR CORPORATION**
1000 Kubota Drive, Grapevine, TX 76051
Telephone : 888-4KUBOTA

Canada : **KUBOTA CANADA LTD.**
5900 14th Avenue, Markham, Ontario, L3S 4K4, Canada
Telephone : (905)294-7477

France : **KUBOTA EUROPE S.A.S**
19-25, Rue Jules Vercruysse, Z.I. BP88, 95101 Argenteuil Cedex, France
Telephone : (33)1-3426-3434

Italy : **KUBOTA EUROPE S.A.S Italy Branch**
Via Grandi, 29 20068 Peschiera Borrome (MI) Italy
Telephone : (39)02-51650377

Germany : **KUBOTA (DEUTSCHLAND) GmbH**
Senefelder Str. 3-5 63110 Rodgau /Nieder-Roden, Germany
Telephone : (49)6106-873-0

U.K. : **KUBOTA (U.K.) LTD.**
Dormer Road, Thame, Oxfordshire, OX9 3UN, U.K.
Telephone : (44)1844-214500

Spain : **KUBOTA ESPAÑA S.A.**
Avenida Recomba No.5, Poligno Industrial la Laguna, Leganes, 28914 (Madrid) Spain
Telephone : (34)91-508-6442

Australia : **KUBOTA AUSTRALIA PTY LTD.**
25-29 Permas Way, Truganina, VIC 3029, Australia
Telephone : (61)-3-9394-4400

Malaysia : **KUBOTA MALAYSIA SDN. BHD.**
Lot 766, Jalan Subang 4, off Persiaran Subang Sungai Penaga Industrial Park,
47500 Subang Jaya
Telephone : (60)-3-7890-3533

Philippines : **KUBOTA PHILIPPINES, INC.**
232 Quirino Highway, Baesa, Quezon City 1106, Philippines
Telephone : (63)2-422-3500

Taiwan : **SHIN TAIWAN AGRICULTURAL MACHINERY CO., LTD.**
16, Fengping 2nd Rd, Taliao Shiang Kaohsiung 83107, Taiwan R.O.C.
Telephone : (886)7-702-2333

Indonesia : **PT KUBOTA MACHINERY INDONESIA**
Tower A at EightyEight@Kasablanka Lantai 16
Jalan Raya Casablanka Kav. 88, Jakarta 12870 Indonesia
Telephone : (62)-21-29568-720

Thailand : **SIAM KUBOTA CORPORATION CO., LTD.**
101/19-24 Moo 20, Navanakorn Industrial Estate, Tambon Khlongnueng, Amphur Khlongluang,
Pathumthani 12120, THAILAND
Telephone : (66)2-909-0300

Korea : **KUBOTA KOREA CO., LTD.**
41-27, Jayumuyeok-gil, Baeksan-myeon, Gimje-si, Jeollabuk-do, Korea
Telephone : (82)-63-544-5822

India : **KUBOTA AGRICULTURAL MACHINERY INDIA PVT. LTD.**
No.15, Medavakkam Road, Sholinganallur, Chennai-600119, T.N., India
Telephone : (91)44-6104-1500

Vietnam : **KUBOTA VIETNAM CO., LTD.**
Lot B-3A2-CN, My Phuoc 3 Industrial Park, Thoi Hoa Ward, Ben Cat Town, Binh Duong Province, Vietnam
Telephone : (84)-274-3577-507

KUBOTA Corporation

AZ. E. 2-2 . -. K

English (U.S.A.)
Code No. 7J066-6912-2

L
A
5
3
5

OPERATOR'S MANUAL

KUBOTA
FRONT LOADER

MODEL LA535

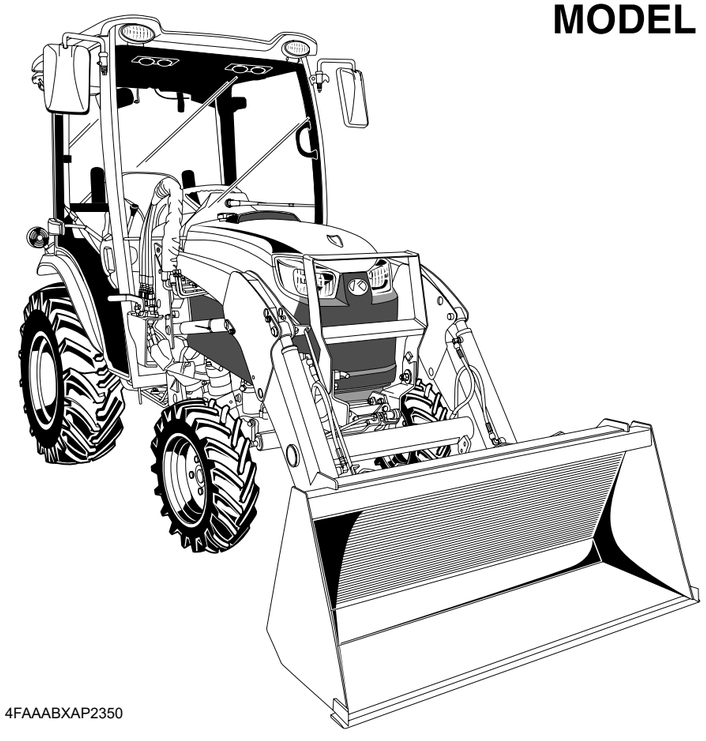

4FAAABXAP2350

READ AND SAVE THIS MANUAL

Kubota

PRINTED IN U.S.A.

© KUBOTA Corporation 2020

https://truckmanualshub.com/

ABBREVIATION LIST

Abbreviations	Definitions
2WD	2-Wheel Drive
4WD	4-Wheel Drive
API	American Petroleum Institute
ASABE	American Society of Agricultural and Biological Engineers, USA
ASTM	American Society of Testing and Materials, USA
DIN	Deutsches Institut für Normung, GERMANY
DT	Dual Traction [4WD]
fpm	Feet Per Minute
GST	Glide Shift Transmission
Hi-Lo	High Speed-Low Speed
HST	Hydrostatic Transmission
m/s	Meters Per Second
PTO	Power Take Off
RH/LH	Right-hand and left-hand sides are determined by facing in the direction of forward travel
ROPS	Roll-Over Protective Structures
rpm	Revolutions Per Minute
r/s	Revolutions Per Second
SAE	Society of Automotive Engineers, USA
SMV	Slow Moving Vehicle
UDT	KUBOTA UDT fluid (Transmission-hydraulic fluid)

California Proposition 65

⚠ WARNING:

Cancer and Reproductive Harm - www.P65Warnings.ca.gov.

https://truckmanualshub.com/

FOREWORD

Thank you for the purchase of a Kubota product.
Before using this product, read this manual carefully and use the product correctly.
After reading, keep the manual in a safe and easy-to-access place for future reference.
Note that product specifications are subject to change without prior notice. The product delivered to you may differ slightly from the product described in the manual.

SAFETY FIRST

This symbol, the industry's "Safety Alert Symbol", is used throughout this manual and on labels on the machine itself to warn of the possibility of personal injury. Read these instructions carefully. It is essential that you read the instructions and safety regulations before you attempt to assemble or use this unit.

DANGER : Indicates an imminently hazardous situation which, if not avoided, will result in death or serious injury.

WARNING : Indicates a potentially hazardous situation which, if not avoided, could result in death or serious injury.

CAUTION : Indicates a potentially hazardous situation which, if not avoided, could result in minor or moderate injury.

IMPORTANT : Indicates that equipment or property damage could result if instructions are not followed.

NOTE : Gives helpful information.

https://truckmanualshub.com/

https://truckmanualshub.com/

CONTENTS

SAFE OPERATION **3**

SERVICING OF THE LOADER **9**
DEALER SERVICE 9

SPECIFICATIONS **10**
SUITABLE TRACTOR 10
LOADER SPECIFICATIONS TABLE 10
BUCKET SPECIFICATIONS TABLE 11
DIMENSIONAL SPECIFICATIONS 12
OPERATIONAL SPECIFICATIONS 13
LOADER TERMINOLOGY 15

PRE-OPERATION CHECK **16**
LUBRICATION BEFORE OPERATING THE LOADER 16
CHECKING THE TRANSMISSION FLUID 16
SETTING THE TREAD 17
WEIGHT OF THE IMPLEMENTS AS THE REAR BALLAST 18
1. Liquid ballast in the rear tires 18
TIRE INFLATION OF THE TRACTOR 19
PERFORMING THE TEST OPERATION OF THE LOADER 19
1. Four position bucket control valve type 20
PURGING AIR FROM THE HYDRAULIC SYSTEM 20
DUAL REMOTE HYDRAULIC CONTROL SYSTEM 20
1. Connecting the control lever and the hydraulic hose 20
2. Operating the loader/remote control valve lever 21

OPERATING THE LOADER **22**
PRECAUTIONS FOR OPERATING THE LOADER 22
OPERATION OF THE LOADER 22
TECHNIQUES FOR OPERATING THE LOADER AND THE TRACTOR 22
1. Filling the bucket 22
2. Precautions for lifting the load 23
3. Precautions for carrying the load 23
4. Dumping and lowering the bucket 24
5. Precautions for operating the loader with float control 24
6. Loading from a bank 25
7. Peeling and scraping the ground 26
8. Loading low trucks or spreaders from a pile 26
9. Backfilling 27
10. Precautions for handling large heavy objects 28
VALVE LOCK 28
FRONT REMOTE HYDRAULIC CONTROL SYSTEM (IF EQUIPPED) 28
1. Installing the hydraulic quick coupler 28
2. Operating the control switch 29
3. Connecting and disconnecting of the remote control coupler 30
ATTACHMENT INSTRUCTION 30
1. Attaching the attachments 30
2. Detaching the attachments 32
3. Dismounting the loader 32
4. Performing the maintenance of the attachments 32
5. Attachments 32
5.1 Quick attach bucket 32
5.2 Snow blade 33
6. Applying the indicator label front attachment 33

https://truckmanualshub.com/

MAINTENANCE **34**
LUBRICATING THE LOADER 34
SERVICE EVERY 20 HOURS TO 30 HOURS 34
1. Re-tightening of hardwares of the loader 34
2. Re-tightening of hardwares of Mechanical self leveling [if equipped] 35
DAILY CHECKING THE LOADER 35
SERVICE EVERY 50 HOURS 35
1. Checking the torque of hardwares of the loader 35
2. Re-tightening the torque of hardwares of Mechanical self leveling [if equipped] 36
3. Checking the movement of the lifting stand [if equipped] 36
REMOVING THE LOADER **37**
HOW TO REMOVE THE LOADER 37
1. Removing Non Swift-Tach loader 37
2. Removing Swift-Tach loader [if equipped] 38
STORAGE OF THE LOADER **41**
STORING THE LOADER 41
REINSTALLING THE LOADER **42**
HOW TO REINSTALL THE LOADER 42
1. Reinstalling Non Swift-Tach loader 42
2. Reinstalling Swift-Tach loader [if equipped] 43
3. Adjusting the swift-tach stand 47
GENERAL TORQUE SPECIFICATION 52
INDEX **54**

SAFE OPERATION

You can avoid most accidents with the loader equipment by following simple safety instructions.
Safety precautions for the loader, if they are followed at all times, will help you operate your loader safely.

PRECAUTIONS BEFORE OPERATING THE LOADER

- Read and understand all instructions and precautions in both the tractor and the loader operator's manuals before using the loader.
  Lack of knowledge can lead to accidents.
- It is the owner's responsibility to ensure that anyone who will operate the loader reads this manual first and becomes familiar with the safe operation of the loader.
- For your safety, Kubota strongly recommends using a ROPS (rollover protective structure) with a seat belt in almost all applications. If your tractor has a foldable ROPS, fold it down only when absolutely necessary and raise it up and lock it again as soon as possible. Do not wear the seat belt when a foldable ROPS is down or a fixed ROPS is removed. If you have any questions, consult your local Kubota dealer.
- Visually check for hydraulic leaks and broken, missing, or malfunctioning parts.
  Perform necessary repairs before operating the loader.
- Replace damaged or illegible safety labels. See SAFETY LABELS on page 6 for required labels.
- When the front loader is mounted on the tractor, enter and exit the operator's seat only from left side of the tractor.
- Engage the loader control valve lock to prevent accidental actuation when the implement is not in use or during transport. Do not utilize the loader control valve lock for maintenance or repair of the machine.
- Assemble, remove, and reinstall the loader only as directed in this manual. Otherwise, serious personal injury or death may result.
- Follow the precautions below when attaching attachments.
  - **[2-lever quick coupler]**
    - Make sure that both handles of the boom LH and RH contact the ear plates at the points (A) and are all the way down.
    - Make sure that both lock pins of the boom LH and RH protrude through the pin slots.
    - Kubota recommends the use of Kubota attachments on Kubota loaders. Non-Kubota attachments, if used, must comply with *ISO 24410, first edition 2005-04-15*.
    - Use of a non-Kubota attachment that does not comply with *ISO 24410* or the improper positioning of handle(s) or non-protrusion of pin(s) may result in detachment of the attachment or deformation, causing loss of performance, personal injury, or death.

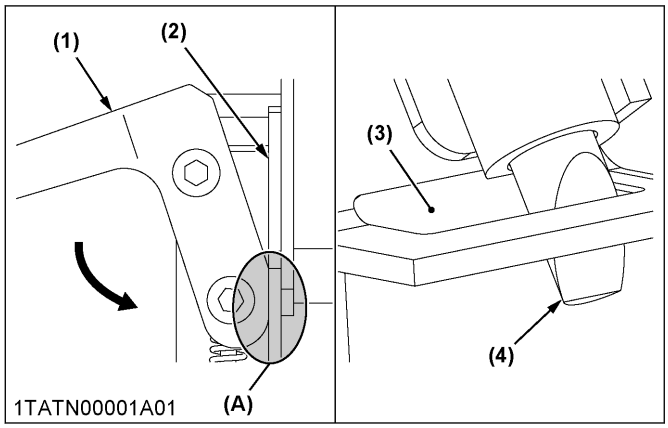

(1) Handle
(2) Ear plate
(3) Pin slot
(4) Lock pin
(A) Points where the handle contacts the ear plate.

  - **[Euro quick coupler]**
    - Make sure that the handle contacts the guide bar at the point (A).
    - Make sure that both lock pins of LH and RH protrude through both pin holes.
    - Any attachment used with Euro quick coupler must comply with *ISO 23206 standard, published 2005*.
    - Use of a non-Kubota attachment that does not comply with *ISO 23206 standard* or the improper positioning of handle or non-protrusion of pin(s) may result in detachment of the attachment or deformation, causing loss of performance, personal injury, or death.

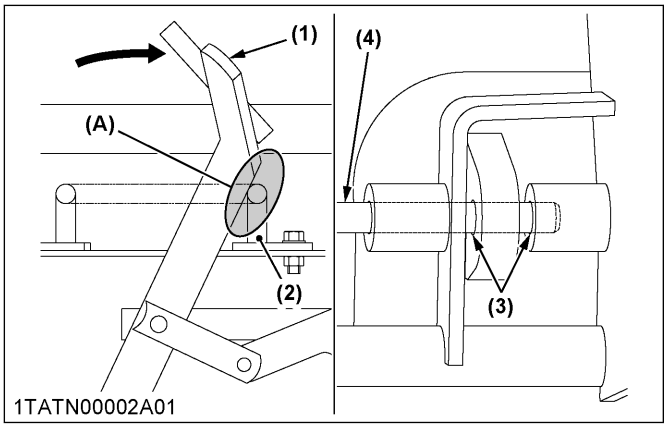

(1) Handle
(2) Guide bar
(3) Pin holes
(4) Lock pin
(A) Point where the handle contacts the guide bar

PRECAUTIONS FOR OPERATING THE LOADER

- Operate the loader only when properly seated at the controls. Do not operate the loader from the ground.
- Move and turn the tractor at low speeds.
- Never allow anyone to get under the bucket of the loader or reach through the boom when the bucket is raised.
- Keep children, others, and livestock away when operating the loader and the tractor.
- Do not walk or work under a raised bucket of the loader or attachment unless it is securely blocked and held in position.
- For the stability of the tractor and operator's safety, add rear ballast to the 3-point hitch and / or to the rear wheels when using the loader.
- To increase stability of the tractor, adjust the rear wheels to the widest setting that is suitable for your application.
- Exercise extra caution when operating the loader with a raised bucket or attachment.
- Do not lift or carry any person on the loader, in the bucket, or other attachment.
- Avoid loose fill, rocks, and holes. Loose fill, rocks, and holes can be dangerous for operation or movement of the loader.
- Avoid overhead wires and obstacles when the loader is raised. Contacting the electric lines can cause electrocution.
- Gradually stop the loader boom when lowering or lifting.
- Use caution when handling loose or shiftable loads.
- When using the loaders for handling large, heavy, or shiftable objects, using proper handling attachments with them is recommended.
- Handling large, heavy objects can be extremely dangerous due to the following reasons:
  - Danger of rolling the tractor over
  - Danger of upending the tractor
  - Danger of the object rolling or sliding down the boom of the loader onto the operator
- If you must handle the large, heavy objects, protect yourself by the following preventive measures:
  - Never lift the load higher than necessary to clear the ground.
  - Add the rear ballast to the tractor to compensate for the load or use the rear implement.
  - Never lift large objects with the equipment that may permit the large objects to roll back onto the operator.
  - Move slowly and carefully, avoiding rough terrain.
- Never lift or pull a load from any point on the loader or any attachments with a chain, rope, or cable. Otherwise, rollover or serious damage to the loader may occur.
- Be extra careful when operating the tractor on a slope. Always operate the tractor up and down, and never across the slope.
- Do not operate the tractor on steep slopes or unstable surfaces.
- When operating another implement on a hillside, be sure to remove the loader to reduce the risk of rollover.
- Carry the boom of the loader at a low position during transport. Ensure that you are able to see over the bucket.
- Allow for the length of the loader when turning the tractor.

PRECAUTIONS AFTER OPERATING THE LOADER

- When loader work is complete and parking or storing, follow the following procedures before leaving the operator's seat of the tractor.
  1. Choose flat, hard ground.
  2. Lower the boom of the loader to the ground.
  3. Stop the engine.
  4. Set the brakes.
  5. Remove the key from the ignition.
- Make sure that the removed loader is on stands and on a hard, level surface.
- Before disconnecting the hydraulic lines, relieve all hydraulic pressure by moving the controls.
- Do not remove the loader from the tractor without an approved bucket attached.

PRECAUTIONS FOR SERVICING THE LOADER

- Always wear safety goggles when servicing or repairing the machine.
- Do not modify the loader. Unauthorized modification may affect the function of the loader, which may result in personal injury.
- Do not use the loader as a work platform or a jack to support the tractor for servicing or maintenance.
  Securely support the tractor or any machine elements with stands or suitable blocking before working underneath.
  For your safety, do not work under any hydraulically supported devices. Hydraulically supported devices can settle, suddenly leak down, or be accidentally lowered.
- Escaping hydraulic oil under pressure can produce sufficient force to penetrate the skin, causing serious personal injury. Do not use hands to search for suspected leaks. Use a piece of cardboard or wood to search for suspected leaks. If injured by escaping fluid, obtain medical treatment immediately.
- Do not tamper with the setting of the relief valve. The relief valve is pre-set at the factory. Changing the setting of the relief valve can cause overloading of the loader and tractor which may result in serious personal injury.
- When servicing or replacing the pins in cylinder ends, bucket, and so on, always use a brass drift and hammer. Otherwise injury from flying metal fragments could result.

SAFETY LABELS

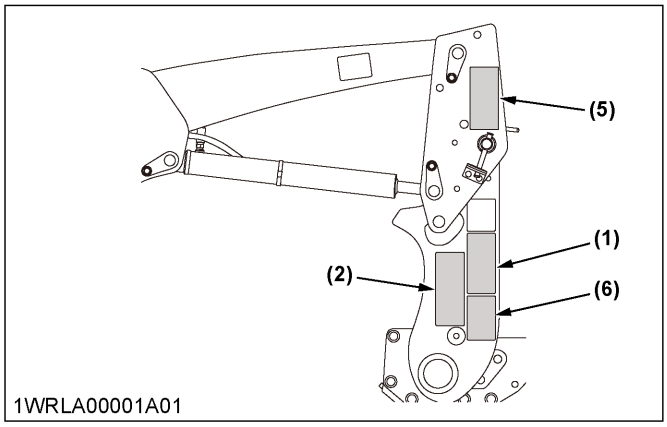

[Standard]

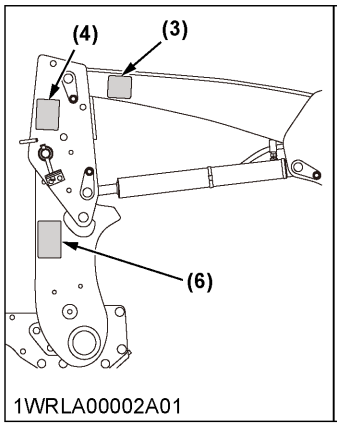

[With MSL kit or Swift-tach kit]

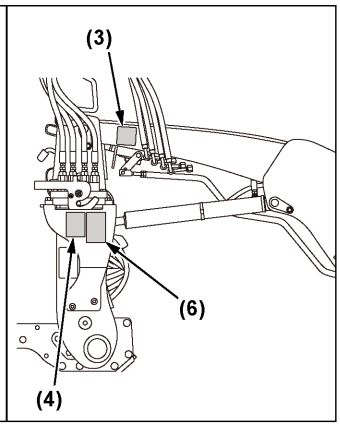

(1) Part No. 7J246-5643-2

DANGER

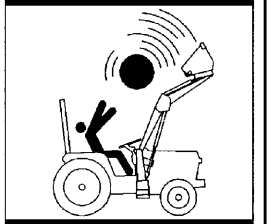

TO AVOID SERIOUS INJURY OR DEATH CAUSED BY FALLING LOADS :

1. Load on raised bucket or fork can fall or roll back onto operator causing serious injury or death.
2. Use approved clamping and / or guard attachments for handling large, loose or shiftable loads such as bales, posts, sheets of plywood etc.
3. Carry loads as low as possible.

(2) Part No. 7J246-5641-2

DANGER

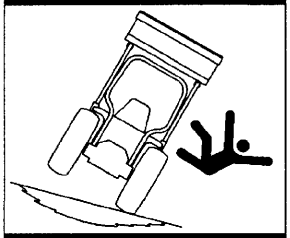

TO AVOID SERIOUS INJURY OR DEATH CAUSED BY ROLLOVERS :

1. ROPS and a fastened seat belt are strongly recommended in almost all applications. Foldable ROPS should be in upright and locked position if equipped.
2. Adjust rear wheels to the widest setting that is suitable for the work.
3. Add recommended wheel ballast and rear weight for stability.
4. DO NOT drive on steep slopes or unstable surfaces.
5. Carry loader arms at low position during transport. Move and turn tractor at slow speeds.

(3) Part No. 7J061-5649-1

WARNING

TO AVOID INJURY FROM CRUSHING :

1. Do not utilize the valve lock for machine maintenance or repair.
2. The valve lock is to prevent accidental actuation when implement is not in use or during transport.

(4) Part No. 7J246-5642-2

DANGER

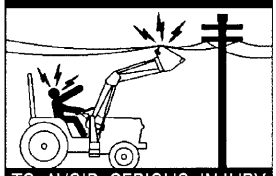

TO AVOID SERIOUS INJURY OR DEATH CAUSED BY CONTACT WITH ELECTRIC LINES:

- Check overhead clearance.

(5) Part No. 7J061-5645-1

WARNING

TO AVOID PERSONAL INJURY :

1. Observe safety precautions in loader and tractor Operator's Manual.
2. Operate the loader from tractor seat only.
3. Keep children, others and livestock away when operating loader and tractor.
4. Avoid holes, loose ground, and rocks which may cause tractor / loader to tip.
5. Make sure approved bucket is attached before removing loader from tractor.
6. When parking or storing, choose flat and hard ground. Lower the bucket to the ground, set brakes and remove key before leaving tractor.
7. Before disconnecting hydraulic lines, relieve all hydraulic pressure.

(6) Part No. 7J246-5644-2 (Both sides)

WARNING

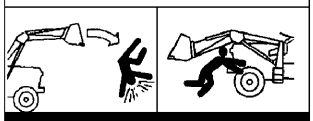

TO AVOID INJURY FROM FALLS OR BEING CRUSHED :

1. DO NOT stand or work under raised loader or bucket.
2. DO NOT use loader as jack for servicing.
3. DO NOT use loader as a work platform.
4. NEVER connect chain, cable or rope to loader bucket while operating loader.

1WRLA00003A01enUS

(1) Part No. 7J802-3648-5

DANGER

TO AVOID PERSONAL INJURY OR DEATH

1.Make sure both handles (LH, RH)Ⓐ contact the ear platesⒷ at the ※points and are all the way down.

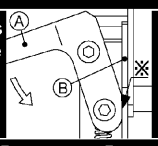

2.Make sure both lock pins (LH, RH) Ⓒ protrude through the pin slots Ⓓ .

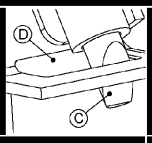

Kubota recommends the use of Kubota attachments on Kubota loaders. Non-Kubota attachments, if used, must comply with ISO 24410, first edition 2005-04-15.

Use of a non-Kubota attachment that does not comply with ISO 24410 or the improper positioning of handle(s) or non-protrusion of pin(s) may result in detachment of the attachment or deformation, causing loss of performance, personal injury or death.

Ⓐ:HANDLE Ⓑ:EAR PLATE Ⓒ:LOCK PIN Ⓓ:PIN SLOT

For information contact your Kubota Dealer

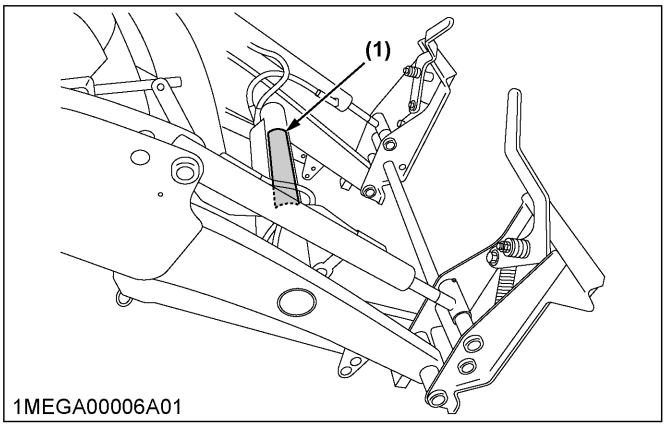

1WRLA00004A01enUS

1. Care for safety labels

- Keep the safety labels clean and free from obstructing material.
- Clean the safety labels with soap and water, and dry the safety labels with a soft cloth.
- Do not spray high-pressure water directly on the safety labels, otherwise the safety labels may peel off.
- Replace damaged or missing safety labels with new safety labels from your local Kubota Dealer.
- If a component with safety label(s) attached is replaced with new component, make sure that new safety label(s) is (are) attached in the same location(s) as the replaced component.
- Attach new safety labels by applying on a clean, dry surface and pressing any bubbles to outside edge.

SERVICING OF THE LOADER

DEALER SERVICE

Your dealer has knowledge of your new loader and has the desire to help you get the most value from it. After reading this manual thoroughly, you will find that you can carry out some of the regular maintenance yourself.
However, when in need of parts or major service, be sure to see your Kubota dealer.
For service, contact the Kubota dealership from which you purchased your loader or your local Kubota dealer.
When in need of parts, prepare to give your dealer the loader serial number.
Locate the serial numbers now and record them in the space provided.

Kubota loader	
Model	
Serial number	
Date of purchase	
Name of dealer	

To be filled in by the purchaser

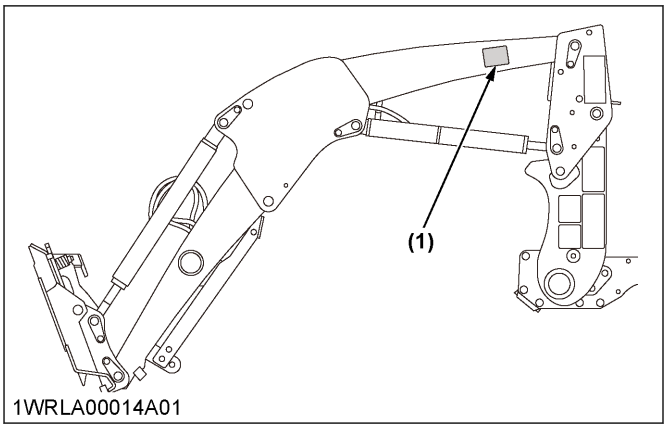

(1) Serial number

SPECIFICATIONS

SUITABLE TRACTOR

Loader	Tractor
LA535	B3350HSDC, B2650SHDC, B3350HSD, B2650HSD, B3350SUHSD, LX3310HSDC, LX2610HSDC, LX3310HSD, LX2610HSD, LX2610SUHSD

LOADER SPECIFICATIONS TABLE

Loader model			**LA535**
Tractor model			**B3350HSDC, B2650SHDC, B3350HSD, B2650HSD, B3350SUHSD, LX3310HSDC, LX2610HSDC, LX3310HSD, LX2610HSD, LX2610SUHSD**
Wheel base (WB)		mm (in.)	1666 (65.6)
Front tires			7-12
Rear tires			12.4-16
Boom cylinder	Bore	mm (in.)	45 (1.77)
	Stroke	mm (in.)	359.5 (14.2)
Bucket cylinder	Bore	mm (in.)	45 (1.77)
	Stroke	mm (in.)	385 (15.2)
Control valve	4 Position bucket control valve type		One Detent Float Position, Two Stage Bucket Dump, Power Beyond Circuit
Rated flow		L/min (GPM)	18.9 (4.99)
Maximum pressure		MPa (kg/cm^2) [psi]	16.6 (169) [2408]
Net weight (approximate)		kg (lbs.)	255*1 (562)

The company reserves the right to change the specifications without notice.

*1 Include the main frame, quick hitch, 54" quick bucket, and front guard.

https://truckmanualshub.com/

BUCKET SPECIFICATIONS TABLE

Loader model			**LA535**	
Model			square 54"	square 60" LM
Type			Quick attach	Quick attach
Width		mm (in.)	1370 (54)	1525 (60.0)
Depth (L)		mm (in.)	456 (18)	529 (20.8)
Height (M)		mm (in.)	562 (22.1)	562 (22.1)
Length (N)		mm (in.)	495 (19.5)	566 (22.3)
Capacity	Struck	m^3 (cu.ft.)	0.21 (7.4)	0.23 (8.1)
	Heaped	m^3 (cu.ft.)	0.26 (9.2)	0.29 (10.2)
Weight		kg (lbs.)	80 (176)	86 (189)

The company reserves the right to change the specifications without notice.

https://truckmanualshub.com/

DIMENSIONAL SPECIFICATIONS

	Loader model		LA535
	Tractor model		B3350HSDC, B2650SHDC, B3350HSD ,B2650HSD, B3350SUHSD, LX3310HSDC, LX2610HSDC, LX3310HSD, LX2610HSD, LX2610SUHSD
R_1	Front tire center height	mm (in.)	285 (11.2)
R_2	Rear tire center height	mm (in.)	451 (17.8)
A	Max. lift height (to bucket pivot pin)	mm (in.)	2134 (84)
B	Max. lift height under level bucket	mm (in.)	2027 (79.8)
C	Clearance with bucket dumped	mm (in.)	1696 (66.8)
D	Reach at max. lift height (dumping reach)	mm (in.)	667 (26.3)
E	Max. dump angle	deg.	36
F	Reach with bucket on ground	mm (in.)	1483 (58.4)
G	Bucket roll-back angle	deg.	30
H	Digging depth	mm (in.)	126 (5.0)
J	Overall height in carrying position	mm (in.)	1187 (46.7)

The company reserves the right to change the specifications without notice.

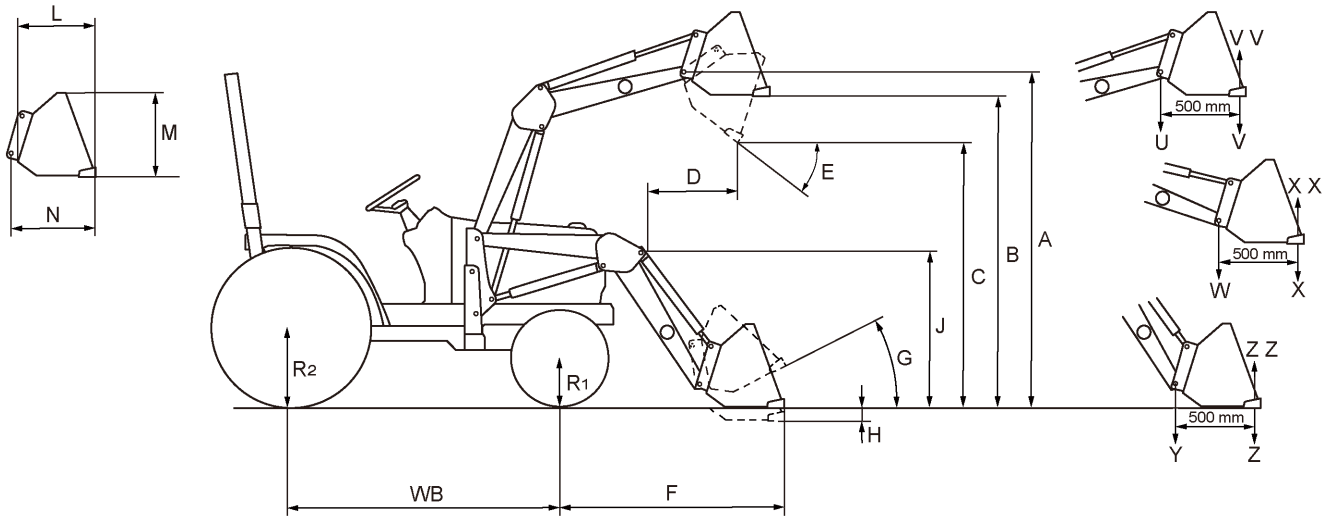

1JDJD00009A02

https://truckmanualshub.com/

OPERATIONAL SPECIFICATIONS

	Loader model		LA535
	Tractor model		B3350HSDC, B2650SHDC, B3350HSD, B2650HSD, B3350SUHSD, LX3310HSDC, LX2610HSDC, LX3310HSD, LX2610HSD, LX2610SUHSD
R1	Front tire center height	mm (in.)	285 (11.2)
R2	Rear tire center height	mm (in.)	451 (17.8)
U	Lift capacity (bucket pivot pin, max. height)	kg (lbs.)	484 (1067)
V	Lift capacity (500 mm forward, max. height)	kg (lbs.)	349 (769)
W	Lift capacity (bucket pivot pin, 1500 mm height)	kg (lbs.)	601 (1324)
X	Lift capacity (500 mm forward, 1500 mm height)	kg (lbs.)	458 (1010)
Y	Breakout force (bucket pivot pin)	N (lbf.)	9987 (2245)
Z	Breakout force (500 mm forward)	N (lbf.)	7267 (1634)
VV	Bucket roll-back force at max. height	N (lbf.)	8964 (2015)
XX	Bucket roll-back force at 1500 mm height	N (lbf.)	11391 (2561)
ZZ	Bucket roll-back force at ground level	N (lbf.)	9999 (2248)
	Raising time	sec.	3.6
	Lowering time	sec.	2.3
	Bucket dumping time	sec.	2.2
	Bucket rollback time	sec.	2.6

The company reserves the right to change the specifications without notice.

https://truckmanualshub.com/

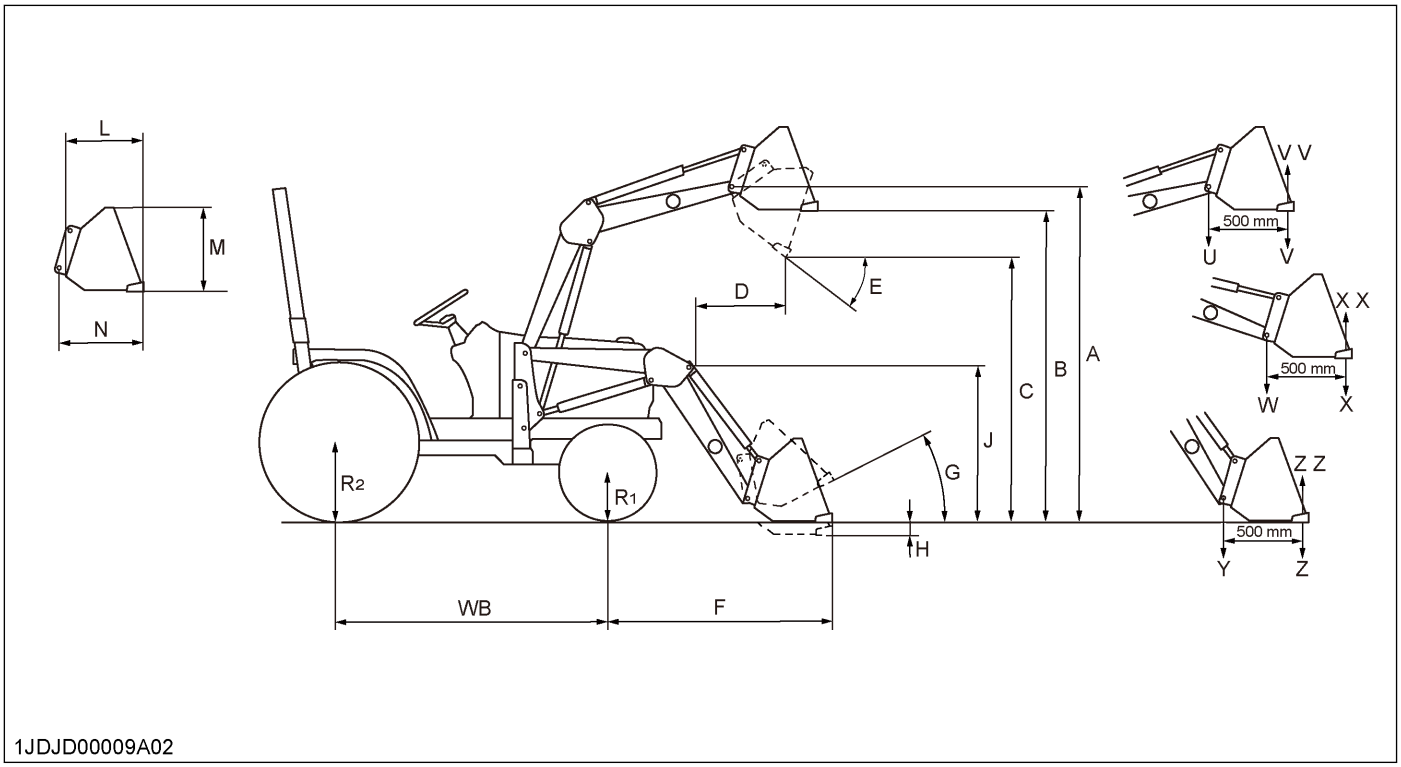

[LA535]

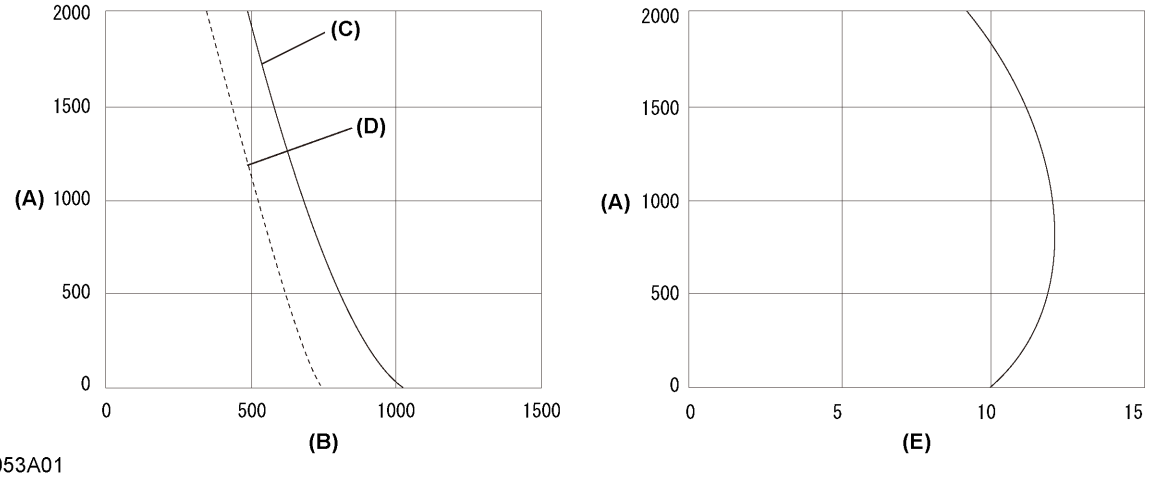

1WRLA00053A01

(A) Height (mm)
(B) Lift capacity (kg)
(C) At pivot pin
(D) 500 mm forward of pivot pin
(E) Rollback force (kN)

The company reserves the right to change the specifications without notice.

https://truckmanualshub.com/

LOADER TERMINOLOGY

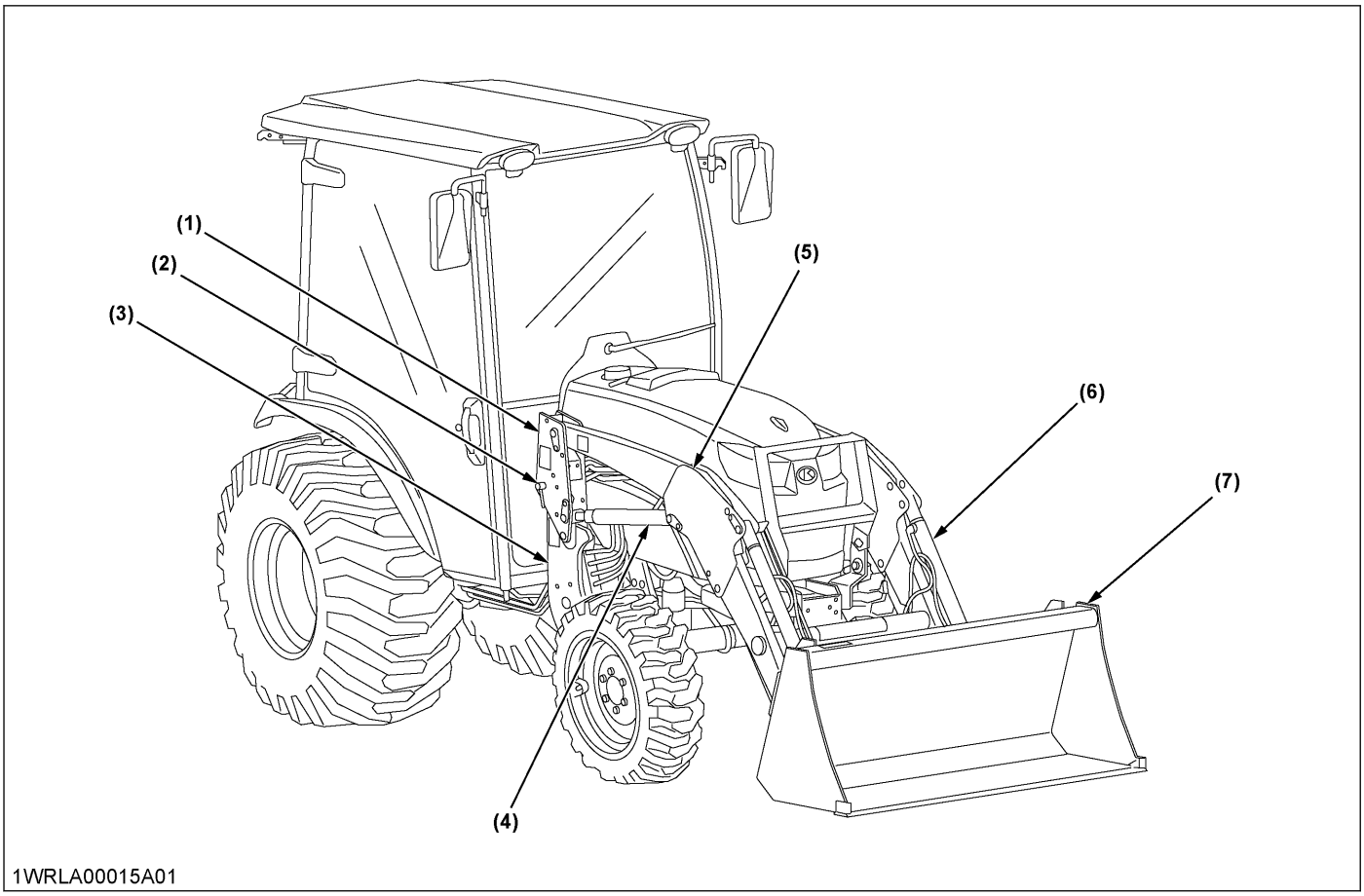

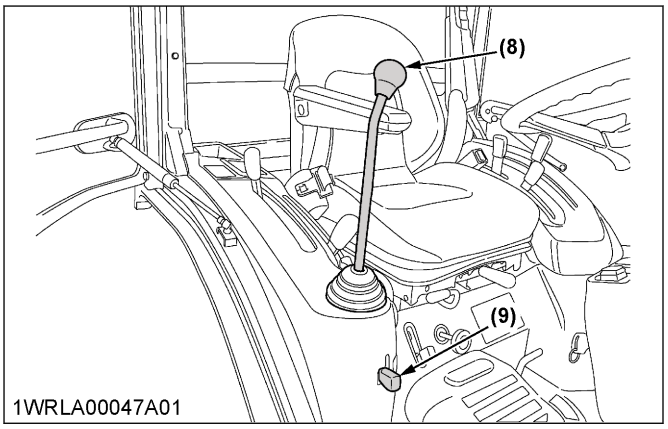

(1) Side frame
(2) Mounting pin
(3) Main frame
(4) Boom cylinder
(5) Boom
(6) Bucket cylinder
(7) Bucket
(8) Loader control lever
(9) Lock lever

https://truckmanualshub.com/

PRE-OPERATION CHECK

LUBRICATION BEFORE OPERATING THE LOADER

Lubricate all grease fittings with grease.
High quality grease designating *"extreme pressure"* and containing Molybdenum disulfide is recommended.
This grease may specify *"Moly EP"* on its label.

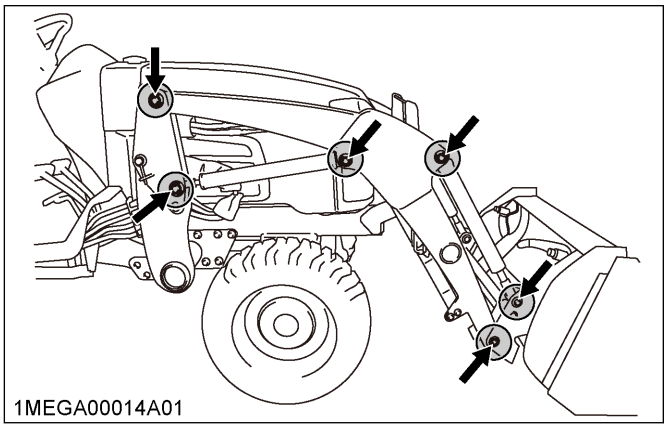

[Mechanical self leveling (if equipped)]

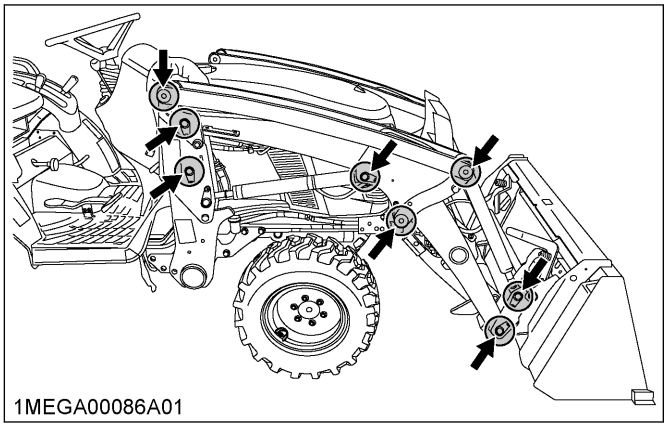

CHECKING THE TRANSMISSION FLUID

IMPORTANT :

- **To check the tractor transmission fluid level, park the machine on a flat surface, lower the bucket to the ground and lower the 3-point hitch.**

1. Check the transmission fluid level of the tractor.
2. Add the transmission fluid if necessary.
   Refer to the *tractor operator's manual* for instructions and proper transmission fluid.

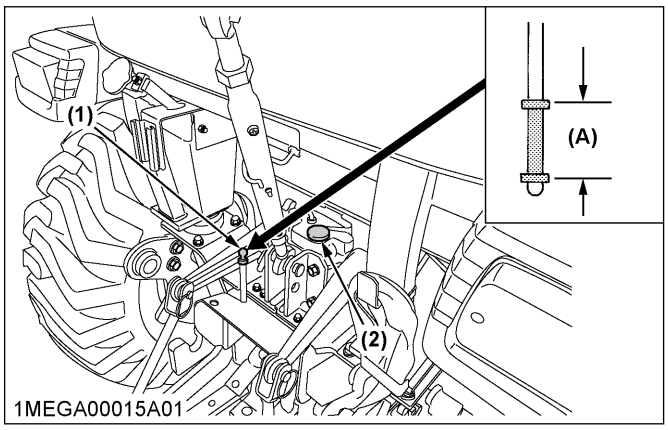

(1) Dipstick
(2) Oil inlet
(A) Range where oil level is acceptable drop within

3. Repeat check of the transmission fluid after purging air from the loader system.
4. Then, add the transmission fluid if necessary.

https://truckmanualshub.com/

SETTING THE TREAD

Set the treads as follows.

Front

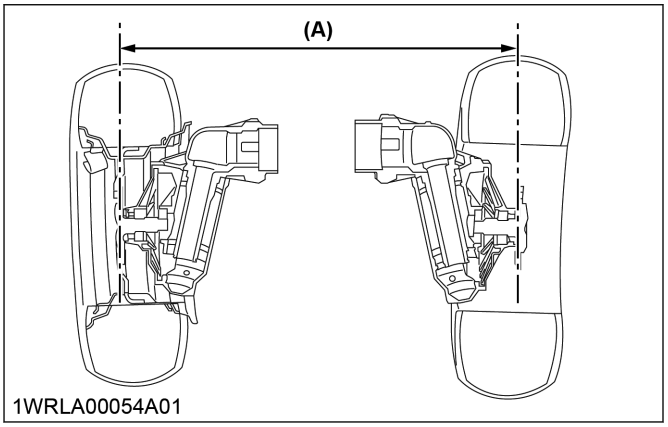

Rear

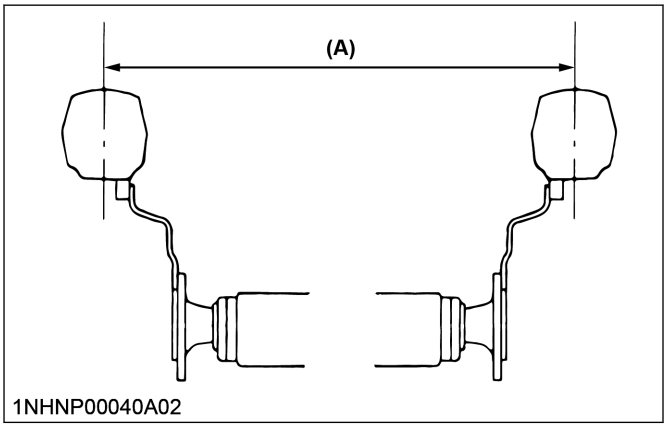

(A) Tread width

Front

Tire	7-12 Farm	24 × 8.50-14 Turf	23 × 8.50-14 Industry	23 × 8.50-12 R14
Tread	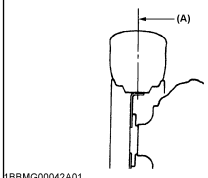 *(A) 935 mm (36.8 in.)*	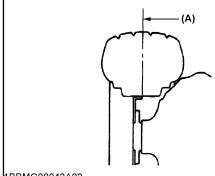 *(A) 930 mm (36.6 in.)*	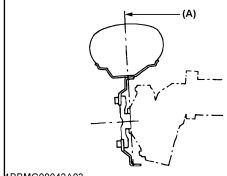 *(A) 905 mm (35.6 in.)*	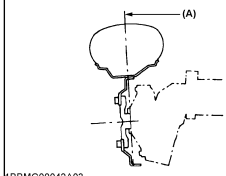 *(A) 970 mm (38.1 in.)*

https://truckmanualshub.com/

Rear

Tire	12.4-16 Farm	13.6-16 Turf	12.4-16 Industry	14-17.5 R14
Tread	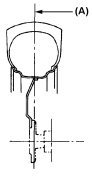 *(A) 1050 mm (41.3 in.)*	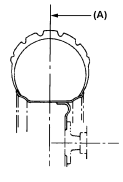 *(A) 1050 mm (41.3 in.)*	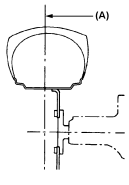 *(A) 1050 mm (41.3 in.)*	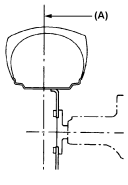 *(A) 1050 mm (41.3 in.)*

[ROPS model only]

Front

Tire	25 × 8.50-14 R14
Tread	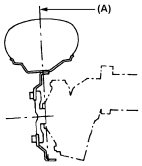 *(A) 965 mm (38.0 in.)*

Rear

Tire	15-19.5 R14
Tread	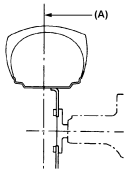 *(A) 1085 mm (42.7 in.)*

WEIGHT OF THE IMPLEMENTS AS THE REAR BALLAST

WARNING

To avoid personal injury or death:

- **For tractor stability and operator safety, add rear ballast to the rear of the tractor in the form of 3-point counter weight and / or the rear wheel ballast. The amount of rear ballast will depend on the application.**

Implement as counter weight	
	LA535
4' Land Scraper	Approx. 225 kg (496 lbs.)
Rear Blade	Approx. 250 kg (550 lbs.)
Rotary Tiller	Approx. 250 kg (550 lbs.)
Back Hoe	Approx. 400 kg (880 lbs.)

1. Liquid ballast in the rear tires

Water and calcium chloride solution provide a safe and economical ballast. Used properly, it will not damage tires, tubes or rims. The addition of calcium chloride is recommended to prevent the water from freezing. Use of this method of weighting the wheels has full approval of the tire manufacturers. See your tire dealer for this service.

https://truckmanualshub.com/

Liquid weight per tire (75 percent filled)

Tire sizes	12.4-16
Slush free at -10 ℃ (+14 ℉) Solid at -30 ℃ (-22 ℉) [Approx. 1 kg (2 lbs.) $CaCl_2$ per 4 L (1 gal.) of water]	85 kg (187 lbs.)
Slush free at -24 ℃ (-11 ℉) Solid at -47 ℃ (-52 ℉) [Approx. 1.5 kg (3.5 lbs.) $CaCl_2$ per 4 L (1 gal.) of water]	89 kg (196 lbs.)
Slush free at -47 ℃ (-52 ℉) Solid at -52 ℃ (-62 ℉) [Approx. 2.25 kg (5 lbs.) $CaCl_2$ per 4 L (1 gal.) of water]	94 kg (207 lbs.)

IMPORTANT :
- **Do not fill tires with water or solution more than 75% of full capacity (to the valve stem level at 12 o'clock position).**

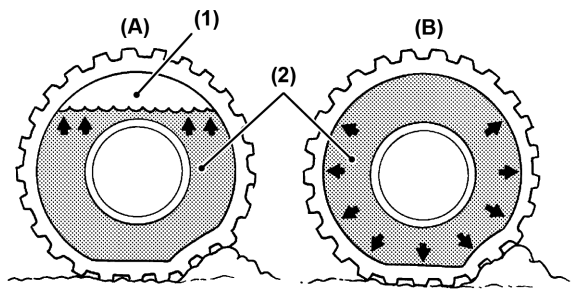

1BXMC00066A02

(1) Air
(2) Water
(A) Correct
(B) Incorrect

	Correct	Incorrect
Amount of water	75% Full	100% Full
Characteristic	Air compresses like a cushion	Water can not be compressed

NOTE :
- **When mounting a heavy rear implement, liquid in the tires may not be necessary.**

IMPORTANT :
- **Do not add liquid ballast or any other weights to the front tires.**
- **While the backhoe is installed on the tractor, you should remove the liquid ballast in the rear tires.**

TIRE INFLATION OF THE TRACTOR

Ensure to inflate the tractor tires properly according to the table below.
Refer to the tractor operator's manual for optional tires.

Inflation pressure

	Tire sizes	Inflation pressure
Front	7-12, 4PR	170 kPa (1.7 kgf/cm^2) [24 psi]
	24 × 8.50-14, 4PR	150 kPa (1.5 kgf/cm^2) [22 psi]
	23 × 8.50-14Ind, 4PR	241 kPa (2.5 kgf/cm^2) [35 psi]
	23×8.50-12 R14, 6PR	234 kPa (2.4 kgf/cm^2) [34 psi]
	25×8.50-14 R14 6PR [ROPS only]	221 kPa (2.2 kgf/cm^2) [32 psi]
Rear	12.4-16, 4PR	110 kPa (1.1 kgf/cm^2) [16 psi]
	13.6-16, 4PR	100 kPa (1.0 kgf/cm^2) [14 psi]
	12.4-16Ind, 4PR	138 kPa (1.4 kgf/cm^2) [20 psi]
	14-17.5 R14, 6PR	210 kPa (2.1 kgf/cm^2) [30 psi]
	15-19.5 R14, 8PR [ROPS only]	210 kPa (2.1 kgf/cm^2) [30 psi]

PERFORMING THE TEST OPERATION OF THE LOADER

⚠ WARNING

To avoid personal injury or death:
- **Keep engine speed at low idle during the test operation of the loader.**
- **Escaping hydraulic oil under pressure can produce sufficient force to penetrate skin, causing serious personal injury.**
  Before disconnecting lines, be sure to relieve all pressure by moving the controls.
- **Before applying pressure to the loader system, be sure that all connections are tight and that lines, tubes, and hoses are not damaged.**
- **Hydraulic fluid escaping from a very small hole can be almost invisible. Use a piece of cardboard or wood to search for suspected leaks. Do not use hands to search for suspected leaks.**
- **If injured by escaping fluid, see a doctor at once. Serious infection or allergic reaction may**

https://truckmanualshub.com/

develop if proper medical treatment is not administered immediately.
- **Do not move the loader control lever into the float position when the bucket is off the ground.**

To begin test operation, follow the following procedure.
1. Slightly move the control lever from the *"N"* position.
2. Slowly raise the boom of the loader just enough for the bucket to clear the ground when fully dumped.
3. Slowly work through the dump and roll back cycles.

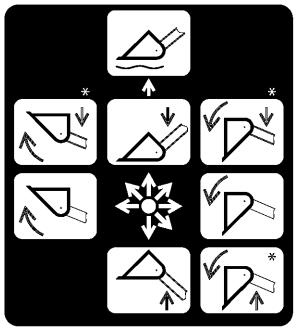

1JDJD00013A01

NOTE :
- **When the control lever is at each corner position marked by asterisk [*], cylinder of the boom and bucket work at the same time.**
  However, the lower left position (raise and roll back) is not recommended for scooping because of insufficient lift force.

IMPORTANT :
- **If the boom or bucket of the loader does not work in the directions indicated on the label, follow the following procedure.**
  1. **Lower the bucket to the ground.**
  2. **Stop the engine.**
  3. **Relieve all hydraulic pressure.**
  4. **Recheck and correct all hydraulic connections and oil level.**

1. Four position bucket control valve type

This control valve has two stage dump positions. The first dump position by moving the lever to the right features greater speed for dumping.
The second dump position (to further right) is the regular dump position. It has good power and control for dumping precisely. This position should be used when operating another implement with this control valve.
These two positions are separated by a detent for your convenience.

PURGING AIR FROM THE HYDRAULIC SYSTEM

1. Repeat operations of raising and lowering the boom and dumping and rolling back the bucket until all the air is removed from the hydraulic system and the hydraulic system responds properly.

   IMPORTANT :
   - **Do not move the loader control lever into the float position when the bucket is off the ground.**

DUAL REMOTE HYDRAULIC CONTROL SYSTEM

The tractor is equipped with the double-acting 2-segment hydraulic control valve for front loader.
To apply the hydraulic power take-off for general attachments, keep the following point in mind.
- Control lever and hydraulic hose connections.
- Loader/remote control valve lever.

1. Connecting the control lever and the hydraulic hose

IMPORTANT :
To avoid damage to the attachments:
- **Do not connect the attachments through the hydraulic motor to the [C] and [D] ports.**
  If the control lever is moved to the regeneration position (R1), the seals on the hydraulic motor will be damaged.
- **The control valve is provided with the regeneration position (R1).**
  When the [C] and [D] ports are used to take off the hydraulic power for the hydraulic cylinder, be sure to connect the [C] port to the head-end side port of the hydraulic cylinder.
- **Connect the colored coupler and the hydraulic cylinder port as the following table when using the control valve to take off the hydraulic power for the hydraulic cylinder.**

Colored coupler	Hydraulic cylinder port
Yellow [B], Blue [C]	Head-end side
White [A], Red [D]	Rod-end side

https://truckmanualshub.com/

1. Connect the control lever in its specified direction and the hydraulic hoses to their specified ports.

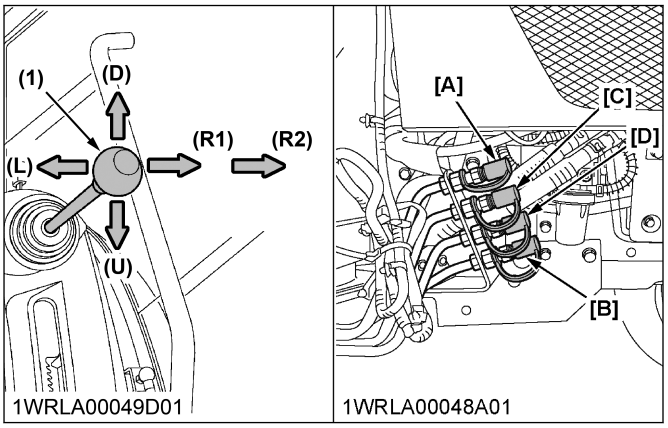

(1) Loader / remote control valve lever

(U) Up
(L) Left
(R1) Right
(R2) Right
(D) Down
[A] White
[B] Yellow
[C] Blue
[D] Red

Hydraulic outlet ports of first segment

Lever		Up		Down	
Port	[A]	In	←	Out	→
	[B]	Out	→	In	←

→ Pressure

← Returning

Hydraulic outlet ports of second segment

Lever		Right		Left	
Port	[C]	Out	→	In	←
	[D]	In	←	Out	→

→ Pressure

← Returning

2. Operating the loader/remote control valve lever

1. Before moving the loader/remote control valve lever, make sure that the hydraulic hoses for attachments are connected.
2. Move the loader/remote control valve lever diagonally (direction-a, direction-b, and direction-c shown in the figure).

You can control the first and second segments at once.

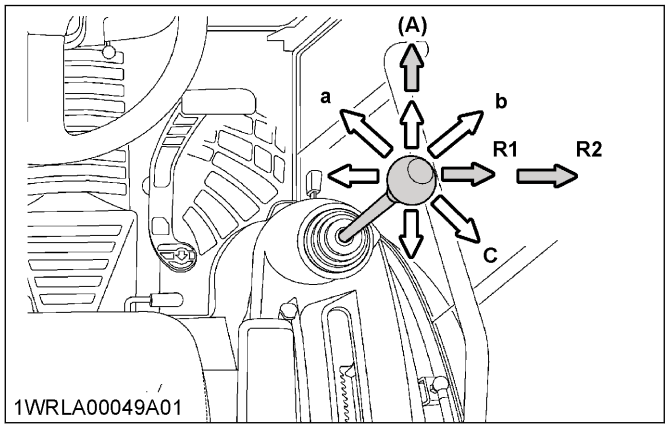

(1) Loader / remote control valve lever

(A) Float
(R1) Right
(R2) Right

NOTE :

- **Move the loader/remote control valve lever to the *"FLOAT"* position, and it will be held there by the detent mechanism. To use the loader/remote-control-valve as a floating valve with detents, connect the hydraulic hoses to ports [A] and [B].**
- **When taking off the hydraulic power from port [D], you can adjust the flow rate in 2 stages with the loader/remote control valve lever.**
  The flow rate is high at position (R1) and low at position (R2). Move the lever to the position (R1) or (R2) depending on the attachment in use.

OPERATING THE LOADER

PRECAUTIONS FOR OPERATING THE LOADER

WARNING

To reduce the possibility of roll over:

- **It is not recommended that the loader be attached when operating another implement on a hillside.**

IMPORTANT :

- **Before operating the loader in rough terrain, remove the mower to avoid damage to the mower (Only when the tractor is equipped with the mower).**

The operator should adjust the engine speed of tractor when operating the loader depending on the operator's level of experience and the type of work you are doing. Excessive speeds are dangerous and may cause spillage of the bucket and unnecessary strain on the tractor and the loader.
When operating in temperatures below -1 ℃ (30 ℉), run the tractor engine below 1200 rpm until the oil temperature exceeds -1 ℃ (30 ℉).

Temperature below	-1 ℃ (30 ℉)
Engine speed below	1200 rpm
Oil temperature	-1 ℃ (30 ℉)

OPERATION OF THE LOADER

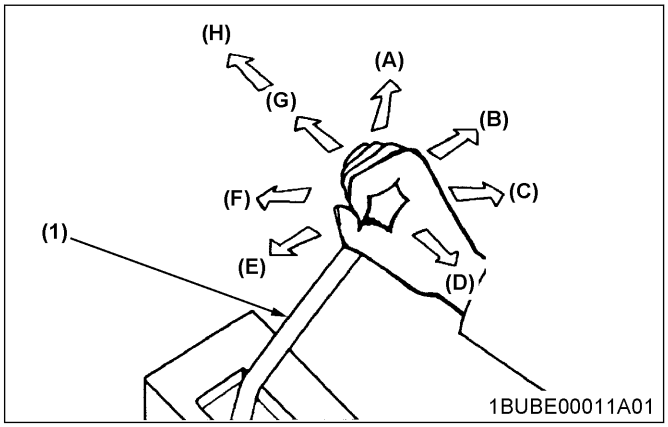

(1) Loader control lever

(A) Down and dump
(B) Dump
(C) UP and dump
(D) Up
(E) Roll back
(F) Down and roll back
(G) Down
(H) Float

TECHNIQUES FOR OPERATING THE LOADER AND THE TRACTOR

1. Filling the bucket

The rollback and lifting of the bucket will increase efficiency because a level bucket throughout the lifting cycle resists lifting of the bucket and increases effort of breakaway from the pile.

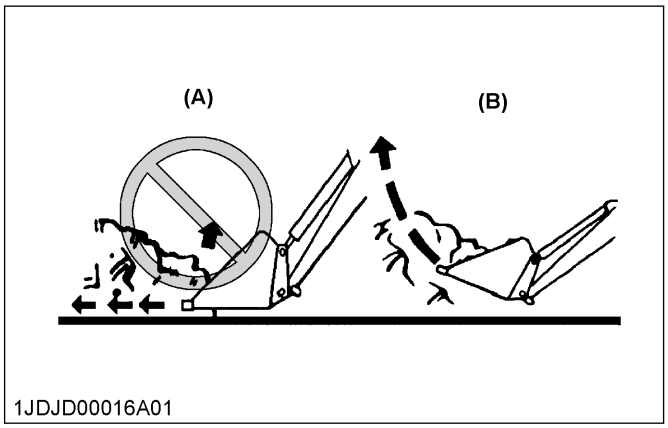

(A) Incorrect
(B) Correct

https://truckmanualshub.com/

1. Approach and enter the pile with a level bucket.

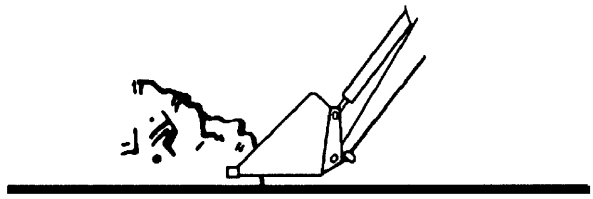

1JDJD00014A01

2. Ease the loader control lever toward you and then left to rollback and lift the bucket.

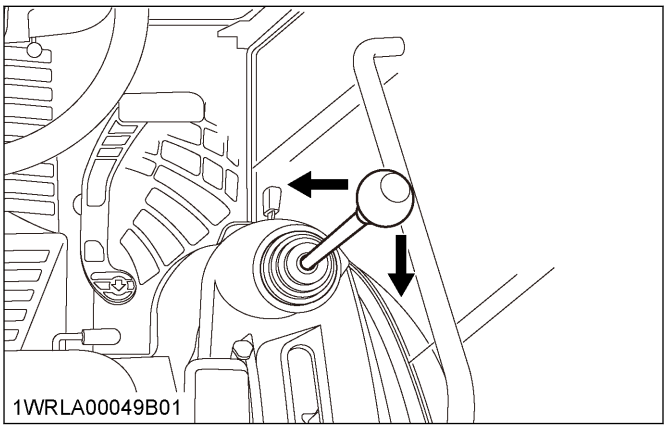

1WRLA00049B01

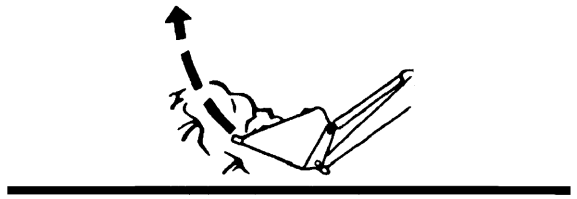

1WRLA00055A01

NOTE :

- **Do not be concerned if the bucket is not completely filled during each pass. Maximum productivity is determined by the amount of material loaded in a given period of time. Two or more tries to fill the bucket on each pass may take more time.**

2. Precautions for lifting the load

WARNING

To avoid personal injury or death:

- **Do not lift the loads in the bucket in excess of the loader capacity.**
- **Before raising the bucket to full height, make sure that the tractor is on level ground. If the tractor is not on level ground, the tractor may tip over, even if it is not moving.**

When lifting the load, keep the bucket positioned to avoid spillage.

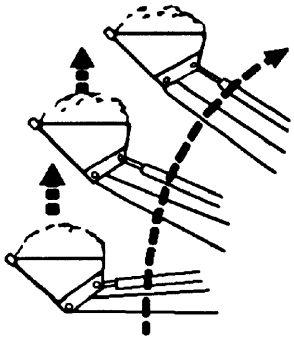

1WRLA00050A01

3. Precautions for carrying the load

WARNING

To avoid personal injury or death:

- **Be extra careful when working on inclines.**
- **When operating on a slope, always operate the tractor up and down the slope, never across the slope.**

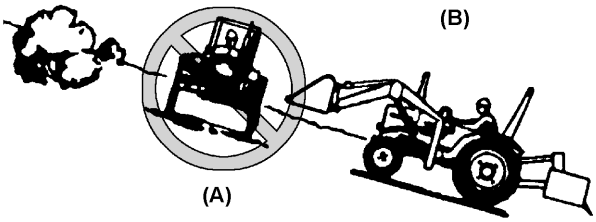

1JDJD00018A01

(A) Incorrect *(B) Correct*

- Position the bucket just below the level of the tractor hood for maximum stability and visibility, whether the bucket is loaded or empty.

https://truckmanualshub.com/

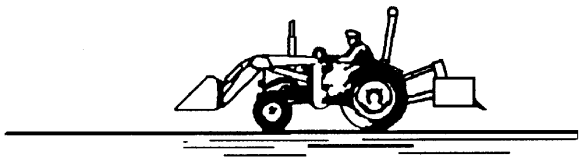

1JDJD00017A01

- Use extreme care when operating the loader on a slope. Keep the bucket as low as possible. Keeping the bucket low keeps the bucket and the tractor center of gravity low and will provide maximum stability of the tractor.
- When transporting a load, keep the bucket as low as possible to avoid tipping in case a wheel drops in a rut.

1JDJD00019A01

(A) Incorrect *(B) Correct*

4. Dumping and lowering the bucket

Dumping the bucket

1. Lift the bucket just high enough to clear the side of the vehicle.
2. Move the tractor in as close to the side of the vehicle as possible.
3. Then dump the bucket.

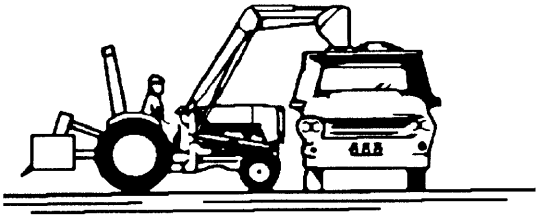

1JDJD00020A01

Lowering the bucket

1. After dumping the bucket, back away from the vehicle while lowering and rolling back the bucket.

5. Precautions for operating the loader with float control

- During operation of the loader on hard surface, keep the bucket level and put the lift control in the float position to permit the bucket to float on the working surface. If hydraulic down pressure is exerted on the bucket, the bucket will wear faster than normal.

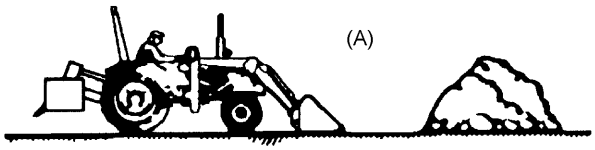

1JDJD00022A01

(A) Float

- The float position will also avoid mixing of surface material with stockpile material. The float position will reduce the chance of surface gouging while removing snow or other material, or when working with a blade.

https://truckmanualshub.com/

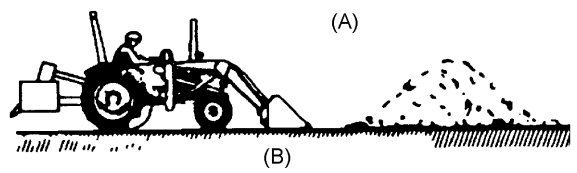

1JDJD00023A01

(A) Float *(B) Surface material*

6. Loading from a bank

WARNING

To avoid personal injury or death:

- **Be extra careful when working on inclines.**
- **When operating on a slope, always operate the tractor up and down the slope, never across the slope.**

- Choose a forward gear that provides a safe ground speed and power for loading.

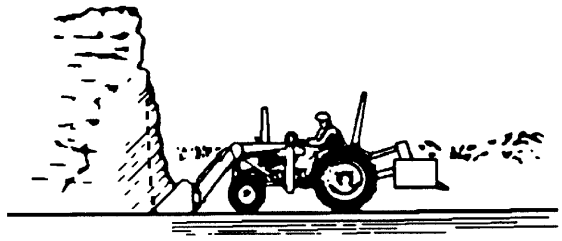
1JDJD00024A01

NOTE :

- **Loader lift and break-away capacity diminish as loading height is increased.**

- Side cutting is a good technique for cutting down a big pile. Wheel width should not exceed the bucket width for the side cutting procedure.

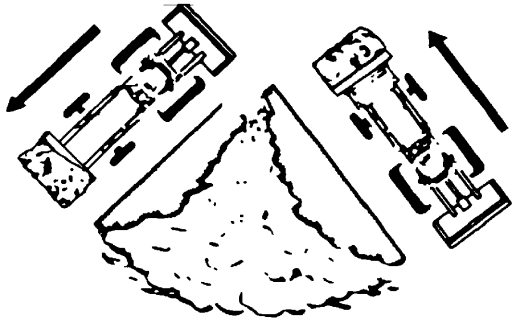
1JDJD00025A01

- If the pile sides are too high and liable to cause cave-in, use the loader to break down the sides until a slot can be cut over the top.

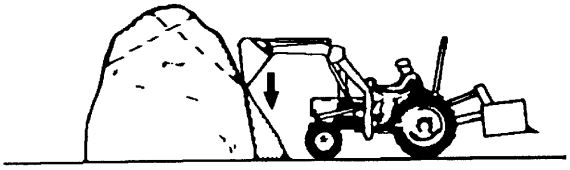
1JDJD00026A01

- Another method for large dirt piles is to build a ramp to approach the pile.

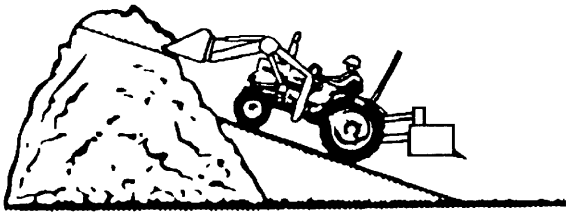
1JDJD00027A01

- It is important to keep the bucket level when approaching a bank or pile. This will help avoid gouging the work area.

https://truckmanualshub.com/

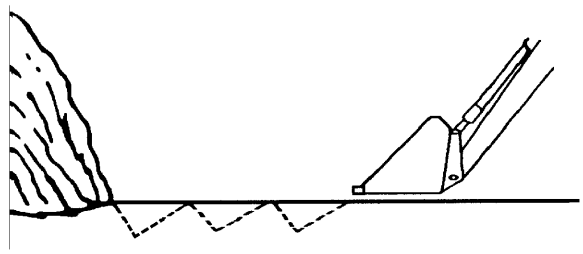
1JDJD00028A01

7. Peeling and scraping the ground

1. Produce a short cut and break-out cleanly.
   a. Use a slight bucket down angle.
   b. Travel forward.
   c. Hold the lift control forward to start the cut.

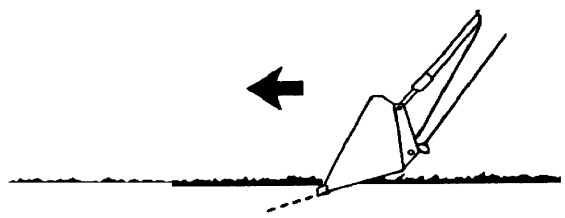
1JDJD00029A01

2. With the bucket level, start a cut at the following notch.

Notch	Approximately 2 in. deep

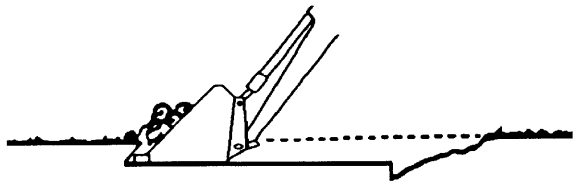
1JDJD00030A01

Hold the depth by feathering the bucket control to adjust the cutting edge up or down. When the front tires enter the notch, adjust the boom cylinder to maintain proper depth.

3. Make additional passes until the desired depth is reached.
   During each pass, use only the bucket control while at working depth. Using only the bucket control will allow you to concentrate on controlling the bucket angle to maintain a precise cut.

1JDJD00031A01

8. Loading low trucks or spreaders from a pile

- For faster loading, minimize the angle of turn and length of operation between pile and spreader.

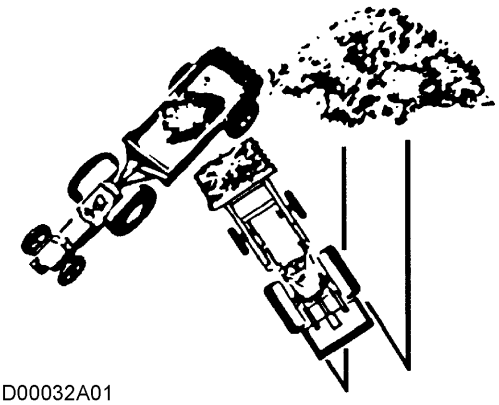
1JDJD00032A01

- Back grade occasionally with a loaded bucket to keep the work surface free of ruts and holes. Also, hold the lift control forward.
  The full weight of the bucket is scraping the ground. Use the heel of the bucket to scrape the ground.

https://truckmanualshub.com/

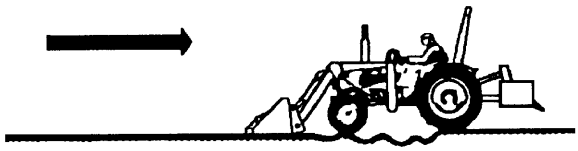
1JDJD00033A01

9. Backfilling

- Approach the pile with the bucket flat.
  Poor operating methods will move less dirt and make it more difficult to hold a level grade.

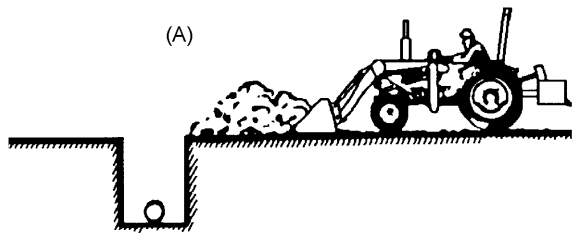

1JDJD00034A01

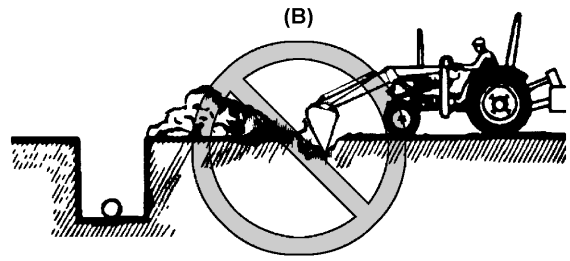

1JDJD00035A01

(A) Correct *(B) Incorrect*

IMPORTANT :

- **Do not use the bucket in the dumped position for bulldozing the pile. As shown in the preceding method, approaching the pile with the bucket in the dumped position will impose severe shock loads on the dump-linkage, the bucket cylinders, and the tractor.**

- Leave dirt in the bucket because dumping on each pass wastes time.

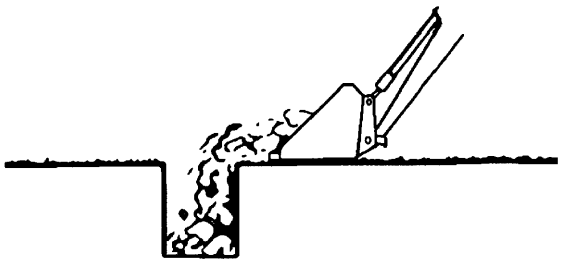
1JDJD00036A01

- Operate at right angles to the ditch. Take as big a bite of the soil pile as the tractor can handle.

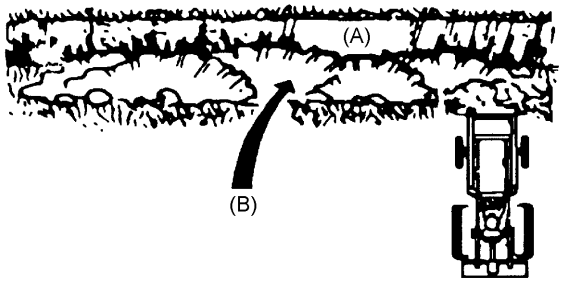

1JDJD00037A01

(A) Ditch *(B) Soil pile*

- Leave dirt which drifts over the side of the bucket for final cleanup.

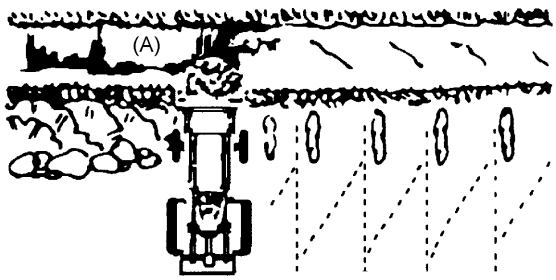

1JDJD00038A01

(A) Ditch

- Pile dirt on the high side for easier backfilling on a slope.

https://truckmanualshub.com/

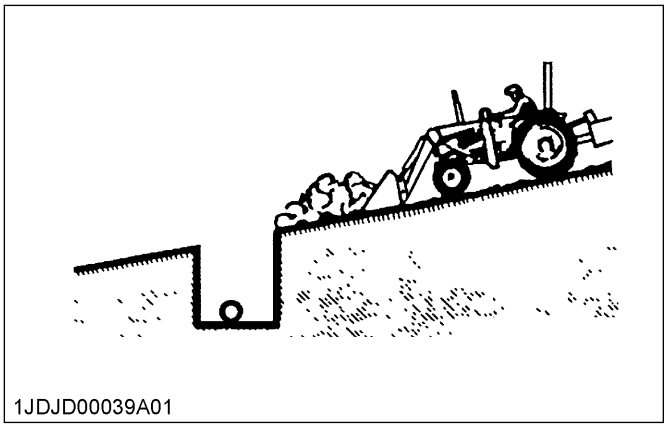

10. Precautions for handling large heavy objects

DANGER

To avoid personal injury or death:

- **Handling large, heavy objects can be dangerous due to the following reasons.**
  - **Danger of rolling the tractor over**
  - **Danger of upending the tractor**
  - **Danger of the object rolling or sliding down the loader boom onto the operator**
- **If you must handle large, heavy objects, protect yourself by the following methods.**
  - **Do not lift load higher than necessary to clear the ground when the tractor is moving**
  - **Add rear ballast to the tractor to compensate for the load**
  - **Do not lift large objects with equipment not equipped an anti-rollback device**
  - **Move the machine slowly and carefully**
  - **Avoid rough terrain**
  - **Keep the transport distance as short as possible and carry the load as low as possible during transport**
  - **Make sure that the loader and the bucket are at proper height and have stopped moving before transport**

VALVE LOCK

The control valve is equipped with a valve lock.

WARNING

To avoid personal injury or death from crushing:

- **Do not utilize the valve lock for machine maintenance or repair.**
- **The valve lock is to prevent accidental actuation when implement is not in use or during transport.**

The control valve can be locked when the loader control lever is in the *"Neutral"* position.
The lock is not intended to, and will not, prevent a leak down of the implement during the period of storage.

[CAB]

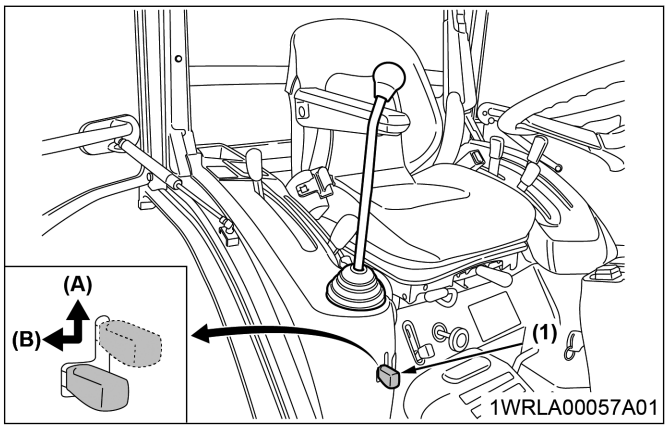

(1) Lock lever
(A) Lock
(B) Unlock

[ROPS]

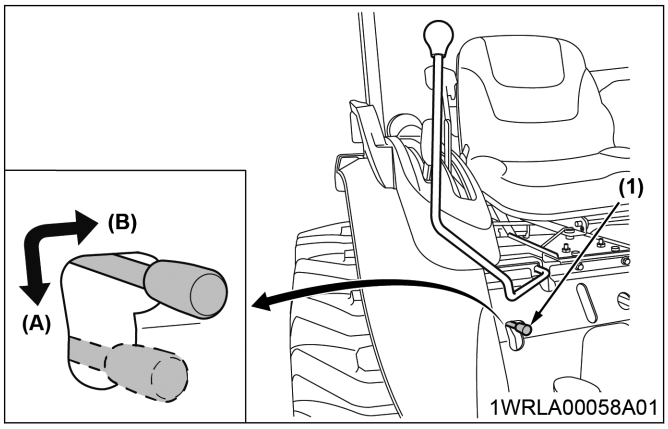

(1) Lock lever
(A) Lock
(B) Unlock

FRONT REMOTE HYDRAULIC CONTROL SYSTEM (IF EQUIPPED)

This system can be used for a front mounted hydraulic implement, as it provides hydraulic oil to the front outlet directly.

1. Installing the hydraulic quick coupler

1. Remove the cap from the front hydraulic outlet.

https://truckmanualshub.com/

2. Install the hydraulic quick coupler as required.

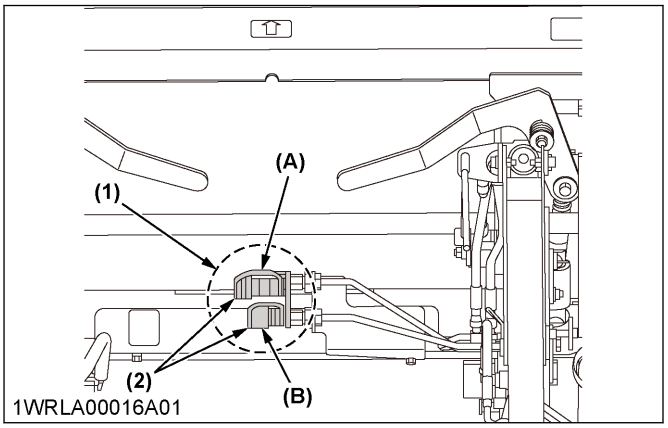

(1) Front hydraulic outlet
(2) Hydraulic quick coupler (Not included in this kit)
(A) Port A
(B) Port B

2. Operating the control switch

WARNING

To avoid personal injury or death:

- **Valve lock does not lock out the switch-operated third-function hydraulics, which are active when the key switch and the front hydraulic valve main switch are on.**

1. Push the front hydraulic valve main switch (1) to engage the front hydraulic valve.
   A light on the front hydraulic valve main switch will illuminate to indicate that the front hydraulic valve is on and the activation switch (2) is enabled.
2. Press the activation switch as follows.
   - When pressing the activation switch-A, hydraulic oil will come out of the port-A and return through the port-B as long as the activation switch is pressed.
   - When pressing the activation switch-B, hydraulic oil will come out of the port-B and return through the port-A as long as the activation switch is pressed.
3. Push the front hydraulic valve main switch again to disengage the front hydraulic valve.
   The front hydraulic valve main switch light will turn off.

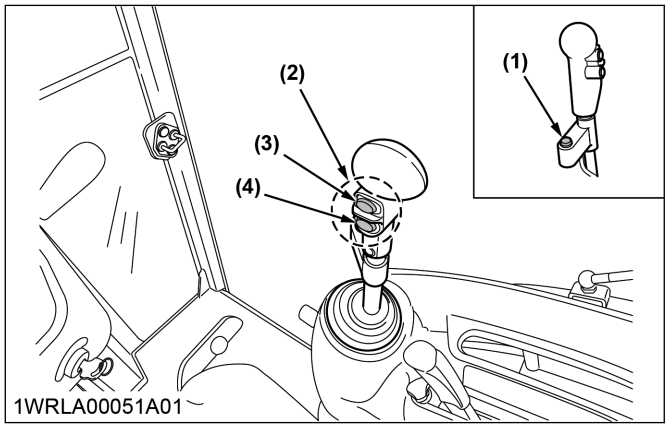

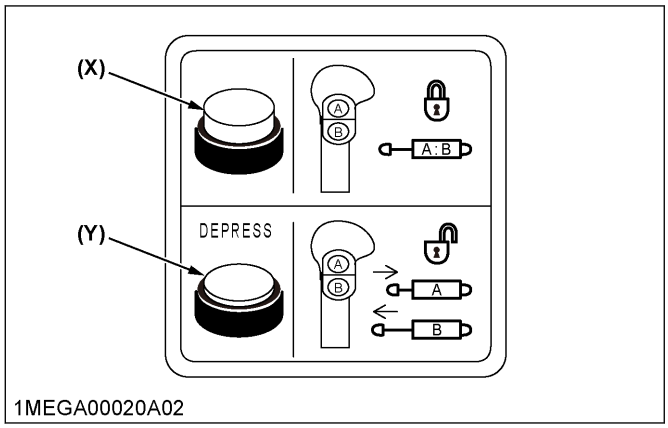

(1) Front hydraulic valve main switch
(2) Activation switch
(3) Activation switch A
(4) Activation switch B
(X) Front hydraulic valve main switch is off
(Y) Front hydraulic valve main switch is on

IMPORTANT :

- **While using a front mounted hydraulic attachment, make sure that the hydraulic hose is routed to avoid contact with the left and right bucket links. Keep the hydraulic hose out of the circled zone in the following figure.**

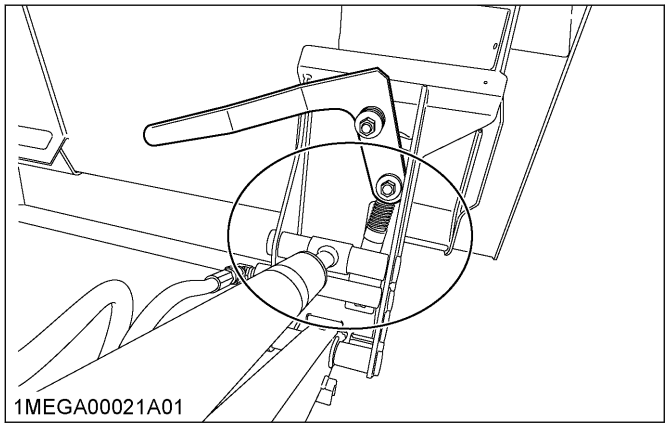

https://truckmanualshub.com/

3. Connecting and disconnecting of the remote control coupler

WARNING

To avoid personal injury or death:

- **Stop the engine and relieve pressure before connecting or disconnecting lines.**
- **Do not use your hand to check for leaks.**

Relieving the hydraulic pressure

1. Move the key switch to the *"RUN"* position.

   NOTE :
   - **Do not start the engine.**
2. Push the front hydraulic valve main switch onto *"ON"*.
3. Press the activation switch A and activation switch B several times.
4. Push the front hydraulic valve main switch onto *"OFF"*.
5. Turn the key switch to the *"OFF"* position.

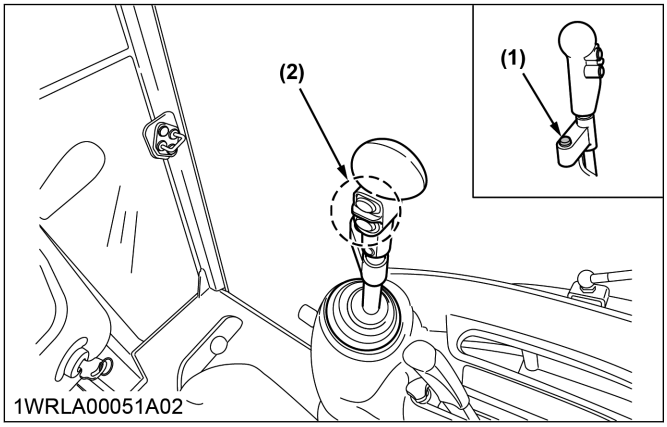

(1) Front hydraulic valve main switch *(2) Activation switch*

Connecting

1. Clean both couplers of the implement and tractor.
2. Remove the dust plugs.
3. Insert the implement remote control coupler in to the hydraulic port on the tractor.
4. Pull on the implement remote control coupler to make sure that both couplers of the implement and tractor are firmly connected.

NOTE :

- **Your local Kubota dealer can supply parts to adapt couplers to hydraulic hoses.**

Disconnecting

1. Lower the implement to the ground to release hydraulic pressure in the hydraulic hoses.
2. Clean both couplers of the implement and tractor.
3. Press the activation switch several times to relieve hydraulic pressure.
4. Pull the hydraulic hose straight from the hydraulic coupler to release it.
5. Clean oil and dust from the hydraulic coupler, and then replace the dust plugs.

ATTACHMENT INSTRUCTION

1. Attaching the attachments

DANGER

To avoid personal injury or death

- **Use of a non-Kubota attachment that does not comply with *ISO24410* or the improper positioning of handle(s) or non-engagement of pin(s) may result in detachment of the attachment or deformation, causing loss of performance, personal injury, or death.**

NOTE :

- **Attachments should be located on a flat, firm surface when attaching and detaching them from the 2-lever quick coupler.**

This 2-lever quick coupler is designed to be used with Kubota attachments. Non-Kubota attachments, if used, must comply with ISO 24410, first edition 2005-04-15. This 2-lever quick coupler allows the operator to change easily without the use of tools.

1. To mount an attachment, pull the handles of the 2-lever quick coupler latching pins to the unlatched position.
   The 2-lever quick coupler handles must be all the way up to ensure that the latching pins are fully retracted.
2. Position the tractor squarely in front of the attachment and tilt the 2-lever quick coupler forward with the bucket cylinders.

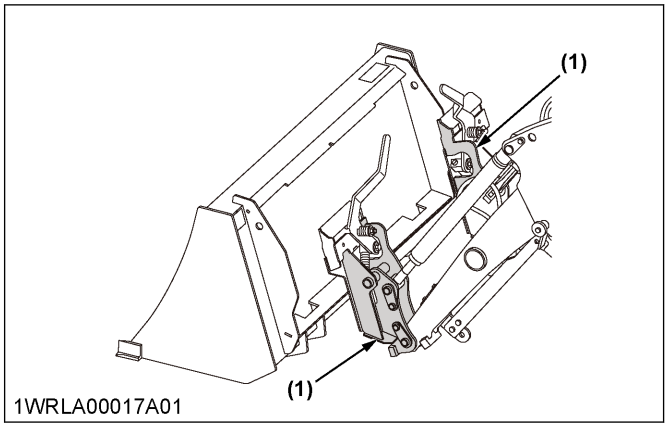

(1) 2-Lever quick coupler

3. Ease the 2-lever quick coupler mounting plate into the saddle of the attachment.

4. Roll the 2-lever quick coupler back using the bucket cylinder and raise the boom slightly.
   The back of the attachment should rest against the front of the 2-lever quick coupler mounting plate, and the weight of the attachment should be supported by the loader.

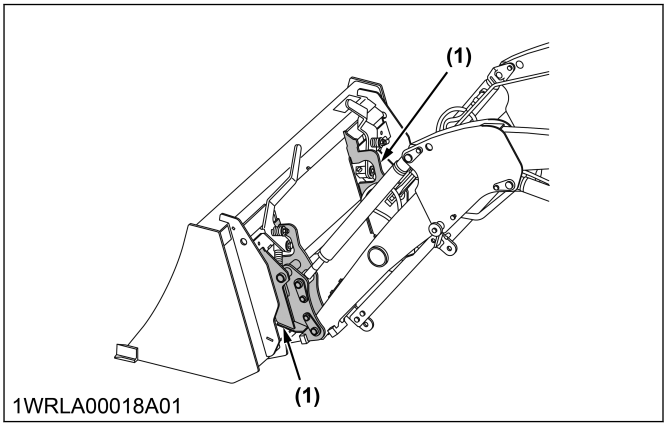

(1) 2-Lever quick coupler

WARNING

To avoid personal injury, death or machine damage:

- **Raise the boom only enough to latch the attachment.**
  The attachment could swing off the 2-lever quick coupler.

5. When the attachment is properly seated in the saddle and against the front of the 2-lever quick coupler mounting plate, turn off the engine and set the parking brake.
6. Push the 2-lever quick coupler lever to the fully latched position.

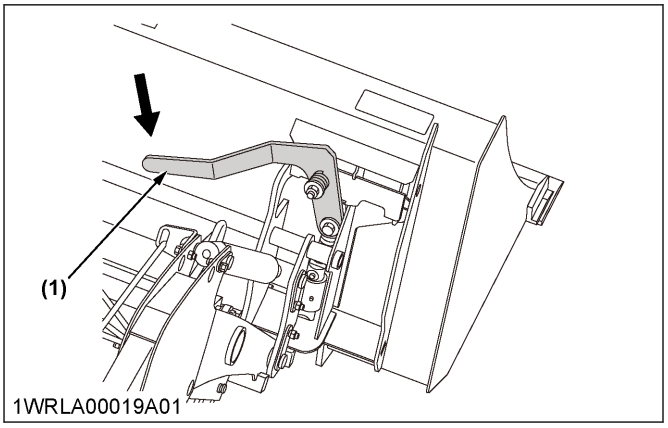

(1) 2-Lever quick coupler

7. Verify both latching pins are completely engaged in the base of the attachment.

DANGER

To avoid personal injury or death:

- **The following engagement points are critical.**
  - **The lock pins of the 2-lever quick coupler must protrude into and through the pin slots of the attachment on both sides.**
    It is critical that the lock pins are in good condition and without visible signs of wear or damage.
    It is critical that the operator align the 2-lever quick coupler of the loader with the attachment to allow the lock pins to go through the pin slots.
  - **Push down both 2-lever quick coupler handles until the handles contact the ear plates near the points where the pin bolt goes through the handle.**
- **Do not operate the tractor or attachment unless all of the preceding conditions are met.**

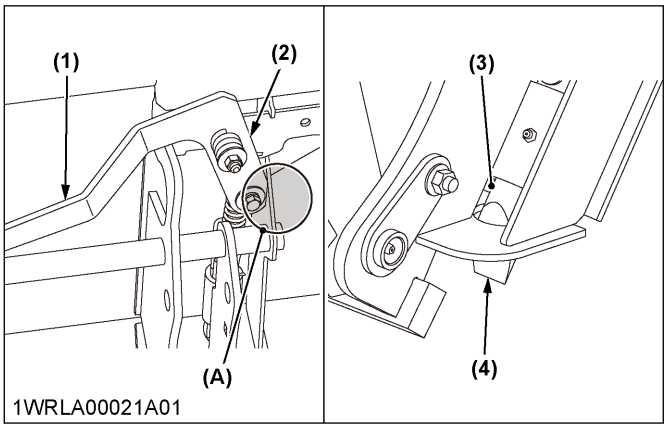

(1) Handle
(2) Ear plate
(3) Pin slot
(4) Lock pin
(A) Points where the 2-lever quick coupler handle contacts the ear plate

8. Visually verify when pushing the 2-lever quick coupler handles into locked position that the latch pins rotate completely and are located underneath the stop of the 2-lever quick coupler.

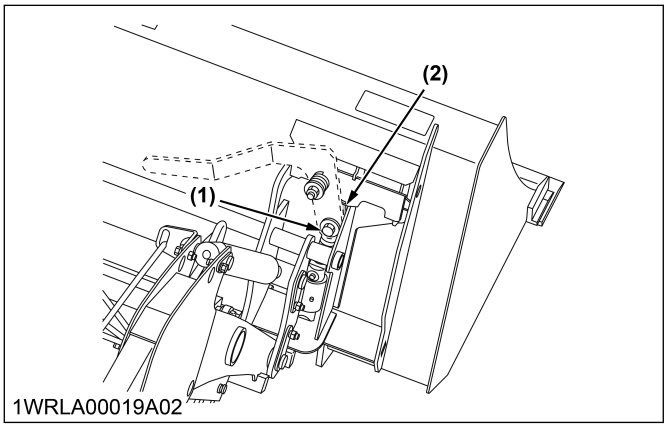

(1) Latch pins
(2) Stopper

https://truckmanualshub.com/

9. When connecting different attachments, visually inspect for broken or damaged pins. If broken or damaged pins are found, replace before using.
   Use of broken pins may result in attachment detachment or deformation, causing loss of performance, personal injury or death.

You are now ready to use the attachment. All compatible equipment attaches and detaches using the same method.

WARNING

To avoid personal injury, death, or machine damage:

- **Never operate or transport attachments which are not attached completely.**
- **Always replace damaged hardware immediately.**

2. Detaching the attachments

Detaching is the reverse of attachment.

1. Lower the attachment to ground level with the attachment slightly in the rolled back position.
2. Stop the engine and set the parking brake.
3. Pull the 2-lever quick coupler handles to the unlatched position to release the latching pins.
4. While sitting in the operator's seat of the tractor, start the engine and slowly move the loader control lever to the *"DUMP"* position until the attachment is pushed away slightly from the 2-lever quick coupler.
5. Lower the boom of the loader so that the 2-lever quick coupler mounting plate clears the attachment saddle.
6. Back away from the attachment slowly.
7. If an attachment is not going to be attached to the 2-lever quick coupler immediately, push the 2-lever quick coupler handles to the locked position to prevent damage to the handle assembly.

3. Dismounting the loader

WARNING

To avoid personal injury, death, or machine damage:

- **Remove the loader from the tractor only when an approved bucket is attached to the loader.**

1. Remove the loader following the instructions provided in HOW TO REMOVE THE LOADER on page 37.

4. Performing the maintenance of the attachments

Attachments are secured to the 2-lever quick coupler with an over-center-latching-system. It is important that parts of the attachments are kept clean, lubricated, and free from debris.

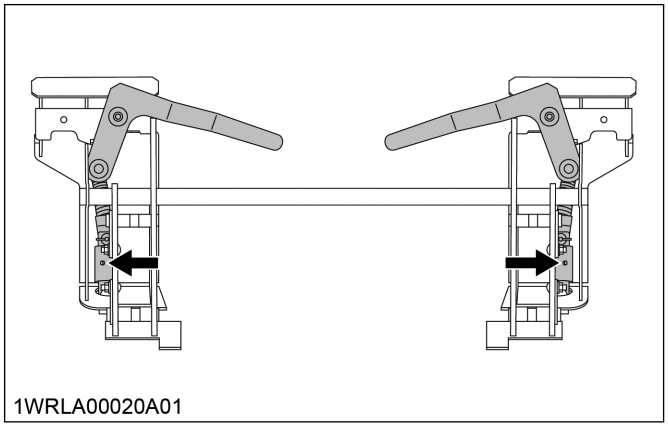
1WRLA00020A01

- Keep the latching pins and latching handles free from debris.
- Lubricate the latching pins weekly with grease.
- Keep the latching handle tight. If the handle becomes loose, tighten the hex nut to remove any play from the handle.
- Clean the saddle, the top of the attachment, and the latching pin slots of any dirt and debris before mounting an attachment to the 2-lever quick coupler.

5. Attachments

5.1 Quick attach bucket

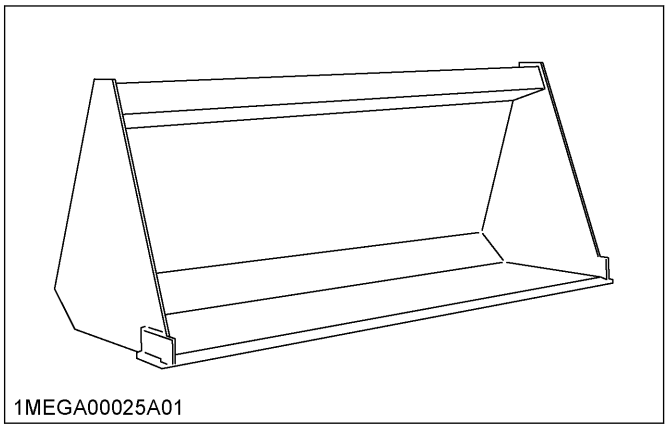
1MEGA00025A01

5.2 Snow blade

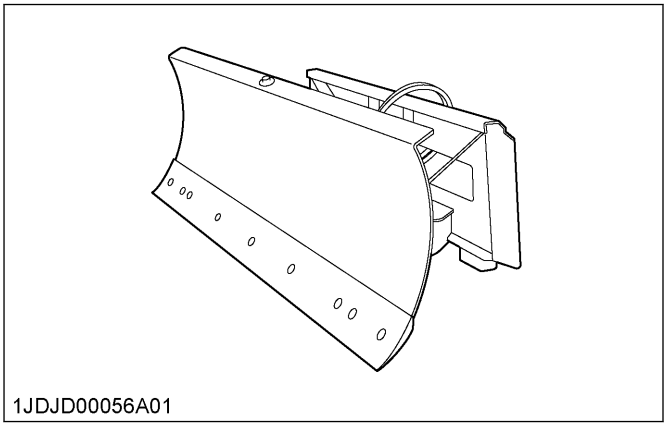

6. Applying the indicator label front attachment

1. With front attachment mounted to the tractor apply indicator label to attachment inline with center of tractor as shown below.

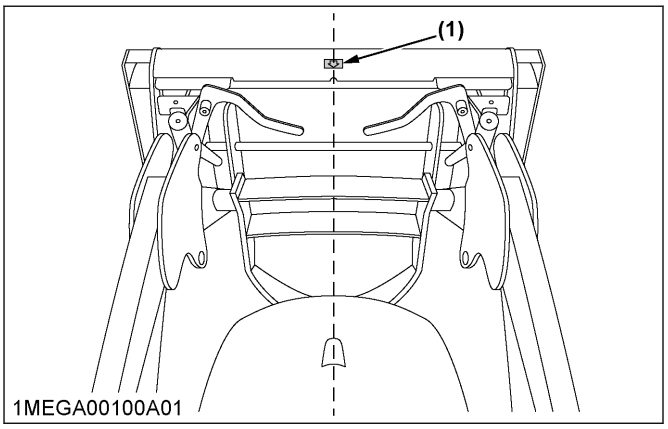

(1) Label

https://truckmanualshub.com/

MAINTENANCE

WARNING

To avoid personal injury or death:

- **Be sure to check and service the tractor on a flat surface with the bucket on the ground, engine stop, the key removed and the parking brake on.**

LUBRICATING THE LOADER

Lubricate all grease fittings with grease.
High quality grease designating “extreme pressure” and containing Molybdenum disulfide is recommended.
This grease may specify *“Moly EP”* on its label.

1. Lubricate all grease fittings every 10 hours of operation. Also, lubricate the joints of the control lever linkage every 10 hours.

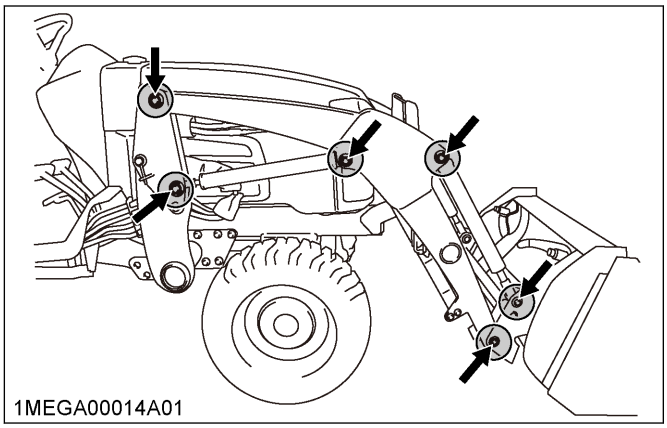

[Mechanical self leveling (if equipped)]

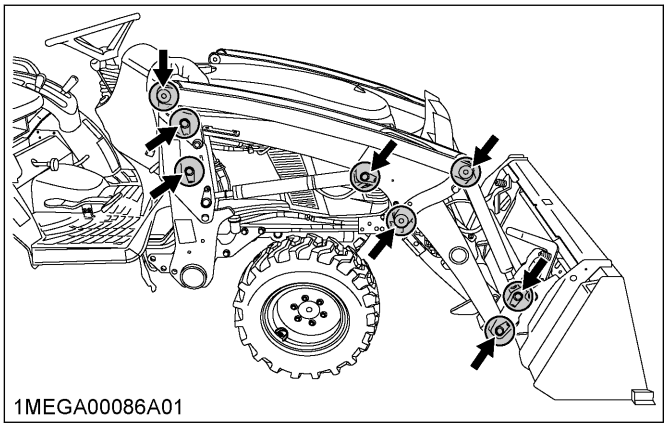

2. Before daily operation, check the hydraulic fluid level of the tractor. If the hydraulic fluid level is low, add the hydraulic fluid as described in the *tractor operator's manual*. Also change the filter element and the hydraulic fluid as recommended in the *tractor operator's manual*.

SERVICE EVERY 20 HOURS TO 30 HOURS

1. Re-tightening of hardwares of the loader

After 20 to 30 hours of initial loader operation, re-tighten all mounting bolts and nuts to the required torque values as follows.

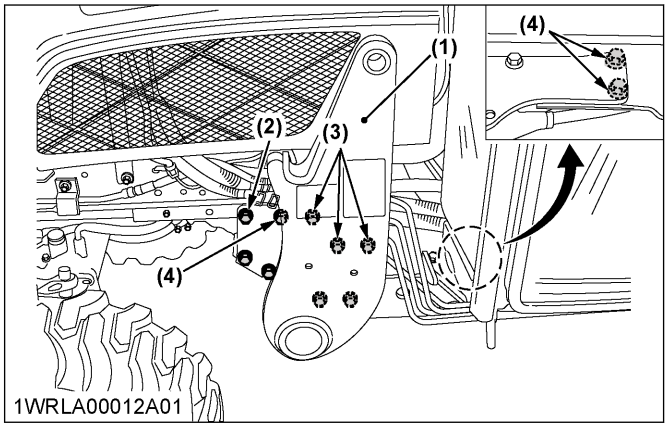

(1) Main frame

Bolt torque (2) (4)	124 to 147 N·m (12.6 to 15.0 kgf·m) (91.5 to 108.4 lbf·ft)
Bolt torque (3)	80.0 to 90.0 N·m (8.2 to 9.2 kgf·m) (59.0 to 66.4 lbf·ft)

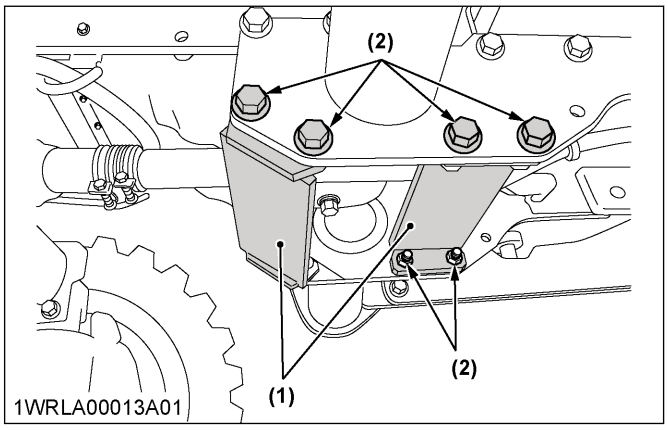

(1) Main frame connector

Bolt torque (2)	124 to 147 N·m (12.6 to 15.0 kgf·m) (91.5 to 108.4 lbf·ft)

https://truckmanualshub.com/

2. Re-tightening of hardwares of Mechanical self leveling [if equipped]

After 20 to 30 hours of initial loader operation, re-tighten bolts and nuts for Mechanical self leveling to the required torque values as follows.

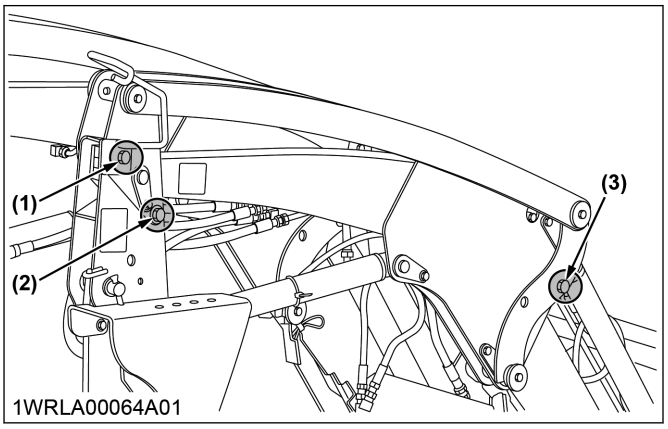

Bolt torque (1) (2) (3)	260 to 304 N·m (26.5 to 31.0 kgf·m) (192 to 224 lbf·ft)

DAILY CHECKING THE LOADER

WARNING

To avoid personal injury or death:

- **When removing the engine side covers, be careful not to touch hot loader cylinders. Allow all surfaces to cool before performing maintenance.**
- **Before servicing the loader or the tractor, be sure to place the boom of the loader in contact with the ground. When raising the boom of the loader during service or maintenance, support the boom as shown in the figure.**

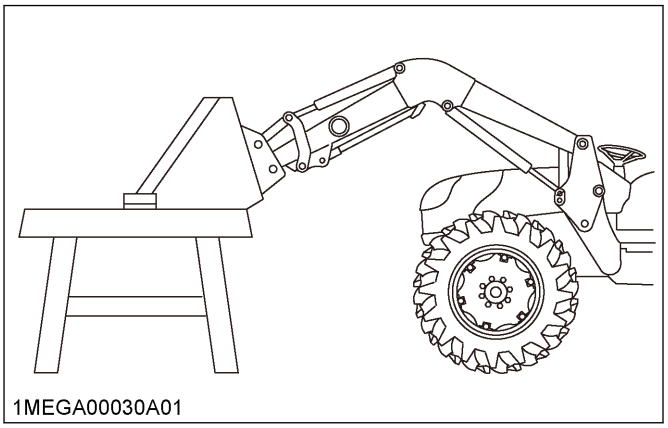

1. Before daily operation, visually check to see if the hardware and their bolts and nuts are tight.

   Tighten the hardware of the loader to torque values as specified in the Re-tightening of hardwares of the loader on page 34 and GENERAL TORQUE SPECIFICATION on page 52.
2. With the engine off and the bucket on the ground, inspect all hoses for cuts or wear. Check for signs of leaks and make sure all fittings are tight.

WARNING

To avoid personal injury or death:

- **Escaping hydraulic fluid under pressure can produce sufficient force to penetrate skin, causing serious personal injury.**
  Before disconnecting lines, be sure to relieve all pressure.
- **Before applying pressure to the loader system, be sure that all connections are tight and that lines, tubes, and hoses are not damaged.**
- **Fluid escaping from a pin hole can be almost invisible. Use a piece of cardboard or wood to search for suspected leaks. Do not use hands to search for suspected leaks.**
- **If you are injured by escaping fluid, see a doctor at once. Serious infection or allergic reaction will develop if proper medical treatment is not administered immediately.**

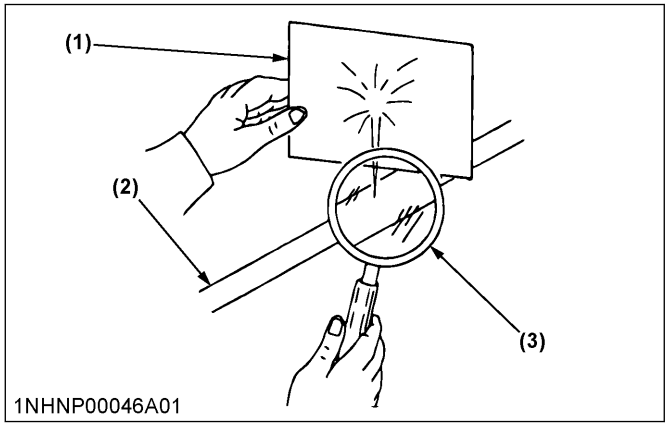

(1) Cardboard
(2) Hydraulic line
(3) Magnifying glass

SERVICE EVERY 50 HOURS

1. Checking the torque of hardwares of the loader

WARNING

To avoid personal injury or death:

- **Never operate the front loader with a loose main frame.**
- **Any time bolts and nuts are loosened, retighten to specified torque.**

- **Check all bolts and nuts frequently and keep them tight.**

Check the bolts and nuts of the main frame regularly, especially when they are new.
If the bolts and nuts of the main frame are loosen, tighten them as follows.

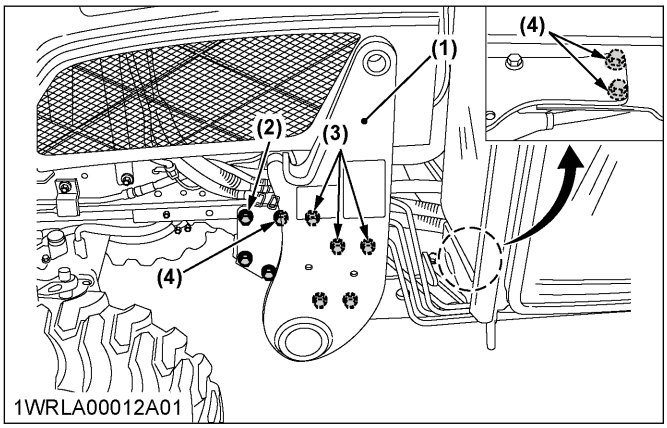

(1) Main frame

Bolt torque (2) (4)	124 to 147 N·m (12.6 to 15.0 kgf·m) (91.5 to 108.4 lbf·ft)
Bolt torque (3)	80.0 to 90.0 N·m (8.2 to 9.2 kgf·m) (59.0 to 66.4 lbf·ft)

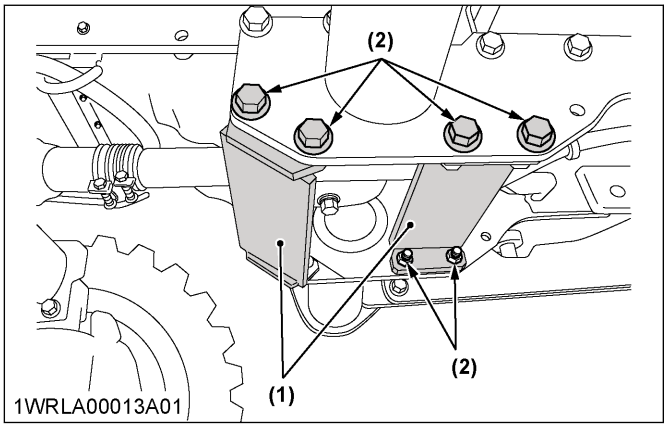

(1) Main frame connector

Bolt torque (2)	124 to 147 N·m (12.6 to 15.0 kgf·m) (91.5 to 108.4 lbf·ft)

2. Re-tightening the torque of hardwares of Mechanical self leveling [if equipped]

Check the bolts and nuts of Mechanical self leveling regularly, especially when they are new. If the bolts and nuts of Mechanical Self leveling are loosen, tighten them as follows.

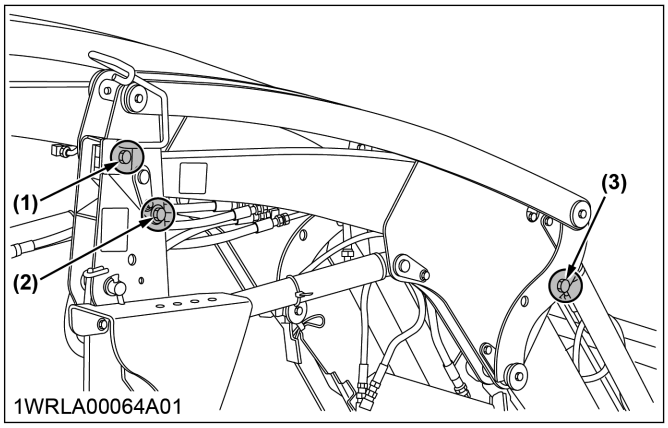

Bolt torque (1) (2) (3)	260 to 304 N·m (26.5 to 31.0 kgf·m) (192 to 224 lbf·ft)

3. Checking the movement of the lifting stand [if equipped]

1. Check the lifting stand linkage for dirt or debris and ensure the linkage rotates freely.
   If the linkage does not rotate freely clean the linkage as needed.
2. Check the height of the lifting stand.
   If the stand does not hook and fold up successfully, readjust the height of the lifting stand according to the instructions provided in Adjusting the swift-tach stand on page 47.

REMOVING THE LOADER

HOW TO REMOVE THE LOADER

WARNING

To avoid personal injury or death:

- **Make sure that an approved bucket is attached before removing the loader from the tractor.**
- **For removing the loader, choose flat and hard ground, preferably concrete.**
- **If the ground surface is soft, place suitable planks on the ground for the bucket and the stand.**
- **When starting the engine or using the loader control lever, always sit in the operator's seat.**
- **Make sure that the bucket and the stand are at ground level.**

1. Removing Non Swift-Tach loader

(See Removing Swift-Tach loader [if equipped] on page 38)

1. Raise the boom until the stands can be rotated.
2. Stop the engine.
3. Remove the spring pins holding the stands to the boom.
4. Slide the stands leftward and rotate them until the hole in the stand and pin on the boom are aligned. Then slide the stands rightward and insert the spring pin as shown.

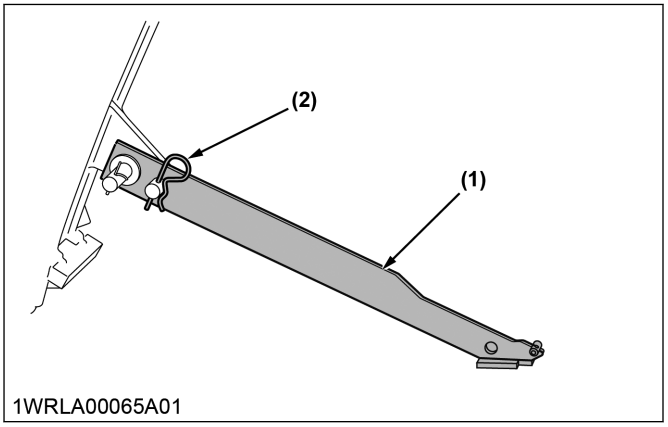

(1) Stand *(2) Spring pin*

5. Start the engine and run at idle.
6. Dump the bucket approximately 20 degrees.
7. Lower the boom and raise the front wheels slightly.

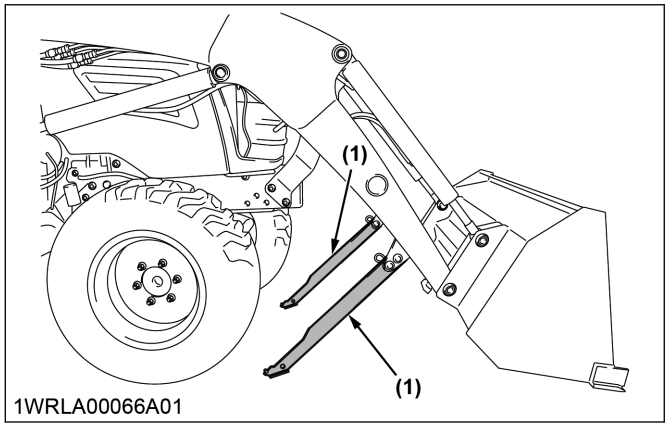

(1) Stand

IMPORTANT :

- **Lift the weight off the front wheels with the bucket. Do not lift them with the stands.**

8. Stop the engine.
9. Remove the mounting pins from the loader main frame and store them on boom.
10. Start the engine and run at idle. Slowly move the hydraulic control lever to rollback position to raise the loader side frames up and out of the receivers of the main frames as shown.

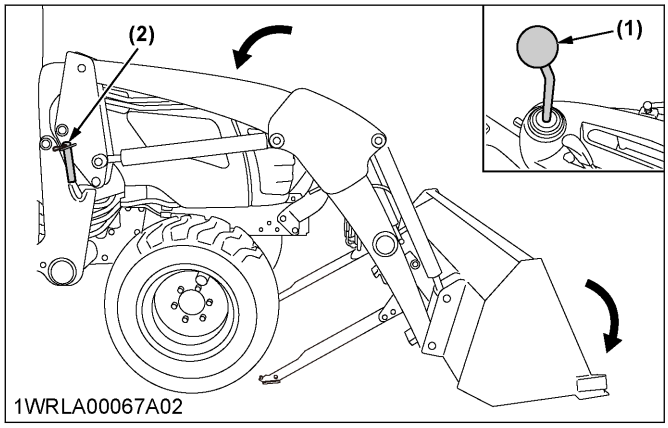

(1) Hydraulic control lever *(2) Mounting pin*

11. Stop the engine.
12. Slowly release all hydraulic pressure by moving the hydraulic control lever in all directions.
13. Disconnect the 4 hoses with quick couplers at the control valve.

14. Hook the hoses on the side frame and attach the protective plugs to their respective couplers as shown below.

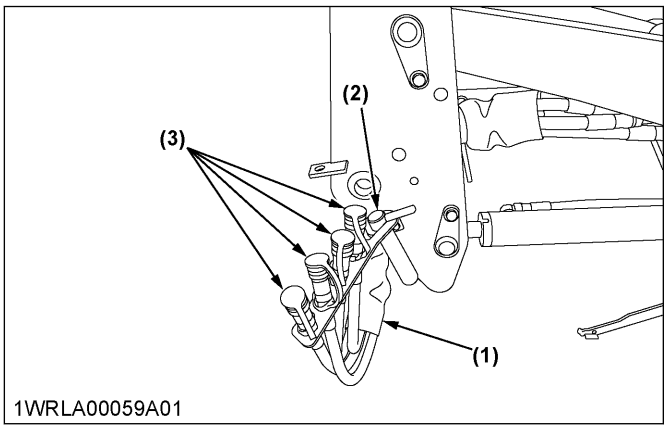

(1) Hoses
(2) Mount pin
(3) Protective plugs

NOTE :
Confirm the following points.
- **The hoses are out of contact with the front wheel.**
- **Dirt does not come in contact with the couplers, and there is no oil leakage.**

15. Place the protective caps on the quick coupler ends.

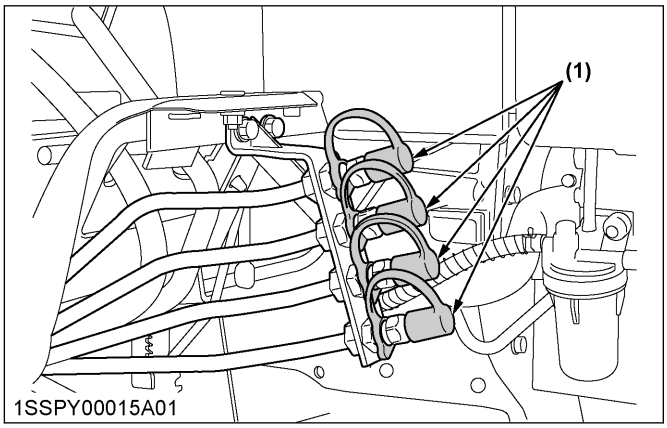

(1) Protective caps

16. Start the engine and slowly back the tractor away from the loader.

2. Removing Swift-Tach loader [if equipped]

⚠ WARNING
To avoid personal injury or death:
If you do not get off the tractor while removing or reinstalling the loader;
- **Stop the engine before operating the mounting lever.**
- **Get off the tractor when you feel uneasy to do some operation.**

1. Raise the boom until the bucket pivot pin is the height of the boom pivot pin.
2. Dump the bucket fully.

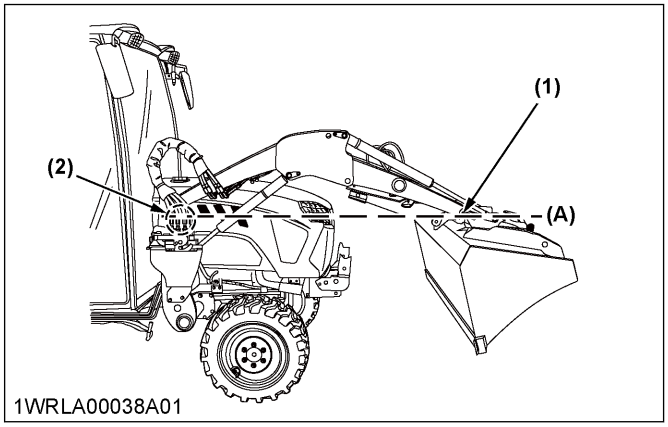

(1) Bucket pivot pin
(2) Boom pivot pin
(A) Same height

3. Slide the stand lever downward completely and release the loader storage stands by unlocking.

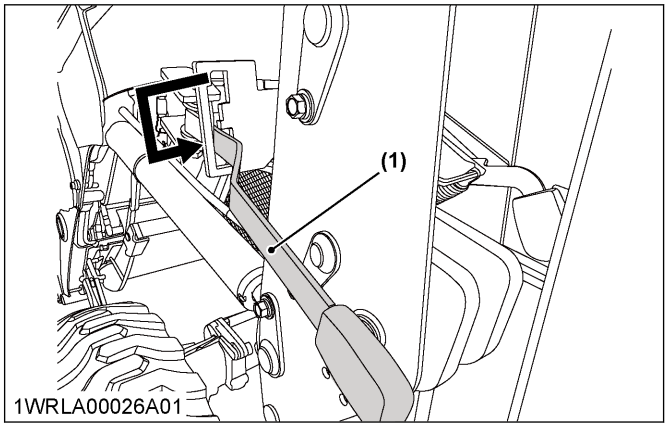

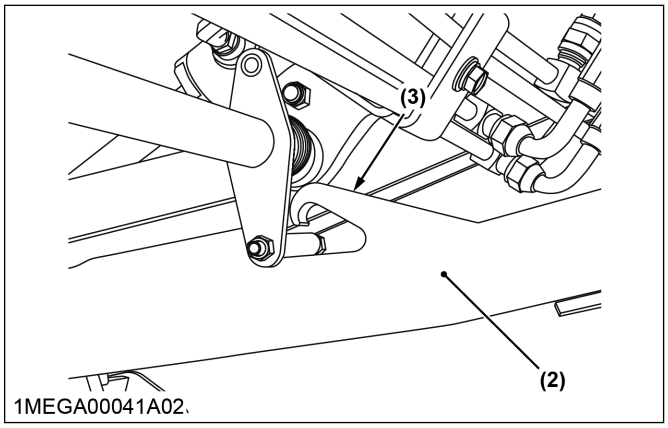

(1) Stand lever
(2) Stand
(3) Stand hook

https://truckmanualshub.com/

4. Roll the bucket back until the storage stand legs are fully extended.

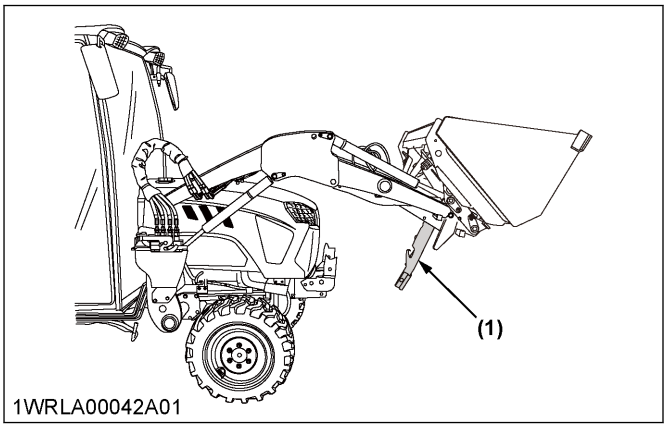

(1) Stand

5. Lower the boom until the cutting edge of the bucket contacts the ground and dump the bucket to raise the front wheels and push the side frames back.

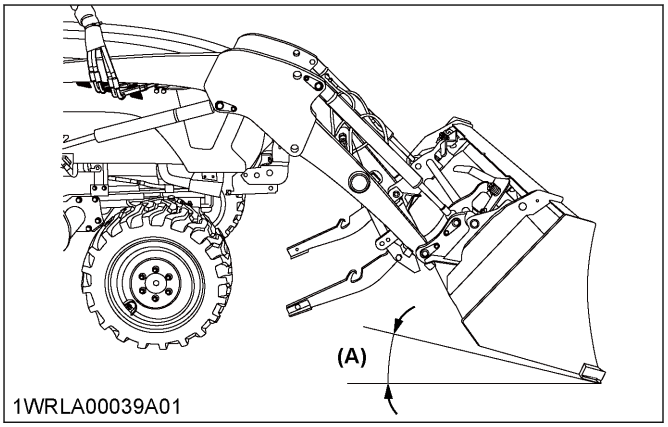

(A) The cutting edge of the bucket

IMPORTANT :
- **When raising the front wheels, the stands are not to be grounded.**

6. Lift the mounting levers into the unlock position (both sides).

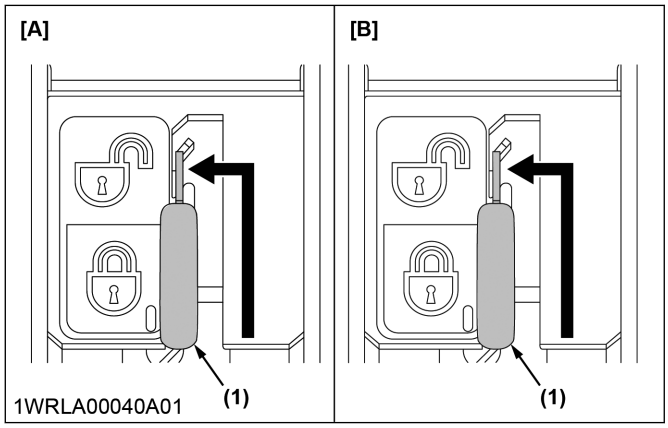

(1) Mounting lever
[A] Left side
[B] Right side

7. Slowly operate the control lever to extend the boom cylinders to half stroke and roll back the bucket to raise the side frames up and out of receivers of the main frames as shown.

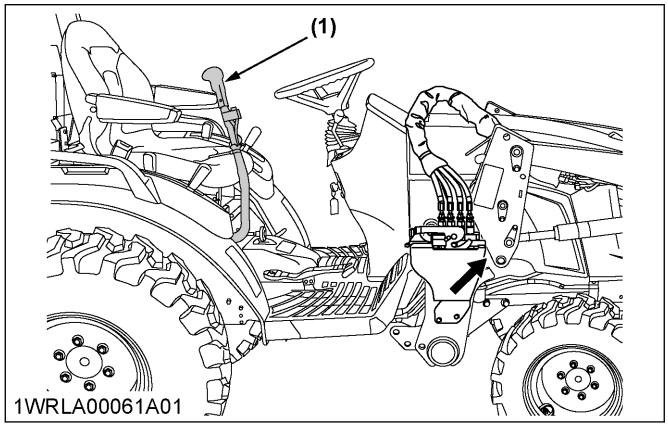

(1) Loader control lever

8. Operate the control lever to fully retract the boom cylinders.

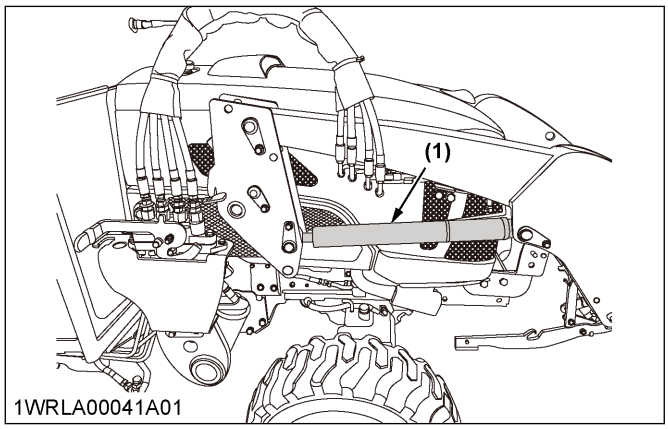

(1) Boom cylinder

https://truckmanualshub.com/

9. Move the mount levers to the lock position (both sides) as shown below.

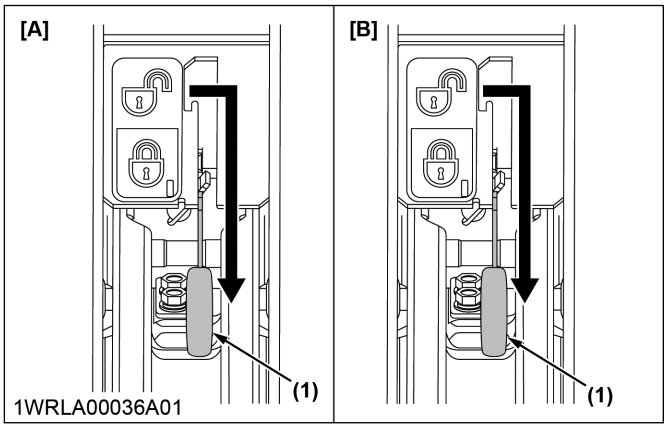

(1) Mounting lever *[A] Left side* *[B] Right side*

10. Backup the tractor so that the quick coupler is positioned at the back of side frame as shown in the following figure.

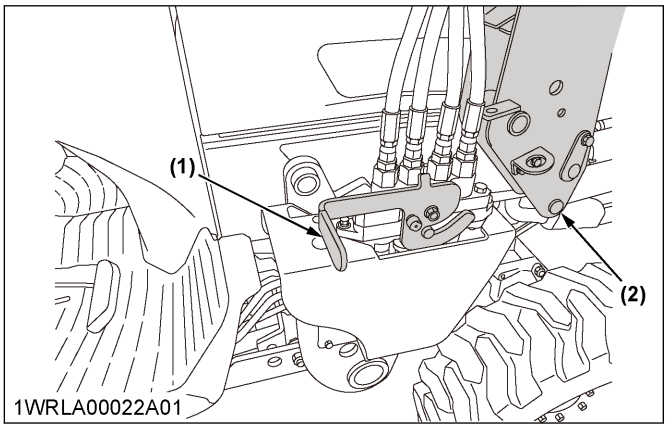

(1) Quick coupler *(2) Side frame*

11. Turn off the engine and release all hydraulic pressure by operating the control lever in all directions.
12. Set the parking brake and unfasten seat belt, turn the safety lock button counterclockwise to unlock it.

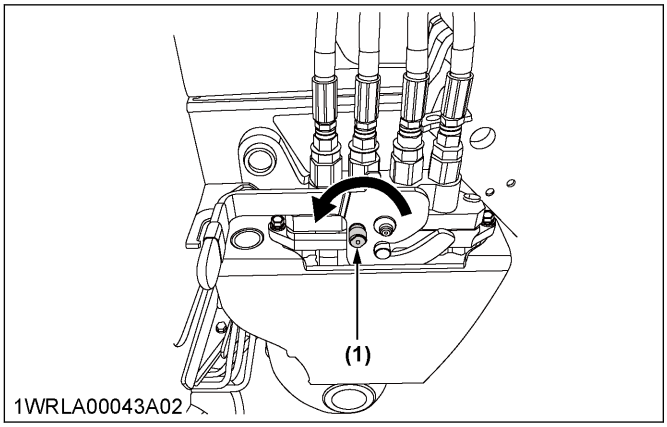

(1) Safety lock button (red)

13. Raise the quick coupler lever up until it stops.

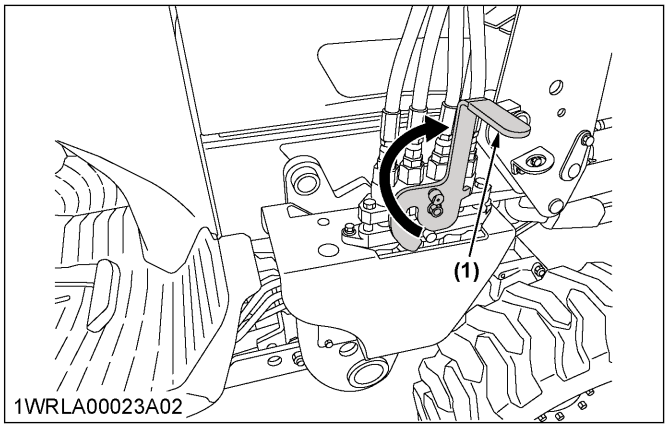

(1) Lever

14. Lift the quick coupler and place it into the coupler stay.

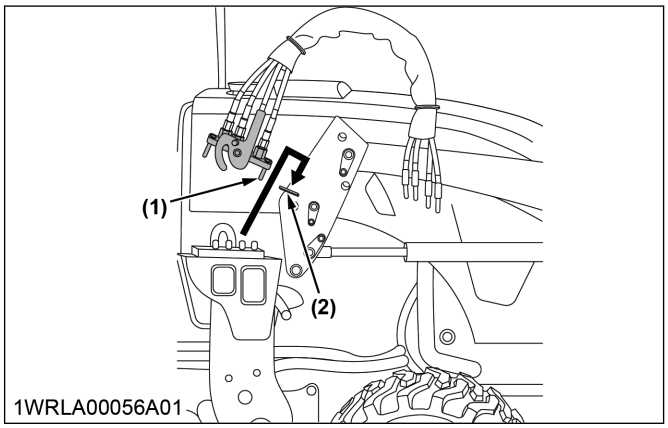

(1) Quick coupler *(2) Coupler stay*

15. Place the protective caps on the ends of the quick coupler.

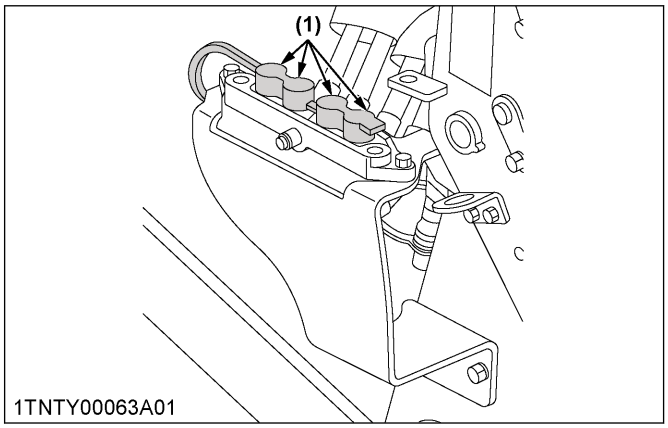

(1) Protective caps

16. Fasten the seat belt, start the engine and slowly back the tractor away from the loader.

https://truckmanualshub.com/

STORAGE OF THE LOADER

STORING THE LOADER

1. Store the loader in a clean, dry place.
2. Make sure that the loader is properly supported.

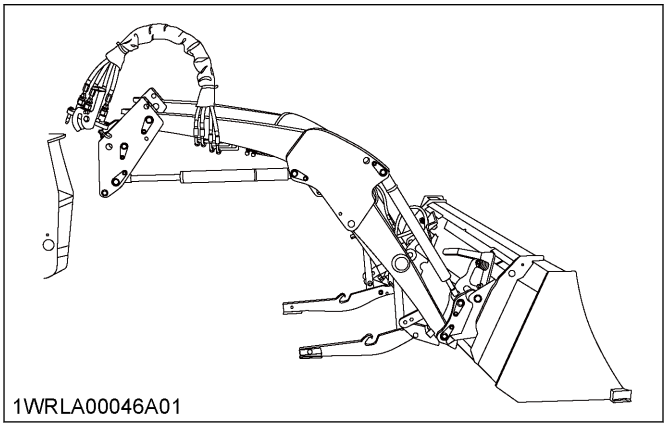

3. Check the hydraulic hoses and connections. Repair or replace the hydraulic hoses if necessary.
4. Repair or replace any worn, damaged, or missing parts.
5. Lubricate the loader as described on LUBRICATING THE LOADER on page 34.
6. Apply a coat of grease to all exposed cylinder rods to prevent rust.
7. Repaint worn or scratched parts.

REINSTALLING THE LOADER

HOW TO REINSTALL THE LOADER

WARNING

To avoid personal injury or death:

- **Before starting the engine and operating the control valve, always sit in the operator's seat.**

1. Reinstalling Non Swift-Tach loader

(See Reinstalling Swift-Tach loader [if equipped] on page 43)

1. Slowly drive the tractor between the loader side frames until the rear portion of both side frames touches the main frames as shown.

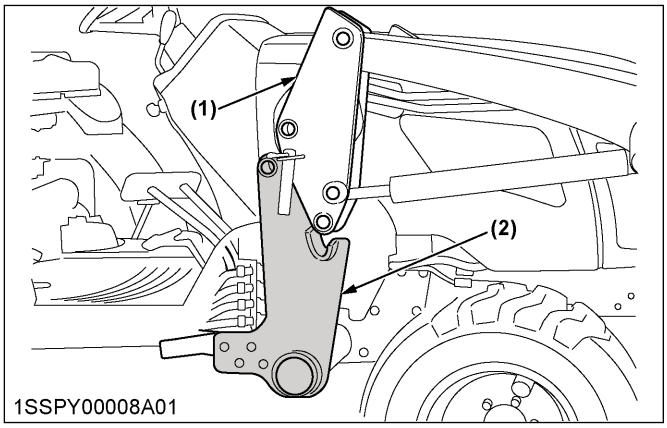

(1) Side frame *(2) Main frame*

2. Stop the engine.
3. Connect 4 hoses with couplers to the fittings on the control valve as indicated with color marks. Then connect the protective caps and plugs to each other.

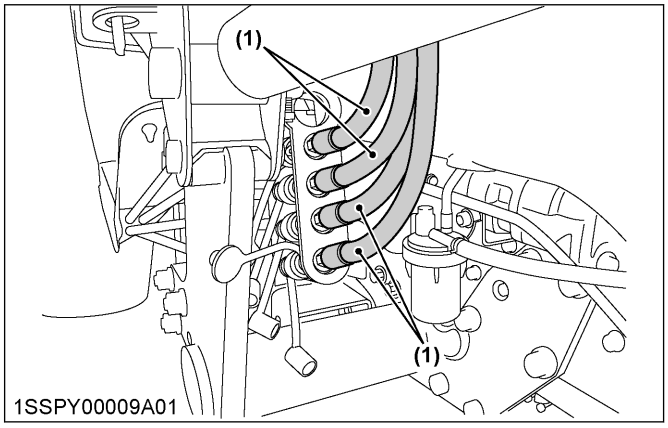

(1) Hoses

4. Start the engine and run at idle.
5. Slowly move the hydraulic control lever to dump position to lower the side frames into the main frames and engage the bosses of the main frames to the guide bosses of the side frames. Then lift the front wheels slightly with the loader.

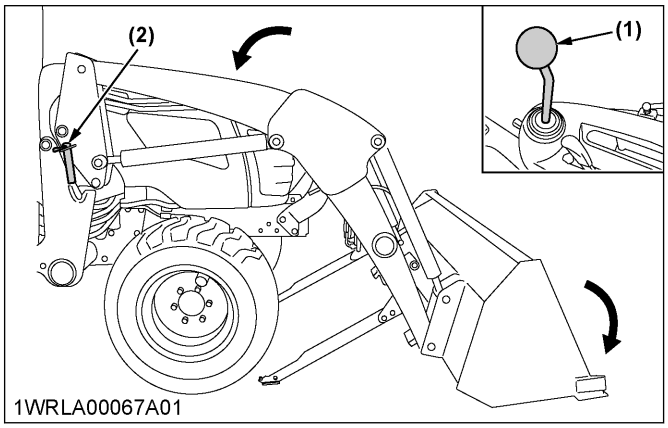

(1) Hydraulic control lever *(2) Mounting pin*

IMPORTANT :

- **Do not attempt to lift the front wheels with the stand.**

6. Stop the engine. Reinstall the mounting pins and secure them with the locking rods.
7. Start the engine.
8. Raise the boom until the stand can be rotated.
9. Stop the engine.

https://truckmanualshub.com/

10. Store the stands to their original positions and secure them with the spring pins as shown.

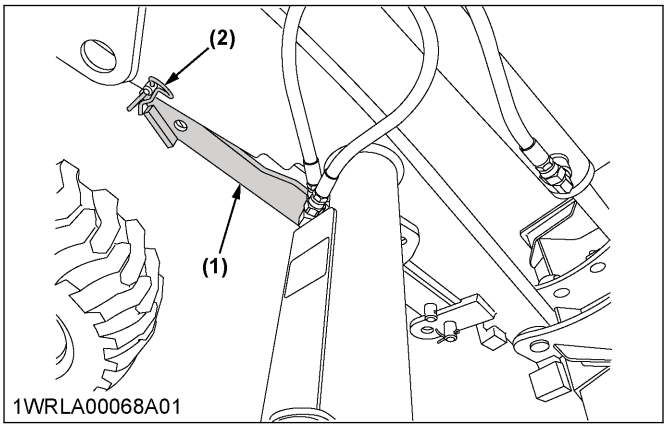

(1) Stand *(2) Spring pin*

11. Start the engine.
12. Lower the boom and level the bucket.

2. Reinstalling Swift-Tach loader [if equipped]

WARNING

To avoid personal injury or death:
If you do not get off the tractor while removing or reinstalling the loader;

- **Stop the engine before operating the mounting lever.**
- **Get off the tractor when you feel uneasy to do some operation.**

1. Carefully drive the tractor between the side frames of the loader as shown in the following figures.

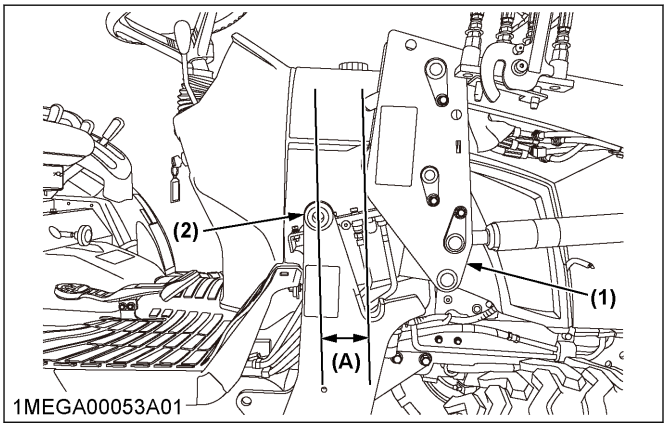

(1) Side frame *(A) 150 mm to 200 mm*
(2) Main frame

2. Stop the engine, set the parking brake and unfasten the seat belt.
3. Remove the protective caps from the tractor quick coupler.

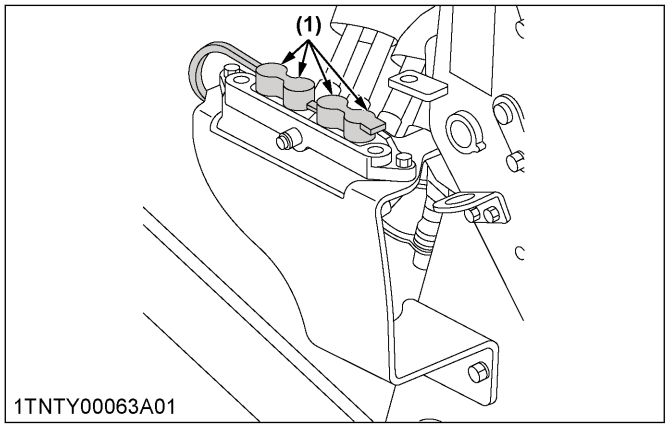

(1) Protective caps

4. Take off the dust cap.

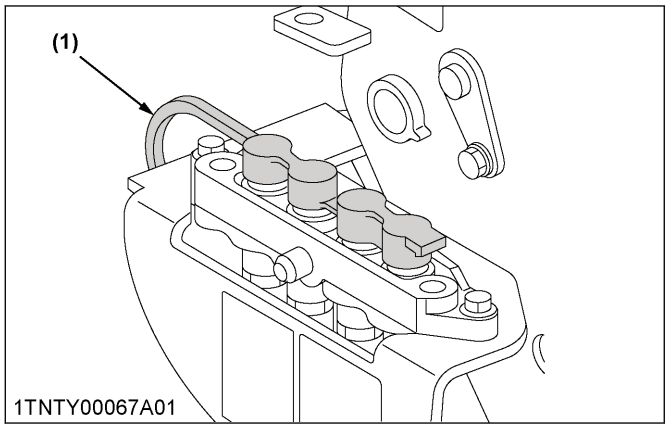

(1) Dust cap

5. Fold the dust cap.

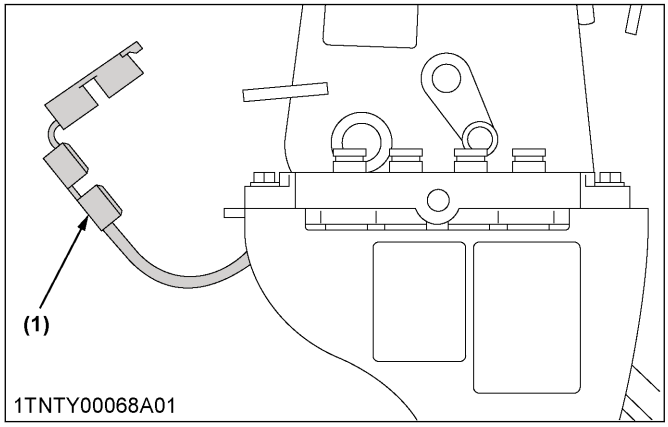

(1) Dust cap

6. Leave dust cap hanging.
   Make sure that the cap is closed to prevent the contamination.

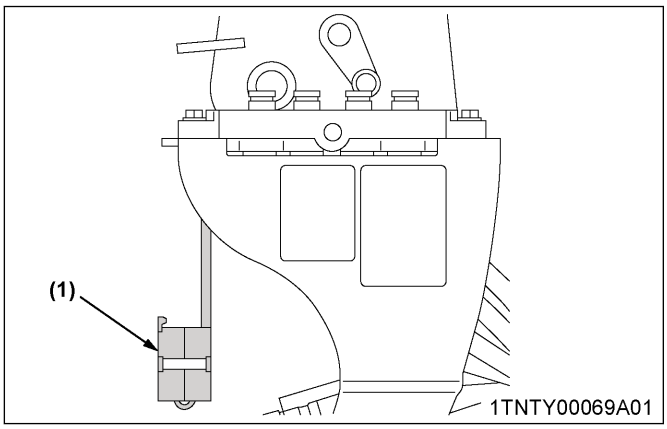

(1) Dust cap

7. Align the quick coupler with the bottom side quick coupler on tractor and rotate the lever down until the quick coupler locks. Then turn the safety lock button clockwise.

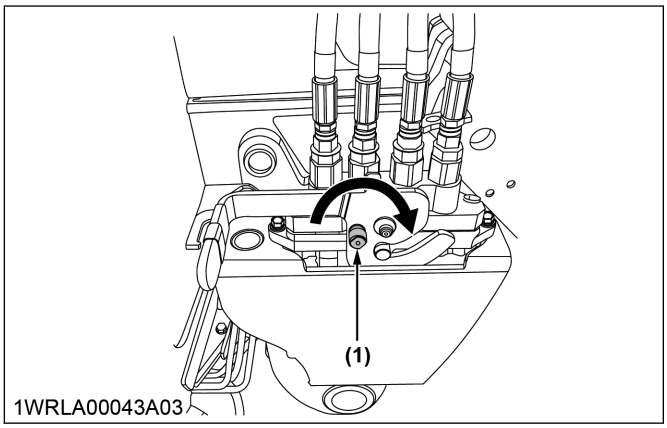

(1) Safety lock button (red) *(2) Lever*

IMPORTANT :
- **Get the quick coupler locked, and move up and down the lever to make sure that the quick coupler is tightly locked.**

8. Make sure that the mounting levers of both sides are in the lock position as shown in the follow figures.

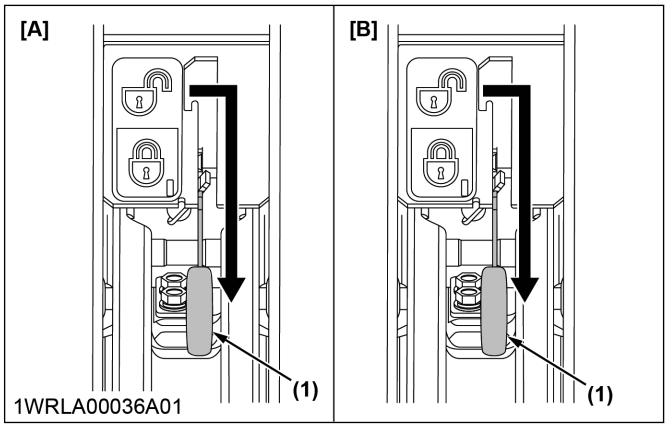

(1) Mounting lever *[A] Left side* *[B] Right side*

9. Fasten the seat belt and start the engine.

https://truckmanualshub.com/

10. Slowly operate the loader control lever to roll the bucket back and extend the boom cylinders until the left and right guide bosses of side frames ((1) below) contact the main frames.

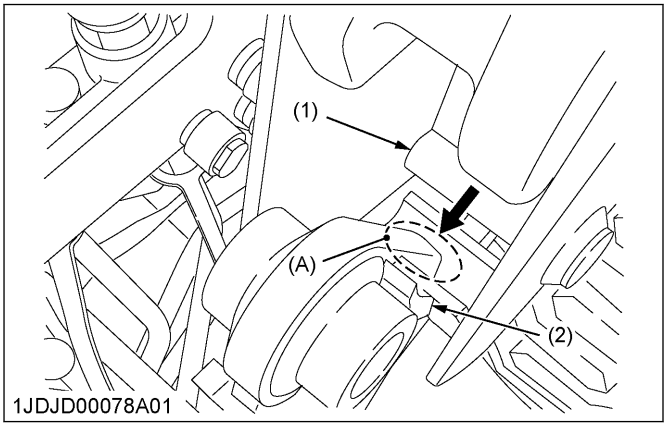

(1) Guide boss of side frame
(2) Main frame
(A) Contact point

IMPORTANT :

- **Do not attempt to install loader side frames onto the main frames with the boom cylinders fully retracted.**
  Be sure that 8.0 to 10.0 in. (203 to 254 mm) of boom cylinder rods are exposed before installing loader.

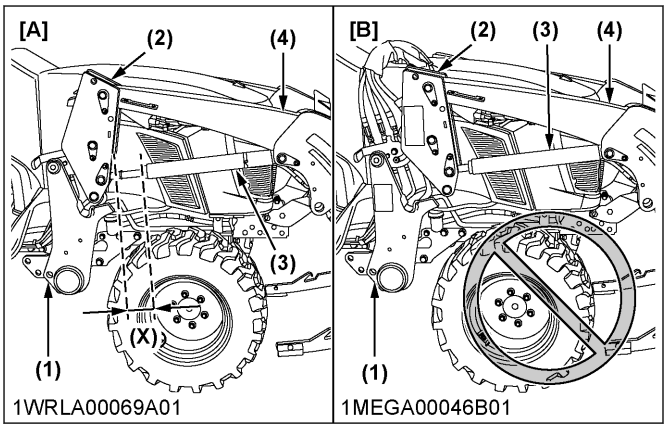

(1) Main frame
(2) Side frame
(3) Boom cylinder
(4) Boom
[A] Good
[B] No good
(X) 8.0 to 10.0 in. (203 to 254 mm)

11. Slowly operate the loader control lever to the dump position to lower the side frames into the main frames, and engage the left and right guide bosses of the side frames to the saddle bracket of the main frames, as shown in the following figure.

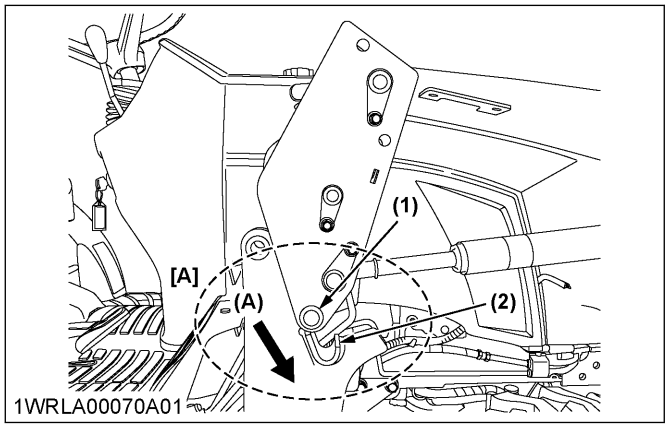

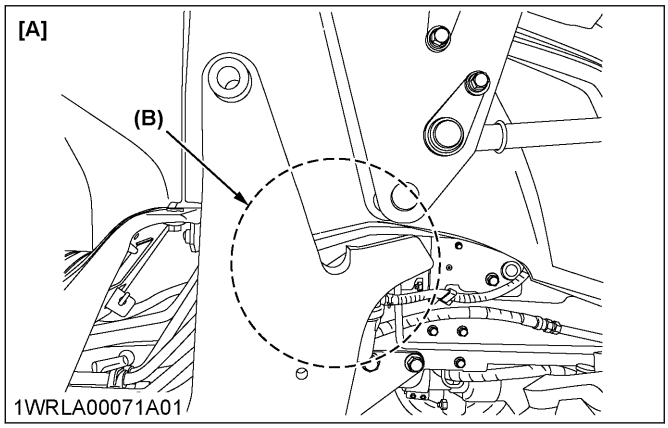

(1) Guide boss of side frame
(2) Saddle bracket of main frame
[A] Engaging bosses
(A) Engage
(B) To be securely engaged

IMPORTANT :

- **Make sure that the guide bosses of the side frames are engaged by the saddle bracket of the main frames. Otherwise the loader in use may drop off the main frames, thereby damaging the tractor itself.**

12. Make sure that the left and right bosses of the side frames are engaged by the saddle bracket of the main frames. Then slowly move the loader-control-lever to the dump position until the bucket tilts down the following degrees to the ground.

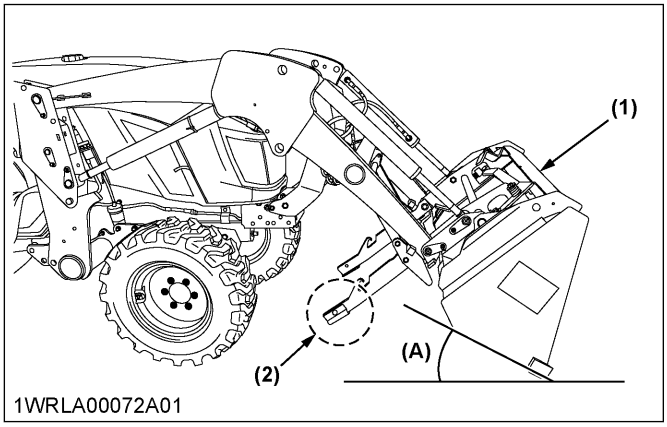

(1) Bucket
(2) Tip of the stand
(A) Angle between bucket bottom and ground

Angle between bucket bottom and ground (A)	20 degrees or so

IMPORTANT :
- **Make sure that the tips of the stands are off the ground.**

13. Slowly operate the loader control lever to the down position to lift the front wheels slightly with the loader until the mount hooks are completely mounted on the main frame as shown in the following figure.

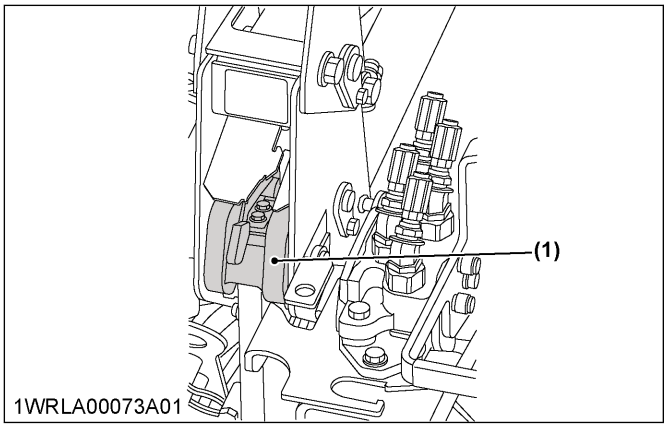

(1) Mount hook

IMPORTANT :
- **Make sure that the mount hooks at both sides are properly mounted on the main frame.**

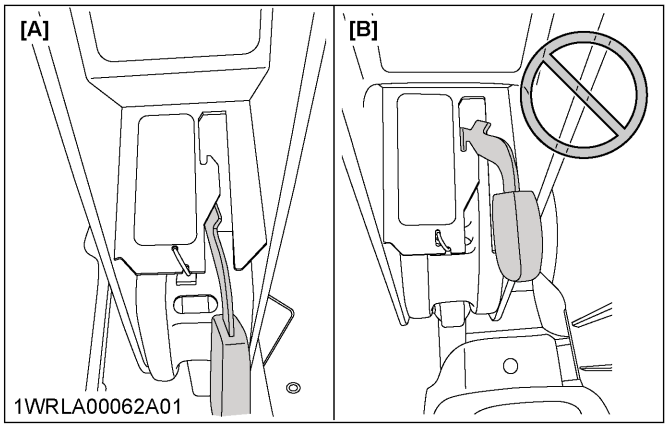

[A] Good
[B] No good

14. Slowly operate the loader control lever to the up position until the cutting edge of the bucket comes up slightly off the ground. Then make sure that the right and left mounting levers are in the locked position.
    Dismount and remount the loader if the cutting edge of the bucket is off the ground but the mount hooks are unlocked.
15. Raise the boom until the bucket-pivot-pin comes up to the height of the boom-pivot-pin.

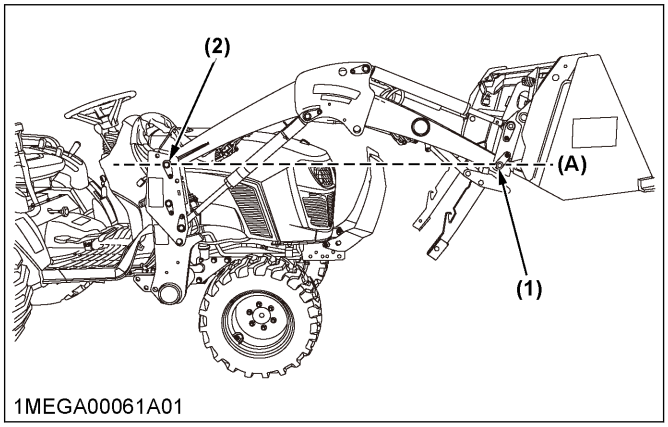

(1) Bucket pivot pin
(2) Boom pivot pin
(A) Same height

https://truckmanualshub.com/

16. Make sure that the stand lever is at its low position as shown in the following figure.

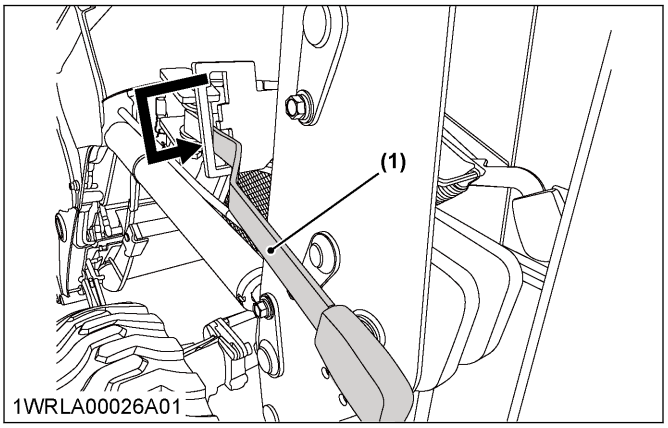

(1) Stand lever

17. Slowly dump the bucket until the stands are in the stowed position.
18. Using the stand lever lock the stands in the stowed position as shown below.

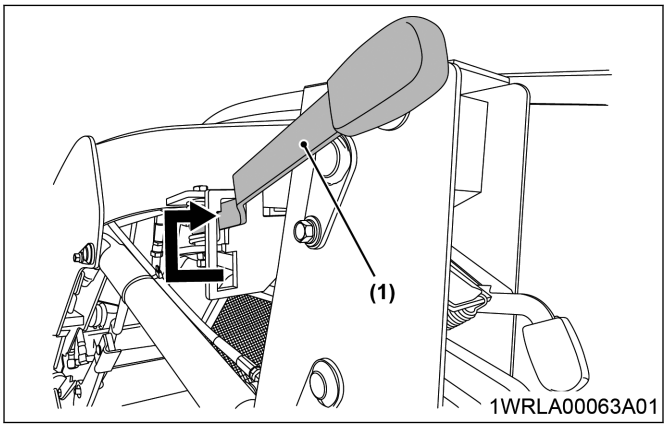

(1) Stand lever

IMPORTANT :

- **Do not force the stand lever if it gets twisted halfway and fails to stow away the stand. In such case, lower the stand lever and move the bucket to the full roll back position. Then go back to step 13. and take its following steps.**

19. Verify LH/RH stand hooks are engaged properly as shown below.

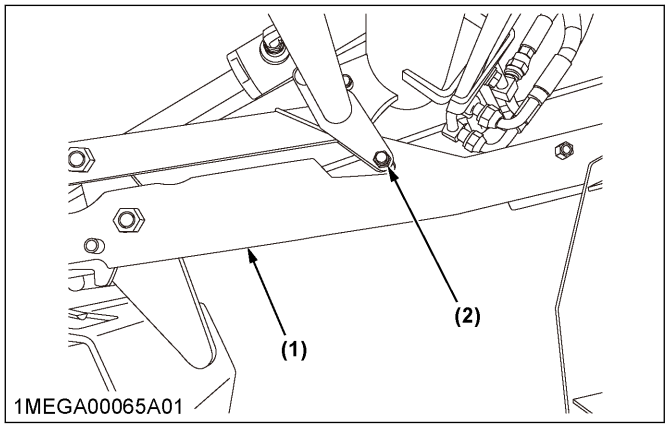

(1) Stand *(2) Stand hook*

3. Adjusting the swift-tach stand

If the stand does not hook and fold up successfully, readjust the height of lifting stand, referring to the following steps.

1. Ensure that the left and right stand adjusting plate is in the lowest possible position as seen in the figure.

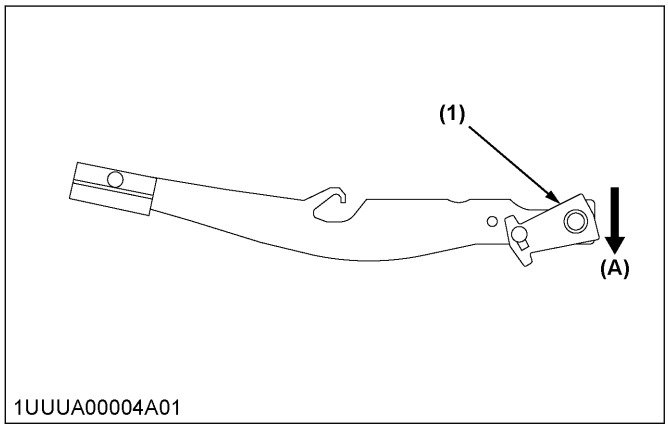

(1) Stand Adjusting Plate *(A) Lowest possible position*

2. Raise the boom until the bucket pivot pin is the same height as the boom pivot pin as seen in the figure.

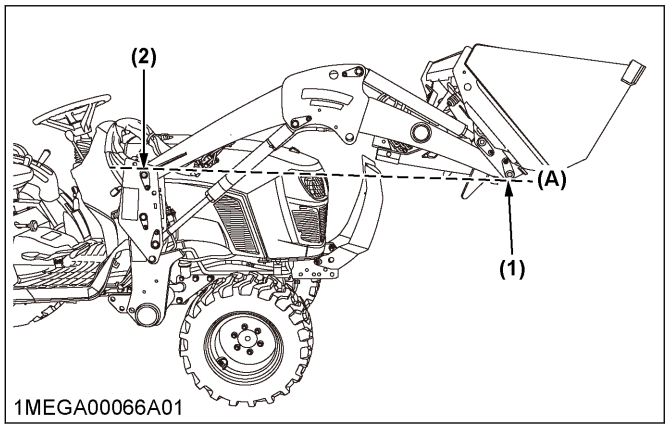

(1) Bucket pivot pin *(A) Same height*
(2) Boom pivot pin

3. For safety, stabilize the height of the boom using a crane, jack stand, etc. Stabilize the boom only while still allowing the bucket to move.
4. Carefully dump the bucket until the stand hooks clear the roller bolts as seen in the figure.

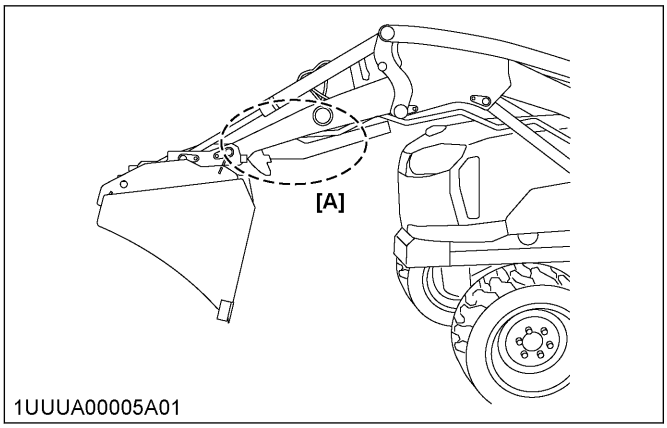

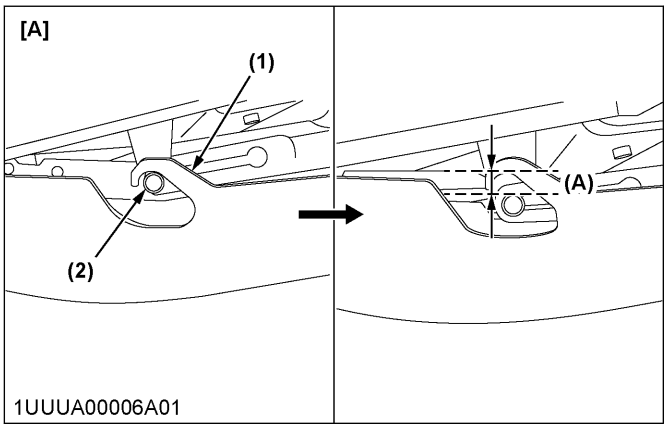

(1) Stand hook
(2) Roller bolt
(A) 4 to 5 mm (0.15 to 0.19 in.) clearance

5. Move the stand to the unlock position as seen in the figure.

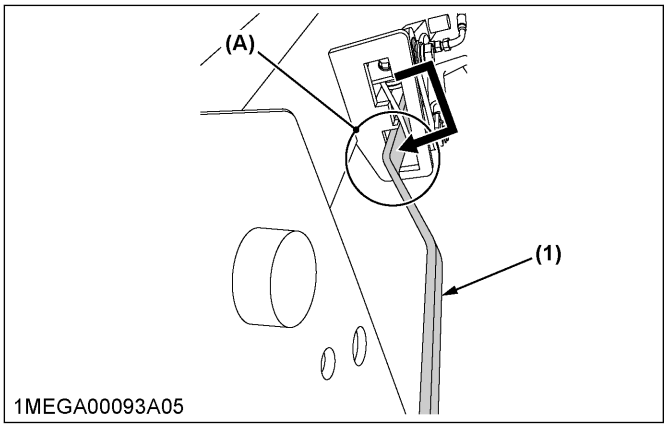

(1) Stand lever
(A) Unlocked position

NOTE :
- **If stand rollers do not disengage stand hooks, lift both stand by hand to release rollers while stand lock lever is in the unlocked position.**

6. Roll bucket back until roller is in line with the stand hook as seen in the figure.

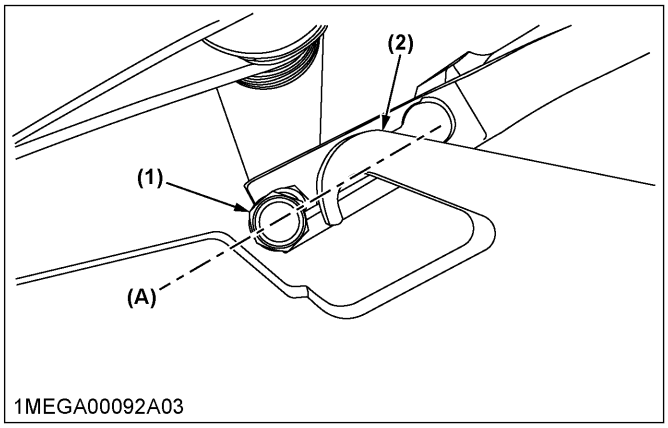

(1) Roller
(2) Stand hook
(A) Inline condition

https://truckmanualshub.com/

7. Check the clearance (X) between the roller and rod off of the stand lever as shown in the figures. the stand hook on the closest side as seen in the figure. If the clearance is 1 to 2 mm (0.04 to 0.08 in.) proceed to step 11. If the clearance is less than 1 mm (0.04 in.) or greater than 2 mm (0.08 in.) continue to step 8.

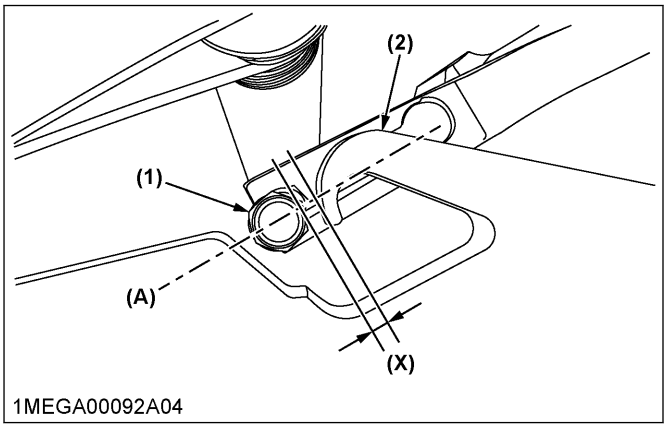

(1) Roller
(2) Stand hook
(A) Inline condition
(X) Measure here

NOTE :

- **Use provided band cord (1.25 mm (0.05 in.) thick) as a spacer tool for clearance (X) as seen in following figure.**

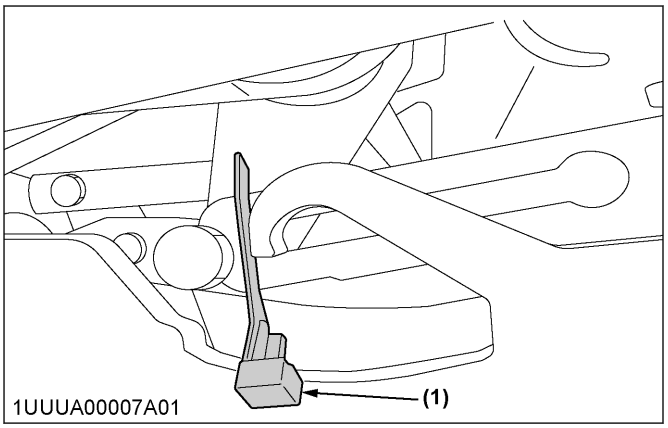

(1) Band cord

8. Remove rue ring and slide upper end of connecting rod off of the stand lever as shown in the figures.

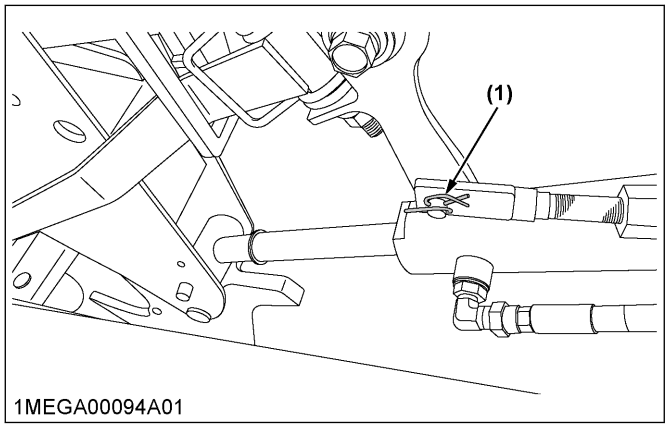

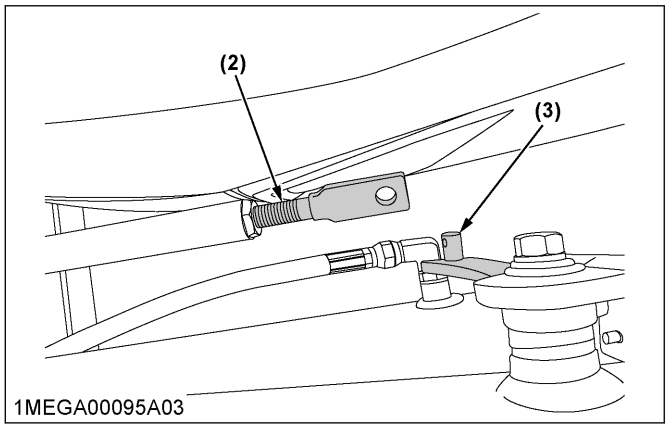

(1) Rue ring
(2) Connecting rod
(3) Stand lever

9. If measurement from step 7 was less than 1 mm (0.04 in.) rotate the rod connector counter clockwise (extend). If measurement from step 7 was greater than 2 mm (0.08 in.) rotate the rod connector clockwise (shorten). (Each half rotation = 0.6 mm (0.02 in.)).
10. Slide stand lever rod back on to lever and secure with snap pin and retighten nut.

M10	Tightening torque	39.2 to 45.1 N·m (4 to 4.6 kgf·m) (28.9 to 33.2 lbf·ft)

11. Repeat steps 7-10 until 1 to 2 mm (0.04 to 0.08 in.) (X) from step 7 is achieved.

12. Dump bucket until both stand hooks are clear of the roller bolts as seen in the figure. (roughly 4 to 5 mm (0.16 to 0.20 in.))

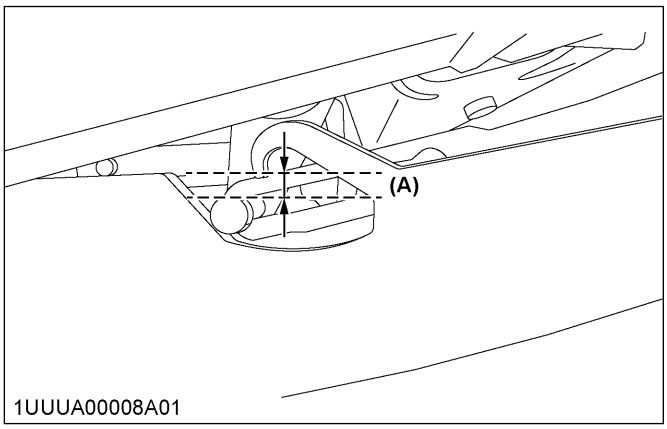

(A) 4 to 5 mm (0.16 to 0.20 in.) clearance

13. Lock stands as seen in the figure.

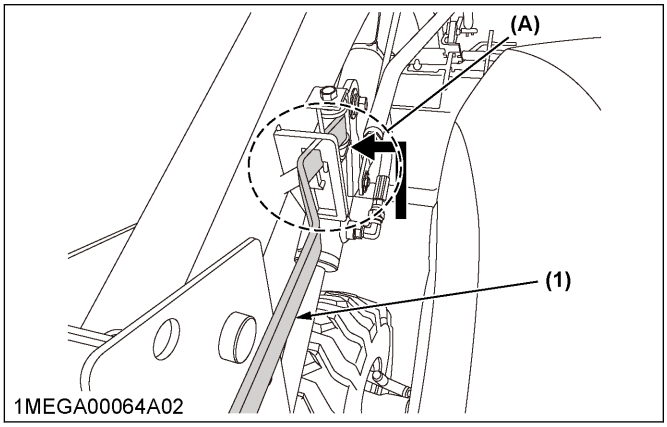

(1) Stand lever *(A) Locked position*

14. Loosen the nuts on both stand adjusting plates until the plate can move freely as seen in the figure.

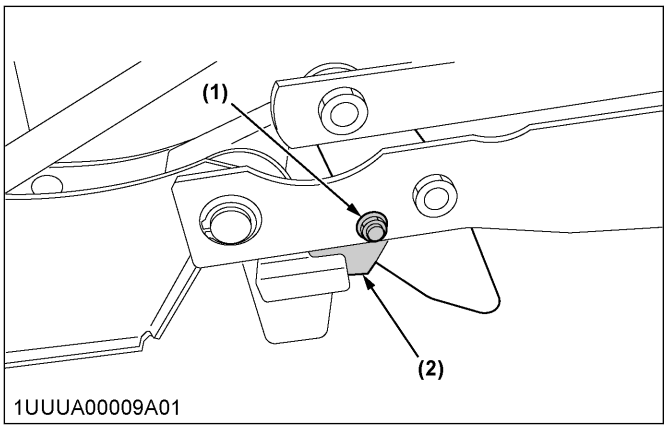

(1) M10 nut *(2) Stand adjusting plate*

15. Dump the bucket to max as seen in the figure.

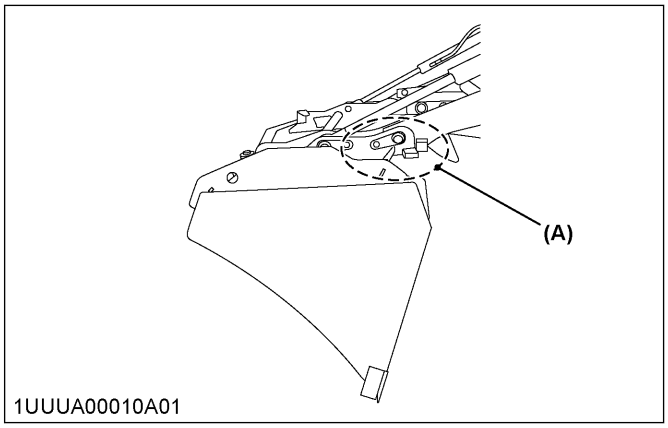

(A) Max dump

16. Adjust the stand adjusting plate on both sides to 1 to 2 mm (0.04 to 0.08 in.) of clearance (X) from the bucket stopper as in the figure. Then retighten locking nut.

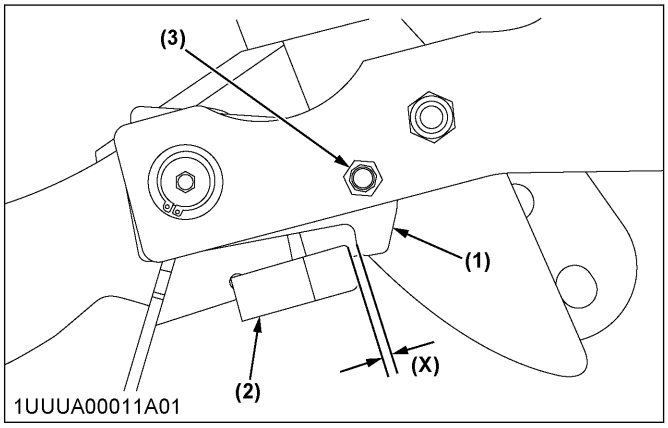

(1) Stand adjusting plate *(X) 1 to 2 mm (0.04 to 0.08 in.)*
(2) Bucket stopper
(3) M10 locking nut

NOTE :

- **Use provided band cord (~1.25 mm (0.05 in.) thick) as a spacer tool for clearance (X) as seen in following figure.**

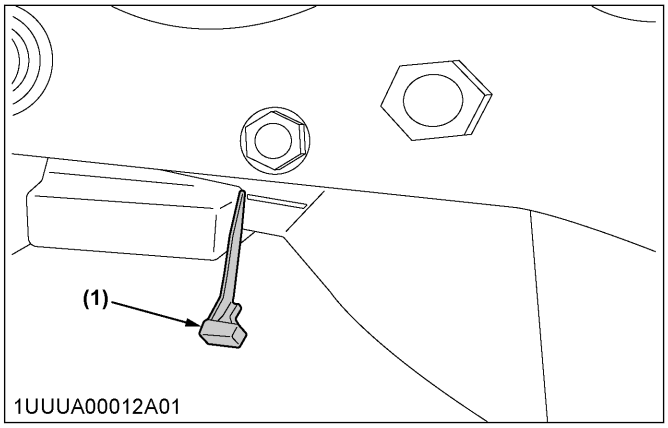

(1) Band cord

17. Remove crane, jack stand, etc. used to stabilize the boom in step 3.

https://truckmanualshub.com/

18. Complete. See Removing Swift-Tach Loader section of operator's manual for function check instructions.

https://truckmanualshub.com/

GENERAL TORQUE SPECIFICATION

If the torque levels are specified in the text, follow that specification.

American standard screws, bolts, and nuts with UNC or UNF threads		
SAE grade No.	**GR5**	**GR8**
1/4	11.7 N·m to 15.8 N·m 1.19 kgf·m to 1.61 kgf·m 8.6 lbf·ft to 11.6 lbf·ft	16.3 N·m to 19.8 N·m 1.66 kgf·m to 2.02 kgf·m 12.0 lbf·ft to 14.6 lbf·ft
5/16	23.1 N·m to 27.8 N·m 2.35 kgf·m to 2.83 kgf·m 17.0 lbf·ft to 20.5 lbf·ft	32.5 N·m to 39.3 N·m 3.31 kgf·m to 4.01 kgf·m 24.0 lbf·ft to 29.0 lbf·ft
3/8	47.5 N·m to 57.0 N·m 4.84 kgf·m to 5.81 kgf·m 35.0 lbf·ft to 42.0 lbf·ft	61.0 N·m to 73.2 N·m 6.22 kgf·m to 7.46 kgf·m 45.0 lbf·ft to 54.0 lbf·ft
1/2	108.5 N·m to 130.2 N·m 11.06 kgf·m to 13.28 kgf·m 80.0 lbf·ft to 96.0 lbf·ft	149.2 N·m to 179.0 N·m 15.21 kgf·m to 18.25 kgf·m 110.0 lbf·ft to 132.0 lbf·ft
9/16	149.2 N·m to 179.0 N·m 15.21 kgf·m to 18.25 kgf·m 110.0 lbf·ft to 132.0 lbf·ft	217.0 N·m to 260.4 N·m 22.13 kgf·m to 26.55 kgf·m 160.0 lbf·ft to 192.0 lbf·ft
5/8	203.4 N·m to 244.1 N·m 20.74 kgf·m to 24.89 kgf·m 150.0 lbf·ft to 180.0 lbf·ft	298.3 N·m to 358.0 N·m 30.42 kgf·m to 36.51 kgf·m 220.0 lbf·ft to 264.0 lbf·ft

Metric cap screws 8.8	
Property class	**8.8 Approx. SAE GR5**
M6	9.8 N·m to 11.2 N·m 1.0 kgf·m to 1.1 kgf·m 7.2 lbf·ft to 8.3 lbf·ft
M8	23.6 N·m to 27.4 N·m 2.4 kgf·m to 2.8 kgf·m 17.4 lbf·ft to 20.2 lbf·ft
M10	48.1 N·m to 55.8 N·m 4.9 kgf·m to 5.7 kgf·m 35.5 lbf·ft to 41.2 lbf·ft
M12	77.5 N·m to 90.1 N·m 7.9 kgf·m to 9.2 kgf·m 57.2 lbf·ft to 66.5 lbf·ft
M14	124 N·m to 147 N·m 12.6 kgf·m to 15.0 kgf·m 91.5 lbf·ft to 108.4 lbf·ft
M16	197 N·m to 225 N·m 20.0 kgf·m to 23.0 kgf·m 145 lbf·ft to 166 lbf·ft
M18	275 N·m to 318 N·m 28.0 kgf·m to 32.5 kgf·m 203 lbf·ft to 235 lbf·ft
M20	368 N·m to 431 N·m 37.6 kgf·m to 44.0 kgf·m 272 lbf·ft to 318 lbf·ft

https://truckmanualshub.com/

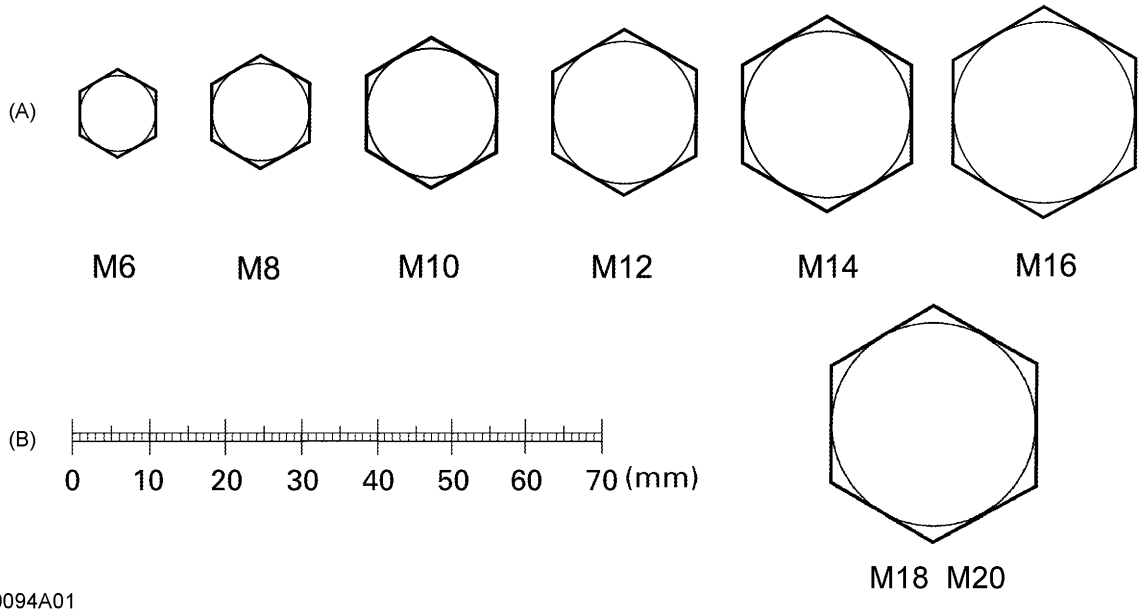

1JDJD00094A01

(A) Top of bolt *(B) Length*

https://truckmanualshub.com/

INDEX

A

activation switch
- operating.....29

attachment
- attaching.....30
- detaching.....32
- maintenance.....32

B

backfilling.....27
bucket.....32
- filling.....22

C

control lever
- connecting.....20

control switch.....29

D

dealer service.....9
dual remote hydraulic control system.....20
dumping the bucket.....24

F

four position bucket control valve type.....20
front hydraulic valve main switch
- operating.....29

front remote hydraulic control system.....28

G

general torque specification.....52

H

hardware
- checking torque.....35

hardware of mechanical self leveling [if equipped]
- re-tightening.....35
- re-tightening the torque.....36

hardware of the loader
- re-tightening.....34

hydraulic hose
- connecting.....20

hydraulic quick coupler
- installing.....28

hydraulic system
- purging air.....20

I

indicator label
- applying front attachment.....33

L

liquid ballast
- rear tire.....18

loader
- daily checking.....35
- dismounting.....32
- loading from bank.....25
- operating.....22
- precautions for carrying load.....23
- precautions for handling large heavy objects.....28
- storing.....41
- terminology.....15

loader with float control
- precautions for operating.....24

loader/remote control valve lever
- operating.....21

loading low trucks from a pile.....26
loading or spreaders from a pile.....26
lowering the bucket.....24
lubricating the loader.....34
lubrication
- before operating the loader.....16

M

main frame
- checking torque of bolt and nut.....35

movement of lifting stand
- checking.....36

N

Non Swift-Tach loader
- reinstalling.....42
- removing.....37

P

peeling the ground.....26
precaution
- after operating the loader.....4
- before operating the loader.....3
- operating the loader.....4
- servicing.....5

precautions
- lifting load.....23

R

remote control coupler
- connecting and disconnecting.....30

S

safety label.....6

https://truckmanualshub.com/

safety labels
care.....8
scraping the ground..... 26
setting tread..... 17
snow blade.....33
specification
dimensional.....12
operational..... 13
specifications table
bucket.....11
loader..... 10
suitable tractor.....10
Swift-Tach loader [if equipped]
reinstalling.....43
removing..... 38
swift-tach stand
adjusting.....47

T

test operation..... 19
tire inflation.....19
transmission fluid
checking.....16

V

valve lock..... 28
valve lock..... 22

W

weight
rear ballast..... 18