https://truckmanualshub.com/

DINO® 210XT

OPERATING INSTRUCTIONS

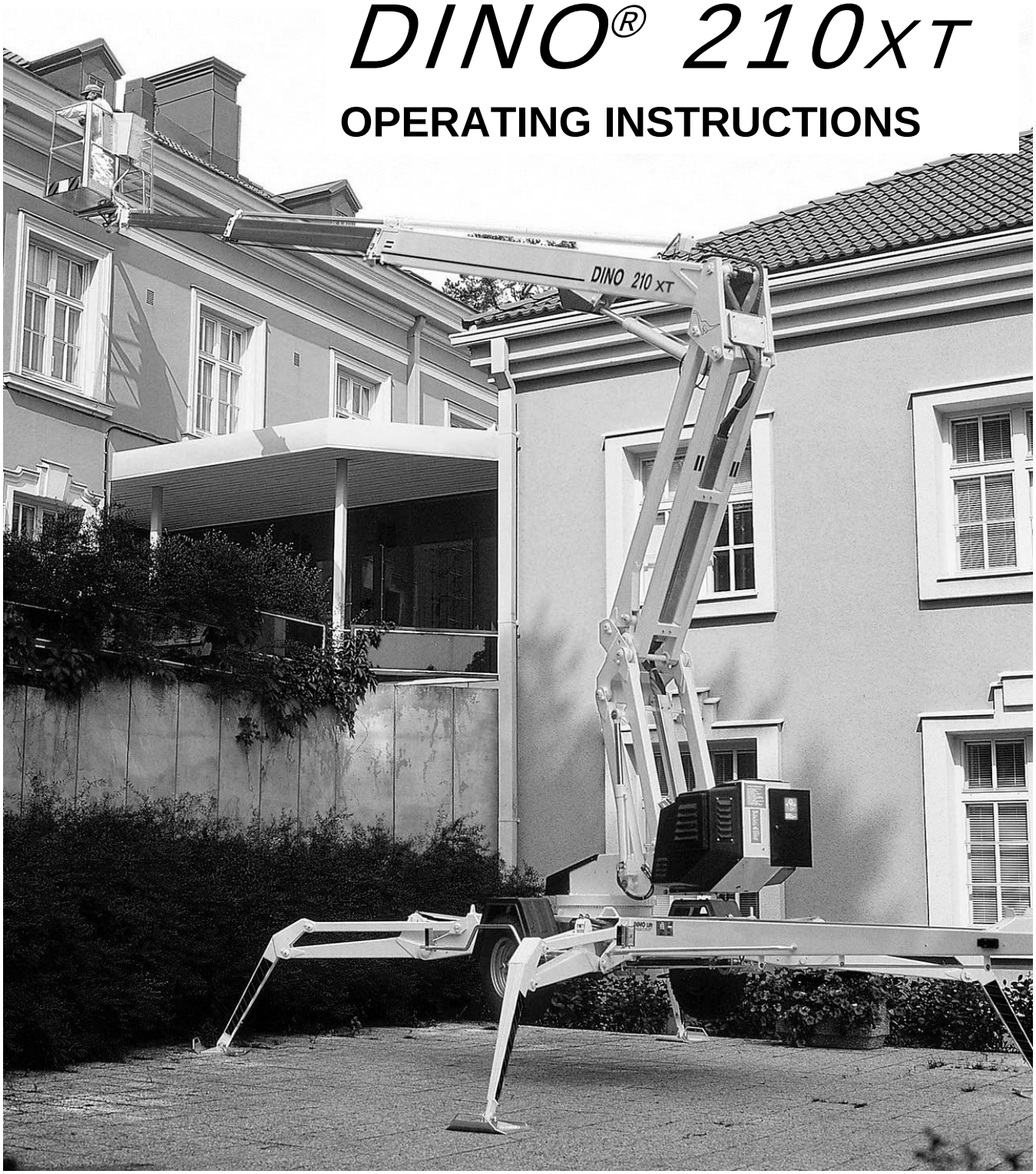

DINO Lift®

Raikkolantie 145
FI-32210 LOIMAA
T. +358 2 762 5900
F. +358 2 762 7160
dino@dinolift.com
www.dinolift.com

Downloaded from www.Manualslib.com manuals search engine

Downloaded from www.Manualslib.com manuals search engine

https://truckmanualshub.com/

OPERATING INSTRUCTIONS

Valid from serial number **2945->**

Downloaded from www.Manualslib.com manuals search engine

CONTENTS

REACH DIAGRAM **6**

TECHNICAL SPECIFICATION **7**

GENERAL SAFETY REGULATIONS **8**

REGULAR INSPECTION **10**

WORKSITE INSPECTION **11**

OPERATION OF SAFETY DEVICES **13**

OPERATING CONTROLS **15**

OPERATING CONTROLS ON THE CHASSIS CONTROL PANEL 15
OPERATING CONTROLS OF DRIVE SYSTEM 16
OPERATING CONTROLS OF OUTRIGGERS 16
OPERATING CONTROLS ON THE PLATFORM 16
OPERATING CONTROLS ON THE PLATFORM 17

MEASURES TO BE TAKEN IF THE LIFT IS AT RISK OF LOSING ITS STABILITY **19**

START-UP **21**

OPERATING THE LIFT FROM THE CHASSIS PANEL 26
OPERATING THE LIFT FROM THE PLATFORM PANEL 28

EMERGENCY DESCENT SYSTEM **34**

DRIVING DEVICE **35**

DRIVING DEVICE **36**

SPECIAL INSTRUCTIONS FOR WINTER USE **38**

MEASURES TO BE TAKEN AT THE END OF THE WORKING DAY **39**

PREPARING THE LIFT FOR TRANSPORT **40**

CONNECTION TO THE TOWING VEHICLE **41**

INSTRUCTIONS FOR SERVICE AND MAINTENANCE **42**

GENERAL SERVICE INSTRUCTIONS 42
SERVICE AND INSPECTION INSTRUCTIONS 43
LUBRICATION PLAN 44
LOAD HOLDING AND LOAD REGULATION VALVES 47
WHEEL BRAKES AND BEARINGS 48
LEVELLING SYSTEM OF THE PLATFORM 51
REGULAR SERVICING 52
TESTING THE LOAD LIMIT SWITCHES RK4 AND RK 5 ..... *59*
ADJUSTMENT OF THE OVERLOAD LIMIT SWITCHES *61*

INSPECTION INSTRUCTIONS **66**

FIRST INSPECTION 66

Downloaded from www.Manualslib.com manuals search engine

DAILY INSPECTION (START-UP INSPECTION) 67
MONTHLY INSPECTION (MAINTENANCE INSPECTION) 68
ANNUAL INSPECTION (REGULAR INSPECTION) 69
EXTRAORDINARY INSPECTION 72
TEST LOADING INSTRUCTIONS FOR REGULAR INSPECTION 73

FAULT FINDING 74

GENERAL INFORMATION OF HYDRAULICS 81

ELECTRIC COMPONENTS 82

CHASSIS CONTROL CENTRE (LCB), RELAYS 82
CHASSIS CONTROL CENTRE (LCB), SWITCHES 86
CHASSIS CONTROL CENTRE (LCB), OTHER ITEMS 87
PLATFORM CONTROL CENTRE (UCB), RELAYS 88
PLATFORM CONTROL CENTRE (UCB), SWITCHES 89
PLATFORM CONTROL CENTRE (UCB), OTHER ITEMS 90
LIMIT-SWITCHES 90
DRIVING DEVICE CONTROL CENTRE (DCB) 91
OTHER MARKINGS 91

ADJUSTMENT VALUES OF MOVEMENT SPEEDS 92

ELECTRIC COMPONENTS 2945 > 94

WIRING DIAGRAM 98

ELECTRIC DIAGRAM 2945--> 99

HYDRAULIC COMPONENTS 2945 > 117

HYDRAULIC DIAGRAM 2945 > 118

Downloaded from www.Manualslib.com manuals search engine

REACH DIAGRAM

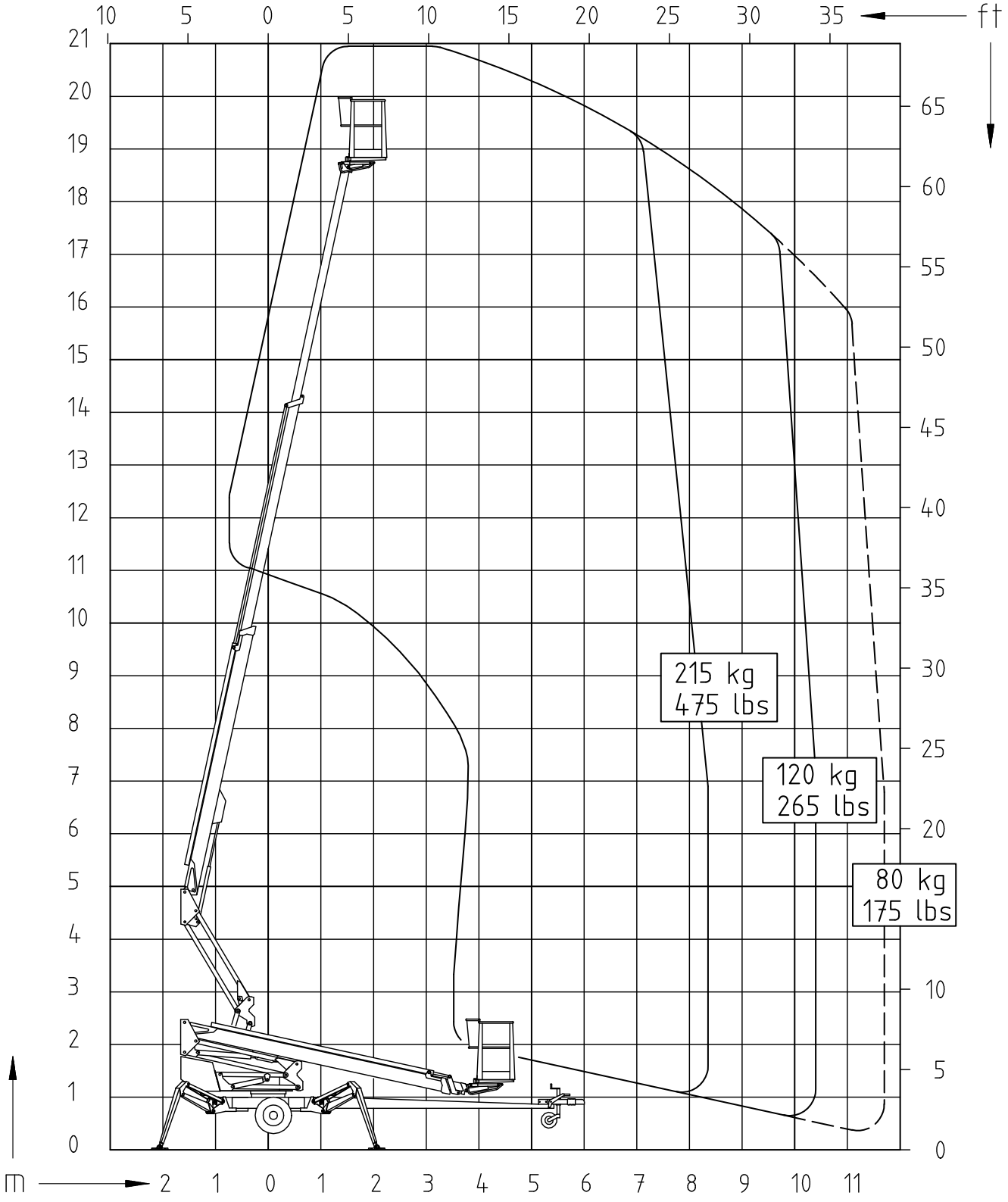

Downloaded from www.Manualslib.com manuals search engine

TECHNICAL SPECIFICATION

Max. working height	21,0 m
Max. platform height	19,0 m
Max. outreach	11,7 m
Boom rotation	continuous
Platform rotation	90°
Turn area	refer to reach diagram
Support width	4,30 m
Transport width	1,92 m
Transport length	7,88 m
Transport height	2,18 m
Weight	2 440 kg
Max. allowed load on platform	215 kg
Max. number of persons + additional load	2 persons + 55 kg
Max. allowed sideways load (caused by persons)	400 N
Max. lateral inclination (chassis)	±0,3°
Max. wind speed during operation	12,5 m/s
Min. ambient temperature when working	- 20 °C
Max. support force on the outriggers	22800 N
Platform size	0,7 x 1,3 m
Gradeability	25 %
Power supply:	
- mains current:	230V / 50Hz / 10A
- internal combustion engine (gasoline, petrol)	4.8 kW (6.5 hp)/ 3600 r/min
- internal combustion engine (diesel)	4.4 kW (6 hp)/ 2800 r/min
Socket outlets on the platform	230V / 50Hz / 16A

Downloaded from www.Manualslib.com manuals search engine

GENERAL SAFETY REGULATIONS

Make yourself familiar with these operation instructions before using the lift!

Keep these operating instructions in the place reserved for them.
Make sure that all users of the lift are familiar with these instructions.
Advice the new users and strictly follow all instructions given by the manufacturer.

Make sure you clearly understand all instructions relating to the operational safety of the lift.

Always use chocks under the wheels when disconnecting the lift from the car.

Only specially trained personnel who are well familiar with the device and at least 18-years old are allowed to operate the lift

The max. allowed load on the platform is two (2) persons and at maximum fifty five (55) kg of additional load, however, the total load must not exceed two hundred fifteen (215) kg.

The platform may only be operated when the chassis is well supported and the wheels are off the ground.

The load-bearing capacity and the gradient of the base must be taken into account when supporting the chassis.

Additional support plates of adequate size must be used under the outriggers when working on soft ground. Only use such additional support plates on which the metallic outriggers will not slide.

The lift may only be moved in the transport position. No persons or load are allowed on the platform during the transportation.

The weather conditions, such as wind, visibility and rain, must always be taken into account so that these factors will not adversely affect the safe performance of the lifting operations.

The use of the lift is prohibited if
- **the temperature drops under -20 °C** or
- **the wind speed exceeds 12.5 m/s**

Downloaded from www.Manualslib.com manuals search engine

Do not use ladders, steps or other similar equipment on the platform.

Never throw any objects from the platform.

The lift must not be used for transferring goods or persons between different floors or working levels.

Never disable the operation of any safety device.

Always make sure before lowering the platform that the area on the underside is clear of any obstructions.
Avoid damaging the platform by lowering it on the ground or bringing it in contact with any structures.

When working in busy areas the operating range of the lift must be clearly marked either by using warning lights or fencing.
Also observe the regulations of the Road Traffic Act.

Beware of the live aerial power lines in the area - observe the minimum safety distances:

Voltage	**Min. distance below (m)**	**Min. distance at the side (m)**
100 - 400 V hanging spiral cable	0,5	0,5
100 - 400 V open-wire cable	2	2
6 - 45 kV	2	3
110 kV	3	5
220 kV	4	5
400 kV	5	5

Keep the lift clean of any dirt which may impair the safe operation and impede the inspection of the structures

The device must be serviced and inspected regularly.
Only skilled persons who are familiar with the service and reparation instructions are allowed to carry out the service and reparation work.

It is strictly prohibited to use a lift which is out of order.

The device must not be modified without the manufacturer´s consent.

Downloaded from www.Manualslib.com manuals search engine

REGULAR INSPECTION

A thorough inspection of the lift must be carried out at least once every twelve (12) months.

The inspection shall be carried out by a technically trained person who is familiar with the operation and structure of the lift.

Draw up a protocol of the inspections and keep it always with the unit stored in the space reserved for it.

Carry out he inspections on regular basis throughout the service life of the lift.

The inspection must be carried out within twelve (12) months from the first or the previous inspection.

If the lift is used under extreme conditions, intervals between the inspections shall be reduced.

The overall operating condition of the lift as well as the condition of the safety-related control devices shall be established in the regular inspections. Particular attention shall be paid to changes which affect the operational safety.

In connection with the regular inspection, it shall be established to what extent the lessons and practical experience gained from the previous inspection can be implemented for even better safety.

ATTENTION! Primarily the national legislation must be followed!

Regular inspections and service measures are described more thoroughly in the chapter "Service- and maintenance".

Downloaded from www.Manualslib.com manuals search engine

WORKSITE INSPECTION

1. General
- Is the lift suited for the intended job?
- Is the performance of the lift sufficient for the job? (reach, loadability etc.)
- Is the position of the lift safe?
- Is the lighting on the worksite sufficient?

2. Documents
- Are the Operation and Service Instructions for this lift present? (Manufacturer´s instructions)
- Are inspections and servicing carried out in accordance with the instructions and have the defects affecting the safety been checked as repaired?
  (Inspection protocols)

3. Structure (Visual inspection and operational test)
- General condition of the lift
- Operation and protection of the controls
- Emergency stop, signal horn and limit switches
- Electrical appliances and wiring
- Oil leaks
- Load markings and signs

4. Operator
- Is the operator old enough?
- Has the operator received the required training?

5. Special issues on the work site
- Are there any additional regulations relevant to the worksite or the work?

Downloaded from www.Manualslib.com manuals search engine

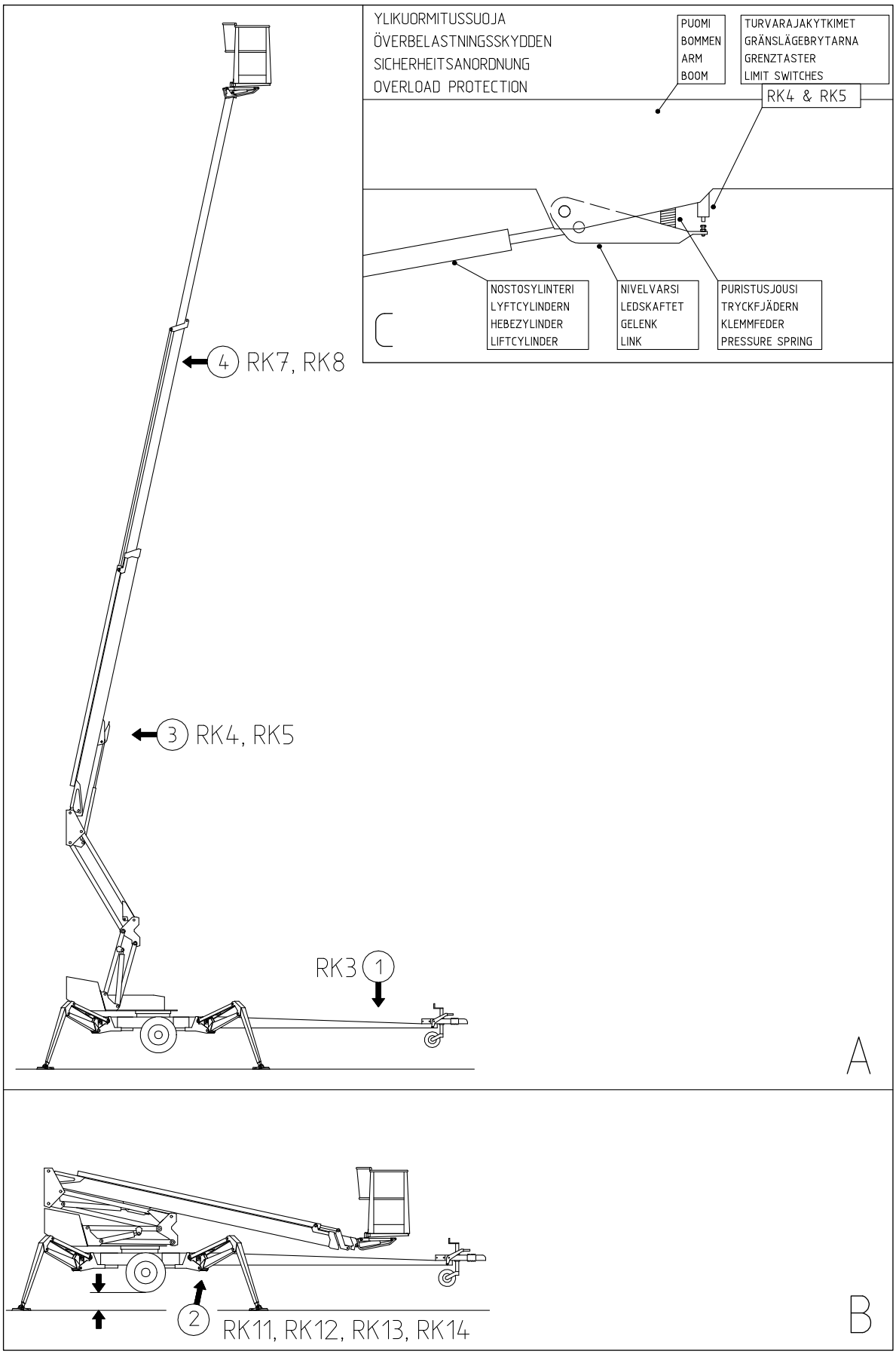

Downloaded from www.Manualslib.com manuals search engine

OPERATION OF SAFETY DEVICES

1. Support outriggers (Fig. A)
The safety limit switch **RK3** prevents the operation of the outriggers and the driving device when the boom does not rest on the transport support. The switch is located on the tow-bar at the transport support.

2. Lifting the boom (Fig. B)
All the lift's support outriggers must be in the support position before the boom is lifted. Make sure that the wheels are off the ground.
The safety limit switches **RK11, RK12, RK13** ja **RK14** are located on the support outriggers.

3. Overload protection switches (Figs. A and C)
The safety limit switches prevent overloading of the lift. At a predetermined position the overload limit switch **RK4** stops extension of the telescope and lowering of the boom.
The overload limit switch **RK5** backs up if the RK4 for some reason does not work.
The green light in the platform control centre is lit when the platform is inside the allowed operating range. The red light comes on as the RK4 stops the movement. When the red light is on, the lift can be operated in the direction where it stays inside the allowed outreach area. The safety limit switch RK5 backs up the operation of the RK4 by switching on the buzzer on the platform.

4. As the emergency stop button is depressed all movements stop and the power unit is turned off.
The emergency stop pushbutton must be pulled up before the power unit can be restarted (button 3 on page 14 and button 22 on page 18).

Ensure the operation of the safety devices - do not lock the chassis panel cover with key while the lift is in operation.

Downloaded from www.Manualslib.com manuals search engine

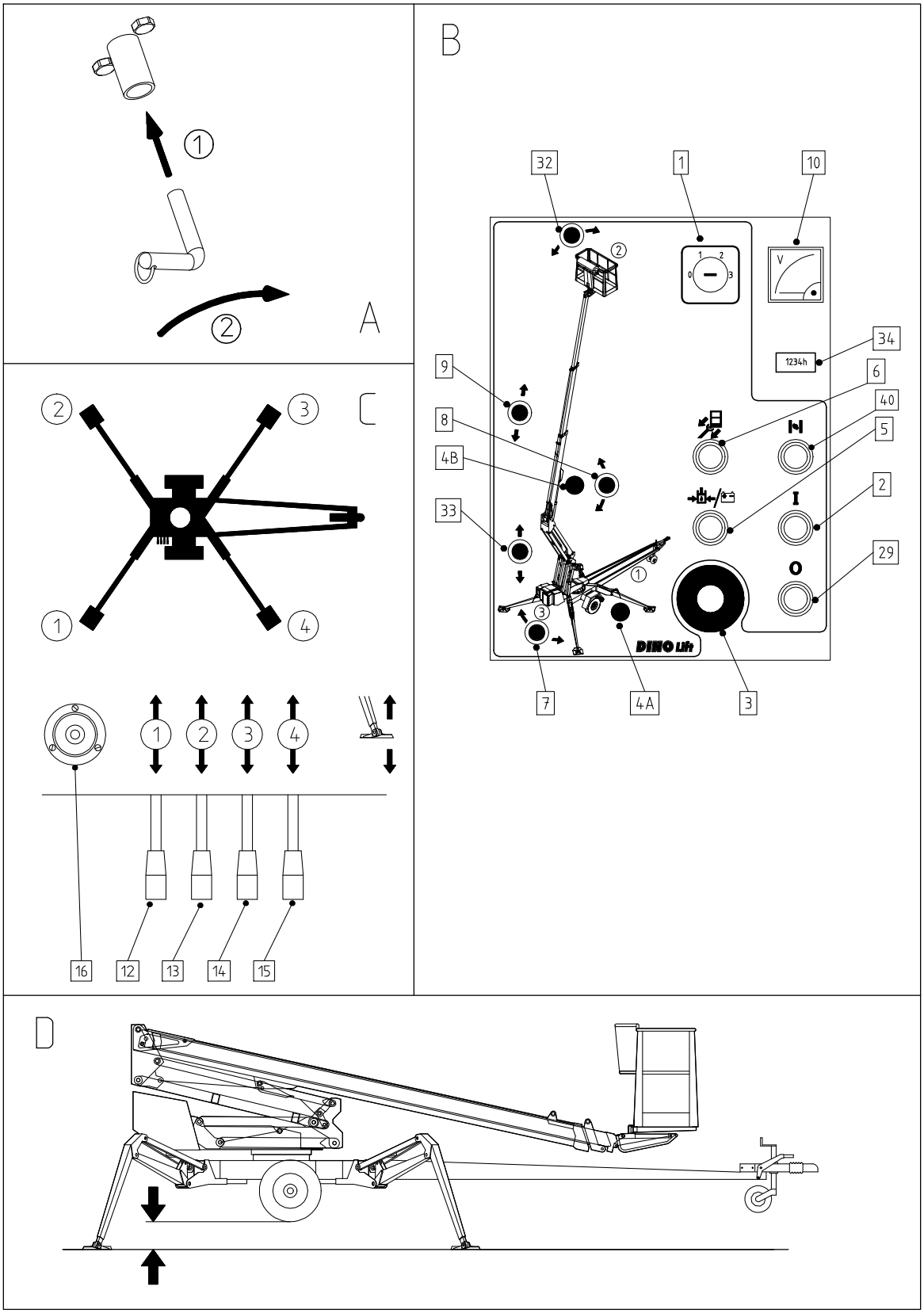

Downloaded from www.Manualslib.com manuals search engine

OPERATING CONTROLS

OPERATING CONTROLS ON THE CHASSIS CONTROL PANEL

1. Selector switch
   - 0 - ignition off
   - 1 - outrigger circuit, hydraulic drive
   - 2 -controlling the boom from the platform panel
   - 3 -controlling the boom from the chassis panel
2. Start button
3. Emergency stop button

4A. Green signal light for limit switches of the outriggers

4B. Red signal light for the safety device (RK5)

5. Start button of emergency descent system
6. Telescope in, pushbutton
7. Lever switch for turning
8. Lever switch for boom system
9. Lever switch for telescope movement
10. Voltage meter

12. Rear outrigger, right
13. Rear outrigger, left
14. Front outrigger, left
15. Front outrigger, right
16. Position indicator of chassis

29. Stop button
32. Lever switch for platform inclination
33. Lever switch for articulated arms
34. Hour meter
40. Choke

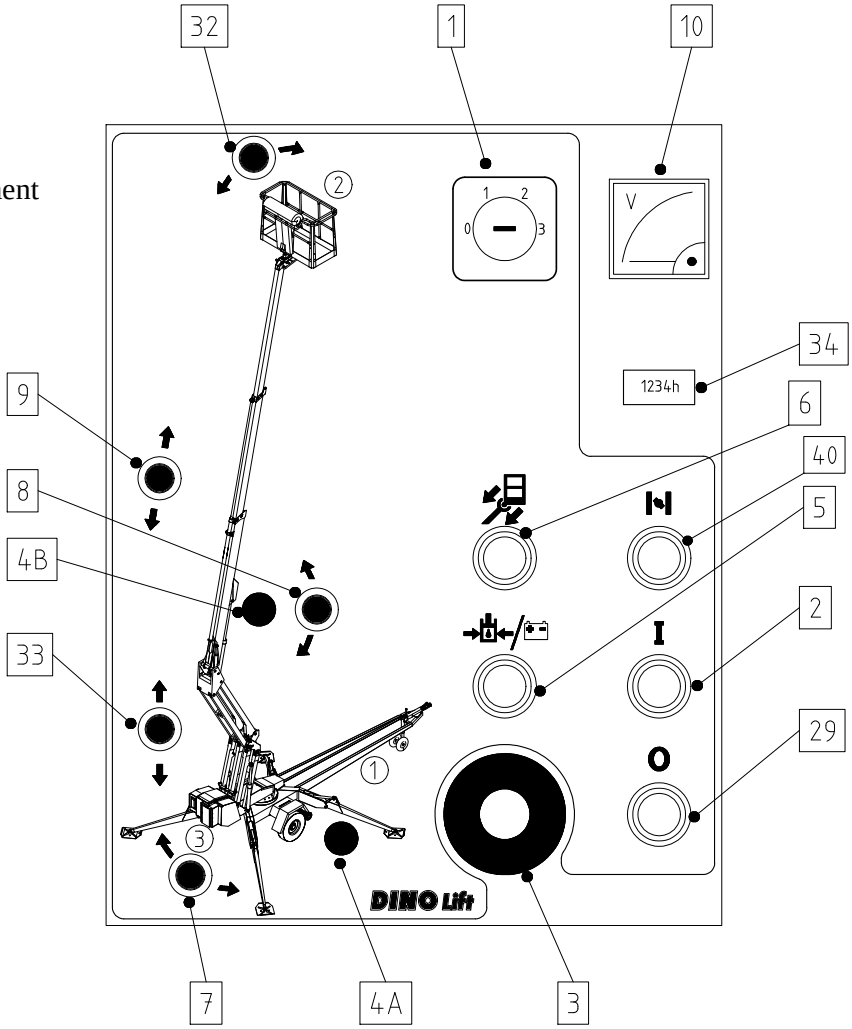

Downloaded from www.Manualslib.com manuals search engine

OPERATING CONTROLS OF DRIVE SYSTEM

28A. Forward - backward
28A + 28L drive to the left
28A + 28R drive to the right

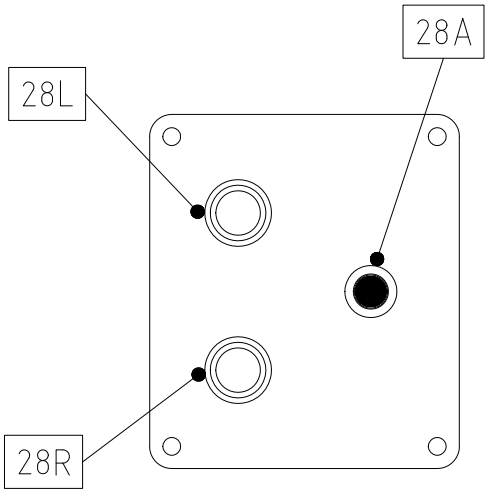

OPERATING CONTROLS OF OUTRIGGERS

12. Rear outrigger, right
13. Rear outrigger, left
14. Front outrigger, left
15. Front outrigger, right
16. Position indicator of chassis

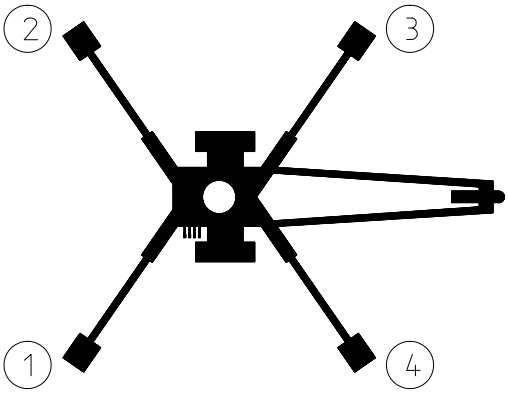

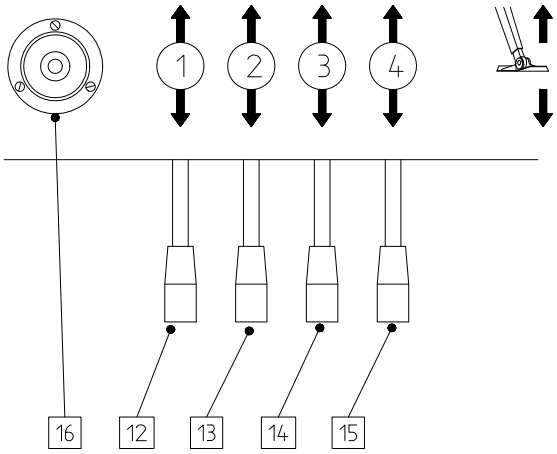

Downloaded from www.Manualslib.com manuals search engine

https://truckmanualshub.com/

OPERATING CONTROLS ON THE PLATFORM

Close the cover of the chassis control panel before operating the platform controls.
The cover must not be locked while the lift is in operation.

17. Control lever

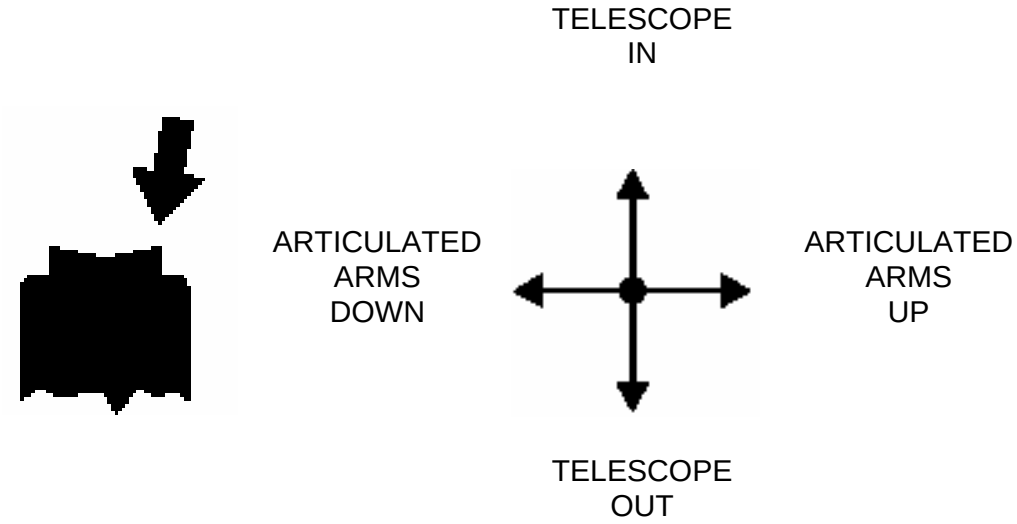

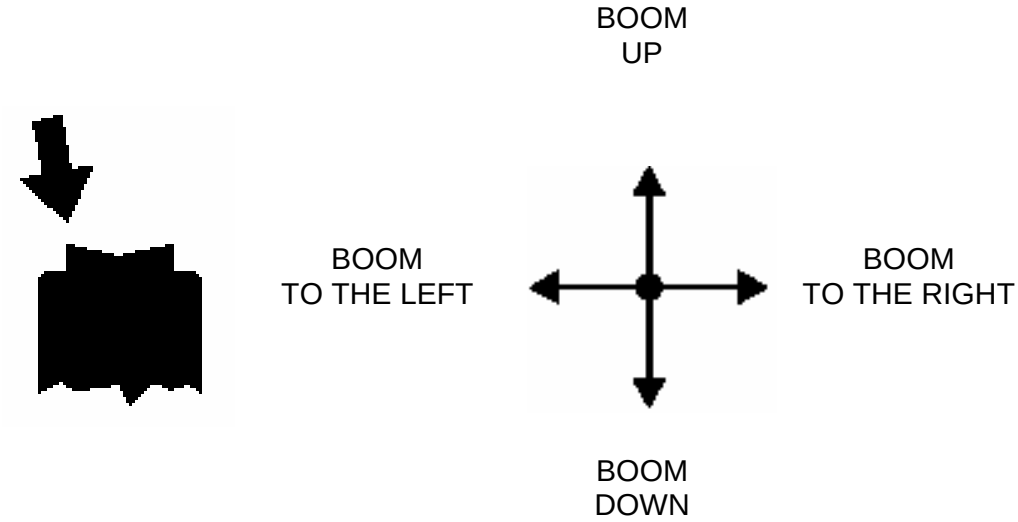

Downloaded from www.Manualslib.com manuals search engine

18. Signal lights
    - green inside allowed outreach range
    - red at the border of allowed outreach range
20. Emergency descent device start button
21. Retracting the telescope
22. Emergency stop
    - push to stop
    - pull to reset
23. Sound signal
24. Socket outlet 230VAC/ (2 pcs.)
25. Stopping the engine
26. Starting the engine
30. Turning the platform (is used simultaneously with pushbutton 35)
31. Platform swing fuse
35. Levelling of the platform (pushbutton)
36. Lever for levelling of platform (is used simultaneously with pushbutton 35)
41. Choke

Downloaded from www.Manualslib.com manuals search engine

MEASURES TO BE TAKEN IF THE LIFT IS AT RISK OF LOSING ITS STABILITY

The reason for the reduced stability can be a fault in the lift, the wind or other lateral force, collapse of the standing base or negligence in providing sufficient support. In most cases a sign of the reduced stability is the inclination of the lift.

1. If there is time, try to find out the reason for the reduced stability and the direction of its effect. Warn other people on the work site using the alarm signal.

2. Reduce the outreach to the side by retracting the telescope. Avoid abrupt movements.

3. Turn the boom away from the danger zone, i.e. to a position where the stability of the lift is normal.

4. Lower the boom.

If the stability has been lost as a result of a fault in the lift, repair such a fault immediately.

Do not use the lift until the fault has been repaired and the condition of the lift has been verified.

Downloaded from www.Manualslib.com manuals search engine

Notes

Downloaded from www.Manualslib.com manuals search engine

START-UP

1. Ground stability

- make sure that the ground is even and hard enough to support the lift in a steady level position

Soil material	Density	Max. ground pressure P kg/cm²
Gravel	High density Medium density Loose	6 4 2
Sand	High density Medium density Loose	5 3 1,5
Fine sand	High density Medium density Loose	4 2 1
Sand/ mud	High density (very hard to work) Medium density (hard to work) Loose (easily worked)	1,00 0,50 0,25

- if the ground is soft, use sufficiently large and sturdy additional plates under the support outriggers

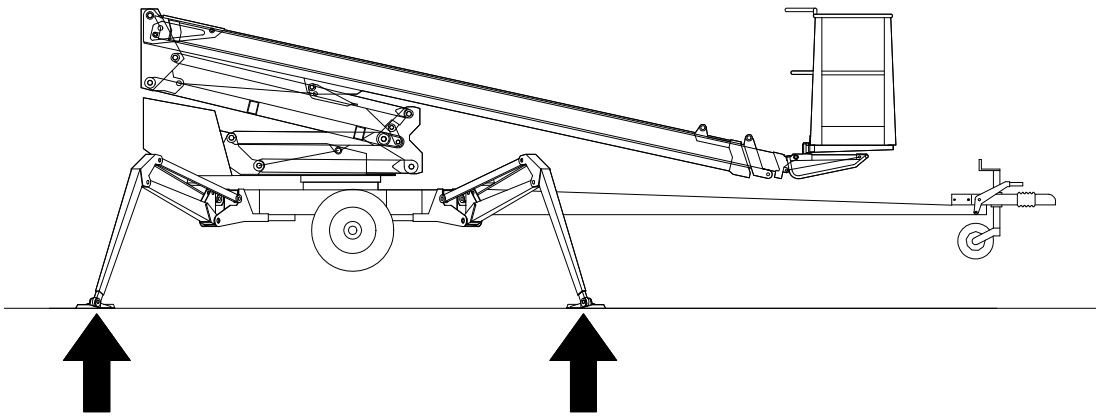

- observe the effect of ice, possible rain and inclination of the surface on the support (the support outriggers must not slip on the surface)
- the operation is prohibited if the lift is not properly supported and in a level position

2. Drive or push the lift to the inspected lifting site

- apply the parking brake
- disconnect the lift from the towing vehicle

Downloaded from www.Manualslib.com manuals search engine

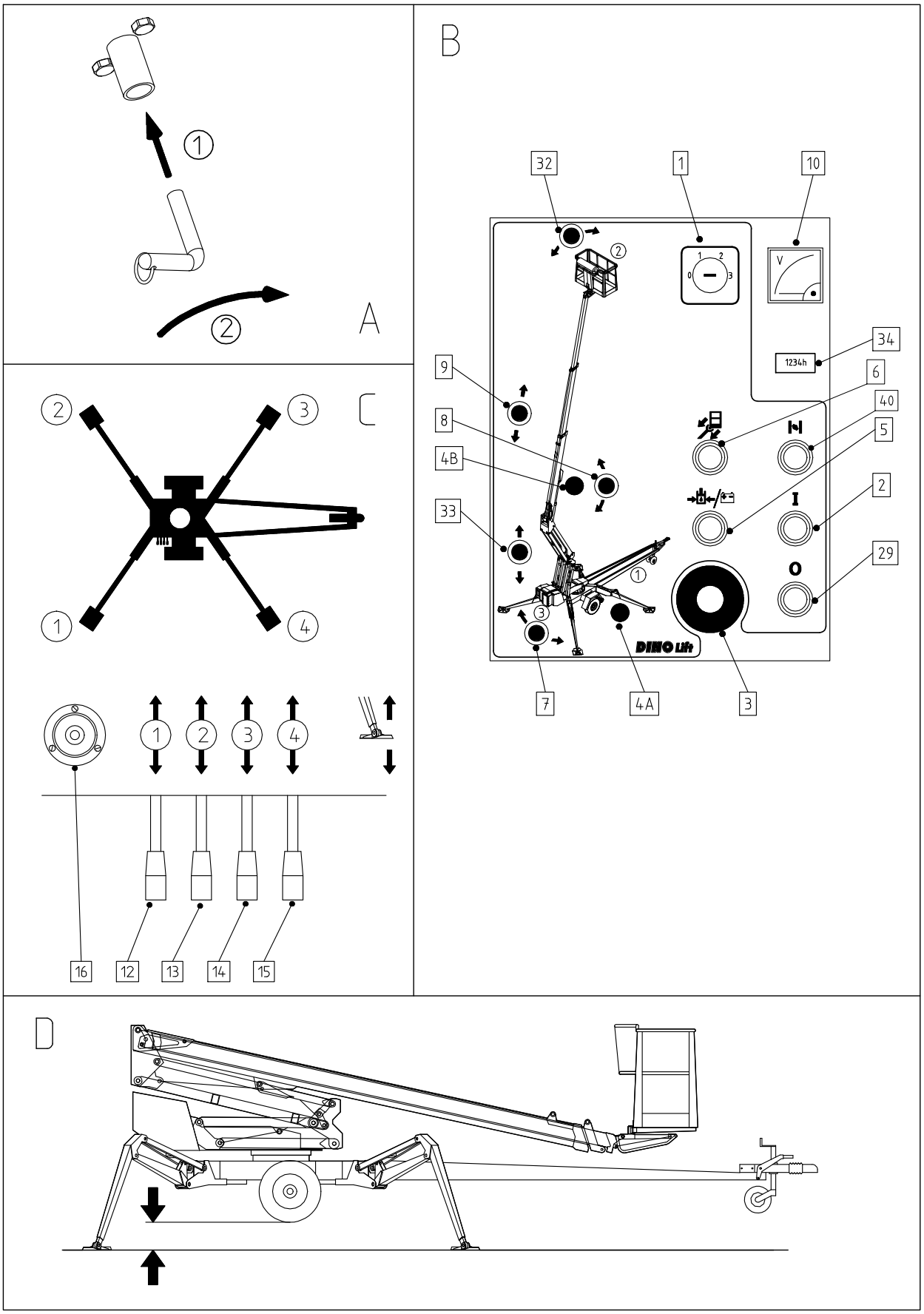

Downloaded from www.Manualslib.com manuals search engine

3. Connection of power supply to the lift

A. POWERED BY AC-SUPPLY

While the mains voltage is plugged in, the12VDC supplied by a separate unit.

- connect the mains cable to the power supply
- turn on the main switch (Fig. A)
- for maximum out of the electric motor the voltage must 230 VAC (-10%/ +6%), the frequency must be 50 Hz and rating of the fuse 10A (the length of the connecting cable has some effect)

B. POWERED BY COMBUSTION ENGINE

In the absence of the mains, the12 VDC is supplied by a battery.

- do not connect the mains cable (230 VAC)
- turn on the main switch (Fig. A)
- open the fuel cock
- switch on the choke for starting by depressing the button on the cover of the centre

  If the battery is flat start the aggregate by pulling the starter grip keeping the button at the aggregate bed depressed. Pull the starter grip lightly until you feel resistance, then pull briskly.

  Do not allow the starter grip to snap back against the engine.
- adjust the engine speed to halfway.

Leave the combustion engine running between operations because the battery only recharges while the engine is running.

Close the fuel cock when stopping the combustion engine.

Note! The fuel cock must be closed when the lift is towed.

C. OPERATION WITH DIESEL ENGINE

- do not connect the mains cable (230 VAC)
- turn on the main switch (Fig. A)

Please refer to separate user manual for the diesel engine delivered with the lift for instructions concerning the start-up of the engine, when the battery is empty.

Leave the combustion engine running between operations because the battery only recharges while the engine is running.

To avoid damaging the electronics of the diesel engine; **do not disconnect the mains current while the diesel engine is running!**

4. To access the operating controls open the cover on the chassis

Check the condition of the battery to ensure operation of the emergency descent system.

The charge level of the battery is indicated by LEDs.

During charging the red LED is on and the green LED is off.

- when the battery is almost fully charged, both LEDs are lit
- when the battery is fully charged, the green LED is lit and the red one flashes
- if both LEDs are lit after full charging, the battery is dead

5. Turn the selector switch (1) to position 1 (Fig. B)

Downloaded from www.Manualslib.com manuals search engine

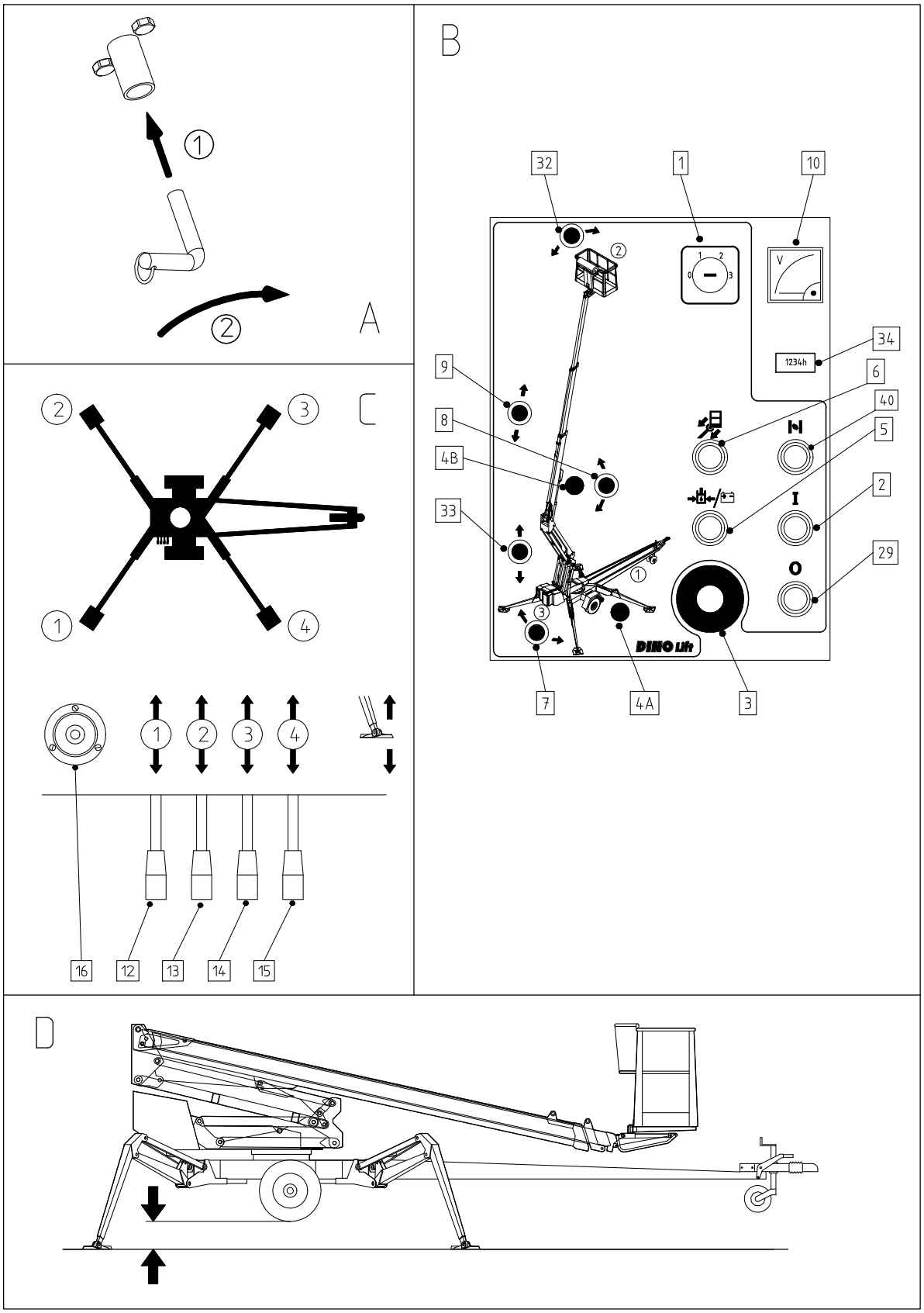

Downloaded from www.Manualslib.com manuals search engine

6. Start the engine with button 2 (green)

The electric timer of the lift automatically disconnects the supply voltage (12 VDC) 1 hour after the last time the electric or combustion engines were in operation.
Re-activate the power supply by pressing the start button either on the chassis control panel or on the platform control panel.

Petrol engine:

- turn off the choke
- adjust the engine speed

7. Lower the front support outriggers (on the tow-bar side)

8. Lower the rear support outriggers (do not damage the tow-bar jockey wheel)

9. Level the chassis with the outriggers with the help of the level gauge (16) (Fig. C). The air bubble must be located inside the inner ring.

MAKE SURE THAT THE WHEELS ARE CLEARLY OFF THE GROUND (FIG. D)

- the (green) signal light 4A on the chassis control panel comes on when all outriggers are in the lower position and the outrigger limit switch circuit is connected
- make sure all outriggers are firmly supported on the ground

Downloaded from www.Manualslib.com manuals search engine

OPERATING THE LIFT FROM THE CHASSIS PANEL

10. Turn the selector switch (1) to position 3

- now you are able to operate the boom with levers 7, 8, 9, 33 and the platform with lever 32 from the chassis panel

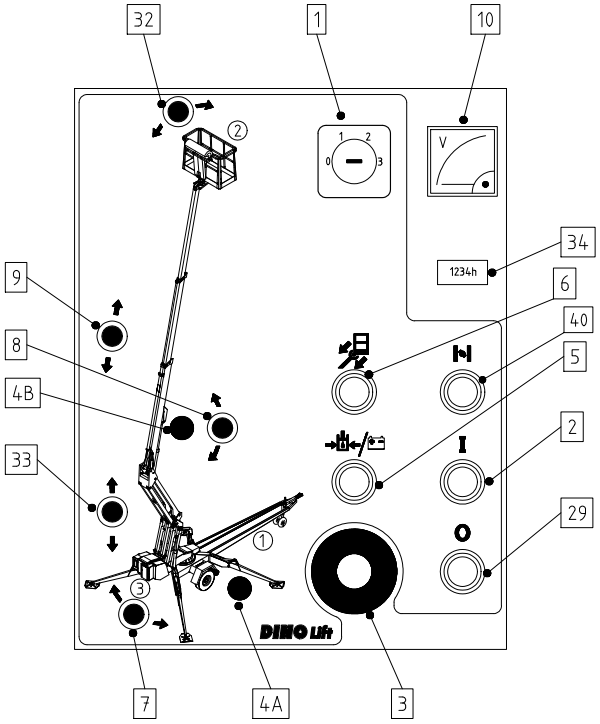

- **test the operation of the emergency descent system as follows:**

  1. start by lifting the boom about 1 - 2 metres (with lever 8) and continue by extending the telescope 1 - 2 metres (with lever 9) keeping the emergency stop button depressed - thus the movement shall stop

  2. start the power unit of the emergency descent system (pushbutton 5), retract the telescope (lever 9) and lower the boom (lever 8)

  3. pull up the emergency stop button

  4. lift the boom from the towbar

Downloaded from www.Manualslib.com manuals search engine

Note! If you have levelled the chassis of the lift ON A GRADIENT turn around the boom carefully to make sure that the turning device does not bang against the support outriggers.

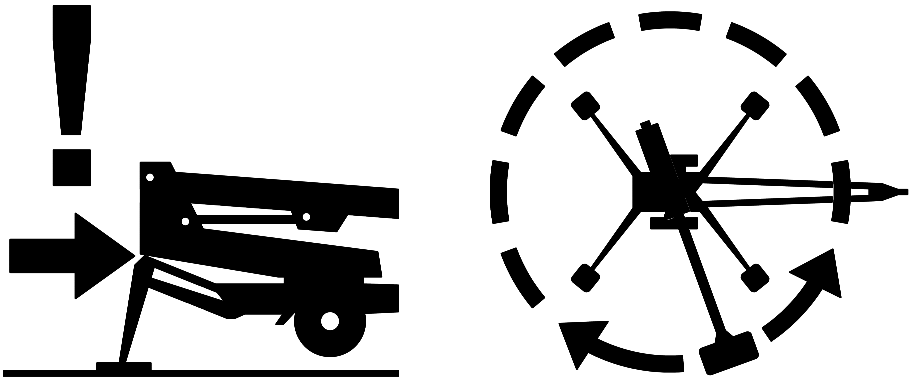

5. turn the boom to the side to enable its lowering

6. extend the telescope as much as necessary to ensure safe entrance on the platform

DO NOT DAMAGE THE TOW-BAR JOCKEY WHEEL!

The boom movements are noticeably slower when the emergency descent system is used.
The speed of the boom movements cannot be adjusted continually with the control levers when the lift is operated from the chassis control panel.

Lock the selector switch (1) in position 1 (support outriggers) before working under the boom.
Make sure that neither people nor load are on the platform.

Downloaded from www.Manualslib.com manuals search engine

OPERATING THE LIFT FROM THE PLATFORM PANEL

11. Turn the selector switch (1) to position 2 and take away the key
Do not lock the chassis control panel cover with the key.

- now you can operate the boom with lever 17 on the platform control panel

Start by pushing the rocker switch at the end of the control lever and then move the lever carefully in the desired direction of motion. If you move the lever before pushing the rocker switch, the action is deterred.

- test the operation of the emergency descent system as follows:

  - start by lifting the boom about 1 - 2 metres (with lever 17) and continue by extending the telescope 1 - 2 metres (with lever 9) keeping the emergency stop button depressed - thus the movement shall stop

  - start the emergency descent power unit (pushbutton 20), retract the telescope and lower the boom (lever 17)

  - pull up the emergency stop button

DO NOT DAMAGE THE TOW-BAR JOCKEY WHEEL!

The movement speed of the platform can be continually adjusted with the lever (17).

Downloaded from www.Manualslib.com manuals search engine

12. Test the operation of the overload limit switch RK4

- platform load about 80 kg
- drive the boom to a horizontal position

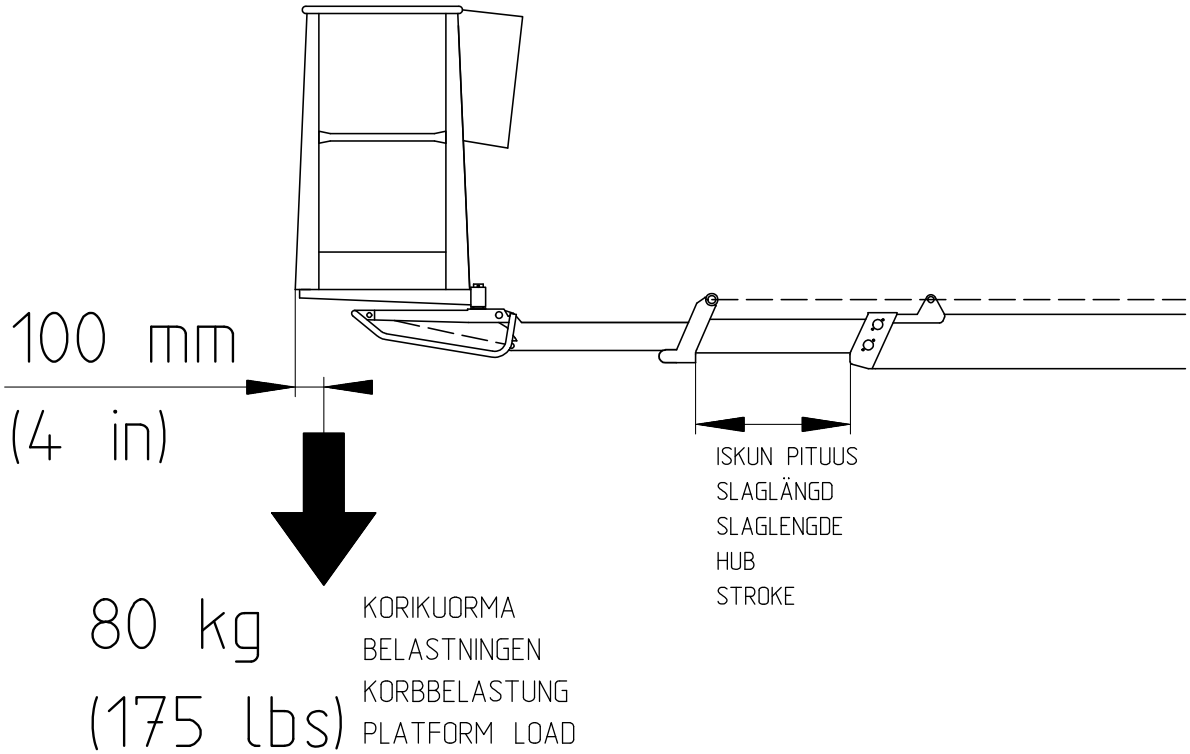

- extend the telescope
  As the movement stops the red overload light (18) must light up.
- compare the outreach with the figures in the reach diagram (page 59) in this manual.

12A. Measures to be taken after overloading has occurred

- **(The overload limit switch RK5 switches off the electric circuit of the operating controls and switches on the buzzer on the platform)**
- **retract the platform to inside the operating range of the RK4 by pushing the ”telescope in” -button (31 or 36) (the green light lights up)**
- **after this the lift may be operated normally**

WARNING!
Do not add load (e.g. another person) onto the platform while the red overload light (18) is lit.

Example: A person, who is working alone on the platform, extends the telescope, or an empty platform is driven from the chassis control panel to the maximum reach keeping it close to the ground. If the overload signal light now lights up, the telescope must be retracted before loading the platform further.

IF THE SAFETY DEVICES OR THE EMERGENCY DESCENT SYSTEM ARE NOT WORKING, HAVE THEM REPAIRED BEFORE OPERATING THE LIFT!

13. Refer to the item "Daily inspections" in the task list for servicing

Downloaded from www.Manualslib.com manuals search engine

14. With the boom slightly lifted and the telescope extended, make sure that the platform does not lower of itself while the operating controls are not being used

15. When working under cold weather conditions, let the engine run for a while without load to increase the hydraulic oil temperature. Start the operations by driving the movements carefully without load back and forth from the chassis control panel.

16. Move the platform to the work object

The platform movements can be operated with continually adjustable speed from the platform control panel (not from the chassis control panel). Only one movement can be operated at a time. If several control levers are operated simultaneously, only the movement with the least resistance will operate.

ATTENTION!

Lowering the platform to transport position: Always before lowering the boom onto the transport support, retract the telescope completely and turn the platform perpendicular to the boom.

DO NOT DAMAGE THE TOW-BAR JOCKEY WHEEL!
DO NOT TAKE ADDITIONAL LOAD IN THE UPPER POSITION!

17. Observe when lifting the platform

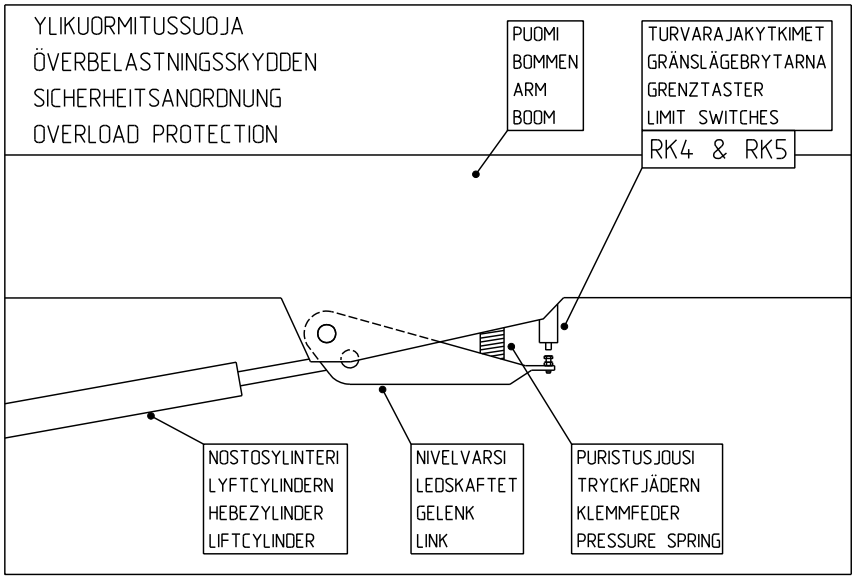

- the operating range of the platform depends on the load (see Technical Data) and is monitored by the safety limit switches RK4 and RK5, which are located under the protecting cover
  The limit switches must not be adjusted or modified. The inspection and adjustment may only be carried out by an authorized serviceman.

18. Working a long time in the same position

- there are pushbuttons for both stopping and starting on both the platform and the chassis control panels
  When the weather is warm and the platform is kept for a longer period in the same position, it is not necessary to let the engine run continuously.

Downloaded from www.Manualslib.com manuals search engine

- when the weather is cold, it is recommended to let the engine run to keep the hydraulic oil warm
- It is recommended to also leave the combustion engine running between the operations, to ensure the battery remains well charged
- check the stability and condition of the base regularly during the operation, taking into account the weather and ground conditions
- the electric timer of the lift automatically disconnects the supply voltage (12 VDC) 1 hour after the last time the electric or combustion engines were in operation
  Re-activate the power supply by pressing the start button either on the chassis control panel or on the platform control panel.

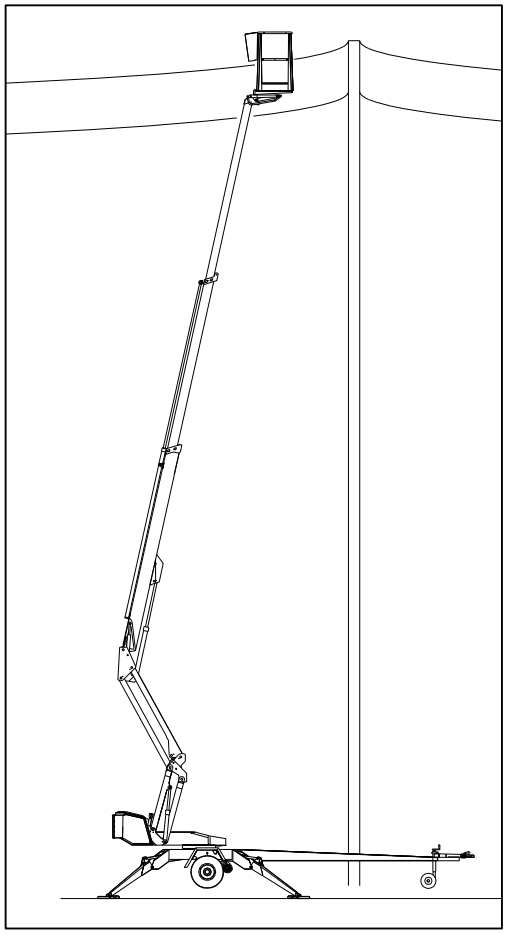

19. When moving the platform, remember the following

- be careful of the high voltage power lines
- do not exceed the max. allowed lateral force (400N)
- do not touch open electric wires
- do not throw objects from the platform
- do not damage the lift
- do not take additional load in the upper position
- do not damage other devices
- do not load the platform vertically more than what is allowed

20. When leaving the lift

- drive the lift to a safe position, preferably to the transport position
- switch off the power unit
- prevent unauthorized use of the lift by locking the control centre cover

Downloaded from www.Manualslib.com manuals search engine

21. Adjustment of the platform position

From the chassis control centre (LCB)

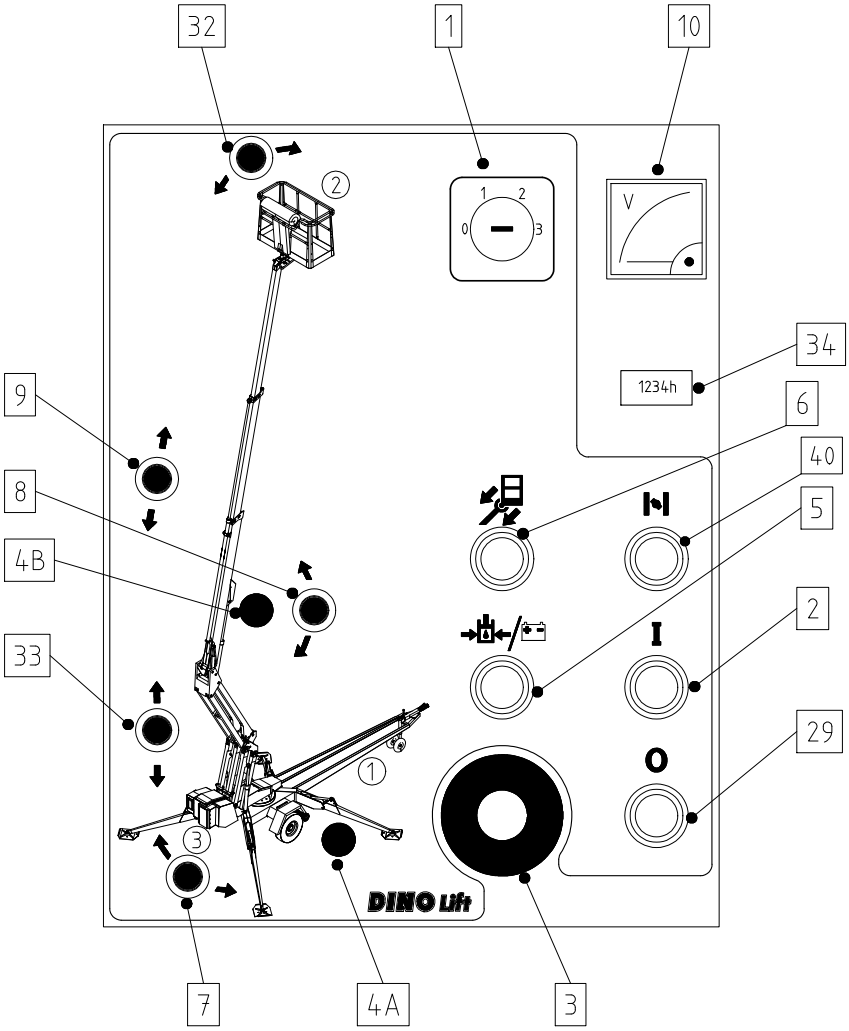

The position of the platform may be adjusted from the chassis control panel in the following way:

- turn the selector switch (1) to position 3
- select the correction movement direction with the control lever (32)

Carry out the adjustment while the boom is in the horizontal position.

Carry out the levelling of the platform while the lift is in the support position (the outriggers down).

Downloaded from www.Manualslib.com manuals search engine

From the platform (UCB):

The position of the platform may be adjusted from the platform control panel in the following way:

- turn the selector switch (1) to position 2
- press the selector button (35) for platform levelling
- select the correction movement direction with the control lever (36)

Carry out the adjustment while the boom is in the horizontal position.

Carry out the levelling of the platform while the lift is in the support position (the outriggers down).

Downloaded from www.Manualslib.com manuals search engine

EMERGENCY DESCENT SYSTEM

As a precaution against possible power failure, the lift is equipped with a battery operated emergency descent system.

1. Setup of the system
   - 12V 44Ah
   - recharger
   - hydraulic unit 12 VDC

2. Servicing the battery
   - the system incorporates an automatic battery recharger with short circuit and overheat protection
     - charging voltage maintenance 13,8V, charging 14,7V
     - rated current 3A
   - if necessary, top up distilled water above the battery elements

3. The hydraulic unit comprises:
   - pressure relief valve, set value 15 MPa (150 bar)
   - check valve
   - direct current motor 800W

Start the emergency descent system with the pushbutton (20 on the platform and 5 on the chassis). The emergency descent system can only be operated when the pushbutton is depressed.

ATTENTION!

Start by retracting the telescope completely, continue by lowering the boom and finally turn the boom system.
The emergency descent system can also be used for raising the support outriggers to the transport position

If the emergency descent system does not operate try to warn other personnel present on the site so that they can make the lift engine or the emergency descent unit operational by, for example, changing the battery.

Always check the condition of the emergency descent system battery before putting the lift into operation.
(page 24)

Downloaded from www.Manualslib.com manuals search engine

DRIVING DEVICE

The hydraulic driving device is intended for moving the lift within the work area if the towing vehicle cannot be used.

1. Do not drive downhill with the driving device if the inclination of the surface is more than 5 per cent, i.e., more than 1/20 (corresponding to a descent of 0.5 m over a distance of 10 m). If the surface gradient is greater than this, you may lose control of the device.

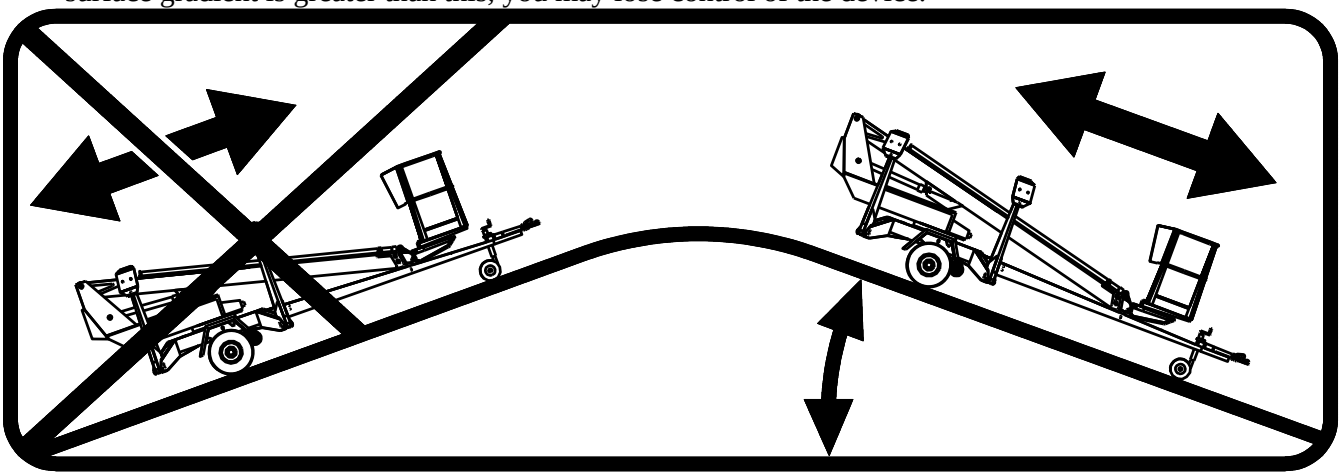

2. **When driving on a slope, the tow-bar must always point towards the descent. Never drive with the driving device with the tow-bar pointing towards the ascent.**

3. **Always place chocks under the wheels before disconnecting the device from the towing vehicle.**

4. Always apply the handbrake before disconnecting the device from the towing vehicle. Only use the handbrake as a parking brake or for emergency stopping.

5. Never leave the lift on a slope being supported only by the self-braking action of the driving device.

6. **When transferring the lift using the driving device:**
   - **take care not to allow the wheel to roll over your foot**
   - **look out for sudden sideways movements of the tow-bar**
   - **be careful not to cause danger to other people and the environment**

7. **Do not move the device on a slope using only hand-power. You may lose control over it and cause an injury.**

8. **Never park a vehicle combination on a slope.**

Downloaded from www.Manualslib.com manuals search engine

DRIVING DEVICE

The hydraulic driving device is intended for moving the lift within the work area if the towing vehicle cannot be used.

- start the aggregate and adjust the engine speed to ¾ of the maximum (petrol engine). The running speed of the aggregate affects the driving speed.

- turn the selector switch 1 outriggers to position (1)

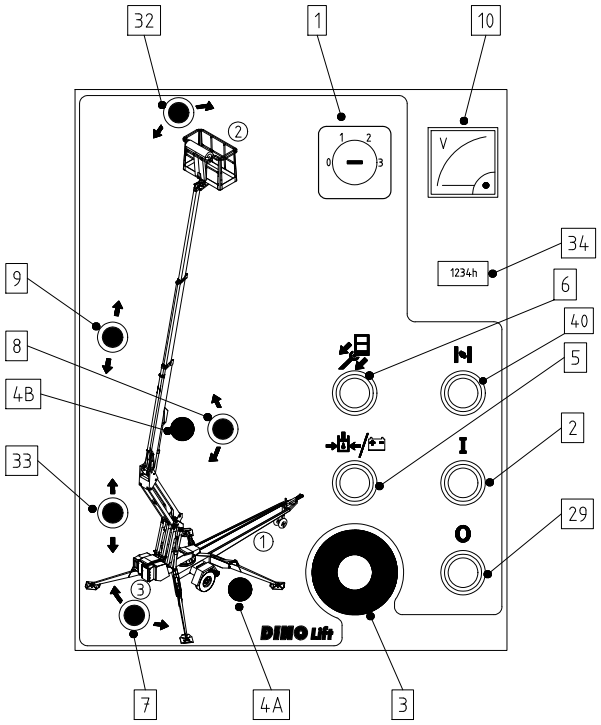

- make sure that the platform is in the transport position and the outriggers are in the upper position
- make sure that the mains cable is long enough to cover the whole travel distance (power supply from mains)
- press the driving device against the wheel

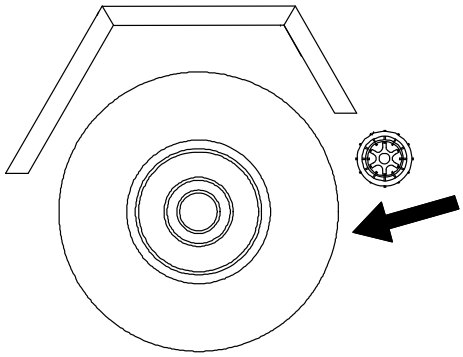

Downloaded from www.Manualslib.com manuals search engine

- release the parking brake

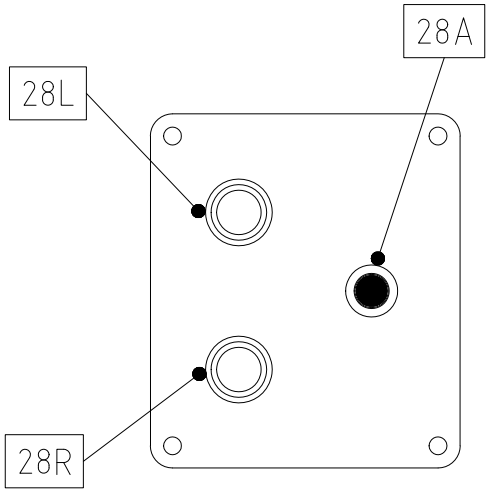

- drive the unit using the pushbuttons

forward / backward	28A
to the left	28A + 28L
to the right	28A + 28R

- do not drive the jockey wheel into obstacles or potholes

ATTENTION! If one of the wheels bumps into an obstacle, the lift may turn abruptly.

- after the driving apply the parking brake
- disconnect the driving device from the wheel

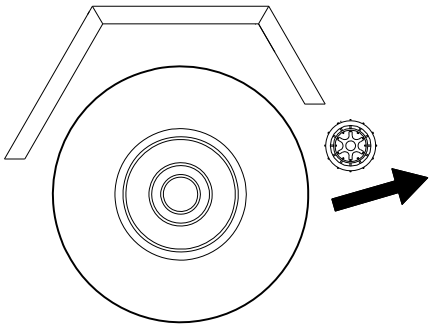

- Switch on the driving device by turning the switch 27 to position 0

Remote control of the driving device (optional extra).
- plug in the remote control cable to the socket in the driving device control box

ATTENTION!
Be careful not to damage the jockey wheel tube by extending it too much.
As the lift is moved with the driving device, the suitable length for the jockey wheel stem can be achieved by adjusting the gap between the lower surface of the tow-bar/brake rod and the wheel to 1 - 3 cm. Thus the wheel can turn freely.

Downloaded from www.Manualslib.com manuals search engine

SPECIAL INSTRUCTIONS FOR WINTER USE

- **the lowest allowed operating temperature of the lift is -20 °C.**
- if the temperature is below zero, let the power unit run for a few minutes before starting the movements
- start with a few movements to warm-up oil in the cylinders and to ensure proper operation of the valves
- check that the limit switches and the emergency descent devices are operational and clean (from dirt, snow, ice, etc.)
- protect the control panel and the platform from snow and ice whenever they are not in use

ALWAYS KEEP THE LIFT FREE FROM DIRT, SNOW ETC.

Downloaded from www.Manualslib.com manuals search engine

MEASURES TO BE TAKEN AT THE END OF THE WORKING DAY

1. Retract the telescope boom completely.

2. Check that the platform is perpendicular to the boom.

3. Lower the boom/platform onto the support on the tow-bar.
   - the limit switch on the transport support prevents operation of the support outriggers if the platform is not down

4. Close the cover on the platform control panel.

5. Turn the selector switch to position 0 and turn off the mains switch.

6. If you want to charge the battery, keep the mains cable connected, otherwise disconnect the lift from the mains supply.

7. Make sure that the covers are locked.

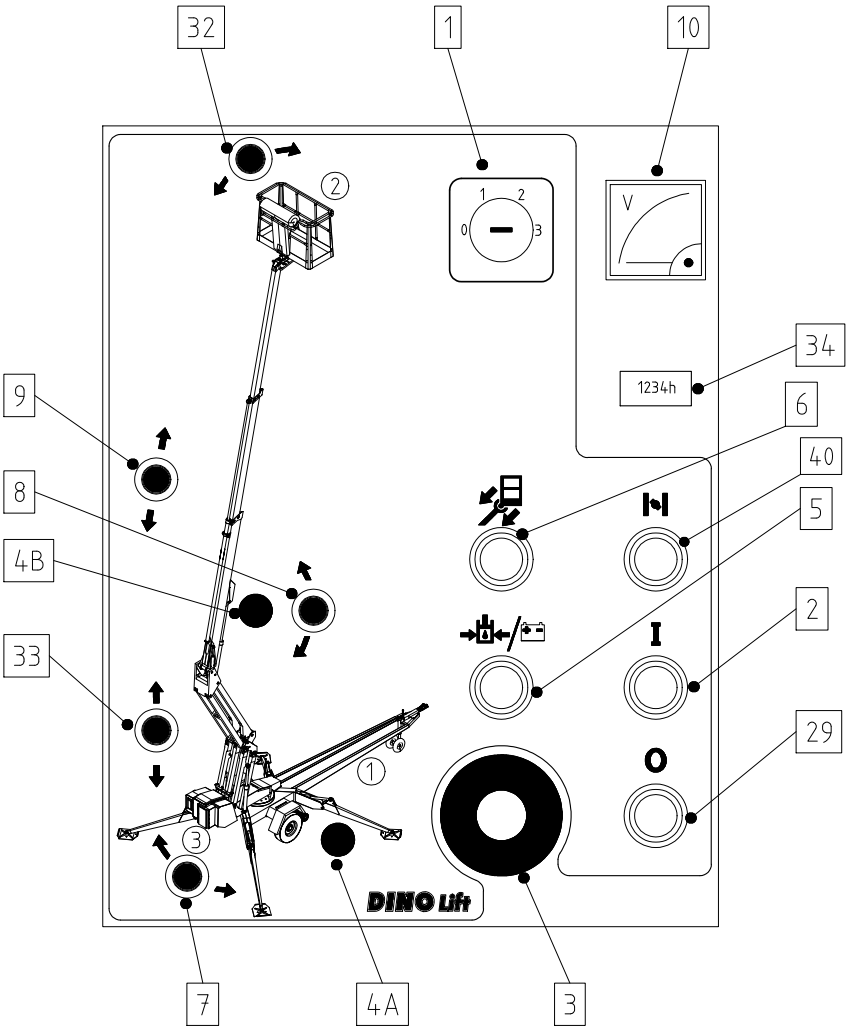

Downloaded from www.Manualslib.com manuals search engine

PREPARING THE LIFT FOR TRANSPORT

1. Retract the telescope boom completely.

2. Check that the platform is perpendicular to the boom.

3. Lower the boom/platform onto the support on the tow-bar.
   - the limit switch on the transport support prevents operation of the support outriggers if the platform is not down

4. Close the cover on the platform control panel.

5. Turn the selector switch 1 outriggers to position (1).

6. Lift the support outriggers.
   - at first the rear support outriggers (do not damage the rear lights)
   - then the front support outriggers (do not damage the jockey wheel)

7. Apply the parking brake.

8. Make sure that the driving device is disconnected.

9. Turn the selector switch to position 0 and disconnect the lift from the power supply.

10. Turn the mains switch to position 0.

11. Make sure that the covers are locked.

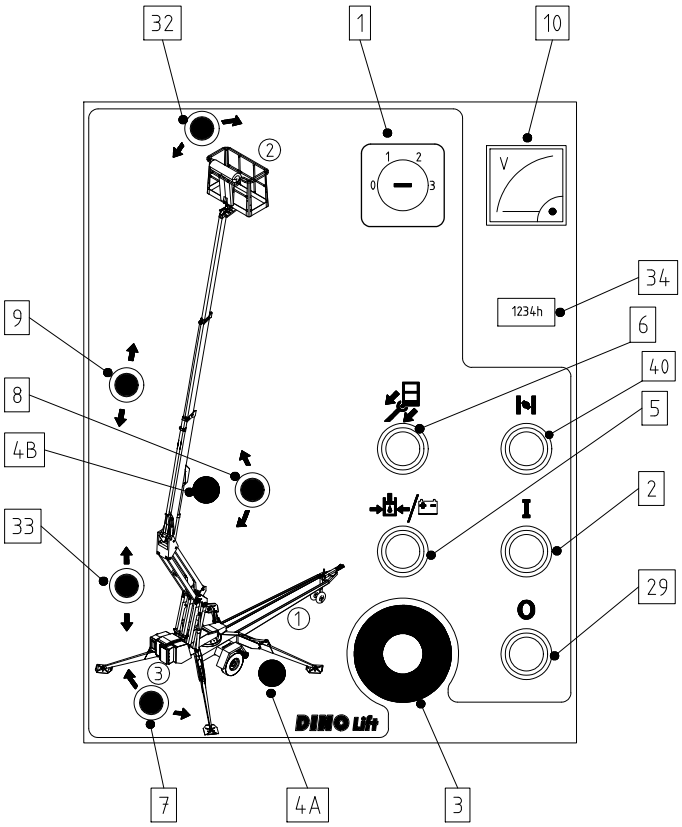

Downloaded from www.Manualslib.com manuals search engine

CONNECTION TO THE TOWING VEHICLE

1. Lift up and push forward the ball-coupling handle (in the driving direction). Now the ball-coupling is released.

2. Press the ball-coupling onto the towball using only a little force. The connection and locking take place automatically.

ATTENTION! ALWAYS MAKE SURE AFTER THE CONNECTION THAT THE BALL-COUPLING IS PROPERLY LOCKED!

Clean and lubricate the ball-coupling regularly.

3. Connect the emergency stop wires and light plug to the vehicle. Check the cable for chafing and proper operation of the wires.

4. Check the operation of the lights.

5. Carefully release the parking brake and make sure that its locking is in order and that its handle stays in the lower position.

6. Lift up the jockey wheel to the transport position.

NO LOAD ALLOWED ON THE PLATFORM DURING TOWING OF THE LIFT!

In particular, if you are parking or disconnecting the lift from the towing vehicle on a slope, apply the parking brake as firmly as possible. After having applied the parking brake, push the lift backward to make the reverse automatics release the brake shoes. The spring cylinder pulls the parking brake tighter. Thus the brakes of the vehicle are again properly on.
Adjust the brakes according to the service instructions.
Place chocks under the wheels as an additional precaution.

If you leave the lift standing for a longer period of time, for example over the winter, we recommend propping it up to release any load from the wheels.

ATTENTION!

- Check
  - transport position of the outriggers
  - locking of the ball-coupling
  - operation of the lights
  - parking brake
  - condition and pressure of the tyres
    - rear axle. 450 kPa (4,5 bar)
    - jockey wheel 250 kPa (2,5 bar)
  - safety wires
  - locking of the brakes after transportation
  - attachment of the jockey wheel
  - that the driving device is disconnected from the wheel

Downloaded from www.Manualslib.com manuals search engine

INSTRUCTIONS FOR SERVICE AND MAINTENANCE

GENERAL SERVICE INSTRUCTIONS

- carry out the servicing and inspection of the lift in accordance with the instructions
- when it comes to more demanding repair works turn to a specialist or contact the distributor or the manufacturer of the lift
- do not modify the lift without written consent from the manufacturer
- any such faults which may affect the operational safety of the unit must be repaired before the lift is next used
- do not let oil spill on the ground
- keep the lift clean, especially the platform
- clean up the lift before service and inspection
- use genuine spare parts
- support the platform, boom system and support outriggers in a position in which the load does not rest on the structure under repair or cause any other danger (e.g. transport position or use of supporting structures)
- the device may be lifted with two slings, each with a load-carrying capacity of at least 2 500 kg or slinging at the four lugs (see picture)
  Be careful not to damage the device during the lifting!

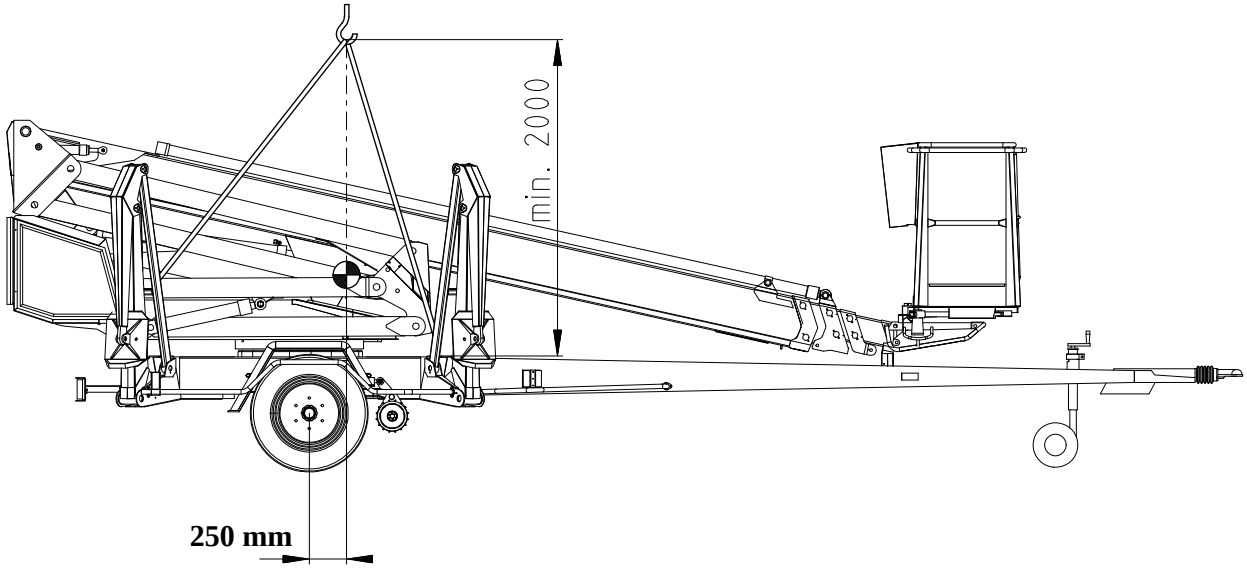

Downloaded from www.Manualslib.com manuals search engine

SERVICE AND INSPECTION INSTRUCTIONS

1. The first service after 20 hours of operation

- change the pressure filter element
- adjust the brakes according to the instructions on page 47
- check the the wheel bolts for tightness after about 100 km of driving (325 Nm)

2. Daily service

- check the oil level in the hydraulics, top up if necessary
- check the hydraulic connections
- check the unit visually
- check the operation of the emergency descent and emergency stop functions
- check the operation of the safety devices

3. Weekly service

- check the tyre pressure (450 kPa, jockey wheel 250 kPa)
- grease the fulcrum pins (refer to lubrication plan, page 43)
- check the sliding surfaces of the telescope and apply silicon if necessary
- check the clearance between the slide pads and surfaces and adjust the pads if necessary
- put a load of about 80 kg onto the platform and drive the boom to level position

Continue by extending the telescope until the red signal light lights up and the movement stops. Measure the stroke in accordance with the instructions on page 58 and compare it with the setting of the outreach limit RK4. If the stroke exceeds the allowed value, contact the service person.

4. Service every six months

- change the hydraulic oil and the filter cartridge.
- check the condition of the brakes
- check the the wheel bolts for tightness (325 Nm)
- grease the gear ring of the turning device

5. Periodic service every 12 months ín accordance with the instructions for regular servicing below in this manual

IF THE LIFT IS OPERATED UNDER DEMANDING CONDITIONS (IN EXCEPTIONALLY HUMID OR DUSTY ENVIRONMENT, CORROSIVE CLIMATE, ETC.) THE INTERVALS BETWEEN THE OIL CHANGES AND THE OTHER INSPECTIONS SHALL BE SHORTENED TO MEET THE PREVAILING CONDITIONS IN ORDER TO MAINTAIN THE OPERATIONAL SAFETY AND RELIABILITY OF THE LIFT.

THE PERFORMANCE OF THE PERIODIC SERVICING AND THE INSPECTIONS IS ABSOLUTELY MANDATORY, BECAUSE THEIR NEGLIGENCE MAY IMPAIR THE OPERATIONAL SAFETY OF THE LIFT.

THE GUARANTEE WILL NOT REMAIN VALID, IF THE SERVICING AND THE PERIODIC INSPECTIONS ARE NOT PERFORMED.

Downloaded from www.Manualslib.com manuals search engine

https://truckmanualshub.com/

LUBRICATION PLAN

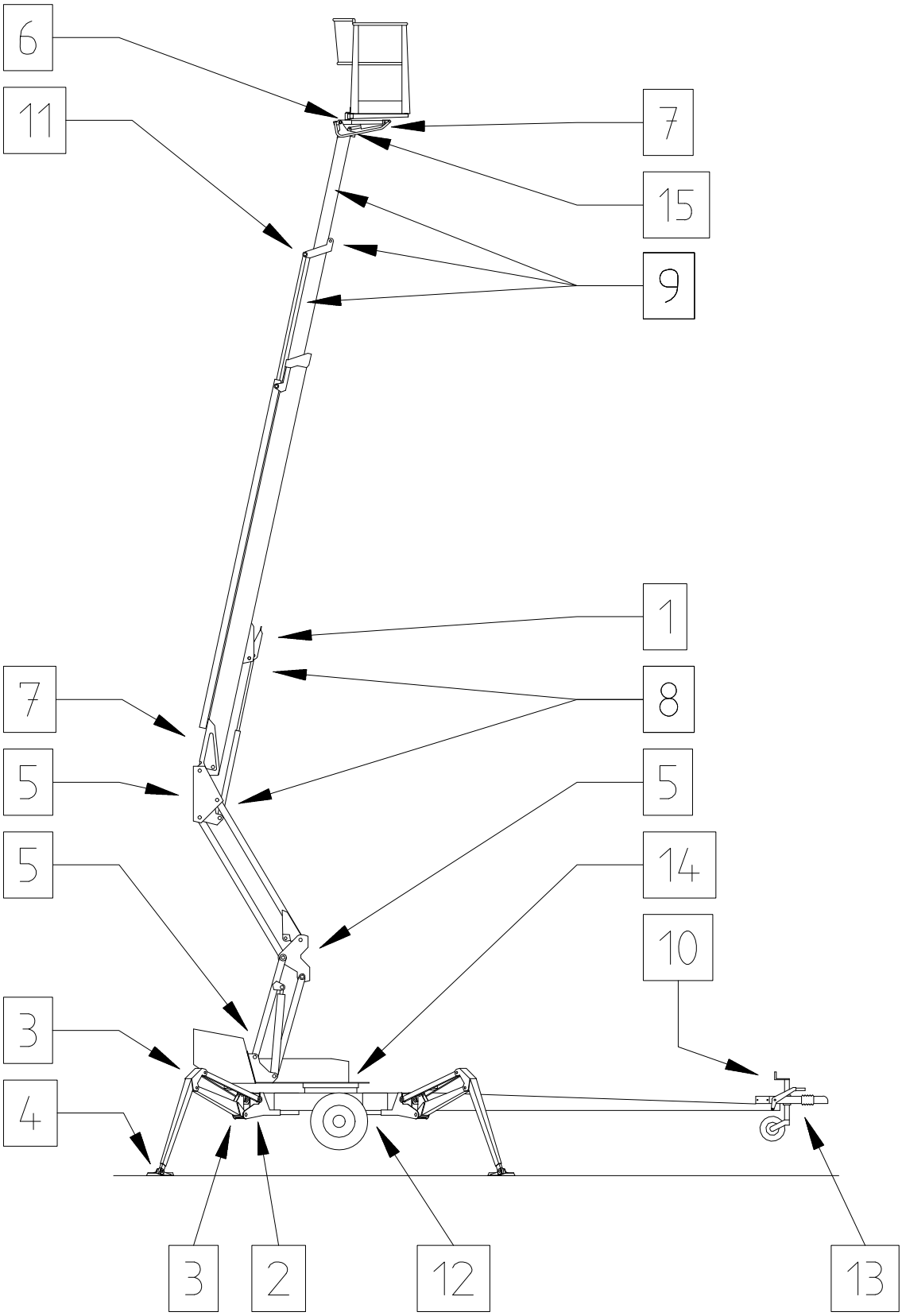

Downloaded from www.Manualslib.com manuals search engine

EVERY 50 HOURS

1. Bearings of the safety device
2. Bearings of the outrigger cylinders
3. Bearings of the outriggers
4. Bearings of the outrigger foot plates
5. Bearings of the boom and the articulated arms
6. Bearings of the platform
7. Bearings of the levelling cylinders (except the bearing on the rod side of the upper levelling cylinder)
8. Bearings of the lifting cylinder
9. Sliding surfaces/rolls of the telescope
10. Jockey wheel slide and threads

TWICE A YEAR

11. Bearing of the telescope cylinder
12. Driving device
13. Overrun brake - overrun
14. Turning device bearings* and gear ring
15. Bearing on the rod side of the upper levelling cylinder

Lubricant Esso Beacon EP2 or equivalent

The overload protection device joint (point 1) must absolutely be lubricated regularly and **always immediately after the lift has been washed**.

Moving parts of the mechanism of the outrigger limit switch system must be lubricated every 50 hours.

If necessary, apply a thin grease film on moving parts of the ball-coupling.

Always lubricate the lift and apply a protective grease film immediately after the washing.

*Remove the crescent-shaped covers from the underside of the lift in order to enable lubrication of the turning bearing nipples (4 pieces).

Lubricate the visible parts of the Flyer-chains for the boom twice a year. Use Master chain lubricant 1-4014 or equivalent.

Downloaded from www.Manualslib.com manuals search engine

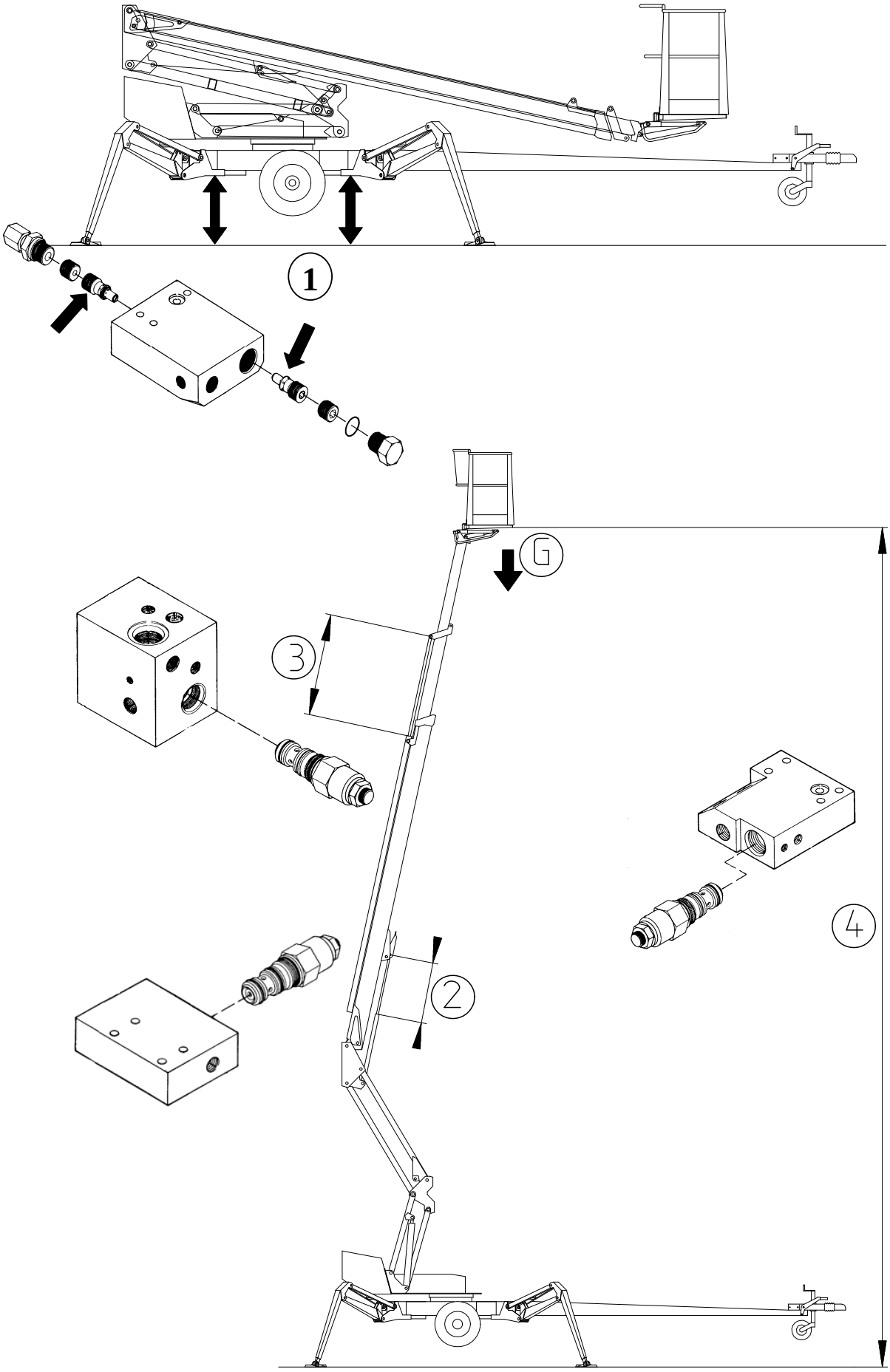

Downloaded from www.Manualslib.com manuals search engine

LOAD HOLDING AND LOAD REGULATION VALVES

Check of operation

1. To check the tightness of the outrigger cylinder load holding valves measure the height position of the chassis from the floor separately at each outrigger. After a few minutes, measure the height again.

2. To check the tightness of the load regulation valves on the boom cylinder and the cylinders of the articulated arms drive the boom to a position in which its movement can be reliably measured. Observe the possible movement of the boom in a few minute's time.

3. To check the tightness of the load regulation valve on the telescope cylinder extend the telescope and stop the movement at any position, measure the stroke and observe in a few minutes time that the stroke does not change. (Note! Drive the boom to an almost vertical position).

4. To check the tightness of the load regulation valve on the platform levelling system, put a load of 100 - 200 kg on the platform and measure the distance from the rear edge of the platform to the floor. Observe for a few minutes that its height position does not change.

Service instructions

1. Disconnect and clean the valve

2. Check the O-rings and replace, if necessary.

3. Put the valves carefully in place

4. Replace the valve, if necessary

5. Do not change the settings of the valves

Support the platform, boom system and outriggers in a position, in which the load does not rest on the repaired structure. Make sure to relieve the residual pressure from the cylinders.

Downloaded from www.Manualslib.com manuals search engine

WHEEL BRAKES AND BEARINGS

Adjustment of the brakes

Jack up the lift until the wheels rise off the ground and support it in this position.

Make sure that the wheels can rotate freely.

The brake rods must be slack (with the handbrake released).

Check the attachment of the brake rods.

Turn the adjustment wheel behind the hole shown by the arrow until the wheel can no longer be turned by hand.

Turn the adjustment wheel counter-clockwise until the wheel can be turned freely.

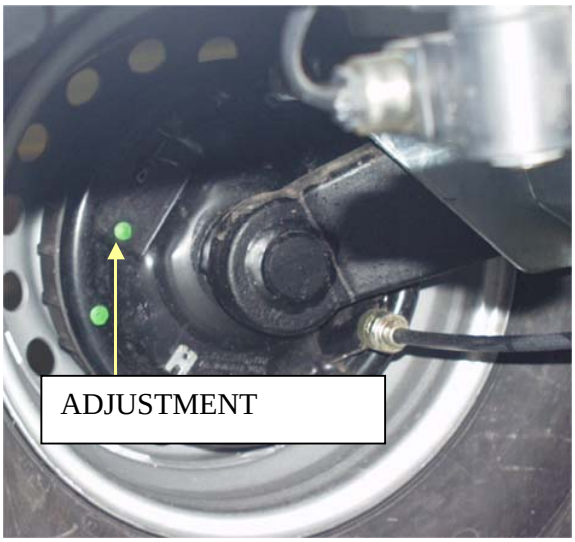

Adjust the braking force with the nuts keeping the brake balancer perpendicular to the tow-bar so that both wheels will brake.

Downloaded from www.Manualslib.com manuals search engine

Tightening the brake system too much causes overheating of the brakes during transportation and increases the required towing force.

We recommend performing a braking test after the adjustment. Check the flawless operation by braking 2 - 3 times in the course of the test run.

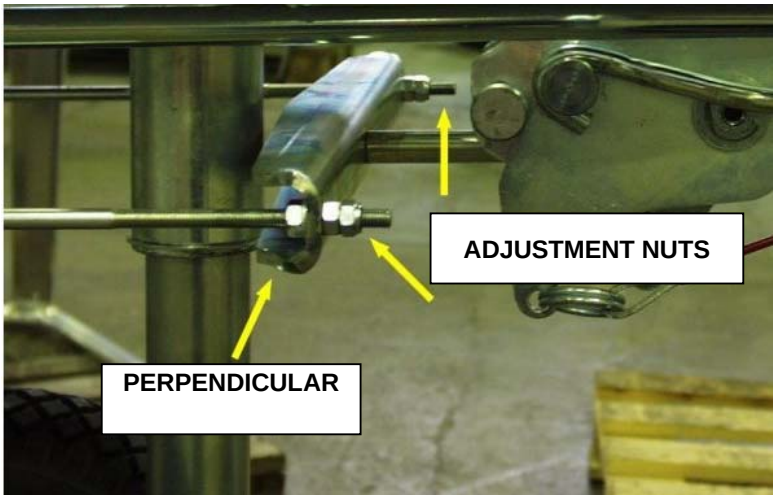

Downloaded from www.Manualslib.com manuals search engine

Adjustment of the bearing clearance

The wheel bearings are lubricated for life and do not require any service.
(The bearings do not require any lubrication and they cannot be adjusted)

Service intervals

500 km	(running in)
5 000 km	adjustment of the brakes, lubrication of the moving parts of the overrun
13 000 - 15 000 km	or every six months: a) check the brake linings for wear b) check the operation of the overrun brake c) lubricate the sliding parts of the overrun brake

The service-life of the double row angular contact compact bearings is long and they are maintenance-free. Therefore, the bearings very rarely break under normal operating conditions. If a bearing failure, due to exceptional operating conditions, occurs, replace the entire brake drum assembly with the pressed-in bearings and locking nut.

ATTENTION!
Assign a specialized workshop for the work.

Turn the wheels at least once every 3 months to keep the lubricating film intact.

Downloaded from www.Manualslib.com manuals search engine

LEVELLING SYSTEM OF THE PLATFORM

- A so-called Slave Cylinder System is applied for levelling of the platform:
  - the slave cylinder under the platform is controlled by a master cylinder
  - the platform keeps its level position only if the valves in the system are tight
  - the levelling system comprises the following parts:

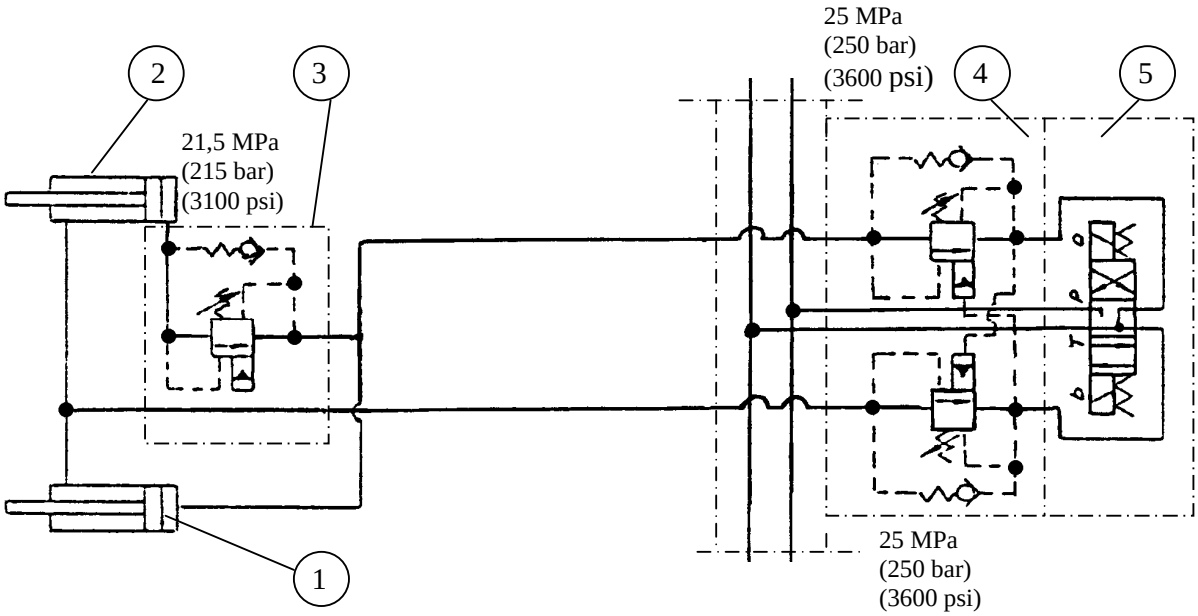

1. Master cylinder
2. Slave cylinder
3. Load regulation valve
4. Double load regulation valve
5. Electric directional valve

- If the platform, viewed by the operator, drifts forwards, the reason can be:

1) a leak in the slave cylinder double load regulation valve (on the piston rod side) in the direction of the electric directional valve (which is not tight)
2) an internal leakage in the cylinder

- If the platform, viewed by the operator, drifts backwards, the reason can be:

1) a leak in the load regulation valve (4) on the piston (bottom) side of the slave cylinder in the direction of the electric directional valve (5) (which is not tight)
2) an internal leakage in the cylinder

The leak will cause drifting of the platform until the load regulation valve (3) under the platform id closed. The closing is caused by dropping of the pressure on the piston rod side to the opening ratio, which is 5:1

If the valves are not tight, refer to the service instructions in the chapter "load holding and load regulation valves"

Settings of the load regulation valves:

- the opening pressure of the double load regulation valves (4) is 25 MPa (250 bar)
- the opening pressure of the load regulation valve (3) under the platform is 21,5 MPa (215 bar)

Do not change the preset values.

Downloaded from www.Manualslib.com manuals search engine

REGULAR SERVICING

The lift shall be serviced regularly at intervals of 11 - 12 month.

Under demanding conditions where moist, corrosive substances or corrosive climate may speed up the deterioration of the structure and induce malfunctions, the inspection must be performed more often and the influence of corrosion and malfunctions must be reduced by using appropriate protective means.

Only technical specialists who are familiar with the structure and the operation of the lift are allowed to maintain the lift.

We recommend turning to the service staff of the dealer.

SCHEDULE FOR REGULAR SERVICING

1. Clean the lift thoroughly before the service

The hydraulic and electric appliances must not be dismantled if they are not clean. Any contaminants in the system may cause malfunctions later on. Wash the lift externally.

ATTENTION!
Be careful not to direct the high pressure water jet straight to the electric appliances, such as the control panels on the chassis and on the platform, relays, solenoid valves and limit switches.

- use pressure air to dry the electric devices, hydraulic connectors etc.before opening them
- apply appropriate moisture repellent to the electric appliances after the drying
- always protect the piston rods with e.g. CRC3-36 anti-corrosive agent after washing with a solvent

REMEMBER CLEANLINESS!

Downloaded from www.Manualslib.com manuals search engine

2. Change the hydraulic oil and replace the filter
(protect your skin against the hydraulic oil)

- remove the plug and drain the oil tank with the cylinders of the lift completely retracted

- clean and rinse the oil tank with suitable agent

- replace the pressure filter

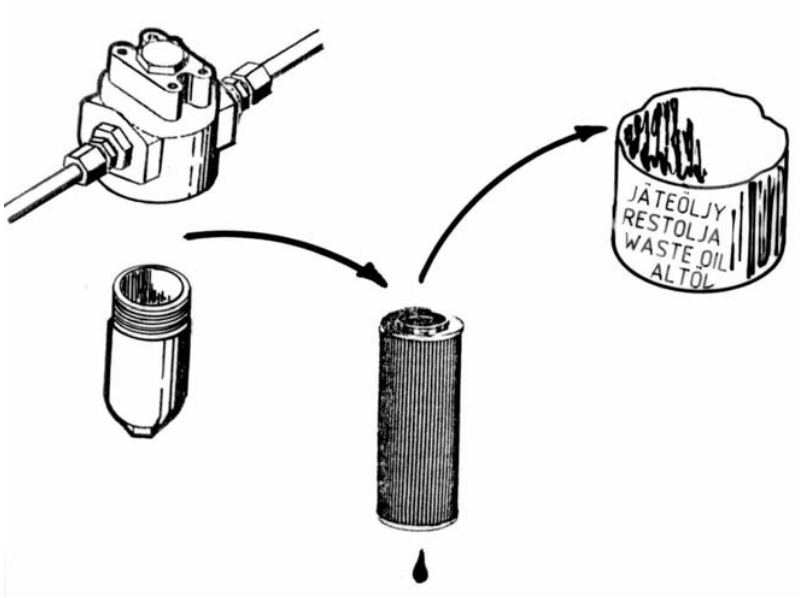

- install the drain plug

- refill the tank with fresh oil, the oil volume required for change is about 20 l

Factory filling **Neste Hydrauli 28 Super** or **Esso Univis J26** or environmentally friendly **Raisio Biosafe Hydraulic oil 32 NE**.

- never mix different oil sorts

- if required, top up hydraulic oil to the level with the upper edge of the level eye while the lift is in the transport position.

3. Check the hydraulic hoses and pipes

Replace any externally damaged hoses or clashed pipes. Check the connections.

Downloaded from www.Manualslib.com manuals search engine

4. Inspect joints of the support outrigger

- lower the outriggers slightly
- swing the outriggers back and forth in the horisontal plane and check the joints for play

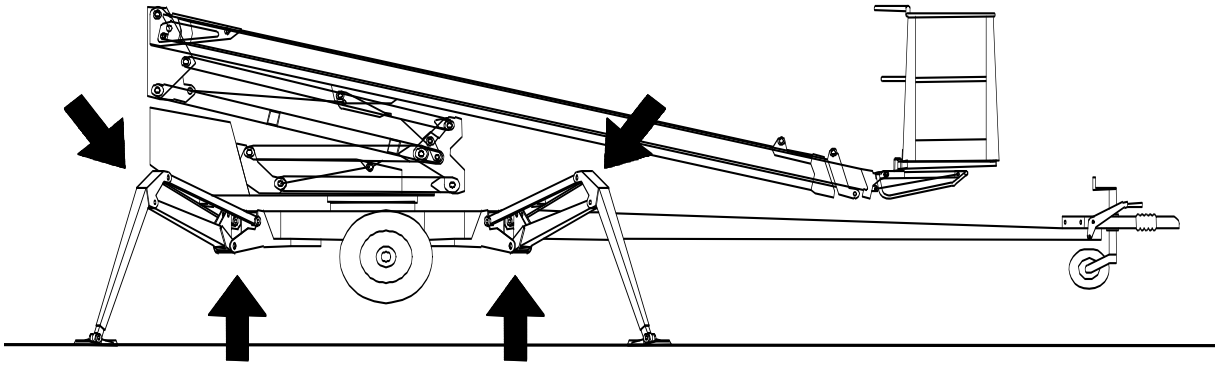

- check the operation and condition of the limit switch mechanisms on the outriggers
- replace any worn out parts
- lubricate the joints (refer to the lubrication plan)

Lower the outriggers to support position.

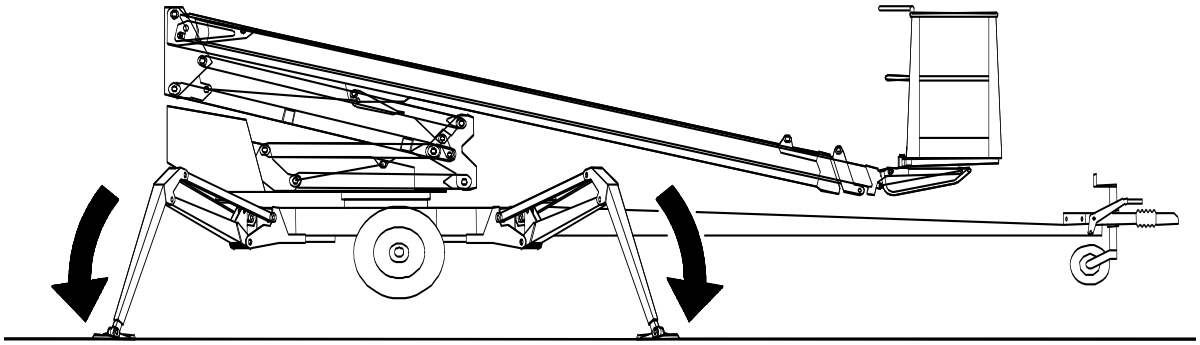

5. Inspect the cylinders, and lubricate the joint bearings (refer to the lubrication plan).

- drive the lift cylinder to its upper position from the chassis control panel and inspect the condition of the piston rod and tightness of the connections
- drive the lift cylinder to its lower position from the chassis control panel and inspect the connections for tightness
- retract and extend the telescope cylinder from the chassis control panel and inspect the condition and tightness of the cylinder
- lubricate the joints of the lifting, telescope and levelling cylinders
- extend the articulated arm cylinders from the lower control panel and inspect their condition and tightness
- inspect the outrigger cylinders and lubricate their joints

Downloaded from www.Manualslib.com manuals search engine

6. Inspection of the boom and the chassis

- extend the telescope and inspect the platform and its attachment and the boom

- inspect the boom joints and play of the sliding pads, readjust if necessary. Lubricate the sliding surfaces

- check the condition, locking and adjustment of the Flyer-chain

- secure the attachment to the boom of the unloaded flyer-chain by pulling the chain by hand with the boom fully extended

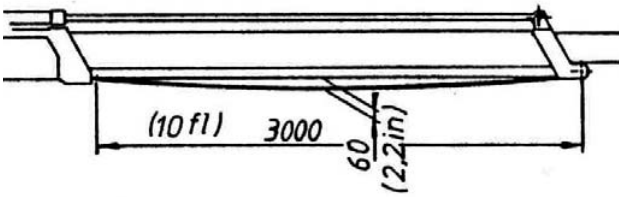

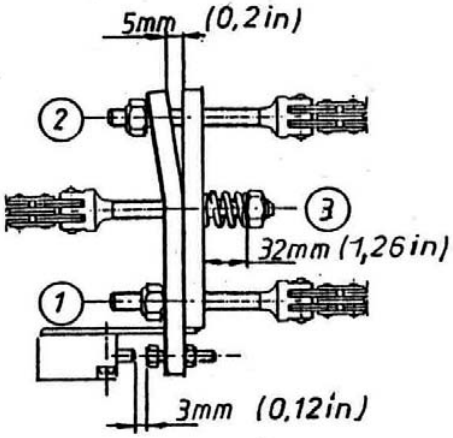

- inspect the turning device and its attachment, lubricate the turning bearing and the gear ring
  Remove the crescent-shaped covers from the underside of the lift in order to enable lubrication of the turning bearing nipples (4 pieces).

ATTENTION! Excess grease pressure may press out the turning bearing seal.

- check the turning bearing play
  Max. allowed axial play is about 1 mm.

- check the attachment bolts of the turning device for tightness: 280 Nm (M16)
  150 Nm (M12)

If you have to turn open or tighten the attachment bolts, do not forget to use bonding adhesive (tighten crosswise)

- check the chassis and the welded seams on it; especially around the turning device and attachment points of the outriggers

- inspect the outriggers.

- check the tow-bar, in particular its attachment to the chassis

- lubricate the bearings of the boom and outrigger joints

Downloaded from www.Manualslib.com manuals search engine

7. Check the overrun

- attachment of the overrun
- clearance
- condition of the towball-coupling
- condition of the locking device
- check that the overrun brake mechanism moves freely

8. Inspection of the axle and suspension

- check the attachment of the axles
- check condition of the rubber absorbers and torsion arms.

9. Inspection of the safety devices

- check the attachment and the external condition of the limit switches

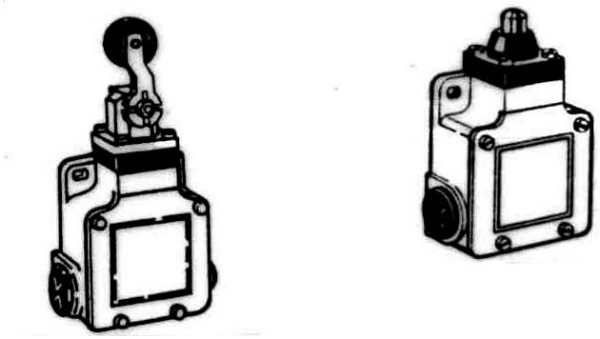

- from the tow-bar (transport position of the platform, RK3)
- safety device (RK4 and RK5)
- support outriggers (RK11, RK12, RK13 and RK14)
- boom (RK7 and RK8)

Downloaded from www.Manualslib.com manuals search engine

10. Operation of the safety devices while they are controlled from the chassis control panel

- lift the platform slightly up from the transport position

- the outriggers must not operate in any position of the selector switch

- lift the boom and test the following:
  1. emergency stop (3)
  2. emergency descent, retraction of telescope (6)
  3. emergency descent, lowering of the boom (5 and 8)

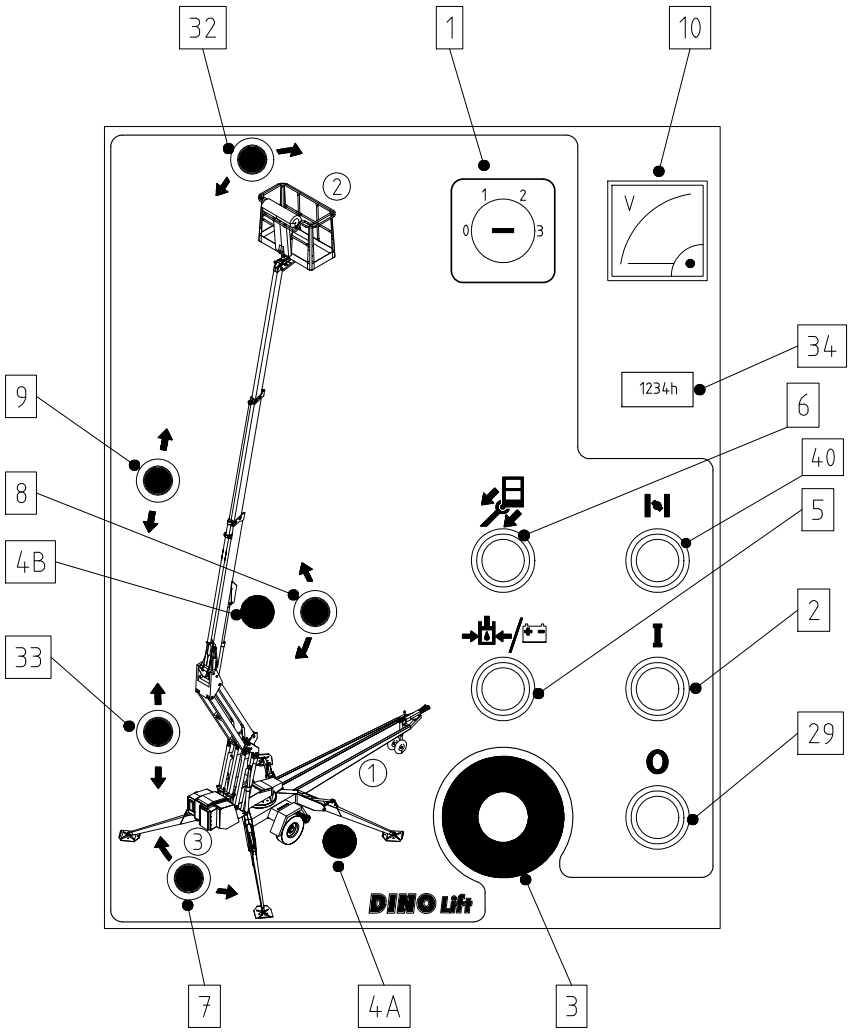

- bring the boom to the transport position and lift the outriggers with the driving device connected.

- the boom must not operate in any position of the selector switch

- disconnect the driving device and lower the outriggers (bring the lift to a level position)

Downloaded from www.Manualslib.com manuals search engine

- put a load of about 80 kg onto the platform

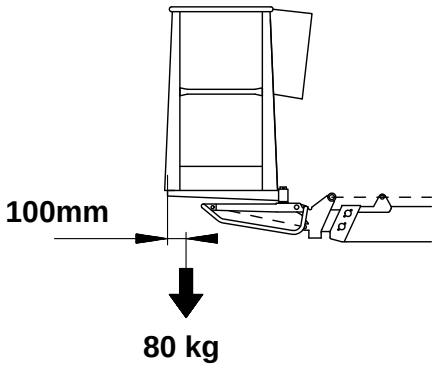

- lift the boom and extend the telescope
  The movement stops as soon as the red outreach limit signal light lights up (at max. outreach).

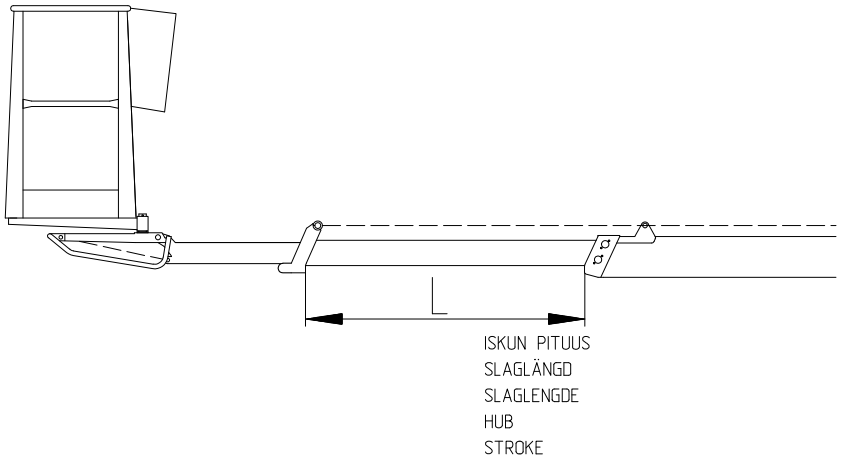

Now:

- the lifting of the boom should be operational - the lowering of the boom must NOT be operational
- the retraction of the telescope should be operational - the extension of the telescope must NOT be operational

Downloaded from www.Manualslib.com manuals search engine

TESTING THE LOAD LIMIT SWITCHES RK4 AND RK 5

Put a carefully weighed load (80 kg) on the platform. Place it at a distance of 100 mm from the rear edge of the platform.

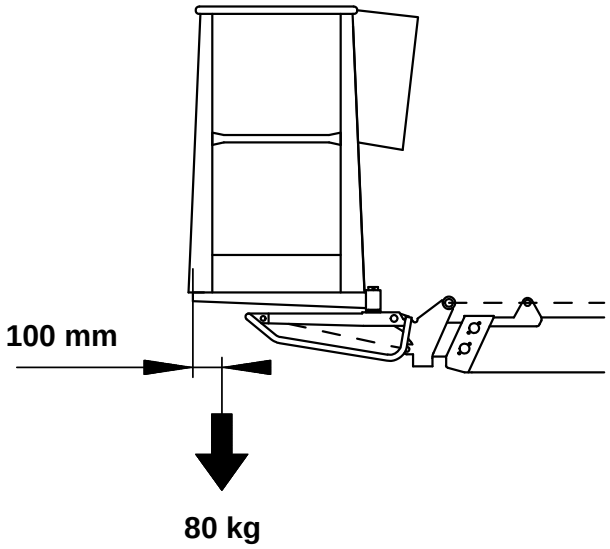

Drive the boom to a horizontal position from the chassis control panel.

Lift and lower the rear edge of the platform using the position control.

1. **Lowering the rear edge of the platform**
2. **Lifting the rear edge of the platform**

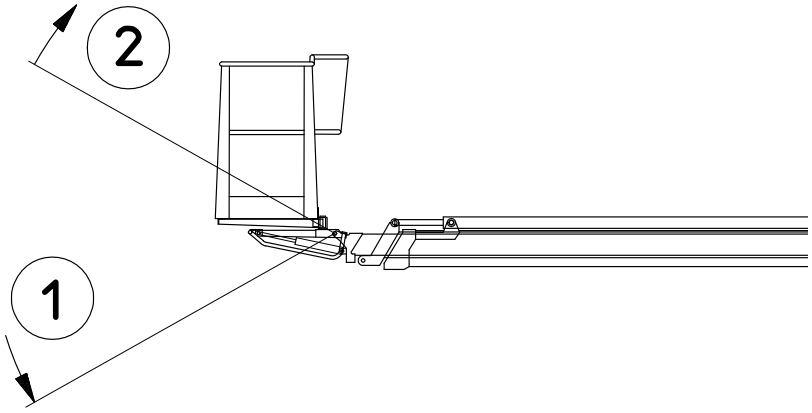

Drive the platform with the position control to a horizontal psoition so that that the last stage of the adjustment procedure is lifting of the rear edge.

Downloaded from www.Manualslib.com manuals search engine

Adjustment method I:

Extend the telescope until it stops. (Do not correct the position of the platform).

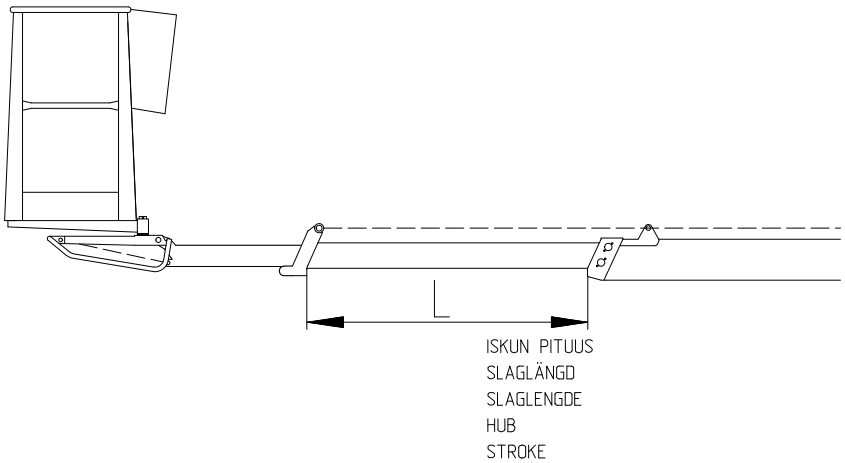

Measure the length of the protruding part of the telescope extension(L). The length shall be 3 100 mm ±50 mm.
Make sure that a red signal light on the platform is lit.

- the second safety limit switch (RK5) backs up if the first switch outreach limit switch (RK4) fails
- disable the RK4 for testing by disconnecting the conductor from the terminal X1:43 and connecting the terminals X3:25 ja X1:41 in the chassis control panel with a jumper lead
  Also connect a conductor between the terminals X1 and X2 of the relay SR3.

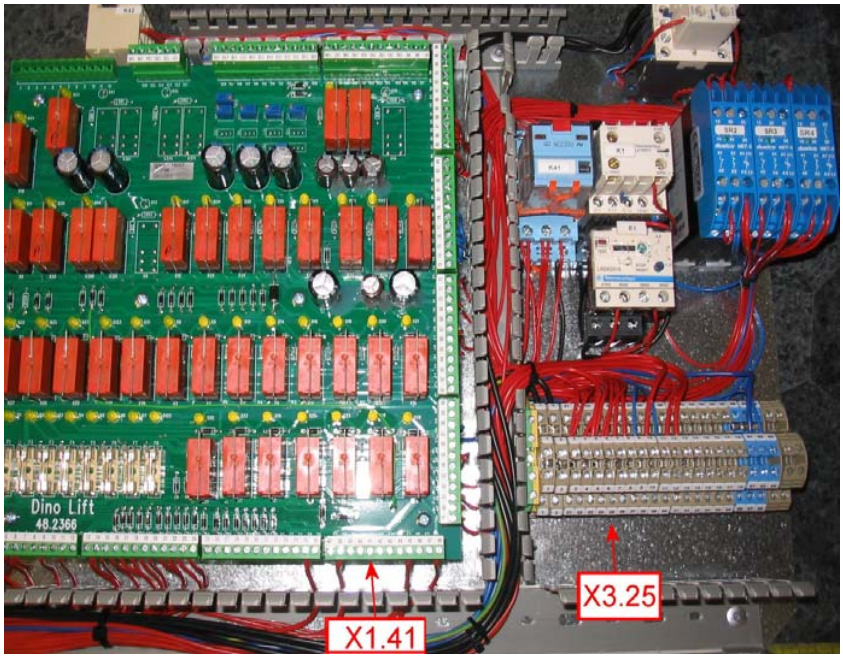

- retract and extend the boom and measure the length of the telescope extension´s protruding part
  The length shall be 3 600 mm ±50 mm.
- if the protruding part is too long, adjust the limit switches and secure their position with a seal

ATTENTION! Remember to resume the operation of the RK4 by connecting the conductor to terminal X1:43 and removing the jumper leads.

Downloaded from www.Manualslib.com manuals search engine

ADJUSTMENT OF THE OVERLOAD LIMIT SWITCHES

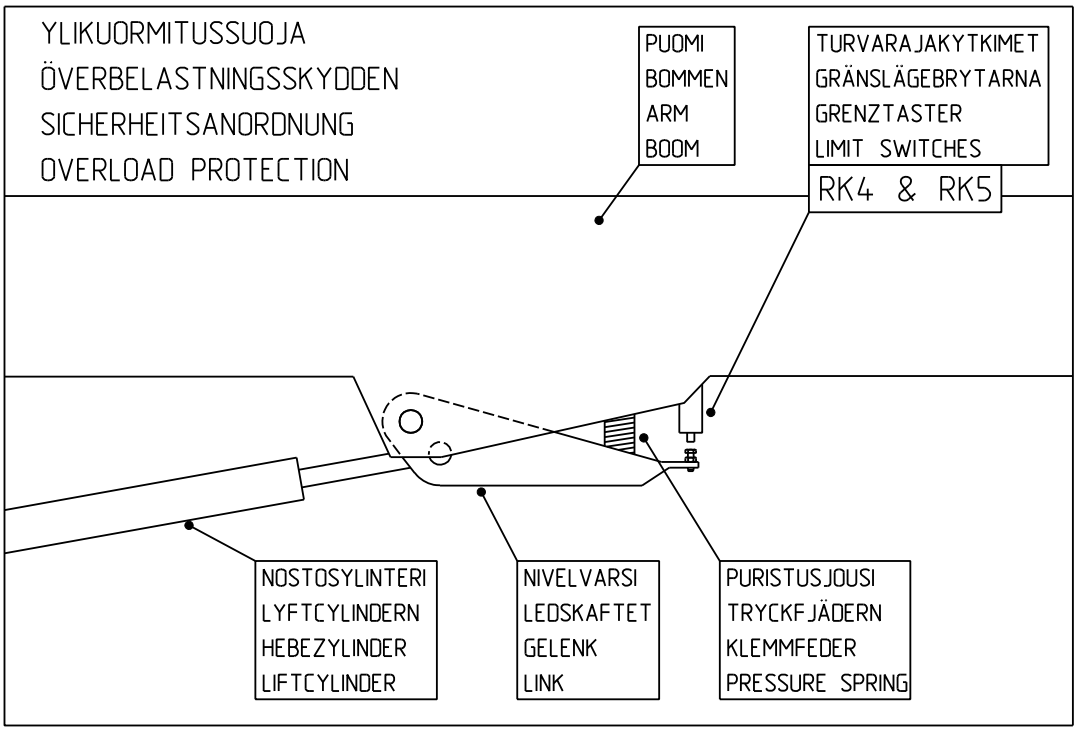

Always check the operation of both limit switches in connection with the service.

Adjustment method II

- make sure that the RK5 with certainty will trip before the RK4 by adjusting the RK4
- extend the boom and measure the length of one protruding part of the telescope extension (stroke)

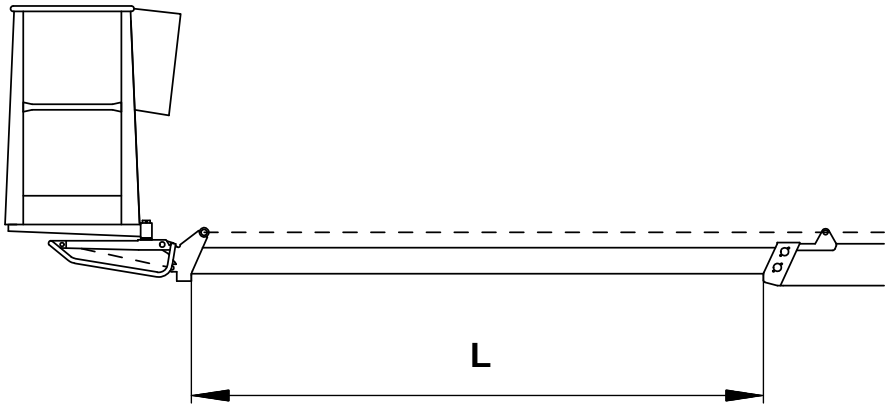

Downloaded from www.Manualslib.com manuals search engine

- the measure shall be 3 600 mm ±50 mm.
- tighten the locking of the adjustment screw and check once more the settings
- set RK4 to trip earlier than RK5
- extend the boom and measure the stroke
- the measure shall be 3 100 mm ±50 mm.
- tighten the locking of the adjustment screw and check once more the settings
- apply a safety wire to the adjustment screws in such a manner that it will not be possible to unscrew the screws away from the limit switches
- apply a seal on the wire
- put the cover in place

Downloaded from www.Manualslib.com manuals search engine

11. Measuring the pressure

- connect the pressure gauge to the measuring point

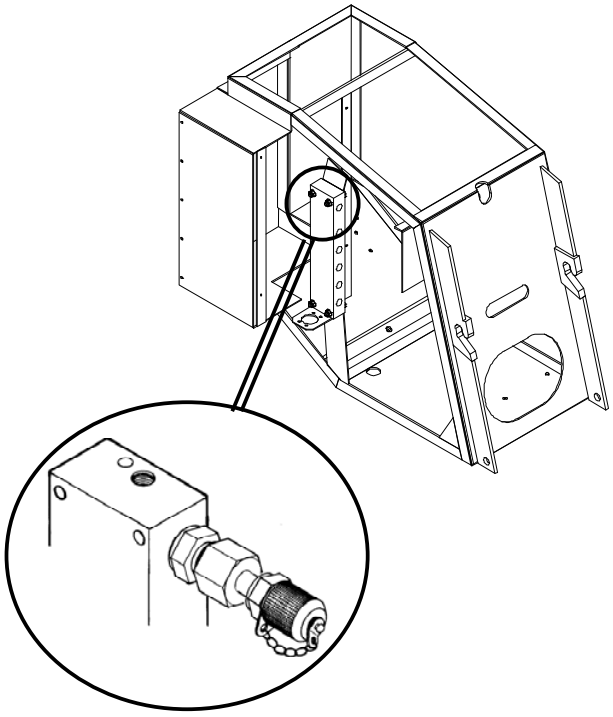

- the max. pressure of the warm (40 - 60 °C) oil is 21 –21,5 MPa (210 -215 bar)
- the turning pressure is 6 MPa (60 bar)
- if you have to readjust the pressure, secure the new setting with a seal

Downloaded from www.Manualslib.com manuals search engine

12. Check the operating controls on the platform

- check the overall condition of the electric appliances inside the box and spray with moisture repellent, if necessary
- check the cables and the tightness of the cable clamps
- test the sound signal (23), emergency stop (22) and emergency descent (20)
- test all movements
- test the operation of the overload limit switches before lifting the boom

Downloaded from www.Manualslib.com manuals search engine

13. Warning signs and adhesives

- make sure that all warning signs and adhesives are legible, replace if necessary

14. Inspect the brakes and the driving device

- remove the wheels
- clean the brake system and check the settings
- check the free movement of the brake shoes the operation of their return springs
- replace any worn out linings
- check the condition of the driving device and lubricate the joints
- put the wheels in place and tighten the wheel bolts
  Re-check the tightness of the wheel bolts after about 100 km drive (325 Nm).
- check the tyre pressure: 450 kPa (4,5 bar) on the rear axle
  250 kPa (2,5 bar) on the jockey wheel
- check the free movement of the overrun brake and the parking brake
- check the safety wires

15. Check the condition of the lights and the reflectors

16. Repeat the anti-corrosion treatment using e.g. Tectyl 210R anti-corrosion agent

17. Test-run with a load of 80 kg following the loading instructions. Check the structures after the test-run.

18. Draw up a test protocol, save your own copy and give the other copy to the customer

Downloaded from www.Manualslib.com manuals search engine

INSPECTION INSTRUCTIONS

All lifting equipment and lifting gear used at a construction site must always be inspected before use. The lifts and related lifting gear used on a work site shall be subjected to a regular maintenance inspection; if possible once a week.
Keep a journal of any notable shortcomings and defects observed and advise the foreman of them.

FIRST INSPECTION

The initial inspection and test loading of the Dino access platforms is performed by the manufacturer. A protocol which accompanies the lift is drawn up of the inspection.

Downloaded from www.Manualslib.com manuals search engine

DAILY INSPECTION (START-UP INSPECTION)

To be always performed at a new work site and in the beginning of every working day.
The inspection is performed by the user.
In the inspection attention shall be paid to the following issues:

- establish the load-bearing capacity of the ground at the lifting site (see the table "maximum permissible ground pressure for different soil materials" on page 21 for guidelines)
- verify the standing stability of the lift
- control the due operation of the position indicator
- test the operation of the emergency stop system both from the platform and the chassis control panels.
- test the operation of the emergency descent system both from the platform and the chassis control panels
- test the alarm signal
- check the warning and signal lights
- check the operation and cleanliness of the lights and reflectors
- check the condition of the operating controls and test all work movements
- check the condition of the access routes, the platform gate and the handrails
- check the operation of the load limit switches (refer to the service instructions).
- check the limit switches, which prevent the operation of the boom movements (refer to the service instructions)
- check the operation of the limit switches, which block the outrigger movements (refer to the service instructions).
- check the hydraulic system for tightness
- test the brakes
- check the unit visually
- observe the location of the nearby power lines (refer to the safety distances on page 9)

Downloaded from www.Manualslib.com manuals search engine

MONTHLY INSPECTION (MAINTENANCE INSPECTION)

The inspection shall be performed by a person who is well familiar with the lift.
Task list for inspection:

- perform the measures of the A2478daily inspection
- check the attachment points of the boom and the platform
- check the operation and condition of the platform levelling system
- perform visual inspection of the load-bearing structures
  - chassis
  - turning device
  - telescope (fully extended)
  - support outriggers and their joints
  - welded seams for cracks, corrosion or breaches
  - are the possible repair weldings duly executed
- check that the platform does not "drift" (refer to the service instructions)
- check that the outriggers do not "drift" (refer to the service instructions).
- hydraulic oil level
- check the electro-hydraulic rotating adaptor for leaks and seizures
- check the tyres and the tyre pressure
- check the wheel bolts and rims
- check the turning gear play
- check the operation of the driving device
- check the condition and attachment of the electric wires
- check the condition and attachment of the battery
- check the condition of the overrun
- make sure that all signs, warnings and pictorials for operating controls and control equipment are in place, in good condition and clean.
- check that the lift is clean all over

Downloaded from www.Manualslib.com manuals search engine

ANNUAL INSPECTION (REGULAR INSPECTION)

The inspection shall be performed by a skilled technician or an expert inspection body with documented evidence of competence according to requirements presented on page 10. In the inspection special attention has to be paid to the condition of the steel structures, the safety devices and the operating system.

Clean the lift before the inspection
The inspection incorporates the following measures and checks:

- perform the measures of the daily and monthly inspection

- inspect thoroughly the hydraulic system

  - power unit
    - connect the pressure gauge to the measuring point in the hydraulic system
    - make the oil flow through the relief valve by driving one of the movements against the end stop
    - observe the pressure reading in the gauge; when the oil is warm the pressure should be 21 - 21,5 MPa (210 -215 bar)

  - load-holding check-valves on the outriggers
    - lift the device off the ground with the outriggers and measure the distance to the chassis at each outrigger
    - step on the platform and extend the telescope keeping the boom level
      Turn the boom round a few times, stop at the initial position and check that the distance between the ground and the outriggers has not changed.
    - lift the outriggers from the ground and leave them in this position for about 10 minutes
      Observe that the outriggers do not lower of themselves.

  - load-holding check-valve on the lift cylinder
    - lift the boom from the chassis control panel to an angle of about 45° and extend the telescope
      Observe about 10 minutes that the boom does not lower of itself.

  - load regulation valve of the telescope cylinder
    - lift the boom from the chassis control panel and extend the telescope slightly; leave it in this position for about 5 minutes
    - make sure that the telescope does not retract of itself

  - load regulation valve of the levelling system
    - put a load of about 120 kg on the platform
    - lift and lower the boom 4 - 5 times
    - make sure that the position of the platform does not change

  - electric directional valves
    - operate all boom and turning movements and check that they all work properly and that the movements stop as soon as the levers are released

Downloaded from www.Manualslib.com manuals search engine

- manually operated directional valves
    - check that the valves of the support outriggers and the driving device work properly and no movements are executed when the spools are in the neutral position

- electro-hydraulic rotary adaptor
    - check the adaptor for tightness
    - check that the lever arm neither seizes nor is loose

- cylinders
    - lower the outriggers to support position and check the condition of piston rods and wiper rings
    - lift the boom to its upper position and check the condition of the piston rod and the wiper ring of the lift cylinder
    - lift up the articulated arms and check the condition of the piston rods and wiper rings of the cylinders
    - check the condition of the piston rod and wiper ring of the master cylinder in the slave cylinder system.
    - lower the boom and check the condition of the piston rod and wiper ring of the slave cylinder under the platform

- hoses
    - check the hoses for leaks and chafing

- pipes
    - check that there are no dents, leaks, trace of corrosion or chafing at the clamps
      Check that the pipes are properly fastened.

- connections
    - check the hose and pipe connections for leaks

- inspect thoroughly the electric system
    - check that the control panel boxes are dry, clean and tight.
    - check the condition of the cable connections and their protection against moisture
    - check the condition and attachment of the limit switches
    - check the limit switch lead-throughs for tightness
    - check the connections of the electric valves
    - check the connections of the solenoid valves
    - perform visual inspection of all electric wiring
    - check the condition of the mains cable plug
    - check the condition of the electric motor.

- check the attachment points of the hydraulic cylinders
    - check the condition of the bearings and pins of the outrigger cylinders and the locking of the pins
    - check the condition of the lifting cylinder bearings and pins and the locking of the pins
    - check the condition of the articulated arm cylinder bearings and pins and the locking of the pins
    - check the condition of the telescope cylinder bearings and pins and the locking of the pins
      Check the condition of the gas springs
    - check the condition of the master and slave cylinder bearings and pins and the locking of the pins

Downloaded from www.Manualslib.com manuals search engine

- check the condition of the boom joint
    - check the bearing and the pin of the boom joint and the locking of the pin
    - check the condition and attachment of the articulated arm joint pins and bearings

- check the support outriggers and their footplates
    - check the mechanical structure of the outriggers and the welded seams
      The structures must not show signs of deformations or cracks No fractures or cracks allowed in the welded seams.
    - check the footplates for deformations, cracks or breaches
      Also check that the footplate can turn freely on its joint.

- inspect the boom.
    - extend the telescope and check that there are no permanent deformations, dents or traces of substantial wear in the boom
    - also check the welded seams for wear, cracks or breaches
    - check the boom attachment for cracks or breaches
    - check the condition of the platform brackets
    - check the locking of the platform pin
    - check the condition and attachment of the flyer-chain, the locking of the pins and the tightness of the spring
    - check the condition of the cable chain, its clamp brackets as well as the tightness of the screw connections
    - check the play and attachment of the gliding surfaces on the boom.

- inspect the platform
    - general condition
    - check that the platform does not show signs of deformations, substantial wear or buckles
    - check that the handrails, the steps, the gate and the attachment of the gate are in order
    - check that the lock of the gate and the gas spring are in order
    - check the condition of the platform floor plate
    - check the platform carrier for notable buckles or deformations

- check all protective covers
    - check the condition of the support outrigger cylinder guards
    - check the condition of the slave cylinder guard
    - check the condition of the boom end cover, turning device covers, chassis control panel cover, safety device cover, platform control panel cover and the rear light cover

- perform visual inspection of all screw connections

- inspect the turning device
    - general condition
    - check the play and attachment of the angular gear
    - check the condition of the gear ring
    - check the play of the turning gear
    - check the tightening torque of the turning bearing´s attachment screws (M16 280 Nm, M12 150 Nm)
    - check the attachment of the turning motor

Downloaded from www.Manualslib.com manuals search engine

- check the condition of the chassis
    - general condition
    - check the attachment of the tow-bar to the chassis
    - check the condition of the overrun and its attachment to the chassis.
    - check the axle and its attachment to the chassis
    - check the attachment and condition of the brake wires and rods
    - check the rims, the tightness of the wheel bolts, the tyres and the tyre pressure
    - check the condition of the driving device, attachment of the parts and condition of the covers for electric components
    - check the condition of the transport support of the boom

- perform a test run, test all operating controls, control the outreach with a load of 215 kg on the platform according to the instructions on page 58

- also check the operation of the limit switches during the test run (refer to the service instructions)
    - the load-sensing limit switches on the safety devices
    - the limit switches on the outriggers, which prevent the operation of the boom movements
    - the limit switches on the tow-bar, which prevent the use of the outriggers

- after the test-loading make sure that the test loading has not caused any defects, such as fractures or permanent deformations of dangerous nature, on the steel structures or other loaded parts

- draw up a protocol of the regular inspection with following articles:

    1. inspection form
    2. data of repair welds
        a) date of repair
        b) repaired by whom
        c) what was repaired

- as the machine is ready for operation after the annual inspection, mark the inspection date on the inspection plate affixed to the lift

EXTRAORDINARY INSPECTION (INSPECTION AFTER AN EXCEPTIONAL SITUATION)

The inspection is required if the lift has been damaged in a manner which may affect its load-bearing capacity or safe operation.

- in this case the lift shall be inspected according to the instructions for the annual inspection
- the lift shall be subjected to a test loading and a stability test
- a protocol shall be drawn up for the inspection

Downloaded from www.Manualslib.com manuals search engine

TEST LOADING INSTRUCTIONS FOR REGULAR INSPECTION

1. Place the lift on an even surface with good carrying capacity. Drive the outriggers to their lowest position (the minimum support width).

2. Turn the boom to the side from the tow-bar and lower it on the ground.

3. Put a weighed load of 215 kg on the platform (I).

4. Lift the boom to as high as it goes and extend the telescope to its full length (maximum lifting height).

5. Lower the boom until the safety device stops the movement.

6. Turn the boom round over 360°.

7. Retract the telescope and lower the boom to a horizontal position.

8. Extend the telescope until the safety limit switch RK4 stops the movement. Establish the standing stability in this situation by turning the lift round over 360°.

9. Carry out the same procedure with a platform load of 80 kg (II).

10. Compare the outreach with the reach diagram. If necessary, readjust as instructed on page 60 "adjustment of the overload limit switches".

After the above mentioned test loadings (case I and case II) and the subsequent inspection have been completed without finding any defects in the structure or stability of the lift, the lift may be used provided that the reach and platform load restrictions on page 6 of this manual are observed.

The max. allowed platform load is 215 kg

- in conjunction with the first, i.e. start-up inspection, the lift shall be subjected to a test loading with an overload of 25% and after that the supporting structures shall be thoroughly inspected

- In conjunction with the annual inspection the lift shall be subjected to a regular inspection, a test-run and a test loading with maximum permissible load and a thorough inspection of the supporting structures

- the first inspection shall be recorded in the start-up inspection protocol and the test-run shall be recorded in the protocols for the annual and regular inspection

Downloaded from www.Manualslib.com manuals search engine

FAULT FINDING

FAULT	REMEDY

1. Electric motor does not start although the start button is pressed and the selector switch is in position 1, 2 or 3

Emergency stop button is stuck.	Pull up the button and re-start the engine with the start button.
Fuse F2 blown.	Replace the fuse (10A).
No mains supply (230 VAC) to the selector switch.	Check the extension cords, possible distribution boards and fuses.
The fault current safety switch has tripped.	Reset the fault current safety switch.
Voltage supply to the switch OK, but no transmission forward.	Check the operation of the selector switch and replace it, if necessary.
The power supply voltage both comes to the selector switch and is fed further.	Check the operation of the engine control contactor and thermo-relay as well as the operation of the relays which control the operation of the contactors.
Telescope chain limit switch RK7 has disconnected the contactor circuit.	Check the operation of the RK 7 and readjust as instructed in the picture on page 54.
No direct-current supply (12VDC).	Mains switch turned off, turn on the switch.

2. None of the platform movements is operational though the electric motor is running and the selector switch is in position 2 or 3

Green signal light for outriggers is not lit.	Check operation of the safety limit switches RK11, RK12, RK13 and RK14.
The green signal light for the outrigger limit switches is lit, but the boom movements do not operate.	Check the operation of the safety relay SR2 for the outrigger circuit.
Overloading of the boom has occurred.	Retract the platform with the buttons 6 or 21 inside the designated operating range of the platform (the green light in the platform control panel lights up).

3. Outriggers do not move

Boom does not rest on the transport support.	Drive the boom onto the transport support.
The selector switch is in wrong position.	Turn the selector switch to position 1.
Limit switch on the boom support is not closed.	Drive the boom onto the transport support and check the operation of the limit switch RK3.

4. Platform turn is not operational

Automatic fuse F10 has tripped.	Reset the automatic fuse with the reset button.

Downloaded from www.Manualslib.com manuals search engine

FAULT	REMEDY

5. No power supply to the lift though the mains switch is on and the selector switch is in position 1, 2 or 3

Activation of power supply not completed.	Press the start button to activate the power supply.
One of the fuses F1, F11 or F12 blown.	Change the fuse an press the start button.
Battery is flat.	Recharge the battery.

Check, whether the fault is in the electric system or in the hydraulic system.

6. Disturbance of platform movements - only one of the movements is operational

Irregular and indefinite malfunctions. 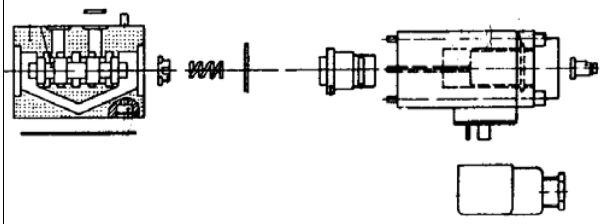	Make sure that the hydraulic oil and the filter have been changed. Thoroughly clean the solenoid valve spools and housings (requires utmost cleanliness - not all contaminants can be spotted with the naked eye). Also temporary contact failures in the joysticks may cause malfunctions. Spray with moisture repellent.
Lifting or lowering of the boom and extension of the telescope are not operational, red light on the platform is lit and the buzzer in the chassis control panel is audible.	Overloading of boom has ocurred; retract the telescope and retry (automatic reset).

7. Boom drifts slowly downwards

"lock valve" i.e. the pressure activated check valve is leaking. 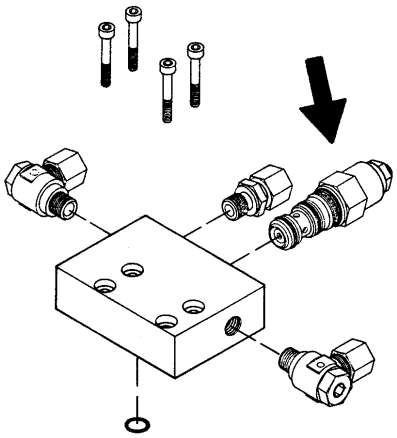	Remove and clean the valve. Check the condition of the o-rings. Install the valve carefully - the correct tightening torque is 60 Nm. If necessary, replace the valve.

Downloaded from www.Manualslib.com manuals search engine

FAULT	REMEDY

8. Power pack does not start

Battery is flat.	Recharge the battery.
Mains cable is connected.	Disconnect the plug from the mains.
No direct-current supply (12VDC).	Mains switch turned off, turn on the switch.

9. Power pack cranks but does not start

Fuel tank is empty.	Fill the fuel tank.
Choke is off.	Press choke button (cold engine).
Throttle lever in idling position.	Increase the engine revolutions.

10. Boom cannot be lifted

	Refer to item 4. Electric valve open. Remedy as instructed above in conjunction with the seizure of the electric valve spool.
Lifting of the boom makes the lift turn.	Solenoid valve is stuck in turning position. Wash carefully the spool and the block.

11. Telescope movement does not operate

	Refer to item 4. Check that the solenoid valve of the telescope is not stuck in the centre (open) position.

Downloaded from www.Manualslib.com manuals search engine

FAULT	REMEDY

12. Telescope slowly retracts

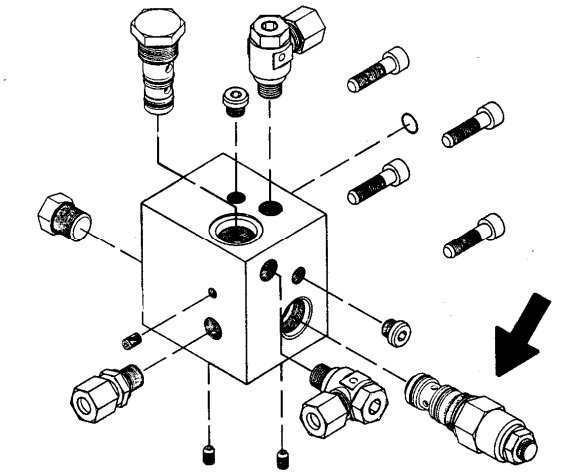

Load regulation valve is leaking.	For remedy, refer to item 7 (lock valve).

13. Platform drifts backwards

Double load regulation valve on the bottom side is leaking.	For remedy, refer to item 7 (lock valve).
Load regulation valve under the platform is leaking.	For remedy, refer to item 7 (lock valve).

14. Platform drifts forward

Double load regulation valve on the rod side is leaking.	For remedy, refer to item 7 (lock valve).

15. Outriggers do not move though the selector switch is in position 1

Boom does not rest on the transport support.	Drive the boom onto the support.
Electric valve for movement of boom/outriggers does not operate (jams in the centre position).	For remedy, refer to item 4.

Downloaded from www.Manualslib.com manuals search engine

FAULT	REMEDY

16. Outrigger does not stay in the support position (see illustration)

The load regulation valve on the bottom side is leaking.	For remedy, refer to item 5 (lock valve). Tightening torque 55 Nm.

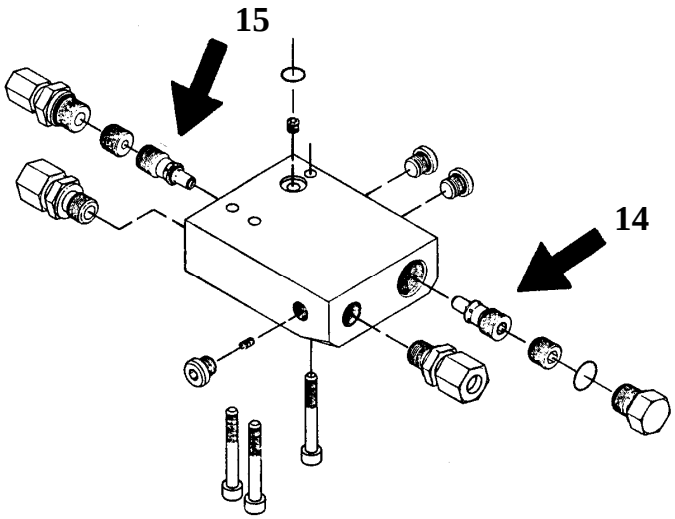

17. Outrigger does not stay in the transport position (see illustration)

Load regulation valve on the rod side is leaking.	Measures as above.

18. Driving device does not operate though the selector switch is in position 1

Boom does not rest on the transport support.	Drive the boom onto the support.
Electric valve for movement of boom/outriggers does not operate (jams in the centre position).	For remedy, refer to item 4.

19. Too low braking force

Too much play in the brake system.	Adjust the brakes (refer to page 47).
Brake linings not yet run-in.	Pull the parking brake lever slightly and drive 2 - 3 kilometres.
Brake-shoes "glazed", dirty or oil on the friction surfaces.	Replace the brake-shoe sets. Clean the friction surfaces of the brake drum.
Overrun brake jams.	Lubricate.
Brake rod jammed or bent.	Repair.
Brake wires rusty or broken.	Replace wires.

Downloaded from www.Manualslib.com manuals search engine

FAULT	REMEDY

20. Braking uneven and jerky

Too much play in the brake system.	Adjust the brakes (refer to page 47).
Shock absorber of the overrun device faulty.	Replace the shock absorber.
Reverse automatics - brake-shoe jams in the carrier.	Replace the brake-shoe in the carrier.

21. The brakes drag (only one of the wheels brakes)

Brake units wrongly adjusted.	Readjust the brake units according to instructions. Also refer to point 17 for possible cause.

22. Lift brakes as the engine speed is decreased

Shock absorber of the overrun device faulty.	Replace the shock absorber.

23. Reversing forced or impossible

Brakes have been adjusted too tight.	Adjust the brake system as instructed on page 47.

24. Wheel brakes overheat

Brake system wrongly adjusted.	Adjust the brake system as instructed on page 47.
Wheel brakes dirty.	Clean the wheel brakes.
Overrun brake - force transmission lever jams.	Dismantle, clean and lubricate the transmission rod.
Parking brake not completely released.	Release the parking brake completely.

Downloaded from www.Manualslib.com manuals search engine

FAULT	REMEDY

24. Ball-coupling is not locked

Inner parts of the ball-coupling dirty.	Clean and lubricate.
Tow-ball of the towing vehicle too large.	Measure the tow-ball. According to DIN74058 the diameter of the ball must be max. 50 mm and min. 49,5 mm. If the measure is different or the ball is nor perfectly spherical, it must be replaced.

Always, when you change brake-shoes, replace all shoes on the axle.
Always when assembling the brakes make sure to install the springs, the brake-shoes and the expander in the right way.
When adjusting the brakes, turn the wheels forward (in driving direction)!

Naturally the possible reasons for malfunctions are many, but the following are the most common:

- low supply voltage (long and thin supply cable)
- the battery is flat (low voltage)
- contaminants in the hydraulic system
- loose electric connection or a contact failure caused by moisture

KEEP THE LIFT CLEAN AND PROTECT IT AGAINST MOISTURE

Downloaded from www.Manualslib.com manuals search engine

GENERAL INFORMATION OF HYDRAULICS

The movements require simultaneous operation of two electric valves, i.e:

- change-over valve for outriggers/boom system and boom
- change-over valve for outriggers/boom system and telescope
- change-over valve for outriggers/boom system and platform
- change-over valve for outriggers/boom system and rotation
- change-over valve for outriggers/boom system and articulated arms

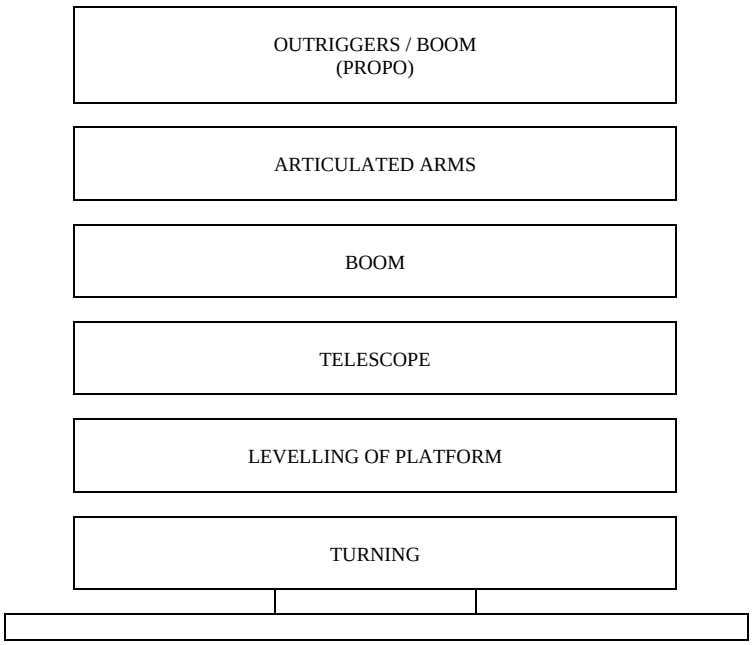

Press the pin at the end of the electric valves while one of the power units is running.

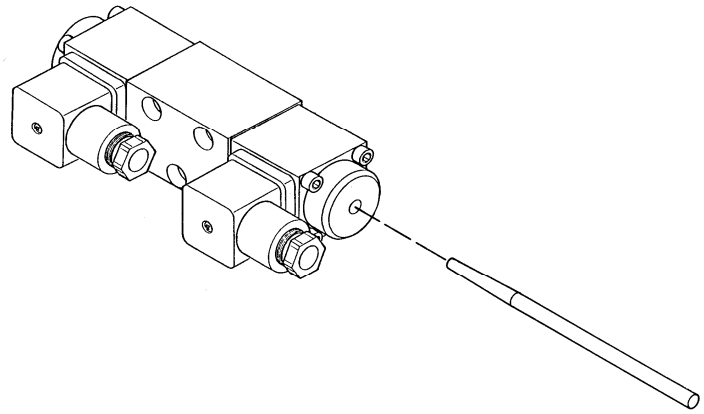

If the movements operate, the fault is in operating controls of the electric system or the valve spools are dirty, which causes jamming (refer to fault finding scheme, item 6).

If none of the movements operate, the fault is in the hydraulic system.

Downloaded from www.Manualslib.com manuals search engine

ELECTRIC COMPONENTS

CHASSIS CONTROL CENTRE (LCB), RELAYS

K1: START CONTACTOR (M1) FOR THE ENGINE
Control circuit fuse F2 10A

K2: AUXILIARY RELAY FOR EMERGENCY STOP BUTTON
Switches off the mains supply (230VAC).
Control circuit fuse F2 10A

K3: TURNING THE BOOM CLOCKWISE
Control circuit fuse F9 1,6A (Platform control panel) and F4 10A (Chassis control panel).

K4: TURNING THE BOOM COUNTER-CLOCKWISE
Control circuit fuse F9 1,6A (Platform control panel) and F4 10A (Chassis control panel).

K5: AUXILIARY RELAY FOR "BOOM DOWN" MOVEMENT
Control circuit fuse F9 1,6A (Platform control panel) and F4 10A (Chassis control panel).

K6: RETARDATION OF "BOOM DOWN" MOVEMENT
Lowers the maximum speed of the "Boom down" movement by connecting the control card of the resistor to the control circuit.
Control circuit fuse F9 1,6A (Platform control panel) and F4 10A (Chassis control panel).

K7: AUXILIARY RELAY FOR "BOOM UP" MOVEMENT
Control circuit fuse F9 1,6A (Platform control panel) and F4 10A (Chassis control panel).

K9: AUXILIARY RELAY FOR "TELESCOPE IN" MOVEMENT
Control circuit fuse F9 1,6A (Platform control panel) and F4 10A (Chassis control panel).

K10: AUXILIARY RELAY FOR "TELESCOPE OUT" MOVEMENT
Control circuit fuse F9 1,6A (Platform control panel) and F4 10A (Chassis control panel).

K11: ARTICULATED ARMS DOWN
Control circuit fuse F9 1,6A (Platform control panel) and F4 10A (Chassis control panel).

K12: RETARDATION OF "ARTICULATED ARMS DOWN" MOVEMENT
Lowers the maximum speed of the "Articulated arms down" movement by connecting the control card of the resistor to the control circuit.
Control circuit fuse F9 1,6A (Platform control panel) and F4 10A (Chassis control panel).

K13: ARTICULATED ARMS UP
Control circuit fuse F9 1,6A (Platform control panel) and F4 10A (Chassis control panel).

K15: LEVELLING OF THE PLATFORM
Levelling of the platform backward
Control circuit fuse F9 1,6A (Platform control panel) and F4 10A (Chassis control panel).

K16: LEVELLING OF THE PLATFORM
Levelling of the platform forward
Control circuit fuse F9 1,6A (Platform control panel) and F4 10A (Chassis control panel).

Downloaded from www.Manualslib.com manuals search engine

K17: CENTRE POSITION ACTIVATION OF THE JOYSTICK
Switches off the voltage from the joysticks´s micro-switches if the dead-man-switch DMK has not been pressed while the joystick is in the centre position.

K18: CONTROL RELAY FOR ADDITIONAL MOVEMENT SPEED RESISTORS
The relay is used for changing the Propo-card control voltage over to the adjustable resistor of the boom/platform levelling.
As the relay is active the control voltage is supplied through the TR10 resistor (movement speed of the boom from the chassis control panel)
When the relay is not active, the control voltage is supplied via the resistor TR9 (levelling of the platform)
Control circuit fuse F9 1,6A (Platform control panel) and F4 10A (Chassis control panel).

K19: Change-over relay for control voltage of the Propo-card.
As the relay is active the control voltage to the Propo-card is supplied via additional resistors.
As the relay is not active the control voltage is supplied to the joystick by means of which the control voltage is adjusted to desired value with the help of adjustable resistors inside the joystick.
Control circuit fuse F9 1,6A (Platform control panel) and F4 10A (Chassis control panel).

K20: FUNCTION RELAY FOR OUTREACH LIMIT SWITCH RK4
Switches off the "telescope out" movement as the RK4 operates. Delay about 1,2s.
Control circuit fuse F2 10A

K21: AUXILIARY RELAY FOR SWITCHING OFF THE "BOOM DOWN" MOVEMENT.
Safety limit switch RK4 controls the relay which switches off the spool control circuit of the relay K5.
Control circuit fuse F2 10A

K22: AUXILIARY RELAY FOR SWITCHING OFF THE "TELESCOPE OUT" MOVEMENT
Closing tip of the safety limit switch RK4 controls the relay which switches off the spool control voltage of the relay K10, delay 2,5 s.
Control circuit fuse F2 10A

K23: SELECTOR RELAY FOR CONTROL FROM CHASSIS
Controls the solenoid valve for selection of chassis.
Fuse F2 10A

K24: CENTRE POSITION ACTIVATION OF THE JOYSTICK
Pressing the dead-man-switch DMK breaks the control voltage from the spool of the relay K17 which would otherwise disconnect the control voltage from the micro-switches on the joystick.

K25: CONTROL OF THE CONTROL CARD
Connects the sensing voltage 0-5VDC to the control card.

K26: RPM-RELAY
Controls the speed of the combustion engine. Increases the speed during performance of the control movement.
Control circuit fuse F9 1,6A (Platform control panel) and F4 10A (Chassis control panel).

K27: AUXILIARY RELAY FOR POWER SUPPLY TO DRIVING DEVICE
The relay is controlled by limit switch RK3.

Downloaded from www.Manualslib.com manuals search engine

Fuse F3 10A

K28: CONTROL RELAY FOR EMERGENCY DESCENT UNIT SOLENOID
Switches on the voltage supply to the emergency descent unit solenoid SR1.
Fuse F7 10A

K29: PREVENTION OF DUAL CONTROL
The relay is controlled by the emergency descent buttons S11 and S13.
Control circuit fuse F7 10A

K30: Control of alternator of the Honda engine
Energizes the alternator of the Honda engine.
Fuse F2 10A

K31: SWITCH-OFF RELAY FOR COMBUSTION ENGINE
Fuse F2 10A

K32: SWITCH-OFF RELAY FOR COMBUSTION ENGINE
Fuse F2 10A

K33: AUXILIARY RELAY FOR DIESEL ENGINE START

K34: PREVENTION RELAY FOR RESTART OF ELECTRIC MOTOR
Prevents the electric motor from starting after the failure in AC power supply by switching off the control voltage from the control contactor of the motor.

K35: PREVENTION RELAY FOR RESTART OF ELECTRIC MOTOR
Connects the voltage supply to the relay K34, if the voltage in the control circuit of the contactor is switched off.

K390: CHANGE-OVER RELAY FOR OPTIONAL FUNCTIONS
As the relay is active the lifting-lowering movements of the articulated arms are switched over to the joystick movements in the X-direction. As the relay is not active the joystick movements in the X-direction control turning of the boom to the left and right.

K391: CHANGE-OVER RELAY FOR OPTIONAL FUNCTIONS
As the relay is active the in-out movements of the telescope are switched over to the joystick movements in the Y-direction. As the relay is not active lifting-lowering movements of the boom are switched over to the joystick movements in the Y-direction

K40: CONTROL OF THE COMBUSTION ENGINE CHOKE
Switches on the combustion engine choke
Fuse F2 10A

K41: SENSOR RELAY FOR AC SUPPLY
When the lift is connected to an AC supply, the relay switches off the start circuit and switches on the stop circuit of the combustion engine. The relay spool is controlled by the AC-voltage.

K42: START RELAY OF COMBUSTION ENGINE
Fuse F2 10A

SR2: Safety relay monitoring the operation of the outriggers
The safety relay resets as soon as all outrigger safety limit switches (RK11, RK12, RK13 and RK14) have closed. After that it is possible to operate the boom.

Downloaded from www.Manualslib.com manuals search engine

SR3: SAFETY RELAY WHICH MONITORS THE OVERLOADING OF BOOM

Safety limit-switch RK5 controls the operation of the safety relay.

Overloading of the boom: SR3 is disconnected. The safety relay is automatically reset upon return to the normal outreach range. The delay adjusted with the capacitors affects the tripping moment of the SR3.

If the RK5 fails: SR3 is disconnected. The safety relay is not automatically reset but the due operation of the electric equipment must be checked. The delay adjusted with the capacitors affects the tripping moment of the SR3.

SR4: SAFETY RELAY FOR EMERGENCY STOP CIRCUIT

SR4 switches off control voltage from the engine control contactors.

The safety relay operates provided that the emergency stop buttons on the upper and lower control centres are in their upper positions and the chain limit switch RK7 is not active. In adition the contactors K1 and K2 must be inactive.

The safety relay will trip if the emergency stop buttons either on the upper or on the lower control centre is depressed or the chain limit switch is activated.

Downloaded from www.Manualslib.com manuals search engine

CHASSIS CONTROL CENTRE (LCB), SWITCHES

S1: LOCKING EMERGENCY STOP SWITCH
Stops all other functions except the emergency descent and the sound signal, which remain operational.

S2: START SWITCH
Controls the contactor of the electric motor and start solenoid of the combustion engine if the combustion engine is used.

S3: STOP SWITCH
Disconnects the control voltage from the control contactor of the electric motor and the stop relay of the combustion engine.

S13:START SWITCH FOR EMERGENCY DESCENT
Controls the solenoid for the emergency descent unit which starts the unit and supplies the control voltage to the control levers while the the emergency descent system is in operation.

S16: TURNING OF THE BOOM TO THE RIGHT - LEFT
Non-locking lever switch (chassis control panel).

S17: BOOM UP-DOWN
Non-locking lever switch (chassis control panel).

S18: TELESCOPE IN-OUT
Non-locking lever switch (chassis control panel).

S19: ARTICULATED ARMS DOWN-UP
Non-locking lever switch (chassis control panel).

S20: PLATFORM LEVELLING FORWARD-BACKWARD
Non-locking lever switch (chassis control panel).

S32: TELESCOPE IN
Non-locking button switch. After the SR3 has tripped, the telescope can be retracted by depressing the button.

S40: COMBUSTION ENGINE CHOKE
Non-locking button switch. Depressing the button activates the combustion engine choke.

Downloaded from www.Manualslib.com manuals search engine

CHASSIS CONTROL CENTRE (LCB), OTHER ITEMS

F1: 1.6A FUSE FOR TIMER CARD ACTIVATION CIRCUIT

F2: 10 A CONTROL FUSE FOR START CIRCUIT AND OUTREACH MONITORING CIRCUIT

F3: 10 A CONTROL FUSE FOR DRIVING DEVICE

F4: 5 A FUSE FOR CONTROL LEVERS AND JOYSTICK ON THE CHASSIS AND PLATFORM CONTROL PANELS

F5: 1,6 A CONTROL FUSE FOR DRIVING DEVICE

F6: FUSE FOR SOLENOID VALVES 10A

F7: 10 A CONTROL FUSE FOR EMERGENCY DESCENT CIRCUIT

F8: 10 A FUSE FOR CONTROL OF COMBUSTION ENGINE

F12: TIMER CARD FUSE 16A

H3: YELLOW LED SIGNAL LIGHT
Indicates the operation of the outrigger limit switches RK11-RK14.

H4: RED LED SIGNAL LIGHT
Indicates the tripping of the SR3.

HM1: HOUR METER
Measures the running hours of the machine.

Q1: TURN SWITCH WITH KEY
Selector switch for choice of operating location.
1 = Chassis
2 = platform
3 = chassis panel

T1: POWER SUPPLY
Feeds the 12 VDC control voltage to the system as the machine is being powered by AC-supply.

TC: TIMER CARD
Control card for supply voltage.
Connects the control voltage supply from the power source while the AC feed is connected.
Switches over the voltage supply feed from battery.
Disconnects the supply voltage from the lift after a preset delay (normally 1 hour)
Start buttons S2 and S6 are used for re-activation of the control voltage.

TR9: RESISTOR
Adjustable resistor for movement speed for operation from the chassis panel.

TR10: RESISTOR
Adjustable resistor for lowering speed of platform levelling.

Downloaded from www.Manualslib.com manuals search engine

TR11: RESISTOR
Adjustable resistor for movement speed for operation from the chassis panel.

TR12: RESISTOR
Adjusting the lowering speed of the articulated arms.

U1: VOLTAGE METER
When the control voltage is switched on, the voltage meter reading indicates the value of alternating voltage.

PLATFORM CONTROL CENTRE (UCB), RELAYS

K50: CONTROL RELAY FOR SIGNAL LIGHTS WHICH INDICATE THE STATE OF LOADING OF THE PLATFORM
The relay is controlled by the closing point of the limit switch RK4.

K51: PLATFORM TURN TO THE LEFT
Controlled by the non-locking lever switch S36.
The control movement is stopped by the inductive end limit switch RK9 of the linear motor.

K52: PLATFORM TURN TO THE RIGHT
Controlled by the non-locking lever switch S36.
The control movement is stopped by the inductive end limit switch RK10 of the linear motor.

Downloaded from www.Manualslib.com manuals search engine

PLATFORM CONTROL CENTRE (UCB), SWITCHES

DMK: DEAD-MAN-SWITCH

JST: JOYSTICK
As the right side of the rocker switch is depressed, the movements are: boom up - down and turn right - left.
As the left side of the rocker switch is depressed, the movements are: telescope out - in and articulated arms up - down.

S4: LOCKING EMERGENCY STOP SWITCH
Stops all other functions except the emergency descent and the sound signal, which remain operational.

S5: STOP SWITCH
Disconnects the control voltage from the control contactor of the electric motor and the stop relay of the combustion engine.

S6: START SWITCH
Controls the contactor of the electric motor and start solenoid of the combustion engine if the combustion engine is used.

S10: SOUND SIGNAL SWITCH

S11: EMERGENCY DESCENT SWITCH
Controls the solenoid for the emergency descent unit which starts the unit and supplies the control voltage to the control levers while the the emergency descent system is in operation.

S12: PLATFORM LEVELLING FORWARD-BACKWARD
Control switch, non-locking lever switch.
The levelling is operated by pressing the button S29 and tuning the lever switch S12.

S29: SELECTOR SWITCH FOR LEVELLING AND TURNING OF PLATFORM
Non-locking button switch.
Switches on the control voltage to the switches S12 and S36 as the button is pressed.

S31: TELESCOPE IN
Non-locking pushbutton for retraction of the telescope.

S36: PLATFORM TURN TO LEFT AND RIGHT
Non-locking lever switch.
Controls the relays K14 and K15.
The turning is operated by pressing the button S29 and turning the lever switch S36.

S41: COMBUSTION ENGINE CHOKE
Non-locking button switch. Depressing the button activates the combustion engine choke.

Downloaded from www.Manualslib.com manuals search engine

PLATFORM CONTROL CENTRE (UCB), OTHER ITEMS

H1: GREEN LED SIGNAL LIGHT
The platform inside the operating range.

H2: RED LED SIGNAL LIGHT
The platform at the border of the operating range.

F10: AUTOMATIC FUSE FOR PLATFORM TURN 4A

F9: JOYSTICK FUSE 1.6A

PR: SOCKET OUTLET ON THE PLATFORM 230VAC 16A.

ÄM2: BUZZER
Indicates the operation of the safety limit switch RK5 and the emergency stop switches S1 and S4.

LIMIT-SWITCHES

RK3: LIMIT SWITCH FOR THE BOOM SUPPORT
Prevents the operation of the outriggers and the driving device if the boom does not rest on the support in the transport position. Controls the relay K30.

RK4: SAFETY LIMIT SWITCH FOR THE ADJUSTED OPERATING RANGE
The operation of the limit switch stops the "boom down" movement and the "telescope out" movement.

RK5: BACKUP LIMIT SWITCH FOR THE SAFETY LIMIT SWITCH RK4.
Trips after the preset delay (2,4 seconds) the safety relay SR3 which controls the sound signal AM2 and switches off the control voltage to the limit switch RK4.

RK7: SAFETY LIMIT SWITCH FOR THE TELESCOPE CHAIN.
Operation of the safety limit switch stops the electric motor. The limit switch switches off the control voltage to the contactor K1 after which only the emergency descent unit will operate.

RK8: "TELESCOPE IN THE INNER POSITION" SAFETY LIMIT SWITCH
The limits switch closes as the telescope movement is completely retracted.
If the RK4 or RK5 has failed the boom cannot be lowered until the telescope movement has been completely retracted and the tips of the limit switch RK8 have closed.

RK9: INDUCTIVE LIMIT SWITCH
Limits turning of the platform to the left by disconnecting the control voltage circuit for the relay K51.

RK10: INDUCTIVE LIMIT SWITCH
Limits turning of the platform to the right by disconnecting the control voltage circuit for the relay K52.

RK11 - RK14 **:** LIMIT SWITCHES ON THE OUTRIGGERS
The limit switch closes as soon as sufficent force is exerted on the outrigger.
Prevents the operation of the boom unless the outriggers are not firmly supported on the ground and all limit switches are not closed.

Downloaded from www.Manualslib.com manuals search engine

DRIVING DEVICE CONTROL CENTRE (DCB)

S21: SELECTOR SWITCH
DRIVING DEVICE IN OPERATION - NOT IN OPERATION

S22: NON-LOCKING OPERATION SWITCH
DRIVING DEVICE; DRIVE TO THE LEFT - TO THE RIGHT

S23: NON-LOCKING OPERATION SWITCH
DRIVING DEVICE; DRIVE TO THE LEFT - TO THE RIGHT

S24: NON-LOCKING OPERATION SWITCH
DRIVING DEVICE; DRIVE TO THE REAR

S25: NON-LOCKING OPERATION SWITCH
DRIVING DEVICE; DRIVE TO THE FRONT

OTHER MARKINGS

B1: BATTERY 12VDC 44AH

E1: THERMORELAY FOR THE ELECTRIC MOTOR

F11: MAIN BATTERY FUSE 125A

J1: PLUG

M1: ELECTRIC MOTOR 230VAC 1.5kW

M2: EMERGENCY DESCENT MOTOR 12VDC
MAX. OPERATING TIME 10 MIN.

M3: MOTOR FOR PLATFORM TURN

PL: ROTARY ADAPTOR
The electric circuits between the chassis and the turning device go through the electric rotary adaptor.

SR1: Solenoid for the emergency descent unit
When energized, starts the emergency descent unit M2.

SPV: Mains switch
Disconnects the plus terminal of the battery.

T2: Battery recharger
Charging voltage 13,8VDC 6A.
Charges the battery if the mains supply is connected.

VVK: FAULT CURRENT SWITCH 25A 30 ms.

ÄM1: SOUND SIGNAL

Downloaded from www.Manualslib.com manuals search engine

ADJUSTMENT VALUES OF MOVEMENT SPEEDS

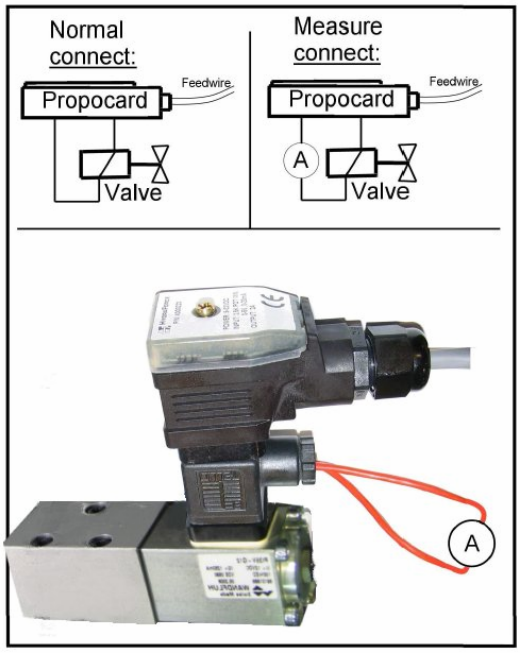

1. **Measuring devices required for the adjustment**
   - volt-ohm-milliammeter (for measuring of current)
   - measuring adapter (for measuring of current)

2. **Disconnect the socket from the control card and connect the measuring adapter between the valve and the socket.**

3. **Connect the measuring conductors to the direct current range of the volt-ohm-milliammeter (max. measuring current I_{max}=2A)**

   Lift up the machine from the ground using the outriggers for operating the boom

4. **Turn the key-switch to position 3, the power unit may be switched off**

5. **Check that the adjustable resistors TR9, TR10, TR11 and TR12 on the circuit card in the main centre have been turned counter-clockwise to their extreme positions**

CONTROL CARD SCREWS
1. Maximum current I_{max}
2. Minimum current I_{min}
3. Frequency adjustment
4. Intensity of frequency
5. Ascending ramp
6. Descending ramp

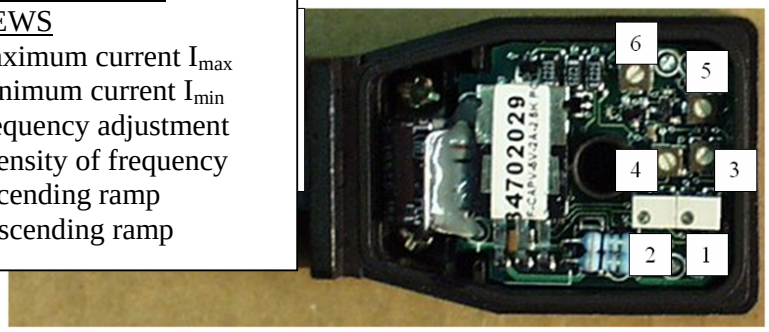

6. **Frequency adjustment (the lift in boom-mode, the power unit is not running)**

   Turn at first the **adjustment screw 3** on the control card to its minimum position (to extreme position counter-clockwise) and after this turn it 1/4 turn clockwise.

7. **Intensity adjustment of frequency (the lift in boom-mode, the power unit is not running)**

   Turn at first the **adjustment screw 4** on the control card to its minimum position (to extreme position counter-clockwise) and after this turn it 1/4 turn clockwise.

8. **Adjustment of the ascending ramp (the lift in boom-mode, the power unit is not running)**

   Turn at first the **adjustment screw 5** on the control card to its minimum position (to extreme position counter-clockwise) and after this turn it 1/5 turn clockwise.

9. **Adjustment of the descending ramp (the lift in boom-mode, the power unit is not running)**

   Turn the **adjustment screw 6** on the control card to its minimum position (to extreme position counter-clockwise), the descending ramp is not in use.

Downloaded from www.Manualslib.com manuals search engine

10. Adjustment of min. current of the control card (the lift in boom-mode, the power unit is not running)

10.1 The intensity of current increases as the screw is turned clockwise

10.2 Adjust the minimum current to I_{min}=330mA

11. Adjustment of max. current for the control card (the lift in boom-mode, the power unit is not running)

11.1 the max. current is adjusted using the **screw 1**

11.2 drive the "boom up" movement

11.3 carry out the adjustment during the lifting, the current increases as the screw is turned clockwise

11.4 adjust the max. current to I_{max}=1300mA

12. The movement speeds are adjusted using the adjustable resistors on the circuit card in the main control centre. The speed of the following movements can be adjusted:

- TR9 = levelling of the platform
- TR10 = the speed of movements when controlled from the chassis control panel (affects the speed of all movements when controlled from the chassis panel)
- TR11 = lowering of the boom
- TR12 = lowering of the articulated arms

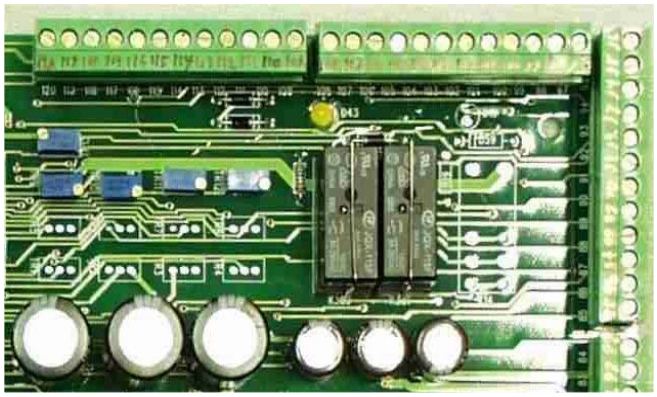

13. Adjustment of the movement speed from the chassis panel.

Drive the "boom up" movement and simultaneously adjust the intensity of current using the adjustable resistor TR10 to I_{lower}=1250mA.

14. Adjusting the lowering speed of the boom

14.1 Drive the "boom down" movement and simultaneously adjust the intensity of current using the adjustable resistor TR11 to I_{lower}=1230mA.

14.2 Check the lowering speed of the boom > start the power unit and raise the boom until the (floor of the) platform is at the height of 2,8 metres.

14.3 Lower the boom to its lowermost position (over a distance of 2 m). The lowering should take about 12 seconds.

15. Lowering the articulated arms

Drive the "articulated arms down" movement and simultaneously adjust the intensity of current using the adjustable resistor TR12 to I_{lower}=1230mA.

16. Levelling of the platform

16.1 Lift the boom as much as is required to prevent the platform from clashing with the chassis during the movement.

16.2 Drive the levelling movement of the platform and simultaneously adjust the intensity of current using the adjustable resistor TR9 to $I_{platform}$=910mA.

16.3 The time required for turning the platform from its upper position to its lower position should be about 23 seconds.

17. Finally, remove the measuring adapter and re-connect the control card plug to its socket.

Downloaded from www.Manualslib.com manuals search engine

ELECTRIC COMPONENTS 2945 >

Boom=Boom CH=Chassis DCB=Driving device centre HN=Honda LCB=Chassis control centre
OT=Outrigger PL= Platform RU= Turning device UCB=Platform control centre

ID	Diagram	Position	Part nr.	Designation	Description of operation
B1		RU	48.2276	Battery	Battery
CC1		RU	48.2340	Control card	Control card for propo-valve
E1		LCB	DL8.058	Thermorelay	Thermorelay for electric motor
F1		LCB	48.3030	Fuse 1,6A	Control circuit fuse for electric supply
F2		LCB	48.640	Fuse 10A	Start circuit fuse
F3		LCB	48.640	Fuse 10A	Chassis control centre fuse
F4		LCB	48.3035	Fuse 5A	Control switch fuse
F5		LCB	48.3030	Fuse 1.6A	Control card fuse
F6		LCB	48.640	Fuse 10A	Fuse for solenoid valves
F7		UCB	48.640	Fuse 10A	Emergency descent circuit fuse
F8		LCB	48.640	Fuse 10A	Control fuse for combustion engine
F9		UCB	48.3030	Fuse 1,6A	Joystick fuse
F10		UCB	48.3036	Fuse 5A	Platform swing motor fuse
F11		RU	48.3041	Fuse 125A	Main battery fuse
F12		LCB	48.3038	Fuse 16A	Timer card fuse
H1		UCB	48.2204	LED signal light, green	Outreach signal light, inside the range
H2		UCB	48.2203	LED signal light, red	Outreach signal light, at the border
H3		LCB	48.2204	LED signal light, green	Support outrigger circuit signal light, limit switches closed
H4		LCB	48.2203	LED signal light, red	Signal light for safety relay SR3, the safety relay has tripped, the outreach safety limit switch RK5 has tripped
HM1		LCB	48.3618	Hour meter	Hour meter which measures the running time of the engine
J1		CH	48.2085	Socket	Plug
JST		UCB	4CA9843	Joystick	Joystick, operation of the boom
K1		LCB	48.2162	Contactor	Control contactor for the electric motor
K2		LCB	48.2162	Contactor	Auxiliary relay for emergency stop button
K3		LCB	48.2374	Telescope in K9	Turning of boom, to the left
K4		LCB	48.2374	Telescope in K9	Turning the boom, to the right
K5		LCB	48.2374	Telescope in K9	Lowering the boom
K6		LCB	48.2392	Telescope in K9	Boom down, retardation relay
K7		LCB	48.2374	Telescope in K9	Lifting of the boom
K9		LCB	48.2374	Telescope in K9	Retracting the telescope
K10		LCB	48.2374	Telescope in K9	Extending the telescope
K11		LCB	48.2374	Telescope in K9	Lowering the articulated arms
K12		LCB	48.2392	Telescope in K9	Articulated arms down, retardation
K13		LCB	48.2374	Telescope in K9	Raising the articulated arms
K15		LCB	48.2374	Telescope in K9	Levelling of the platform backward
K16		LCB	48.2374	Telescope in K9	Levelling of the platform forward
K17		LCB	48.2374	Telescope in K9	Activation of the joystick at the centre position
K18		LCB	48.2392	Telescope in K9	Selector relay, platform levelling/chassis control panel
K19		LCB	48.2392	Telescope in K9	Selector relay, control from chassis/platform
K20		LCB	48.2374	Telescope in K9	Blocking relay for the "telescope out" movement
K21		LCB	48.2374	Telescope in K9	Blocking relay for the boom movement
K22		LCB	48.2375	Telescope in K9	Blocking relay for the "telescope out" movement
K23		LCB	48.2374	Telescope in K9	Control of supply voltage to the driving control centre on the chassis
K24		LCB	48.2375	Telescope in K9	Centre-position activation of joystick

Downloaded from www.Manualslib.com manuals search engine

Boom=Boom CH=Chassis DCB=Driving device centre HN=Honda LCB=Chassis control centre
OT=Outrigger PL= Platform RU= Turning device UCB=Platform control centre

ID	Diagram	Position	Part nr.	Designation	Description of operation
K25		LCB	48.2392	Telescope in K9	Control relay for control card
K26		LCB	48.2374	Telescope in K9	Control relay for combustion engine speed
K27		LCB	48.2374	Telescope in K9	Control of supply voltage to the driving control centre on the chassis
K28		LCB	48.2374	Telescope in K9	Control relay for reserve power unit
K29		LCB	48.2374	Telescope in K9	Blocking relay for dual operation, electric motor/emergency descent motor
K30		LCB	48.2374	Telescope in K9	Control of alternator of the Honda engine
K31		LCB	48.2374	Telescope in K9	Switch-off of combustion engine
K32		LCB	48.2374	Telescope in K9	Switch-off of combustion engine
K33		LCB	48.2374	Telescope in K9	Relay for optional equipment
K34		LCB	48.2374	Telescope in K9	Blocking relay for re-start if the control voltage is switched off
K35		LCB	48.2375	Telescope in K9	Blocking relay for re-start if the control voltage is switched off
K390		LCB	48.2375	Telescope in K9	Change-over relay for secondary operations of joystick
K391		LCB	48.2375	Telescope in K9	Change-over relay for secondary operations of joystick
K40		LCB	48.2374	Telescope in K9	Control relay for choke
K41		LCB	48.2133	Telescope in K9	Selector relay, main power unit/combustion engine
K42		LCB	48.2277	Telescope in K9	Start relay of combustion engine
K50		UCB	48.2374	Telescope in K9	Control relay for the outreach signal lights
K51		UCB	48.2374	Telescope in K9	Turning the platform, to the left
K52		UCB	48.2374	Telescope in K9	Turning the platform, to the right
M1		RU	47.828	Electric motor	AC electric motor
M2		RU	47.2318	Power unit (reserve power plant)	DC motor for emergency descent
M3		PL	4CB4253	Linear motor	Turning motor of the platform.
PL		CH	48.3550	Rotary adaptor (electric part)	Rotary adaptor, electric transmission between the chassis and the turning device
PR		UCB	48.2145	Socket outlet	socket outlet on the platform 230VAC 16A.
Q1		LCB	48.2316	Turn switch	Turn switch with key, choice of operating location LCB/OK/AK
RK3		CH	48.1936 + 48.2142	Limit switch	Limit switch for boom support NC
RK4		Boom	48.2068 + 48.2334	Limit switch	Limit switch for outreach control NC/NO
RK5		Boom	48.2068 + 48.2334	Limit switch	Limit switch for outreach control NC
RK7		Boom	48.2116	Limit switch	Limit switch for chain NC, opens if the chain is slack
RK8		Boom	48.1936 + 48.2142	Limit switch	Limit switch, telescope fully retracted NC
RK9		PL	48.2170	Stroke limiter	Inductive end limit switch for turning motor of platform NC
RK10		PL	48.2170	Stroke limiter	Inductive end limit switch for turning motor of platform NC
RK11		OT	48.2413 +48.2414 +48.2415	Limit switch	Outrigger limit switch NC, closes as the outrigger is on the ground
RK12		OT	48.2413 +48.2414 +48.2415	Limit switch	Outrigger limit switch NC, closes as the outrigger is on the ground
RK13		OT	48.2413 +48.2414 +48.2415	Limit switch	Outrigger limit switch NC, closes as the outrigger is on the ground

Downloaded from www.Manualslib.com manuals search engine

RK14		OT	48.2413 +48.2414 +48.2415	Limit switch	Outrigger limit switch NC, closes as the outrigger is on the ground
S1		LCB	48.2311+48.2313+48.2303	Locking emergency stop button	Emergency stop button, NC
S2		LCB	48.2309+48.2312+48.2302	Pushbutton, green	Engine start button NO
S3		LCB	48.2310+48.2313	Push button, red	Engine stop button NC.
S4		UCB	48.2311+48.2313+48.2303	Locking emergency stop button	Emergency stop button, NC
S5		UCB	48.2310+48.2313	Push button, red	Engine stop button NC.

Boom=Boom CH=Chassis DCB=Driving device centre HN=Honda LCB=Chassis control centre
OT=Outrigger PL= Platform RU= Turning device UCB=Platform control centre

ID	Diagram	Position	Part nr.	Designation	Description of operation
S6		UCB	48.2309+48.2312+48.2302	Pushbutton, green	Engine start button NO
S10		UCB	48.2309+48.2312	Pushbutton, green	Sound signal control button NO.
S11		UCB	48.2335+48.2312	Pushbutton, yellow	Emergency descent motor start button NO, platform
S12		UCB	48.616+48.1007	Lever switch	Platform levelling forward/backward, platform
S13		LCB	48.2335+48.2312	Pushbutton, yellow	Emergency descent motor start button NO, chassis
S16		LCB	48.616 + 48.1007	Lever switch	Turning of boom, right/left, chassis
S17		LCB	48.616 + 48.1007	Lever switch	Lifting/lowering of the boom, chassis
S18		LCB	48.616 + 48.1007	Lever switch	Telescope in/out, chassis
S19		LCB	48.616 + 48.1007	Lever switch	Articulated arms down/up, chassis
S20		LCB	48.616 + 48.1007	Lever switch	Platform levelling forward/backward, chassis
S24		DCB	48.616 + 48.1007	Lever switch	Drive to the rear
S25		DCB	48.2309+48.2313+48.2303	Pushbutton, green	Turning of the chassis
S26		DCB	48.2309+48.2313+48.2303	Pushbutton, green	Turning of the chassis
S29		UCB	48.2309+48.2312	Pushbutton, green	Dual operation button for levelling of the platform, platform
S31		UCB	48.2336+48.2312	Pushbutton, blue	Retraction of the telescope, is used if the safety limit switch RK5 has tripped, platform
S32		LCB	48.2336+48.2312	Pushbutton, blue	Retraction of the telescope, is used if the safety limit switch RK5 has tripped, chassis
S36		UCB	48.616 + 48.1007	Lever switch	Turning of the platform , to left/right, platform
SR1		RU		Solenoid	Emergency descent motor solenoid
SR2		LCB	48.2264	Safety relay	Support outrigger circuit safety relay, is active if the outrigger limit switches are closed
SR3		LCB	48.2264	Safety relay	Safety relay for outreach control safety limit switch, is active if the limit switches RK4 and RK5 are closed
SR4		LCB	48.2264	Safety relay	Safety relay for emergency stop circuit. Is active provided that the emergency descent circuit is in order and the RK7 as well as the K1 and the K2 are not activated.
SPV		RU	48.2442	Mains switch	Disconnects the battery from the system
T1		LCB	47.863	Power source	Power source, supplies the control voltage when powered by AC.
T2		RU	48.0125	Battery charger, automatic	Battery charger 230VAC 3A
TC		LCB	48.3506	Timer card	Time card disconnects the power supply to the lift after a preset delay if the contactor no longer is active
TR9		LCB		Adjustable resistor	Adjustment of the levelling speed of the platform
TR10		LCB		Adjustable resistor	Adjustment of the lowering speed of the boom
TR11		LCB		Adjustable resistor	Universal adjustment of the movement

Downloaded from www.Manualslib.com manuals search engine

					speed when controlling from the chassis panel.
TR12		LCB		Adjustable resistor	Speed adjustment of articulated arms descent
VM1		LCB	48.2063	Voltmeter	Voltage meter
VVK		CH	48.2287	Fault current switch	Fault current switch, switches off the AC-feed in case of fault current
ÄM1		RU	48.049	Sound signal	Sound signal, operation with push button S10
ÄM2		UCB	48.0108	Sound signal	Buzzer, operates if the emergency stop button is depressed and the safety limit switch RK5 trips.

Components for Hatz- diesel (Optional)

Boom=Boom CH=Chassis DCB=Driving device centre HN=Honda LCB=Chassis control centre
OT=Outrigger PL= Platform RU= Turning device UCB=Platform control centre

ID	Diagram	Position	Part nr.	Designation	Description of operation
		HZ		Linear motor	Adsjustment motor of the engine speed
S6		HZ		Temperature sensor	The switch earths the circuit if the engine overheats
S7		HZ		Oil pressure sensor	The switch earths the circuit if the oil pressure drops
MHZ1		HZ		Starter	Starter of the diesel engine
Y2		HZ		Stop solenoid	When the engine is stops, the current will be switched off and the valve will close
R1-GLOW		HZ		Glow plug	Glow plug of the diesel engine

Components for Honda (Optional)

ID	Diagram	Position	Part nr.	Designation	Description of operation
S37		HN		Pushbutton, green	By-pass button for stop circuit of Honda engine
K4		HN	48.1974	Relay 24V DC	Blocking relay for dual starting
IIDA		HN	48.2323	Relay	Auxiliary relay for switching off (earthing)
SR4		HN	48.2422	Solenoid	Choke solenoid

Downloaded from www.Manualslib.com manuals search engine

WIRING DIAGRAM

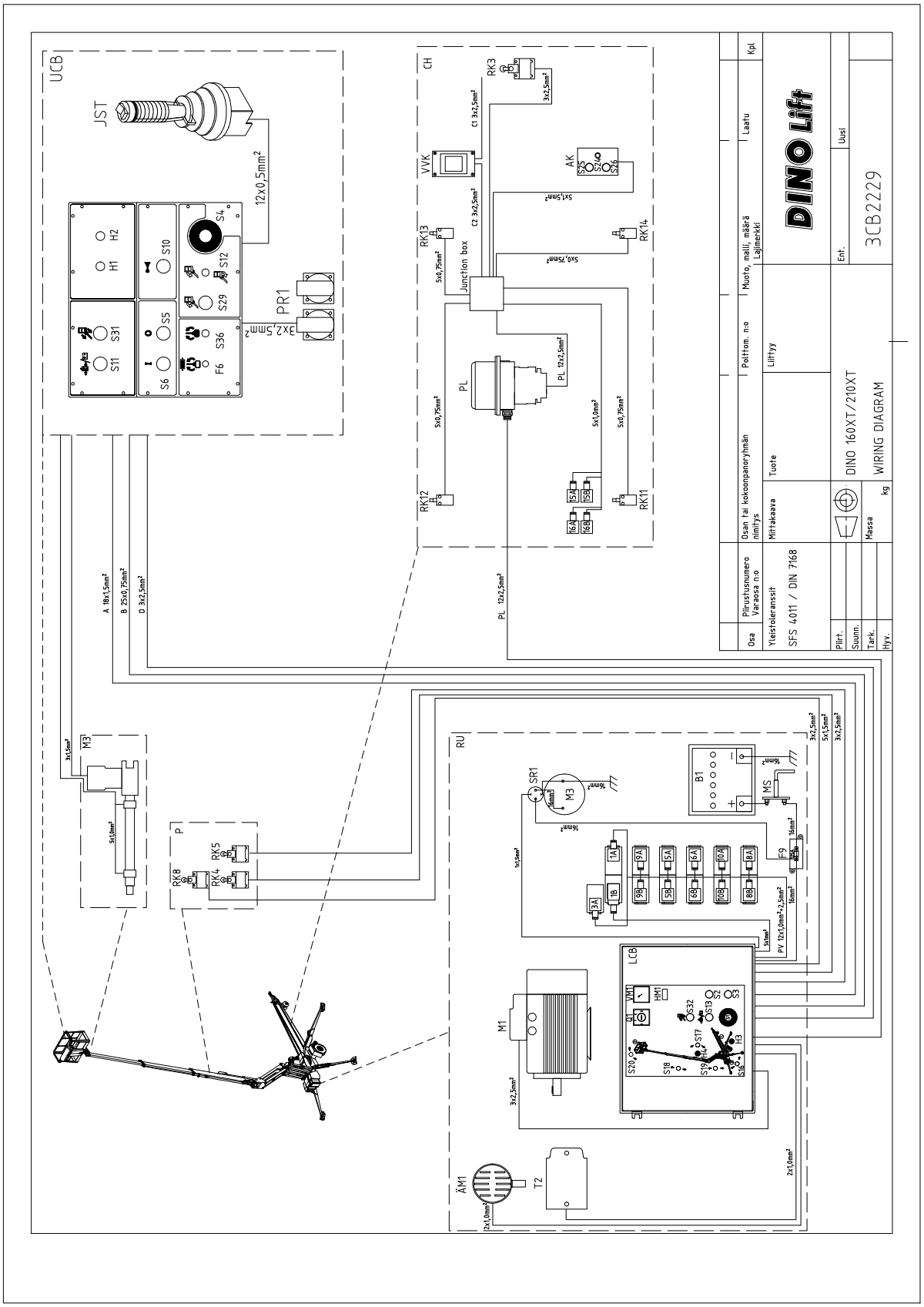

Downloaded from www.Manualslib.com manuals search engine

ELECTRIC DIAGRAM 2945-->

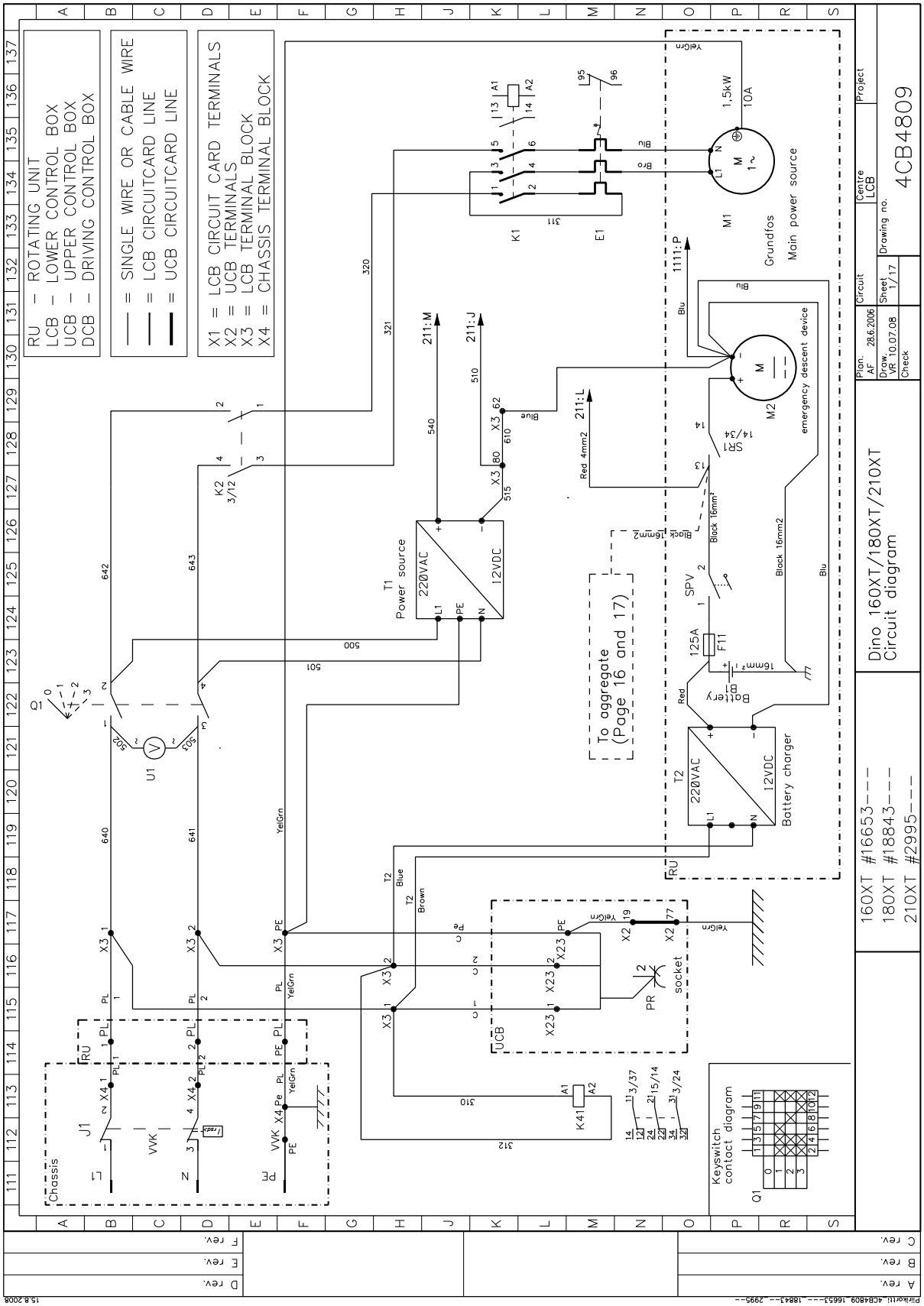

Downloaded from www.Manualslib.com manuals search engine

Downloaded from www.Manualslib.com manuals search engine

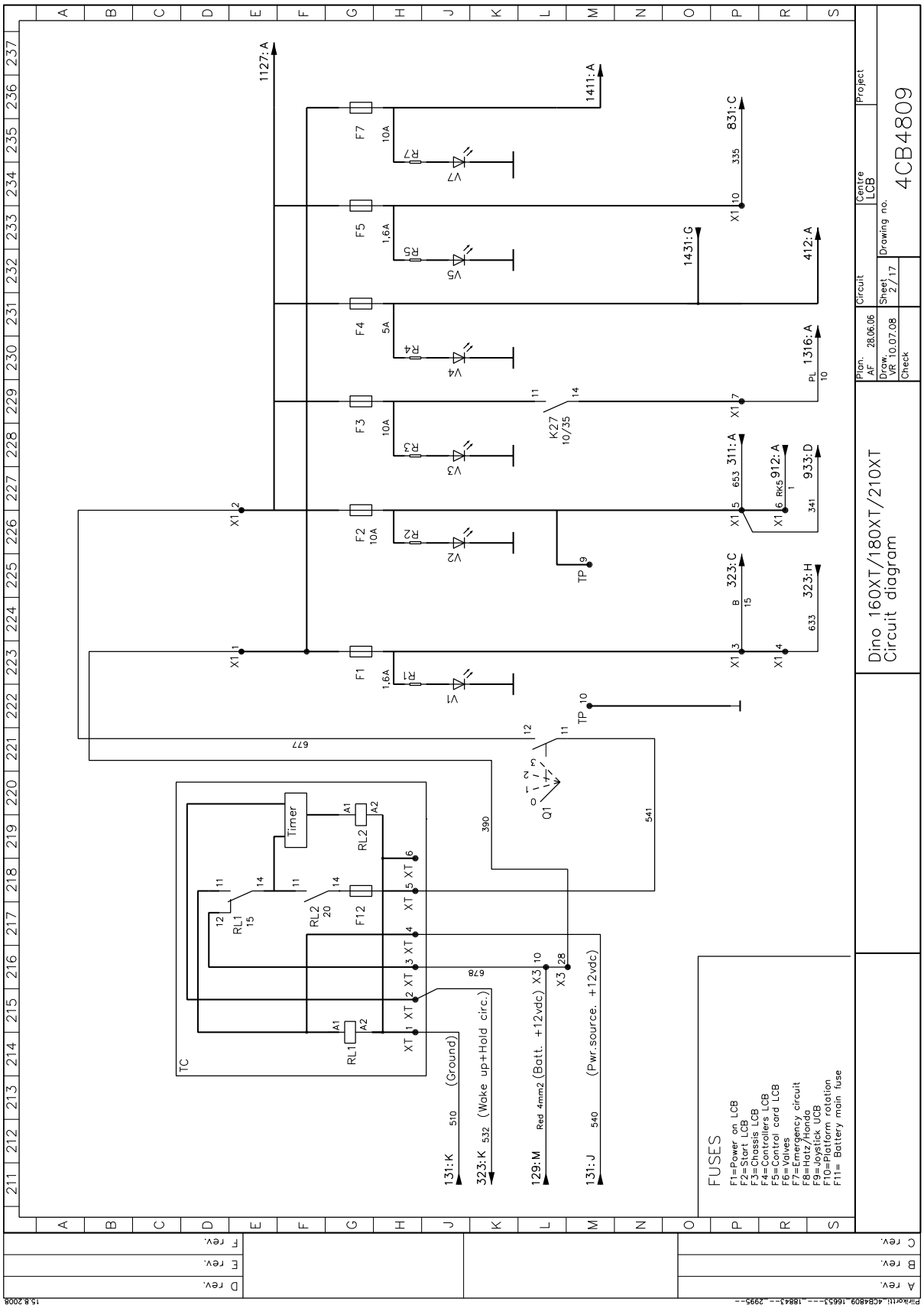

Downloaded from www.Manualslib.com manuals search engine

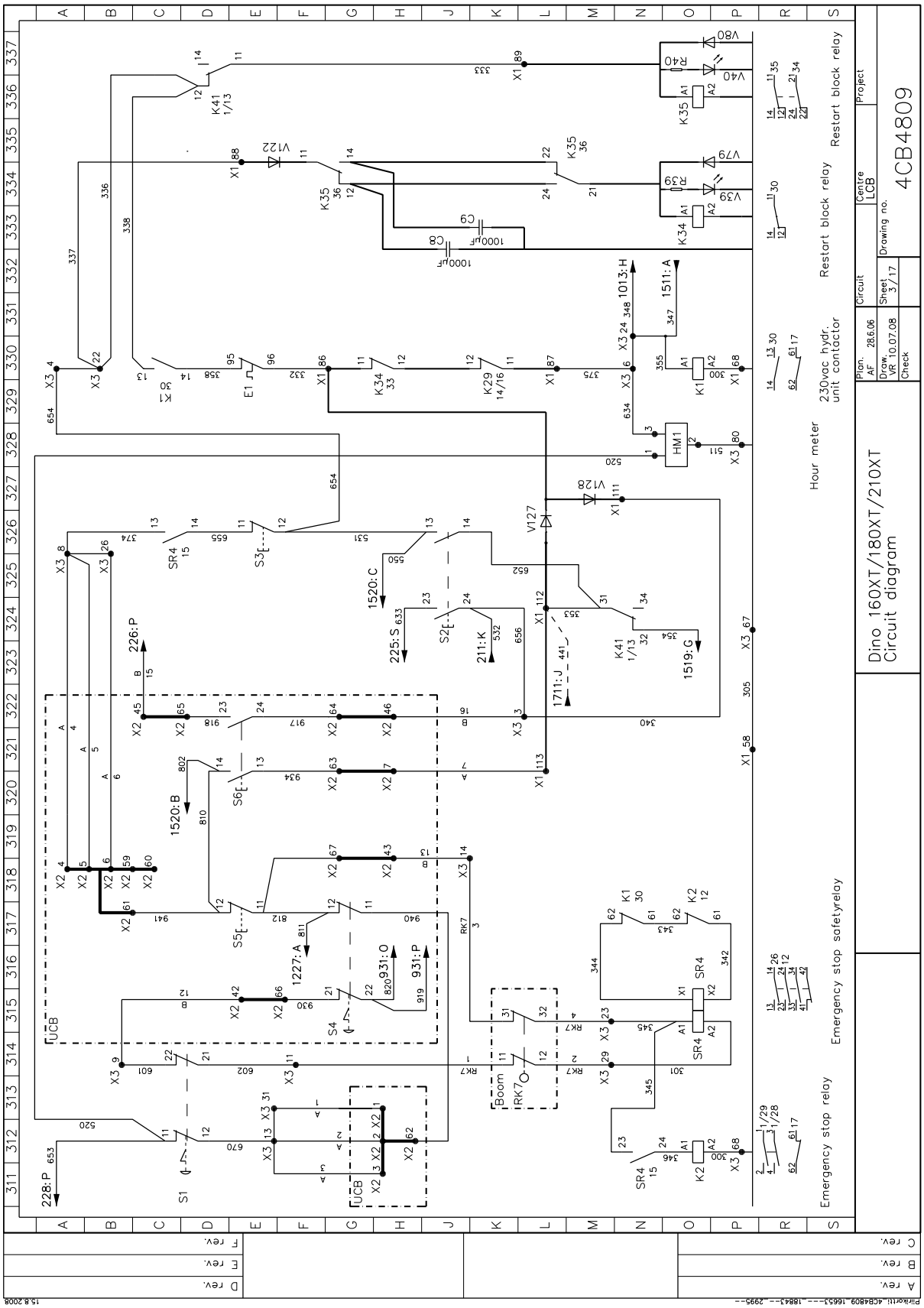

Downloaded from www.Manualslib.com manuals search engine

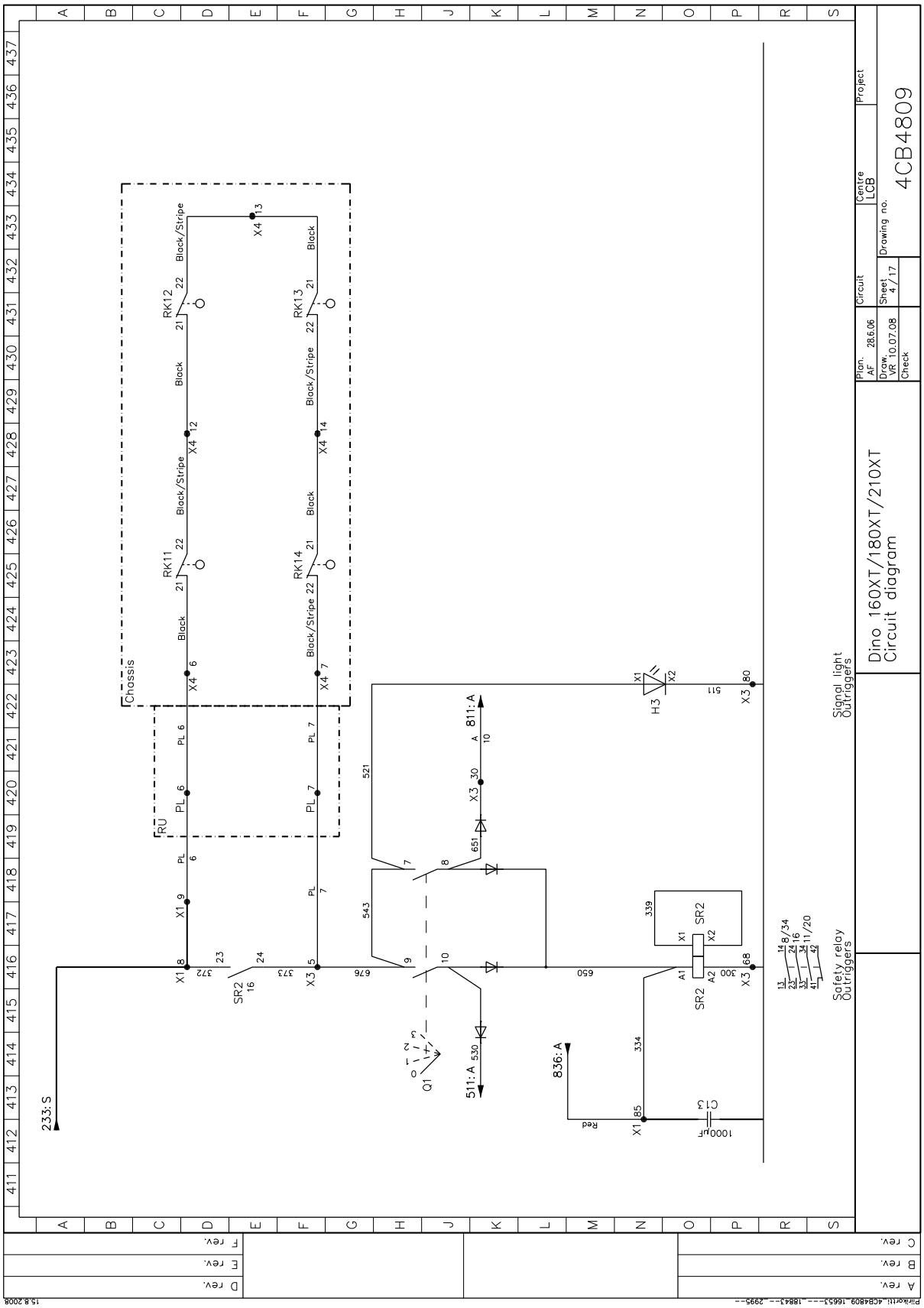

Downloaded from www.Manualslib.com manuals search engine

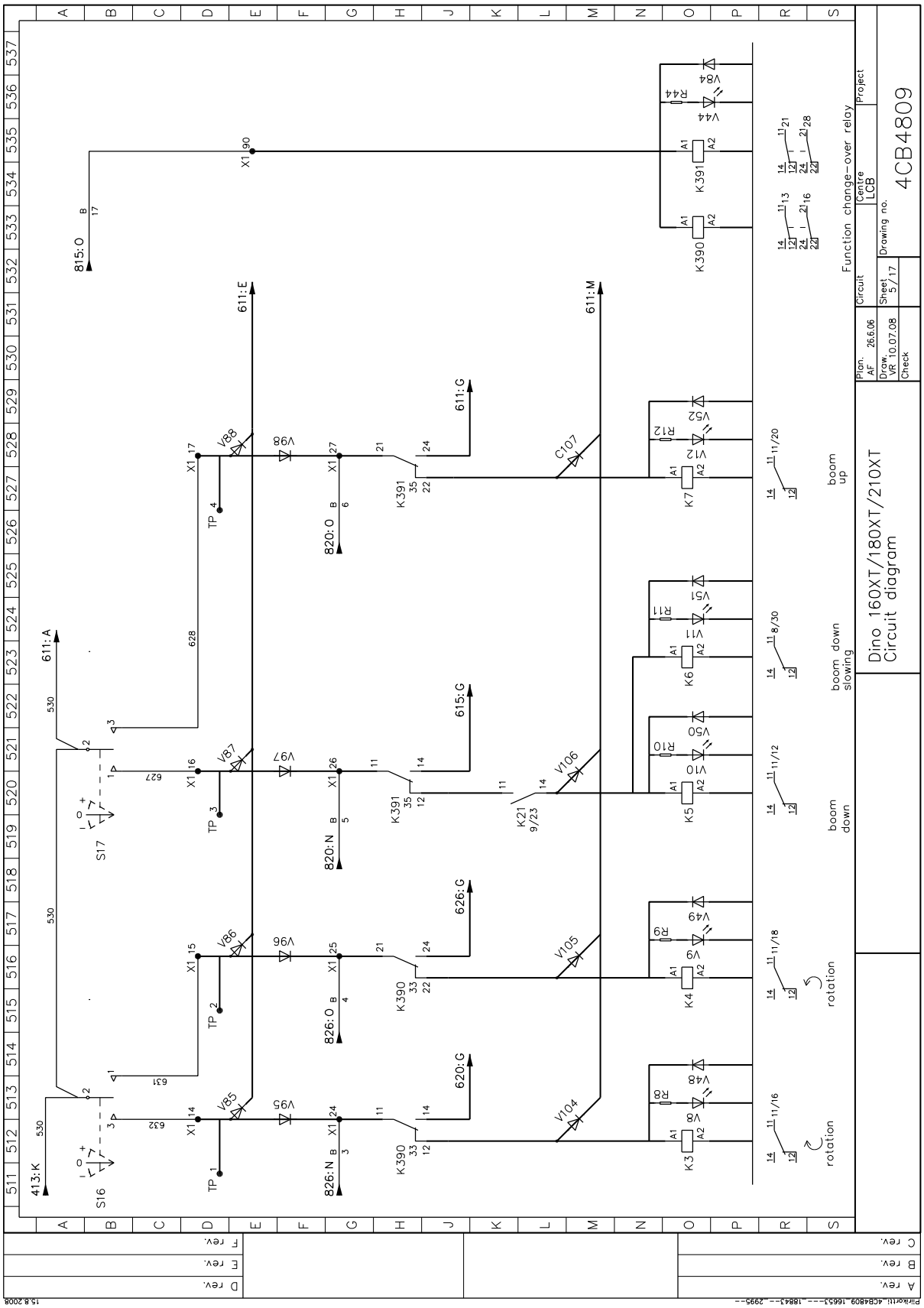

Downloaded from www.Manualslib.com manuals search engine

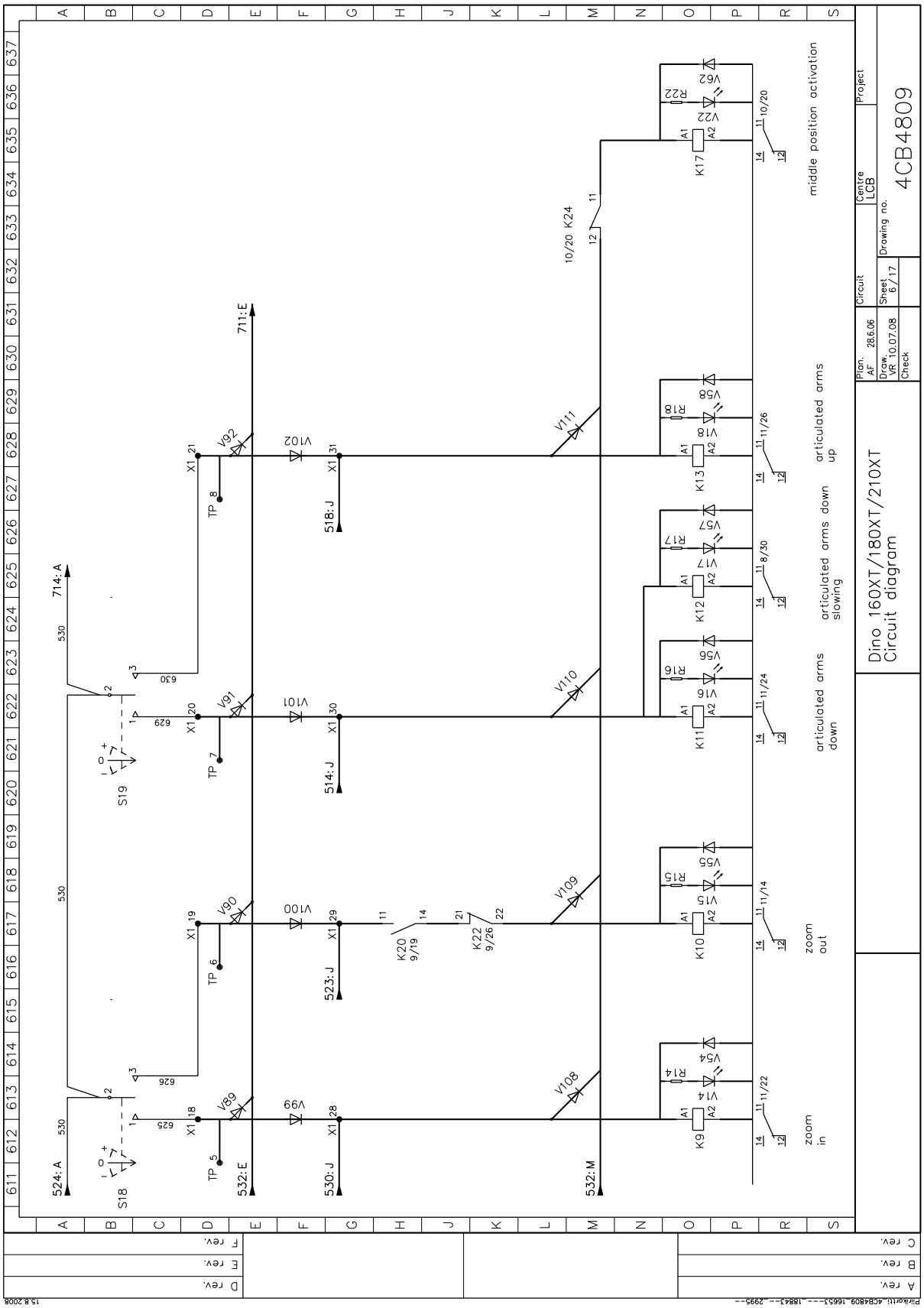

Downloaded from www.Manualslib.com manuals search engine

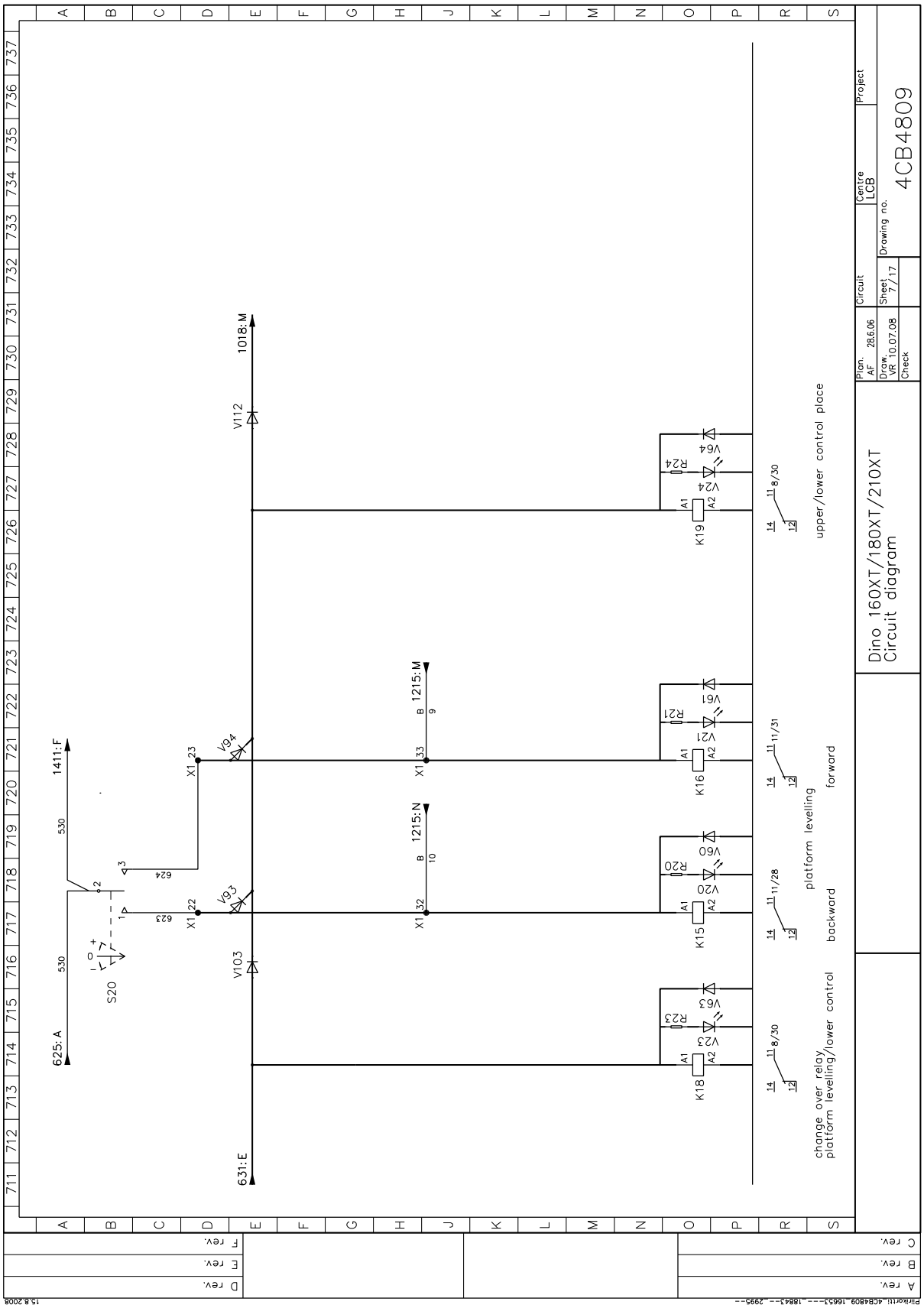

Downloaded from www.Manualslib.com manuals search engine

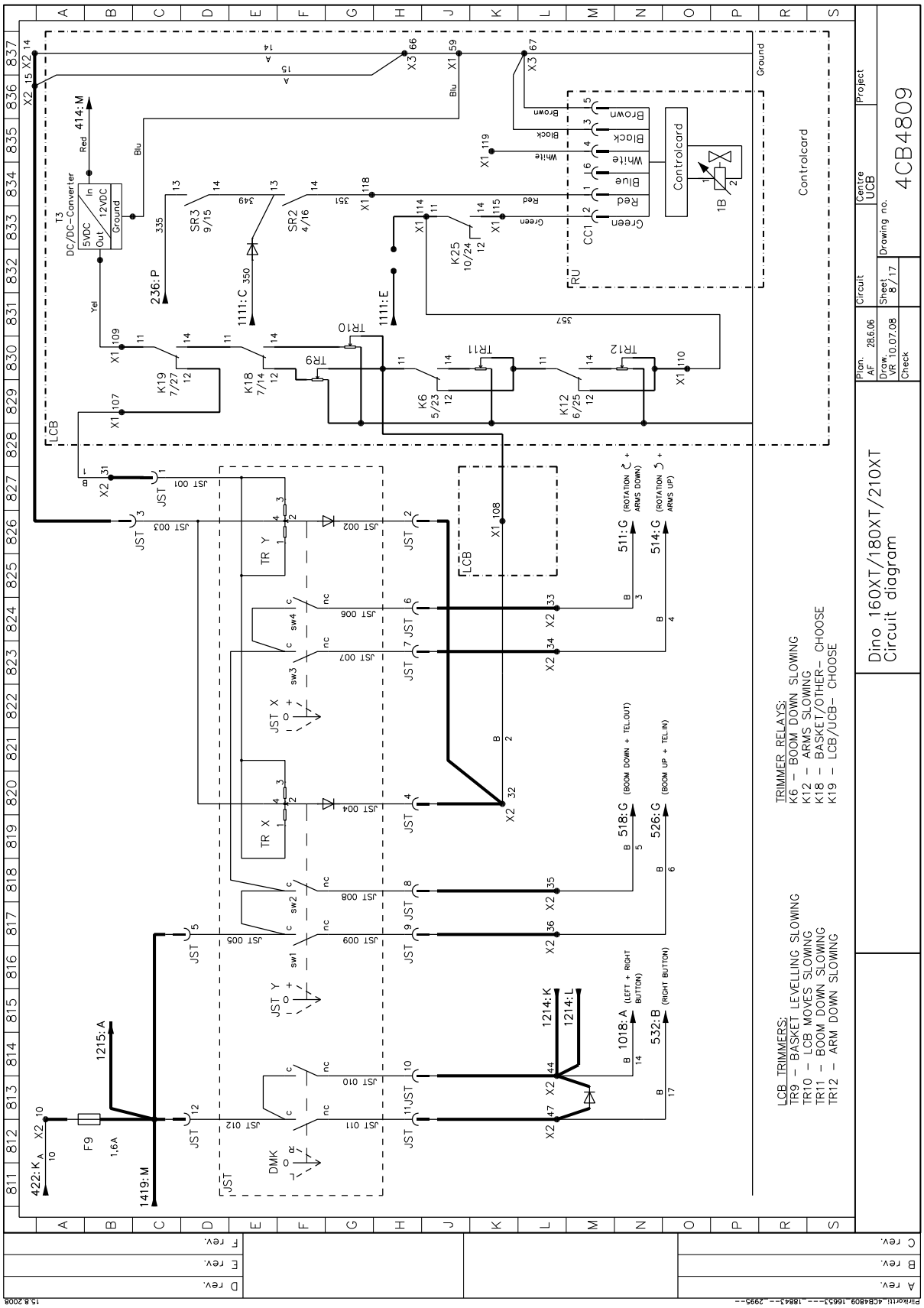

Downloaded from www.Manualslib.com manuals search engine

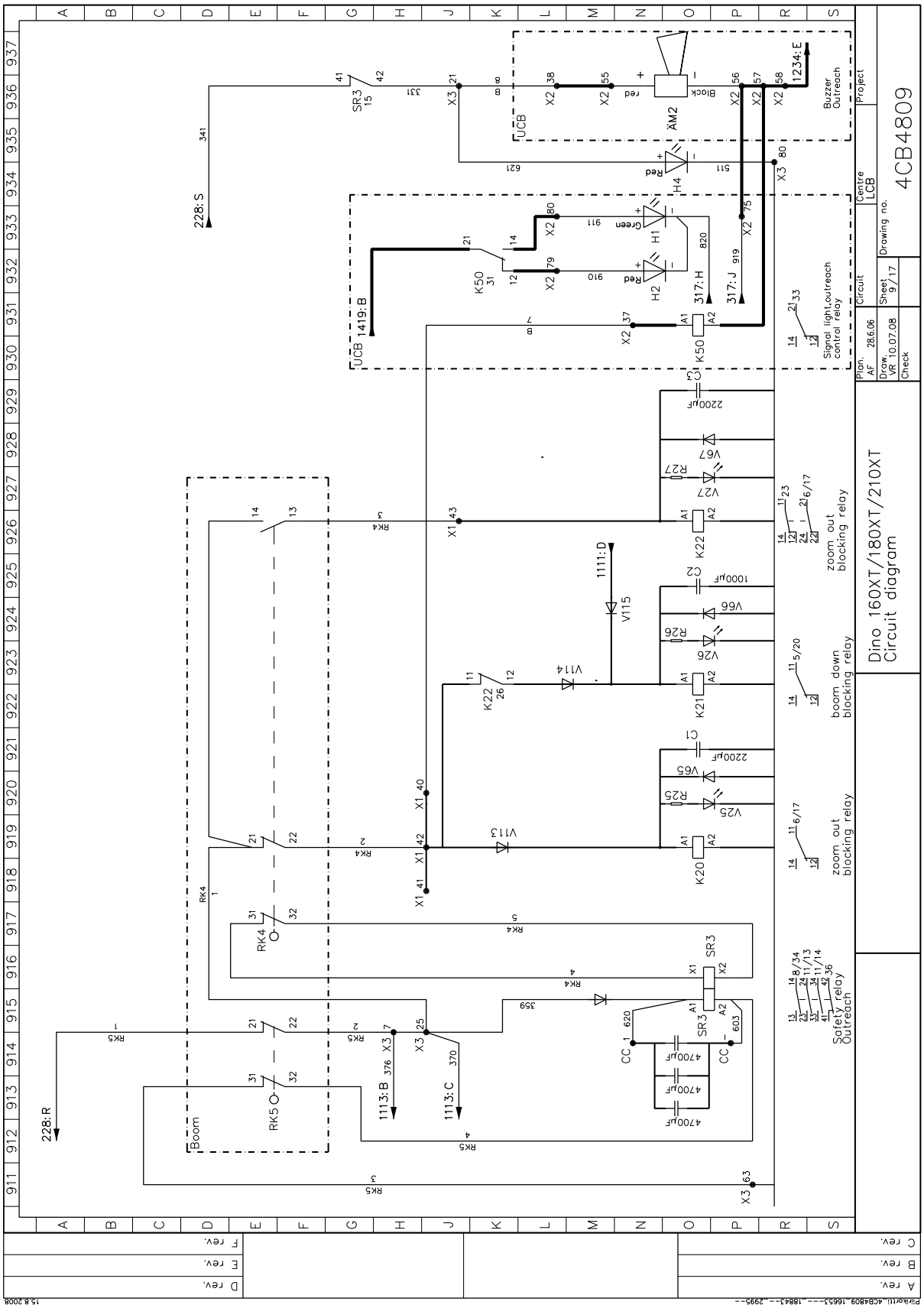

Downloaded from www.Manualslib.com manuals search engine

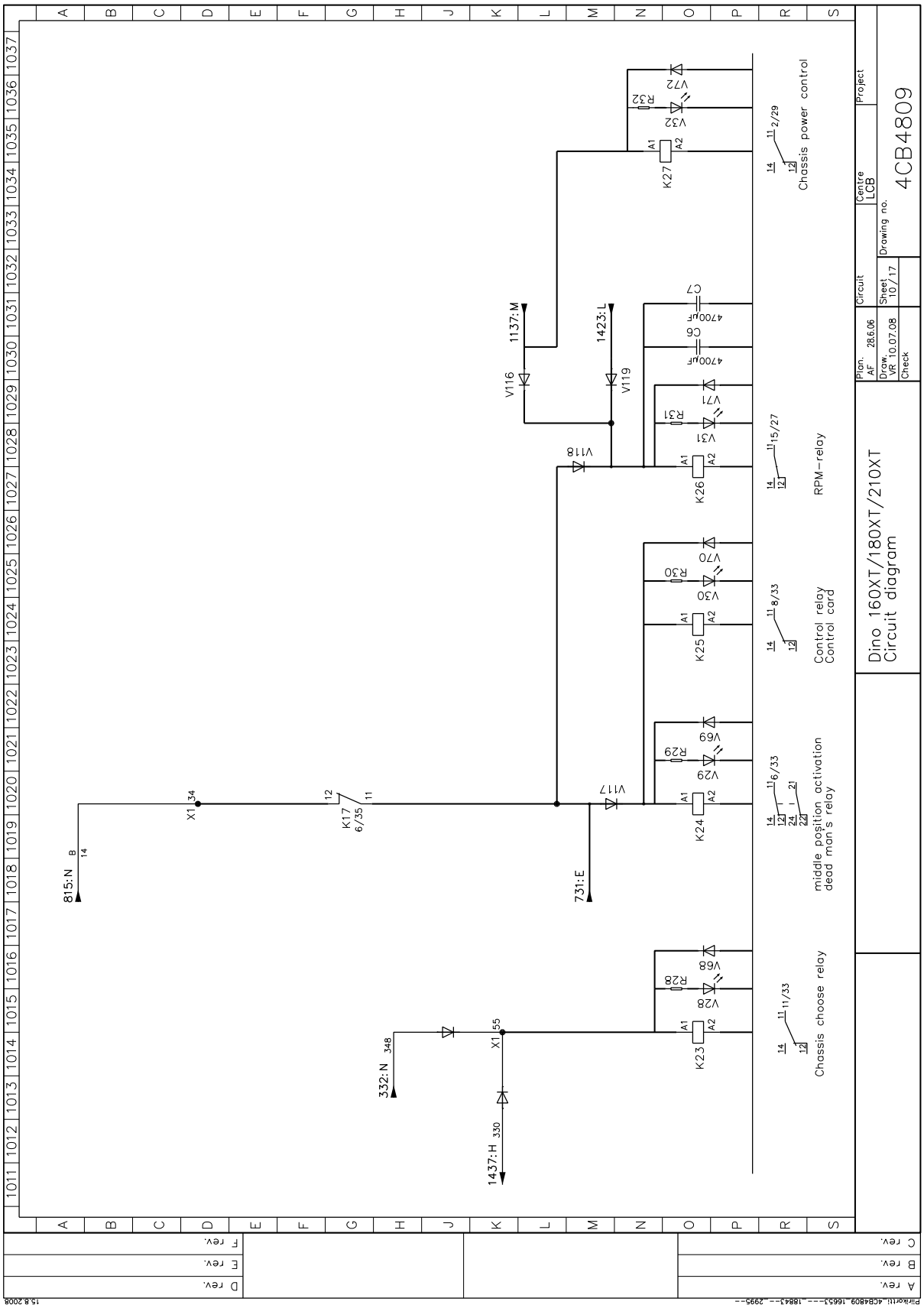

Downloaded from www.Manualslib.com manuals search engine

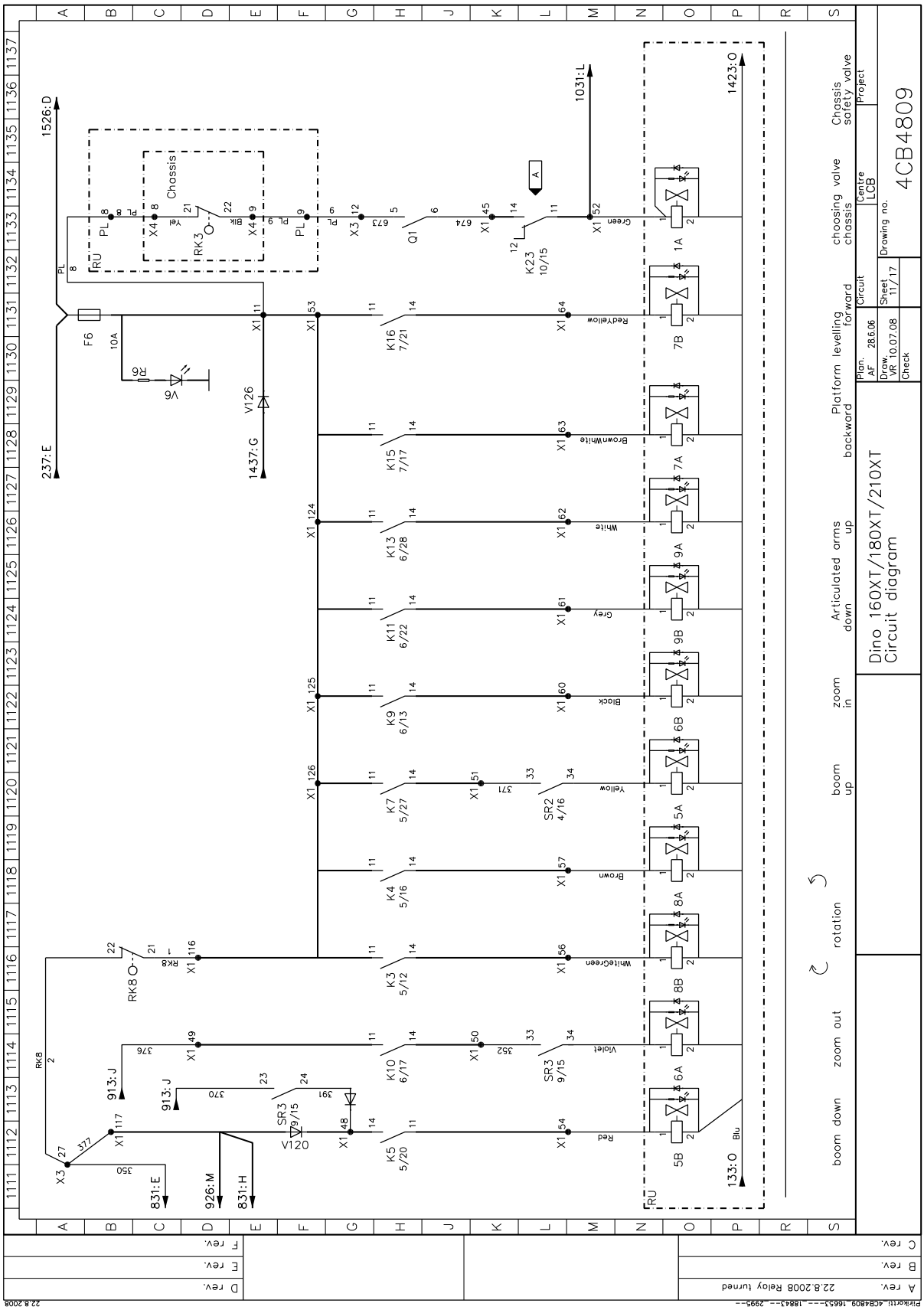

Downloaded from www.Manualslib.com manuals search engine

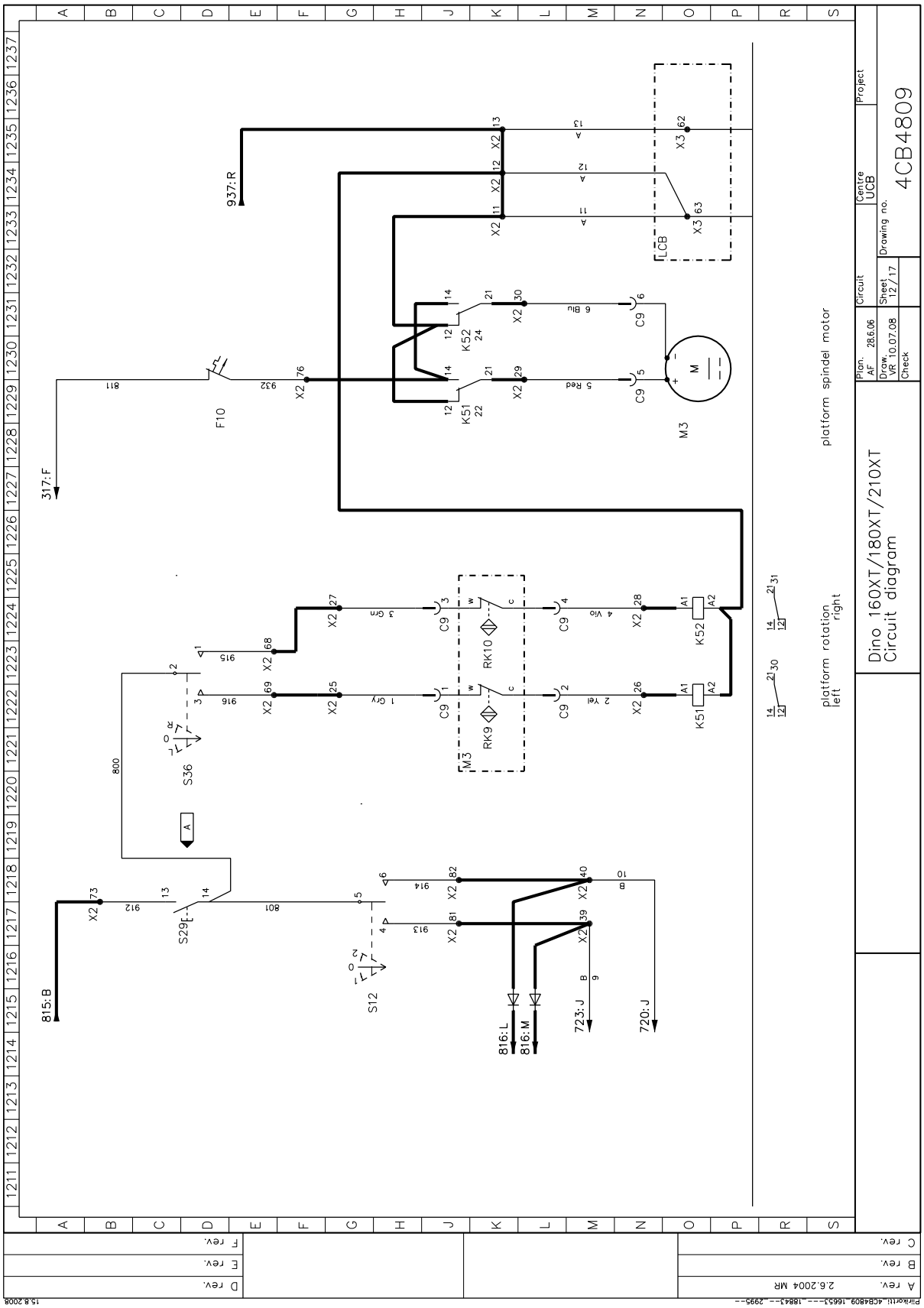

Downloaded from www.Manualslib.com manuals search engine

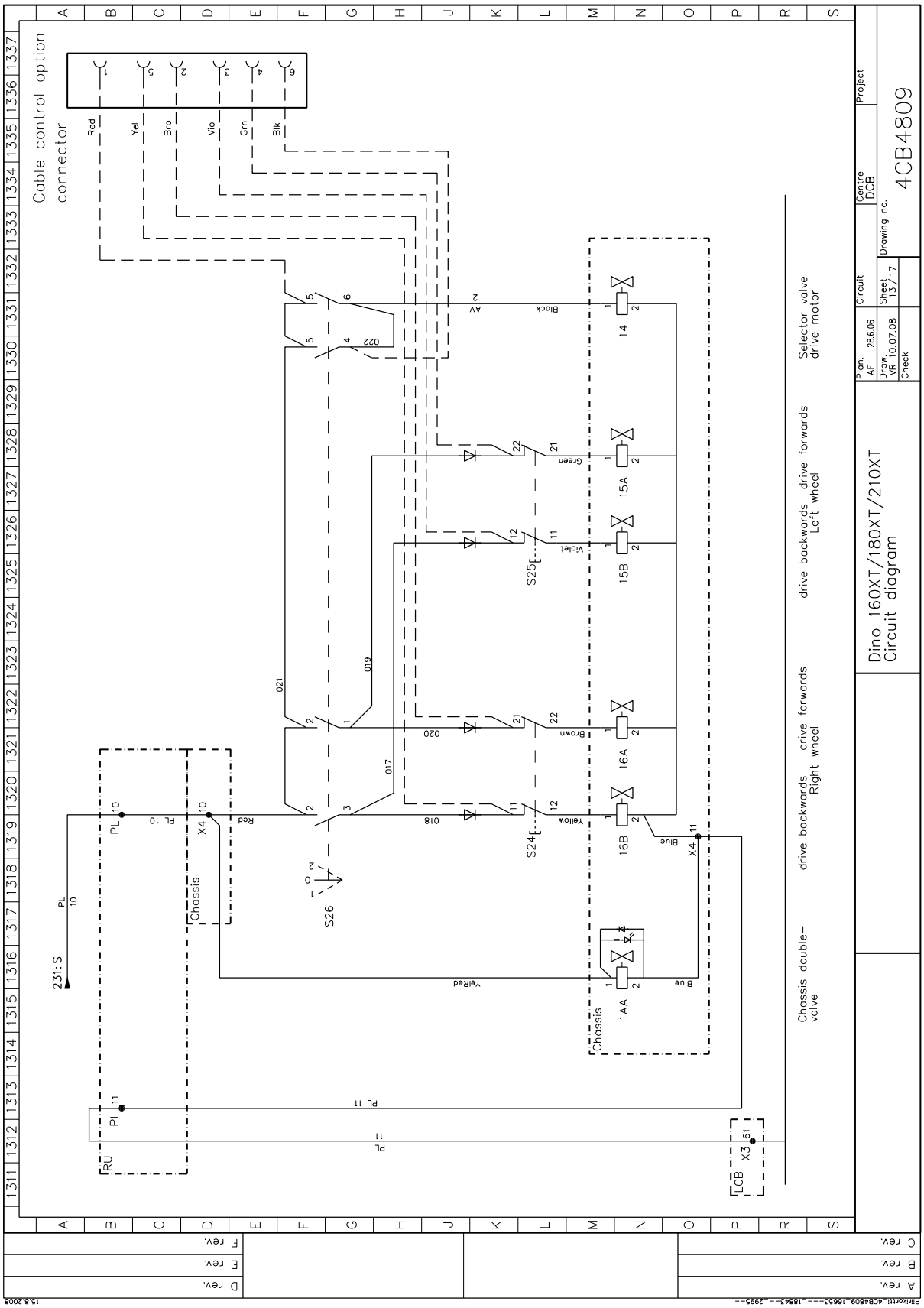

Downloaded from www.Manualslib.com manuals search engine

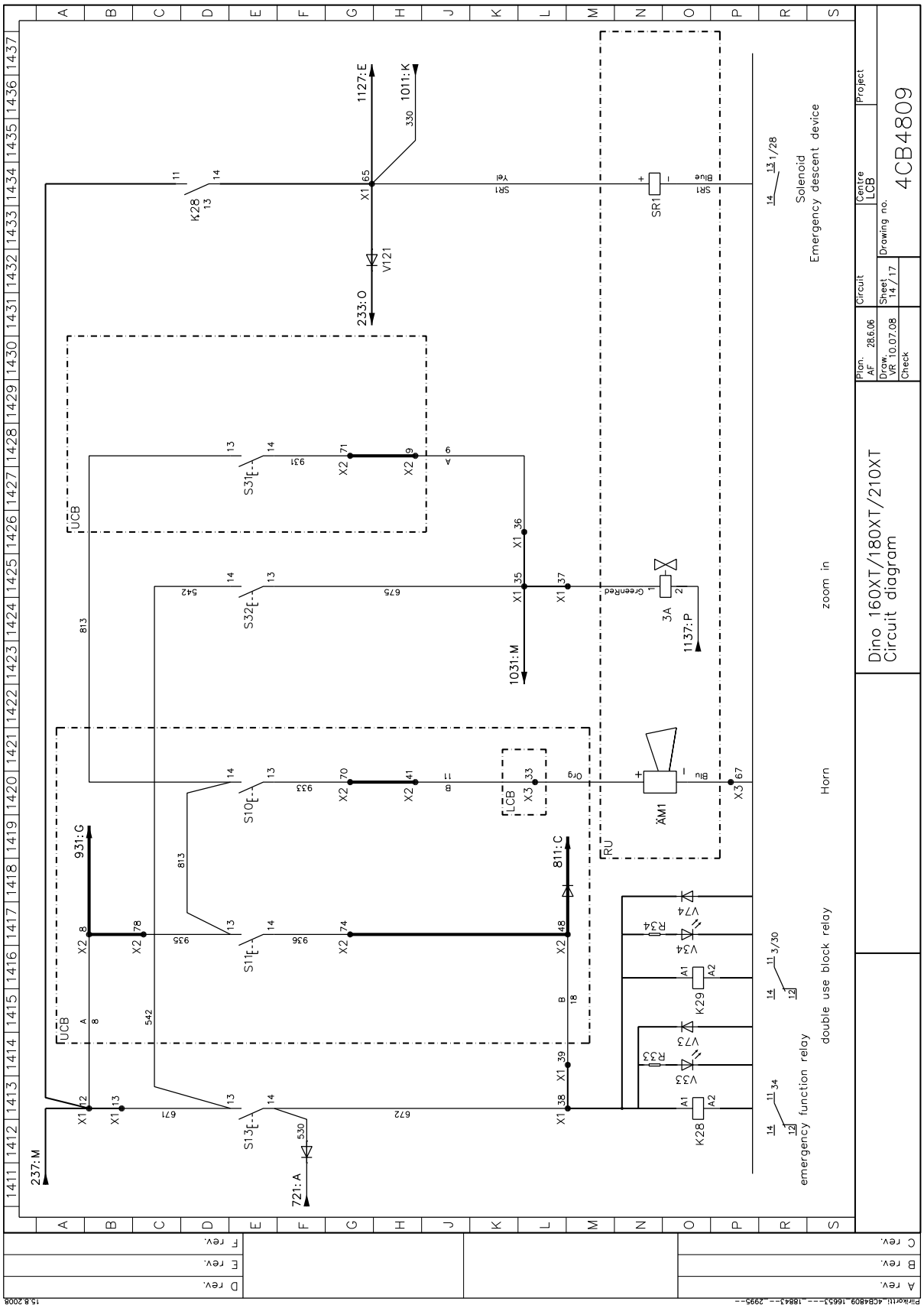

Downloaded from www.Manualslib.com manuals search engine

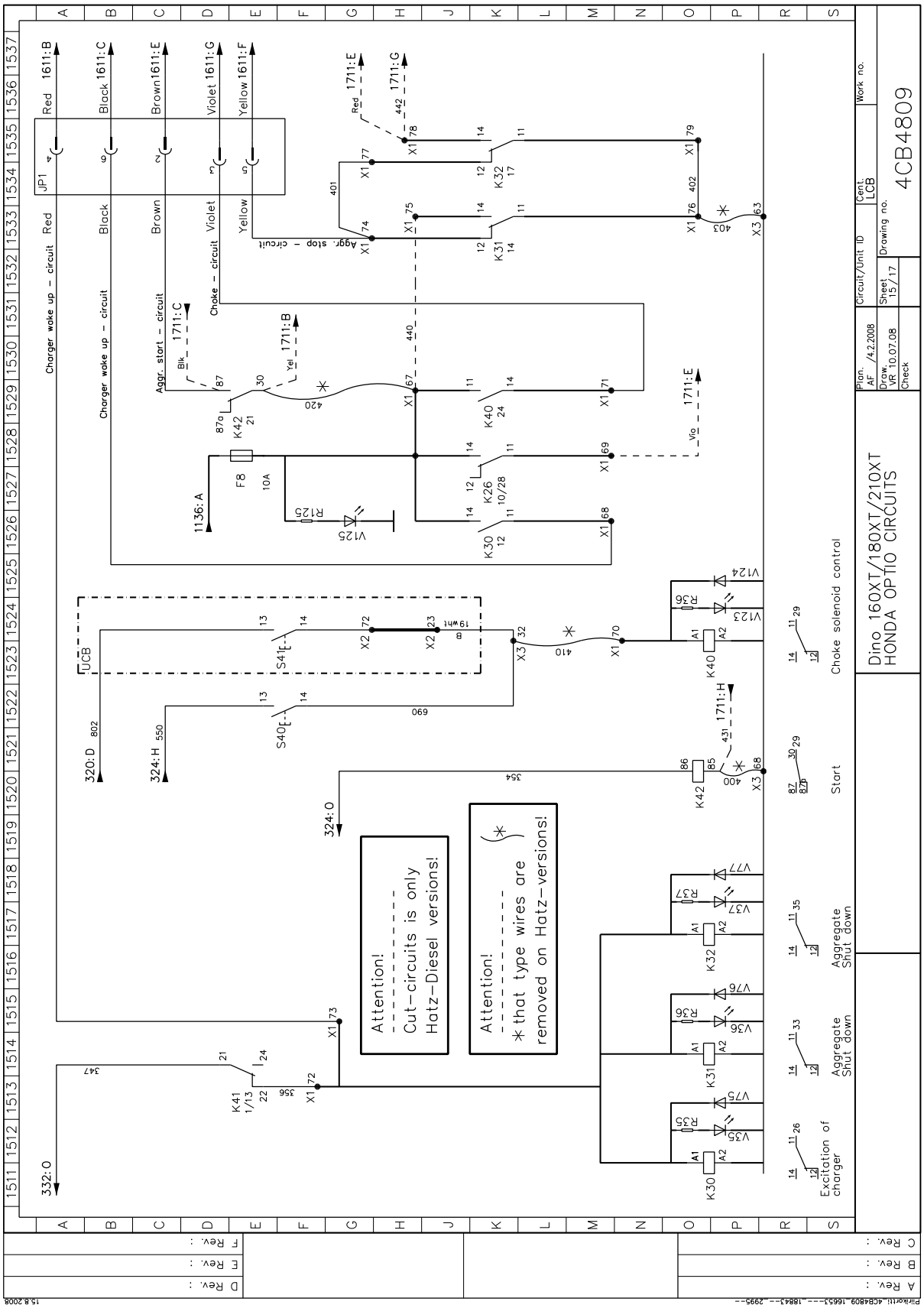

Downloaded from www.Manualslib.com manuals search engine

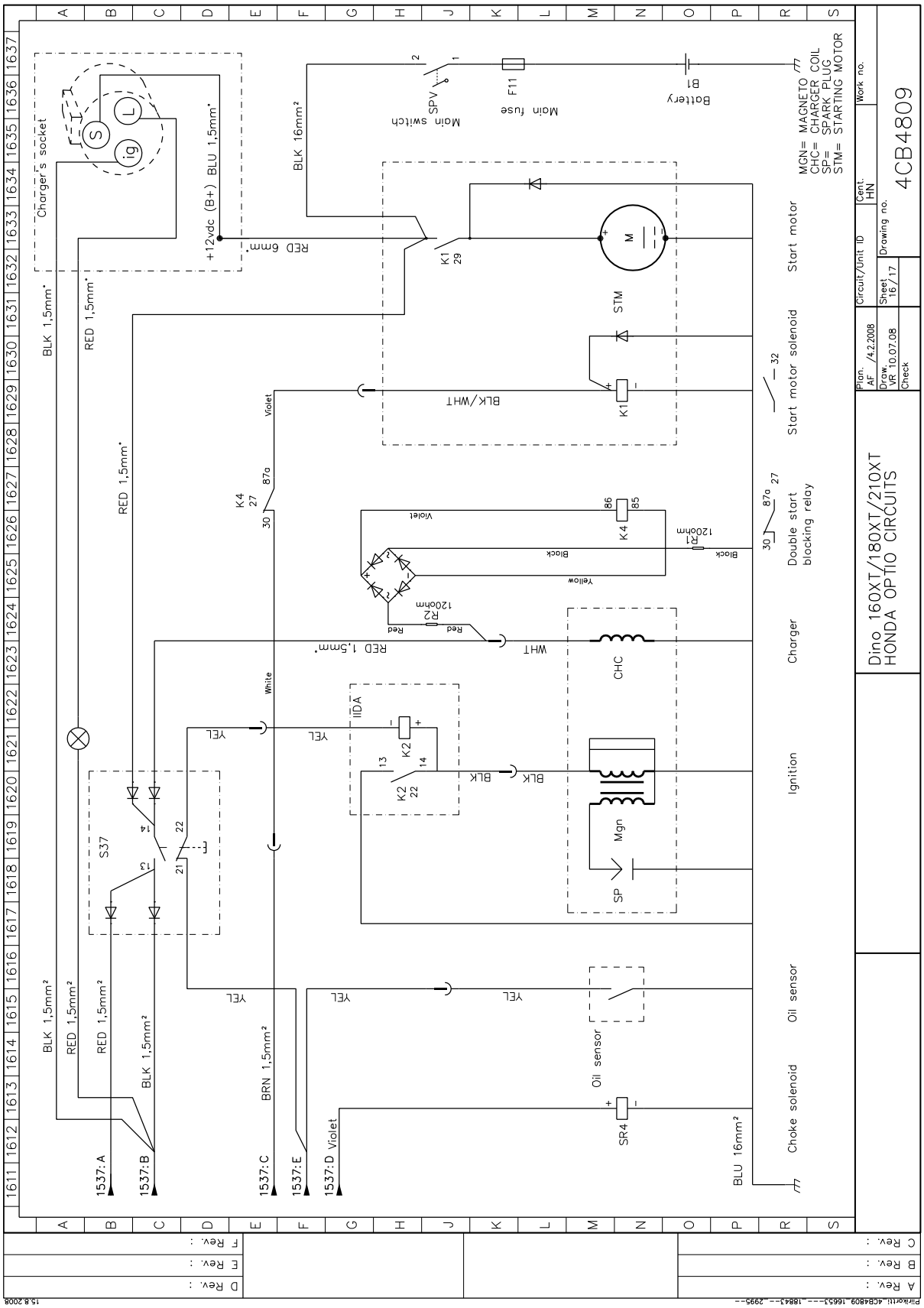

Downloaded from www.Manualslib.com manuals search engine

Notes

Downloaded from www.Manualslib.com manuals search engine

HYDRAULIC COMPONENTS 2945 >

Ref.	Part nr.	Description	Qty
1	47.171	Pressure filter	1
2	47.2049	Hydraulic pump	1
3	47.2273	Hydraulic motor	1
5	47.2576	Flow control valve	4
6	47.2771	Flow control valve	4
7	47.2858	Double load regulation valve	2
8	47.2720B	Manually operated directional valve	1
9	47.2335	Hydraulic motor	2
10	47.2722	Load regulation valve	1
11	47.2722	Load regulation valve	1
12	47.2722	Load regulation valve	1
13	47.2733	Priority valve	1
14	47.2910	Solenoid valve	1
15	47.2749	Pressure limiting valve	1
16	47.2808	Pressure limiting valve	1
17	47.2769	Double load regulation valve	1
18	47.377	Check valve, pressure activated	8
19	47.2318	Power unit (reserve power pack)	1
20	47.2630	Solenoid valve	3
21	47.2713	Solenoid valve	1
22	47.2731	Solenoid valve	1
23	47.378	Solenoid valve	1
24	47.2766	Load regulation valve	2
25	4CB1944	Rotary adaptor (hydraulic part)	1
26	DL5.019	Cylinder (telescope)	1
27	DL6.018	Cylinder (lift)	1
28	DL7.019	Cylinder (outrigger)	4
29	DL10.007	Cylinder (master)	1
30	DL10.005	Cylinder (slave)	1
31	47.816	Electric motor	1
32	47.2917	Pressure limiting valve	1
33	47.190	Breather	1
34	DL6.026	Cylinder (articulated arms)	2
35	47.2953	Solenoid valve and flow control valve	1
36	47.2053	Hydraulic pump	1
37	47.888	Combustion engine (aggregate)	1
38	47.2972	Counter check valve	1
39	47.2969	Load regulation valve, exhausts to air	1
40	47.2827	Solenoid valve	1

Downloaded from www.Manualslib.com manuals search engine

HYDRAULIC DIAGRAM 2945 >

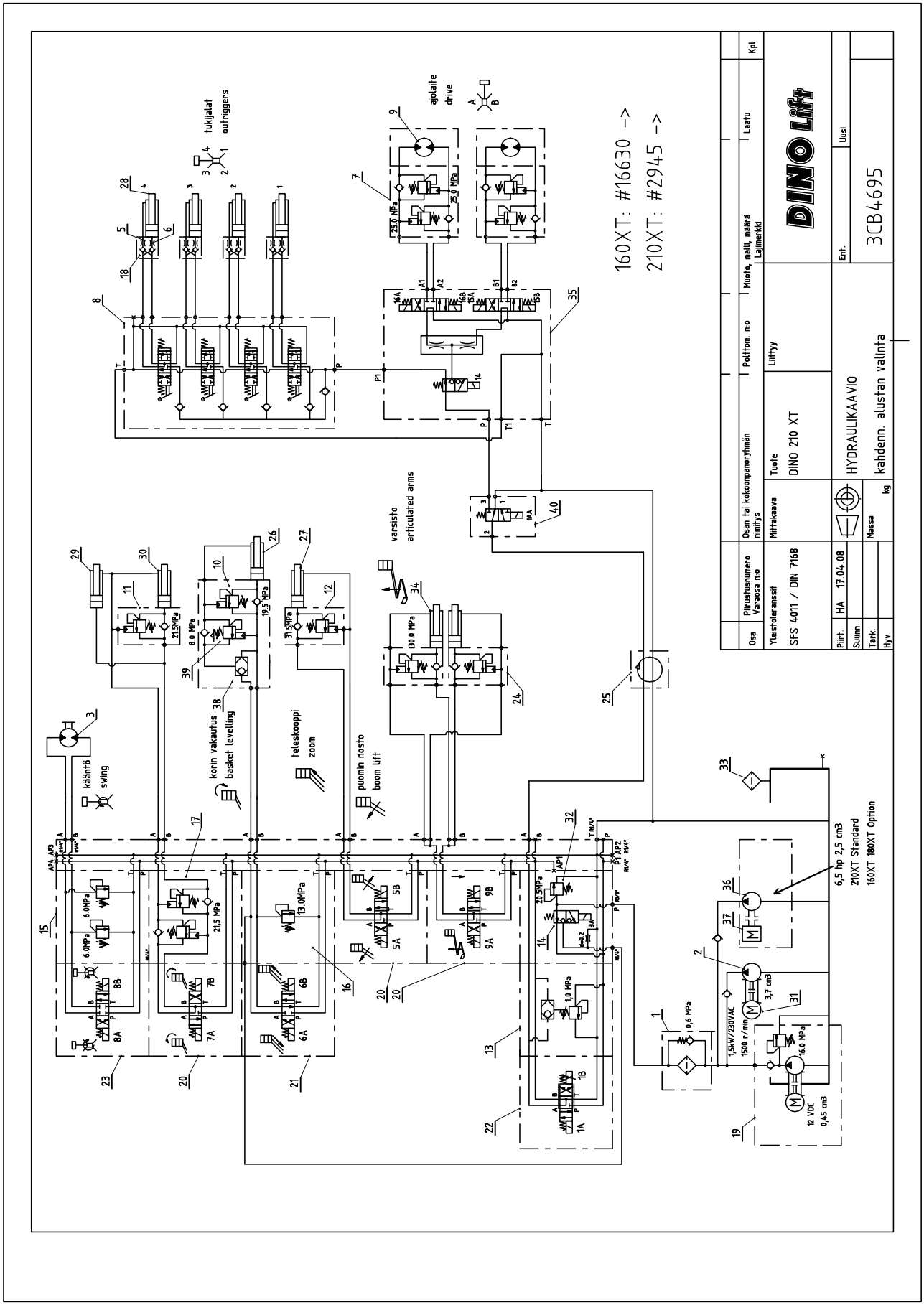

Downloaded from www.Manualslib.com manuals search engine

https://truckmanualshub.com/

Notes

Downloaded from www.Manualslib.com manuals search engine