https://truckmanualshub.com/

FUEL SYSTEM

TABLE OF CONTENTS

	page
FUEL DELIVERY - GAS	1
FUEL INJECTION - GAS	44
FUEL DELIVERY - DIESEL	104
FUEL INJECTION - DIESEL	140

FUEL DELIVERY - GAS

TABLE OF CONTENTS

	page
FUEL DELIVERY - GAS	
DESCRIPTION	2
OPERATION	4
STANDARD PROCEDURE	
STANDARD PROCEDURE - FUEL SYSTEM PRESSURE RELEASE	4
STANDARD PROCEDURE - DRAINING FUEL TANK - EXCEPT DIESEL	5
SPECIFICATIONS	
FUEL SYSTEM PRESSURE	5
TORQUE - EXCEPT DIESEL	5
SPECIAL TOOLS	
FUEL SYSTEM	8
FUEL FILTER/PRESSURE REGULATOR	
DESCRIPTION	9
OPERATION	9
SENSOR - FUEL LEVEL SENDING UNIT	
DESCRIPTION	10
OPERATION	10
REMOVAL	10
INSTALLATION	11
LINES, FUEL	
DESCRIPTION	12
FITTING-QUICK CONNECT	
DESCRIPTION	13
STANDARD PROCEDURE - QUICK-CONNECT FITTINGS	13
MODULE-FUEL PUMP	
DESCRIPTION	19
OPERATION	19
MODULE - FUEL PUMP	
DESCRIPTION	20
OPERATION	20
REMOVAL	20
INSTALLATION	21
RAIL - FUEL	
DESCRIPTION	22
OPERATION	22
REMOVAL	
3.7L V-6	22
4.7L V-8	23
5.7L	24
8.3L - SRT-10	26
INSTALLATION	
3.7L	30
4.7L	31
5.7L	32
8.3L - SRT-10	32
TANK - FUEL	
DESCRIPTION	34
OPERATION	34
REMOVAL- EXCEPT DIESEL	34
INSTALLATION - EXCEPT DIESEL	38
FILTER - INLET	
REMOVAL	43
INSTALLATION	43

https://truckmanualshub.com/

FUEL DELIVERY - GAS

DESCRIPTION

The fuel delivery system consists of:

- a fuel pump module containing the electric fuel pump, fuel filter/fuel pressure regulator, fuel gauge sending unit (fuel level sensor) and a secondary fuel filter located at the bottom of the pump module
- fuel tubes/lines/hoses
- a combination fuel filter/fuel pressure regulator
- quick-connect fittings
- fuel injector rail
- fuel tank
- fuel tank filler/vent tube assembly
- fuel tank filler tube cap
- accelerator pedal
- throttle cable

Certain fuel delivery components can be found in the following graphics:

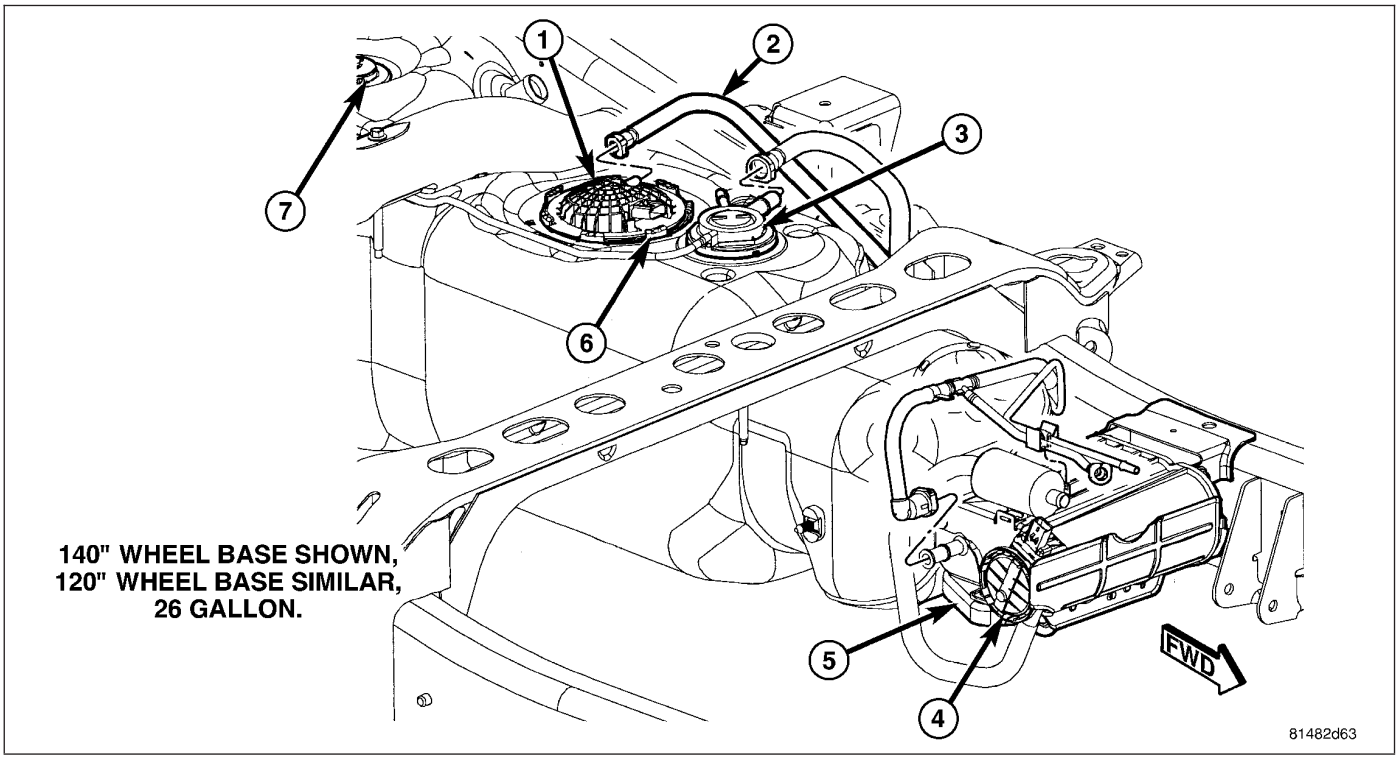

https://truckmanualshub.com/

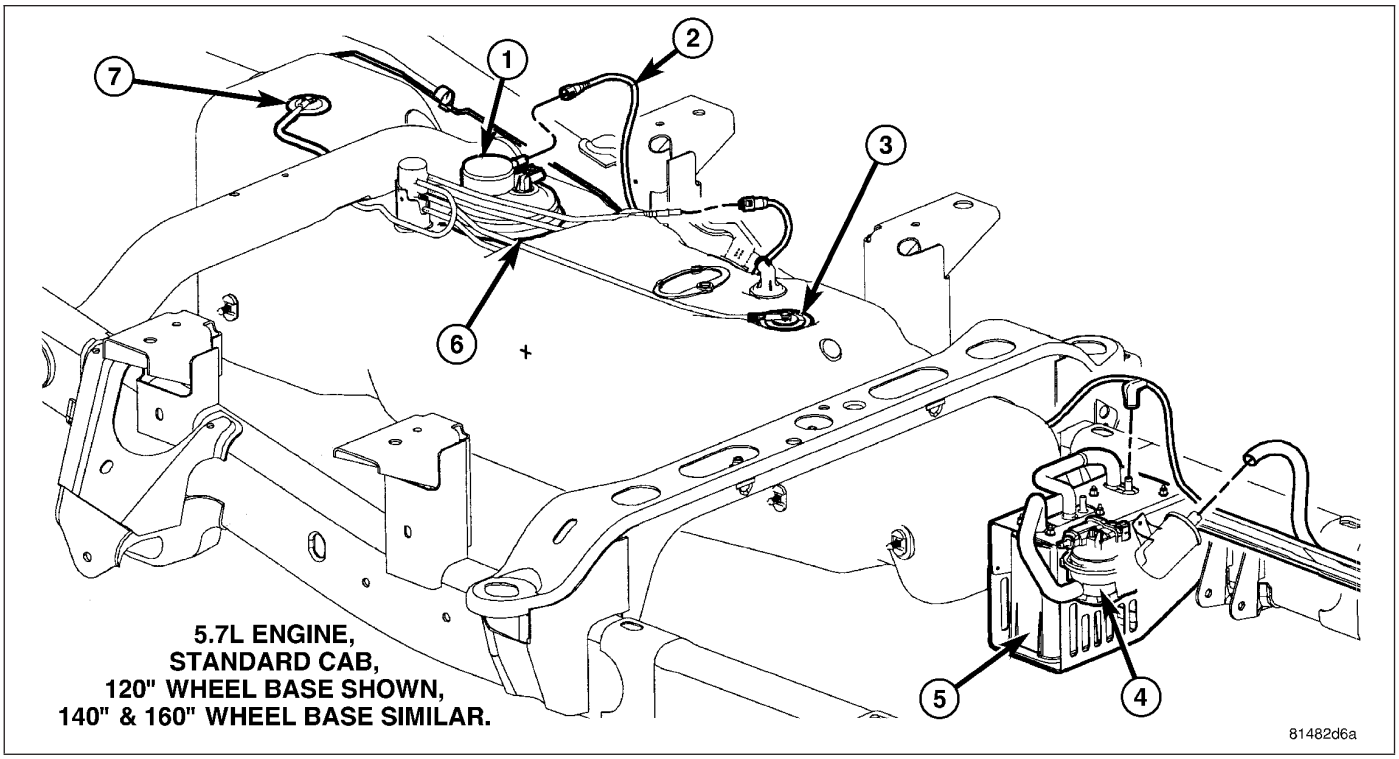

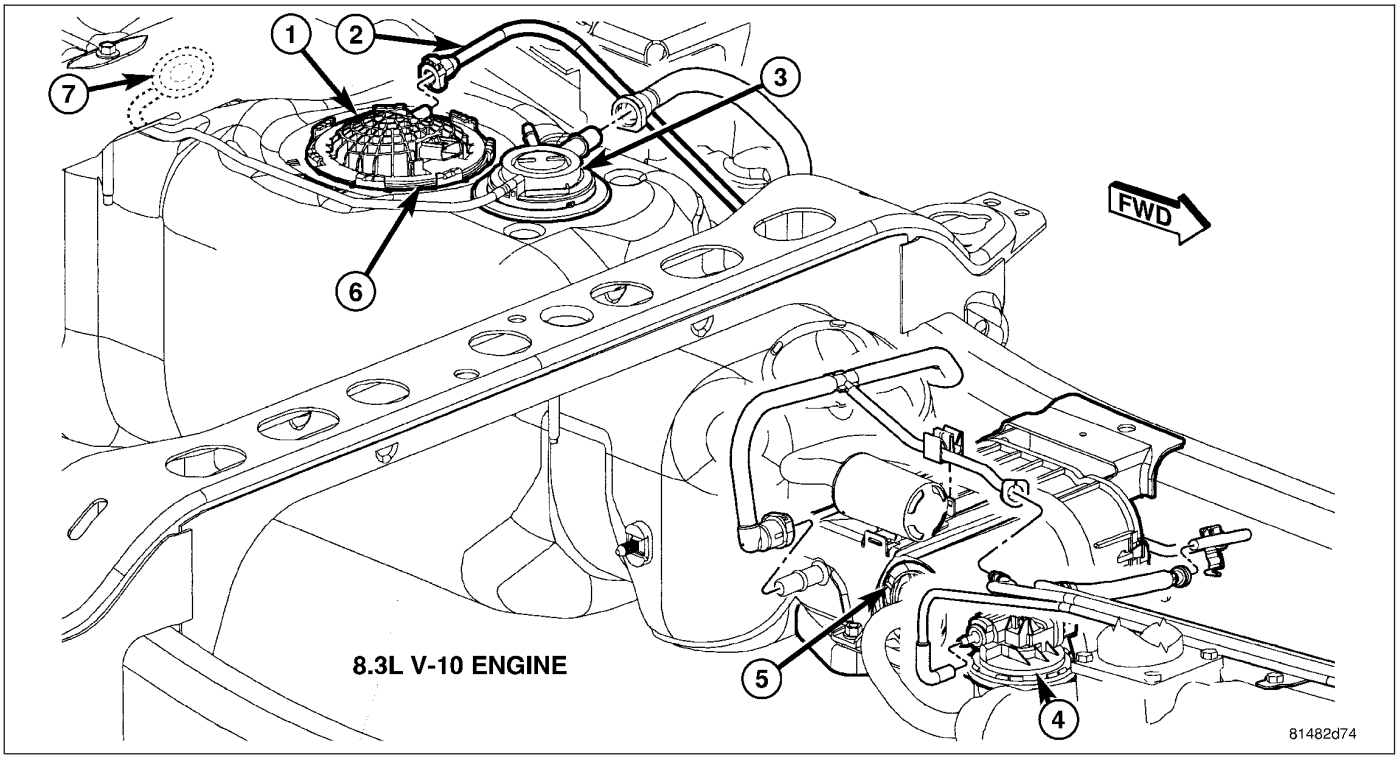

https://truckmanualshub.com/

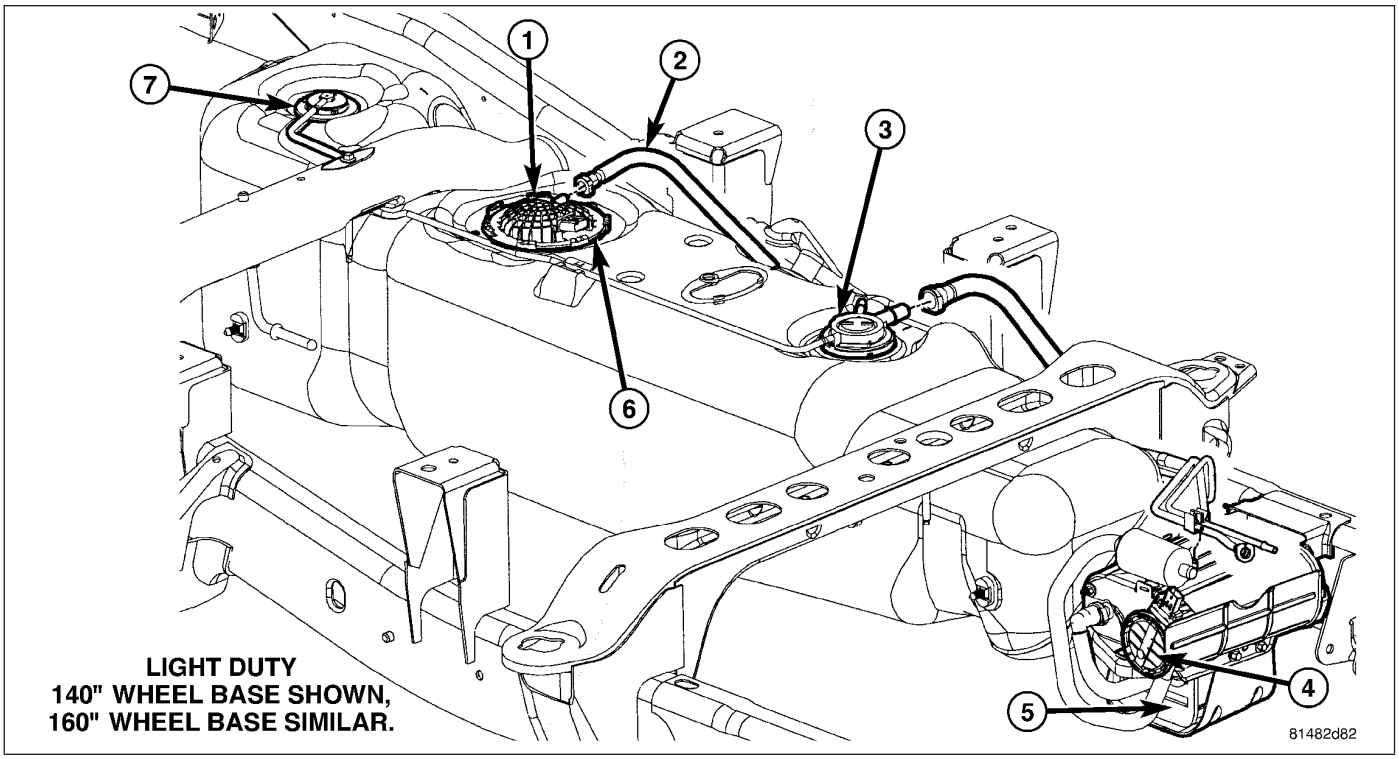

OPERATION

Fuel is returned through the fuel pump module and back into the fuel tank through the fuel filter/fuel pressure regulator. A separate fuel return line from the engine to the tank is not used.

The fuel tank assembly consists of: the fuel tank, fuel pump module assembly, fuel pump module locknut/gasket, and fuel tank check valve (refer to Fuel Tank Check Valve for information).

A fuel filler/vent tube assembly using a pressure/vacuum, 1/4 turn fuel filler cap is used. The fuel filler tube contains a flap door located below the fuel fill cap.

Also to be considered part of the fuel system is the evaporation control system. This is designed to reduce the emission of fuel vapors into the atmosphere. The description and function of the Evaporative Control System is found in Emission Control Systems.

Both fuel filters (at bottom of fuel pump module and within fuel pressure regulator) are designed for extended service. They do not require normal scheduled maintenance. Filters should only be replaced if a diagnostic procedure indicates to do so.

STANDARD PROCEDURE

STANDARD PROCEDURE - FUEL SYSTEM PRESSURE RELEASE

Use following procedure if the fuel injector rail is, or is not equipped with a fuel pressure test port.

1. Remove fuel fill cap.
2. Remove fuel pump relay from Power Distribution Center (PDC). For location of relay, refer to label on underside of PDC cover.
3. Start and run engine until it stalls.
4. Attempt restarting engine until it will no longer run.
5. Turn ignition key to OFF position.

CAUTION: Steps 1, 2, 3 and 4 must be performed to relieve high pressure fuel from within fuel rail. Do not attempt to use following steps to relieve this pressure as excessive fuel will be forced into a cylinder chamber.

6. Unplug connector from any fuel injector.
7. Attach one end of a jumper wire with alligator clips (18 gauge or smaller) to either injector terminal.

https://truckmanualshub.com/

8. Connect other end of jumper wire to positive side of battery.
9. Connect one end of a second jumper wire to remaining injector terminal.

CAUTION: Powering an injector for more than a few seconds will permanently damage the injector.

10. Momentarily touch other end of jumper wire to negative terminal of battery for no more than a few seconds.
11. Place a rag or towel below fuel line quick-connect fitting at fuel rail.
12. Disconnect quick-connect fitting at fuel rail. Refer to Quick-Connect Fittings.
13. Return fuel pump relay to PDC.
14. One or more Diagnostic Trouble Codes (DTC's) may have been stored in PCM memory due to fuel pump relay removal. The DRB® scan tool must be used to erase a DTC.

STANDARD PROCEDURE - DRAINING FUEL TANK - EXCEPT DIESEL

WARNING: The fuel system may be under constant fuel pressure even with the engine off. This pressure must be released before servicing fuel tank.

Two different procedures may be used to drain fuel tank: through the fuel fill fitting on tank, or using a diagnostic scan tool to activate the fuel pump relay. Due to a one-way check valve installed into the fuel fill opening fitting at the tank, the tank cannot be drained conventionally at the fill cap.

The quickest draining procedure involves removing the rubber fuel fill hose at the fuel tank.

As an alternative procedure, the electric fuel pump may be activated allowing tank to be drained at fuel rail connection. Refer to diagnostic scan tool for fuel pump activation procedures. Before disconnecting fuel line at fuel rail, release fuel pressure. Refer to the Fuel System Pressure Release Procedure for procedures. Attach end of special test hose tool number 6631 or 6539 at fuel rail disconnection (tool number 6631 is used on 5/16" fuel lines while tool number 6539 is used on 3/8" fuel lines). Position opposite end of this hose tool to an approved gasoline draining station. Activate fuel pump and drain tank until empty.

If electric fuel pump is not operating, fuel must be drained through fuel fill fitting at tank. Refer to following procedures.

1. Release fuel system pressure.
2. Raise vehicle.
3. Thoroughly clean area around fuel fill fitting and rubber fuel fill hose at tank.
4. If vehicle is equipped with 4 doors and a 6 foot (short) box, remove left-rear tire/wheel.
5. Loosen clamp and disconnect rubber fuel fill hose at tank fitting. Using an approved gas holding tank, drain fuel tank through this fitting.

SPECIFICATIONS

FUEL SYSTEM PRESSURE

58 psi +/- 2 psi

TORQUE - EXCEPT DIESEL

DESCRIPTION	N-m	Ft. Lbs.	In. Lbs.
Accelerator Pedal Bracket Mounting	12	-	105
Accelerator Pedal Position Sensor Bracket-to-Battery Tray Bolts	3	-	30
Crankshaft Position Sensor - 3.7L	28	21	-
Crankshaft Position Sensor - 4.7L	28	21	-

https://truckmanualshub.com/

DESCRIPTION	N-m	Ft. Lbs.	In. Lbs.
Crankshaft Position Sensor - 5.7L	12	-	105 (+/-20)
Camshaft Position Sensor - 3.7L	12	-	106
Camshaft Position Sensor - 4.7L	12	-	106
Camshaft Position Sensor - 5.7L	12	9	105 (+/-) 20
Engine Coolant Temperature Sensor - 3.7L	11	-	96
Engine Coolant Temperature Sensor - 4.7L	11	-	96
Engine Coolant Temperature Sensor - 5.7L	11	-	96
EVAP Canister- to-Bracket Nuts	8.5	-	75
EVAP Canister-to-Frame Bolts	34	25	
Fuel Filler Hose Clamp at Tank	3	-	30
Fuel Filler Housing-to-Body Screws	2	-	17
Fuel Pump Module Lock Ring	54	40	-
Fuel Rail Mounting Bolts - 3.7L	11	-	100
Fuel Rail Mounting Bolts - 4.7L	11	-	100
Fuel Rail Mounting Bolts - 5.7L	11	-	100
Fuel Rail Mounting Bolts - 8.3L	12	-	105
Fuel Tank Mounting Straps	41	30	-
IAC Motor Mounting Screws - 3.7L	7	-	60
IAC Motor Mounting Screws - 4.7L	7	-	60
Leak Detection Pump Mounting Bolt	8.5	-	75
Map Sensor Mounting Screws - 3.7L	3	-	25
Map Sensor Mounting Screws - 4.7L	3	-	25
PCM-to-Mounting Bracket Mounting Screws	4	-	35
Power Steering Pressure Switch - 3.7L	14-22	-	124-195
Power Steering Pressure Switch - 4.7L	14-22	-	124-195

https://truckmanualshub.com/

DESCRIPTION	N-m	Ft. Lbs.	In. Lbs.
TPS Mounting Screws - 3.7L	7	-	60
TPS Mounting Screws - 4.7L	7	-	60
Throttle Body Mounting Bolts - 3.7L	11	-	100
Throttle Body Mounting Bolts - 4.7L	12	-	105
Throttle Body Mounting Bolts - 5.7L	12	-	105
Oxygen Sensors	30	22	-
Ignition Coil Mounting Bolts	11	-	100

https://truckmanualshub.com/

SPECIAL TOOLS

FUEL SYSTEM

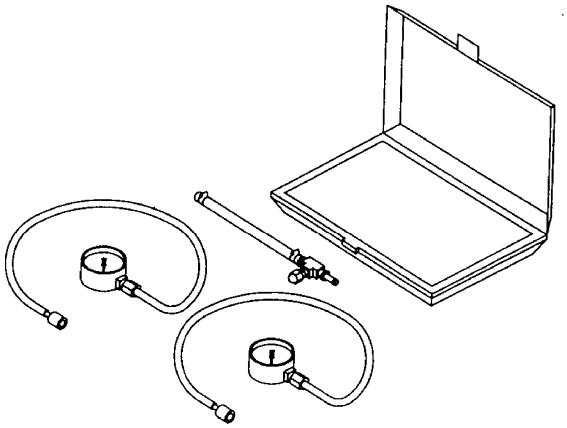

TEST KIT, FUEL PRESSURE #5069

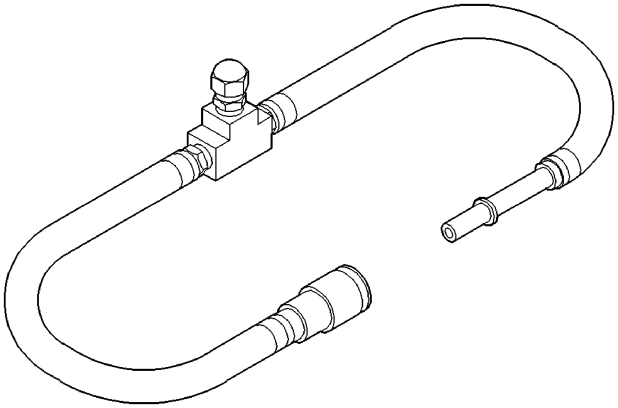

ADAPTERS, FUEL PRESSURE TEST - #6539 AND/OR #6631

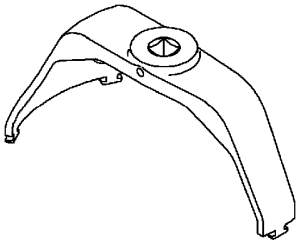

LOCKRING REMOVER/INSTALLER #9340

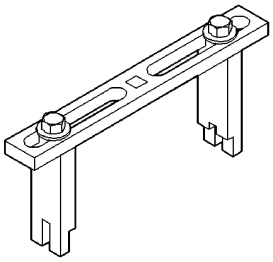

SPANNER WRENCH - #6856

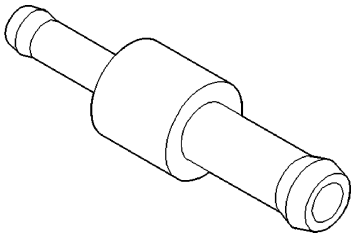

FITTING, AIR METERING - #6714

O2S (OXYGEN SENSOR) REMOVER/INSTALLER - #C-4907

https://truckmanualshub.com/

FUEL FILTER/PRESSURE REGULATOR

DESCRIPTION

A combination fuel filter and fuel pressure regulator (3) is used on all engines. It is located on the top of the fuel pump module. A separate frame mounted fuel filter is not used with any engine.

Both fuel filters (at bottom of fuel pump module and within fuel pressure regulator) are designed for extended service. They do not require normal scheduled maintenance. Filters should only be replaced if a diagnostic procedure indicates to do so.

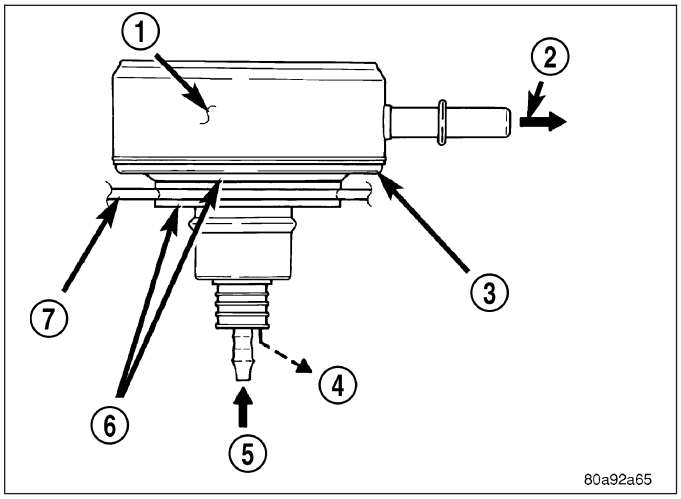

OPERATION

Fuel Pressure Regulator Operation: The pressure regulator is a mechanical device that is not controlled by engine vacuum or the Powertrain Control Module (PCM).

The regulator is calibrated to maintain fuel system operating pressure of approximately 58 ± 2 psi at the fuel injectors. It contains a diaphragm, calibrated springs and a fuel return valve. The internal fuel filter is also part of the assembly.

Fuel is supplied to the filter/regulator by the electric fuel pump through an opening tube at the bottom of filter/regulator.

The regulator acts as a check valve to maintain some fuel pressure when the engine is not operating. This will help to start the engine. A second check valve is located at the outlet end of the electric fuel pump. **Refer to Fuel Pump - Description and Operation for more information.**

If fuel pressure at the pressure regulator exceeds approximately 60 psi, an internal diaphragm opens and excess fuel pressure is routed back into the tank through the bottom of pressure regulator.

Both fuel filters (at bottom of fuel pump module and within fuel pressure regulator) are designed for extended service. They do not require normal scheduled maintenance. Filters should only be replaced if a diagnostic procedure indicates to do so.

https://truckmanualshub.com/

SENSOR - FUEL LEVEL SENDING UNIT

DESCRIPTION

The fuel gauge sending unit (fuel level sensor) is attached to the side of the fuel pump module. The sending unit consists of a float, an arm, and a variable resistor track (card).

OPERATION

The fuel pump module has 4 different circuits (wires). Two of these circuits are used for the fuel gauge sending unit for fuel gauge operation, and for certain OBD II emission requirements. The other 2 wires are used for electric fuel pump operation.

For Fuel Gauge Operation: A constant current source is supplied to the resistor track on the fuel gauge sending unit. This is fed directly from the Powertrain Control Module (PCM). **NOTE: For diagnostic purposes, this 12V power source can only be verified with the circuit opened (fuel pump module electrical connector unplugged). With the connectors plugged, output voltages will vary from about 0.6 volts at FULL, to about 8.6 volts at EMPTY (about 8.6 volts at EMPTY for Jeep models, and about 7.0 volts at EMPTY for Dodge Truck models).** The resistor track is used to vary the voltage (resistance) depending on fuel tank float level. As fuel level increases, the float and arm move up, which decreases voltage. As fuel level decreases, the float and arm move down, which increases voltage. The varied voltage signal is returned back to the PCM through the sensor return circuit.

Both of the electrical circuits between the fuel gauge sending unit and the PCM are hard-wired (not multi-plexed). After the voltage signal is sent from the resistor track, and back to the PCM, the PCM will interpret the resistance (voltage) data and send a message across the multi-plex bus circuits to the instrument panel cluster. Here it is translated into the appropriate fuel gauge level reading. Refer to Instrument Panel for additional information.

For OBD II Emission Monitor Requirements: The PCM will monitor the voltage output sent from the resistor track on the sending unit to indicate fuel level. The purpose of this feature is to prevent the OBD II system from recording/setting false misfire and fuel system monitor diagnostic trouble codes. The feature is activated if the fuel level in the tank is less than approximately 15 percent of its rated capacity. If equipped with a Leak Detection Pump (EVAP system monitor), this feature will also be activated if the fuel level in the tank is more than approximately 85 percent of its rated capacity.

REMOVAL

The fuel level sending unit (fuel level sensor) and float assembly (7) is located on the side of the fuel pump module.

1. Remove fuel pump module from fuel tank. Refer to Fuel Pump Module Removal/Installation.
2. Disconnect 4–wire electrical connector (3) from fuel pump module. Separate necessary sending unit wiring from connector using terminal pick / removal tool. Refer to Special Tools in 8W Wiring for tool part numbers.

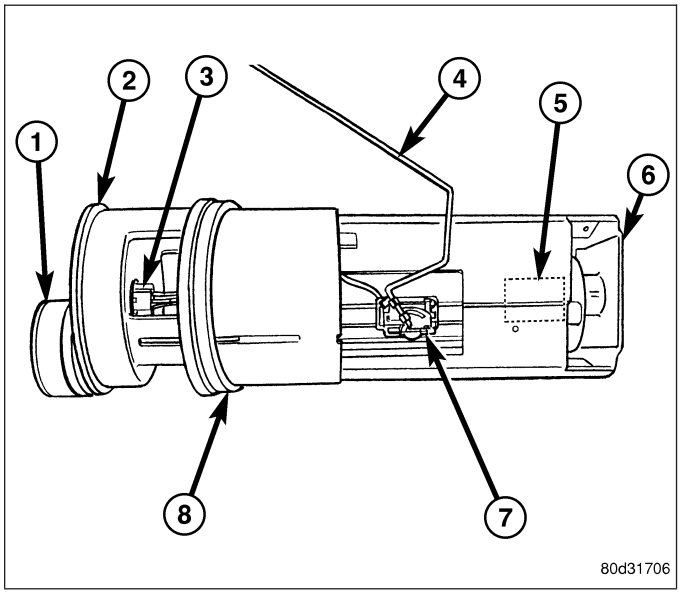

https://truckmanualshub.com/

3. To remove sending unit from pump module, lift on plastic locking tab while sliding sending unit tracks.

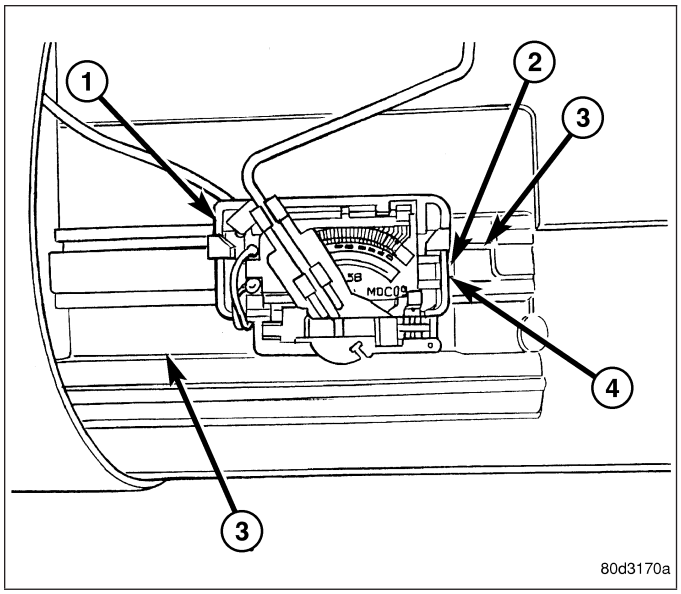

INSTALLATION

1. Connect necessary wiring into electrical connectors. Connect 4–wire electrical connector to pump module.
2. Position sending unit to pump module. Slide and snap into place.
3. Install fuel pump module. Refer to Fuel Pump Module Removal/Installation.

https://truckmanualshub.com/

LINES, FUEL

DESCRIPTION

Also refer to Quick-Connect Fittings.

WARNING: The fuel system may be under a constant pressure (even with the engine off). Before servicing any fuel system hoses, fittings, lines, or most components, fuel system pressure must be released. Refer to the fuel system pressure release procedure.

The lines/tubes/hoses used on fuel injected vehicles are of a special construction. This is due to the higher fuel pressures and the possibility of contaminated fuel in this system. If it is necessary to replace these lines/tubes/hoses, only those marked EFM/EFI may be used.

If equipped: The hose clamps used to secure rubber hoses on fuel injected vehicles are of a special rolled edge construction. This construction is used to prevent the edge of the clamp from cutting into the hose. Only these rolled edge type clamps may be used in this system. All other types of clamps may cut into the hoses and cause high-pressure fuel leaks.

Use new original equipment type hose clamps.

https://truckmanualshub.com/

FITTING-QUICK CONNECT

DESCRIPTION

Different types of quick-connect fittings are used to attach the various fuel system components, lines and tubes. These are: a single-button type, a two-button type, a pinch type, a single-tab type, a two-tab type or a plastic retainer ring type. Some are equipped with safety latch clips. Some may require the use of a special tool for disconnection and removal. (Refer to 14 - FUEL SYSTEM/FUEL DELIVERY/QUICK CONNECT FITTING - STANDARD PROCEDURE)

CAUTION: Before separating a quick-connect fitting, pay attention to what type of fitting is being used by referring to Quick-Connect Fitting Removal. This will prevent unnecessary fitting or fitting latch breakage.

CAUTION: The interior components (O-rings, clips) of quick-connect fittings are not serviced separately, but new plastic spacers and latches are available for some types. If service parts are not available, do not attempt to repair the damaged fitting or fuel line (tube). If repair is necessary, replace the complete fuel line (tube) assembly.

STANDARD PROCEDURE - QUICK-CONNECT FITTINGS

Different types of quick-connect fittings are used to attach the various fuel system components, lines and tubes. These are: a single-button type, a two-button type, a pinch type, a single-tab type, a two-tab type or a plastic retainer ring type. Some are equipped with safety latch clips. Some may require the use of a special tool for disconnection and removal.

DISCONNECTING

WARNING: The fuel system is under a constant pressure (even with engine off). Before servicing any fuel system hose, fitting or line, fuel system pressure must be released. Refer to fuel system pressure release procedure.

CAUTION: Before separating a quick-connect fitting, pay attention to what type of fitting is being used by referring to Quick-Connect Fitting Removal. This will prevent unnecessary fitting or fitting latch breakage.

CAUTION: The interior components (O-rings, clips) of quick-connect fittings are not serviced separately, but new plastic spacers and latches are available for some types. If service parts are not available, do not attempt to repair the damaged fitting or fuel line (tube). If repair is necessary, replace the complete fuel line (tube) assembly.

1. Perform fuel pressure release procedure. Refer to Fuel Pressure Release Procedure.
2. Disconnect negative battery cable from battery.
3. Clean fitting of any foreign material before disassembly.

https://truckmanualshub.com/

4. **Single–Button Type Fitting:** This type of fitting is equipped with a single push-button (2) located on the quick-connect fitting.

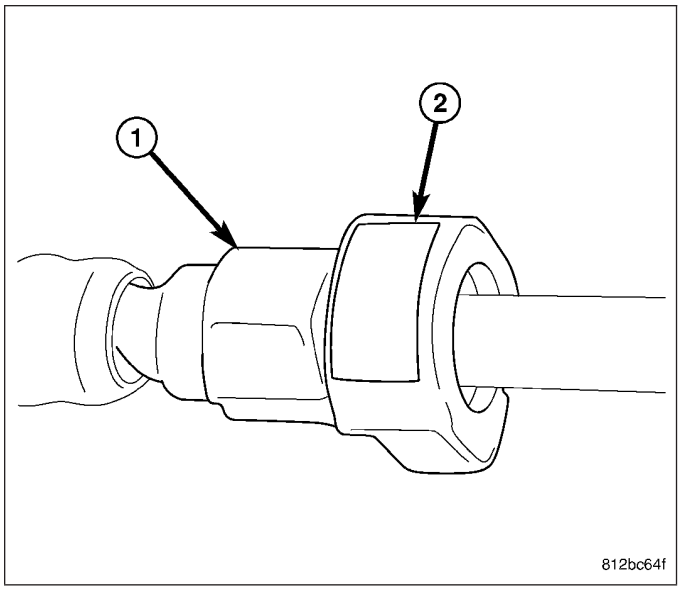

5. The push-button is attached to two internal latches (1). To disconnect, press on push-button with your thumb and unlatch fitting from fuel line. Special tools are not required for disconnection. **DO NOT ATTEMPT TO PRY OR PULL UP ON PUSH-BUTTON. LATCHES WILL BE BROKEN.**

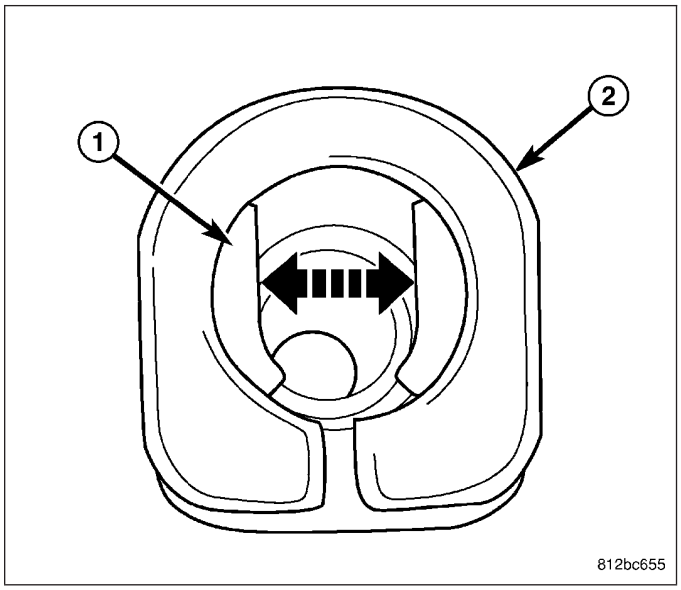

https://truckmanualshub.com/

6. Perform fuel pressure release procedure. Refer to Fuel Pressure Release Procedure.
7. Disconnect negative battery cable from battery.
8. Clean fitting of any foreign material before disassembly.
9. **2–Button Type Fitting:** This type of fitting (1) is equipped with a push-button located on each side of quick-connect fitting (2). Press on both buttons simultaneously for removal. Special tools are not required for disconnection.

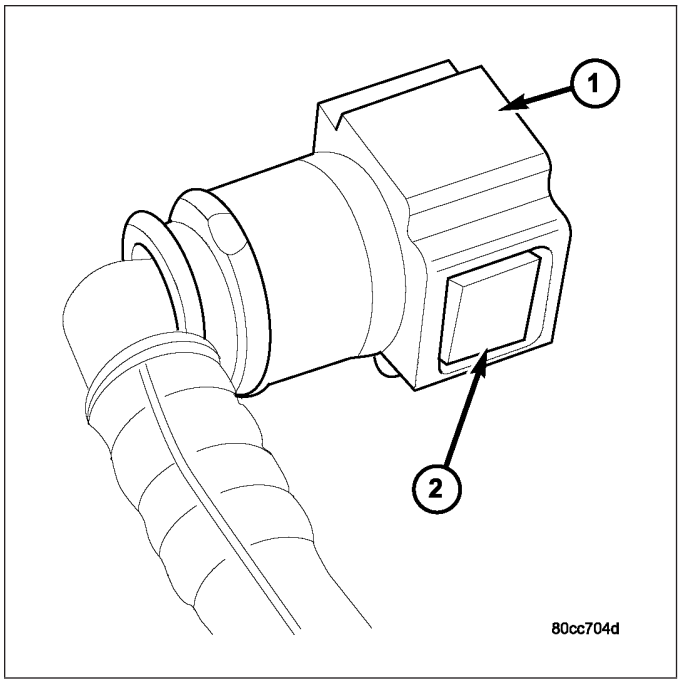

10. **Pinch-Type Fitting:** This fitting (1) is equipped with two finger tabs (2). Pinch both tabs together while removing fitting. Special tools are not required for disconnection.

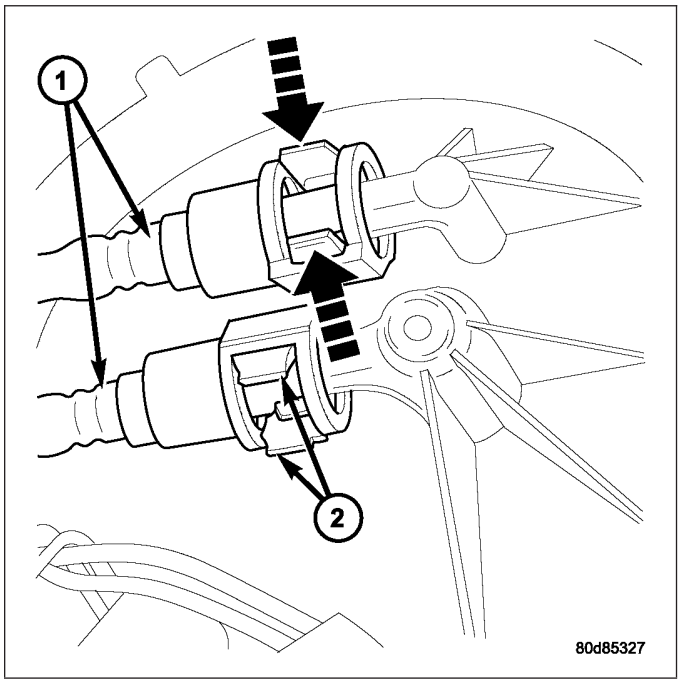

https://truckmanualshub.com/

11. **Single-Tab Type Fitting:** This type of fitting (3) is equipped with a single pull tab (1). The tab is removable. After tab is removed, quick-connect fitting can be separated from fuel system component. Special tools are not required for disconnection.

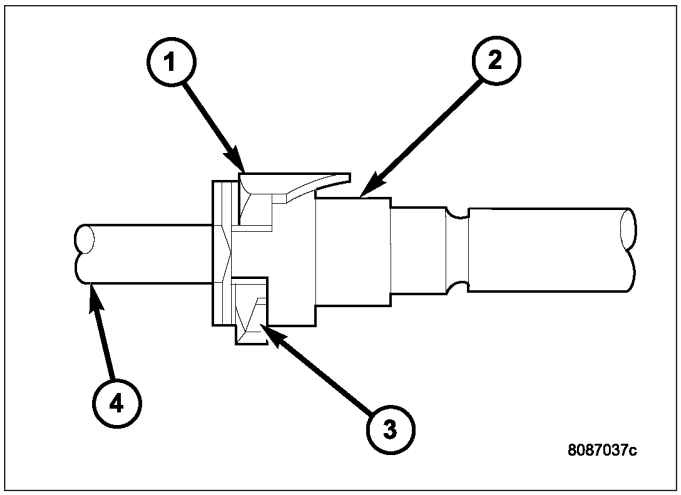

12. Press release tab on side of fitting to release pull tab (1). **If release tab is not pressed prior to releasing pull tab, pull tab will be damaged.**
13. While pressing release tab on side of fitting, use screwdriver (2) to pry up pull tab.
14. Raise pull tab until it separates from quick-connect fitting.

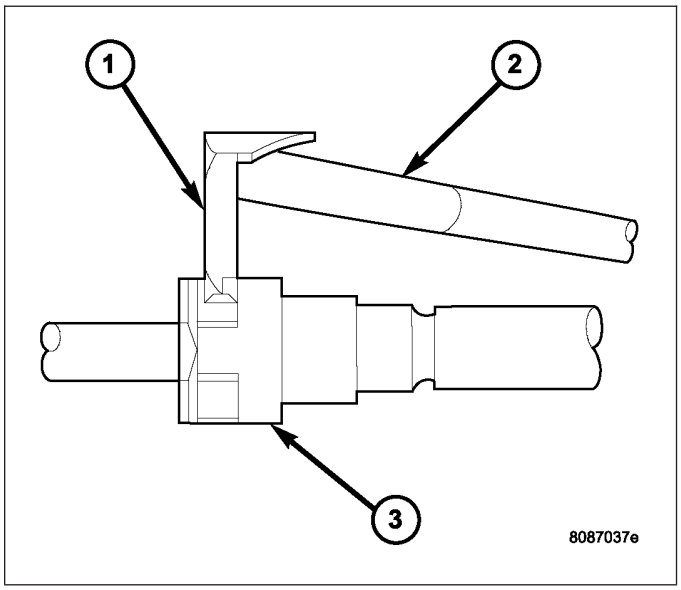

15. **Two-Tab Type Fitting:** This type of fitting (2) is equipped with tabs located on both sides of fitting (1). The tabs are supplied for disconnecting quick-connect fitting from component being serviced.
    a. To disconnect quick-connect fitting, squeeze plastic retainer tabs (1) against sides of quick-connect fitting with your fingers. Tool use is not required for removal and may damage plastic retainer.
    b. Pull fitting from fuel system component being serviced.
    c. The plastic retainer will remain on component being serviced after fitting is disconnected. The O-rings and spacer will remain in quick-connect fitting connector body.

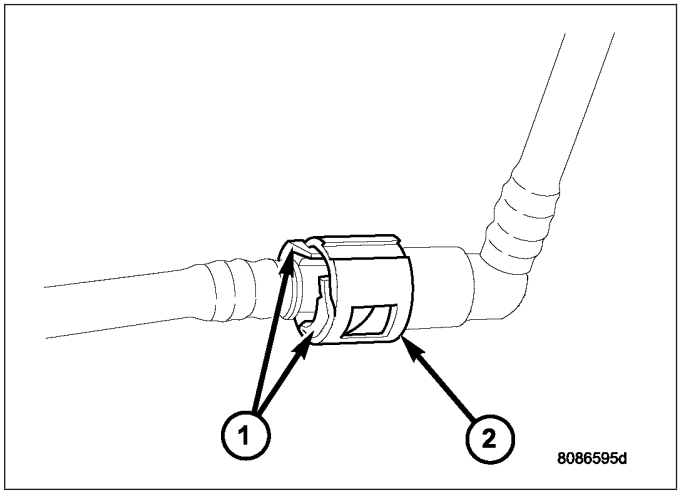

https://truckmanualshub.com/

16. **Plastic Retainer Ring Type Fitting:** This type of fitting can be identified by the use of a full-round plastic retainer ring (4) usually black in color.
    a. To release fuel system component from quick-connect fitting, firmly push fitting towards component being serviced while firmly pushing plastic retainer ring into fitting (6). With plastic ring depressed, pull fitting from component. **The plastic retainer ring must be pressed squarely into fitting body. If this retainer is cocked during removal, it may be difficult to disconnect fitting. Use an open-end wrench on shoulder of plastic retainer ring to aid in disconnection.**
    b. After disconnection, plastic retainer ring will remain with quick-connect fitting connector body.
    c. Inspect fitting connector body, plastic retainer ring and fuel system component for damage. Replace as necessary.

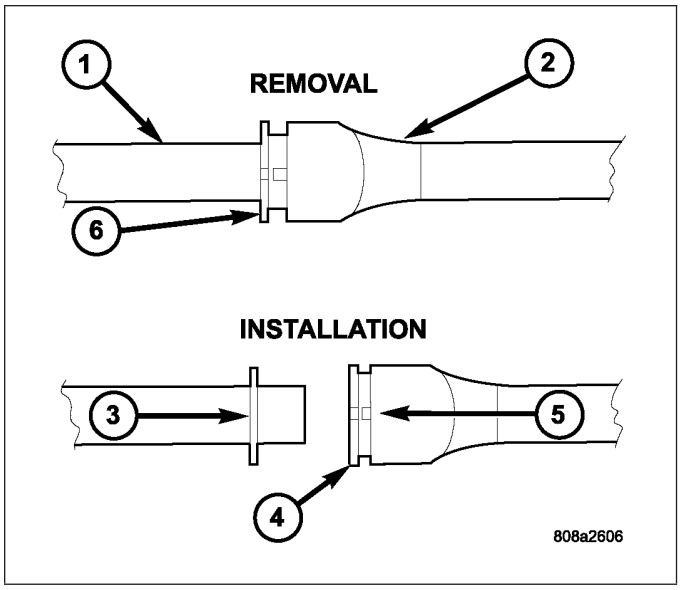

17. **Latch Clips — Type 1:** Depending on vehicle model and engine, 2 different types of safety latch clips are used. Type-1 (4) is tethered to fuel line and type-2 is not. A special tool will be necessary to disconnect fuel line after latch clip is removed. The latch clip may be used on certain fuel line/fuel rail connection, or to join fuel lines together.
18. Pry up on latch clip with a screwdriver (3).
19. Slide latch clip toward fuel rail while lifting with screwdriver.

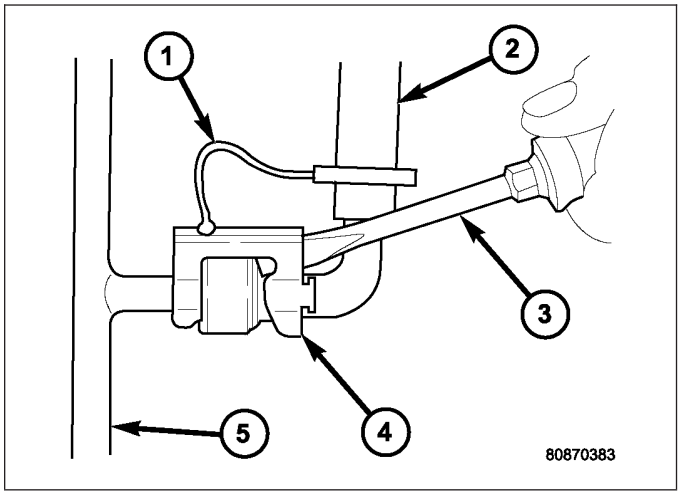

20. Insert special fuel line removal tool (Snap-On number FIH 9055-1 or equivalent) into fuel line (1). Use tool to release locking fingers in end of line.
21. With special tool still inserted, pull fuel line from fuel rail.
22. After disconnection, locking fingers will remain within quick-connect fitting at end of fuel line.
23. Disconnect quick-connect fitting from fuel system component being serviced.

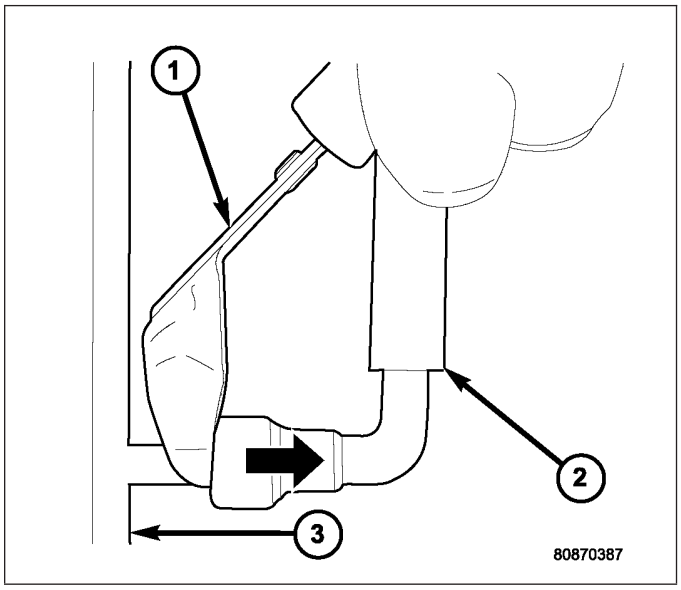

https://truckmanualshub.com/

24. **Latch Clips — Type 2:** Depending on vehicle model and engine, 2 different types of safety latch clips are used. Type-1 is tethered to fuel line and type-2 is not. A special tool will be necessary to disconnect fuel line after latch clip is removed. The latch clip may be used on certain fuel line/ fuel rail connection, or to join fuel lines together.
25. Type 2: Separate and unlatch small arms (1) on end of clip and swing away from fuel line.
26. Slide latch clip toward fuel rail while lifting with screwdriver.

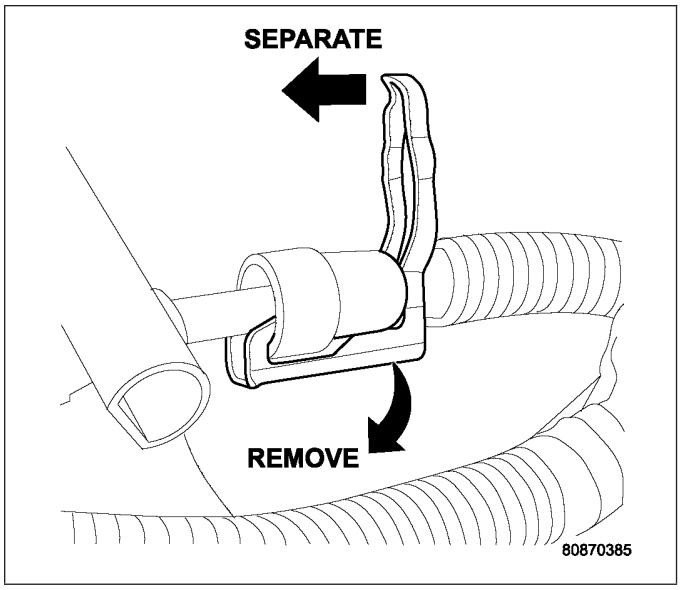

27. Insert special fuel line removal tool (Snap-On number FIH 9055-1 or equivalent) into fuel line (1). Use tool to release locking fingers in end of line.
28. With special tool still inserted, pull fuel line from fuel rail.
29. After disconnection, locking fingers will remain within quick-connect fitting at end of fuel line.
30. Disconnect quick-connect fitting from fuel system component being serviced.

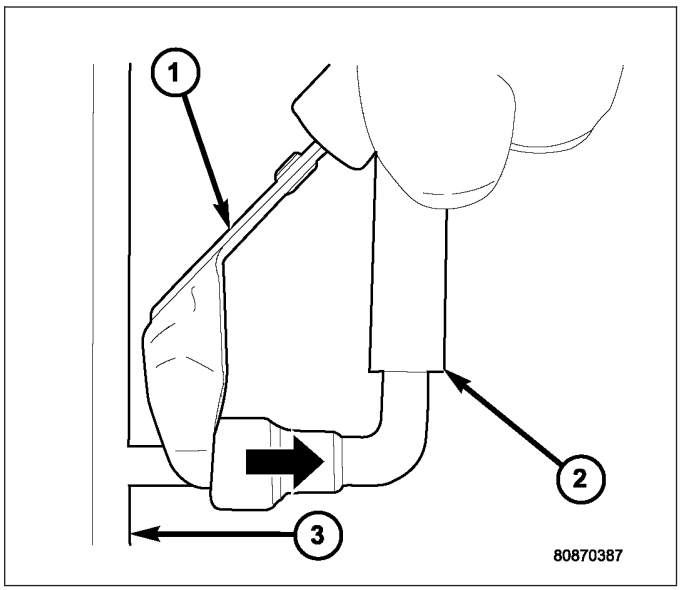

CONNECTING

1. Inspect quick-connect fitting body and fuel system component for damage. Replace as necessary.
2. Prior to connecting quick-connect fitting to component being serviced, check condition of fitting and component. Clean parts with a lint-free cloth. Lubricate with clean engine oil.
3. Insert quick-connect fitting into fuel tube or fuel system component until built-on stop on fuel tube or component rests against back of fitting.
4. Continue pushing until a click is felt.
5. Single-tab type fitting: Push new tab down until it locks into place in quick-connect fitting.
6. Verify a locked condition by firmly pulling on fuel tube and fitting (15-30 lbs.).
7. Latch Clip Equipped: Install latch clip (snaps into position). **If latch clip will not fit, this indicates fuel line is not properly installed to fuel rail (or other fuel line). Recheck fuel line connection.**
8. Connect negative cable to battery.
9. Start engine and check for leaks.

https://truckmanualshub.com/

MODULE-FUEL PUMP

DESCRIPTION

The electric fuel pump is located inside of the fuel pump module. A 12 volt, permanent magnet, electric motor powers the fuel pump. The electric fuel pump is not a separate, serviceable component.

OPERATION

Voltage to operate the electric pump is supplied through the fuel pump relay.

Fuel is drawn in through a filter at the bottom of the module and pushed through the electric motor gearset to the pump outlet.

Check Valve Operation: The bottom section of the fuel pump module contains a one-way check valve to prevent fuel flow back into the tank and to maintain fuel supply line pressure (engine warm) when pump is not operational. It is also used to keep the fuel supply line full of gasoline when pump is not operational. After the vehicle has cooled down, fuel pressure may drop to 0 psi (cold fluid contracts), but liquid gasoline will remain in fuel supply line between the check valve and fuel injectors. **Fuel pressure that has dropped to 0 psi on a cooled down vehicle (engine off) is a normal condition.**

The electric fuel pump is not a separate, serviceable component.

https://truckmanualshub.com/

MODULE - FUEL PUMP

DESCRIPTION

The fuel pump module assembly is located on the top of the fuel tank. The complete assembly contains the following components:

- A combination fuel filter/fuel pressure regulator
- A separate fuel pick-up, or inlet filter
- An electric fuel pump
- A lockring to retain pump module to tank
- A soft gasket between tank flange and module
- A fuel gauge sending unit (fuel level sensor)
- Fuel line connection

The fuel gauge sending unit may be serviced separately. If the electrical fuel pump, primary inlet filter, fuel filter or fuel pressure regulator require service, the fuel pump module must be replaced.

OPERATION

Refer to Fuel Pump, Inlet Filter, Fuel Filter / Fuel Pressure Regulator and Fuel Gauge Sending Unit.

REMOVAL

WARNING: The fuel system may be under a constant pressure (even with the engine off). Before servicing the fuel pump module, the fuel system pressure must be released.

1. Drain and remove fuel tank. Refer to Fuel Tank Removal/Installation.
2. Note rotational position of module before attempting removal. An indexing arrow is located on top of module for this purpose.
3. Position Special Tool 9340 (3) into notches on outside edge of lockring (5).
4. Install 1/2 inch drive breaker bar (1) to tool 9340 (3).
5. Rotate breaker bar counter-clockwise to remove lockring (5).
6. Remove lockring. The module will spring up slightly when lockring is removed.
7. Remove module from fuel tank. Be careful not to bend float arm while removing.

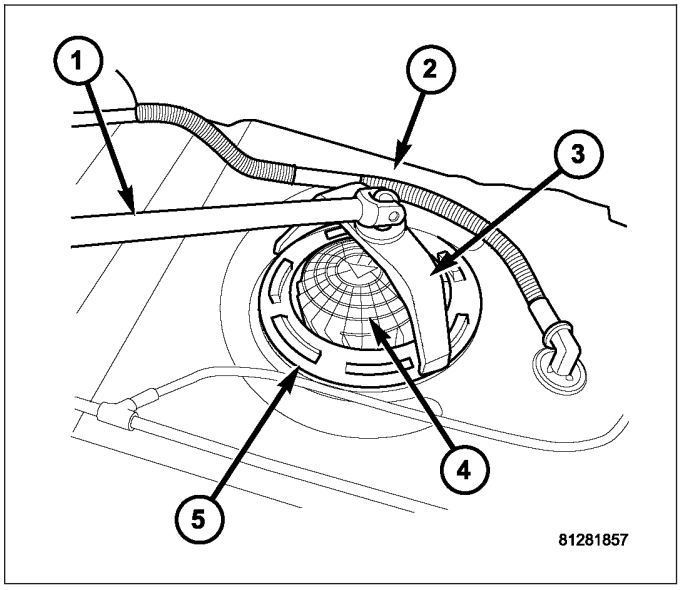

https://truckmanualshub.com/

INSTALLATION

1. Using a new seal (gasket), position fuel pump module into opening in fuel tank.
2. Position lockring (5) over top of fuel pump module.
3. Rotate module until embossed alignment arrow points to center alignment mark. This step must be performed to prevent float from contacting side of fuel tank. Also be sure fuel fitting on top of pump module is pointed to drivers side of vehicle.
4. Install Special Tool 9340 (3) to lockring.
5. Install 1/2 inch drive breaker (1) into Special Tool 9340 (3).
6. Tighten lockring (clockwise) until all seven notches have engaged.
7. Install fuel tank. Refer to Fuel Tank Removal/Installation.

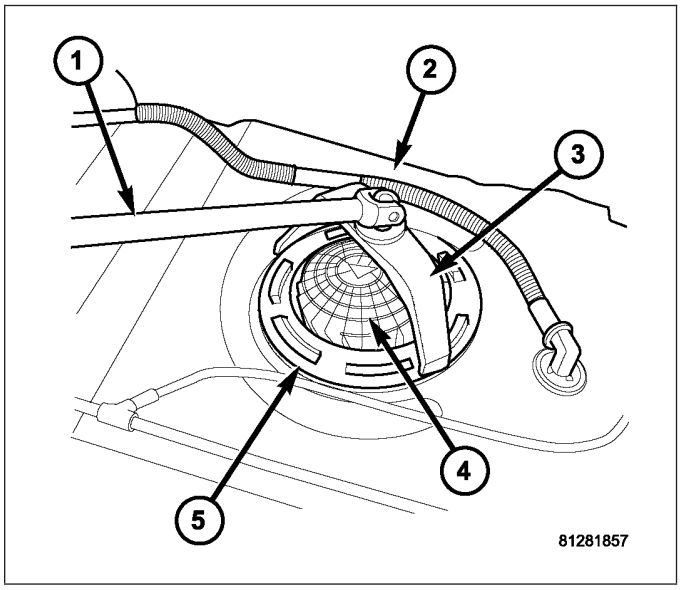

https://truckmanualshub.com/

RAIL - FUEL

DESCRIPTION

The fuel injector rail is used to mount the fuel injectors to the engine.

OPERATION

High pressure from the fuel pump is routed to the fuel rail. The fuel rail then supplies the necessary fuel to each individual fuel injector.

A quick-connect fitting with a safety latch clip is used to attach the fuel line to the fuel rail.

The fuel rail is not repairable.

CAUTION: The left and right sections of the fuel rail are connected with either a flexible connecting hose, or joints. Do not attempt to separate the rail halves at these connecting hose or joints. Due to the design of the connecting hose or joint, it does not use any clamps. Never attempt to install a clamping device of any kind to the hose or joint. When removing the fuel rail assembly for any reason, be careful not to bend or kink the connecting hose or joint.

REMOVAL

3.7L V-6

WARNING: The fuel system is under constant pressure even with engine off. Before servicing fuel rail, fuel system pressure must be released.

CAUTION: The left and right fuel rails are replaced as an assembly. Do not attempt to separate rail halves at connector tubes. Due to design of tubes, it does not use any clamps. Never attempt to install a clamping device of any kind to tubes. When removing fuel rail assembly for any reason, be careful not to bend or kink tubes.

1. Remove fuel tank filler tube cap.
2. Perform Fuel System Pressure Release Procedure. (Refer to 14 - FUEL SYSTEM/FUEL DELIVERY - STANDARD PROCEDURE)
3. Remove negative battery cable at battery.
4. Remove air duct at throttle body air box.
5. Remove air box at throttle body.
6. Remove air resonator mounting bracket at front of throttle body (2 bolts).
7. Disconnect fuel line latch clip and fuel line at fuel rail. A special tool will be necessary for fuel line disconnection. (Refer to 14 - FUEL SYSTEM/FUEL DELIVERY/QUICK CONNECT FITTING - STANDARD PROCEDURE)
8. Remove necessary vacuum lines at throttle body.
9. Disconnect electrical connectors at all 6 fuel injectors. To remove connector refer to. Push red colored slider away from injector (1). While pushing slider, depress tab (2) and remove connector (3) from injector. The factory fuel injection wiring harness is numerically tagged (INJ 1, INJ 2, etc.) for injector position identification. If harness is not tagged, note wiring location before removal.

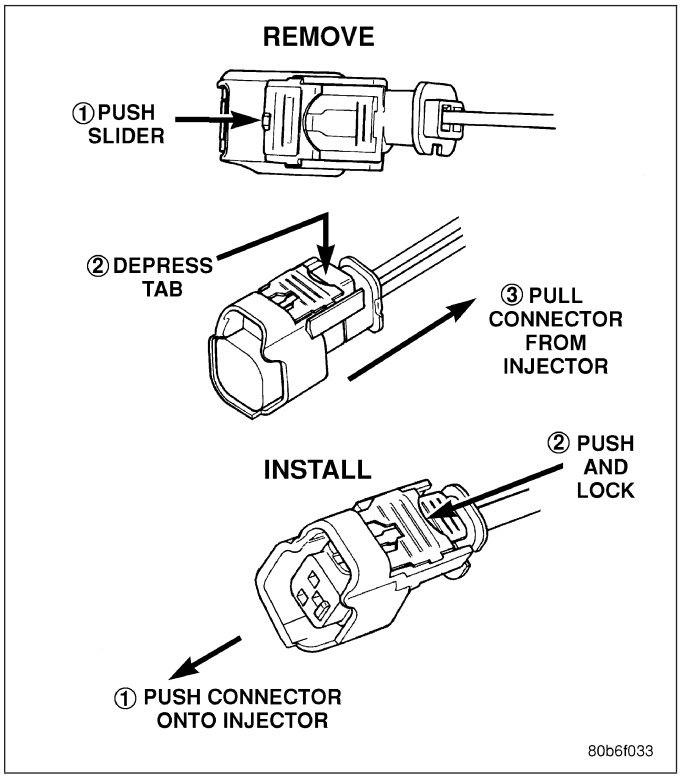

10. Disconnect electrical connectors at all throttle body sensors.

https://truckmanualshub.com/

11. Remove 6 ignition coils. (Refer to 8 - ELECTRICAL/IGNITION CONTROL/IGNITION COIL - REMOVAL)

12. Remove 4 fuel rail mounting bolts (1).
13. Gently rock and pull **left** side of fuel rail until fuel injectors just start to clear machined holes in cylinder head. Gently rock and pull **right** side of rail until injectors just start to clear cylinder head holes. Repeat this procedure (left/right) until all injectors have cleared cylinder head holes.
14. Remove fuel rail (with injectors attached) from engine.
15. If fuel injectors are to be removed, (Refer to 14 - FUEL SYSTEM/FUEL INJECTION/FUEL INJECTOR - REMOVAL).

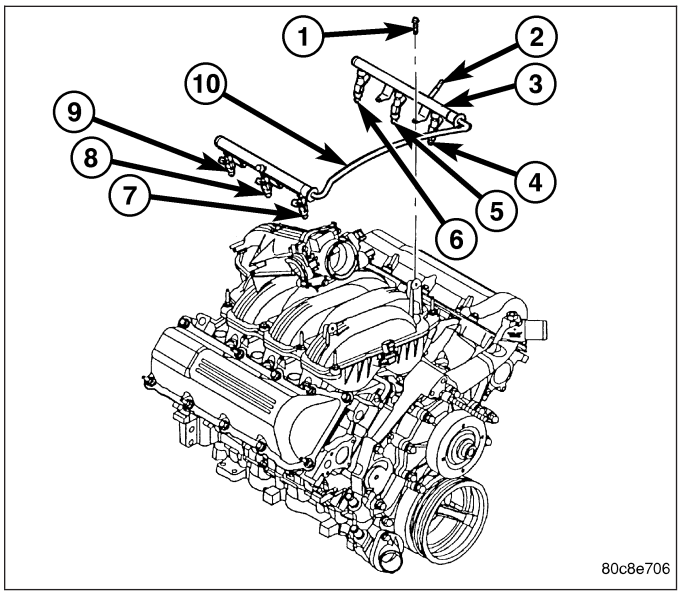

4.7L V-8

WARNING: The fuel system is under constant pressure even with engine off. Before servicing fuel rail, fuel system pressure must be released.

CAUTION: The left and right fuel rails are replaced as an assembly. Do not attempt to separate rail halves at connector tubes. Due to design of tubes, it does not use any clamps. Never attempt to install a clamping device of any kind to tubes. When removing fuel rail assembly for any reason, be careful not to bend or kink tubes.

1. Remove fuel tank filler tube cap.
2. Perform Fuel System Pressure Release Procedure. (Refer to 14 - FUEL SYSTEM/FUEL DELIVERY - STANDARD PROCEDURE)
3. Remove negative battery cable at battery.
4. Remove air duct at throttle body air box.
5. Remove air box at throttle body.
6. Remove air resonator mounting bracket at front of throttle body (2 bolts).
7. Disconnect fuel line latch clip and fuel line at fuel rail. A special tool will be necessary for fuel line disconnection. (Refer to 14 - FUEL SYSTEM/FUEL DELIVERY/QUICK CONNECT FITTING - STANDARD PROCEDURE)
8. Remove necessary vacuum lines at throttle body.
9. Disconnect electrical connectors at all 8 fuel injectors. To remove connector refer to. Push red colored slider away from injector (1). While pushing slider, depress tab (2) and remove connector (3) from injector. The factory fuel injection wiring harness is numerically tagged (INJ 1, INJ 2, etc.) for injector position identification. If harness is not tagged, note wiring location before removal.

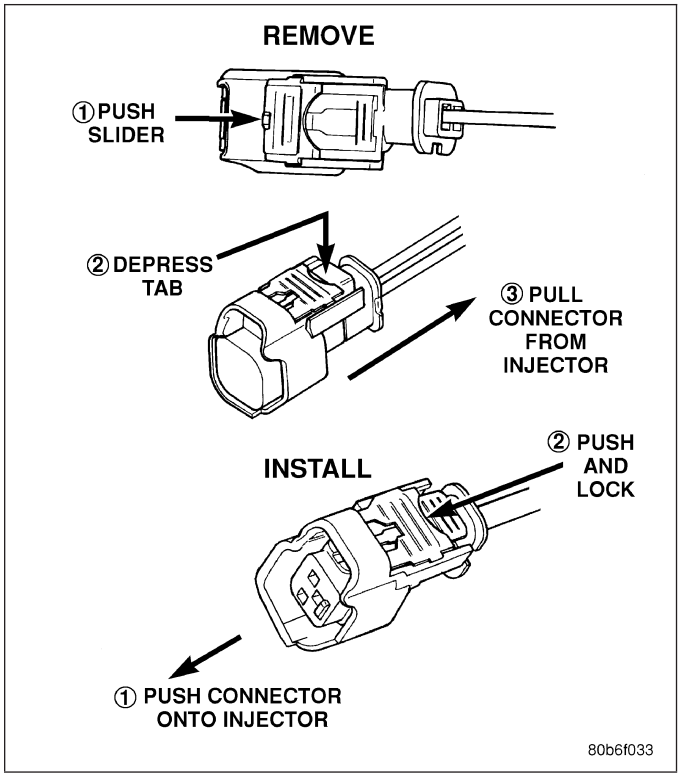

https://truckmanualshub.com/

10. Disconnect electrical connectors at all throttle body sensors.
11. Remove 8 ignition coils. (Refer to 8 - ELECTRICAL/IGNITION CONTROL/IGNITION COIL - REMOVAL)
12. Remove 4 fuel rail mounting bolts (1).
13. Gently rock and pull **left** side of fuel rail until fuel injectors just start to clear machined holes in cylinder head. Gently rock and pull **right** side of rail until injectors just start to clear cylinder head holes. Repeat this procedure (left/right) until all injectors have cleared cylinder head holes.
14. Remove fuel rail (with injectors attached) from engine.
15. If fuel injectors are to be removed, (Refer to 14 - FUEL SYSTEM/FUEL INJECTION/FUEL INJECTOR - REMOVAL).

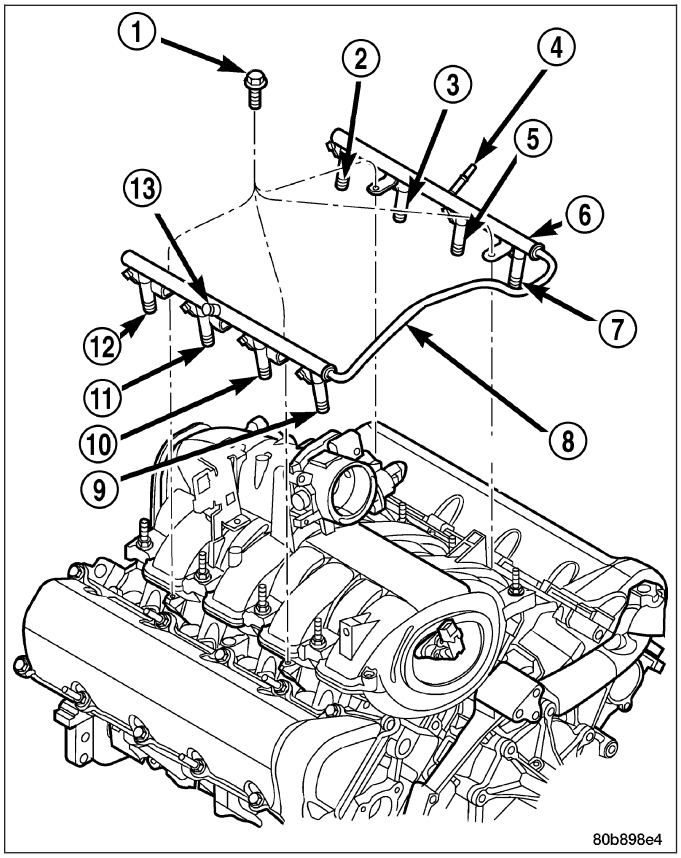

5.7L

WARNING: The fuel system is under constant pressure even with engine off. Before servicing fuel rail, fuel system pressure must be released. (Refer to 14 - FUEL SYSTEM/FUEL DELIVERY - STANDARD PROCEDURE)

CAUTION: The left and right fuel rails are replaced as an assembly. Do not attempt to separate rail halves at connector tube. Due to design of tube, it does not use any clamps. Never attempt to install a clamping device of any kind to tube. When removing fuel rail assembly for any reason, be careful not to bend or kink tube.

https://truckmanualshub.com/

1. Remove fuel tank filler tube cap.
2. Perform fuel system pressure release procedure. (Refer to 14 - FUEL SYSTEM/FUEL DELIVERY - STANDARD PROCEDURE)
3. Remove negative battery cable at battery.
4. Remove flex tube (air cleaner housing to engine).
5. Remove air resonator box at throttle body.
6. Disconnect electrical connectors at all 8 fuel injectors. Push red colored slider away from injector (1). While pushing slider, depress tab (2) and remove connector (3) from injector. The factory fuel injection wiring harness is numerically tagged (INJ 1, INJ 2, etc.) for injector position identification. If harness is not tagged, note wiring location before removal.
7. Disconnect electrical connectors at all throttle body sensors.

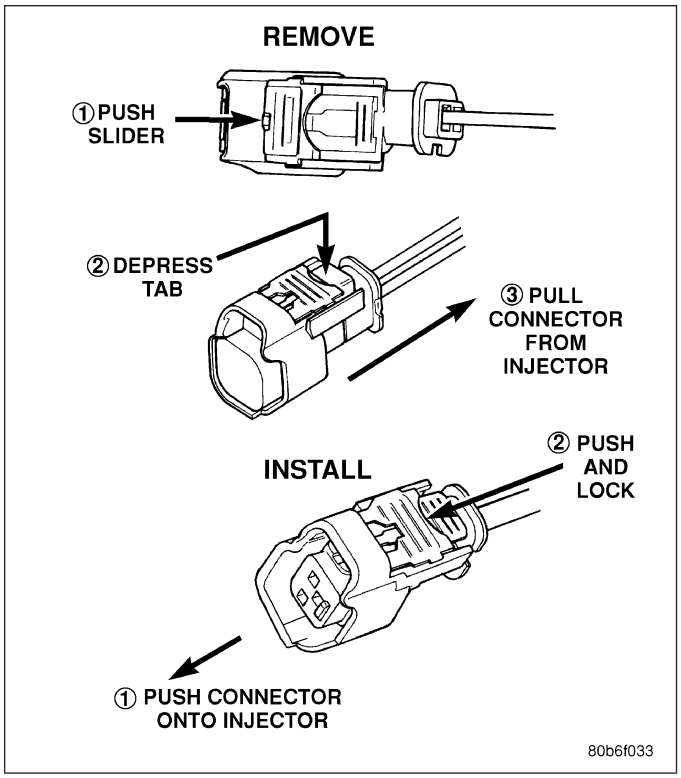

8. Disconnect fuel supply tube quick connect fitting at the fuel rail, (Refer to 14 - FUEL SYSTEM/FUEL DELIVERY/QUICK CONNECT FITTING - STANDARD PROCEDURE).
9. Remove four fuel rail mounting bolts (1) and hold-down clamps.
10. Gently rock and pull **left** side of fuel rail until fuel injectors just start to clear machined holes in intake manifold. Gently rock and pull **right** side of rail until injectors just start to clear intake manifold head holes. Repeat this procedure (left/right) until all injectors have cleared machined holes.
11. Remove fuel rail (with injectors attached) from engine.
12. If fuel injectors are to be removed, (Refer to 14 - FUEL SYSTEM/FUEL INJECTION/FUEL INJECTOR - REMOVAL).

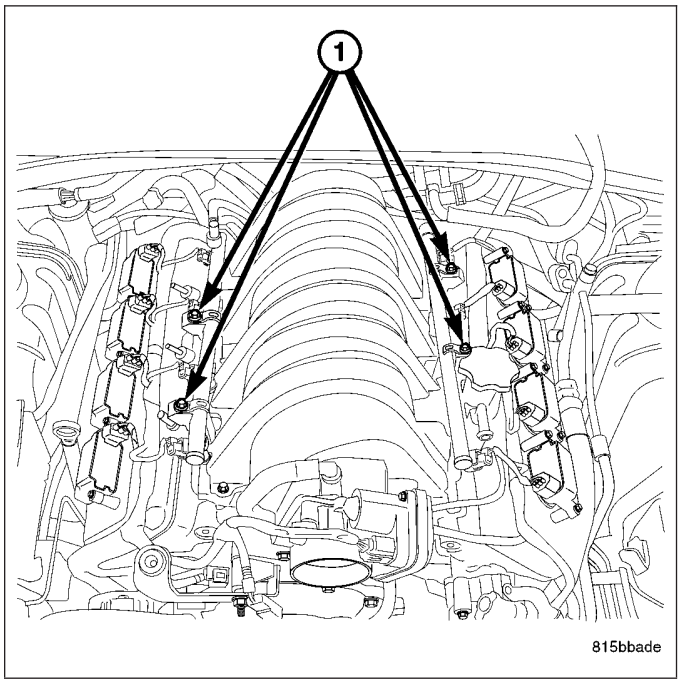

https://truckmanualshub.com/

8.3L - SRT-10

1. Disconnect the electrical connector to the MAP sensor (2) and Coolant Temperature sensor (3).
2. Release fuel system pressure. Refer to Fuel Pressure Release Procedure in this section.
3. Disconnect negative battery cable.
4. Remove the air cleaner assembly, refer to the Engine/Air Intake System/Air Cleaner Housing for more information.

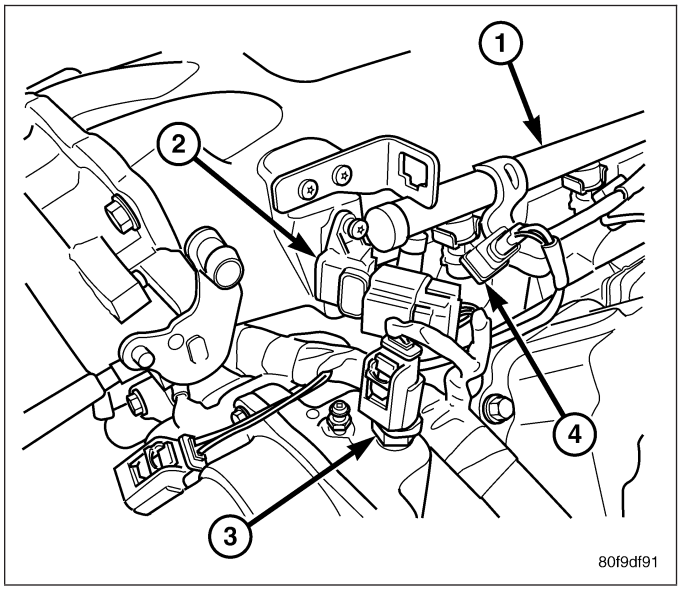

5. Disconnect the electrical connector to the TPS (1) and Idle Air Control.

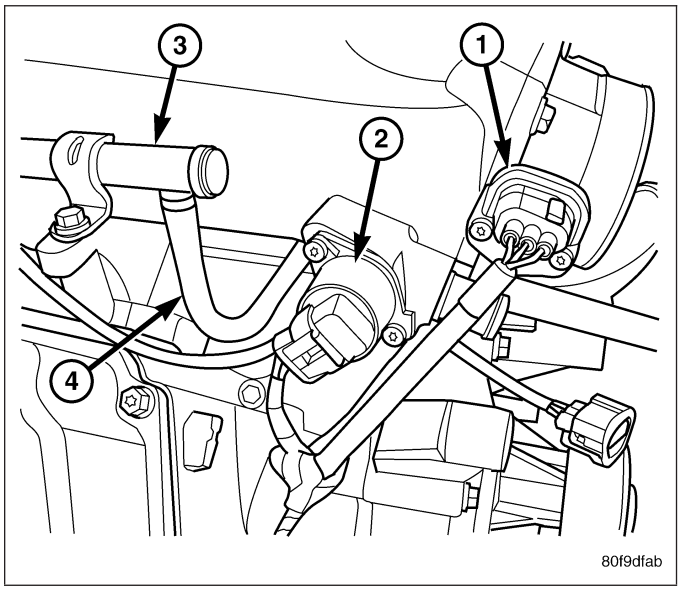

https://truckmanualshub.com/

6. Remove the wiring harness from the wiring clips under the throttle body.

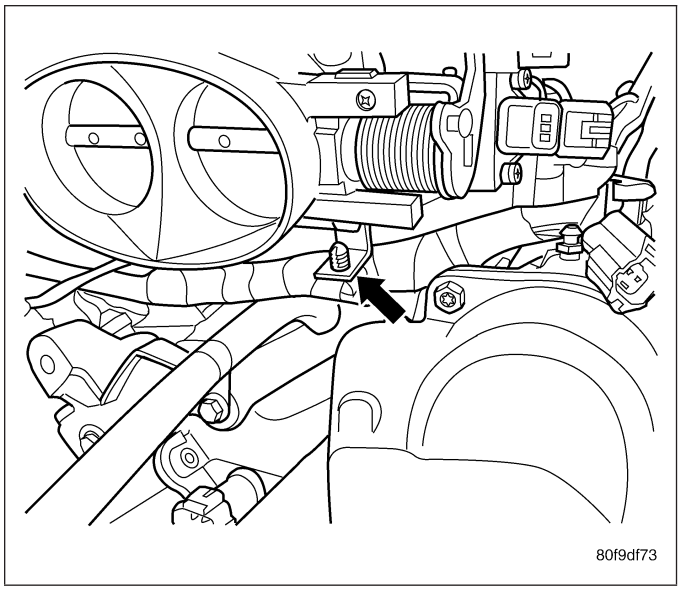

7. Disconnect the electrical connector from the fuel injectors.

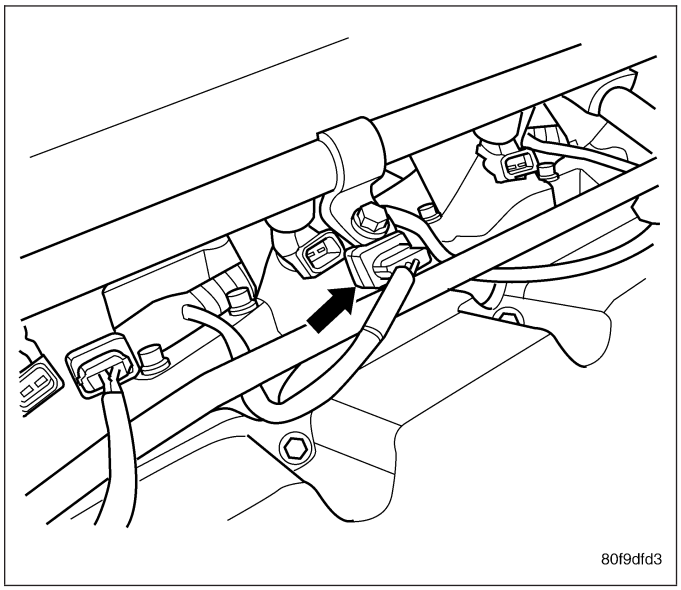

8. Disconnect the fuel line quick connector.

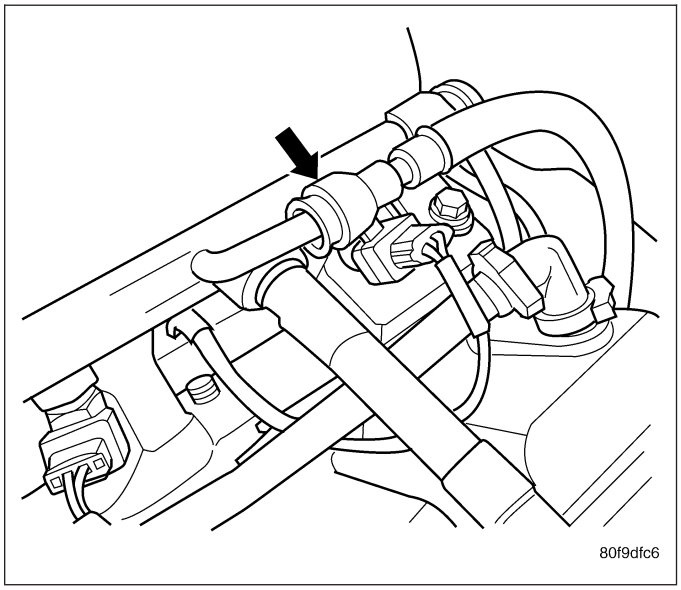

https://truckmanualshub.com/

9. Remove the bolts for the fuel rail.

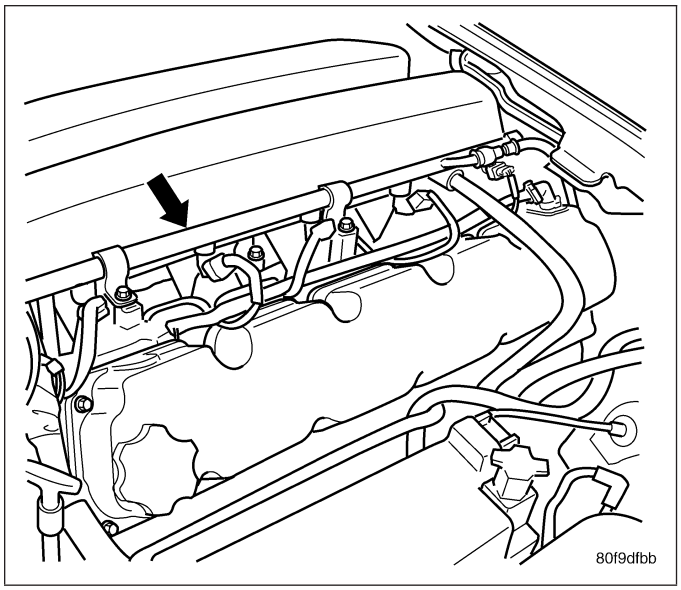

10. Pull fuel rail and injectors straight up and out of the intake manifold.

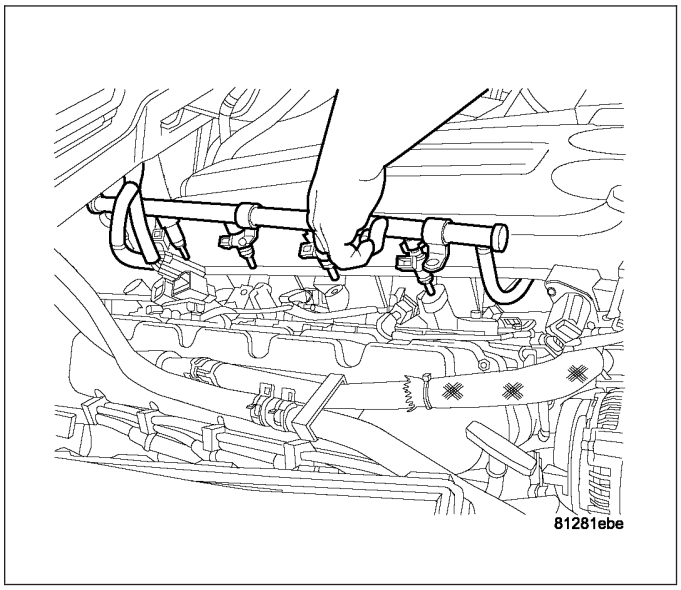

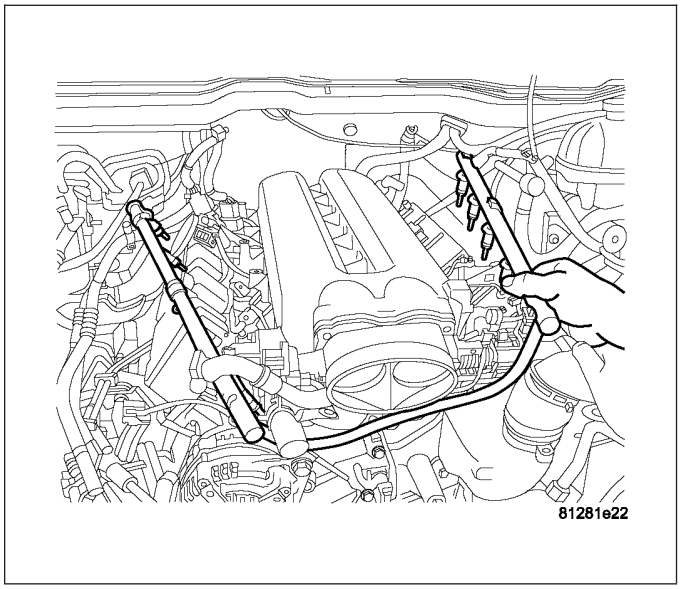

https://truckmanualshub.com/

11. Move the fuel rail forward and out from under the intake manifold and throttle body.

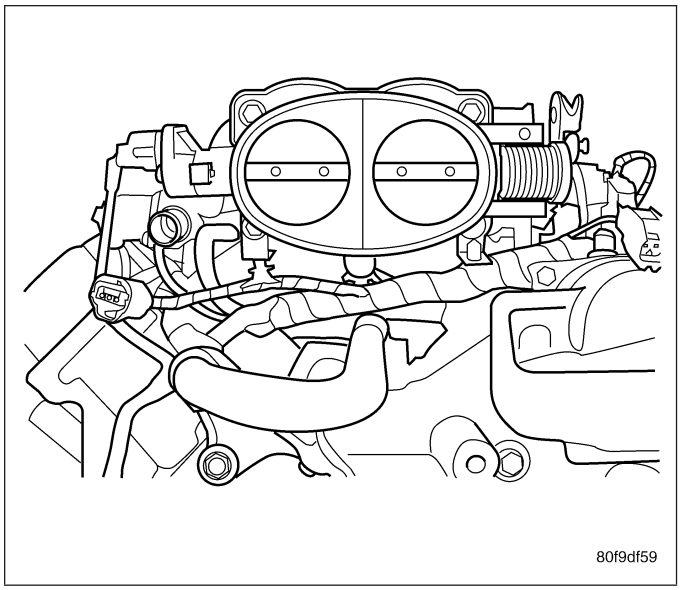

12. Remove the fuel injector from the fuel rail.

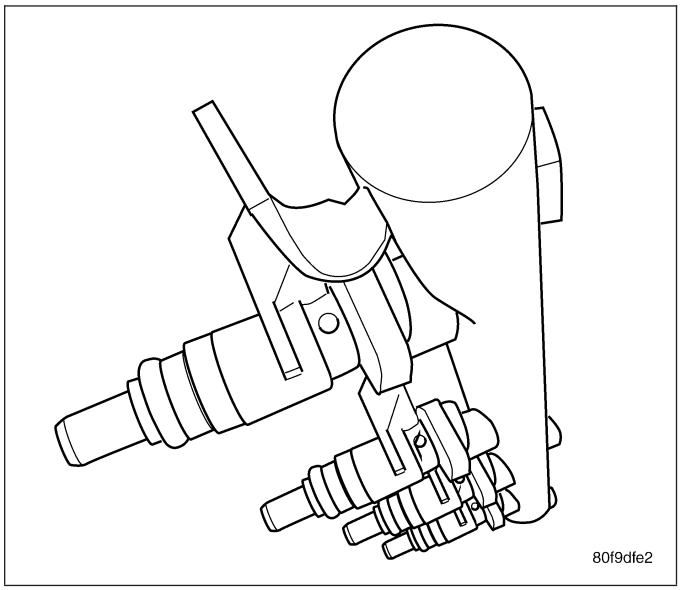

https://truckmanualshub.com/

INSTALLATION

3.7L

1. If fuel injectors are to be installed, (Refer to 14 - FUEL SYSTEM/FUEL INJECTION/FUEL INJECTOR - INSTALLATION).
2. Clean out fuel injector machined bores in intake manifold.
3. Apply a small amount of engine oil to each fuel injector O-ring. This will help in fuel rail installation.
4. Position fuel rail/fuel injector assembly to machined injector openings in cylinder head.
5. Guide each injector into cylinder head. Be careful not to tear injector O-rings.
6. Push **right** side of fuel rail down until fuel injectors have bottomed on cylinder head shoulder. Push **left** fuel rail down until injectors have bottomed on cylinder head shoulder.
7. Install 4 fuel rail mounting bolts and tighten. (Refer to 14 - FUEL SYSTEM/FUEL DELIVERY - SPECIFICATIONS)
8. Install 6 ignition coils. (Refer to 8 - ELECTRICAL/IGNITION CONTROL/IGNITION COIL - INSTALLATION)
9. Connect electrical connectors to throttle body.
10. Connect electrical connectors at all fuel injectors. To install connector, refer to. Push connector onto injector (1) and then push and lock red colored slider (2). Verify connector is locked to injector by lightly tugging on connector.

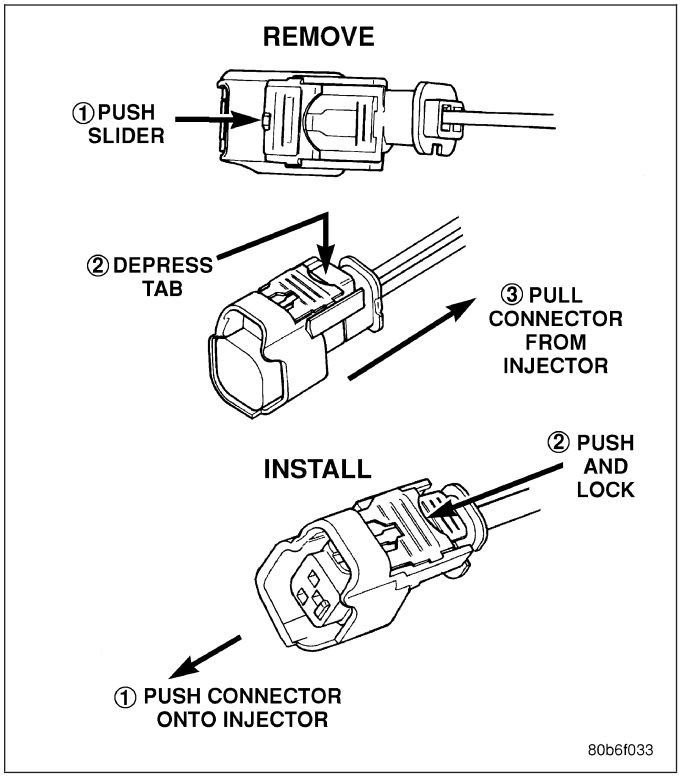

11. Connect necessary vacuum lines to throttle body.
12. Install air resonator mounting bracket near front of throttle body (2 bolts).
13. Connect fuel line latch clip and fuel line to fuel rail. (Refer to 14 - FUEL SYSTEM/FUEL DELIVERY/QUICK CONNECT FITTING - STANDARD PROCEDURE)
14. Install air box to throttle body.
15. Install air duct to air box.
16. Connect battery cable to battery.
17. Start engine and check for leaks.

https://truckmanualshub.com/

4.7L

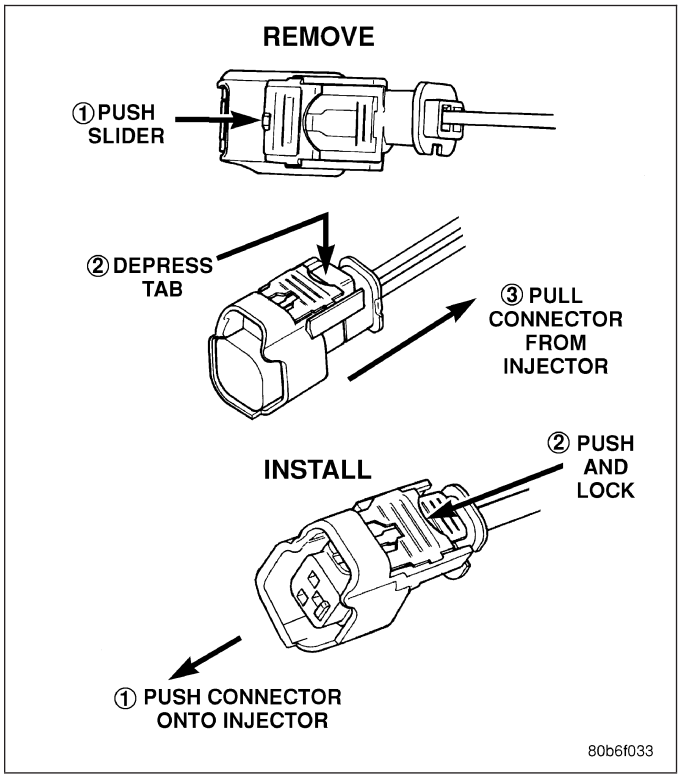

1. If fuel injectors are to be installed, (Refer to 14 - FUEL SYSTEM/FUEL INJECTION/FUEL INJECTOR - INSTALLATION).
2. Clean out fuel injector machined bores in intake manifold.
3. Apply a small amount of engine oil to each fuel injector O-ring. This will help in fuel rail installation.
4. Position fuel rail/fuel injector assembly to machined injector openings in cylinder head.
5. Guide each injector into cylinder head. Be careful not to tear injector O-rings.
6. Push **right** side of fuel rail down until fuel injectors have bottomed on cylinder head shoulder. Push **left** fuel rail down until injectors have bottomed on cylinder head shoulder.
7. Install 4 fuel rail mounting bolts and tighten. (Refer to 14 - FUEL SYSTEM/FUEL DELIVERY - SPECIFICATIONS)
8. Install 8 ignition coils. (Refer to 8 - ELECTRICAL/IGNITION CONTROL/IGNITION COIL - INSTALLATION)
9. Connect electrical connectors to throttle body.
10. Connect electrical connectors at all fuel injectors. To install connector, refer to. Push connector onto injector (1) and then push and lock red colored slider (2). Verify connector is locked to injector by lightly tugging on connector.
11. Connect necessary vacuum lines to throttle body.
12. Install air resonator mounting bracket near front of throttle body (2 bolts).
13. Connect fuel line latch clip and fuel line to fuel rail. (Refer to 14 - FUEL SYSTEM/FUEL DELIVERY/QUICK CONNECT FITTING - STANDARD PROCEDURE)
14. Install air box to throttle body.
15. Install air duct to air box.
16. Connect battery cable to battery.
17. Start engine and check for leaks.

https://truckmanualshub.com/

5.7L

1. If fuel injectors are to be installed, (Refer to 14 - FUEL SYSTEM/FUEL INJECTION/FUEL INJECTOR - INSTALLATION).
2. Clean out fuel injector machined bores in intake manifold.
3. Apply a small amount of engine oil to each fuel injector O-ring. This will help in fuel rail installation.
4. Position fuel rail/fuel injector assembly to machined injector openings in intake manifold.
5. Guide each injector into intake manifold. Be careful not to tear injector O-rings.
6. Push **right** side of fuel rail down until fuel injectors have bottomed on shoulders. Push **left** fuel rail down until injectors have bottomed on shoulders.
7. Install 4 fuel rail holddown clamps and 4 mounting bolts (1) (Refer to 14 - FUEL SYSTEM/FUEL DELIVERY - SPECIFICATIONS).
8. Connect electrical connector to throttle body.

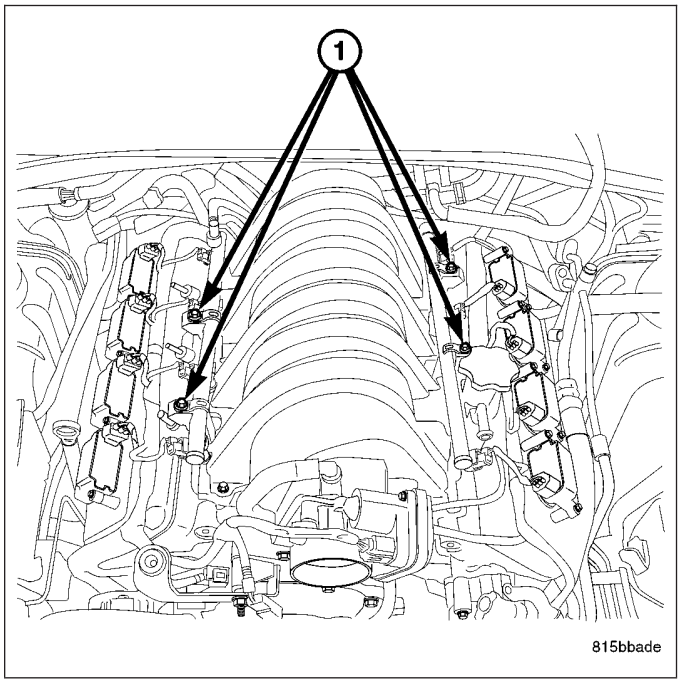

9. Connect electrical connectors at all fuel injectors. Push connector onto injector (1) and then push and lock red colored slider (2). Verify connector is locked to injector by lightly tugging on connector.
10. Connect fuel line latch clip and fuel line to fuel rail. (Refer to 14 - FUEL SYSTEM/FUEL DELIVERY/QUICK CONNECT FITTING - STANDARD PROCEDURE).
11. Install air resonator to throttle body (2 bolts).
12. Install flexible air duct to air box.
13. Connect battery cable to battery.
14. Start engine and check for leaks.

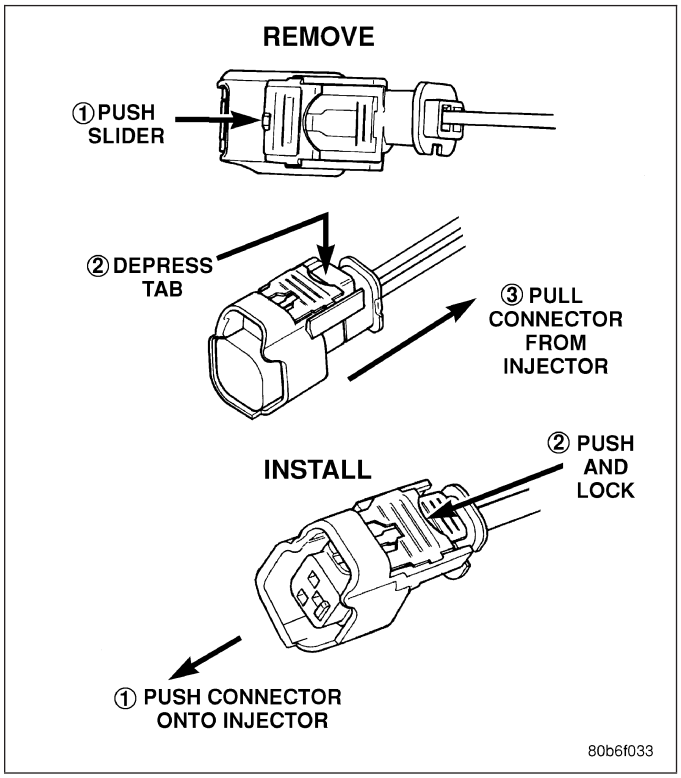

8.3L - SRT-10

1. Install the fuel injectors to the fuel rail.
2. Install fuel rail under throttle body.
3. Apply a light coating of clean engine oil to the O-ring on the nozzle end of each injector.
4. Insert fuel injector nozzles into openings in intake manifold. Seat the injectors in place. Tighten fuel rail bolts to 12 N·m (105 in. lbs.).
5. Attach electrical connectors to fuel injectors.

https://truckmanualshub.com/

6. Connect the electrical connector to the MAP sensor and Coolant Temperature sensor.
7. Connect the electrical connector to the TPS and Idle Air Control.
8. Install the wiring harness to the wiring clips under the throttle body.
9. Connect fuel supply tube to fuel rail. Refer to Quick Connect Fittings in the Fuel Delivery section.
10. Install the negative battery cable.
11. Install the air cleaner assembly, refer to the Engine/Air Intake System/Air Cleaner Housing for more information.
12. Use the DRBIII® scan tool ASD Fuel System Test to pressurize the fuel system. Check for leaks.

https://truckmanualshub.com/

TANK - FUEL

DESCRIPTION

The fuel tank is constructed of a plastic material. Its main functions are for fuel storage and for placement of the fuel pump module, and (if equipped) certain ORVR components.

OPERATION

All models pass a full 360 degree rollover test without fuel leakage. To accomplish this, fuel and vapor flow controls are required for all fuel tank connections.

Two check (control) valves are mounted into the top of the fuel tank. Refer to Fuel Tank Check Valve for additional information.

An evaporation control system is connected to the fuel tank to reduce emissions of fuel vapors into the atmosphere. When fuel evaporates from the fuel tank, vapors pass through vent hoses or tubes to a charcoal canister where they are temporarily held. When the engine is running, the vapors are drawn into the intake manifold. Certain models are also equipped with a self-diagnosing system using a Leak Detection Pump (LDP) or NVLD Pump, and/or an On-Board Refueling Vapor Recovery (ORVR) system. Refer to Emission Control System for additional information.

REMOVAL- EXCEPT DIESEL

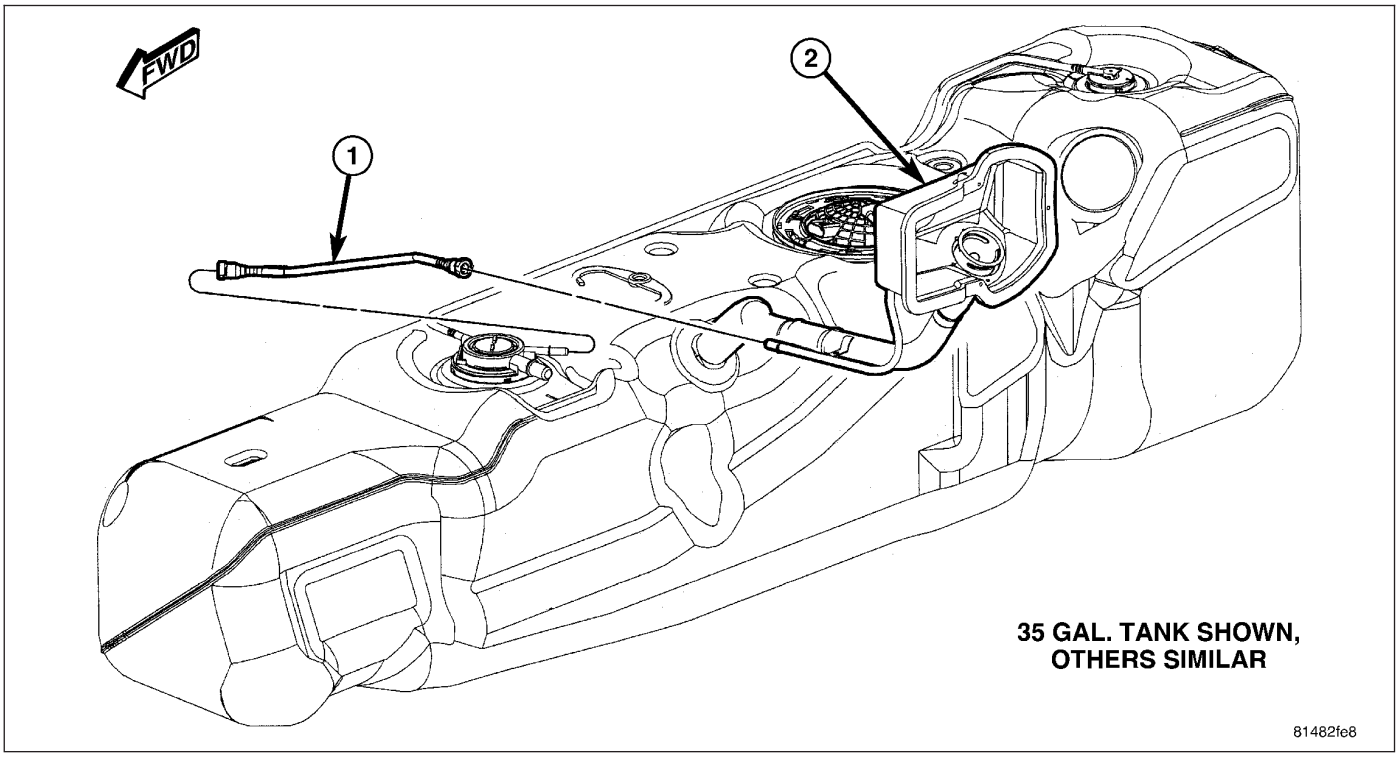

1. Disconnect and separate fuel vent line (1) from fuel fill bezel (2).

https://truckmanualshub.com/

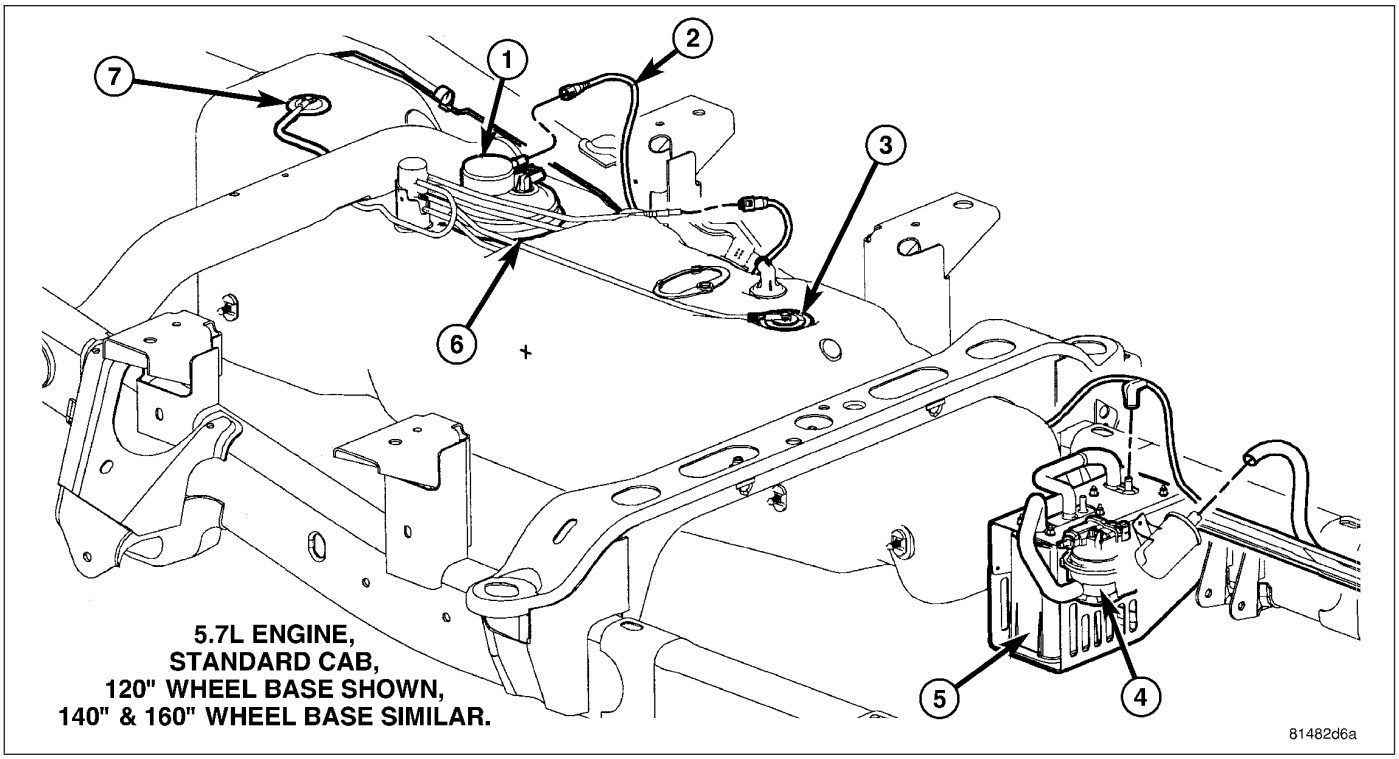

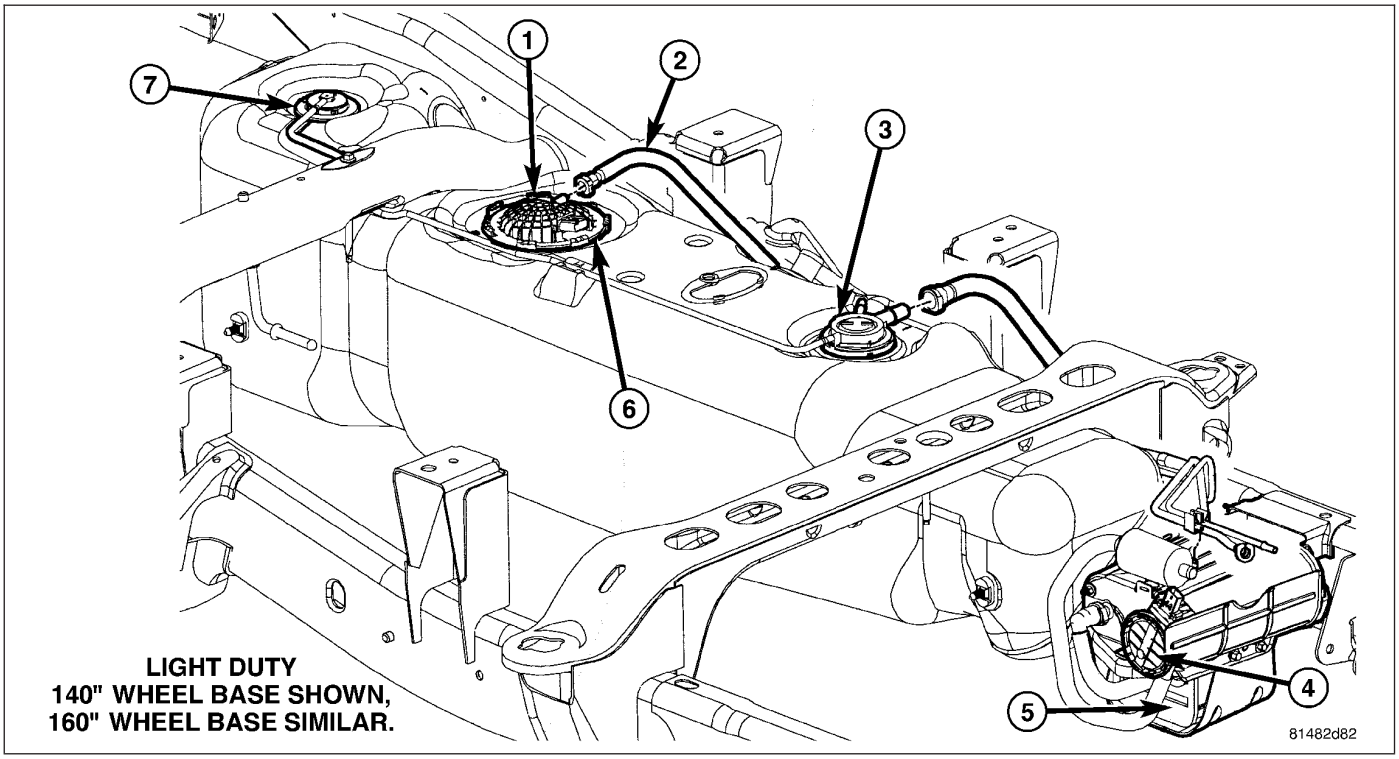

https://truckmanualshub.com/

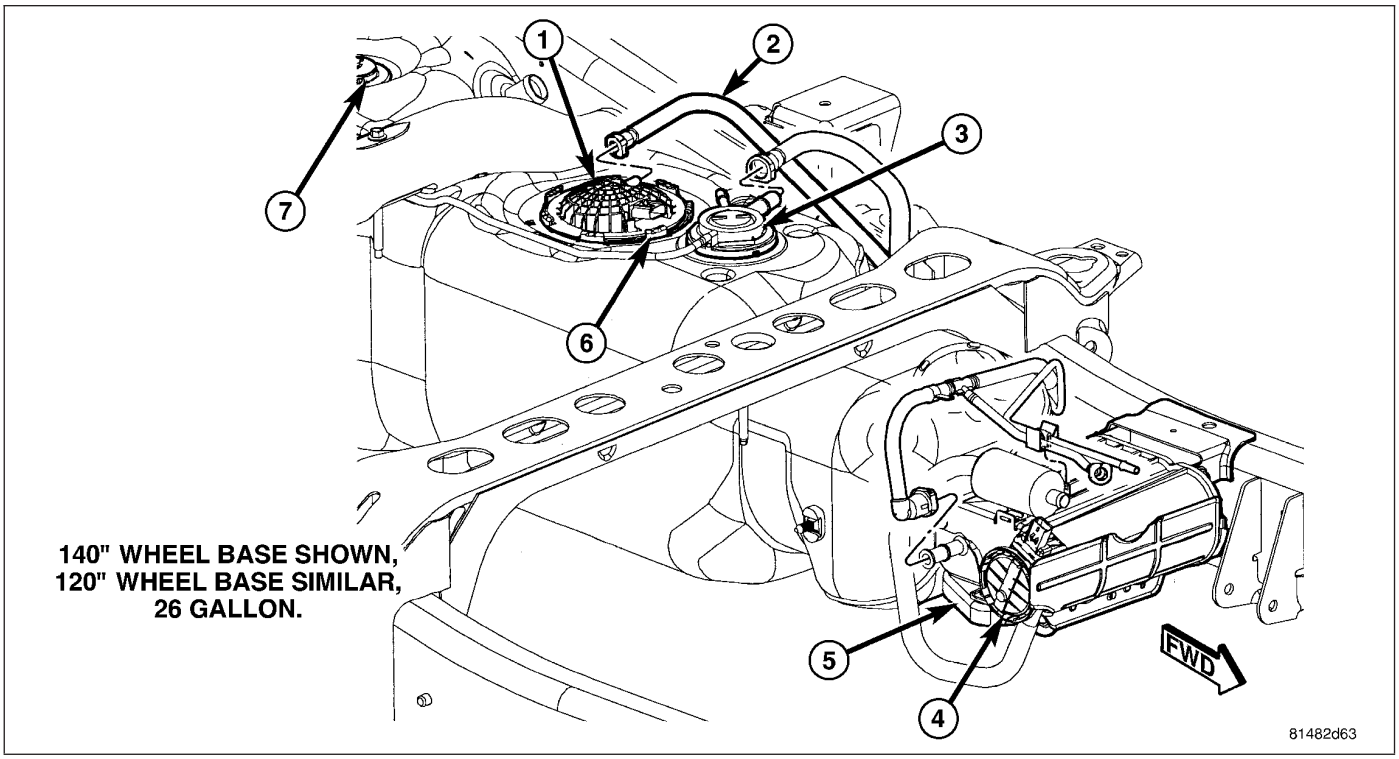

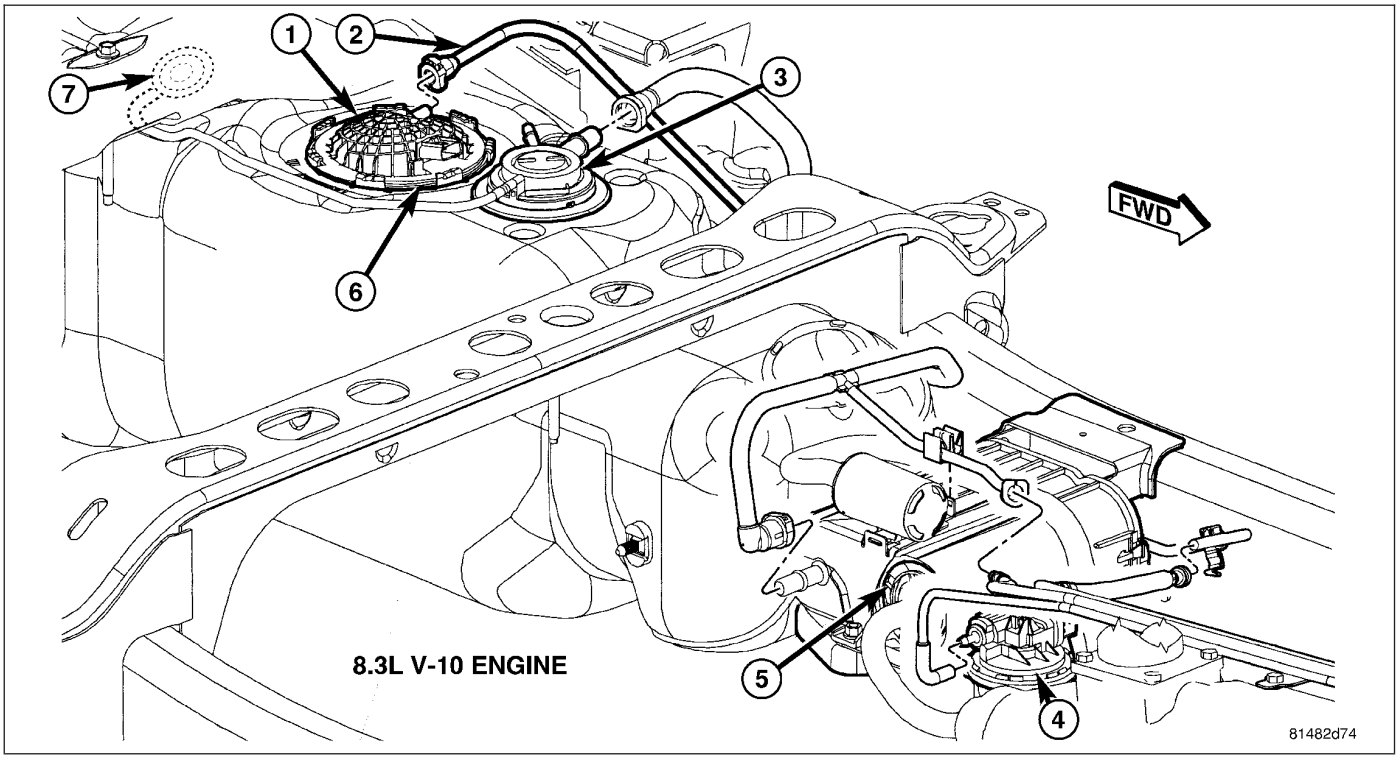

2. Disconnect electrical connector at top of fuel pump module. To disconnect electrical connector: Push upward on red colored tab to unlock. Push on black colored tab while removing connector.
3. Disconnect necessary emission vent lines from leak pump and EVAP canister (4) and/or (5).
4. Disconnect fuel supply line (2) from fuel pump module (1).
5. Disconnect necessary emission vent lines from check valves (3) and/or (7) at top of tank.

https://truckmanualshub.com/

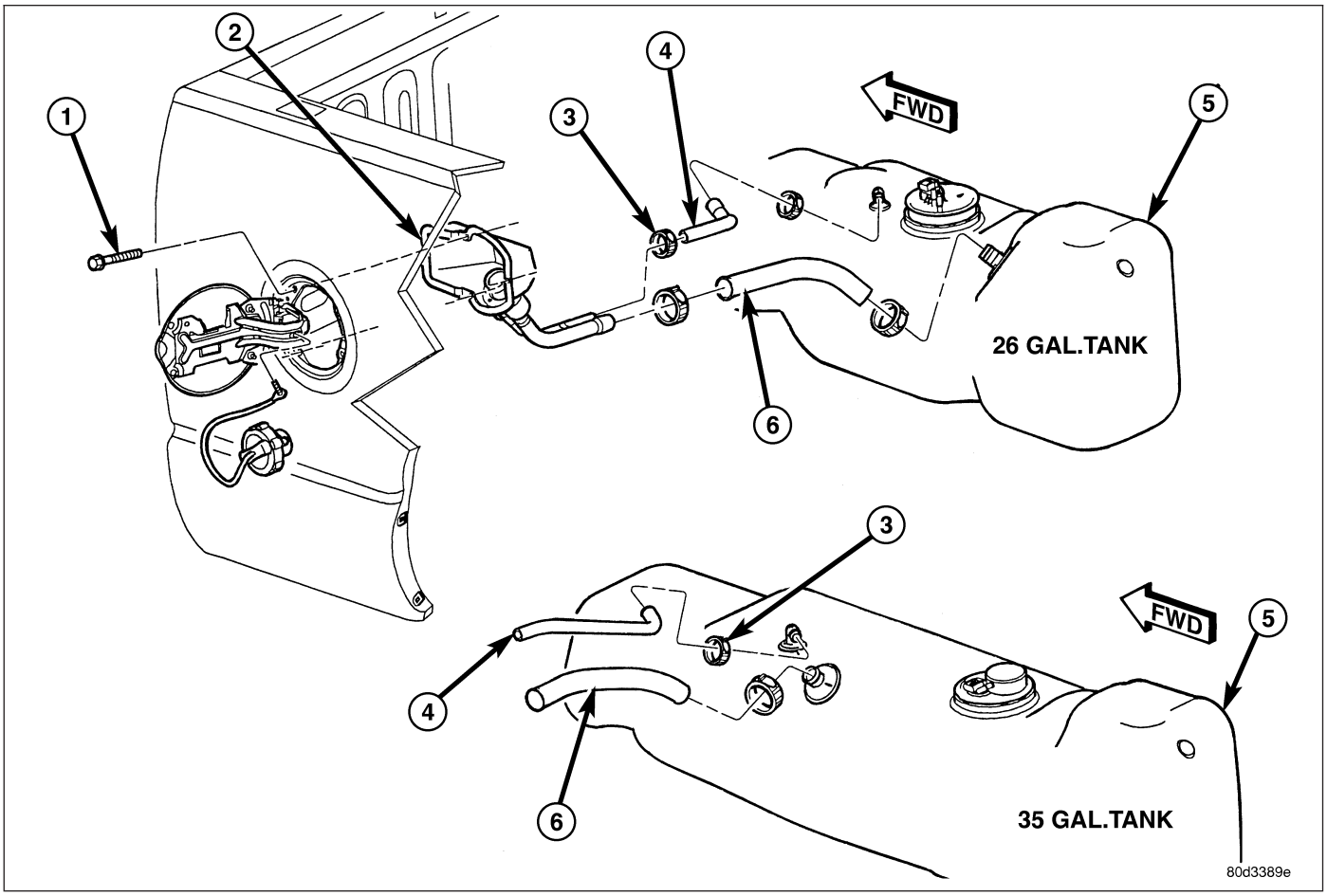

6. Loosen clamps (3) and disconnect rubber fuel hoses at tank fittings.
7. Support tank with a hydraulic jack.

https://truckmanualshub.com/

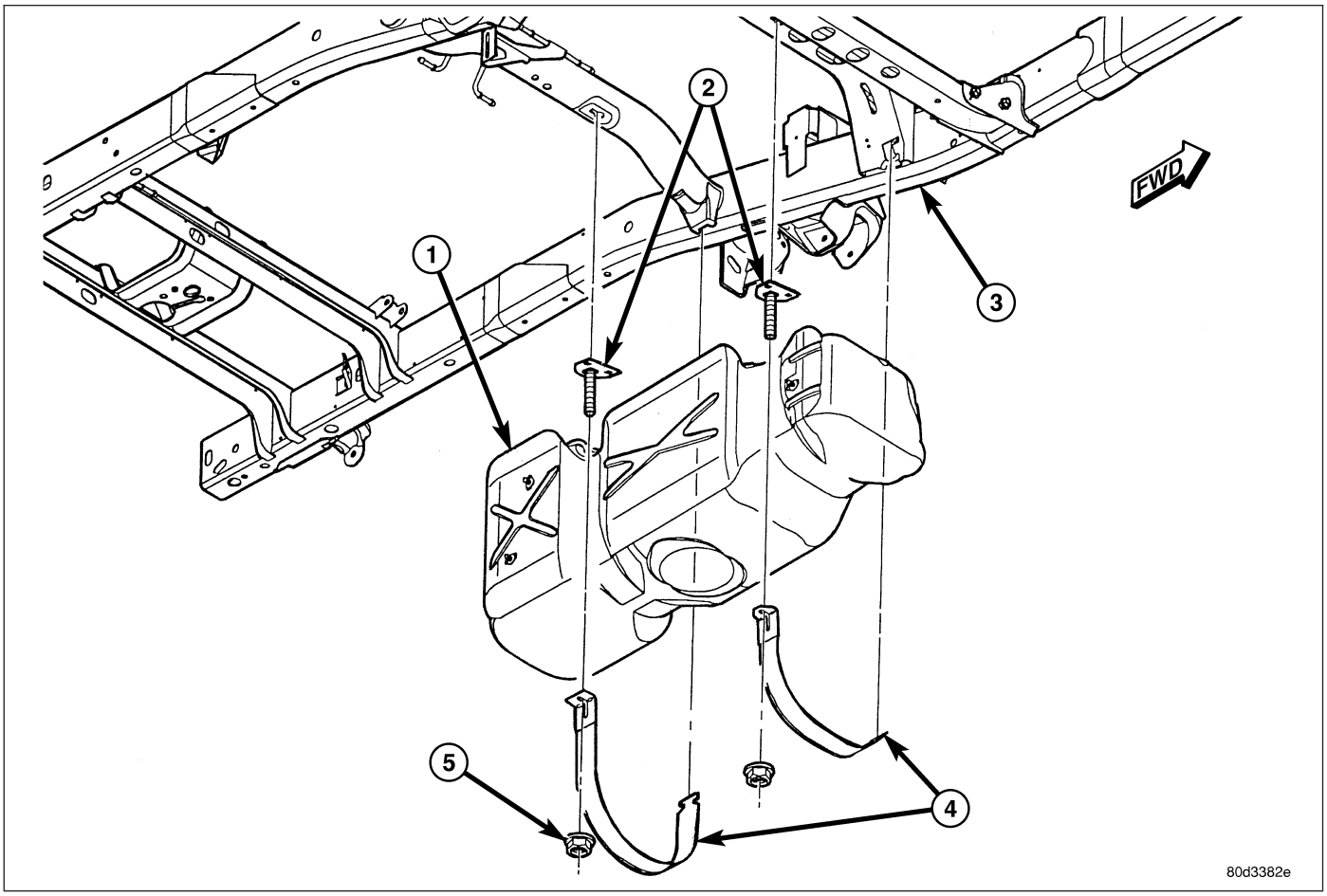

8. Remove two fuel tank strap nuts (5) and remove both tank support straps (4).
9. Continue to lower tank for removal.
10. If fuel tank is to be replaced, remove fuel pump module from tank. Refer to Fuel Pump Module Removal/Installation procedures.

INSTALLATION - EXCEPT DIESEL

1. If fuel tank is to be replaced, install fuel pump module into tank. Refer to Fuel Pump Module Removal/Installation procedures.
2. Disconnect clamps and remove rubber fuel fill hose and fuel vent hose at fuel fill tube. Install these two hoses to two fuel tank fittings. Rotate hoses until paint marks (2) on hoses line up with alignment marks (1). Tighten both clamps.

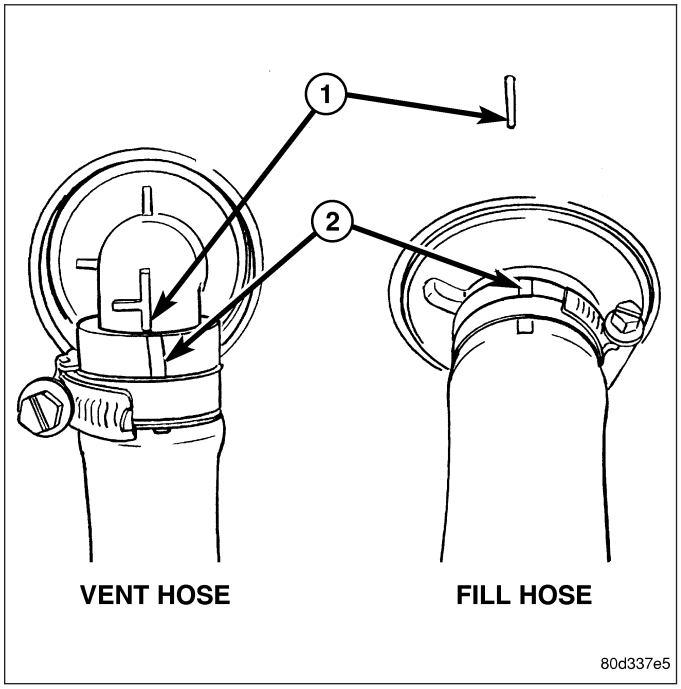

https://truckmanualshub.com/

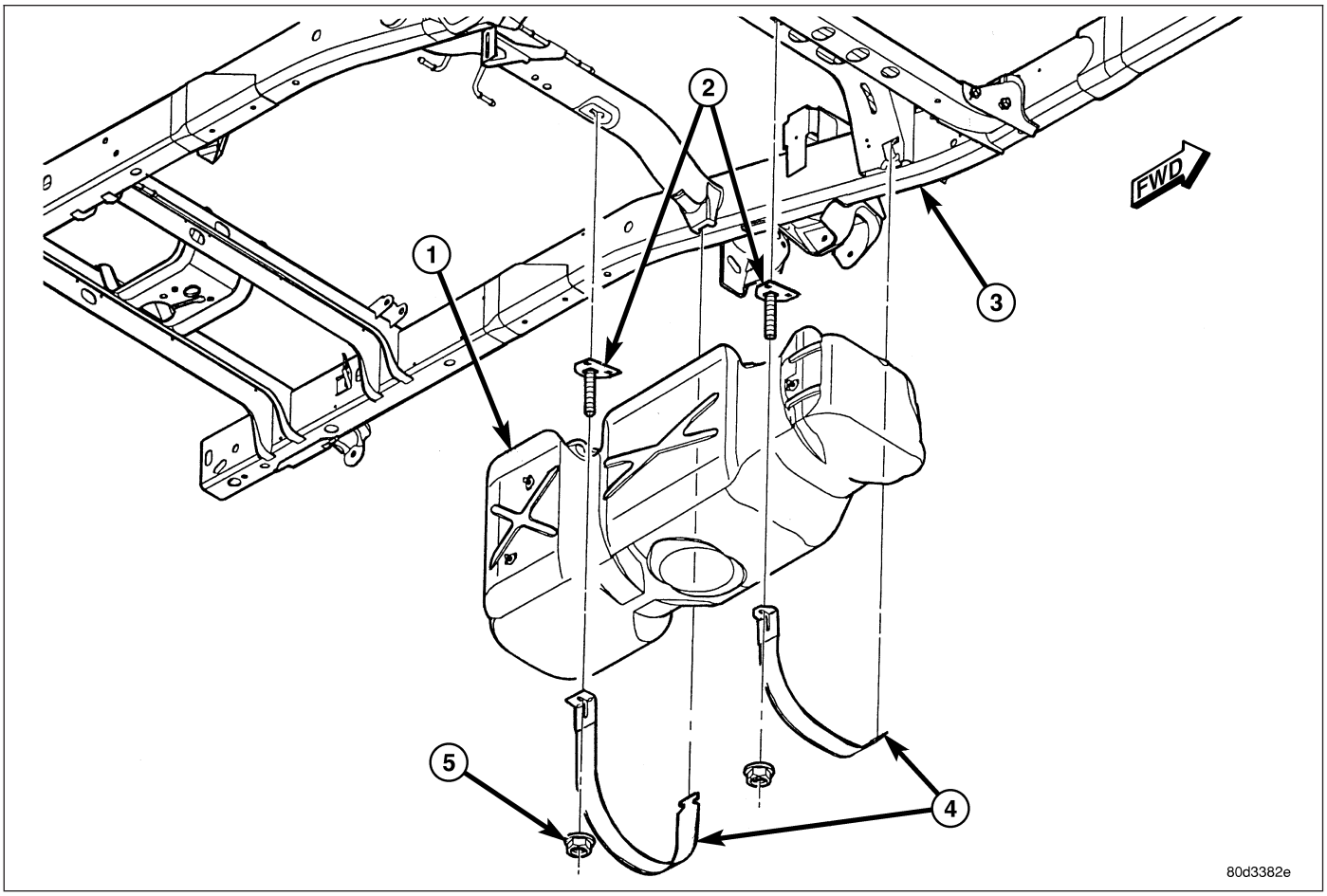

3. Position fuel tank (1) to hydraulic jack.
4. Raise tank (1) until positioned near body.
5. Continue raising tank until positioned snug to body.
6. Install and position both tank support straps (4). Install two fuel tank strap nuts (5) and tighten. **Tighten rear strap nut first.** Refer to Torque Specifications.

https://truckmanualshub.com/

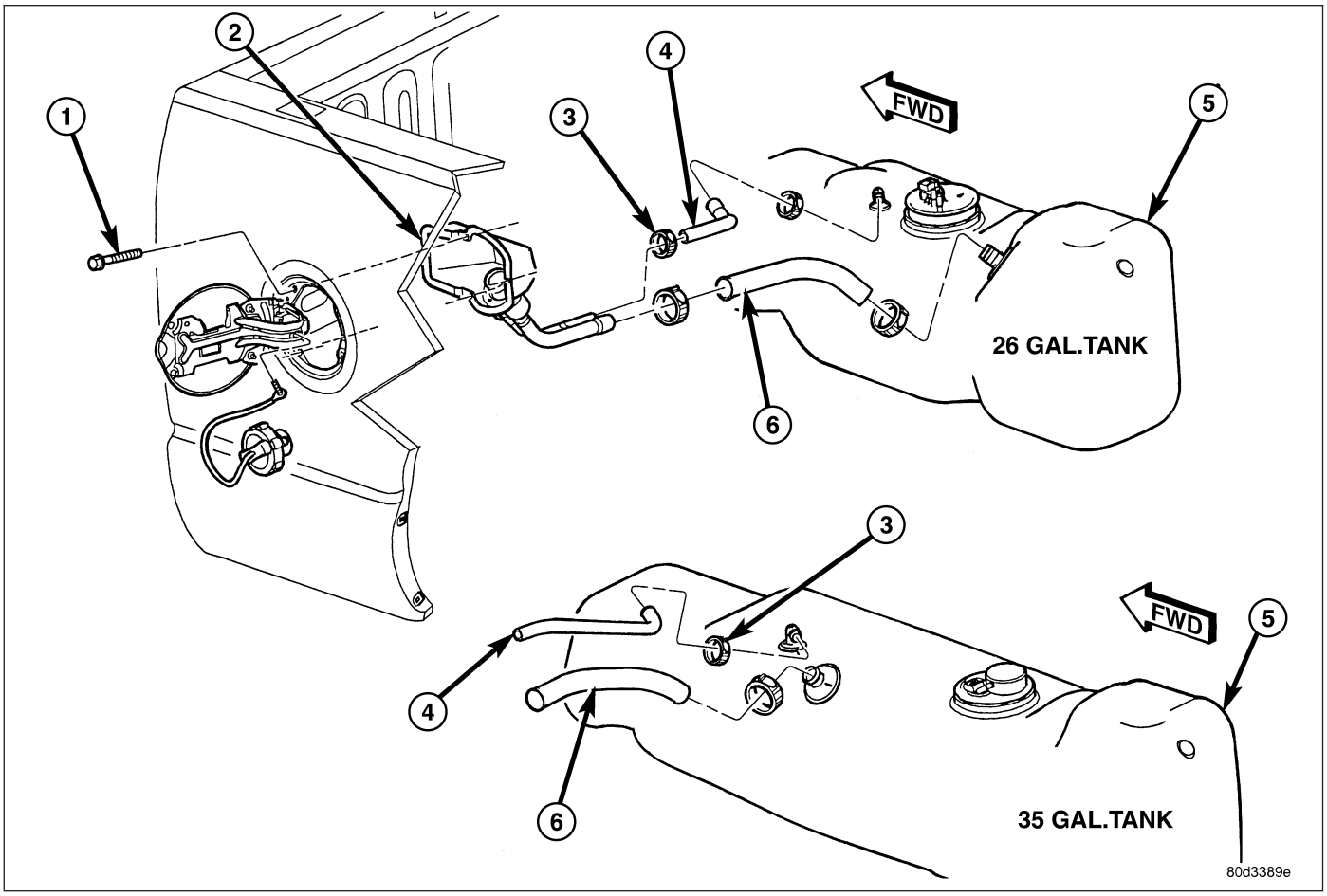

7. Connect rubber fill and vent hoses to fuel fill tube and tighten clamps (3).

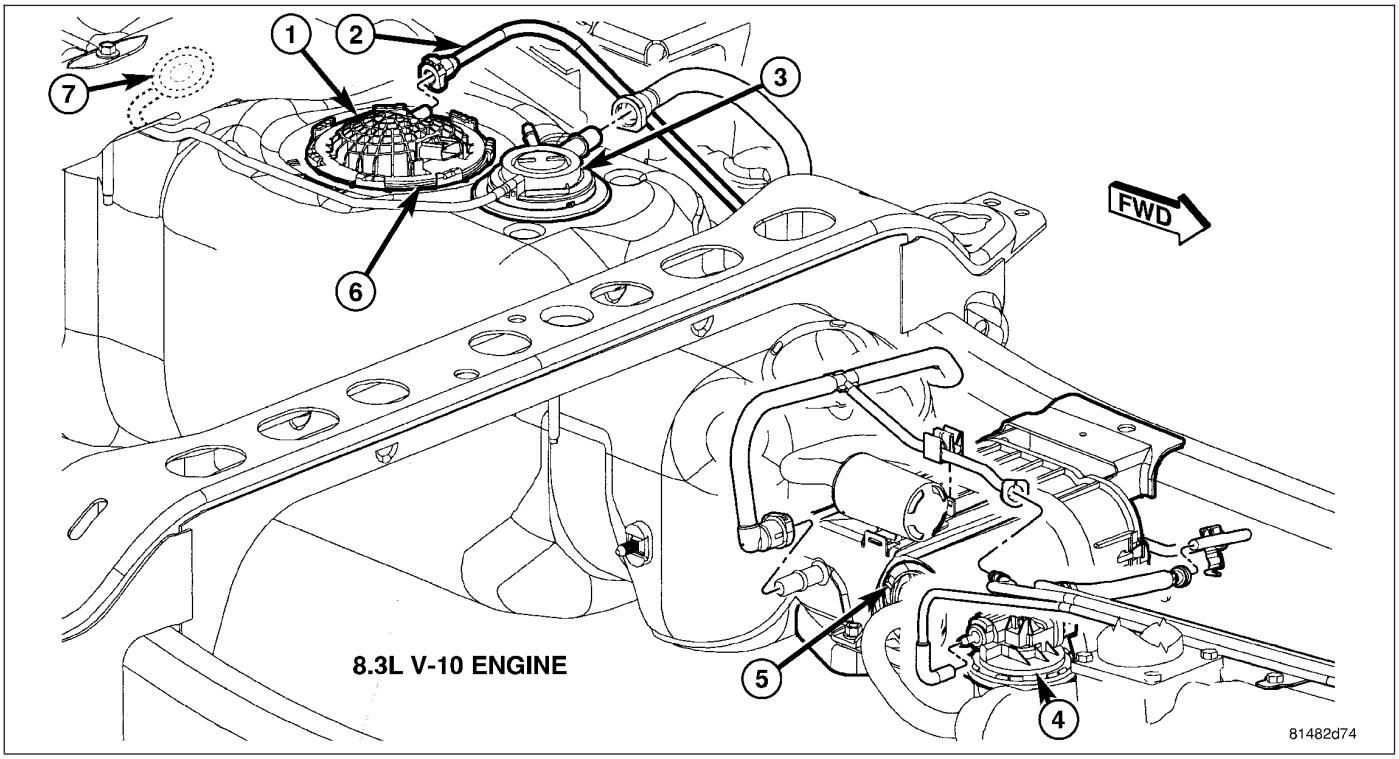

https://truckmanualshub.com/

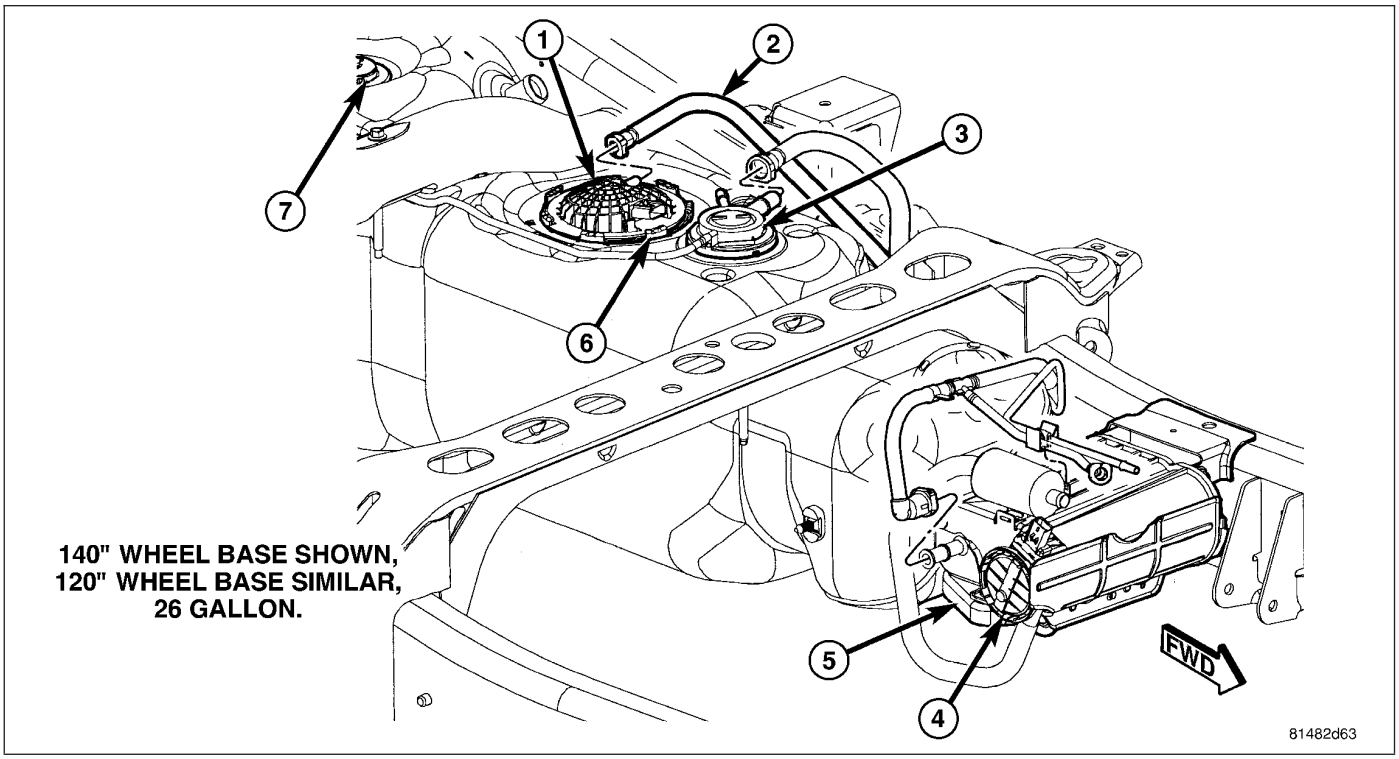

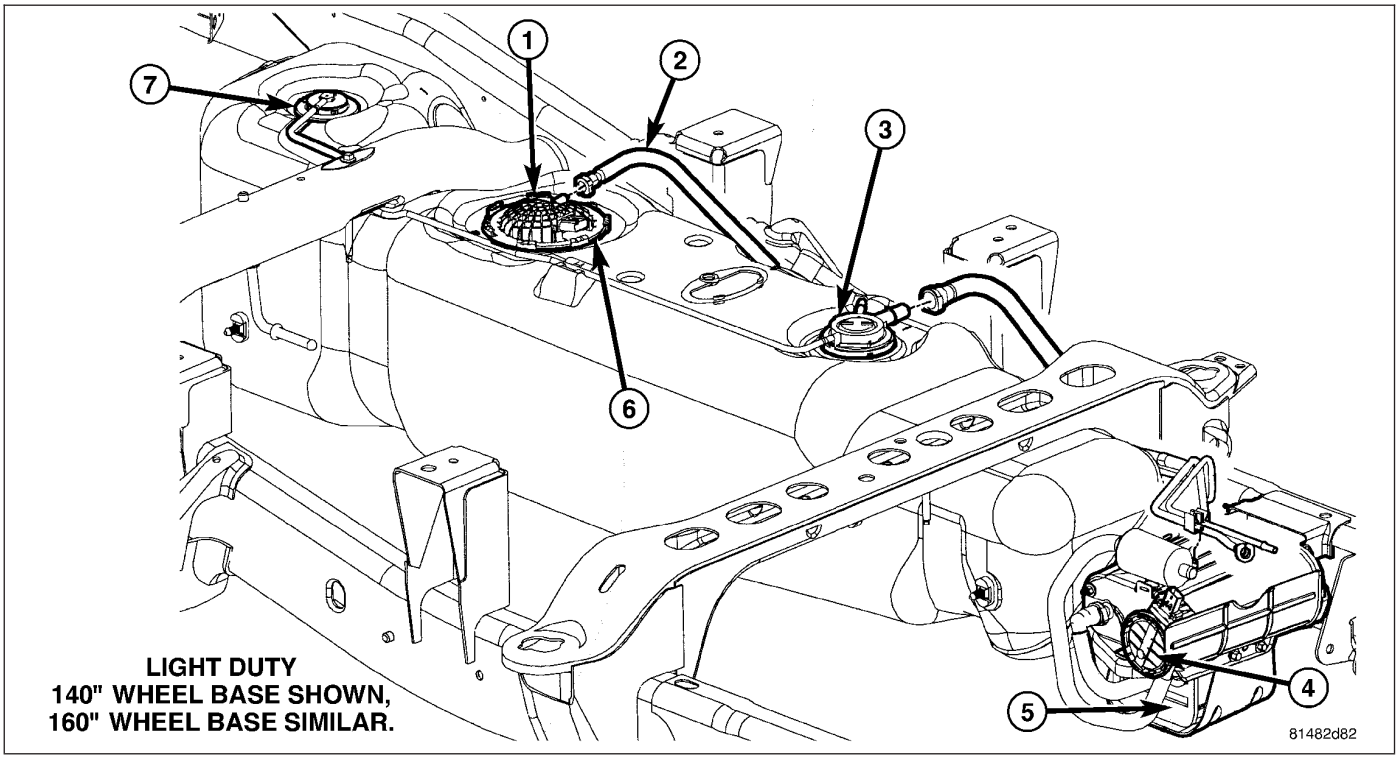

https://truckmanualshub.com/

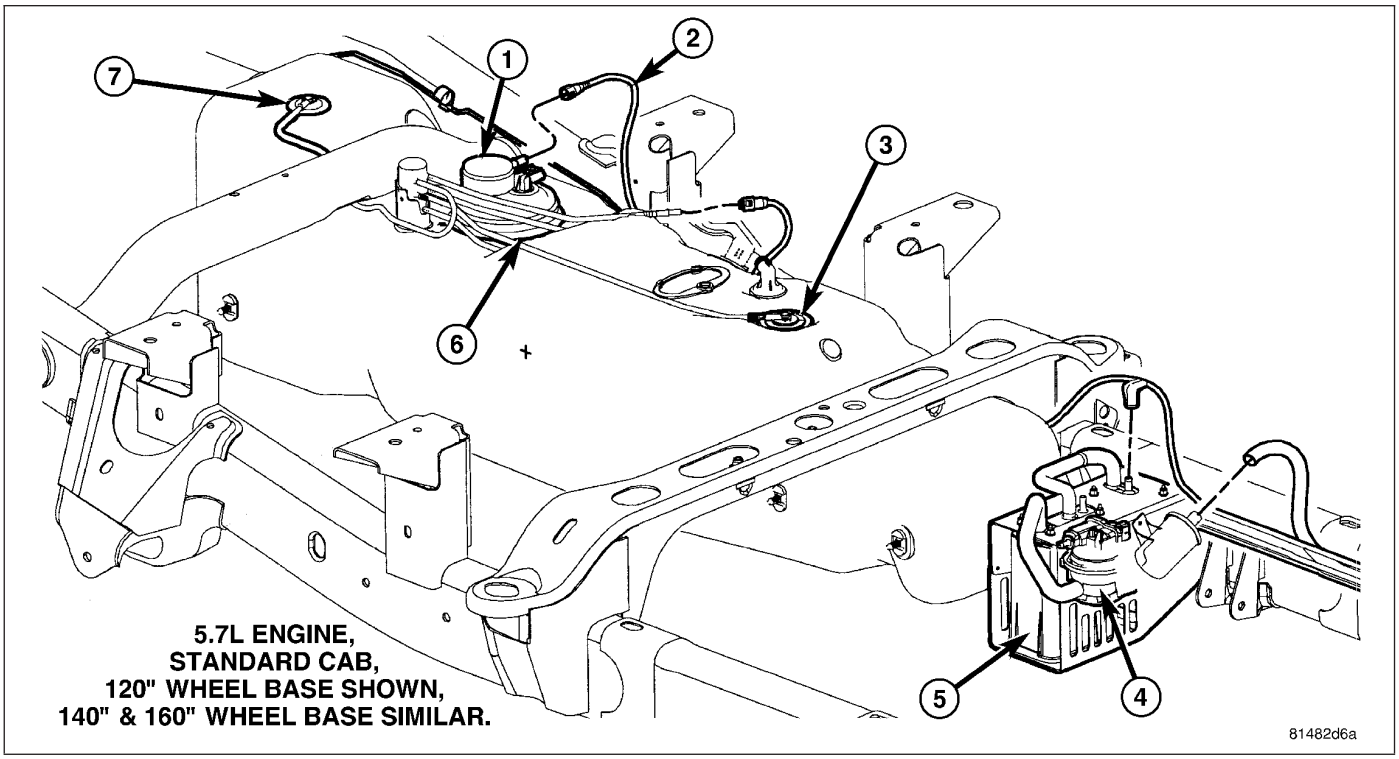

8. Connect electrical connector to top of fuel pump module.
9. Connect necessary emission vent lines to leak pump and EVAP canister (4) and/or (5).
10. Connect fuel supply line (2) to fuel pump module (1).
11. Connect necessary emission vent lines from check valves (3) and/or (7) at top of tank.

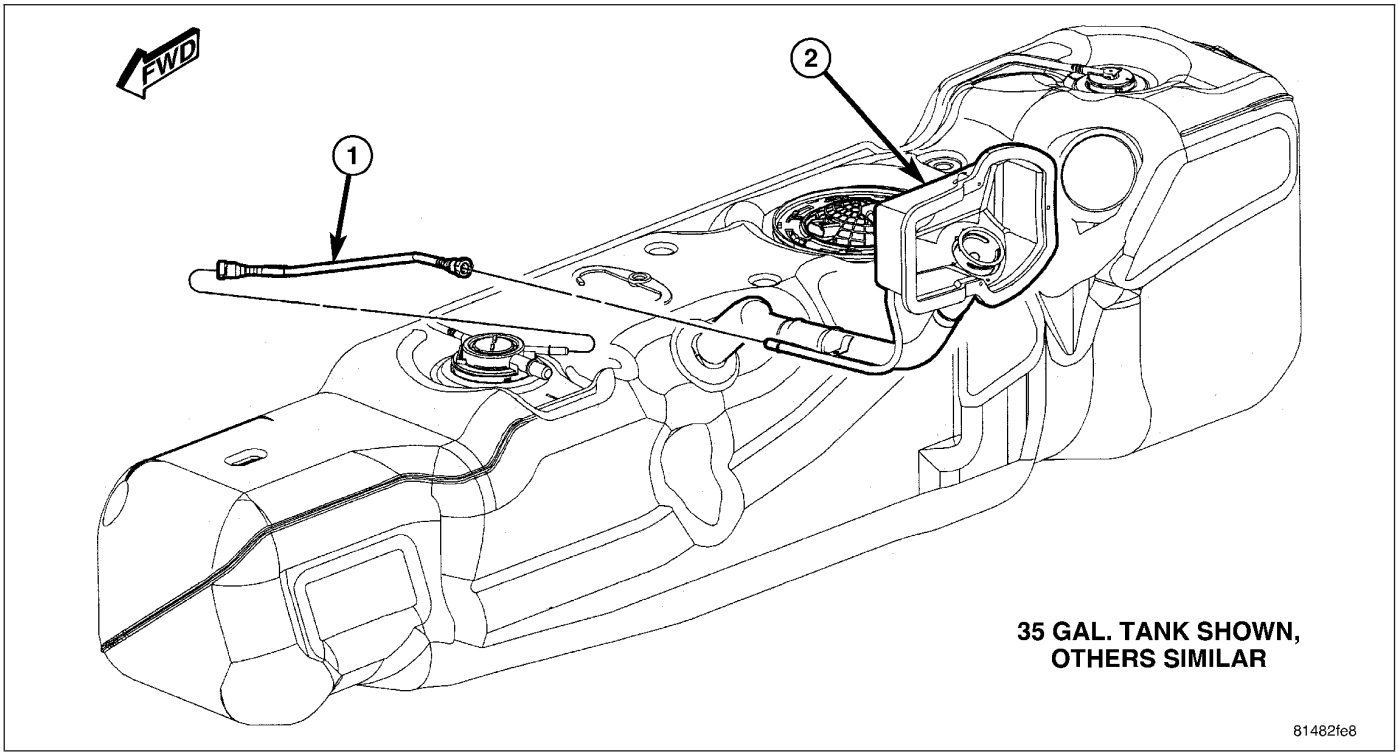

12. Connect fuel vent line (1) to fuel fill bezel (2).
13. Fill fuel tank with fuel.
14. Start engine and check for fuel leaks near top of module.

https://truckmanualshub.com/

FILTER - INLET

REMOVAL

The fuel pump inlet filter (strainer) is located on the bottom of the fuel pump module (1). The fuel pump module is located inside of fuel tank.

1. Remove fuel tank. Refer to Fuel Tank Removal/Installation.
2. Remove fuel pump module. Refer to Fuel Pump Module Removal/Installation.
3. Remove filter by carefully prying 2 lock tabs (2) at bottom of module with 2 screwdrivers. Filter is snapped to module.
4. Clean bottom of pump module.

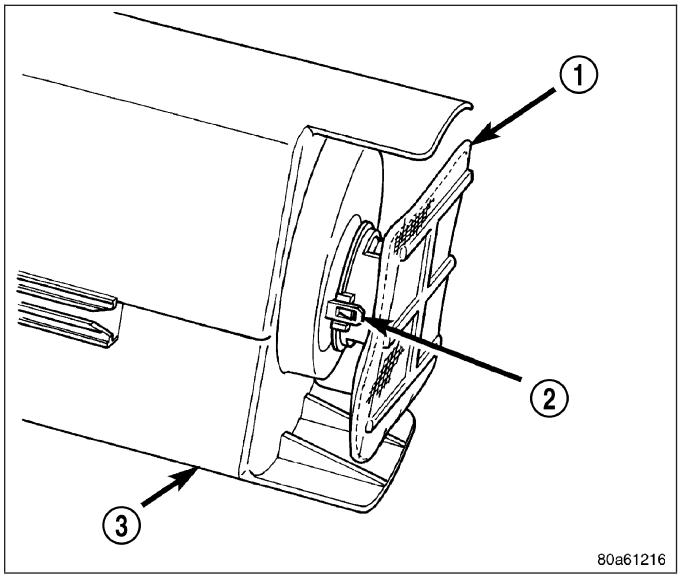

INSTALLATION

The fuel pump inlet filter (strainer) is located on the bottom of the fuel pump module. The fuel pump module is located inside of fuel tank.

1. Snap new filter to bottom of module. Be sure o-ring is in correct position.
2. Install fuel pump module. Refer to Fuel Pump Module Removal/Installation.
3. Install fuel tank. Refer to Fuel Tank Removal/Installation.

https://truckmanualshub.com/

FUEL INJECTION - GAS

TABLE OF CONTENTS

page

PEDAL - ACCELERATOR
REMOVAL 46
INSTALLATION 46
SENSOR-ACCELERATOR PEDAL POSITION
DESCRIPTION 47
OPERATION 47
REMOVAL 47
INSTALLATION 48
SENSOR-CRANKSHAFT POSITION
DESCRIPTION
3.7L V-6 49
4.7L V-8 49
5.7L V-8 50
OPERATION
3.7L V-6 50
4.7L V-8 51
5.7L V-8 51
REMOVAL
3.7L V-6 52
4.7L V-8 52
5.7L V-8 53
8.3L - SRT-10 53
INSTALLATION
3.7L V-6 54
4.7L V-8 55
5.7L V-8 55
8.3L - SRT-10 55
INJECTOR - FUEL
DESCRIPTION 56
OPERATION
FUEL INJECTOR 56
PCM OUTPUT 56
REMOVAL
3.7/4.7/ 5.7L 57
8.3L - SRT-10 57
INSTALLATION
3.7/ 4.7/ 5.7L 60
8.3L - SRT-10 60
RELAY - FUEL PUMP
DESCRIPTION 61
OPERATION 61
REMOVAL 61
INSTALLATION 61
MOTOR-IAC
DESCRIPTION
3.7L, 4.7L, 5.7L 62
8.3L - SRT-10 63
OPERATION
3.7L V-6/4.7L V-8 63
REMOVAL
3.7L V-6 64
4.7L V-8 65
5.7L V-8 65
8.3L - SRT-10 65
INSTALLATION
3.7L V-6 66
4.7L V-8 66
5.7L V-8 66
8.3L - SRT-10 67
SENSOR - INLET AIR TEMPERATURE
REMOVAL — 8.3L 68
INSTALLATION 68
SENSOR-INTAKE AIR TEMPERATURE
DESCRIPTION
3.7L V-6 69
4.7L V-8 69
5.7L V-8 70
OPERATION 70
REMOVAL
3.7L V-6 71
4.7L V-8 72
5.7L V-8 73
INSTALLATION
3.7L V-6 74
4.7L V-8 75
5.7L V-8 75
SENSOR-MAP
DESCRIPTION
3.7L V-6 76
4.7L V-8 76
5.7L V-8 77
8.3L - SRT-10 77
OPERATION 77
REMOVAL
3.7L V-6 79
4.7L V-8 80
5.7L V-8 80
8.3 L - SRT-10 81
INSTALLATION
3.7L V-6 81
4.7L V-8 82
5.7L V-8 83
8.3L - SRT-10 83
SENSOR - OXYGEN
DESCRIPTION 84
REMOVAL 84
INSTALLATION 85
SWITCH-PTO
DESCRIPTION 86
OPERATION 86
THROTTLE BODY
DESCRIPTION 87

https://truckmanualshub.com/

OPERATION 87
REMOVAL
3.7L V-6 87
4.7L V-8 88
5.7L V-8 88
8.3L - SRT-10 90
INSTALLATION
3.7L V-6 92
4.7L V-8 93
5.7L V-8 93
8.3L - SRT-10 94
CABLE - THROTTLE CONTROL
REMOVAL 95
INSTALLATION 97
SENSOR-THROTTLE POSITION
DESCRIPTION
3.7/4.7/5.7L 98
8.3L - SRT-10 98
OPERATION 99
REMOVAL
3.7L V6 99
4.7L V-8 100
5.7L V-8 100
8.3L - SRT-10 100
INSTALLATION
3.7L V-6 101
4.7L V-8 102
8.3L - SRT-10 103

https://truckmanualshub.com/

PEDAL - ACCELERATOR

REMOVAL

The following procedure applies only to vehicles without the Adjustable Pedal Package (code XAP).

The accelerator pedal is serviced as a complete assembly including the bracket.

The accelerator cable is connected to the upper part of the accelerator pedal arm by a plastic retainer (clip) (2). This plastic retainer snaps into the top of the accelerator pedal arm.

1. From inside the vehicle, hold up accelerator pedal. Remove plastic cable retainer (clip) and throttle cable core wire from upper end of accelerator pedal arm. Plastic cable retainer (clip) snaps into pedal arm.
2. Remove 2 accelerator pedal mounting bracket nuts. Remove accelerator pedal assembly.

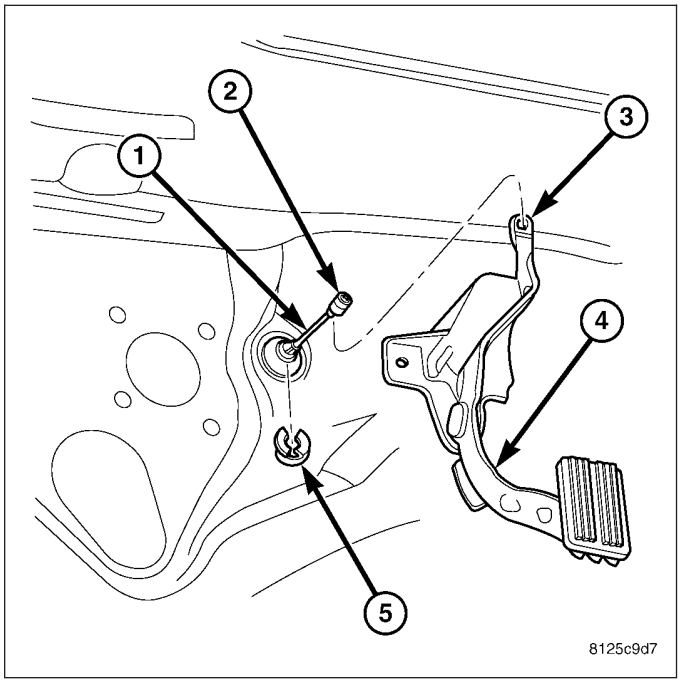

INSTALLATION

1. Place accelerator pedal assembly over 2 studs.
2. Install and tighten 2 mounting nuts. Refer to Torque Specifications.
3. Slide throttle cable into opening slot in top of pedal arm.
4. Push plastic cable retainer (clip) into accelerator pedal arm opening until it snaps into place.
5. Before starting engine, operate accelerator pedal to check for any binding.

https://truckmanualshub.com/

SENSOR-ACCELERATOR PEDAL POSITION

DESCRIPTION

The Accelerator Pedal Position Sensor (APPS) (1) is located inside the vehicle. It is attached to the accelerator pedal assembly (3). It is used only on 5.7L V-8 gas engines and diesel engines.

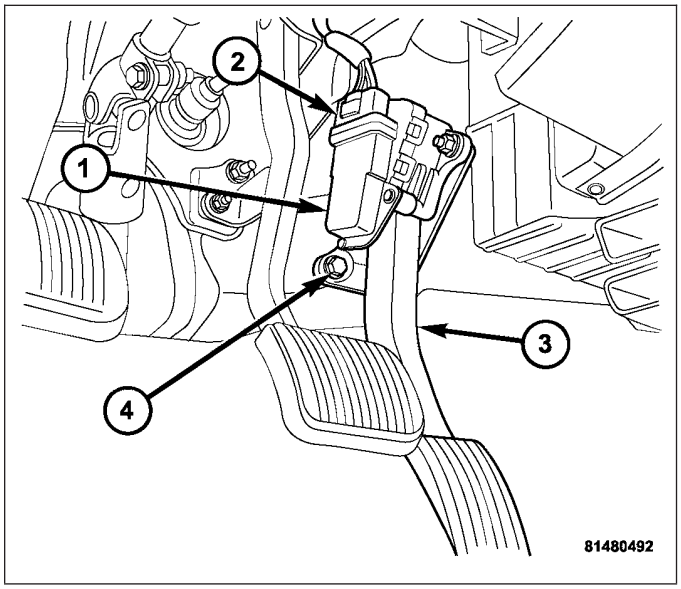

OPERATION

The Accelerator Pedal Position Sensor (APPS) provides the Powertrain Control Module (PCM) with two DC voltage signals which change as the position of the accelerator pedal changes. One of the DC voltage signals will be half the voltage of the other signal.

REMOVAL

CAUTION: Do not attempt to separate or remove the Accelerator Pedal Position Sensor (APPS) from the accelerator pedal assembly. The APPS is replaced as an assembly along with the pedal. If sensor is removed from pedal, its electronic calibration may be destroyed.

1. Disconnect 6–way electrical connector at top of APPS (2).
2. Remove APPS lower mounting bolt (4) and two mounting nuts.
3. Remove pedal and APPS assembly from vehicle.

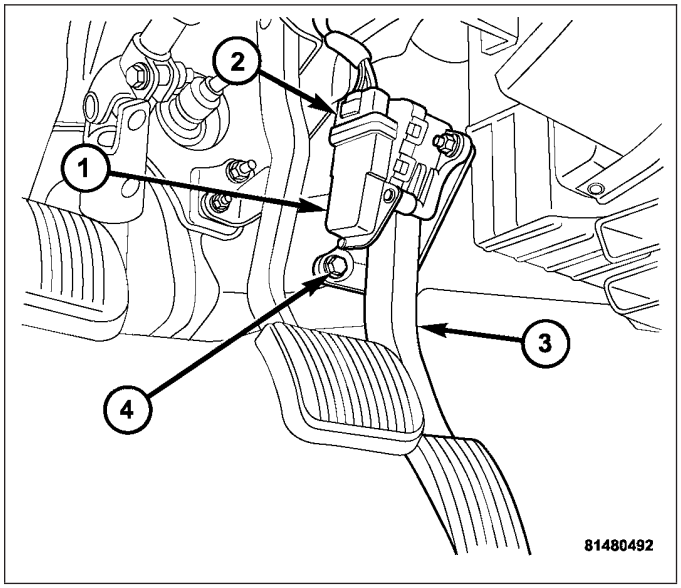

https://truckmanualshub.com/

INSTALLATION

CAUTION: Do not attempt to separate or remove the Accelerator Pedal Position Sensor (APPS) from the accelerator pedal assembly. The APPS is replaced as an assembly along with the pedal. If sensor is removed from pedal, its electronic calibration may be destroyed.

1. Position pedal and APPS assembly to its mounting bracket.
2. Connect 6–way electrical connector to top of APPS (2).
3. Install APPS lower mounting bolt (4) and two mounting nuts.
4. If necessary, use a Scan Tool to erase any Diagnostic Trouble Codes (DTC's).

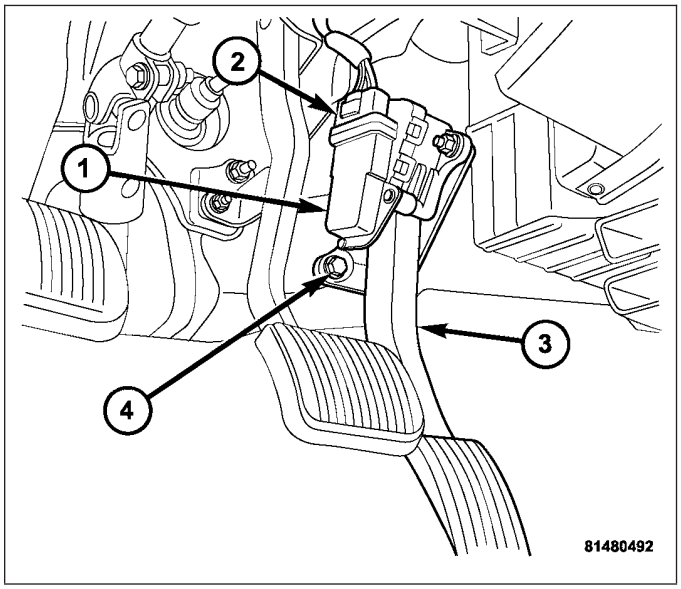

https://truckmanualshub.com/

SENSOR-CRANKSHAFT POSITION

DESCRIPTION

3.7L V-6

The Crankshaft Position (CKP) (2) sensor is mounted into the right rear side of the cylinder block. It is positioned and bolted into a machined hole.

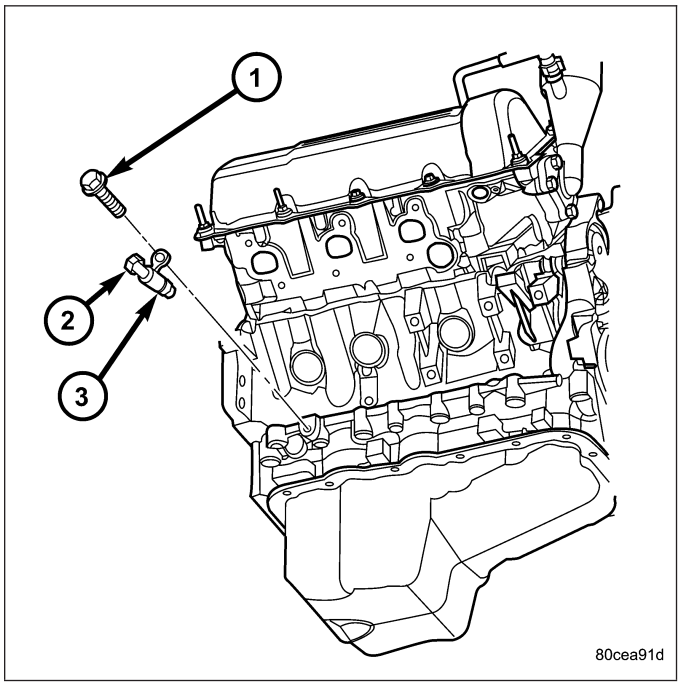

4.7L V-8

The Crankshaft Position (CKP) (1) sensor is mounted into the right rear side of the cylinder block. It is positioned and bolted into a machined hole.

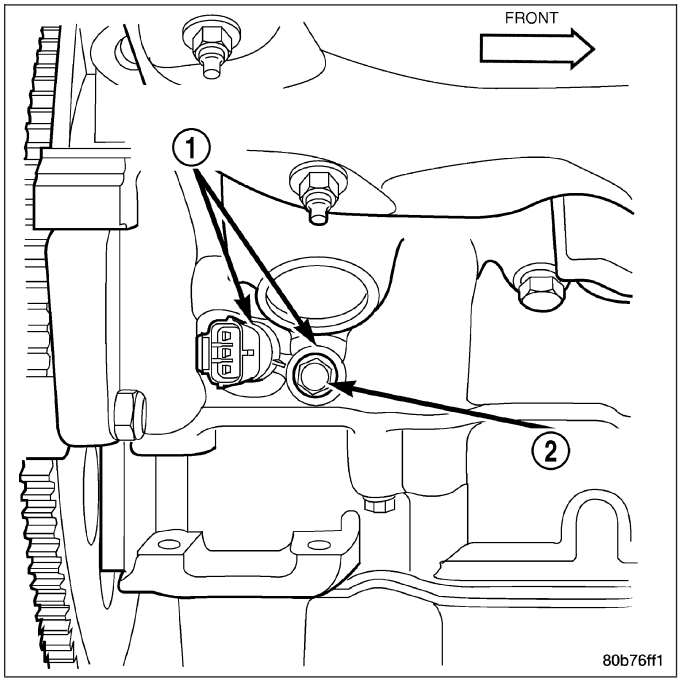

https://truckmanualshub.com/

5.7L V-8

The Crankshaft Position (CKP) (4) sensor is mounted into the right rear side of the cylinder block. It is positioned and bolted into a machined hole.

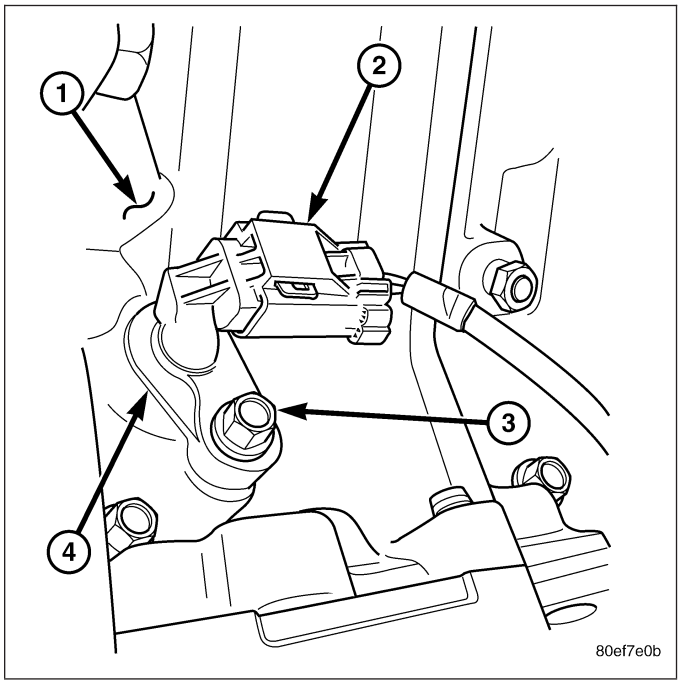

OPERATION

3.7L V-6

Engine speed and crankshaft position are provided through the CKP (Crankshaft Position) sensor. The sensor generates pulses that are the input sent to the Powertrain Control Module (PCM). The PCM interprets the sensor input to determine the crankshaft position. The PCM then uses this position, along with other inputs, to determine injector sequence and ignition timing.

The sensor is a hall effect device combined with an internal magnet. It is also sensitive to steel within a certain distance from it.

A tonewheel (targetwheel) (1) is bolted to the engine crankshaft. This tonewheel has sets of notches (2) at its outer edge.

The notches cause a pulse to be generated when they pass under the sensor. The pulses are the input to the PCM.

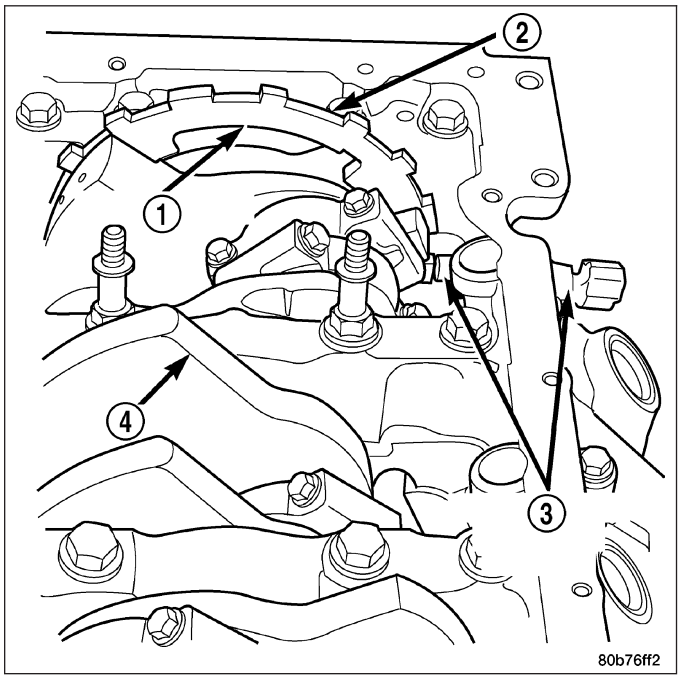

https://truckmanualshub.com/

4.7L V-8

Engine speed and crankshaft position are provided through the CKP (Crankshaft Position) sensor. The sensor generates pulses that are the input sent to the Powertrain Control Module (PCM). The PCM interprets the sensor input to determine the crankshaft position. The PCM then uses this position, along with other inputs, to determine injector sequence and ignition timing.

The sensor is a hall effect device combined with an internal magnet. It is also sensitive to steel within a certain distance from it.

A tonewheel (1) is bolted to the engine crankshaft. This tonewheel has sets of notches (2) at its outer edge.

The notches cause a pulse to be generated when they pass under the sensor. The pulses are the input to the PCM.

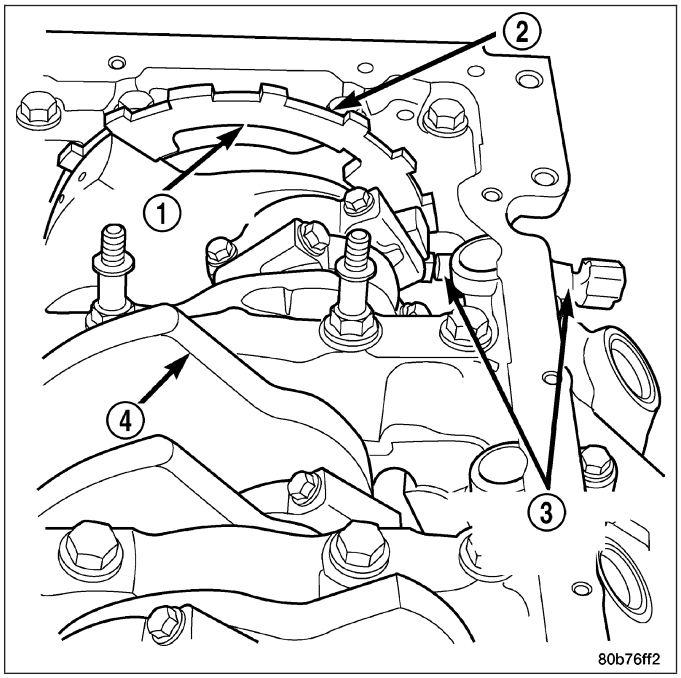

5.7L V-8

Engine speed and crankshaft position are provided through the CKP (Crankshaft Position) sensor. The sensor generates pulses that are the input sent to the Powertrain Control Module (PCM). The PCM interprets the sensor input to determine the crankshaft position. The PCM then uses this position, along with other inputs, to determine injector sequence and ignition timing.

The sensor is a hall effect device combined with an internal magnet. It is also sensitive to steel within a certain distance from it.

A tonewheel is bolted to the engine crankshaft. This tonewheel has sets of notches (3) at its outer edge.

The notches cause a pulse to be generated when they pass under the sensor. The pulses are the input to the PCM.

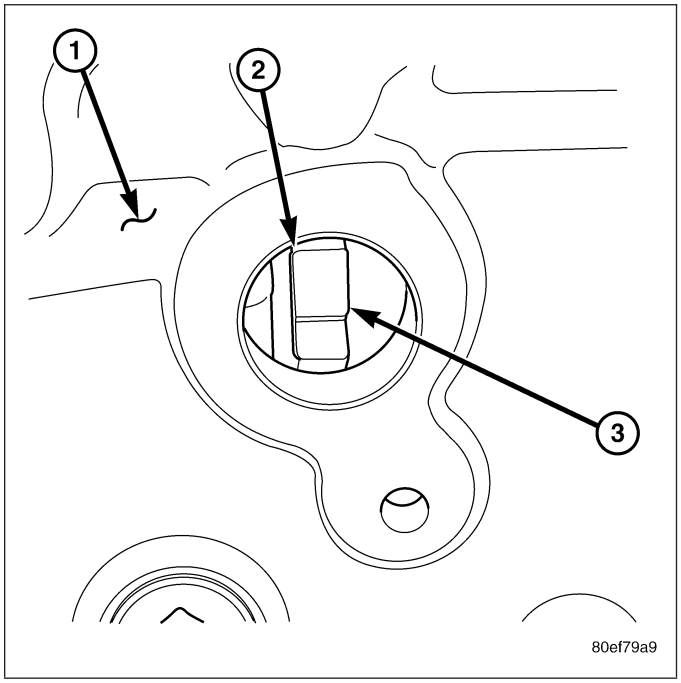

https://truckmanualshub.com/

REMOVAL

3.7L V-6

The Crankshaft Position (CKP) sensor is mounted into the right rear side of the cylinder block. It is positioned and bolted into a machined hole.

1. Raise vehicle.
2. Disconnect sensor electrical connector.
3. Remove sensor mounting bolt (1).
4. Carefully twist sensor (2) from cylinder block.
5. Check condition of sensor O-ring (3).

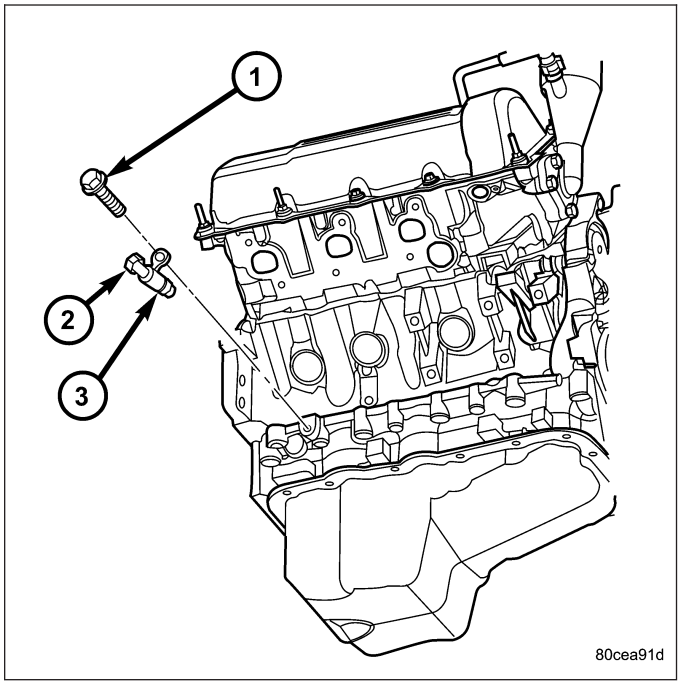

4.7L V-8

The Crankshaft Position (CKP) sensor is located at the right-rear side of the engine cylinder block. It is positioned and bolted into a machined hole in the engine block.

1. Raise vehicle.
2. Disconnect CKP electrical connector at sensor.
3. Remove CKP mounting bolt (2).
4. Carefully twist sensor (1) from cylinder block.
5. Remove sensor from vehicle.
6. Check condition of sensor O-ring.

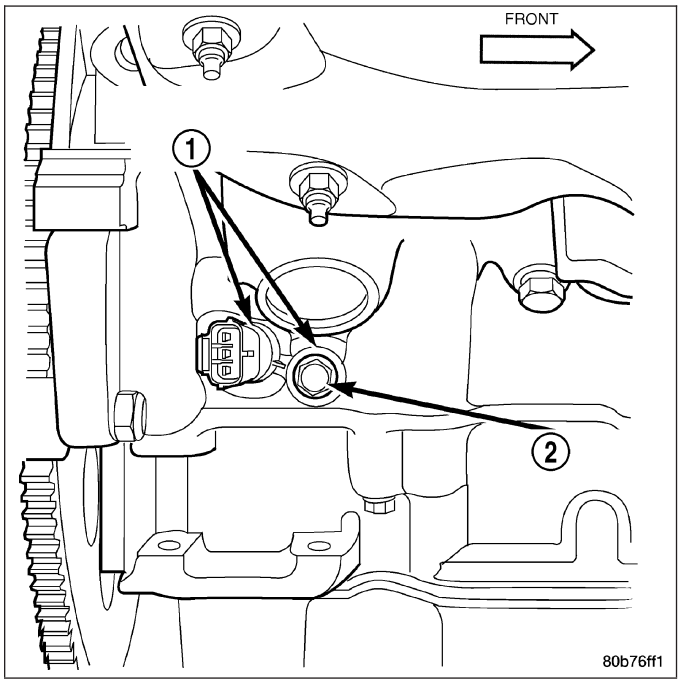

https://truckmanualshub.com/

5.7L V-8

The Crankshaft Position (CKP) sensor (4) is located at the right-rear side of the engine cylinder block. It is positioned and bolted into a machined hole in the engine block.

1. Raise vehicle.
2. Disconnect CKP electrical connector at sensor.
3. Remove CKP mounting bolt (3).
4. Carefully twist sensor (4) from cylinder block.
5. Remove sensor from vehicle.
6. Check condition of sensor O-ring.

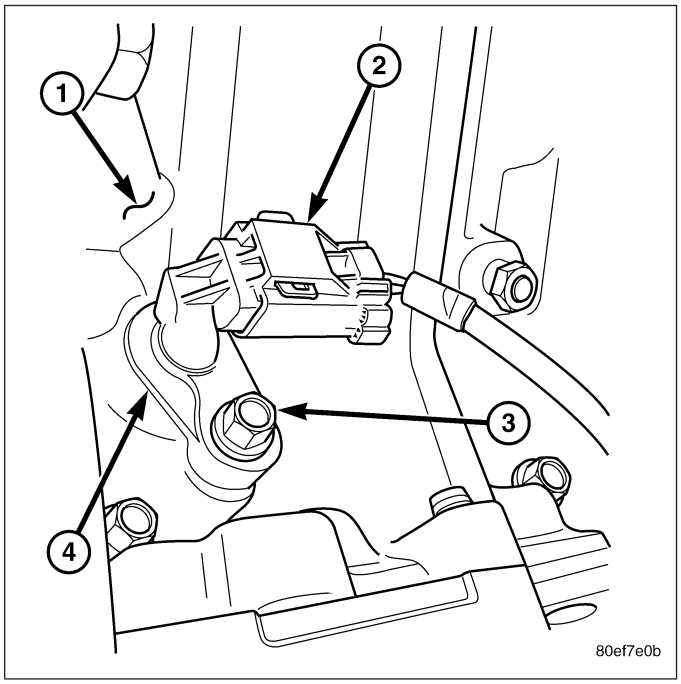

8.3L - SRT-10

The sensor is located at the rear lower passenger side of motor.

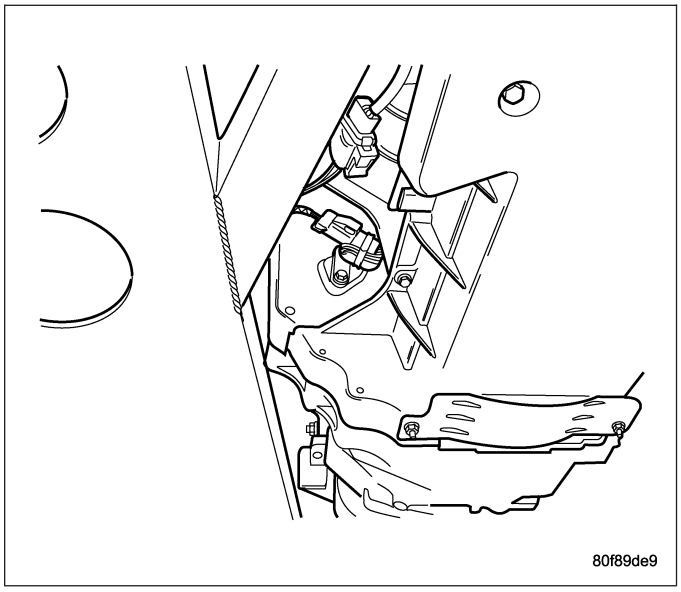

https://truckmanualshub.com/

1. Disconnect electrical connector from crankshaft position sensor.
2. Remove sensor mounting bolt.
3. Pull sensor out. A light tap to top of sensor may ease removal.

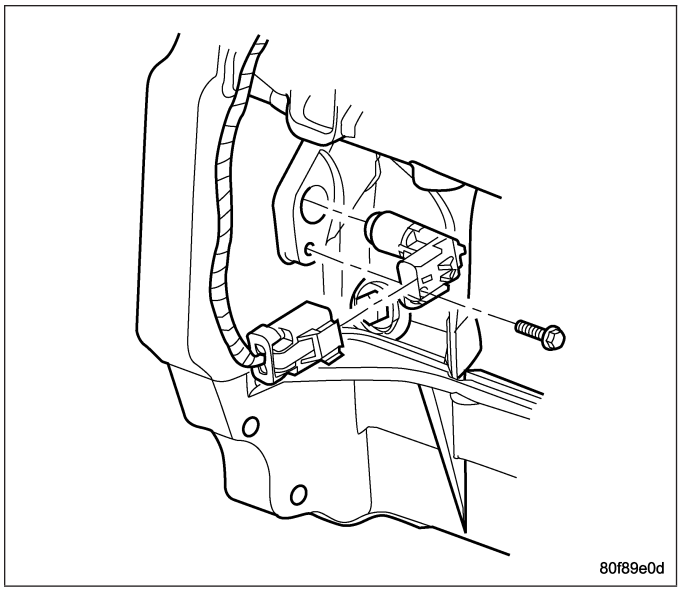

INSTALLATION

3.7L V-6

1. Clean out machined hole in engine block.
2. Apply a small amount of engine oil to sensor O-ring (3).
3. Install sensor into engine block with a slight rocking and twisting action.

CAUTION: Before tightening sensor mounting bolt, be sure sensor is completely flush to cylinder block. If sensor is not flush, damage to sensor mounting tang may result.

4. Install mounting bolt and tighten to 28 N·m (21 ft. lbs.) torque.
5. Connect electrical connector to sensor.
6. Lower vehicle.

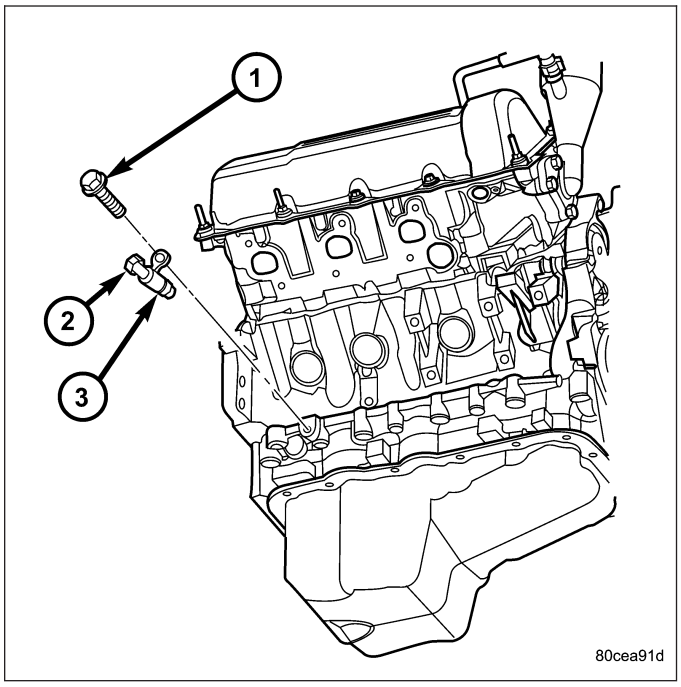

https://truckmanualshub.com/

4.7L V-8

1. Clean out machined hole in engine block.
2. Apply a small amount of engine oil to sensor o-ring.
3. Install sensor (1) into engine block with a slight rocking and twisting action.

CAUTION: Before tightening sensor mounting bolt, be sure sensor is completely flush to cylinder block. If sensor is not flush, damage to sensor mounting tang may result.

4. Install mounting bolt and tighten to 28 N·m (21 ft. lbs.) torque.
5. Connect electrical connector to sensor.
6. Lower vehicle.

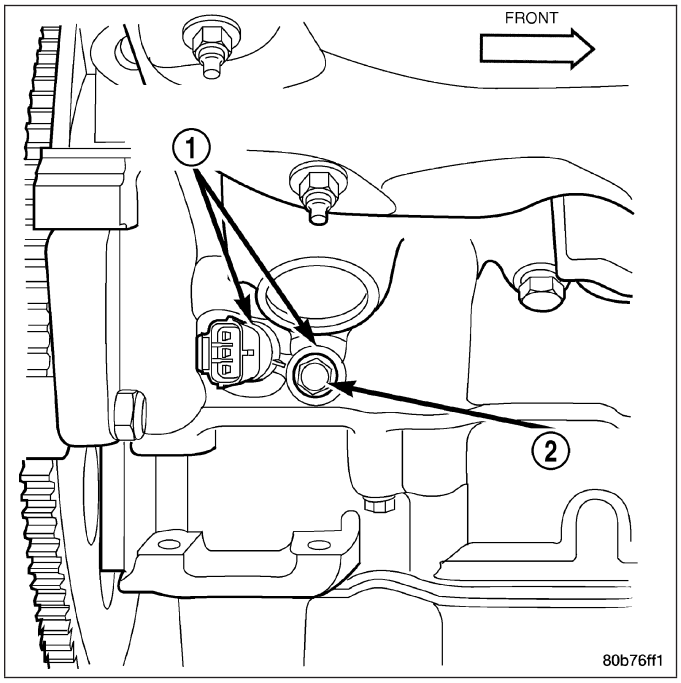

5.7L V-8

1. Clean out machined hole in engine block.
2. Apply a small amount of engine oil to sensor o-ring.
3. Install sensor (4) into engine block with a slight rocking and twisting action.

CAUTION: Before tightening sensor mounting bolt, be sure sensor is completely flush to cylinder block. If sensor is not flush, damage to sensor mounting tang may result.

4. Install mounting bolt (3) and tighten to 28 N·m (21 ft. lbs.) torque.
5. Connect electrical connector to sensor.
6. Lower vehicle.

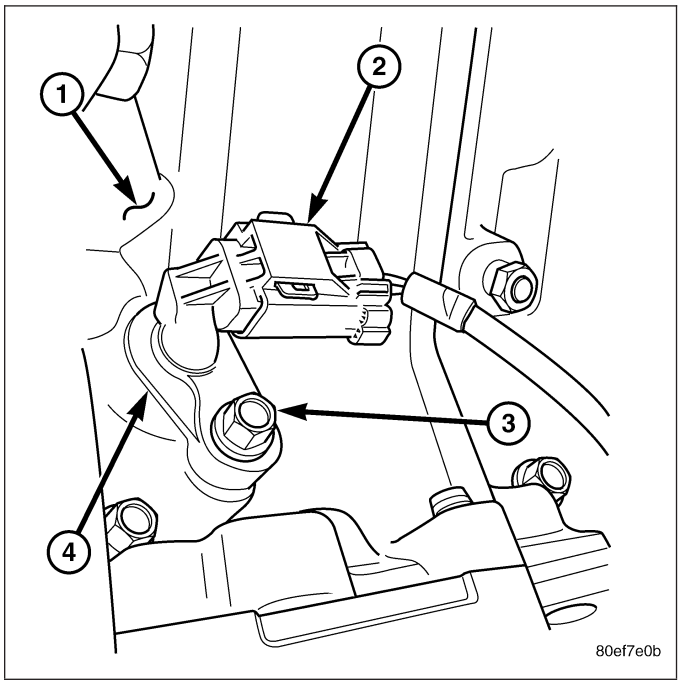

8.3L - SRT-10

1. Slide the sensor into the hole.
2. Install and tighten the mounting bolt to 11 N·m (95 in. lbs.) torque.
3. Connect the electrical connector to the sensor and lock.

https://truckmanualshub.com/

INJECTOR - FUEL

DESCRIPTION

An individual fuel injector (1) is used for each individual cylinder.

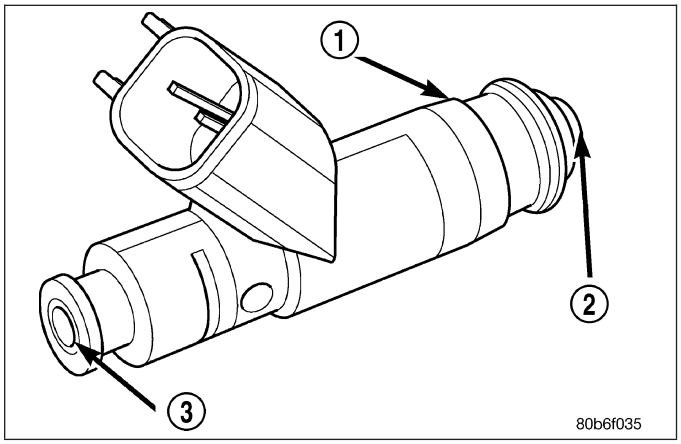

OPERATION

FUEL INJECTOR

The top (fuel entry) end of the injector (1) is attached into an opening on the fuel rail.

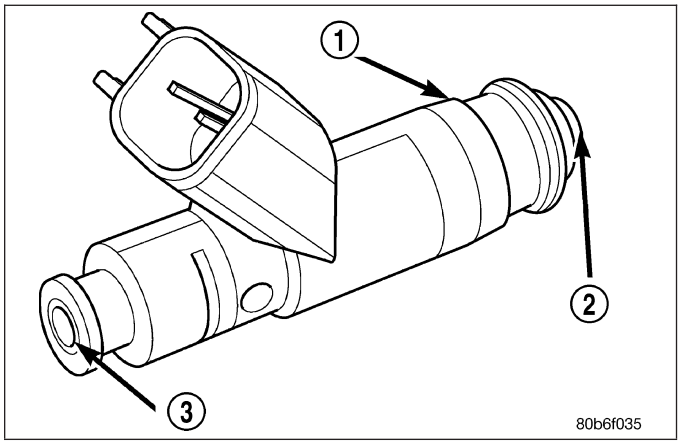

The fuel injectors are electrical solenoids. The injector contains a pintle that closes off an orifice at the nozzle end. When electric current is supplied to the injector, the armature and needle move a short distance against a spring, allowing fuel to flow out the orifice. Because the fuel is under high pressure, a fine spray is developed in the shape of a pencil stream. The spraying action atomizes the fuel, adding it to the air entering the combustion chamber.

The nozzle (outlet) ends of the injectors are positioned into openings in the intake manifold just above the intake valve ports of the cylinder head. The engine wiring harness connector for each fuel injector is equipped with an attached numerical tag (INJ 1, INJ 2 etc.). This is used to identify each fuel injector.

The injectors are energized individually in a sequential order by the Powertrain Control Module (PCM). The PCM will adjust injector pulse width by switching the ground path to each individual injector on and off. Injector pulse width is the period of time that the injector is energized. The PCM will adjust injector pulse width based on various inputs it receives.

Battery voltage is supplied to the injectors through the ASD relay.

The PCM determines injector pulse width based on various inputs.

PCM OUTPUT

The nozzle ends of the injectors are positioned into openings in the intake manifold just above the intake valve ports of the cylinder head. The engine wiring harness connector for each fuel injector is equipped with an attached numerical tag (INJ 1, INJ 2 etc.). This is used to identify each fuel injector with its respective cylinder number.

The injectors are energized individually in a sequential order by the Powertrain Control Module (PCM). The PCM will adjust injector pulse width by switching the ground path to each individual injector on and off. Injector pulse width is the period of time that the injector is energized. The PCM will adjust injector pulse width based on various inputs it receives.

https://truckmanualshub.com/

Battery voltage (12 volts +) is supplied to the injectors through the ASD relay. The ASD relay will shut-down the 12 volt power source to the fuel injectors if the PCM senses the ignition is on, but the engine is not running. This occurs after the engine has not been running for approximately 1.8 seconds.

The PCM determines injector on-time (pulse width) based on various inputs.

REMOVAL

3.7/4.7/ 5.7L

1. Remove fuel rail. (Refer to 14 - FUEL SYSTEM/ FUEL DELIVERY/FUEL RAIL - REMOVAL)
2. Disconnect clip(s) that retain fuel injector(s) to fuel rail (2).

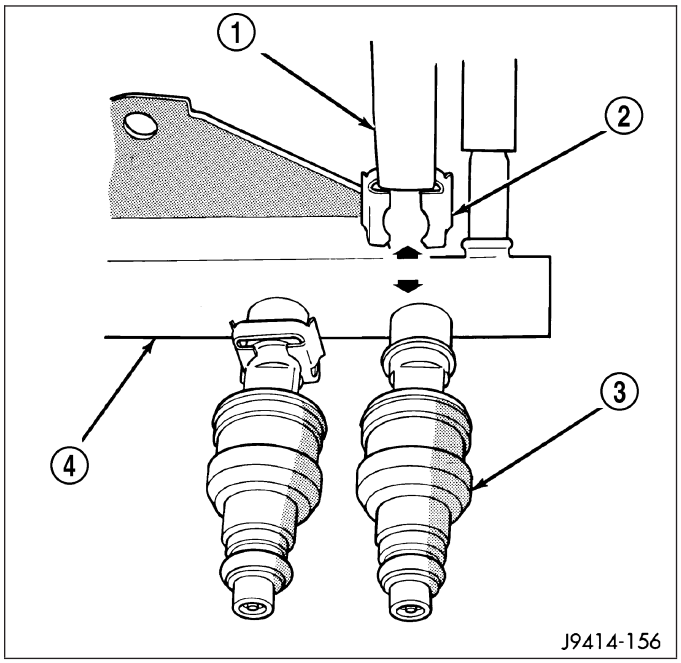

8.3L - SRT-10

1. Release fuel system pressure. Refer to Fuel Pressure Release Procedure in this section.
2. Remove the battery cover and disconnect negative battery cable.
3. Remove the air cleaner assembly, refer to the Engine/Air Intake System/Air Cleaner Housing for more information.
4. Disconnect the electrical connector to the MAP sensor and Coolant Temperature sensor.

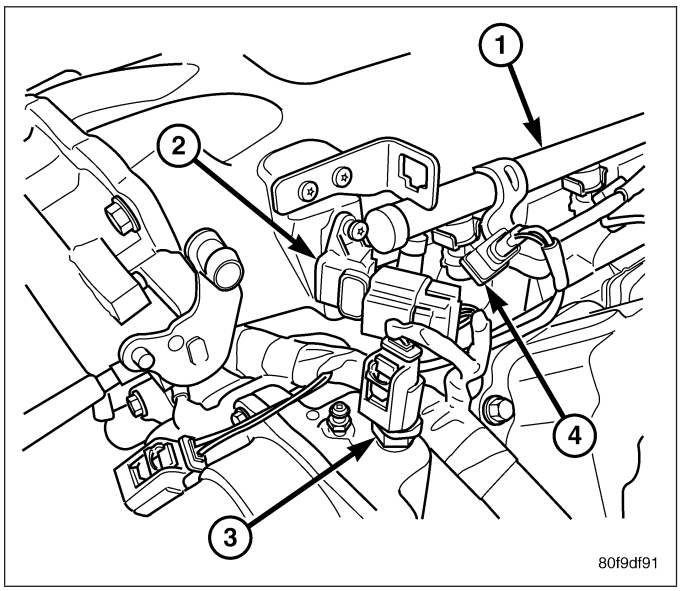

https://truckmanualshub.com/

5. Disconnect the electrical connector to the TPS and Idle Air Control.

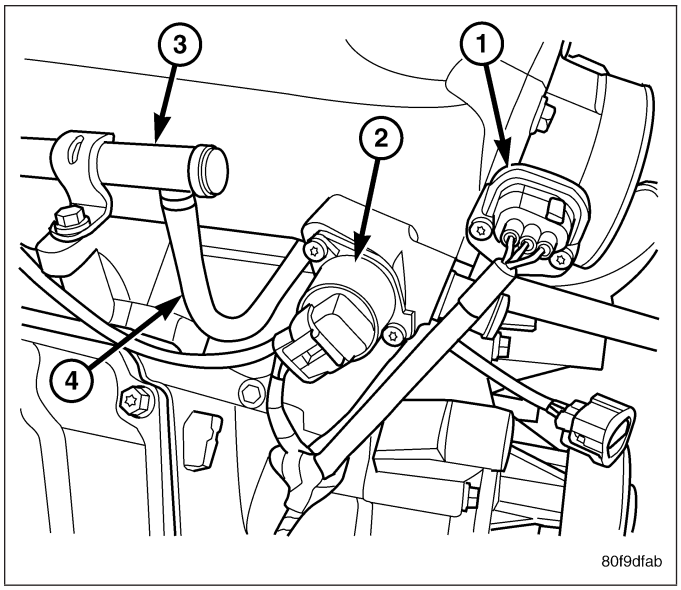

6. Remove the wiring harness from the wiring clips under thew throttle body.

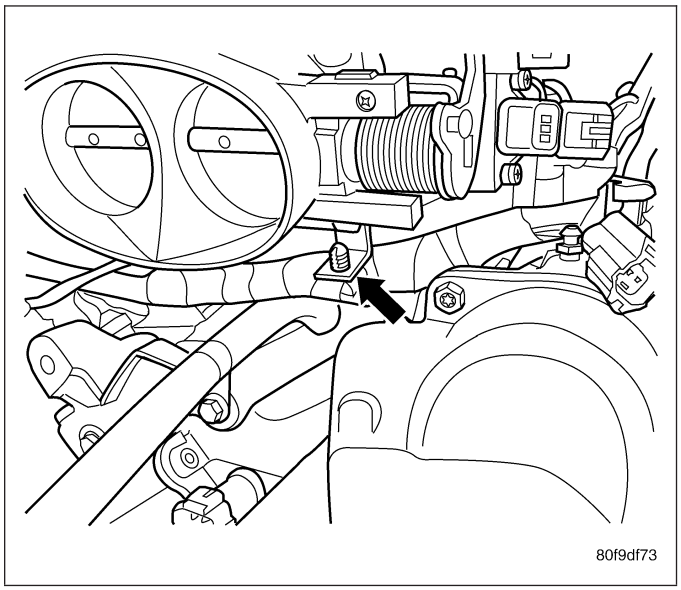

7. Disconnect the electrical connector from the fuel injectors.

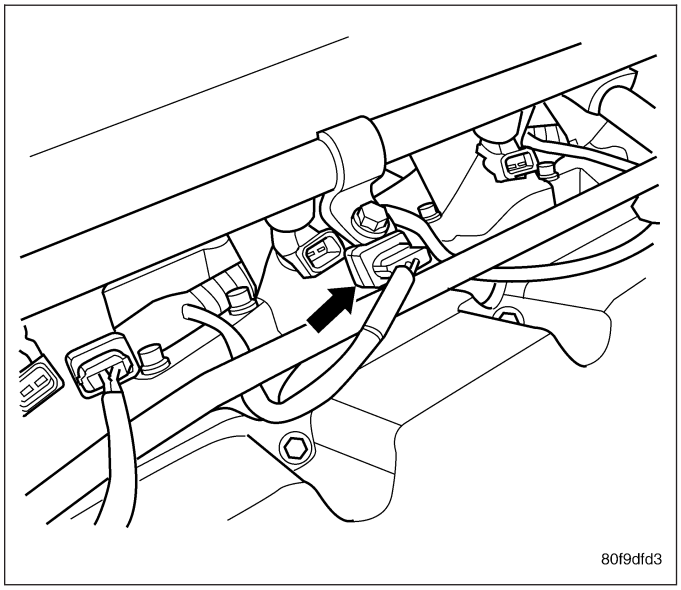

https://truckmanualshub.com/

8. Disconnect the fuel line quick connector.

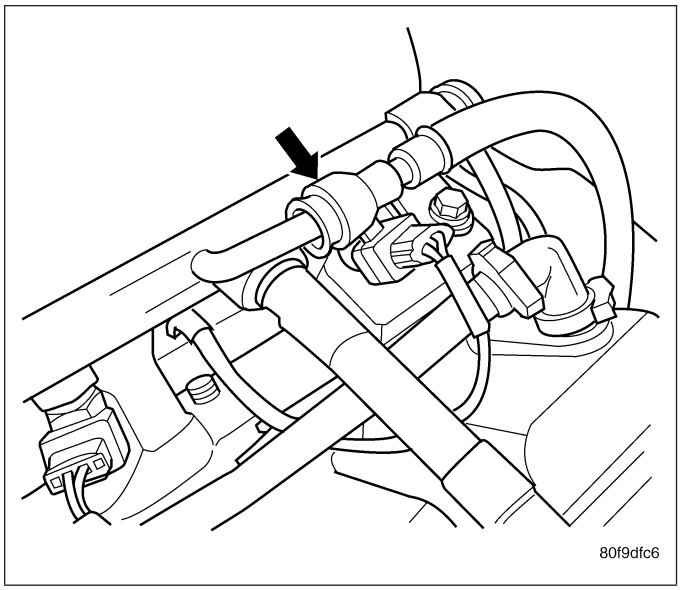

9. Remove the bolts for the fuel rail.

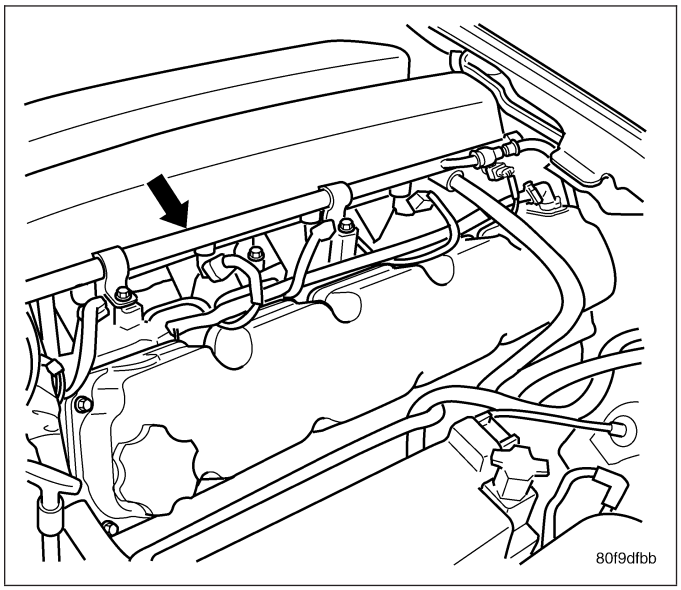

10. Pull fuel rail and injectors straight up and out of the intake manifold.
11. Move the fuel rail forward and out from under the intake manifold and throttle body.

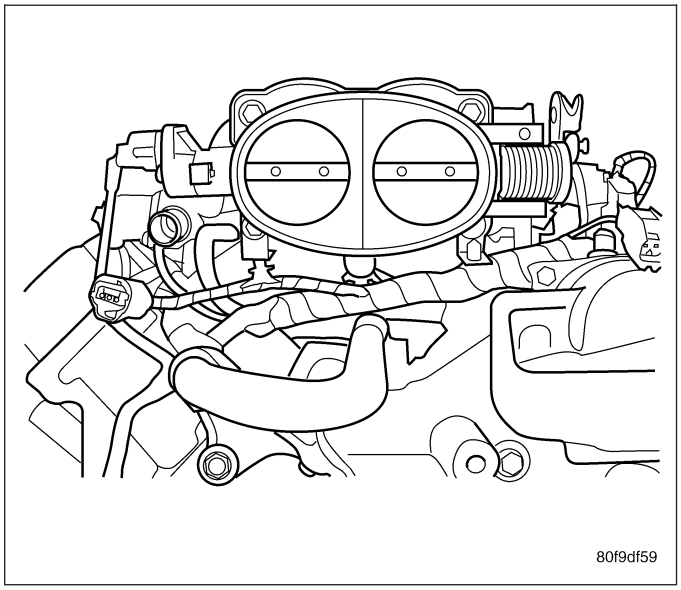

https://truckmanualshub.com/

12. Remove the fuel injector from the fuel rail.

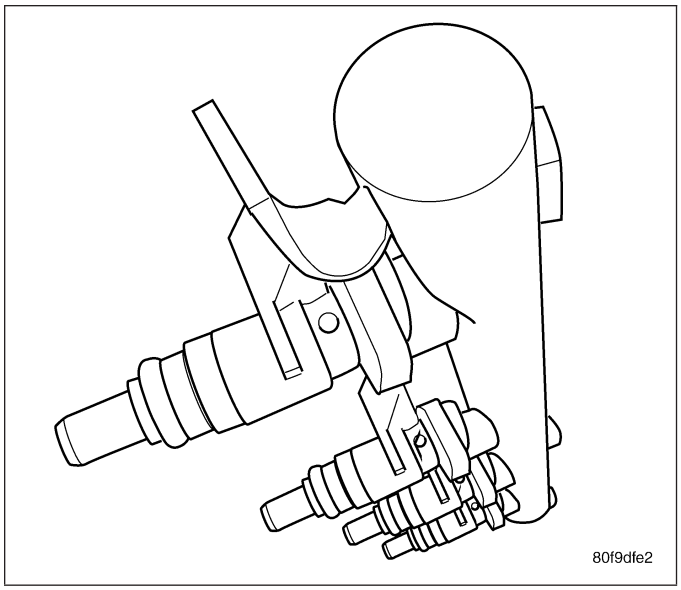

INSTALLATION

3.7/ 4.7/ 5.7L

1. Install fuel injector(s) into fuel rail assembly and install retaining clip(s).
2. If same injector(s) is being reinstalled, install new O-ring(s).
3. Apply a small amount of clean engine oil to each injector O-ring. This will aid in installation.
4. Install fuel rail. (Refer to 14 - FUEL SYSTEM/FUEL DELIVERY/FUEL RAIL - INSTALLATION)
5. Start engine and check for fuel leaks.

8.3L - SRT-10

1. Install the fuel injectors to the fuel rail.
2. Install fuel rail under throttle body.
3. Apply a light coating of clean engine oil to the O-ring on the nozzle end of each injector.
4. Insert fuel injector nozzles into openings in intake manifold. Seat the injectors in place. Tighten fuel rail bolts to 12 N·m (105 in. lbs.).
5. Attach electrical connectors to fuel injectors.
6. Connect the electrical connector to the MAP sensor and Coolant Temperature sensor.
7. Connect the electrical connector to the TPS and Idle Air Control.
8. Install the wiring harness to the wiring clips under the throttle body.
9. Connect fuel supply tube to fuel rail. Refer to Quick Connect Fittings in the Fuel Delivery section
10. Install the negative battery cable and install the battery cover.
11. Install the air cleaner assembly, refer to the Engine/Air Intake System/Air Cleaner Housing for more information.
12. Use the DRBIII® scan tool ASD Fuel System Test to pressurize the fuel system. Check for leaks.

https://truckmanualshub.com/

RELAY - FUEL PUMP

DESCRIPTION

The 5–pin, 12–volt, fuel pump relay is located in the Power Distribution Center (PDC). Refer to the label on the PDC cover for relay location.

OPERATION

The Powertrain Control Module (PCM) energizes the electric fuel pump through the fuel pump relay. The fuel pump relay is energized by first applying battery voltage to it when the ignition key is turned ON, and then applying a ground signal to the relay from the PCM.

Whenever the ignition key is turned ON, the electric fuel pump will operate. But, the PCM will shut-down the ground circuit to the fuel pump relay in approximately 1–3 seconds unless the engine is operating or the starter motor is engaged.

REMOVAL

The fuel pump relay is located in the Power Distribution Center (PDC) (2). Refer to label on PDC cover for relay location.

1. Remove PDC cover.
2. Remove relay from PDC.
3. Check condition of relay terminals and PDC connector terminals for damage or corrosion. Repair if necessary before installing relay.
4. Check for pin height (pin height should be the same for all terminals within the PDC connector). Repair if necessary before installing relay.

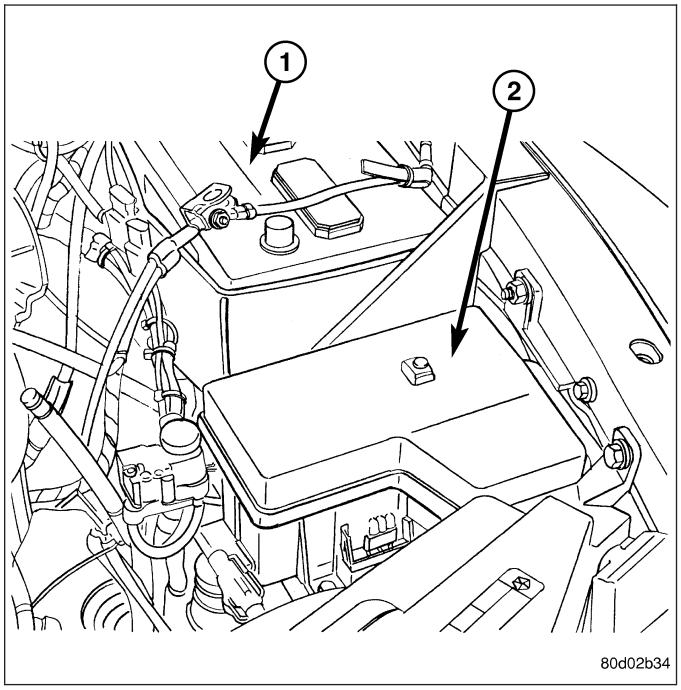

INSTALLATION

The fuel pump relay is located in the Power Distribution Center (PDC). Refer to label on PDC cover for relay location.

1. Install relay to PDC.
2. Install cover to PDC.

https://truckmanualshub.com/

MOTOR-IAC

DESCRIPTION

3.7L, 4.7L, 5.7L

3.7L: The IAC stepper motor (3) is mounted to the throttle body. It regulates the amount of air bypassing the control of the throttle plate. As engine loads and ambient temperatures change, engine rpm changes. A pintle on the IAC stepper motor protrudes into a passage in the throttle body, controlling air flow through the passage. The IAC is controlled by the Powertrain Control Module (PCM) to maintain the target engine idle speed.

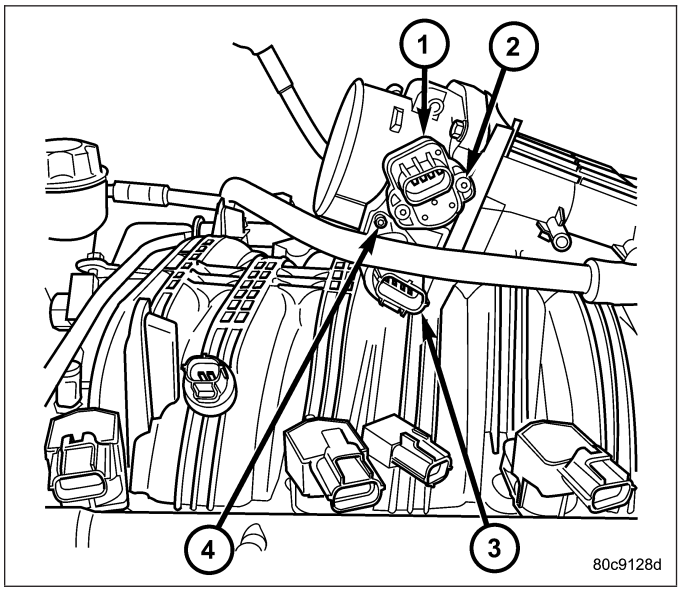

4.7L: The IAC stepper motor (3) is mounted to the throttle body. It regulates the amount of air bypassing the control of the throttle plate. As engine loads and ambient temperatures change, engine rpm changes. A pintle on the IAC stepper motor protrudes into a passage in the throttle body, controlling air flow through the passage. The IAC is controlled by the Powertrain Control Module (PCM) to maintain the target engine idle speed.

5.7L: A separate IAC motor is not used with the 5.7L V-8 engine.

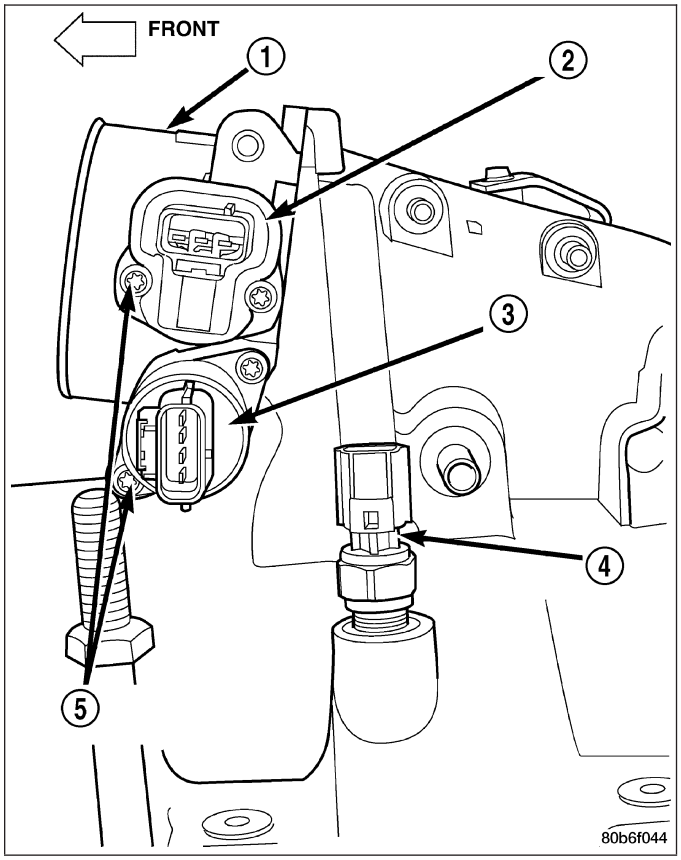

https://truckmanualshub.com/

8.3L - SRT-10

The idle air control motor is mounted at the front right of the intake manifold.

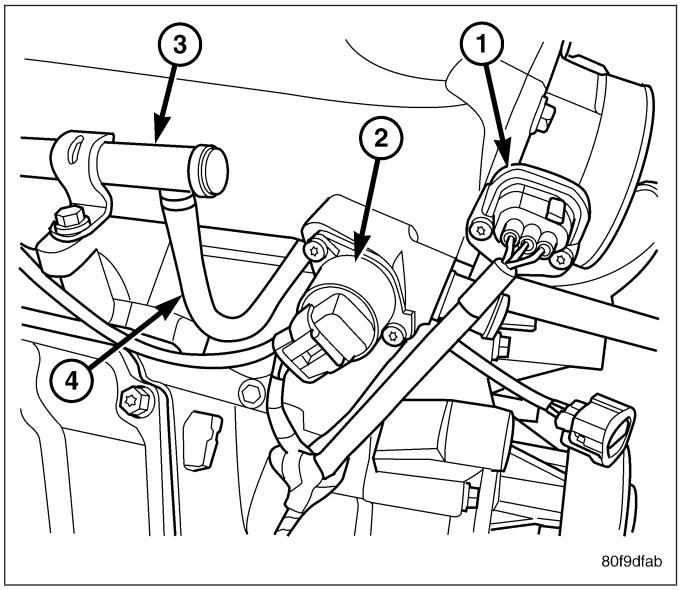

OPERATION

3.7L V-6/4.7L V-8

A separate IAC motor is not used with the 5.7L V-8 engine.

At idle, engine speed can be increased by retracting the IAC motor pintle and allowing more air to pass through the port, or it can be decreased by restricting the passage with the pintle and diminishing the amount of air bypassing the throttle plate.

The IAC is called a stepper motor because it is moved (rotated) in steps, or increments. Opening the IAC opens an air passage around the throttle blade which increases RPM.

The PCM uses the IAC motor to control idle speed (along with timing) and to reach a desired MAP during decel (keep engine from stalling).

The IAC motor has 4 wires with 4 circuits. Two of the wires are for 12 volts and ground to supply electrical current to the motor windings to operate the stepper motor in one direction. The other 2 wires are also for 12 volts and ground to supply electrical current to operate the stepper motor in the opposite direction.

To make the IAC go in the opposite direction, the PCM just reverses polarity on both windings. If only 1 wire is open, the IAC can only be moved 1 step (increment) in either direction. To keep the IAC motor in position when no movement is needed, the PCM will energize both windings at the same time. This locks the IAC motor in place.

In the IAC motor system, the PCM will count every step that the motor is moved. This allows the PCM to determine the motor pintle position. If the memory is cleared, the PCM no longer knows the position of the pintle. So at the first key ON, the PCM drives the IAC motor closed, regardless of where it was before. This zeros the counter. From this point the PCM will back out the IAC motor and keep track of its position again.

When engine rpm is above idle speed, the IAC is used for the following:

- Off-idle dashpot (throttle blade will close quickly but idle speed will not stop quickly)
- Deceleration air flow control
- A/C compressor load control (also opens the passage slightly before the compressor is engaged so that the engine rpm does not dip down when the compressor engages)
- Power steering load control

The PCM can control polarity of the circuit to control direction of the stepper motor.

IAC Stepper Motor Program: The PCM is also equipped with a memory program that records the number of steps the IAC stepper motor most recently advanced to during a certain set of parameters. For example: The PCM was attempting to maintain a 1000 rpm target during a cold start-up cycle. The last recorded number of steps for that may have been 125. That value would be recorded in the memory cell so that the next time the PCM recognizes the

https://truckmanualshub.com/

identical conditions, the PCM recalls that 125 steps were required to maintain the target. This program allows for greater customer satisfaction due to greater control of engine idle.

Another function of the memory program, which occurs when the power steering switch (if equipped), or the A/C request circuit, requires that the IAC stepper motor control engine rpm, is the recording of the last targeted steps into the memory cell. The PCM can anticipate A/C compressor loads. This is accomplished by delaying compressor operation for approximately 0.5 seconds until the PCM moves the IAC stepper motor to the recorded steps that were loaded into the memory cell. Using this program helps eliminate idle-quality changes as loads change. Finally, the PCM incorporates a ″No-Load″ engine speed limiter of approximately 1800 - 2000 rpm, when it recognizes that the TPS is indicating an idle signal and IAC motor cannot maintain engine idle.

A (factory adjusted) set screw is used to mechanically limit the position of the throttle body throttle plate. **Never attempt to adjust the engine idle speed using this screw.** All idle speed functions are controlled by the IAC motor through the PCM.

REMOVAL

3.7L V-6

The Idle Air Control (IAC) motor (3) is located on the side of the throttle body.

1. Remove air resonator box at throttle body.
2. Disconnect electrical connector from IAC motor.
3. Remove two mounting bolts (screws) (4).
4. Remove IAC motor from throttle body.

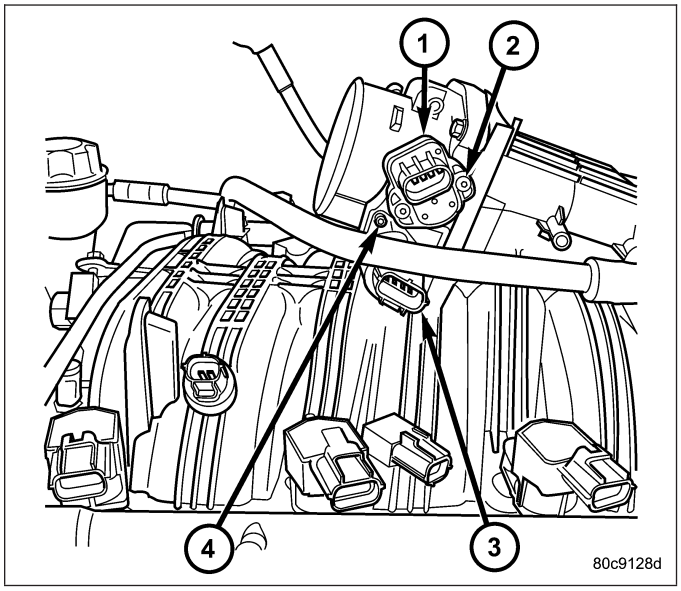

https://truckmanualshub.com/

4.7L V-8

The Idle Air Control (IAC) motor (3) is located on the side of the throttle body.

1. Remove air resonator box at throttle body.
2. Disconnect electrical connector from IAC motor.
3. Remove two mounting bolts (screws).
4. Remove IAC motor from throttle body.

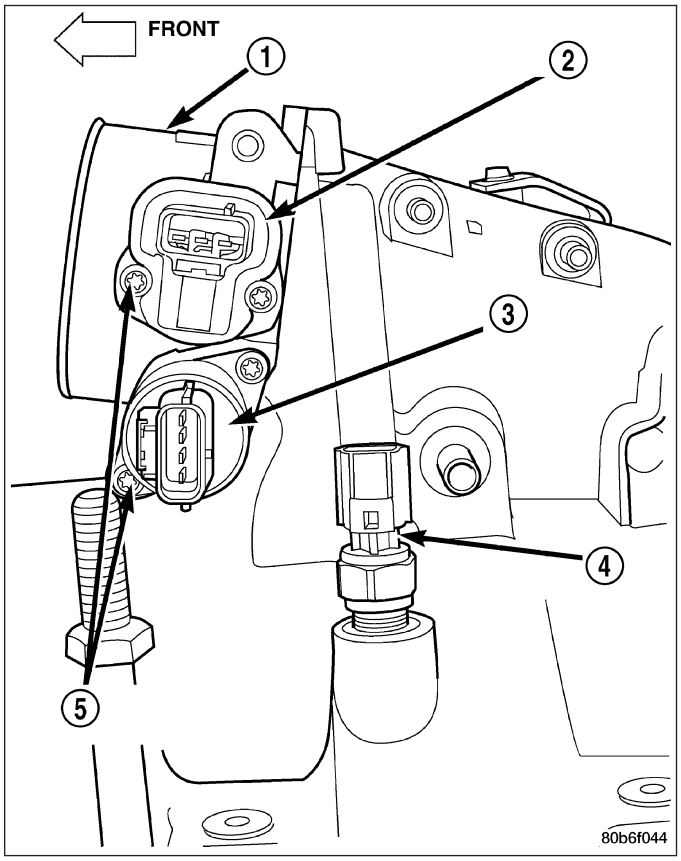

5.7L V-8

The IAC motor is not serviceable on the 5.7L V-8 engine.

8.3L - SRT-10

The IAC motor is inserted into a housing at the front of the intake manifold. The IAC motor and housing are serviced together.

1. Remove housing to manifold screws. Remove IAC motor and housing.
2. Disconnect the electrical connector from IAC motor.

https://truckmanualshub.com/

INSTALLATION

3.7L V-6

The Idle Air Control (IAC) motor (3) is located on the side of the throttle body.

1. Install IAC motor to throttle body.
2. Install and tighten two mounting bolts (screws) to 7 N·m (60 in. lbs.) torque.
3. Install electrical connector.
4. Install air resonator to throttle body.

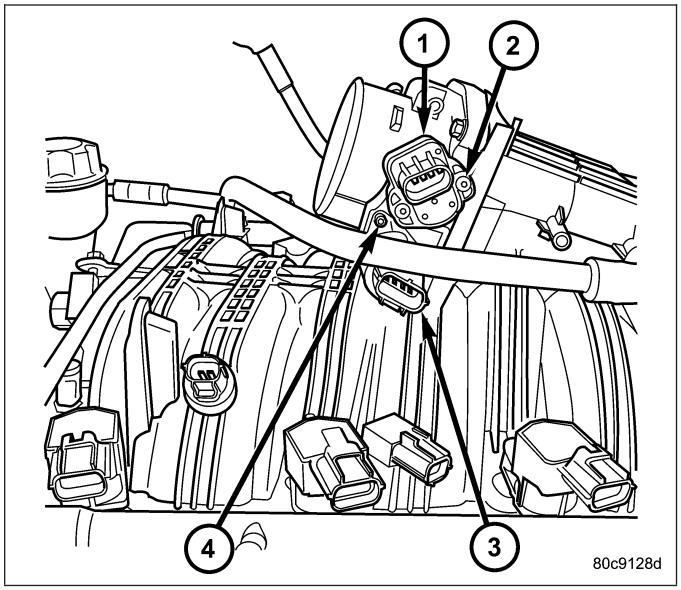

4.7L V-8

The Idle Air Control (IAC) motor (3) is located on the side of the throttle body.

1. Install IAC motor to throttle body.
2. Install and tighten two mounting bolts (screws) to 7 N·m (60 in. lbs.) torque.
3. Install electrical connector.
4. Install air resonator to throttle body.

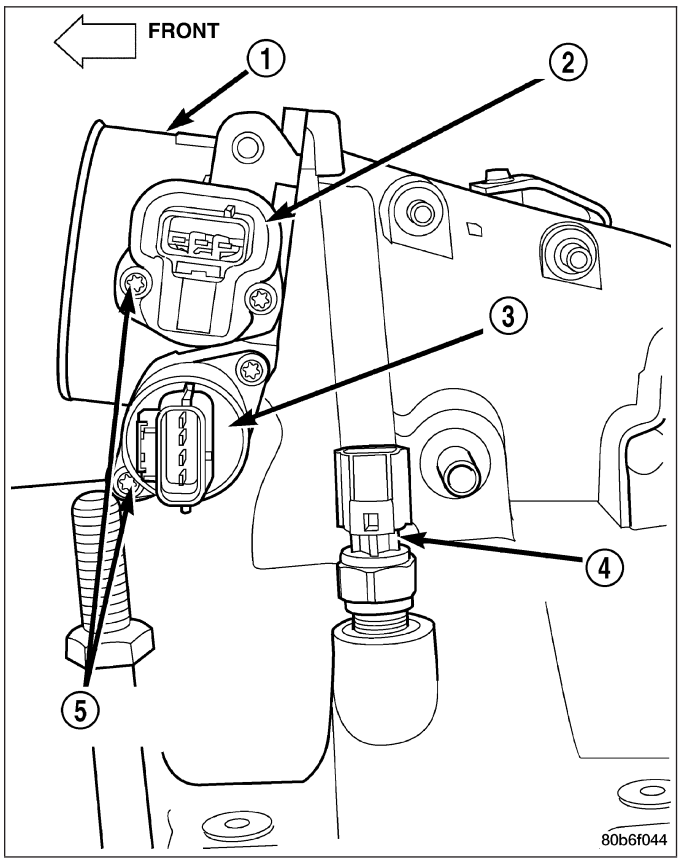

5.7L V-8

The IAC motor is not serviceable on the 5.7L V-8 engine.

https://truckmanualshub.com/

8.3L - SRT-10

The IAC motor is inserted into a housing at the front of the intake manifold. The IAC motor and housing are serviced together.

1. Attach electrical connector to IAC motor.
2. Install IAC motor into and housing on manifold. Tighten mounting screws to 4 N·m (35 in. lbs.) torque.

https://truckmanualshub.com/

SENSOR - INLET AIR TEMPERATURE

REMOVAL — 8.3L

NOTE: Take care not to damage the thermister pill when removing the sensor.

1. Remove the battery cover and disconnect the negative battery cable.
2. Disconnect the electrical connector from the inlet temperature sensor.
3. Remove sensor from inlet hose.

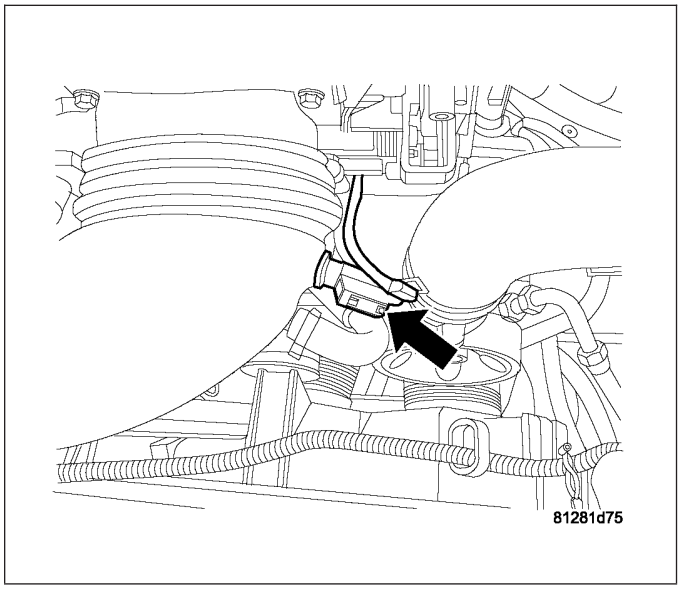

INSTALLATION

NOTE: Take care not to damage the open thermister pill when installing the sensor.

1. Install sensor , use a little water to aid in insertion of sensor.
2. Make sure that the rib on the sensor matches up with the rib on the inlet hose. The thermister pill should be in direct contact with the inlet air stream.
3. Connect the electrical connector.
4. Connect the negative battery cable and install battery cover.

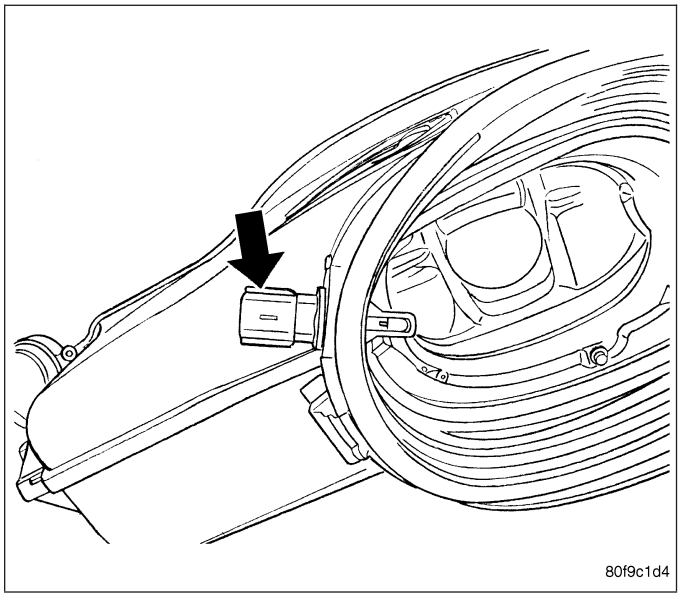

https://truckmanualshub.com/

SENSOR-INTAKE AIR TEMPERATURE

DESCRIPTION

3.7L V-6

The 2-wire Intake Manifold Air Temperature (IAT) sensor (1) is installed in the intake manifold with the sensor element extending into the air stream.

The IAT sensor is a two-wire Negative Thermal Coefficient (NTC) sensor. Meaning, as intake manifold temperature increases, resistance (voltage) in the sensor decreases. As temperature decreases, resistance (voltage) in the sensor increases.

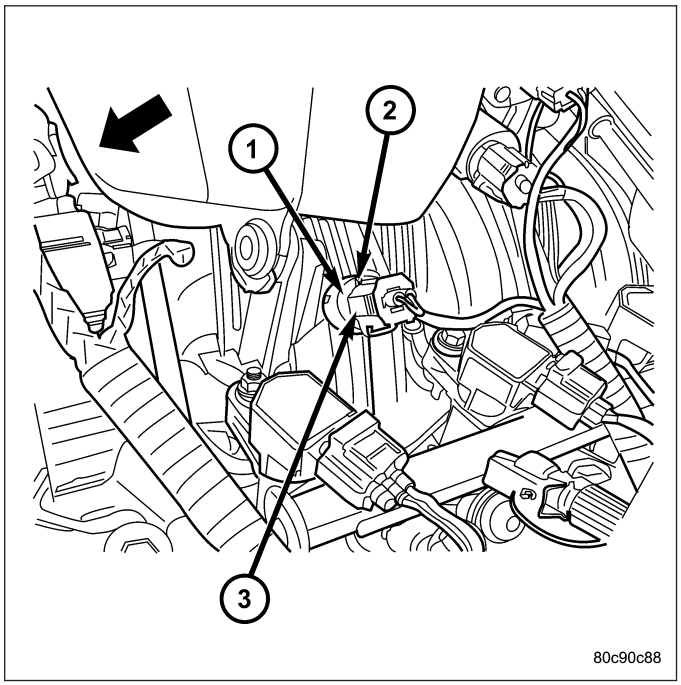

4.7L V-8

The 2-wire Intake Manifold Air Temperature (IAT) sensor (3) is installed in the intake manifold with the sensor element extending into the air stream.

The IAT sensor is a two-wire Negative Thermal Coefficient (NTC) sensor. Meaning, as intake manifold temperature increases, resistance (voltage) in the sensor decreases. As temperature decreases, resistance (voltage) in the sensor increases.

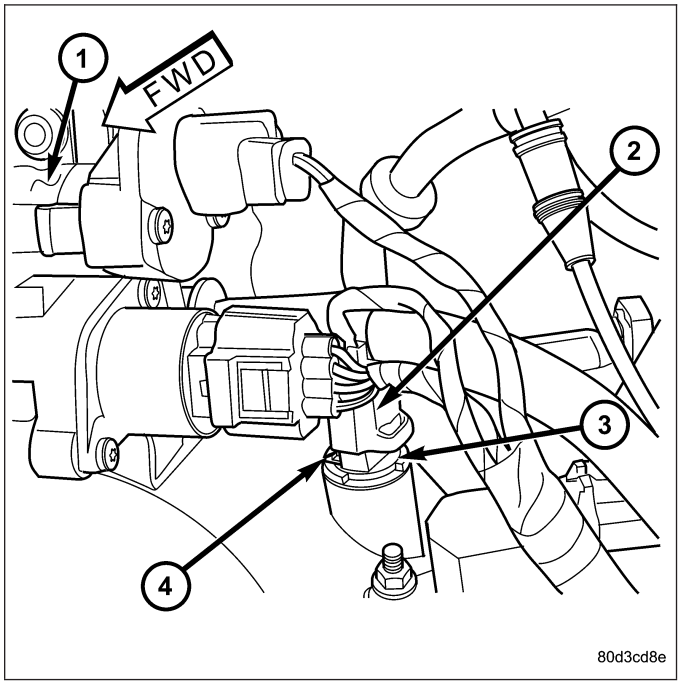

https://truckmanualshub.com/

5.7L V-8

The 2-wire Intake Manifold Air Temperature (IAT) sensor is installed in the intake manifold (2) with the sensor element extending into the air stream.

The IAT sensor is a two-wire Negative Thermal Coefficient (NTC) sensor. Meaning, as intake manifold temperature increases, resistance (voltage) in the sensor decreases. As temperature decreases, resistance (voltage) in the sensor increases.

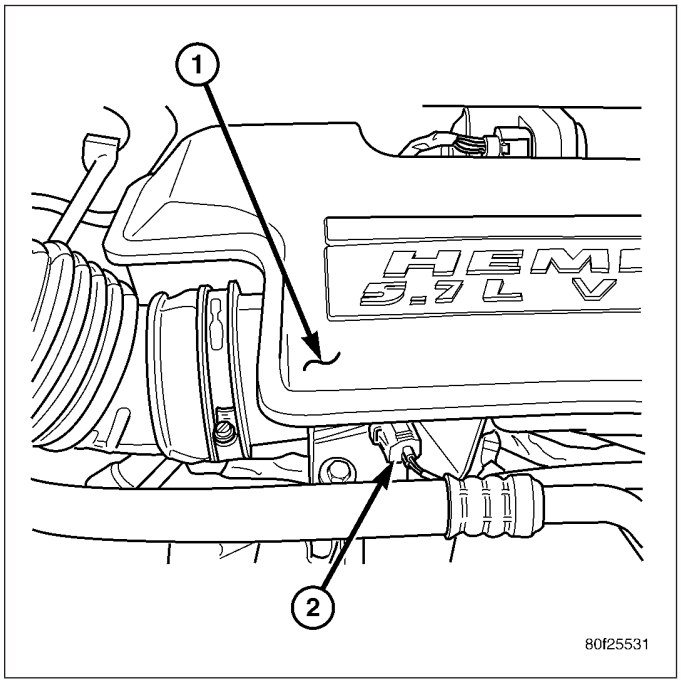

OPERATION

The IAT sensor provides an input voltage to the Powertrain Control Module (PCM) indicating the density of the air entering the intake manifold based upon intake manifold temperature. At key-on, a 5–volt power circuit is supplied to the sensor from the PCM. The sensor is grounded at the PCM through a low-noise, sensor-return circuit.

The PCM uses this input to calculate the following:

- Injector pulse-width
- Adjustment of spark timing (to help prevent spark knock with high intake manifold air-charge temperatures)

The resistance values of the IAT sensor is the same as for the Engine Coolant Temperature (ECT) sensor.

https://truckmanualshub.com/

REMOVAL

3.7L V-6

The intake manifold air temperature (IAT) sensor is installed into the left side of intake manifold plenum.

1. Disconnect electrical connector from IAT sensor.
2. Clean dirt from intake manifold at sensor base.

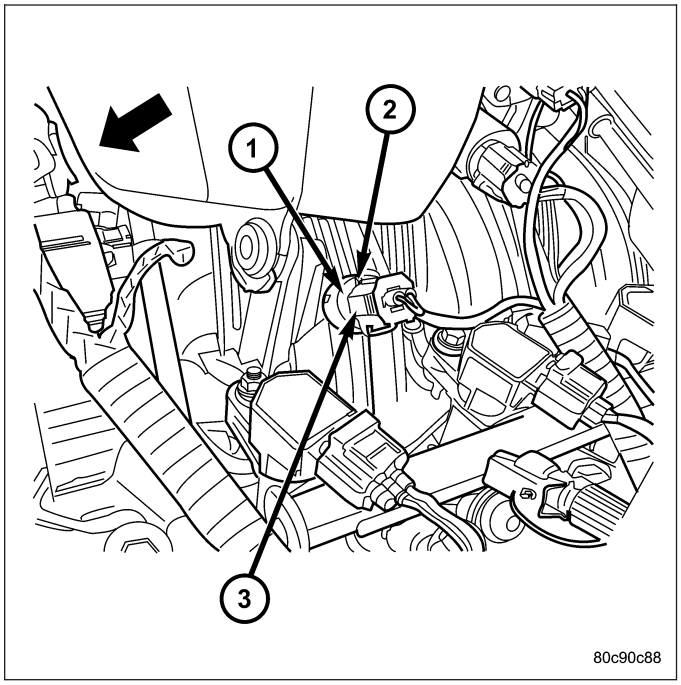

3. Gently lift on small plastic release tab (3) and rotate sensor about 1/4 turn counterclockwise for removal.
4. Check condition of sensor O-ring.

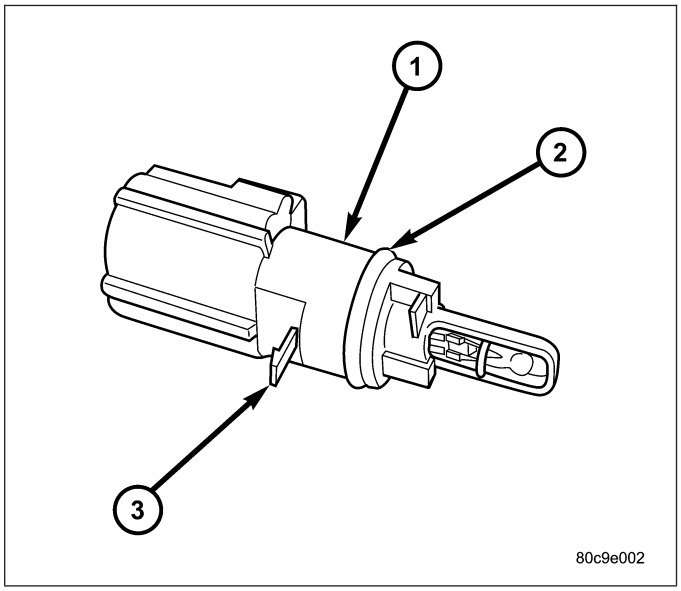

https://truckmanualshub.com/

4.7L V-8

The intake manifold air temperature (IAT) sensor (3) is installed into the left side of intake manifold plenum.

1. Disconnect electrical connector from IAT sensor.
2. Clean dirt from intake manifold at sensor base.

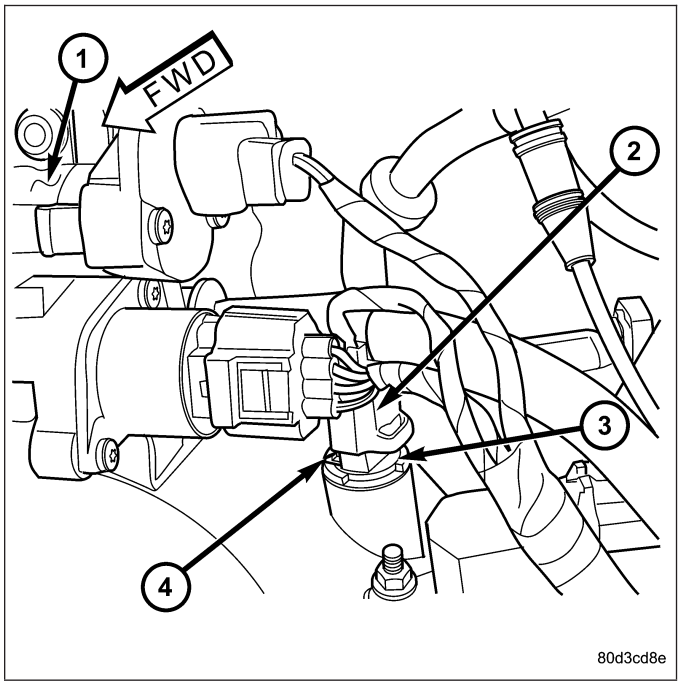

3. Gently lift on small plastic release tab (3) and rotate sensor about 1/4 turn counterclockwise for removal.
4. Check condition of sensor O-ring.

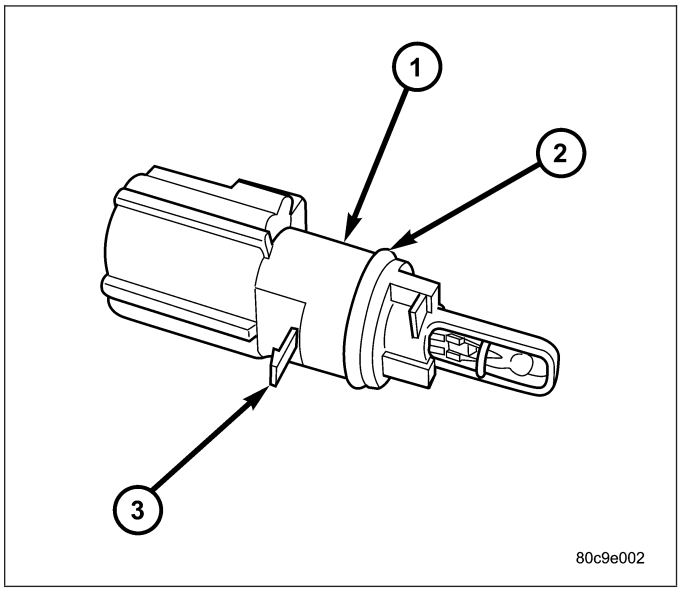

https://truckmanualshub.com/

5.7L V-8

The intake manifold air temperature (IAT) sensor (2) is installed into the front of the intake manifold air box plenum.

1. Disconnect electrical connector (2) from IAT sensor.
2. Clean dirt from intake manifold at sensor base.

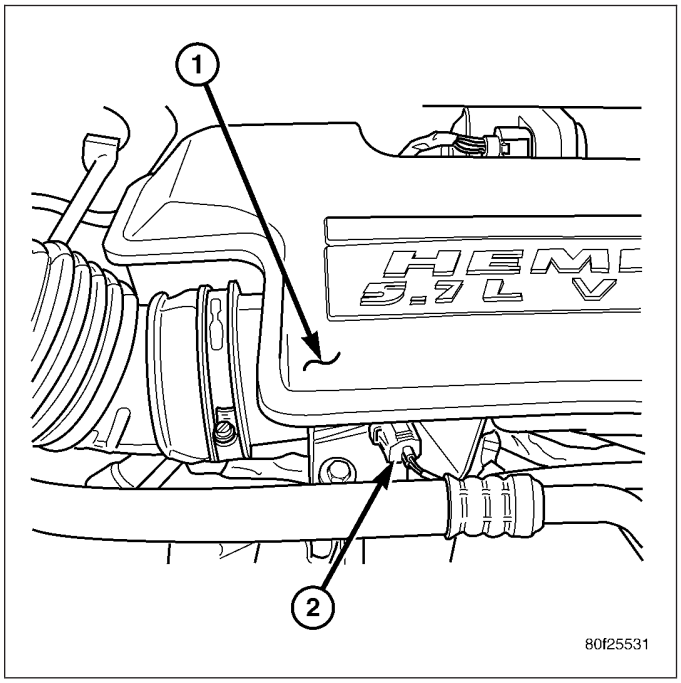

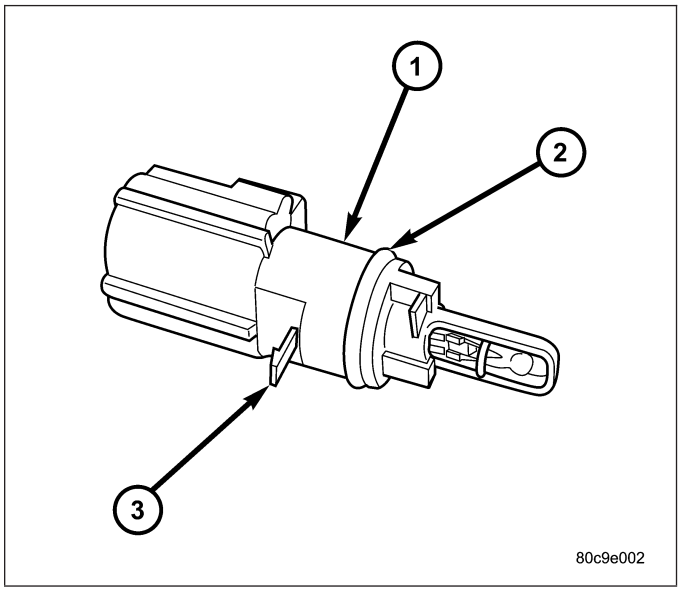

https://truckmanualshub.com/

3. Gently lift on small plastic release tab (3) and rotate sensor about 1/4 turn counterclockwise for removal.
4. Check condition of sensor O-ring.

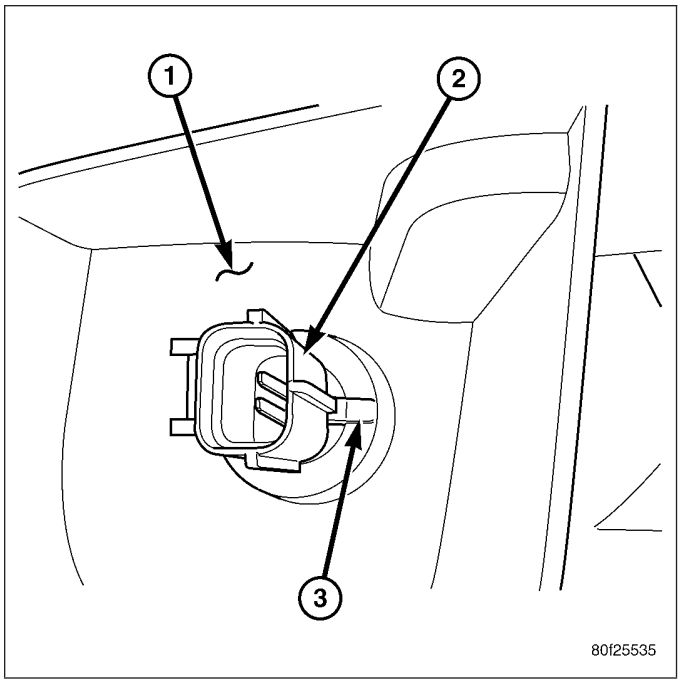

INSTALLATION

3.7L V-6

The intake manifold air temperature (IAT) sensor (1) is installed into the left side of intake manifold plenum.

1. Check condition of sensor O-ring.
2. Clean sensor mounting hole in intake manifold.
3. Position sensor into intake manifold and rotate clockwise until past release tab (2).
4. Install electrical connector.

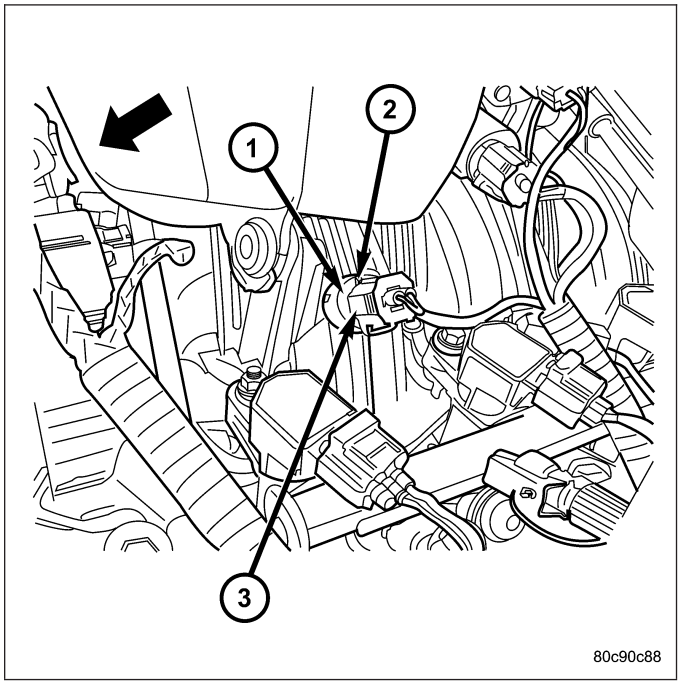

https://truckmanualshub.com/

4.7L V-8

The intake manifold air temperature (IAT) sensor (3) is installed into the left side of intake manifold plenum.

1. Check condition of sensor O-ring.
2. Clean sensor mounting hole in intake manifold.
3. Position sensor into intake manifold and rotate clockwise until past release tab.
4. Install electrical connector.

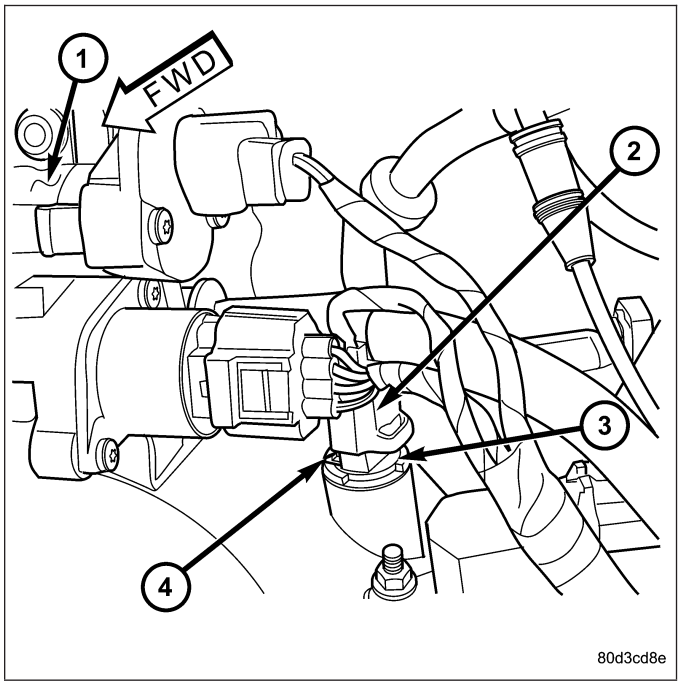

5.7L V-8

The intake manifold air temperature (IAT) sensor (2) is installed into the front of the intake manifold air box plenum.

1. Check condition of sensor O-ring.
2. Clean sensor mounting hole in intake manifold.
3. Position sensor into intake manifold and rotate clockwise until past release tab.
4. Install electrical connector.

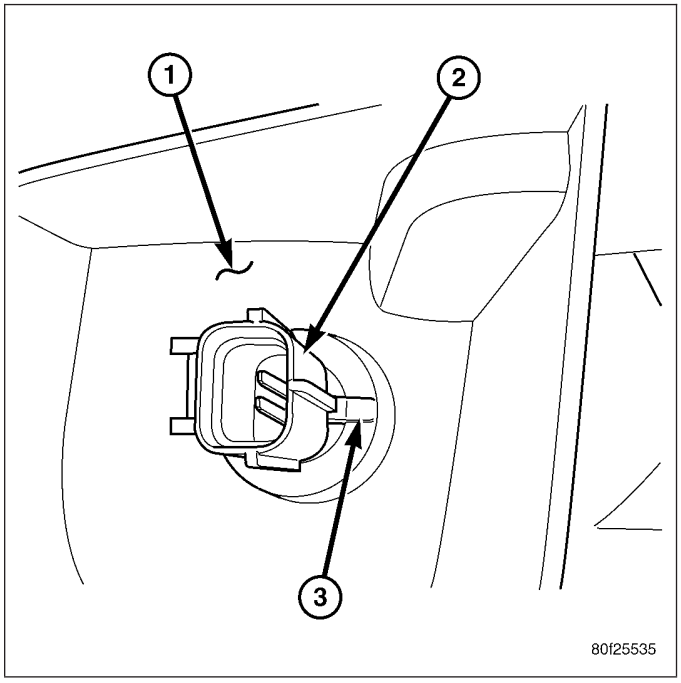

https://truckmanualshub.com/

SENSOR-MAP

DESCRIPTION

3.7L V-6

The Manifold Absolute Pressure (MAP) sensor (2) is mounted into the front of the intake manifold with 2 screws.

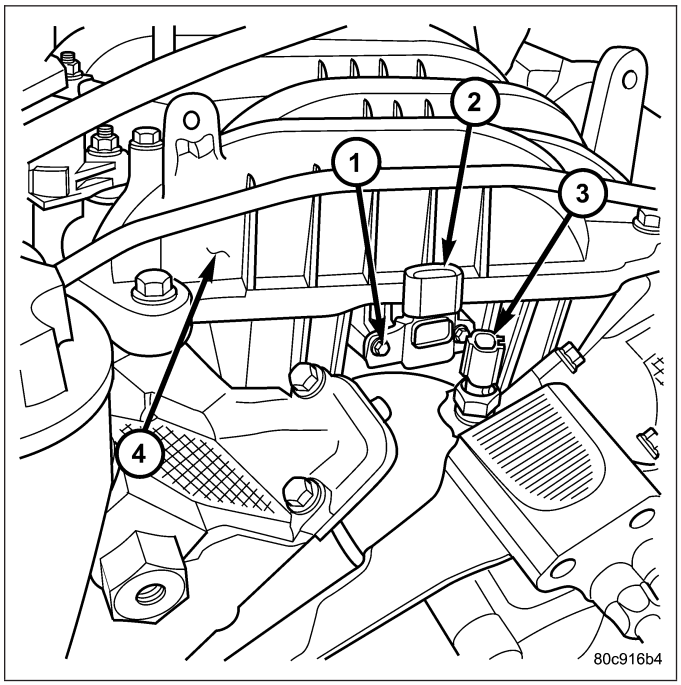

4.7L V-8

The Manifold Absolute Pressure (MAP) sensor (1) is mounted into the front of the intake manifold with 2 screws.

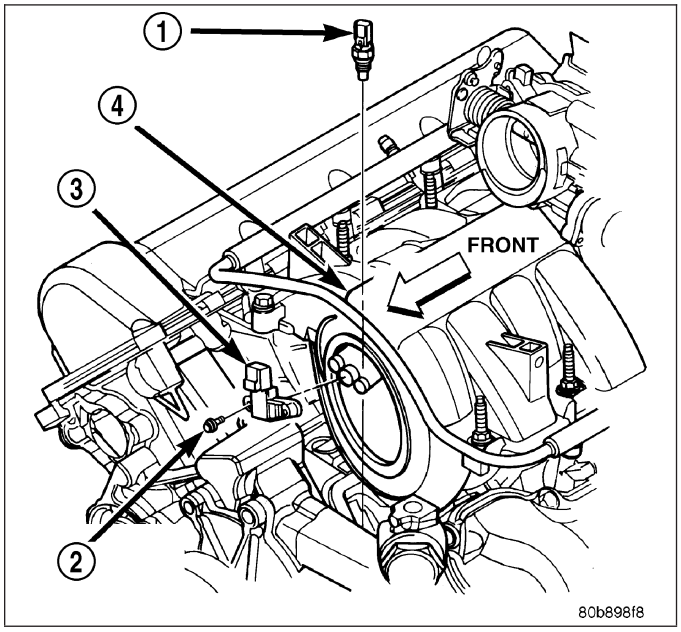

https://truckmanualshub.com/

5.7L V-8

The Manifold Absolute Pressure (MAP) sensor is mounted to the front of the intake manifold air plenum box.

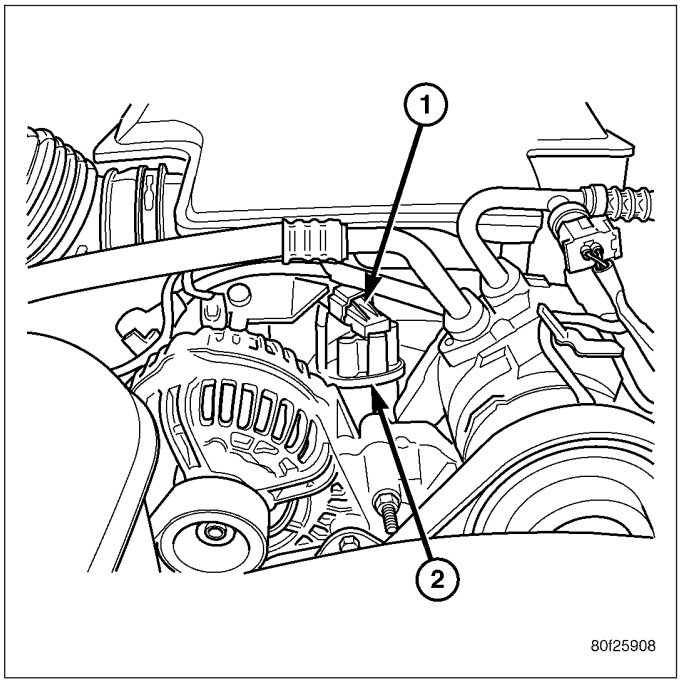

8.3L - SRT-10

The MAP sensor (2) mounts to the drivers side intake manifold plenum.

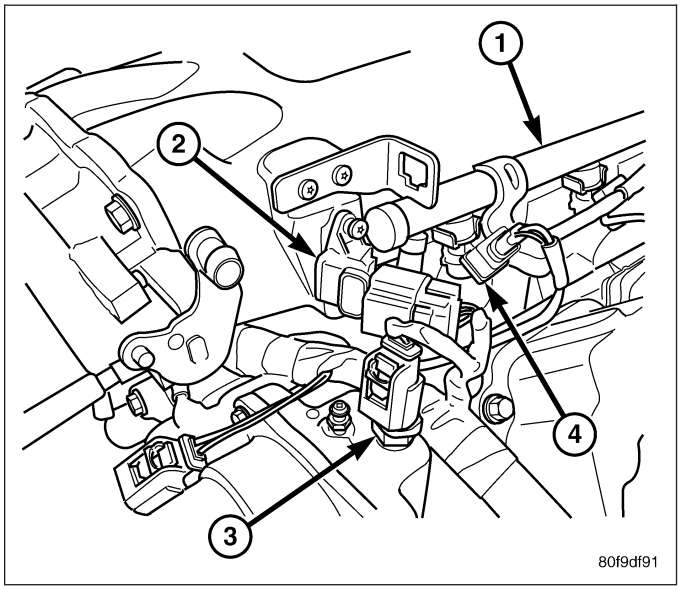

OPERATION

The MAP sensor is used as an input to the Powertrain Control Module (PCM). It contains a silicon based sensing unit to provide data on the manifold vacuum that draws the air/fuel mixture into the combustion chamber. The PCM requires this information to determine injector pulse width and spark advance. When manifold absolute pressure (MAP) equals Barometric pressure, the pulse width will be at maximum.

A 5 volt reference is supplied from the PCM and returns a voltage signal to the PCM that reflects manifold pressure. The zero pressure reading is 0.5V and full scale is 4.5V. For a pressure swing of 0–15 psi, the voltage changes 4.0V. To operate the sensor, it is supplied a regulated 4.8 to 5.1 volts. Ground is provided through the low-noise, sensor return circuit at the PCM.

The MAP sensor input is the number one contributor to fuel injector pulse width. The most important function of the MAP sensor is to determine barometric pressure. The PCM needs to know if the vehicle is at sea level or at a

https://truckmanualshub.com/

higher altitude, because the air density changes with altitude. It will also help to correct for varying barometric pressure. Barometric pressure and altitude have a direct inverse correlation; as altitude goes up, barometric goes down. At key-on, the PCM powers up and looks at MAP voltage, and based upon the voltage it sees, it knows the current barometric pressure (relative to altitude). Once the engine starts, the PCM looks at the voltage again, continuously every 12 milliseconds, and compares the current voltage to what it was at key-on. The difference between current voltage and what it was at key-on, is manifold vacuum.

During key-on (engine not running) the sensor reads (updates) barometric pressure. A normal range can be obtained by monitoring a known good sensor.

As the altitude increases, the air becomes thinner (less oxygen). If a vehicle is started and driven to a very different altitude than where it was at key-on, the barometric pressure needs to be updated. Any time the PCM sees Wide Open Throttle (WOT), based upon Throttle Position Sensor (TPS) angle and RPM, it will update barometric pressure in the MAP memory cell. With periodic updates, the PCM can make its calculations more effectively.

The PCM uses the MAP sensor input to aid in calculating the following:

- Manifold pressure
- Barometric pressure
- Engine load
- Injector pulse-width
- Spark-advance programs
- Shift-point strategies (certain automatic transmissions only)
- Idle speed
- Decel fuel shutoff

The MAP sensor signal is provided from a single piezoresistive element located in the center of a diaphragm. The element and diaphragm are both made of silicone. As manifold pressure changes, the diaphragm moves causing the element to deflect, which stresses the silicone. When silicone is exposed to stress, its resistance changes. As manifold vacuum increases, the MAP sensor input voltage decreases proportionally. The sensor also contains electronics that condition the signal and provide temperature compensation.

The PCM recognizes a decrease in manifold pressure by monitoring a decrease in voltage from the reading stored in the barometric pressure memory cell. The MAP sensor is a linear sensor; meaning as pressure changes, voltage changes proportionately. The range of voltage output from the sensor is usually between 4.6 volts at sea level to as low as 0.3 volts at 26 in. of Hg. Barometric pressure is the pressure exerted by the atmosphere upon an object. At sea level on a standard day, no storm, barometric pressure is approximately 29.92 in Hg. For every 100 feet of altitude, barometric pressure drops 0.10 in. Hg. If a storm goes through, it can change barometric pressure from what should be present for that altitude. You should know what the average pressure and corresponding barometric pressure is for your area.

https://truckmanualshub.com/

REMOVAL

3.7L V-6

The Manifold Absolute Pressure (MAP) sensor is mounted into the front of the intake manifold

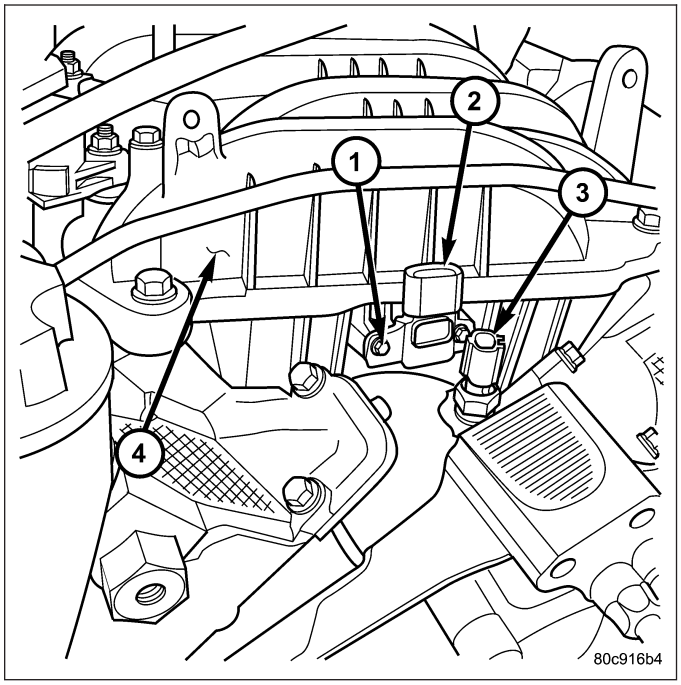

An O-ring (2) is used to seal the sensor to the intake manifold.

1. Disconnect electrical connector at sensor.
2. Clean area around MAP sensor.
3. Remove 2 sensor mounting screws.
4. Remove MAP sensor from intake manifold.
5. Check condition of sensor O-ring.

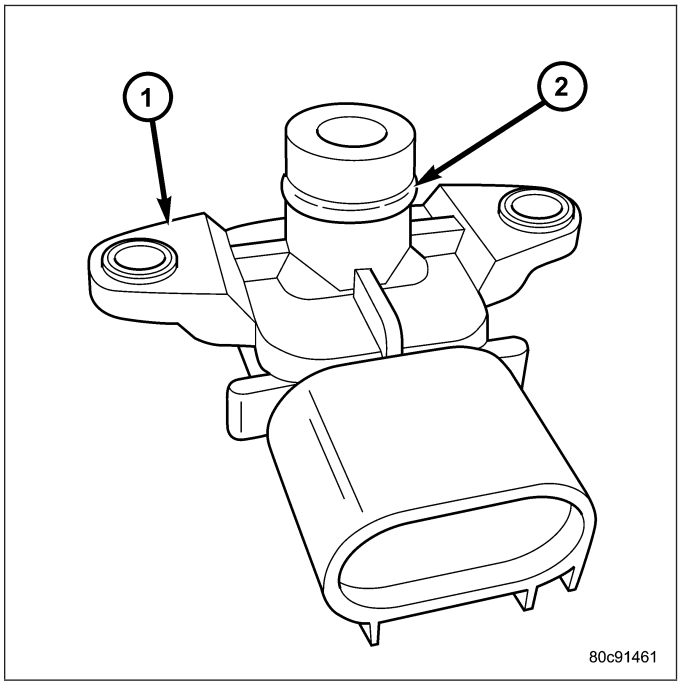

https://truckmanualshub.com/

4.7L V-8

The MAP sensor (3) is located on the front of the intake manifold. An O-ring seals the sensor to the intake manifold.

1. Disconnect electrical connector at sensor.
2. Clean area around MAP sensor.
3. Remove 2 sensor mounting bolts.
4. Remove MAP sensor from intake manifold.
5. Check condition of sensor O-ring.

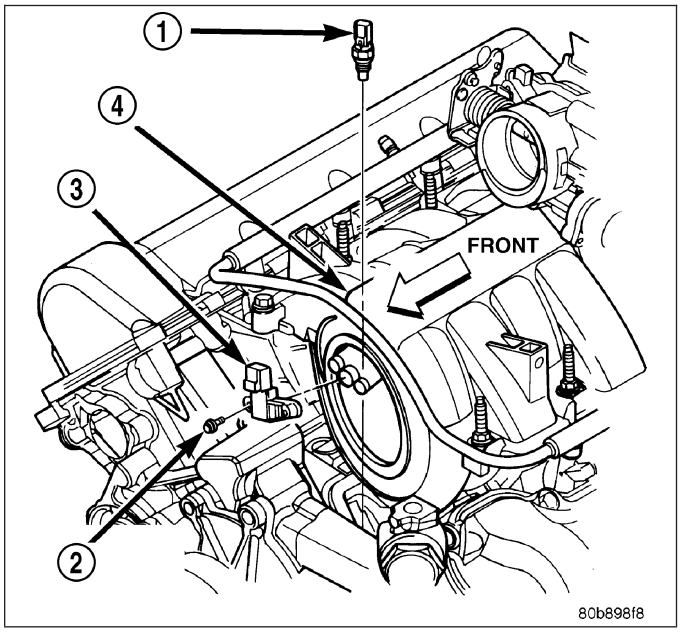

5.7L V-8

The Manifold Absolute Pressure (MAP) sensor is mounted to the front of the intake manifold air plenum box.

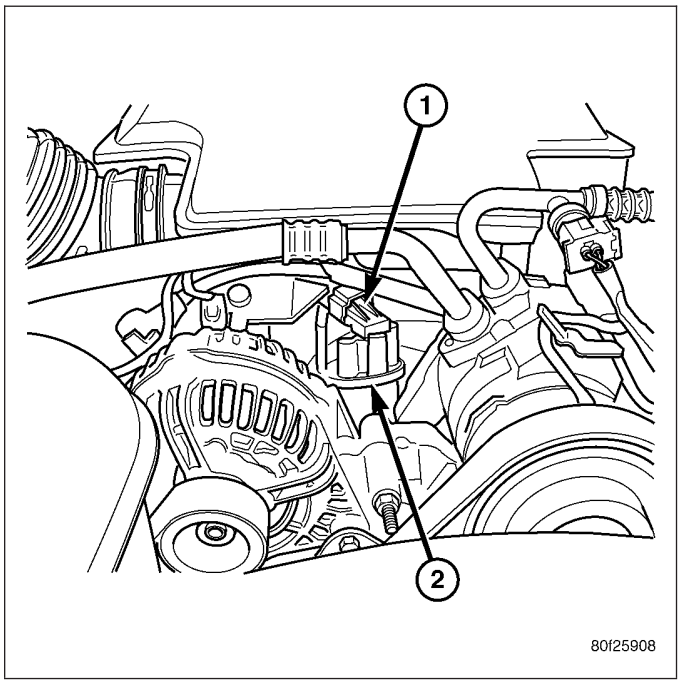

https://truckmanualshub.com/

1. Disconnect electrical connector at sensor by sliding release lock out. Press down on lock tab for removal.
2. Rotate sensor (3) 1/4 turn counterclockwise for removal.
3. Check condition of sensor O-ring.

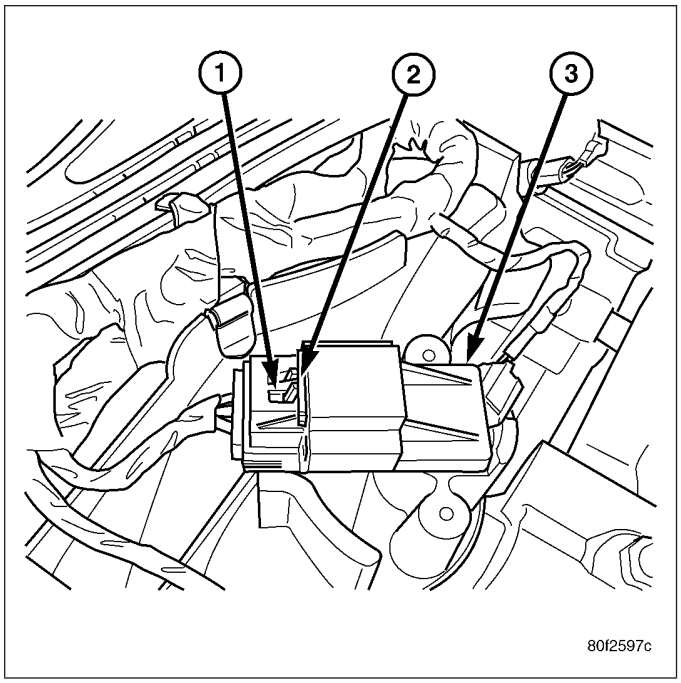

8.3 L - SRT-10

The manifold absolute pressure sensor is mounted on the drivers side of the intake manifold.

1. Disconnect the electrical connector from the MAP sensor.
2. Remove MAP sensor mounting screws.

INSTALLATION

3.7L V-6

The Manifold Absolute Pressure (MAP) sensor is mounted into the front of the intake manifold.

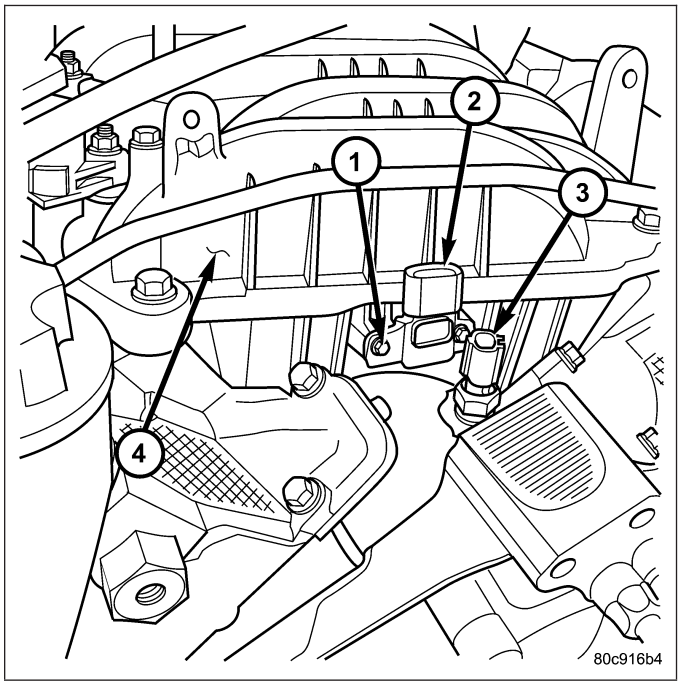

https://truckmanualshub.com/

An O-ring (2) is used to seal the sensor to the intake manifold.

1. Clean MAP sensor mounting hole at intake manifold.
2. Check MAP sensor O-ring seal for cuts or tears.
3. Position sensor into manifold.
4. Install MAP sensor mounting bolts (screws). (Refer to 14 - FUEL SYSTEM/FUEL DELIVERY - SPECIFICATIONS)
5. Connect electrical connector.

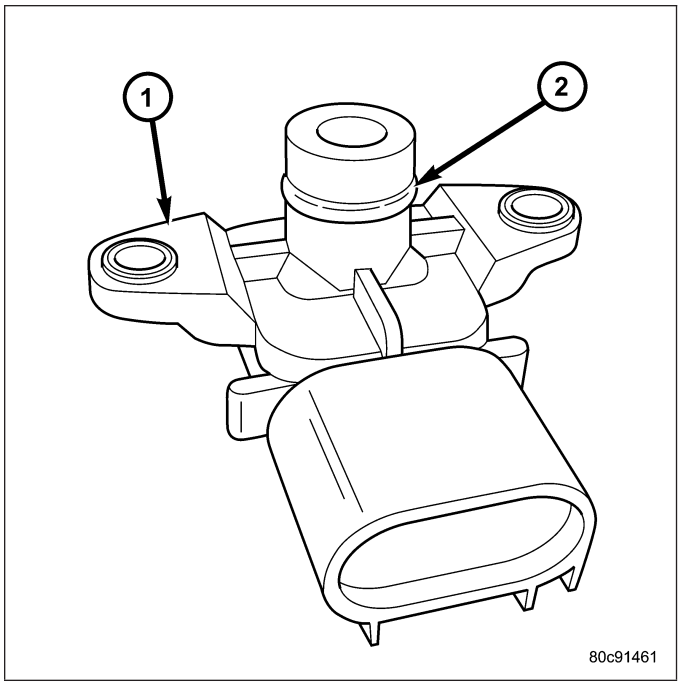

4.7L V-8

The MAP sensor is located on the front of the intake manifold.

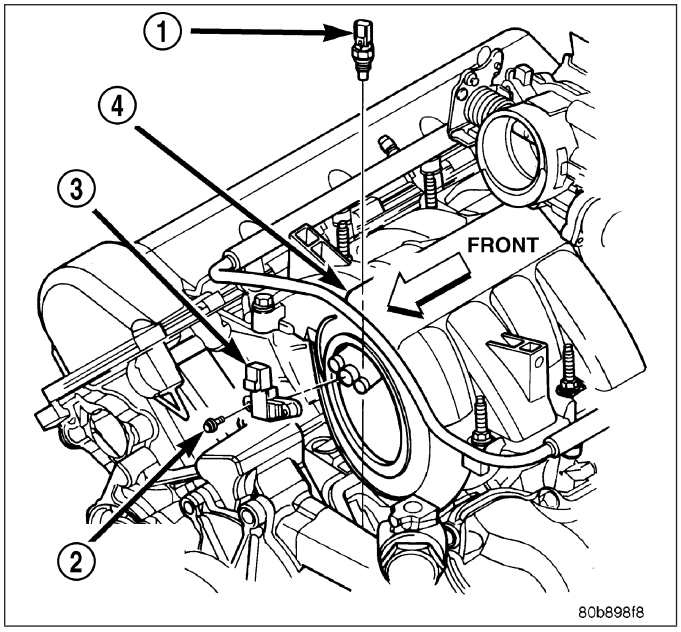

https://truckmanualshub.com/

An O-ring (2) seals the sensor to the intake manifold.

1. Clean MAP sensor mounting hole at intake manifold.
2. Check MAP sensor O-ring seal for cuts or tears.
3. Position sensor into manifold.
4. Install MAP sensor mounting bolts (screws). (Refer to 14 - FUEL SYSTEM/FUEL DELIVERY - SPECIFICATIONS)
5. Connect electrical connector.

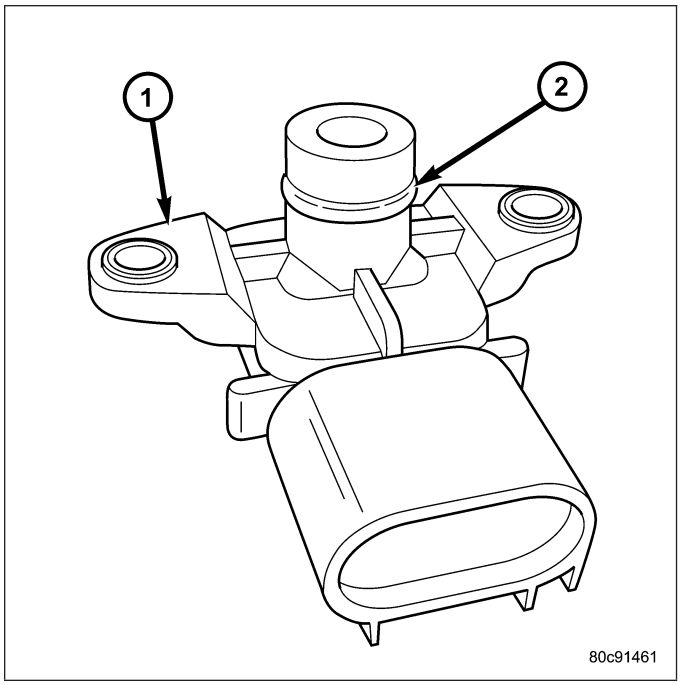

5.7L V-8

The Manifold Absolute Pressure (MAP) sensor (1) is mounted to the front of the intake manifold air plenum box.

1. Clean MAP sensor mounting hole at intake manifold.
2. Check MAP sensor O-ring seal for cuts or tears.
3. Position sensor into manifold.
4. Rotate sensor 1/4 turn clockwise for installation.
5. Connect electrical connector.

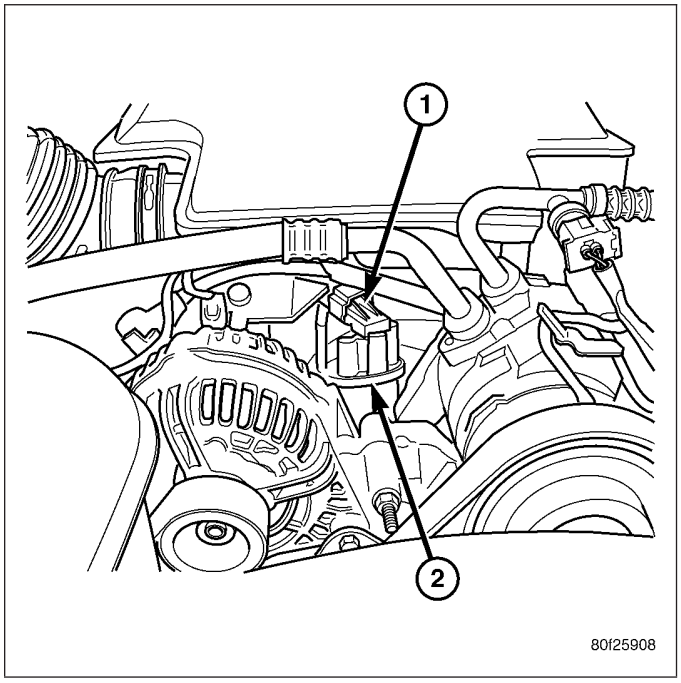

8.3L - SRT-10

1. Install the MAP sensor to the intake manifold.
2. Install MAP sensor mounting screws and tighten mounting screws to 4 N·m (35 in. lbs.).
3. Connect the electrical connector to the MAP sensor.

https://truckmanualshub.com/

SENSOR - OXYGEN

DESCRIPTION

The Oxygen Sensors (O2S) are attached to, and protrude into the vehicle exhaust system. Depending on the engine or emission package, the vehicle may use a total of either 2 or 4 sensors.

Federal Emission Packages : Two sensors are used: upstream (referred to as 1/1) and downstream (referred to as 1/2). With this emission package, the upstream sensor (1/1) is located just before the main catalytic convertor. The downstream sensor (1/2) is located just after the main catalytic convertor.

California Emission Packages: On this emissions package, 4 sensors are used: 2 upstream (referred to as 1/1 and 2/1) and 2 downstream (referred to as 1/2 and 2/2). With this emission package, the right upstream sensor (2/1) is located in the right exhaust downpipe just before the mini-catalytic convertor. The left upstream sensor (1/1) is located in the left exhaust downpipe just before the mini-catalytic convertor. The right downstream sensor (2/2) is located in the right exhaust downpipe just after the mini-catalytic convertor, and before the main catalytic convertor. The left downstream sensor (1/2) is located in the left exhaust downpipe just after the mini-catalytic convertor, and before the main catalytic convertor.

REMOVAL

CAUTION: Never apply any type of grease to the oxygen sensor electrical connector, or attempt any soldering of the sensor wiring harness.

WARNING: The exhaust manifold, exhaust pipes and catalytic converter become very hot during engine operation. Allow engine to cool before removing oxygen sensor.

1. Raise and support vehicle.
2. Disconnect wire connector from O2S sensor.

CAUTION: When disconnecting sensor electrical connector, do not pull directly on wire going into sensor.

3. Remove O2S sensor with an oxygen sensor removal and installation tool.
4. Clean threads in exhaust pipe using appropriate tap.

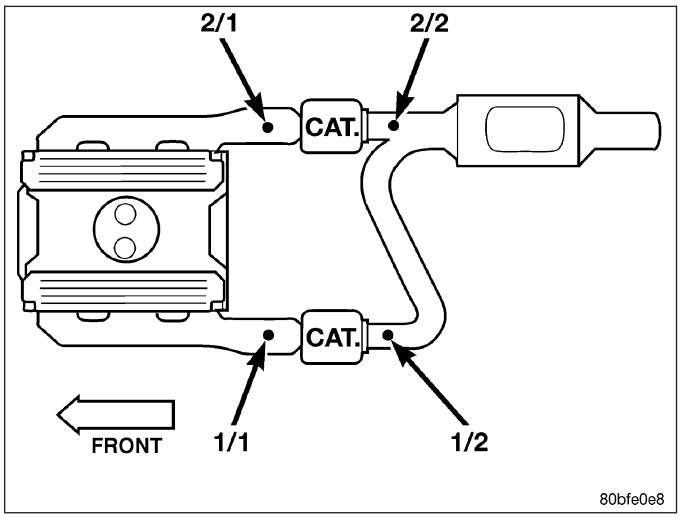

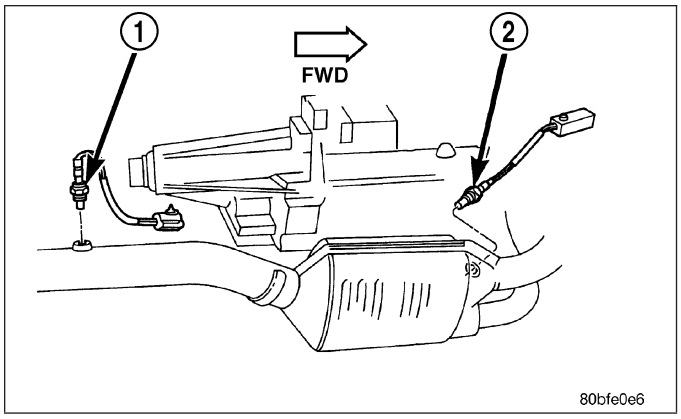

https://truckmanualshub.com/

INSTALLATION

Threads of new oxygen sensors are factory coated with anti-seize compound to aid in removal. **DO NOT add any additional anti-seize compound to threads of a new oxygen sensor.**

1. Install O2S sensor. Tighten to 30 N·m (22 ft. lbs.) torque.
2. Connect O2S sensor wire connector.
3. Lower vehicle.

https://truckmanualshub.com/

SWITCH-PTO

DESCRIPTION

This Powertrain Control Module (PCM) input is used only on models equipped with aftermarket Power Take Off (PTO) units.

OPERATION

The input is used only to tell the PCM (or ECM-Diesel) that the PTO has been engaged. The PCM (or ECM) will disable (temporarily shut down) certain OBD II diagnostic trouble codes when the PTO is engaged.

JTEC and NGC Engine Controllers: When the aftermarket PTO switch has been engaged, a 12V + signal is sent through circuit G113 to PCM pin A13. The PCM will then sense and determine that the PTO has been activated.

CM 845 or CM 848 Diesel Engine Controllers: When the aftermarket PTO switch has been engaged, a 12V + signal is sent through circuit G113 to ECM pin B38. The ECM will then sense and determine that the PTO has been activated.

https://truckmanualshub.com/

THROTTLE BODY

DESCRIPTION

The throttle body is located on the intake manifold. Fuel does not enter the intake manifold through the throttle body. Fuel is sprayed into the manifold by the fuel injectors.

OPERATION

Filtered air from the air cleaner enters the intake manifold through the throttle body. The throttle body contains an air control passage controlled by an Idle Air Control (IAC) motor. The air control passage is used to supply air for idle conditions. A throttle valve (plate) is used to supply air for above idle conditions.

5.7L V-8 Engine:

The throttle body on the 5.7L engine is an electrically controlled unit. A mechanical cable is not used to connect the throttle body to the accelerator pedal. The Accelerator Pedal Position Sensor (APPS) along with inputs from other sensors sets the throttle blade to pre-determined positions.

Except 5.7L V-8 Engine:

Certain sensors are attached to the throttle body. The accelerator pedal cable, speed control cable and transmission control cable (when equipped) are connected to the throttle body linkage arm.

A (factory adjusted) set screw is used to mechanically limit the position of the throttle body throttle plate. **Never attempt to adjust the engine idle speed using this screw.** All idle speed functions are controlled by the PCM.

REMOVAL

3.7L V-6

A (factory adjusted) set screw is used to mechanically limit the position of the throttle body throttle plate. **Never attempt to adjust the engine idle speed using this screw.** All idle speed functions are controlled by the Powertrain Control Module (PCM).

1. Remove air cleaner tube at throttle body.
2. Disconnect throttle body electrical connectors at IAC motor and TPS.
3. Remove all control cables from throttle body (lever) arm. Refer to the Accelerator Pedal and Throttle Cable section for removal/installation procedures.
4. Disconnect necessary vacuum lines at throttle body.
5. Remove 3 throttle body mounting bolts (2).
6. Remove throttle body from intake manifold.

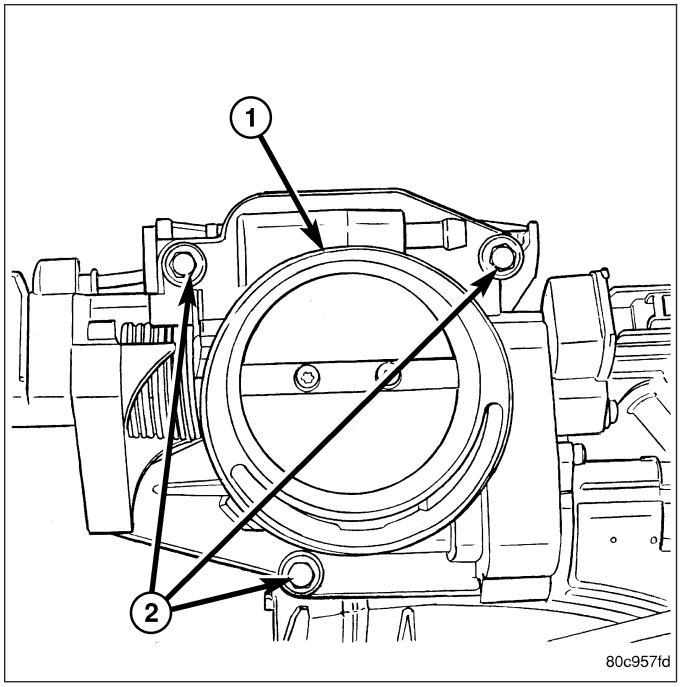

https://truckmanualshub.com/

7. Check condition of old throttle body-to-intake manifold O-ring.

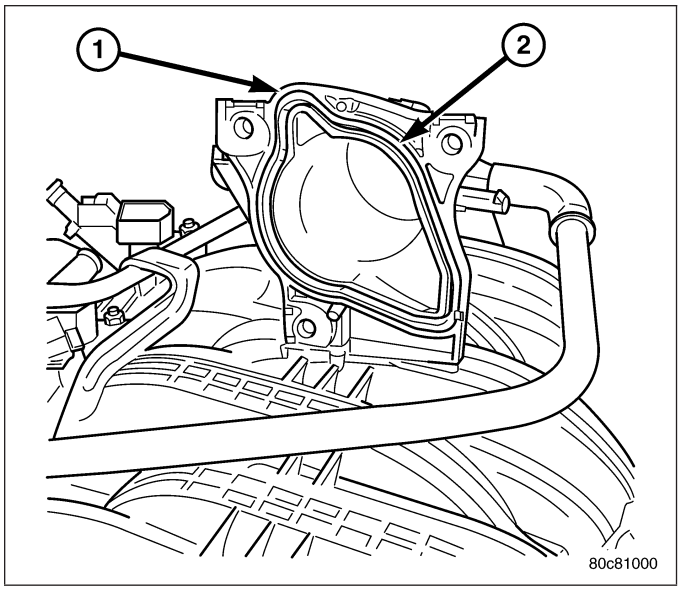

4.7L V-8

1. Remove air duct and air resonator box at throttle body.
2. Disconnect throttle body electrical connectors at IAC motor and TPS.
3. Remove vacuum line at throttle body.
4. Remove all control cables from throttle body (lever) arm. Refer to Accelerator Pedal and Throttle Cable.
5. Remove three throttle body mounting bolts (1).
6. Remove throttle body from intake manifold.

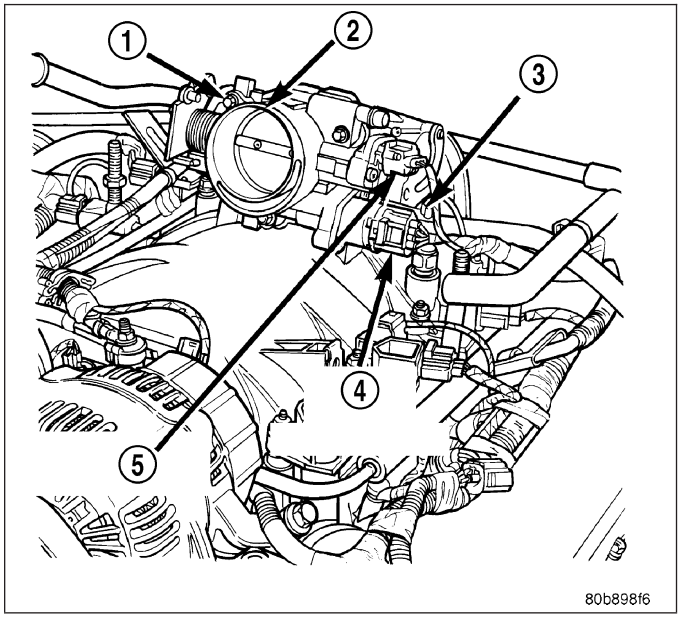

5.7L V-8

CAUTION: Do not use spray (carb) cleaners on any part of the throttle body. Do not apply silicone lubricants to any part of the throttle body.

https://truckmanualshub.com/

1. Remove air duct and air resonator box at throttle body.
2. Disconnect electrical connector (2) at throttle body.
3. Remove 4 throttle body mounting bolts (4).
4. Remove throttle body from intake manifold.

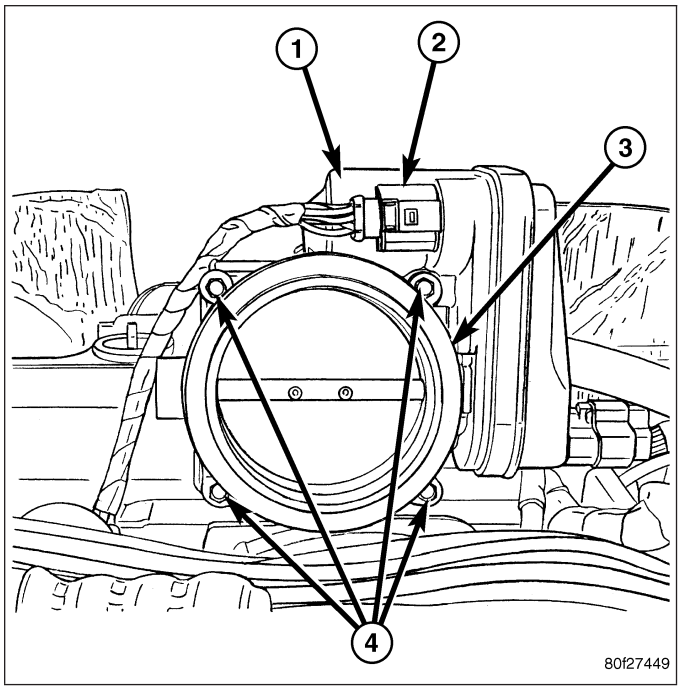

5. Check condition of throttle body O-ring (2).
6. If the throttle body has been changed, the following procedure must be performed:
   a. Disconnect negative battery cable from battery. Leave cable disconnected for approximately 90 seconds.
   b. Reconnect cable to battery.
   c. Turn ignition switch ON, but do not crank engine.
   d. Leave ignition switch ON for a minimum of 10 seconds. This will allow PCM to learn throttle body electrical parameters.

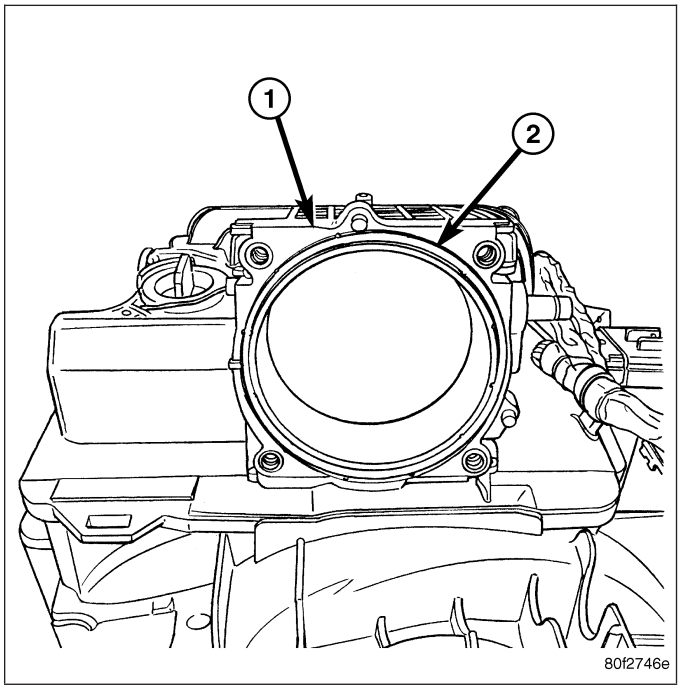

https://truckmanualshub.com/

8.3L - SRT-10

1. Remove the throttle cable.

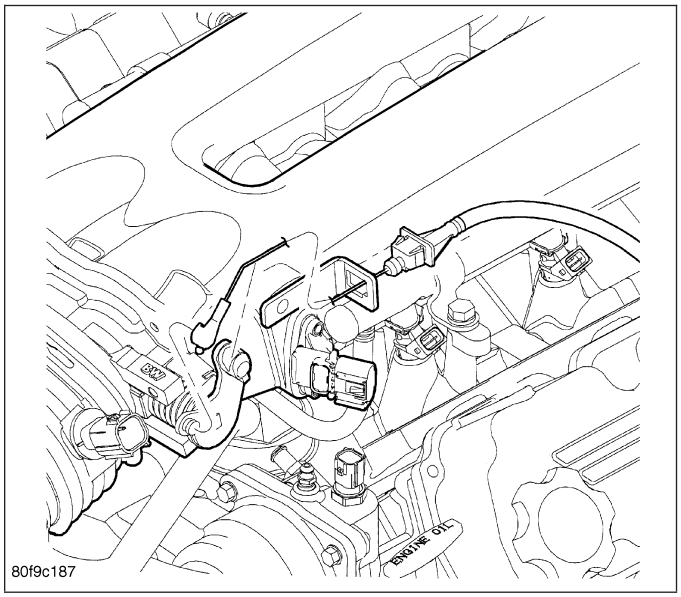

2. Remove the battery cover and disconnect the negative battery cable.
3. Remove the air cleaner assembly, refer to the Engine/Air Intake System/Air Cleaner Housing for more information.
4. Disconnect the TPS electrical connector.

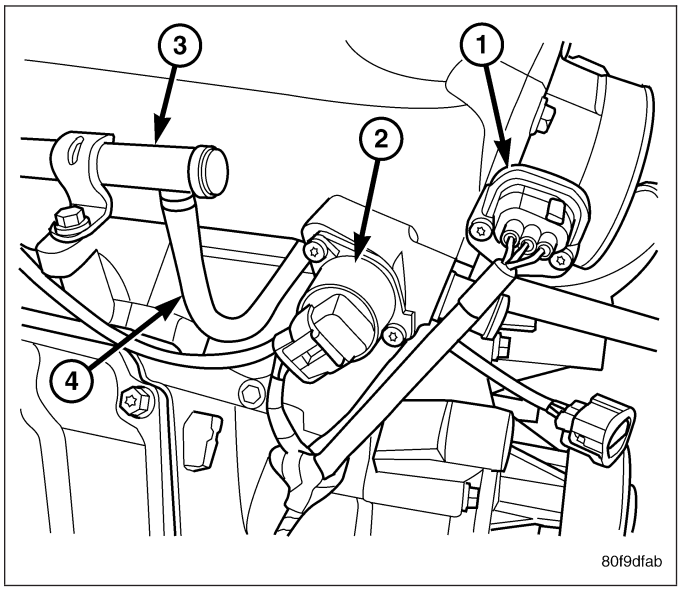

https://truckmanualshub.com/

5. Remove the throttle body bolts.

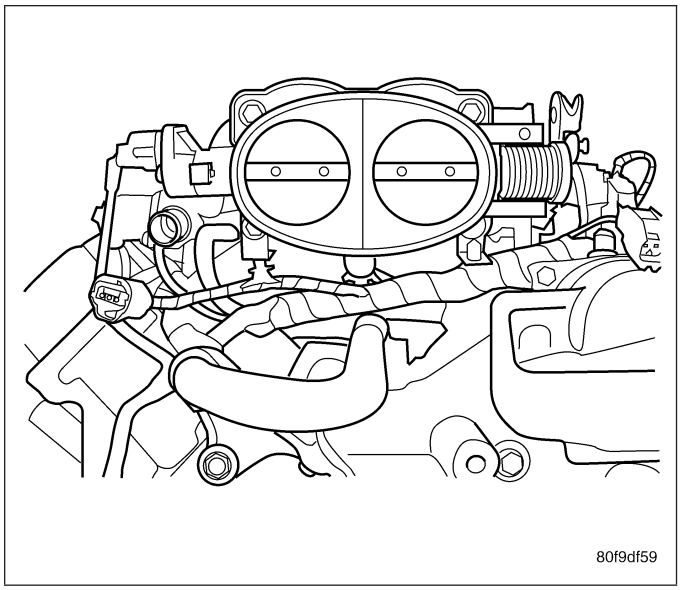

6. Remove the throttle body wiring clips.
7. Remove the throttle body.

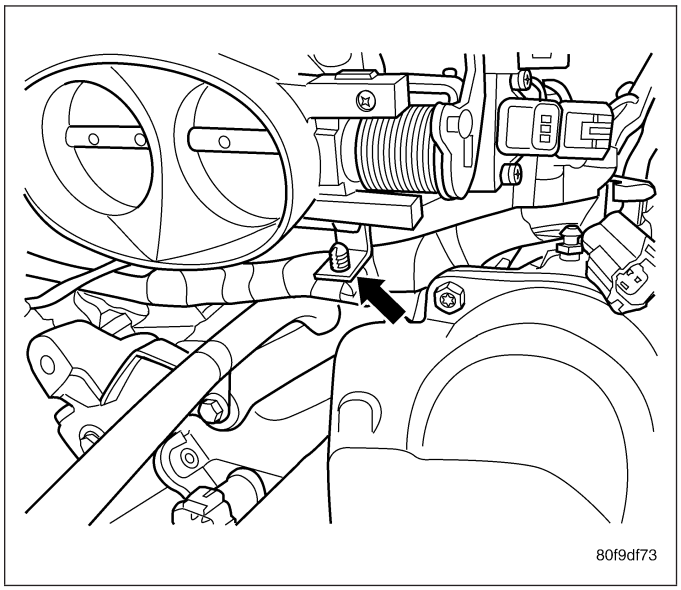

https://truckmanualshub.com/

INSTALLATION

3.7L V-6

1. Check condition of throttle body-to-intake manifold O-ring (2). Replace as necessary.
2. Clean mating surfaces of throttle body and intake manifold.
3. Install throttle body-to-intake manifold o-ring.
4. Install throttle body to intake manifold.

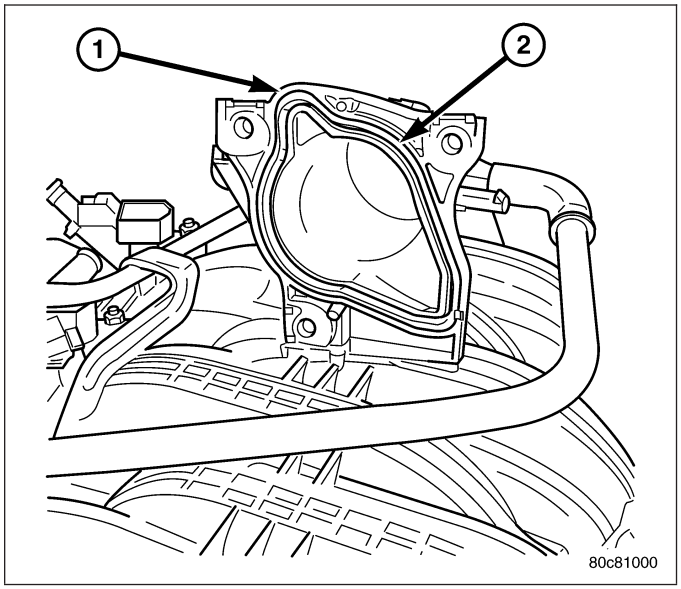

5. Install three mounting bolts (2). Tighten bolts to 12 N·m (105 in. lbs.) torque.
6. Install control cables.
7. Install electrical connectors.
8. Install necessary vacuum lines.
9. Install air plenum.

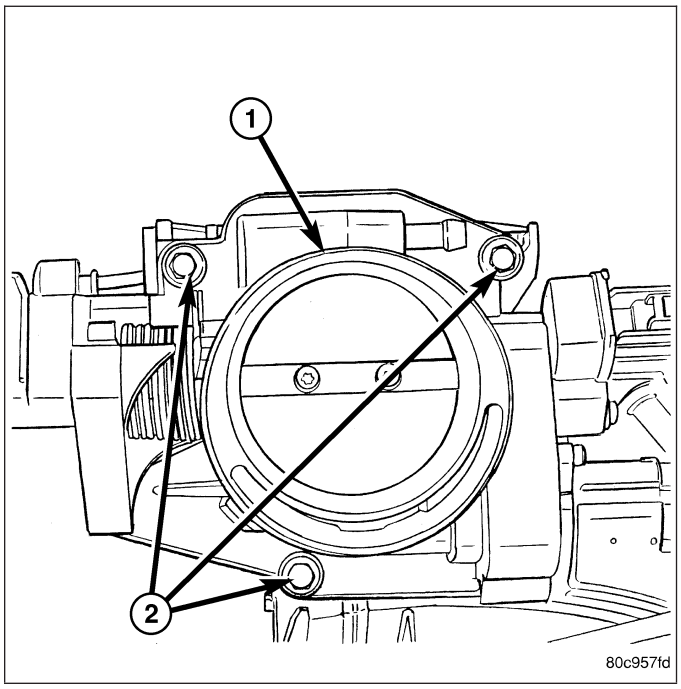

https://truckmanualshub.com/

4.7L V-8

1. Clean throttle body-to-intake manifold o-ring.
2. Clean mating surfaces of throttle body and intake manifold.
3. Install throttle body to intake manifold by positioning throttle body to manifold alignment pins.
4. Install three mounting bolts (1). Tighten bolts to 12 N·m (105 in. lbs.) torque.
5. Install control cables.
6. Install vacuum line to throttle body.
7. Install electrical connectors.
8. Install air plenum.

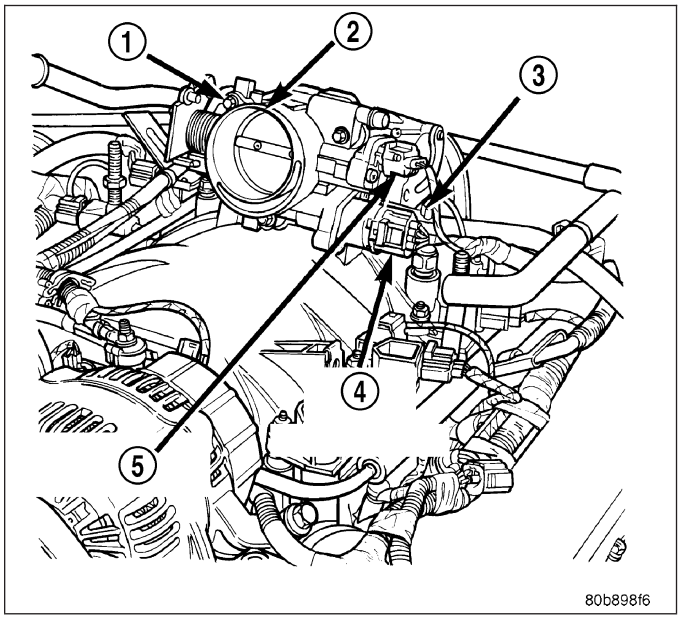

5.7L V-8

CAUTION: Do not use spray (carb) cleaners on any part of the throttle body. Do not apply silicone lubricants to any part of the throttle body.

1. Clean and check condition of throttle body-to-intake manifold O-ring (2).
2. Clean mating surfaces of throttle body and intake manifold.
3. Install throttle body to intake manifold by positioning throttle body to manifold alignment pins.

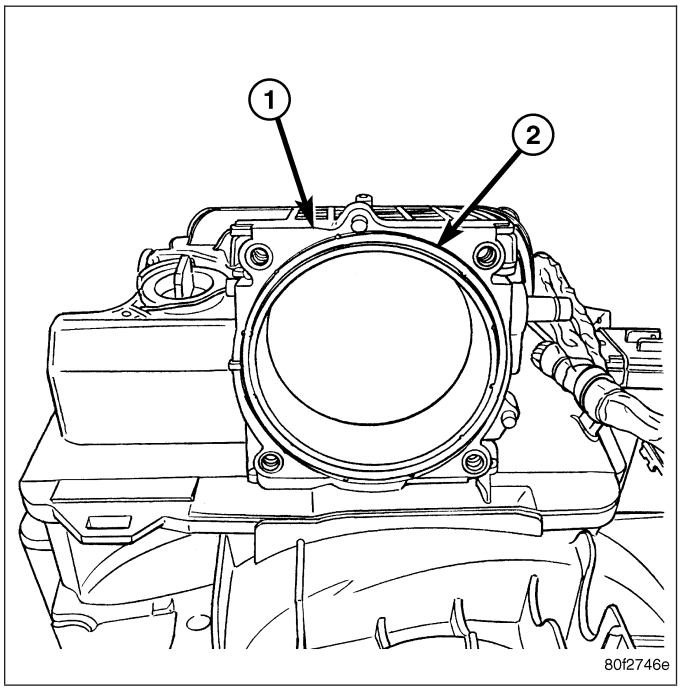

https://truckmanualshub.com/

4. Install 4 mounting bolts. (Refer to 14 - FUEL SYSTEM/FUEL DELIVERY - SPECIFICATIONS)
5. Install electrical connector.
6. Install air plenum.
7. **If the throttle body has been changed, the following procedure must be performed:**
   a. Disconnect negative battery cable from battery. Leave cable disconnected for approximately 90 seconds.
   b. Reconnect cable to battery.
   c. Turn ignition switch ON, but do not crank engine.
   d. Leave ignition switch ON for a minimum of 10 seconds. This will allow PCM to learn throttle body electrical parameters.

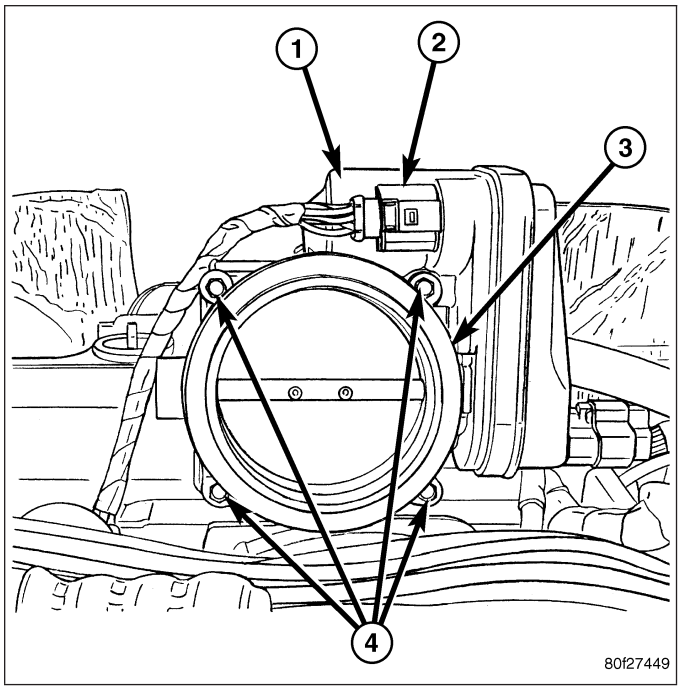

8.3L - SRT-10

1. Mount throttle body and wiring clips , tighten bolts to 12 N.m (105 in. lbs.).
2. Connect electrical connector to throttle position sensor.
3. Install the throttle cable.
4. Install the air cleaner housing, refer to Engine/Air Intake System/Air Cleaner Housing.
5. Connect the negative battery cable and install the battery cover.

https://truckmanualshub.com/

CABLE - THROTTLE CONTROL

REMOVAL

3.7L V-6

CAUTION: Be careful not to damage or kink cable core wire (within cable sheathing) while servicing accelerator pedal or throttle cable.

1. From inside vehicle, hold up accelerator pedal. Remove plastic cable retainer (clip) and throttle cable core wire from upper end of pedal arm. Plastic cable retainer snaps into top of pedal arm.
2. Remove cable core wire at pedal arm.
3. From inside vehicle, remove metal clip holding cable to dashpanel.
4. Remove air resonator box at throttle body.
5. Unsnap cable from dashpanel routing clip.
6. Remove cable housing from dash panel and pull into engine compartment.
7. Hold throttle in wide open position. While held in this position, slide throttle cable pin (1) from throttle body bellcrank.

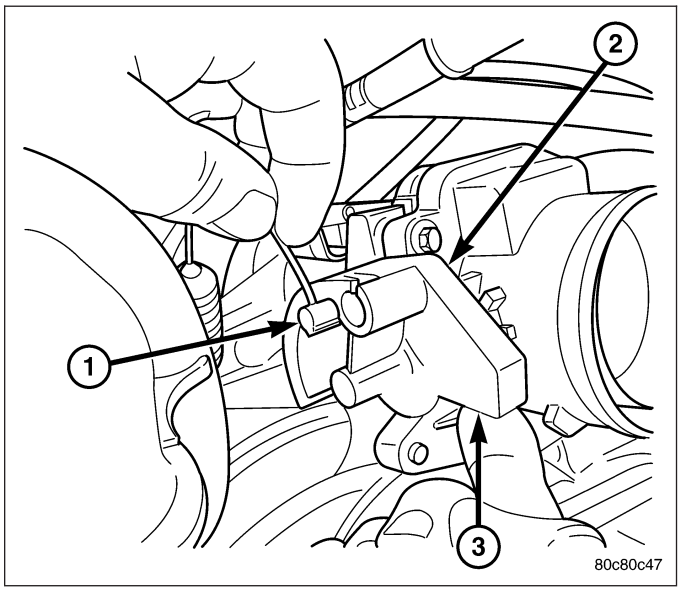

8. Using a pick or small screwdriver (3), press release tab (2) to release plastic (4) cable mount from bracket. **Press on tab only enough to release cable from bracket. If tab is pressed too much, it will be broken.** Slide plastic mount towards right side of vehicle to remove throttle cable from throttle body bracket.
9. Remove throttle cable from vehicle.

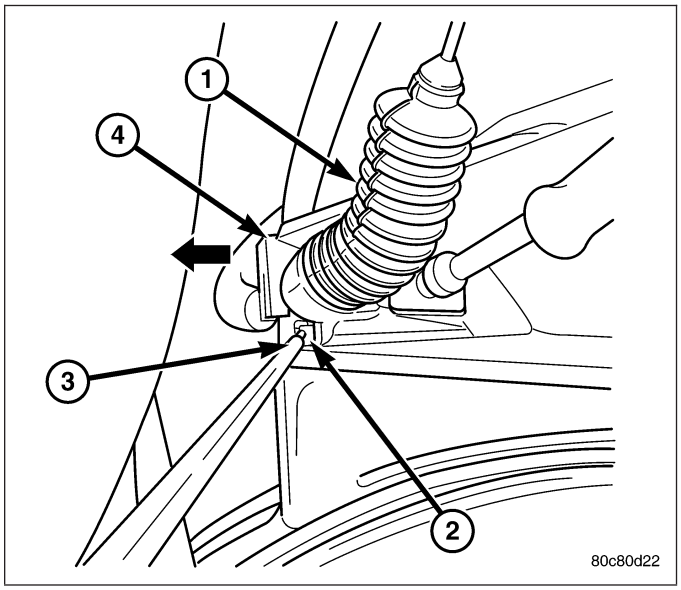

4.7L V-8

CAUTION: Be careful not to damage or kink cable core wire (within cable sheathing) while servicing accelerator pedal or throttle cable.

https://truckmanualshub.com/

1. From inside vehicle, hold up accelerator pedal. Remove plastic cable retainer (clip) and throttle cable core wire from upper end of pedal arm. Plastic cable retainer (clip) snaps into pedal arm.
2. Remove cable core wire at pedal arm.
3. From inside vehicle, remove cable clip holding cable to dashpanel.
4. Remove air box at throttle body.
5. Unsnap cable from dashpanel routing clip.
6. Remove cable housing from dash panel and pull into engine compartment.
7. Using finger pressure only, disconnect accelerator cable connector at throttle body bellcrank pin by pushing connector off bellcrank pin towards front of vehicle. **DO NOT try to pull connector off perpendicular to bellcrank pin. Connector will be broken.**
8. Lift accelerator cable from top of cable cam.

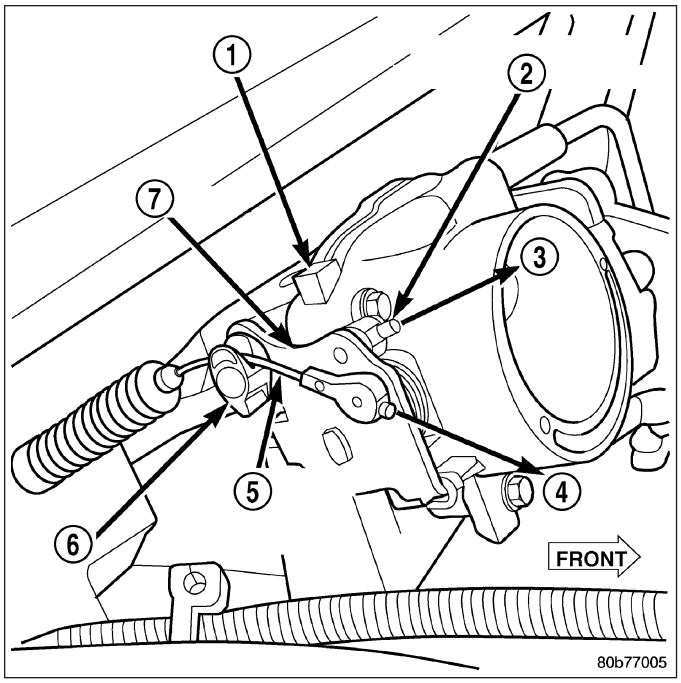

9. Press tab (3) to release plastic cable mount from bracket. **Press on tab only enough to release cable from bracket. If tab is pressed too much, it will be broken.** Slide plastic mount towards passenger side of vehicle to remove cable from bracket.
10. Remove throttle cable from vehicle.

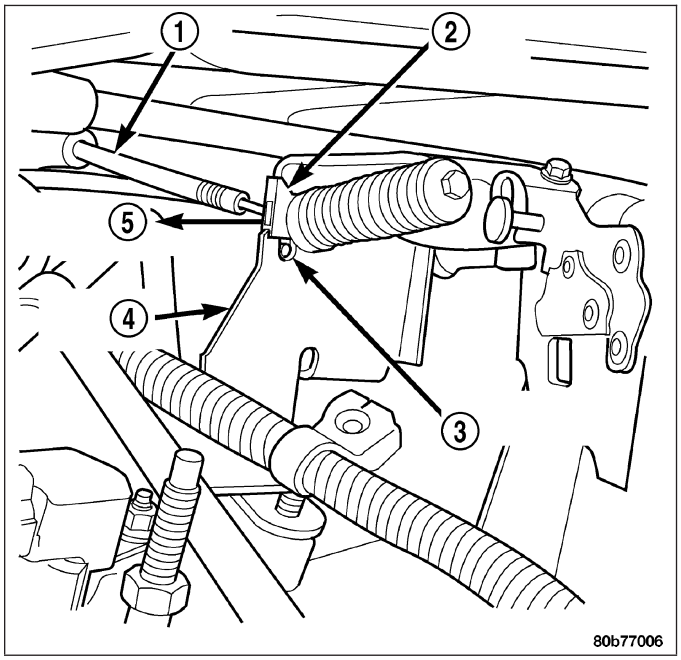

5.7L V-8

The Throttle Control Cable on the 5.7L V-8 engine connects the accelerator pedal to the Accelerator Pedal Position Sensor (APPS). A separate mechanical cable is not routed to the throttle body.

CAUTION: Be careful not to damage or kink cable core wire (within cable sheathing) while servicing accelerator pedal, cables or APPS.

1. From inside vehicle, hold up accelerator pedal. Remove plastic cable retainer and throttle cable core wire from upper end of pedal arm. The plastic cable retainer snaps into pedal arm.
2. Remove cable core wire at pedal arm.
3. Remove APPS. Refer to Accelerator Pedal Position Sensor (APPS) Removal / Installation.
4. From inside vehicle, remove cable clip.
5. Remove cable housing from dash panel and pull cable into engine compartment.

https://truckmanualshub.com/

6. Remove cable housing at APPS bracket by pressing on release tab with a small screwdriver. **To prevent cable housing breakage, press on tab only enough to release cable from APPS bracket.**

INSTALLATION

3.7L V-6

1. Slide accelerator cable plastic mount into throttle body mounting bracket. Continue sliding until release tab is aligned to hole in mounting bracket.
2. Hold throttle in wide open position. While held in this position, slide throttle cable pin into throttle body bellcrank.
3. Push cable housing into rubber grommet and through opening in dash panel.
4. From inside vehicle, install metal clip holding cable to dashpanel.
5. From inside vehicle, slide throttle cable core wire into opening (slot) in top of pedal arm.
6. Push plastic cable retainer (clip) into pedal arm opening until it snaps in place.
7. Install air resonator tube to throttle body.
8. Before starting engine, operate accelerator pedal to check for any binding.

4.7L V-8

1. Slide accelerator cable plastic mount into bracket. Continue sliding until tab is aligned to hole in mounting bracket.
2. Route accelerator cable over top of cable cam.
3. Connect cable end to throttle body bellcrank pin (snaps on rearward).
4. Slide rubber grommet away from plastic cable housing.
5. Install rubber grommet into dash panel until seated.
6. Push cable housing into rubber grommet and through opening in dash panel.
7. From inside vehicle, install clip holding cable to dashpanel.
8. From inside vehicle, slide throttle cable core wire into opening in top of pedal arm.
9. Push cable retainer (clip) into pedal arm opening until it snaps in place.
10. Snap cable into dashpanel routing clip.
11. Install air resonator tube to throttle body.
12. Before starting engine, operate accelerator pedal to check for any binding.

5.7L V-8

1. Attach cable to Accelerator Pedal Position Sensor (APPS). Refer to APPS Removal / Installation.
2. Push cable housing into rubber grommet and through opening in dash panel.
3. From inside vehicle, install clip holding cable to dashpanel.
4. From inside vehicle, slide throttle cable core wire into opening in top of pedal arm.
5. Push cable retainer (clip) into pedal arm opening until it snaps in place.
6. Before starting engine, operate accelerator pedal to check for any binding.
7. If necessary, use DRB III® Scan Tool to erase any APPS Diagnostic Trouble Codes (DTC's) from PCM.

https://truckmanualshub.com/

SENSOR-THROTTLE POSITION

DESCRIPTION

3.7/4.7/5.7L

The 3-wire Throttle Position Sensor (TPS) (2) is mounted on the throttle body and is connected to the throttle blade shaft.

The 5.7L V-8 engine does not use a separate TPS on the throttle body.

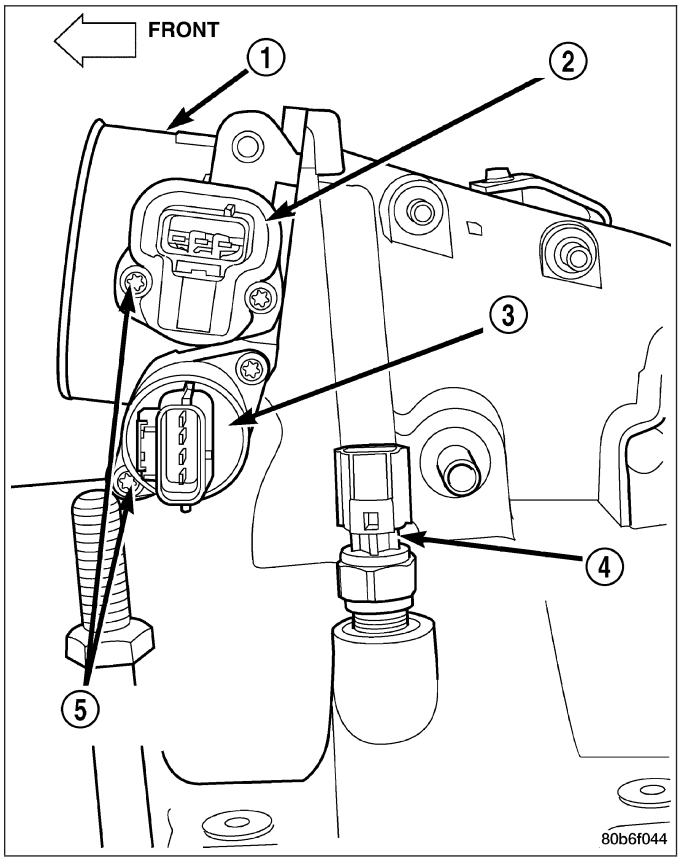

8.3L - SRT-10

The TPS (1) is mounted on the passenger side of the throttle body. The sensor connects to the throttle blade shaft. The TPS is a variable resistor that provides the Powertrain Control Module (PCM) with an input signal (voltage).

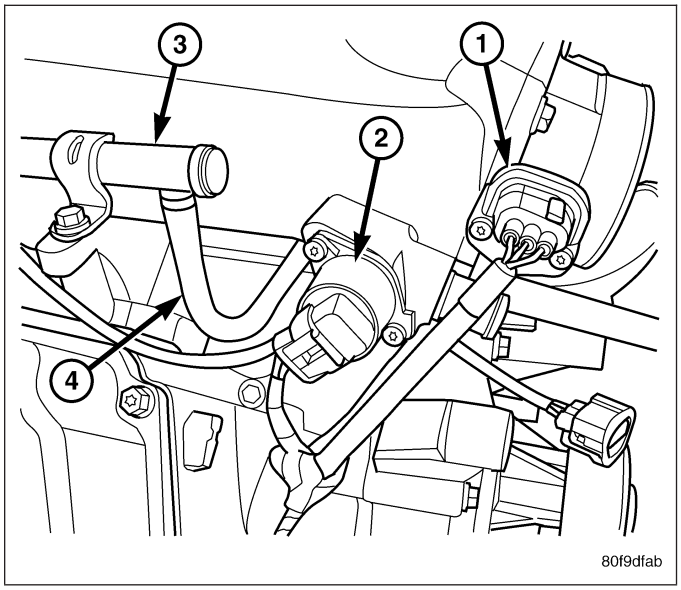

https://truckmanualshub.com/

OPERATION

The 5.7L V-8 engine does not use a separate Throttle Position Sensor (TPS) on the throttle body.

The 3-wire TPS provides the Powertrain Control Module (PCM) with an input signal (voltage) that represents the throttle blade position of the throttle body. The sensor is connected to the throttle blade shaft. As the position of the throttle blade changes, the output voltage of the TPS changes.

The PCM supplies approximately 5 volts to the TPS. The TPS output voltage (input signal to the PCM) represents the throttle blade position. The PCM receives an input signal voltage from the TPS. This will vary in an approximate range of from .26 volts at minimum throttle opening (idle), to 4.49 volts at wide open throttle. Along with inputs from other sensors, the PCM uses the TPS input to determine current engine operating conditions. In response to engine operating conditions, the PCM will adjust fuel injector pulse width and ignition timing.

The PCM needs to identify the actions and position of the throttle blade at all times. This information is needed to assist in performing the following calculations:

- Ignition timing advance
- Fuel injection pulse-width
- Idle (learned value or minimum TPS)
- Off-idle (0.06 volt)
- Wide Open Throttle (WOT) open loop (2.608 volts above learned idle voltage)
- Deceleration fuel lean out
- Fuel cutoff during cranking at WOT (2.608 volts above learned idle voltage)
- A/C WOT cutoff (certain automatic transmissions only)

REMOVAL

3.7L V6

The Throttle Position Sensor (TPS) (1) is mounted to the throttle body.

1. Remove air resonator tube at throttle body.
2. Disconnect TPS electrical connector.
3. Remove 2 TPS mounting screws.
4. Remove TPS.

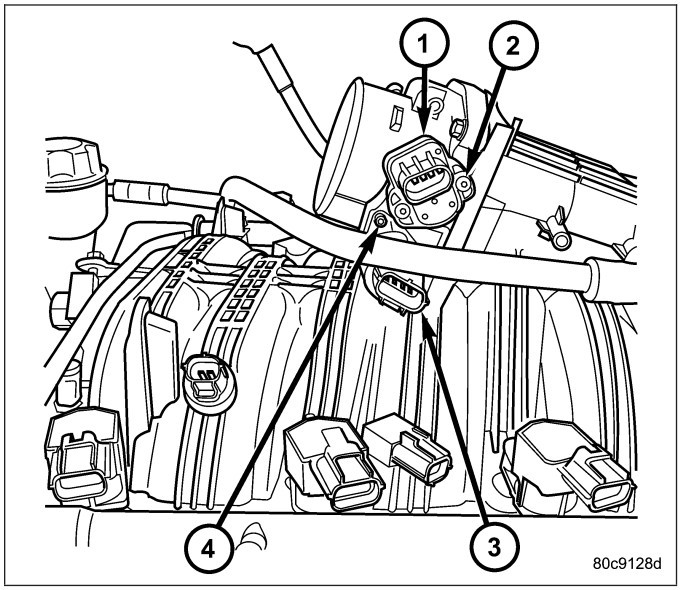

https://truckmanualshub.com/

4.7L V-8

The TPS (2) is located on the throttle body.

1. Remove air duct and tube at throttle body.
2. Disconnect TPS electrical connector.
3. Remove two TPS mounting bolts (screws).
4. Remove TPS from throttle body.

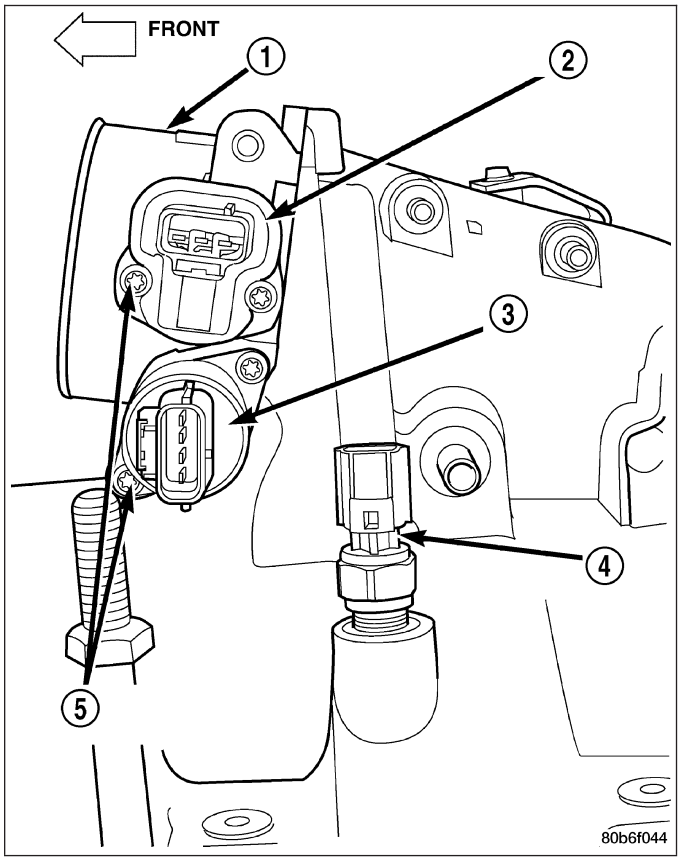

5.7L V-8

The 5.7L V-8 engine does not use a separate Throttle Position Sensor (TPS) on the throttle body.

8.3L - SRT-10

The TPS is attached to the throttle body.

1. Disconnect the TPS electrical connector.
2. Remove the TPS mounting screws.
3. Remove the TPS.

https://truckmanualshub.com/

INSTALLATION

3.7L V-6

The Throttle Position Sensor (TPS) (1) is mounted to the throttle body.

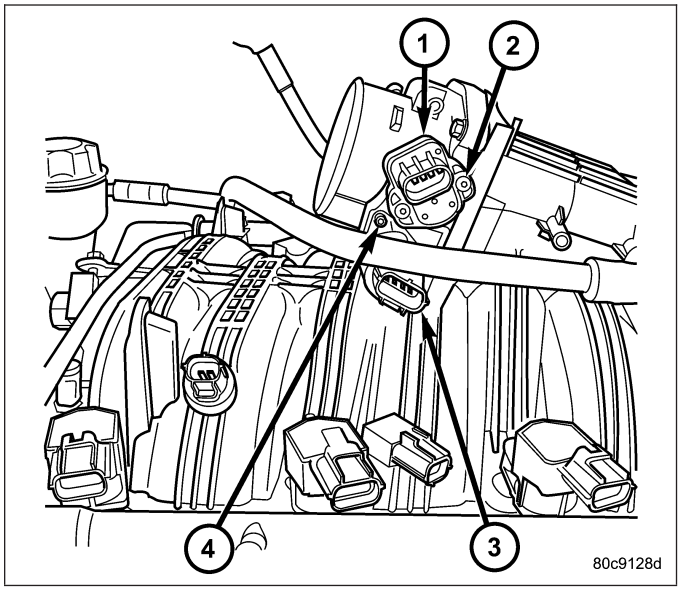

The throttle shaft end of throttle body slides into a socket in TPS. The TPS must be installed so that it can be rotated a few degrees. (If sensor will not rotate, install sensor with throttle shaft on other side of socket tangs). The TPS will be under slight tension when rotated.

1. Install TPS and retaining screws.
2. Tighten screws to 7 N·m (60 in. lbs.) torque.
3. Connect TPS electrical connector to TPS.
4. Manually operate throttle (by hand) to check for any TPS binding before starting engine.
5. Install air cleaner tube to throttle body.

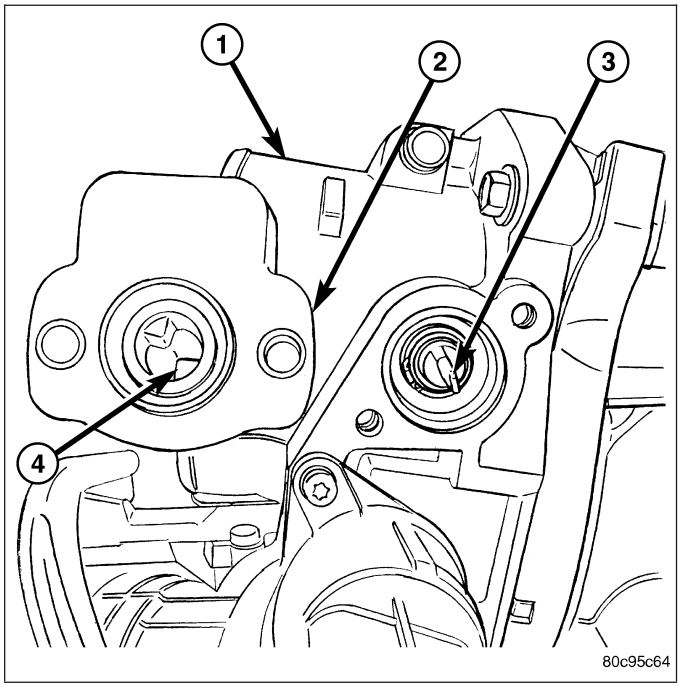

https://truckmanualshub.com/

4.7L V-8

The throttle shaft end of throttle body (5) slides into a socket in TPS. The TPS must be installed so that it can be rotated a few degrees. If sensor will not rotate, install sensor with throttle shaft on other side of socket tangs. The TPS will be under slight tension when rotated.

1. Install TPS and two retaining bolts.
2. Tighten bolts to 7 N·m (60 in. lbs.) torque.
3. Manually operate throttle control lever by hand to check for any binding of TPS.
4. Connect TPS electrical connector to TPS.
5. Install air duct/air box to throttle body.

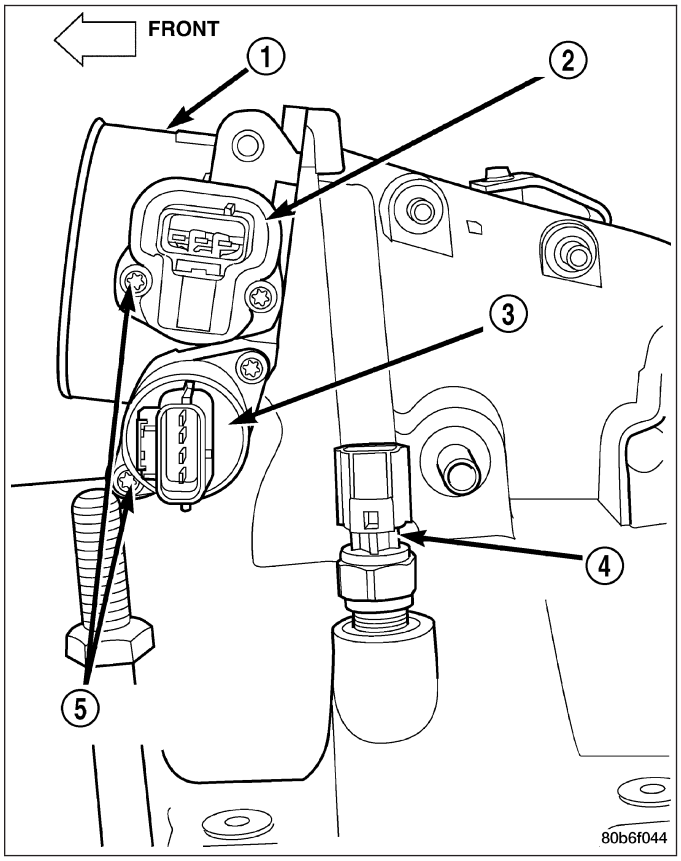

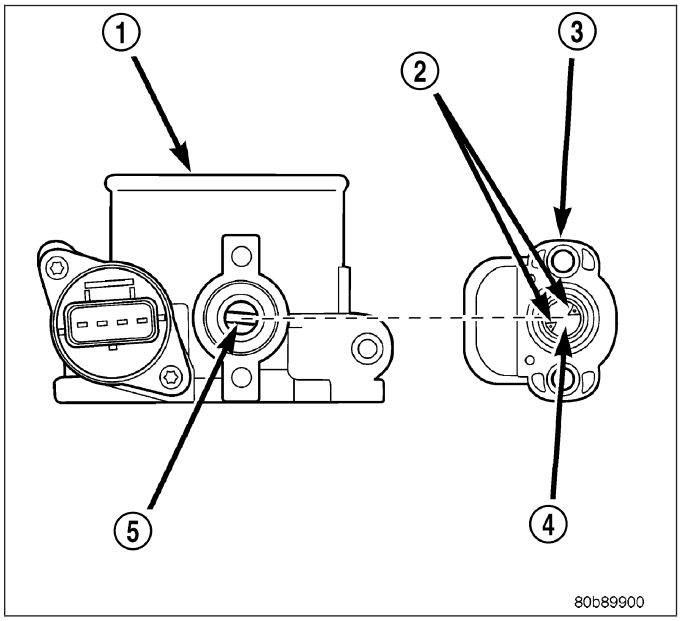

https://truckmanualshub.com/

8.3L - SRT-10

The TPS is attached to the throttle body.

The throttle shaft end of the throttle body slides into a socket in the TPS. When indexed correctly, the TPS can rotate a few degrees to line up the mounting screw holes with the screw holes in the throttle body. If the sensor will not rotate into place, install the sensor with the throttle shaft on the other side of the socket tangs. The TPS has slight tension when rotated to align the mounting holes.

1. Install TPS and mounting screws.
2. Attach electrical connector to the TPS.

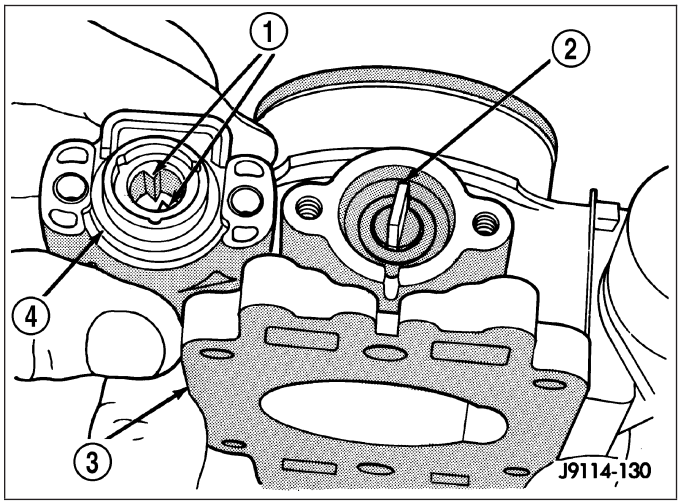

https://truckmanualshub.com/

FUEL DELIVERY - DIESEL

TABLE OF CONTENTS

page

FUEL DELIVERY - DIESEL
DESCRIPTION - DIESEL FUEL SYSTEM 105
STANDARD PROCEDURE
WATER DRAINING AT FUEL FILTER 106
CLEANING FUEL SYSTEM PARTS 106
FUEL SYSTEM PRIMING 106
DRAINING FUEL TANK - DIESEL 107
SPECIFICATIONS
FUEL INJECTOR FIRING ORDER - DIESEL . . 107
TORQUE 107
SPECIAL TOOLS
DIESEL FUEL SYSTEM 109
FILTER - FUEL / WATER SEPARATOR
DESCRIPTION 111
OPERATION 111
REMOVAL 111
INSTALLATION 113
HEATER-FUEL
DESCRIPTION 115
OPERATION 115
DIAGNOSIS AND TESTING
FUEL HEATER 115
REMOVAL 116
PUMP - FUEL INJECTION
DESCRIPTION 117
OPERATION 117
DIAGNOSIS AND TESTING
FUEL INJECTION PUMP TIMING 117
REMOVAL 117
INSTALLATION 120
SENSOR - FUEL LEVEL SENDING UNIT
DESCRIPTION 124
OPERATION 124
REMOVAL
REMOVAL/INSTALLATION 124
LINES - FUEL
DESCRIPTION 125
OPERATION 125
DIAGNOSIS AND TESTING
HIGH-PRESSURE FUEL LINE LEAKS 125
REMOVAL 126
INSTALLATION 127
SENSOR - FUEL PRESSURE
DESCRIPTION 129
OPERATION 129
REMOVAL 129
INSTALLATION 129
VALVE - FUEL PRESSURE LIMITING
DESCRIPTION 130
OPERATION 130
REMOVAL 130
INSTALLATION 131
TANK - FUEL
DESCRIPTION 132
REMOVAL 132
INSTALLATION 133
MODULE - FUEL TANK
DESCRIPTION 134
OPERATION 134
REMOVAL 134
INSTALLATION 134
PUMP - FUEL TRANSFER
DESCRIPTION 136
OPERATION 136
REMOVAL 136
INSTALLATION 136
VALVE - CASCADE OVERFLOW
DESCRIPTION 137
OPERATION 137
SENSOR-WATER IN FUEL
DESCRIPTION 138
OPERATION 138
REMOVAL 138
CIRCUIT - FUEL DRAIN
OPERATION 139

https://truckmanualshub.com/

FUEL DELIVERY - DIESEL

DESCRIPTION - DIESEL FUEL SYSTEM

WARNING: High-pressure fuel lines deliver diesel fuel under extreme pressure from the injection pump to the fuel injectors. This may be as high as 160,000 kpa (23,206 psi). Use extreme caution when inspecting for high-pressure fuel leaks. Inspect for high-pressure fuel leaks with a sheet of cardboard. High fuel injection pressure can cause personal injury if contact is made with the skin.

ART UNDER CONSTRUCTION

The fuel system used on the Cummins engine is an electronically controlled, Bosch HPCR (High-Pressure Common Rail) system. The HPCR system consists of five main components:

- Electric Fuel Transfer (lift) Pump Located in the Fuel Tank
- Fuel Pump/Gear Pump (attached to fuel injection pump)
- High-Pressure Fuel Injection Pump
- Fuel Injection Rail
- Fuel Injectors

Also to be considered as part of the overall fuel system are:

- Accelerator Pedal
- Air Cleaner Housing/Element
- Check Valve Banjo Fitting at Rear of Cylinder Head
- Fuel Connector Tubes
- Fuel Drain Manifold (passage)
- Fuel Drain Valve (at filter)
- Fuel Filter/Water Separator
- Fuel Heater
- Fuel Heater Relay
- Fuel Transfer Pump Relay
- Fuel Level (gauge) Sending Unit
- Fuel Pressure Limiting Valve
- Fuel Tank
- Fuel Tank Module (containing a fuel gauge sending unit, separate fuel filter located at bottom of tank module, and fuel transfer pump)
- Fuel Tank Filler/Vent Tube Assembly
- Fuel Tank Filler Tube Cap
- Fuel Tubes/Lines/Hoses
- High-Pressure Fuel Injector Lines
- In-Tank Fuel Filter (at bottom of fuel tank module)
- Low-Pressure Fuel Supply Lines
- Low-Pressure Fuel Return Lines
- Overflow Valve
- Quick-Connect Fuel Line Fittings
- Accelerator Pedal Position Sensor (APPS) Located in Cab
- Water Draining (maintenance)
- Water-In-Fuel (WIF) Sensor
- Screened Banjo Bolt (22)

The fuel injection pump supplies high pressure to the fuel rail independent of engine speed. This high pressure fuel is then accumulated in the fuel rail. High pressure fuel is constantly supplied to the injectors by the fuel rail. The Engine Control Module (ECM) controls the fueling and timing of the engine by actuating the injectors.

https://truckmanualshub.com/

Fuel enters the system from the electric fuel transfer (lift) pump, which is located inside of the fuel tank and attached to the fuel tank module (the fuel transfer pump is no longer attached to the engine). Fuel is forced through the fuel filter element and then enters the Fuel Pump/Gear Pump, which is attached to the rear of the fuel injection pump. The Fuel Pump/Gear Pump is a low-pressure pump and produce pressures ranging from 551.5 kpa (80 psi) to 1241 kpa (180) psi. Fuel then enters the fuel injection pump. Low pressure fuel is then supplied to the FCA (Fuel Control Actuator).

The FCA is an electronically controlled solenoid valve. The ECM controls the amount of fuel that enters the high-pressure pumping chambers by opening and closing the FCA based on a demanded fuel pressure. The FPS (Fuel Pressure Sensor) on the fuel rail monitors the actual fuel pressure and provides it as an input to the ECM. When the actuator is opened, the maximum amount of fuel is being supplied to the fuel injection pump. Any fuel that does not enter the injection pump is directed to the overflow valve. The overflow valve regulates how much excess fuel is used for lubrication of the pump and how much is returned to the tank through the drain manifold.

Fuel entering the injection pump is pressurized to between 300-1600 bar (4351-23,206 psi) by three radial pumping chambers. The pressurized fuel is then supplied to the fuel rail.

STANDARD PROCEDURE

WATER DRAINING AT FUEL FILTER

Refer to Fuel Filter/Water Separator removal/installation for procedures.

CLEANING FUEL SYSTEM PARTS

CAUTION: Cleanliness cannot be overemphasized when handling or replacing diesel fuel system components. This especially includes the fuel injectors, high-pressure fuel lines and fuel injection pump. Very tight tolerances are used with these parts. Dirt contamination could cause rapid part wear and possible plugging of fuel injector nozzle tip holes. This in turn could lead to possible engine misfire. Always wash/clean any fuel system component thoroughly before disassembly and then air dry. Cap or cover any open part after disassembly. Before assembly, examine each part for dirt, grease or other contaminants and clean if necessary. When installing new parts, lubricate them with clean engine oil or clean diesel fuel only.

FUEL SYSTEM PRIMING

A certain amount of air becomes trapped in the fuel system when fuel system components on the supply and/or high-pressure side are serviced or replaced. Fuel system priming is accomplished using the electric fuel transfer (lift) pump.

Servicing or replacing fuel system components will not require fuel system priming.

The fuel transfer (lift) pump is self-priming: When the key is first turned on (without cranking engine), the pump operates for approximately 1 to 2 second and then shuts off (Note: When ambient temperatures are cold enough to cause the intake air heaters to operate, the fuel lift pump will operate during the entire intake air pre-heat cycle). The pump will also operate for up to 25 seconds after the starter is quickly engaged, and then disengaged without allowing the engine to start. The pump shuts off immediately if the key is on and the engine stops running.

1. Turn key to CRANK position and quickly release key to ON position before engine starts. This will operate fuel transfer pump for approximately 25 seconds.
2. Crank engine. If the engine does not start after 25 seconds, turn key to OFF position, and leave it off for at least 5 seconds. Repeat previous step until engine starts.
3. Fuel system priming is now completed.
4. Attempt to start engine. If engine will not start, proceed to following steps. **When engine does start, it may run erratically and be noisy for a few minutes. This is a normal condition.**

CAUTION: Do not engage the starter motor for more than 30 seconds at a time. Allow two minutes between cranking intervals.

5. Perform previous fuel priming procedure steps using fuel transfer pump. Be sure fuel is present at fuel tank.
6. Crank the engine for 30 seconds at a time to allow fuel system to prime.

https://truckmanualshub.com/

WARNING: The fuel injection pump supplies extremely high fuel pressure to each individual injector through the high-pressure lines. Fuel under this amount of pressure can penetrate the skin and cause personal injury. Wear safety goggles and adequate protective clothing. Do not loosen fuel fittings while engine is running.

WARNING: Engine may start while cranking starter motor.

DRAINING FUEL TANK - DIESEL

Due to a one-way check valve installed into the fuel fill opening fitting at the tank, the tank cannot be drained conventionally at the fill cap.

1. Raise vehicle.
2. If vehicle is equipped with 4 doors and a 6 foot (short) box, remove left-rear tire/wheel.
3. Thoroughly clean area at top of fuel tank around fuel tank module.
4. Loosen clamp and disconnect rubber fuel fill hose at tank.
5. Drain fuel tank by attaching drain hose from an approved diesel fuel draining station to the fuel fill fitting of tank.

SPECIFICATIONS

FUEL INJECTOR FIRING ORDER - DIESEL

1–5–3–6–2–4

TORQUE

DESCRIPTION	N-m	Ft. Lbs.	In. Lbs.
Crankshaft Position Sensor	9		80
Camshaft Position Sensor	9	-	80
Engine Coolant Temperature Sensor	18	13	160
Rear Engine Lift Bracket Bolts	77	56	-
Fuel Connector Nut at Cylinder Head	50	37	-
Fuel Filler Hose Clamp at Tank	3	-	27
Fuel Filler Housing-to-Body Screws	2	-	17
Fuel Filter Lid	34	25	-
Fuel Filter Drain Valve Screws	1.5	-	14
Fuel Heater Element Screws	1.5	-	14
Fuel Line Banjo Fitting Bolts	24	18	-
Screened Banjo Bolt	24	18	-
Fuel Line Banjo Fitting Bolts at Fuel Filter Housing	24	18	-

https://truckmanualshub.com/

DESCRIPTION	N-m	Ft. Lbs.	In. Lbs.
Fuel Line Fittings (High-Pressure - Pump to Rail)	37	27	-
Fuel Line Fittings (High-Pressure - Cylinder Head to Rail)	30	22	-
#6 Fuel Line Shield Bolts	43	32	-
Fuel Injector Solenoid Nuts	1.25	-	11
Fuel Injection Pump-to-Gear Shaft Nut	105	77	-
Fuel Injection Pump Mounting Nuts	24	18	-
Fuel Line Brace-to-Intake Manifold Cover Bolt (High-Pressure)	24	18	-
Fuel Pressure Sensor	70	52	-
Fuel Pressure Limiting Valve (Banjo Bolt)	24	18	-
Fuel Pressure Limiting Valve (In Fuel Rail)	70	52	-
Fuel Rail Mounting Bolts	24	18	212
Fuel Tank Mounting Straps	41	30	-
Map Sensor Mounting Screws	1	-	9
ECM-to-Engine Bracket Mounting Bolts	24	18	-
ECM Electrical Harness Connector	3	-	27
Water-In-Fuel Sensor	4.5	-	39

https://truckmanualshub.com/

SPECIAL TOOLS

DIESEL FUEL SYSTEM

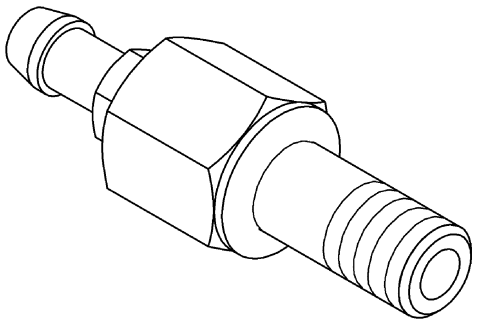

FUEL PRESSURE TEST ADAPTER - # 9012

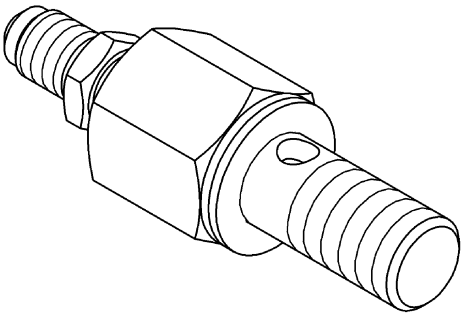

FUEL PRESSURE TEST ADAPTER - #9014

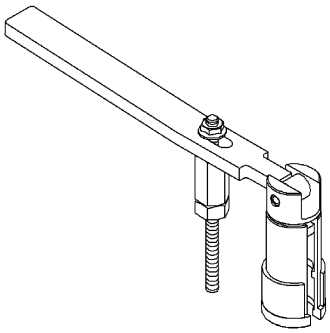

FUEL INJECTOR REMOVER - #9010

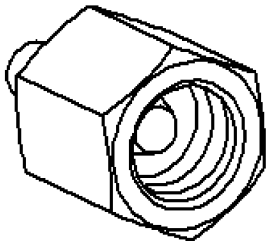

PRESSURE CAP - #9011

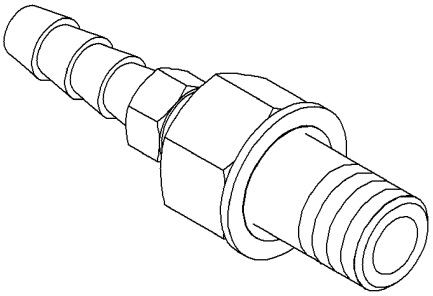

FUEL PRESSURE TEST ADAPTER - #9013

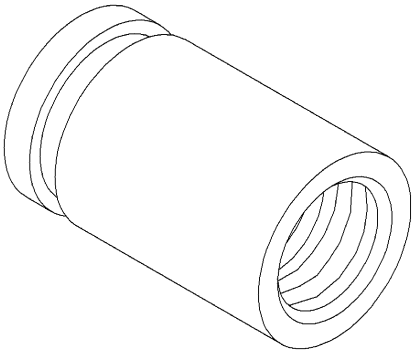

FUEL INJECTOR TUBE (CONNECTOR) REMOVER - #9015

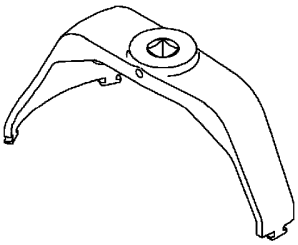

LOCKRING REMOVER/INSTALLER #9340

https://truckmanualshub.com/

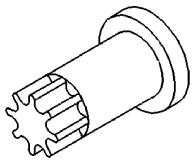

ENGINE ROTATING (BARRING) TOOL - #7471B
(ALSO PART OF KIT #6860)

https://truckmanualshub.com/

FILTER - FUEL / WATER SEPARATOR

DESCRIPTION

The fuel filter/water separator assembly is located on left side of engine above the starter motor. The assembly also includes the fuel heater, Water-In-Fuel (WIF) sensor and a screened banjo bolt attached at the bottom of the fuel filter canister.

OPERATION

The fuel filter/water separator protects the fuel injection pump by removing water and contaminants from the fuel. The construction of the filter/separator allows fuel to pass through it, but helps prevent moisture (water) from doing so. Moisture collects at the bottom of the canister.

Refer to the maintenance schedules in the owners manual for the recommended fuel filter replacement intervals.

For draining of water from canister, refer to Fuel Filter/Water Separator Removal/Installation section.

There is a screened banjo bolt that is attached at the bottom of the fuel filter canister. It provides additional filtering for the high pressure fuel system components.

A Water-In-Fuel (WIF) sensor is attached to the side of fuel filter housing. Refer to Water-In-Fuel Sensor Description/Operation.

The fuel heater is installed into the top of the filter/separator housing. Refer to Fuel Heater Description/Operation.

REMOVAL

Refer to maintenance schedules in this manual, or the Owner's Manual for recommended fuel filter replacement intervals.

Draining water from fuel filter/water separator housing:

The housing drain valve (9) serves two purposes. One is to **partially** drain the filter housing of excess water. The other is to **completely** drain the housing for fuel filter, drain valve, heater element or water-in-fuel sensor replacement.

The filter housing should be partially drained whenever the water-in-fuel warning lamp remains illuminated. (Note that lamp will be illuminated for approximately two seconds when ignition key is initially placed in ON position for a bulb check).

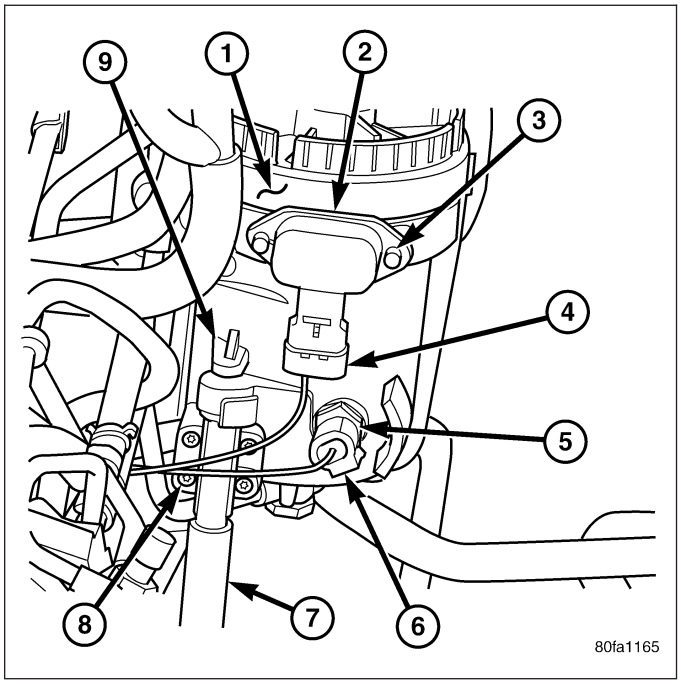

1. A drain hose (7) is located at the bottom of drain valve. Place drain pan under drain hose.
2. **With engine not running,** rotate drain valve handle counter-clockwise (rearward) to OPEN (DRAIN) position. Hold drain valve open until all water and contaminants have been removed and clean fuel exits.
3. If drain valve, fuel heater element or Water-In-Fuel (WIF) sensor is being replaced, drain housing completely. Dispose of mixture in drain pan according to applicable regulations.
4. After draining operation, rotate valve handle clockwise (forward) to the CLOSE position.

https://truckmanualshub.com/

5. **Fuel Filter Replacement:** The fuel filter is located inside of the fuel filter housing.
   a. Clean all debris from around canister.
   b. Remove filter lid (1) using a socket. Attach socket to large hex (2) on top of lid. Rotate counterclockwise for removal. Remove O-ring. Discard O-ring.
   c. Remove filter element by twisting element sideways from filter lid.

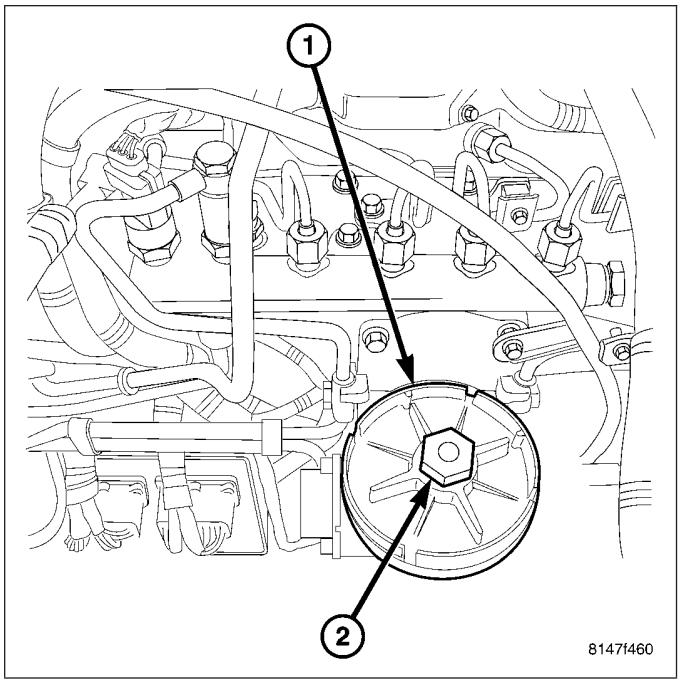

6. **Water-In-Fuel (WIF) Sensor Replacement:** The WIF sensor (5) is located on the side of the fuel filter housing.
   a. Disconnect electrical connector at sensor.
   b. Clean area around sensor.
   c. Remove sensor by rotating counterclockwise.
   d. Check condition of sensor O-ring. Replace if damaged.

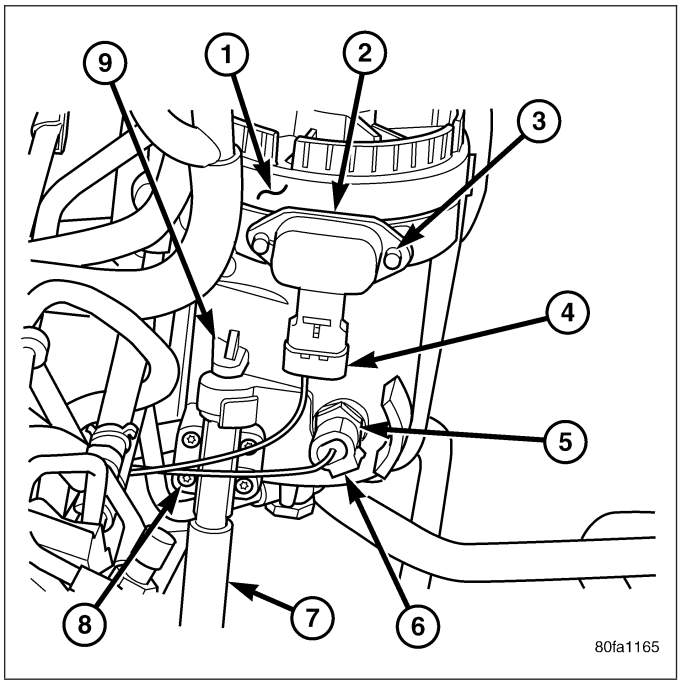

https://truckmanualshub.com/

7. **Fuel Heater Element Replacement:** The heater element (2) is located in the fuel filter housing.
   a. Remove fuel filter. See previous steps.
   b. Disconnect electrical connector.
   c. Remove two T-15 Torx head mounting screws (3) from fuel heater element.
   d. Remove fuel heater.

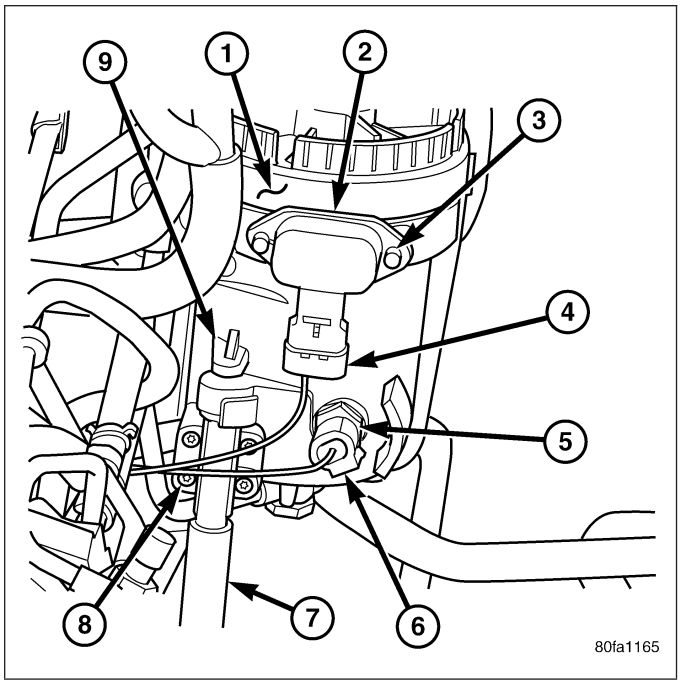

8. **Drain Valve Replacement:** The drain valve assembly (9) is located on the side of the fuel filter housing.
   a. Disconnect drain hose (7) from the fuel drain valve.
   b. Remove 4 drain valve mounting screws (T-15 Torx head) (8).
   c. Remove drain valve from filter housing.
9. Remove the screened banjo bolt (9) that is located on the bottom of the fuel filter housing. It attaches the Injection Pump supply line to the fuel filter housing.

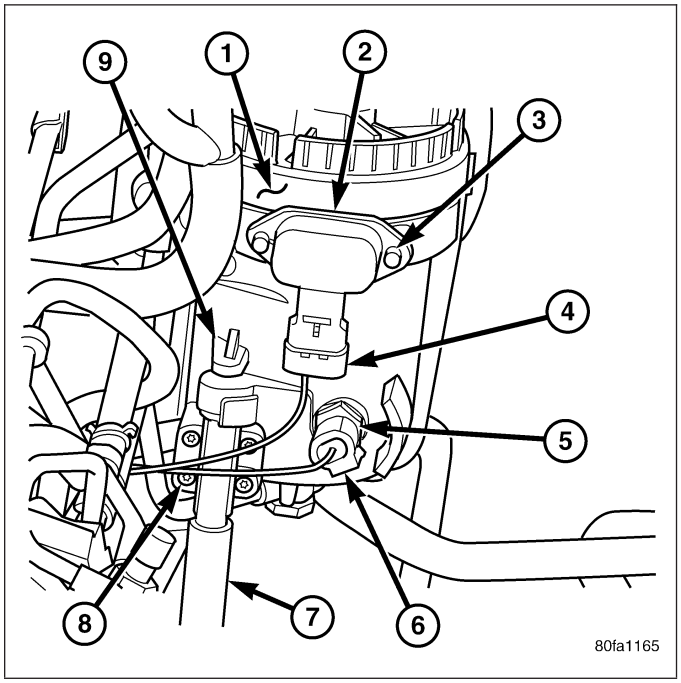

INSTALLATION

Refer to maintenance schedules for recommended fuel filter replacement intervals.

1. Thoroughly clean inside of filter housing, filter cap and all related components.
2. **Fuel Filter:**
   a. **The engine has a self-priming low-pressure fuel system. Refer to Standard Procedures-Fuel System Priming.**
   b. Install new O-ring to canister lid and lubricate O-ring with clean engine oil.
   c. Position new element to canister lid. Place this assembly into canister by rotating clockwise.
   d. Tighten cap to 34 N·m (25 ft. lbs.) torque. Do not overtighten cap.
3. **Water-In-Fuel (WIF) Sensor:**

https://truckmanualshub.com/

a. Install new o-ring seal to WIF sensor.

b. Apply a light film of clean oil to o-ring seal.

c. Install sensor into housing.

d. Tighten sensor to 2.5 N·m (25 in. lbs.) torque.

e. Connect electrical connector to WIF sensor.

4. **Fuel Heater Element:**

a. Install fuel heater into fuel filter housing.

b. Install fuel heater thermostat onto the outside of the fuel filter housing.

c. Install fuel heater mounting screws and tighten to 1-1.5 N·m (8 - 13 in. lbs.) torque.

d. Connect electrical connector to fuel heater thermostat.

e. Install new filter cover O-ring onto fuel filter housing cover and lubricate with clean engine oil.

f. Tighten fuel filter housing cover (lid) to 34 N·m (25 ft. lbs.).

5. **Drain Valve:**

a. Install 2 new O-rings to valve.

b. Lubricate with silicon grease.

c. Install fuel drain valve.

d. Install 4 mounting screws and tighten to 1–1.5 N·m (8–13 in. lbs.) torque.

e. Connect drain hose to drain valve.

6. Install two new sealing washers to bolt.
7. Install screened banjo bolt Tighten to 24 N·m (18 ft. lbs.)
8. Start engine and check for leaks.

https://truckmanualshub.com/

HEATER-FUEL

DESCRIPTION

The fuel heater assembly is located on the side of the fuel filter housing and internal to the fuel filter housing .

The heater/element assembly is equipped with a temperature sensor (thermostat) that senses fuel temperature. This sensor is attached to the fuel heater/element assembly.

OPERATION

The fuel heater is used to prevent diesel fuel from waxing during cold weather operation.

When the fuel temperature is below 45° ±8 F (7°C), the temperature sensor allows current to flow to the heater element warming the fuel. When the fuel temperature is above 75° ±8 F (24°C), the sensor stops current flow to the heater element.

Battery voltage to operate the fuel heater element is supplied from the ignition switch and through a solid stated device in the IPM. **The fuel heater element and ″solid state device in IPM″ instead of ″fuel heater relay″ are not computer controlled.**

The heater element operates on 12 volts, 300 watts at 0° F (-18° C).

DIAGNOSIS AND TESTING

FUEL HEATER

The fuel heater is used to prevent diesel fuel from waxing during cold weather operation.

NOTE: The fuel heater element, ″solid state device in IPM″ instead of ″fuel heater relay″ and fuel heater temperature sensor are not controlled by the Engine Control Module (ECM).

A malfunctioning fuel heater can cause a wax build-up in the fuel filter/water separator. Wax build-up in the filter/separator can cause engine starting problems and prevent the engine from revving up. It can also cause blue or white fog-like exhaust. If the heater is not operating in cold temperatures, the engine may not operate due to fuel waxing.

The fuel heater assembly is located on the side of fuel filter housing and internal to the fuel filter housing.

The heater assembly is equipped with a built-in fuel temperature sensor (thermostat) that senses fuel temperature. When fuel temperature drops below 45° ± 8° F (7° C), the sensor allows current to flow to built-in heater element to warm fuel. When fuel temperature rises above 75 °± 8° F (24° C), the sensor stops current flow to heater element (circuit is open).

Voltage to operate fuel heater element is supplied from ignition switch, through ″solid state device in IPM″, to fuel temperature sensor and on to fuel heater element.

The heater element operates on 12 volts, 300 watts at 0 °F (-18° C). As temperature increases, power requirements decrease.

A minimum of 7 volts is required to operate the fuel heater. The resistance value of the heater element is less than 1 ohm (cold) and up to 1000 ohms warm.

TESTING

1. Disconnect electrical connector from thermostat.

Ambient temperature must be below the circuit close temperature. If necessary, induce this ambient temperature by placing ice packs on thermostat to produce an effective ambient temperature below circuit close temperature.

Measure resistance across two pins. Operating range is 0.3 - 0.45 Ohms.

2. If resistance is out of range, remove thermostat and check resistance across terminal connections of heater. The heater can be checked at room temperature. Operating range is 0.3 - 0.45 Ohms.
3. Replace heater if resistance is not within operating range.
4. If heater is within operating range, replace heater thermostat.

https://truckmanualshub.com/

REMOVAL

The fuel heater sensor/thermostat is located on the side of the fuel filter housing. The fuel heater element is located internal to the fuel filter housing. (Refer to 14 - FUEL SYSTEM/FUEL DELIVERY/FUEL FILTER / WATER SEPARATOR - REMOVAL).

https://truckmanualshub.com/

PUMP - FUEL INJECTION

DESCRIPTION

A Robert Bosch high-pressure fuel injection pump is used. The pump is attached to the back of the timing gear housing at the left /front side of the engine.

OPERATION

The fuel injection pump supplies high pressure to the fuel rail independent of engine speed. This high pressure is then accumulated in the fuel rail. High pressure fuel is constantly supplied to the injectors by the fuel rail. The Engine Control Module (ECM) controls the fueling and timing of the engine by actuating the injectors.

Fuel enters the system from the electric fuel transfer (lift) pump, which is located in the fuel tank. Fuel is forced through the fuel filter element and then enters the Fuel Pump/Gear Pump, which is attached to the rear of the fuel injection pump. The Fuel Pump/Gear Pump is a low-pressure pump and produce pressures ranging from 551.5 kpa (80 psi) to 1241 kpa (180) psi. Fuel then enters the fuel injection pump. Low pressure fuel is then supplied to the FCA (Fuel Control Actuator).

The FCA is an electronically controlled solenoid valve. The ECM controls the amount of fuel that enters the high-pressure pumping chambers by opening and closing the FCA based on a demanded fuel pressure. The FPS (Fuel Pressure Sensor) on the fuel rail provides the actual fuel pressure. When the actuator is opened, the maximum amount of fuel is being supplied to the fuel injection pump. Any fuel that does not enter the injection pump is directed to the cascade overflow valve. The cascade overflow valve regulates how much excess fuel is used for lubrication of the pump and how much is returned to the tank through the drain manifold.

Fuel entering the injection pump is pressurized to between 300-1600 bar (4351-23206 psi) by three radial pumping chambers. The pressurized fuel is then supplied to the fuel rail.

DIAGNOSIS AND TESTING

FUEL INJECTION PUMP TIMING

With the Bosch injection pump, there are no mechanical adjustments needed or necessary to accomplish fuel injection timing. All timing and fuel adjustments are electrically made by the engine mounted Engine Control Module (ECM).

REMOVAL

CAUTION: Cleanliness cannot be overemphasized when handling or replacing diesel fuel system components. This especially includes the fuel injectors, high-pressure fuel lines and fuel injection pump. Very tight tolerances are used with these parts. Dirt contamination could cause rapid part wear and possible plugging of fuel injector nozzle tip holes. This in turn could lead to possible engine misfire. Always wash/clean any fuel system component thoroughly before disassembly and then air dry. Cap or cover any open part after disassembly. Before assembly, examine each part for dirt, grease or other contaminants and clean if necessary. When installing new parts, lubricate them with clean engine oil or clean diesel fuel only.

https://truckmanualshub.com/

1. Disconnect both negative battery cables at both batteries. Cover and isolate ends of both cables.
2. Remove intake manifold air intake tube (above injection pump) and its rubber connector hose (2).
3. Remove accessory drive belt.

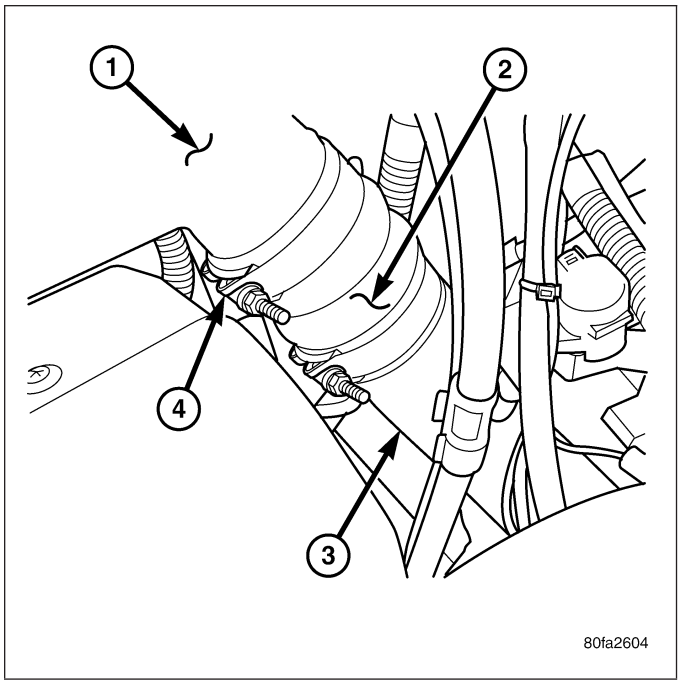

4. Thoroughly clean the rear of injection pump, and attachment points for its 3 fuel lines. Also clean the opposite ends of these same 3 lines at their attachment points.

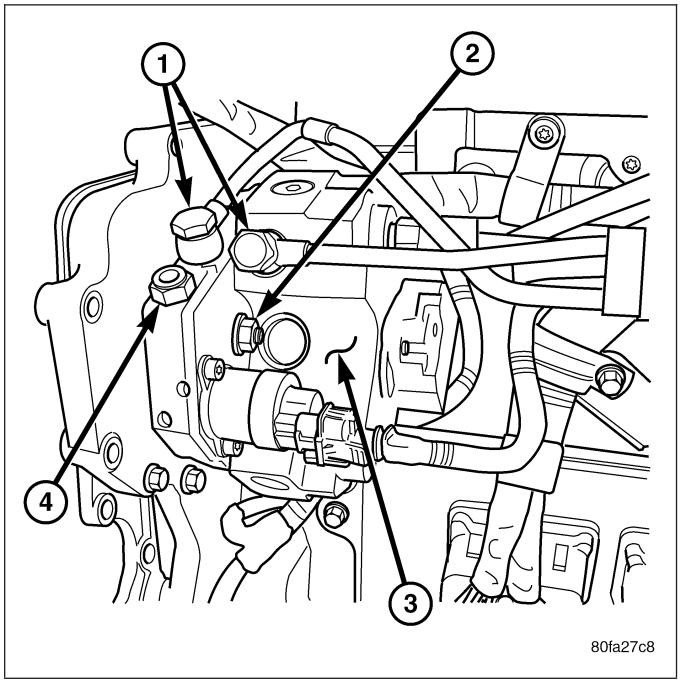

https://truckmanualshub.com/

5. Disconnect Fuel Control Actuator (FCA) electrical connector (3) at rear of injection pump.

CAUTION: Whenever a fuel line fitting is connected to a secondary fitting, always use a back-up wrench on the secondary fitting. Do not allow the secondary fitting to rotate.

6. Remove fuel line (injection pump-to-fuel pressure limiting valve).
7. Remove fuel line (injection pump-to-fuel rail). Use back-up wrench on fitting at fuel pump.
8. Remove fuel line (injection pump-to-fuel filter housing).

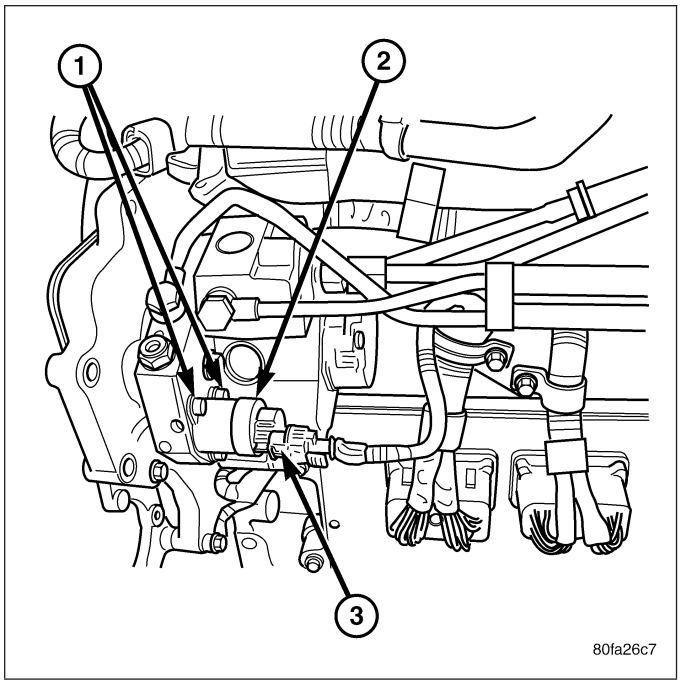

9. Remove fuel pump drive gear access cover with a 3/8” drive ratchet. Access cover (2) is threaded to timing gear cover.
10. Remove fuel pump drive gear mounting nut and washer.

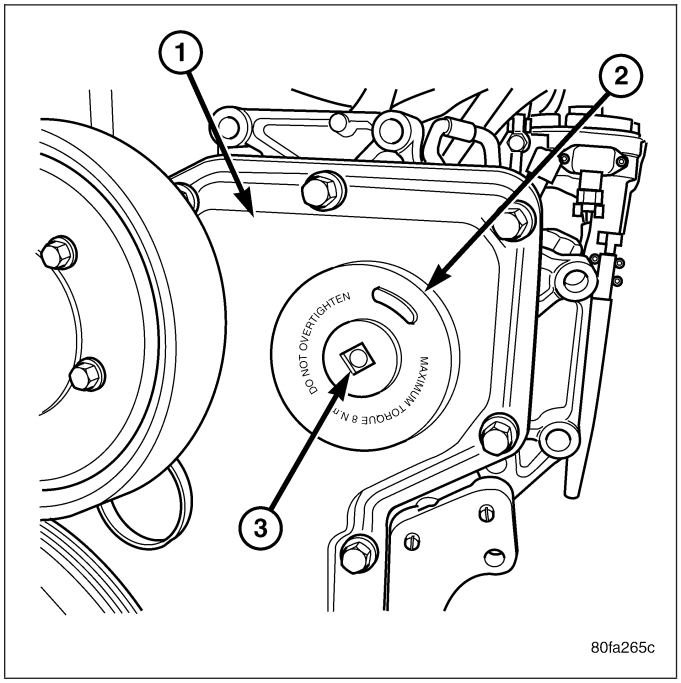

https://truckmanualshub.com/

11. Attach C3428B, or L4407A (or equivalent) gear puller (1) to pump drive gear with 2 bolts, and separate gear from pump (a keyway is not used on this particular injection pump). Leave drive gear hanging loose within timing gear cover.

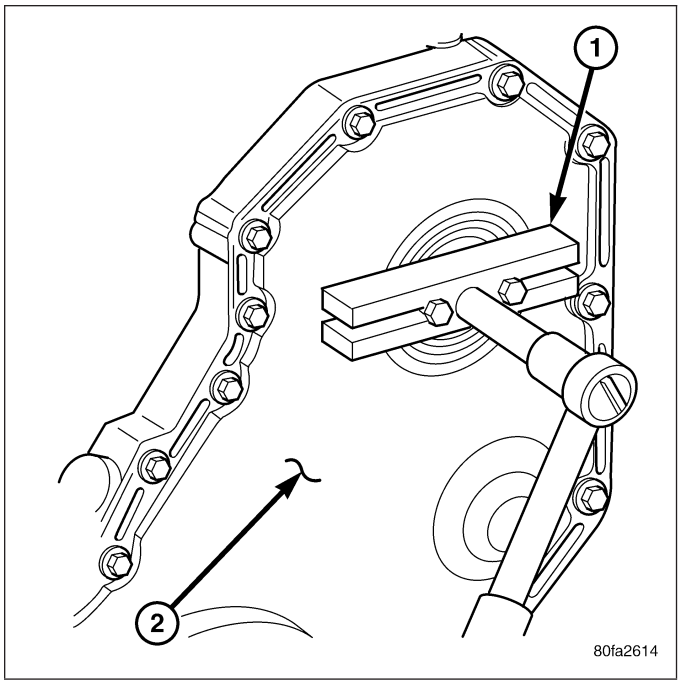

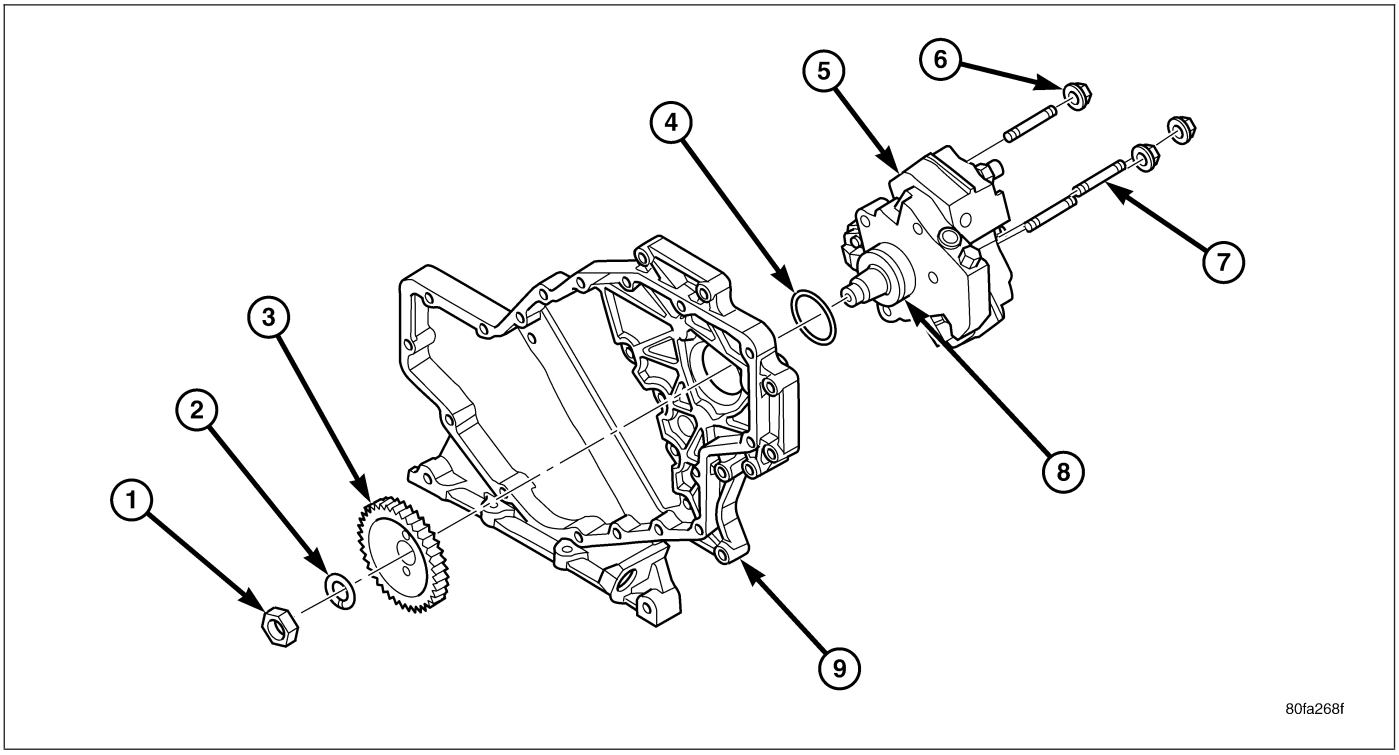

12. Remove 3 injection pump mounting nuts (6) , and remove pump from engine.

INSTALLATION

CAUTION: Cleanliness cannot be overemphasized when handling or replacing diesel fuel system components. This especially includes the fuel injectors, high-pressure fuel lines and fuel injection pump. Very tight tolerances are used with these parts. Dirt contamination could cause rapid part wear and possible plugging of fuel injector nozzle tip holes. This in turn could lead to possible engine misfire. Always wash/clean any fuel system component thoroughly before disassembly and then air dry. Cap or cover any open part after disassembly. Before assembly, examine each part for dirt, grease or other contaminants and clean if necessary. When installing new parts, lubricate them with clean engine oil or clean diesel fuel only.

https://truckmanualshub.com/

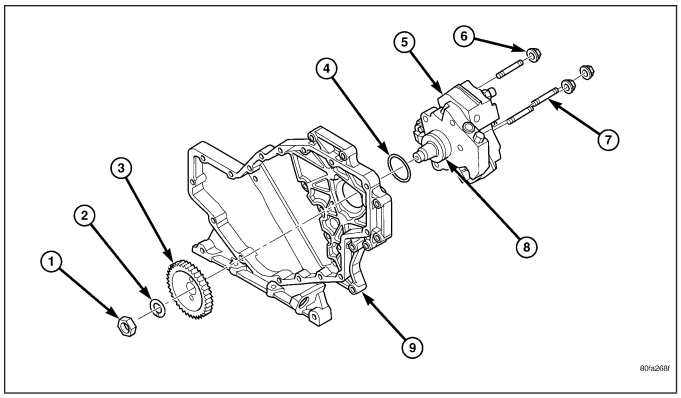

1. Inspect pump mounting surfaces at pump and mounting flange and pilot bore for nicks, cuts or damage. Inspect O-ring surfaces for nicks, cuts or damage.
2. Clean injection pump mounting flange and pilot bore at gear housing. Also clean front of injection pump.
3. Install new rubber O-ring (square) into machined groove at pump mounting area.
4. Apply clean engine oil **to injection pump O-ring and pilot bore only.**

The machined tapers on both injection pump shaft and injection pump gear must be absolutely dry, clean and free of any dirt or oil film. This will ensure proper gear-to-shaft tightening.

5. Clean pump gear and pump shaft at machined tapers with an evaporative type cleaner such as brake cleaner.
6. Position injection pump to mounting flange on gear housing while aligning injection pump shaft through back of injection pump gear.
7. After pump is positioned flat to mounting flange, install 3 pump mounting nuts (3) and tighten **finger tight only.** Do not attempt a final tightening at this time. **Do not attempt to tighten (pull) pump to gear housing using mounting nuts. Damage to pump or gear housing may occur. The pump must be positioned flat to its mounting flange before attempting to tighten 3 mounting nuts.**
8. To prevent damage or cracking of components, install and tighten nuts in the following sequence:
   a. Install injection pump shaft washer and nut to pump shaft. Tighten nut **finger tight only.**
   b. Do preliminary (light) tightening of injection pump shaft nut.
   c. Tighten 3 injection pump mounting nuts to 24 N·m (18 ft. lbs.).
   d. Do a final tightening of pump shaft nut to 105 N·m (77 ft. lbs.).

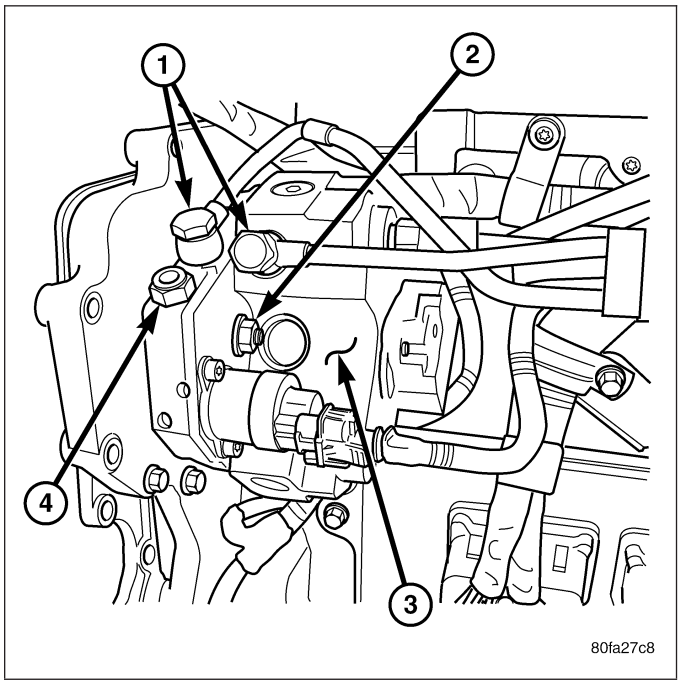

https://truckmanualshub.com/

9. Install drive gear access cover (2) using a 3/8” drive ratchet. Access cover is threaded to timing gear cover. Tighten to 8 N·m (71 in. lbs.) torque.

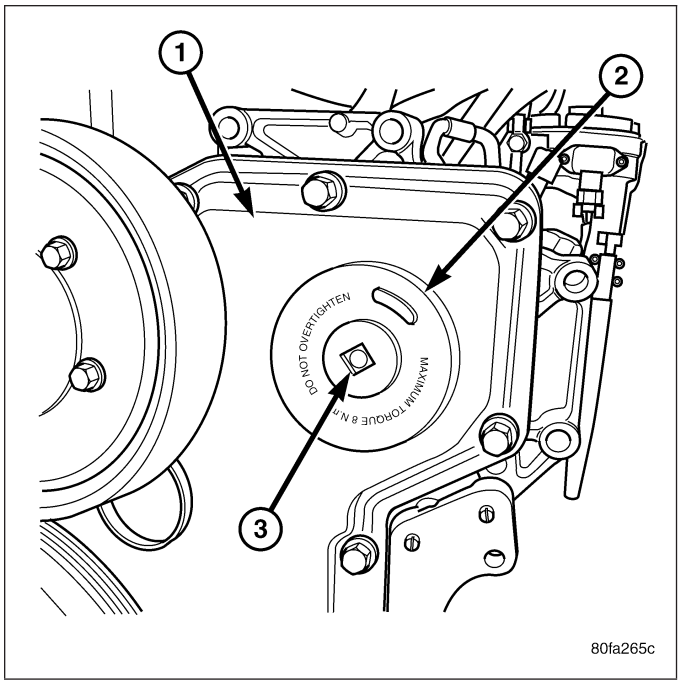

10. Install fuel return line (injection pump-to-fuel filter). Tighten banjo bolts (1) to 24 N·m (18 ft. lbs.) torque.
11. Install fuel line (injection pump-to-fuel rail).
    a. Tighten fitting at fuel pump to 37 N·m (27 ft. lbs.) torque. Use a back-up wrench.
    b. Tighten fitting at fuel rail to 37 N·m (27 ft. lbs.) torque.
12. Install fuel line (injection pump-to-fuel filter housing). Tighten to 24 N·m (18 ft. lbs.) torque.

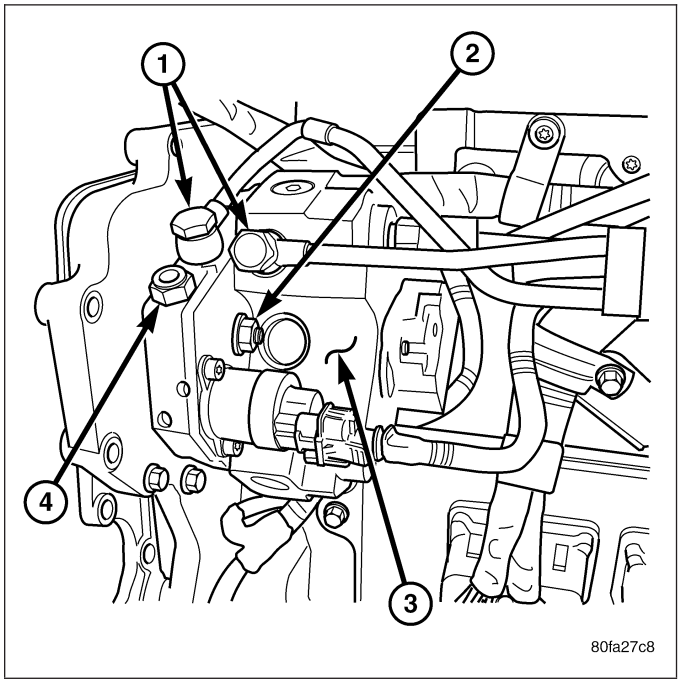

https://truckmanualshub.com/

13. Connect Fuel Control Actuator (FCA) electrical connector (3) to rear of injection pump.

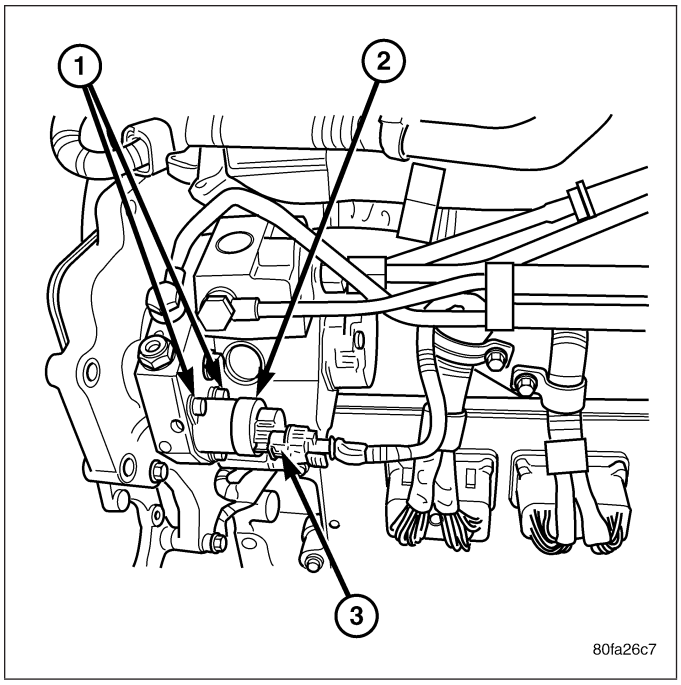

14. Install intake manifold air intake tube (above injection pump). Tighten clamps.
15. Install accessory drive belt.
16. Connect both negative battery cables to both batteries.
17. Check system for fuel or engine oil leaks.

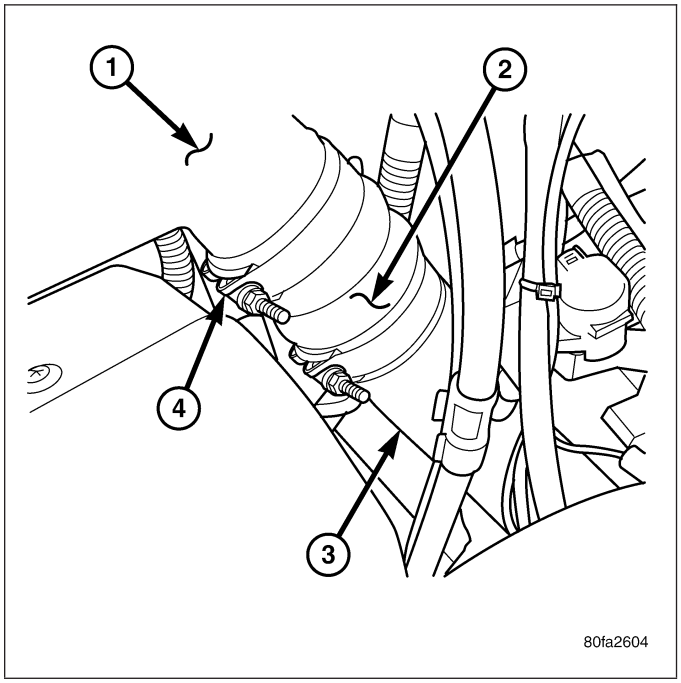

https://truckmanualshub.com/

SENSOR - FUEL LEVEL SENDING UNIT

DESCRIPTION

The fuel gauge sending unit (fuel level sensor) is attached to the side of the fuel pump module. The sending unit consists of a float, an arm, and a variable resistor track (card). The fuel transfer (lift) pump is also attached to the fuel pump module.

OPERATION

For Fuel Gauge Operation: A constant input voltage source of about 12 volts (battery voltage) is supplied to the resistor track on the fuel gauge sending unit. This is fed directly from the Engine Control Module (ECM). **NOTE: For diagnostic purposes, this 12V power source can only be verified with the circuit opened (fuel tank module electrical connector unplugged). With the connectors plugged, output voltages will vary from about .6 volts at FULL, to about 7.0 volts at EMPTY.** The resistor track is used to vary the voltage (resistance) depending on fuel tank float level. As fuel level increases, the float and arm move up, which decreases voltage. As fuel level decreases, the float and arm move down, which increases voltage. The varied voltage signal is returned back to the ECM through the sensor return circuit.

Both of the electrical circuits between the fuel gauge sending unit and the ECM are hard-wired (not multi-plexed). After the voltage signal is sent from the resistor track, and back to the ECM, the ECM will interpret the resistance (voltage) data and send a message across the multi-plex bus circuits to the instrument panel cluster. Here it is translated into the appropriate fuel gauge level reading. Refer to Instrument Panel for additional information.

REMOVAL

REMOVAL/INSTALLATION

For diesel removal and installation procedures, refer to the gas section of Fuel System/Fuel Delivery. See Fuel Level Sending Unit/Sensor Removal/Installation.

https://truckmanualshub.com/

LINES - FUEL

DESCRIPTION

Low-Pressure Lines Are:

- the fuel supply line from fuel tank to fuel filter housing.
- the fuel return line back to fuel tank.
- the fuel drain (manifold) line at rear of cylinder head.
- the fuel supply line from fuel filter to fuel injection pump.
- the fuel injection pump return line.

High-Pressure Lines Are:

- the fuel line from fuel injection pump to fuel rail.
- the 6 fuel lines from fuel rail up to injector connector tubes

WARNING: High-pressure fuel lines deliver diesel fuel under extreme pressure from the injection pump to the fuel injectors. This may be as high as 160,000 kpa (23,206 psi). Use extreme caution when inspecting for high-pressure fuel leaks. Inspect for high-pressure fuel leaks with a sheet of cardboard. High fuel injection pressure can cause personal injury if contact is made with the skin.

OPERATION

High-Pressure Lines

CAUTION: The high-pressure fuel lines must be held securely in the brace. The lines cannot contact each other or other components. Do not attempt to weld high-pressure fuel lines or to repair lines that are damaged. If lines are ever kinked or bent, they must be replaced. Use only the recommended lines when replacement of high-pressure fuel line is necessary.

High-pressure fuel lines deliver fuel (under pressure) of up to approximately 160,000 kPa (23,206 PSI) from the injection pump to the fuel injectors. The lines expand and contract from the high-pressure fuel pulses generated during the injection process. All high-pressure fuel lines are of the same length and inside diameter. Correct high-pressure fuel line usage and installation is critical to smooth engine operation.

WARNING: Use extreme caution when inspecting for high-pressure fuel leaks. Inspect for high-pressure fuel leaks with a sheet of cardboard. High fuel injection pressure can cause personal injury if contact is made with the skin.

DIAGNOSIS AND TESTING

HIGH-PRESSURE FUEL LINE LEAKS

High-pressure fuel line leaks can cause starting problems and poor engine performance.

WARNING: Due to extreme fuel pressures of up to 160,000 kpa (23,206 psi), use extreme caution when inspecting for high-pressure fuel leaks. Do not get your hand or a finger near a suspected leak. Inspect for high-pressure fuel leaks with a sheet of cardboard. High fuel injection pressure can cause personal injury if contact is made with the skin.

Start the engine. Move the cardboard over the suspected high-pressure fuel line leak, and check for fuel spray onto the cardboard. If line is leaking, retorque line while engine is shutdown. Replace damaged, restricted or leaking high-pressure fuel lines with the correct replacement line.

CAUTION: The high-pressure fuel lines must be clamped securely in place in the brace. The lines cannot contact each other or other components. Do not attempt to weld high-pressure fuel lines or to repair lines that are damaged. Only use the recommended lines when replacement of high-pressure fuel line is necessary.

https://truckmanualshub.com/

REMOVAL

CAUTION: Cleanliness cannot be overemphasized when handling or replacing diesel fuel system components. This especially includes the fuel injectors, high-pressure fuel lines and fuel injection pump. Very tight tolerances are used with these parts. Dirt contamination could cause rapid part wear and possible plugging of fuel injector nozzle tip holes. This in turn could lead to possible engine misfire. Always wash/clean any fuel system component thoroughly before disassembly and then air dry. Cap or cover any open part after disassembly. Before assembly, examine each part for dirt, grease or other contaminants and clean if necessary. When installing new parts, lubricate them with clean engine oil or clean diesel fuel only.

1. Disconnect both negative battery cables from both batteries. Cover and isolate ends of cables.
2. Thoroughly clean fuel lines at both ends.
3. If removing fuel line at either No. 1 or No. 2 cylinder, the intake manifold air heater elements must first be removed from top of intake manifold. Refer to Intake Air Heater Removal / Installation for procedures.
4. If removing fuel line at No. 6 cylinder, a bracket (1) is located above fuel line connection at cylinder head. Two bolts secure this bracket to rear of cylinder head. The upper bolt hole is slotted. Loosen (but do not remove) these 2 bracket bolts. Tilt bracket down to gain access to No. 6 fuel line connection.
5. Remove engine lift bracket (if necessary).

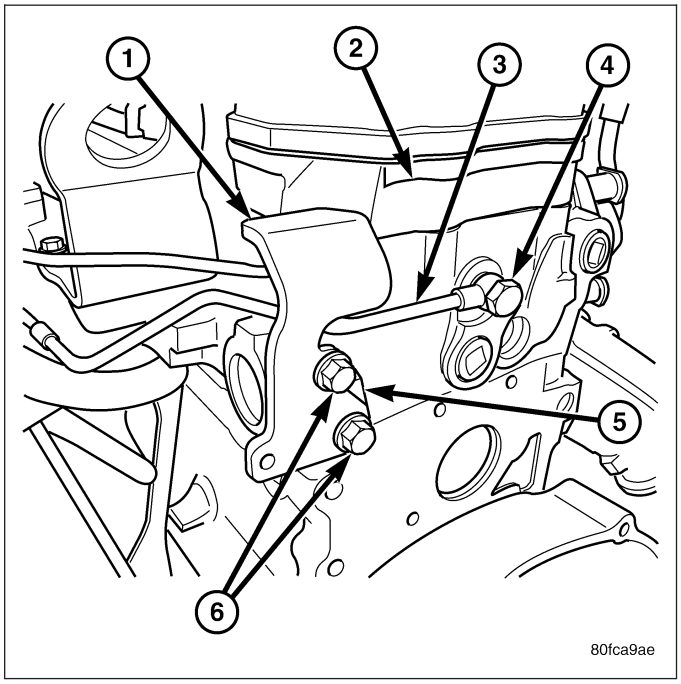

6. Remove necessary insulated fuel line support clamps (2) at intake manifold. DO NOT remove insulators from fuel lines.
7. Place shop towels around fuel lines at fuel rail and injectors. If possible, do not allow fuel to drip down side of engine.

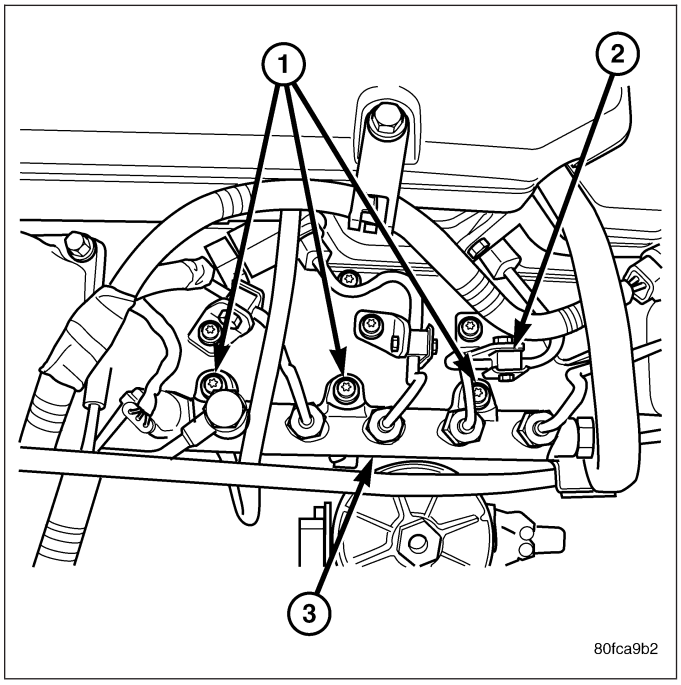

CAUTION: When loosening or tightening high-pressure lines attached to a separate fitting , use a back-up wrench on fitting. Do not allow fitting to rotate. Damage to both fuel line and fitting will result.

https://truckmanualshub.com/

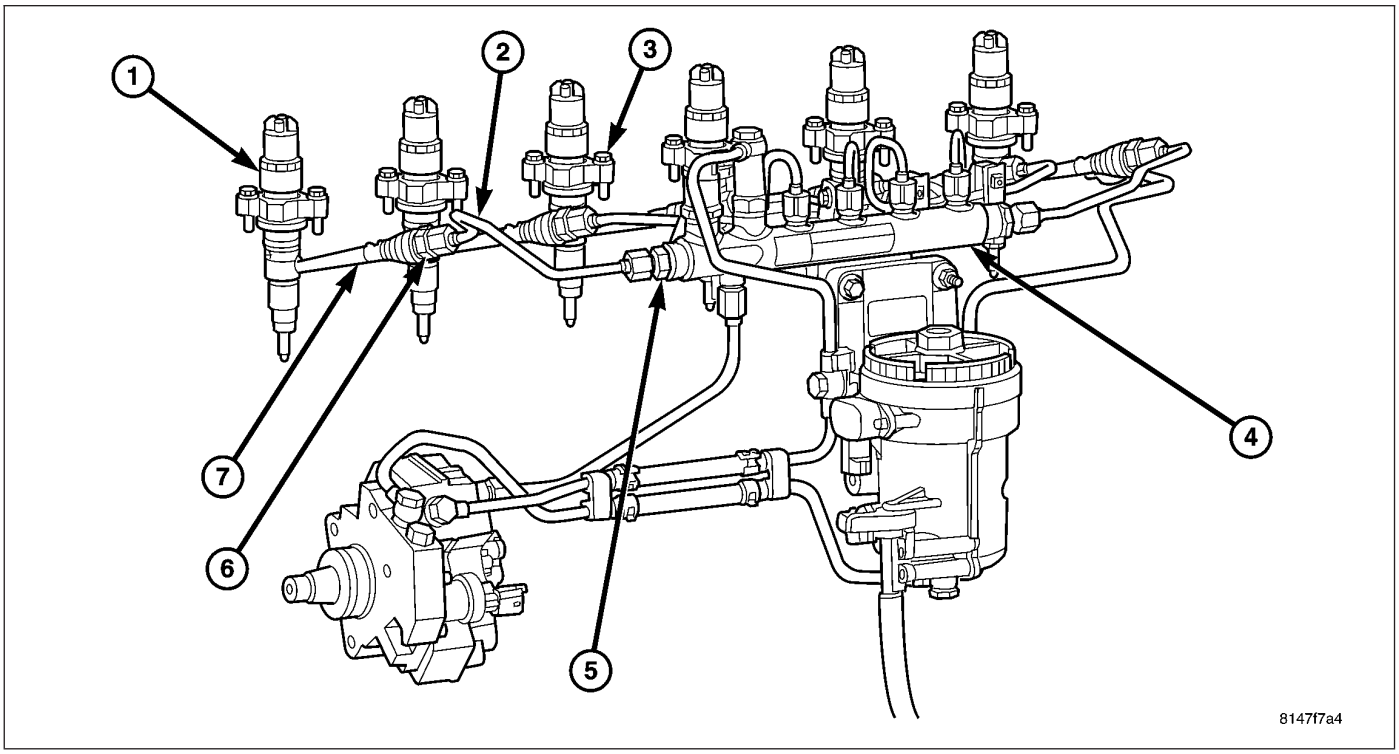

8. Carefully remove each fuel line from engine. Note position of each while removing. **Do not bend lines while removing.**

INSTALLATION

All high-pressure fuel lines are of the same length and inside diameter. Correct high-pressure fuel line usage and installation is critical to smooth engine operation.

CAUTION: Anytime a high-pressure line is removed from the engine, its fuel connector nut at the cylinder head must first be retorqued. Refer to Torque Specifications.

1. Tighten nuts at high pressure injector connector nut at the cylinder head. Torque nut to 50 N·m (37 ft. lbs.).
2. Position and install fuel line support clamp (2) bolts or nut. Tighten finger tight.
3. Position proper fuel line to proper injector on engine. Tighten fittings hand tight at both ends of line.
4. Tighten fuel line at cylinder head. Torque nut to 30 N·m (22 ft. lbs.).

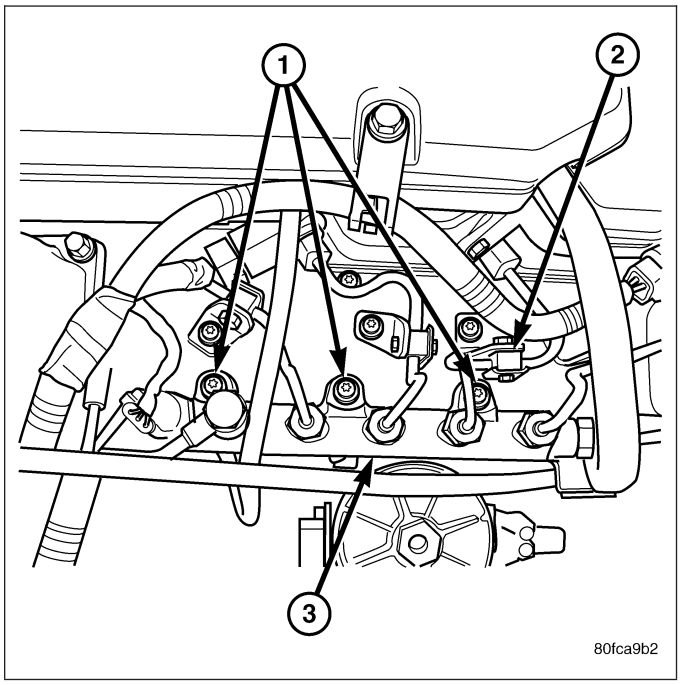

https://truckmanualshub.com/

5. Install engine lifting bracket (1) and bolt. Torque nut to 77 N·m (56 ft. lbs.).
6. Tighten fuel lines at fuel rail. Torque nut to 37 N·m (27 ft. lbs.).
7. Tighten clamp support to intake manifold cover. Torque nut to 24 N·m (18 ft. lbs.).
8. If fuel line at either No. 1 or No. 2 cylinder has been replaced, install intake manifold air heater elements to top of intake manifold. Refer to Intake Air Heater Removal / Installation for procedures.
9. If fuel line at No. 6 cylinder has been replaced, tilt metal bracket (shield) upward and tighten 2 bolts at rear of cylinder head. Torque nut to 43N·m (32 ft. lbs.).
10. Connect both negative battery cables to both batteries.
11. Prime fuel system. Refer to Fuel System Priming.
12. Check lines/fittings for leaks.

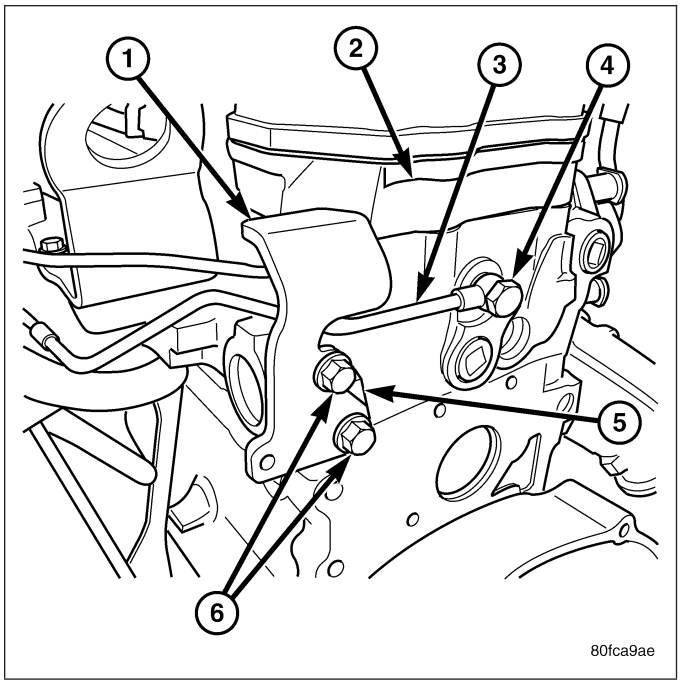

https://truckmanualshub.com/

SENSOR - FUEL PRESSURE

DESCRIPTION

The fuel pressure sensor is mounted vertically near the top/center of the fuel rail.

OPERATION

The fuel pressure sensor monitors actual high-pressure within the fuel rail. An output signal from this sensor (relating to fuel pressure) is sent to the Engine Control Module (ECM).

REMOVAL

The fuel pressure sensor (4) is mounted vertically near the top/center of the fuel rail.

1. Disconnect electrical connector (1) at sensor.
2. Remove sensor from fuel rail.
3. Inspect sensor sealing surface.

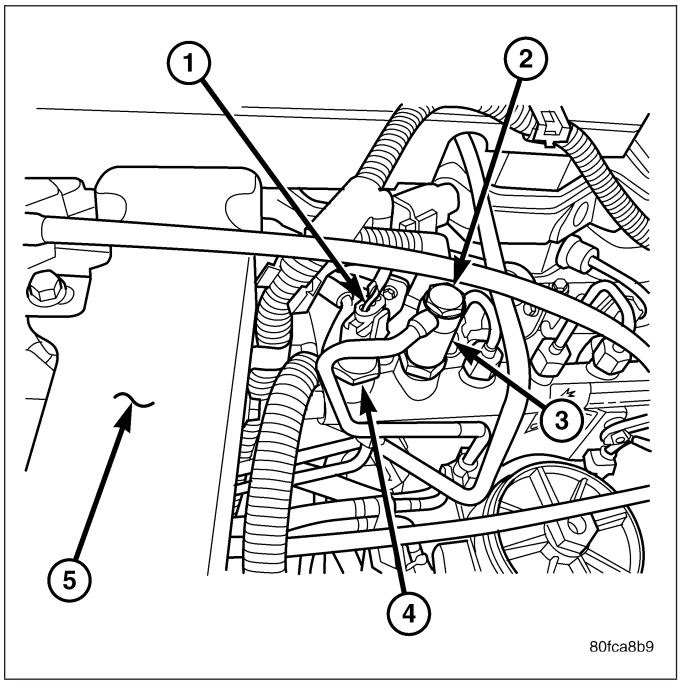

INSTALLATION

1. Inspect fuel pressure sensor sealing surface.
2. Lubricate sensor threads with clean diesel fuel.
3. Install sensor (4) into fuel rail.
4. To prevent leaks, sensor **must** be tightened to 70 N·m (52 ft. lbs.).
5. Connect electrical connector to sensor.
6. Start engine and check for fuel leaks.

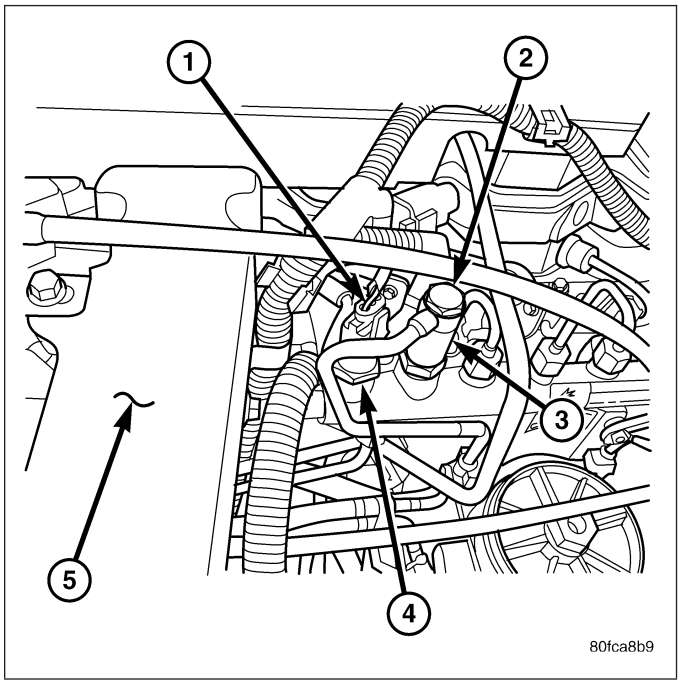

https://truckmanualshub.com/

VALVE - FUEL PRESSURE LIMITING

DESCRIPTION

The fuel pressure limiting valve is located on the top of the fuel rail.

OPERATION

Fuel pressure at the fuel rail is monitored by the fuel rail pressure sensor. If fuel pressure becomes excessive, the pressure limiting valve opens and vents excess pressure into the fuel drain circuit.

REMOVAL

CAUTION: Cleanliness cannot be overemphasized when handling or replacing diesel fuel system components. This especially includes the fuel injectors, high-pressure fuel lines and fuel injection pump. Very tight tolerances are used with these parts. Dirt contamination could cause rapid part wear and possible plugging of fuel injector nozzle tip holes. This in turn could lead to possible engine misfire. Always wash/clean any fuel system component thoroughly before disassembly and then air dry. Cap or cover any open part after disassembly. Before assembly, examine each part for dirt, grease or other contaminants and clean if necessary. When installing new parts, lubricate them with clean engine oil or clean diesel fuel only.

The fuel pressure limiting valve (3) is located on the top of the fuel rail.

1. Thoroughly clean area at pressure limiting valve.
2. Remove banjo bolt (2) at banjo fitting.
3. Remove pressure limiting valve from fuel rail.

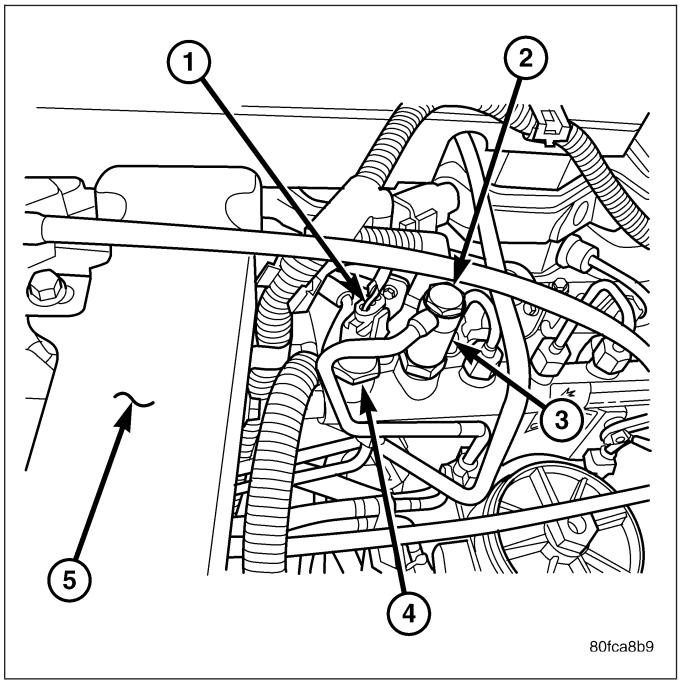

https://truckmanualshub.com/

INSTALLATION

1. Be sure both top of manifold and limiting valve are clean.
2. Install valve. To prevent leaks, valve must be tightened to prescribed torque. Refer to Torque Specifications.
3. Assemble banjo bolt and new sealing washers to limiting valve, copper seal against limiting valve and rubber seal against banjo bolt (2).
4. Tighten banjo bolt. Torque to 24 N·m (18 ft. lbs.).

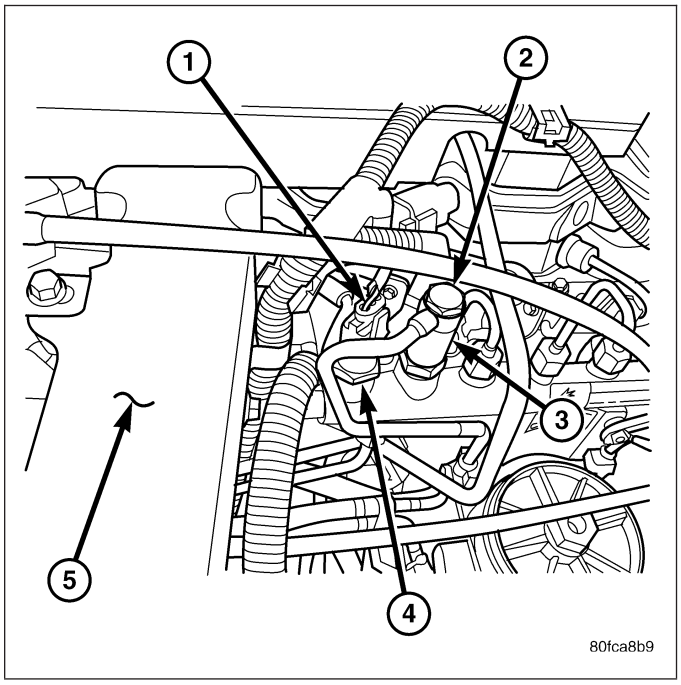

https://truckmanualshub.com/

TANK - FUEL

DESCRIPTION

The fuel tank is similar to the tank used with gasoline powered models. The tank is equipped with a separate fuel return line and a different fuel tank module for diesel powered models. The electric fuel transfer pump (lift pump) is attached to the fuel pump module. Refer to Fuel Tank Module for additional information.

REMOVAL

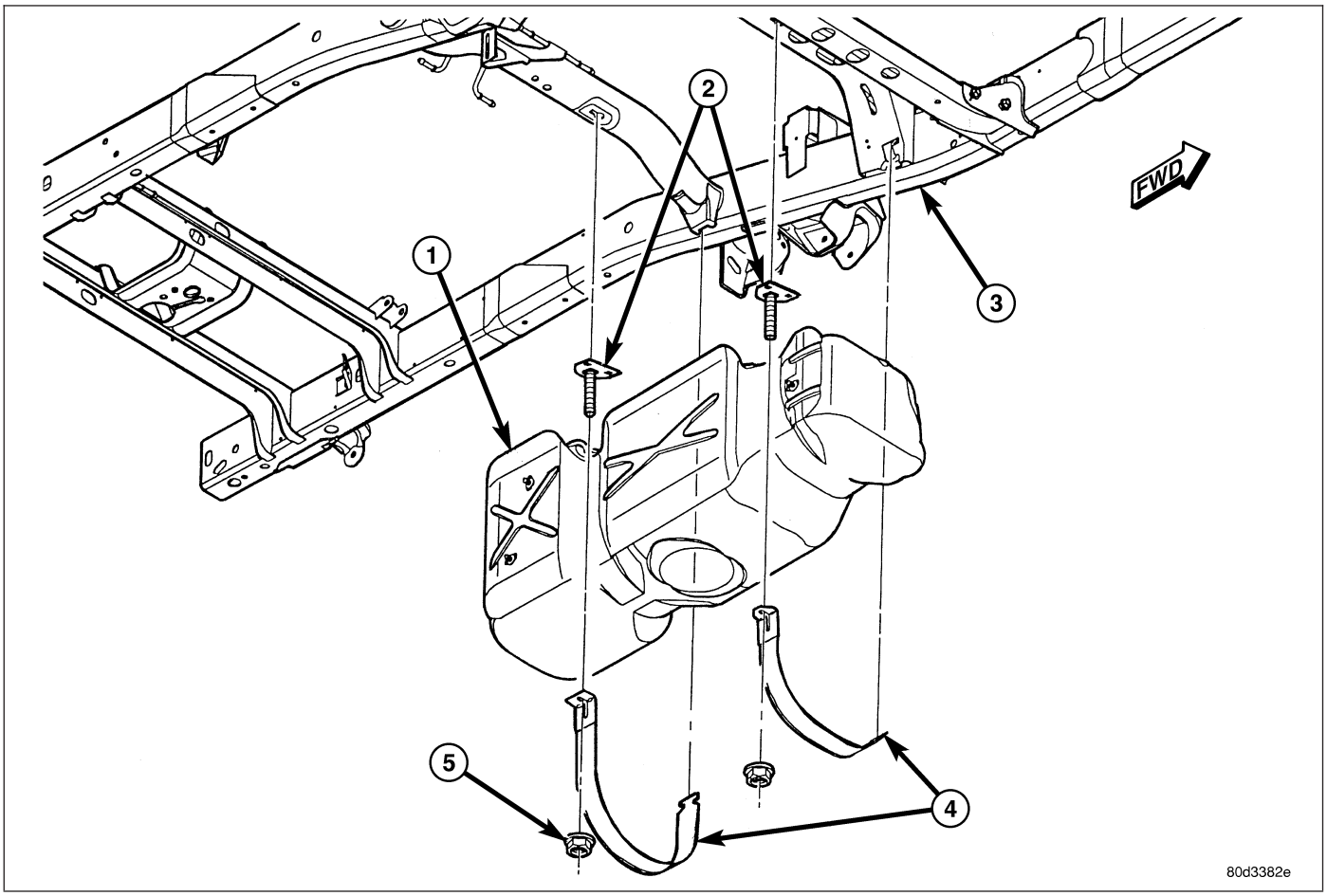

1. Drain fuel tank. (Refer to 14 - FUEL SYSTEM/FUEL DELIVERY - STANDARD PROCEDURE).
2. Support tank with a hydraulic jack.
3. Remove two fuel tank strap nuts (5) and remove both tank support straps.
4. Carefully lower tank a few inches and disconnect fuel pump module electrical connector at top of tank. To disconnect electrical connector: Push upward on red colored tab to unlock. Push on black colored tab while removing connector.
5. Disconnect fuel supply and return lines at fuel tank module. Refer to Quick-Connect Fittings for procedures.
6. Continue to lower tank for removal.
7. If fuel tank is to be replaced, remove fuel tank module from tank. (Refer to 14 - FUEL SYSTEM/FUEL DELIVERY/FUEL TANK MODULE - REMOVAL).

https://truckmanualshub.com/

INSTALLATION

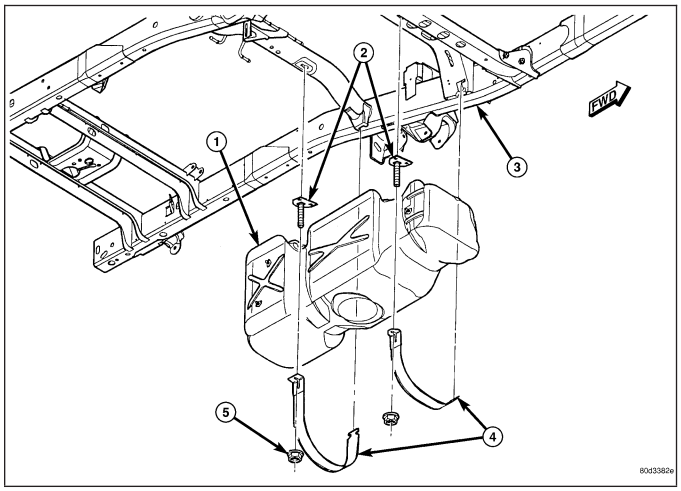

1. If fuel tank is to be replaced, install fuel tank module into tank. (Refer to 14 - FUEL SYSTEM/FUEL DELIVERY/FUEL TANK MODULE - REMOVAL).
2. Position fuel tank (1) to hydraulic jack.
3. Raise tank until positioned near body.
4. Connect fuel tank module electrical connector at top of tank.
5. Connect fuel supply and return lines to tank module.
6. Continue raising tank until positioned snug to body.
7. Install and position both tank support straps (4). Install 2 fuel tank strap nuts and tighten to 41 N·m (30 ft. lbs.). **Tighten rear strap nut first.**
8. Remove hydraulic jack.
9. Connect rubber fill hose to fuel fill tube and tighten clamp.
10. Install tire / wheel (if necessary).
11. Lower vehicle.
12. Fill fuel tank with fuel.
13. Start engine and check for fuel leaks near top of module.

https://truckmanualshub.com/

MODULE - FUEL TANK

DESCRIPTION

.

The fuel tank module is installed in the top of the fuel tank. The fuel tank module contains the following components:

- An electric fuel transfer (lift) pump
- Fuel reservoir
- A separate in-tank fuel filter
- Fuel gauge sending unit (fuel level sensor)
- Fuel supply line connection
- A special lockring to retain module to fuel tank
- Fuel return line connection

OPERATION

Refer to Fuel Gauge Sending Unit.

REMOVAL

1. Drain and remove fuel tank (Refer to 14 - FUEL SYSTEM/FUEL DELIVERY/FUEL TANK - REMOVAL).
2. Note rotational position of module before attempting removal. An indexing arrow is located on top of module for this purpose.
3. Position Special Tool 9340 (3) into notches on outside edge of lockring (5).
4. Install 1/2 inch drive breaker bar (1) to tool 9340 (3).
5. Rotate breaker bar counterclockwise to remove lockring.
6. Remove lockring. The module will spring up slightly when lockring is removed.
7. Remove module from fuel tank. Be careful not to bend float arm while removing.

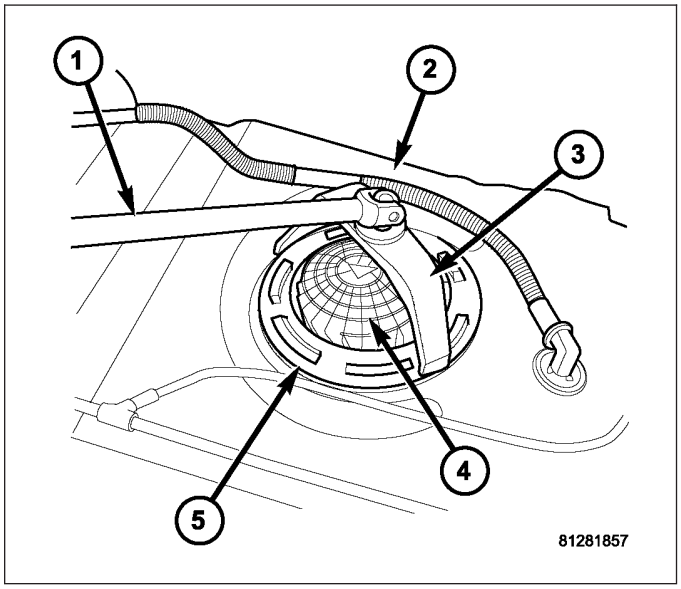

INSTALLATION

CAUTION: Whenever the fuel pump module is serviced, the rubber seal (gasket) must be replaced.

https://truckmanualshub.com/

1. Using a new seal (gasket), position fuel pump module into opening in fuel tank.
2. Position lockring (5) over top of fuel pump module.
3. Rotate module until embossed alignment arrow points to center alignment mark. This step must be performed to prevent float from contacting side of fuel tank. Also be sure fuel fitting on top of pump module is pointed to drivers side of vehicle.
4. Install Special Tool 9340 (3) to lockring.
5. Install 1/2 inch drive breaker (1) into Special Tool 9340 (3).
6. Tighten lockring (clockwise) until all seven notches have engaged.
7. Install fuel tank (Refer to 14 - FUEL SYSTEM/ FUEL DELIVERY/FUEL TANK - INSTALLATION).

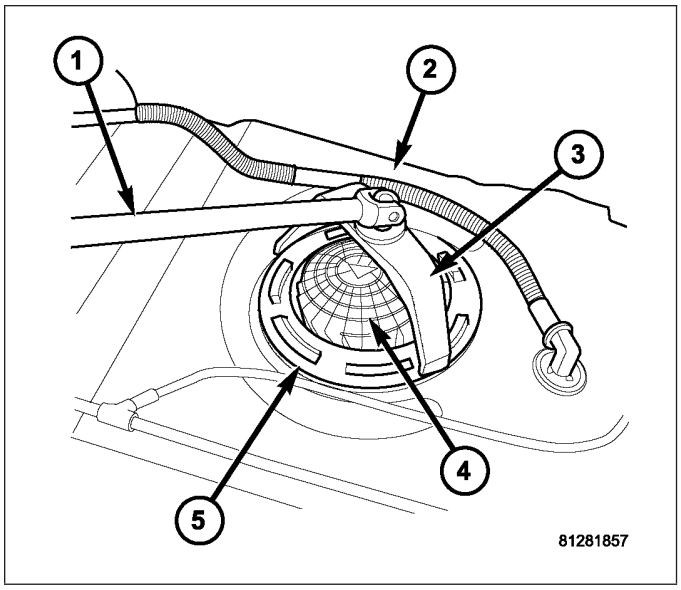

https://truckmanualshub.com/

PUMP - FUEL TRANSFER

DESCRIPTION

The fuel transfer pump (fuel lift pump) is part of the fuel pump module. The fuel pump module is located in the fuel tank. The 12–volt electric pump is operated and controlled by the Engine Control Module (ECM). The ECM controls a relay in the Intelligent Power Module (IPM) for transfer pump operation.

OPERATION

The purpose of the fuel transfer pump is to supply (transfer) a low-pressure fuel source: **from** the fuel tank, **through** the fuel filter/water separator and **to** the fuel injection pump. Here, the low-pressure is raised to a high-pressure by the fuel injection pump for operation of the high-pressure fuel injectors. Check valves within the pump, control direction of fuel flow and prevent fuel bleed-back during engine shut down.

Maximum current flow to the pump is 5 amperes.

With the engine running, the pump has a 100 percent duty-cycle.

The transfer pump is self-priming: When the key is first turned on (without cranking engine), the pump will operate for approximately 2 seconds and then shut off (Note: When ambient temperatures are cold enough to cause the intake air heaters to operate, the fuel lift pump will operate during the entire intake air pre-heat cycle). The pump will also operate for up to 25 seconds after the starter is engaged, and then disengaged and the engine is not running. The pump shuts off immediately if the key is on and the engine stops running.

The fuel volume of the transfer pump will always provide more fuel than the fuel injection pump requires. Excess fuel is returned from the injection pump through an overflow valve, and then back to the fuel tank.

REMOVAL

The fuel transfer pump (fuel lift pump) is a part of the fuel tank module. It is not serviced separately. Refer to Fuel Tank Module Removal or Installation for procedures (Refer to 14 - FUEL SYSTEM/FUEL DELIVERY/FUEL TANK MODULE - REMOVAL).

INSTALLATION

The fuel transfer pump (fuel lift pump) is a part of the fuel tank module. It is not serviced separately (Refer to 14 - FUEL SYSTEM/FUEL DELIVERY/FUEL TANK MODULE - INSTALLATION).

https://truckmanualshub.com/

VALVE - CASCADE OVERFLOW

DESCRIPTION

NOTE: The cascade overflow valve is not serviced separately.

The cascade overflow valve (4) is located on the top/rear side of the fuel injection pump.

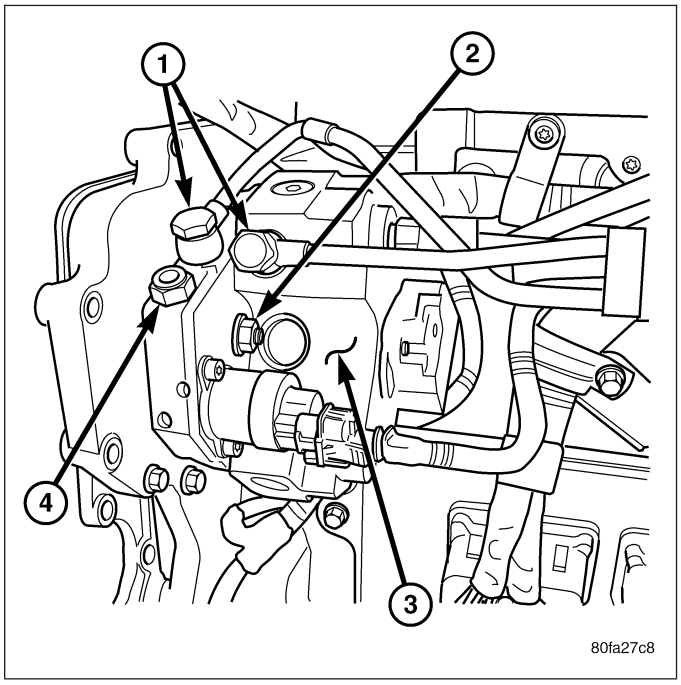

OPERATION

When the fuel control actuator (FCA) is opened, the maximum amount of fuel is being delivered to the fuel injection pump. The cascade valve regulates how much excess fuel is used for lubrication of the injection pump, and is also used to route excess fuel through the drain circuit and back into the fuel tank.

https://truckmanualshub.com/

SENSOR-WATER IN FUEL

DESCRIPTION

The Water-In-Fuel (WIF) sensor (5) is located on the side of the fuel filter/water separator canister.

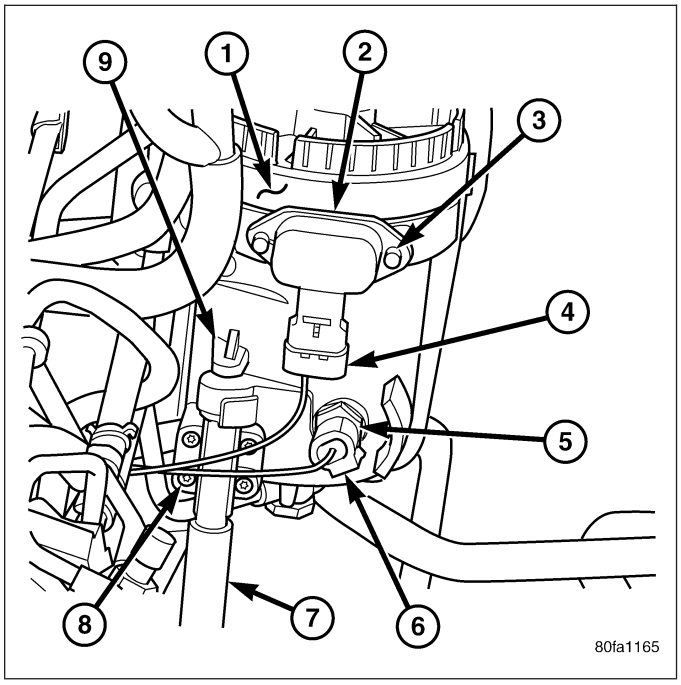

OPERATION

The sensor sends an input to the Engine Control Module (ECM) when it senses water in the fuel filter/water separator. As the water level in the filter/separator increases, the resistance across the WIF sensor decreases. This decrease in resistance is sent as a signal to the ECM and compared to a high water standard value. Once the value reaches 30 to 40 kilohms, the ECM will activate the water-in-fuel warning lamp through CCD bus circuits. This all takes place when the ignition key is initially put in the ON position. The ECM continues to monitor the input while the engine is running.

REMOVAL

The Water-In-Fuel (WIF) sensor is located at the side of fuel filter/water separator canister. (Refer to 14 - FUEL SYSTEM/FUEL DELIVERY/FUEL TANK MODULE - INSTALLATION).

https://truckmanualshub.com/

CIRCUIT - FUEL DRAIN

OPERATION

The Fuel Drain Circuit incorporates several sources of fuel return. Fuel travels from the fuel tank (via the fuel transfer pump) and is forced through the fuel filter. This fuel then travels into the fuel injection pump. It then goes to a fuel drain line and returns back to the fuel tank.

The fuel that flows to the fuel pump is pressurized by a gear pump and internally transferred to the fuel injection pump. At this point the fuel is channeled into two passages. One passage sends fuel to the FCA (Fuel Control Actuator). The other passage sends fuel to the cascade overflow valve. The overflow valve sends some fuel to a lubrication passage. The rest of the fuel is sent to a drain passage which connects to an external fuel line.

Fuel that travels through the FCA is pressurized by the fuel injection pump and sent through an external high pressure fuel line to the fuel rail. At the fuel rail, fuel is sent to the fuel injectors. If fuel pressure in the fuel rail becomes excessive, the pressure limiting valve opens and sends fuel through an external fuel line.

At the fuel injector, fuel that is not injected is used for lubrication of the fuel injectors. This fuel then travels through an internal passage that is connected to the rear of the cylinder head, an then into an external fuel line. This line is connected to the vehicles fuel return line, and returns excess fuel back and into the fuel tank.

https://truckmanualshub.com/

FUEL INJECTION - DIESEL

TABLE OF CONTENTS

page

SENSOR-ACCELERATOR PEDAL POSITION
DESCRIPTION 141
OPERATION 141
REMOVAL 141
INSTALLATION 142
SENSOR-CAMSHAFT POSITION
DESCRIPTION 143
OPERATION 143
REMOVAL 143
INSTALLATION 144
SENSOR-CRANKSHAFT POSITION
DESCRIPTION 145
OPERATION 145
REMOVAL 146
INSTALLATION 146
ACTUATOR - FUEL CONTROL
DESCRIPTION 147
OPERATION 147
REMOVAL 147
INSTALLATION 147
INJECTOR - FUEL
DESCRIPTION 148
OPERATION 149
REMOVAL 149
INSTALLATION 153
FUEL INJECTOR RAIL
DESCRIPTION 155
OPERATION 155
REMOVAL 155
INSTALLATION 156
SENSOR-TEMPERATURE/PRESSURE-INTAKE
DESCRIPTION 157
OPERATION 157
REMOVAL 157
INSTALLATION 159
HEATER - INTAKE AIR
DESCRIPTION 160
OPERATION 160
REMOVAL 160
INSTALLATION 162
RELAY - INTAKE AIR HEATER
DESCRIPTION 163
OPERATION 163
REMOVAL 163
INSTALLATION 164
SENSOR-TEMPERATURE/PRESSURE-MAP
DESCRIPTION 165
OPERATION 165
REMOVAL 165
INSTALLATION 166
SENSOR-MAP
DESCRIPTION 167
SWITCH - PTO
DESCRIPTION 168
OPERATION 168

https://truckmanualshub.com/

SENSOR-ACCELERATOR PEDAL POSITION

DESCRIPTION

The Accelerator Pedal Position Sensor (APPS) (1) is located inside the vehicle. It is attached to the accelerator pedal assembly (3).

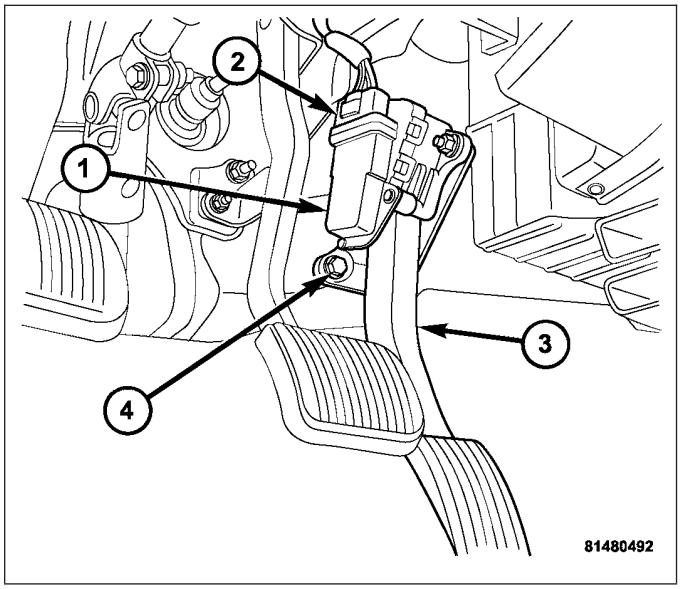

OPERATION

The Accelerator Pedal Position Sensor (APPS) provides the Engine Control Module (ECM) with two DC voltage signals which change as the position of the accelerator pedal changes. One of the DC voltage signals will be half the voltage of the other signal.

REMOVAL

CAUTION: Do not attempt to separate or remove the Accelerator Pedal Position Sensor (APPS) from the accelerator pedal assembly. The APPS is replaced as an assembly along with the pedal. If sensor is removed from pedal, its electronic calibration may be destroyed.

1. Disconnect 6–way electrical connector at top of APPS (2).
2. Remove APPS lower mounting bolt (4) and two mounting nuts.
3. Remove pedal and APPS assembly from vehicle.

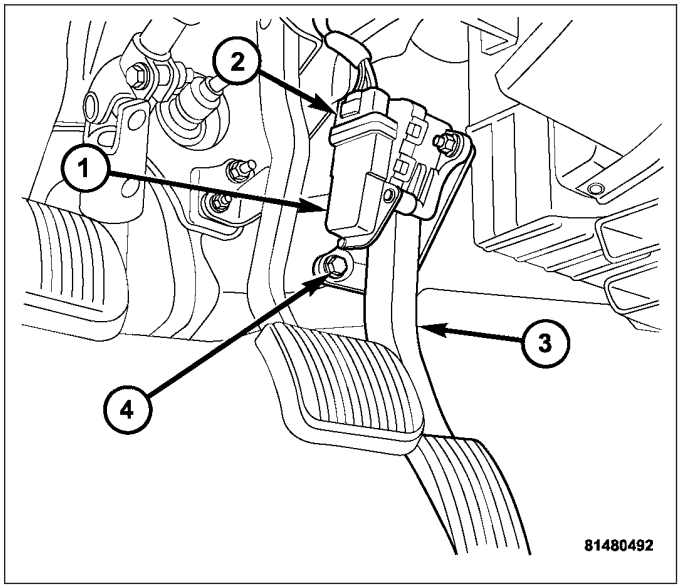

https://truckmanualshub.com/

INSTALLATION

CAUTION: Do not attempt to separate or remove the Accelerator Pedal Position Sensor (APPS) from the accelerator pedal assembly. The APPS is replaced as an assembly along with the pedal. If sensor is removed from pedal, its electronic calibration may be destroyed.

1. Position pedal and APPS assembly to its mounting bracket.
2. Connect 6–way electrical connector to top of APPS (2).
3. Install APPS lower mounting bolt (4) and two mounting nuts.
4. If necessary, use a Scan Tool to erase any Diagnostic Trouble Codes (DTC's).

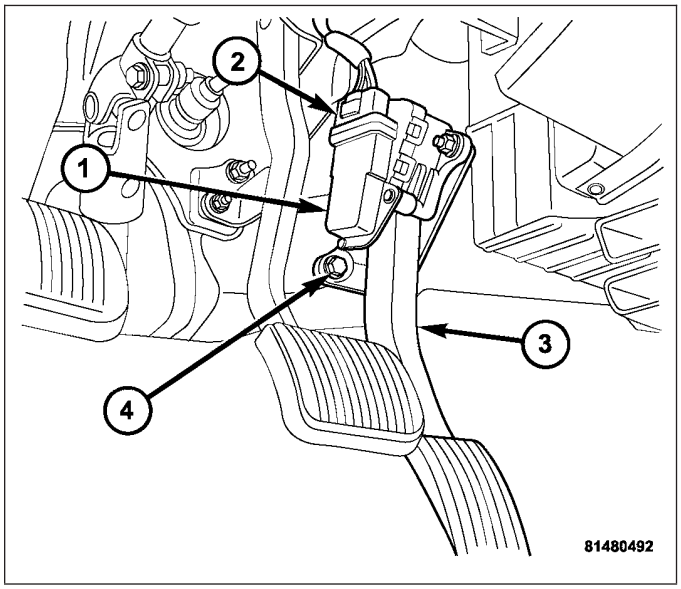

https://truckmanualshub.com/

SENSOR-CAMSHAFT POSITION

DESCRIPTION

The Camshaft Position Sensor (CMP) on the 5.9L diesel engine is located below the fuel injection pump. It is bolted to the back of the timing gear housing.

OPERATION

The diesel Camshaft Position Sensor (CMP) contains a hall effect device. A rotating target wheel (tone-wheel) for the CMP is located on the camshaft gear. This hall effect device detects holes located on the back side of the camshaft gear. As the camshaft gear rotates, the holes pass the tip of the CMP.

When the leading edge of the hole passes the tip of the CMP, the following occurs: The interruption of magnetic field causes the voltage to switch high resulting in a signal of approximately 5 volts.

When the trailing edge of the hole passes the tip of the CMP, the following occurs: The change of the magnetic field causes the signal voltage to switch low to 0 volts.

The CMP (1) provides a signal to the Engine Control Module (ECM) at all times when the engine is running. The ECM uses the CMP information primarily on engine start-up. Once the engine is running, the ECM uses the CMP as a backup sensor for engine speed. The Crankshaft Position Sensor (CKP) is the primary engine speed indicator for the engine after the engine is running.

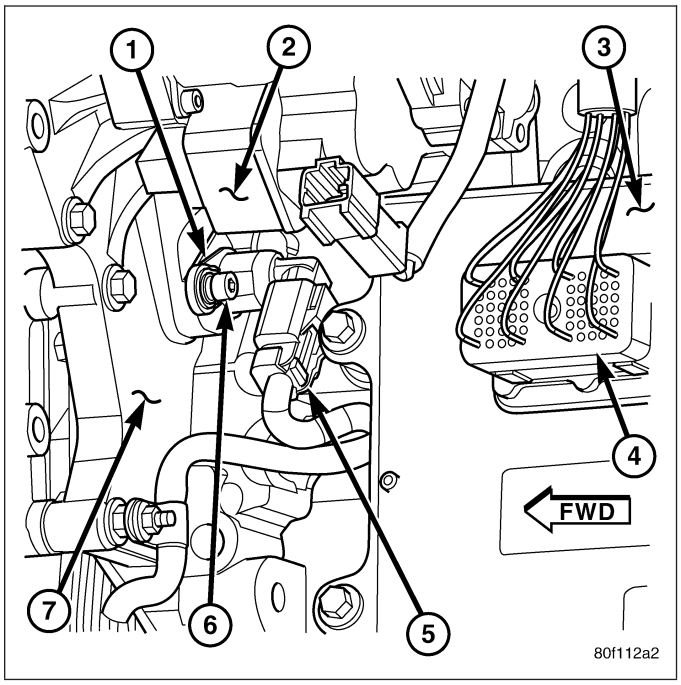

REMOVAL

The Camshaft Position Sensor (CMP) on the 5.9L diesel engine is located (1) below the fuel injection pump. It is bolted to the back of the timing gear housing (7).

1. Disconnect electrical connector at CMP sensor.
2. Remove sensor mounting bolt (6).
3. Carefully twist and pull the sensor from timing gear housing.
4. Check condition of sensor O-ring.

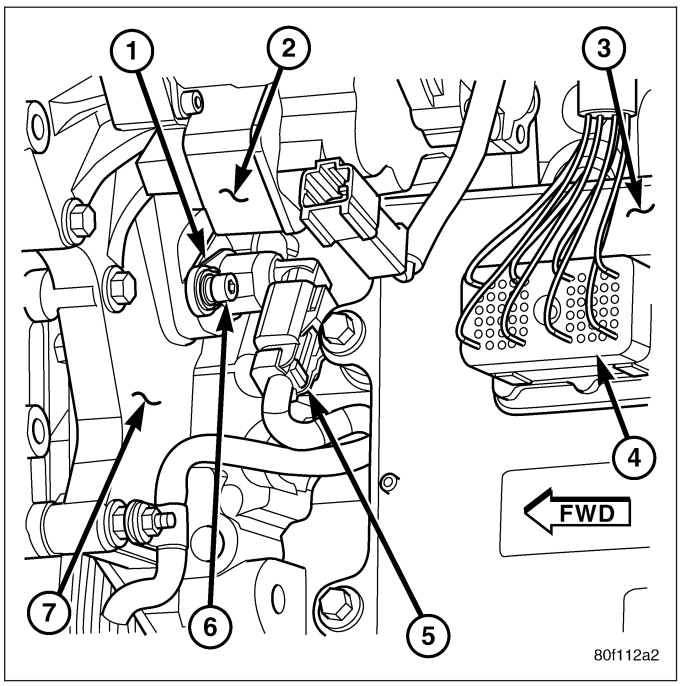

https://truckmanualshub.com/

INSTALLATION

1. Clean out machined hole in back of timing gear housing.
2. Apply a small amount of engine oil to sensor O-ring and sensor hole.
3. Install sensor into timing gear housing with a slight rocking action. Do not twist sensor into position as damage to O-ring may result.

CAUTION: Before tightening sensor mounting bolt, be sure sensor is completely flush to back of timing gear housing (cover). Remove (cover) if sensor is not flush, damage to sensor mounting tang may result.

4. Install mounting bolt and tighten. Torque to 9 N·m (80 in. lbs.).
5. Connect electrical connector (5) to sensor.

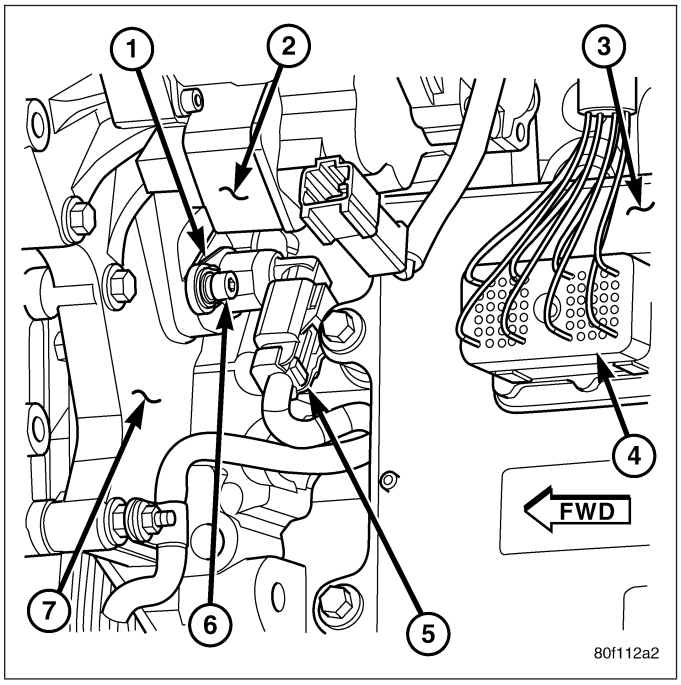

https://truckmanualshub.com/

SENSOR-CRANKSHAFT POSITION

DESCRIPTION

The Crankshaft Position Sensor (CKP) on the diesel engine is attached at the front / left side of the engine next to the engine harmonic balancer (crankshaft damper).

OPERATION

The Crankshaft Position Sensor (CKP) (5) is the primary engine speed indicator for the engine after the engine is running.

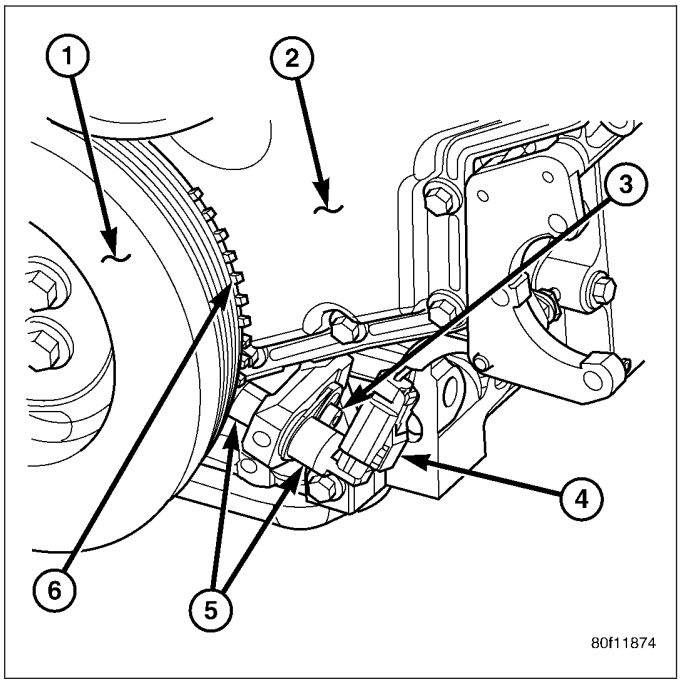

The CKP contains a hall effect device. A rotating, notched target wheel (tonewheel) for the CKP is located behind the engine harmonic balancer (2). This hall effect device detects notches located on the tonewheel. As the tonewheel rotates, the notches pass the tip of the CKP.

When the leading edge of the tonewheel notch passes the tip of the CKP, the following occurs: The interruption of magnetic field causes the voltage to switch high resulting in a signal of approximately 5 volts.

When the trailing edge of the tonewheel notch passes the tip of the CKP, the following occurs: The change of the magnetic field causes the signal voltage to switch low to 0 volts.

The Camshaft Position Sensor (CMP) also provides a signal to the Engine Control Module (ECM) at all times when the engine is running. The ECM uses this CMP information primarily on engine start-up. Once the engine is running, the ECM uses the CMP as a backup sensor for engine speed.

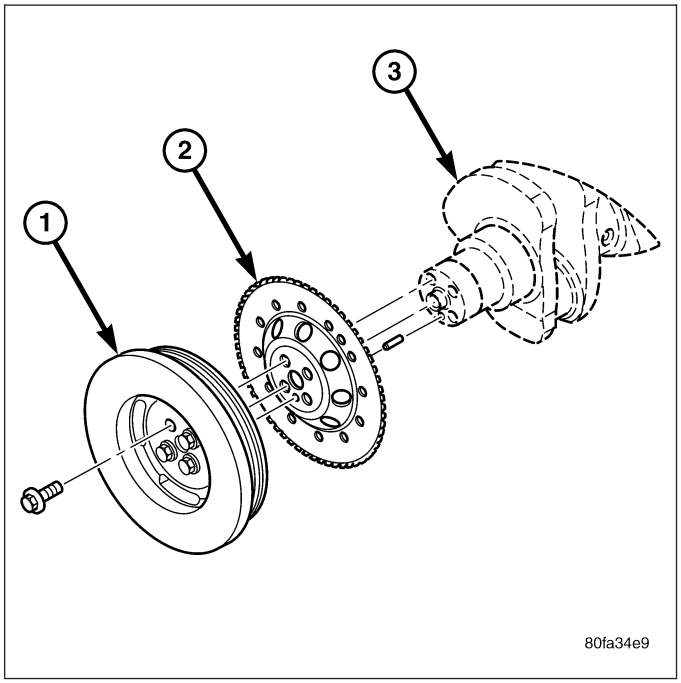

https://truckmanualshub.com/

REMOVAL

1. Raise and support vehicle
2. Disconnect electrical connector (4) at CKP sensor.
3. Remove 1 sensor mounting bolt (3).
4. Remove CKP sensor.

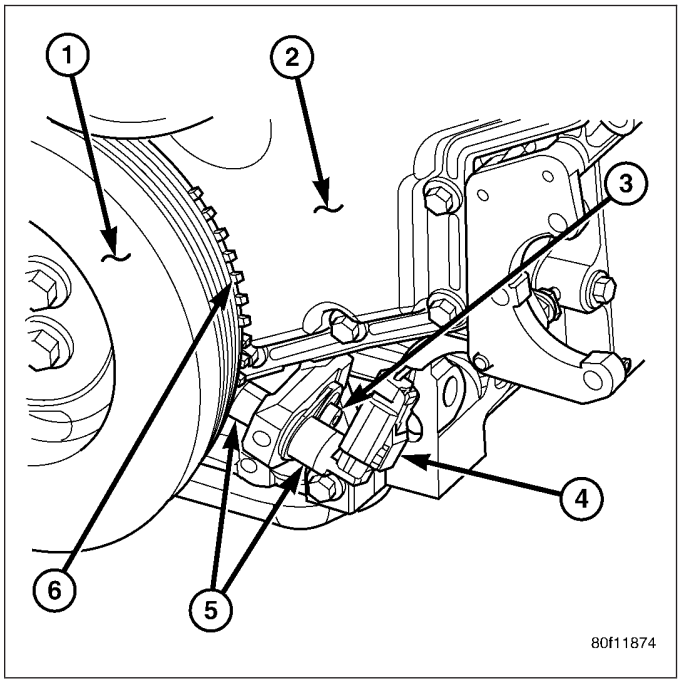

INSTALLATION

1. Position and install CKP sensor (5) to engine.
2. Install 1 sensor mounting bolt and tighten to 9 N·m (80 in. lbs.) torque.
3. Install electrical connector (4) to CKP sensor.

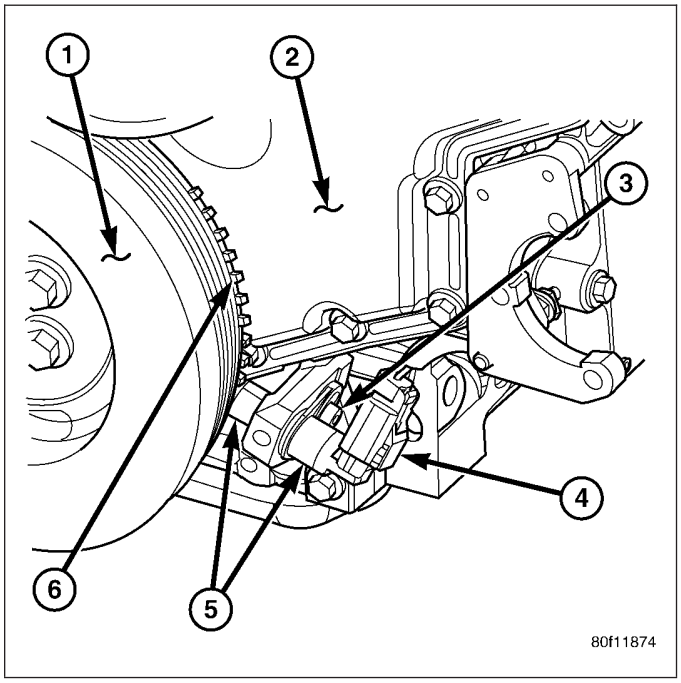

https://truckmanualshub.com/

ACTUATOR - FUEL CONTROL

DESCRIPTION

The Fuel Control Actuator (FCA) is located at the rear of the high-pressure, fuel injection pump (2).

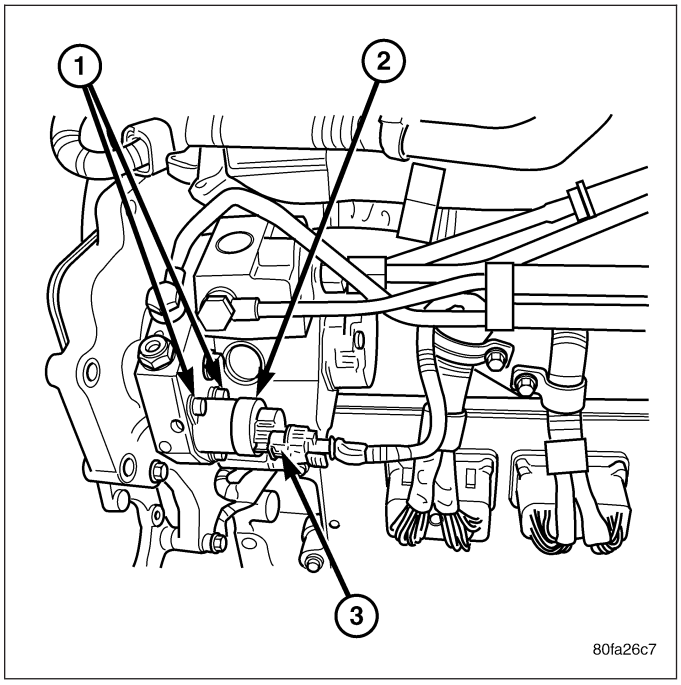

OPERATION

The Fuel Control Actuator (FCA) is an electronically controlled solenoid valve. The ECM controls the amount of fuel that enters the high-pressure pumping chambers by opening and closing the FCA based on a demanded fuel pressure. When the FCA is opened, the maximum amount of fuel is being supplied to the fuel injection pump. Any fuel that does not enter the injection pump is directed to the cascade overflow valve. The cascade overflow valve regulates how much excess fuel is used for lubrication of the pump and how much is returned to the fuel tank through the drain manifold.

An audible click from the FCA is normal when operating the key from the ON to the OFF position.

REMOVAL

1. Remove the cap srews and Fuel Control Actuator (FCA).
2. Twist and pull FCA to remove.

INSTALLATION

1. Lubricate the new Fuel Control Actuator (FCA) o-ring with clean oil before installation.
2. Turn the FCA in a clockwise direction while pressing it into the bore. Be sure that the FCA flange is flush with the mounting surface on the Fuel Injection Pump.
3. Install the capscrews by hand.
4. Then tighten capscrews to 7Nm (62 in-lbs).

https://truckmanualshub.com/

INJECTOR - FUEL

DESCRIPTION

Six individual, solenoid actuated high-pressure fuel injectors are used. The injectors are vertically mounted into a bored hole in the top of the cylinder head. This bored hole is located between the intake/exhaust valves.

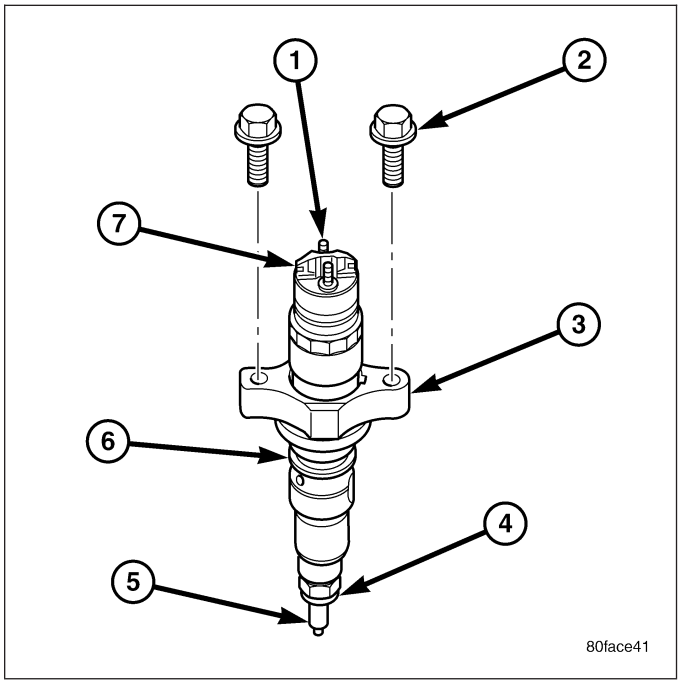

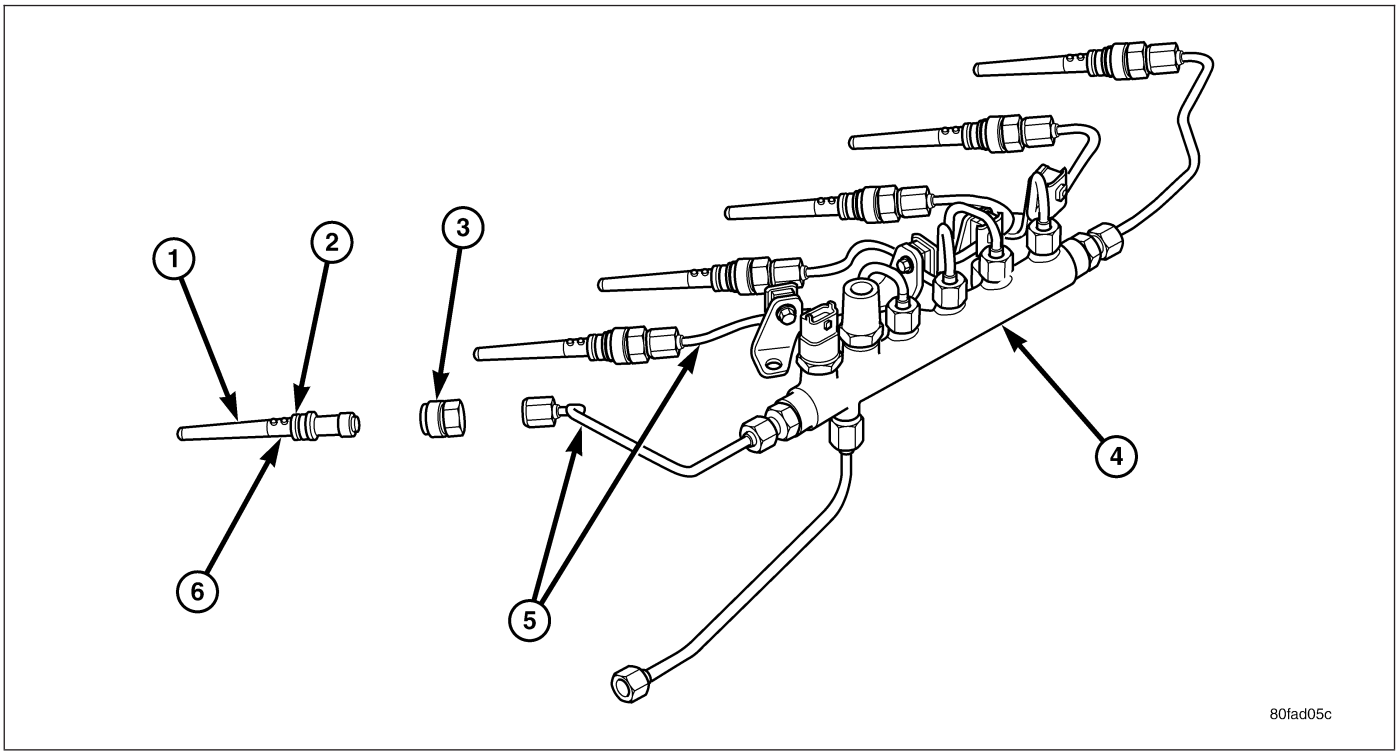

High-pressure connectors, mounted into the side of the cylinder head, connect each fuel injector to each high-pressure fuel line. The injector part number is laser-burned onto the injector. Failure to replace with the proper injector will cause severe engine damage.

https://truckmanualshub.com/

OPERATION

High-pressure fuel is supplied from the injection pump, through a high-pressure fuel line, into a fuel rail, through high-pressure lines, through steel connectors and into the solenoid actuated fuel injector. The ECM actuates the solenoid causing the needle valve to rise and fuel flows through the spray holes in the nozzle tip into the combustion chamber.

Each fuel injector is connected to the fuel rail by a high-pressure fuel line and a steel connector. This steel connector is positioned into the cylinder head and sealed with an O-ring. The connector is retained in the cylinder head by a nut (fitting) that is threaded into the cylinder head.

The torquing force of this threaded nut (fitting) provides a sealing pressure between the fuel line connector and the fuel injector. **Retaining nut torque is very critical.** If the nut (fitting) is under torqued, the mating surfaces will not seal and a high-pressure fuel leak will result. If the fitting is over torqued, the connector and injector will deform and also cause a high-pressure fuel leak. This leak will be inside the cylinder head and will not be visible. The result will be a possible fuel injector miss-fire and low power, or a no-start condition.

The fuel injectors use hole type nozzles. High-pressure flows into the side of the injector, the ECM activates the solenoid causing the injector needle to lift and fuel to be injected. The clearances in the nozzle bore are extremely small and any dirt or contaminants will cause the injector to stick. Because of this, it is very important to do a thorough cleaning of any lines before opening up any fuel system component. Always cover or cap any open fuel connections before a fuel system repair is performed.

Each fuel injector connector tube contains an edge filter that is designed to break up small contaminants before entering the fuel injector. **The edge filters are not a substitute for proper cleaning and covering of all fuel system components during repair.**

The bottom of each fuel injector is sealed to the cylinder head with a **1.5mm** thick copper shim (gasket). The correct thickness shim must always be re-installed after removing an injector.

Fuel pressure in the injector circuit decreases after injection. The injector needle valve is immediately closed and fuel flow into the combustion chamber is stopped. Exhaust gases are prevented from entering the injector nozzle by the needle valve.

REMOVAL

CAUTION: Refer to Cleaning Fuel System Parts.

Six individual, solenoid actuated high-pressure fuel injectors (7) are used. The injectors are vertically mounted into a bored hole in the top of the cylinder head. This bored hole is located between the intake/exhaust valves. High-pressure connectors, mounted into the side of the cylinder head, connect each fuel injector to each high-pressure fuel line.

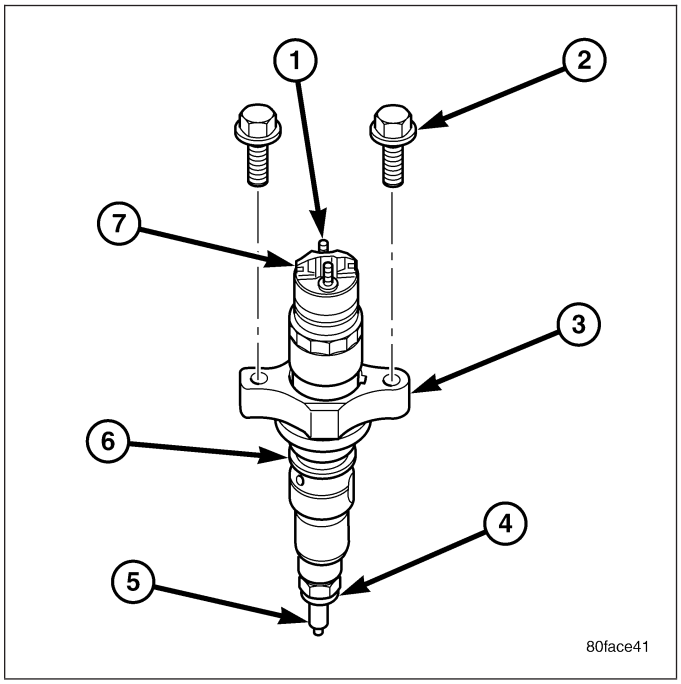

1. Disconnect both negative battery cables from both batteries. Cover and isolate ends of cables.
2. Remove vanity cover.
3. Remove breather assembly and tubes.

https://truckmanualshub.com/

4. Remove valve cover (Refer to 9 - ENGINE/CYLINDER HEAD/CYLINDER HEAD COVER(S) - REMOVAL).
5. Remove all 12 fuel injector wire harness nuts (1) securing integrated wiring harness to all 6 fuel injectors.
6. Remove all 12 fuel injector wire harness nuts (1) securing integrated wiring harness to all 6 fuel injectors.

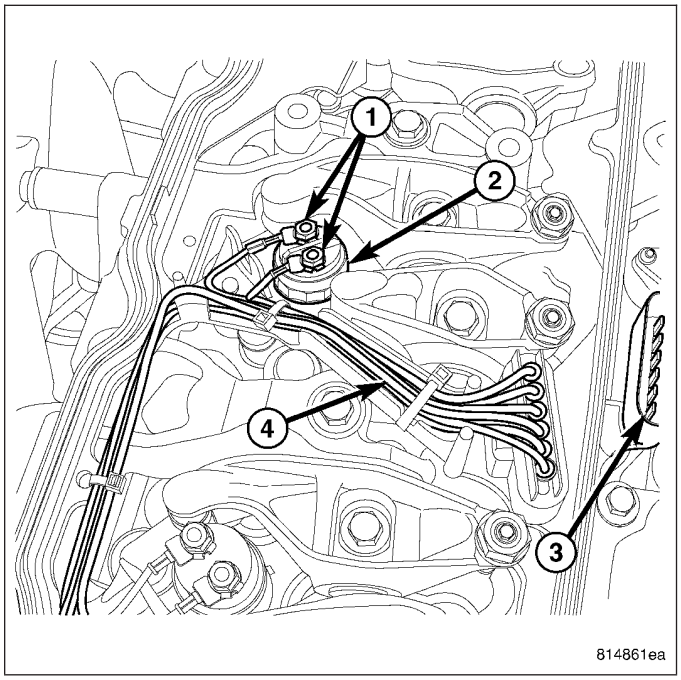

7. An integrated fuel injector wire harness / valve cover gasket (2) is used. After all 12 nuts (1) have been removed, remove this integrated gasket. Before removing gasket, disconnect engine wiring harness at both electrical connectors (3).

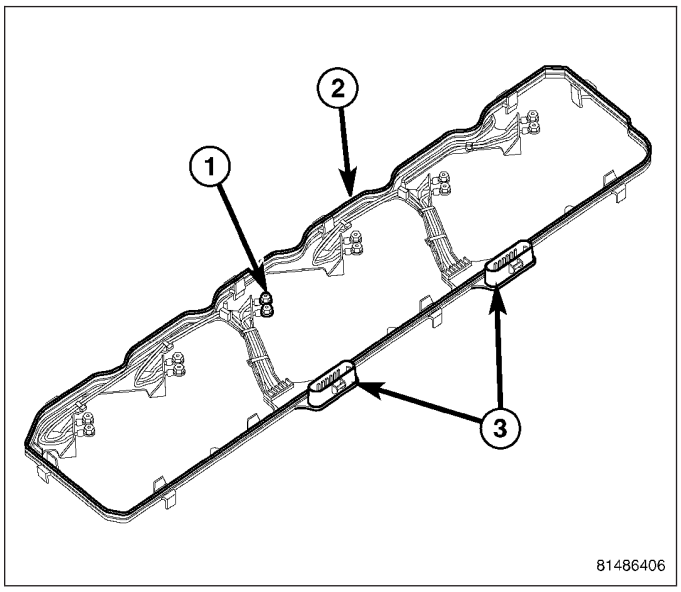

8. Remove necessary high pressure fuel line connecting the necessary fuel injector rail to high pressure connector. Refer to Fuel Line Removal for procedures.
9. A connector retainer (nut) is used on each connector tube. Remove this nut(s) by unthreading from cylinder head.

https://truckmanualshub.com/

10. Using special high-pressure connector removal tool #9015 (4) remove necessary high-pressure connector(s) from cylinder head. Tool #9015 threads onto connector tube. Use tool to pry connector tube(s) from cylinder head.

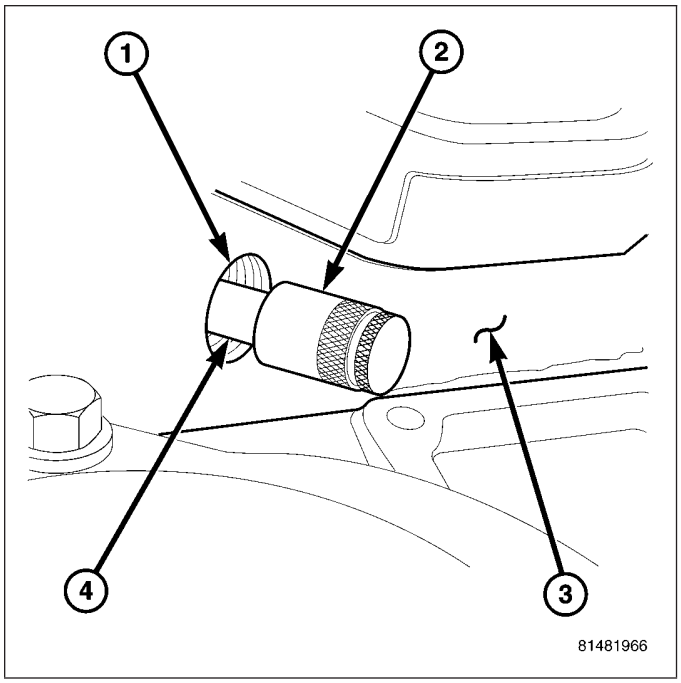

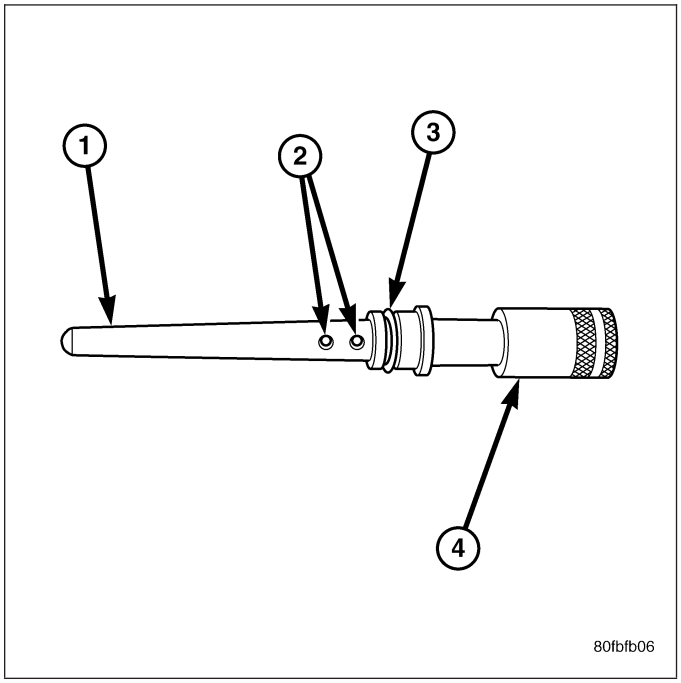

https://truckmanualshub.com/

11. Remove 2 fuel injector hold-down clamp bolts (1) at each injector being removed.
12. Remove necessary exhaust rocker arm assembly(s).

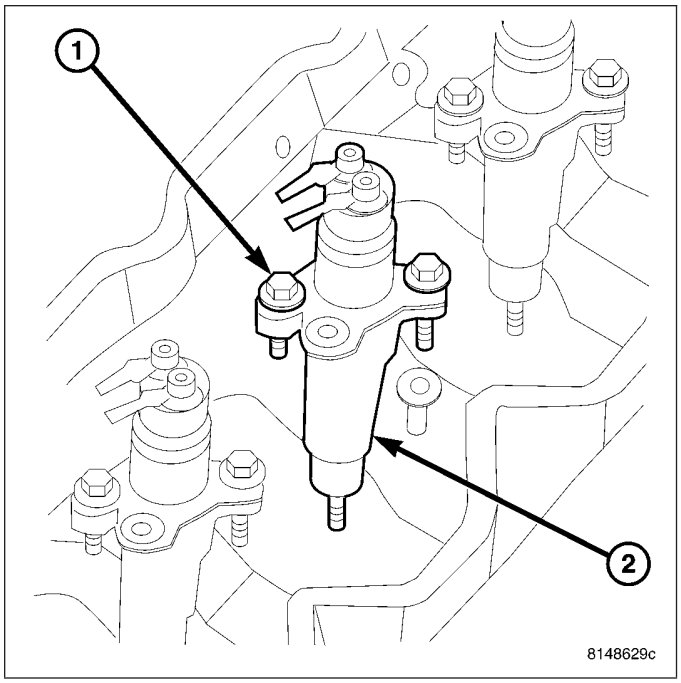

13. **USING TOOL #9010:**
    a. Special Tool #9010 is equipped with 2 clamshell clamps, a sliding retainer sleeve to retain the clamshell clamps, a 2–piece mounting stud, and a pivoting handle. **Do not attempt to remove the fuel injector with any other device. Damage to injector will occur.**
    b. The rocker housing is bolted to the top of cylinder head. The mounting stud from tool #9010 was meant to temporarily replace a rocker housing mounting bolt. Remove the necessary rocker housing mounting bolt. These mounting bolts are located at the center of each of the 5 rocker housing support bridges.

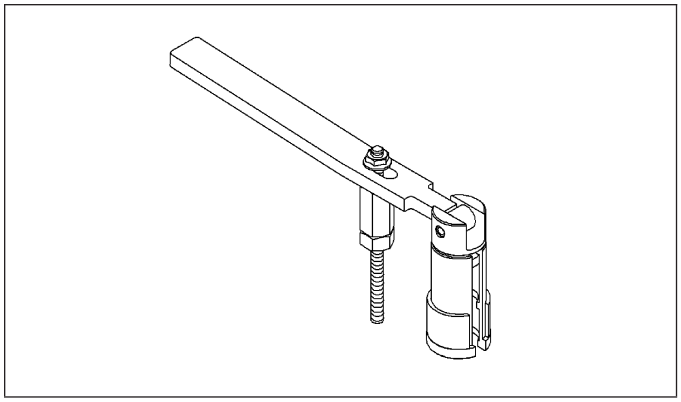

    c. Install and tighten 2–piece mounting stud to rocker housing. If removing the No. 6 fuel injector, separate the 2–piece mounting stud. Install lower half of mounting stud to center of rocker housing bridge. Install upper half of mounting stud to lower half.
    d. Position tool handle to mounting stud and install handle nut. Leave handle nut loose to allow a pivoting action.
    e. Position lower part of clamshell halves to sides of fuel injector (wider shoulder to bottom). The upper part of clamshell halves should also be positioned into machined shoulder on the handles pivoting head.
    f. Slide the retainer sleeve over pivoting handle head to lock clamshell halves together.
    g. Be sure handle pivot nut is loose.
    h. Depress handle downward to remove fuel injector straight up from cylinder head bore.

https://truckmanualshub.com/

14. Remove and discard injector sealing washer (2). This washer should be located on tip of injector, or may have remained in the injector bore..

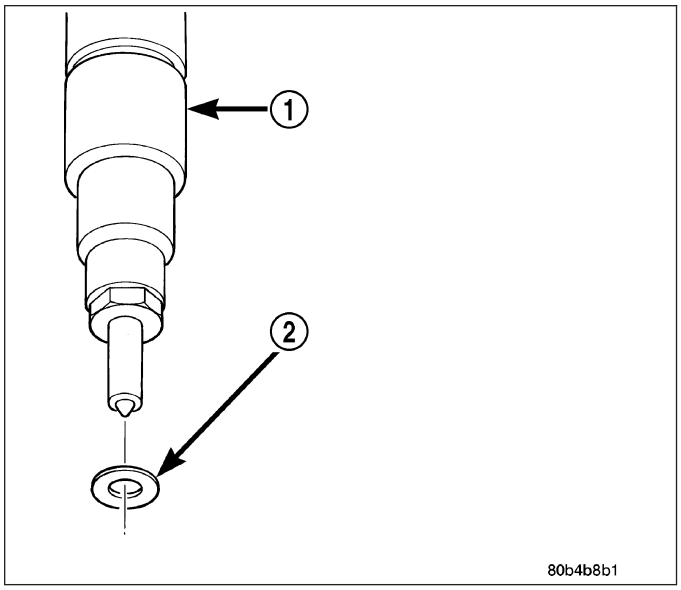

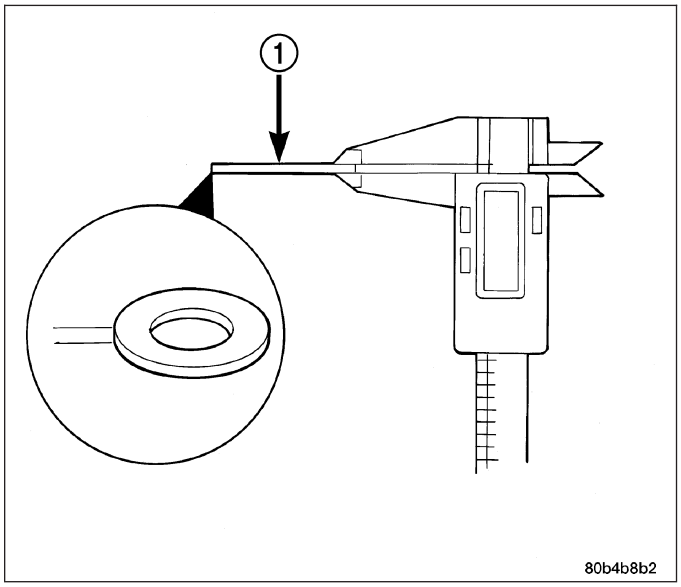

INSTALLATION

1. **Inspect fuel injector:**
   a. Look for burrs on injector inlet.
   b. Check nozzle holes for hole erosion or plugging.
   c. Inspect end of nozzle for burrs or rough machine marks.
   d. Look for cracks at nozzle end.
   e. If any of these conditions occur, replace injector.
2. Thoroughly clean fuel injector cylinder head bore. Blow out bore hole with compressed air.

https://truckmanualshub.com/

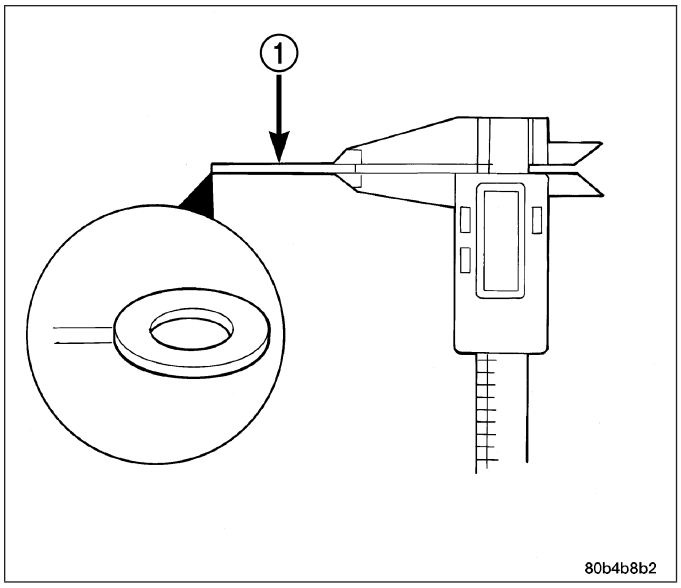

3. The bottom of fuel injector is sealed to cylinder head bore with a copper sealing washer (shim) (1) of a certain thickness. A new shim (1) with correct thickness must always be re-installed after removing injector. Measure thickness of injector shim (1). **Shim Thickness: 1.5 mm (.060”)**
4. Install new shim (1) (washer) to bottom of injector. Apply light coating of clean engine oil to washer. This will keep washer in place during installation.
5. Install new o-ring to fuel injector. Apply small amount of clean engine oil to O-ring and injector bore.
6. Install injector into cylinder head with male (high-pressure) connector port facing the intake manifold. Push down on fuel injector mounting flange to engage O-ring and seat injector.
7. Tightening Sequence:
   a. Install fuel injector holdown clamp (mounting flange) bolts. Be sure the clamp is perpendicular to the injector body. **Do a preliminary tightening of these bolts to 5 N·m (44 in. lbs.) torque. This preliminary tightening insures the fuel injector is seated and centered.**
   b. After tightening, relieve bolt torque, but leave both bolts threaded in place.
   c. Install high-pressure connector and retaining nut. Do a preliminary tightening to 15 N·m (11 ft. lbs.) torque.
   d. Alternately tighten injector holdown bolts to 10 N·m (89 in. lbs.) torque.
   e. Do a final tightening of the high-pressure connector and retaining nut. Tighten to 50 N·m (37 ft. lbs.) torque.
8. Install integrated gasket
9. Connect injector solenoid wires and nuts to top of injectors. Tighten connector nuts to 1.25 N·m (11 in. lbs.) torque. **Be very careful not to overtighten these nuts as damage to fuel injector will occur.**
10. Install exhaust rocker arm assembly. Refer to the Diesel Engine section.
11. Set exhaust valve lash. Refer to the Diesel Engine section.
12. Install fuel connector tube nut at cylinder head and tighten to 50 N·m (37 ft. lbs.). **Be sure to use a secondary back-up wrench on the connector nut (fitting) while torquing fuel line fitting.** Refer to Fuel Line Installation for additional information.
13. Install valve cover (Refer to 9 - ENGINE/CYLINDER HEAD/CYLINDER HEAD COVER(S) - INSTALLATION).
14. Install breather assembly.
15. Connect negative battery cables to both batteries.

https://truckmanualshub.com/

FUEL INJECTOR RAIL

DESCRIPTION

The fuel injector rail is bolted to the top of the intake manifold.

OPERATION

The fuel rail is used as a distribution device to supply high-pressure fuel to the high-pressure fuel lines.

REMOVAL

CAUTION: Cleanliness cannot be overemphasized when handling or replacing diesel fuel system components. This especially includes the fuel injectors, high-pressure fuel lines and fuel injection pump. Very tight tolerances are used with these parts. Dirt contamination could cause rapid part wear and possible plugging of fuel injector nozzle tip holes. This in turn could lead to possible engine misfire. Always wash/clean any fuel system component thoroughly before disassembly and then air dry. Cap or cover any open part after disassembly. Before assembly, examine each part for dirt, grease or other contaminants and clean if necessary. When installing new parts, lubricate them with clean engine oil or clean diesel fuel only.

1. Disconnect both negative battery cables at both batteries. Isolate ends of both cables.
2. Disconnect electrical connector at fuel pressure sensor.
3. Remove banjo bolt at fuel limiting valve.
4. Disconnect necessary wiring harness retention clips from intake manifold.
5. Lift 2 rubber covers to gain access to positive (+), intake heater cable nuts. Remove 2 nuts and remove 2 cables from studs.
6. Carefully remove 4 high-pressure fuel lines from top of fuel rail. Note position of each line while removing. **Do not bend lines while removing.**

CAUTION: WHEN LOOSENING OR TIGHTENING HIGH-PRESSURE LINES ATTACHED TO A SEPARATE FITTING, USE A BACK-UP WRENCH ON FITTING. DO NOT ALLOW FITTING TO ROTATE. DAMAGE TO BOTH FUEL LINE AND FITTING WILL RESULT.

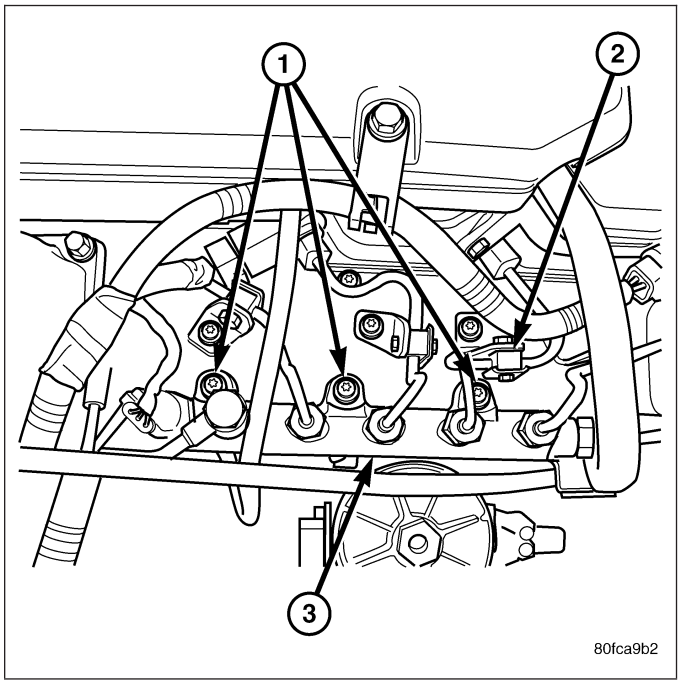

7. Carefully remove 2 high-pressure fuel lines at each end of fuel rail. Note position of each line while removing. **Do not bend lines while removing.** (Refer to 14 - FUEL SYSTEM/FUEL DELIVERY/FUEL LINES - REMOVAL).
8. Remove fuel line connecting injection pump to fuel rail.
9. Remove three injection rail mounting bolts.
10. Remove rail from top of intake manifold.

https://truckmanualshub.com/

INSTALLATION

1. Clean any dirt/debris from top of intake manifold and bottom of fuel rail.
2. Position fuel rail to top of manifold and install 3 mounting bolts (1) finger tight.
3. Install all high-pressure lines to rail (Refer to 14 - FUEL SYSTEM/FUEL DELIVERY/FUEL LINES - REMOVAL) (Refer to 14 - FUEL SYSTEM/FUEL DELIVERY/FUEL LINES - INSTALLATION). Torque to 30 N·m (22 ft. lbs.).
4. Tighten 3 mounting bolts at fuel rail. Torque bolts to 24 N·m (18 ft. lbs.).
5. Reposition wiring harness to intake elbow and install nut.
6. Install and tighten fuel limiting valve banjo bolt. Copper washer against fuel limiting valve, rubber seal against banjo bolt. Torque to 24 N·m (18 ft. lbs.).
7. Connect electrical connector to fuel pressure sensor.
8. Position 2 positive (+) cables to intake heater studs. Install 2 nuts.
9. Connect battery cables to both batteries.
10. Start engine and check for leaks.

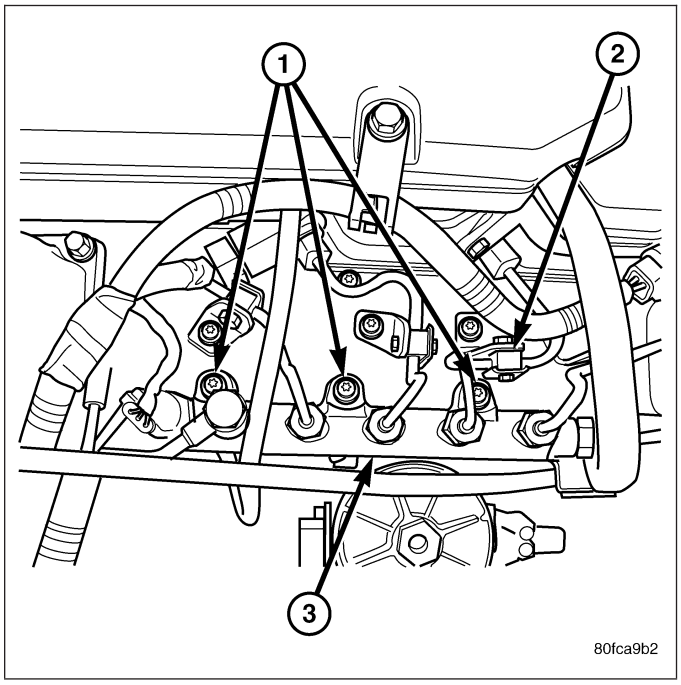

https://truckmanualshub.com/

SENSOR-TEMPERATURE/PRESSURE-INTAKE

DESCRIPTION

The combination, dual function Inlet Air Temperature/ Pressure Sensor (4) is located on the air cleaner (filter) cover.

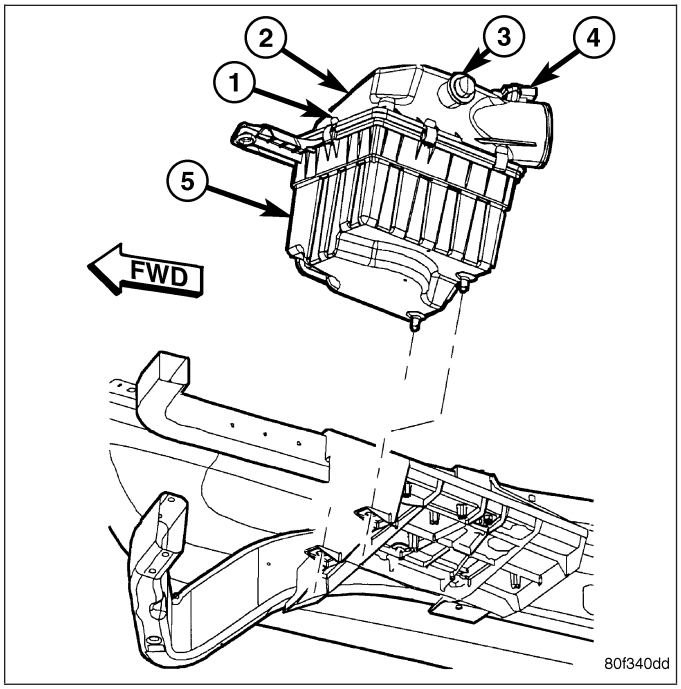

OPERATION

The Inlet Air Temperature/Pressure Sensor is a combination dual-function sensor. The sensor element extends into the intake air stream at the top of the air filter housing. Ambient air temperature as well as barometric pressure is monitored by this sensor. The Engine Control Module (ECM) monitors signals from this sensor.

REMOVAL

The Inlet Air Temperature/Pressure Sensor is located on the air cleaner cover.

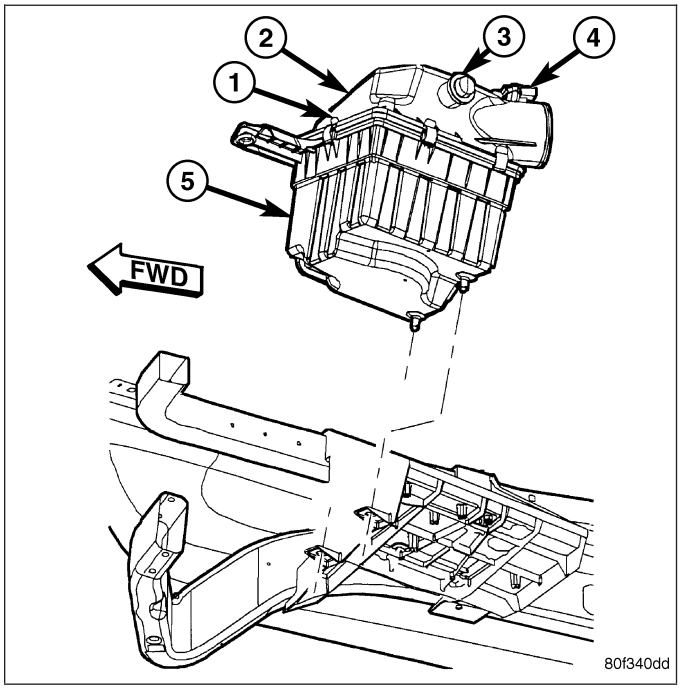

https://truckmanualshub.com/

1. Disconnect electrical connector at sensor.
2. Remove two Torx-type mounting screws (3).
3. Remove sensor from air cleaner cover.

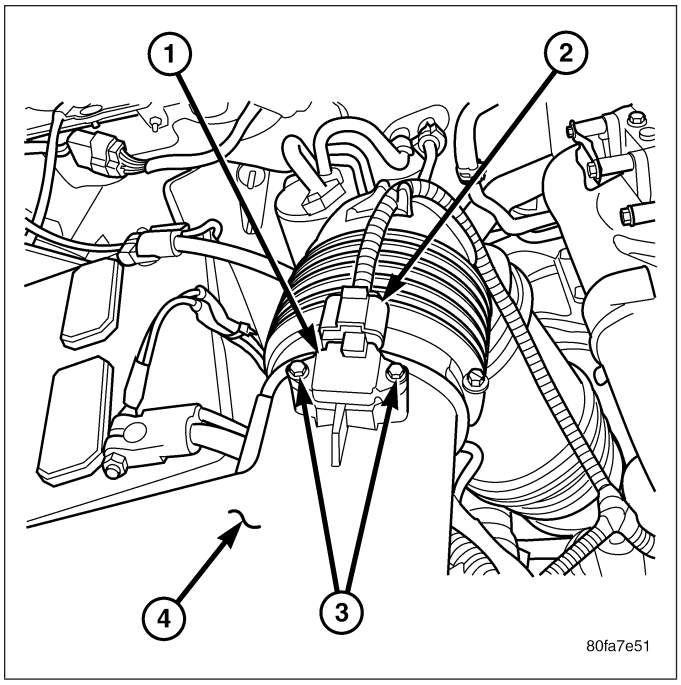

4. Check condition of sensor O-ring (2).

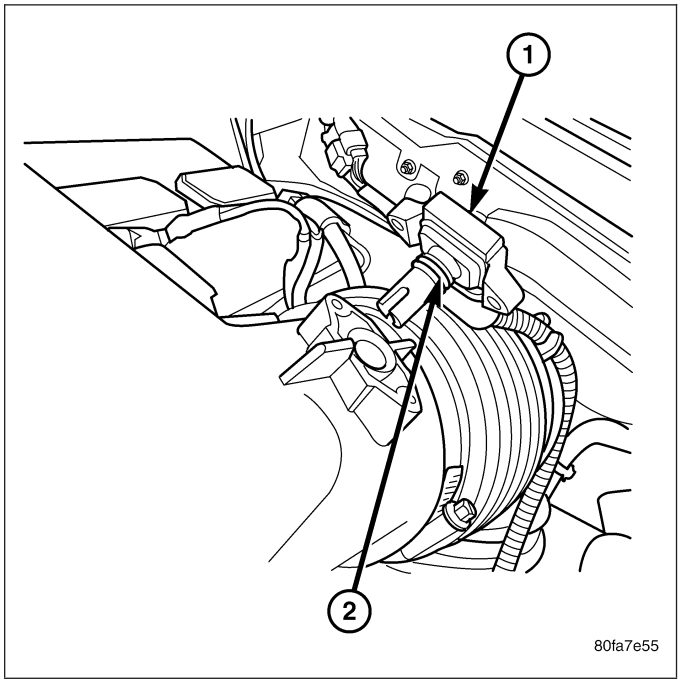

https://truckmanualshub.com/

INSTALLATION

1. Check condition of sensor O-ring.
2. Position sensor into top of air cleaner cover with a slight twisting action.
3. Install 2 mounting screws (3).
4. Install electrical connector (2).

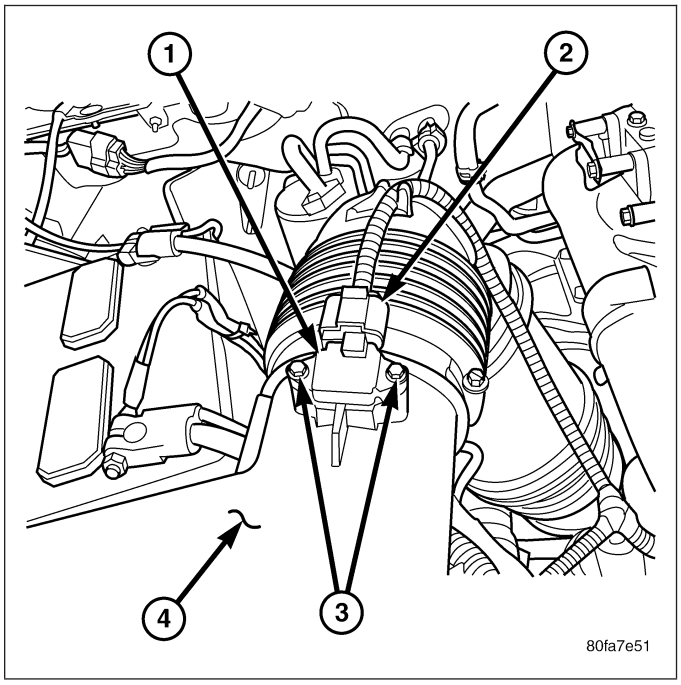

https://truckmanualshub.com/

HEATER - INTAKE AIR

DESCRIPTION

The intake manifold air heater element assembly is located in the top of the intake manifold.

OPERATION

The air heater element is used to heat incoming air to the intake manifold. This is done to help engine starting and improve driveability with cool or cold outside temperatures.

Electrical supply for the air heater element is controlled by the Engine Control Module (ECM) through the air heater relay. Refer to Intake Manifold Air Heater Relay for more information.

One heavy-duty cable connects the air heater element to the air heater relay. This cable will supply 12 volts to an individual heating element within the heater block assembly.

CAUTION: The heater elements are no longer grounded using an external ground strap. Grounding is now accomplished using two electrically conductive gaskets. Failure to use these gaskets will result in faulty heater element operation.

Refer to the Powertrain Diagnostic Procedures manual for electrical operation and complete description of the intake heaters, including pre-heat and post-heat cycles.

REMOVAL

If servicing the heater element, the entire block/element assembly must be replaced.

1. Disconnect both negative battery cables at both batteries. Cover and isolate ends of both cables.
2. Remove both the intake manifold air intake tube (above injection pump), and its rubber connector hose (2).

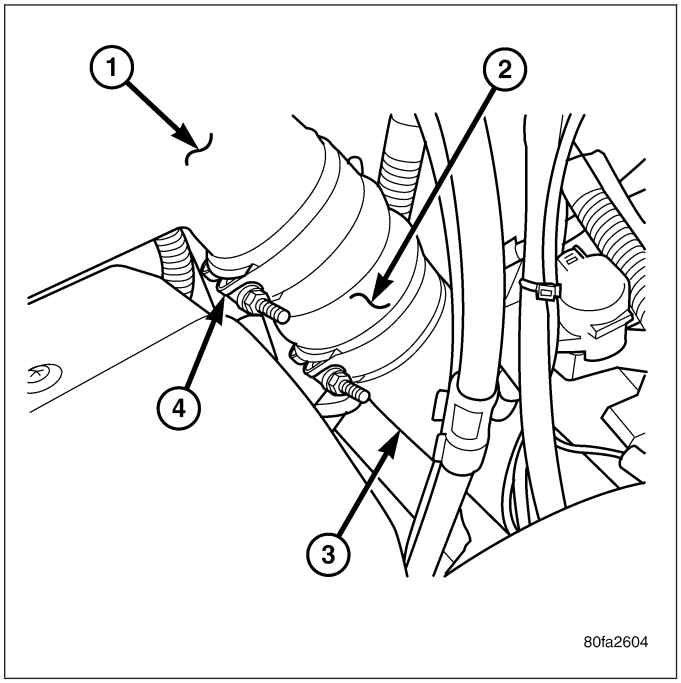

https://truckmanualshub.com/

3. Lift 2 rubber covers (3) to gain access to 2 positive (+) cable nuts.

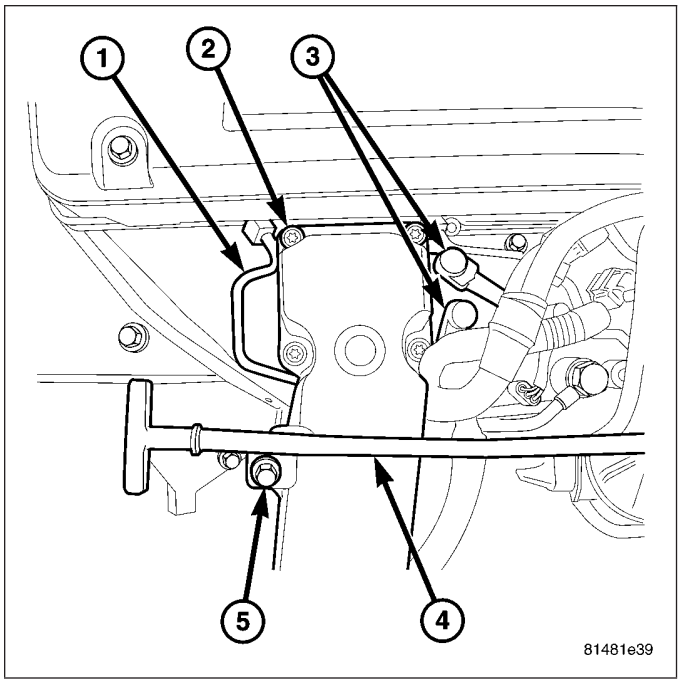

4. Remove cable nut (6) (Fig #.) and remove cable from stud.
5. Remove wiring harness clips.
6. Remove engine oil dipstick tube bracket from air inlet connection and fuel filter housing.
7. Remove four housing mounting bolts (1) and remove heater element assembly.

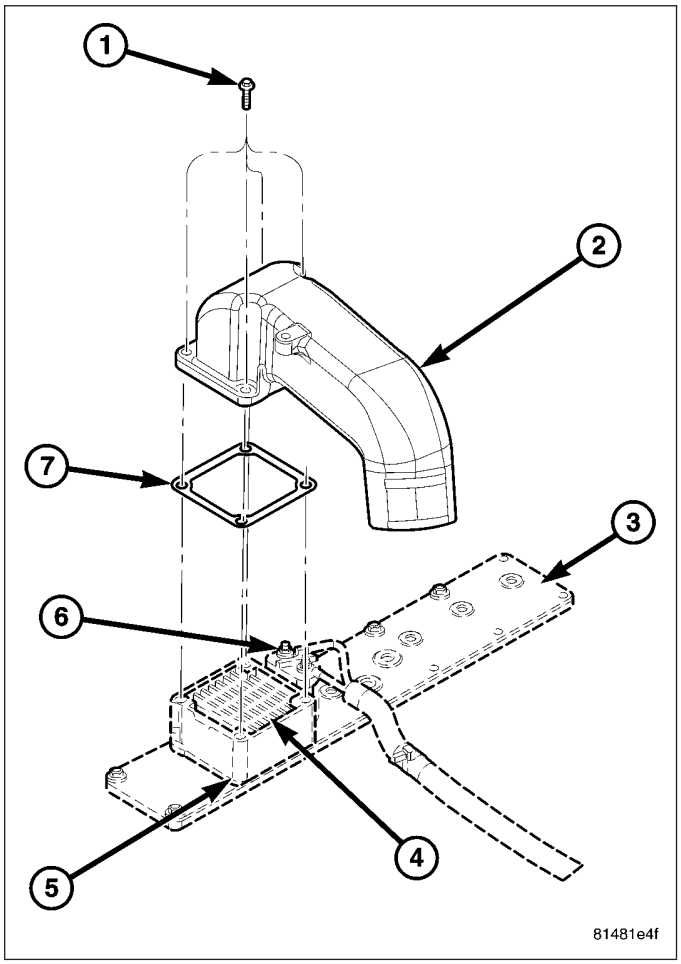

https://truckmanualshub.com/

INSTALLATION

If servicing the heater element, the entire block/element assembly must be replaced.

CAUTION: The heater elements are no longer grounded using an external ground strap. Grounding is now accomplished using two electrically conductive gaskets. Failure to use these gaskets will result in faulty heater element operation.

1. Using 2 new gaskets, position element assembly and air housing to intake manifold (2).
2. Install wire harness clips to intake connection stud.
3. Install 4 housing bolts (1) and tighten to 24 N·m (18 ft. lbs.) torque.
4. Connect 2 positive (+) heater cables (6) at cable mounting studs. **Do not allow either of the cable eyelets to contact any other metal source other than the cable nuts/studs.**

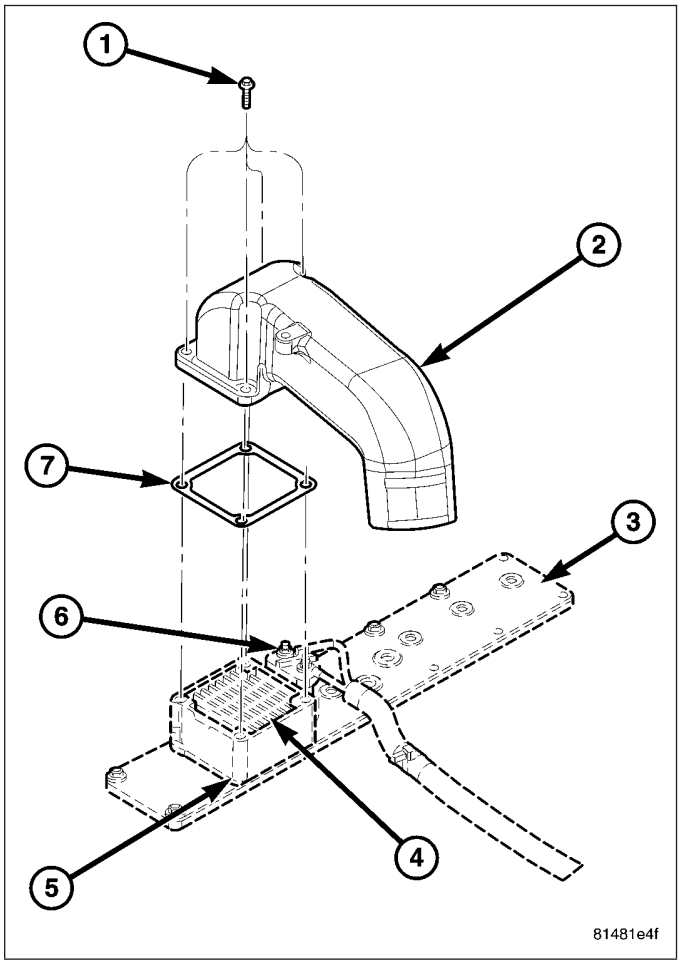

5. Install engine oil dipstick tube and mounting bolt (5).
6. Connect rubber connector hose and intake tube to air intake housing. Tighten clamp bolts to 11 N·m (100 in. lbs.) torque.
7. Connect both negative battery cables at both batteries.

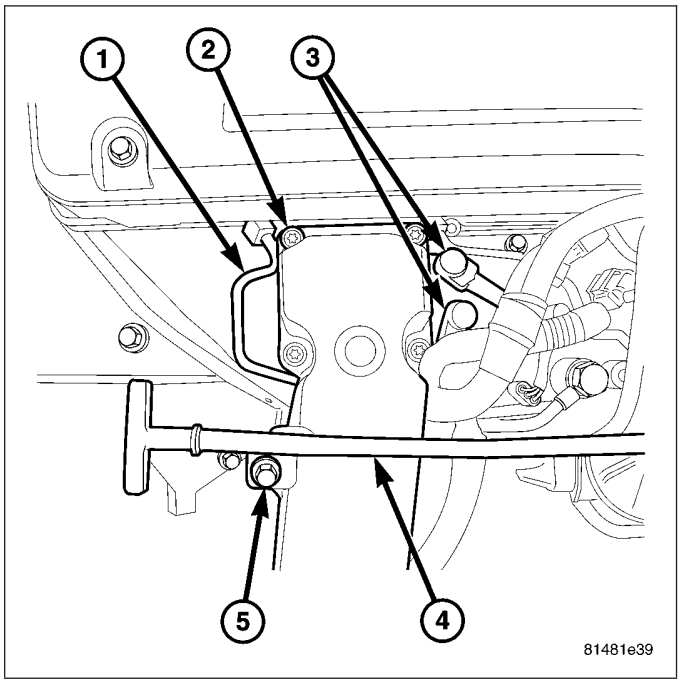

https://truckmanualshub.com/

RELAY - INTAKE AIR HEATER

DESCRIPTION

The intake manifold air heater relay (4) is located in the engine compartment.

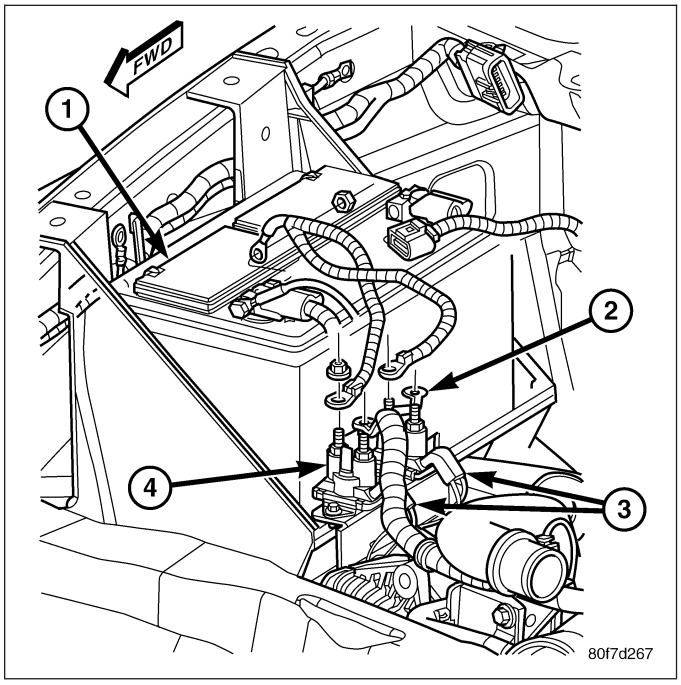

OPERATION

The Engine Control Module (ECM) operates the heating element through the intake manifold air heater relay. Refer to Powertrain Diagnostic Procedures for an electrical operation and complete description of the intake heater, including pre-heat and post-heat cycles.

REMOVAL

The two intake manifold air heater relays (4) are located in the engine compartment. They are attached to a common bracket. This bracket is attached to the right battery tray.

The mounting bracket and both relays are replaced as an assembly.

1. Disconnect both negative battery cables at both batteries.
2. Disconnect four relay trigger wires at both relays. Note position of wiring before removing.
3. Lift four rubber shields from all 4 cables.
4. Remove four nuts at cable connectors. Note position of wiring before removing.
5. Remove relay mounting bracket bolts and remove relay assembly.

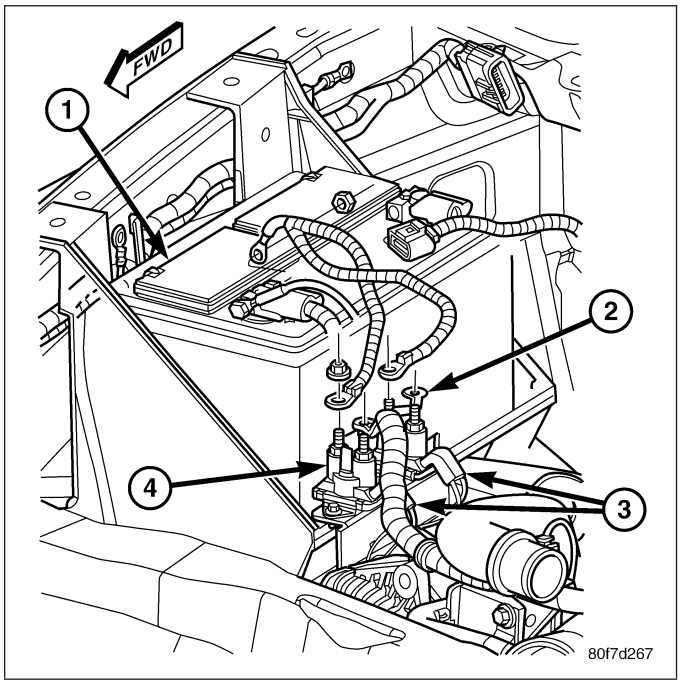

https://truckmanualshub.com/

INSTALLATION

1. Install relay assembly (4) to battery tray. Tighten mounting bolts to 4.5 N·m (40 in. lbs.) torque.
2. Connect eight electrical connectors to relays.
3. Connect battery cables to both batteries.

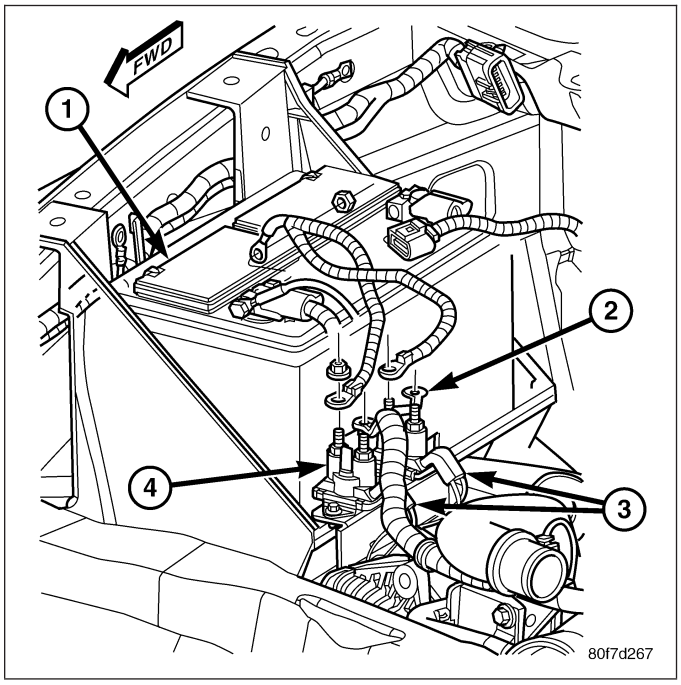

https://truckmanualshub.com/

SENSOR-TEMPERATURE/PRESSURE-MAP

DESCRIPTION

The combination, dual function Intake Manifold Air Temperature Sensor/MAP Sensor (2) is installed into the top of the intake manifold.

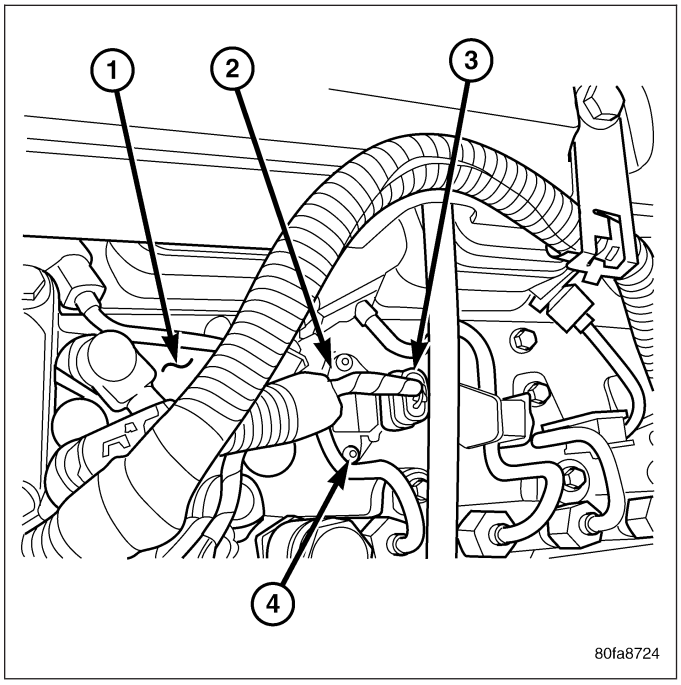

OPERATION

The combination, dual function Intake Manifold Air Temperature Sensor/MAP Sensor is installed into the top of the intake manifold with the sensor element extending into the air stream.

The IAT portion of the sensor provides an input voltage to the Engine Control Module (ECM) indicating intake manifold air temperature. The MAP portion of the sensor provides an input voltage to the ECM indicating turbocharger boost pressure.

REMOVAL

The combination, dual function Intake Manifold Air Temperature Sensor/MAP (IAT/MAP) sensor is installed (2) into the top of the intake manifold.

1. Clean area around sensor.
2. Disconnect electrical connector (3) from IAT/MAP sensor.
3. Remove two T-15 Torx headed screws (4).
4. Remove sensor from intake manifold.

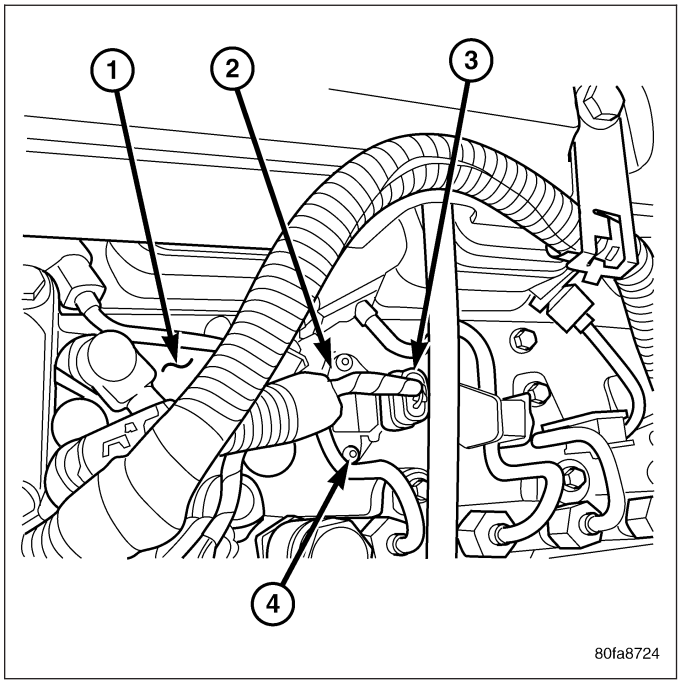

https://truckmanualshub.com/

5. Check condition of sensor O-ring (2).

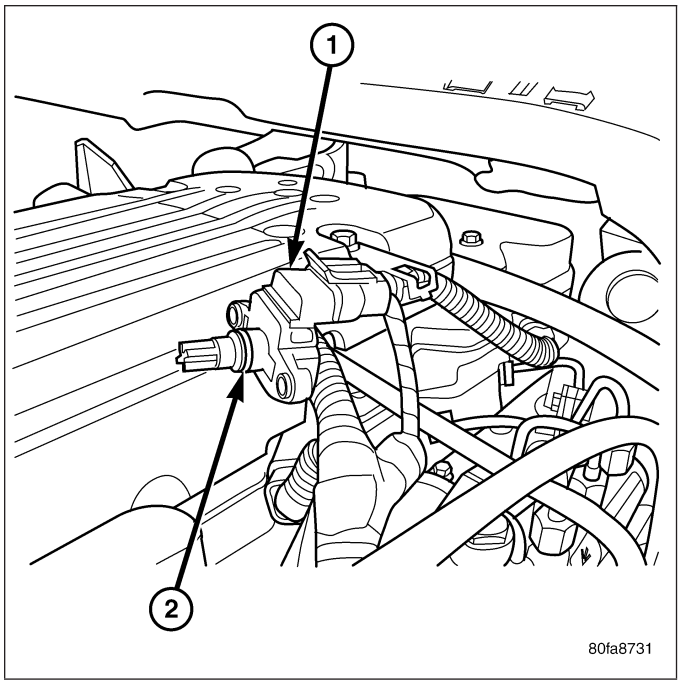

INSTALLATION

1. Check condition of sensor o-ring.
2. Lubricate sensor o-ring and sensor hole in intake manifold cover with clean engine oil.
3. Clean sensor mounting area at intake manifold (1).
4. Position sensor (2) into intake manifold.
5. Install and tighten 2 sensor mounting screws to 1 N·m (9 in. lbs.) torque.
6. Connect electrical connector to sensor.

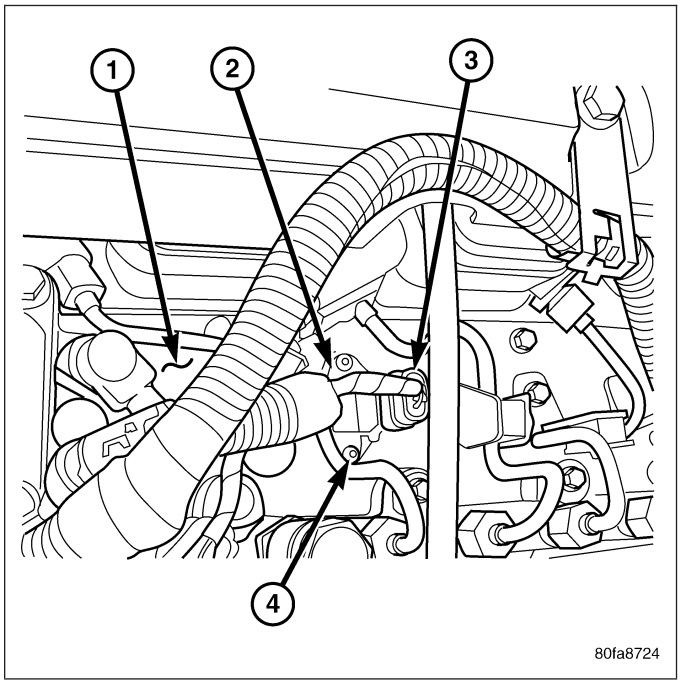

https://truckmanualshub.com/

SENSOR-MAP

DESCRIPTION

A combination, dual function Intake Manifold Air Temperature Sensor/MAP Sensor is used. Refer to Intake Air Temperature Sensor/MAP Sensor for information.

https://truckmanualshub.com/

SWITCH - PTO

DESCRIPTION

This Engine Control Module (ECM) input is used only on models equipped with aftermarket Power Take Off (PTO) units.

OPERATION

This input is used only to tell the ECM that the aftermarket PTO (Power Take Off) unit has been engaged. The ECM will disable (temporarily shut down) certain OBD II diagnostic trouble codes when the PTO unit is engaged.