https://truckmanualshub.com/

CPD10/15/18/20/25/30J
CPD10/15/18/20/25/30J D1
CPD10/15/18/20/25/30/35J C1
CPD10/15/18/20/25/30/35J C2
CPD40/45/50J D1
CPD40/45/50J C2

1～5t　J Series Counterbalanced Battery Forklift Truck

SERVICE MANUAL

Original Instruction

HANGCHA GROUP CO., LTD.

Dec. 2010 3rd edition

https://truckmanualshub.com/

https://truckmanualshub.com/

FOREWORD

Thanks for your purchasing our forklift truck.

4 wheel counterbalanced battery forklift truck is our company's new product. It has the character of small turning radius, beautiful shape, small dimensions, low gravity.

This operation manual is the explanations that how to use 1-3tJ series forklift truck correctly. It will instruct you how to operate safety and precautionary maintenance.

To ensure safety and exert the truck's potential, all the personnel that in charge of operation, maintenance and management must read this manual thoroughly before starting work with the forklift.

This manual is applicable to container trucks.

Forbid repairing the truck if you haven't been trained.

Our product design will update and perform better, so the content in this manual may be not the same as the forklift you owned.

If you have any questions please keep touches with HANGCHA GROUP CO.,LTD.sales department or let the agents know.

The meanings of model

Truck model	Tow electric control	Rise electric control	Rated capacity（t）/ load centre distance（mm）
CPD10/15/18/20/25/30J	1244 (CURTIS)	1254 (CURTIS)	1.0/500,1.5/500,1.8/500, 2.0/500,2.5/500,3/500, 4/500,4.5/500,5/500
CPD10/15/18/20/25/30J D1	ACS (INMOTION)	ACS (INMOTION)	
CPD10/15/18/20/25/30/35J C1	1238 (CURTIS)	EVC255 (CURTIS)	1. 0/500, 1. 5/500, 1. 8/500, 2. 0/500, 2.5/500,3/500,3.5/300
CPD10/15/18/20/25/30/35J C2	1238 (CURTIS)	1236 (CURTIS)	1. 0/500, 1. 5/500, 1. 8/500, 2. 0/500, 2.5/500,3/500,3.5/300
CPD40/45/50J C2	1238 (CURTIS)	1238 (CURTIS)	4/500,4.5/500,5/500

© Dec. 2010 3rd edition HANGCHA GROUP CO., LTD.

https://truckmanualshub.com/

https://truckmanualshub.com/

CONTENT

FOREWORD
1. DRIVING SYSTEM 1
1.1 ENGINE FOR FORKLIFT 1
1.2 GEAR BOX 8
1.3 DRIVING AXLE 9
2. STEERING SYSTEM 14
2.1 STEERING DEVICE 14
2.2 STEERING AXLE 15
3. BRAKE SYSTEM 19
3.1 MASTER CYLINDER 19
3.2 FOOT BRAKE 20
3.3 HAND BRAKE DEVICE 22
4. HYDRAULIC SYSTEM 23
5. LIFTING SYSTEM 27
5.1 DATA 27
5.2 FAULT 28
5.3 MAST 30
5.4 LIFTING CYLINDER 32
5.5 TILTING CYLINDER 32
6. ELECTRICAL SYSTEM 33
6.1 CPD10/15/20/25/30J FORK 33
6.2 CPD10/15/20/25/30/35J C1、CPD10/15/18/20/25/30/35J C2、CPD40/45/50J C2 FORK 37
6.3 CPD10/15/20/25/30J D1 FORK 44
7. MAINTENANCE RECORD 57

https://truckmanualshub.com/

1. Driving system

Drive system is composed most components such as electrical engineering, gear box, driving axle detent tyre and wheel rim.

Gear box is two grades reduce speed gear, one grade straight gear and one grade planet gear. So the gear box is very small.

Detent is a hoof detent, if you need know the particular content, you can see relevant portion of the trig system.

1.1 Engine for Forklift

1.1.1Data

CPD10/15J/18J

Model	Rated Power (kw)	Rated Voltage (V)	Rated Current (A)	Rated speed (r/m)	Max. Speed (r/m)	Excitations Mode	Insulation Grade	Cooling Mode	Protecting Grade	Ration (m)	Weight (Kg)	Remark
XQ – 5–3A	5.3	45	139	1700	3200	separate excitation	F	IC01	IP20	60	95	tow
XQD –8.2-3D	8.2	45	172.8	1600	3200	series excitation	F	IC01	IP20	5	65	work

CPD20/25J

Model	Rated Power (kw)	Rated Voltage (V)	Rated Current (A)	Rated speed (r/m)	Max. Speed (r/m)	Excitations Mode	Insulation Grade	Cooling Mode	Protecting Grade	Ration (m)	Weight (Kg)	Remark
XQ-7A	7	45	180	1200	2400	separate excitation	F	IC01	IP20	60	112	tow
XQD-8.6-3D	8.6	45	248	1600	3200	series excitation	F	IC00	IP44	5	72	work

CPD30J

Model	Rated Power (kw)	Rated Voltage (V)	Rated Current (A)	Rated speed (r/m)	Max. Speed (r/m)	Excitations Mode	Insulation Grade	Cooling Mode	Protecting Grade	Ration (m)	Weight (Kg)	Remark
XQ – 10.2 A	10.2	75	162.5	1500	/	separate excitation	F	IC01	IP20	60	120	tow
XQD - 10 -3D	10	75	161.6	2000	/	series excitation	F	IC01	IP20	15	83	work

CPD10/15/18J C1

Model	Rated Power (kw)	Rated Voltage (V)	Rated Current (A)	Rated speed (r/m)	Max. Speed (r/m)	Excitations Mode	Insulation Grade	Cooling Mode	Protecting Grade	Ration (m)	Weight (Kg)	Remark
YDQ6.8-4HC	6.8	31	222	1200	2000	AC	F	IC01	IP20	60	94	tow
XQD –8.2-3D	8.2	45	172.8	1600	3200	series excitation	F	IC01	IP20	5	65	work

CPD20/25J C1

Model	Rated Power (kw)	Rated Voltage (V)	Rated Current (A)	Rated speed (r/m)	Max. Speed (r/m)	Excitations Mode	Insulation Grade	Cooling Mode	Protecting Grade	Ration (m)	Weight (Kg)	Remark
YDQ9.1-4HC	9.1	31	280	1200	2000	AC	F	IC01	IP20	60	110	tow
XQD-8.6-3D	8.6	45	248	1600	3200	series excitation	F	IC00	IP44	5	72	work

CPD30/35J C1

Model	Rated Power (kw)	Rated Voltage (V)	Rated Current (A)	Rated speed (r/m)	Max. Speed (r/m)	Excitations Mode	Insulation Grade	Cooling Mode	Protecting Grade	Ration (m)	Weight (Kg)	Remark
YDQ11.75-4HC	10.6	51	180	1200	/	AC	F	IC01	IP20	60	110	tow
XQD - 10 -3D	10	75	161.6	2000	/	series excitation	F	IC01	IP20	15	83	work

CPD10/15/18J C2

Model	Rated Power (kw)	Rated Voltage (V)	Rated Current (A)	Rated speed (r/m)	Max. Speed (r/m)	Excitations Mode	Insulation Grade	Cooling Mode	Protecting Grade	Ration (m)	Weight (Kg)	Remark
YDQ6.8-4HC	6.8	31	222	1200	2000	AC	F	IC01	IP20	60	94	tow
YDQ–8.6	8.6	31	248	1600	3200	AC	F	IC01	IP44	5	65	work

CPD20/25J C2

Model	Rated Power (kw)	Rated Voltage (V)	Rated Current (A)	Rated speed (r/m)	Max. Speed (r/m)	Excitations Mode	Insulation Grade	Cooling Mode	Protecting Grade	Ration (m)	Weight (Kg)	Remark
YDQ9.1-4HC	9.1	31	280	1200	2000	AC	F	IC01	IP20	60	110	tow
YDQ-8.6HC	8.6	31	248	1600	3200	AC	F	IC00	IP44	5	65	work

CPD30/35J C2

Model	Rated Power (kw)	Rated Voltage (V)	Rated Current (A)	Rated speed (r/m)	Max. Speed (r/m)	Excitations Mode	Insulation Grade	Cooling Mode	Protecting Grade	Ration (m)	Weight (Kg)	Remark
YDQ11.75-4HC	10.6	51	180	1200	/	AC	F	IC01	IP20	60	110	tow
YDQ - 10	10	51	161.6	2000	/	AC	F	IC01	IP44	15	80	work

CPD40/45/50J C2

Model	Rated Power (kw)	Rated Voltage (V)	Rated Current (A)	Rated speed (r/m)	Max. Speed (r/m)	Excitations Mode	Insulation Grade	Cooling Mode	Protecting Grade	Ration (m)	Weight (Kg)	Remark
YDQ16.6-4HC	16.6	51	250	3100	5000	AC	H	IC00	IP20	60	155	tow
YDB25.4-4	25.4	51	387	1620	3200	AC	H	IC00	IP20	5	115	work

CPD10/15J D1

Model	Rated Power (kw)	Rated Voltage (V)	Rated Current (A)	Rated speed (r/m)	Max. Speed (r/m)	Excitations Mode	Insulation Grade	Cooling Mode	Protecting Grade	Ration (m)	Weight (Kg)	Remark
TSP180/4-180-48V	10.5	31	280	1200	2000	AC	F	IC01	IP20	60	135	tow
TSW112/4-195-T-48V	11	31	285	2000	3200	AC	F	IC01	IP20	15	83	work

CPD20/25J D1

Model	Rated Power (kw)	Rated Voltage (V)	Rated Current (A)	Rated speed (r/m)	Max. Speed (r/m)	Excitations Mode	Insulation Grade	Cooling Mode	Protecting Grade	Ration (m)	Weight (Kg)	Remark
TSP180/4-180-48V	10.5	31	280	1200	2000	AC	F	IC01	IP20	60	135	tow
TSW112/4-195-T-48V	11	31	285	2000	3200	AC	F	IC01	IP20	15	83	work

CPD30J D1

Model	Rated Power (kw)	Rated Voltage (V)	Rated Current (A)	Rated speed (r/m)	Max. Speed (r/m)	Excitations Mode	Insulation Grade	Cooling Mode	Protecting Grade	Ration (m)	Weight (Kg)	Remark
TSP180/4-180-80V	10.6	51	180	1200	2000	AC	F	IC01	IP20	60	135	tow
TSW112/4-195-T-80V	12.8	51	216	2000	3200	AC	F	IC01	IP20	15	83	work

CPD40/45/50J-D1

Model	Rated Power (kw)	Rated Voltage (V)	Rated Current (A)	Rated speed (r/m)	Max. Speed (r/m)	Excitations Mode	Insulation Grade	Cooling Mode	Protecting Grade	Ration (m)	Weight (Kg)	Remark
TSP180/4-200	16.6	52	/	/	/	AC	F	IC01	IP20	60	/	tow
TSP160/4-250-T	25	49	387	1620	/	AC	F	IC01	IP20	5	/	work

electromotor applied range	Height above sea level	No exceed 1200m	Remark
	Environment temperature highest/lowest	40^0C/-25^0C	
	Relative temperature	Until on the surface of motor dew 100%	
	Cooling air	Must not contain volatile gas	
most work current of the motor	Tractor motor	Three times of rated current ,admit time is one minute	
	Lifting motor、steering motor	One point eight times of rated current ,admit time is one minute	
Admit temperature Rolling bearing（Environment temperature not exceed 40^0C）		95^0C	
From brush box catadrome side to surface of the commutation		2～4mm	**JD1 not**
Cooling insulation resistance（When it approach work temperature, please measure by 250Vmegohmmeter）		＜45V 0.5MΩ 45V～110V 1MΩ	
Brush		Metal plumbagin brush trade J201 chart No 5CZ、578	**JD1 not**

1.1.2 Failure diagnosis

CPD10-30

Failure phenomenon	Possible cause
All of sheet copper nigrescence	Brush's pressure is wrong
Parts of commutator according to a certain order nigrescence	parts is short circuit armature coil is short parts of commutator is not fasten to armature coils open circuit
Parts of commutator are nigrescent, but without definite rule	commutator's center line location change ·commutator' s surface is rough, out of round
Brush wear and tear, change colors and break	motor vibration clearance between brush and box is bigger. working surface distance between the box and commutator is bigger mice between parts of commutator extrude material of the brush is bad trademark of the brush is wrong
Sparkle strong	motor overload commutator is unholy commutator is rough or out of round mica or parts of commutator extrude brush seat grinding is bad the pressure of brush is not enough big trademark of the brush is wrong the brush lock in the box the brush frame is loose or vibrational the polarity and tactic order of magnetic pole is wrong
The brush and wire heat	the sparkle of brush is strong the brush is not contacted with the cable the cable is thinner
The brush have noise	the surface of the commmutator is rough

1.1.3The marker, sign and connecting type of exceed cable or terminal of motor

series excitation motor	A1 --motor armature's head
	A2--motor armature's end
	D1--shunt excitation's head
	D2--shunt excitation's end
Separated Excitation motor	A1 --motor armature's head
	A2--motor armature's end
	F1—Separated Excitation excitation's head
	F2-- Separated Excitation excitation's end

Connection mode
Series excitation motor

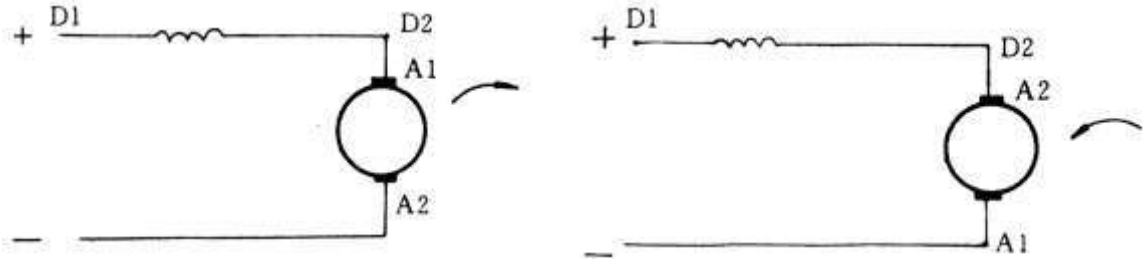

Separate excitation motor

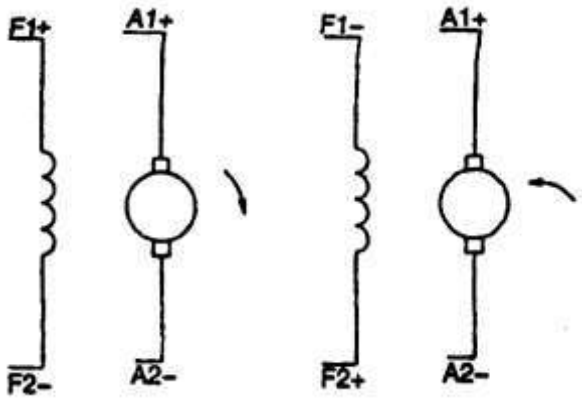

1.1.4 Use and maintain

CPD10-30J

The commutator has four check windows, with which you can observe and maintain the commutator and brush. There are four average distributing magnetic poles in seat. The magnetic pole coil is made of F state copper thread, dipping with F state insulating varnish. Parts of stator and neutral position of brush have been adjusted; users mustn't unpack and adjust randomly.

Check armature for rotation and void frictionize.

Check outgoing line of electric machine for connection

Brush should slide freely in the brush hold box.

Check reverse chip for neatness, if need be，clear canaliculus between the reverse chip or the commutator surface of powder, can used cleanly calico of soft and no thread downy , maybe surface had oil ,calico can dip alcohol when wiping (stop process).

check all fasteners whether fastened.

·brush's shelf must reliable fastened, can't become flexible. If need running or disassembly brush's shelf， must make out marker，can become flexible bolt. When the brush's shelf reposition, aim at marker line, screw down bolt, in order to keep brush in the former neutral location.

·winding isolating resistance should check of fix a date, when near work's temperature, under rule data, otherwise should put up dry.

fix a date open window shutter, check inside part whether transmutation and reverse partial circs whether up to snuff.

you should often clean bed load and other dirt on the motor's shell, in order to giving out heat quantity best.

Every half year check motor one time as follow:

a. Inspect exterior and clean the dust for the motor；
b. Clean or replace bearing, during running it is permitted to giving off abnormal noise for bearing；
c. Inspect the brush's abrasion, if necessary replace it.

Burnishing for brush：

·When replaces the brush, using "00" thin emery cloth to burnishing it. During burnishing you can haul the emery cloth leftward or rightward.

After burnish the brush and clean the commutator with emery cloth, the motor should lowered voltage and limiting speed to running under load, in order to safety, till the brush's working face is shined.

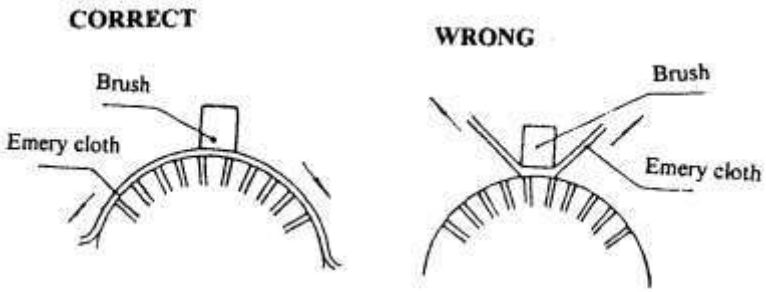

CPD10/15/18/20/25/30/35J C1

CPD10/15/18/20/25/30/35J C2、CPD40/45/50J C2

CPD10/15/18/20/25/30J D1、CPD40/45/50J D1

CPD10/15/18/20/25/30/35J C1、CPD10/15/18/20/25/30/35J C2、CPD40/45/50J C2、CPD10/15/18/20/25/30J D1、CPD40/45/50J D1 fork don't have commutator and brush，not need maintain. You must clear dust everyday.

1.2 Gear box

Gear box is two grades reduce speed gear, one grade straight gear and one grade planet gear. So the gear box is very small.

Trouble	Probably cause	Method of troubleshooting
When traveling or change direction	Gear clearance is too big. Too much worn of gear.	Adjust. Replace.
Too much noise when traveling	Oil level is low. Gear clearance is too big. Too much worn of gear.	Add oil. Adjust. Replace.

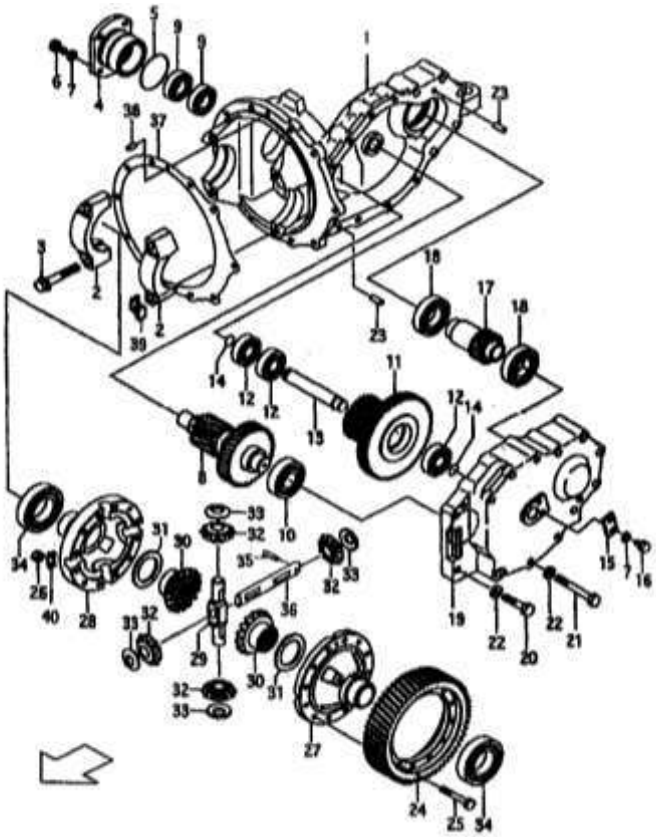

1. Box	2.Bearing pedestal	3. Bolt	4.Bearing pedestal	5.O joint ring
8.Dual articulated gear	9. Axletree 6206	10.Axletree 6307	11. dual articulated gear	12.Axletree 6305
13.axes	14. O joint ring	15.Positioning board	16. Bolt	17. Pinion
18. Axletree 6208	19. Tank cap	20. Bolt	21. Bolt	23.Pin

24. Girth gear	25. bolt	26.nut	27.right differential carrier	28.left differential carrier
29. Gear shaft (I)	30. Face gear	31. Gasket	32. Planetary gear	33. Thrust washer
34. Axletree 6211	35. Straight pin	36.Gear shaft (II)	37. Paper gasket	38.pin
39. Lock plate	40. Lock washer			

1.3 Driving axle

1.3.1 Data

Type	1-1.8t	2-2.5t	3t	4-5t
Driving axle type		Full floating, axle and truck body direct install, front		
Tire pressure		10.30MPa		
Wheel hub rotation starting torque at hub blot N		10～29		
Axial play of wheel bearing mm		less than 0.08		
weight	125-130	195-198	202-208	350-380

1.3.2 Trouble diagnoses and corrections

condition	Probable cause	Corrective action
Abnormal noises	loose driving axle and body connecting blots. loose wheel nut worn or damaged wheel hub bearing. wheel hub bearing not properly adjusted. worn axle shaft spliner. insufficient lubrication	Tighten. Tighten. Replace. Adjust. Replace. Lubricate.
Unstable driving	loose wheel nut. deformed wheel. worn or damaged wheel hub bearing. loose driving axle and body connecting blots. wheel hub bearing not properly adjusted. improper tire pressure.	Tighten. Replace. Replace. Tighten. Adjust. Adjust.
Oil leakage	worn or damaged axle shaft oil seal. final drive improperly installed. loose drain plug.	Replace Replace gasket. Tighten.

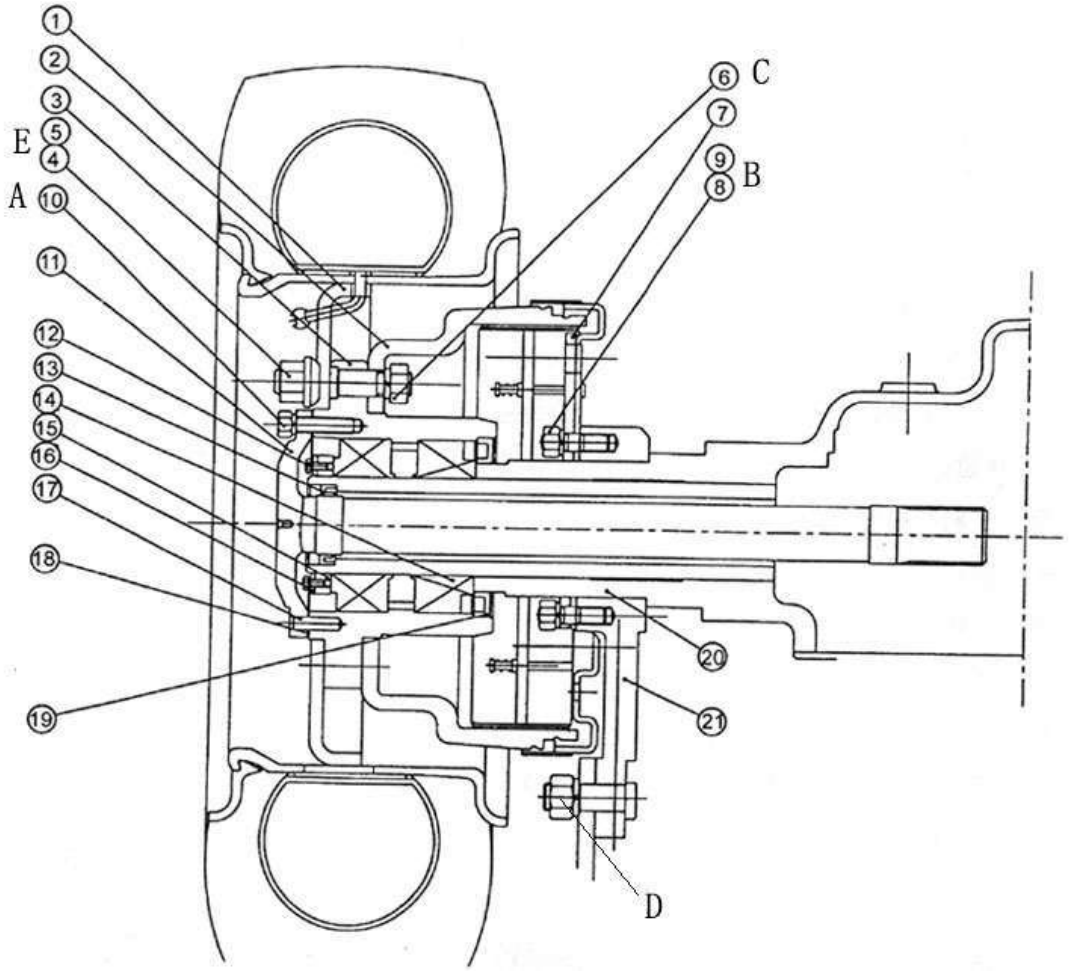

Fig.3-1 Driving axle

1. Rim	2. Brake drum	3. wheel hub	4.Wheel nut	5. Wheel hub bolt
6. Bolt	7.Brake Assembly	8. Wash	9.Bolt	10. Half-axle nut
11. Half axle	12.Bolt	13. Oil seal	14. Taper roller bearing	15. Adjusting nut
16. Lock nut	17.Pin	18. Paper shim	19. Oil seal	20.Axle case
21. Supporter				

Tighten torque: N.m

	1-1.8t	2-3t	4-5t
Axle shaft bolt Ⓐ	44-58	73.5-88.3	105-156
Trig soleplate bolt Ⓑ	76-107	118-147	157-176
nut connecting brake drum and hub Ⓒ	260-347	324-373	324-373
Bolt and nut connecting support plate and truck body Ⓓ	260-347	324-373	324-373
Tyre nut Ⓔ	157-176	441-588	441-588

1.3.3Driving axle assemble removal and installation

> ⚠ WARNING
>
> Be careful when removal and installation driving axle as it is heavy.

1) Raise front end of forklift truck and support frame with wooden blocks.
2) Remove mast assembles.
3) Slightly raise axle with a hoist and place wooden blacks under differential gear carrier and transmission case.
4) After placing a pan under axle case, loose oil plug, drain oil from axle case.
5) Disconnect brake nuts from left and right cylinders.(see fig.5-1）。

> **CAUTION：Plug brake tube openings to prevent oil from flowing out.**

6) Disconnect brake cable at hand brake lever.
7) Remove front wheels.
8) Remove axle shaft.
9) Support driving axle with wire ropes and lifting device.
10) Remove bolts securing axle mounting bracket to frame.（see fig.5-2）.
11) Remove nuts securing axle case to differential gear carrier.（see fig.5-3）.
12) Remove driving axle assemble.

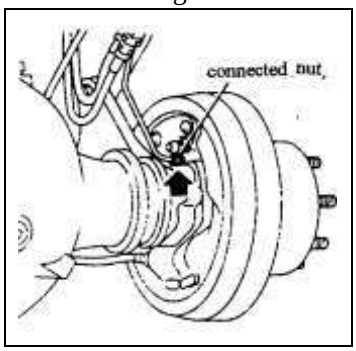

Fig.1-1

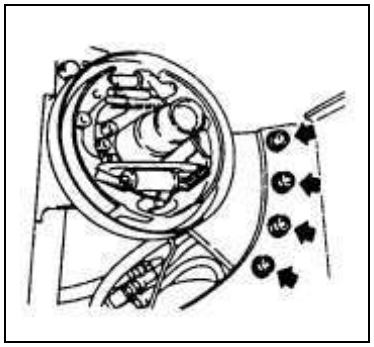

Fig.1-2

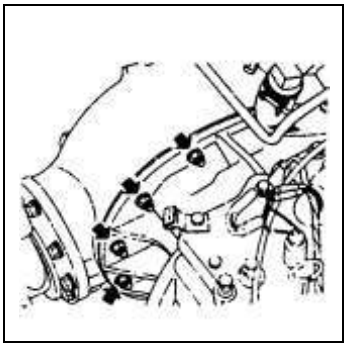

Fig.1-3

13）Remove brake drum，remove wheel hub.

14）Remove axle mounting bracket and brake component from axle tube.

15）Remove oil seal from axle tube.

16）To install driving axle assemble in the reverse order of removal. Observe the following:

① When installing axle mounting bracket and brake component, apply a coat of calcium grease to axle tube.

② Apply 1/3～2/3 of volume of calcium grease to wheel hub，then install them on axle tube.

③ Install oil seal with its part number facing to the inside of forklift truck.

④ attach seal tape （PVC, white）to drain plug then installed after cleaned it.

⑤ Replenish axle case with gear oil. Tighten vent plug after clearing.

GL-5 85W/90	Gear oil (L）	2.8	1-1.8t
		3.2	2-3t
		4.5	4-5t

Vent plug should clear instantly to prevent pressure inside of wheel hub from rising.

1.3.4. Axle shaft and wheel hub

Remove

1）Raise the front end of forklift truck and support frame with wooden blocks.

2）Remove front wheel and axle shaft.

3）Remove lock nuts, lock washers, snap ring, felt ring, adjusting nut. Use special tools.

4）Remove brake drum（refer to Fig.5-4）;

If brake drum is difficult to remove: a. Remove adjusting hole plug. Then with flat-blade screwdriver extend adjusting hole, turn adjusting ratchet wheel by 10 notches. To contract brake shoe lining（refer to Fig.5-5）. b. evenly tapping on brake drum with brass bar or wooden mallet.

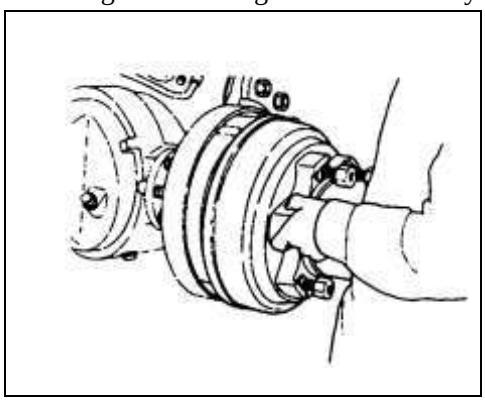

Fig.1-4

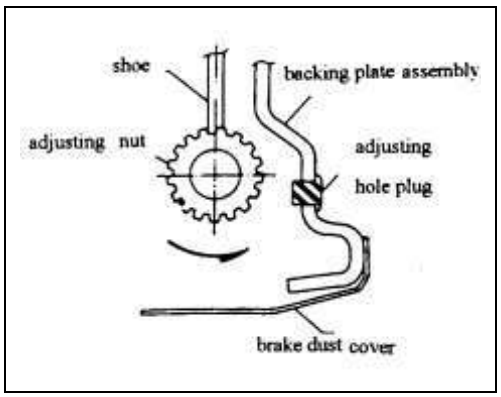

Fig.1-5

5）Remove wheel hub, be careful not to drop bearing inner race.

6）Remove oil seal and inner bearing as an assembly by evenly tapping on periphery of seal with a wooden mallet and brass bar.

7）Remove bearing outer race from wheel hub by evenly tapping on its periphery with a wooden mallet.

CAUTION：Be careful not to damage oil seal and outer race.

Inspection

Stepped wear or cracks on axle shaft splines	Replace
Seized, scratched, noisy or rusted bearing or improper rotation of rollers	Replace
Cracked or damage wheel hub	Replace
Damaged oil seal felt ring.	Replace

Installation

Install reverse order of removal.

1.3.5 Bearing adjusting

1）Lubricate on taper roller bearing.

2）Tighten roller bearing lock nut in wheel hub until wheel hub can no longer be rotated with one hand.

3）From that position, turn back lock nut approx. 60^0.

4）Turn back wheel hub two or three rotations so that bearing settles down.

5）Again tighten lock nut until it can no longer be rotated with one hand; then turn back approx.60^0.

6）Install snap ring and settles down felt ring, install lock washer so as to set its hole in the pin of snap ring. Screw lock nut.

7）Turn wheel hub back and forth two or three rotations to see if rotation starting torque is within specifications. Rotation starting force： 10～29N（refer to Fig.1-6）;

8）Measure axial play of wheel hub to see if it is within specification. Axial play is less than 0.08mm（refer to Fig.1-7）.

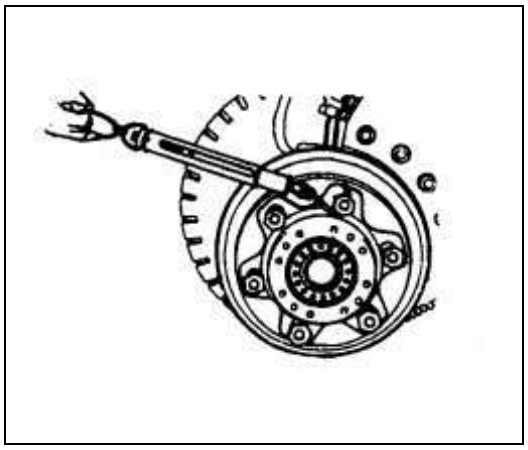

Fig.1-6

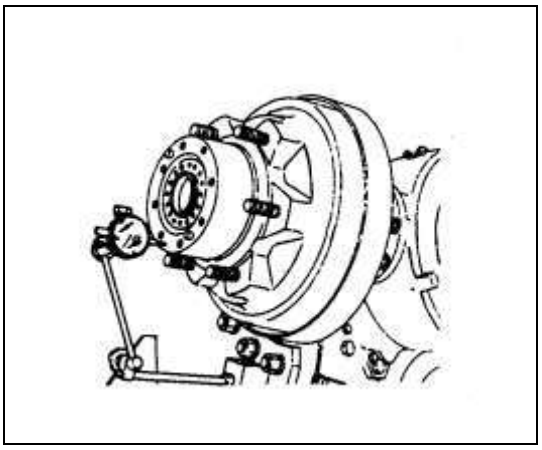

Fig.1-7

2. Steering system

Steering system include rear steering axle and steering device.

2.1 Steering device

It consists of steering wheel, upside steering column, downside steering column, bearings, steering gear, priority valve, clamp bolt and hydraulic switch etc. You can adjust the steering angle forward and backward by yourself. Refer to fig. 2-1.

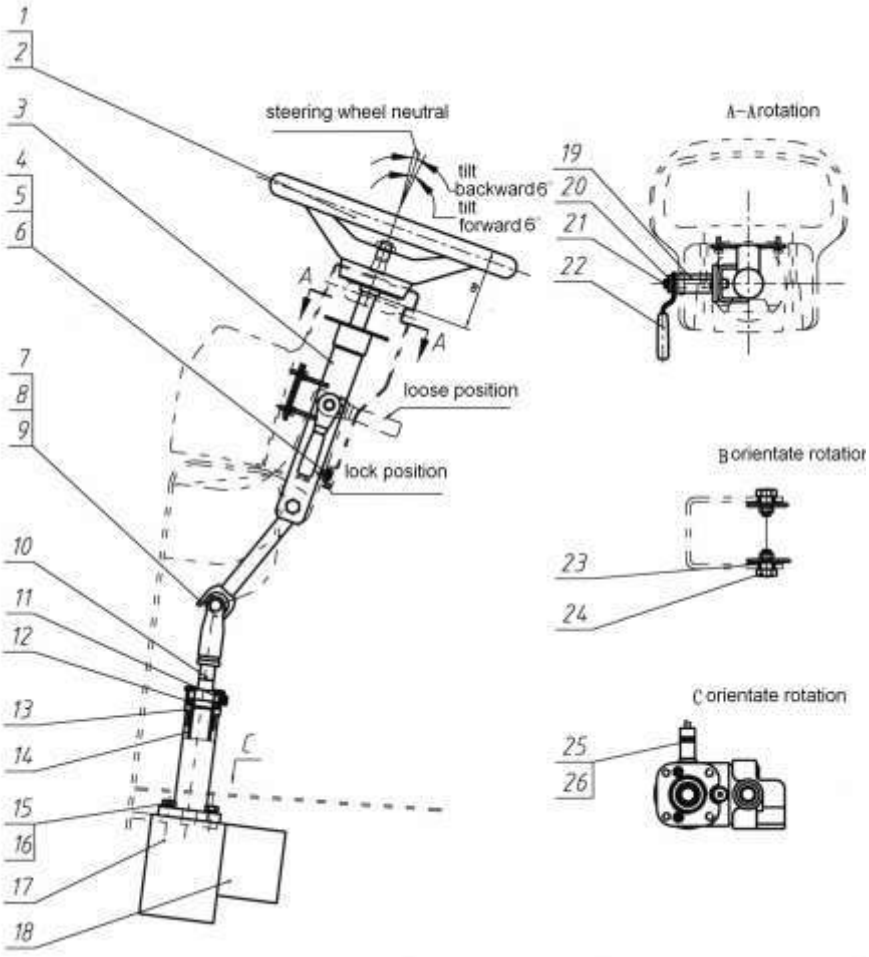

1. Steering wheel	3.Upside steering column	8.Gimbal	10. Down side steering axle	12. Bearing
13. Snap ring	14.Down side steering column	17. Steering gear	18. Priority valve	19. Clamp bolt
22. Clamp lever	26.Hydraulic switch			

Fig. 2-1 Steering device

2.2 Steering axle

2.2.1 General specifications

Axle body type	Center support, swing type		
Turning angle	Inner wheel	1-1.5t	79.5 º
		2-3t	80 º
	Outer wheel	1-1.8t	56 º
		2-3t	55.7 º
Tyre pressure	0.9MPa		

Axle centre（none for 4-5t）

Vertical play（mm）	0～1
Adjusting shim for end shaft of axle thickness（mm）	0.5, 1.0, 1.6
Part No.	N163-220020-000

Kingpin

Kingpin axial play（mm）	Less than 0.20
Kingpin adjusting washer	
thickness（mm）	Part No.
0.10, 0.30, 0.70	N163-220012-000

wheel hub bearing

Pre-tighten	Tighten steering spindle nut until drive wheel hub no longer rotates with one hand. Then loose 1/8～1/6 rotations. Or wheel hub rotation starting torque at hub blot 10-29.8N
Axial play(mm)	Less than 0.10

Truck type	1-1.8t	2-2.5t	3-3.5t	4-5 t
weight Kg	66-68	96-99	98-100	135-150

2.2.2 Trouble diagnoses corrections

condition	**Probable cause**	**Corrective action**
Unstable driving	loose wheel nut wheel bearing out of adjustment. improperly adjusted shims. faulty steering system.	tighten adjust adjust refer to turning system section
Noises	insufficient lubrication. loose bolts and nut. improperly adjusting shim for axle end Shaft. damaged joint bearing at two ends of rod.	Apply calcium grease tighten adjust replace

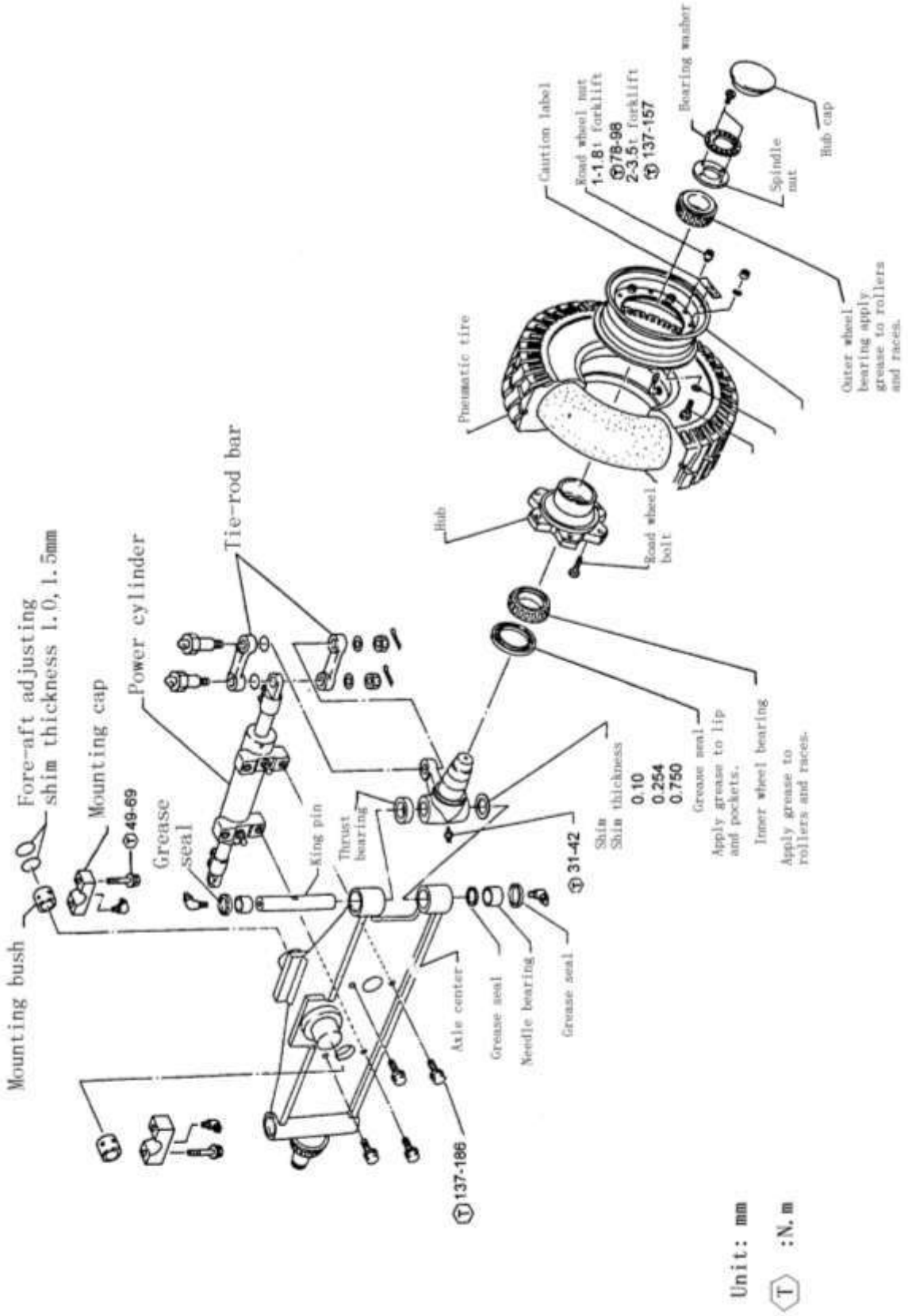
Fore-aft adjusting shim thickness 1.0, 1.5mm
Mounting bush
Mounting cap
T 49-69
Grease seal
Power cylinder
Tie-rod bar
King pin
Thrust bearing
T 137-186
Axle center
Grease seal
Needle bearing
Grease seal
T 31-42
Shim
Shim thickness
0.10
0.254
0.750
Grease seal
Apply grease to lip and pockets.
Inner wheel bearing
Apply grease to rollers and races.
Hub
Road wheel bolt
Pneumatic tire
Caution label
Road wheel nut
1-1.8t forklift
T 78-98
2-3.5t forklift
T 137-157
Bearing washer
Spindle nut
Hub cap
Outer wheel bearing apply grease to rollers and races.
Unit: mm
T :N.m

2.2.3 Remove

Wheel hub

1) Jack up and support forklift truck body with Wooden blocks.
2) Remove tire.
3) Remove hubcap.
4) Remove steering spindle nut.
5) Pull off hub assembles.
6) Remove bearing inner race.

Caution： a. Not to drop bearing inner race.

b. Be careful not to damage oil seal.

2.2.4 Kingpin and steering spindle

1) Remove rod.
2) Loose lock bolts.（See fig.2-2）;
3) Remove grease nipples on kingpin.
4) Remove kingpin.

Caution： Hold kingpin to prevent it from dropping. (See fig.2-3).

5) Take off spindle, thrust bearing and shim.

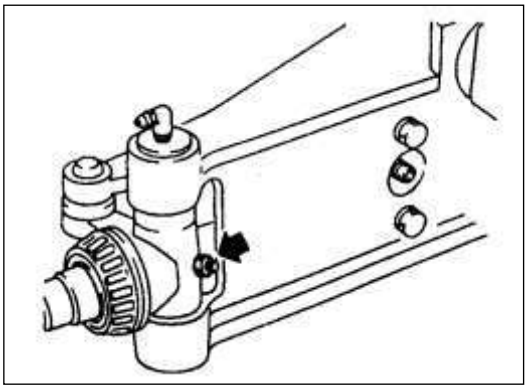

Fig. 2-2

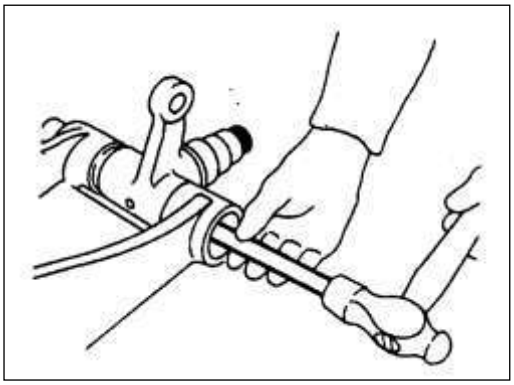

Fig. 2-3

INSPECTION：

1）. Replace spindle if cracked.

2）. Replace bearing if its rollers or roller surfaces are rusted or nicked.

3）. Replace steel sleeve if it distortion, out of round, cracked.

4）. Replace thrust bearing and dust cap if them damaged.

Installation

To install, reverse the order of removal. Careful observes the following.

1）always insert kingpin from lower side.

2）install thrust bearing, set the tighten-ring below the support and loosen-ring. Pack all grease between dust proof inside, loosen-ring, and tighten-ring.

3）adjust axial play to specification with shims. Axial plays less than 0.15mm.

4）the character of seal tape faces outside. Apple grease to roller of roller bearing, also apply grease between lip and groove of seal tape.

5）pack all grease nipple with a sufficient.

2.2.5 Wheel bearing adjustment

1）Slowly rotate hub. Tighten steering spindle nut until it can no longer be rotated with one hand.

2）From that position, turn back steering spindle nut 1/6～1/4 rotation. Measure hub bolt force is 10～30N.

3）Make sure that hub rotates smoothly and that its axial play is within specification. Axial play is less than 0.10mm.

2.2.6 Steering cylinder

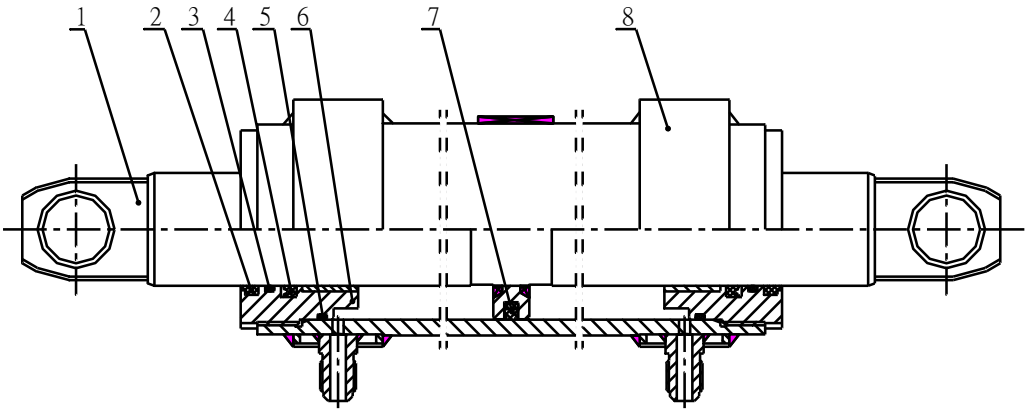

图 2-4 Steering cylinder

1. Piston rod	2.LBH wiper	3. O ring	4.ISI seal ring
5. O ring	6. Guide sleeve	7. Glay ring	8. Crock

3. Brake system

The brake system is the front two-wheel braking type consisting of a master cylinder, brakes and brake pedal.

3.1 Master cylinder

The master cylinder contains a valve seat, check valve, return spring, primary cup, piston and secondary cup, which are kept in place with stop washer and stop wire. The exterior of the cylinder is protected from dust by means of a rubber dust cover. The piston is actuated through the push rod by operation of the brake pedal. First, as the brake pedal, the push rod pushes the piston forwards. The brake fluid in the cylinder flows back to the reserve tank through the return port until the primary cup blocks up the return port. After the primary cup passes the return port, the brake fluid in the cylinder is pressurized and opens the check valve, flowing through the brake lines to the wheel cylinder. Thus, each wheel cylinder piston is forced outwards. This brings the brake shoes into contact with the wheel drum and slows or stops the lift truck.. Meanwhile, the cavity caused behind the piston is filled with brake fluid led through the return port and inlet port to lubricate the piston. When the brake pedal is released, the piston is forced back by the return spring. At the same time, the brake fluid in each wheel cylinder is pressurized by the force of the brake shoe return spring, thus returning into the master through the check valve. With the piston in its original position, the fluid in the cylinder flows into the reserve tank through the return port. The brake fluid in the brake lines and wheel cylinders has a residual pressure proportioned to the set pressure of the check valve, which makes each wheel cylinder piston cup securely seated to prevent oil leakage and eliminates of vapor lock developing when the lift truck is sharply broken.

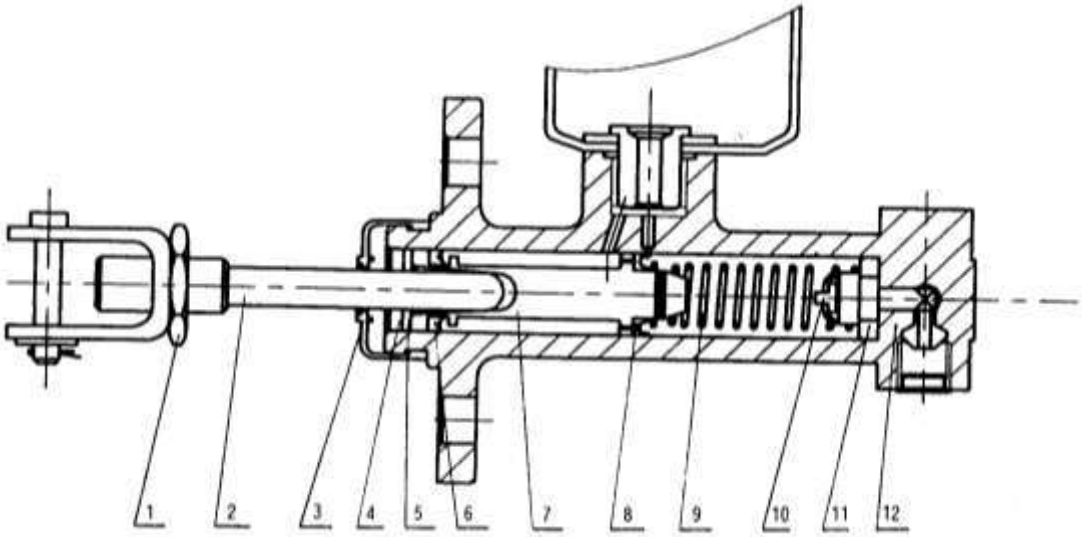

图 3-1 Master cylinder

1. Lock nut	2. Rod	3. Duct cover	4. Stop wire
5. Stop washer	6.Secondary cup	7. Piston	8. Primary cup
9. Spring	10. Check valve	11. Valve seat	12. Cylinder body

3.2 Foot brake

3.2.1 Brake

The configuration of the 2-3t right detent can refer to fig 3-2. The configuration of 1-1.8t 、4-5t right detent Configuration was similitude to 2-3t.

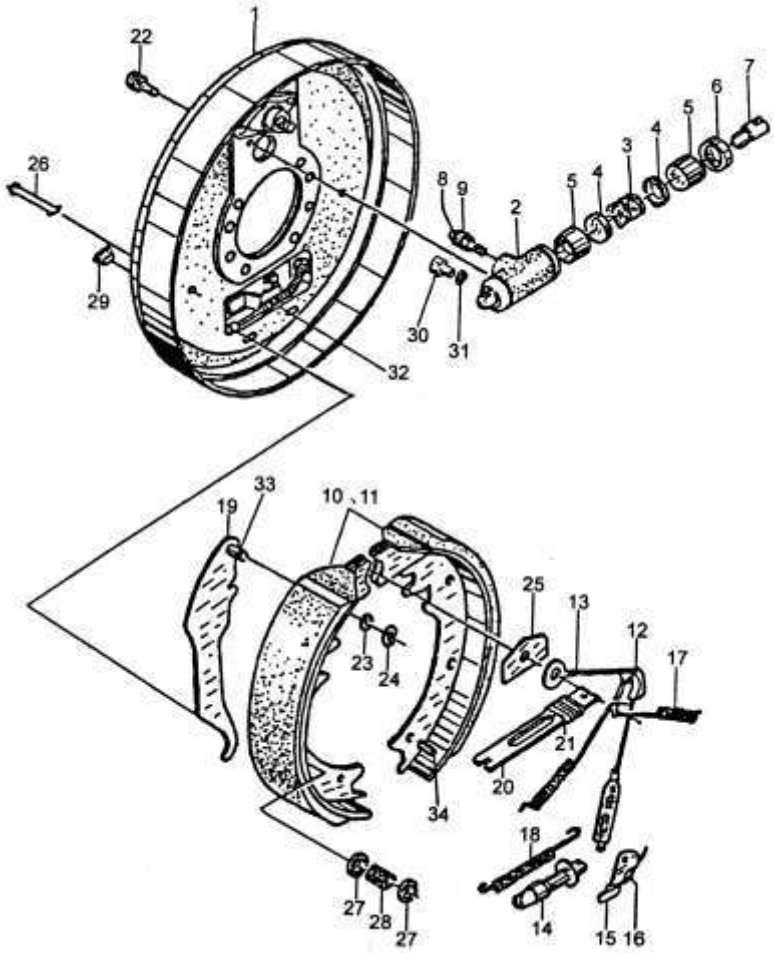

Fig.3-2 2-3t forklift truck right brake assembly

1. Brake mount bracket	2. Wheel cylinder body	3. Cylinder return spring	4. Rubber cap	5.Piston
6.Cylinder dust cover	7. Push rod	8.Air bleeder cap	9.Air bleeder screw	10. Brake shoe assemble (front)
11. Brake shoe assemble (rear)	12. Guider	13. Adjuster cable	14.Adjusting bolt	15. Pawl
16.Spring	17. Brake shoe return spring	18.Return spring	19.Parking brake rod	20.Strut level
21.Spring	22.Bolt	23.Washer	24.Snap ring	25.Guider
26.Spring support rod	27.Spring bracket	28.Spring	29.Plug	30.Oil connector
31.Bush	32.Brake steel cable			

3.2.2 Replace brake shoe:

1) Place the forklift truck on level concrete.
2) Start engine and raise carriage about 100mm.
3) Place chocks behind rear wheels to prevent movement of forklift truck.
4) Loosen wheel nuts two or three turns each.
5) Tilt mast fully backward, and place a wooden block under each side of outer mast.

   ⚠ **WARNING：**

   Do not allow wooden blocks to touch front tires.
6) Tilt mast forward until front tires are raised from surface.
7) Support forklift truck by putting additional wooden blocks under each side of front-end frame.
8) Stop engine.
9) Remove wheel tire nuts and brake drum.
10) Replace brake shoes with new ones.
11) Install brake drum.
12) Adjust shoe to drum clearance:

① Remove adjusting hole plug on the bottom of the brake assemble.

② Insert a flat-blade screwdriver to adjusting hole, turn adjusting ratchet wheel downward to expand the brake shoes until wheel hub can not be turned by hand.

③ Move the ratchet wheel 2～3 notches to allow the wheel hub to be turned freely, slight friction is allowed between the brake and shoe lining.

④ Replace the plug.

⑤ Install wheels.

⑥ Properly adjusting pedal stroke.

⑦ Remove blocks.

⑧ make sure no person or obstacle is around forklift, then operate forklift in reverse at 2 to 3 km/h, set foot on brake pedal 2～3 times.

3.3 Hand brake device

The hand brake device adopts a hand-pulling soft brake wire cable device. It makes use of auto-assist pressure linings type brake together with foot brake. Only when parking truck, use the hand brake. If it occurs for foot brake malfunction, use hand brake to stop the truck.

condition	Probable cause	Corrective action
Insufficient brake force	Oil leakage in brake lines. Air in brake lines. Improper functioning of master cylinder or wheel cylinder. Clogged oil lines.	Correct and replenish. Bleed air. Correct or replace. Clean
Brake dragging	No free play of brake pedal. Faulty piston cup. Weak or broken return springs. Clogged master cylinder returns port. Clogged oil lines.	Adjust. Replace Replace Clean Clean

4. Hydraulic system

The high pressure oil from main pump goes to control valve and divide it to two parts by dividing valve inside control valve: one of them goes to lifting cylinder or tilting cylinder, another part goes to steering gear with invariable flow to control steering cylinder. When lifting and tilting spool is in neutral, high pressure oil return oil tank directly from pass way. When pulling lifting spool, high pressure oil goes by throttle valve and then push piston rod under lifting cylinder piston. When pushing lifting spool, it is that bottom of lifting cylinder piston connects with low pressure line and then piston rod drops by deadweight and weight of cargo. In this time, oil from lifting cylinder goes by unidirectional speed limiting valve so as to control the falling speed. When operating tilting spool, high pressure oil goes to front house of tilting cylinder and another connects with low pressure line so as to make mast tilt forward or backward.

Main pump

Trouble	Probable cause	Corrective action
No oil from oil pump	Low oil level in tank.	Add oil to specified level.
	Clogged suction pipe or strainer.	Clean oil line and tank. If oil is dirty, change.
Low discharge pressure on oil pump.	Worn bearing damaged backup ring and O-ring.	Replace faulty parts.
	Maladjusted relief valve.	Readjust to specified pressure using pressure gauge.
	Air in oil pump.	Retighten suction side pipe. Add oil in oil tank. Check pump oil seal. Do not operate pump until bubbles in tank disappear.
Noisy oil pump	Cavitation due to crushed suction hose or clogged strainer.	Adjust or replace crushed hose and clean strainer.
	Air being sucked from loose suction side joint.	Retighten each joint.
	Cavitation due to too high oil viscosity.	replace with new oil having proper viscosity for temperature at which pump is to be operate. to operate when oil temperature is normal.
	Bubbles in hydraulic oil.	Determine cause of bubbles and remedy.
Oil leaking from oil pump	Faulty oil seal on pump, faulty O-ring or worn sliding surfaces on pump.	Replace faulty parts.

Control valve

Trouble	Probable cause	Corrective action
Pressure of relief valve is not steady or too low.	Loose of pressure-adjust screw.	Readjusted and retighten.
	Distorted or damaged pressure-adjust spring.	Replace.
	Worn or blocked relief valve core.	Replace or clean.
	Pump abated.	Examine and repair pump.
Fork tilt forward when control lever is used while engine is off.	Worn or damaged tilt lock valve.	Replace valve core and tilt lock valve as an assembly.
	Broken tilting lock spring.	Replace spring.
	Damaged tilt valve plunger O-ring.	Replace O-ring.
Mast is unstable when tilting forward.	Malfunctioning tilt relief valve.	Replace tilt relief valve assembly.
Lowering distance of mast is big when spool valve is in the centre.	Valve body and spool valve is worn and clearance between them is too great.	Replace spool valve with specified clearance.
	Spool valve is not in centre.	Keep being in the centre.
	Cylinder seal abated.	Examine and repair cylinder.
	Taper valve is worn or blocked by dirt.	Replace or clean taper valve.
Spool valve is not return neutral position.	Damaged or distorted reposition-spring.	Replace spring.
	Dirt exist between valve body and spool valve.	Clean.
	Blocked control device.	Adjusted.
	Not coaxial parts at reposition	Reinstall.，be coaxial
Leakage	Damaged O-ring.	Replace.
	Faulty seal of joint.	Check and retighten.
	LOOSE SEAL PLATE.	Clean seal plate and retighten blots.
	Loosed lock-nut of relief valve and connect-nut between plate and plate.	Tighten.

Adjusting the pressure of the main relieve valve

The pressure of the main relieve valve is all ready adjusted in the factory, and it can't be adjusted generally. The following is an example of 3t truck to specify how to adjust the pressure.

(1). Put 125 percent of the rated load (2000kg) on the forklift stable.

(2).Step the accelerated pedal to the end, control the lift pole, if the forklift can get the height of 300mm,the main relieve valve is all right. Otherwise, adjust it as step (3).

(3).If the forklift can't work, enhance the pressure main relieve valve, remove the front soleplate, loosen the tightening nut of the main relieve valve, screw the adjusting nut clockwise to enhance the pressure of the main relieve valve. If the height of lift is higher than 300mm, screw the adjust nut anti-clockwise to reduce the pressure.

(4).Step the accelerated pedal to the end to make the forklift in the height range of 0-300mm. Otherwise, adjust it as step (3).

Warning:

·The load should be put stably.

·Don't adjust if the pressure is already adjusted correctly.

Hydraulic system principle diagram

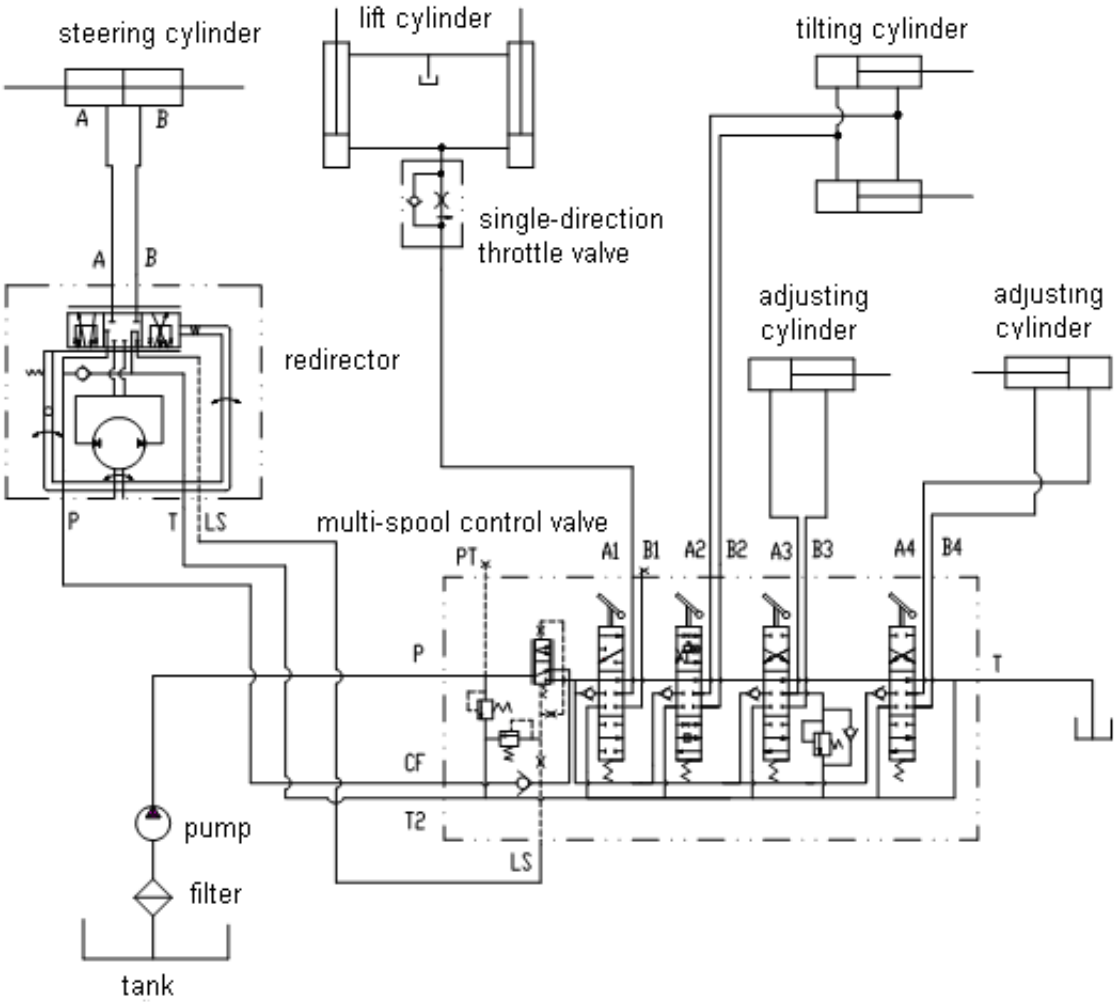

Tonnage Items	1.3t	1.5t	1.8-3.5t	4-5t
The max. input pressure of redirector	16MPa	16MPa	16MPa	16MPa
Main safety valve pressure of multi-spool control valve	12 MPa	15 MPa	17.5 MPa	18.5 MPa
Rated pressure of gear pump	20 MPa	20 MPa	20 MPa	20 MPa

5. Lifting system

5.1 Data

Inspection and adjustment

Place	Assembly clearance （mm）	Repair clearance（mm）
Mast to lift roller	0.1～0.8	0.2～1
Shims	0.5～1	
Mast to back up metal	0.1～0.8	0.2～1
Shims	0.5～1	
Inner mast to carriage side roller	0.1～0.6	0.2～1
Lift chain deflection	25～30 mm	

Tightening torque

Place	Model or Lifting	N m
Lift chain lock nut	1～1.5t	127-157（M16），245-314（M20 single chain）
	2～3t	176-216(M18)　245-314（M20）
Mast support cap blot	1～1.5t	89-118（M14）
	2～3t	176-216（M18）
Tilt cylinder lock nut	1～1.5t	89-118（M14）
	2～3t	
Lift cylinder bolt(head)	1～3t	76-107（M12）
Lift cylinder bolt（toe）	1～1.5t	22-29（M8）
	2～3.5t	44-58（M10）
Lift cylinder fixing bolt（U type）	1～1.5t	14-18（M8）
	2～3t	29-39（M10）

Weight of basal mast

Model of truck	1t	1.5 t	1.8 t	2t	2.5t	3t	4-4.5t	5t
Weight of mast Kg	531	531	531	930	1000	1100	1450	1550

5.2 Fault

Fault	Probable cause	Corrective action
Fork arm carrier or mast tilt by itself.	1.Tilt cylinder and ring abraded excessively	Replace piston ring tilt cylinder.
	2. The hydraulic control valve spring is inoperative.	Replace it.
The fork arms carrier moves up and down sluggishly.	1. Caused by piston jamming or bent piston rod.	Replace the faulty parts.
	2. Too much dirt is accumulated in the cylinder.	Strip it down and clean.
Forks are lifted or lowered unsmoothly.	1. Carriage bracket assembly out of adjustment.	Adjust clearance with thrust metal and carriage side roller.
	2. Insufficient clearance between inner and outer masts or rollers and mast.	Adjust clearance with rollers.
	3. Biting foreign materials between moving part.	Remove foreign materials.
	4. Insufficient lubrication.	Apply grease on contact surfaces of sliding parts.（butter）
	5. Bent carriage bracket assembly.	Repair or replace.
Forks are lifted unevenly	1. Lift chains out of adjustable.	Adjust lift chains.
Lift roller does not rotate	1. Grease stiffened or dirt accumulated on lift roller and mast sliding surfaces.	Clean and lubricate lift rollers.
	2. Improperly adjusted lift roller.	Adjust.
Excessive mast noise	1. Insufficient lubrication.	Lubricate.
	2. Improperly adjusted lift roller, side roller and back-up metal.	Adjust.
	3. Rubber pad on lower of outer mast is useless for container fork lift truck.	By adjusting shims and rubber pad, piston rod is in touch with bottom of cylinder body after inner mast is in touch with rubber pad.

Fault	Probable cause	Corrective action
Insufficient lift power or no lift movement.	1. Excessive wear occurs between the oil pump body and gears, causing too much clearance.	Replace the worn parts or the oil pump.
	2. The lifting jack piston Yx-ring has worn, resulting in excessive inner leaks.	Replace Yx-ring.
	3. Springs of the multiple control valve and its relief valve are inoperative oil leaks.	Replace.
	4.Excessive wear occurs of the hydraulic control valve ,resulting in excessive oil leaks.	Replace.
	5. Oil leaks occur between the hydraulic control valve sections.	Dismantle for regrinding the joint surfaces and reassemble the valve.
	6. Leakage occurs in the hydraulic pipe.	Tighten the joint nuts and inspect the seal for damage.
	7. The hydraulic oil temperature is too high. Oil viscosity is too low and the rate is insufficient.	Change the wrong hydraulic oil or stop operation for reducing the oil temperature. Find out the reasons for high oil temperature and eliminate the trouble.
	8. The load carried is beyond the designed capacity.	Observe the lifting capacity limit.

5.3 mast

Basic mast is 3m high, composed of inner and outer mast, fork arm carrier, fork arm, chain and idler wheel, etc.

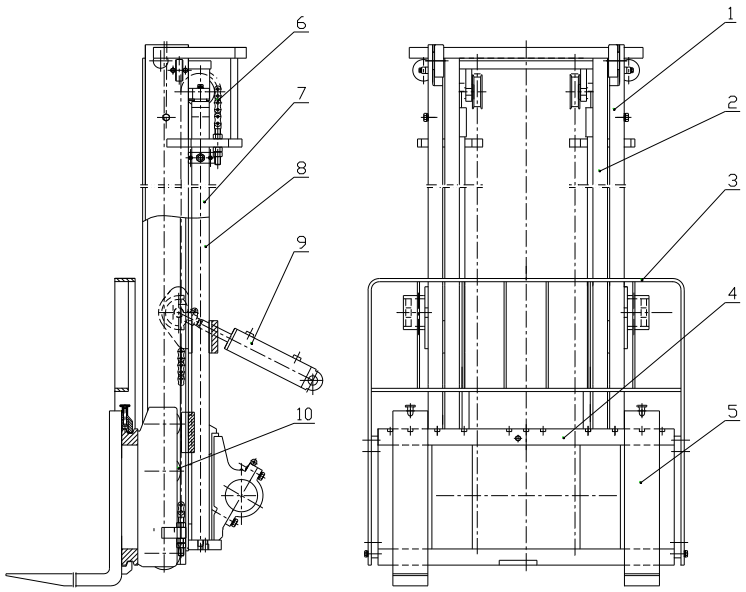

Fig5-1 Double lift mast with wide view

1.Outer mast	2.Inner mast	3.Back rest	4. Fork arm carrier	5.Fork
6.Chain	7.Left lifting cylinder	8.Right lifting cylinder	9.Tilting cylinder	10.Idler wheel

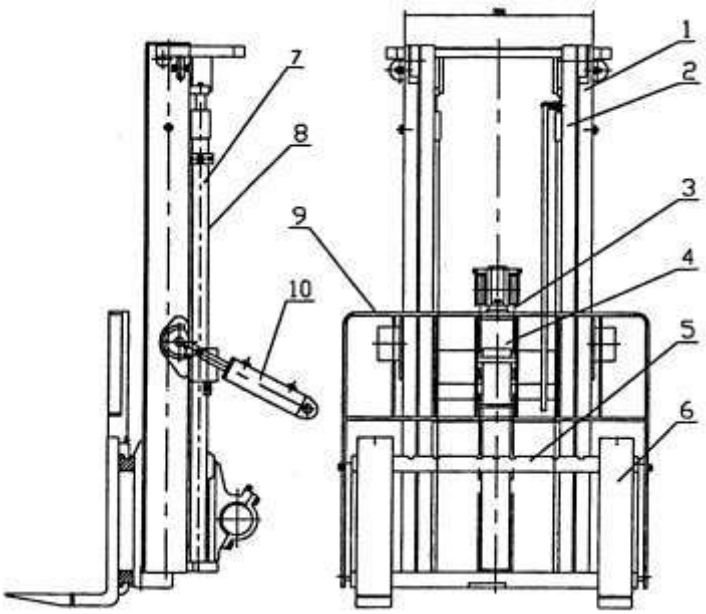

Fig5-2 Double full free lift mast

1. Outer mast	2.Inner mast	3. Chain	4. Free lifting cylinder	5. Fork arm carrier
6. Fork	7.Left lifting cylinder	8.Right lifting cylinder	9. Fork arms	10.Tilt cylinder

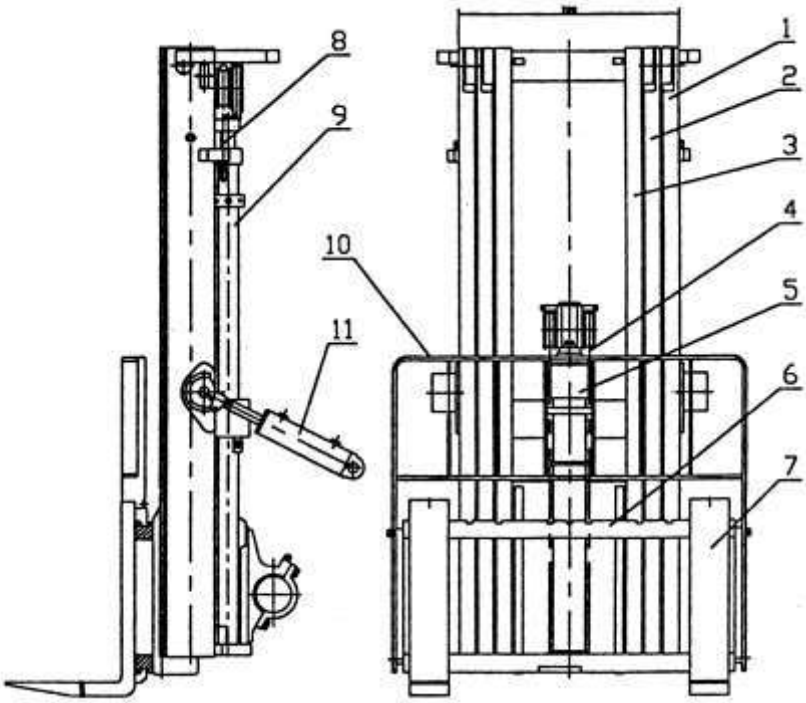

Fig 5-3 Container truck mast

1. Outer mast	2.Inner mast	3. Chain	4. Free lifting cylinder
5. Fork arm carrier	6.Fork	7. Sideway cylinder	8. Left rise cylinder
9. Right rise cylinder	10. Fork arms	11.Tilt cylinder	

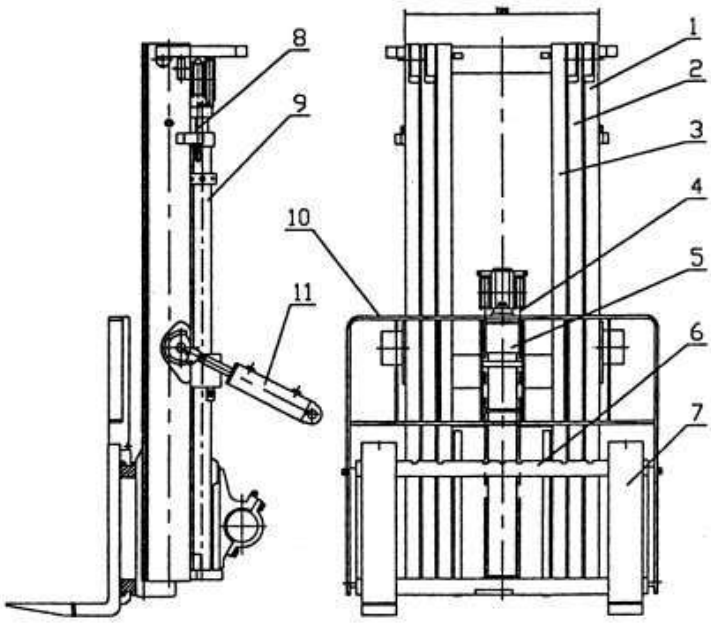

Fig 5-4 Triple full free lift mast

1. Outer mast	2. Inner mast	3. Chain	4. Free lifting cylinder
5. Fork arm carrier	6. Fork	7. Sideway cylinder	8. Left rise cylinder
9. Right rise cylinder	10. Fork arms	11.Tilt cylinder	

5.4 Lifting cylinder

Plunger feeder lifting cylinder has dash control, configuration see fig 5-5

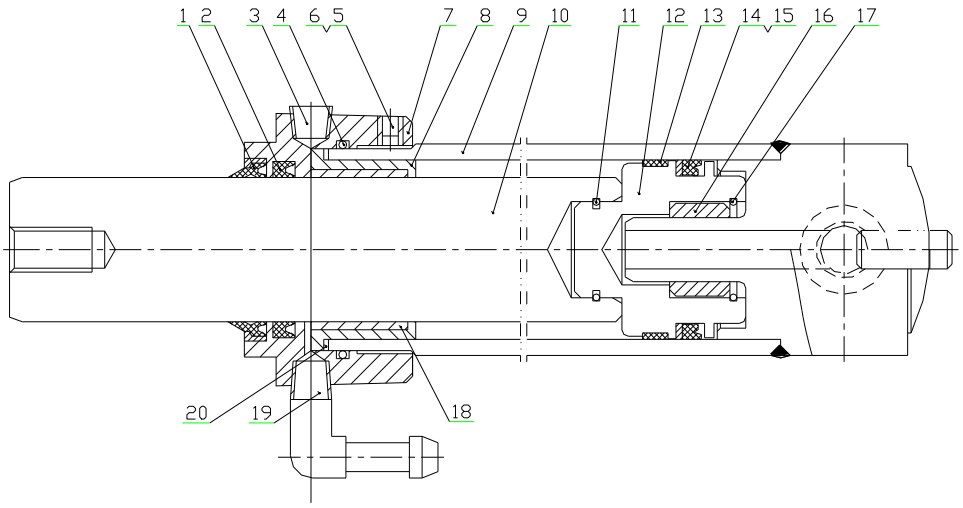

Fig 5-5 Lifting cylinder

1.LBH dust proof	2. ISI ring	3. Plug screw	4. O Ring	5.Piston
6.Bolt	7.Guide	8.bush	9. Cylinder body	10.Piston
11. Snap ring	12. Piston	13. Support ring	14. Back up rings	15. OSI ring
16. Valve guide	17.Snap ring	18. Steel axletree	19.Blowout patch	20.Adjusting washer

5.5 Tilting cylinder

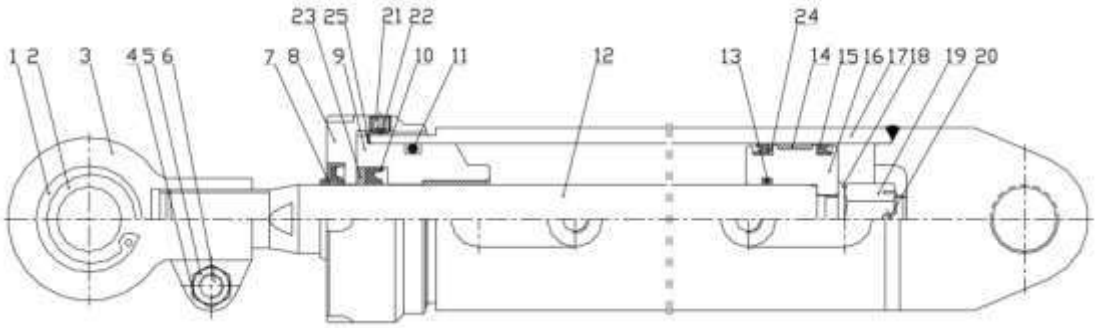

Fig 5-6 Tilting cylinder

1. Retaining ring	2.Knuckle bearing	3. Support	4.Lubrication nipple	5. Nut
6. Bolt	7. dust proof	8. Cylinder	9. Guide	10. U ring
11. O ring	12. Piston rod	13. O ring	14. Thimble	15. U ring
16. Piston	17.Cylinder body	18. Washer	19. Nut	20. Pin
21.bolt	22.Nylon tray	23.Snap ring	24. Snap ring	25.Adjusting washer

6. Electrical system

6.1 CPD10/15/20/25/30J fork

6.1.1summarize

Curtis PMC 1244 MultiMode controllers are separately excited motor speed controllers designed for use in a variety of material handling vehicles. These programmable controllers are simple to install, efficient, and cost effective.

Typical applications include low lifts, stackers, fork lifts, reach trucks, personnel carriers, counterbalance trucks, order pickers, boom trucks, and other industrial vehicles.

The 1244 MultiMode controller offers smooth, silent, cost effective control of motor speed and torque. A four quadrant, full-bridge field
Winding control stage is combined with a two quadrants, half-bridge armature power stage to provide solid state motor reversing and regenerative braking power without additional relays or contactors. The 1244 controller can also be specified to be compatible with CAN Bus communication systems.

These controllers are fully programmable by means of the optional handheld 1307 programmer. Use of the programmer provides diagnostic and test capability as well as configuration flexibility.
Like all Curtis PMC motor controllers, the 1244 offers superior operator control of the vehicle’s motor drive speed. Features include:

_ Full-bridge field and half-bridge armature power MOSFET design, providing
• Infinitely variable forward, reverse, drive, and brake control
• Silent high frequency operation
• High efficiency
_ Regenerative braking, providing longer operation on a single battery charge and reducing motor brush wear and motor heating
_ Programmability through the 1307 handheld programmer
_ Complete diagnostics through the 1307 programmer and the internal Status
LED
_ Two fault outputs provide diagnostics to remotely mounted displays
_ Continuous armature current control, reducing arcing and brush wear
_ Automatic braking when throttle is reduced from either direction; this provides a compression braking feel and enhances safety by automatically
initiating braking in an operator hands off condition
_ Deceleration Rate, Load Compensation, and Restraint features prevent downhill runaway conditions; speed is controlled to within approximately
20% of level surface value
_ MultiMode allows four user-selectable vehicle operating personalities
_ Programmable to match individual separately excited motor characteristics
_ Meets or exceeds EEC fault detect requirements
_ Vehicle top speed is controlled and limited in each mode

_ Linear temperature and under voltage cutback on motor currents; no sudden loss of power under any thermal conditions

_ High pedal disable (HPD) and static return to off (SRO) interlocks prevent vehicle runaway at startup

_ Creep speed adjustable from 0% to 25% in each mode

_ Continuous diagnostics during operation, with microprocessor power-on self-test

_ Internal and external watchdog circuits ensure proper software operation

_ Programmable coil drivers provide adjustable contactor pull-in and holding voltages

_ Hour-meter enable output is active whenever the controller is providing motor current

_ Optional Electromagnetic Brake Driver provides automatic control of an electromagnetic brake or other similar function

6.1.2 Failure code

CPD10-30J

Fault table of tow controller

LED code	PROGRAMMER LCD DISPLAY	EXPLANATION	POSSIBLE CAUSE
1,2	HW FAIL SAFE1-2-3	self-test or watchdog fault	Controller defective.
1，3	M-SHORTED	internal M- short to B-	1． Controller defective.
	FIELD OPEN	.Field winding fault	1. Motor field wiring loose. 1, 2. Motor field winding open.
	ARM SENSOR	armature current sensor fault	1． Controller defective.
	FLD SENSOR	Field current sensor fault	1． Controller defective.
2，1	SPEED CONTROL FAULT	VSC signal exceed range	1． VSC input wire open. 2． VSC input wire shorted to B+ or B-. 3． Throttle pot defective. 4. Wrong throttle type selected.
2，3	START LOCKOUT	starting sequence wrong	1．.Improper seq. of direction and throttle inputs. 2. Wrong START LOCKOUT type selected. 3. Misadjusted throttle pot. 4. Sequencing delay too short.
3，1	CONT DRVR OC	cont. driver output over current	1. Contactor coil shorted.
3，2	MAIN CONT WELDED	welded main contactor	1. Main contactor stuck closed. 2. Main contactor driver shorted.
3，3	PRECHARGE FAULT	internal voltage too low at startup	1. Controller defective. 2. External short, or leakage path to B- on external B+ connection.
3，4	MISSING CONTACTOR	missing contactor	1 Any contactor coil open or not connected.
	CONT DNC	main contactor did not close	1 Main contactor missing or wire to coil open.
4，2	OVERVOLTAGE	overvoltage	1. Battery voltage >overvoltage shutdown limit. 2. Vehicle operating with charger attached. 3. Battery disconnected during regen braking.
4，3	THERMAL CUTBACK	Over-/under-temp. cutback	1.Temperature >85℃ or < -25℃. 2. Excessive load on vehicle. 3. Improper mounting of controller. 4. Operation in extreme environments.

Fault table of lift (oil pump) controller

LED code	PROGRAMMER LCD DISPLAY	EXPLANATION	POSSIBLE CAUSE
off On	■ □	NO voltage or controller is not working, error (such as MCII defective)	
0,1	■ ¤	controller work normally, no error	
1,1	¤ ¤	EEPROM defective	1. EEPROM miss data 2. EEPROM data check error，use programmer 1311 to change any parameter can delete the error.
1,2	¤ ¤¤	Hardware defective	1. MOSFET short down. 2. Motor circuit is an open circuit.
2,1	¤¤ ¤	Low voltage	Battery voltage is too low.
2,2	¤¤ ¤¤	Lifting lock.	The function of lifting lock of the controller is touch off.
2,3	¤¤ ¤¤¤	Order fault（Startup lockout）	Any switch of SS1-SS4 closes earlier than KSI or INTERLOCK.
3,2	¤¤¤ ¤¤	Contact err	1. Main contact bonded。 2. The set of parameter “CONTACT CNTRL” is wrong.
3,3	¤¤¤ ¤¤¤	Pre-charge fault	1. Pre-charge circuit work with err. 2. Motor short down.
3,4	¤¤¤ ¤¤¤¤	Contact has not been installed or is not close.	1. The connection of main contact coil loose. 2. Main contact works abnormally.
4,1	¤¤¤¤ ¤	Low -voltage protect.	The voltage of battery is lower than the set value of “LOVOLT CUTBACK”
4,2	¤¤¤¤ ¤¤	Over-voltage protect.	The battery voltage is too high.
4,3	¤¤¤¤ ¤¤¤	temperature protect（over-/under-temp）	1. The temperature of controller is too high or too low. 2. Temperature sensor works abnormal.

6.2 CPD10/15/20/25/30/35J C1、CPD10/15/18/20/25/30/35J C2、CPD40/45/50J C2 fork

6.2.1 Summarize

CURTIS company procreates controller ，adopt international advanced closed loop system and advanced control technique。Designing large screen instrument，can clear display “electric quantity”、“speed”、“total time of run ” and so on information。Designation adopt code plus character manner，increase maintain efficiency。Four work models can be set through meter so as to suitable for different condition.

（1）Actuating motor

Actuating motor adopt three-phase alternating current frequency conversion electromotor，increase conversion efficiency，not have commentator brush in order not to maintenance 。

（2）Lift motor

Lift motor JC1 is direct current motor, so is the motor of J series truck. Lift motor JC2 adopts three-phase alternating electromotor，increase conversion efficiency，not have commentator brush in order not to maintenance.

（3）SAFETY & PROTECTION FEATURES

① Reverse Polarity of the battery

②Connection errors

③All inputs are protected against connections errors.

④Current overload protection

⑤it have detecting element，control peak current.

⑥Thermal protection

If the controller temperature exceeds 85 ℃, the maximum current reduces in proportion to the thermal increase. The temperature can never exceed 115 ℃.

If the electric machinery temperature exceeds 145 ℃, the maximum current reduces in proportion to the thermal increase. The temperature can never exceed 165 ℃.

⑦Low Battery charge

When the battery charge is low, the maximum current is reduced proportionally to the battery discharge.

⑧External Agents

Electric control is hermetical .The chopper is protected against dust and spray of liquid to economy.

⑨Protection against accidental Start Up

A precise sequence of operations is necessary before the machine will start. Operation can not commence if these operations are not carried out correctly. Requests for drive must be made after closing the Key Switch.

（4）OPERATIONAL FEATURES

① Feedback control system make the vehicle speed follow accelerator ，whether low speed or not

high speed easy control .

② two archives speed and acceleration design ， can apply to most situation.

③ regeneration technology make change direction of fork even smooth。

④ three regenerative braking mode ：

A、acceleration pedal part release appear regenerative braking，

B、direction reverse regenerative braking，

C、ramp downslide appear regenerative braking，

Except increase security drive，reclaim part of electric energy，prolong work time of every time .

⑤ control speed during downgrade： speed lie on accelerator 。if speed exceed set point，controller may automatic braking，this give optimal ramp.

Notice:

1 .Maintain electric control ，must first cut off electrical source，then hold 10-100ohmic resistance join controller anode and cathode，release residual voltage in the capacitor, or else you may meet tip-and-run danger.

2.Magnetic and radiation have some effect to inverter，long time effect may mangle controller, So need apart form magnetic and radiation.

6.2.2 Error code

CPD10-35J C1 EC ERROR CODE TABLE

There are two LEDs including a yellow LED and a red LED. The two LEDs have four different display modes, indicating the type of information they are providing.

DISPLAY	STATUS
Neither LED illuminated	Controller is not powered on, has a dead battery, or is severely damaged.
Yellow LED flashing	Controller is operating normally.
Yellow and red LEDs both on solid	Controller is in Flash program mode.
Red LED and yellow LED flashing alternately	Controller has detected a fault.

TOWING CONTROLLER ERROR CODE TABLE

CODE	PROGRAMMER LCD DISPLAY	POSSIBLE CAUSE
1，2	Controller Overcurrent	1. External short of phase U, V, or W motor connections. 2. Motor parameters are mis-tuned. 3. Controller defective.
1，3	Current Sensor Fault	1. Leakage to vehicle frame from phase U, V, or W (short in motor stator). 2. Controller defective.
1，4	Precharge Failed	1. External load on capacitor bank (B+ connection stud) that prevents the capacitor bank from charging. 2. See 1311 menu Monitor »Battery: Capacitor Voltage.
1，5	Controller Severe Undertemp	1. Controller is operating in an extreme environment. 2. See 1311 menu Monitor »Controller: Temperature.
1，6	Controller Severe Overtemp	1. Controller is operating in an extreme environment. 2. Excessive load on vehicle. 3. Improper mounting of controller. 4. See 1311 menu Monitor »Controller: Temperature.
1，7	Severe Undervoltage	1. Battery Menu parameters are misadjusted. 2. Non-controller system drain on battery. 3. Battery resistance too high. 4. Battery disconnected while driving. 5. See 1311 menu Monitor »Battery: Capacitor Voltage. 6. Blown B+ fuse or main contactor did not close.
1，8	Severe Overvoltage	1. Battery Menu parameters are misadjusted. 2. Battery resistance too high for given regen current. 3. Battery disconnected while regen braking. 4. See 1311 menu Monitor »Battery: Capacitor Voltage.
2，1	Controller Undertemp Cutback	1. Controller is performance-limited at this temperature. 2. Controller is operating in an extreme environment. 3. See 1311 menu Monitor »Controller: Temperature.

CODE	PROGRAMMER LCD DISPLAY	POSSIBLE CAUSE
2，2	Controller Overtemp Cutback	1. Controller is performance-limited at this temperature. 2. Controller is operating in an extreme environment. 3. Excessive load on vehicle. 4. Improper mounting of controller. 5. See 1311 menu Monitor »Controller: Temperature.
2，3	Undervoltage Cutback	1. Normal operation. Fault shows that the batteries need recharging. Controller is performance limited at this voltage. 2. Battery parameters are misadjusted. 3. Non-controller system drain on battery 4. Battery resistance too high. 5. Battery disconnected while driving. 6. See 1311 menu Monitor »Battery: Capacitor Voltage. 7. Blown B+ fuse or main contactor did not close.
2，4	Overvoltage Cutback	1. Normal operation. Fault shows that regen braking currents elevated the battery voltage during regen braking Controller is performance limited at this voltage. 2. Battery parameters are misadjusted. 3. Battery resistance too high for given regen current. 4. Battery disconnected while regen braking 5. See 1311 menu Monitor »Battery: Capacitor Voltage.
2，5	+5V Supply Failure	1. External load impedance on the +5V supply (pin 26) is too low. 2. See 1311 menu Monitor »outputs: 5 Volts and Ext Supply Current.
2，6	Digital Out 6 Overcurrent	1. External load impedance on Digital Output 6 driver (pin 19) is too low.
2，7	Digital Out 7 Overcurrent	1. External load impedance on Digital Output 7 driver (pin 20) is too low.
2，8	Motor Temp Hot Cutback	1. Motor temperature is at or above the programmed Temperature Hot setting, and the requested current is being cut back. 2. Motor Temperature Control Menu parameters are mis-tuned. 3. See 1311 menus Monitor »Motor: Temperature and Monitor »Inputs: Analog2. 4. If the application doesn't use a motor thermistor, Temp Compensation and Temp Cutback should be programmed Off.
2，9	Motor Temp Sensor Fault	1. Motor thermistor is not connected properly. 2. If the application doesn't use a motor thermistor, Temp Compensation and Temp Cutback should be programmed Off. 3. See 1311 menus Monitor »Motor: Temperature and Monitor »Inputs: Analog2.

CODE	PROGRAMMER LCD DISPLAY	POSSIBLE CAUSE
3，1	Coil 1 Driver Open/Short	1. Open or short on driver load. 2. Dirty connector pins. 3. Bad crimps or faulty wiring.
3，1	Main Open/Short	1. Open or short on driver load. 2. Dirty connector pins. 3. Bad crimps or faulty wiring.
3，2	Coil2 Driver Open/Short	1. Open or short on driver load. 2. Dirty connector pins. 3. Bad crimps or faulty wiring.
3，2	EM Brake Open/Short	1. Open or short on driver load. 2. Dirty connector pins. 3. Bad crimps or faulty wiring.
3，3	Coil3 Driver Open/Short	1. Open or short on driver load. 2. Dirty connector pins. 3. Bad crimps or faulty wiring.
3，4	Coil4 Driver Open/Short	1. Open or short on driver load. 2. Dirty connector pins. 3. Bad crimps or faulty wiring.
3，5	PD Open/Short	1. Open or short on driver load. 2. Dirty connector pins. 3. Bad crimps or faulty wiring.
3，6	Encoder Fault	1. Motor encoder failure. 2. Bad crimps or faulty wiring. 3. See 1311 menu Monitor »Motor: Motor RPM.
3，7	Motor Open	1. Motor phase is open. 2. Bad crimps or faulty wiring.
3，8	Main Contactor Welded	1. Main contactor tips are welded closed. 2. Motor phase U is disconnected or open. 3. An alternate voltage path (such as an external precharge resistor) is providing a current to the capacitor bank (B+ connection stud).
3，9	Main Contactor Did Not Close	1. Main contactor did not close. 2. Main contactor tips are oxidized, burned, or not making good contact. 3. External load on capacitor bank (B+ connection stud) that prevents capacitor bank from charging. 4. Blown B+ fuse.

CODE	PROGRAMMER LCD DISPLAY	POSSIBLE CAUSE
4，1	Throttle Wiper High	1. Throttle pot wiper voltage too high. 2. See 1311 menu Monitor »Inputs: Throttle Pot.
4，2	Throttle Wiper Low	1. Throttle pot wiper voltage too low. 2. See 1311 menu Monitor »Inputs: Throttle Pot.
4，3	Brake Wiper High	1. Brake pot wiper voltage too high. 2. See 1311 menu Monitor »Inputs: Brake Pot.
4，4	Brake Wiper Low	1. Brake pot wiper voltage too low. 2. See 1311 menu Monitor »Inputs: Brake Pot.
4，5	Pot Low Overcurrent	1. Combined pot resistance connected to pot low is too low. 2. See 1311 menu Monitor »Outputs: Pot Low.
4，6	EEPROM Failure	1. Failure to write to EEPROM memory. This can be caused by EEPROM memory writes initiated by VCL, by the CAN bus, by adjusting parameters with the 1311, or by loading new software into the controller.
4，7	HPD/Sequencing Fault	1. KSI, interlock, direction, and throttle inputs applied in incorrect sequence. 2. Faulty wiring, crimps, or switches at KSI, interlock, direction, or throttle inputs. 3. See 1311 menu Monitor »Inputs.
4，7	Emer Rev HPD	1. Emergency Reverse operation has concluded, but the throttle, forward and reverse inputs, and interlock have not been returned to neutral.
4，9	Parameter Change Fault	1. This is a safety fault caused by a change in certain 1311 parameter settings so that the vehicle will not operate until KSI is cycled. For example, if a user changes the Throttle Type this fault will appear and require cycling KSI before the vehicle can operate.
6，8	VCL Runtime Error	1. VCL code encountered a runtime VCL error. 2. See 1311 menu Monitor »Controller: VCL Error Module and VCL Error. This error can then be compared to the runtime VCL module ID and error code definitions found in the specific OS system information file.
6，9	External Supply Out of Range	1. External load on the 5V and 12V supplies draws either too much or too little current. 2. Fault Checking Menu parameters Ext Supply Max and Ext Supply Min are mis-tuned. 3. See 1311 menu Monitor »Outputs: Ext Supply Current.

CODE	PROGRAMMER LCD DISPLAY	POSSIBLE CAUSE
7，1	OS General	1. Internal controller fault.
7，2	PDO Timeout	1. Time between CAN PDO messages received exceeded the PDO Timeout Period.
7，3	Stall Detect	1. Stalled motor. 2. Motor encoder failure. 3. Bad crimps or faulty wiring. 4. Problems with power supply for the motor encoder. 5. See 1311 menu Monitor »Motor: Motor RPM.
8，7	Motor Characterization Fault	1. Motor characterization failed during the motor characterization process.
8，8	Encoder Characterization Fault	1. Encoder characterization failed during the motor characterization process. 2. Motor encoder pulse rate is not a standard value (32, 48, 64, 80 ppr).
8，9	Motor Type Fault	1. The Motor type parameter value is out of range.
9，2	EM Brake Failed to Set	1. Vehicle movement sensed after the EM Brake has been commanded to set. 2. EM Brake will not hold the motor from rotating.
9，3	Limited Operating Strategy（LOS）	1. Limited Operating Strategy (LOS) control mode has been activated, as a result of either an Encoder Fault (Code 36) or a Stall Detect Fault (Code 73). 2. Motor encoder failure. 3. Bad crimps or faulty wiring. 4. Vehicle is stalled.
9，4	Emer Rev Timeout	1. Emergency Reverse was activated and concluded because the EMR Timeout timer has expired. 2. The emergency reverse input is stuck On.

Lifting (pump) controller error code table is the same as that of CPD10-30J.

CPD10/15/18/20/25/30/35J C2、CPD40/45/50J C2 EC ERROR CODE TABLE

Lifting (pump) controller error code table is the same as that of CPD10-30J C1

Towing controller error code table is the same as that of CPD10-30J C1

6.3 CPD10/15/20/25/30J D1 fork

6.3.1 Summarize

INMOTION company procreates controller ， adopt international advanced closed loop system and advanced control technique。Designing large screen instrument，can clear display “electric quantity”、“speed”、“total time of run ”，“work time of drive ”，“work time of lift ”and so on information。Designation adopt code plus character manner，increase maintain efficiency。It also through meter check periphery component to come true function of handset

(1) Actuating motor

Actuating motor adopt three-phase alternating current frequency conversion electromotor，increase conversion efficiency，not have commentator brush in order not to maintenance 。

(2) Lift motor

Lift motor adopt three-phase alternating electromotor ， increase conversion efficiency，not have commentator brush in order not to maintenance.

(3) Safety & protection features

① Reverse Polarity of the battery

② Connection errors

③ All inputs are protected against connections errors.

④ Current overload protection

⑤ It have detecting element，control peak current.

⑥ Thermal protection

If the controller temperature exceeds 85 ℃, the maximum current reduces in proportion to the thermal increase. The temperature can never exceed 115 ℃.

If the electric machinery temperature exceeds 145 ℃, the maximum current reduces in proportion to the thermal increase. The temperature can never exceed 165 ℃.

⑦ Low Battery charge

When the battery charge is low, the maximum current is reduced proportionally to the battery discharge.

⑧ External Agents

Electric control is hermetical .The chopper is protected against dust and spray of liquid to economy.

⑨ Protection against accidental Start Up

A precise sequence of operations is necessary before the machine will start. Operation cannot commence if these operations are not carried out correctly. Requests for drive must be made after closing the Key Switch.

(4) Operational features

① Feedback control system make the vehicle speed follow accelerator ， whether low speed or not high speed easy control .

② Two archives speed and acceleration design ， can apply to most situation.

③ Regeneration technology make change direction of fork even smooth。

④ Three regenerative braking mode ：

A、acceleration pedal part release appear regenerative braking，

B direction reverse regenerative braking，

C、 ramp downslide appear regenerative braking，

Except increase security drive，reclaim part of electric energy，prolong work time of every time .

⑤ Control speed during downgrade： speed lie on accelerator 。if speed exceed set point，controller may automatic braking，this give optimal ramp

Notice:

1 .Maintain electric control ，must first cut off electrical source，then hold 10-100ohmic resistance join controller anode and cathode，release residual voltage in the capacitor, or else you may meet tip-and-run danger.

2.Magnetic and radiation have some effect to inverter，long time effect may mangle controller, So need apart form magnetic and radiation.

6.3.2 Error code

(1) Errors detected by VMC20

Code.	Source	Condition	When	Tract	Main	PS	Reset	Remark
101	Switch startup error	ACCEL switch active at startup	KEY→ON	OFF	ON	-	ACC SWITCH=OFF	Traction setspeed=0
102	Switch startup error	FW|REV switch active at startup	KEY→ON	OFF	ON		FW=REV= OFF	Traction setspeed=0
103	Direction switch error	FW and REV ON at the same time	KEY=ON	OFF	ON	-	KEY=OFF	Traction setspeed=0
104	Accel pot error	Pot voltage > 95% or Pot voltage < 5% of VX_out	KEY=ON	ON	ON	-	KEY=OFF	Traction setspeed=0
105	Accel switch error	Voltage > 30% when ACC switch is not active	KEY=ON	ON	ON	-	KEY=OFF	Traction setspeed=0
107	Battery under voltage	48V:Less than 28.2V/.8s 36V: Less than 24.8V/.8s	KEY=ON	OFF	OFF	-	KEY=OFF	Detected by VMC20, not by ACS.
108	ACS under voltage	Voltage < limit (Parameter) for more than 0.8sec	KEY=ON	OFF	OFF	-	KEY=OFF	Detected by VMC20, not by ACS
109	Battery over voltage	More than 65V/0.8s	KEY=ON	OFF	OFF	-	KEY=OFF	Detected by VMC20, not by ACS.
110	ACS over voltage	Voltage > limit (Parameter) for more than 0.8sec	KEY=ON	OFF	OFF	-	KEY=OFF	Detected by VMC20, not by ACS
111	Communication error	See 5.2.1.	KEY=ON	OFF	ON	-	KEY=OFF	Traction setspeed=0
112	PM brush wear	wear and tearsensor = ON	KEY=ON			-	KEY=OFF	Only happens at the place where the option sensor install.
113	PM thermal	PMheat sensor = ON	KEY=ON	-	ON	-	KEY=OFF	Only happens at the place where the option sensor install.
114	Battery low voltage	batteryLED = ON	KEY=ON	OFF	ON	-		Charge a battery.
115	Startup error	Startup interior error	KEY=ON	OFF	ON		KEY=OFF	Connect with the engineer of Danaher

(2) Errors detected by drive ACS (EMCY)

Code	Source	Condition	When	Tract	Main	PS	Reset	Remark
251	Short circuit	ACS is shorted or motor terminals are shorted	KEY=ON	OFF	ON	OFF	KEY=OFF	ACS may be damaged if short circuit is internal.
252	ACS over temperature	ACS hs temp > 115 degC	KEY=ON	OFF	ON	ON	KEY=OFF	
253	Motor over temperature	Motor temp > 185 degC	KEY=ON	OFF	ON	ON	KEY=OFF	
254	ACS current sensor error	ACS current sensor error	KEY→ON	OFF	ON	ON	KEY=OFF	ACS must be repaired
255	Charging timeout	ACS capacitors are not charged within 10sec from power on	KEY→ON	OFF	ON	ON	KEY=OFF	Check charging circuit
256	ACS no response	ACS does not respond at startup	KEY=ON	OFF	ON	ON	KEY=OFF	Check CAN bus wiring.
257	ACS PDO timeout	ACS CAN open timeout (detected by VMC20)	KEY=ON	OFF	ON	ON	KEY=OFF	Check CAN bus wiring.
258	ACS SDO error	ACS SDO error (wrong SW version)	KEY=ON	OFF	ON	ON	KEY=OFF	Check SW version
259	CANopen timeout	ACS CAN open timeout (detected by VMC20)	KEY=ON	OFF	ON	ON	KEY=OFF	Check CAN bus wiring
260	ACS low voltage trip	ACS voltage <15V	KEY=ON	OFF	ON	ON	KEY=OFF	Instantaneous voltage
261	ACS high voltage trip	ACS voltage > 68V (software)	KEY=ON	OFF	ON	ON	KEY=OFF	Instantaneous voltage
262	ACS high voltage trip	ACS voltage >68V (hardware)	KEY=ON	OFF	ON	ON	KEY=OFF	Instantaneous voltage
263	ACS PCB temp trip	ACS PCB temp > 115 ℃ (only GEN4，GEN5not)	KEY=ON	OFF	ON	ON	KEY=OFF	
264	Other error		KEY=ON	OFF	ON	ON	KEY=OFF	Other urgency instance from ACS

(3)Errors detected by drive ACS (Warning)

Code	Source	Condition	When	Tract	Main	PS	Reset	Remark
201	ACS low temp warning	ACS heat sink temp < -20 ℃	KEY=ON	ON	ON	ON	KEY=OFF or Heat sink temp normal	Lowest Accel will be used.
202	ACS high temp warning	ACS heat sink temp > 85 ℃	KEY=ON	ON	ON	ON	KEY=OFF or Heat sink temp normal	Lowest Accel will be used.
203	Motor high temp warning	Motor temp > 145 ℃	KEY=ON	ON	ON	ON	KEY=OFF	Lowest Accel will be used.
204	Heat sink temp sensor error	ACS heat sink temp sensor error	KEY=ON	ON	ON	ON	KEY=OFF	Lowest Accel will be used.
205	Motor low temp warning	Motor temp < -50 ℃	KEY=ON	ON	ON	ON	KEY=OFF	Lowest Accel will be used.
206	Motor temp sensor error	Motor temp sensor not connected or short circuit	KEY=ON	ON	ON	ON	KEY=OFF or sensor connected	Lowest Accel will be used.
207	Speed feedback sensor error	Speed feedback sensor not connected / short circuit	KEY=ON	ON	ON	ON	KEY=OFF or sensor connected	ACS can not control speed correctly. No driving allowed.
208	ACS high voltage warning	ACS voltage > 68V	KEY=ON	ON	ON	ON	KEY=OFF or voltage back to normal	Lowest Accel will be used.
209	ACS low voltage warning	ACS voltage < 22.5V	KEY=ON	ON	ON	ON	KEY=OFF or voltage back to normal	Lowest Accel will be used.
210	ACS default values loaded	Default parameters are used in ACS	KEY=ON	ON	ON	ON	KEY=OFF	Turn the key switch off and on again.
211	Power reduce	Power is reduced (by some warning condition)	KEY=ON	ON	ON	ON	KEY=OFF	
212	Checksum error	Calibration parameter checksum error	KEY=ON	ON	ON	ON	KEY=OFF	
213	PCB low temp warning	PCB temp <-20 ℃ (onlyGEN4，GEN5 not)	KEY=ON	ON	ON	ON	KEY=OFF	
214	PCB high temp warning	PCB temp > 100 ℃ (only GEN4，GEN5 not)	KEY=ON	ON	ON	ON	KEY=OFF	
215	PCB sensor error	PCB temperature sensor error (only GEN4，GEN5 not)	KEY=ON	ON	ON	ON	KEY=OFF	
216	Current sensor default error	Current check default error	KEY=ON	ON	ON	ON	KEY=OFF	

(4)Errors detected by pump ACS (EMCY)

Code	Source	Condition	When	Tract	Main	PS	Reset	Remark
351	Short circuit	ACS is shorted or motor terminals are shorted	KEY=ON	OFF	OFF	ON	KEY=OFF	ACS may be damaged if short circuit is internal.
352	ACS over temjperature	ACS hs temp > 115 ℃	KEY=ON	OFF	ON	ON	KEY=OFF	See 1.2.2.1
353	Motor over temperature	Motor temp > 185 ℃	KEY=ON	OFF	ON	ON	KEY=OFF	See 1.2.2.2
354	ACS current sensor error	ACS current sensor error	KEY→ON	OFF	ON	ON	KEY=OFF	ACS must be repaired
355	Charging timeout	ACS capacitors are not charged within 10sec from power on	KEY→ON	OFF	ON	ON	KEY=OFF	Check charging circuit
356	ACS no response	ACS does not respond at startup	KEY=ON	OFF	ON	ON	KEY=OFF	Check CAN bus wiring.
357	ACS PDO timeout	ACS CAN open timeout (detected by VMC20)	KEY=ON	OFF	ON	ON	KEY=OFF	Check CAN bus wiring.
358	ACS SDO error	ACS SDO error (wrong SW version)	KEY=ON	OFF	ON	ON	KEY=OFF	Check SW version
359	CANopen timeout	ACS CAN open timeout (detected by VMC20)	KEY=ON	OFF	ON	ON	KEY=OFF	Check CAN bus wiring
360	ACS low voltage trip	ACS voltage <15V	KEY=ON	OFF	ON	ON	KEY=OFF	Instantaneous voltage
361	ACS high voltage trip	ACS voltage > 68V (software)	KEY=ON	OFF	ON	ON	KEY=OFF	Instantaneous voltage
362	ACS high voltage trip	ACS voltage >68V (hardware)	KEY=ON	OFF	ON	ON	KEY=OFF	Instantaneous voltage
363	ACS PCB temp trip	ACS PCB temperature > 115 ℃ (none for GEN4，GEN5 only)	KEY=ON	OFF	ON	ON	KEY=OFF	
364	Other error		KEY=ON	OFF	ON	ON	KEY=OFF	Any other EMCY form ACS.
301	ACS low temp warning	ACS heat sink temp < -20 ℃	KEY=ON	ON	ON	ON	KEY=OFF or Heat sink temp normal	Lowest Accel will be used.
302	ACS high temp warning	ACS heat sink temp > 85 ℃	KEY=ON	ON	ON	ON	.KEY=OFF or Heat sink temp normal	Lowest Accel will be used

(5)Errors detected by pump ACS (Warning)

Code	Source	Condition	When	Tract	Main	PS	Reset	Remark
303	Motor high temp warning	Motor temp > 145 ℃	KEY=ON	ON	ON	ON	KEY=OFF	See 1.2.2.2 Lowest Accel will be used.
304	Heat sink temp sensor error	ACS heat sink temp sensor error	KEY=ON	ON	ON	ON	KEY=OFF	
305	Motor low temp warning	Motor temp < -50 ℃	KEY=ON	ON	ON	ON	KEY=OFF	See 1.2.2.2 Lowest Accel will be used.
306	Motor temp sensor error	Motor temp sensor not connected or short circuit	KEY=ON	ON	ON	ON	KEY=OFF or sensor connected	
307	Speed feedback sensor error	Speed feedback sensor not connected / short circuit	KEY=ON	ON	ON	ON	KEY=OFF or sensor connected	ACS can not control speed correctly. No driving allowed.
308	ACS high voltage warning	ACS voltage > 68V	KEY=ON	ON	ON	ON	KEY=OFF or voltage back to normal	Lowest Accel will be used.
309	ACS low voltage warning	ACS voltage < 22.5V	KEY=ON	ON	ON	ON	KEY=OFF or voltage back to normal	Lowest Accel will be used.
310	ACS default values loaded	Default parameters are used in ACS	KEY=ON	ON	ON	ON	KEY=OFF	Turn the key switch off and on again.
311	Power reduce	Power is reduced (by some warning condition)	KEY=ON	ON	ON	ON	KEY=OFF	
312	Checksum error	Calibration parameter checksum error	KEY=ON	ON	ON	ON	KEY=OFF	
313	PCB low temp warning	PCB temperature <-20 ℃ (only GEN4，GEN5not)	KEY=ON	ON	ON	ON	KEY=OFF	
314	PCB high temp warning	PCB temperature > 100 ℃ (only GEN4，GEN5 not)	KEY=ON	ON	ON	ON	KEY=OFF	
315	PCB sensor error	PCB temperature sensor error (only GEN4，GEN5 not)	KEY=ON	ON	ON	ON	KEY=OFF	
316	Current sensor default error	Current check default error	KEY=ON	ON	ON	ON	KEY=OFF	

https://truckmanualshub.com/

ELECTRICAL SYSTEM PRINCIPLE DIAGRAM OF CPD10/15/18/20/25/30J

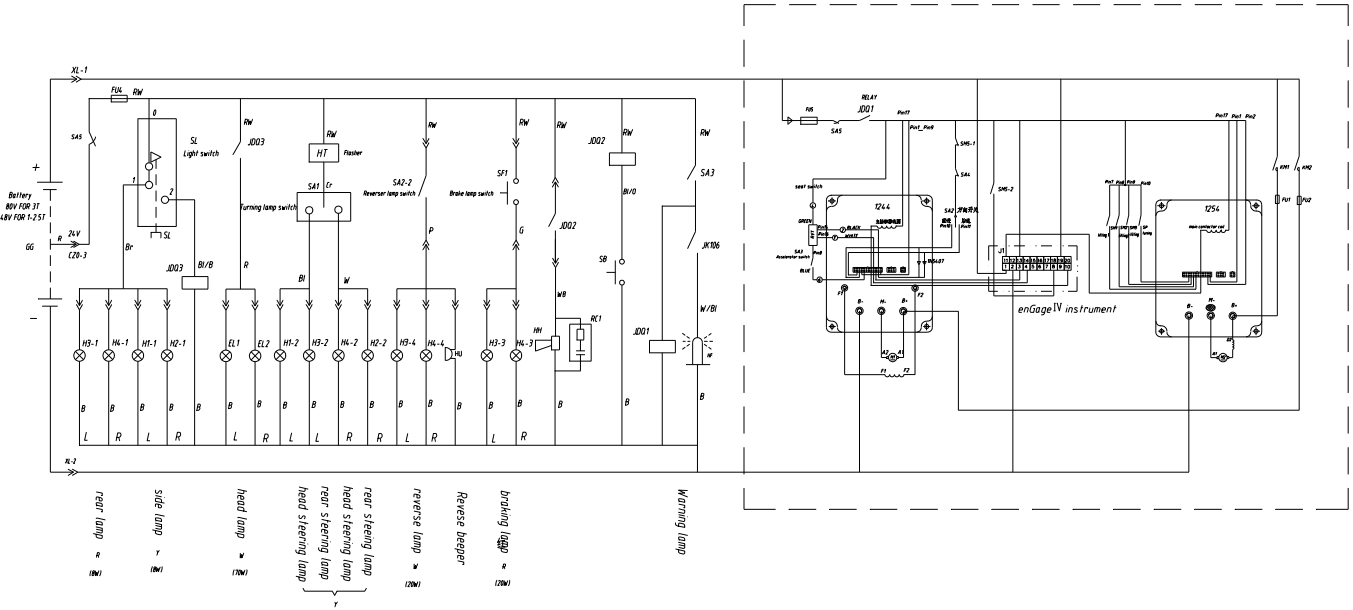

wire color	Black	White	Red	Green	Yellow	Brown	Blue	Grey	Purple	Orange	Pink
Symbol	B	W	R	G	Y	Br	Bl	Gr	Pu	O	P

NO.	CODE	NAME	MODEL	SPECIFICATION	QTY	REMARK
32	PUMP MOTOR	oil pump motor			1	
31	TRACTION MOTOR	service motor			1	
30	XL	accumulator connector			1	
29	FU5	fuse	BLX	10A	1	pipe core 10A
28	FU3、FU4	fuse	BLX	10A	2	pipe core 10A
27	FU2	fuse		275A	1	
26	FU1	fuse		225A	1	
25	SM5	hand brake switch	TM1308-G00		1	
24	SM4	the 4th handle	TM1308-G00		1	
23	SM3	side moving controller	TM1308-G00		1	
22	SM3	tilting controller	TM1308-G00		1	
21	SM1-2	lifting controller	TM1308-G00		2	
20	SP	hydraulic switch			1	
19	SB	horn button	LA2-G00		1	foot pedal
18	HF	warning lamp	LTD152A	24V	1	
17	HU	Revese beeper	DJB-24B	24v	1	
16	HT	flasher	SG224C	24v	1	
15	JDQ1-3	relay		24V	3	
14	HH	horn		24v	1	
13	SF1	brake lamp switch		24v/3A	1	
12	SA5	red urgent stop button		24V	1	
11	SA4	seat switch			(1)	seat belt
10	SA3	key switch			1	
9	SA2	direction switch			1	direction switch combination
8	SA1	turning lamp switch			(1)	
7	SL	lamp switch			(1)	
6	KM1-2	main contactor			1	
5	RC1	horn filter			1	
4	H3-H4	three colors rear lamp		24v	2	
3	H1-H2	side lamp		24v	2	
2	EL1-EL2	head lamp		24v/70W	2	
1	GG	acidic battery			40	moulded case

https://truckmanualshub.com/

WIRING DIAGRAM OF CPD10/15/18/20/25/30J

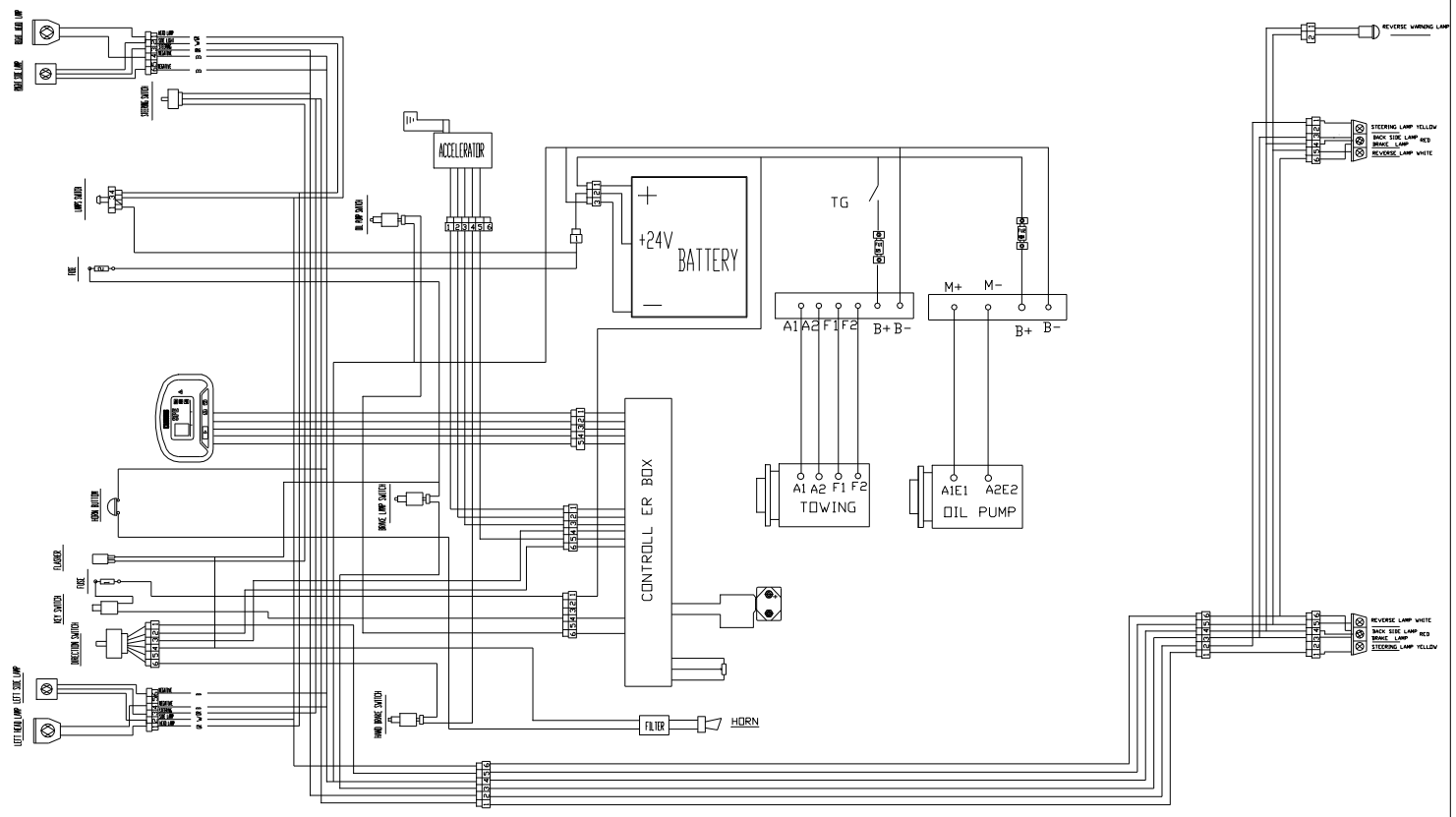

ELECTRICAL SYSTEM PRINCIPLE DIAGRAM OF CPD10/15/18/20/25/30/35J-C1

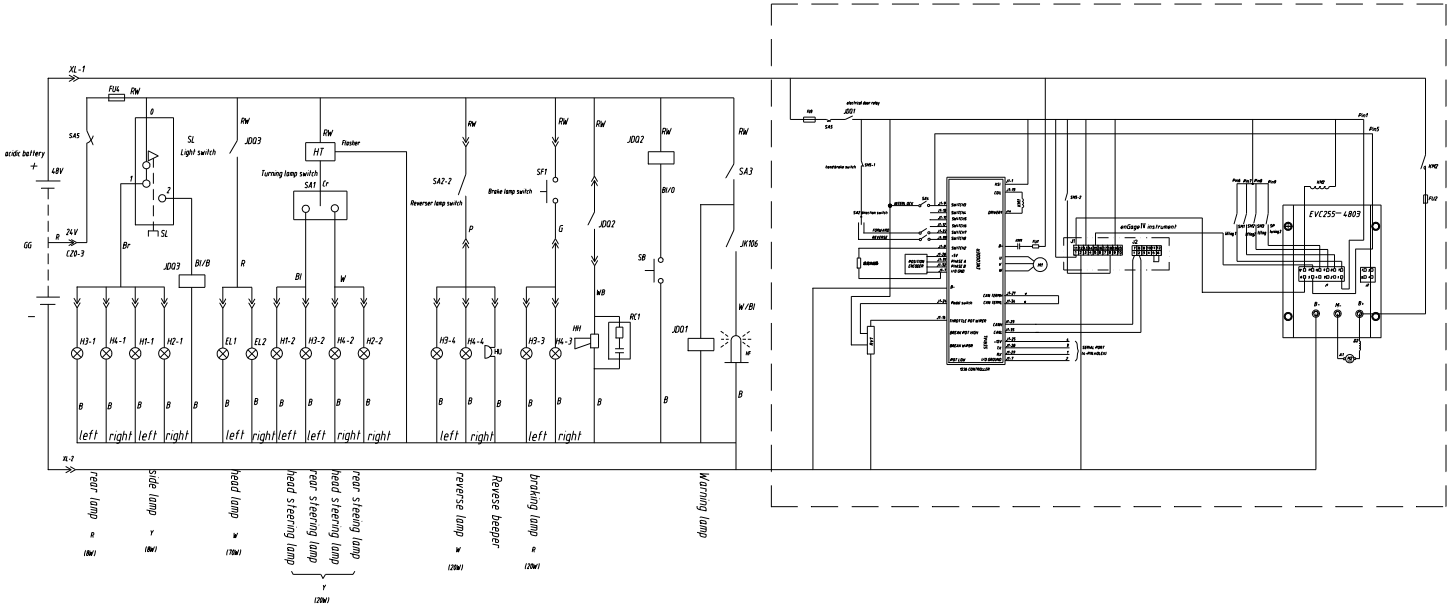

wire color	Black	White	Red	Green	Yellow	Brown	Blue	Grey	Purple	Orange	Pink
Symbol	B	W	R	G	Y	Br	Bl	Gr	Pu	O	P

enGage IV instrument

1	BDI+
2	BDI-
3	M1
4	M2
8	hand brake indicator
10	1244 error indicator
11	pump controller error indicator
13	key input
15	low power protect
19	electrical heat

NO	CODE	NAME	QTY	REMARK
32	PUMP MOTOR	oil pump motor	1	
31	TRACTION MOTOR	service motor	1	
30	XL	accumulator connector	1	
29	FU5	fuse	1	
28	FU3、FU4	fuse	2	
27	FU2	fuse	1	
26	FU1	fuse	1	
25	SM5	hand brake switch	1	
24	SM4	the 4th handle	1	
23	SM3	side moving controller	1	
22	SM3	tilting controller	1	
21	SM1-2	lifting controller	2	
20	SP	hydraulic switch	1	
19	SB	horn button	1	
18	HF	warning lamp	1	
17	HU	Revese beeper	1	
16	HT	flasher	1	
15	JDQ1-3	relay	3	
14	HH	horn	1	
13	SF1	brake lamp switch	1	
12	SA5	red urgent stop button	1	
11	SA4	seat switch	(1)	
10	SA3	key switch	1	
9	SA2	direction switch	1	
8	SA1	turning lamp switch	(1)	
7	SL	lamp switch	(1)	
6	KM1-2	main contactor	2	
5	RC1	horn filter	1	
4	H3-H4	three colors rear lamp	2	
3	H1-H2	side lamp	2	
2	EL1-EL2	head lamp	2	
1	GG	acidic battery		

ELECTRICAL SYSTEM PRINCIPLE DIAGRAM OF CPD10/15/18/20/25/30/40/45/50J C2

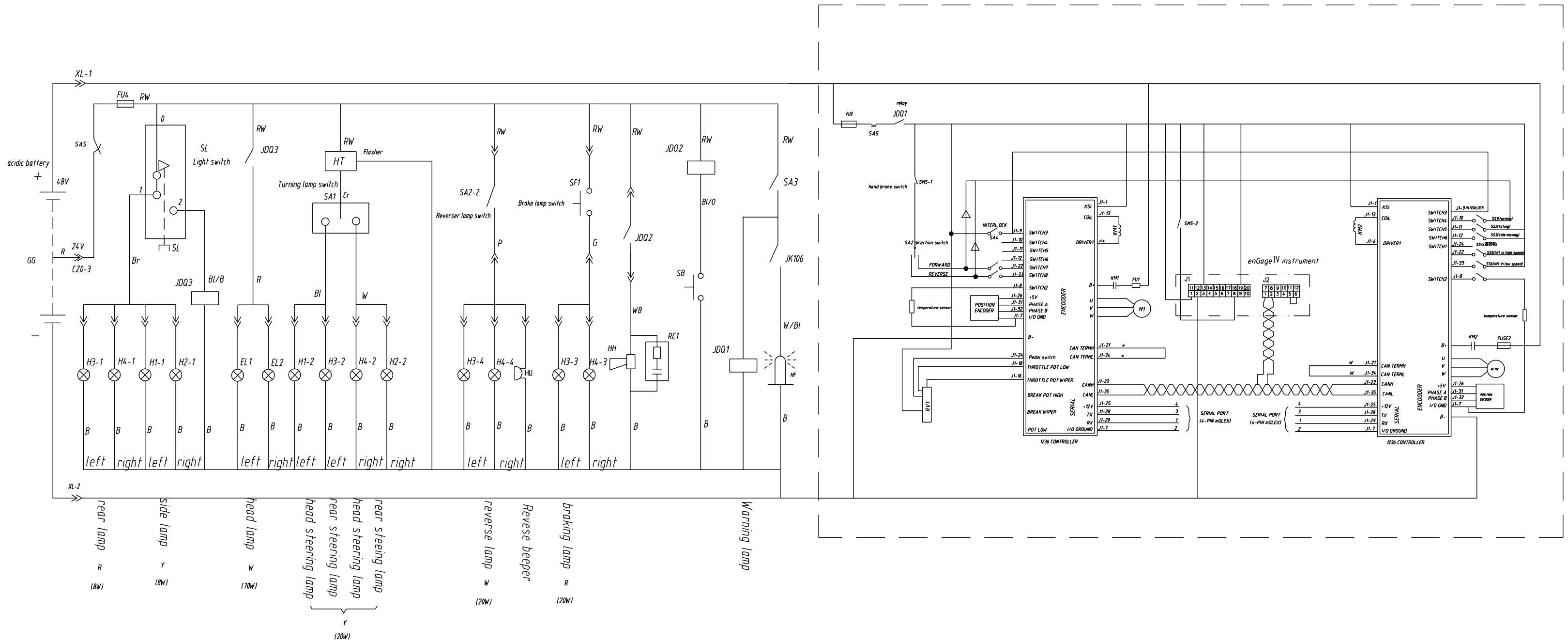

wire color	Black	White	Red	Green	Yellow	Brown	Blue	Grey	Purple	Orange	Pink
Symbol	B	W	R	G	Y	Br	Bl	Gr	Pu	O	P

enGage IV instrument

1	BDI+
2	BDI-
3	M1
4	M2
8	hand brake indicator
10	1244 error indicator
11	pump controller error indicator
13	key input
15	low power pretect
19	electrical heat

NO.	CODE	NAME	QTY	REMARK
32	PUMP MOTOR	oil pump motor	1	
31	TRACTION MOTOR	service motor	1	
30	XL	accumulator connector	1	
29	FU5	fuse	1	
28	FU3、FU4	fuse	2	
27	FU2	fuse	1	
26	FU1	fuse	1	
25	SM5	hand brake switch	1	
24	SM4	the 4th handle	1	
23	SM3	side moving controller	1	
22	SM3	tilting controller	1	
21	SM1-2	lifting controller	2	
20	SP	hydraulic switch	1	
19	SB	horn button	1	
18	HF	warning lamp	1	
17	HU	Revese beeper	1	
16	HT	flasher	1	
15	JDQ1-3	relay	3	
14	HH	horn	1	
13	SF1	brake lamp switch	1	
12	SA5	red urgent stop button	1	
11	SA4	seat switch	(1)	
10	SA3	key switch	1	
9	SA2	direction switch	1	
8	SA1	turning lamp switch	(1)	
7	SL	lamp switch	(1)	
6	KM1-2	main contactor	2	
5	RC1	horn filter	1	
4	H3-H4	three colors rear lamp	2	
3	H1-H2	side lamp	2	
2	EL1-EL2	head lamp	2	
1	GG	acidic battery		

https://truckmanualshub.com/

ELECTRICAL SYSTEM PRINCIPLE DIAGRAM OF CPD10/15/18/20/25/30/40/45/50J D1

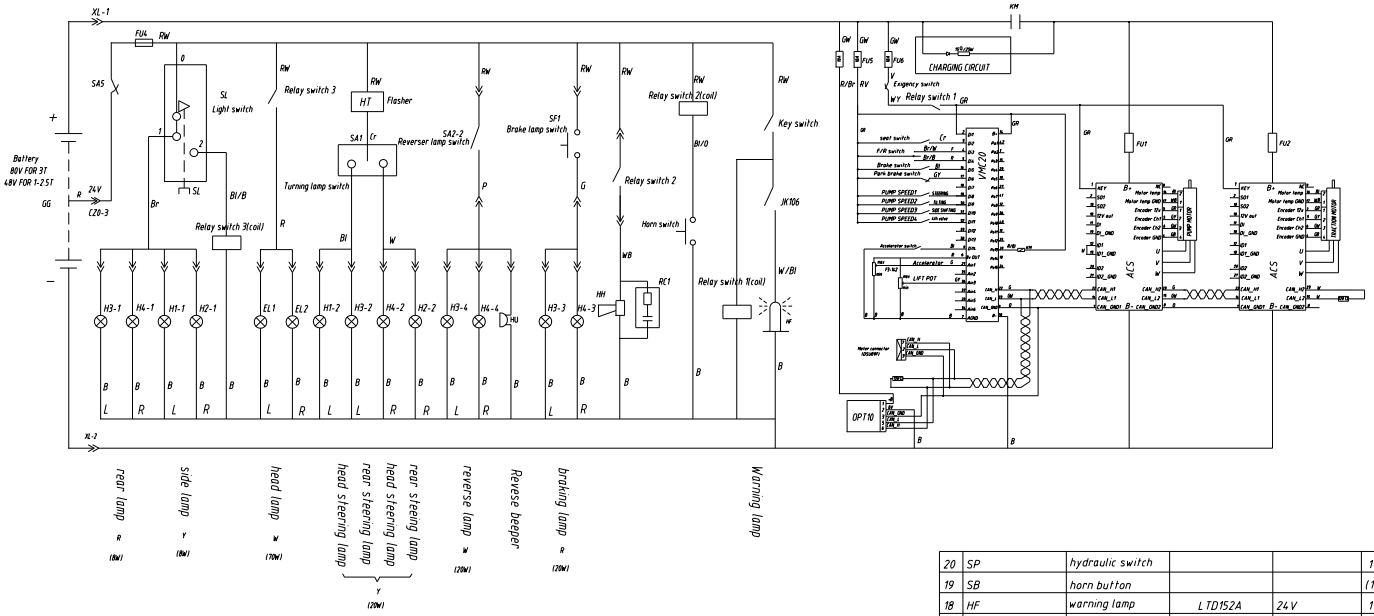

wire color	Black	White	Red	Green	Yellow	Brown	Blue	Grey	Purple	Orange	Pink
Symbol	B	W	R	G	Y	Br	Bl	Gr	Pu	O	P

NO.	CODE	NAME	MODEL	SPECIFICATION	QTY	REMARK
33	JDQ1-3	relay	HFV4	24V	3	
32	PUMP MOTOR	oil pump motor			1	
31	TRACTION MOTOR	service motor			1	
30	XL	accumulator connector			1	
29	FU5	fuse	BLX	10A	1	tube core 10A
28	FU3、FU4	fuse	BLX	10A	2	tube core 10A
27	FU2	fuse		425A	1	
26	FU1	fuse		300A	1	
25	SM5	hand brake switch	TM1308-G00		1	
24	SM4	the 4th handle	TM1308-G00		1	
23	SM3	side moving controller	TM1308-G00		1	
22	SM2	tilting controller	TM1308-G00		1	
21	SM1	lifting controller	TM1308-G00		1	
20	SP	hydraulic switch			1	
19	SB	horn button			(1)	on the steering wheel
18	HF	warning lamp	LTD152A	24V	1	
17	HU	Revese beeper	DJB-24B	24v	1	
16	HT	flasher	SG224C	24v	1	
15	HH	horn	DL224ED	24v	1	
14	SF2	brake switch	JK231	24V/3A	1	
13	SF1	brake lamp switch	JK231	24v/3A	1	
12	SA5	red urgent stop button	XB2BT44C	24V	1	
11	SA4	seat switch			(1)	seat belt
10	SA3	key switch	JK411A		1	
9	SA2	direction switch			1	direction switch combination
8	SA1	turning lamp switch			(1)	
7	SL	lamp switch			(1)	
6	KM	main contactor	SW200		1	
5	RC1	horn filter			1	
4	H3-H4	three colors rear lamp		24v	2	
3	H1-H2	side lamp		24v	2	
2	EL1-EL2	head lamp	WD100x90	24v/70W	2	
1	GG	acidic battery				moulded case

WIRING DIAGRAM OF CPD10/15/18/20/25/30/40/45/50/J D1

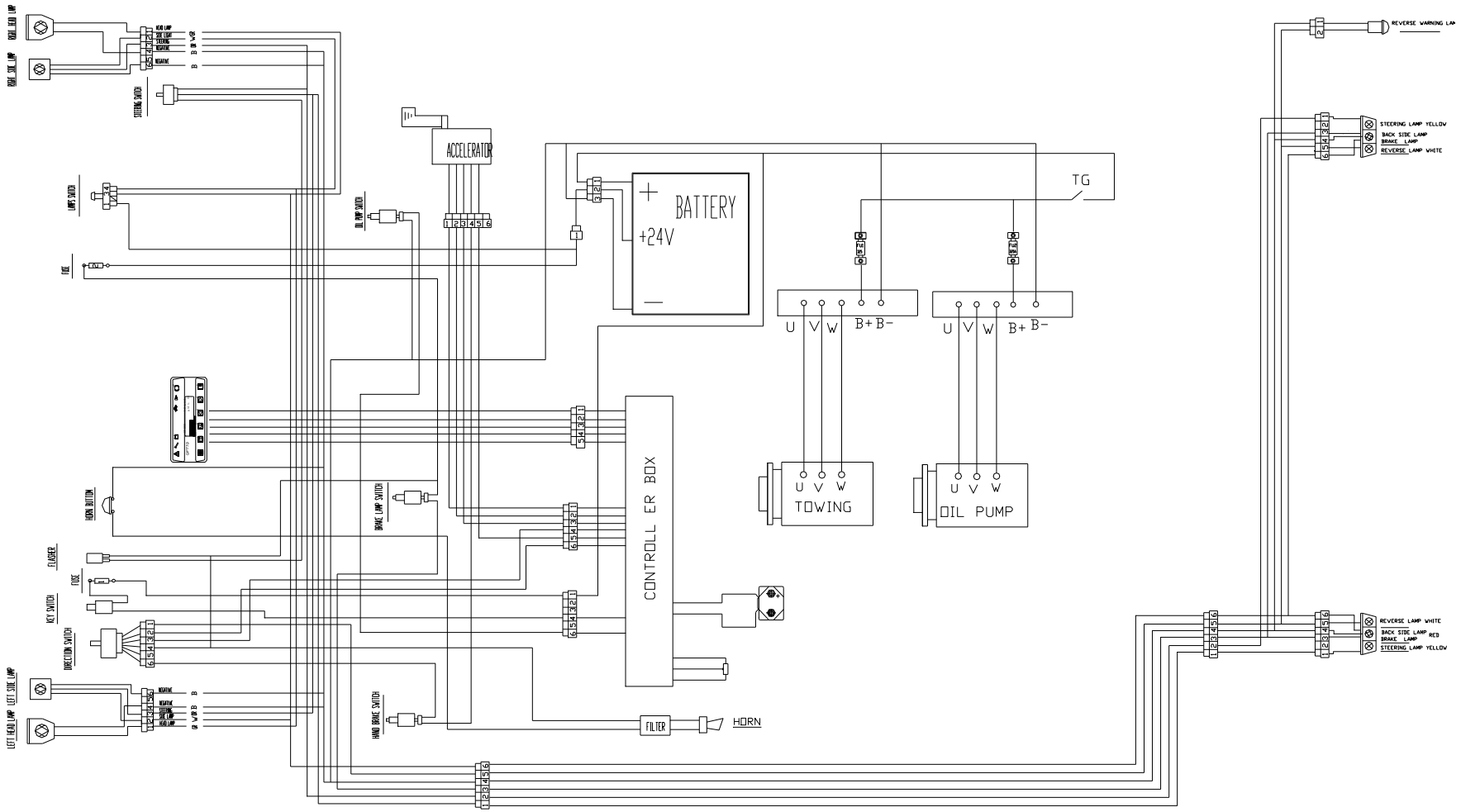

7. Maintenance record

Date	Maintain content	Maintainer

https://truckmanualshub.com/

HANGCHA GROUP CO. , LTD.

- Address for: OVERSEAS USERS
- Manufacturing site: 88 Donghuan Road, LinAn Econimic Development zone, Zhejiang, P.R.China ■ ZIP:311305
- Registered Address：398 Shi Qiao Road, Hangzhou, P.R. China) ■ ZIP :310004
- Fax: 0086-571-88926789,0086-571-88132890
- **Web: http://www.hcforklift.com**
- **E-mail: sales@hcforklift.com**