https://truckmanualshub.com/

LM315GC

Triple Greens Mower (Diesel Model)

Owner's Operating Manual

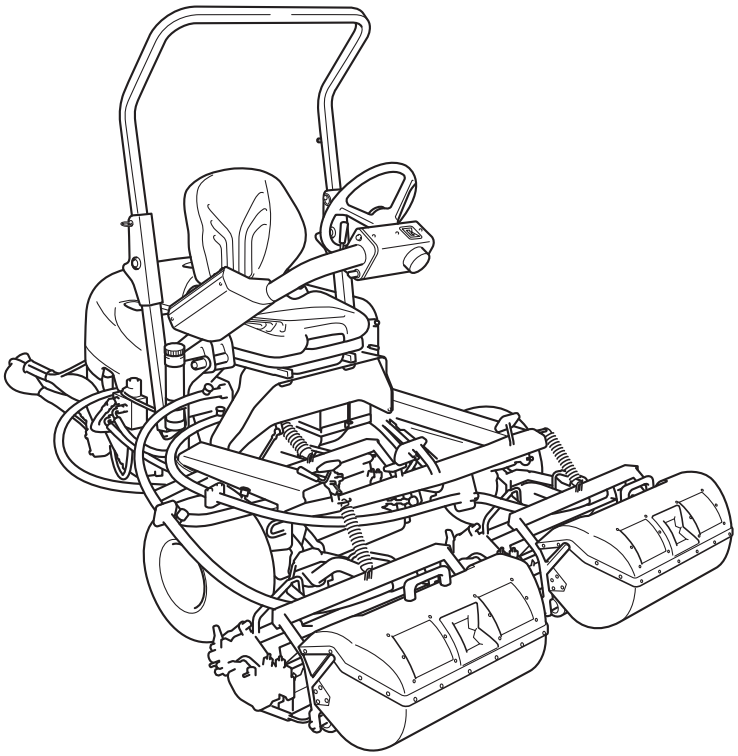

"Required reading" Read this manual and the Owner's Manual for the engine before using the machine.

BARONESS®

Quality on Demand

Serial No. 30346-

Original Instructions Ver.2.0

https://truckmanualshub.com/

Greeting

Thank you for purchasing the Baroness machine. This manual explains proper handling, adjustment, and inspection of your machine. Prior to use, carefully read this manual to thoroughly understand the contents for safe and correct operation.
We hope you will use the machine safely, and take advantage of its best performance.

Keeping the Owner's Operating Manual

Keep this manual in the box on the right side of the seat.

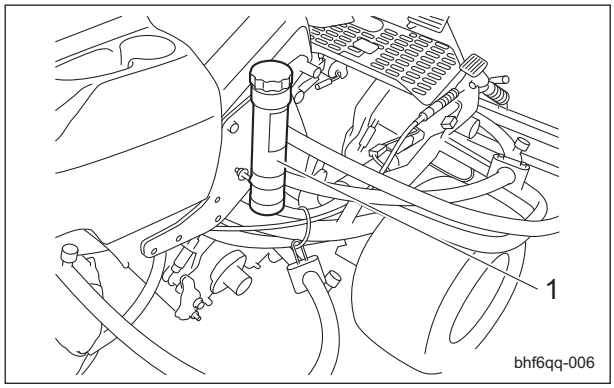

Keeping the Owner's Operating Manual_001

1	Box

https://truckmanualshub.com/

Introduction

Read this manual carefully to ensure that you thoroughly understand how to properly operate and maintain this machine, and to avoid causing injury to yourself or others.

The operator is responsible for operating the machine properly and safely.

Do not perform maintenance on the machine other than that described in this manual.

Be sure to also read the operating manuals for the engine, battery, etc.

Maintenance should only be performed by a certified specialist.

If you have any questions concerning maintenance or genuine parts, please contact your local Baroness dealer or Kyoeisha.

When making inquiries about this machine, please specify the machine's model designation and serial number.

When loaning or transferring this machine, please also provide this manual together with the machine.

Kyoeisha Co., Ltd.

Caution

The information described in this manual is subject to change for improvement without prior notice.
When replacing parts, be sure to use genuine Baroness parts or parts designated by Kyoeisha.
Note that the Baroness product warranty may not apply to defects caused by the use of parts from other companies.

Warning Symbols

This manual uses the following warning symbols for handling precautions that are important for your safety.

696cq5-001	Warning symbol

This symbol indicates the articles regarding "Danger," "Warning," or "Caution."
Those articles describe important safety precautions and so read them carefully to understand completely before operating the machine.
Failure to adequately follow these safety precautions may cause an accident.

Danger

This symbol indicates that serious injury or death will occur if the warning is ignored.

Warning

This symbol indicates that serious injury or death may occur if the warning is ignored.

Caution

This symbol indicates that injury or damage to property may occur if the warning is ignored.

Important

This symbol indicates precautions on the mechanism of the machine.

https://truckmanualshub.com/

Introduction

Purpose

For greens/for tees: This machine is intended for cutting turf grass at golf courses.
For fields: This machine is intended for cutting turf grass on soccer and baseball fields.
Do not use this machine in any other way than its intended purpose, and do not modify the machine.
Operating this machine for other purposes and modifying it may be very dangerous and may cause damage to the machine.
In addition, this machine is not authorized for operation as a special motor vehicle. Do not operate it on public roads.

https://truckmanualshub.com/

Contents

Safety ..... Page 1-1

Safe Operating Practices ..... Page 1-2

Disposal ..... Page 2-1

Waste Disposal ..... Page 2-2

Product Overview ..... Page 3-1

Specifications ..... Page 3-2
Names of Each Section ..... Page 3-4
Safety Signs and Instruction Signs ..... Page 3-6

Handling Instructions ..... Page 4-1

Inspection Before Use ..... Page 4-2
Tightening torques ..... Page 4-15
Adjustment Before Operating ..... Page 4-19
Procedure to Start / Stop Engine ..... Page 4-26
Operation of Each Section ..... Page 4-28
Instruments ..... Page 4-39
Travel of Machine ..... Page 4-41
Cutting Work ..... Page 4-42
Transporting ..... Page 4-42

Maintenance ..... Page 5-1

Maintenance Precautions ..... Page 5-2
Maintenance Schedule ..... Page 5-3
Jacking up the machine ..... Page 5-6
Greasing ..... Page 5-7
Maintenance (Mower) ..... Page 5-10
Maintenance (Main Body) ..... Page 5-12
Long-Term Storage ..... Page 5-19

https://truckmanualshub.com/

Contents

https://truckmanualshub.com/

Safe Operating Practices ..... Page 1-2

Training .....Page 1-2
Preparation .....Page 1-2
Operation .....Page 1-3
Maintenance and storage .....Page 1-4

https://truckmanualshub.com/

Safety

Failure to adequately follow these safety precautions may cause an accident resulting in injury or death.

Danger

This machine is designed to ensure safe operation and has been tested and inspected thoroughly before shipment from the factory.
The machine is equipped with safety devices to prevent accidents.
However, whether the machine demonstrates its original performance level depends on the manner in which it is operated and handled, as well as the manner in which it is managed on a daily basis.
Inappropriate use or management of the machine may result in injury or death.
Observe the following safety instructions to ensure safe operation.

Safe Operating Practices

The following instructions include the ones from CEN standard EN 836: 1997, ISO standard 5395: 1990, and ANSI B71.4-2004.

Training

1. Read this manual and other training material carefully. Be familiar with the controls, safety signs, and the proper use of the equipment.
2. If the operator or mechanic can not read English it is the owner's responsibility to explain this manual to them.
3. All operators and mechanics should seek and obtain professional and practical instruction.
   The owner is responsible for training the users.
   Such instruction should emphasize.
   [1] The need for care and concentration when working with ride-on machines.
   [2] Control of a ride-on machine sliding on a slope will not be regained by the application of the brake.
   The main reasons for loss of control are
   - Insufficient wheel grip
   - Being driven too fast
   - Inadequate braking
   - The type of machine is unsuitable for its task
   - Lack of awareness of the effect of ground conditions, especially slopes
   - Incorrect hitching and load distribution
4. Never allow children or people unfamiliar with these instructions to use or service the machine.
   Local regulations may restrict the age of the operator.
5. The owner/use can prevent and is responsible for accidents or injuries occurring to themselves, other people, or property.
6. Keep in mind that the owner, operator, and mechanic are responsible for accidents or hazards occurring to other people or their property.

Preparation

1. Evaluate the terrain to determine what accessories and attachments are needed to properly and safety perform the job. Only use accessories and attachments approved by the manufacturer.
2. While operating, always wear substantial footwear, long trousers, hard hat, safety glasses, and ear protection. Long hair, loose clothing, or jewelry may get tangled in moving parts. Do not operate the equipment when barefoot or wearing open sandals.
3. Inspect the area where the equipment is to be used and remove all objects such as rocks, toys and wire which can be thrown by the machine.
4. Exercise care in the handling of fuel.

Warning

Warning-Fuel is highly flammable. Take the following precautions.

[1] Store fuel in containers specifically designed for this purpose.
[2] Add fuel before starting the engine. Never remove the cap of the fuel tank or add fuel while the engine is running or when the engine is hot.
[3] Refuel outdoors only and do not smoke while refueling.
[4] If fuel is spilled, do not attempt to start the engine but move the machine away from the area of spillage and avoid creating any source of ignition until petrol vapours have dissipated.
[5] Replace all fuel tanks and container caps securely.

https://truckmanualshub.com/

5. Check that operator's presence controls, safety switches and shields are attached and functioning properly. Do not operate unless they are functioning properly.
6. If the brake operation is faulty or the parking brake lever has noticeable play, be sure to adjust or repair them before operating the machine.
7. Replace faulty mufflers.

Operation

1. Do not operate the engine in a confined space where dangerous carbon monoxide fumes can collect.
2. Only operate in good light, keeping away from holes and hidden hazards.
3. Before attempting to start the engine, disengage all attachments, shift into neutral, and engage the parking brake.
   Only start engine from the operator`s position.
   Use seat belts if provided.
4. Remember there is no such thing as a safe slope. Travel on grass slopes requires particular care.
   To guard against overturning:
   [1] Do not stop or start suddenly when going up or downhill.
   [2] Engage clutch slowly, always keep machine in gear, especially when traveling downhill.
   [3] Machine speeds should be kept low on slopes and during tight turns.
   [4] Stay alert for humps and hollows and other hidden hazards.
   [5] Never operate across the face of the slope, unless the machine is designed for this purpose.
   [6] Never drive the machine on a slope with an angle of gradient that is greater than that specified or in a place where there is a danger of the machine slipping.
5. Never operate the machine with damaged guards, shields, or without safety protective devices in place.
   Be sure all interlocks are attached, adjusted and functioning properly.
6. Do not change the engine governor settings or overspeed the engine. Operating the engine at excessive speed may increase the hazard of personal injury.
7. Do the following before leaving the operator`s position.
   [1] Stop on level ground.
   [2] Disengage the power take-off and lower the attachments.
   [3] Change into neutral and set the parking brake.
   [4] Stop the engine and remove the key.
8. Disengage the drive to attachments, stop the engine, and remove the ignition key in the following conditions.
   [1] Before refueling.
   [2] Before removing the grass catcher/ catchers.
   [3] Before making height adjustment unless adjustment can be made from the operator's position.
   [4] Before cleaning blockages.
   [5] Before checking, cleaning, or working the machine.
   [6] After striking a foreign object or if an abnormal vibration occurs.
   Inspect the machine for damage and make repairs before restarting and operating the equipment.
9. Keep hands and feet away from the cutting units and the rotating parts.
10. Look behind and down before backing up to be sure of a clear path.
11. Do not carry passengers.
12. Never operate while people, especially children, or pets are nearby.
13. Slow down and use caution when making turns and crossing roads and sidewalks.
14. Stop the blades rotating before crossing surfaces other than grass.
15. Disengage drive to attachments when transporting or not in use.
16. When using any attachments, never direct discharge of material toward bystanders nor allow anyone near the machine while in operation.
17. Do not operate the machine under the influence of alcohol or drugs.

https://truckmanualshub.com/

18. Take care when loading or unloading the machine into a trailer or a truck. Load or unload the machine in a flat and safe place. Before loading or unloading, set the parking brake on the truck or trailer, stop the engine, and chock the wheels.
    When transporting the machine on a truck or a trailer, set the parking brake, stop the engine, and fasten the machine to the truck with a rope or other suitable restraining device that has sufficient strength.
    When using a running board, select one with sufficient strength, length, and width and that will not cause the machine to slip.
19. Close the fuel valve before transporting the machine.
20. Use care when approaching blind corners, shrubs, trees, or other objects that may obscure vision.
21. Do not take your eyes off the road ahead. Do not operate the machine with no hands.
22. Reduce the throttle setting during engine run-out and, if the engine is provided with a shut-off valve, turn the fuel off at the conclusion of operation.

Maintenance and storage

1. Disengage drives on level ground, lower the attachments, set parking brake, stop engine and remove key from ignition. Wait for all movement to stop before adjusting, cleaning or repairing.
2. When machine is to be parked, stored, or left unattended, lower the cutting units unless a positive machanical lock is provided.
3. To reduce the fire hazard, keep the engine, silencer/muffler, battery compartment fuel storage area, cutting unit and drives free of grass, leaves, or excessive grease. Clean up oil or fuel spillage.
4. Allow the engine to cool before storing in any enclosure.
5. Only cover the machine with a sheet after hot parts have sufficiently cooled down.
6. Never store the equipment with fuel in the tank inside a building where fumes may reach an open flame or spark.
7. If the engine is provided with a shut-off valve, shut off valve while storing or transporting.
8. Do not store fuel near flames.
9. Never allow untrained personnel to service machine.
10. Allow the engine/muffler to cool before checking/maintenance.
11. Appropriately manage and correctly use the tools necessary for servicing or adjusting the machine.
12. Use jack stands to support components when required.
13. Carefully release pressure from components with stored energy.
14. Be sure to depressurize the hydraulic system before performing maintenance operations on it such as removing hydraulic equipment.
15. Check whether line connectors in the hydraulic system are properly tightened. Before applying hydraulic pressure, check the connections of the hydraulic pressure lines and the condition of the hoses.
16. When checking the hydraulic circuit for pinhole leaks or oil leakage from nozzles, do not use your hands. Use items such as paper or corrugated cardboard to find leakage points. Be extremely careful with high-pressure oil as it may pierce your skin, resulting in an injury.
    If fluid is injected into the skin it must be surgically removed within a few hours by a doctor familiar with this form of injury or gangrene may result.
17. Disconnect battery before making any repairs. Disconnect the negative terminal first and the positive last. Reconnect positive first and negative last.
18. Make sure that parts such as wires are not touching each other and that their covers have not come off.
19. Use care when checking the cylinders/reels and bed knifes.
    [1] Wear gloves and use caution when seruicing them.
    [2] Be careful durig adjustment of the machine to prevent entrapment of the fingers between moving blades and fixed parts of the machine.
20. On multi-cylinder/multi-reel machines take care as rotating one cylinder/reel can cause other cylinder/reels to rotate.
21. Keep hands and feet away from moving parts. If possible, do not make adjustments with the engine running.

https://truckmanualshub.com/

22. Charge batteries in an open well ventilated area, away from spark and flames. Unplug charger before connecting or disconnecting from battery. Wear protective clothing and use insulated tools.
23. Keep all parts in good working condition and all hardware tightened. Replace all worn or damaged decals.
24. Keep all nuts, bolts and screws tight to be sure the equipment is in safe working condition.
25. Check the grass catcher frequently for wear or deterioration.
26. If the fuel tank has to be drained, do this outdoors.

https://truckmanualshub.com/

https://truckmanualshub.com/

Disposal

Waste Disposal ..... Page 2-2

About the Waste disposal ..... Page 2-2

https://truckmanualshub.com/

Disposal

Waste Disposal

About the Waste disposal

Make sure that waste generated when servicing or repairing the machine is disposed of in accordance with local regulations.
(e.g. waste oil, antifreeze batteries, rubber products, and wires etc.)

https://truckmanualshub.com/

Product Overview

Specifications ..... Page 3-2

Specifications .....Page 3-2
Sound pressure level .....Page 3-3
Sound power level ..... Page 3-3
Vibration level ..... Page 3-3

Names of Each Section ..... Page 3-4

Serial Number Plate .....Page 3-5
Specification Decal ..... Page 3-5
Noise Emission Decal .....Page 3-5
Year of Manufacture Decal .....Page 3-5
ROPS authentication decal ..... Page 3-5
Battery capacity decal ..... Page 3-5

Safety Signs and Instruction Signs ..... Page 3-6

About Safety Signs and Instruction Signs .....Page 3-6
Positions of Safety Decals and Instruction Decals ..... Page 3-6
Description of Safety Decals and Instruction Decals ..... Page 3-7

https://truckmanualshub.com/

Product Overview

Specifications

Specifications

Model			LM315GC (for greens)	LM315GC (for tees)	LM315GC (for fields)
Dimensions	Total length		215 cm		
	Total width		203 cm		
	Total height	Steering wheel	132 to 141 cm		
Weight	11 blades, with ROPS and empty fuel tank	2WD	659 kg		
		3WD	684 kg		
	Grass catcher (for one machine)		12 kg		
	Groomer (for one machine)		10 kg		
Minimum turning radius			161 cm		
Engine		Model	Kubota D722-E4B		
		Type	Vertical water-cooled 4-cycle diesel engine		
		Total displacement	719 cm^3 (0.719 L)		
		Maximum output	12.4 kW (16.9 PS)/3,000 rpm		
Fuel tank capacity			Diesel 20.0 dm^3 (20.0 L)		
Fuel consumption			286 g/kW·h (rated output)		
Quantity of engine oil			2.8 dm^3 (2.8 L)		
Operating width			152 cm		
Operating height (Adjusted mowing height)			2.0 to 18.0 mm	6.0 to 20.0 mm	10.0 to 40.0 mm
Drive			HST 2WD [3WD (2WD/3WD selectable)]		
Speed (HST)		Forward	0 - 15.0 km/h		
		Reverse	0 - 6.0 km/h		
Speed (Mechanical)			-		
Efficiency			7,296 m^2/h (6.0 km/h x cutting width x 0.8)		
Maximum inclination for operation			15 degrees		
Tire size	Front wheel		Smooth 18 x 9.50-8 2P	Pillow Dia 18 x 8.50-8 4P	Smooth 18 x 9.50-8 2P
	Rear wheel		Smooth 18 x 9.50-8 2P	Pillow Dia 18 x 8.50-8 4P	Smooth 18 x 9.50-8 2P
Tire pneumatic pressure	Front wheel		80 kPa (0.8 kgf/cm^2)	100 kPa (1.0 kgf/cm^2)	80 kPa (0.8 kgf/cm^2)
	Rear wheel		80 kPa (0.8 kgf/cm^2)	100 kPa (1.0 kgf/cm^2)	80 kPa (0.8 kgf/cm^2)
Battery			55B24 L (BCI GROUP SIZE 51R: Recommended equivalent product EXIDE 51R-60)		

* The factory default maximum engine rpm is 3,000 rpm.

https://truckmanualshub.com/

Sound pressure level

Sound pressure level

This machine was confirmed to have a continuous A-weighted sound pressure level of 87 dB by measuring identical machines in accordance with the procedure specified in ISO 5395-1:2013.

Sound power level

Sound power level

This machine was confirmed to have a sound power level of 103 dB by measuring identical machines in accordance with the procedure specified in directive 2000/14/EC.

Vibration level

Hand-arm vibration

This machine was confirmed to transmit a maximum vibration level of less than 2.5 m/s^2 to hands and arms by measuring identical machines in accordance with the procedure specified in ISO 5349-1:2001,ISO 5349-2:2001.

Whole body vibration

This machine was confirmed to transmit a maximum vibration level of less than 0.5 m/s^2 to the whole body by measuring identical machines in accordance with the procedure specified in ISO 2631-1:1997,ISO 2631-2:2003.

https://truckmanualshub.com/

Product Overview

Names of Each Section

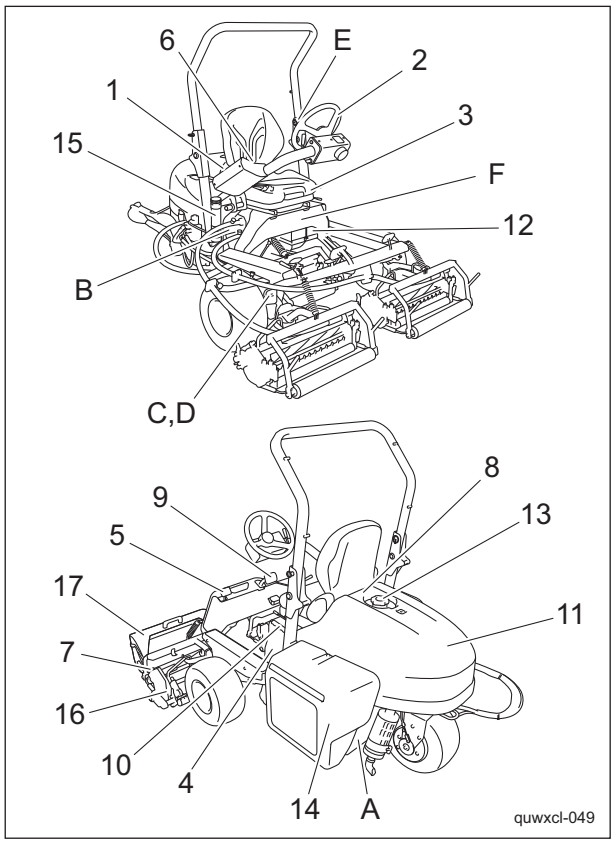

Names of Each Section_001

1	Operation panel
2	Steering wheel
3	Seat
4	Underseat cover
5	Mower pedal
6	Reel rotation switch
7	Reel reverse lever
8	Transmission selector lever
9	Traveling pedal
10	Parking brake lever
11	Hood
12	Battery
13	Fuel tank
14	Radiator cover
15	Box
16	Mower unit
17	Grass catcher
A	Serial number plate
B	Specification decal
C	Noise emission decal
D	Year of manufacture decal
E	ROPS compliance decal
F	Battery capacity decal

https://truckmanualshub.com/

Serial Number Plate

The serial number plate indicates the model and serial number of the machine.

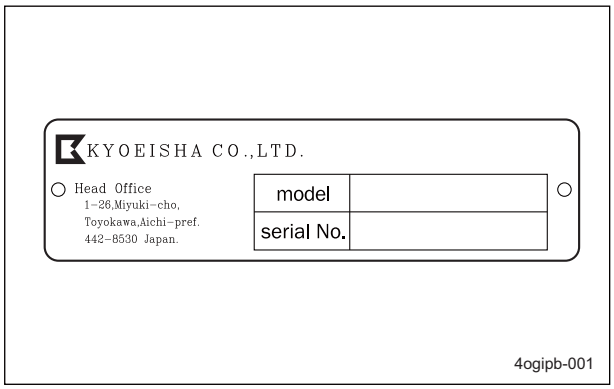

Serial Number Plate_001

Specification Decal

(For Europe)
The Specification decal indicates the CE marking, model , and weight, etc.

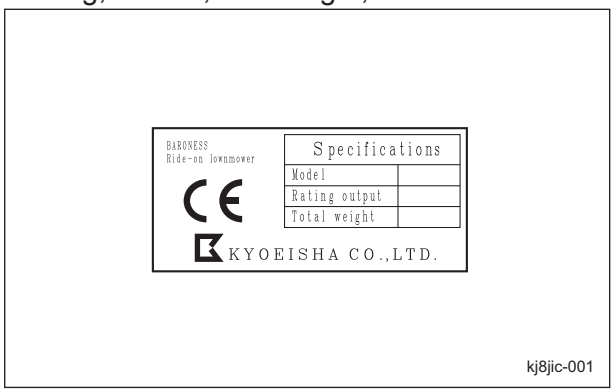

Decal, Specifications_001

Noise Emission Decal

(For Europe)
The noise emission decal indicates the sound power level determined by measuring identical machines in accordance with the procedure specified in the EC directives.

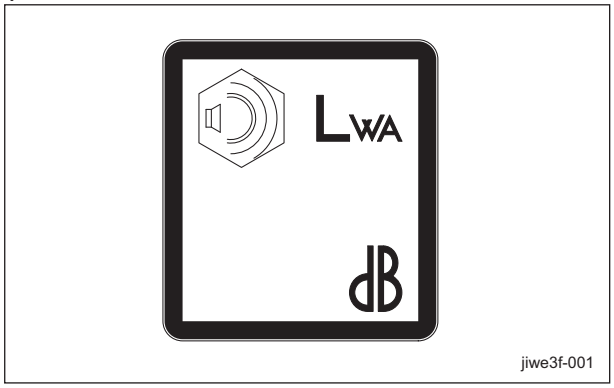

Noise Emission Decal_001

Year of Manufacture Decal

(For Europe)
The year of manufacture decal indicates the year when this machine was manufactured.

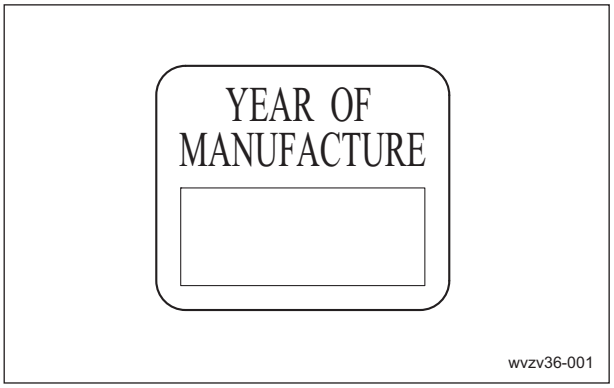

Year of Manufacture Decal_001

ROPS authentication decal

The ROPS authentication decal indicates the manufacturer, model, etc., in accordance with International Standard ISO21299:2009.

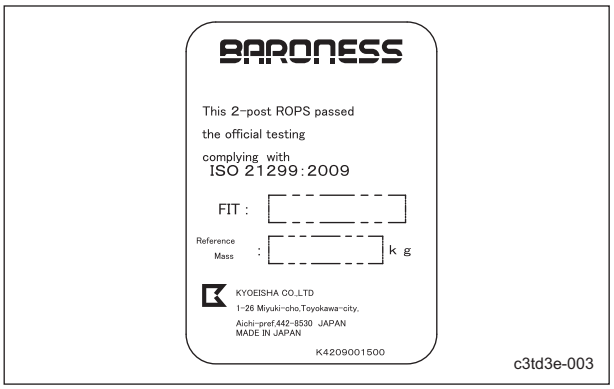

ROPS Authentication Decal_001

Battery capacity decal

(For Europe)
The battery capacity decal indicates the capacity by 20HR and CCA.

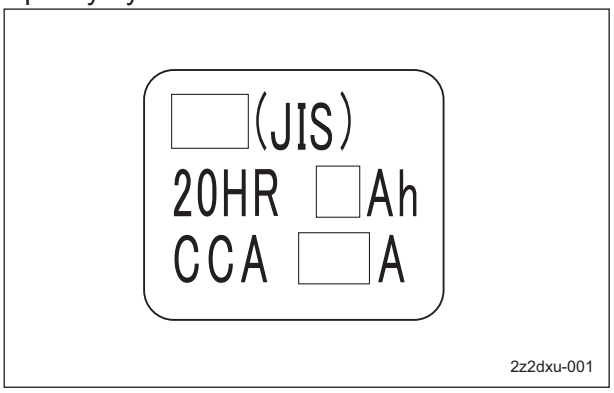

Battery capacity decal_001

https://truckmanualshub.com/

Safety Signs and Instruction Signs

About Safety Signs and Instruction Signs

Warning

Safety decals and instruction decals are attached to this machine.
Make sure that they are preserved in their entirety. If they are damaged, become dirty, or peel off, replace them with new ones.

Part numbers for decals that need to be replaced are listed in the parts catalog. Order them from a Baroness dealer or Kyoeisha.

Positions of Safety Decals and Instruction Decals

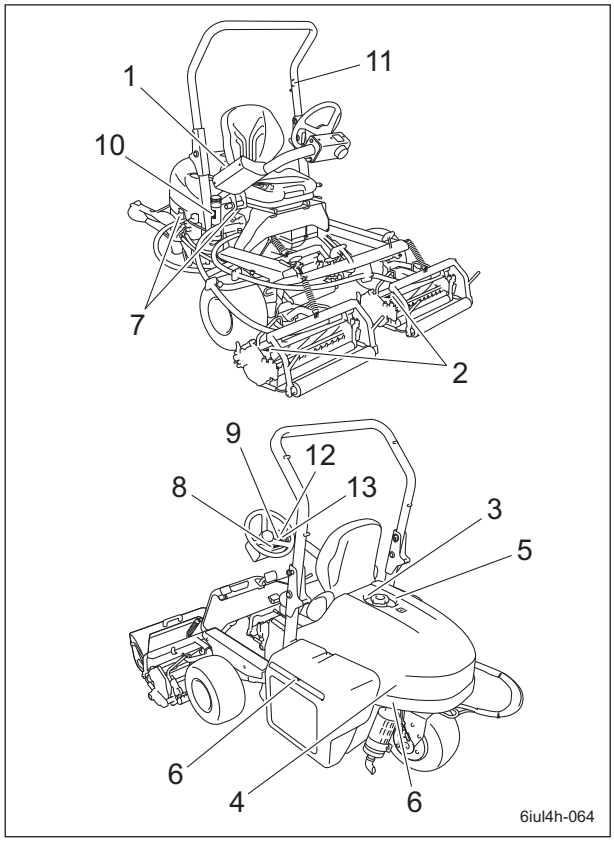

Positions of Safety Decals and Instruction Decals_001

https://truckmanualshub.com/

Description of Safety Decals and Instruction Decals

1	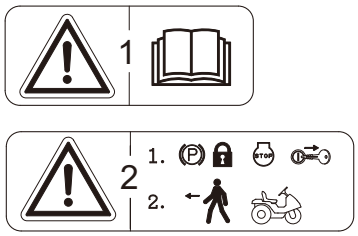 qigqnx-058	LM315GC0503Z0 Decal D, operation 1. Warning Read the Owner's Operating Manual. 2. Warning Apply the parking brake, stop the engine, and then remove the ignition key before leaving the machine.
2	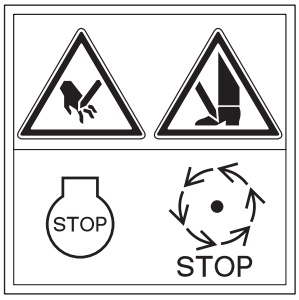 qigqnx-010	K4205001600 Decal, caution to mutilation Danger May cut your hand or leg - Stop the cutter rotation and engine. Otherwise, you may be injured.
3	qigqnx-041	K4205001940 Decal, fire prohibition Danger Keep away from fire.
4	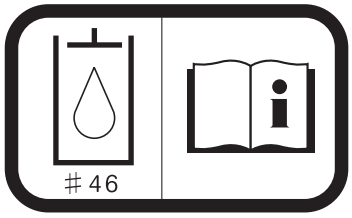 qigqnx-020	K4209000980 Decal, hydraulic oil Read the Owner's Operating Manual.
5	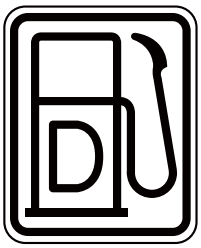 qigqnx-073	K4209001460 Decal, diesel fuel Use diesel fuel.

https://truckmanualshub.com/

6	qigqnx-074	K4205001920 Decal, caution for high temperatures Caution High temperature - Do not touch. Otherwise, you will get burned.
7	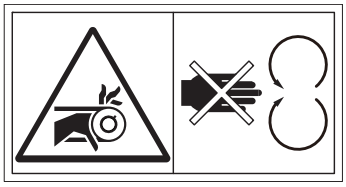 qigqnx-012	K4205001910 Decal, caution to getting entangled Danger Watch for rotating parts - Keep your hands away from the belts while the engine is running.
8	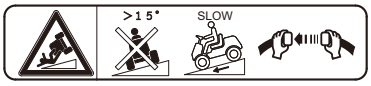 qigqnx-059	K4205002040 Decal, caution to sloped land Danger Rollover - Do not work on slopes of 15 degrees or more. When you descend a slope, drive at low speed. If the machine is equipped with ROPS, fasten your seatbelt.
9	qigqnx-060	K4205002050 Decal, caution to exhaust gas diffusion Warning Caution to exhaust gas diffusion - All persons other than the operator must keep a safe distance from the machine. Danger Flying objects - All persons other than the operator must keep a safe distance from the machine.
10	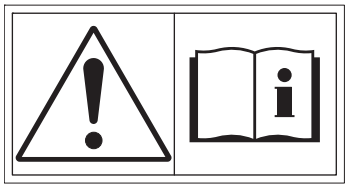 qigqnx-017	K4205001560 Decal, read Owner's Operating Manual Warning Read the Owner's Operating Manual.
11	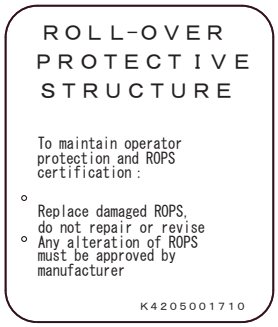 qigqnx-072	K4205001710 Decal, ROPS caution Replace damaged ROPS. Do not repair or modify.

https://truckmanualshub.com/

12	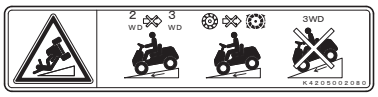 qigqnx-085	(Only on models with 3WD specifications) K4205002080 Decal, caution for slopes (3WD) **Warning** Rollover - Do not switch between 2WD and 3WD while traveling on downward slopes. Do not set the reel rotation switch to the "MOW" (reel rotation) position while traveling on downward slopes. Do not travel in three-wheel drive on downward slopes.
13	 qigqnx-015	K4205002090 Decal, caution to noise

https://truckmanualshub.com/

https://truckmanualshub.com/

Inspection Before Use ..... Page 4-2

Reel Cutter (Cutting Cylinder) and Bed Knife (Bottom Blade) ..... Page 4-2
Radiator Cover ..... Page 4-2
Dustproof net ..... Page 4-2
Radiator ..... Page 4-2
Coolant ..... Page 4-3
Hydraulic Oil ..... Page 4-6
Air Cleaner ..... Page 4-8
Battery ..... Page 4-9
Tire ..... Page 4-10
Brake ..... Page 4-10
Belt ..... Page 4-10
Engine ..... Page 4-10
Engine Oil ..... Page 4-10
Fuel ..... Page 4-12
Oil Leakage ..... Page 4-14

Tightening torques ..... Page 4-15

Standard tightening torques ..... Page 4-15
Principal tightening torques ..... Page 4-17

Adjustment Before Operating ..... Page 4-19

Adjustment of Seat ..... Page 4-19
Adjustment of Steering Wheel ..... Page 4-19
Adjustment of Blade Engagement ..... Page 4-20
Adjustment of Cutting Height ..... Page 4-21
Adjustment of Groomer ..... Page 4-24
Cutting Height and Thickness of Bed Knife (Bottom Blade) ..... Page 4-25
Adjustment of Cutter Adjustment Spring ..... Page 4-25

Procedure to Start / Stop Engine ..... Page 4-26

Start / Stop of Engine ..... Page 4-26
Safety Mechanisms ..... Page 4-28
Warning Mechanisms ..... Page 4-28

Operation of Each Section ..... Page 4-28

Precautions for Operating the Machine ..... Page 4-28
Cautions for when You Leave the Machine ..... Page 4-28
Description about Operation Decals .... Page 4-28
Light Switch ..... Page 4-32
Throttle Lever ..... Page 4-32
Mower Pedal ..... Page 4-33
Up Switch ..... Page 4-33
2WD/3WD Selector Switch ..... Page 4-34
Reel Rotation Switch ..... Page 4-35
Reel Reverse Lever ..... Page 4-36
Transmission Selector Lever ..... Page 4-36
Traveling Pedal ..... Page 4-37
Parking Brake Lever ..... Page 4-37
Hood ..... Page 4-38
Underseat Cover ..... Page 4-38

Instruments ..... Page 4-39

Instruments on the Operation Panel .... Page 4-39
Hour meter ..... Page 4-39
Water Temperature Gauge ..... Page 4-39
Pilot Lamps ..... Page 4-40
Fuel Gauge ..... Page 4-41

Travel of Machine ..... Page 4-41

Moving the Machine ..... Page 4-41
Towing the Machine ..... Page 4-41

Cutting Work ..... Page 4-42

Cutting Work ..... Page 4-42
Removing Grass Catcher ..... Page 4-42

Transporting ..... Page 4-42

Transporting Procedure ..... Page 4-42

https://truckmanualshub.com/

Inspection Before Use

Be sure to perform an inspection before you start using the machine so that you will be able to take advantage of its optimum performance for a long period of time.

Reel Cutter (Cutting Cylinder) and Bed Knife (Bottom Blade)

Inspection of Reel Cutter (Cutting Cylinder) and Bed Knife (Bottom Blade)

The reel cutter (cutting cylinder) and bed knife (bottom blade) may become dull due to frequent use, objects crushed during mowing, or damage caused during transportation. Inspect the reel cutter (cutting cylinder) and bed knife (bottom blade), and if necessary, adjust the blade engagement, perform back lapping, or resharpen or replace the reel cutter (cutting cylinder) and the bed knife (bottom blade).

1. Check to see whether or not the edge of the reel cutter (cutting cylinder) and the bed knife (bottom blade) are too blunt to cut.
2. Make sure that the reel cutter (cutting cylinder) and the bed knife (bottom blade) are not cracked.
3. Check to see how much the reel cutter (cutting cylinder) and the bed knife (bottom blade) are worn.
4. Make sure that the reel cutter (cutting cylinder) and the bed knife (bottom blade) have not changed color due to heat from grinding.
5. Check to see whether or not the second edge face remains at the point of reel cutter (cutting cylinder).
6. Make sure that the welding between the reel cutter (cutting cylinder) and the disc has not come off.

Radiator Cover

Inspection of Radiator Cover

1. Make sure that there is no damage to the radiator cover.
2. Make sure that the radiator cover is not contaminated.

Dustproof net

Inspection of Dust-proof Mesh

1. Make sure that there is no damage to the dust-proof mesh.
2. Make sure that the dust-proof mesh is not contaminated.

Cleaning of Dust-proof Mesh

> **Important**
>
> An unclean dust-proof mesh may cause overheating or damage to the engine.
> It may also cause malfunction of the hydraulic system.

If the dust-proof mesh has been contaminated with dust, be sure to clean it.
Especially, after operating the machine in a dusty environment, it is important to remove dust as soon as possible.

1. Pull up the dust-proof mesh.

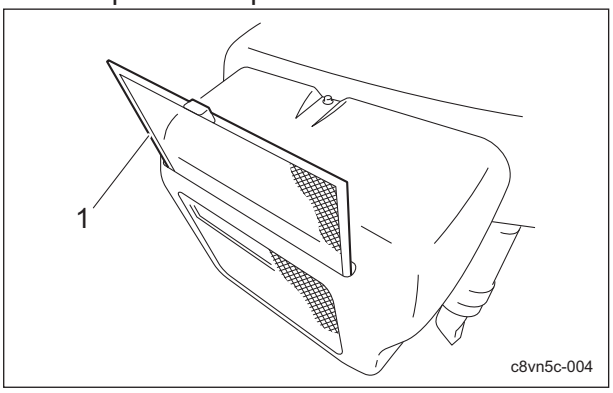

Cleaning of Dust-proof Mesh_001

1	Dust-proof mesh

2. Carefully clean the front and back of the dust-proof mesh with water or compressed air.

Radiator

Inspection of Radiator

For details on handling the engine, please refer to the separate Engine Operating Manual.

1. Make sure that there is no damage to the radiator.
2. Make sure that the radiator is not contaminated.

https://truckmanualshub.com/

Cleaning of Radiator

For details on handling the engine, please refer to the separate Engine Handling Manual.

Important

An unclean radiator cover may cause overheating or damage to the engine.
It may also cause malfunction of the hydraulic system.

Important

Do not use solid objects, such as a spatula or screwdriver, or high-pressure water to clean the radiator or oil cooler.
Otherwise, special fins or tubes may be damaged, possibly resulting in reduced cooling performance or coolant leakage.

If the radiator has been contaminated with dust, be sure to clean it.
Especially, after operating the machine in a dusty environment, it is important to remove dust as soon as possible.

1. Remove the bolt.
2. Open the radiator cover.
3. Pull up the dust-proof mesh upward and remove it.

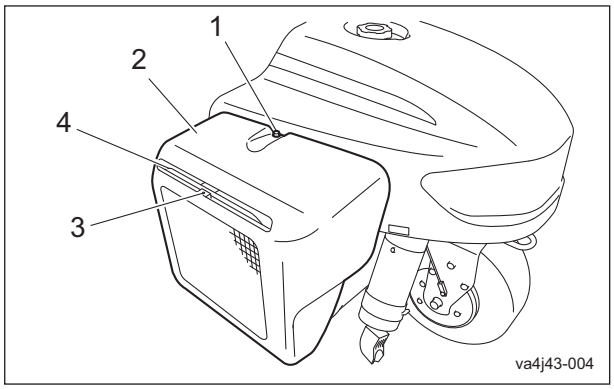

Cleaning of Radiator_001

1	Bolt
2	Radiator cover
3	Dust-proof mesh
4	Radiator

4. Carefully clean the front and back of the radiator with water or compressed air.

Coolant

Inspection of Coolant

For details on handling the engine, please refer to the separate Engine Handling Manual.

Warning

Do not touch the radiator or coolant during engine operation or right after the engine has been turned off.
Otherwise, you may get burned due to high temperatures.

Caution

Inspection should take place after the engine has well cooled down.

1. Make sure that the coolant level in the reserve tank is between "FULL" and "LOW."

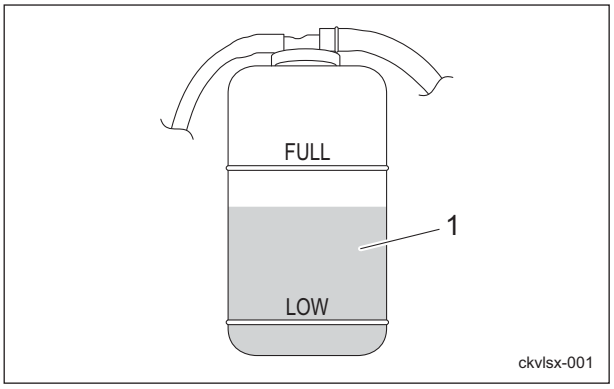

Inspection of Coolant_001

1	Reserve tank

https://truckmanualshub.com/

Coolant Supply

For details on handling the engine, please refer to the separate Engine Handling Manual.

Warning

Do not touch the radiator or coolant during engine operation or right after the engine has been turned off.
Otherwise, you may get burned due to high temperatures.
After the radiator has well cooled down, open the radiator cap.

Caution

Supply coolant after the engine has well cooled down.

Caution

The radiator cap is pressurized.
If you remove the radiator cap while the engine is overheated, hot steam will burst out, possibly resulting in burns.
Make sure that the water temperature and pressure are reduced, and then grab the cap with a thick cloth and gradually open the cap.

Important

When you supply coolant, be sure to use clean water, such as tap water.
During winter, remove coolant. Alternatively, mix long-life coolant and clean water, and then pour it into the radiator and reserve tank.

Relationship between concentration of long-life coolant (LLC) and freezing temperature

Freezing temperature	LLC concentration (volume %)
Down to -10 °C (14 °F)	20 %
Down to -15 °C (5 °F)	30 %
Down to -20 °C (-4 °F)	35 %
Down to -25 °C (-13 °F)	40 %

1. If the coolant level in the reserve tank is lower than the "LOW" mark, open the reserve tank cap and fill the tank with clean water up to the "FULL" mark.

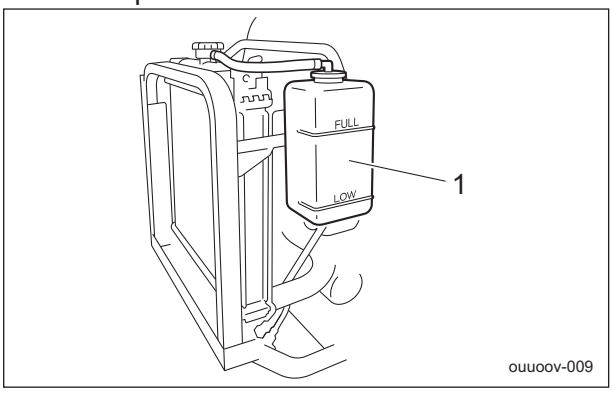

Coolant Supply_001

1	Reserve tank

2. If no coolant is in the reserve tank, follow the steps below to fill the tank with clean water.
   [1] Open the radiator cap, and then supply clean water up to the opening.
   [2] Open the reserve tank cap, and then supply clean water up to the "FULL" mark.

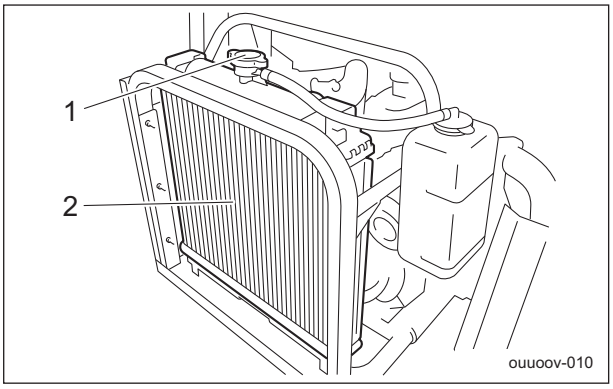

Coolant Supply_002

1	Radiator cap
2	Radiator

https://truckmanualshub.com/

Change of Coolant

For details on handling the engine, please refer to the separate Engine Handling Manual.

Warning

When you replace the coolant, be sure to drain it into a bowl and discard it in accordance with local laws and regulations.

Warning

Do not touch the radiator or coolant during engine operation or right after the engine has been turned off.
Otherwise, you may get burned due to high temperatures.
After the radiator has well cooled down, open the radiator cap.

Caution

Change coolant after the engine has well cooled down.

Important

When you change coolant, be sure to use clean water, such as tap water.
During winter, remove coolant. Alternatively, mix long-life coolant and clean water, and then pour it into the radiator and reserve tank.

For details on changing coolant, please refer to the separate Engine Operating Manual.
Coolant quantity, including the reserve tank, is 3.0 dm^3 (3.0 L).

https://truckmanualshub.com/

Hydraulic Oil

Inspection of Hydraulic Oil

1. Raise the mower units and maintain that position on a level surface.
2. Make sure that the oil level is at the middle of the oil gauge.

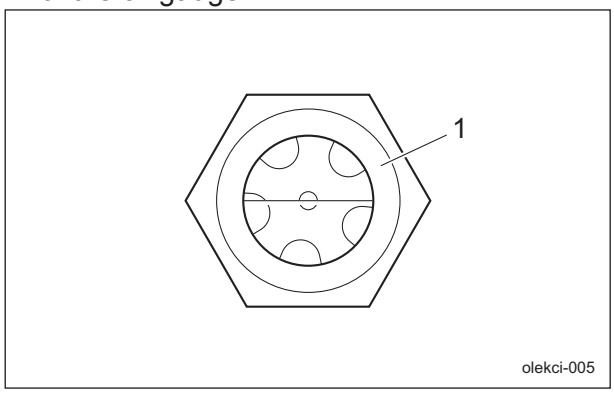

Inspection of Hydraulic Oil_001

1	Oil gauge

3. Check underneath the machine for oil leakage.

Hydraulic Oil Supply

> **Important**
>
> Do not mix different types of oil.

> **Important**
>
> Use Shell Tellus S2M46 (or equivalent) as hydraulic oil.

1. If the oil level is low, open the tank cap and supply oil until the oil level reaches the middle of the oil gauge on the hydraulic tank.

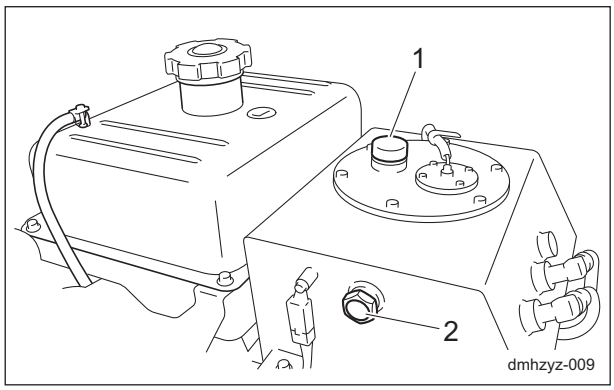

Hydraulic Oil Supply_001

1	Tank cap
2	Oil gauge

2. Tighten the tank cap securely.
3. Start the engine, raise and lower the mower units, and turn the steering wheel left and right.
4. Move forward and reverse repeatedly several times.
5. Raise the mower units and maintain that position on a level surface, and then check to see if the oil level is at the middle of the oil gauge. If necessary, supply oil.
6. Check underneath the machine for oil leakage.

https://truckmanualshub.com/

Change of Hydraulic Oil

Warning

When you change the hydraulic oil, be sure to drain it into a bowl and discard it in accordance with local laws and regulations.

Caution

If the oil emulsifies or if it becomes even slightly less transparent, change the oil immediately.

Caution

Be careful with hot oil, which could cause burns if it contacts your skin.

Important

Use Shell Tellus S2M46 (or equivalent) as hydraulic oil.

1. Follow the steps below to remove the old oil.
   [1] Start and run the engine to warm up the oil.
   [2] On a level surface, lower the mower units, and then stop the engine.
   [3] Remove the drain plug of the hydraulic tank, and then drain the old oil into a container.
   [4] Wind new sealing tape on the drain plug, and then attach it to the hydraulic tank.

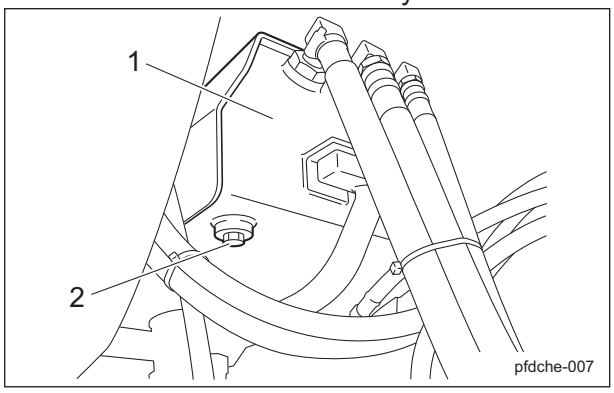

Change of Hydraulic Oil_001

1	Hydraulic tank
2	Drain plug

2. Open the tank cap, and then pour new oil from the fill port until the oil level reaches the middle of the oil gauge on the hydraulic tank.
   The hydraulic tank capacity is approximately 16.0 dm^3 (16.0 L).

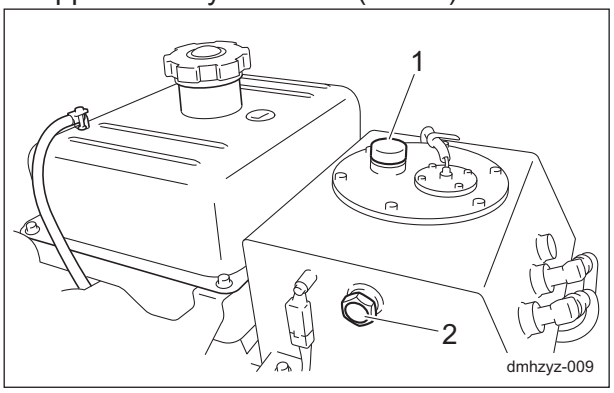

Change of Hydraulic Oil_002

1	Tank cap
2	Oil gauge

3. Tighten the tank cap securely.
4. Start the engine, raise and lower the mower units, and turn the steering wheel left and right.
5. Move forward and reverse repeatedly several times.
6. Raise the mower units and maintain that position on a level surface, and then check to see if the oil level is at the middle of the oil gauge. If necessary, supply oil.
7. Check underneath the machine for oil leakage.

https://truckmanualshub.com/

Air Cleaner

Inspection of Air Cleaner

For details on handling the engine, please refer to the separate Engine Handling Manual.
The air cleaner is a component that removes dirt from the intake air to prevent wear of the cylinder liners and piston rings so that the engine will always operate smoothly.
A contaminated air cleaner element may cause malfunction of the engine.

1. Make sure that there is no damage to the air cleaner.
2. Make sure that the air cleaner element is not contaminated.

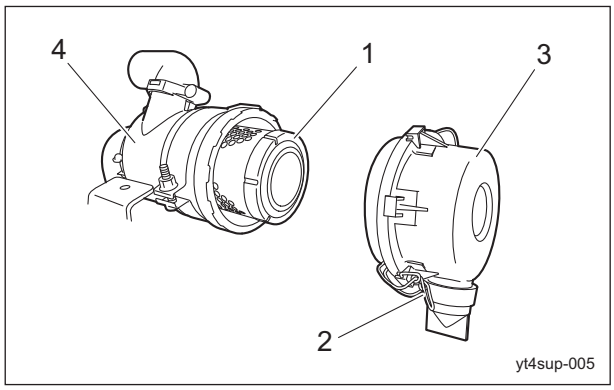

Inspection of Air Cleaner_001

1	Air cleaner element
2	Clip
3	Air cleaner cap
4	Air cleaner body

Cleaning of Air Cleaner

For details on handling the engine, please refer to the separate Engine Handling Manual.
A contaminated air cleaner element may cause malfunction of the engine.
To maximize the life of the engine, clean the air cleaner properly.

1. Follow the steps below to clean the air cleaner.
   [1] Remove the clips from the two locations and remove the air cleaner cap.
   [2] Remove the air cleaner element.
   [3] While paying close attention not to damage the air cleaner element, tap a solid portion of the air cleaner element or blow compressed air from its inside to remove dust and dirt.
   [4] Attach the air cleaner element to the air cleaner body.
   [5] Replace the air cleaner cap, and then fix it securely with the clips.

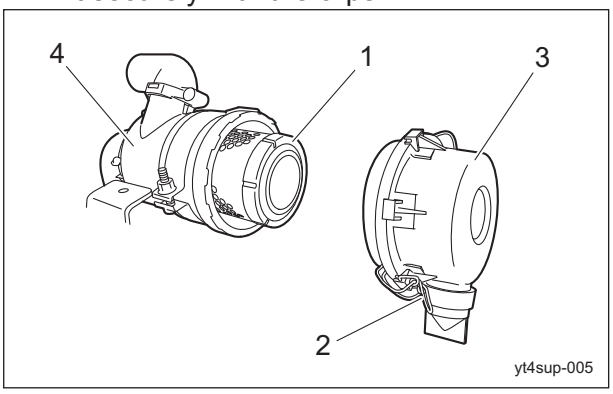

Cleaning of Air Cleaner_001

1	Air cleaner element
2	Clip
3	Air cleaner cap
4	Air cleaner body

Change of Air Cleaner

For details on handling the engine, please refer to the separate Engine Operating Manual.
A contaminated air cleaner element may cause malfunction of the engine.
To maximize the life of the engine, replace the air cleaner element at the appropriate times.

1. The timing for replacing the air cleaner element is described below.
   [1] Replace the air cleaner element in accordance with the Maintenance Schedule.
   [2] If it is significantly contaminated, replace it, even if the hours of operation do not exceed the specified time.
   [3] Even if the hours of operation do not exceed the specified time, change it at least once per year.
2. Replace the air cleaner element in the same manner as cleaning the air cleaner. (See "Cleaning of Air Cleaner" (Page 4-8) .)

https://truckmanualshub.com/

Battery

Inspection of Battery

For details on handling the battery, please refer to the separate Battery Instruction Manual.

Danger

Keep fire away while inspecting or charging the battery.
The battery may explode.

Warning

Do not allow the battery fluid level to become lower than the LOWER LEVEL (minimum fluid level line).
The battery may explode if it is used or charged while the battery fluid level is at the LOWER LEVEL (minimum fluid level line).

1. Clean the areas around the battery fluid level lines using a cloth dampened with water.
2. Make sure that the battery fluid level is between the UPPER LEVEL (maximum fluid level line) and the LOWER LEVEL (minimum fluid level line).

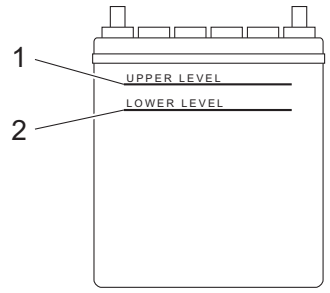

Inspection of Battery_001

1	UPPER LEVEL
2	LOWER LEVEL

Supply of Battery Fluid

For details on handling the battery, please refer to the separate Battery Instruction Manual.

Danger

Be careful not to let your skin, eyes or clothes, etc., come into contact with the battery fluid or accidentally swallow the fluid.
Should your skin or clothes come into contact with the battery fluid, immediately wash them away with water.

Warning

When you supply battery fluid, wear protective garments and safety glasses, etc.

Caution

Implement after the engine and muffler etc. have well cooled down.
Otherwise you may get burned.

1. If the battery fluid level is lower than halfway between the UPPER LEVEL (maximum) line and LOWER LEVEL (minimum) line, add purified water up to the UPPER LEVEL (maximum) line.

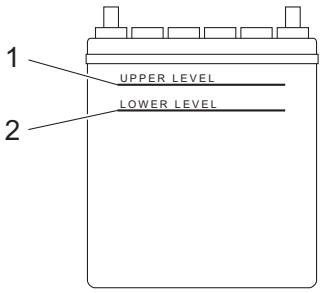

Supply of Battery Fluid_001

1	UPPER LEVEL
2	LOWER LEVEL

https://truckmanualshub.com/

Tire

Inspection of Tires

1. Check the pneumatic pressure of the tires.
2. Make sure that there are no cracks, damage or abnormal wear.

(For green/For field)

	Tire size	Pneumatic pressure
Front wheel	Smooth 18 × 9.50-8 2P	80 kPa (0.8 kgf/cm^2)
Rear wheel	Smooth 18 × 9.50-8 2P	80 kPa (0.8 kgf/cm^2)

(For teeing ground)

	Tire size	Pneumatic pressure
Front wheel	Pillow Dia 18 × 8.50-8 4P	100 kPa (1.0 kgf/cm^2)
Rear wheel	Pillow Dia 18 × 8.50-8 4P	100 kPa (1.0 kgf/cm^2)

Brake

Inspection of Parking Brake

1. Make sure that the brake is not applied any longer when you pull the parking brake lever.
2. Make sure that the brake is not applied even slightly when you press the push button to release the parking brake lever.

Belt

Inspection of Belt

Caution

If you have removed the cover during inspection, make sure that you replace it in the original position securely.
If the cover remains removed, the operator may come in contact with the rotating objects or belt, possibly resulting in injuries.

Important

A slacking or damaged belt may cause the cutter rotation speed or operation speed to be insufficient for operation.

1. Press the middle of the belt with your finger to check the belt tension.
2. Make sure that there are no cracks, damage or abnormal wear.

Engine

Inspection of Engine-Associated Parts

For details on handling the engine, please refer to the separate Engine Operating Manual.

1. Check the fuel system parts for loosened or cracked joints and leakage. Replace the parts if necessary.
2. Blow compressed air to clean any grass or flammable materials that may be attached inside or around the muffler.

Engine Oil

Inspection of Engine Oil

For details on handling the engine, please refer to the separate Engine Handling Manual.

Important

Securely tighten the oil level gauge and oil filler cap.

1. Stop the engine, wait for 10 to 20 minutes for the engine to cool down, and then check the oil level.
2. Position the machine so that the engine will be level, then insert the oil level gauge all the way to check the oil level.

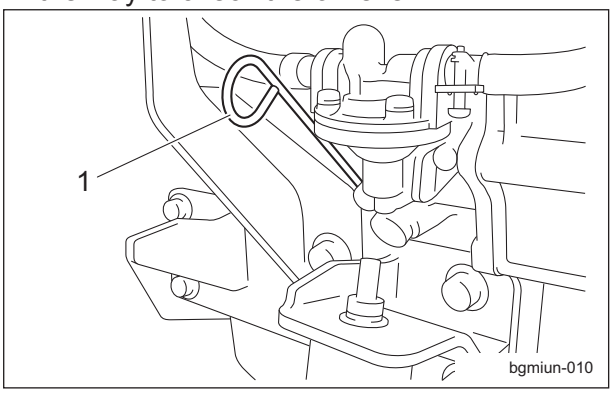

Inspection of Engine Oil_001

1	Oil level gauge

https://truckmanualshub.com/

3. The appropriate oil level should be between the upper and lower limit lines on the gauge.

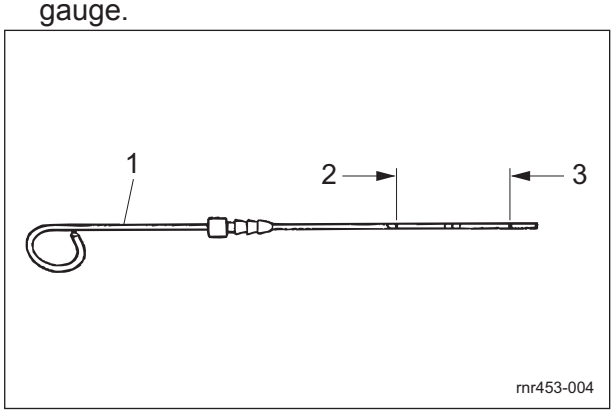

Inspection of Engine Oil_002

1	Oil level gauge
2	Upper limit
3	Lower limit

Filling of Engine Oil

For details on handling the engine, please refer to the separate Engine Handling Manual.

> **Important**
>
> Do not fill too much engine oil. Otherwise, the engine may be damaged.

> **Important**
>
> Do not mix different types of engine oil.

> **Important**
>
> Be sure to use engine oil that is classified as API Service Grade CF or higher, with an SAE Viscosity that is appropriate for the operating environment (ambient temperature).

> **Important**
>
> Securely tighten the oil level gauge and oil filler cap.

1. Engine oil is supplied through the oil filler cap.
   Remove the oil filler cap, and then supply new engine oil until the oil reaches a level in between the upper and lower limit lines on the oil level gauge.

2. Replace the oil filler cap.

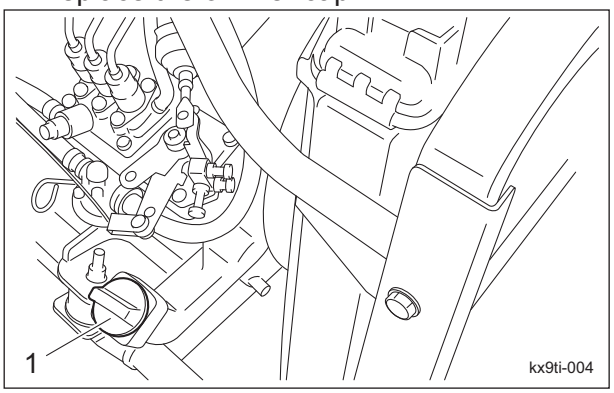

Filling of Engine Oil_001

1	Oil filler cap

3. It will take a while for the supplied engine oil to descend into the oil pan.
   Check the oil level again 10 to 20 minutes after filling the oil.

https://truckmanualshub.com/

Change of Engine Oil

For details on handling the engine, please refer to the separate Engine Handling Manual.

Warning

When you change the engine oil, be sure to drain it into a bowl and discard it in accordance with local laws and regulations.

Caution

Be careful with hot oil, which could cause burns if it contacts your skin.

Important

Be sure to use engine oil that is classified as API Service Grade CF or higher, with an SAE Viscosity that is appropriate for the operating environment (ambient temperature).

Important

Securely tighten the oil level gauge and oil filler cap.

Change the engine oil more frequently if the engine oil is contaminated and, especially, if you use the machine in dusty areas or operate the engine at high loads or in high temperatures.

1. Move the machine onto a level surface, stop the engine, remove the drain plug while the engine oil is warm, and then drain the oil into a bowl.
2. Replace the drain plug in the engine.

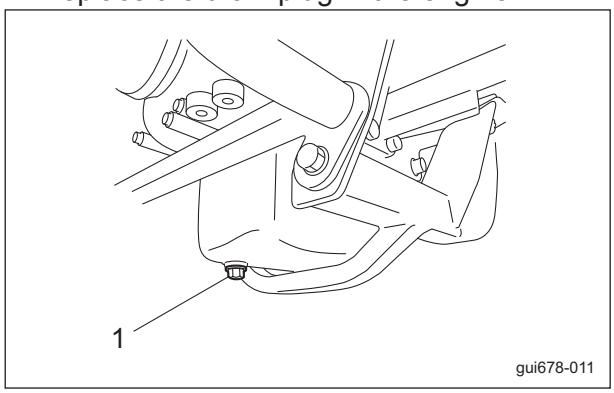

Change of Engine Oil_001

1	Drain plug

3. Through the oil filler cap, supply new engine oil until the oil reaches a level in between the upper and lower limit lines on the oil level gauge.
   Engine oil quantity is approximately 2.8 dm^3 (2.8 L).
4. Replace the oil filler cap.

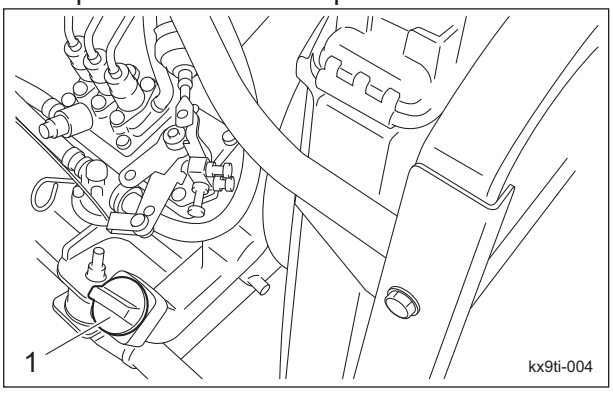

Change of Engine Oil_002

1	Oil filler cap

5. It will take a while for the supplied engine oil to descend into the oil pan.
   Check the oil level again 10 to 20 minutes after filling the oil.

Fuel

Inspection of Fuel Quantity

With the machine on a level surface, observe the fuel gauge on the fuel tank to check the fuel level.

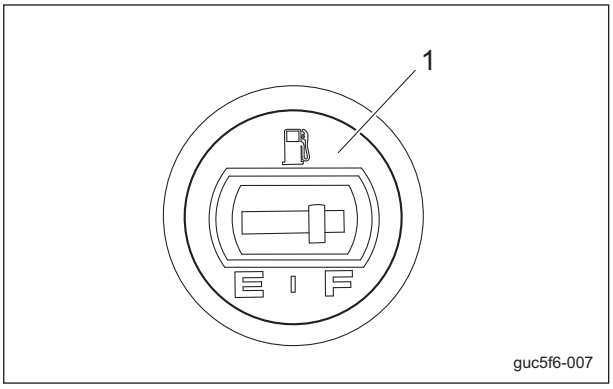

Inspection of Fuel Quantity_001

1	Fuel gauge

https://truckmanualshub.com/

Fuel Supply

Danger

Do not supply fuel above F (FULL) level of the fuel gauge.
If you supply too much fuel, it might overflow from the fuel cap when you travel or work on a slope.

Warning

Keep fire away while refueling.
Do not smoke while refueling.

If the fuel gauge on the fuel tank indicates a level close to E (EMPTY), supply fuel (diesel) at your earliest convenience.
The fuel tank capacity is approximately 20.0 dm^3 (20.0 L).

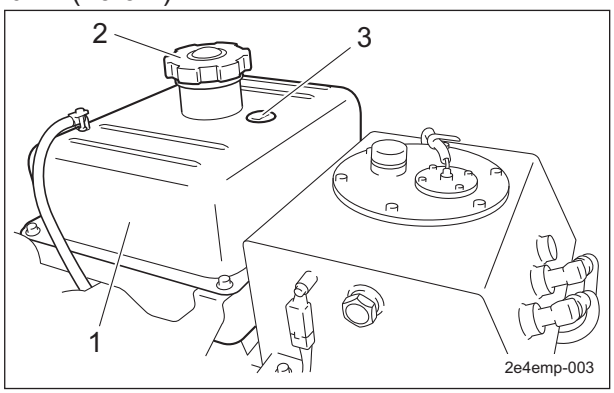

Fuel Supply_001

1	Fuel tank
2	Tank cap
3	Fuel gauge

Air Bleeding of Fuel System

Important

Be sure to tighten the air-bleeding plug except when air bleeding.
Otherwise, it may cause the engine stop.

1. Fill up the fuel tank with fuel and open the fuel cock.
2. Loosen the air-bleeding plug of the fuel filter 2 to 3 turns.
3. If air bubble of the fuel from the plug has gone, tighten the plug.

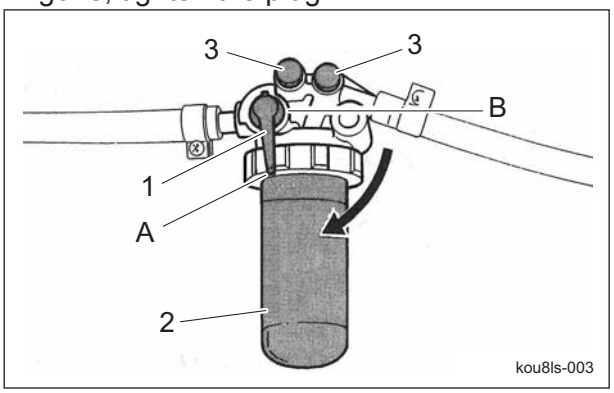

Air Bleeding of Fuel System_001

1	Fuel cock
2	Fuel filter
3	Air-bleeding plug
A	ON (Open)
B	OFF (Close)

4. Loosen the air-bleeding plug of the injection pump.

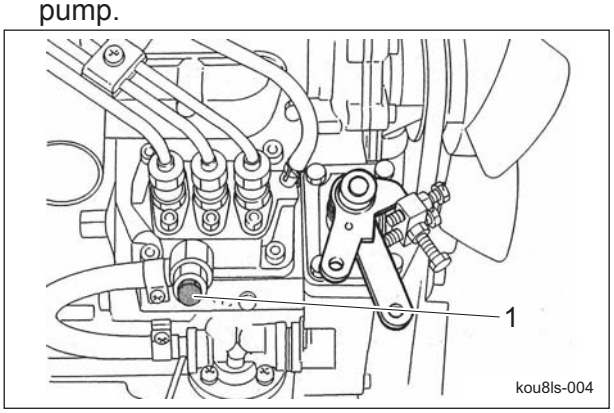

Air Bleeding of Fuel System_002

1	Air-bleeding plug

5. Sit on the operator's seat.
6. Make sure that the parking brake is applied.
7. Turn the reel rotation switch to "TRAVEL" (reel stop).

https://truckmanualshub.com/

8. Make sure that the traveling pedal is neutral.
9. Set the ignition key to "START" position.

Important

In the case that there are still air bubbles in the fuel from air-bleeding plug even after 15 seconds or more pass after setting the ignition key to "START", pause for 30 seconds or more and then repeat the same steps.

10. If the starter rotates and air bubble of the fuel from the air-bleeding plug has gone, return the ignition key slowly to "OFF" position and tighten the plug.

Oil Leakage

Inspection of Oil Leakage

⚠ Caution

When performing maintenance on the hydraulic system, lower the mower units.

After approximately 50 hours of operation, some tightened portions may be loosened and oil may leak.
Be sure to retighten the parts.
Check the bottom of the machine for oil leakage.

https://truckmanualshub.com/

Tightening torques

Standard tightening torques

Bolts and Nuts

Important

A number of bolts are used in each part of this machine.
Be sure to re-tighten the bolts and nuts, because they may be loosened at the earlier stage of the use.

As to the bolts and nuts without any special instruction, tighten them in appropriate tightening torque with proper tool.
Too much tightening may cause the looseness or damage of the screw.
The strength of tightening is determined by types of screws, strength, the friction of thread face or base face and others.
The table below is for the galvanized or parkerized bolts.
In case that the strength of internal thread is weak, it is not applied.
Do not use rusty or sand attached "screw."
Otherwise, it may cause insufficient tightening even if you apply the specified tightening torque.
The friction of the screw face becomes higher and the tightening torque is canceled out by the friction, therefore sufficient tightening cannot be applied.
If "screw" is wet by water or oil, do not tighten it with normal tightening torque.
If the screw is wet, the torque coefficient will get smaller and it may result in too much tightening.
Too much tightening may cause looseness by the screw stretched or result in damage.
Do not use a bolt experienced too much burden.
Using the impact wrench requires the skill.
Do exercise as much as possible for steady tightening.

https://truckmanualshub.com/

Handling Instructions

Nominal diameter	General bolt		
	Strength classification 4.8		
	tib3yb-001		
	N-m	kgf-cm	lb-in
M5	3 - 5	30.59 - 50.99	26.55 - 44.26
M6	7 - 9	71.38 - 91.77	61.96 - 79.66
M8	14 - 19	142.76 - 193.74	123.91 - 168.17
M10	29 - 38	295.71 - 387.49	256.68 - 336.34
M12	52 - 67	530.24 - 683.20	460.25 - 593.02
M14	70 - 94	713.79 - 958.52	619.57 - 831.99
M16	88 - 112	897.34 - 1142.06	778.89 - 991.31
M18	116 - 144	1,182.85 - 1,468.37	1,026.72 - 1,274.54
M20	147 - 183	1,498.96 - 1,866.05	1,301.10 - 1,619.73
M22	295	3,008.12	2,611.05
M24	370	3,772.89	3,274.87
M27	550	5,608.35	4,868.05
M30	740	7,545.78	6,549.74

Nominal diameter	Heat-treated bolt					
	Strength classification 8.8			Strength classification 10.9		
	tib3yb-002			tib3yb-003		
	N-m	kgf-cm	lb-in	N-m	kgf-cm	lb-in
M5	5 - 7	50.99 - 71.38	44.26 - 61.96	7 - 10	71.38 - 101.97	61.96 - 88.51
M6	8 - 11	81.58 - 112.17	70.81 - 97.36	14 - 18	142.76 - 183.55	123.91 - 159.32
M8	23 - 29	234.53 - 295.71	203.57 - 256.68	28 - 38	285.52 - 387.49	247.83 - 336.34
M10	45 - 57	458.87 - 581.23	398.30 - 504.51	58 - 76	591.43 - 774.97	513.36 - 672.68
M12	67 - 85	683.20 - 866.75	593.02 - 752.34	104 - 134	1,060.49 - 1,366.40	920.50 - 1186.03
M14	106 - 134	1,080.88 - 1,366.40	938.21 - 1,186.03	140 - 188	1,427.58 - 1,917.04	1,239.14 - 1,663.99
M16	152 - 188	1,549.94 - 1,917.04	1,345.35 - 1,663.99	210 - 260	2,141.37 - 2,651.22	1,858.71 - 2,301.26
M18	200 - 240	2,039.40 - 2,447.28	1,770.20 - 2,124.24	280 - 340	2,855.16 - 3,466.98	2,478.28 - 3,009.34
M20	245 - 295	2,498.27 - 3,008.12	2,168.50 - 2,611.05	370 - 450	3,772.89 - 4,588.65	3,274.87 - 3,982.95
M22	-	-	-	530	5,404.41	4,691.03
M24	-	-	-	670	6,831.99	5,930.17
M27	-	-	-	1,000	10,197.00	8,851.00
M30	-	-	-	1,340	14,628.78	11,860.34

Note:
The same values are applied to "fine screw thread."

https://truckmanualshub.com/

Principal tightening torques

Tightening Torque by Model

LM315GC
Tighten the following bolts and nuts at the torque specified in the table.
For thread locking adhesive, apply a middle strength thread locker (ThreeBond 1322 anaerobic adhesives).

Location		Code	Part name	Tightening torque			Thread locking adhesive
				N-m	kgf-cm	lb-in	
Front frame		K0010080202	Bolt, heat-treated M8-20	23 - 38	234.53 -387.49	203.57 - 336.34	-
Engine coupling	Joint	K0010080152	Bolt, heat-treated M8-15	23 - 38	234.53 -387.49	203.57 - 336.34	-
Engine coupling	Belt collar	K0010080302	Bolt, heat-treated M8-30	23 - 38	234.53 -387.49	203.57 - 336.34	-
Gasoline engine	Engine rack	K0000080402	Bolt, M8-40	14 - 19	142.76 - 193.74	123.91 - 168.17	○
Gasoline engine	Engine rack	K0003080452	Bolt, M8-45	14 - 19	142.76 - 193.74	123.91 - 168.17	○
Diesel engine	Engine mount	K0017100252	Bolt, heat-treated, small, 10-25 P1.25	45 - 57	1835.46 - 2039.40	1593.18 - 1770.20	-
Diesel engine	Wire mounting adjuster	K0011100302	Bolt, heat-treated M10-30P1.25	45 - 57	1835.46 - 2039.40	1593.18 - 1770.20	-
Diesel engine	Muffler mounting adjuster	K0011100352	Bolt, heat-treated M10-35P1.25	45 - 57	1835.46 - 2039.40	1593.18 - 1770.20	-
Diesel engine	Pulley mounting adjuster	K0010080202	Bolt, heat-treated M8-20	23 - 38	234.53 -387.49	203.57 - 336.34	-
Diesel engine	Engine pulley D	K0010080202	Bolt, heat-treated M8-20	23 - 38	234.53 -387.49	203.57 - 336.34	-
Diesel engine	Clamping plates	K0010080252	Bolt, heat-treated M8-25	14 - 19	142.76 - 193.74	123.91 - 168.17	-
Front wheel	Wheel	K0010100302	Bolt, heat-treated M10-30	58 - 76	591.43 - 774.97	513.36 - 672.68	-
Front wheel	Wheel mounting base	K0138240002	24 slotted nut high P1.5	180 - 200	1835.46 - 2039.40	1593.18 - 1770.20	-
3WD rear wheel	Motor	K0000120502	Bolt, M12-50	52 - 67	530.24 - 683.20	460.25 - 593.02	-
3WD rear wheel	Wheel	K0013101202	Bolt, heat-treated M10-120	58 - 76	591.43 - 774.97	513.36 - 672.68	-
3WD rear wheel	Wheel mounting base	K0138240002	24 slotted nut high P1.5	180 - 200	1835.46 - 2039.40	1593.18 - 1770.20	-
3WD rear wheel	Brake Assy	K0010080252	Bolt, heat-treated M8-25	14 - 19	142.76 - 193.74	123.91 - 168.17	-

https://truckmanualshub.com/

Location		Code	Part name	Tightening torque			Thread locking adhesive
				N-m	kgf-cm	lb-in	
2WD rear wheel	Wheel	K0010100302	Bolt, heat-treated M10-30	45 - 57	1835.46 - 2039.40	1593.18 - 1770.20	-
2WD rear wheel	Brake drum	K0010100302	Bolt, heat-treated M10-30	45 - 57	1835.46 - 2039.40	1593.18 - 1770.20	-
Mower	Reel shaft	LM315GB2102Z0	Reel gear fixing nut	2.5	25.49	22.13	-
Mower	Reel shaft (with Groomer)	LM315GB2101Z0	20-tooth reel gear	2.5	25.49	22.13	-
Mower	Bed knife (Bottom blade)	K0071000222	Screw, heat-treated flathead M6-12	7 - 9	71.38 - 91.77	61.96 -79.66	-
Mower	Groomer reel	K0160000602	17 special nut P1M4	5 - 10	50.99 - 101.97	44.26 - 88.51	-
Mower	Gearbox	LM315GA1817Z0	Reverse shaft	52 - 67	530.24 - 683.20	460.25 - 593.02	○
Mower	Gearbox	LM315GA1816Z0	Intermediate shaft	52 - 67	530.24 - 683.20	460.25 - 593.02	○
Mower	Front roller	K6083000042	Connected pin, 15-19	29 - 38	295.71 - 387.49	256.68 - 336.34	-
Mower	Front roller	K0071000152	Bolt, Left-handed Thread	29 - 38	295.71 - 387.49	256.68 - 336.34	-
Mower	Groomer mounting	K6809000270	Screw	18	183.55	159.32	-
Mower	Groomer mounting	LM315GA1835Z0	Mower mounting bolt, left	20	203.94	177.02	-
Mower	Groomer mounting	LM315GA1836Z0	Mower mounting bolt, right	20	203.94	177.02	-
ROPS pillar right/left		K0010120402	Bolt, heat-treated M12-40	58 - 76	591.43 - 774.97	513.36 - 672.68	-
CR Brush		LM315GC7603Z2	Pulley, reel shaft	14 - 19	142.76 - 193.74	123.91 - 168.17	○

https://truckmanualshub.com/

Adjustment Before Operating

Adjustment of Seat

Use the seat adjustment levers to adjust the seat.
Adjust the position according to the operator's body size.

1. Use the forward/backward adjustment lever to adjust the seat back and forth.
2. Use the backrest tilt adjustment lever to adjust the angle of the backrest.
3. Pull out the suspension adjustment handle and move it up or down to adjust the firmness of the seat suspension.
   Observe the suspension adjustment scale while making adjustments. (50 - 160 kg)
4. The seat can be adjusted to one of two levels by pulling up the forward tilt angle adjustment lever.

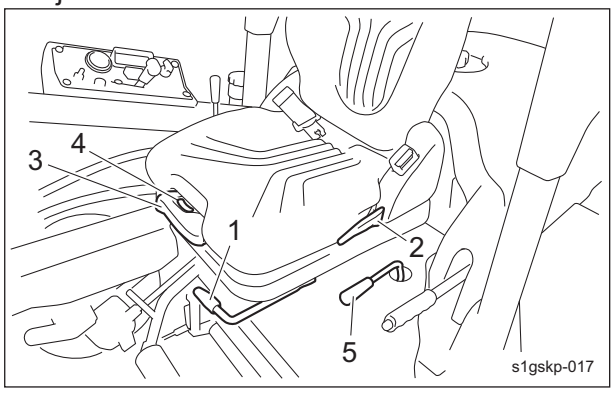

Adjustment of Seat_001

1	Forward/backward adjustment lever
2	Angle adjustment lever
3	Suspension adjustment handle
4	Suspension adjustment scale
5	Forward tilt angle adjustment lever

Adjustment of Steering Wheel

Warning

Since it is dangerous, do not adjust the steering wheel while traveling.

Caution

Be sure the steering wheel position is securely locked.
It would be extremely dangerous if it becomes loose while traveling.

Caution

When operating the height adjustment lever, be careful not to pinch your hands.

The steering wheel arm can be adjusted up or down.
Adjust the position according to the operator's body size.
Pull up the height adjustment lever, position the steering wheel arm to a proper position for your work and push down the height adjustment lever to lock it.
The height adjustment lever is attached to the right of the seat.

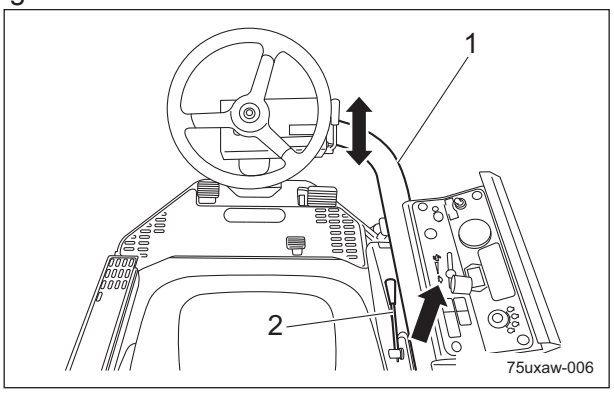

Adjustment of Steering Wheel_001

1	Steering wheel arm
2	Height adjustment lever

https://truckmanualshub.com/

The steering wheel angle can be adjusted up or down.
Adjust the position according to the operator's body size.
Pull the angle adjustment lever, position the steering wheel to a proper position for your work and push the angle adjustment lever forward to lock it.
The angle adjustment lever is attached to the right of the steering wheel.

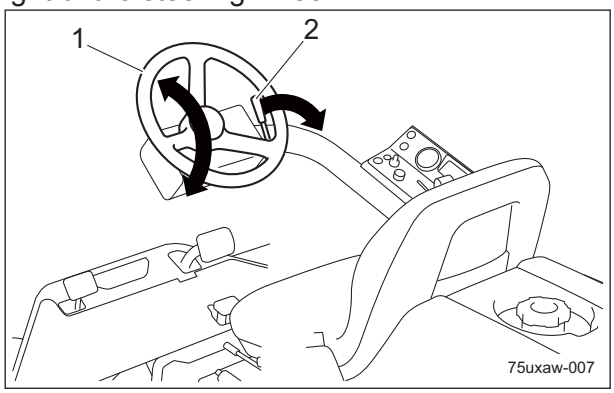

Adjustment of Steering Wheel_002

1	Steering wheel
2	Angle adjustment lever

Adjustment of Blade Engagement

Caution

Before cutting newspaper as a test, be sure to stop the engine and wear gloves to protect your hands.
Pay attention not to let the reel cutter (cutting cylinder) catch your gloves. Otherwise, you may injure your hand or fingers.

Caution

Before adjusting the blade engagement, be sure to set the rotation selector lever for the reel cutter (attached to the mower unit) to the "N" position.

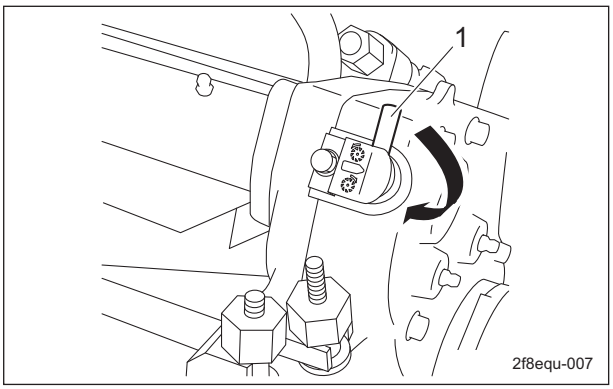

Adjustment of Blade Engagement_001

1	Rotation selector lever

Adjust the engagement between the reel cutter (cutting cylinder) and the bed knife (bottom blade) so that newspaper (one piece) will be cut cleanly by the edge of both blades when the blades in their entirety come slightly into contact with each other via the cutter adjustment nuts.
Insert a strip of newspaper into the space between the reel cutter (cutting cylinder) and the bed knife (bottom blade) at an angle of 90 degrees. Then, rotate the reel cutter (cutting cylinder) counter-clockwise (when you face the mower unit from the left) to check the sharpness of the blades.
Check the sharpness of the entire range (three or four points from left edge to right) of the reel cutter (cutting cylinder).

https://truckmanualshub.com/

1. If a gap is created between edges:
   Loosen (rotate counter-clockwise) the cutter adjustment nut to apply more contact pressure between the reel cutter (cutting cylinder) and the bed knife (bottom blade).
2. If the reel cutter (cutting cylinder) is too tight to turn:
   Tighten (rotate clockwise) the cutter adjustment nut to reduce the contact pressure between the reel cutter (cutting cylinder) and the bed knife (bottom blade).
3. If the sharpness is not improved by the adjustment:
   Perform back lapping to the reel cutter.

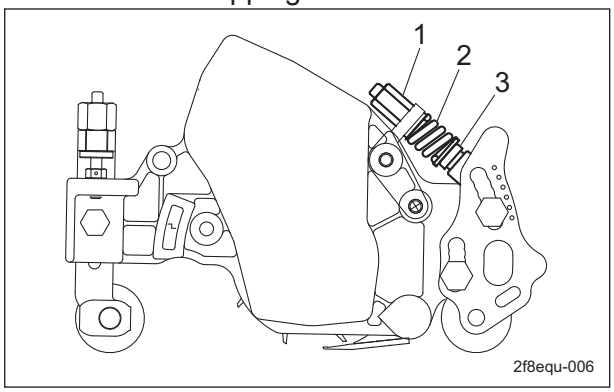

Adjustment of Blade Engagement_002

1	Cutter adjustment nut
2	Spring
3	Pipe with cutter adjusting screw

Adjustment of Cutting Height

Adjust the cutting height to fit your cutting work.

> **Important**
>
> This applies the set cutting height that differs from the actual cutting height.

Adjustment of Rear Roller

LM315GC (for greensmowing)
You can adjust the rear roller by six stages.

1. Attach the rear roller in a position that suits your work requirements within the cutting height range.
   Note:
   The figure below shows the position of the rear roller bracket with a new reel cutter when using a 2.0 mm bed knife (for Europe) or 2.0 mm bed knife (2.5 offset) (for Australia).
   (For the recommended minimum cutting height, refer to " "Cutting Height and Thickness of Bed Knife (Bottom Blade)" (Page 4-25) .")

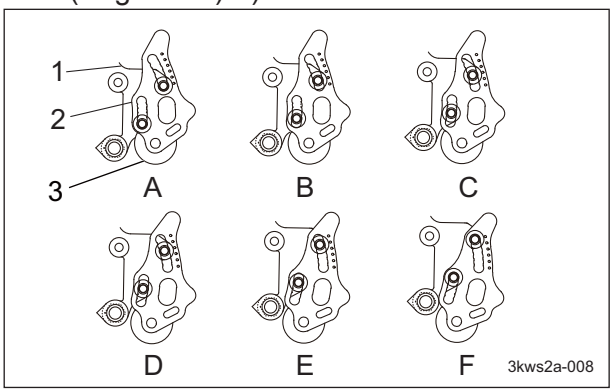

Adjustment of Rear Roller_001

	1	Mower frame
	2	Rear roller bracket
	3	Rear roller
	A	Use when the reel cutter is worn out
	B	2.0 - 5.0 mm (0.079 - 0.197 in)
	C	2.0 - 10.0 mm (0.079 - 0.394 in)
	D	10.0 - 14.0 mm (0.394 - 0.551 in)
	E	14.0 - 18.0 mm (0.551 - 0.709 in)
*	F	18.0 - 20.0 mm (0.709 - 0.787 in)

* Not recommended by manufacturer.
Note:
If the cutting height was the same with settings B and C, the volume of mowing would be larger with C since the offset distance is larger.

https://truckmanualshub.com/

LM315GC (for tee mowing)
You can adjust the rear roller by eight stages.

1. Attach the rear roller in a position that suits your work requirements within the cutting height range.
   Note:
   The figure below shows the position of the rear roller bracket with a new reel cutter using 3.0 mm bed knife.
   (For the recommended minimum cutting height, refer to " "Cutting Height and Thickness of Bed Knife (Bottom Blade)" (Page 4-25) .")

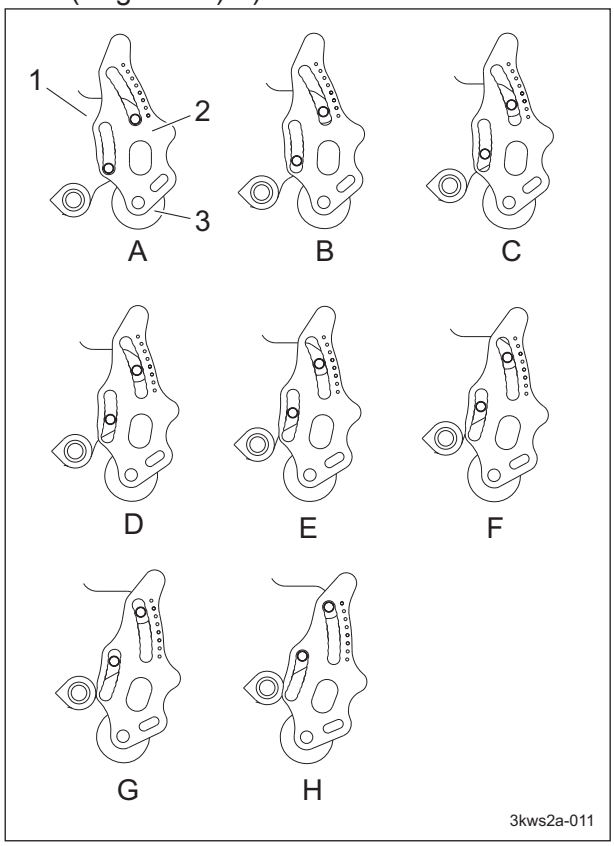

Adjustment of Rear Roller_003

	1	Mower frame
	2	Rear roller bracket
	3	Rear roller
	A	Use when the reel cutter is worn out
	B	6.0 - 13.0 mm (0.236 - 0.512 in)
	C	13.0 - 17.0 mm (0.512 - 0.669 in)
	D	17.0 - 20.0 mm (0.669 - 0.787 in)
*	E	20.0 - 25.0 mm (0.787 - 0.984 in)
*	F	25.0 - 28.0 mm (0.984 - 1.102 in)
*	G	28.0 - 32.0 mm (1.102 - 1.260 in)
*	H	32.0 - 35.0 mm (1.260 - 1.378 in)

* Not recommended by manufacturer.

LM315GC (for field mowing)
You can adjust the rear roller by eight stages.

1. Attach the rear roller in a position that suits your work requirements within the cutting height range.
   Note:
   The figure below shows the position of the rear roller bracket with a new reel cutter using 3.0 mm bed knife.
   (For the recommended minimum cutting height, refer to " "Cutting Height and Thickness of Bed Knife (Bottom Blade)" (Page 4-25) .")

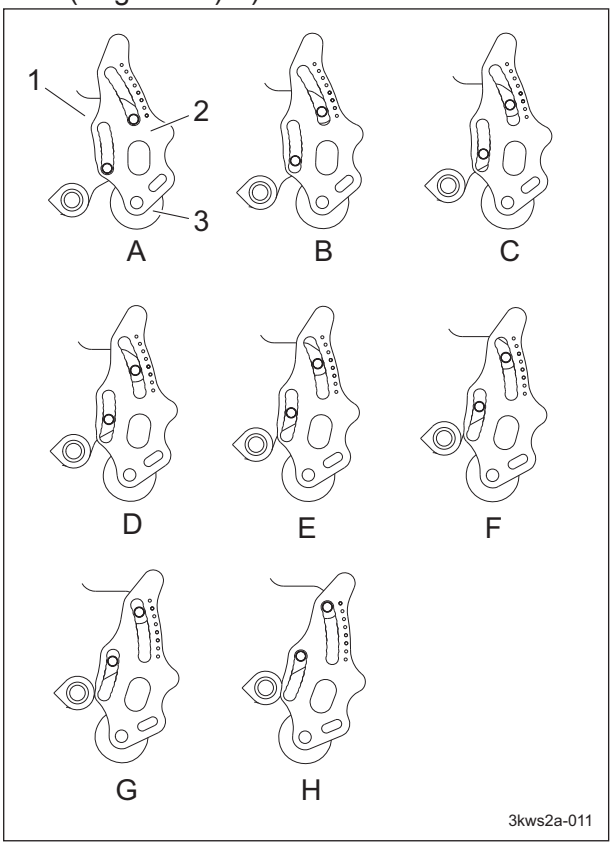

Adjustment of Rear Roller_004

	1	Mower frame
	2	Rear roller bracket
	3	Rear roller
	A	10.0 - 13.0 mm (0.394 - 0.512 in)
	B	13.0 - 17.0 mm (0.512 - 0.669 in)
	C	17.0 - 22.0 mm (0.669 - 0.866 in)
	D	22.0 - 28.0 mm (0.866 - 1.102 in)
	E	28.0 - 33.0 mm (1.102 - 1.299 in)
	F	33.0 - 37.0 mm (1.299 - 1.457 in)
	G	37.0 - 40.0 mm (1.457 - 1.575 in)
*	H	40.0 - 43.0 mm (1.575 - 1.693 in)

* Not recommended by manufacturer.

https://truckmanualshub.com/

Adjustment of Front Roller

1. Set the slide caliper to the required cutting height, adjust the neck position of the cutting height screw of the cutting height gauge and securely lock with a fly nut.
2. Loosen the nut which fixes the roller bracket of the front roller.
3. Apply the cutting height gauge to the front and rear rollers at each edge of left and right of the mower unit.

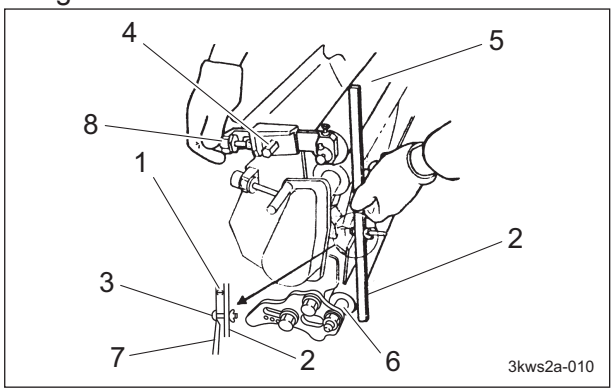

Adjustment of Front Roller_001

1	Cutting height
2	Cutting height gauge
3	Cutting height screw
4	Nut
5	Front roller
6	Rear roller
7	Bed knife (bottom blade)
8	Roller adjuster

4. Adjust the front roller up and down by the roller adjuster to determine the position of the front roller, in order not to have a gap with the neck position of the cutting height screw of the cutting height gauge, at the edge of the bed knife.

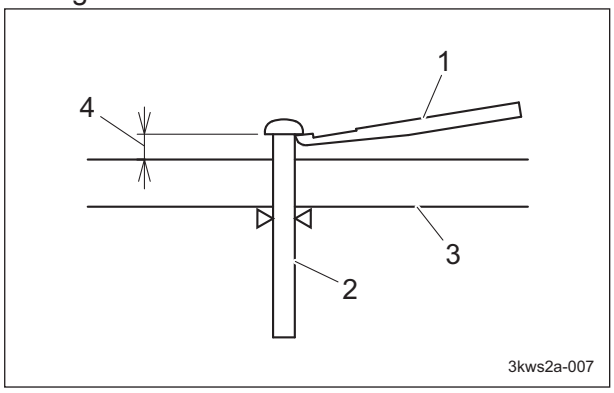

Adjustment of Front Roller_002

1	Bed knife (bottom blade)
2	Cutting height screw
3	Cutting height gauge
4	Cutting height

5. Repeat the same process at the opposite side for the adjustment of cutting height.
6. Tighten the nuts that secure the right and left roller brackets to secure them firmly.
7. Again, make sure that the cutting height is at the required position by applying the cutting height gauge to the front and rear rollers at each edge of right and left of the mower unit.

https://truckmanualshub.com/

Adjustment of Groomer

Caution

- For adjustment, be sure to use the cutting height gauge so that the right and left sides can be parallel.
  Otherwise it may cause damage on the bearings.
- Set the grooming height more than 0.0 mm from the ground.
  Otherwise it may cause damage on the groomer shaft, bearings and gears etc.
- When using the grooming brush, set it to the same height as the cutting height.
  If it is set lower, it may wear easily.

1. Set the groomer screw of the cutting height gauge to the desired height.

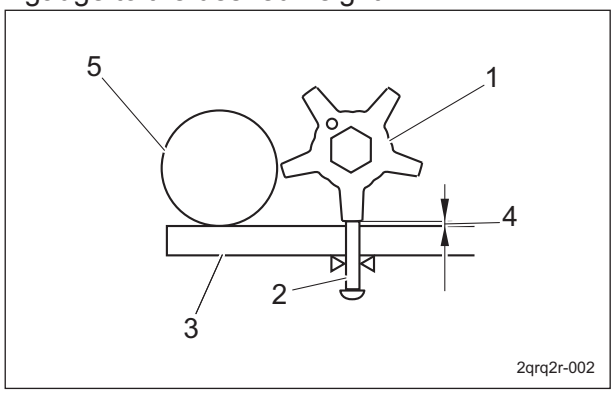

Adjustment of Groomer_001

1	Front groomer
2	Groomer screw
3	Cutting height gauge
4	Grooming height
5	Front roller

2. Loosen the nuts fixing the right and left groomer adjustment bolts.

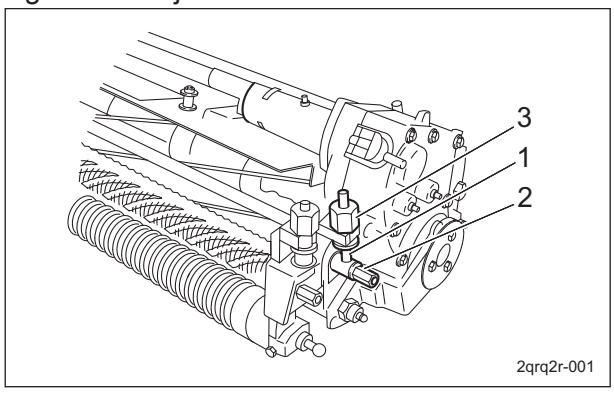

Adjustment of Groomer_002

1	Groomer adjustment bolt
2	Nut
3	Groomer adjuster

3. Adjust the groomer adjuster so that the groomer screw can contact with the cutting edge of the groomer.
   [1] Place the cutting height gauge set to the desired height on the ends of the front and rear rollers.
   [2] Adjust the groomer adjuster up and down so that the right and left sides can be parallel.
   [3] Adjust it at the other side in the same manner.
   [4] Tighten the nuts securely after adjustment.

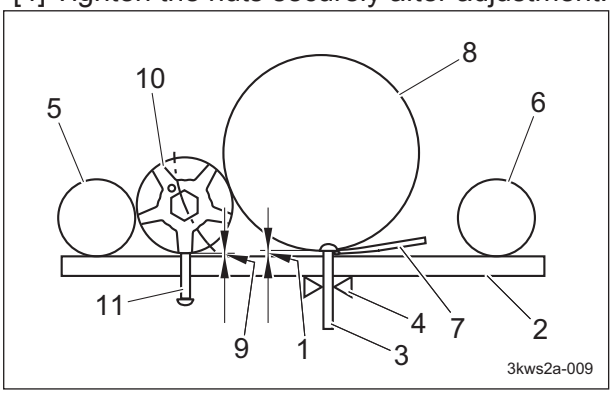

Adjustment of Groomer_003

1	Cutting height
2	Cutting height gauge
3	Cutting height screw
4	Nut
5	Front roller
6	Rear roller
7	Bed knife (bottom blade)
8	Reel cutter (cutting cylinder)
9	Grooming height
10	Front groomer
11	Groomer screw

https://truckmanualshub.com/

Cutting Height and Thickness of Bed Knife (Bottom Blade)

Thickness of the bed knife (bottom blade) roughly affects the recommended minimum cutting height like the figures below.

Thickness of blade (mm/inch)	Rough minimum cutting height (mm/inch)	Code	Part name	Remarks
1.5/0.059	2.5/0.098	K2511000270	1.5 Bed knife (bottom blade) 55G	For green
2.0/0.079	3.0/0.118	K2511000280	2 Bed knife (bottom blade) 55G	For green (For Europe)
2.0/0.079	3.0/0.118	LM56G--9008A0	2 Bed knife (bottom blade) 55G-44.5	For green (For Australia)
2.5/0.098	3.5/0.138	K2511000050	2.5 Bed knife (bottom blade) 55G	Option
3.0/0.118	4.0/0.157	K2510000060	3 Bed knife (bottom blade) 62.5-559	For teeing ground/For field
5.0/0.197	7.0/0.276	K2510000160	5 Bed knife (bottom blade) 62.5-559	Option

Important

* Rough minimum cutting height is for the height of the average green.
  If the green undulation is hard, set it a little bit higher in order not to damage the green surface.

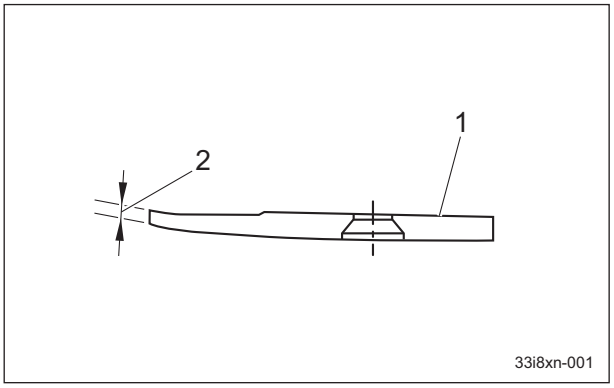

Cutting Height and Thickness of Bed Knife (Bottom Blade)_001

1	Bed knife (bottom blade)
2	Thickness of blade

Adjustment of Cutter Adjustment Spring

If the diameter of the reel cutter (cutting cylinder) becomes smaller, adjust the cutter adjustment spring.

1. Adjust the blade engagement.
2. Loosen the pipe with cutter adjusting screw, and then adjust the length of the spring coil to approximately 26.0 mm (1.024 in).

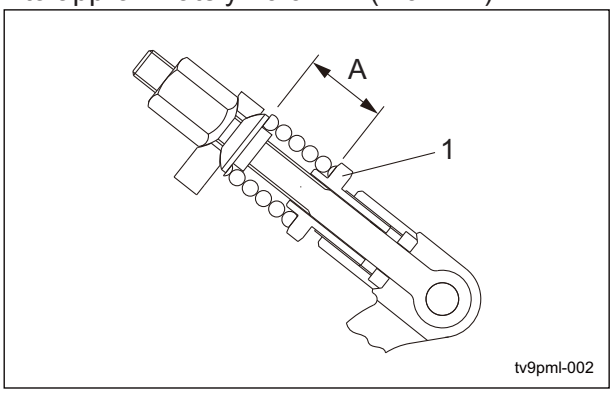

Adjustment of Cutter Adjustment Spring_001

1	Pipe with cutter adjusting screw
A	26.0 mm (1.024 in)

https://truckmanualshub.com/

Procedure to Start / Stop Engine

Start / Stop of Engine

Procedure to Start Engine

Warning

Before starting the engine, make sure that there are no other people or obstacles around the machine.

Important

Starter operation must take 15 seconds or less.
If the engine does not start, stop using the battery for 30 to 60 seconds to avoid exhausting the battery.

1. Open the fuel cock.
   The fuel cock is located beneath the fuel tank.

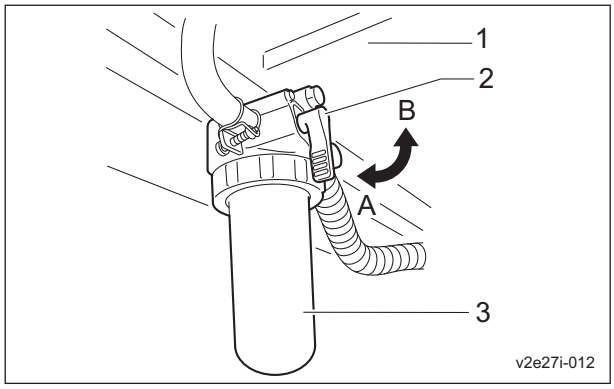

Procedure to Start Engine_001

1	Fuel tank
2	Fuel cock
3	Fuel filter
A	ON (open)
B	OFF (closed)

2. Sit on the seat.
3. Make sure that the parking brake is applied.
4. Set the reel rotation switch to the "TRAVEL" (reel stop) position.
   (- #30420)

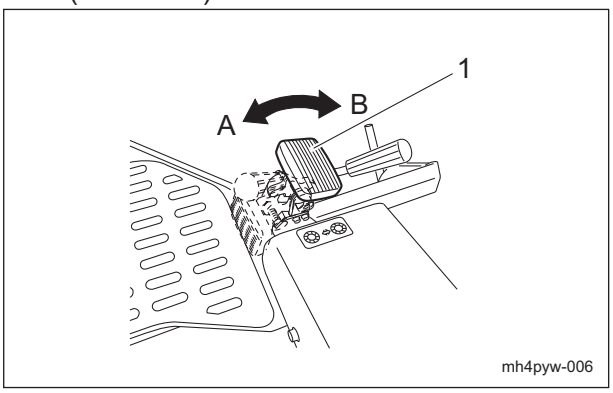

Procedure to Start Engine_002

(#30421 -)

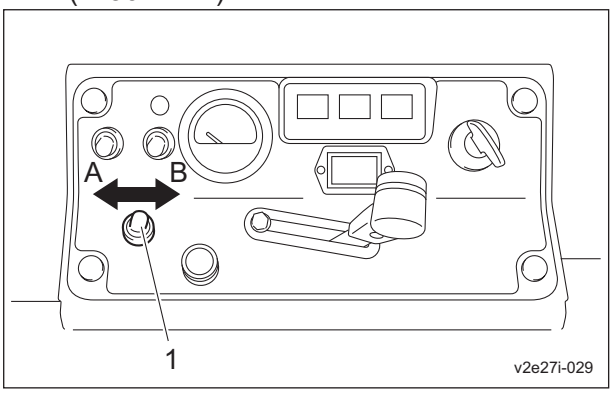

Procedure to Start Engine_003

1	Reel rotation switch
A	Rotate
B	Stop

5. Make sure that the traveling pedal is in the neutral position.
6. Shift the throttle lever halfway from the turtle icon (low speed) to the rabbit icon (high speed) position.

https://truckmanualshub.com/

Important

The thermo-start lamp turns off at the specified time. However, the lamp turning off is not related to the glow plug generating heat. If the ignition key is left in the "GLOW" position after the lamp is turned off, the plug will still generate heat.
The lamp will stay illuminated for five seconds.

7. Switch the ignition key to the "GLOW" position.

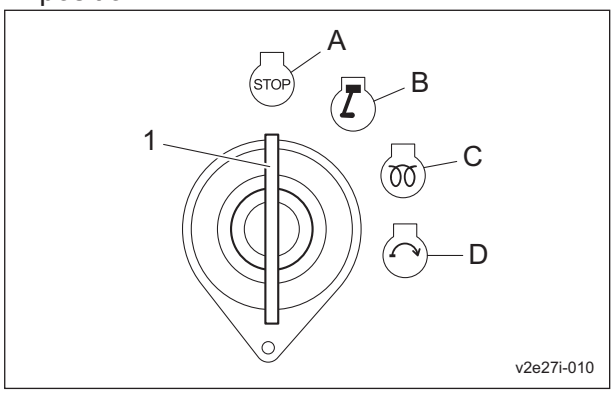

Procedure to Start Engine_004

1	Ignition key
A	OFF
B	ON
C	GLOW
D	START

8. Make sure that the glow plug is generating heat and the thermo-start lamp is turned on.

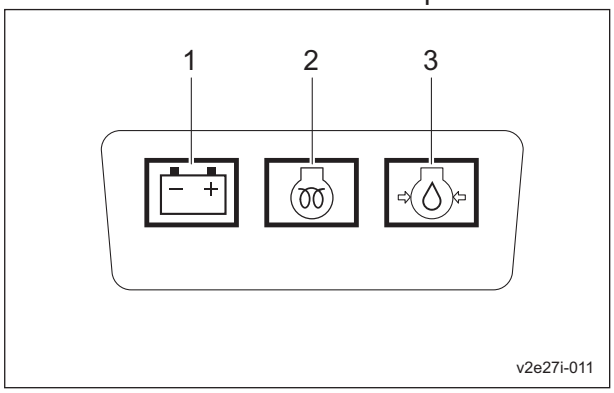

Procedure to Start Engine_005

1	Charge lamp
2	Thermo-start lamp
3	Oil pressure lamp

Caution

Quickly returning the ignition key from the "START" position to the "ON" position may result in damage to the machine.

9. After the thermo-start lamp turns off, immediately set the ignition key to the "START" position.
10. When the starter starts rotating and the engine starts, slowly return the ignition key to the "ON" position.
11. Make sure that the charge lamp and engine oil pressure lamp turn off.
    If they do not turn off, stop the engine and inspect the machine.
12. Shift the throttle lever to the turtle icon (low speed), and then warm up the engine for 1-2 minutes.
13. Gradually move the throttle lever to the rabbit icon (high speed).

Procedure to Stop Engine

1. Set the traveling pedal to the neutral position.
2. Pull the parking brake lever.
3. Set the reel rotation switch to the "TRAVEL" (reel stop) position.
4. Shift the throttle lever to the turtle icon (low speed), and then warm up the engine for 1-2 minutes.
5. Switch the ignition key to the "OFF" position.
6. Make sure that the engine has stopped.
7. Remove the ignition key.
8. Leave the driver's seat.
9. Close the fuel cock.
   The fuel cock is located beneath the fuel tank.

https://truckmanualshub.com/

Safety Mechanisms

This machine features a safety device for starting/stopping the engine.

1. As for starting the engine, the safety device prevents the engine from starting unless it meets each of the following four conditions.
   - An operator is sitting on the seat.
   - The parking brake lever is pulled.
   - The reel rotation switch is set to the "TRAVEL" (reel stop) position.
   - The traveling pedal is set to the neutral position.
2. The safety device will be activated and will stop the engine under any of the following conditions:
   - The operator leaves the seat without applying the parking brake.
   - The operator leaves the seat while the reel cutter (cutting cylinder) is positively rotating.
   - The traveling pedal is operated after the parking brake is applied and the operator leaves the seat.

Warning Mechanisms

This machine features warning mechanisms on overheating, hydraulic oil level and preventing traveling while the parking brake is applied.

1. If water temperature inside the engine exceeds 105 degrees Celsius, a buzzer will sound. (intermittent tone)
2. If the oil level in the hydraulic tank declines from the specified level by approximately 1.2 dm^3 (1.2 L), a buzzer will sound. (intermittent tone)
3. If the traveling pedal is depressed while the parking brake is applied, a buzzer will sound. (intermittent tone)

Operation of Each Section

Precautions for Operating the Machine

⚠ Caution

Under any circumstances drive the machine at such a speed that you can stop it immediately for emergencies.

Cautions for when You Leave the Machine

⚠ Caution

If the brakes are not sufficiently effective, use the wheel stoppers to secure the machine.

Description about Operation Decals

(- #30420)

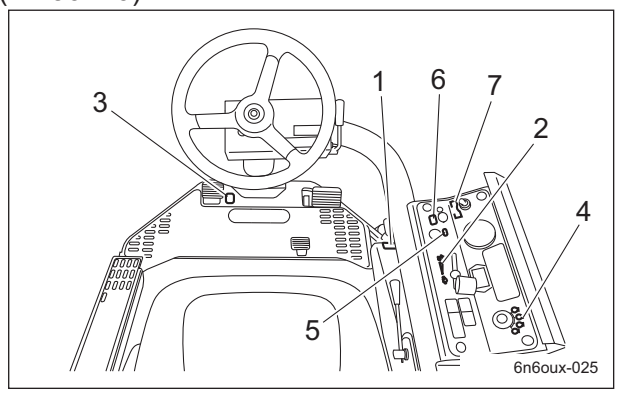

Description about Operation Decals_001

1	Decal, reel rotation/stop
2	Decal, engine rotation
3	Decal, mower unit Up/Down
4	Decal, key switch
5	Decal, mower unit up-switch
6	Decal, 2WD/3WD changeover
7	Decal, light switch

(#30421 -)

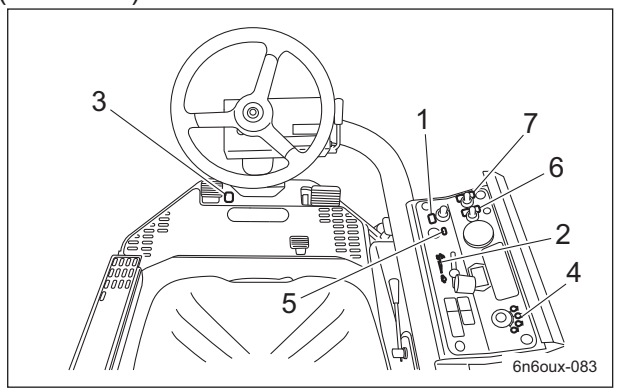

https://truckmanualshub.com/

1	Decal, reel rotation/stop
2	Decal, engine rotation
3	Decal, mower unit Up/Down
4	Decal, key switch
5	Decal, mower unit up-switch
6	Decal, 2WD/3WD changeover
7	Decal, light switch

(#30346 -)

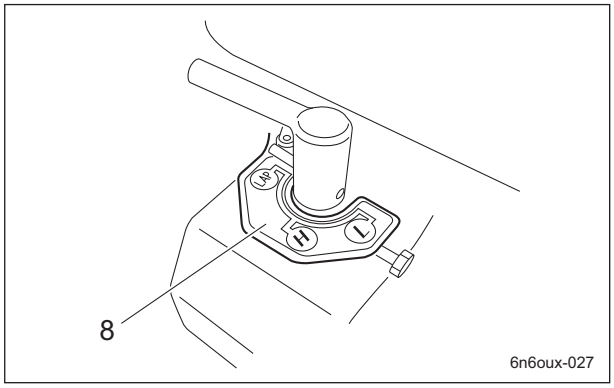

Description about Operation Decals_002

8	Decal, reel rotation changeover

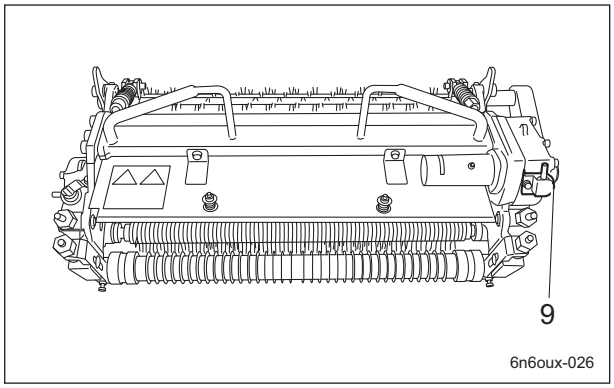

Description about Operation Decals_003

9	Decal, mower unit reel rotation changeover

https://truckmanualshub.com/

Handling Instructions

1	(- #30420) K4203001540 Decal, reel rotation/stop It illustrates Rotation/Stop of the reel cutter (cutting cylinder). 1.Rotate 2.Stop	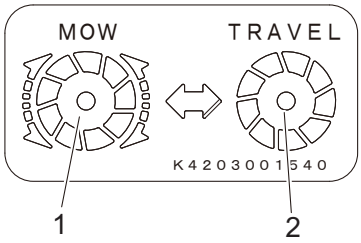 6n6oux-028
	(#30421 -) Decal, reel rotation/stop It illustrates Rotation/Stop of the reel cutter (cutting cylinder). 1.Rotate 2.Stop	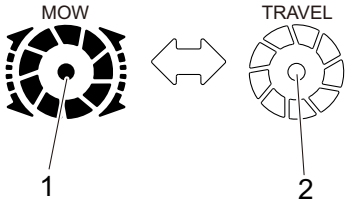 6n6oux-084
2	Decal, engine rotation It illustrates Low/High of the engine rotation speed. 1.Low 2.High	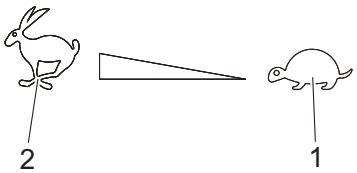 6n6oux-029
3	K4203001520 Decal, mower unit Up/Down It illustrates Up/Down of the mower unit.	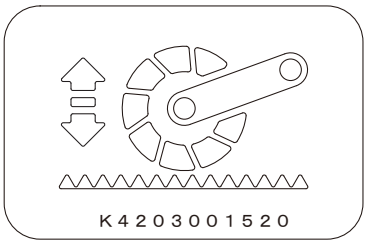 6n6oux-030
4	Decal, key switch It illustrates the position of the key switch. 1.OFF 2.ON 3.GLOW 4.START	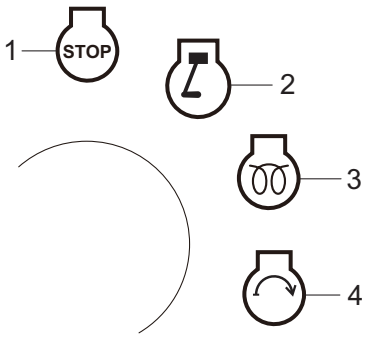 6n6oux-021
5	LM315GC0407Z0 Decal, mower unit up-switch It illustrates the up-switch of the mower unit.	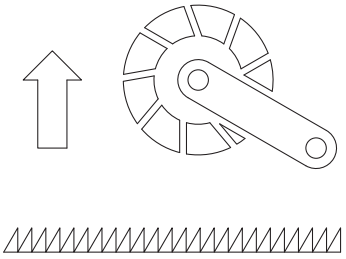 6n6oux-032

https://truckmanualshub.com/

6	(- #30420) K4203001530 Decal, 2WD/3WD changeover It illustrates 2WD/3WD changeover.	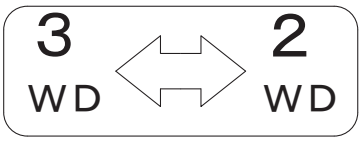 6n6oux-033
	(#30421 -) K4203001620 Decal, 2WD/3WD changeover It illustrates 2WD/3WD changeover.	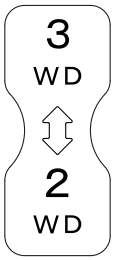 6n6oux-085
7	(- #30420) K4203001410 Decal, light switch It illustrates ON/OFF of the light. 1.ON 2.OFF	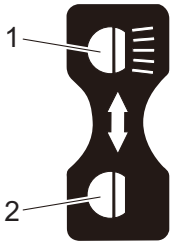 6n6oux-034
	(#30421 -) K4203001610 Decal, light switch It illustrates ON/OFF of the light. 1.ON 2.OFF	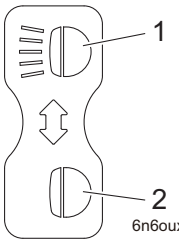 6n6oux-086
8	LM315GC1418Z0 Decal, reel rotation changeover It illustrates the rotation changeover of the reel cutter (cutting cylinder) for High speed, Low speed and back lapping. 1.High 2.Low 3.Back lapping	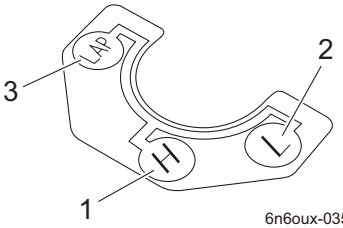 6n6oux-035
9	K4203001550 Decal, mower unit reel rotation changeover It illustrates the rotation changeover of the reel cutter (attached to the mower unit) for Normal rotation, Neutral and Reverse rotation. 1.Normal rotation 2.Neutral 3.Reverse rotation	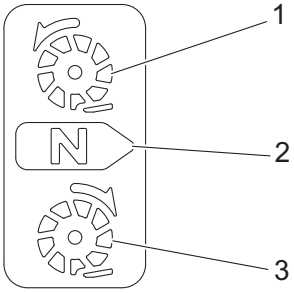 6n6oux-036

https://truckmanualshub.com/

Light Switch

Note:
Depending on the specifications, this function may not be available.
The light switch is located in the operation panel.
Flip the switch up to turn the light on, and down to turn the light off.
(- #30420)

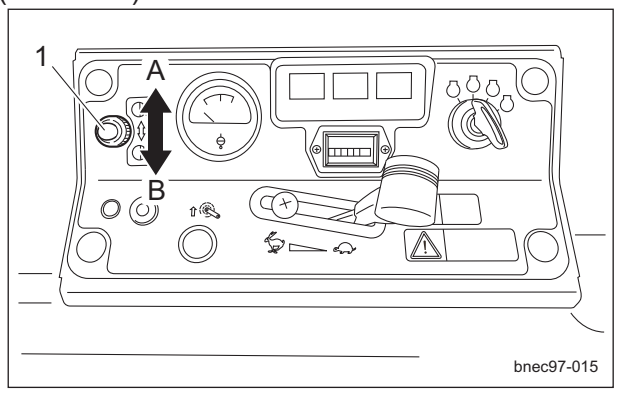

Light Switch_001

(#30421 -)

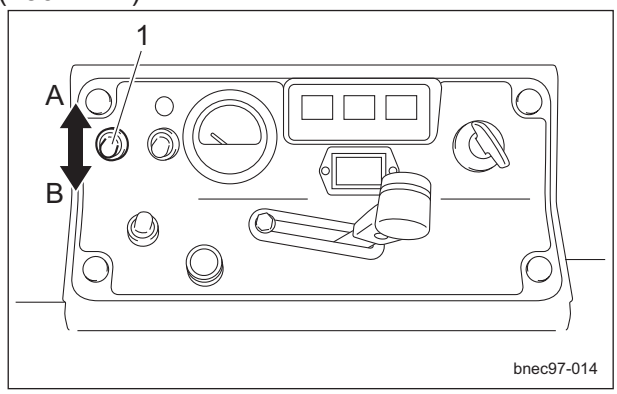

Light Switch_002

1	Light switch
A	ON
B	OFF

Throttle Lever

The throttle lever is located in the operation panel and enables you to adjust the engine rpm.
Move the throttle lever toward the rabbit icon (high speed) to increase the engine rpm, and toward the turtle icon (low speed) to reduce the rpm.
Note:
The factory default engine rpm (maximum) is set to 3,000 rpm.
(- #30420)

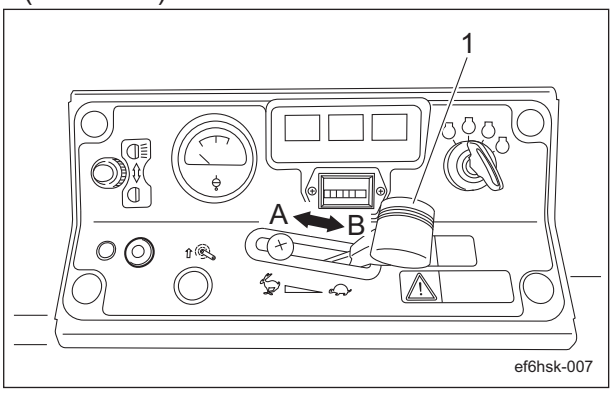

Throttle Lever_001

(#30421 -)

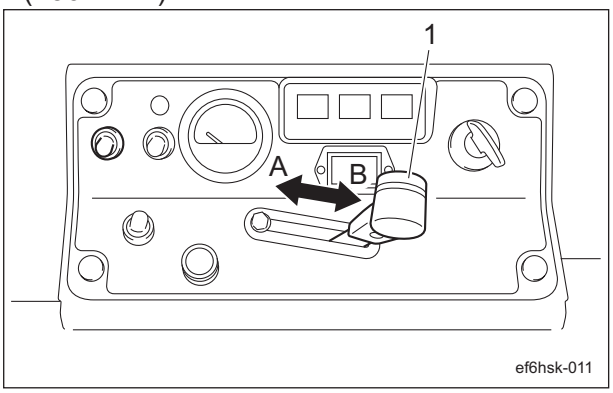

Throttle Lever_002

1	Throttle lever
A	High
B	Low

https://truckmanualshub.com/

Mower Pedal

Caution

Do not keep depressing the mower pedal after an operation.
It may cause malfunction.

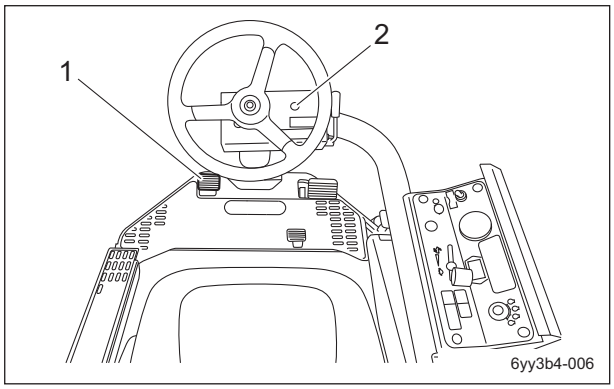

Mower Pedal_001

1	Mower pedal
2	Green LED

The mower pedal is located on the left of the foot area in front of the driver's seat.
Depressing the pedal switches the mower units between the up and down positions.
When it is switched to the down position, the green LED on the steering column lights up.
The Up/Down speed of the mower unit is affected by the engine rotation speed. When the engine rotation is at low speed, the Up/Down speed is at low as well.

Important

Even if the reel rotation switch is set to the "MOW" (reel rotation) position, when the mower units are raised, the reel cutters (cutting cylinders) stop rotating.

Important

Operation of the mower pedal cannot raise the mower units to the highest position.
When traveling, keep pressing the up switch to raise the mower units to the highest position.

Up Switch

Caution

Up switch should be used only when the height of the mower unit is not sufficient.
Do not press this switch when the mower unit is at lowered position.
Otherwise, the harness may get damaged.

The up switch is located in the operation panel.
If the height of the mower unit is not sufficient for traveling etc, keep pressing the up switch to operate the magnetic valve to raise the mower unit to the highest position.
(- #30420)

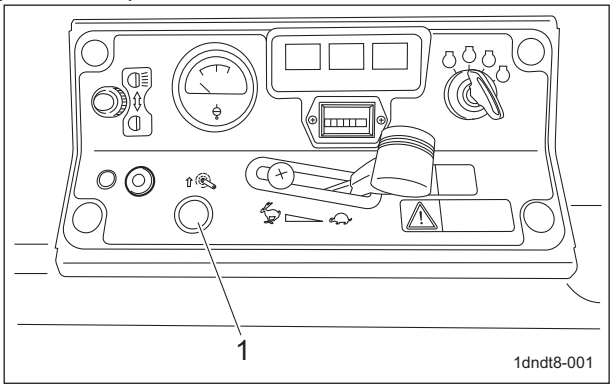

Up Switch_001

(#30421 -)

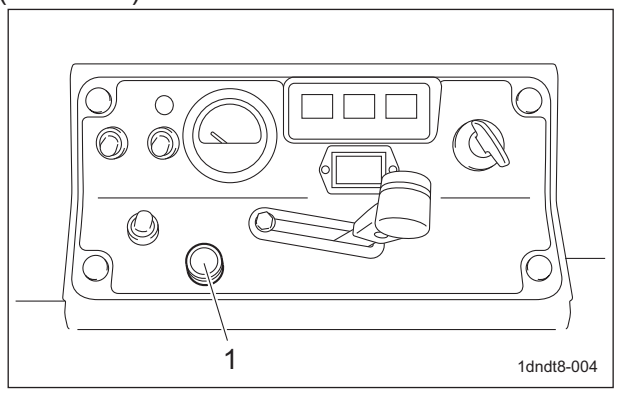

Up Switch_002

1	Up switch

https://truckmanualshub.com/

2WD/3WD Selector Switch

Caution

When switching between 2WD and 3WD operation, make sure to stop the machine completely.

Caution

In case of 2WD/3WD model, travel in 2WD mode since it is dangerous to travel on steep downward slopes, wet road surface or downward slopes of wet lawn in 3WD mode. Rear tire going into a skid may cause loss of traveling control.

Important

When the reel rotation switch is set to the "MOW" (reel rotation) position, regardless of the position of the 2WD/3WD selector switch, 3WD is selected.
When the traveling mode is switched to 3WD, the red LED in front of the 2WD/3WD selector switch lights up.

Note:
Depending on the specifications, this function may not be available.
The 2WD/3WD selector switch is located in the operation panel.

(- #30420)
Flipping the switch forward turns to 3WD mode and flipping backward turns to 2WD mode.
When the traveling mode is switched to 3WD, the red LED in front of the 2WD/3WD selector switch lights up.

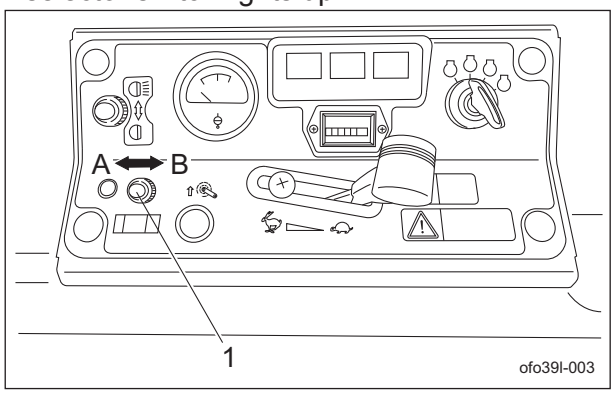

2WD/3WD Selector Switch_001

1	2WD/3WD selector switch
A	3WD
B	2WD

(#30421 -)
Flipping the switch up selects 3WD mode, and flipping it down selects 2WD mode.
When the traveling mode is switched to 3WD, the red LED above the 2WD/3WD selector switch lights up.

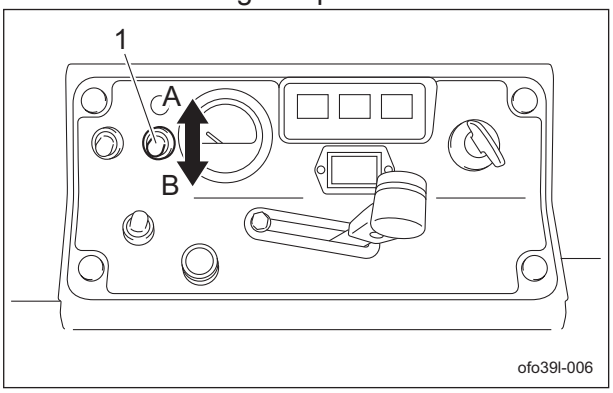

2WD/3WD Selector Switch_002

1	2WD/3WD selector switch
A	3WD
B	2WD

https://truckmanualshub.com/

Reel Rotation Switch

Warning

Set the reel rotation switch to the "TRAVEL" (reel stop) position except during mowing or backlapping.

Caution

In case of 2WD/3WD model, travel in 2WD mode since it is dangerous to travel on steep downward slopes, wet road surface or downward slopes of wet lawn in 3WD mode. Rear tire going into a skid may cause loss of traveling control.

Important

In case of 2WD/3WD model, whenever the reel rotation switch is set to the "MOW" (reel rotation) position, the drive mode is put into 3WD regardless of the position of the 2WD/3WD selector switch.

(- #30420)
The reel rotation switch is located on the right of the foot area in front of the driver's seat. Setting the switch to the "MOW" (reel rotation) position rotates the reel, and to the "TRAVEL" (reel stop) position stops the reel.

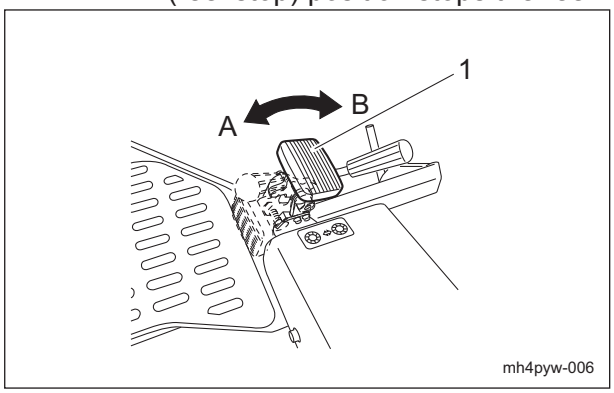

Reel Rotation Switch_001

1	Reel rotation switch
A	Rotate
B	Stop

(#30421 -)
The reel rotation switch is located in the operation panel. Setting the switch to the "MOW" (reel rotation) position rotates the reel, and to the "TRAVEL" (reel stop) position stops the reel.

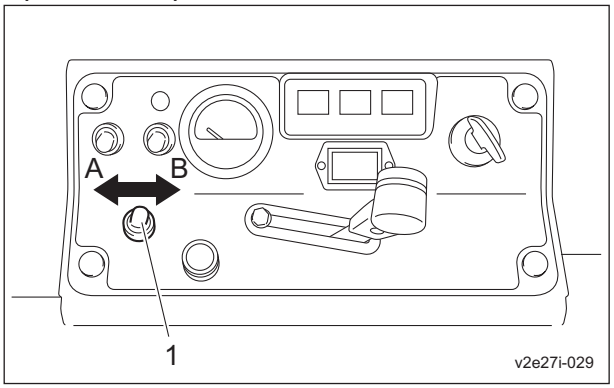

Reel Rotation Switch_002

1	Reel rotation switch
A	Rotate
B	Stop

When the reel rotation switch is set to the "MOW" (reel rotation) position, the reel cutters (cutting cylinders) will rotate or stop in sync with the up and down motion of the mower units. When the mower units are lowered, the reel cutters (cutting cylinders) rotate, and when the mower units are raised, they stop.

1. When the mower units are lowered, the sensor activates the electromagnetic clutch, and the reel cutters (cutting cylinders) start rotating by means of the flexible wire.
2. When the mower units are raised, even if the reel rotation switch is set to the "MOW" (reel rotation) position, the sensor does not activate the electromagnetic clutch, and the reel cutters (cutting cylinders) do not rotate.

https://truckmanualshub.com/

Reel Reverse Lever

Caution

Operate the reel reverse lever while the rotation of the reel cutter (cutting cylinder) is stopped, and adjust it to the position suitable for your work.

The reel reverse lever is located at the upper part of the gear case of the mower unit.
If you set the lever to Normal, it starts cutting rotation, set to Reverse for back lapping rotation and Neutral for free rotation.

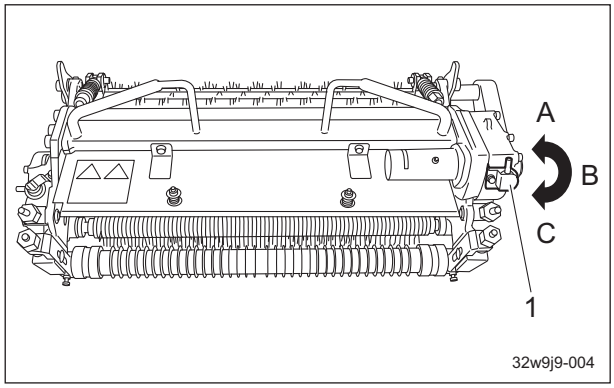

Reel Reverse Lever_001

1	Reel reverse lever
A	Normal rotation
B	Neutral
C	Reverse rotation

Transmission Selector Lever

Caution

The transmission selector lever should be operated while the engine rotation is stopped, and adjusted to the position suitable for your work.

Important

For the LM315GC (for fields), normally cut with the lever set to the "L" position.

The transmission selector lever is located at the upper part of the transmission, behind the driver's seat. When the lever is shifted to "H," the reel cutters (cutting cylinders) rotate fast; on "L" they rotate slowly; on "LAP" they rotate more slowly, at a suitable speed for back lapping.

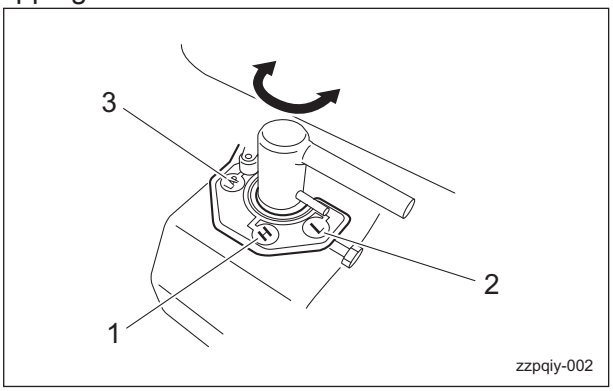

Transmission Selector Lever_001

1	H
2	L
3	LAP

1. H
   The reel cutters (cutting cylinders) rotate faster, and the clip pitch (cutting interval) becomes shorter.
   This is suitable for the work at a good turf condition.
2. L
   The reel cutter (cutting cylinder) rotates slower compared to when it is at "H" and the clip pitch becomes longer.
   This is suitable for the work at the turf condition not so good.

https://truckmanualshub.com/

3. LAP
   The reel cutter (cutting cylinder) rotates in a speed suitable for the back lapping and its maintainability increases. (The rotation direction is not changed, so use the reel reverse lever of the mower unit to reverse the rotation).

Traveling Pedal

Warning

This machine is not authorized as a special motor vehicle. Do not drive it on public roads.

Caution

When the machine is traveling at a high speed, it will not stop immediately after you take your foot off the traveling pedal.

Important

When the reel rotation switch is turned "ON," the working speed is limited by the pedal stopper.

The traveling pedals are located in the right foot area and control forward and reverse operation of the machine.
When the forward pedal (front side) is depressed, the machine travels forward. When the reverse pedal (rear side) is depressed, the machine travels backward.
The speed changes in accordance with how much the pedal is depressed.
When you take your foot off the pedal, the machine stops automatically.

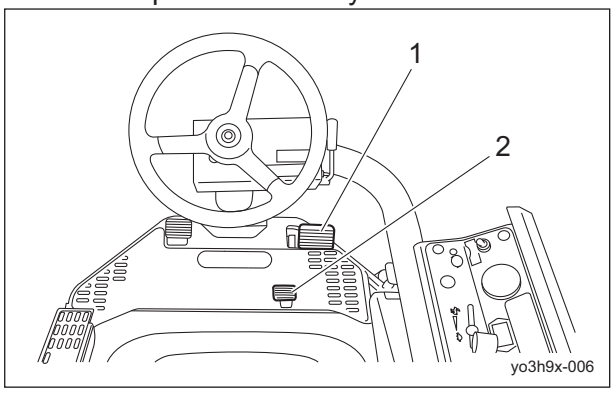

Traveling Pedal_001

1	Forward pedal
2	Reverse pedal

Parking Brake Lever

Caution

Be sure to release the parking brake before driving.
Otherwise, it may cause the malfunction of the brake or hydraulic system.

Caution

Never park the machine on a slope.

The parking brake lever is located at the left of the driver's seat.
To park the machine, pull the parking brake lever completely.
To release the parking brake, press the push button while lowering the parking brake lever all the way to its resting position.
If the traveling pedal is depressed while the parking brake is applied, a buzzer will sound. (intermittent tone)

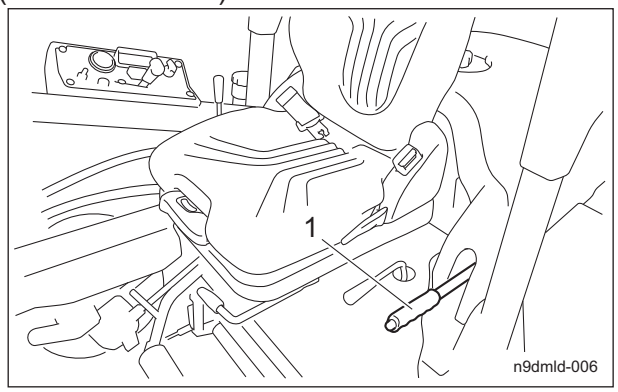

Parking Brake Lever_001

1	Parking brake lever

https://truckmanualshub.com/

Hood

Caution

Do not open the hood in strong winds.

Caution

Be careful not to pinch your fingers when you open or close the hood.

1. Unlock the bolt, and then lift up the hood.
2. Make sure that the hood will not close, and then remove your hands.

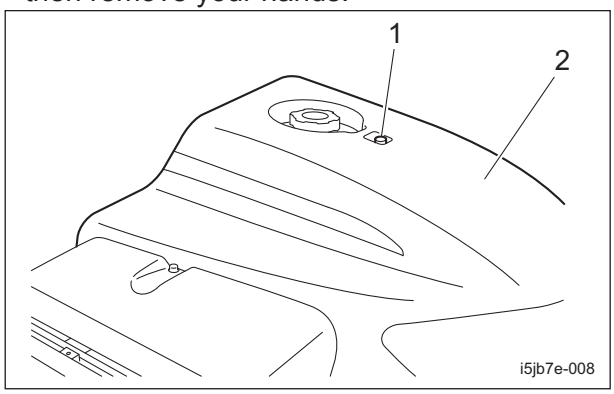

Hood_001

1	Bolt
2	Hood

3. When closing the hood, do the operation slowly.
4. Press the hood lightly and lock it with the bolt.

Underseat Cover

Caution

Be careful not to pinch your fingers when you open or close the underseat cover.

1. Remove the grass catcher located at the center.(See "Removing Grass Catcher" (Page 4-42) .)
2. Adjust the steering wheel arm to the lowest position.(See "Adjustment of Steering Wheel" (Page 4-19) .)
3. Slide the seat forward and rotate the lock lever 90 degrees anticlockwise.

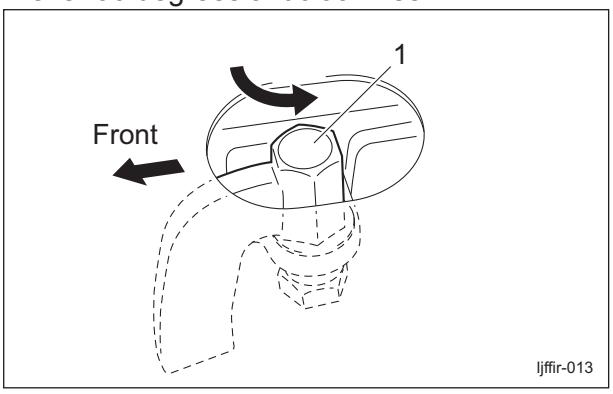

Underseat Cover_001

1	Lock lever

4. Pull up the forward tilt angle adjustment lever and lift up the underseat cover together with the seat.

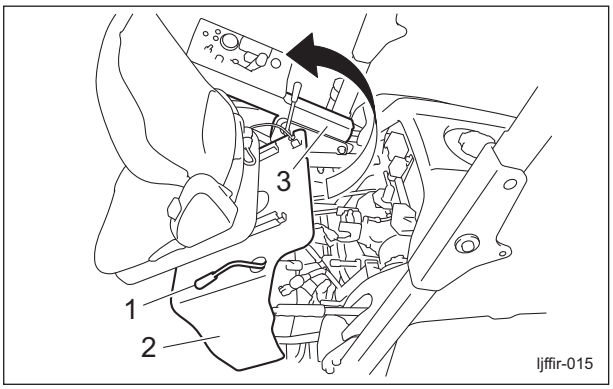

Underseat Cover_002

1	Forward tilt angle adjustment lever
2	Underseat cover
3	Steering wheel arm

5. When closing the underseat cover, do it slowly and be sure to use the forward tilt angle adjustment lever to fix it securely.
6. Rotate the lock lever 90 degrees clockwise to fix the underseat cover.

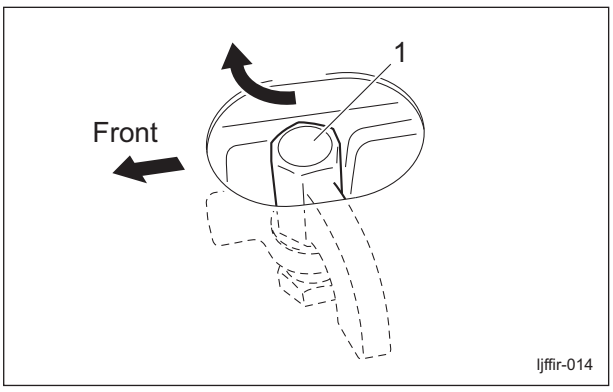

Underseat Cover_003

https://truckmanualshub.com/

1	Lock lever

Instruments

Instruments on the Operation Panel

(- #30420)

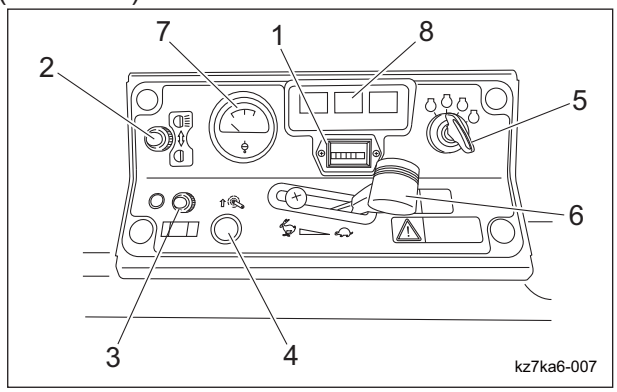

Instruments on the Operation Panel_001

1	Hour meter
2	Light switch
3	2WD/3WD selector switch
4	Up switch
5	Ignition key
6	Throttle lever
7	Water temperature gauge
8	Pilot lamp

(#30421 -)

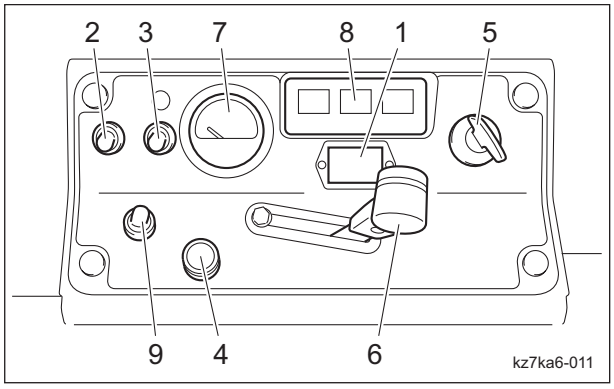

Instruments on the Operation Panel_002

1	Hour meter
2	Light switch
3	2WD/3WD selector switch
4	Up switch
5	Ignition key
6	Throttle lever
7	Water temperature gauge
8	Pilot lamp
9	Reel rotation switch

Hour meter

The hour meter is located in the operation panel, and indicates the accumulated operation time of the engine.
The number in black figures on a white background is incremented every six minutes.
The number in white figures on a black background is incremented every hour.
1/10 wheel ··· black figures on a white background
Hour wheel ··· white figures on a black background

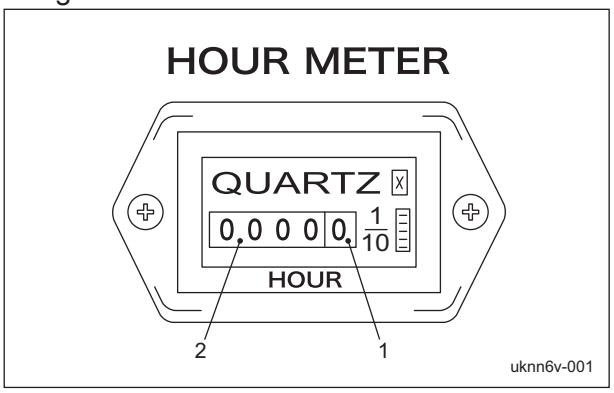

Hour meter_001

1	1/10 wheel
2	Hour wheel

Water Temperature Gauge

The water temperature gauge is located in the operation panel.
This instrument indicates the water temperature inside the engine.
If the water temperature gauge indicates a level close to "H" during operation, the machine is overheated.

https://truckmanualshub.com/

Remove the load from the engine, idle the machine for five minutes, stop the engine, and then inspect the machine and perform any necessary maintenance.
If the water temperature exceeds 105 degrees Celsius, a buzzer will sound.(Intermittent tone)

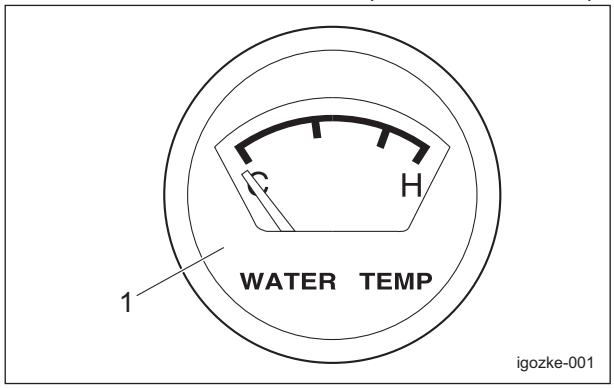

Water Temperature Gauge_001

1	Water temperature gauge

Pilot Lamps

Charge Lamp

The charge lamp is the left pilot lamp located in the operation panel.
It turns on when the ignition key is set to the "ON" position before the engine starts. It turns off when the engine starts and the alternator starts operating properly.
If this lamp illuminates while you are operating the machine, stop the engine immediately, and then inspect the machine and perform any necessary maintenance.

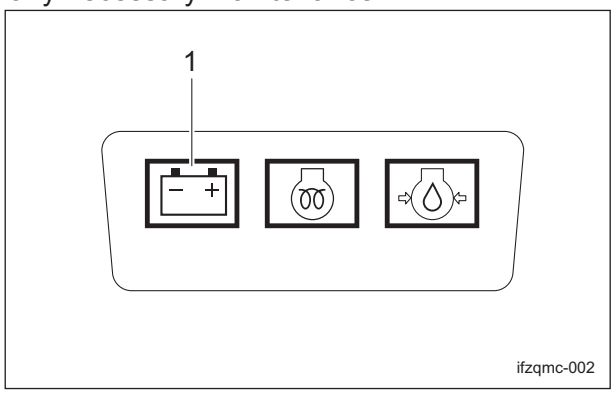

Charge Lamp_001

1	Charge lamp

Thermo-start Lamp

The thermo-start lamp is the middle pilot lamp located in the operation panel.
When the ignition key is set to the "GLOW" position, it illuminates as the glow plug generates heat.
Illumination of the thermo-start lamp is controlled by the glow lamp timer, and the lamp is turned off after a specified amount of time passes.
The duration of illumination indicates an approximate period of time required for warm-up, and has been fixed at five seconds.

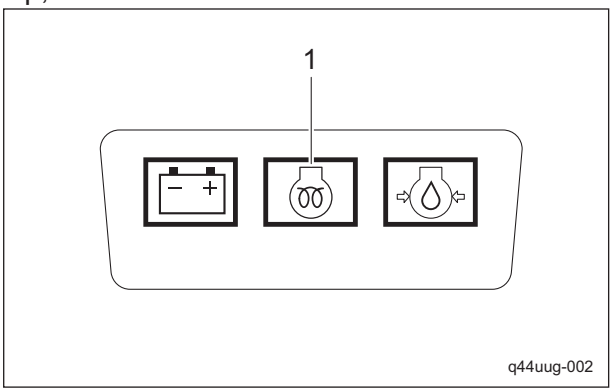

Thermo-start Lamp_001

1	Thermo-start lamp

Oil Pressure Lamp

The oil pressure lamp is the right pilot lamp located in the operation panel.
It turns on when the ignition key is set to the "ON" position before the engine starts. It turns off when the engine starts and engine oil pressure is generated properly.
If this lamp illuminates while you are operating the machine, stop the engine immediately, and then inspect the machine and perform any necessary maintenance.

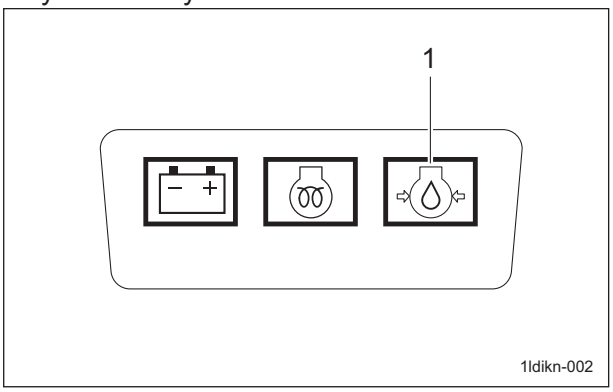

Oil Pressure Lamp_001

1	Oil pressure lamp

https://truckmanualshub.com/

Fuel Gauge

The fuel gauge is located on the fuel tank. This instrument indicates the quantity of fuel inside the fuel tank.

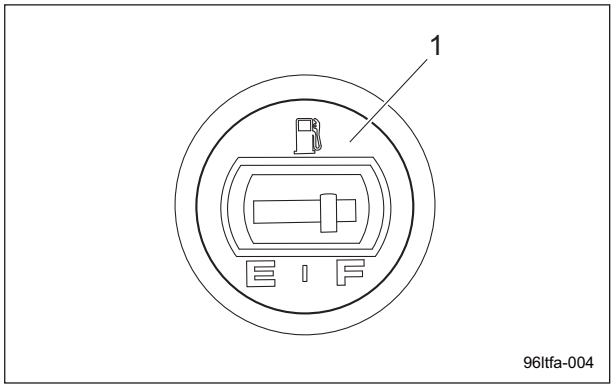

Fuel Gauge_001

1	Fuel gauge

Travel of Machine

Moving the Machine

Warning

Set the reel rotation switch to the "TRAVEL" (reel stop) position except during mowing or backlapping.

Caution

In case of 2WD/3WD model, travel in 2WD mode since it is dangerous to travel on steep downward slopes, wet road surface or downward slopes of wet lawn in 3WD mode. Rear tire going into a skid may cause loss of traveling control.

Important

In case of 2WD/3WD model, whenever the reel rotation switch is set to the "MOW" (reel rotation) position, the drive mode is put into 3WD regardless of the position of the 2WD/3WD selector switch.

1. Start the engine.(See "Procedure to Start Engine" (Page 4-26) .)
2. Raise all mower units.
3. While pressing the push button, release the parking brake lever.
4. Slowly depress the traveling pedal.
5. The machine can start traveling.

Towing the Machine

If the machine does not travel due to engine trouble, etc., you can move it in the following ways:

- Pushing by hand
- Towing (See the following instruction.)

Caution

Tow the machine at a low speed while paying close attention.

Caution

Do not touch the unload valve except when towing the machine.

Caution

Before restarting the engine, be sure to close the unload valve.

1. Stop the engine. (See "Procedure to Stop Engine" (Page 4-27) .)
2. Pull the parking brake lever and chock the wheels.
3. The unload valve is located at the lower right of the frame.
   While pressing the unload valve, rotate it 90 degrees (vertically) to open.

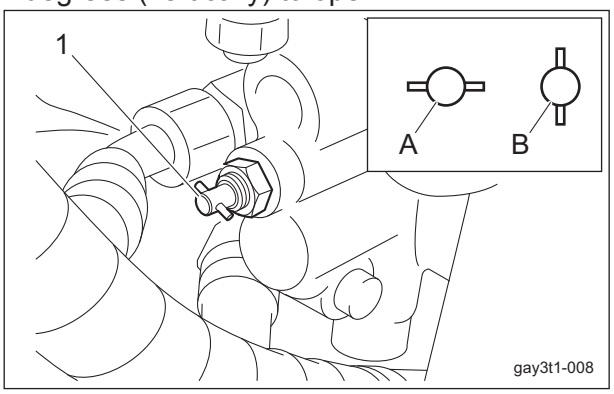

Towing the Machine_001

1	Unload valve
A	Onload
B	Unload

4. While pressing the push button, release the parking brake lever and remove the wheel stopper.
5. Tow the machine slowly.

https://truckmanualshub.com/

Cutting Work

Cutting Work

Warning

Do NOT start to move or stop the machine abruptly.
To do so is very dangerous. In addition, it may damage the hydraulic system or result in oil leakage.

Warning

Set the reel rotation switch to the "TRAVEL" (reel stop) position except during mowing or backlapping.

Caution

In case of 2WD/3WD model, travel in 2WD mode since it is dangerous to travel on steep downward slopes, wet road surface or downward slopes of wet lawn in 3WD mode. Rear tire going into a skid may cause loss of traveling control.

Caution

Be sure to install the grass catchers. Otherwise, flying objects from the mower units may hit your feet.

Important

In case of 2WD/3WD model, whenever the reel rotation switch is set to the "MOW" (reel rotation) position, the drive mode is put into 3WD regardless of the position of the 2WD/3WD selector switch.

1. Install the grass catchers.
2. Start the engine. (See "Procedure to Start Engine" (Page 4-26) .)
3. Raise all mower units.
4. While pressing the push button, release the parking brake lever.
5. Shift the throttle lever to the rabbit icon (high speed) to run the engine at the maximum speed (3,000 rpm).
6. Set the reel rotation switch to the "MOW" (reel rotation) position.
7. Start the work following the procedure below.
   [1] Depress the traveling pedal.
   [2] Depress the mower pedal when the mower unit reaches the collar of the green.
   [3] Lower the mower units to start rotating the reel cutters (cutting cylinders).
   Note:
   During the work, the reel cutters (cutting cylinders) will rotate or stop in sync with the up and down motion of the mower units.
8. Set the reel rotation switch to the "TRAVEL" (reel stop) position after the operation completed.

Removing Grass Catcher

1. To discard the collected grasses, set the reel rotation switch to the "TRAVEL" (reel stop) position.
2. Lift up the grass catcher and remove it.

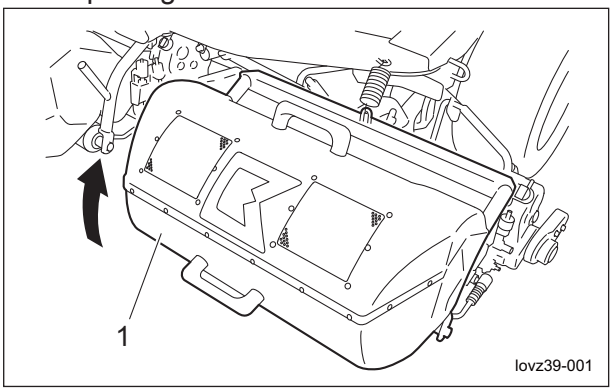

Removing Grass Catcher_001

1	Grass catcher

Transporting

Transporting Procedure

When loading the machine into a trailer or a truck to transport it, drive the machine forward. When unloading, drive the machine in reverse.

https://truckmanualshub.com/

Maintenance Precautions ..... Page 5-2

Maintenance Schedule ..... Page 5-3

Specified Values ..... Page 5-4
Main Consumable Parts ..... Page 5-5

Jacking up the machine ..... Page 5-6

About the Jacking up the machine ..... Page 5-6
Jack-up Points ..... Page 5-6

Greasing ..... Page 5-7

About Greasing ..... Page 5-7
Greasing Points ..... Page 5-7

Maintenance (Mower) ..... Page 5-10

Back Lapping of Reel Cutter (Cutting Cylinder) ..... Page 5-10
Adjusting CAM ..... Page 5-11
Attaching Reel Cutter (Cutting Cylinder) ..... Page 5-12

Maintenance (Main Body) ..... Page 5-12

Removing/Installing Tires ..... Page 5-12
Adjustment of Belt Tension ..... Page 5-14
Adjustment of Parking Brake ..... Page 5-15
Adjusting Work Speed ..... Page 5-16
Adjusting the Neutral Position of the Piston Pump ..... Page 5-16
Change of Fuse ..... Page 5-17
Check the Operation Status of the Relay ..... Page 5-18
Removal of Mower Unit ..... Page 5-19

Long-Term Storage ..... Page 5-19

Before Long-Term Storage ..... Page 5-19

https://truckmanualshub.com/

Maintenance

Maintenance Precautions

Caution

First, learn well the maintenance operations you plan to perform.

Caution

Use tools appropriate for each maintenance operation.

Caution

For the safe and best performance of your machine, use Baroness genuine parts for replacement and accessories.
Please note that our product warranty may be void if you use non-genuine parts for replacement or accessories.

https://truckmanualshub.com/

Maintenance Schedule

LM315GC Diesel Model
Follow the maintenance schedule below.
○ · · · Inspect, adjust, supply, clean
● · · · Replace (first time)
△ · · · Replace

	Maintenance Item	Before work	After work	Every 8 hrs.	Every 50 hrs.	Every 100 hrs.	Every 200 hrs.	Every 250 hrs.	Every 400 hrs.	Every 500 hrs.	Every year	Every 2 years	Every 4 years	Remarks
Engine	Tightening the parts	○												
	Fuel	○												
	Air cleaner	○					△							
	Engine oil	○		●	△									8 hrs (first time)
	Engine oil filter	○			●	△								50 hrs (first time)
	Ignition plug	-	-	-	-	-	-	-	-	-	-	-	-	-
	Radiator	○												
	Oil cooler	-	-	-	-	-	-	-	-	-	-	-	-	-
	Coolant	○			△									
	Fan belt	○									△			
	Battery	○										△		
	Battery fluid	○												
	Cleaning the exterior	○												
Main body	Tightening the parts	○												
	Interlock system	○												
	Emergency switch	-	-	-	-	-	-	-	-	-	-	-	-	-
	Electrical wiring										○			
	Knife	○												
	Steering chain	-	-	-	-	-	-	-	-	-	-	-	-	-
	Cutting (or brush) height	○												
	Greasing, oiling			○	○									Refer to greasing point
	Tire	○												
	Rubber crawler	-	-	-	-	-	-	-	-	-	-	-	-	-
	V-belt	○									△			
	Brake	○												
	Wire	○					△							
	Cover	○												
	Oil leakage	○												
	Hydraulic oil	○				●				△				100 hrs (first time)

https://truckmanualshub.com/

Maintenance

	Maintenance Item	Before work	After work	Every 8 hrs.	Every 50 hrs.	Every 100 hrs.	Every 200 hrs.	Every 250 hrs.	Every 400 hrs.	Every 500 hrs.	Every year	Every 2 years	Every 4 years	Remarks
Main body	Hydraulic oil filter					●				△				100 hrs (first time)
	Hydraulic motor oil	-	-	-	-	-	-	-	-	-	-	-	-	-
	Power unit oil	-	-	-	-	-	-	-	-	-	-	-	-	-
	Transmission oil	-	-	-	-	-	-	-	-	-	-	-	-	-
	Hydraulic hose (moving part)	○										△		
	Hydraulic hose (fixed part)	○											△	
	Air cleaner	○					△							
	Electromagnetic pump filter	-	-	-	-	-	-	-	-	-	-	-	-	-
	Fuel strainer					○					△			
	Fuel pipe	○												
	Cleaning the exterior	○												
By model	Greasing (center part of the flexible wire)			○										
	Greasing (main body side of the flexible wire)	○												
	Transmission grease											△		

For the maintenance schedule of the items unlisted above, refer to the Owner’s Manual for the engine.
The values for consumables are not guaranteed.
Replace the steering cylinder hoses every 2 years.

Specified Values

Fuel tank capacity	20.0 dm^3 (20.0 L)	
Hydraulic tank capacity	16.0 dm^3 (16.0 L)	Shell Tellus S2M46 (or equivalent)
Engine oil capacity	2.8 dm^3 (2.8 L)	D10W-30 CF class or above
Coolant capacity	3.0 dm^3 (3.0 L)	Including 0.7 dm^3 (0.7 L) reserve tank
Front tire pneumatic pressure	80 kPa (0.8 kgf/cm^2)	LM315GC (For green/For field) Smooth 18 × 9.50-8 2P
	100 kPa (1.0 kgf/cm^2)	LM315GC (For teeing ground) Pillow Dia 18 × 8.50-8 4P
Rear tire pneumatic pressure	80 kPa (0.8 kgf/cm^2)	LM315GC (For green/For field) Smooth 18 × 9.50-8 2P
	100 kPa (1.0 kgf/cm^2)	LM315GC (For teeing ground) Pillow Dia 18 × 8.50-8 4P
Cutter adjustment spring	26.0 mm (1.024 in)	Total length of spring
Engine tension spring	50.0 mm (1.969 in)	Total length of spring

https://truckmanualshub.com/

Main Consumable Parts

Part name	Code
Engine fan belt	PF16883-9701-0
Engine oil element	PFHH150-3243-0
Air cleaner element	PFK7311-8239-0
Fuel filter element	PF1G313-4356-0
Hydraulic suction filter	K3413000050
Hydraulic cartridge filter	K3412000050
Hydraulic oil (20 L can)	K2913100200
Brake wire	K1120106000
Throttle wire	K1110148400
Brake shoe	P741-8005-00
	P741-8007-00
Fuel hose (tank - fuel filter)	K3180002700
Fuel hose (fuel filter - engine)	K3180009000
Fuel hose (engine drain - tank)	K3182005700
Flexible wire	LM315GA0801Z0
*Flexible wire (outer)	LM315GA0802Z0
*Flexible wire (inner)	LM315G-0803Z0
Length of flexible wire	LM315GA0804A0
*Length of flexible wire (outer)	LM315GA0805A0
*Length of flexible wire (inner)	LM315GA0806Z0
Battery	K3600000260
Engine pulley cog belt	K2374220410
V-belt GLA28A-4	K2324028000
Push-pull cable	K1160121010

https://truckmanualshub.com/

Jacking up the machine

About the Jacking up the machine

Warning

When replacing a tire or beginning any other maintenance or repairs, be sure to chock the wheels to prevent the machine from moving.
Before jacking up the machine, park it on a hard, flat surface such as a concrete floor and remove any obstacles that could prevent you from performing the work safely.
When necessary, use an appropriate chain block, hoist, or jack.
Support the machine securely with jack stands or appropriate blocks.
Failure to do so may cause the machine to move or fall, resulting in injury or death.

Use the jack-up points identified in this manual when jacking up the machine.
Only place a jack under the jack-up points specified.
Placing a jack at any other point could result in damage to the frame or other parts.

Jack-up Points

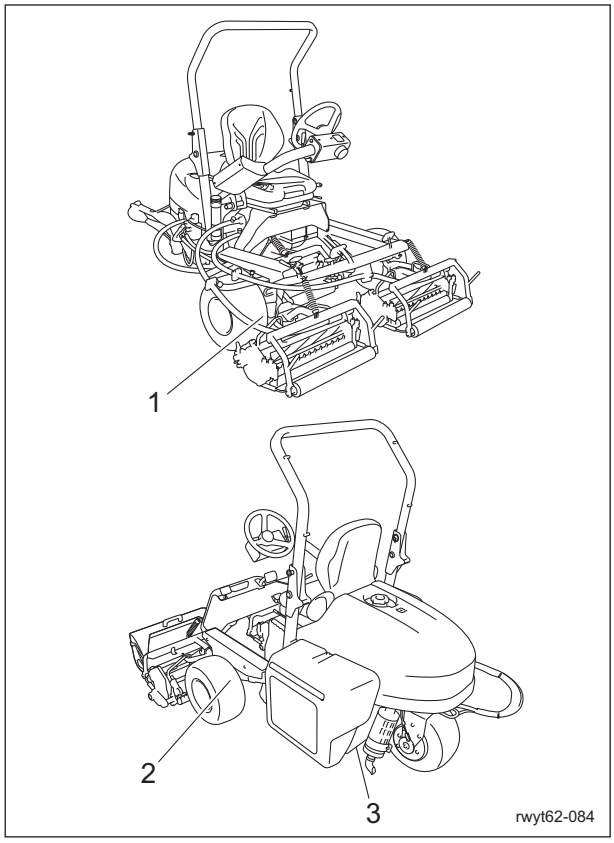

Jack-up Points_001

1	Front right frame
2	Front left frame
3	Engine mount frame

1. Front right frame

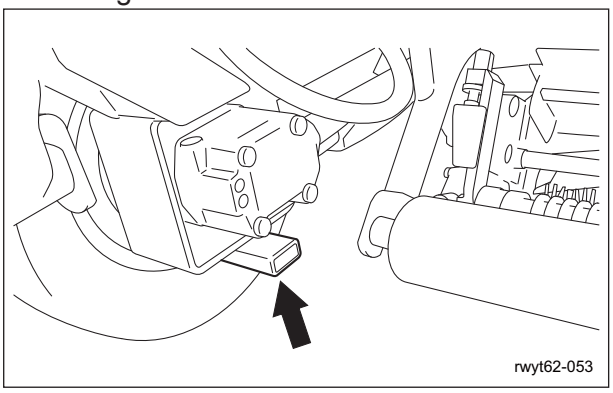

Jack-up Points_002

2. Front left frame

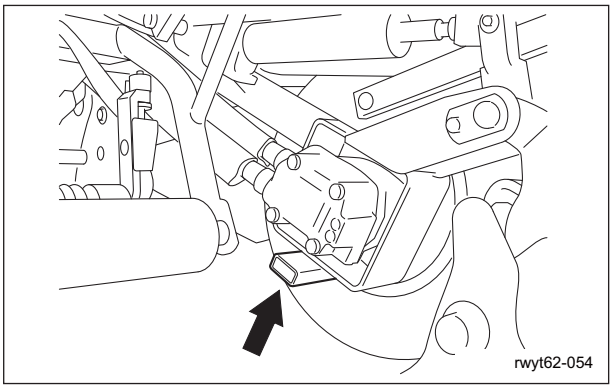

Jack-up Points_003

3. Engine mount frame

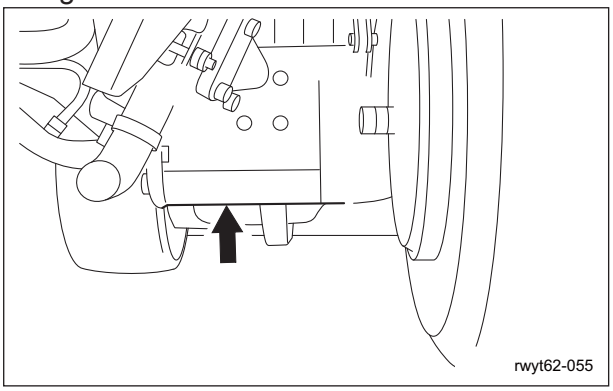

Jack-up Points_004

https://truckmanualshub.com/

Greasing

About Greasing

Since there may be adhesion or damage due to lack of grease on moving parts, they must be greased.
Add urea-based No. 2 grease in accordance with the Maintenance Schedule.
Other locations where the specified grease or lubricant is used are indicated in "Greasing Points".
Add grease using the specified grease or lubricant.

Greasing Points

Grease nipples are installed in the following locations.

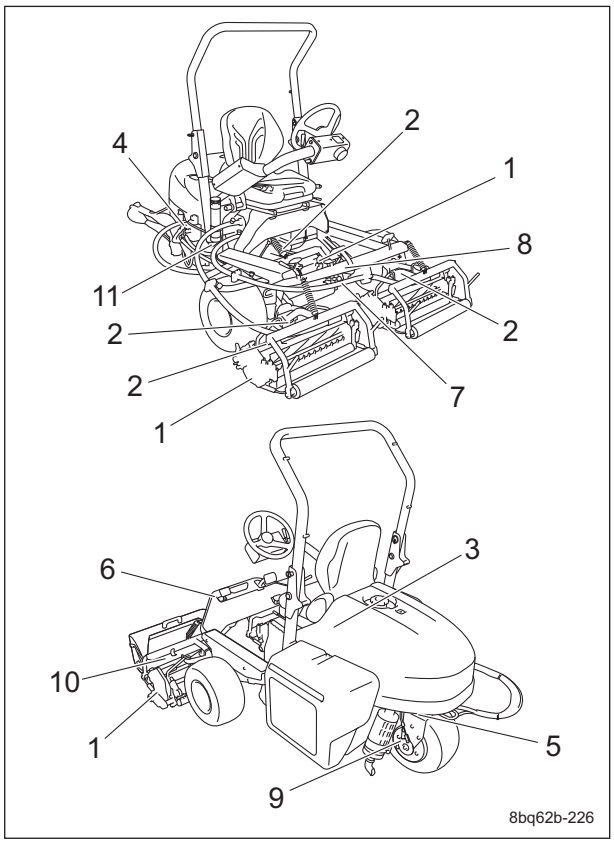

Greasing Points_001

	Location	No. of greasing points
1	Mower unit	36
2	Mower arm fulcrum	6
3	Belt tension lever	1
4	Neutral position area	1
5	Rear wheel pivot	1
6	Mower pedal shaft fulcrum	1
7	Flexible wire bracket	1
8	Traveling pedal shaft fulcrum	1
9	Rear wheel brake lever shaft	1
10	Flexible wire edge	3
11	Flexible wire	6

1. Mower unit
   Each mower unit has 12 points (6 A and 6 B points).
   Add grease to A and B every 8 and 50 hours, respectively.
   Right

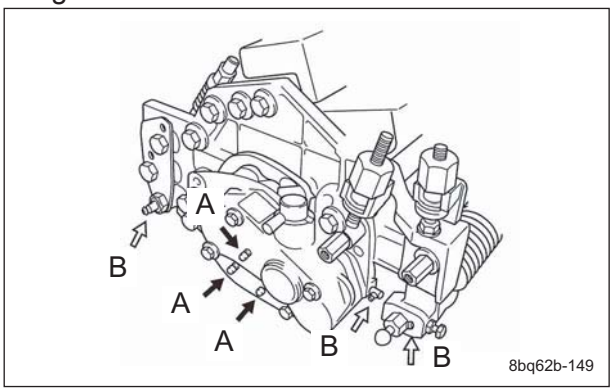

Greasing Points_002

Left

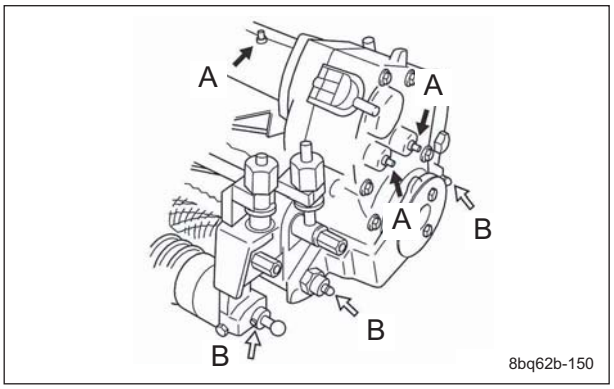

Greasing Points_003

https://truckmanualshub.com/

2. Mower arm fulcrum

[1] Front mower unit
There are two greasing points on each mower unit.

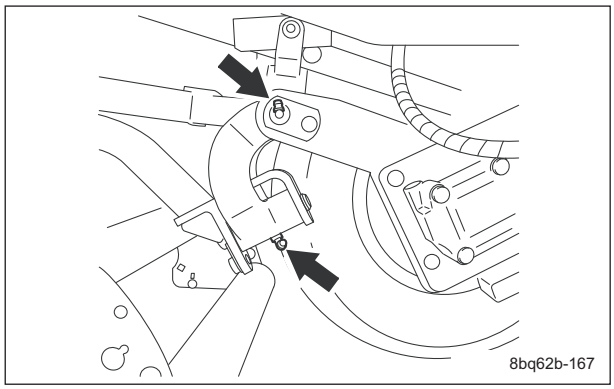

Greasing Points_004

[2] Rear mower unit
There are two locations.

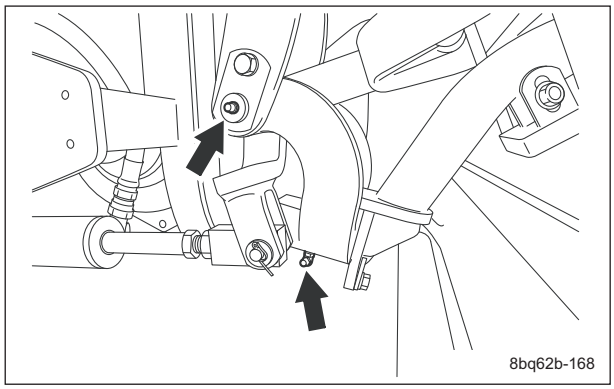

Greasing Points_005

3. Belt tension lever

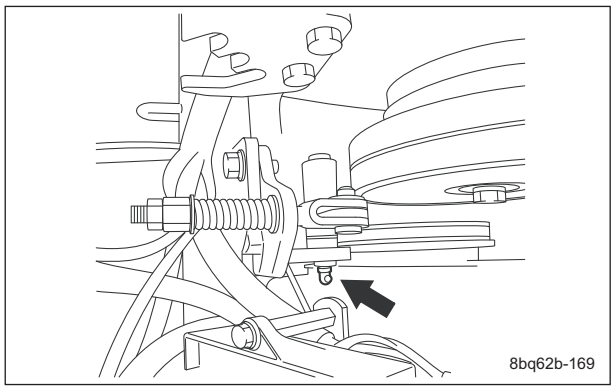

Greasing Points_006

4. Neutral position area

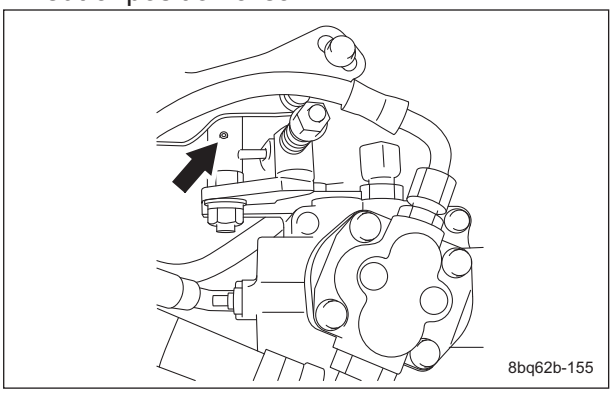

Greasing Points_007

5. Rear wheel pivot

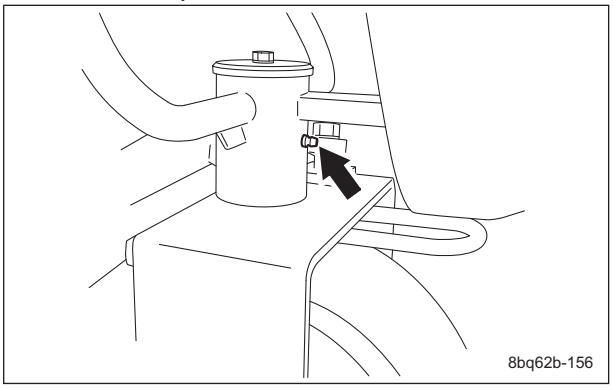

Greasing Points_008

6. Mower pedal shaft fulcrum

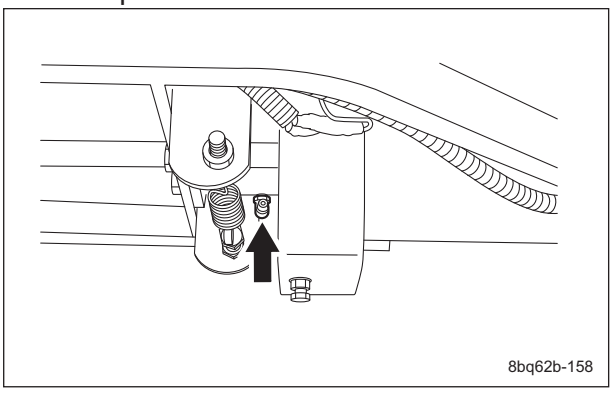

Greasing Points_009

7. Flexible wire bracket

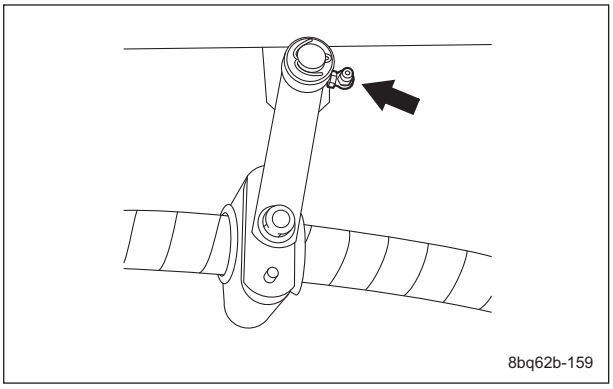

Greasing Points_010

https://truckmanualshub.com/

8. Traveling pedal shaft fulcrum

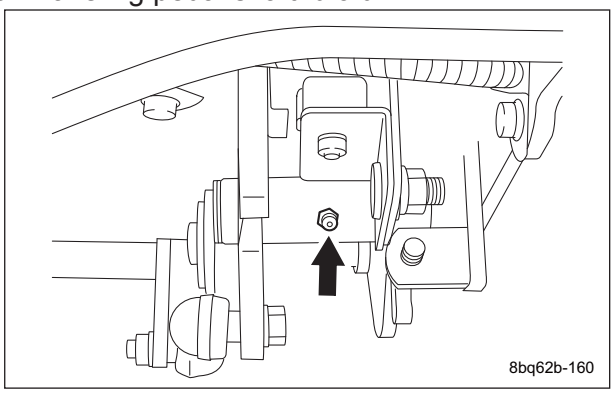

Greasing Points_011

9. Rear wheel brake lever shaft

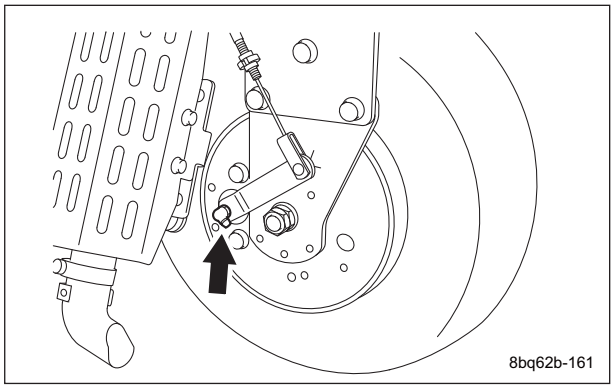

Greasing Points_012

10. Flexible wire edge
There is one greasing point on each flexible wire.

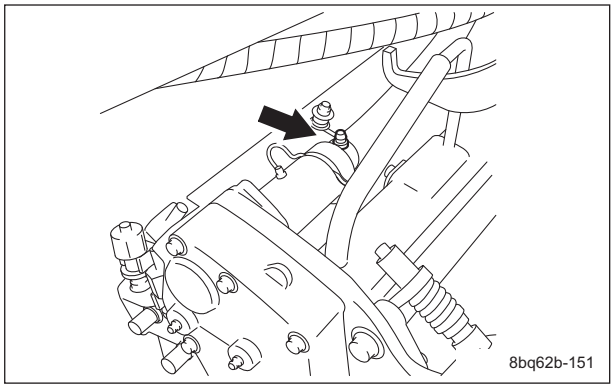

Greasing Points_013

11. Flexible wire
Use Moly speed grease No.2
Screw in the grease cup 360 degrees and add grease.

Central part
Add grease every 8 hours of operation.

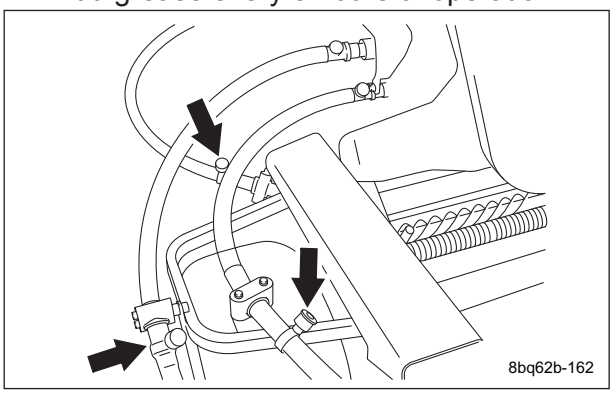

Greasing Points_014

Main body side
Add grease before operation.

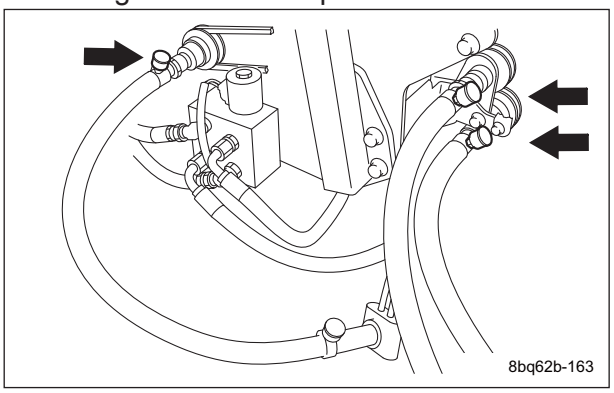

Greasing Points_015

https://truckmanualshub.com/

Maintenance (Mower)

Back Lapping of Reel Cutter (Cutting Cylinder)

Back lapping is work similar to sharpening a cooking knife. If the edges of the reel cutter (cutting cylinder) and the bed knife (bottom blade) become blunt and make cutting difficult, both the reel cutter (cutting cylinder) and the bed knife (bottom blade) should be simultaneously sharpened by reversing the reel cutter (cutting cylinder) with an abrasive paste applied.
However, back lapping is a temporary measure and would not restore the sharpness completely.
If the edges of the reel cutter (cutting cylinder) and the bed knife (bottom blade) become blunt and make cutting difficult, follow the steps below to perform back lapping.

Caution

Both the reel cutter (cutting cylinder) and the bed knife (bottom blade) are edged tools. Handle them carefully, since they could cut your hands and feet.

Caution

Be careful not to inhale exhaust gas during back lapping.

Caution

During back lapping, the reel cutter (cutting cylinder) rotates.
Keep hands and feet away from moving parts.

Caution

Do not perform back lapping with any other persons.

Caution

Be sure to stop the engine before and during shifting the transmission selector.
Otherwise, your hands may get caught in the V belt.

1. Have the following items ready: Strips of newspaper, Abrasive [Back lapping powder mixed with oil; or gel compound (Baroness genuine abrasive)], Brush.

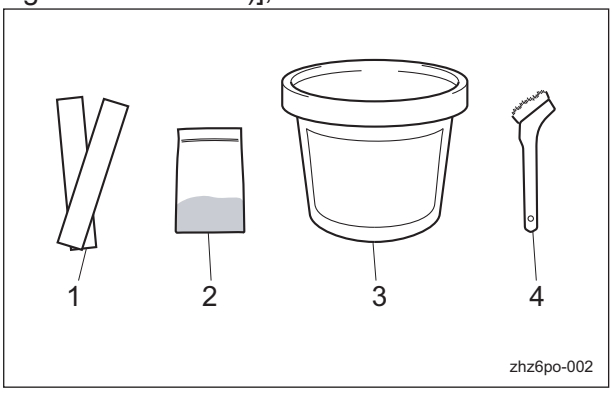

Back Lapping of Reel Cutter (Cutting Cylinder)_001

1	Newspaper
2	Back lapping powder
3	Gel compound
4	Brush

Note:
The mixing ratio for the abrasive, in volume, is one part back lapping powder to three or four parts oil.

Caution

Before cutting newspaper as a test, be sure to stop the engine and wear gloves to protect your hands.
Pay attention not to let the reel cutter (cutting cylinder) catch your gloves. Otherwise, you may injure your hand or fingers.

Caution

Before adjusting the blade engagement, be sure to set the reel reverse lever (attached to the mower unit) to the "N" position.

Important

Check the sharpness of the blade by checking the blade engagement after cutting grass.

2. Insert one or two strips of newspaper into the space between the reel cutter (cutting cylinder) and the bed knife (bottom blade) at an angle of 90 degrees. Then, rotate the reel cutter (cutting cylinder) counter-clockwise (when you face the mower unit from the left) to check the sharpness of the blades.

https://truckmanualshub.com/

3. Check the sharpness of the entire range (three or four points from the left edge to the right one) of the reel cutter (cutting cylinder).
4. Using a piece of chalk, mark locations on the blade that are sharp.
5. Set the reel reverse lever for the mower units to the "Reverse" position, and then set the transmission selector lever to the "LAP" position.
   Shift the lever(s) to the "N" position for the mower unit(s) for which you will not perform back lapping.
6. Start the engine, and run it at a low rpm.
7. Set the reel rotation switch to the "MOW" (reel rotation) to reverse the reel cutter (cutting cylinder).
8. Apply the abrasive evenly with the brush on the top side of reel cutter (cutting cylinder) where the newspaper was cut well or of chalk-marked locations. (Never apply to blunt areas.)
9. Idle the machine for a while and, when contact noise is no longer heard, return the reel rotation switch to the "TRAVEL" (reel stop) position to stop the reel cutter (cutting cylinder).
10. Stop the engine.
11. Wash off or wipe off with a cloth, etc., the abrasive from the reel cutter (cutting cylinder), and then check it for sharpness.
12. Repeat steps 2 to 11 until the entire range (three or four points from the left edge to the right one) of the reel cutter (cutting cylinder) will be uniformly sharpened.
13. Finally, apply abrasive to the entire blade width of the reel cutter (cutting cylinder) and perform final back lapping.
14. Stop the rotation of the reel cutter (cutting cylinder), stop the engine, and then wash off the abrasive using a washer etc.
15. While checking the blade for sharpness, adjust blade engagement.

Adjusting CAM

Important

The figure below shows the situation when you see from the left frame.
The right frame is mirror reversed.

When the gap at the left frame side between the reel cutter (cutting cylinder) and the bed knife (bottom blade) appears.

1. Loosen the locknut and turn the left cam bush clockwise for the gap size.
   When you raise the bed knife (bottom blade) for 0.1mm (0.039 inch), turn the left cam bush clockwise for 30 degrees.
2. Once the adjustment completed, tighten the locknut securely.

When the gap at the right frame side between the reel cutter (cutting cylinder) and the bed knife (bottom blade) appears.

1. Loosen the locknut and turn the right cam bush anticlockwise for the gap size.
2. Once the adjustment completed, tighten the locknut securely.

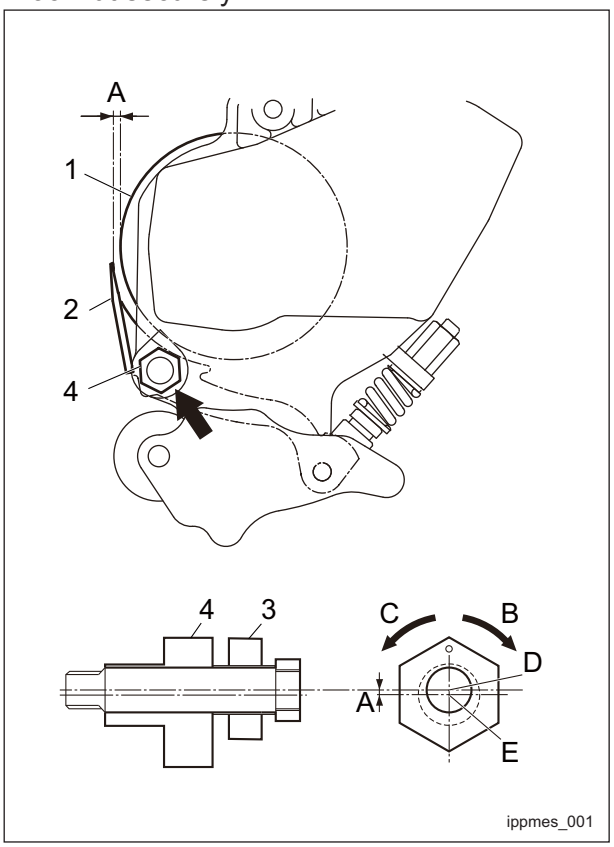

Adjusting CAM_001

1	Reel cutter (Cutting cylinder)
2	Bed knife (Bottom blade)
3	Lock nut
4	Cam bush
A	Max 0.3 mm (0.012 inch)
B	Bed knife (bottom blade) moving up
C	Bed knife (bottom blade) moving down
D	Center of cutter pin
E	Center of cam bush

https://truckmanualshub.com/

Attaching Reel Cutter (Cutting Cylinder)

Caution

Both the reel cutter (cutting cylinder) and the bed knife (bottom blade) are edged tools. Handle them carefully, since they could cut your hands and feet.

Follow the instruction below to replace the reel cutter bearing (right/left) and seal.
Use 30204JRP6 as bearing.

1. Fill up (Excelite EP No.2) to the bearings and seal.
2. Attach the reel cutter (cutting cylinder) to the frame like the figure below.
3. Tighten the inner nut and check the bearing for backlash.
4. Loosen the inner nut at the level that the reel cutter (cutting cylinder) can be rotated lightly by your hand and you don't feel the backlash.
   Tightening torque: 7 N-m (71.4 kgf-cm / 61.96 lb-in)
5. Tighten the outer locknut.

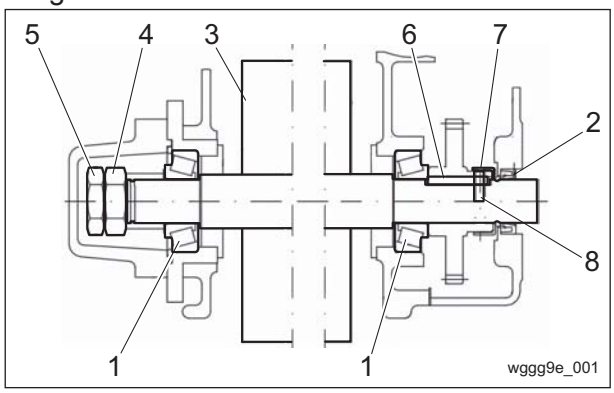

Attaching Reel Cutter (Cutting Cylinder)_001

1	Bearing
2	Seal
3	Reel cutter (Cutting cylinder)
4	Inner nut
5	Outer nut
6	Key
7	Cover
8	Pin

Maintenance (Main Body)

Removing/Installing Tires

Front Tire

Follow the steps below to remove the front tire:

1. Loosen the bolts.

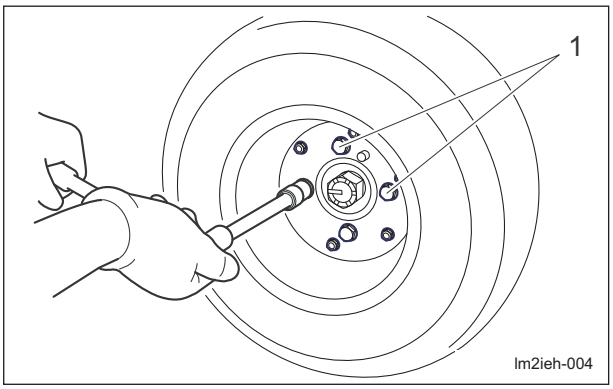

Front Tires_001

1	Heat-treated bolt

2. Securely place the jack beneath the jack-up point of the front right/left frame area, and then raise it until the tire lifts off the ground. (See "Jack-up Points" (Page 5-6) .)
3. Remove the bolts.
4. Remove the tire from the wheel mounting base.

Caution

Refer to the Tightening Torque Table.
Note that the Baroness product warranty may not apply to defects caused by incorrect or overtorque tightening etc.

Important

Tighten the bolts in the tightening order (crosswise).

For installing the front tires, reverse the removing procedure.

Rear Tire

Follow the steps below to remove the rear tires:
[2WD]

1. Securely place the jack beneath the jack-up points of the engine mount frame area, and then raise it until the tire lifts off the ground. (See "Jack-up Points" (Page 5-6) .)

https://truckmanualshub.com/

2. Remove the wire.
3. Remove the right/left bolts.
4. Remove the rear wheel Assy.

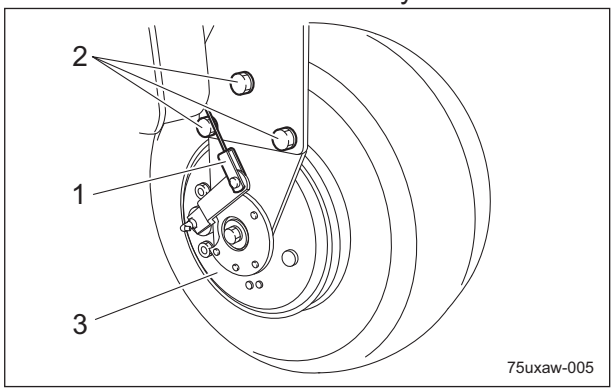

Rear Tires_001

1	Wire
2	Bolt
3	Rear wheel Assy

5. Remove the bolts.

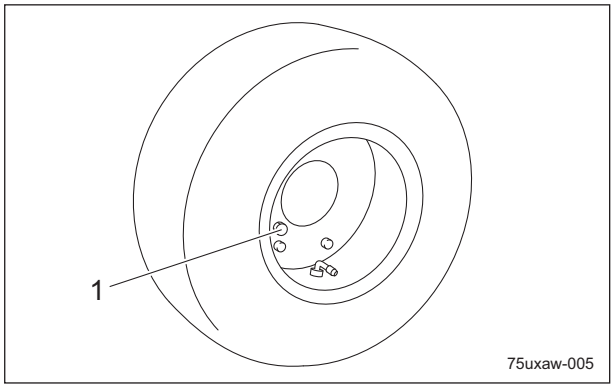

Rear Tires_002

1	Bolt

6. Remove the tire from the wheel mounting base.

Caution

Refer to the Tightening Torque Table.
Note that the Baroness product warranty may not apply to defects caused by incorrect or overtorque tightening etc.

Important

Tighten the bolts in the tightening order (crosswise).

For installing the rear tires, reverse the removing procedure.
[3WD]

1. Securely place the jack beneath the jack-up points of the engine mount frame area, and then raise it until the tire lifts off the ground. (See "Jack-up Points" (Page 5-6) .)
2. Remove the wire.
3. Remove right/left the bolt A(s).
4. Remove the bolt B at the center.
5. Remove the brake shoe Assy.
6. Remove the brake drum.

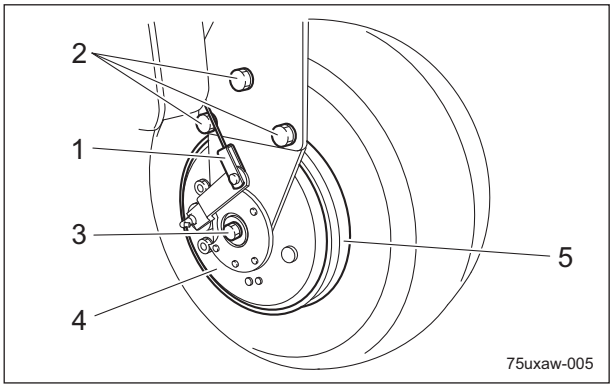

Rear Tires_003

1	Wire
2	Bolt A
3	Bolt B
4	Brake shoe Assy
5	Brake drum

7. Remove the bolts.

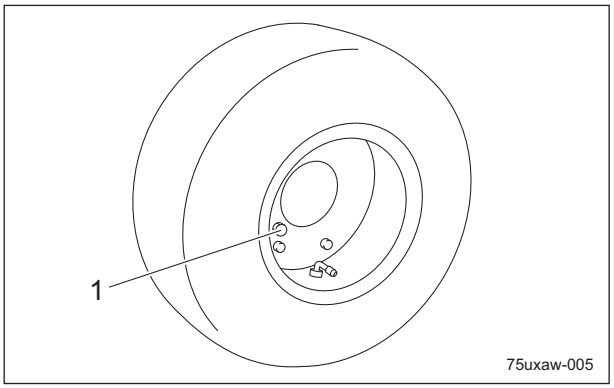

Rear Tires_004

1	Bolt

8. Remove the tire from the wheel mounting base.

https://truckmanualshub.com/

Caution

Refer to the Tightening Torque Table.
Note that the Baroness product warranty may not apply to defects caused by incorrect or overtorque tightening etc.

Important

Tighten the bolts in the tightening order (crosswise).

For installing the rear tires, reverse the removing procedure.

Adjustment of Belt Tension

Caution

Be sure to stop the engine before adjusting the belts.

Important

Make sure that the belt has the specified amount of tension.

If the belt becomes slack due to frequent use, it may jump or slip.
In addition, if it is overtightened, it may wear prematurely.
If necessary, adjust it, and always check the belt for appropriate tension.

Fan Belt

Caution

Be sure to stop the engine before adjusting the belts.

For details on handling the engine, please refer to the separate Engine Handling Manual.
Open the hood.

1. Press the middle of the belt with your finger to check the belt tension.
2. If the belt is too slack, loosen the nuts and bolts fixing the alternator, and then move the alternator to adjust the tension.

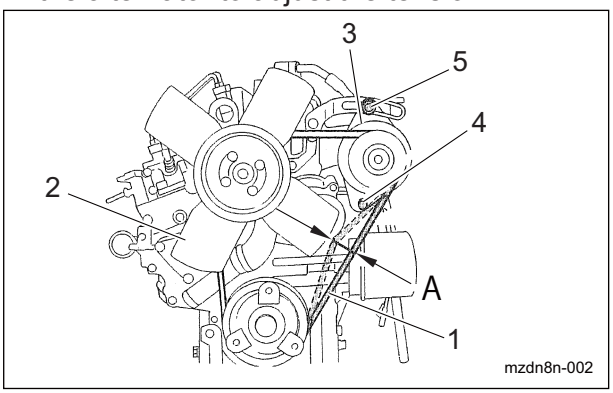

Fan Belt_001

1	Fan belt
2	Blade
3	Alternator
4	Nut
5	Bolt
A	7.0 - 9.0 mm (0.276 - 0.354 in)

Reel Cutter Drive Belt

Caution

Be sure to stop the engine before adjusting the belts.

1. Tilt the underseat cover forward and open the cover.
2. Open the hood.
3. Press the middle of the belt with your finger to check the belt tension.
4. If the belt is too slack, loosen the bolts and move the flexible wire housing (the pulley attached) with the spanner to adjust the tension.

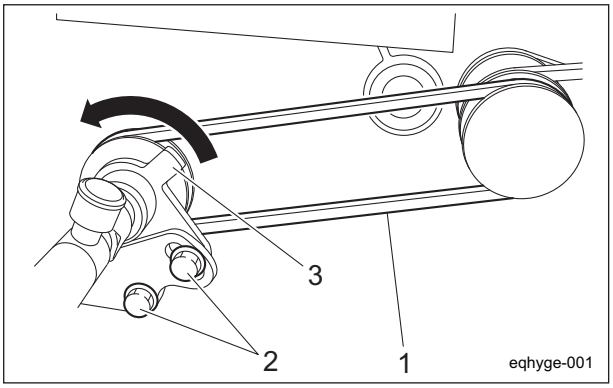

Reel Cutter Drive Belt_001

https://truckmanualshub.com/

1	Reel cutter drive belt
2	Bolt
3	Flexible wire housing

Engine Tension Belt

Caution

Be sure to stop the engine before adjusting the belts.

1. Tilt the underseat cover forward and open the cover.
2. Open the hood.
3. Press the middle of the belt with your finger to check the belt tension.

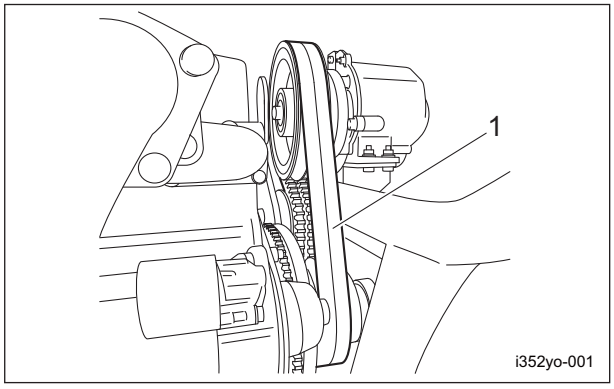

Engine Tension Belt_001

1	Engine tension belt

4. Loosen the nut to adjust the length of the spring.

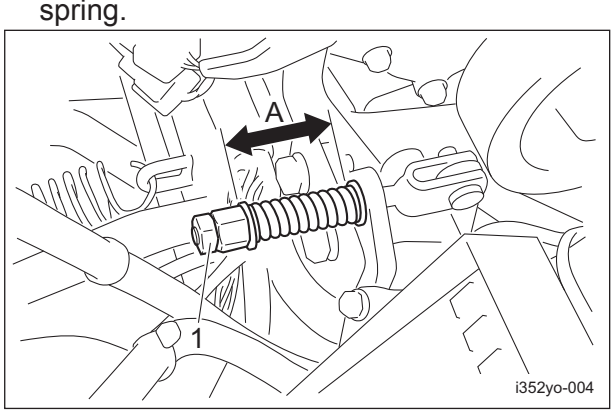

Engine Tension Belt_002

1	Nut
A	50.0 mm (1.969 in)

5. Lock it with the nut.

Adjustment of Parking Brake

Danger

If the brake wire is cut, the machine will be unable to stop. This would be extremely dangerous.
If the brake wire is cracked or damaged, replace it with a new one immediately.
If the parking brake is not sufficiently effective when you pull the parking brake lever, adjust the brake wire.

Adjust the parking brake by tightening the brake wire adjustment bolt.

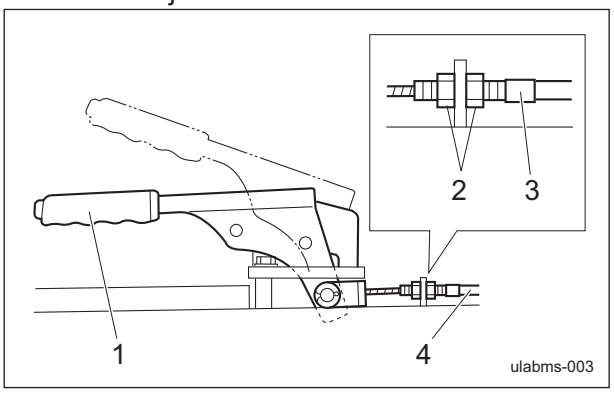

Adjustment of Parking Brake_001

1	Parking brake lever
2	Lock nut
3	Adjustment bolt
4	Brake wire

https://truckmanualshub.com/

Adjusting Work Speed

Follow the steps below to make adjustments.

(- #30420)

1. Set the reel rotation switch to the "MOW" (reel rotation) position.

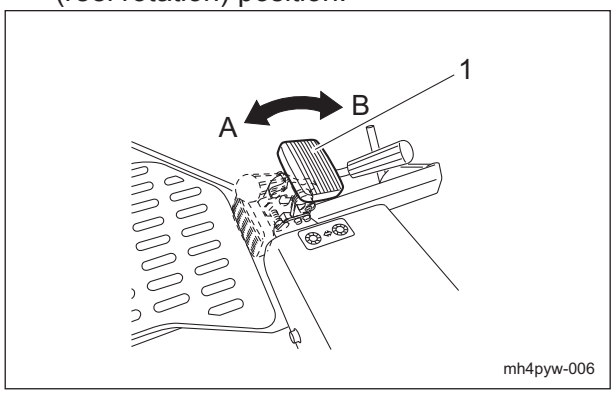

Adjusting Work Speed_001

1	Reel rotation switch
A	Rotate
B	Stop

2. Loosen the locknut on the side of the reel rotation switch to adjust the length of the bolt.
   - Length of the bolt (Longer): Slower
   - Length of the bolt (Shorter): Faster

   Once the adjustment has completed, be sure to lock with the nut.

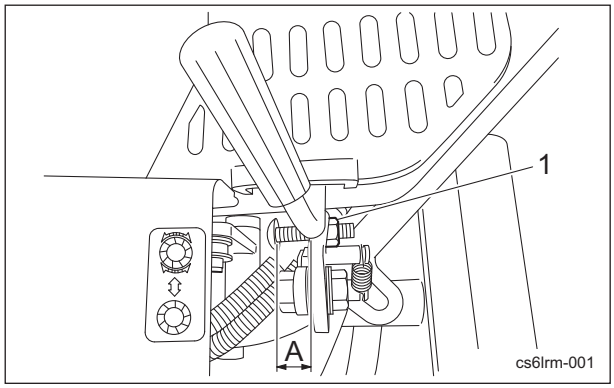

Adjusting Work Speed_002

1	Lock nut
A	Length of the bolt

(#30421 -)

1. Depress the mower pedal to lower the mower units.
2. Loosen the locknut on the side of the rod head for the right cylinder to adjust the length of the bolt.
   - Length of the bolt (Longer): Slower
   - Length of the bolt (Shorter): Faster

   Once the adjustment has completed, be sure to lock with the nut.

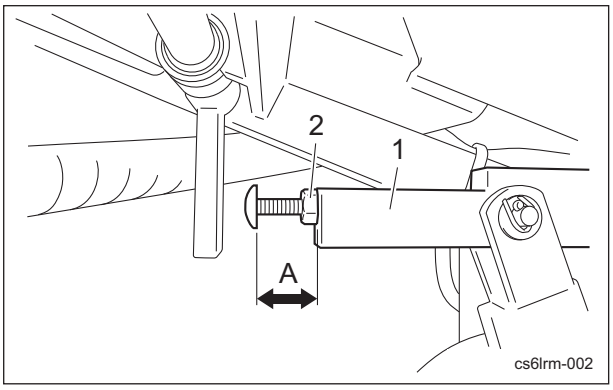

Adjusting Work Speed_003

1	Rod head
2	Lock nut
A	Length of the bolt

Adjusting the Neutral Position of the Piston Pump

Caution

Make sure not to touch rotating tires.

Caution

When adjusting the neutral position, pay close attention to abrupt start of the machine.
Place the jacks beneath the jack-up points, and then lift the machine until all the tires get off the ground.

If the machine moves forward or backward while the traveling pedals are released, they are not set to the neutral position.
Follow the steps below to make adjustments.

1. Stop the engine.
2. Place the jacks beneath the jack-up points, and then lift the machine off the ground. (See "Jack-up Points" (Page 5-6) .)
3. Make sure that no tires get contact with the jack stand.
4. Start the engine, and rev it up to the maximum rpm.
5. Adjust the neutral position.
   [1] Loosen the lock nut.

https://truckmanualshub.com/

[2] Rotate the camshaft slowly until the front wheel stops.
Find the position where the front wheel stops and lock the camshaft with the nut.

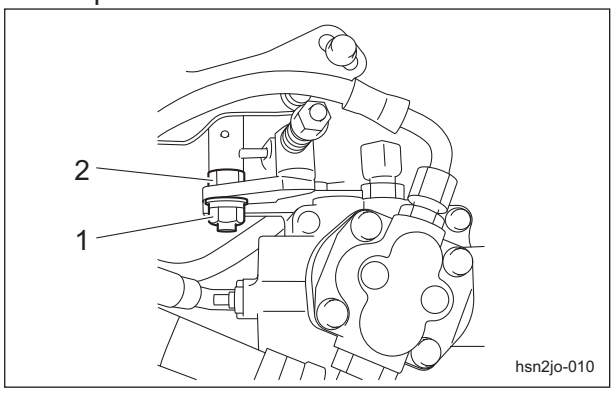

Adjusting the Neutral Position of the Piston Pump_001

1	Lock nut
2	Cam shaft

Change of Fuse

Fuse Box

Warning

Before performing maintenance on the electrical system, be sure to disconnect the negative terminal of the battery.

Caution

If a fuse is blown, the electrical circuit may be shorted.
Check to identify the cause, such as a bad terminal connection, damaged wiring or terminals, or incorrect wiring.

The fuse box includes spare fuses and tools.

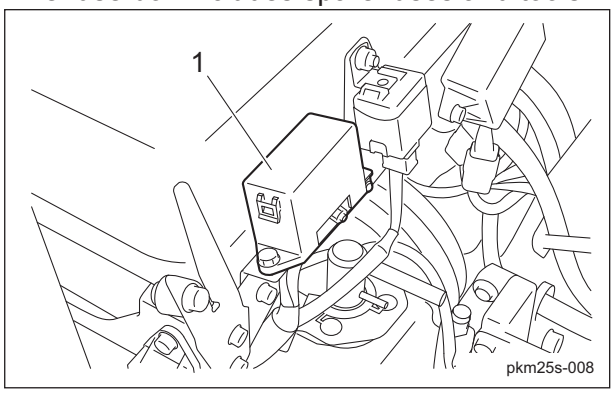

Fuse Box_001

1	Fuse box

The machine uses a mini fuse for automobiles.
Replace an old fuse with a new fuse of the specified capacity.

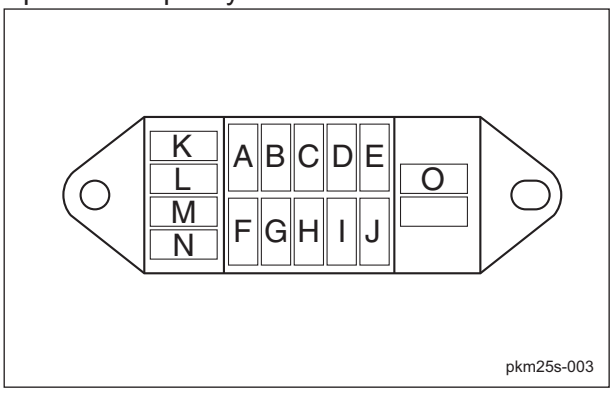

Fuse Box_002

A	5 A	Glow lamp timer
B	5 A	Key stop timer
C	5 A	Glow lamp timer, glow lamp (thermo-start lamp)
D	-	-
E	-	-
F	15 A	Engine stop solenoid
G	15 A	Others
H	5 A	Water temperature gauge, regulator
I	-	-
J	-	-
K	5 A	Spare
L	5 A	
M	15 A	
N	15 A	
O	Fuse removal tool	

Fusible Link

Fuse capacity of the fusible link is 50A.

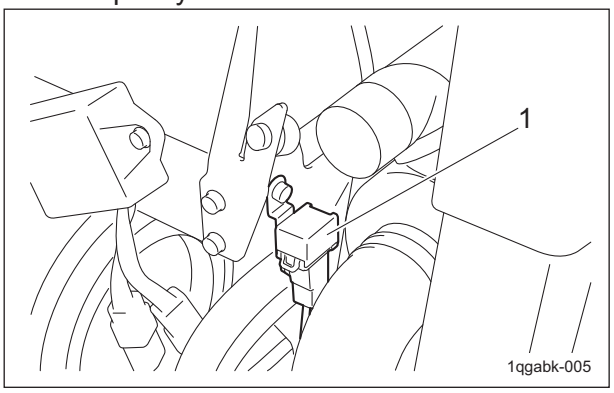

Fusible Link_001

1	Fusible link

https://truckmanualshub.com/

Check the Operation Status of the Relay

Mower Unit Control Relay

The relay box is located behind the seat.
This controls Up/Down of the mower unit and Rotate/Stop of the reel cutter (cutting cylinder).
The operating condition can be checked by the illumination of the LEDs.

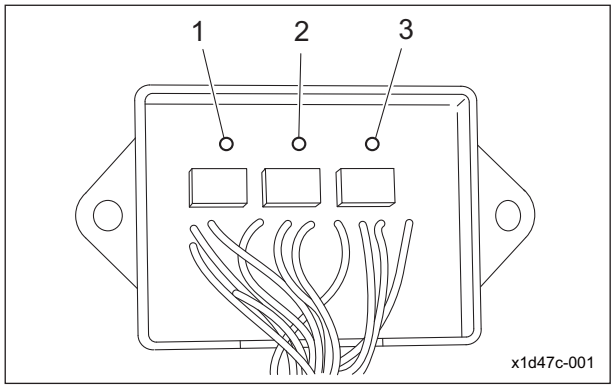

Mower Unit Control Relay_001

Refer to the table below to check the LED status.

		Condition	LED status
1	Front right up/down cylinder (Reel rotation)	Down	ON
		Up	OFF
2	Center mower up/down cylinder (Before pressing Raise/Lower switch)	Up	ON
		Down	OFF
3	Center mower up/down cylinder (After pressing Raise/Lower switch)	Down	ON
		Up	OFF

Interlock Relay

The relay box is located under the underseat cover.
This controls a safety device for starting/stopping the engine.
The operating condition can be checked by the illumination of the LEDs.

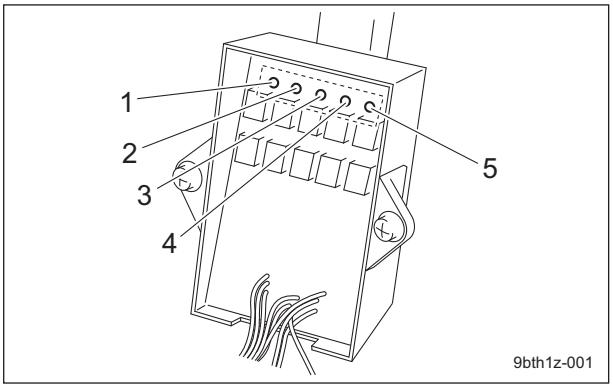

Interlock Relay_001

Refer to the table below to check the LED status.

		Condition	LED status
1	Traveling pedal switch	Neutral	ON
		Depress	OFF
2	Parking brake switch	Pull	ON
		Release	OFF
3	Seat switch	Away	ON
		Seated	OFF
4	Reel rotation switch	ON	ON
		OFF	OFF
5	Transmission selector lever	LAP	ON
		H	OFF
		L	OFF

https://truckmanualshub.com/

Removal of Mower Unit

1. Remove the clip which fixes the mower unit and flexible wire.

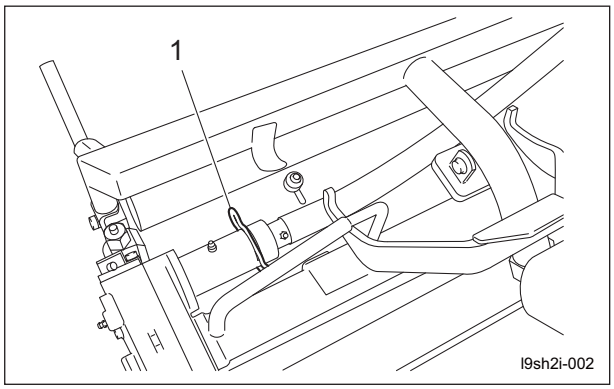

Removal of Mower Unit_001

1	Clip

2. Slide the stopper of the mower attaching pipe forward and pull it out.
3. Pull out the mower unit and remove it.

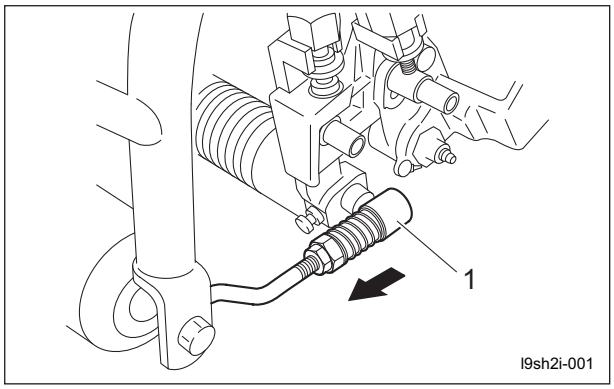

Removal of Mower Unit_002

1	Stopper (right/left)

Note:
For installing the mower unit, reverse the removing procedure.

Long-Term Storage

Before Long-Term Storage

- Remove dirt, grass clippings, debris, oil stains etc. completely.
- Supply oil and apply grease to appropriate parts.
- Remove the battery.

https://truckmanualshub.com/

https://truckmanualshub.com/

BARONESS
Quality on Demand

EU Declaration of Conformity

Product Identification

Product :		Ride-on lawnmower	
Make :		BARONESS	
Type :		LM315	
Version(s) :		GC	
Starting Serial No. :		**30109**	
Measured Sound Power Level :		LWA 102.48	dB
Guaranteed Sound Power Level :		LWA 103	dB
Manufacturer	Name :	Kyoeisha Co., Ltd.	
	Address :	1-26 Miyuki-cho, Toyokawa, Aichi-pref.,Japan	

Conforms to the following Directives

2006/42/EC	Machinery (MD)
2004/108/EC	Electromagnetic compatability (EMC)
2000/14/EC	Noise emissions from outdoor equipment

We has been designed and manufactured using the following specifications

ISO 12100 : 2010 (2006/42/EC)
ISO 5395-1 : 2013 (2006/42/EC)
ISO 5395-3 : 2013 (2006/42/EC)
ISO 14982:1998 (2004/108/EC)

Technical Documentation

Keeper's Name :	Kyoeisha Co., Ltd.
Keeper's Address :	1-26 Miyuki-cho, Toyokawa, Aichi-pref.,Japan

Compiler of the technical file (2006/42/EC)

Name:	Kyoeisha U.K.Ltd.
Address:	Unit 5 Hatch Industrial Park Grewell Road,Basingstke Hampshire RG24 7NG, the United Kingdom

Conformity assessment procedures

Internal production control : Module A (2006/42/EC)
EC-type examination : Module B (2004/108/EC)
Internal control of production with assessment of technical documentation and periodical checking (2000/14/EC)

Involved Notified Body (2000/14/EC)

Name :	SNCH
Address :	11, Route de Sandweiler 5230 Sandweiler Luxembourg
Certificate / Report No. :	SNCH*2000/14*2005/88*2212*01/TCLM315-01

Place : Japan
Date : 21 October 2015 (21 / 10 / 2015)

Signature : Kimiya Kaneko
Name : Kimiya Kaneko
Position : Quality Dept. Manager

(fr)

Déclaration de conformité UE

Identification du produit

Produit :		Tondeuse à gazon autoportée	
Fabriquant :		BARONESS	
Type :		LM315	
Version(s) :		GC	
Numéro de série de début :		**30109**	
Niveau de puissance acoustique mesuré :		LwA 102.48	dB
Niveau de puissance acoustique garanti :		LwA 103	dB
Fabricant	Nom :	Kyoeisha Co., Ltd.	
	Adresse :	1-26, Miyuki-cho, Toyokawa, préfecture d'Aichi, Japon	

Conforme aux directives suivantes :

2006/42/CE	Machine (MD)
2004/108/CE	Compatibilité électromagnétique (CEM)
2000/14/CE	Émissions sonores de l'équipement de plein air

Conception et fabrication en respect des spécifications suivantes :

ISO 12100 : 2010 (2006/42/CE)
ISO 5395-1 : 2013 (2006/42/CE)
ISO 5395-3 : 2013 (2006/42/CE)
ISO 14982:1998 (2004/108/CE)

Fiche technique

Marque :	Kyoeisha Co., Ltd.
Adresse de la marque :	1-26, Miyuki-cho, Toyokawa, préfecture d'Aichi, Japon

Compilateur de la fiche technique (2006/42/CE)

Nom :	Kyoeisha U.K. Ltd.
Adresse :	Unit 5 Hatch Industrial Park Greywell Road, Basingstoke Hampshire RG24 7NG, Royaume-Uni

Procédures d'évaluation de la conformité

Contrôle de production interne : module A (2006/42/CE)
Examen de type CE : module B (2004/108/CE)
Contrôle interne de la production avec évaluation de la fiche technique et vérification périodique (2000/14/CE)

Organisme notifié impliqué (2000/14/CE)

Nom :	SNCH
Adresse :	11, Route de Sandweiler 5230 Sandweiler, Luxembourg
N° de certificat/rapport :	SNCH*2000/14*2005/88*2212*01/TCLM315-01

https://truckmanualshub.com/

(es)

Declaración de conformidad de la UE

Identificación del producto

Producto:		Cortacésped con conductor
Marca:		BARONESS
Tipo:		LM315
Versión:		GC
N.º de serie inicial:		**30109**
Nivel de potencia sonora medido:		LWA 102.48 dB
Nivel de potencia sonora garantizado:		LWA 103 dB
Fabricante	Nombre:	Kyoeisha Co., Ltd.
	Dirección:	1-26 Miyuki-cho, Toyokawa, Aichi-pref., Japón

Cumple las siguientes Directivas

2006/42/CE	Maquinaria (MD)
2004/108/CE	Compatibilidad electromagnética (EMC)
2000/14/CE	Emisiones sonoras de máquinas de uso al aire libre

Se ha diseñado y fabricado utilizando las siguientes especificaciones

ISO 12100 : 2010 (2006/42/CE)
ISO 5395-1 : 2013 (2006/42/CE)
ISO 5395-3 : 2013 (2006/42/CE)
ISO 14982:1998 (2004/108/CE)

Documentación técnica

Nombre del responsable:	Kyoeisha Co., Ltd.
Dirección del responsable:	1-26 Miyuki-cho, Toyokawa, Aichi-pref., Japón

Compilador del archivo técnico (2006/42/CE)

Nombre:	Kyoeisha U.K. Ltd.
Dirección:	Unit 5 Hatch Industrial Park Greywell Road, Basingstoke Hampshire RG24 7NG, Reino Unido

Procedimientos de evaluación de conformidad

Control de fabricación interno: Módulo A (2006/42/CE)
Examen de tipo CE: Módulo B (2004/108/CE)
Control interno de fabricación con evaluación de documentación técnica y comprobaciones periódicas (2000/14/CE)

Organismo notificado implicado (2000/14/CE)

Nombre:	SNCH
Dirección:	11, Route de Sandweiler 5230 Sandweiler Luxemburgo
Certificado/Informe n.º:	SNCH*2000/14*2005/88*2212*01/TCLM315-01

(de)

EU-Konformitätserklärung

Produktbeschreibung

Produkt:		Aufsitzrasenmäher
Marke:		BARONESS
Modell:		LM315
Version(en):		GC
Startseriennummer:		**30109**
Gemessener Schallleistungspegel:		LWA 102.48 dB
Garantierter Schallleistungspegel:		LWA 103 dB
Hersteller	Name:	Kyoeisha Co., Ltd.
	Adresse:	1-26 Miyuki-cho, Toyokawa, Aichi-pref.,Japan

Entspricht den folgenden Richtlinien

2006/42/EG	Maschinenrichtlinie
2004/108/EG	Elektromagnetische Verträglichkeit (EMV)
2000/14/EG	Geräuschemission von im Freien betriebenen Geräten

Unter Anwendung der folgenden Bestimmungen entwickelt und hergestellt

ISO 12100 : 2010 (2006/42/EG)
ISO 5395-1 : 2013 (2006/42/EG)
ISO 5395-3 : 2013 (2006/42/EG)
ISO 14982:1998 (2004/108/EG)

Technische Dokumentation

Name des Halters	Kyoeisha Co., Ltd.
Adresse des Halters	1-26 Miyuki-cho, Toyokawa, Aichi-pref.,Japan

Technische Unterlagen erstellt von (2006/42/EG)

Name:	Kyoeisha U.K.Ltd.
Adresse:	Unit 5 Hatch Industrial Park Grewell Road,Basingstoke Hampshire RG24 7NG, Großbritannien

Konformitätsbewertungsverfahren

Interne Produktionskontrolle : Modul A (2006/42/EG)
EG-Baumusterprüfung : Modul B (2004/108/EG)
Interne Produktionskontrolle mit Bewertung der technischen Unterlagen und regelmäßiger Überprüfung (2000/14/EG)

Beteiligte benannte Stelle (2000/14/EG)

Name:	SNCH
Adresse :	11, Route de Sandweiler 5230 Sandweiler Luxemburg
Bescheinigung/Bericht Nr. :	SNCH*2000/14*2005/88*2212*01/TCLM315-01

https://truckmanualshub.com/

(sv)

EU-försäkran om överensstämmelse

Produktidentifikation

Produkt :		Åkgräsklippare		
Märke:		BARONESS		
Typ:		LM315		
Version(er):		GC		
Serienummer startar på:		**30109**		
Uppmätt ljudeffektnivå:		LWA	102.48	dB
Garanterad ljudeffektnivå:		LWA	103	dB
Tillverkare	Namn:	Kyoeisha Co., Ltd.		
	Adress:	1-26 Miyuki-cho, Toyokawa, Aichi-pref., Japan		

Uppfyller följande direktiv

2006/42/EG	Maskindirektivet
2004/108/EG	Elektromagnetisk kompabilitet (EMC)
2000/14/EG	Bulleremission från utomhusutrustning

Följande kravspecifikationer har följts vid konstruktion och tillverkning

ISO 12100:2010 (2006/42/EG)
ISO 5395-1:2013 (2006/42/EG)
ISO 5395-3:2013 (2006/42/EG)
ISO 14982:1998 (2004/108/EG)

Teknisk dokumentation

Innehavarens namn:	Kyoeisha Co., Ltd.
Innehavarens adress:	1-26 Miyuki-cho, Toyokawa, Aichi-pref., Japan

Den tekniska filen(2006/42/EG) har tagits fram av

Namn:	Kyoeisha U.K.Ltd.
Adress:	Unit 5 Hatch Industrial Park Grewell Road, Basingstoke Hampshire RG24 7NG, Storbritannien

Förfarande för bedömning av överensstämmelse

Intern produktionskontroll: Modul A (2006/42/EG:2011/65/EU)
EG-typprovning: Modul B (2004/108/EG)
Intern kontroll av produktion med fastställande av teknisk dokumentation och periodiska kontroller (2000/14/EG)

Anmält organ (2000/14/EG)

Namn:	SNCH
Adress:	11, Route de Sandweiler 5230 Sandweiler Luxembourg
Certifikatnummer/rapportnummer:	SNCH*2000/14*2005/88*2212*01/TCLM315-01

https://truckmanualshub.com/

BARONESS®

Quality on Demand

KYOEISHA CO.,LTD.

Head Office 1-26, Miyuki-cho, Toyokawa, Aichi-Pref. 442-8530 Japan. Tel :(0533) 84-1390 Fax:(0533) 89-3623

LM315GC-UMA-GBZ/15K-00-S.K