https://truckmanualshub.com/

95UR

Concrete solutions. Always.

Engine 4TNV98CT

Engine power 53,7 kW - 73,0 HP

Operating Weight 9.100 kg

EUROCOMACH®

https://truckmanualshub.com/

95UR

Operating weight with rubber track	kg	9.100
Operating weight with steel track	kg	9.420
Travelling speed (AUTO TWO SPEED)	km/h	1a : 0 ÷ 2,6 / 2a : 0 ÷ 5,2
Slew speed	rpm	10

ENGINE

Type	YANMAR 4TNV98CT - STAGE 5	
Max. Power (2.100 rpm)	kW - HP	53,7 - 73,0
Displacement	cc	3.319
Number of cylinders	n°	4
Cooling	Liquid	
Consumption	lt/h	9,3
Alternator	V (A)	12 (80)
Battery	V (Ah)	12 (100/900)

HYDRAULIC SYSTEM

Circuit Type	Load Sensing system with "Flow Sharing" control valve with 11 elements	
Pump type	1 LS hydraulic variable pump with electronic control + 1 gear pump	
Pump displacement	cc	84 + 9
Pump capacity	lt/min	185 + 20
Max. circuit calibration pressure	bar	290 - 200 - 35
Auxiliary systems (max pressure): AUX 1 single or double effect with priority AUX 2 double effect AUX 3 double effect	lt/min (bar)	100 (200) 90/80 (290) 50/50 (290)

PERFORMANCES

Max. digging depth with standard arm (optional arm)	mm	4.220 (4.570)
Max. dumping height with standard arm (optional arm)	mm	5.450 (5.670)
Bucket breaking force (standard arm) ISO 6015	daN	5.850
Arm breaking force (standard arm) ISO 6015	daN	4.350
Traction force	daN	7.960
Ground bearing pressure with rubber tracks	kg/cm²	0,45
Max. slope	60% - 30°	

DIMENSIONS

Maximum width	mm	2.320
Total height	mm	2.560
Rear rotation radius	mm	1.155
Digging arm length std (optional)	mm	1.760 (2.110)
Tracks width	mm	450
Rollers number (for each side)	n°	5/1 (rubber track) 6/1 (steel track)

FILLINGS

Fuel tank	lt	105
Hydraulic oil tank	lt	90
Hydraulic circuit capacity	lt	120
Cooling system capacity	lt	25
Engine oil	lt	10

CONTROLS

Boom, dipper stick, bucket and turret swing	2 pilot joysticks
Tracks mouvement (included counter rotation)	2 pilot levers
Dozer blade	pilot lever
High priority auxiliary system with holding function AUX 1 (single or double effect)	electroproportional switch on right joystick
Auxiliary system AUX 2 (double effect)	electroproportional switch on right joystick
Low priority auxiliary system AUX 3 (double effect)	electroproportional switch on left joystick
Offset	electroproportional switch on left joystick

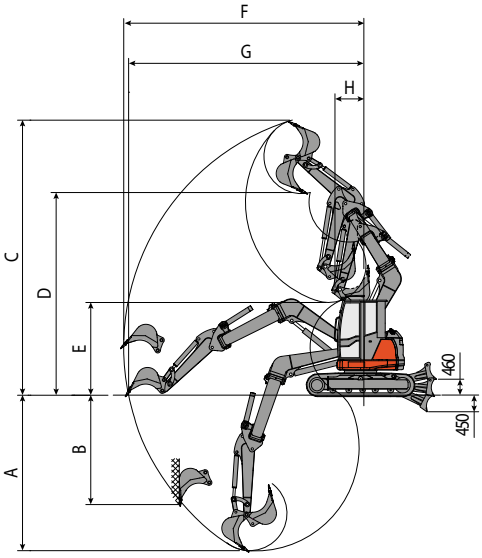

Standard arm (1.760 mm)	left	center	right
A	3.840	4.220	3.530
B	2.860	3.200	2.575
C	7.050	7.380	6.780
D	5.130	5.450	4.860
E	2.120	2.460	1.860
F	6.070	6.450	5.770
G	5.030	6.320	5.610
H (R min)	1.465	1.180	2.080

Long arm (2.110 mm)	left	center	right
A	4.190	4.570	3.880
B	3.230	3.590	2.950
C	7.280	7.600	7.010
D	5.340	5.670	5.070
E	1.795	2.120	1.540
F	6.380	6.760	6.075
G	6.240	6.630	5.920
H (R min)	1.540	1.260	2.090

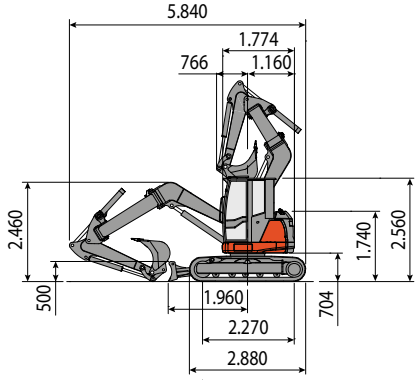

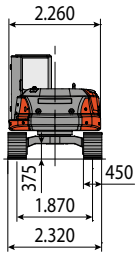

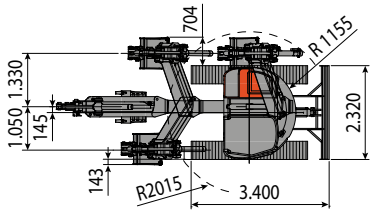

LIFTING CAPACITY

Opening arm from the rotation's center (m)
Lifting capacity (kg) at 1.5 m height

	3	4	5	MAX
Frontal and lowered dozer blade	*3.740	*2.815	*2.270	*2.050
Frontal and lifted dozer blade	2.435	1.745	1.295	1.185
Lateral	2.590	1.690	1.210	1.010

* Indicates the hydraulic load limit.

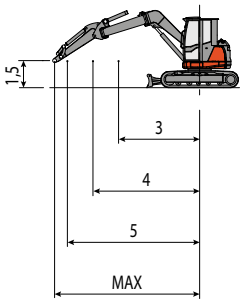

The lifting capacity is based on the ISO 10567 and it does not exceed more than the 75% of static tipping load or more than the 87% of the hydraulic lifting capacity of the machine.

EUROCOMACH®

These pictures may include optional rather than standard settings. Technical features are not binding and may be modified without notice in any moment.