https://truckmanualshub.com/

Operator's Manual

Do not remove this manual from the truck.

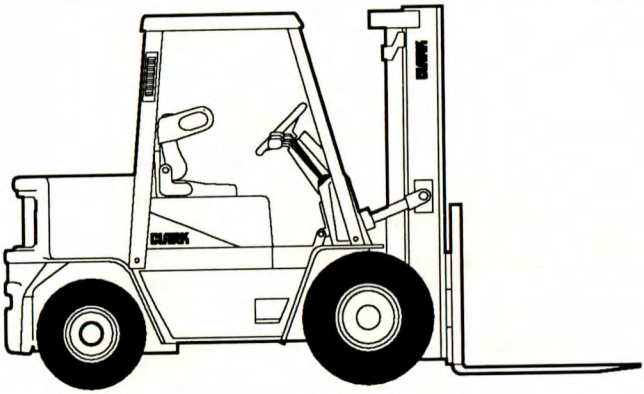

GPX 35/40/45/50/55

CLARK

Book No. 2808496
OM 606

https://truckmanualshub.com/

Record the following information pertaining to your truck.

Model No. _____
Serial No. _____
Customer Truck Identification No. _____
Truck Weight, Empty _____
Truck Rated Capacity _____
Truck Gross Weight _____
Truck Gross Weight, Loaded w/ Rated Load _____
Special Equipment or Attachments _____

IMPORTANT

Do not expose this manual to hot water or steam.

The following warnings are provided pursuant to California Health & Safety Code Sections 25249.5 et. seq:

⚠ WARNING

California Proposition 65

This product contains and emits chemicals known to the State of California to cause cancer, birth defects and other reproductive harm.

CALIFORNIA

Proposition 65 Warning

Diesel engine exhaust and some of its constituents are known to the State of California to cause cancer, birth defects or other reproductive harm.

⚠ WARNING

The engine exhaust from this product contains chemicals known to the State of California to cause cancer, birth defects or other reproductive harm.

1995 Clark Material Handling Company

https://truckmanualshub.com/

Operator's Manual

You must be trained and authorized to operate a lift truck.

YOU can prevent accidents

First: Learn safe operating rules and your company rules.

Next: Read your Operator's Manual. If you do not understand it, ask your supervisor for help.

Learn about the unit you operate.

KNOW YOUR TRUCK

Then: Practice operating your truck safely.

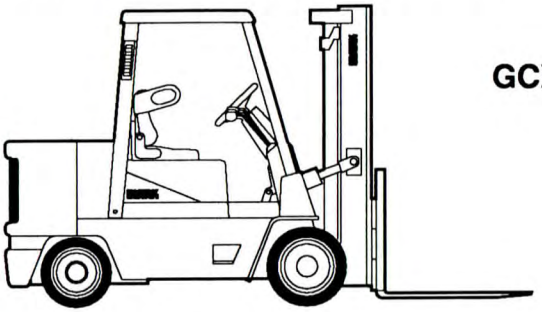

GCX 30-50

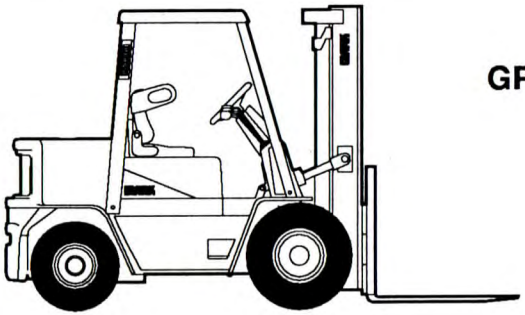

GPX 30-55

And: Keep your truck in safe operating condition with correct and timely maintenance.

Breaking these rules will cause serious or fatal injury to yourself and others

https://truckmanualshub.com/

A Message to CLARK Lift Truck Operators

Lift trucks are specialized machines with unique operating characteristics, designed to perform a specific job. Their function and operation is not like a car or ordinary truck. They require specific instructions and rules for safe operation and maintenance.

Safe operation of lift trucks is of primary importance to CLARK. Our experience with lift truck accidents has shown that when accidents happen and people are killed or injured, the causes are:

- **Operator not properly trained**
- **Operator not experienced with lift truck operation**
- **Basic safety rules not followed**
- **Lift truck not maintained in safe operating condition**

For these reasons, CLARK wants you to know about the safe operation and correct maintenance of your lift truck.

This manual is designed to help you operate your lift truck safely. This manual shows and tells you about safety inspections and the important general safety rules and hazards of lift truck operation. It describes the special components and features of the truck and explains their functions. The correct operating procedures are shown and explained. Illustrations and important safety messages are included for clear understanding. A Section on maintenance and lubrication is included for the lift truck mechanic.

https://truckmanualshub.com/

The operator's manual is not a training manual. It is a guide to help trained and authorized operators safely operate their lift truck by emphasizing and illustrating the correct procedures. However, it cannot cover every possible situation that may result in an accident. You must watch for hazards in your work areas and avoid or correct them. It is important that you know and understand the information in this manual and that you know and follow your company safety rules! Be sure that your equipment is maintained in a safe condition. Do not operate a damaged truck. Practice safe operation every time you use your lift truck. Let's join together to set new standards in safety.

Remember, before you start operating this lift truck, be sure you understand all driving procedures. It is your responsibility, and it is important to you and your family, to operate your lift truck safely and efficiently. Be aware that the Federal Occupational Safety and Health Act (OSHA) and state laws require that operators be completely trained in the safe operation of lift trucks; if you think you need training, ask your supervisor.

CLARK lift trucks are built to take hard work, but not abuse. They are built to be dependable, but they are only as safe and efficient as the operator and the persons responsible for maintaining them. Do not make any repairs to this truck unless you have been trained in safe lift truck repair procedures and are authorized by your employer.

https://truckmanualshub.com/

https://truckmanualshub.com/

Contents of this Manual

This manual covers trucks with capacities from 6,000 lbs (3,000 kg) through 10,000 lbs (5,000 kg).

A Message to CLARK Lift Truck Operators ii

Introduction vi

How to Use this Manual viii

Safety Signs and Safety Messages x

Section 1. General Safety Rules 1-1

Section 2. Operating Hazards 2-1

Section 3. Know Your Truck 3-1

Section 4. Operator Maintenance and Care 4-1

Section 5. Starting and Operating Procedures 5-1

Section 6. Emergency Towing and Starting 6-1

Section 7. Planned Maintenance 8-1

Section 8. Specifications 9-1

Index Index-1

https://truckmanualshub.com/

Introduction

CLARK welcomes you to the growing group of professionals who own, operate, and maintain CLARK lift trucks. We take pride in the long tradition of quality products and superior value the CLARK name represents. This manual familiarizes you with safety, operating, and maintenance information about your new lift truck. It has been specially prepared to help you use and maintain your CLARK lift truck in a safe and correct manner.

Your CLARK lift truck has been designed and built to be as safe and efficient as today's technology can make it. As manufactured, it meets all the applicable mandatory requirements of ANSI B56.1-1988 Safety Standard for Powered Industrial Trucks. Each truck is also furnished with equipment to help you operate safely; for example, parking brake and horn are standard equipment.

Safe, productive operation of a lift truck requires both skill and knowledge on the part of the operator. The operator must know, understand, and practice the safety rules and safe driving and load handling techniques described in this manual. To develop the skill required, the operator must become familiar with the construction and features of the lift truck and how they function. The operator must understand its capabilities and limitations, and see that it is kept in a safe condition.

Routine Servicing and Maintenance

Regular maintenance and care of your lift truck is not only important for economy and utilization reasons; it is essential for your safety. A faulty lift truck is a potential source of danger to the operator, and to other personnel working near it. As with all quality equipment, keep your lift truck in good operating condition by following the recommended schedule of maintenance.

User Daily Inspection — Safety and Operating Checks

A lift truck should always be examined by the user, before driving, to be sure it is safe to operate. The importance of this procedure is emphasized in this manual with a brief illustrated review and later with more detailed instructions. CLARK dealers can supply copies of a helpful "Drivers Daily Checklist."

Planned Maintenance

In addition to the daily user inspection, CLARK recommends that a planned maintenance and safety inspection program (PM) be performed by a trained and authorized mechanic on a regular basis. The PM will provide an opportunity to make a thorough inspection of the safety and operating condition of your lift truck. Necessary adjustments and repairs can be done during the PM, which will increase the life of components and reduce unscheduled downtime. The PM can be scheduled to meet your particular application and lift truck usage.

The procedures for a periodic planned maintenance program that covers inspections, operational checks, cleaning, lubrication, and minor adjustments are outlined in this manual. Your CLARK dealer is prepared to help you with a Planned Maintenance Program with trained service personnel who know your lift truck and can keep it operating safely and efficiently.

Service Manual

In-depth service information for trained service personnel is found in *Service Manual SM593*

https://truckmanualshub.com/

How to Use this Manual

This manual is a digest of essential information about the safe operation of your lift truck.This manual acquaints you with the features and functions of your lift truck and explains how to maintain your lift truck. This manual is organized into eight major parts:

Section 1, General Safety Rules, reviews and illustrates accepted practices for safe operation of a lift truck.

Section 2, Operating Hazards, warns of conditions that could cause damage to the truck or injury to the operator or other personnel.

Section 3, Know Your Truck, describes the major operating components, systems, controls, and other features of your truck and tells how they function.

Section 4, Operator Maintenance and Care, presents details on how to perform the operator's daily safety inspection and refuel the lift truck.

Section 5, Starting and Operating Procedures, discusses specific instructions on the safe, efficient operation of your lift truck.

Section 6, Emergency Towing and Starting, gives instructions for towing your truck in an emergency and for using battery jumper cables to start you truck in an emergency.

Section 7, Planned Maintenance, describes the PM program.

Section 8, Specifications, provides reference information and data on features, components, and maintenance items.

Also, the **Index** helps you locate information about various topics.

NOTICE: The descriptions and specifications included in this manual were in effect at the time of printing. CLARK Material Handling Company reserves the right to make improvements and changes in specifications or design, without notice and without incurring obligation. Please check with your authorized CLARK dealer for information on possible updates or revisions.

The examples, illustrations, and explanations in this manual should help you improve your skill and knowledge as a professional lift truck operator and take full advantage of the capabilities and safety features of your new lift truck.

https://truckmanualshub.com/

The first Section of the manual is devoted to a review, with illustrations and brief messages, of general safety rules and the major operating hazards you can encounter while operating a lift truck. Next, you will find descriptions of the components of your specific lift truck model and how the instruments, gauges, and controls operate. Then, you will find a discussion of safe and efficient operating procedures, followed by instructions on how to tow a disabled lift truck. The later sections of the manual are devoted to maintenance and truck specifications.

Take time to carefully read the "Know Your Truck" section. By acquiring a good basic understanding of your truck's features, and how they function, you are better prepared to operate it both efficiently and safely.

In "Planned Maintenance," you will find essential information for correct servicing and periodic maintenance of your truck, including charts with recommended maintenance intervals and component capacities. Carefully follow these instructions and procedures.

Each major Section has its own table of contents, so that you can find the various topics more easily. If you cannot find a topic in the table of contents, check the index at the back of the manual.

We urge you to first carefully read the manual from cover to cover. Take time to read and understand the information on general safety rules and operating hazards. Acquaint yourself with the various procedures in this manual. Understand how all gauges, indicator lights, and controls function. Please contact your authorized CLARK dealer for the answers to any questions you may have about your lift truck's features, operation, or manuals.

Operate your lift truck safely; careful driving is your responsibility. Drive defensively and think about the safety of people who are working nearby. Know your truck's capabilities and limitations. Follow all instructions in this manual, including all IMPORTANT, CAUTION, WARNING, and DANGER messages to avoid damage to your lift truck or the possibility of any harm to yourself or others.

This manual is intended to be a permanently attached part of your lift truck. Keep it on the truck as a ready reference for anyone who may drive or service it. If the truck you operate is not equipped with this manual, ask your supervisor to obtain one and have it attached to the truck. And, remember, your CLARK dealer is pleased to answer any questions about the operation and maintenance of your lift truck and will provide you with additional information should you require it.

https://truckmanualshub.com/

Safety Signs and Safety Messages

Improper operation can cause accidents. Don't take chances with incorrect or damaged equipment. **Read** and **understand** the procedures for safe driving and maintenance outlined in this manual. Don't hesitate to ask for help. **Stay alert!** Follow safety rules, regulations, and procedures. Avoid accidents by recognizing dangerous procedures or situations before they occur. **Drive and work safely** and follow the safety signs and their messages on the truck and in this manual.

Safety signs and messages are placed in this manual and on the truck to provide instructions and identify specific areas where potential hazards exist and special precautions should be taken. Know and understand the meaning of these instructions, signs, and messages. Damage to the truck, death, or serious injury to you or other persons may result if these messages are not followed. If warning decals are damaged, they must be replaced. Contact your CLARK dealer for replacements.

NOTICE

This message is used when special information, instructions or identification are required relating to procedures, equipment, tools, pressures, capacities and other special data.

IMPORTANT

This message is used when special precautions should be taken to ensure a correct action or to avoid damage to or malfunction of the truck or a component.

CAUTION

This message is a reminder of safety practices that can result in personal injury if proper precautions are not taken.

WARNING

This message indicates a hazard exists that can result in injury or death if proper precautions are not taken.

DANGER

This message is used when an extreme hazard exists.

https://truckmanualshub.com/

General Safety Rules

Contents

Daily Inspection 1-2
Do's and Don'ts 1-3
Seat Belts 1-4
Tip Over 1-4
No Riders 1-5
Pedestrians 1-6
Operator Protection 1-6
Pinch Points 1-7
Travel 1-8
Grades, Ramps, Slopes, and Inclines 1-9
Surface and Capacity 1-9
Parking 1-10

https://truckmanualshub.com/

General Safety Rules

Daily Inspection

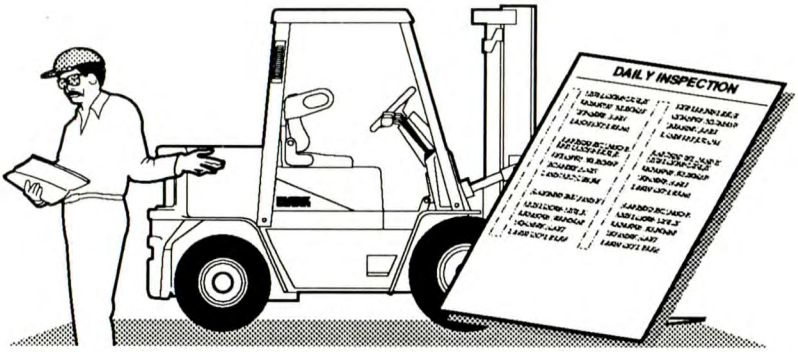

At the beginning of each shift, inspect your truck and fill out a daily inspection sheet.

Check for damage and maintenance problems.

Have repairs made before you operate the truck.

Do not make repairs yourself. Lift truck mechanics are trained professionals. They know how to make repairs safely.

https://truckmanualshub.com/

General Safety Rules

Do's and Don'ts

DON'T MIX DRUGS OR ALCOHOL WITH YOUR JOB.

DO WATCH FOR PEDESTRIANS.

DON'T BLOCK SAFETY OR EMERGENCY EQUIPMENT.

DO WEAR SAFETY EQUIPMENT WHEN REQUIRED

DON'T SMOKE IN "NO SMOKING" AREAS.

https://truckmanualshub.com/

General Safety Rules

Seat Belts

Make sure your seat belt is buckled at all times.

IMPORTANT
Seat belts can reduce injuries.

ALWAYS BUCKLE UP

TIP WITH THE TRUCK

If your truck starts to tip over,
DO NOT JUMP!!!

Your chance for survival in a tip-over are better if you stay with the truck, in your seat. Brace yourself as illustrated below.

1. **Stay in your seat.**
2. **Grip the wheel.**
3. **Brace your feet.**

https://truckmanualshub.com/

General Safety Rules

No Riders

DANGER

The operator is the only one who should be on a truck.

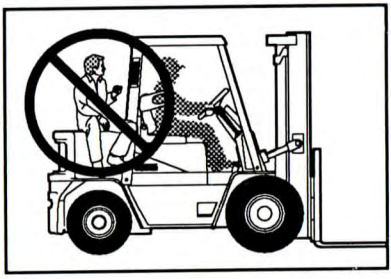

DANGER

Never transport personnel on the forks of a lift truck.

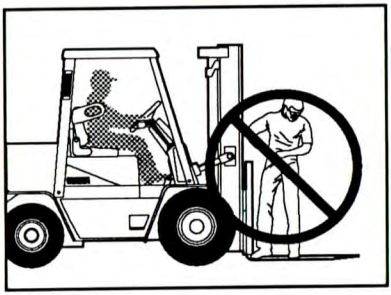

DANGER

Never allow anyone to walk under raised forks.

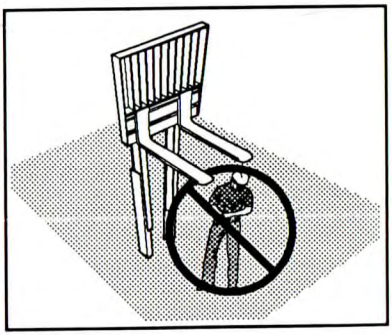

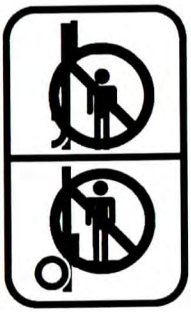

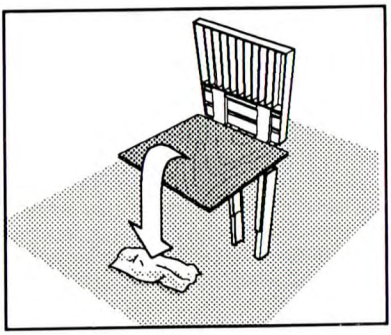

DANGER

There is special equipment to raise people for overhead work. DO NOT USE LIFT TRUCKS.

https://truckmanualshub.com/

General Safety Rules

Pedestrians

Watch where you are going. Look in the direction of travel. Pedestrians may use the same roadway you do. Sound your horn at all intersections or blind spots.

Watch for people in your work area even if your truck has warning lights or alarms. People may not watch for you. Make people stand back, even when you are parked.

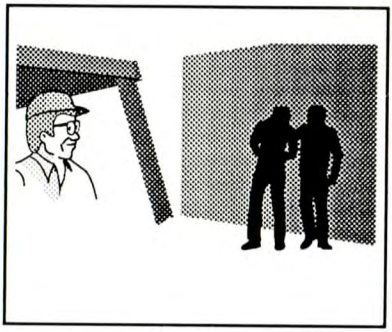

Operator Protection

Keep under the overhead guard.

Always keep your body within the confines of the truck.

Watch for intrusions into the operator's compartment.

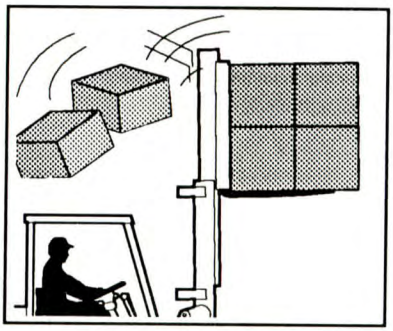

https://truckmanualshub.com/

General Safety Rules
Pinch Points

WARNING

Keep hands, feet and legs out of the upright.

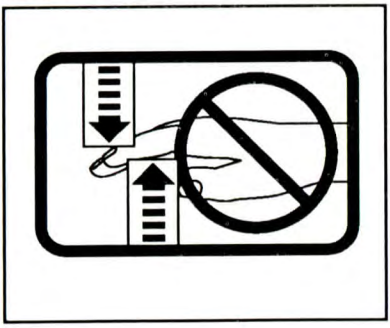

WARNING

Don't use the upright as a ladder.

CAUTION

Never try to repair the upright, carriage, chain, or attachment yourself! Never try to repair the upright, carriage, chain, or attachment yourself! Always get a trained mechanic.

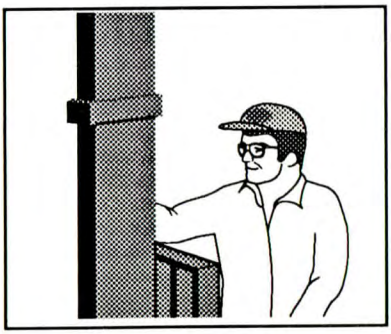

https://truckmanualshub.com/

General Safety Rules
Travel

Travel with the load near the operating surface and with upright tilted back to cradle the load whenever possible.

Never lift or lower the load when the truck is in motion.

When handling bulky loads that restrict your vision—operate your truck in reverse to improve visibility.

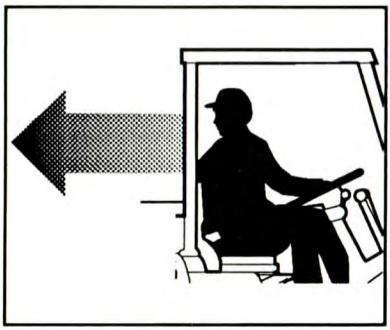

Unstable loads are a hazard to you and to your fellow workers. Always make certain that the load is well stacked and evenly positioned across both forks. Never attempt to lift a load with only one fork.

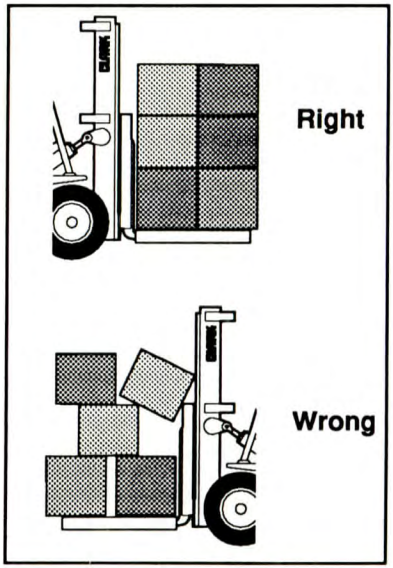

https://truckmanualshub.com/

General Safety Rules

Grades, Ramps, Slopes, and Inclines

Unloaded
Forks Downgrade

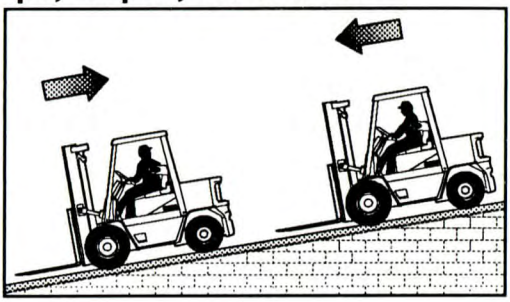

Loaded
Forks Upgrade

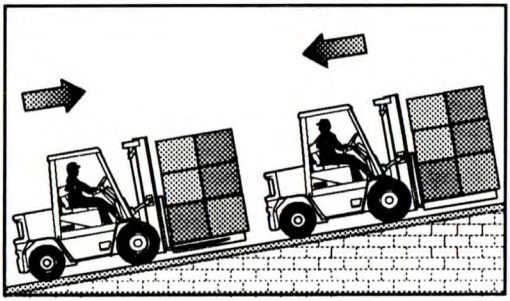

WARNING

Never turn on a grade, either loaded or unloaded.

Surface and Capacity

Avoid these conditions. They can cause a truck to tip over or lose traction for braking or driving.

Know the weight of your truck and load. Check capacities.

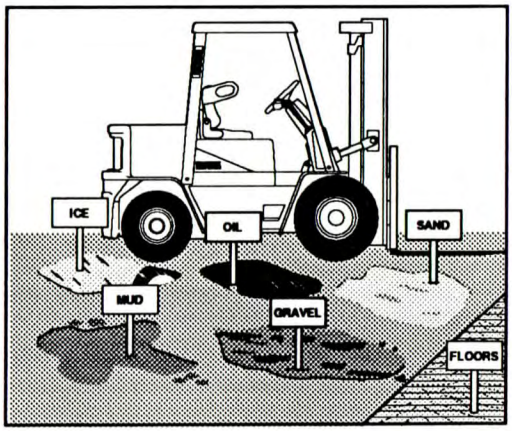

https://truckmanualshub.com/

General Safety Rules
Parking

Never park on a grade.

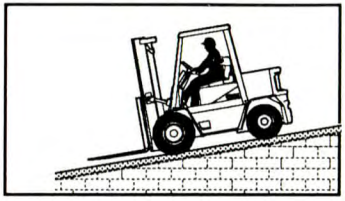

Always come to a complete stop before leaving truck.

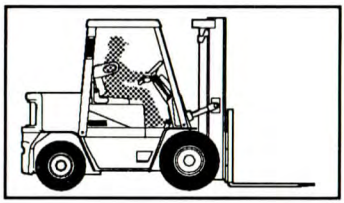

Be sure travel control is in NEUTRAL.

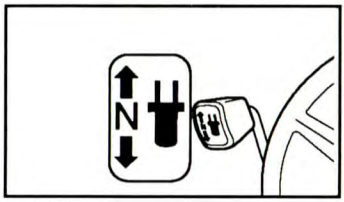

Lower forks fully to floor and tilt forward.

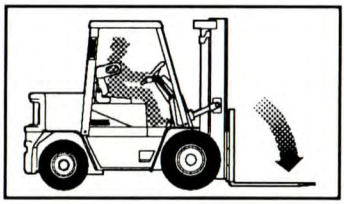

Turn key to OFF position.

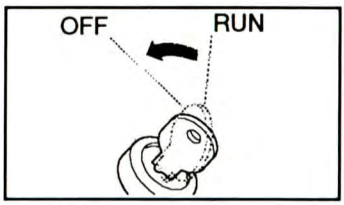

Set parking brake.

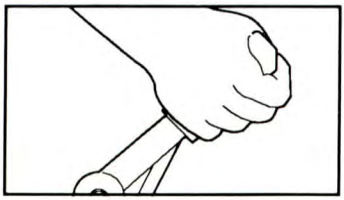

https://truckmanualshub.com/

Operating Hazards

Contents

Loose Loads 2-2
Long and Wide Loads 2-3
Rear Swing 2-3
Low Overhead Clearance 2-4
Drop-Offs 2-5
Right-Angle Stacking 2-6
Chain Slack 2-7
Pallets and Skids 2-8

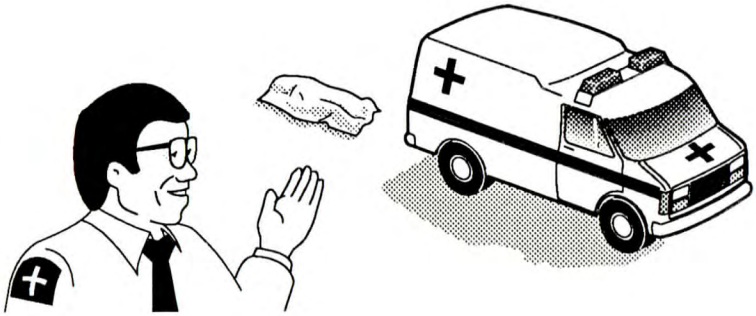

This Section shows hazards that may cause you, or someone around you, to be killed or badly hurt. As the operator, you must look for other hazards. Get your supervisor to help you identify and avoid those hazards.

https://truckmanualshub.com/

Loose Loads

WARNING

Loose or unbalanced loads are dangerous. Observe these precautions.

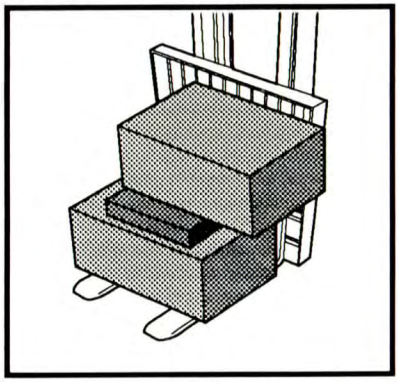

Never carry loose or uneven material.

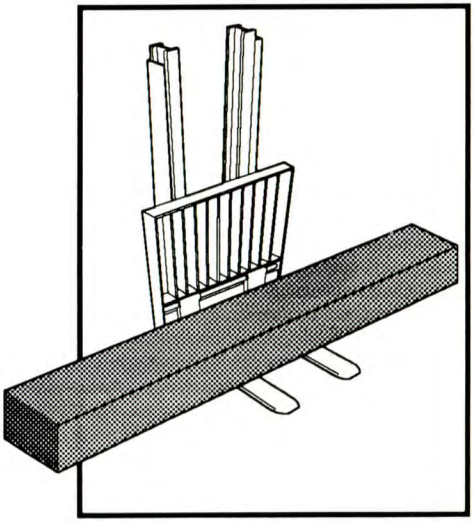

Center wide loads.

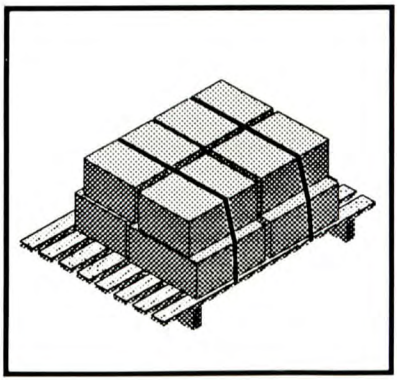

Stack and band loose material.

https://truckmanualshub.com/

Long and Wide Loads

WARNING

With long or wide loads, you need more room. So slow down and watch your clearance.

When extra-long material makes it necessary to travel with the load elevated, do so with extreme care and be alert to load end-swing when turning.

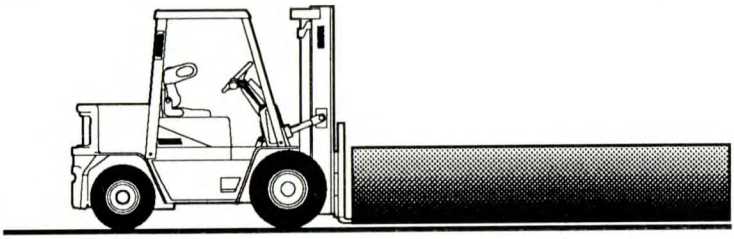

WARNING

A long load reduces the capacity of the truck. Know and understand your truck load rating.

Rear Swing

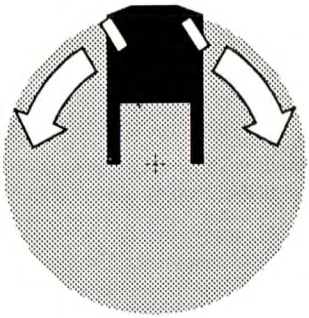

WARNING

When turning, be sure the rear end of the truck does not swing into racks, posts, etc.

https://truckmanualshub.com/

Low Overhead Clearance

WARNING

Watch overhead: Moving into overhead structures can tip a truck over.

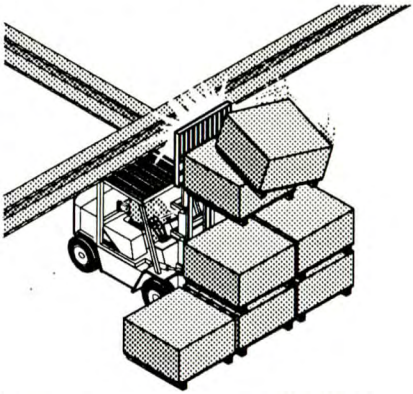

WARNING

Know the height of your truck, with and without a load. Check your clearances. Keep the load low and tilted back.

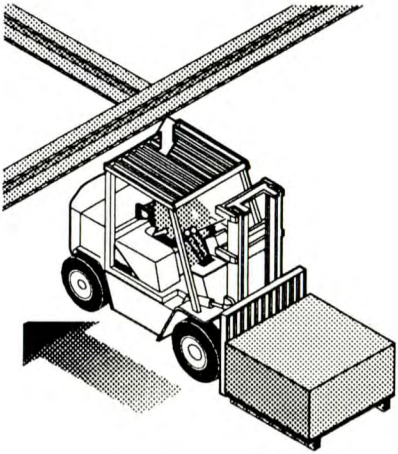

Fast Turns and High Loads

WARNING

Slow down before turning. The truck can tip over.

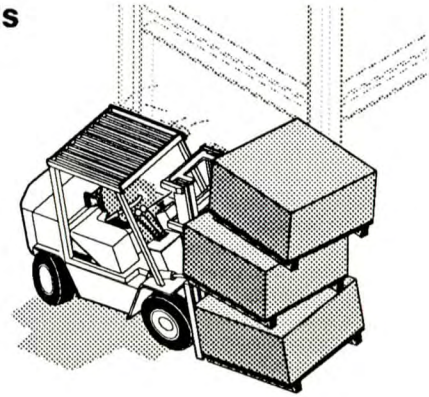

https://truckmanualshub.com/

WARNING

Turn to sharp with a raised load and your truck can tip even at slow speeds. Travel with a load raised only when removing or depositing a load.

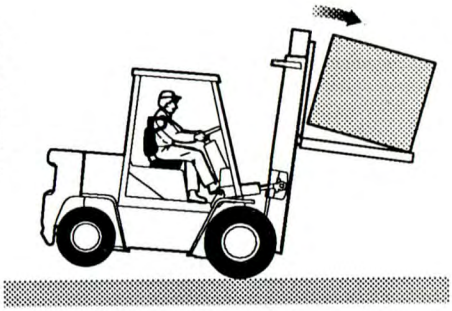

Drop-Offs

WARNING

To avoid these hazards, you must:

- **Talk to the truck driver yourself; make sure the driver does not move the trailer until you are done!**
- **Apply trailer brakes.**
- **Use wheel chocks.**
- **Use trailer-to-dock locking system if available.**

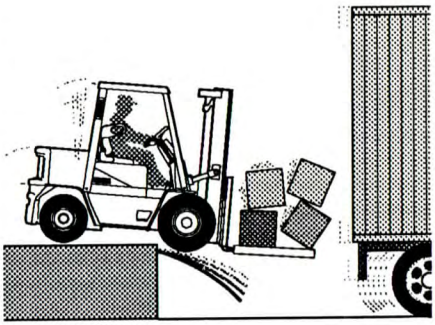

The impact of moving in and out of a trailer may cause the trailer to creep or move.

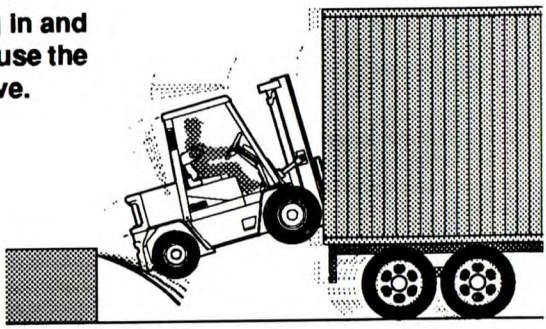

https://truckmanualshub.com/

Right-Angle Stacking

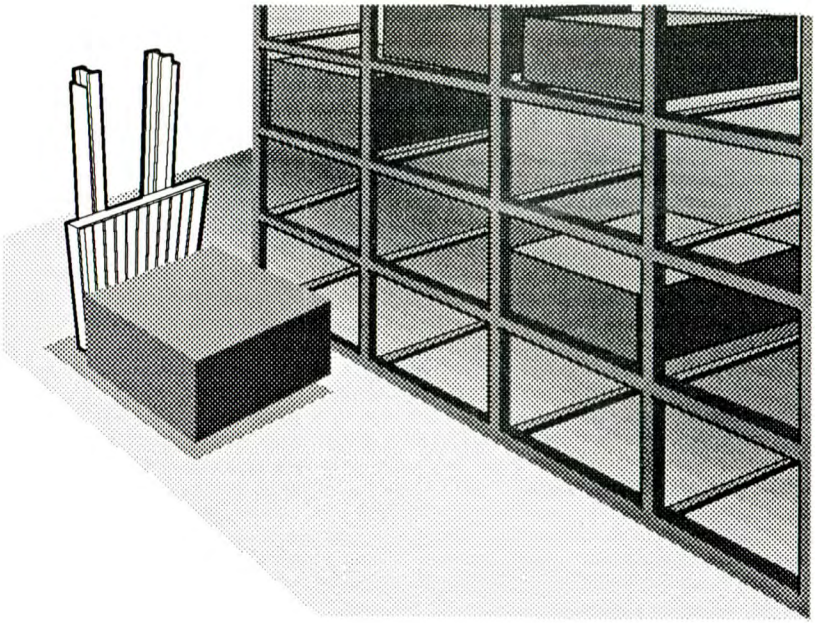

SLOWLY

WARNING

When right-angle stacking or moving with a raised load to clear low objects, avoid sharp turns and move slowly.

https://truckmanualshub.com/

Chain Slack

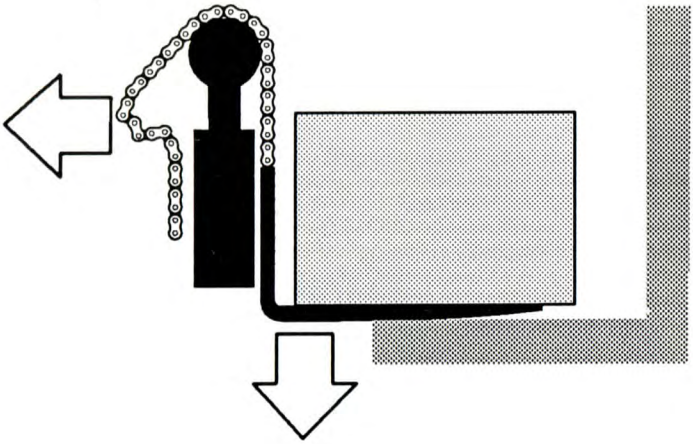

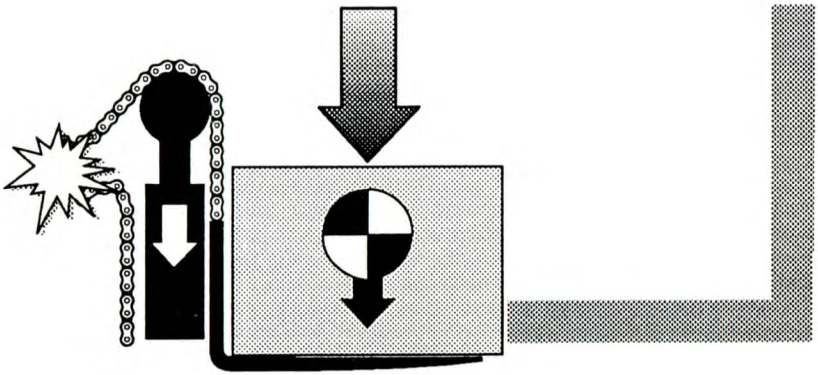

WARNING

Slack chains mean rail or carriage hang-up. Raise the forks before you move. Relieving hang-ups by traveling can cause broken chains, serious damage and injury.

https://truckmanualshub.com/

Pallets and Skids

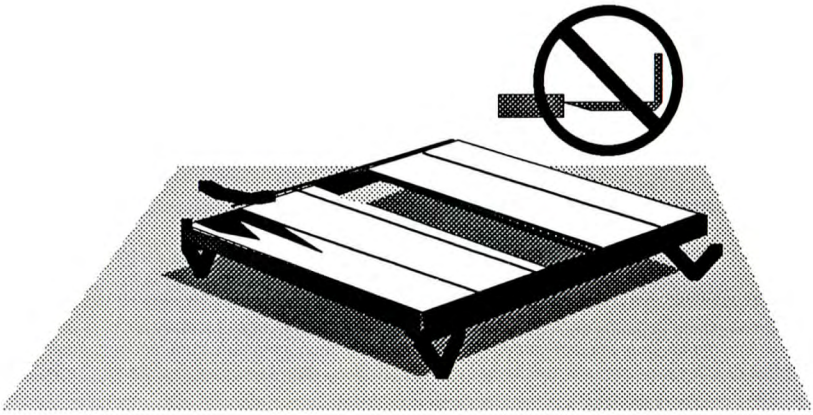

WARNING

Do not move or store materials on damaged pallets or skids. Items can fall through them causing severe injury or death!

Be sure the pallet or skid you are using is in good condition and does not have defective or missing components and fasteners.

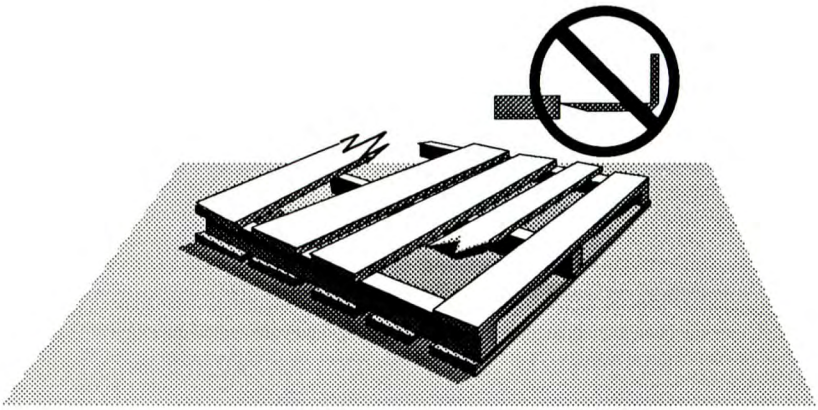

https://truckmanualshub.com

Know Your Truck

Contents

Truck Model Description 3-2
Data/Safety Plates and Decals 3-3
Operator's Compartment and Controls 3-8
Key/Start Switch 3-10
Seat Adjustment 3-11
Parking Brake 3-11
Hour Meter 3-12
Steering System 3-12
Horn Button 3-12
Steering Pylon 3-12
Brake Pedals 3-12
Drive Control Lever 3-13
High or Low Speed Lever 3-13
Hydraulic Control Levers 3-14
Lift Control Function 3-14
Tilt Control Function 3-14
Auxiliary Control Valve Lever (Optional) 3-14
LPG Fuel System 3-15
CNG Fuel System 3-16

https://truckmanualshub.com/

Truck Model Description

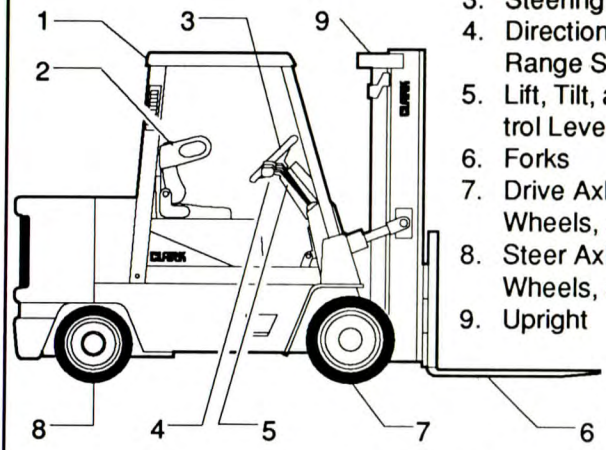

1. Overhead Guard
2. Seat and Seat Belt
3. Steering Handwheel
4. Direction Control and Range Shift Levers
5. Lift, Tilt, and Auxiliary Con trol Levers
6. Forks
7. Drive Axle, Cushion Wheels, and Tires
8. Steer Axle, Cushion Wheels, and Tires
9. Upright

GCX 30-50

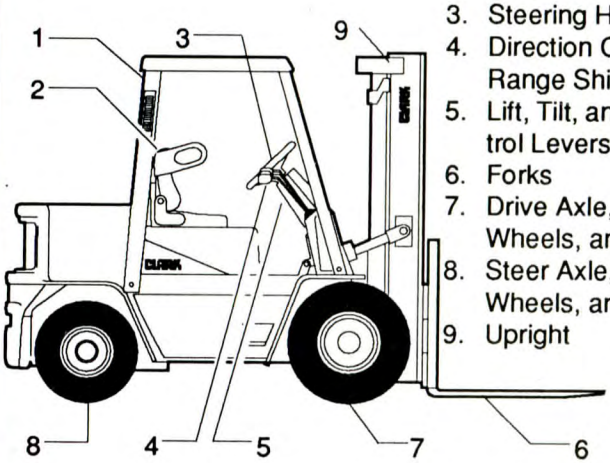

1. Overhead Guard
2. Seat and Seat Belt
3. Steering Handwheel
4. Direction Control and Range Shift Levers
5. Lift, Tilt, and Auxiliary Con trol Levers
6. Forks
7. Drive Axle, Pneumatic Wheels, and Tires
8. Steer Axle, Pneumatic Wheels, and Tires
9. Upright

GPX 30-55

https://truckmanualshub.com/

Data/Safety Plates and Decals

IMPORTANT

Do not operate a lift truck with damaged or missing decals or data plates. Replace them immediately. They contain important information (as described on the following pages). Refer to the Service Manual for the location of all decals.

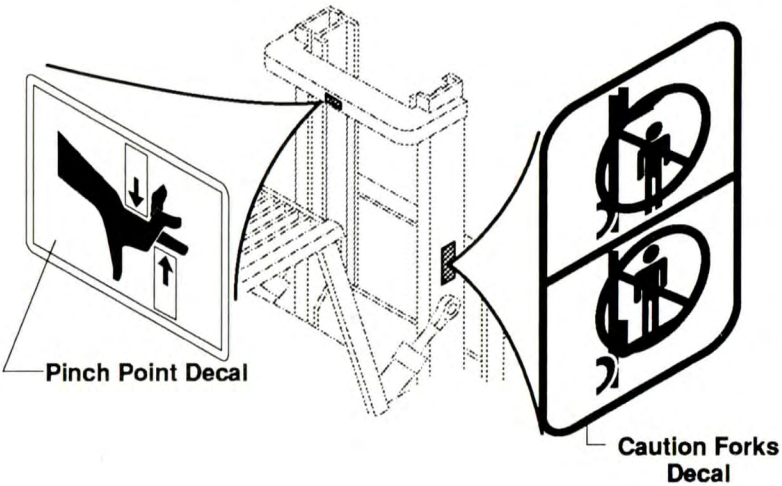

https://truckmanualshub.com/

Truck Data and Capacity Plate

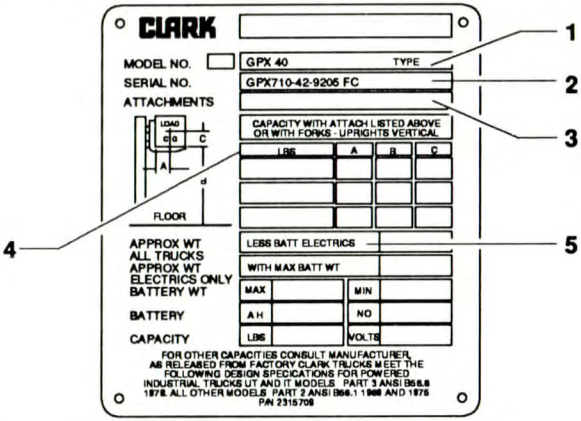

1. Truck model number or registered name.
2. Truck serial number—An identification number assigned to this particular truck and should be used when requesting information or ordering service parts for this truck from your authorized CLARK dealer. The serial number is also stamped on the frame.
3. Attachment description (if any installed)—The user must see that the truck is marked to identify the attachment(s), including the weight of the truck/attachment combination and truck capacity with the attachment.
4. Capacity rating, load center, and lifting height data—Shows the maximum load capacity of this truck with relation to load centers and fork heights (see diagram on plate).Personal injury and damage to the truck can occur if these capacities are exceeded. **Do not exceed the maximum capacity specified**.
5. Truck weight—The approximate weight of the truck without a load on the forks. This weight plus the weight of the load must be considered when operating on elevators, elevated floors, etc. to be sure they are safe.

CAUTION

When attachments are added or if the truck is modified, the capacity of the truck may be affected. Contact your authorized CLARK dealer for a new nameplate showing the revised capacity.

https://truckmanualshub.com/

Operator Safety Warning Plate

⚠ WARNING

BREAKING THESE RULES WILL CAUSE SERIOUS OR FATAL INJURY TO YOURSELF AND OTHERS.

- Do not operate this lift truck unless you are trained and authorized. Read and understand operators manual before starting lift truck. Clark dealers have replacement manuals.
- Do not operate damaged or faulty lift truck. Do not attempt repairs unless you are trained and authorized.
- Look where you drive. Watch out for people obstructions (especially overhead), and drop-offs. If load blocks your view, drive backward except up slopes.
- Lift trucks will tip over if not properly operated. Slow down before turning. Do not turn on slopes. Drive with forks or attachments fully lowered and tilted back. Check tires for correct pressure.
- Forks or attachments can fall rapidly if not properly controlled or maintained. Do not use this lift truck to raise people.
- Protect against falling objects. Overhead guard and load backrest extension must be in place.
- Do not load lift truck over capacity on nameplate. Move long, high, or wide loads carefully. Do not move unstable loads.
- Before getting off lift truck, lower forks or attachments all the way, put drive in neutral. turn off key, and set parking brake.

Clark Equipment Co., 1984 Sit Down Rider 2387649

The operator's safety warning plate describes basic instructions for safe operation of a lift truck. Read and understand these instructions and other safety messages in this manual and on the lift truck.

https://truckmanualshub.com/

IMPORTANT

Safety and warning decals are placed in conspicuous locations on the truck to remind you of essential procedures or to prevent you from making an error that could damage the truck or possibly cause personal injury. You should know, understand, and follow these instructions. Safety and warning decals should be replaced immediately if missing or defaced (damaged or illegible). Refer to your Service Manual for the location of all decals.

Seat Belt/Tip-Over Warning Decal

This decal is located on the seat deck, to the left of the operator. It's purpose is to remind the operator that staying in the seat provides the best chance of avoiding injury in the event of a truck-tipping mishap.

Lift trucks can be tipped over if operated improperly. Experience with lift truck accidents has shown that the driver cannot react quickly enough to jump clear of the truck and overhead guard as the truck tips. To protect operators from severe injury or death in the event of a tip-over, it is best to be held securely in the seat. So, please, always buckle up when driving your lift truck.

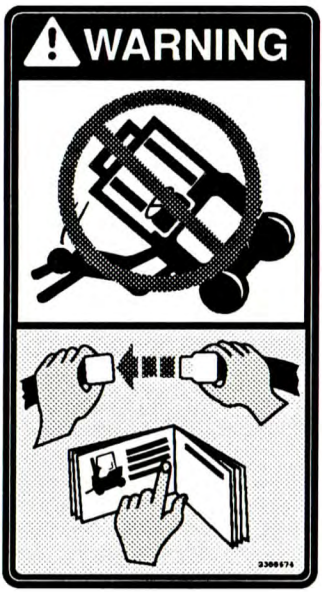

ALWAYS BUCKLE UP!

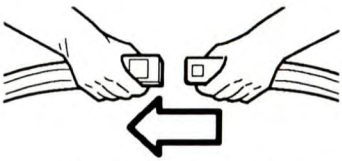

Seat belts can reduce injuries

https://truckmanualshub.com/

Upright Warning Decal

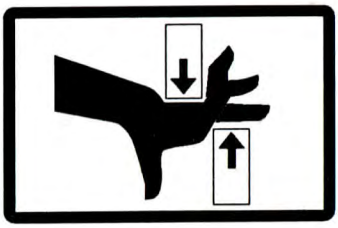

This safety decal is placed on the upright to warn of the danger of injury from movement between rails, chains, sheaves, fork carriage, and other parts of the upright assembly. Do not climb on or reach into the upright. Personal injury will result if any part of your body is put between moving parts of the upright.

Keep Away from Forks Decal

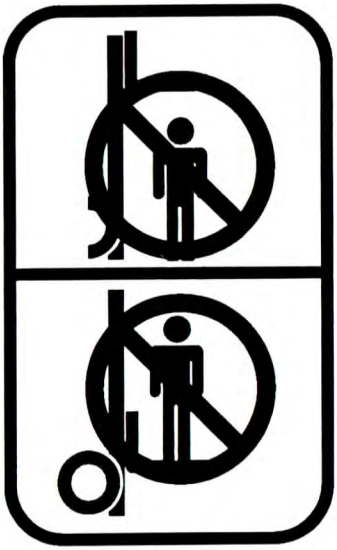

This safety decal is placed on the upright to warn of the danger of injury from forks when they are in the raised position. Do not ride on or stand under forks or attachments. The forks can fall and cause injury or death. Always make sure that the forks are in the fully lowered position when they are not handling a load.

Fan Warning Decal

This safety decal is displayed on the cooling fan shroud of the radiator to warn of the danger of injury from spinning fan blades when the engine is running. Be sure that you keep your hands, fingers, arms, and clothing away from a spinning fan. Don't stand in line with a spinning fan. Fan blades can break at excessively high RPM and be thrown out of the engine compartment.

https://truckmanualshub.com/

Operator's Compartment and Controls

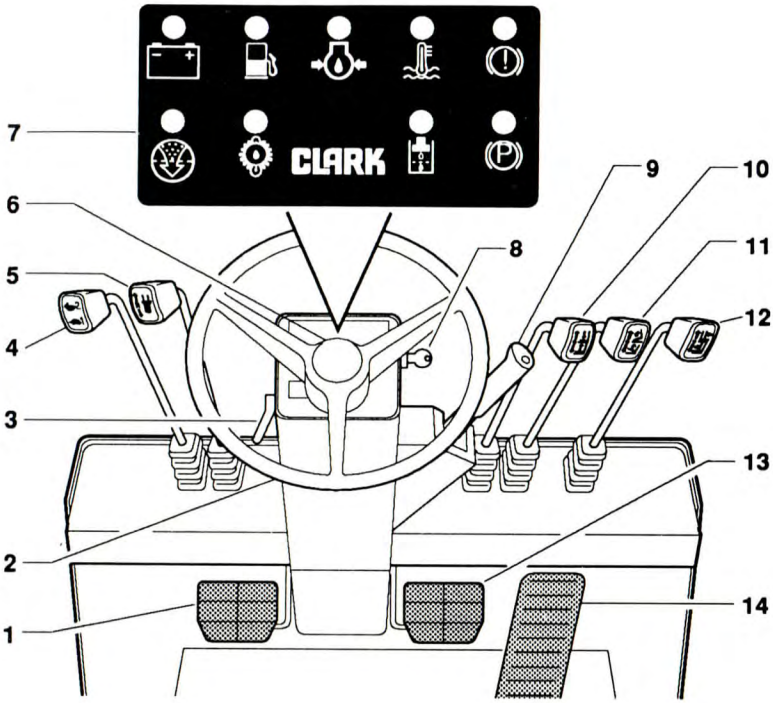

1. Inching Pedal
2. Steering Handwheel
3. Pylon Release Lever
4. Range Shift Lever
5. Directional Control Lever
6. Horn Button
7. Diagnostics Display
8. Key Switch
9. Parking Brake Lever
10. Lift Control Lever
11. Tilt Control Lever
12. Aux Valve Control Lever
13. Brake Pedal
14. Accelerator Pedal

IMPORTANT

Familiarize yourself with the controls and follow safe operating procedures.

Operator's Compartment and Controls

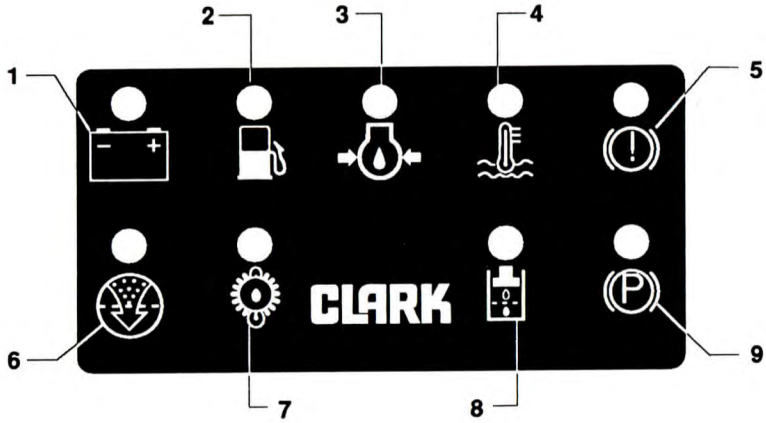

Warning Lights

1. Low Battery
2. Low Fuel Tank
3. Low Engine Oil Pressure
4. High Water Temperature
5. Low Brake Fluid
6. Air Filter Clogged
7. High Transmission Temperature
8. Hydraulic Oil Filter Dirty
9. Parking Brake Applied

If any of these Warning Lights show an irregularity or when the warning lights do not work, have them checked immediately. Check the warning lights regularly while operating your lift truck.

https://truckmanualshub.com/

Key/Start Switch

The Key/Start Switch:

- Turns the truck electrical system on and off.
- Connects and tests the warning indicator lights.
- Connects the starter motor circuit when engine is to be started.

The Key/Start Switch has three positions.

When the key is in the vertical OFF position, all truck electrical circuits are off, and the key can be removed. From the OFF position, the key can be turned clockwise to the START position, where the starter motor is engaged and part of the truck electrical system is energized. When the key is released from the START position, it automatically returns to the RUN position, where the starter is disengaged and the entire truck electrical system is on.

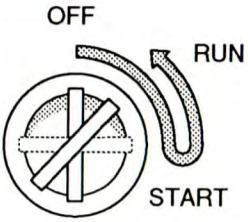

The key switch has a mechanical "anti-restart" feature, which prevents the engine starter from being engaged and damaged if the operator attempts to start the engine when it is already running. The key switch cannot be turned from the START position from the RUN position without returning the key to the OFF position. If the engine stops running, the key switch must be turned to the OFF position before it can be restarted.

Preheating (Diesel Only))

With the switch in the ON position the warning lights light up and the glow plugs are pre-heating automatically. As soon as the glow plugs have reached the required temperature, the warning lights will go out. The engine can then be started. For improved starting, pre-heating is continued for about 5 seconds after the warning lights have gone out. To repeat the preheating process turn the key into the OFF and then into the ON position.

Engine Stop

Run the engine at idling speed briefly before shutting it off. Turn the key switch to the OFF position to shut the engine down.

IMPORTANT

Do not leave the truck without lowering the forks turning off the engine or without applying parking brake.

https://truckmanualshub.com/

Seat Adjustment

The seat adjustment lever is located on the left side under the seat. To unlock the seat, push the lever to the left and adjust the seat so that all controls may be comfortably reached. Release the lever and make sure that the seat locks into postion.

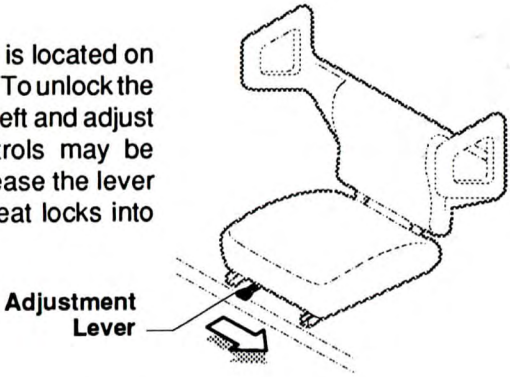

Parking Brake

The parking brake lever mechanically operates the parking brake. Pull the lever toward the operator to apply the parking brake. The lever should snap-lock easily into the applied position, when correctly adjusted. Push the lever forward to release the parking brake.

The parking brake, which is independent of the service brake system, is actuated by a cable.

The cable tension can be adjusted by turning the screw in the end of the parking brake handle—clockwise to tighten the cable, counter-clockwise to loosen it.

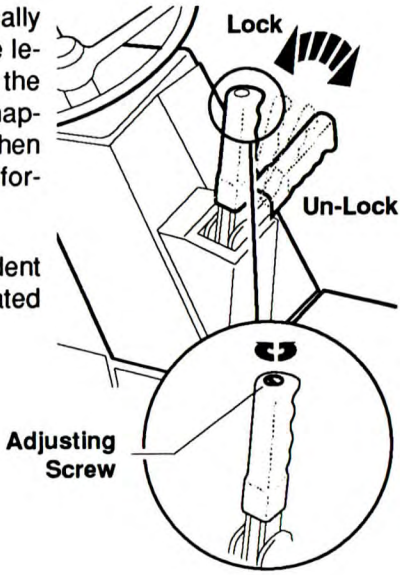

WARNING

Always apply parking brake before leaving truck.

WARNING

Never operate your lift truck with a defective parking brake.

https://truckmanualshub.com/

Hour Meter

Starting the engine also starts the operating hour meter. You can easily keep to the prescribed maintenance intervals on the basis of the indicated operating hours.

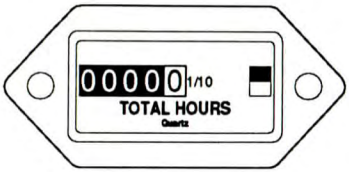

Steering System

The steering handwheel operates a steering control valve that directs the oil flow to the steering cylinder connected to the steer axle. The steering control valve also acts as a pump to provide manual steering if the hydraulic pump stops.

Horn Button

The horn button is located in the center hub of the steering handwheel and is electrically connected by contacts and wiring to the horn assembly.

Steering Column Pylon

The pylon can be tilted forward or back then locked into position. By rotating the latch counterclockwise to unlock and clockwise to lock the pylon. When the pylon is free it can moved into a safe and comfortable operating position.

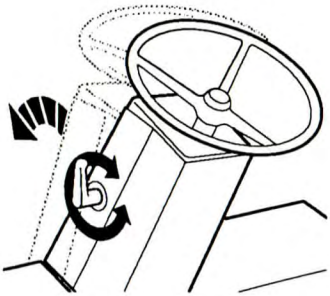

CAUTION

Make sure the pylon locking latch is tightened securely before operating truck.

Brake Pedals

The left hand (1) brake pedal (inching pedal) has two functions in order to improve handling and efficiency. While pressing the inching pedal the first part of its movement disconnects the power from the engine to the transmission. The amount of disconnect is dependent on the amount movement of the pedal. The last part of the travel activates the brake system.

https://truckmanualshub.com/

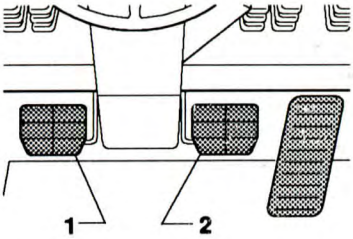

In this way you are able to lift a load rapidly with full engine RPM while traveling at creep speed
Therefore you are able to control the driving speed with the inching pedal while operating it like a clutch. This is very useful in confined working spaces. On ramps or inclines the right hand (2) brake pedal only should be used. When using the inching pedal on slopes the lift truck could move involuntary backwards or forwards.

CAUTION

Use the inching pedal only on level grades.

Direction Control Lever

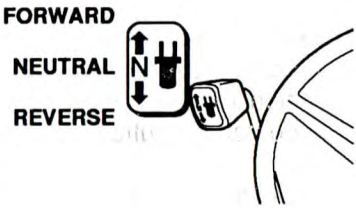

This lever is on the left next to the steering column. When changing the direction of travel, make sure that your lift truck has come to a complete stop before moving the lever to the other position.

IMPORTANT

For safety reasons, your CLARK forklift truck is fitted with a neutral start switch. The purpose of this is to prevent the engine from being started while in gear. Thus the engine may only start when the direction control lever is in the neutral position.

CAUTION

If the truck will start with the direction control lever in either forward or reverse, there is a problem with the neutral start switch and must be fixed.

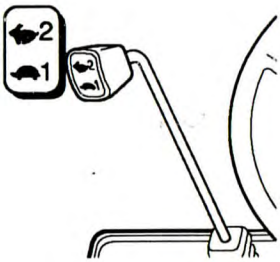

High or Low Speed Lever

There is also a gear lever ("High or Low Speed") on lift trucks with two-speed transmission.

https://truckmanualshub.com/

Hydraulic Control Levers

The lift and tilt control levers are to the right hand side of the steering wheel. If your machine is fitted with an attachment the lever to control it will be in this location also. The knobs on the levers have symbols on them which makes clear their particular functions.

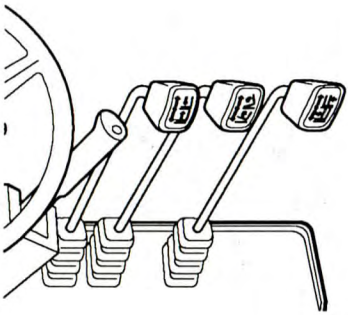

Lift Control Function

With the lift control lever, you are able to raise and lower the fork carriage on the upright. The lifting and lowering speeds are controlled through the main hydraulic valve by varying the lever position (amount of movement from the center or neutral position).

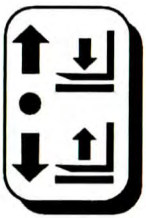

When the lift control lever is pushed forward, the fork carriage is lowered. When the lift control lever is pulled back the fork carriage is raised. You can also lower the fork carriage even if the key switch is OFF.

Tilt Control Lever

With the tilt control lever, you are able to control the tilting or vertical positioning of the upright and the angle of the forks. When the lever is pulled back, the upright and forks tilt backward. Push the lever forward to tilt the upright and forks forwards.

Auxiliary Control Lever (Optional)

An auxiliary control lever is mounted to the right of the tilt control lever. If your lift truck is equipped with an optional attachment, this lever lets you control the speed and direction of movement of this attachment.

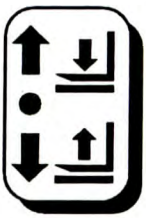

https://truckmanualshub.com/

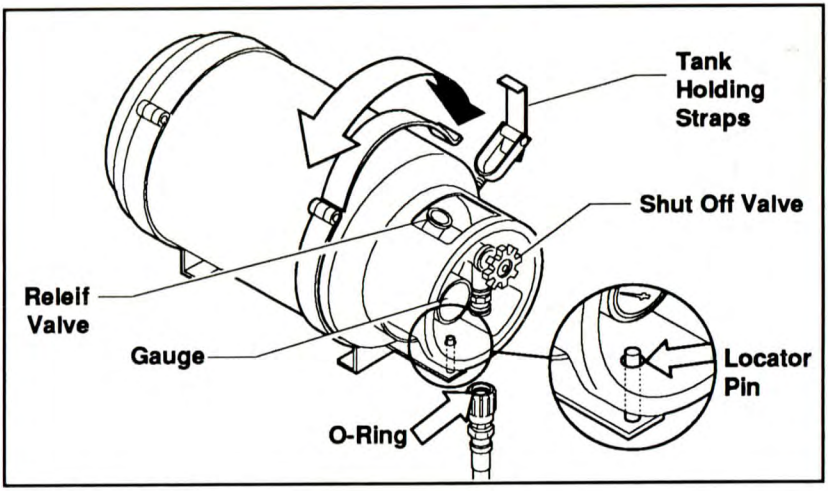

LPG Fuel System

WARNING

LPG IS HIGHLY FLAMMABLE. Never smoke when changing Tanks. Never change tanks with the engine running.

LPG IS HEAVIER THAN AIR. Always operate LPG-fueled lift trucks in a well-ventated area so that vital oxygen is present.

If your truck uses liquefied petroleum gas (LPG), the fuel is stored in a tank mounted on the truck. A shut-off valve, a safety check valve, a relief valve and a pressure gauge are attached to the tank.

You manually operate the shut-off valve to control the flow of fuel from the tank. You must close this valve when the engine is not running. Close this valve by hand only to a firm tightness. Do not over-tighten.

When you open the shut-off valve before starting the engine, turn the handle slowly; otherwise, the check valve will block fuel-flow for a two to three minute period.

The O-Ring on the coupling must be kept in good condition.

IMPORTANT

The tank must lock onto the locator pin before pin before the fastener is secured. This is to make sure that the relief valve is the proper orientation.

https://truckmanualshub.com/

CNG Fuel System

WARNING

Contents of the CNG tank are under extreme pressure. When refueling be very cautious. Make sure there is NO SMOKING, NO OPEN FLAMES. Make sure engine is turned off. CNG IS HIGHLY FLAMMABLE GAS.

CNG Tank

If your lift truck is fueled by compressed natural gas (CNG), the fuel is stored in a tank mounted on the truck. There is a shut-off valve on the tank and a relief valve that is both heat and pressure actuated. You manually operate the shut-off valve to control the fuel flow from the tank. You must manually close this valve at the end of each shift. Close the tank valve by hand to a firm tightness. **Do not over-tighten.**

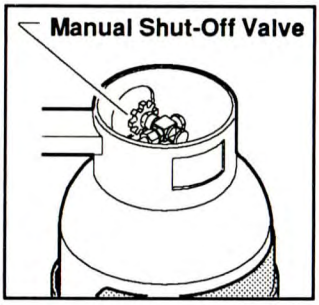

CNG Fuel Level Gauge

The amount of fuel remaining in the tank can be checked by looking at the gauge either on the dash or on the seat deck just to the right of the driver's seat. The gauge reads from 0 to 6000 psi. When the tank is full the gauge should read 3000 psi, this is the maximum working pressure. The truck should be refueled when the pressure drops below 500 psi.

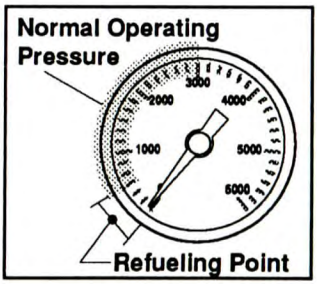

Emergency Shut-Off Valve

This quarter-turn valve, shown in the illustration, should only be used in case of an emergency.

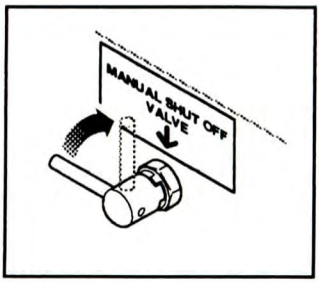

DANGER

If you smell natural gas in or around the engine area you may have a CNG leak. Turn the emergency shut-off valve to the OFF position. Have a trained and authorized mechanic look at the truck.

https://truckmanualsfree.com/

Operator Maintenance and Care

Contents

Daily Safety Inspection 4-2

Fuel Safety Practices 4-5

Refueling LPG Tanks 4-6

Refueling CNG Tanks 4-8

NOTICE

The Occupational Safety and Health Act (OSHA) requires that truck users examine their trucks before each shift to be sure they are in safe working order. Defects when found shall be immediately reported and corrected. The truck shall be taken out of service until it has been restored to safe operating condition.

https://truckmanualshub.com/

Daily Safety Inspection

Before using a lift truck, **it is the operator's responsibility** to check its condition and be sure it is safe to operate.

Check for damage and maintenance problems; have repairs made before you operate the truck. Unusual noises or problems should be reported immediately to your supervisor or other designated authority.

Do not make repairs yourself unless you are trained in lift truck repair procedures and authorized by your employer. Have a qualified mechanic make repairs using genuine CLARK or CLARK-approved parts.

CAUTION

Do not operate a truck if it is in need of repair. If it is in an unsafe condition, remove the key and report the condition to the proper authority. If the truck becomes unsafe in any way while you are operating it, stop operating the truck, report the problem immediately, and have it corrected.

Lift trucks should be inspected every eight hours, or at the start of each shift. In general, the daily inspection should include the **visual** and **functional checks** described on the following pages.

As an aid in carrying out this inspection, CLARK has prepared a form called the **"Driver's Daily Checklist."** We recommend that you use this form to make a daily record of your inspections and truck condition. You may obtain copies of this form from your CLARK dealer.

WARNING

Leaking hydraulic oil may be hot or under pressure. When inspecting a lift truck, wear safety glasses and do not check for leaks with bare hands.

https://truckmanualshub.com/

Visual Checks

First, perform a visual inspection of the truck and its major components:

1. Walk around your lift truck and take note of obvious damage that may have been caused by operation during the last shift.
2. Check that all capacity, safety, and warning plates or decals are attached and legible.
3. Check before and after starting engine for leaking fuel, engine coolant, transmission fluid, etc.
4. Check for hydraulic oil leaks and loose fittings.

   CAUTION

   Do not use bare hands to check. Oil may be hot or under pressure.

5. Be sure that the driver's overhead guard and any other safety devices are in place, undamaged, and attached securely.
6. Check all of the critical components that handle or carry the load.
7. Look the upright and lift chains over. Check for obvious wear and maintenance problems such as damaged or missing parts, leaks, slack or broken chains, rust, corrosion, bent parts, cracks, etc.
8. Carefully inspect the load forks for cracks, breaks, bending, twists, and wear. Be sure that the forks are correctly installed and locked in their proper position.
9. Inspect the wheels and tires for safe mounting, wear condition, and air pressure.
10. Check the hydraulic sump oil level, engine oil level, and fuel level.

https://truckmanualshub.com/

Functional Checks

Check the operation of the truck as follows.

NOTICE

Before performing these checks, familiarize yourself with the starting, operating, and shut-down procedures in Section 5 of this manual. Also, know the safety rules given in Section 1 of this manual.

1. Test warning devices, horn, lights, and other safety equipment and accessories.
2. Start the engine and be sure all controls and systems operate freely and return to neutral properly. Check the:
   - Gauges, meters, and indicator lights
   - Service brakes, inching pedal, and parking brakes
   - Hydraulic controls: lift, tilt, and auxiliary (if installed)
   - Accelerator
   - Directional control
   - Steering system
   - Lift mechanism and any attachments.

When the functional checks are completed, follow the **standard shut-down procedures** given in Section 5, "Starting and Operating Procedures."

Concluding the Inspection

Make a record on the "Driver's Daily Checklist' of all the problems that you find. Review the checklist to be sure it has been completed and turn it in to the person responsible for lift truck maintenance. Be sure any unusual noises or problems are investigated immediately.

Do not operate a lift truck that has a maintenance problem or is not safe to operate.

Instead, remove the key from the ignition switch and put an "Out of Service" tag on the truck.

If all of the Daily Inspection checks were normal or satisfactory, the truck can be operated.

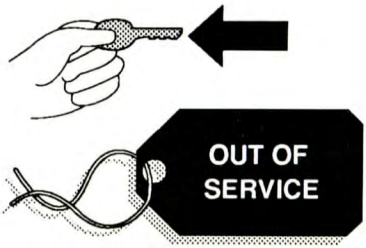

https://truckmanualshub.com/

Fuel Safety Practices

Refueling Gasoline and Diesel Trucks

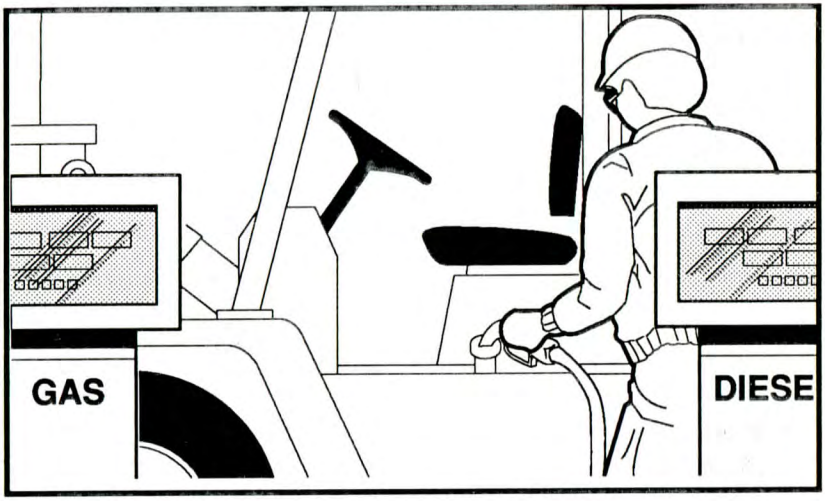

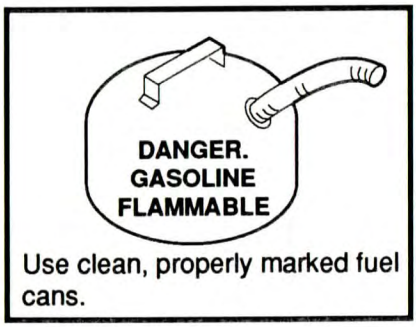

Use clean, properly marked fuel cans.

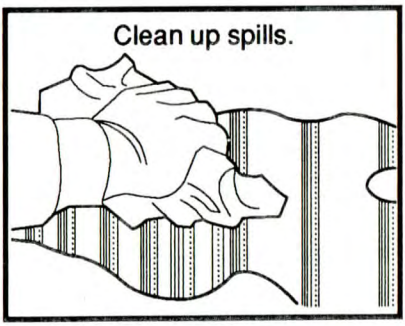

https://truckmanualshub.com/

Refueling LPG Tanks

When changing liquefied petroleum gas (LPG), tanks follow these basic rules:

- Change only in well ventilated areas.
- Never allow open flames.
- Turn the ignition switch to the OFF position.
- Check for leaks.
- Check condition of the O-ring.
- Make sure tank is in locating pin.
- Make sure tank latch is securely fastened.
- Store tanks according to local fire codes

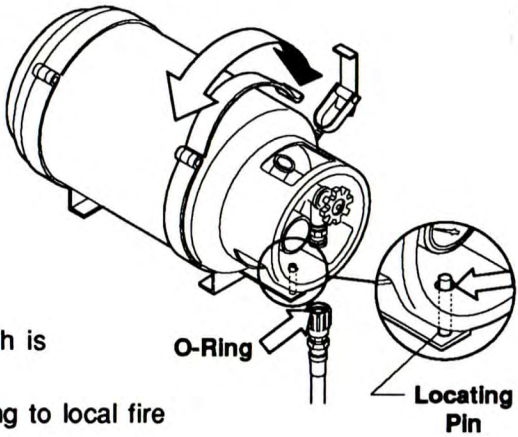

If you refill LPG tanks:

- Make sure you know and understand the proper procedure for filling an LPG tank.
- If you have any questions on re-filling LPG tanks, please ask your supervisor.

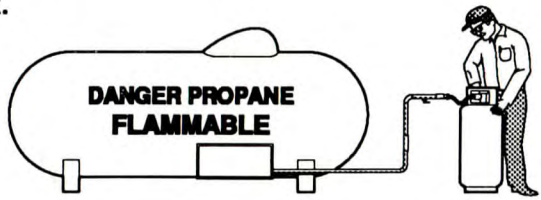

DANGER

LPG IS HEAVIER THAN AIR. It settles on your clothes and the ground around you, displacing oxygen vital for breathing. Open flame can cause flash fires.

IMPORTANT

Check all connections for damage or leaks. If the truck will not start after you change tanks, get a qualified mechanic to check the truck.

https://truckservicehub.com/

RECOMMENDED SAFETY MAINTENANCE PROCEDURES FOR LPG-FUELED LIFT TRUCKS

WARNING

LPG is a combustible fuel that is heavier than air. Escaping gas may accumulate in low areas. The fuel cylinder should be mounted so that it does not extend outside the truck and should also be properly positioned by using the locating pin or key way.

The fuel valve should be turned off when the machine is not in service.

Cast fittings should not be used in the LPG system.

Use only Underwriters Laboratories or Factory Mutual listed LPG hose assemblies where pressure fuel lines are required.

All pipe threaded fittings should be installed using an approved sealing compound.

Fuel lines should be supported by clamps to minimize chafing and wear.

The LPG solenoid valve should be wired to an automatic shut off switch (oil pressure or vacuum) to prevent leakage of gas in the event the ignition is on without the engine running.

Check the propane solenoid or vacuum shutoff valve for leakage as follows:

1. Turn fuel tank valve off, start and run engine until it stops.
2. Install a 0 to 30 psi pressure gauge per instruction A or B:
   A. To primary test port of single units consisting of primary and secondary regulators.
   B. Between the primary and secondary stage regulators when the LPG system consists of two regulators.
3. Turn the tank fuel valve on. The pressure gauge should maintain a zero reading. If it does not, the solenoid valve or vacuum shutoff valve must be repaired or replaced. An odor is added to LPG to help indicate leaks. If you detect gas odor, you should turn off the fuel tank supply valve and engine. Remove all sources of ignition, and ventilate the area. Make all of the necessary repairs before you turn the fuel supply on. The complete LPG system should be inspected periodically. Check all hoses for wear, connections for leaks, and all parts for damage.

NOTE: Fuel hoses have a limited life expectancy. They should be checked for cracking and drying due to age. Hoses with visible signs of age should be replaced. Use only Underwriters Laboratories or Factory Mutual listed LPG parts for replacements.

NOTE: The above information is provided as a guide. Consult the National Fire Protection Association Pamphlet 58 for the safe storage and handling of liquefied petroleum gases. Governmental safety regulations in your locality could vary. Check with the authority having jurisdiction to be sure that you meet all of their requirements. Contact the manufacturer for detailed service information.

SERVICE WORK SHOULD BE PERFORMED BY QUALIFIED PERSONNEL ONLY.

https://truckmanualshub.com/

Refueling CNG Tanks

WARNING

Contents of the CNG tank are under extreme pressure. When refueling be very cautious. Make sure there is NO Smoking, NO OPEN FLAMES. Make sure engine is turned off. CNG IS HIGHLY FLAMMABLE GAS.

When refueling a (compressed natural gas) CNG system, follow these basic rules:

- Make sure you know and understand the proper procedure for filling a CNG fuel system.
- If you have any questions on refilling CNG tanks, please ask your supervisor.
- Refuel only in well ventilated areas.
- Make sure you refill your truck in an approved CNG fueling station.
- Apply the parking brake and turn the ignition switch to the OFF position.
- Checks for leaks.
- Never allow open flames.

Refueling Procedure: Your truck is equipped with a standard 1/2" fill block. The fueling station has a standard 1/2" fuel probe with a 2- or 3-position shut-off valve. Your truck and fueling station may be equipped with optional fueling adaptors. Make sure that you understand how to use them. If you have any questions, please ask your supervisor. For proper fueling procedures, follow the steps below.

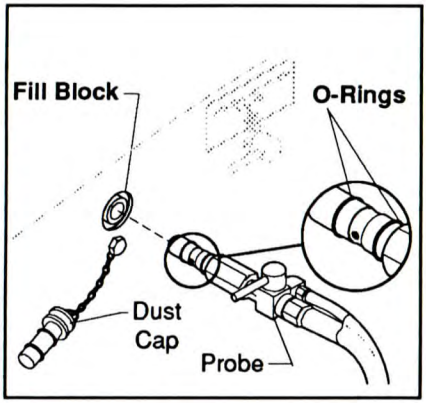

IMPORTANT

Before refueling your CNG truck, examine the fueling probe and make sure the O-rings are not damaged or missing.

Follow these basic steps:

1. Remove the dust cover.
2. Insert the fuel probe into the fuel fill block. Make sure it is inserted all the way.
3. Slowly turn the valve to the full open position.
4. When the tank reaches full, the fueling station automatically shuts off. Your pressure gauge will read about 3000 psi. This is the maximum operating pressure.

Before disconnecting the fuel probe, it may be necessary to vent the fuel line. You do this by turning the valve to the VENT position, pause, then turn the valve to the CLOSED position. The probe can now be easily removed from the fill block. Return the probe to its proper holder.

CAUTION

If leakage should occur, close the valve on the probe and have qualified personnel make repairs.

WARNING

THIS TRUCK RUNS ON COMPRESSED NATURAL GAS (CNG), A COLORLESS GAS STORED UNDER VERY HIGH PRESSURE. CNG IS LIGHTER THAN AIR. IT COLLECTS IN CLOSED PLACES. DO NOT ALLOW GAS TO ESCAPE INDOORS OR INTO CONFINED SPACES. FIRE AND EXPLOSION MAY RESULT CAUSING SEVERE INJURIES.

- Follow your employer's work rules for refueling, operating, inspecting, and parking trucks.
- To fill tank turn off key switch, lights and all truck accesories. No smoking, sparks or flames allowed.
- If you smell or hear leaks do not start truck. If you think CNG is leaking tell your supervisor immediately.
- If a leak starts at any time, or you see a fire, turn off emergency shut off or tank valve and key switch; tell your supervisor.
- Park only where your supervisor says it is safe. Turn off key switch, tank valve, and set parking brake.
- Fuel tanks must be periodically inspected and pressure tested. Inspect all lines and components for wear, damage, and secure routing.

ALL SERVICE WORK SHOULD BE PERFORMED BY QUALIFIED PERSONNEL ONLY.

Clark Material Handling Co., 1992 CNG Warning 2794034

https://truckmanualshub.com/

https://truckmanualshub.com/

Starting and Operating Procedures

Contents

Before Operating the Truck 5-2
Adjusting the Seat 5-3
Buckling Up 5-3
Starting from a Safe Condition 5-4
General Starting and Operating Tips 5-5
Starting the Engine 5-7
Positioning Forks and Upright 5-8
Selecting Speed Range and Direction 5-9
Using the Accelerator 5-10
Braking 5-10
Inching 5-10
Operating Safely 5-11
Adjusting the Load Forks 5-14
Load Handling 5-14
Traveling with a Load 5-15
Picking Up and Moving Loads 5-16
Unloading 5-17
Stacking 5-18
Shut-Down Procedure 5-20

https://truckmanualshub.com/

Before Operating the Truck

Be sure that you have read and understand the information in this *Operator's Manual* before operating the lift truck.

The *Operator's Manual* is stored in a compartment in the back of the seat. It is attached with a cable so that it can be used easily but cannot be removed from the truck.

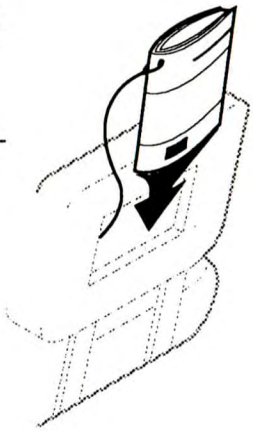

WARNING

- **A lift truck can be dangerous if not used properly. Safe operation is the responsibility of the operator.**
- **Do not start or operate the truck, or any of its functions or attachments, from any place other than the designated operator's position.**

CAUTION

- **Inspect your lift truck before operating at the start of the day or shift. Before putting your truck to use, check the operation of the controls and all systems.**
- **Protect yourself. Do not operate truck without a DRIVER'S OVERHEAD GUARD unless conditions prevent its use. Do not remove overhead guard unless specifically authorized. Use special care if operation without this safety device is required.**

https://truckmanualshub.com/

Adjusting the Seat

Adjust the seat to a comfortable position for you. Adjust the seat by moving and holding the release lever at the front edge of the seat. Put the seat in a position that will provide easy reach to all controls. Release the seat lever. Make sure that the seat locking mechanism is engaged.

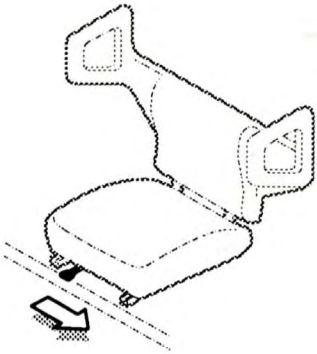

CAUTION

Never adjust the driver's seat while the truck is moving, to avoid the possibility of loss of control and of personal injury.

Buckling Up

Buckle up. Be sure that you put on the seat belt. Connect and adjust the seat belt strap to a snug, comfortable position.

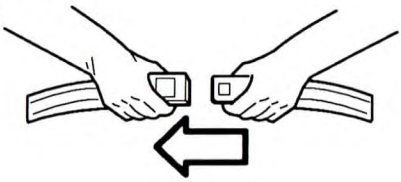

WARNING

Always wear your seat belt when operating a lift truck.

https://truckmanualshub.com/

Starting from a Safe Condition

Always start from a safe condition. Before operating a lift truck, make sure that:

- You are safely seated in the truck.
- The parking brake is applied.
- The forks are fully lowered to the floor or ground.

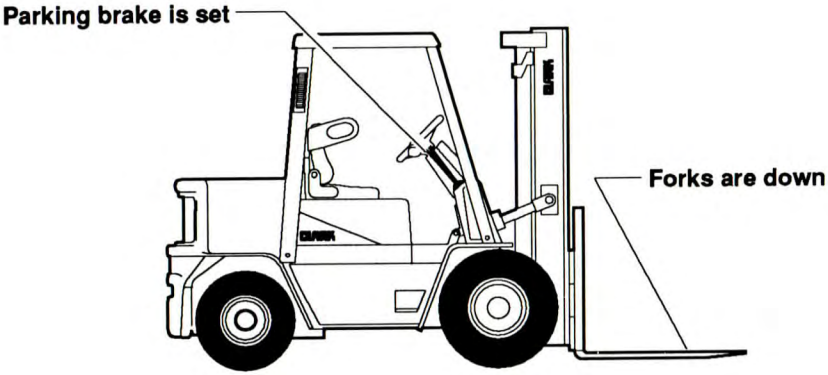

- You are familiar with how all the controls function.
- All controls are in neutral or other correct position.
- The truck has received its daily inspection and is ready to operate.

Put the direction control lever in the NEUTRAL position, before starting. The truck should start only in the NEUTRAL position. If it starts in gear, have the truck serviced.

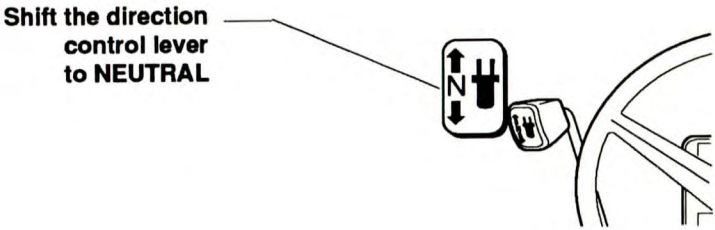

https://truckmanualshub.com

General Starting and Operating Tips

Before you start the truck, make sure that you have taken all the above-mentioned precautions, you have read this manual, you are starting from a safe condition, with the directional control in NEUTRAL, the seat adjusted, and your seat belt buckled.

WARNING

INSPECT YOUR LIFT TRUCK BEFORE OPERATING at the start of the day or shift. Before you put your truck to use, check the operation of the controls and all systems.

Turn off any lights or optional electrical equipment while you crank the engine. This reduces the electrical load on your battery.

Avoid excessive starter cranking (in excess of 30 seconds). To avoid starter overheating or damage, do not crank the starter continuously for more than 30 seconds at a time. If the engine fails to start, wait two to three minutes before again attempting to start your lift truck.

If your battery is "run down" (discharged) or becomes discharged while you try to start your truck, please refer to Section 6, "Emergency Starting and Towing," in this manual.

To avoid damage to your truck or possible harm to yourself. Follow these recommendations:

- Warm the engine up before driving or applying a load. Idle engine at 650-750 RPM *(diesel)* and 600-650 RPM *(gas/LPG/CNG)* for a few minutes to circulate and warm the oil. Then increase speed to approximately half-throttle for a short period or until the engine coolant reaches approximately 100° F. This procedure helps prolong engine life.
- Let the engine run until the normal operating temperature is reached. Then operate the controls and check all gauges and warning indicators to be sure they are functioning properly. Stop the engine and make a visual inspection for oil, water, or fuel leaks.
- Do not operate the engine at speeds above idle for more than brief periods without a load.

https://truckmanualshub.com/

- Do not run the engine at maximum power continuously until the engine is fully warmed up.
- Never operate the engine at more than the regular no-load governed speed. Excessive speeds are harmful.

NOTICE

The governor is set at the factory and should need no adjustment.

- Avoid extended (in excess of 10 minutes) and unnecessary idling of the engine. Turn off the engine instead.
- If your truck is equipped with a gasoline engine, it will have a manual choke located on the seat deck just to the driver's right, near the control levers.
- **Carbon monoxide** is colorless and odorless but can be present with all other exhaust fumes.

WARNING

Exhaust gases are harmful and can cause serious injury or death. Proper ventilation is always necessary for safe inside operation or warm-up.

IMPORTANT

Due to the precise tolerances of diesel injection systems, it is extremely important that the diesel fuel be kept clean and free of dirt or water. Dirt or water in the system can cause severe damage to both the injection pump and the injection nozzles.

https://truckmanualshub.com/

Starting the Engine

1. Start from a safe condition: Before you start the truck, safely seat yourself on the truck, apply the parking brake, make sure all controls are in neutral or other correct position, lower the forks fully to floor or ground, put the direction control lever in NEUTRAL, and make sure you know how to operate the truck and all its controls.

2. **Gasoline trucks only:** You may need to use the manual choke if the engine is not warm. To do so, pull the choke out about halfway, then depress the accelerator pedal to about half-throttle position.

   LPG or CNG trucks only: Slowly open the shut-off valve on the fuel tank.

NOTICE

OPEN THE TANK SHUT-OFF VALVE SLOWLY. If it is opened too quickly, the automatic safety check valve will close and the engine will not start. If this happens, close the shut-off valve and wait two to three minutes. Then, open the shut-off valve slowly.

Preheating (Diesel Only)
With the switch in the ON position the warning lights light up and the glow plugs are preheating automatically. As soon as the glow plugs have reached the required temperature, the warning lights will go out. The engine can then be started. For improved starting, pre-heating is continued for about 5 seconds after the warning lights have gone out. To repeat the preheating process turn the key into the OFF and then into the ON position.

⚠ DANGER

DO NOT USE STARTING FLUID to help start an engine. The fluid contains ether or other explosive substances that could cause serious injury. Starting fluid is especially dangerous when used on engines with glow plugs. Never use starting fluid with a glow plug equipped engine.

3. Turn the key/start switch to the START position to crank the engine. Release the key to the RUN position and return the accelerator to idle as soon as the engine starts.

https://truckmanualshub.com/

Gasoline trucks only: After the engine starts, adjust the choke for fast idle warm-up. When the engine has reached normal operating temperature, push the choke in all the way.

IMPORTANT

If the engine stalls or falters in starting, wait three or four seconds before re-engaging the starter. This prevents possible serious damage to the starter or engine.

The key switch has a mechanical "anti-restart" feature, which prevents the engine starter from being engaged and damaged if the operator attempts to start the engine when it is already running. The key switch cannot be turned from the START position from the RUN position without returning the key to the OFF position before it can be restarted.

4. When starting a cold engine, increase the engine speed (RPM) slowly to be sure adequate lubrication is available to the bearings and to allow the oil pressure to stabilize.
5. Idle the engine three to five minutes at 1,000 RPM before operating with a load.

Positioning Forks and Upright

When driving, with or without a load, it is a good practice to always raise the forks slightly and tilt the upright (forks) backward. Raising the forks and tilting them back prevents the fork tips from catching on possible obstructions and reduces the wear on the fork blades from striking or dragging on the floor or ground. See safety messages on next page.

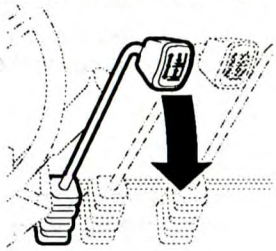

Pull back on the lift control lever and raise the forks 6 to 8 inches (152 to 203 mm) above the floor. Then, using the tilt control, tilt the upright back slightly to raise the fork tips.

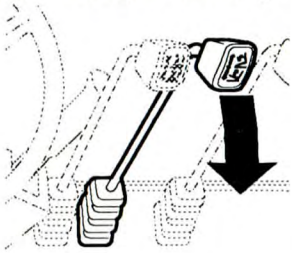

The amount of forward and rearward tilt to be used is governed by the application.

https://truckmanualshub.com/

NOTICE

When the upright (carriage and/or load) is raised into a high (elevated) position, the stability of the truck is reduced. Some of the other conditions that may affect stability are ground and floor conditions, grade, speed, loading, dynamic and static forces, and the judgement exercised by the operator. Trucks equipped with attachments behave as partially loaded trucks even when operated without a load on the attachment. Also, improper operation, faulty maintenance, or poor housekeeping may contribute to a condition of instability.

CAUTION

For stability, do not travel with the load or carriage in a highly elevated position. Travel with the lift mechanism raised only enough to clear the ground or obstacles.

Selecting Speed Range and Direction

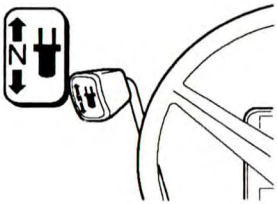

Direction Control Lever

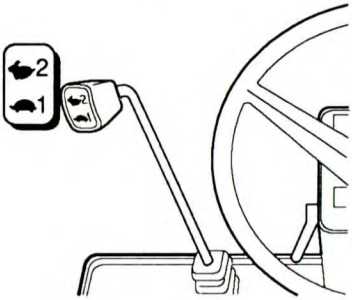

Range Shift Lever

Use the range shift lever to select a gear range appropriate for your load and task. Speed 1 is for heavy-duty applications. Speed 2 is for normal handling and maneuvering. Slow down to idle speed before you shift to a lower gear.

Push the direction control lever forward, center it, or pull it back for FORWARD, NEUTRAL, or REVERSE, respectively. Traction is disabled in NEUTRAL.

https://truckmanualshub.com/

Using the Accelerator

With the parking brake released and the direction control in FORWARD or REVERSE, put your foot on the accelerator pedal and push down smoothly until the truck is moving at the desired speed.

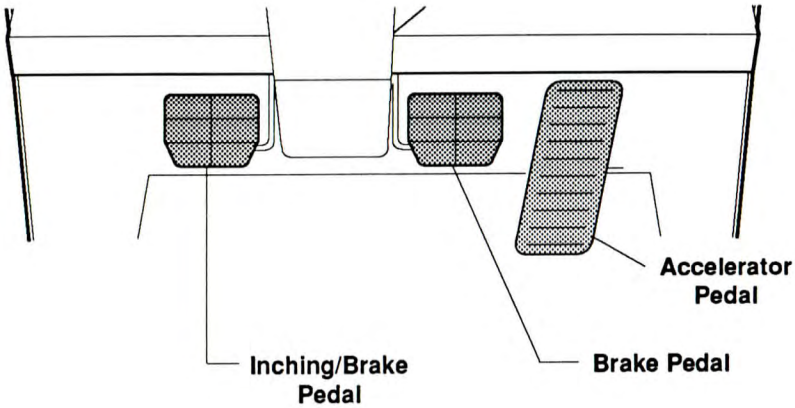

Braking

To stop the truck, lift your foot from the accelerator pedal and put it on the brake pedal. Push down on the brake pedal in a smooth, firm motion until the truck is stopped.

IMPORTANT

Stop a lift truck as gradually as practical. Hard braking and wheel sliding are dangerous, increase wear, and cause you to loose a load and harm the lift truck.

Inching

Use the inching pedal and accelerator in combination to vary lift and travel speeds independently. The further you depress the inching pedal, the more the driving clutch slips, reducing travel motion. With the inching pedal fully depressed, the brakes fully engage. You operate the inching pedal with your left foot for precise control of travel speed, while you operate the accelerator to vary lift speed.

https://truckmanualshub.com/

Operating Safely

Safe operation is the responsibility of the operator.

Watch where you are going. Don't go if you can't see...

Before driving, check all around to be sure that your intended path of travel is clear of obstructions and pedestrians.

WARNING

LOOK WHERE YOU DRIVE. Watch out for pedestrians, other vehicles, obstructions (especially overhead), and drop-offs. If the load blocks your view, drive backward, except up slopes.

Do not allow anyone to stand or pass under the load or raised forks. Watch for people in your work area even if your truck has warning lights or alarms. They may not watch for you.

Sound horn at intersections and wherever vision is obstructed. Do not drive a truck up to anyone standing in front of an object.

Protect yourself and those around you...

Operate the truck only from the designated operator's position. Stay within the confines of the lift truck profile dimensions. Keep all body parts inside the operator's compartment and away from the danger of passing obstructions. Keep under the overhead guard.

NOTICE

An OVERHEAD GUARD is intended to offer protection to the operator from falling objects, but cannot protect against every possible impact. Therefore, it should not be considered a substitute for good judgement and care in loading, handling, storage, etc.

WARNING

Keep clear of the upright and lift mechanism. NEVER reach into or put hands, arms, legs, or head into or through the upright structure or near the carriage or lift chains. Never put any part of your body between the upright and the truck. Don't use the upright as a ladder. Keep all other persons clear of the load and upright mechanism while attempting to handle a load.

https://truckmanualshub.com/

No riders...

Do not carry passengers. The operator is the only one who should be on the truck.

Always be in full control of your lift truck...

Never operate a lift truck or its attachments if you are not in the designated operator's position.

Never operate a lift truck when your hands are wet or greasy.

Always pick the smoothest travel route for your lift truck. Avoid bumps, holes, slick spots, and loose objects or debris in your path that may cause the truck to swerve or tip. If these conditions are unavoidable, slow down and carefully drive past them. Slow down for wet or slippery surfaces.

Avoid any sudden movement. Start, stop, travel, steer, and brake smoothly.

Operate your lift truck under all conditions at a speed that will permit it to be brought safely to a stop.

Travel with the fork carriage tilted back and raised only enough to fully clear the ground or obstacles. When the carriage (load) is in an elevated position the stability of the truck is reduced.

Do not elevate the load except during stacking.

Grades, ramps, and inclines...

Use special care when operating on ramps, inclines, and uneven areas. Travel slowly. Travel straight up and down. Do not turn or drive at an angle across an incline or ramp. Do not attempt to operate on grades in excess of those specified and/or recommended by the manufacturer.

When the truck is loaded, travel with the load upgrade. When the truck is empty, travel with lifting mechanism (upright) downgrade.

Always brake with the right foot pedal (not with the inching pedal) when travelling down an incline.

https://truckmanualshub.com/

Practice safe operation every time you use your truck...

Careful driving and operation is your responsibility. Be completely familiar with all the safe driving and load handling techniques in this Operator's Manual. Use common sense. Drive carefully; do not indulge in stunt driving or horseplay. Observe traffic rules. Watch for people and hazards. Slow down. Be in full control of your lift truck at all times.

Follow the instructions in this manual to avoid damage to your truck or the possibility of injury to yourself or others.

During your work, observe all functions of your lift truck. This allows you to immediately recognize a problem or irregularity that could affect the safe operation of your truck.

Periodically check the gauges and warning indicator lights in the instrument panel to be sure they indicate a normal condition. If an abnormal condition appears bring the machine to a safe condition and safe location, shut off the key switch immediately and report the problem.

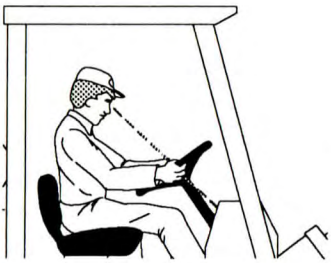

CAUTION

Do not continue to operate a truck that has a malfunction. Stop and have it fixed.

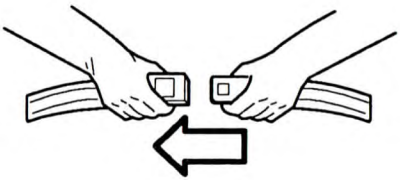

IMPORTANT

Always wear your seat belt when operating your lift truck.

https://truckmanualshub.com/

Adjusting the Load Forks

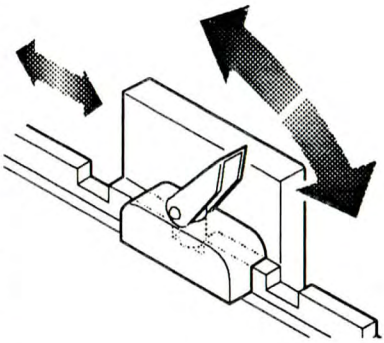

The load forks are adjustable on the hanger, carriage. Forks should be spaced as far apart as the load will allow. Both forks should always be the same distance from the center of the fork carriage. To adjust the forks, raise the carriage slightly. Tilt the upright fully forward to reduce friction and make the forks slide easier. Unlock the fork locking pins. **Position the forks by pushing them away from you**. Secure the fork locking pins.

Load Handling

Handle only loads that are within the truck rated capacity as shown on the nameplate. This rating specifies the maximum load that should be lifted. However, other factors such as special load handling attachments, loads having a high center of gravity, or uneven terrain may dictate that the safe working load be less than the rated capacity. Under these conditions, the operator must reduce the load carried so that the lift truck remains stable.

Handle only stable or safely arranged loads. Do not handle loads made up of loose, unevenly stacked, or unstable items that can easily shift and fall. Take the time to correctly stack and band loose items. Center the load on the forks.

Do not lift anything that might fall on the operator or a bystander.

Do not handle loads that are higher than the fork carriage unless the load is secured so that no part of it can fall backward.

Keep the load back against the carriage. Loads placed out on the ends of the forks can make the lift truck less stable and more likely to tip up.

Lift and lower with the upright mast vertical or tilted slightly back—**never tilted forward**.

Operate lift and tilt controls slowly and smoothly. Never tilt the upright forward when the carriage (load) is raised, except to pick up or deposit a load over a rack or stack.

https://truckmanualshub.com/

WARNING

Slack chains mean rail or carriage hang-up. Raise the upright before you move. If the upright malfunctions in any way or becomes stuck in a raised position, operate the lift control to eliminate any slack chains by raising the cariage. DO NOT go under a raised upright or forks to attempt repairs.

Remember, your lift truck is designed to carry loads forward of the front wheels so that the weight of the load is counter-balanced by the weight of the truck.

The farther the load is carried from the pivot point (center of front wheels), the greater will be the uplift at the rear of the truck. Therefore, always carry the load as close to the front wheels as possible (back and flush against the face of the forks).

The capacity load shown on the nameplate is represented by a cube in which the weight is evenly distributed, with the center of gravity located a standard distance from the face of the forks. If the weight of the actual load to be handled is not evenly distributed, put the heaviest part closest to the carriage.

Traveling with a Load

Travel with load or carriage as low as possible and tilted back. Never travel with the load or carriage raised (elevated) in a high position. Do not elevate the load except during stacking.

Observe all traffic regulations and watch for other traffic, pedestrians, and safe clearances. Always look in the direction of travel. Keep a clear view of the path of travel, and when the load blocks your visibility, travel in reverse with load trailing (except when climbing an incline).

Avoid sudden movements when carrying a load—start, stop, travel, steer, and brake smoothly. Steer clear of bumps, holes, and loose materials or debris on the ground. Lift and tilt slowly and smoothly. Go slowly when turning. Cross railroad tracks at an angle wherever possible.

https://truckmanualshub.com/

Use special care when handling and traveling with long, high, or wide loads—to avoid losing the load, striking bystanders or obstructions, or tipping the truck.

Watch clearances around the truck and load as you travel. Raise the forks or attachment only to pick up or stack a load. Look out for obstructions, especially overhead.

Be aware that exaggerated tail swing, when turning while traveling forward, is a characteristic of lift trucks that are steered by the rear wheels. Accordingly, you need to become accustomed to tail swing and always check the tail swing area of the counterweight to be sure it is clear before you turn.

Always be concerned about the stability of your lift truck. When attachments are used, extra care should be taken in securing, manipulating, positioning, and transporting the load. Because attachments generally add extra weight and complexity to the truck, operate trucks equipped with attachments as partially-loaded trucks when not handling a load.

Picking Up and Moving Loads

When picking up a load from the ground, approach the load slowly and carefully align the truck square with the load. The forks should be adjusted to fit the load or pallet being handled and spread as wide as possible to provide good stability and balance. Before lifting, be sure the load is centered and the forks are fully under and supporting the load. Fork length should be at least 2/3 of load length. With the lift and tilt controls, adjust the forks to the correct height and angle for freely engaging the load pallet.

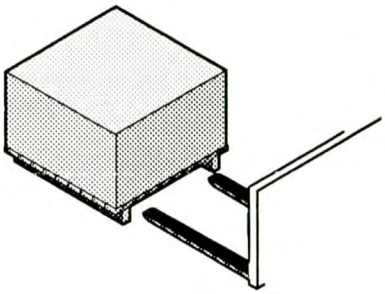

https://truckmanualshub.com/

Move forward until the forks are squarely and completely under the load.

NOTICE

Be sure that the forks do not extend beyond the load, causing damage or tipping of other adjacent loads or materials behind the load being moved.

If the forks are longer than the load, move the tips partially under the load without extending beyond the load. Raise the load to clear the ground. Back out several inches, or whatever distance is necessary, then set the load down and move forward until the load is positioned against the carriage.

Raise the load from the ground or stack by tilting the upright back just enough to lift the load from the surface. When stacking or tiering, use only enough backward tilt to stabilize the load.

Then raise the load to traveling height and tilt fully back to travel (except for loads that must be transported as level as possible).

Unloading

To deposit a load on the floor after being moved into the correct position, tilt the upright forward to a vertical position and lower the load.

Adjust the fork height and tilt the upright forward slightly, as necessary, for smooth removal of the forks from the load (pallet).

Carefully back away to clear the forks from the load.

Raise the forks to traveling height and tilt forks to a level position 6-8 inches (152-203 mm) off the floor.

https://truckmanualshub.com/

Stacking

To put a load on a stack:

1. Approach slowly and align the lift truck and load squarely with the stack.

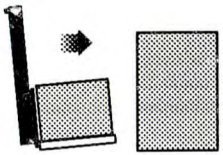

2. Raise the load as the lift truck nears the stack.

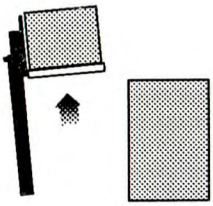

3. Move forward slowly until the load almost touches the stack. The leading edge and sides of the load pallet should line up exactly with the near edge and side of the load or rack on which you are stacking.

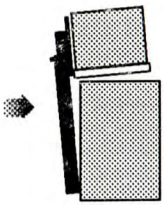

4. Stop close to the stack and further lift the load high enough to clear the top of the stack. Slowly move the load into position. Use care not to damage or move adjacent loads.

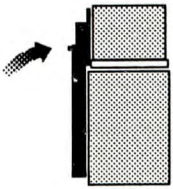

5. When the load is aligned with the stack beneath it, tilt the upright to the vertical position and carefully lower the load onto the top of the stack.

https://truckmanualshub.com/

6. Lower the forks slightly to clear the load pallet. Tilt the forks forward slightly, if necessary.

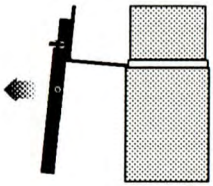

6. Check your travel path, then carefully back away until the forks are clear of the stack. Stop and lower the forks to the travel position (6 to 8 inches [152-203 mm] above the ground), then tilt to level for travel.

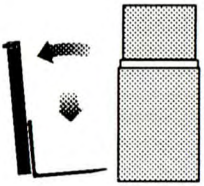

To move a load from a stack:

Approach the stack carefully, truck lined up squarely with the load. With upright mast vertical, raise the forks to the correct height for freely engaging the load pallet. Adjust fork angle as necessary to fit squarely under the load. Move (inch) forward until the forks are under the load.

Be sure that the forks do not extend beyond the load, causing damage or tipping of other adjacent loads or materials behind the load being moved. If the forks are longer than the load, move the tips partially under the load without extending beyond the load. Raise the load to clear the under surface. Back out several inches, then set the load down and move forward until the front face of the forks contacts the load. Be careful that the fork tips now clear the adjacent load or material behind the load being moved.

Raise the load from the stack by tilting the upright back just enough to lift the load from the surface. Or, with the mast still vertical, raise the forks until they begin to lift the load. At this point, apply the minimum back tilt that will stabilize the load.

Check your travel path, slowly back up until clear of the stack, stop, and then lower the load to the travel position (6 to 8 inches [152-203 mm] off the ground). Tilt full back to travel (except for certain loads that may have to be transported as level as possible). Be sure the load is back flush against the carriage or front face of the forks.

NOTICE

Certain loads must be transported as level as possible.

https://truckmanualshub.com/

Shut-Down Procedure

Always leave your lift truck in a safe condition. When you leave your truck, or park it, follow these safety rules:

- Park in a safe area away from normal traffic.
- Never park on a grade.
- Never park in areas that block emergency routes or equipment, access to fire aisles, or stairways and fire equipment.

Before leaving the operator's position:

1. Bring the truck to a complete stop.
2. Put the directional control lever in the NEUTRAL position.
3. Apply the parking brake.
4. Lower the lifting mechanism—carriage and forks or attachment—fully to the ground.

In addition, when leaving the truck unattended:

5. Tilt the upright forward until the forks are level and flat on the ground. Let the engine run at idle speed.
6. **If CNG- or LPG-fueled:** Close the shut-off valve at the fuel tank and let the truck run until it uses up the fuel remaining in the line.
7. Turn the key/start switch to the OFF position and remove the key.
8. Block the wheels, if the truck must be left on an incline or you have any doubt about the truck moving from a safe position.

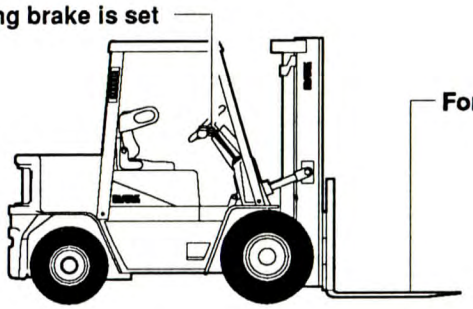

IMPORTANT

If the lift has been working hard, let the engine idle a few minutes before shutting it off.

https://truckmanualshub.com/

Emergency Starting and Towing

Contents

How to Tow a Disabled Truck 6-2

How to Use Battery Jumper Cables 6-4

https://truckmanualshub.com/

How to Tow a Disabled Truck

If your lift truck becomes disabled but can be moved freely on its own wheels without further damage, use the following procedures to tow it safely to a repair area

IMPORTANT

It is important for your safety and to the care of your lift truck to use the proper equipment and carefully follow these recommendations for safe towing.

WARNING

DO NOT tow a lift truck if there is a problem with the brakes or tires or the steering cannot be operated. DO NOT tow up or down ramps and steep inclines. DO NOT attempt to tow a lift truck if traction or weather conditions are poor.

1. Be sure to apply the parking brake or block the drive wheels on the disabled truck while working around it.
2. When possible, raise the carriage (forks) on the disabled truck about 12 inches (300 mm) from the floor or ground. Secure the carriage with a chain.
3. Obtain another lift truck of equal or larger size carrying a partial load for traction
4. Check that the counterweight bolt is in place and properly torqued. (This bolt is made of a special high-tensile steel and is not commercially available. Replace it, when necessary, only with a genuine Clark replacement part).
5. Use an approved, solid metal tow bar with towing couplers that connect to the towing pins in the counterweights.
6. Release the parking brake on the towed vehicle.

NOTICE

Optional towing equipment is available from your Clark dealer.

https://truckmanualshub.com/

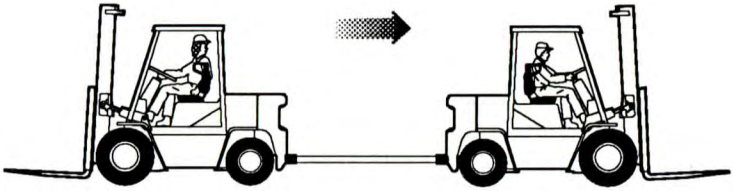

7. Tow the disabled truck backward. **An operator must be on the towed truck.**

   Tow the truck slowly. Careful towing is necessary to prevent injury to personnel or damage to the truck. The truck should be towed at a speed of less than 5 mph (8 kph) with a driver in the seat. Do not lift the truck or any wheels off the floor or ground while the truck is being towed.

CAUTION

The power steering will not operate on the disabled truck when the engine is not running. The steering handwheel will be difficult to turn.

8. Park the disabled truck in authorized areas only. Fully lower the forks to the floor, put the directional control lever in the NEUTRAL position and turn the ignition switch to the OFF position. Engage the parking brake. Remove the ignition key and, when necessary, block the wheels to prevent the truck from rolling.

WARNING

Always engage the parking brake when parking a lift truck. The truck can move and cause injury or death to personnel near it.

https://truckmanualshub.com/

How to Use Battery Jumper Cables

If your lift truck battery is discharged ("dead"), you can start your lift truck by "jumping" it from another lift truck that has a 12-volt, negative-ground electrical system. The "booster" battery must be fully charged and in good condition. This section explains how to perform this procedure safely. To avoid damage to your lift truck and your battery or the possibility of harm to yourself, follow the instructions and warnings carefully. If you have any doubts, ask for help from an experienced mechanic.

If your truck has a battery with terminals on the side you will need a set of jumper cables with matching connector clamps or cable adapters for side-mounted battery terminals.

CAUTION

USE ONLY A 12-VOLT, NEGATIVE GROUND SYSTEM to jump your truck. You can injure yourself and permanently damage your truck's 12-volt starting motor and ignition system by connecting it to a 24-volt power supply (two 12-volt batteries in series or a 24-volt generating set) or to a positive-ground system.

WARNING

BATTERIES CONTAIN SULFURIC ACID. Avoid acid contact with skin, eyes, or clothing. If acid contacts your eyes or skin, flush immediately with water and get medical assistance. Wear safety glasses when working near the battery to protect against possible splashing of the acid solution.

1. If the discharged battery has filler caps, check the fluid level. Do not use an open flame to check and do not smoke. If low, add distilled water to the correct level. Be sure to install the caps before jump starting.

   Do not jump start, charge, or test a sealed-type battery if the test indicator looks illuminated or has a bright color. Install a new battery.

https://truckmanualshub.com/

WARNING

BATTERIES EMIT EXPLOSIVE GAS. Do not smoke or have open flames or sparks in battery charging areas or near batteries. An explosion can result and cause injury or death.

Hydrogen gas is produced during normal battery operation. Hydrogen can explode if flames, sparks, or lighted tobacco are brought near the battery. When charging or using a battery in an enclosed space, always provide ventilation and shield your eyes. Wear safety glasses when working around batteries.

3. Put the truck with the booster battery as near to the other truck as necessary for the jumper cables to reach both batteries. Check and make sure that the trucks do not touch each other. **Use particular care when connecting a booster battery to prevent sparks.**

4. On both trucks:
   a. Apply the parking brake.
   b. Put the directional control lever in the NEUTRAL position.
   c. Turn the key/start switch to the OFF position.
   d. Turn all accessories to the OFF position and leave them off until after the engine has been started and the jumper cables have been removed.

WARNING

To avoid SHORT CIRCUITS, remove all jewelry and do not permit any metal tools to make contact between the positive battery terminal and other metal on the truck. When you connect jumper cable clamps to the positive terminals of the two batteries, make sure that neither clamp contacts any other metal. Injury can occur from electrical shock or explosion.

https://truckmanualshub.com/

5. Connect the jumper cables in the following sequence:

   a. Connect a jumper cable from the positive (+; red) terminal on one battery to the positive (+; red) terminal on the other battery. Never connect positive (+; red) to negative (-; black), or negative to positive.

   b. Connect one end of the second cable to the grounded negative (-; black) terminal of the "Jumper Vehicle" battery.

   c. Connect the other end of the second cable to a stationary, solid metallic point **on the engine** of the "Stalled Vehicle," **not to the negative** (+; black) **terminal** of its battery. Make this connection at a point at least 18 inches (450 mm) away from the battery, if possible. Do not connect it to pulleys, fans or other parts that move. Do not touch hot manifolds that can cause severe burns.

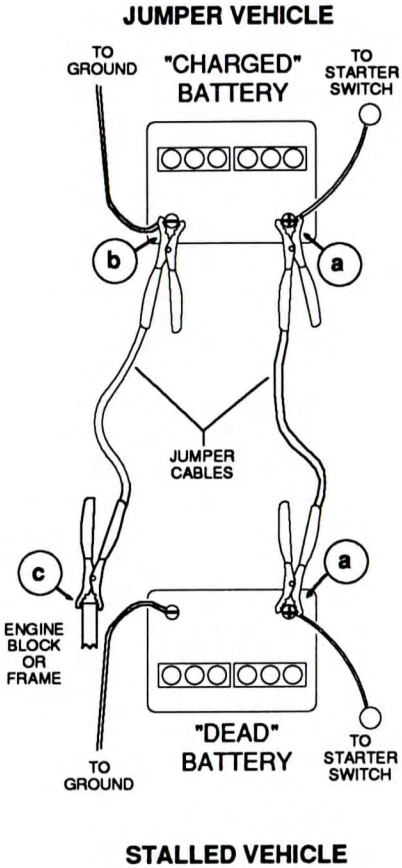

6. Start the engine on the "Jumper Vehicle" and run the engine at a moderate speed for a minimum of five minutes.

7. Start the engine on the "Stalled Vehicle." Follow the starting instructions in Section 5, "Starting and Operating Procedures" in this manual. Be sure that the engine is at idle speed before disconnecting the jumper cables.

8. Remove the jumper cables by reversing the installation sequence exactly. Start by removing the last jumper cable from the stalled vehicle first. Remove the cable end from the engine block first, then the other end of the negative (-; black) cable.

9. Remove both ends of the positive (+; red) cable.

https://truckmanualshub.com/

Planned Maintenance and Lubrication

Contents

Introduction **7-2**

Safe Maintenance Practices **7-3**

Major Component Locations **7-8**

Planned Maintenance Intervals **7-9**

PM Report Form **7-11**

How to Perform Planned Maintenance **7-12**

Visual Inspection 7-12

Functional Tests 7-16

Fluids, Filters, and Engine Accessories 7-20

Lubrication 7-24

Air Cleaning 7-25

Critical Fastener Torque Checks 7-26

Lift Chain Maintenance 7-26

NOTICE

THIS SECTION IS FOR TRAINED SERVICE PERSONNEL to use as a reference for Planned Maintenance procedures. Complete maintenance information is in Service Manual SM593.

Maintenance information for operators is in Section 4, "Operator Maintenance and Care."

https://truckmanualshub.com/

Introduction

NOTICE

ONLY TRAINED AND AUTHORIZED PERSONNEL should perform Planned Maintenance. Local CLARK dealers are prepared to help customers put in place a Planned Maintenance program for checking and maintaining their lift trucks according to applicable safety regulations.

CAUTION

Powered industrial trucks may become hazardous if maintenance is neglected.

As outlined in Section 4, "Operator Maintenance and Care," the operator should make a safety inspection of the lift truck before operating it. The purpose of this daily examination is to check for any obvious damage and maintenance problems, and to have minor adjustments and repairs made to correct any unsafe condition.

In addition to the operator's daily inspection, CLARK recommends that the owner set up and follow a periodic planned maintenance (PM) and inspection program. Performed on a regular basis **by trained personnel**, the program provides thorough inspections and checks of the safe operating condition of the lift truck. "The PM" identifies needed adjustments, repairs, or replacements so they can be made before failure occurs. The specific schedule (frequency) for the PM inspections depends on the particular application and lift truck usage.

This Section recommends typical Planned Maintenance and Lubrication Schedules for items essential to the safety, life, and performance of the truck. It also outlines safe maintenance practices and gives brief procedures for inspections, operational checks, cleaning, lubrication, and minor adjustments.

Specifications for selected components, fuel, lubricants, critical bolt torques, refill capacities, and settings for the truck are found in Section 8.

If you have need for more information on the care and repair of your truck, see you CLARK dealer.

https://truckmanualshub.com/

Safe Maintenance Practices

The following instructions have been prepared from current industry and government safety standards applicable to industrial truck operation and maintenance. These recommended procedures specify conditions, methods, and accepted practices that aid in the safe maintenance of industrial trucks. They are listed here for the reference and safety of all workers during maintenance operations. Carefully read and understand these instructions and the specific maintenance procedures before attempting to do any repair work. When in doubt of any maintenance procedure, please contact your local CLARK dealer.

1. Powered industrial trucks can become hazardous if maintenance is neglected. Therefore, suitable maintenance facilities and trained personnel and procedures shall be provided.
2. Maintenance and inspection of all powered industrial trucks shall be performed in conformance with the manufacturer's recommendations.
3. Follow a scheduled planned maintenance, lubrication, and inspection system.
4. Only trained and authorized personnel are permitted to maintain, repair, adjust, and inspect industrial trucks—and must do so in accordance with the manufacturer's specifications.
5. Always wear safety glasses. Wear a safety (hard) hat in industrial plants and in special work areas where protection is necessary and required.
6. Properly ventilate work area, vent exhaust fumes, and keep shop clean and floors dry.
7. Avoid fire hazards and have fire protection equipment present in the work area. Do not use an open flame to check for level or leakage fuel, electrolyte, or coolant. Do not use open pans of fuel or flammable cleaning fluids for cleaning parts.
8. Before starting work on truck:
   a. Raise drive wheels free of floor and use oak blocks or other positive truck positioning devices.
   b. Remove all jewelry (watches, rings, bracelets, etc.).

https://truckmanualshub.com/

c. Put oak blocks under the load-engaging means, innermasts, or chassis before working on them.

d. Disconnect the battery ground cable (-) before working on the electrical system.

NOTICE

Refer to the "Jacking and Blocking" section in the Service Manual for proper procedures.

9. Operation of the truck to check performance must be conducted in an authorized, safe, clear area.

10. Before starting to operate the truck:

    a. Be seated in a safe operating position and fasten your seat belt.

    b. Make sure parking brake is applied.

    c. Put the direction control in NEUTRAL.

    d. Start the engine.

    e. Check functioning of lift and tilt systems, direction and speed controls, steering, brakes, warning devices, and load handling attachments.

11. Before leaving the truck:

    a Stop the truck.

    b. Fully lower the load-engaging means: upright, carriage, forks or attachments.

    c. Put the directional control in NEUTRAL.

    d. Apply the parking brake.

    e. Stop the engine.

    f. Turn the key switch to the OFF position.

    g. Put blocks at the wheels if the truck must be left on an incline.

12. Brakes, steering mechanisms, control mechanisms, warning devices, lights, governors, lift overload devices, lift and tilt mechanisms, articulating axle stops, and frame members must be carefully and regularly inspected and maintained in a safe operating condition.

https://truckmanualshub.com/

13. Special trucks or devices designed and approved for hazardous-area operation must receive special attention to insure that maintenance preserves the original approved safe operating features.

14. Fuel systems must be checked for leaks and condition of parts. Extra special consideration must be given in the case of a leak in the fuel system. Action must be taken to prevent the use of the truck until the leak has been corrected.

15. All hydraulic systems must be regularly inspected and maintained in conformance with good practice. Tilt and lift cylinders, valves, and other parts must be checked to assure that "drift" or leakage has not developed to the extent that it would create a hazard.

16. When working on the hydraulic system, be sure the engine is turned off, upright is in the fully-lowered position, and hydraulic pressure is relieved in hoses and tubing.

WARNING

Always put oak blocks under the carriage and upright rails when it is necessary to work with the upright in an elevated position.

17. The truck manufacturer's capacity, operation, and maintenance instruction plates, tags, or decals must be maintained in legible condition.

18. Batteries, limit switches, protective devices, electrical conductors, and connections must be maintained in conformance with good practice. Special attention must be paid to the condition of electrical insulation.

19. To avoid injury to personnel or damage to the equipment, consult the manufacturer's procedures in replacing contacts on any battery connection.

20. Industrial trucks must be kept in a clean condition to minimize fire hazards and help in detection of loose or defective parts.

https://truckmanualshub.com/

21. Modifications and additions that affect capacity and safe truck operation must not be done without the manufacturer's prior written approval. Capacity, operation, and maintenance instruction plates, tags, or decals must be changed accordingly.

22. Care must be taken to assure that all replacement parts, including tires, are interchangeable with the original parts and of a quality at least equal to that provided in the original equipment. Parts, including tires, are to be installed per the manufacturer's procedures. Always use genuine CLARK or CLARK-approved parts.

23. When removing tires follow industry safety practices. Most importantly, deflate pneumatic tires completely prior to removal. Following assembly of tires on multi-piece rims, use a safety cage or restraining device while inflating.

24. Use special care when removing heavy components, such as counterweight, upright, etc. Be sure that lifting and handling equipment is of the correct capacity and in good condition.

IMPORTANT

Your new CLARK lift truck has been built to meet all applicable mandatory requirements of ANSI B56.1-1988 Safety Standard for Powered Industrial Trucks. Each truck also includes certain safety devices—such as horn and overhead guard—as standard equipment. No additions, omissions, or modifications should be made that affect compliance to the above requirements or in any way minimize the effectiveness of the safety devices.

https://truckmanualshub.com/

NOTICE

You should be familiar with additional operating and maintenance safety instructions contained in the following publications:

ANSI/ASME B56.1 - 1988: Safety Standard for Low Lift and High Lift Trucks (Safety Code For Powered Industrial Trucks). Published by: Society of Mechanical Engineers, United Engineering Center, 345 E. 47th Street, New York, NY 10017.

NFPA 505-1982:Fire Safety Standard for Powered Industrial Trucks: Type Designations, Areas of Use, Maintenance and Operation. Available from National Fire Protection Association, Inc., Batterymarch Park, Quincy, MA 02269.

General Industrial Standards, OSHA 2206: OSHA Safety and Health Standards (929 CFR 1910), Subpart N-Materials Handling and Storage, Section 1910.178 Powered Industrial Trucks. For sale by: Superintendent of Documents, US Government Printing Office, Washington, DC 20402.

https://truckmanualshub.com/

Major Component Locations

Use the illustration below to help locate components included in the PM procedures.

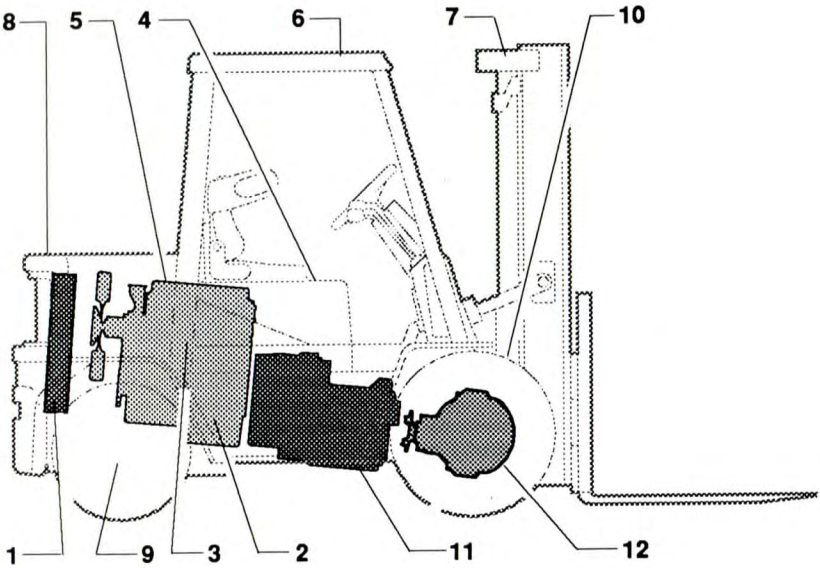

1. Cooling
2. Engine
3. Fuel Carburetion
4. Sheet Metal
5. Exhaust
6. Overhead Guard
7. Upright and Carriage
8. Frame and Counterweight
9. Steer Axle
10. Wheels and Tires
11. Transmission
12. Drive Axle-Differential

https://truckmanualshub.com/

Planned Maintenance Intervals

Time intervals between maintenances are largely determined by operating conditions. For example, operation in sandy, dusty locations requires shorter maintenance intervals than operation in clean warehouses. The indicated intervals are intended for **normal** operation. The operating condition classifications are:

Normal Operation: Eight-hour material handling, mostly in buildings or in clean, open air on clean paved surfaces.

Severe Operation: Prolonged operating hours or constant usage.

Extreme Operation:

- In sandy or dusty locations, such as cement plants, lumber mills, and coal dust or stone crushing sites.
- High-temperature locations, such as steel mills and foundries.
- Sudden temperature changes, such as constant trips from buildings into the open air, or in refrigeration plants.

If the lift truck is used in severe or extreme operating conditions, you must shorten the maintenance intervals accordingly.

NOTICE

Since the operating environment of lift trucks varies widely, the above descriptions are highly generalized and should be applied as actual conditions dictate.

https://truckmanualshub.com/

The maintenance time intervals referred to in this manual relate to truck operating hours as recorded on the hourmeter, and are based on experience CLARK has found to be convenient and suitable under typical (normal or average) operating conditions. The periods and their designations are:

PM Interval:

A = 8 - 10 hours or daily
B = 50 - 250 hours or every month (typical PM interval)
C = 450 - 500 hours or every 3 months
D = 900 - 1000 hours or every 6 months
E = 2000 hours or every year

PERIODIC CHECKS AND PLANNED MAINTENANCE (PM)	A	B	C	D	E
Check truck visually and inspect components.		•			
Test drive truck -- Check functional performance.		•			
Air clean truck and radiator.		•			
Check torque on critical fasteners.		•			
Lubricate truck. (See component)		•			
Drain and replace engine oil filter. (*)		•			
Replace engine oil filter.		•			
Replace engine air filter. (**)			•		
Inspect/adjust fan belts.			•		
Drain/flush radiator coolant.					•
Check battery.			•		
Check transmission fluid level.		•			
Drain and replace transmission fluid.				•	
Replace transmission oil filter.				•	
Clean drive axle air vent.		•			
Check brake condition and wear.					•
Check drive axle mounting and fasteners.		•			
Lubricate steer axle linkage.		•			
Check/lubricate steer axle wheel bearings.					•
Replace hydraulic sump fluid and filter.					•
Replace hydraulic sump breather.				•	
Lubricate tilt cylinder rod ends.		•			
Lubricate upright fittings.		•			
Check lift chain adjustment and wear.		•			
Check/lubricate lift chains.		•			
Lubricate upright rollers.		•			
Check/clean power steering sump screen.		•			
Check radiator cap/pressure test.					•

NOTES:

* Oil change intervals may be determined by laboratory analysis.

** Air filter change interval may be determined by using an air restriction indicator.

https://truckmanualshub.com/

DAILY MAINTENANCE CHECKS	A	B	C	D	E
Check truck for obvious damage and leaks.	•				
Check fuel system for leaks, etc.	•				
Check capacity, warning plates and decals.	•				
Check condition of tires and wheels. Remove embedded objects. Check air pressure.	•				
Check wheel lug nuts.	•				
Check engine oil level.	•				
Check fuel level.	•				
Check hydraulic sump oil level.	•				
Check gauges and instruments.	•				
Check warning lights and hourmeter.	•				
Check overhead guard condition and bolts.	•				
Check horn operation and other warning devices.	•				
Check steering operation.	•				
Check service brake operation.	•				
Check parking brake operation.	•				
Check directional and speed controls operation.	•				
Check accelerator and engine speed operation.	•				
Check lift, tilt and aux operation.	•				
Check upright, lift chains and fasteners.	•				
Check carriage or attachments and forks.	•				
Drain water from air brake reservoir. (If required)	•				
Check optional safety equipment. (Alarms, Lights etc.)	•				

PM Report Form

Make and keep records of your PM inspections. Use these records to help establish the correct PM intervals for the truck application and to indicate maintenance required to prevent major problems from occurring during operation.

As an aid in performing and documenting your PM inspections, CLARK has prepared a ***Gas, LPG, or Diesel Planned Maintenance Report Form***. Copies of this form may be obtained from your authorized CLARK dealer. We recommend that you use this form as a checklist and record of your inspection and truck condition.

The maintenance procedures outlined in this Section are intended to be used in conjunction with the PM Report Form. They are arranged in a logical and efficient sequence.

You make a check mark or entry on the PM Report Form when the PM is performed. A special coding system for indicating the importance of needed repairs and/or adjustments appears on the form.

https://truckmanualshub.com/

When you have finished the PM inspections, be sure to give a copy of the report to the designated authority or person responsible for lift truck maintenance.

Do not make repairs or adjustments unless authorized to do so.

CAUTION

For safety, it is good practice to:

- **Remove all jewelry (watch, rings, bracelets, etc.) before working on the truck.**
- **Disconnect the battery ground cable (-) from the engine or frame before working on electrical components.**
- **Always wear safety glasses. Wear a safety (hard) hat in industrial plants and in special work areas where protection is necessary and required.**

How to Perform Planned Maintenance

Visual Inspection

First, perform a visual inspection of the lift truck and it components. Walk around the truck and take note of any obvious damage and maintenance problems.

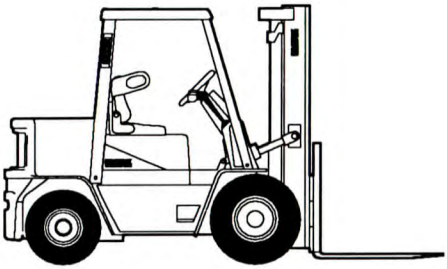

Check to be sure all capacity, safety, and warning plates are attached and legible.

NOTICE

NAMEPLATES AND DECALS: Do not operate a lift truck with damaged or lost decals and nameplates. Replace them immediately. They contain important information.

https://truckmanualshub.com/

Inspect the truck, before and after starting the engine, for any sign of external leakage of fuel, engine coolant, transmission fluid, etc.

Check for hydraulic oil leaks and loose fittings.

CAUTION

HYDRAULIC FLUID PRESSURE: Do not use your hands to check for hydraulic leakage. Fluid under pressure can penetrate your skin and cause serious injury.

Overhead Guard: Be sure that the driver's overhead guard and any safety devices are in place, undamaged, and attached securely.

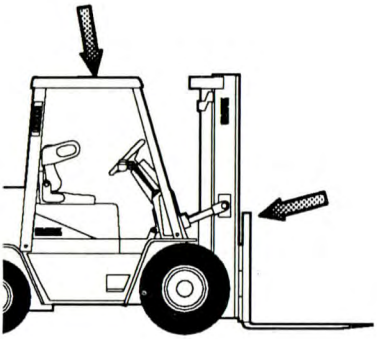

Check the overhead guard for damage. Be sure that it is properly positioned and all mounting fasteners are in place and tight.

Load Handling Components: Inspect the upright assembly, rails, carriage rollers, lift chains, and lift and tilt cylinders. Look for obvious wear and maintenance problems and damaged or missing parts. Check for any loose parts or fittings. Check for leaks, damaged or loose rollers, and rail wear (metal flaking). Carefully check the lift chains for wear, rust, corrosion, cracked or broken links, stretching, etc. Check that the lift and carriage chains are correctly adjusted to have equal tension. Check that the lift chain anchor fasteners and locking means are in place and tight.

Inspect all lift line hydraulic connections for leaks.

IMPORTANT

Uprights and lift chains require special attention and maintenance to remain in safe operating condition. Refer to "Lift Chain Maintenance" in this Section for additional information.

https://truckmanualshub.com/

Forks: Inspect the load forks for cracks, breaks, bending, and wear. The fork top surfaces should be level and even with each other. The height difference between both fork tips should be no more than 3% of the fork length.

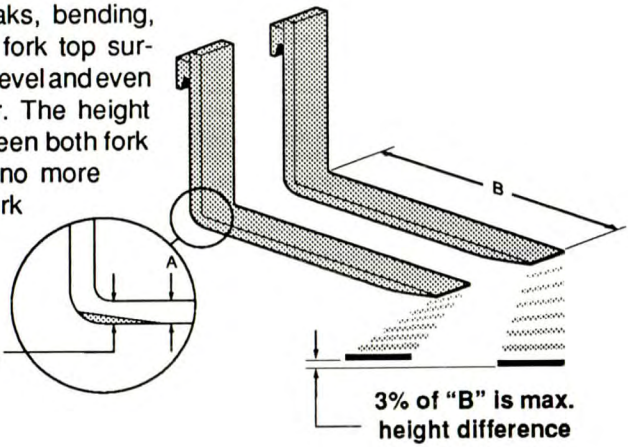

WARNING

If the fork blade at the heel is worn down by more than10 %, the load capacity is reduced and the fork must be replaced.

Inspect the forks for twists and bends. Put a 2"-thick metal block, at least 4" wide by 24" long with parellel sides, on the blade of the fork with the 4" surface against the blade. Put a 24" carpenter's square on the top of the block and against the shank. Check the fork 20" above the blade to make sure it is not bent more than 1" maximum.

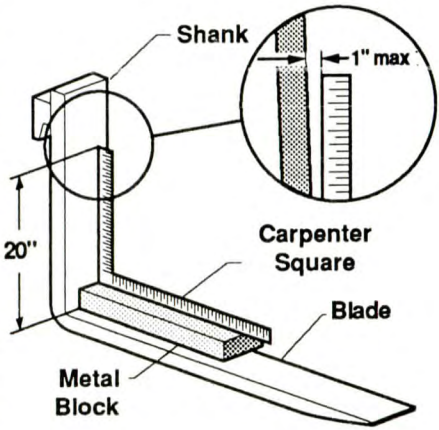

If the fork blades are obviously bent or damaged, have them inspected by a trained maintenance person before operating the truck.

Inspect the fork locking pins for cracks or damage. Reinsert them and note whether they fit properly.

https://truckmanualshub.com/

Wheels and Tires: Check the condition of the drive and steer wheels and tires. Remove objects that are embedded in the tread. Inspect the tires for excessive wear and breaks or "chunking out."

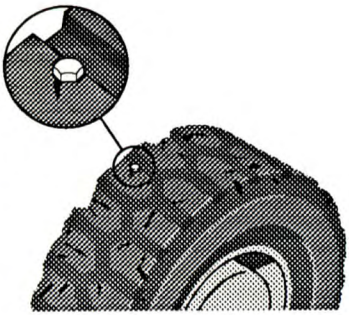

Check all wheel lug nuts or bolts to be sure none are loose or missing. Replace missing bolts or lug nuts. Torque loose or replaced items to specifications.

WARNING

Check tire pressure from a position facing the tread of the tire, not from the side. Use a long-handled gauge to keep your body away from the side. If tires are low, do not add air. Check with a mechanic. The tire may require removal and repair. Incorrect (low) tire pressure can reduce the stability of your lift truck. Proper cold inflation is 100 psi.

https://truckmanualshub.com/

Functional Tests

You will start the engine to complete the functional tests, so be sure that:

- The parking brake is applied.
- Directional control is in NEUTRAL.
- Forks are fully lowered to the floor or ground
- All controls are in neutral or other correct position
- You are familiar with the safety procedures given in Section 5, "Starting and Operating Procedures," in this manual.

As you test the following components, be sure they are properly mounted and working correctly.

Horn: Press the horn button to check horn function. If the horn or any other part does not operate, report the failure and have it repaired before the truck is put into operation.

Neutral Start Switch: Check the operation of the neutral start switch by placing the direction control lever in FORWARD or REVERSE and turning the key switch to START position. The starter must not engage until the direction control lever is moved to the NEUTRAL position.

Hour Meter: Start the engine and let it warm up until it runs evenly and accelerates smoothly when you push on the accelerator pedal. Check the hour meter for operation with the engine running. **Write the hour meter reading on the PM report form**. Report any malfunction or damage.

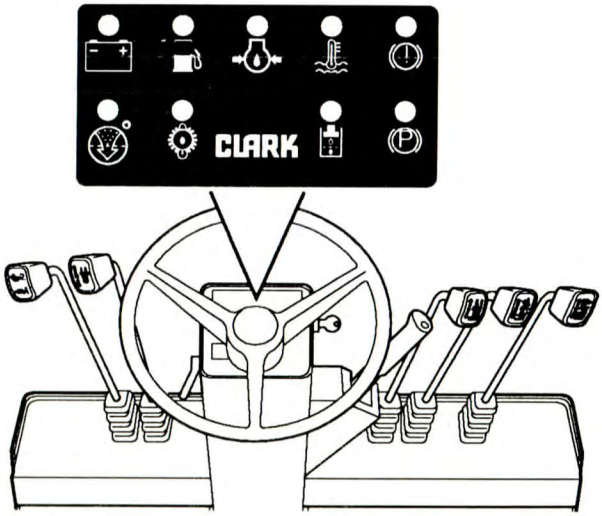

https://truckmanualshub.com/

Indicator Lights: Check that all lights are functioning and indicate normal truck operation as described in Section 3, "Know Your Truck," in this manual.

Service Brakes and Inching Pedal: With the direction control in NEUTRAL and the engine running, push the service brake pedal fully down and hold. The brakes should apply before the pedal reaches the floorplate. If the pedal continues to creep downward, report the failure immediately. **Do not operate the truck until the brakes are repaired.** Perform the same check with the inching pedal. (Additional braking/ inching checks will follow.)

Parking Brake: Check the function of the parking brake. Release, then reapply, then put the truck in gear and accelerate to insure that the brake holds. To check parking brake holding capability, park the lift truck on a grade and apply the parking brake. The parking brake should hold a lift truck with rated load on a 15% grade. Some adjustment is possible by turning the screw in the handle on the parking brake lever.

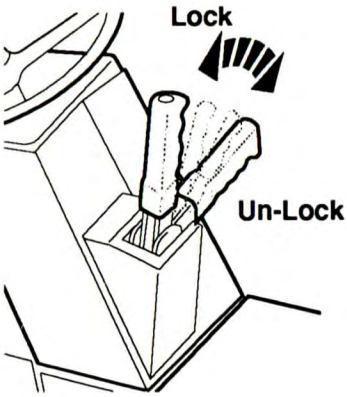

CAUTION

Do not operate a lift truck if the service or parking brakes are not operating properly.

https://truckmanualshub.com/

Lift Mechanisms and Controls: Pull back on the tilt control lever and hold until the upright reaches the full back tilt position. Push forward on the lever to return the upright to the vertical position. Release the lever.

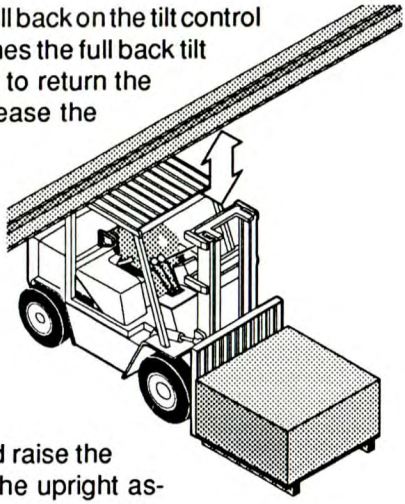

CAUTION

Be sure that there is adequate overhead clearance before raising the upright.

Pull back on the lift control lever and raise the fork carriage to full height. Watch the upright assembly as it rises. Release the lever.

If the maximum fork height is not reached, this indicates there is an inadequate (low) oil level in the hydraulic sump tank or severe binding within the upright.

Push forward on the lift control lever. Watch the upright as it lowers. When the forks reach the floor, release the lever.

All movements of the upright, fork carriage, and lift chains must be even and smooth, without binding or jerking. Watch for chain wobble or looseness; the chains should have equal tension and move smoothly without noticeable wobble.

Auxiliary Controls (Option): If your lift truck is equipped with an attachment, test the control lever for correct function and briefly operate the attachment.

Steering System:

NOTICE

The steering system, steer axle, and steering linkage on your truck should be inspected periodically for abnormal looseness and damage, leaking seals, etc. Also, be alert for any changes in steering action. Hard steering, excessive freeplay (looseness), or unusual sound when turning or maneuvering indicates a need for inspection or servicing.

https://truckmanualshub.com/

Check the steering system by moving the steering handwheel in a full right turn and then in a full left turn. Return the handwheel to the straight-ahead position. The steering system components should operate smoothly when the handwheel is turned. **Never operate a truck that has a steering system fault.**

WARNING

Fasten your seat belt before driving the truck.

Direction Control, Braking, and Inching: Be sure that the travel area is clear in front of the truck.

1. Push firmly on the brake pedal. Release the parking brake. Move the directional control lever from NEUTRAL to FORWARD.
2. Remove your right foot from the service brake pedal and put it on the accelerator pedal. Push down until the truck moves slowly forward. Remove your foot from the accelerator pedal and push down on the service brake pedal to stop the truck. The brakes should apply smoothly and equally.

Be sure the travel area is clear behind the truck.

3. Put the directional control lever in the REVERSE travel position. Push down on the accelerator pedal until the truck moves slowly in the reverse direction. Remove your foot from the accelerator pedal and push down on the service brake pedal to stop the truck. The brakes should apply smoothly and equally.
4. Put the directional control in FORWARD. Press the inching pedal fully down and hold. Depress the accelerator. The truck should not move. Now, with the accelerator still depressed, slowly release the inching pedal until the truck "inches" forward smoothly and slowly. Now apply the service brake and release the inching pedal.

Report any problems.

When you have completed the operational tests, park and leave the truck according to standard shut down procedures. Be sure to make a record of all maintenance and operating problems you find.

https://truckmanualshub.com/

Fluids, Filters, and Engine Accessories

To check fluid levels and other components within the engine compartment, unlatch and open the hood to access the engine compartment.

CAUTION

To avoid the possibility of personal injury, never work in the engine compartment with the engine running, except when it is absolutely necessary to check or make adjustments. Take extreme care to keep hands, tools, loose clothing, etc., away from fan and drive belts. Also remove watches, bracelets, and rings.

Engine Accessories: Inspect the engine coolant hoses and fan belt(s). Look for leaking and obvious damage, worn (frayed) condition, breaks, etc. that could cause failure during operation.

Engine Air Cleaner: Check the engine air cleaner for damage and contamination (excessive dirt buildup and clogging). Be sure that the air cleaner hose is securely connected (not loose or leaking). Fan or cone shaped dust deposits on tube or hose surfaces indicate a leak.

Change or service the air cleaner element every 450 to 500 operating hours, depending upon your application. Service intervals may also be determined by the air restriction indicator.

Battery: Inspect the battery for damage, cracks, leaking condition, etc. If the terminals are corroded, clean and protect them with CLARK Battery Saver (available from your CLARK dealer). If your battery has removable cell caps, check to be sure the cells are all filled. Refill them with distilled water

Engine Cooling System: Check engine coolant level. The engine coolant level is checked by removing the radiator cap. Remove the cap only when the engine is cold. First, turn the cap slowly to release any pressure that may be in the radiator. Then, push the cap fully down and turn to release and remove the cap.

CAUTION

Do not remove the radiator cap when the radiator is hot. STEAM from the radiator will cause severe burns.

https://truckmanualshub.com/

Never remove the radiator cap while the engine is running. Stop the engine and wait until it has cooled. Even then, use extreme care when removing the cap from the radiator. It is good safety practice to use a shop cloth to cover the radiator cap while it is being removed. Wrap the cloth around the cap and turn in slowly to the first stop. Step back while the pressure is released from the cooling system. When you are sure all the pressure has been released, press down on the cap with the cloth in place, and turn and remove the cap. Stand clear of the radiator opening: Hot coolant may splash out. Failure to follow these instructions could result in serious personal injury from hot coolant or steam blowout and/or damage to the cooling system or engine.

The correct FULL level is the top edge of the filler neck. If the level is low, add a 50/50 mixture of specified coolant and water to the correct fill level. If you have to add coolant more than once a month or if you have to add more than one quart at a time, check the cooling system for leaks.

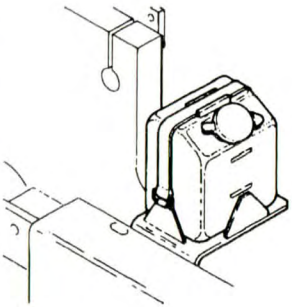

- Check engine oil for presence of coolant leaking into engine.
- Inspect the coolant for condition. Look for excessive contamination or rust or oil in the coolant solution. Check the PM time interval for need to change coolant.
- Check the condition of radiator cap rubber seal and radiator filler neck for damage. Be sure they are clean. Check overflow hose for clogging or damage.

NOTICE

Your lift truck cooling system is filled with a factory-installed solution of 50% water and 50% permanent-type antifreeze containing rust and corrosion inhibitors. You should leave the solution in year around. Plain water may be used in an emergency, but replace it with the specified coolant as soon as possible to avoid damage to the system. Do not use alcohol or methanol antifreeze.

https://truckmanualshub.com/

Engine Oil and Filter: Locate the engine oil dipstick. Pull the dipstick out, wipe it with a clean wiper, and reinsert it fully into the dipstick tube. Remove the dipstick and check oil level.

It is normal to add some oil between oil changes. Keep the oil level above the ADD mark on the dipstick by adding oil as required. **Do not overfill.** Use the correct oil as specified under Lubricant Specifications.

It is recommended to:

- Drain and replace the engine crankcase oil every 50 to 250 operating hours. See NOTICE below.
- Replace the engine oil filter every oil change.
- Remove the oil pan drain plug to drain old oil after the truck has been in operation and the engine (oil) is at operating temperature.
- Carefully check for leaks after changing oil and installing new filter.

NOTICE

The time interval for changing engine oil depends upon your application and operating conditions. To determine the correct schedule for your truck, it is suggested that you periodically submit engine oil samples to a commercial laboratory for analysis of the condition of the oil.

OIL PERFORMANCE DESIGNATION: To help achieve proper engine performance and durability, use only engine lubricating oils of the proper quality. For diesel engines, CLARK recommends that you use motor oil that meets API Service Classification CE/SF. CC/CD or CD/SF oils can be used in areas where CE oil is not available.

https://forklift-manuals.com/

Hydraulic Sump Tank: Check the hydraulic sump tank fluid level. Correct fluid level is important for proper system operation. Low fluid level can cause pump damage. Overfilling can cause loss of fluid or lift system malfunction.

Hydraulic fluid expands as its temperature rises. Therefore, it is preferable to check the fluid level at operating temperature (after approximately 30 minutes of truck operation). To check the fluid level, first park the truck on a level surface and apply the parking brake. Put the upright in a vertical position and lower the fork carriage fully down. Pull the dipstick out, (attached to the sump breather) wipe it with a clean wiper, and reinsert it. Remove dipstick and check oil level. Keep the oil level above the LOW mark on the dipstick by adding recommended hydraulic fluid only, as required. **Do not overfill.**

Check the condition of the hydraulic fluid (age, color or clarity, contamination). Change (replace) the oil as necessary.

Hydraulic Fluid and Filter Change: Drain and replace the hydraulic sump fluid every 2000 operating hours. (Severe service or adverse conditions may require more frequent fluid change). Replace the hydraulic oil filters elements at every oil change. Remove, clean, and reinstall the hydraulic and steer system suction line screens at first PM and every 500 hours thereafter. Check for leaks after installation of the filters. Also, check that the hydraulic line connections at the filter adapter are tightened correctly. The procedure for draining hydraulic sump tank is in your Service Manual.

Sump Tank Breather Maintenance and Inspection: Remove the sump tank fill cap/breather and inspect for excessive (obvious) contamination and damage. Replace the fill cap/breather, per recommended PM schedule or as required by operating conditions.

Access to the Drive Axle: The best method to use for reaching the drive axle check points (oil level/filler plug and drain plug) is dependent upon the style of upright, carriage, and attachments on your truck. The GPX truck is accessed by removing the floorplate and the GCX truck is accessed through the upright.

CAUTION

Apply the parking brake and block the wheels. Be sure to put blocking under the carriage and upright rails.

https://truckmanualshub.com/

WARNING

An upright or carriage can move unexpectedly. Chain or block the carriage and rails. Failure to follow this warning can result in serious injury.

Refer to Machine Jacking and Blocking in your Service Manual for further information.

Transmission Fluid Check: Before checking, run the engine until the unit is at operating temperature. This is important as transmission oil temperature should be 200°F and the engine water jacket should be at operating temperature. Apply the parking brake.

With the engine operating at idle and the transmission in NEUTRAL, check the fluid on the dipstick. Fill, if necessary, to the FULL mark on the dipstick, using CLARK transmission fluid.

NOTICE

Check the planned maintenance interval (operating hours) or the condition of the oil to determine if the drive axle fluid needs to be changed.

Lubrication

Truck Chassis Inspection and Lubrication: Lubrication and inspection of truck chassis components, including steer wheels, steer axle linkage, steering cylinder, and wheel bearings are easier if the truck is raised and blocked up under the frame. Refer to your Service Manual for additional information on machine blocking and jacking. Also refer to your Service Manual for the location of grease fittings.

WARNING

Do not raise the truck by lifting under the counterweight.

Inspect the steering cylinder piston rods, seals, and fasteners for damage, leaks, and looseness. Lubricate the steer axle linkage rod ends and linkage pivot points. Be sure to clean the grease fittings before lubricating, and remove the excess grease from all points after lubricating. Lubricate miscellaneous linkage as needed.

https://truckmanualshub.com/

Upright and Tilt Cylinder Lubrication: Clean the fittings and lubricate the tilt cylinder rod end bushings (forward end). Clean the fittings and lubricate the tilt cylinder base rod-end bushings (rear end). Clean and lubricate the upright trunnion bushings.

Lift Chains: Lubricate the entire length of the upright rail lift and carriage chains with CLARK Chain and Cable Lube.

IMPORTANT

Do not lubricate the carriage roller rails.

Air Cleaning

Always maintain a lift truck in a clean condition. Do not allow dirt, dust, lint, or other contaminants to accumulate on the truck. Keep the truck free from leaking oil and grease. Wipe up all oil spills. Keep the controls and floorboards clean, dry, and safe. A clean truck makes it easier to see leakage and loose, missing, or damaged parts, and helps prevent fires. A clean truck runs cooler. The environment in which a lift truck operates determines how often and to what extent cleaning is necessary.

For example, trucks operating in manufacturing plants that have a high level of dirt, dust, or lint (for example, cotton fibers or paper dust) in the air or on the floor or ground, require more frequent cleaning. The radiator especially may require daily air cleaning to ensure correct cooling. If air pressure does not remove heavy deposits of grease, oil, etc., it may be necessary to use steam or liquid spray cleaner.

IMPORTANT

Lift trucks should be air cleaned at every PM interval, or more often if necessary.

Use an air hose with special adapter or extension, a control valve, and a nozzle to direct the air properly. Use clean, dry, low pressure, compressed air. Restrict air pressure to 30 psi (207 kPa), maximum. (OSHA requirement.)

CAUTION

Wear suitable eye protection and protective clothing when air cleaning. Never point the air nozzle at anyone.

https://truckmanualshub.com/

Air clean the upright assembly, drive axle, radiator—from both counterweight and engine side, engine and accessories, driveline and related components, and steer axle and cylinder.

Critical Fastener Torque Checks

Fasteners in highly loaded (critical) components can quickly fail if they become loosened. Also, loose fasteners can cause damage or failure of the component. For safety, it is important that the correct torque be maintained on all critical fasteners of components that directly support, handle, or control the load and protect the operator.

Critical items include:

- Drive axle mounting
- Drive and steer wheel mounting
- Counterweight mounting
- Overhead guard
- Tilt cylinder mounting and yokes
- Upright mounting and components

Torque specifications are in your Service Manual.

Lift Chain Maintenance

The chain system on the upright was designed for safe, efficient, and reliable transmission of lifting force from hydraulic cylinder to the forks. Safe use of your truck with minimum down-time depends on the correct care and maintenance of the lift chains. Most complaints of unacceptable chain performance are a result of poor maintenance. Chains need periodic maintenance to give maximum service life.

Lift Chain Adjustment Check: The lift chains are correctly adjusted if the lower fork carriage rollers reach their end (lowest) position approximately 0.50 inch (13 mm) from the lower edge of the inner rail. This also positions the bottom of the forks the same (equal) distance above the floor. To check this dimension, raise the carriage to a height that exposes several inches of the inner rail at the roller path. Apply a layer of grease to the roller path on the inner rail. Lower the carriage and pick up a rated capacity load, tilt the upright back slightly, and raise the load until the carriage rollers have passed over the greased area. Lower the load completely and remove the load from the forks. Raise the carriage again to expose the inner rail. You can now check the roller path pattern in the grease and determine the correct adjustment of the chains. The lift chains can be adjusted by loosening or tightening the chain anchor nuts.

https://truckmanualshub.com/

NOTICE

It is important to make the lift chain adjustment check with a rated load to make sure that the chains are stretched to their maximum length.

WARNING

Do not attempt to repair a worn chain. Replace worn or damaged chains. Do not piece chains together.

Lift Chain Inspection and Measurement: Inspect and lubricate the lift chains every PM (50-250 hours). When operating in corrosive environments, inspect the chains every 50 hours. During the inspection, check for the following conditions:

- Rust and corrosion, cracked plates, raised or turned pins, tight joints, wear, and worn pins or holes.
- When the pins or holes become worn, the chain becomes longer. When a section of chain is 3% longer than a section of new chain, the chain is worn and must be discarded.
- Chain wear can be measured by using a chain scale or a steel tape measure. When checking chain wear, be sure to measure a segment of chain that moves over a sheave. Do not repair chains by cutting out the worn section and joining in a new piece. If part of a chain is worn, replace all the chains on a truck.

https://truckmanualshub.com/

Lift Chain Lubrication: Lift chain lubrication is an important part of your maintenance program. The lift chains operate under heavy loadings and function more safely and have longer life if they are regularly and correctly lubricated. CLARK chain lubricant is recommended; it is easily sprayed on and provides superior lubrication. Heavy motor oil may also be used as a lubricant and corrosion inhibitor.

Lift Chain Wear and Replacement Criteria:

1 (NEW CHAIN LENGTH) The distance from the first pin counted to the last pin counted in a span while the chains are lifting a small load.
2 (WORN CHAIN LENGTH) The distance from the first pin counted to the last pin counted in a span while the chains are lifting a small load.
3 (SPAN) The number of pins in the length (segment) of chain to be measured.
4 (PITCH) The distance from the center of one pin to the center of the next pin.

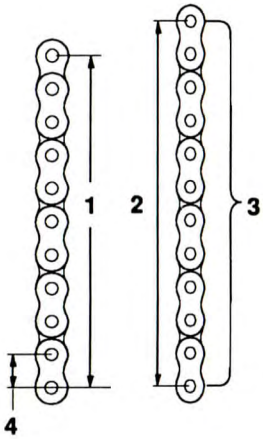

All chains must be replaced if any link has wear of 3% or more, or if any of the damaged conditions noted above are found during inspection. Order replacement chains from your CLARK dealer. Replace all chains as a set. Do not remove factory lubrication or paint new chains. Replace anchor pins and worn or broken anchors when installing new chains. Adjust tension on new chains. Lubricate chains when they are installed on the upright.

NOTICE

Please refer to your Service Manual for additional information on lift chain measurement and maintenance.

Specifications

Clark products and specifications are subject to improvements and changes without notice or obligation

Model Designation — Rated Load Capacity

GPX	35 (D) - 7,000 lbs	@ 24in load center	[3500 kg] @	[500mm]
GPX	40 (D) - 8,000 lbs	@ 24in load center	[4000 kg] @	[500mm]
GPX	45 (D) - 9,000 lbs	@ 24in load center	[4500 kg] @	[500mm]
GPX	50 (D) - 10,000lbs	@ 24in load center	[5000 kg] @	[500mm]
GPX	55 (D) - 11,000lbs	@ 24in load center	[5500 kg] @	[500mm]

Note: Rated capacity applies when using uprights with maximum MFH up to and including: 168 Inches

Engine	*Diesel*	*Gas*	*LPG/CNG*
Model Perkins:	1004.4		
Model GM:		V6 Vortec	V6 Vortec
Cylinders:	4	6	6
Displacement			
cubic inches:	243	263	263
liters:	4.00	4.3	4.3
Idle RPM:	800-850	650-700	650-700
Governed RPM			
No load @ high idle:	2420	2450	2450
Full load:	2220	1800	1800

Cooling System

Automotive type vertical crossflow radiator.
Transmission cooler in side tank.
Cooling system pressure (radiator cap): 50 kPa nominal.
Thermostat: Diesel, 85°C (185°F), fully open 98°C (212°F), Gas/CNG/LPG 83°C (182°F), fully open 96°C (205°F)

Powershift Transmission

CLARK Model H200 Transaxle

Speeds:	2 forward /2 reverse	
Overall Ratios:	1st / 31.133 :1	2nd /15.934 :1

Drive Axle

Offset drive axles. Enclosed axle-end gear reduction develops maximum torque at the wheel. Durability is unmatched. Disc brakes act prior to final gear reduction mutiplaying braking torques.

https://truckmanualshub.com/

Wheels and Tires for Pneumatic Truck

Tires:	GPX 35/40 drive:	8.25 X15,	14-ply rating
	GPX 45/50/55 drive:	32 X 12.1 X 15	20-ply rating
	GPX 35-55 steer:	7.00 X 12,	12-ply rating
Pressure:	GPX 35/44 drive:	724.5 kPa	(105psi)
	GPX 45/50/55 drive:	827.5 kPa	(120psi)
	GPX 35-55 steer:	689.5 kPa	(100psi)

Truck Weights (approximate, with cutoff height upright)

	Empty Vehicle Weight (lbs)	*Loaded Drive Axle (lbs)*	*Empty Drive Axle (lbs)*
GPX35	12,335	18,510	6,108
GPX40	12,810	19,590	5,445
GPX45	14,425	20,910	6,560
GPX50	14,506	22,695	5,842
GPX55	16,352	24,428	6,192

Electrical System

Type: 12 volt DC, negative ground Fuses: 7.5, 15, and 30 amps

Batteries:	*BCI Group 4D* Gas, LPG, CNG	*BCI Group 3EE* Diesel
Cold cranking current amps	12 volt DC- 405 amps @ 0°F total	12 volt DC-625 @ 0°F total

Filters

Engine air:	Dry type—replaceable element
Engine oil:	Spin-on
Transmission:	Spin-on
Hydraulic system oil:	Suction screen in sump tank and filter in return line - 100 Micron; (used for steering system too)
Hydraulic sump breather cap:	5 Micron cap

Use genuine CLARK parts. See your CLARK dealer.

Fuel Recommendations

Diesel:	D-2 with cetane rating of 45 or higher. D-1 and Jet A-1 also acceptable.
Gasoline:	87 octane minimum
LPG:	HD-5 propane

Fill Capacities (fluid volumes)

Fuel tank:		20 US gallons; 76 liters	
Cooling system(diesel):		16.9 quarts; 16 liters	
Cooling system(gas):		19.6 quarts; 18.6 liters	
Engine oil, w/filter (diesel):		7.5 quarts; 7.1 liters	
Engine oil, w/filter (gas):		5 quarts w/filter; 4.7 liters	
Transaxle:		15 quarts; 14.2 liters	
Hyd Sump tank:	GPX 30-55	15 US gallons;	57,0 liters
(Usable Volume)	GPX 40-55	19 US gallons;	72.0 liters

Engine Coolant Recommendation

Use a mixture of 50% ethylene glycol permanent-type antifreeze containing rust and corrosion inhibitors only. **Note:** This mixture provides antifreeze protection level of -37°C (-34°F), approximately.

Transmission Fluid Recommendation

Use CLARK TransmissionFluid.

Hydraulic Fluid Recommendation

Use CLARK Specification MS-68 Hydraulic Oil, with anti-wear additives, or equivalent, only.

https://truckmanualshub.com/

Engine Oil

Use these SAE viscosity grades.

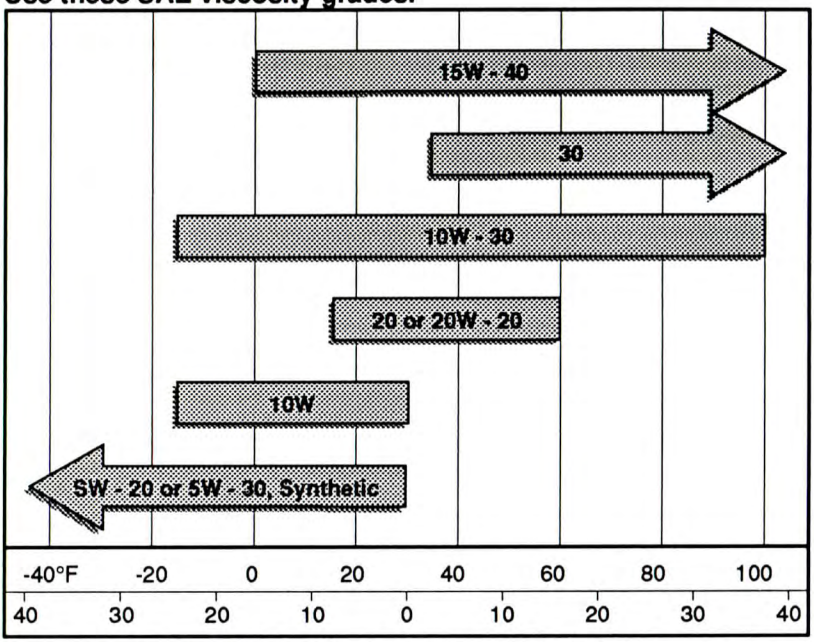

Temperature Range You Expect Before Next Oil Change

Engine Oil Recommendations

American Petroleum Institute (API) classifications CD/SF, CD/SE, Mil-L-2104C. 5W-20 or 5W-30 to be synthetic per Mil-L-46167, Mil-L-2104C or Mil-L-45152B.

IMPORTANT

Do not extend oil change intervals from those specified when using synthetic lubricants.

Fill crankcase with correct amount of oil. When adding oil between oil changes, it is preferable to use the same brand as various oils may be compatible. Refer to the Maintenance and Lubrication Section for recommended oil change intervals.

IMPORTANT

Do not overfill crankcase. Excess oil causes foaming and can cause loss of lubrication and higher operating temperatures, resulting in engine damage.

https://truckmanualshub.com/

Index

A
Accelerator 5-10
Adjusting the load forks 5-14
After operating 5-20
Auxiliary control lever 3-14
B
Battery, jumping 6-4
Battery safety 6-4
Brakes
Parking 3-11
Service 3-12
Braking 5-10
C
Capacities, fill 8–3
Chain slack 2-7
Choke 5-7, 5-8
CNG fuel system
Description 3-16
Emergency shut-off valve 3-16
Fuel level gauge 3-16
Fuel tank 3-16
Maintenance 4-7
Refueling 4-8
Safety warning 4-9
Component locations 7-8
Control, safety tips 5-11
Controls, layout 3-8
Coolant specification 8-1
D
Daily inspection 1-2
Decals and safety plates 3-3
Fan warning decal 3-7
Operator safety warning plate ... 3-5
Seat belt warning decal 3-6
Tip-over warning decal 3-6
Truck data and capacity plate ... 3-4
Upright warning decal 3-7
Description of truck 3-2
Diesel engine, cold starting 5-7
Diesel fuel quality 8-3
Diesel fuel safety 4-5
Direction control 5-9
Direction control lever 3-13
Driver's Daily Checklist 4-2
E
Exhaust gases 5-6
Explosive gases 6-5
F
Fork safety 1-7
Forks, adjusting 5-14
Forks and upright, positioning ... 5-8
Fuel indicator 3-9
Fuel safety practices 4-5
Fueling ..... 4-5 to 4-9
Functional checks, by operator . 4-4
Functional tests, by service personnel 7-16
G
Gasoline fuel safety 4-5
Glow plug switch 5-7
Grades 1-9, 5-12
H
Horn button 3-12
Hour meter 3-12
Hydraulic fluid specification 8-3
Hydraulic leaks 4-2, 7-13
Hydraulic system 3-14
I
Inching 5-10
Inching pedal 3-12
Inclines 1-9, 5-12
Indicator lights 3-8
J
Jacking and blocking 7-4
Jumper cables 6-4
K
Key/start switch 3-10
L
Lift control lever 3-14
Lifting speed 3-14
Load handling ..... 5-14 to 5-19
Locator pin 3-15
Long loads 2-3
Loose loads 2-2

https://truckmanualshub.com/

L (cont)

LPG fuel system
- Blocked fuel flow 3-15
- Description 3-17
- Maintenance 4-7
- Refueling 4-6
- Safety warning 4-7

M

Maintenance, by operator 4-2
Maintenance, by trained personnel 7-1
Maintenance intervals 7-9
Maintenance safety ..... 7-3 to 7-6
Modifying the truck 7-6
Moving loads 5-16

O

Oil (engine) specifications 8-4
Operating hazards ..... 2-1 to 2-8
Operating procedures .. 5-1 to 5-20
Operating tips 5-5
Operator's compartment 3-8
Operator's Manual, location 5-2
Operator's position 5-11
Out of service tag 4-4
Overhead clearance 2-4
Overhead guard 1-6, 5-2, 5-11

P

Pallets 2-8
Parking 1-10, 5-20, 6-3
Parking brake 3-11
Pedestrians 1-6
Picking up loads 5-16
Pinch points 1-7
Planned maintenance .. 7-1 to 7-28
- Air cleaning 7-25
- Auxiliary controls 7-18
- Battery 7-20
- Coolant 7-21
- Cooling system 7-20
- Differential breather 7-24
- Differential fluid 7-24
- Drive axle access 7-23
- Engine accessories 7-20
- Engine air cleaner 7-20
- Filters 7-20
- Fluids 7-20
- Forks 7-14
- Horn 7-16
- Hour meter 7-16
- Hydraulic filter change 7-23
- Hydraulic fluid 7-23
- Hydraulic sump tank 7-23
- Inching pedal 7-19
- Lift chain care ..... 7-26 to 7-28
- Lift mechanisms and controls 7-18
- Lights, indicator 7-16
- Load handling components .. 7-13
- Lubrication, chassis 7-24
- Lubrication, lift chains 7-25
- Lube, upright and tilt cylinder 7-25
- Neutral start switch 7-16
- Oil, engine 7-22
- Oil filter 7-22
- Overhead guard 7-13
- Parking brake 7-17
- Radiator cap 7-21
- Service brakes 7-17, 7-19
- Steering system 7-18
- Sump tank breather 7-23
- Tires 7-15
- Torque checks 7-26
- Transmission fluid 7-24
- Wheels 7-15
- PM Report Form 7-11

Publications, related
- Operator's manual 5-2
- Safety 7-7
- Service Manual ..... vii, 7-1

R

Ramps 1-9, 5-12
Range shift lever 3-13
Rear swing 2-3
Refueling ..... 4-5 to 4-9
Reporting problems 4-2, 5-13
Riders 1-5, 5-12
Right-angle stacking 2-6

https://truckmanualshub.com/

S
Safe maintenance practices ....7-3 to 7-6
Safety inspection, daily 1-2, 4-2
Safety messages x
Safety plates and decals. *See* Decals and safety plates
Safety rules ... 1-1 to 1-14, 2-1 to .....2-8, 5-11 to 5-10
Safety signs x
Seat adjustment 3-11, 5-3
Seat belts 1-4, 5-3
Service Manual ..... vii, 7-1
Short circuits 6-5
Shut-down procedure 5-20
Skids 2-8
Slopes 1-9
Specifications 8-1
Speed range control 5-9
Stability 5-9, 5-12, 5-14
Stacking 5-18
Starter, excessive cranking 5-5
Starting fluid 5-7
Starting from a safe condition ... 5-4
Starting the engine 5-7
Starting tips 5-5
Steering system 3-12
Surface, hazards 1-9

T
Tilt 5-8
Tilt control lever 3-14
Tip over 1-4
Towing 6-2
Transmission fluid specification 8-3
Travel 1-8
Traveling with a load 5-15

U
Unloading 5-17

V
Visibility 5-11
Visual checks, by operator 4-3
Visual inspection, by service personnel ..... 7-12 to 7-15

W
Warm-up 5-5, 5-8
Wide loads 2-3

https://truckmanualshub.com/

Additional copies of this manual may be purchased from
YOUR AUTHORIZED CLARK DEALER.

GREEN THE SOLUTION

CLARK® Material Handling Company

Lexington, KY 40507

Printed in USA