https://truckmanualshub.com/

100+ YEARS OF GLOBAL
TRUST & COMMITMENT

Next Step To Future

XE 35

3.5 Ton Electric Truck

WHY BUY ME?

- Durable for outdoor usage
- High capacity battery for longer working hours
- Lateral battery change system
- Operator presence sensing system
- High performance forklift with global standards

TOLL FREE NUMBER- 1800 270 1123

https://truckmanualshub.com/

BRAND HISTORY

1917

Founded in **1917**; starts in 1918 the production of cars

1933

In **1933**,acquisition by FIAT Group

1937

In **1937** The Plants Of Milan And Brescia Are Unified And The agricultural Machinery Division Of Suzzarals Incorporated With TheGrowth Of 3 New Segments :
1.Buses, Trucks, **2.**Rail Equipment, Agricultural Tractors, Forklift Trucks, Marine Engines
3.Engine Pumps And Cooling Systems

1957

In **1957** OM becomes FIAT Carrelli Elevatori, belonging to IVECO Division

1961

In **1961** PIMESPO, Piccola Industria Meccanica sul Po was born in Luzzara, manufacturing WH Trucks

1981

In **1981** FIAT IVECO acquires PIMESPO.

1992

In **1992** LINDE Group acquires from FIAT the Forklift Division.

2002

In **2002** the Company changes his name into OM Carrelli Elevatori keeping the Brand OM PIMESPO.

2005

In **2005** Luzzara becomes a Plant for the whole STILL Group

2006

In **2006** Linde, Still and OM are unified into the KION Group.

2017

In **2017**, OM launched in Indian market.

https://truckmanualshub.com/

OVERALL DIMENSIONS AND SPECIFICATIONS FOR XE 35

CHARACTERISTICS	1.1	Manufacturer		KION India
	1.2	Manufacturer type designation		XE35
	1.3	Drive Unit		Electric
	1.4	Operator Type		Seated
	1.5	Rated Capacity	Q(Kg)	3500
	1.6	Rated Load Center	C(mm)	500
	1.7	Load distance,centre of drive axle to fork face	X(mm)	515
	1.8	Wheel base	Y(mm)	1622
WEIGHT	2.1	Service Weight (Including Battery)	kg	5100
	2.2	Axle loading: Laden (Front / Rear)	kg	7800 / 800
	2.3	Axle loading: Unladen (Front / Rear)	kg	2200 / 2900
WHEEL & TYRES	3.1	Tyre type		Solid
	3.2	Tyre Size : Front		28 x 9-15
	3.3	Tyre Size : Rear		18 x 7-8
	3.4	Number of Tyres : Front / Rear		2 / 2.
	3.5	Tread (Front / Rear)	b10/b11(mm)	1000 / 980
BASIC DIMENSIONS	4.1	Tilt of Mast	Fwd / Bwd (Deg)	6°/ 6°
	4.2	Overall Mast Height Lowered	h1(mm)	2115
	4.3	Free Lift Height (Without Load backrest)	h2(mm)	1410
	4.4	Max Lift Height	h3(mm)	4500
	4.5	Height ,mast extended(with Load backrest)	h4(mm)	5605
	4.6	Height of overhead guard	h6(mm)	2220
	4.7	Seat Height	h7(mm)	1110
	4.8	Length to face of forks	L2(mm)	2550
	4.9	Overall width	b1/b2(mm)	1220
	4.10	Fork dimensions	s/e/l(mm)	50x125x1070
	4.11	Fork Carriage Class		3A
	4.12	Ground Clearance,laden,below mast	m1(mm)	130
	4.13	Ground Clearance,below frame	m2(mm)	120
	4.14	Aisle width for pallets 1000 x 1200 crossways	Ast(mm)	4520
	4.15	Aisle width for pallets 800 x 1200 lengthways	Ast(mm)	4560
	4.16	Turning radius	Wa(mm)	2300
PERFORMANCE	5.1	Travel Speed (Laden / Unladen)	Kmph	11/12.
	5.2	Lifting Speed (Laden / Unladen)	m/s	0.23/0.37
	5.3	Lowering Speed (Laden / Unladen)	m/s	0.50/0.48
	5.4	Gradability (Laden / Unladen)	%	10.5 / 12
	5.5	Service Brake		Hydraulic
	5.6	Parking Brake		Mechanical
DRIVE	6.1	Drive Motor rating S2 60 min	kW	16.6
	6.2	Lift Motor rating S3 15%	kW	10
	6.3	Battery Capacity	V / AH	80 / 500
	6.4	Battery weight	kg	1350
	6.5	Type of drive unit		AC
	6.6	Steering type		Hydrostatic

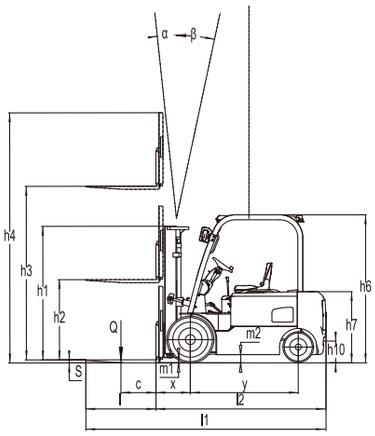

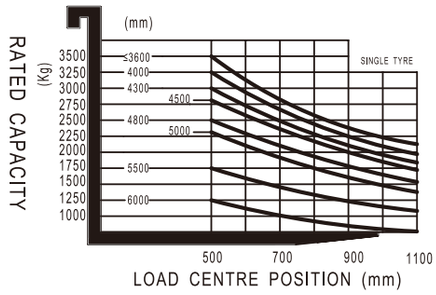

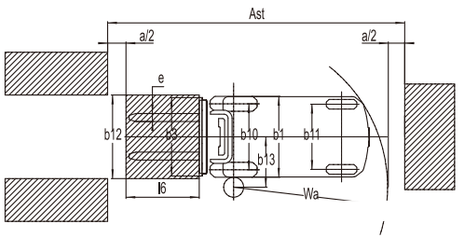

https://truckmanualshub.com/

100+ CUSTOMER
TOUCH POINTS FOR SALES & SERVICE

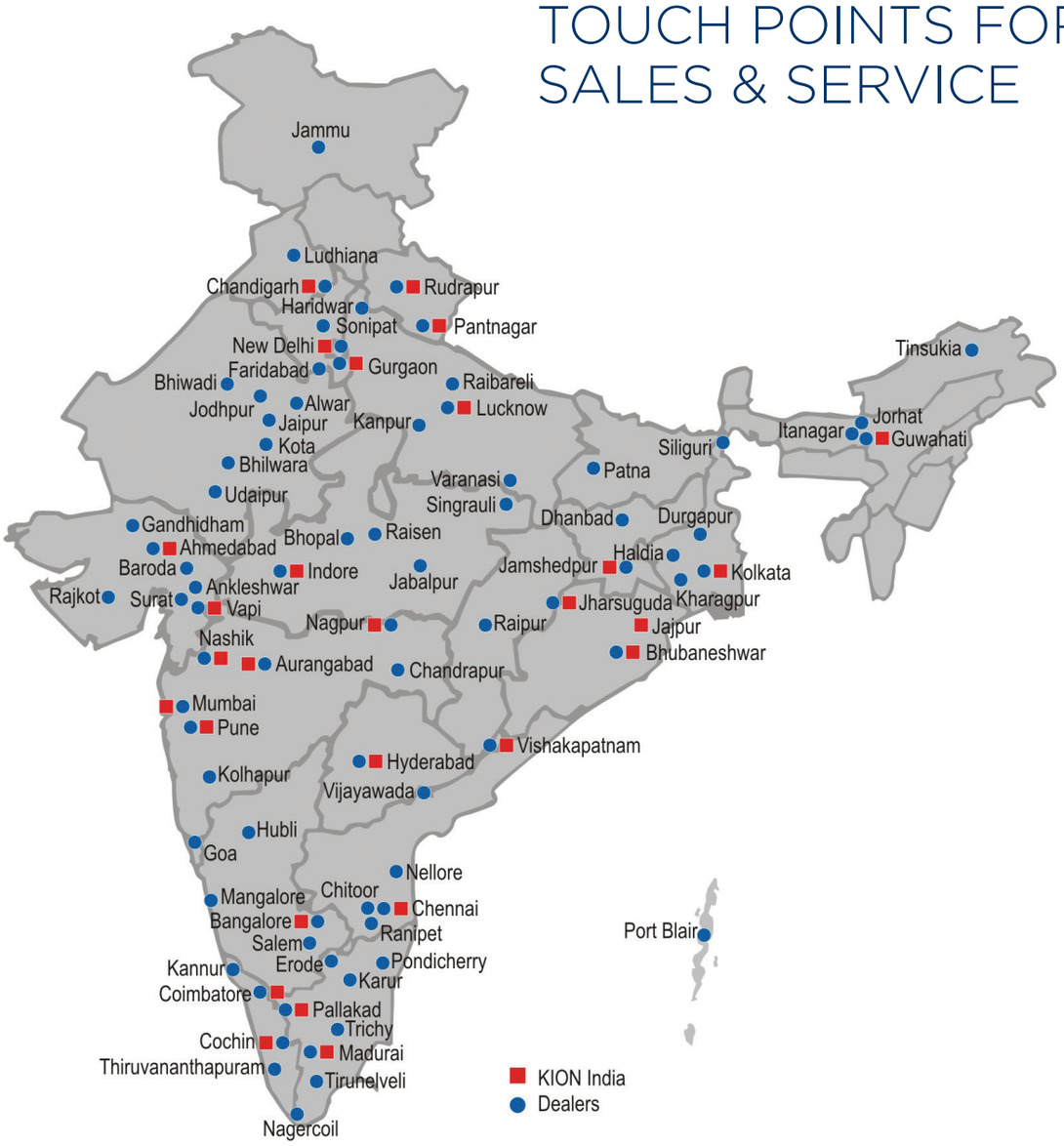

Address :
KION INDIA Private Limited, 5/4 Chandan Nagar,
Pune Nagar Road, Pune-411014 | Ph. No. 020 67342101/194/130/153/129
TOLL FREE NUMBER- 1800 270 1123

F:MKT KION 302.140.00