https://truckmanualshub.com/

An Oshkosh Corporation Company

Service and Maintenance Manual

Model
12SP
15SP

3120775

June 29, 2018 - Rev K

ANSI

ISO9001 REGISTERED COMPANY

UKAS QUALITY MANAGEMENT 015

https://truckmanualshub.com/

https://truckmanualshub.com/

FOREWORD

The purpose of this manual is to provide users with the operating procedures essential for the promotion of proper machine operation for its intended purpose. It is important to over-stress proper machine usage. All information in this manual should be **READ** and **UNDERSTOOD** before any attempt is made to operate the machine. **YOUR OPERATING MANUAL IS YOUR MOST IMPORTANT TOOL** - Keep it with the machine. **REMEMBER ANY EQUIPMENT IS ONLY AS SAFE AS THE OPERATOR.**

BECAUSE THE MANUFACTURER HAS NO DIRECT CONTROL OVER MACHINE APPLICATION AND OPERATION, PROPER SAFETY PRACTICES ARE THE RESPONSIBILITY OF THE USER AND HIS OPERATING PERSONNEL.

ALL INSTRUCTIONS IN THIS MANUAL ARE BASED ON THE USE OF THE MACHINE UNDER PROPER OPERATING CONDITIONS, WITH NO DEVIATIONS FROM THE ORIGINAL DESIGN. ALTERATION AND/OR MODIFICATION OF THE MACHINE IS STRICTLY FORBIDDEN, WITHOUT WRITTEN APPROVAL FROM JLG INDUSTRIES, PER OSHA REGULATIONS.

THIS "SAFETY ALERT SYMBOL" IS USED TO CALL ATTENTION TO POTENTIAL HAZARDS WHICH MAY LEAD TO SERIOUS INJURY OR DEATH IF IGNORED.

Safety of personnel and proper use of the machine are of primary concern, **DANGER, WARNING, CAUTION, NOTICE, INSTRUCTIONS** and **NOTE** are inserted throughout this manual to emphasize these areas. They are defined as follows:

DANGER

DANGER INDICATES AN IMMINENTLY HAZARDOUS SITUATION WHICH, IF NOT AVOIDED WILL RESULT IN SERIOUS INJURY OR DEATH.

WARNING

WARNING INDICATES A POTENTIALLY HAZARDOUS SITUATION WHICH, IF NOT AVOIDED COULD RESULT IN SERIOUS INJURY OR DEATH.

CAUTION

CAUTION INDICATES A POTENTIALLY HAZARDOUS SITUATION WHICH, IF NOT AVOIDED, MAY RESULT IN MINOR OR MODERATE INJURY. IT MAY ALSO BE USED TO ALERT AGAINST UNSAFE PRACTICES.

NOTICE

IMPORTANT OR INSTRUCTIONS PROCEDURES ESSENTIAL FOR SAFE OPERATION AND WHICH, IF NOT FOLLOWED MAY RESULT IN A MALFUNCTION OR DAMAGE TO THE MACHINE.

Also in this Manual "Notes:" are used to provide information of special interest.

NOTICE

JLG INDUSTRIES, INC. MAY HAVE ISSUED SAFETY RELATED BULLETINS FOR YOUR JLG PRODUCT. CONTACT JLG INDUSTRIES, INC. OR THE LOCAL AUTHORIZED JLG DISTRIBUTOR FOR INFORMATION CONCERNING SAFETY RELATED BULLETINS WHICH MAY HAVE BEEN ISSUED FOR YOUR JLG PRODUCT. ALL ITEMS REQUIRED BY THE SAFETY RELATED BULLETINS MUST BE COMPLETED ON THE AFFECTED JLG PRODUCT.

Due to the continuous product improvements, JLG Industries, Inc. reserves the right to make specification changes without prior notification. Contact JLG Industries, Inc. for updated information.

https://truckmanualshub.com/

NOTES:

https://truckmanualshub.com/

MAINTENANCE SAFETY PRECAUTIONS

GENERAL

This section contains the general safety precautions which must be observed during maintenance of the aerial platform. It is of utmost importance that maintenance personnel pay strict attention to these warnings and precautions to avoid possible injury to themselves or others or damage to the equipment. A maintenance program must be established by a qualified person and must be followed to ensure that the machine is safe to operate.

WARNING

MODIFICATION OF THE MACHINE WITHOUT CERTIFICATION BY A RESPONSIBLE AUTHORITY THAT THE MACHINE IS AT LEAST AS SAFE AS ORIGINALLY MANUFACTURED IS A SAFETY VIOLATION.

The specific precautions to be observed during machine maintenance are inserted at the appropriate point in the manual. These precautions are, for the most part, those that apply when servicing hydraulic and larger machine component parts.

Your safety, and that of others, is the first consideration when engaging in the maintenance of equipment. Always be conscious of component weight and never attempt to move heavy parts without the aid of a mechanical device. Do not allow heavy objects to rest in an unstable position. When raising a portion of the equipment, ensure that adequate support is provided.

WARNING

SINCE THE MACHINE MANUFACTURER HAS NO DIRECT CONTROL OVER THE FIELD INSPECTION AND MAINTENANCE, SAFETY IN THIS AREA IS THE RESPONSIBILITY OF THE OWNER/OPERATOR.

HYDRAULIC SYSTEM SAFETY

1. It should be particularly noted that the machines hydraulic systems operate at extremely high and potentially dangerous pressures. Every effort should be made to relieve any system pressure prior to disconnecting or removing any portion of the system.
2. Relieve system pressure by activating the lift DOWN control with the platform completely lowered to direct any line pressure back into the return line to the reservoir. Pressure feed lines to system components can then be disconnected with minimal fluid loss.

MAINTENANCE

WARNING

FAILURE TO COMPLY WITH SAFETY PRECAUTIONS LISTED IN THIS SECTION COULD RESULT IN MACHINE DAMAGE, PERSONNEL INJURY OR DEATH AND IS A SAFETY VIOLATION.

- REMOVE ALL RINGS, WATCHES, AND JEWELRY WHEN PERFORMING ANY MAINTENANCE.
- DO NOT WEAR LONG HAIR UNRESTRAINED, OR LOOSE FITTING CLOTHING AND NECKTIES WHICH ARE APT TO BECOME CAUGHT ON OR ENTANGLED IN EQUIPMENT.
- OBSERVE AND OBEY ALL DANGER, WARNING, CAUTION AND OTHER INSTRUCTIONS ON MACHINE AND IN SERVICE MANUAL.
- KEEP STANDING SURFACES AND HAND HOLDS FREE OF OIL, GREASE, WATER, ETC.
- NEVER WORK UNDER AN ELEVATED PLATFORM UNTIL PLATFORM HAS BEEN SAFELY RESTRAINED FROM ANY MOVEMENT BY BLOCKING OR OVERHEAD SLING.
- BEFORE MAKING ADJUSTMENTS, LUBRICATING OR PERFORMING ANY OTHER MAINTENANCE, SHUT OFF ALL POWER CONTROLS.
- BATTERY SHOULD ALWAYS BE DISCONNECTED DURING REPLACEMENT OF ELECTRICAL COMPONENTS.
- KEEP ALL SUPPORT EQUIPMENT AND ATTACHMENTS STOWED IN THEIR PROPER PLACE.
- USE ONLY APPROVED, NONFLAMMABLE CLEANING SOLVENTS.

https://truckmanualshub.com/

EFFECTIVITY CHANGES

June 2, 1999 - A - Original Issue of Manual

March 7, 2000 - B - Manual Revised (added CSA/Latin America Specifications)

April 13, 2000 - C - Manual Revised (added 12SP Model)

April 25, 2000 - D - Manual Revised (corrected Mast Disassembly/Assembly - Section-2.)

November 22, 2000 - E - Manual Revised - Pages Affected;Section 2 - Pages 2-4 through 2-19.

January 25, 2001 - F - Manual Revised - Pages Affected;Section 2 - Page 2-14 and 2-15.

January 16, 2002 - G - Manual Revised

January 20, 2006 - H - Manual Revised

July 10, 2006 - I - Manual Revised

March 17, 2008 - J - Manual Revised

June 29, 2018 - K - Revised Covers

https://truckmanualshub.com/

SUBJECT - SECTION, PARAGRAPH **PAGE NO.**

MAINTENANCE SAFETY PRECAUTIONS . . . . . a
General . . . . . a
Hydraulic System Safety . . . . . a
Maintenance . . . . . a
EFFECTIVITY CHANGES . . . . . b

SECTION 1 - SPECIFICATIONS

1.1 CAPACITIES 1-1
Hydraulic Oil Reservoir 1-1
1.2 COMPONENT DATA 1-1
Hydraulic Pump/Electric Motor Assembly 1-1
Batteries 1-1
Battery Charger 1-1
1.3 PERFORMANCE DATA 1-1
Platform Capacity (Max. Rated Load) 1-1
Machine Speeds 1-1
Machine Weight (With Standard Platform) 1-1
Machine Height (Platform Stowed) 1-1
Maximum Platform Height (Mast Fully Extended) 1-1
Maximum Working Height (Average Person) 1-1
Machine Overall Width And Length (Stowed) 1-1
1.4 TORQUE REQUIREMENTS 1-1
1.5 LUBRICATION 1-2
Hydraulic Oil 1-2
Lubrication Specifications 1-2
1.6 HYDRAULIC PRESSURE ADJUSTMENT 1-2
1.7 CYLINDER SPECIFICATIONS 1-2
1.8 SERIAL NUMBER LOCATIONS 1-2

SECTION 2 - SERVICE PROCEDURES

2.1 MACHINE PREPARATION, INSPECTION, AND MAINTENANCE 2-1
General 2-1
Preparation, Inspection, and Maintenance 2-1
Pre-Start Inspection 2-1
Pre-Delivery Inspection and Frequent Inspection 2-1
Annual Machine Inspection 2-1
Preventative Maintenance 2-1
2.2 PREVENTIVE MAINTENANCE AND INSPECTION SCHEDULE 2-2
2.3 SERVICING AND MAINTENANCE GUIDELINES 2-4
General 2-4
Safety and Workmanship 2-4
Cleanliness 2-4
Components Removal and Installation 2-4
Component Disassembly and Reassembly 2-4
Pressure-Fit Parts 2-4
Bearings 2-4
Gaskets 2-4
Bolt Usage and Torque Application 2-5
Hydraulic Lines and Electrical Wiring 2-5
Hydraulic System 2-5
Lubrication and Servicing 2-5
Batteries 2-5
Mast Chain Inspection Procedure 2-5
Mast Cable Inspection Procedure 2-6

https://truckmanualshub.com/

2.4 LUBRICATION INFORMATION . . . 2-7
Hydraulic System . . . 2-7
Hydraulic Oil . . . 2-7
Changing Hydraulic Oil . . . 2-7
Lubrication Specifications . . . 2-7
2.5 BATTERY CHARGER - ASSEMBLY AND DISASSEMBLY . . . 2-8
General Information . . . 2-8
Battery Charger Removal . . . 2-8
Cover Removal . . . 2-8
Transformer Replacement . . . 2-9
Printed Circuit Board Replacement . . . 2-9
DC Circuit Breaker Replacement . . . 2-9
AC Circuit Breaker and Voltage Selection Switch Replacement . . . 2-10
Shunt Assembly, Varistor, and SCR Rectifier Replacement (See Illustration) . . . 2-10
2.6 HYDRAULIC LIFT PUMP - SERVICING . . . 2-11
FENNER BRAND PUMP - Brush Replacement . . . 2-11
Motor Cap/Motor Installation . . . 2-11
Motor Brush Installation . . . 2-11
Brush Housing Final Assembly Tips . . . 2-12
MONARCH BRAND PUMP - Brush Replacement . . . 2-13
Motor Assembly - Remove/Install - Reference Marks . . . 2-13
Motor/Brush Cover - Remove/Install . . . 2-13
Brush Carrier Assembly - Remove/Install . . . 2-14
Brush Assembly - Remove/Install . . . 2-14
TANK AND PUMP REMOVAL - (All Pumps) . . . 2-15
Tank Installation . . . 2-15
Filter Screen Installation . . . 2-15
Pump Installation . . . 2-15
Pressure Adjust Valve Installation . . . 2-16
Pressure Check Valve Installation . . . 2-16
2.7 HYDRAULIC LIFT CYLINDER - REMOVAL, INSPECTION AND REBUILD . . . 2-17
Cylinder Removal . . . 2-17
Cylinder Disassembly . . . 2-17
Lift Cylinder Component Inspection . . . 2-17
Cylinder Assembly . . . 2-19
Installation . . . 2-19
2.8 MAST ASSEMBLY AND DISASSEMBLY PROCEDURES . . . 2-20
Mast Disassembly Procedure . . . 2-20
Platform Section Removal . . . 2-20
Mast Section 4 Removal . . . 2-21
Mast Section 3 Removal . . . 2-21
Mast Section 2 Removal . . . 2-21
Mast Section 1 Disassembly (All Masts) . . . 2-21
2.9 MAST ASSEMBLY . . . 2-22
Mast Section 1 - Assembly . . . 2-22
Mast Section 2 - Assembly . . . 2-22
Mast Section 3 - Assembly . . . 2-26
Mast Section 4 - Assembly . . . 2-27
Platform Mounting Section - Assembly . . . 2-28
2.10 MAST TO BASE FRAME INSTALLATION . . . 2-28
2.11 MAST CHAINS/CABLES AND SEQUENCING CABLES ADJUSTMENT . . . 2-29
Mast Chain/Cable Adjustment . . . 2-29
Sequencing Cable Adjustment . . . 2-31
2.12 SEQUENCE CABLE REPLACEMENT KIT . . . 2-31
Remove Old Cable . . . 2-31
Replacement Cable Installation . . . 2-31
Clamp Installation (Drum/Socket Type) . . . 2-32

https://truckmanualshub.com/

SECTION 3 - TROUBLESHOOTING

3.1 General . . . 3-1
3.2 Troubleshooting Information . . . 3-1
3.3 Hydraulic Circuit Checks . . . 3-1
3.4 ELECTRICAL SYSTEM - MULTIMETER BASICS . . . 3-1
Grounding . . . 3-1
Backprobing . . . 3-1
Min/Max . . . 3-1
Polarity . . . 3-2
Scale . . . 3-2
Continuity Measurement Over Long Distances . . . 3-2
Requirements: . . . 3-2
Procedure . . . 3-2
3.5 ELECTRICAL SWITCH TESTING . . . 3-5
Basic Check . . . 3-5
Limit Switches . . . 3-5
Automatic Switches . . . 3-5
Switch Wiring - Low Side, High Side . . . 3-5

LIST OF FIGURES

FIGURE NO.	TITLE	PAGE NO.
1-1.	Hydraulic Pressure Setting - Adjustment Screw Located at Base of Pump Motor	1-2
1-2.	Torque Chart.	1-4
2-1.	Lift Cylinder Internal Component Assembly Cross-Section.	2-18
2-2.	Mast Section - Assembly/Disassembly Reference.	2-20
2-3.	15SP Mast Assembly Components. (5 Section)	2-23
2-4.	12SP Mast Assembly Components. (4 Section)	2-24
2-5.	Mast Chain Routing Diagram.	2-25
2-6.	Mast Chain/Cable/Sequence Cable Adjustment Components. (Typical)	2-30
3-1.	Voltage Measurement (DC)	3-3
3-2.	Resistance Measurement	3-3
3-3.	Continuity Measurement	3-4
3-4.	Current Measurement (DC)	3-4
3-5.	Hydraulic Schematic. (SP Series)	3-7
3-6.	Electrical Diagram (Standard)	3-8
3-7.	Electrical Diagram (With Floor Brake/Gate Alarm Option)	3-10

LIST OF TABLES

TABLE NO.	TITLE	PAGE NO.
1-1	Hydraulic Oil Operating Range	1-2
1-2	Lubrication Specifications	1-2
1-3	Cylinder Specifications	1-2
1-4	Lubrication Intervals for Various Components	1-3
2-1	Inspection and Maintenance	2-2
2-2	Preventive Maintenance & Inspection Schedule	2-3
2-3	Chain Stretch Tolerance	2-5
2-4	AM Series Mast Component Features	2-20
3-1.	DC Unit - Troubleshooting	3-6

https://truckmanualshub.com/

NOTES:

https://truckmanualshub.com/

SECTION 1. SPECIFICATIONS

1.1 CAPACITIES

Hydraulic Oil Reservoir

DC Models - 5 qts. U.S. (4.7 ltr.)

1.2 COMPONENT DATA

Hydraulic Pump/Electric Motor Assembly

DC MODELS - 12 VOLT DC MOTOR/PUMP

Motor - 12v - DC Standard Duty

Pump Displacement - .098 cu. in./rev.(AFC 1.6 cc/rev.)

Pump Output - 1.42 GPM @ 800 PSI @ 11.7v-DC @ 135 AMPS @ 45 Centistrokes (200 SSU)

Pressure Relief - Adjustable Range 1500 to 5000 PSI, Set to 2800 PSI (193 bar) at factory

Batteries

WET (Standard)

12 Volt - 165 Amp (min.) - Deep Cycle Marine - RV

DRY (Option)

12 Volt - 165 Amp (min.) - Deep Cycle Marine - RV

AGM (Absorption Gas Mat) (Option)

12Volt - 100 O.A.H. - M2 Marine Combination

Battery Charger

110/240 Volts AC, 50/60 Hz - input

12 Volt DC, 10 Amp - output

Automatic SCR Charger

Selectable Voltage

NOTE: *A high output - 12Volt DC, 20 Amp output - SCR charger is supplied with the AGM battery option.*

1.3 PERFORMANCE DATA

Platform Capacity *(Max. Rated Load)*

12SP & 15SP - 500 lb.* (227kg) - ANSI-U.S.A./ Latin America

12SP & 15SP - 400 lb.* (181kg) - CSA - Canada

** Evenly distributed on platform floor.*
** Extendible Platform - Max. 250 lb. on rear/250 lb. on front, when extended. Not Available for CSA.*

Machine Speeds

12SP - Lift up - 25 seconds *
Lift down - 13 to 20 seconds *

15SP - Lift up - 30 seconds *
Lift down - 18 to 25 seconds *

** Timed with maximum rated load: 500 lb.*

Machine Weight *(With Standard Platform)*

12SP - 1,180 lbs. (535 kg)

15SP - 1,240 lbs. (563 kg)

Machine Height *(Platform Stowed)*

12SP & 15SP - 78 in. (1.9 m)

Maximum Platform Height *(Mast Fully Extended)*

12SP - 11 ft. 7 in. (3.53 m)

15SP - 15 ft. 2 in. (4.62 m)

Maximum Working Height *(Average Person)*

12SP - 18 ft. (5.4 m)

15SP - 21 ft. (6.4 m)

Machine Overall Width And Length *(Stowed)*

12SP - 34 in.(W) x 73 in.(L) (86 cm x 185 cm)

15SP - 34 in.(W) x 75.5 in.(L) (86 cm x 192 cm)

(Length includes platform and battery pack, end to end.)

1.4 TORQUE REQUIREMENTS

When maintenance becomes necessary or a fastener has loosened, refer to the Torque Chart, Table 1-2. to determine proper torque value.

https://truckmanualshub.com/

1.5 LUBRICATION

Hydraulic Oil

Hydraulic oils must have anti-wear qualities at least to API Service Classification GL-3, and sufficient chemical stability for mobile hydraulic system service. JLG Industries, recommends Mobilfluid 424 hydraulic oil, which has an SAE viscosity of 10W-30 and a viscosity index of 152.

For cold weather applications, i.e. when temperatures remain consistently below +20°F (–7°C) JLG recommends using Mobil DTE 13 hydraulic oil.

Aside from JLG recommendations, it is not advisable to mix oils of different brands or types, as they may not contain the same required additives or be of comparable viscosities. If use of hydraulic oil other than Mobilfluid 424 is desired, contact JLG Industries for proper recommendations.

Table 1-1. Hydraulic Oil Operating Range

HYDRAULIC SYSTEM OPERATING TEMPERATURE RANGE	SAE VISCOSITY GRADE
+0˚F to +180˚F (-18˚C to +83˚C)	10W
+0˚F to +210˚F (-18˚C to +99˚C)	10W-20, 10W-30
+50˚F to +210˚F (+10˚C to +99˚C)	20W-20

Lubrication Specifications

Table 1-2. Lubrication Specifications

KEY	SPECIFICATIONS
MPG -	Multipurpose Grease having a minimum dripping point of 350° F. Excellent water resistance and adhesive qualities, and being of extreme pressure type. (Timken OK 40 pounds minimum.)
EPGL -	Extreme Pressure Gear Lube (oil) meeting API service classification GL-5 or MIL-Spec MIL-L-2105.
HO -	Hydraulic Oil. ISO-Vg grade 32, 46.
CL -	Chain Lube. Use a good quality chain lubricant

1.6 HYDRAULIC PRESSURE ADJUSTMENT

(See Table 1-1.)

Adjust system pressure so that platform will raise with rated capacity in platform.

Turning adjustment screw **clockwise, increases system pressure**, turning screw **counterclockwise, decreases system pressure**.

Do not adjust system pressure higher than required to raise maximum rated load capacity. Make pressure adjustment with oil at normal operating temperature. If pressure is set when oil is cold, platform may not raise rated load after oil has warmed.

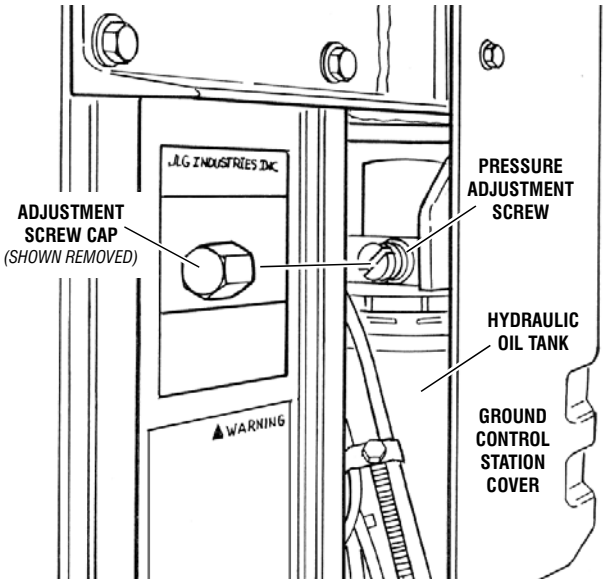

Figure 1-1. Hydraulic Pressure Setting - Adjustment Screw Located at Base of Pump Motor
(Remove Hex Head Cap as Shown)

1.7 CYLINDER SPECIFICATIONS

NOTE: *All dimensions are given in inches (in), with the metric equivalent, centimeters (cm), given in parentheses.*

Table 1-3. Cylinder Specifications

DESCRIPTION	BORE in./(cm)	STROKE in./(cm)	ROD DIA. in./(cm)
Lift Cylinder - 12SP	1.63 (4.1)	32.5 (82.5)	1.38 (3.5)
Lift Cylinder - 15SP	1.63 (4.1)	41.5 (105.4)	1.38 (3.5)

1.8 SERIAL NUMBER LOCATIONS

For machine identification, a serial number plate is affixed to the machine. The plate is located on the back of the mast, just above the mast support bracket. In addition, should the serial number plate be damaged or missing, the machine serial is stamped on the mast and on the base frame.

https://truckmanualshub.com/

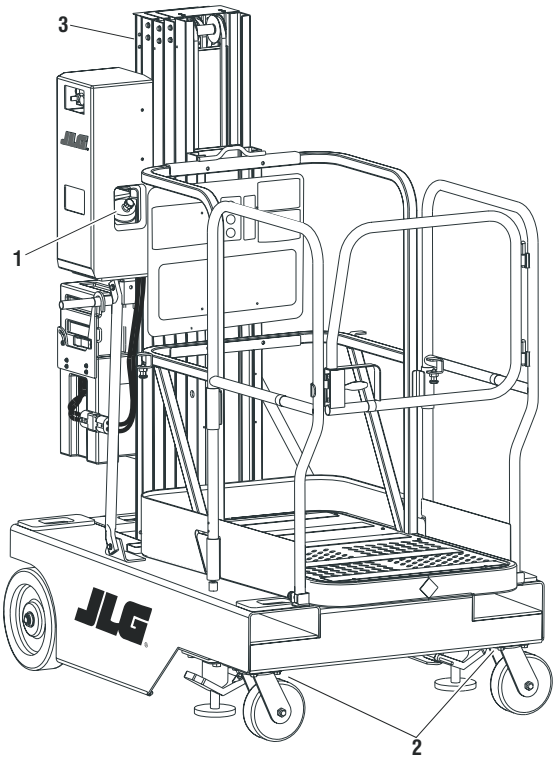

Table 1-4. Lubrication Intervals for Various Components

ITEM	COMPONENT	NO/TYPE LUBE POINTS	LUBE/METHOD	INTERVAL HOURS				COMMENTS
				3 MOS. or 150 Hrs.	6 MOS. or 300 Hrs.	1 YR. or 600 Hrs.	2 YRS. or 1200 Hrs.	
1	Hydraulic Oil	Fill To Line on Reservoir 5 Qt. (4.3 L) Reservoir	HO - Check Hyd. Oil Level HO - Change Hyd. Oil				✔	Check Hyd. Oil after every 10 hrs. of operation. Change Hyd. Oil after every 1200 hrs. of operation.
2	Swivel Raceways	2 - Front Casters	MPG - Pressure Gun		✔			
3	Mast Chains *	2 - Per Section	CL - Brush or Spray	✔				Inspect, lubricate if dry or rusting.

* Applies Only to Mast Sections with Chains.

Key to Lubricants: **MPG** - Multipurpose Grease
HO - Hydraulic Oil - ISO-Vg grade 32, 46
CL - Chain Lube. Use a good quality chain lubricant

Notes:
1. Be certain to lubricate like items on each side of the machine.
2. Recommended lubricating intervals are based on normal use. If machine is subjected to severe operating conditions, such as a high number of cycles, location, corrosive/dirty environment, etc., user must adjust lubricating requirements accordingly.
3. Lubricating intervals are calculated on 50 hours of machine operation a week.
4. Prior to checking hydraulic oil level, operate machine through one complete cycle of lift function (full up and down). Failure to do so will result in incorrect oil level reading on the hydraulic reservoir.

https://truckmanualshub.com/

SIZE	THD	BOLT DIA. (IN.)	THREAD STRESS AREA (SQ. IN.)	VALUES FOR ZINC PLATED BOLTS ONLY										UNPLATED CAP SCREWS	
				SAE GRADE 5 BOLTS & GRADE 2 NUTS					SAE GRADE 8 BOLTS & GRADE 8 NUTS					UNBRAKO 1960 SERIES SOCKET HEAD CAP SCREW WITH LOC-WEL PATCH	
				CLAMP LOAD (LB.)	TORQUE (DRY OR LOC. 263)	TORQUE (LUB.)	TORQUE (LOCTITE 262)	TORQUE (LOCTITE 242 OR 271)	CLAMP LOAD (LB.)	TORQUE (DRY OR LOC. 263)	TORQUE (LUB.)	TORQUE (LOCTITE 262)	TORQUE (LOCTITE 242 OR 271)	CLAMP LOAD (LB.)	TORQUE (as received)
					LB. IN.	LB. IN.	LB. IN.	LB. IN.		LB. IN.	LB. IN.	LB. IN.	LB. IN.		LB. FT.
4	40	0.1120	0.00604	380	8	6	—	—	540	12	9	—	—	—	—
	48		0.00661	420	9	7	—	—	600	13	10	—	—	—	—
6	32	0.1380	0.00909	580	16	12	—	—	820	23	17	—	—	—	—
	40		0.01015	610	18	13	—	—	920	25	19	—	—	—	—
8	32	0.1640	0.01400	900	30	22	—	—	1260	41	31	—	—	—	—
	36		0.01474	940	31	23	—	—	1320	43	32	—	—	—	—
10	24	0.1900	0.01750	1120	43	32	—	—	1580	60	45	—	—	—	—
	32		0.02000	1285	49	36	—	—	1800	68	51	—	—	—	—
1/4	20	0.2500	0.0318	2020	96	75	—	105	2860	144	108	—	160	3180	13
	28		0.0364	2320	120	86	—	135	3280	168	120	—	185	3640	14
					LB. FT.	LB. FT.	LB. FT.	LB. FT.		LB. FT.	LB. FT.	LB. FT.	LB. FT.		
5/16	18	0.3125	0.0524	3340	17	13	16	19	4720	25	18	22	30	5240	25
	24		0.0580	3700	19	14	17	21	5220	25	20	25	30	5800	27
3/8	16	0.3750	0.0775	4940	30	23	28	35	7000	45	35	40	50	7750	45
	24		0.0878	5600	35	25	32	40	7900	50	35	45	55	8780	50
7/16	14	0.4375	0.1063	6800	50	35	45	55	9550	70	55	63	80	10630	70
	20		0.1187	7550	55	40	50	60	10700	80	60	70	90	11870	75
1/2	13	0.5000	0.1419	9050	75	55	68	85	12750	110	80	96	120	14190	110
	20		0.1599	10700	90	65	80	100	14400	120	90	108	135	15990	115
9/16	12	0.5625	0.1820	11600	110	80	98	120	16400	150	110	139	165	18200	155
	18		0.2030	12950	120	90	109	135	18250	170	130	154	190	20300	165
5/8	11	0.6250	0.2260	14400	150	110	135	165	20350	220	170	180	240	22600	210
	18		0.2560	16300	170	130	153	190	23000	240	180	204	265	25600	220
3/4	10	0.7500	0.3340	21300	260	200	240	285	30100	380	280	301	420	33400	365
	16		0.3730	23800	300	220	268	330	33600	420	320	336	465	37300	400
7/8	9	0.8750	0.4620	29400	430	320	386	475	41600	600	460	485	660	46200	585
	14		0.5090	32400	470	350	425	520	45800	660	500	534	725	50900	635
1	8	1.000	0.6060	38600	640	480	579	675	51500	900	680	687	990	60600	865
	12		0.6630	42200	700	530	633	735	59700	1000	740	796	1100	66300	915
1-1/8	7	1.1250	0.7630	42300	800	600	714	840	68700	1280	960	1030	1400	76300	1240
	12		0.8560	47500	880	660	802	925	77000	1440	1080	1155	1575	85600	1380
1-1/4	7	1.2500	0.9690	53800	1120	840	1009	1175	87200	1820	1360	1453	2000	96900	1750
	12		1.0730	59600	1240	920	1118	1300	96600	2000	1500	1610	2200	107300	1880
1-1/2	6	1.500	1.1550	64100	1460	1100	1322	1525	104000	2380	1780	1907	2625	115500	2320
	12		1.3150	73000	1680	1260	1506	1750	118100	2720	2040	2165	3000	131500	2440
1-1/2	6	1.500	1.4050	78000	1940	1460	1755	2025	126500	3160	2360	2530	3475	140500	3040
	12		1.5800	87700	2200	1640	1974	2300	142200	3560	2660	2844	3925	158000	3270

Note: These torque values do not apply to cadium plated fasteners.

SAE GRADE 5

SAE GRADE 8

Figure 1-2. Torque Chart.

https://truckmanualshub.com/

SECTION 2. SERVICE PROCEDURES

2.1 MACHINE PREPARATION, INSPECTION, AND MAINTENANCE

General

This section provides the necessary information needed by those personnel that are responsible to place the machine in operation readiness and maintain its safe operating condition. For maximum service life and safe operation, ensure that all the necessary inspections and maintenance have been completed before placing the machine into service.

Preparation, Inspection, and Maintenance

It is important to establish and conform to a comprehensive inspection and preventive maintenance program. The following table outlines the periodic machine inspections and maintenance recommended by JLG Industries, Inc. Consult your national, regional, or local regulations for further requirements for aerial work platforms. The frequency of inspections and maintenance must be increased as environment, severity and frequency of usage requires.

Pre-Start Inspection

It is the User's or Operator's primary responsibility to perform a Pre-Start Inspection of the machine prior to use daily or at each change of operator. Reference the Operator's and Safety Manual for completion procedures for the Pre-Start Inspection. The Operator and Safety Manual must be read in its entirety and understood prior to performing the Pre-Start Inspection.

Pre-Delivery Inspection and Frequent Inspection

The Pre-Delivery Inspection and Frequent Inspection shall be performed by a qualified JLG equipment mechanic. JLG Industries, Inc. recognizes a qualified JLG equipment mechanic as a person who, by possession of a recognized degree, certificate, extensive knowledge, training, or experience, has successfully demonstrated the ability and proficiency to service, repair, and maintain the subject JLG product model.

The Pre-Delivery Inspection and Frequent Inspection procedures are performed in the same manner, but at different times. The Pre-Delivery Inspection shall be performed prior to each sale, lease, or rental delivery. The Frequent Inspection shall be accomplished for each machine in service for 3 months or 150 hours (whichever comes first); out of service for a period of more than 3 months; or when purchased used. The frequency of this inspection must be increased as environment, severity and frequency of usage requires.

Reference the JLG Pre-Delivery and Frequent Inspection Form and the Inspection and Preventative Maintenance Schedule for items requiring inspection during the performance of these inspections. Reference the appropriate areas of this manual for servicing and maintenance procedures.

Annual Machine Inspection

The Annual Machine Inspection must be performed by a qualified JLG equipment mechanic on an annual basis, no later than thirteen (13) months from the date of the prior Annual Machine Inspection. JLG Industries, Inc. recognizes a qualified JLG equipment mechanic as a person who has successfully completed the JLG Service Training School for the subject JLG product model. Reference the machine Service and Maintenance Manual and appropriate JLG inspection form for performance of this inspection.

Reference the JLG Annual Machine Inspection Form and the Inspection and Preventative Maintenance Schedule for items requiring inspection during the performance of this inspection. Reference the appropriate areas of this manual for servicing and maintenance procedures.

For the purpose of receiving safety-related bulletins, it is important that JLG Industries, Inc. has updated ownership information for each machine. When performing each Annual Machine Inspection, notify JLG Industries, Inc. of the current machine ownership.

Preventative Maintenance

In conjunction with the specified inspections, maintenance shall be performed by a qualified JLG equipment mechanic. JLG Industries, Inc. recognizes a qualified JLG equipment mechanic as a person who, by possession of a recognized degree, certificate, extensive knowledge, training, or experience, has successfully demonstrated the ability and proficiency to service, repair, and maintain the subject JLG product model.

Reference Table 2-2, Preventive Maintenance & Inspection Schedule., and the appropriate areas of this manual for servicing and maintenance procedures. The frequency of service and maintenance must be increased as environment, severity and frequency of usage requires.

https://truckmanualshub.com/

Table 2-1. Inspection and Maintenance

TYPE	FREQUENCY	PRIMARY RESPONSIBILITY	SERVICE QUALIFICATION	REFERENCE
Pre-Start Inspection	Prior to use each day; or At each Operator change.	User or Operator	User or Operator	Operator and Safety Manual
Pre-Delivery Inspection	Prior to each sale, lease, or rental delivery.	Owner, Dealer, or User	Qualified JLG Mechanic	Service and Maintenance Manual and applicable JLG inspection form.
Frequent Inspection	In service for 3 months or 150 hours, whichever comes first; or Out of service for a period of more than 3 months; or Purchased used.	Owner, Dealer, or User	Qualified JLG Mechanic	Service and Maintenance Manual and applicable JLG inspection form.
Annual Machine Inspection	Annually, no later than 13 months from the date of the prior inspection.	Owner, Dealer, or User	Qualified JLG Mechanic	Service and Maintenance Manual and applicable JLG inspection form.
Preventative Maintenance	At intervals as specified in the Service and Maintenance Manual.	Owner, Dealer, or User	Qualified JLG Mechanic	Service and Maintenance Manual

2.2 PREVENTIVE MAINTENANCE AND INSPECTION SCHEDULE

(See Table 2-2.)

The preventive maintenance and inspection checks are listed and defined in the following table. This table is divided into two basic parts, the “AREA” to be inspected and the “INTERVAL” at which the inspection is to take place. Under the “AREA” portion of the table, the various systems along with the components that make up that system are listed. The “INTERVAL” portion of the table is divided into five columns representing the various inspection time periods. The numbers listed within the interval column represent the applicable inspection code for which that component is to be checked.

The checks and services listed in this schedule are not intended to replace any local or regional regulations that may pertain to this type of equipment nor should the lists be considered as all inclusive. Variances in interval times may occur due to climate and/or conditions and depending on the location and use of the machine.

https://truckmanualshub.com/

Table 2-2. Preventive Maintenance & Inspection Schedule.

AREA ON MACHINE	INTERVAL				
	PRE-START (1) INSPECTION	3 MONTH PREVENTATIVE MAINTENANCE	6 MONTH PREVENTATIVE MAINTENANCE	PRE-DELIVERY (2) OR FREQUENT (3) INSPECTION	ANNUAL (4) (YEARLY) INSPECTION
MAST ASSEMBLY	7				
Mast Sections				2, 5	2, 5
Chain Systems			14	3, 14	14, 25
Sequence Cable Systems				3	1, 2, 3
Covers or Shields					1
Sheave Systems				1, 2	1, 2
Bearings					1, 2
Slide Pads					1, 2
PLATFORM ASSEMBLY	7				
Platform and Material Tray				1	1
Guard Rails				1, 2, 4	1, 2, 4
Gate				1, 5	1, 5
Floor				1, 2	1, 2
Lanyard Anchorage Point				1, 4	1, 4
CHASSIS ASSEMBLY	7				
Front Caster Wheels	1, 2	14		1, 2	1, 2
Rear Wheel Assembly				2	2
Bubble Level				1, 7	1, 7
Floor Stop Assembly(s)		1, 3, 7			
FUNCTIONS/CONTROLS	7				
Platform Controls				5, 6, 7	5, 6, 7
Ground Controls				5, 6	5, 6, 14
Function Control Locks, Guards, or Detents				5	5
Function Enable System					
Emergency Stop Switches (Ground & Platform)					5
Function Limit or Cutout Switch Systems				5	
Manual Descent or Auxiliary Power				5	5
POWER SYSTEM					
Battery	19			9	18
Battery Charger					5
HYDRAULIC/ELECTRIC SYSTEM	9				
Hydraulic Pump				1, 2, 9	1, 2, 5, 9
Hydraulic Cylinder				2, 7, 9	2, 9
Cylinder Attachment Pins and Pin Retainers				1, 2	1, 2
Hydraulic Hoses, Lines, and Fittings				1, 9	1, 9
Hydraulic Reservoir, Cap, and Breather				5, 7	5, 7
Hydraulic Filter					
Hydraulic Fluid *	11			11	11
Electrical Connections				20	20
Instruments, Gauges, Switches, Lights, Horn	5				

https://truckmanualshub.com/

Table 2-2. Preventive Maintenance & Inspection Schedule.

AREA ON MACHINE	INTERVAL				
	PRE-START (1) INSPECTION	3 MONTH PREVENTATIVE MAINTENANCE	6 MONTH PREVENTATIVE MAINTENANCE	PRE-DELIVERY (2) OR FREQUENT (3) INSPECTION	ANNUAL (4) (YEARLY) INSPECTION
GENERAL					
Operator and Safety Manuals in Storage Box	21			21	21
ANSI and EMI Manuals/Handbooks Installed	21			21	21
Capacity Decals Installed, Secure, Legible	21			21	21
All Decals/Placards Installed, Secure, Legible	21			21	21
"Walk-Around" Inspection Performed	22				
Annual Machine Inspection Due				21	
No Unauthorized Modifications or Additions				21	21
All Relevant Safety Publications Incorporated				21	21, 22
General Structural Condition and Welds				2, 4	2, 4
All Fasteners, Pins, Shields, and Covers					1, 2
Grease and Lubricate to Specifications				22	22
Function Test of All Systems	22			22	
Paint and Appearance				7	7
Stamp Inspection Date on Frame					22
Notify JLG of Machine Ownership					22

* Drain and Refill with fresh hydraulic fluid every two years.

Footnotes:

1. Prior to use each day; or at each Operator change
2. Prior to each sale, lease, or delivery
3. In service for 3 months; or Out of service for 3 months or more; or Purchased used
4. Annually, no later than 13 months from the date of the prior inspection

Inspection and Maintenance Codes:

1. Check for proper and secure installation.
2. Visual inspection for damage, cracks, distortion, or excessive wear.
3. Check for proper adjustment.
4. Check for cracked or broken welds.
5. Operates properly.
6. Returns to neutral or "off" position when released.
7. Clean and free of debris.
8. Interlocks function properly.
9. Check for signs of leakage.
10. Decals installed and legible.
11. Check for proper fluid level.
12. Check for chafing and proper routing.
13. Check for proper tolerances.
14. Properly lubricated.
15. Torqued to proper specification.
16. No gouges, excessive wear, or cords showing.
17. Properly inflated and seated around rim.
18. Proper and authorized components.
19. Fully charged.
20. No loose connections, corrosion, or abrasions.
21. Verify.
22. Perform.
23. Sealed properly.
24. Overrides Platform controls.
25. Inspected per Service and Maintenance Manual.

https://truckmanualshub.com/

2.3 SERVICING AND MAINTENANCE GUIDELINES

General

The following information is provided to assist you in the use and application of servicing and maintenance procedures contained in this chapter.

⚠ CAUTION

WHEN AN ABNORMAL CONDITION IS NOTED AND PROCEDURES CONTAINED HEREIN DO NOT SPECIFICALLY RELATE TO THE NOTED IRREGULARITY, WORK SHOULD BE STOPPED AND TECHNICALLY QUALIFIED GUIDANCE OBTAINED BEFORE WORK IS RESUMED.

Safety and Workmanship

Your safety, and that of others, is the first consideration when engaging in the maintenance of equipment. Always be conscious of component weight. Never attempt to move heavy parts without the aid of a mechanical device. Do not allow heavy objects to rest in an unstable position. When raising a portion of the equipment, ensure that adequate support is provided.

⚠ WARNING

NEVER WORK UNDER AN ELEVATED PLATFORM UNTIL PLATFORM HAS BEEN SAFELY RESTRAINED FROM ANY MOVEMENT BY BLOCKING OR OVERHEAD SLING.

Cleanliness

The most important single item in preserving the long service life of a machine is to keep dirt and foreign materials out of the vital components. Precautions have been taken to safeguard against this. Shields, covers, seals, and filters are provided to keep the wheel bearings, mast sections and oil supply clean; however, these items must be maintained on a scheduled basis in order to function properly.

At any time when oil lines are disconnected, clear adjacent areas as well as the openings and fittings themselves. As soon as a line or component is disconnected, cap or cover all openings to prevent entry of foreign matter.

Clean and inspect all parts during servicing or maintenance, and assure that all passages and openings are unobstructed. Cover all parts to keep them clean. Be sure all parts are clean before they are installed. New parts should remain in their containers until they are ready to be used.

Components Removal and Installation

Use adjustable lifting devices, whenever possible, if mechanical assistance is required. All slings *(chains, cables, etc.)* should be parallel to each other and as near perpendicular as possible to top of part being lifted.

Should it be necessary to remove a component on an angle, keep in mind that the capacity of an eyebolt or similar bracket lessens, as the angle between the supporting structure and the component becomes less than 90 degrees.

If a part resists removal, check to see whether all nuts, bolts, cables, brackets, wiring, etc., have been removed and that no adjacent parts are interfering.

Component Disassembly and Reassembly

When disassembling or reassembling a component, complete the procedural steps in sequence. Do not partially disassemble or assemble one part, then start on another. Always recheck your work to assure that nothing has been overlooked. Do not make any adjustments, other than those recommended, without obtaining proper approval.

Pressure-Fit Parts

When assembling pressure-fit parts, use an “anti-seize” or molybdenum disulfide base compound to lubricate the mating surface.

Bearings

When a bearing is removed, cover it to keep out dirt and abrasives. Clean bearings in nonflammable cleaning solvent and allow to drip dry. Compressed air can be used but do not spin the bearing.

Discard bearings if the races and balls (or rollers) are pitted, scored, or burned.

If bearing is found to be serviceable, apply a light coat of oil and wrap it in clean (waxed) paper. Do not unwrap reusable or new bearings until they are ready to install.

Lubricate new or used serviceable bearings before installation. When pressing a bearing into a retainer or bore, apply pressure to the outer race. If the bearing is to be installed on a shaft, apply pressure to the inner race.

Gaskets

Check that holes in gaskets align with openings in the mating parts. If it becomes necessary to hand-fabricate a gasket, use gasket material or stock of equivalent material and thickness. Be sure to cut holes in the right location, as blank gaskets can cause serious system damage.

https://truckmanualshub.com/

Bolt Usage and Torque Application

Use bolts of proper length. A bolt which is too long will bottom before the head is tight against its related part. If a bolt is too short, there will not be enough thread area to engage and hold the part properly. When replacing bolts, use only those having the same specifications of the original, or one which is equivalent.

Unless specific torque requirements are given within the text, standard torque values should be used on heat-treated bolts, studs, and steel nuts, in accordance with recommended shop practices. *(See Section-1, Torque Charts)*

Hydraulic Lines and Electrical Wiring

Clearly mark or tag hydraulic lines and electrical wiring, as well as their receptacles, when disconnecting or removing them from the unit. This will assure that they are correctly reinstalled.

Hydraulic System

Keep the system clean. If evidence of metal or rubber particles is found in the hydraulic system, drain and flush the entire system.

Disassemble and reassemble parts on clean work surface. Clean all metal parts with non-flammable cleaning solvent. Lubricate components, as required, to aid assembly.

Lubrication and Servicing

Components and assemblies requiring lubrication and servicing are shown on the Lubrication Chart in Section 1. Service applicable components with the amount, type, and grade of lubricant recommended in this manual, at the specified intervals. When recommended lubricants are not available, consult your local supplier for an equivalent that meets or exceeds the specifications listed.

Batteries

Clean batteries, using a non-metallic brush and a solution of baking soda and water. Rinse with clean water. After cleaning, thoroughly dry batteries and coat terminals with an anti-corrosion compound.

Mast Chain Inspection Procedure

Inspect mast chains for the following conditions:

Wear: Always inspect that segment of chain that operates over a sheave. As the chain flexes over the sheaves, joints and plate edges very gradually wear. Chain “stretch” can be measured using a manufacturers wear scale or steel tape. When chains have elongated 3% they must be removed and replaced. Refer to Table 2-3 for proper chain specifications and allowable stretch tolerances. Peening and wear of chain plate edges are caused by sliding over a chain worn contact face of a sheave, or unusually heavy loads. All of the above require replacement of the chain and correction of the cause. Chain side wear, noticeable when pin heads and outside plates show a definite wear pattern, is caused by misalignment of the sheave/chain anchors and must be corrected promptly. Do not repair chains; if a section of chain is damaged, replace the entire chain set.

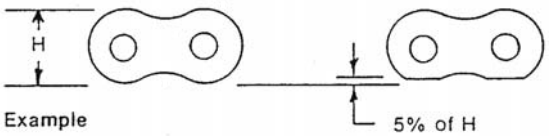

Example

H for a 1" chain	= 0.950"
Maximum wear	= 5% of 0.950" = 0.047"
Minimum plate depth	= 0.950" - 0.047" = 0.903"

Rust and Corrosion: Rust and corrosion will cause a major reduction in the load carrying capacity of the chain, because these are primary reasons for side plate cracking. The initial lubrication at the factory is applied in a hot dip tank to assure full penetration into the joint. Do not steam clean or degrease chains. At time of chain installation, factory lube must be supplemented by a maintenance program to provide a film of oil on the chains at all times. If chains are corroded, they must be inspected, especially the outside plates, for cracks in-line with the pins. If cracks are found, replace the chain; if no cracks are discovered, lubricate the chains by dipping in heated oil, and reinstall on the machine. Keep chains lubricated.

Table 2-3. Chain Stretch Tolerance

Chain Size	Pin to Pin Measurement	Allowable Stretch
.50" pitch	12" or 24 pitches	.24 in./12 in. span
.625 pitch	15" or 24 pitches	.30 in./15 in. span

Fatigue Cracks: Fatigue is a phenomenon that affects most metals, and is the most common cause of chain plate failures. Fatigue cracks are found through the link holes, perpendicular *(90 degrees)* from the pin in-line position. Inspect chains carefully after long time use and heavy loading for this type of crack. If any cracks are discovered, replace all chains, as seemingly sound plates

https://truckmanualshub.com/

are on the verge of cracking. Fatigue and ultimate strength failures on JLG Lifts are incurred as a result of severe abuse as design specs are well within the rated lifting capacity of these chains.

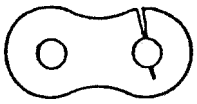

Tight Joints: All joints in the leaf chain should flex freely. On leaf chain, tight joints are usually caused by rust/corrosion, or the inside plates "walking" off the bushing. Limber up rusty/corroded chains *(after inspecting care fully)* with a heavy application of oil *(preferably a hot oil dip)*. Tap inside "walking" plates inward; if "walking" persists, replace the chain. This type of problem is accelerated by poor lubrication maintenance practice, and most tight joint chains have been operated with little or no lubrication. Tight joints on leaf chain are generally caused by:

a. Bent pins or plates.
b. Rusty joints.
c. Peened plate edges.

Oil rusty chains, and replace chains with bent or peened chain components. Keep chains lubricated.

TIGHT JOINTS

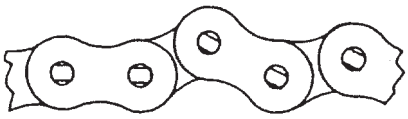

Protruding or Turned Pins: Chains operating with inadequate lube generate tremendous friction between the pin and plates (pin and bushing on leaf chain). In extreme cases, this frictional torque can actually turn the pins in the outside press-fit plates. Inspect for turned pins, which can be easily spotted as the "V" flats on the pin heads are no longer in line. Replace all chains showing evidence of turned or protruding pins. Keep chains lubricated.

Stress Corrosion Cracking: The outside link plates, which are heavily press-fitted to the pins, are particularly susceptible to stress corrosion cracking. Like fatigue cracks, these initiate at the point of highest stress (aperture) but tend to extend in an arc-like path, often parallel to the rolling grain of the material.

ABNORMAL PROTRUSION OR TURNED PINS

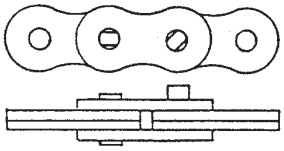

Also, more then one crack can often appear on a link plate. In addition to rusting, this condition can be caused by exposure to an acidic or caustic medium or atmosphere. Stress corrosion is an environmentally assisted failure. Two conditions must be present; corrosive agent and static stress.

ARC-LIKE CRACKED PLATES (STRESS CORROSION)

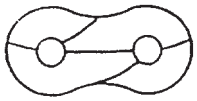

In the chain, static stress is present at the aperture due to the press fit pin. No cycle motion is required and the plates can crack during idle periods. The reactions of many chemical agents (such as battery acid fumes) with hardened metals liberate hydrogen which attacks and weakens the metal grain structure.

Chain Anchors and Sheaves: An inspection of the chain must include a close examination of chain anchors and sheaves. Check chain anchors for wear breakage and misalignment. Anchors with worn or broken fingers should be replaced. They should also be adjusted to eliminate twisting the chain for an even load distribution.

Inspect the sheaves, sheave bearings, sheave grooves and pins for extreme wear, replace as necessary. A worn sheave can mean several problems, as follows:

a. Chains too tight.
b. Sheave bearings/pin bad.
c. Bent/misaligned chains.

Mast Cable Inspection Procedure

NOTICE

MAST CABLES ARE TO BE INSPECTED EVERY THREE MONTHS OR MORE FREQUENTLY AS DESCRIBED FOLLOWING.

⚠ CAUTION

WEAR PROTECTIVE GLOVES TO PROTECT HANDS WHEN HANDLING CABLE.

The periodic inspection shall cover the entire length of the cable. The inspection frequency shall be based on such factors as expected cable life as determined by experience on the particular application or similar installations, severity of environment, percentage of capacity lifts, frequency rates of operation, and exposure to shock loads. Inspection should be more frequent as cables approach the end of their useful lives.

Only the surface wires of the cable require inspection, do not attempt to open the cable. Any deterioration resulting in any loss of original strength, such as described below,

https://truckmanualshub.com/

shall be noted, and then a determination made if further use would constitute a hazard.

Mast cables must be replaced after machine has been in service for five (5) years, regardless of cable condition, or sooner if conditions dictate.

Conditions such as the following shall be sufficient reason for questioning continual use of the [cable] or increasing the frequency of inspection:

1. In running ropes, six randomly distributed broken wires in one lay or three broken wires in one strand in one lay.
2. One outer wire broken at the point of contact with the core of the rope which has worked its way out of the rope structure and protrudes or loops out from the rope structure. Additional inspection of this section is required.
3. Wear of one-third the original diameter of outside individual wires.
4. Kinking, crushing, birdcaging or any other damage resulting in distortion of the rope structure.
5. Evidence of any heat damage from any cause.
6. Reductions from nominal diameter of more than;
   a. 1/64th in. (0.4mm) for diameters up to and including 5/16th in. (8mm);

NOTE: *A good indicator of a stretched extend/retract cable is if the adjusting nuts are bottomed out. If no adjustment remains the cables have stretched and need replacement.*

Also check for cracked, bent, worn, severely corroded, or improperly installed cable ends.

Inspect sheaves, sheave grooves, and sheave pins for excessive wear, replace as necessary.

2.4 LUBRICATION INFORMATION

Hydraulic System

The primary enemy of a hydraulic system is contamination. Contaminants enter the system by various means, e.g., using inadequate hydraulic oil, allowing moisture, grease, filings, sealing components, sand, etc., to enter when performing maintenance, or by permitting the pump to cavitate due to insufficient system warm-up or leaks in the pump supply.

The design and manufacturing tolerances of the component working parts are very close, therefore, even the smallest amount of dirt or foreign matter entering a system can cause wear or damage to the components and generally results in faulty operation. Every precaution must be taken to keep hydraulic oil clean, including reserve oil in storage.

Cloudy oils indicate a high moisture content which permits organic growth, resulting in oxidation or corrosion. If this condition occurs, the system must be drained, flushed, and refilled with clean oil.

It is not advisable to mix oils of different brands or types, as they may not contain the same required additives or be of comparable viscosities. Good grade mineral oils, with viscosities suited to the ambient temperatures in which the machine is operating, are recommended for use.

NOTE: *Metal particles may appear in the oil of new machines due to the wear-in of meshing components.*

Hydraulic Oil

For best performance, JLG recommends the use of ISO-Vg grade 32, 46 oil with a viscosity range between 15-250 SUS at 100 degrees F (32-54 cST at 40 degrees C). Refer to Section 7 for recommended hydraulic oils.

Changing Hydraulic Oil

Use of any of the recommended hydraulic oils eliminates the need for changing the oil on a regular basis. If it is necessary to change the oil, use only those oils meeting or exceeding the specifications appearing in this manual. If unable to obtain the same type of oil supplied with the machine, consult local supplier for assistance in selecting the proper equivalent. Avoid mixing petroleum and synthetic base oils. JLG Industries recommends changing the hydraulic oil annually.

Use every precaution to keep the hydraulic oil clean. If the oil must be poured from the original container into another, be sure to clean all possible contaminants from the service container.

While the unit is shut down, a good preventive maintenance measure is to make a thorough inspection of all hydraulic components, lines, fittings, etc., as well as a functional check of each system, before placing the machine back in service.

Lubrication Specifications

Specified lubricants, as recommended by the component manufacturers, are always the best choice, however, multi-purpose greases usually have the qualities which meet a variety of single purpose grease requirements. Should any question arise regarding the use of greases in maintenance stock, consult your local supplier for evaluation. Refer to table in Section-1 for an explanation of the lubricant key designations appearing in the Lubrication Chart.

https://truckmanualshub.com/

2.5 BATTERY CHARGER - ASSEMBLY AND DISASSEMBLY

General Information

NOTICE

DO NOT ATTEMPT TO DISASSEMBLE THE BATTERY CHARGER IF MACHINE IS STILL UNDER WARRANTY. OPENING THE BATTERY CHARGER WHILE THE MACHINE IS UNDER WARRANTY WILL VOID THE CHARGER WARRANTY. IF UNDER WARRANTY REQUEST A REPLACEMENT CHARGER FROM THE FACTORY.

ALSO BEFORE REPLACING ANY COMPONENT, USE THE CHARGER MANUFACTURERS (SCR) BATTERY CHARGER MANUAL INCLUDED WITH THE MACHINE FOR CHECKING THE INTERNAL AC AND DC CIRCUITS TO DETERMINE WHICH COMPONENT HAS FAILED. COMPLETE WIRING DIAGRAMS PERTAINING TO YOUR MODEL CHARGER ARE ALSO INCLUDED IN THE MANUFACTURERS (SCR) BATTERY CHARGER MANUAL

The AM Series dual AC input battery charger allows for replacement of the following internal components. Consult your Illustrated Parts Manual for part numbers of these components which are available from the JLG Parts Department:

- Transformer
- Printed Circuit Board
- Shunt Assembly
- Interlock Relay
- SCR Rectifier
- AC Circuit Breaker
- DC Circuit Breaker

Replacement and troubleshooting of these components requires removal of the battery charger from it's mounting on the charger/battery box assembly.

Battery Charger Removal

1. If plugged in, unplug the AC voltage cord from AC receptacle and remove the charger/battery box unit from the machine.
2. Disconnect the + (RED) and – (BLACK) charging wires from the charger to the battery terminals in the lower battery compartment.
3. Remove the four (4) mounting bolts and washers located on the back of the upper battery box section, securing the charger into the upper section.
4. Remove the charger through the front opening while pulling the charging wires (RED/BLACK) through the hole on the bottom of the upper battery box section.

Cover Removal

5. Remove the ten (10) screws on the sides and top of the charger cover and remove cover.

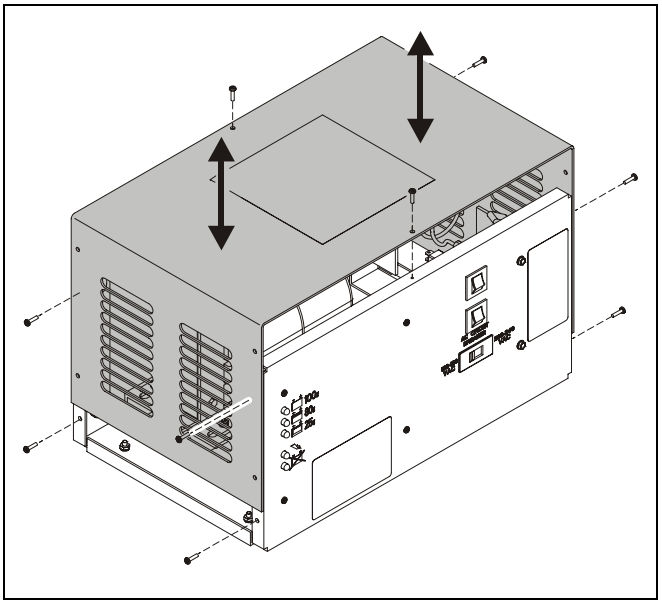

https://truckmanualshub.com/

Transformer Replacement

1. Disconnect the wiring connecting the transformer to other components within the charger assembly.
2. Remove the four nuts from the cap screws securing the transformer brackets to the base of the charger chassis.
3. Remove transformer.

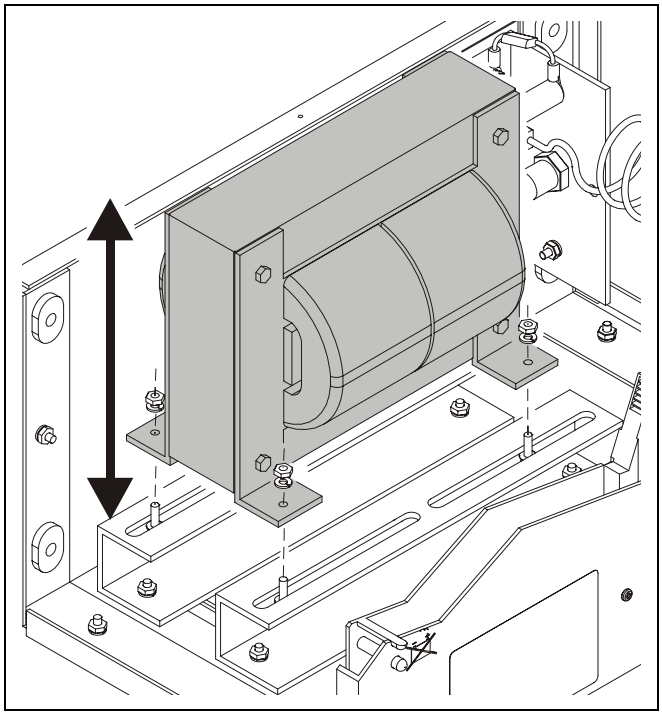

Printed Circuit Board Replacement

1. Disconnect the wide wiring connector from the end of the circuit board.
2. Remove the four (4) screw attaching the card to the front face of the charger chassis.
3. Remove the circuit board.

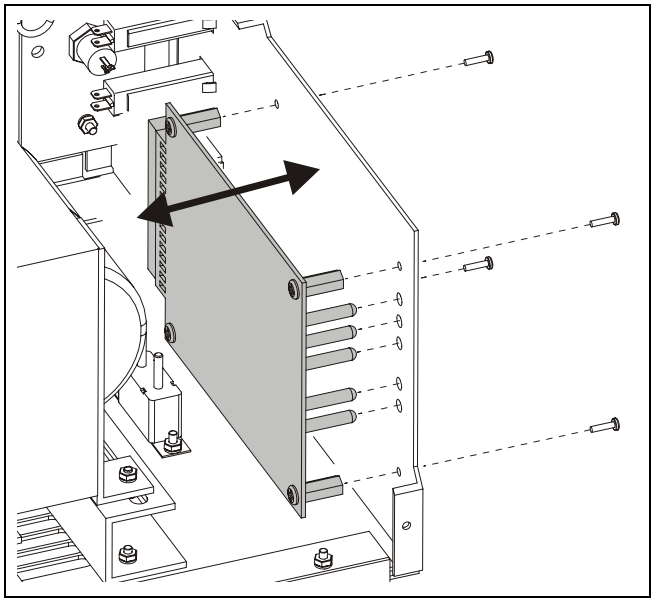

DC Circuit Breaker Replacement

1. Remove the wiring from the breaker terminals.
2. Remove the bolt, nut and washer from each side of the breaker, remove the breaker from the housing.

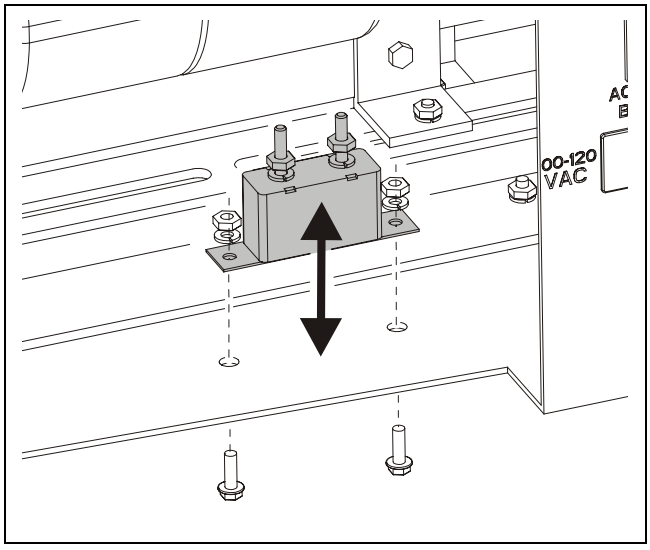

https://truckmanualshub.com/

AC Circuit Breaker and Voltage Selection Switch Replacement

1. Remove the wiring from the AC breaker or Voltage Selection Switch terminals.
2. To remove the breaker or switch from the front face of the charger, on the inside of the charger front face, push in on the tabs located on the sides of the breaker/switch assembly and remove the assembly out the front of the charger.

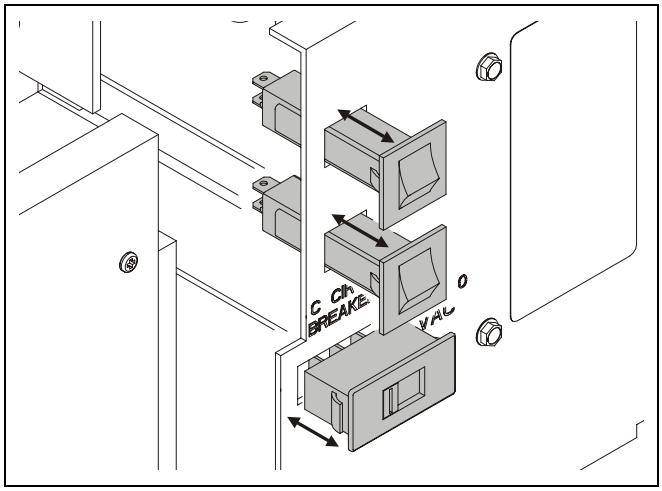

Shunt Assembly, Varistor, and SCR Rectifier Replacement *(See Illustration)*

Shunt Assembly (Item #1)

1. Carefully remove the screw from the end of the shunt assembly. The white insulator may need to be restrained to keep it from turning while removing the shunt assembly fasteners. Also make note of the position of each washer, nut and wire connector when removing for later assembly.

SCR Rectifier Replacement (Item #2)

1. Remove the wiring from the SCR Rectifier.
2. Remove the nut securing the rectifier to the insulated aluminum chassis bracket.
3. Remove the SCR Rectifier.

Varistor Replacement (Item #3)

1. Remove the fasteners securing the varistor to the aluminum angle bracket *(see illustration below)*. One through the rear panel of the base with a short white spacer and one at the long white insulator attaching the shunt assembly to the bracket.
2. Remove the varistor from it's mount.

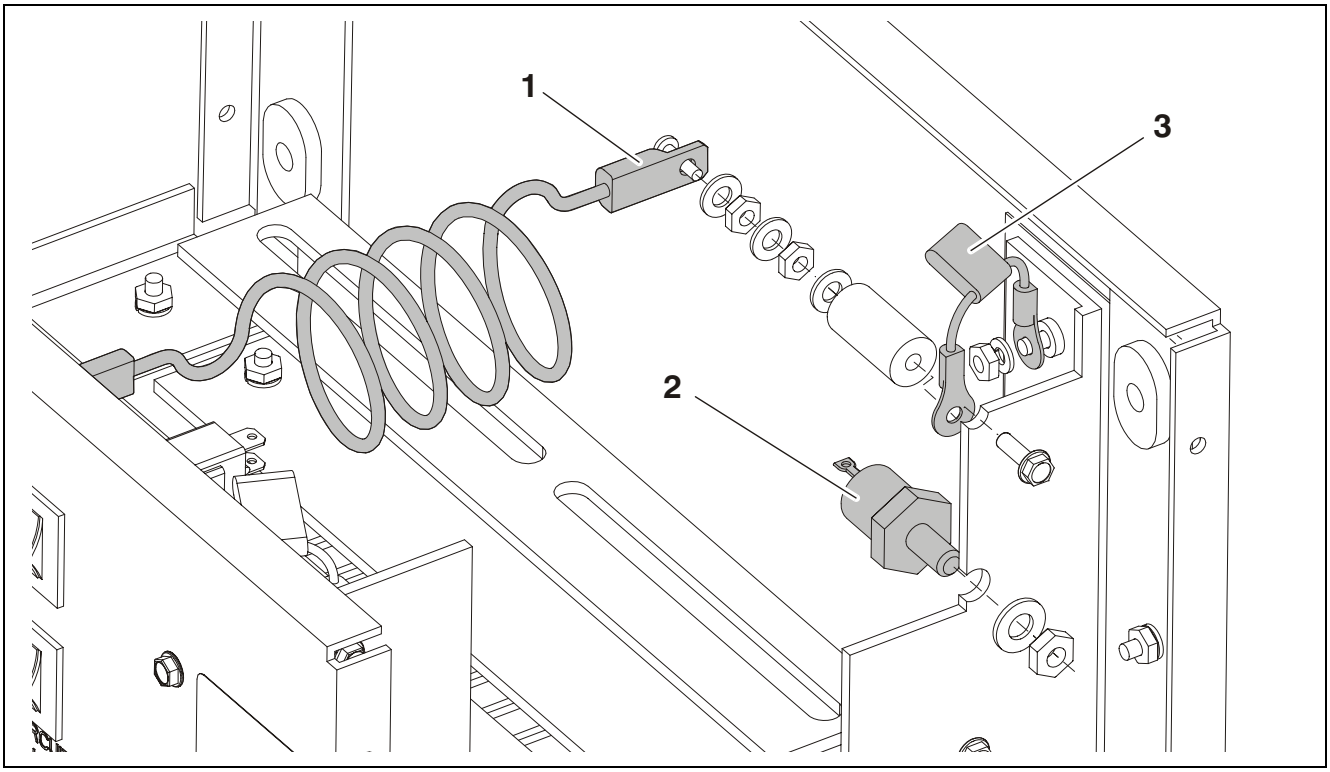

https://truckmanualshub.com/

2.6 HYDRAULIC LIFT PUMP - SERVICING

Remove hydraulic pump from machine.

FENNER BRAND PUMP - Brush Replacement

Motor Cap/Motor Installation

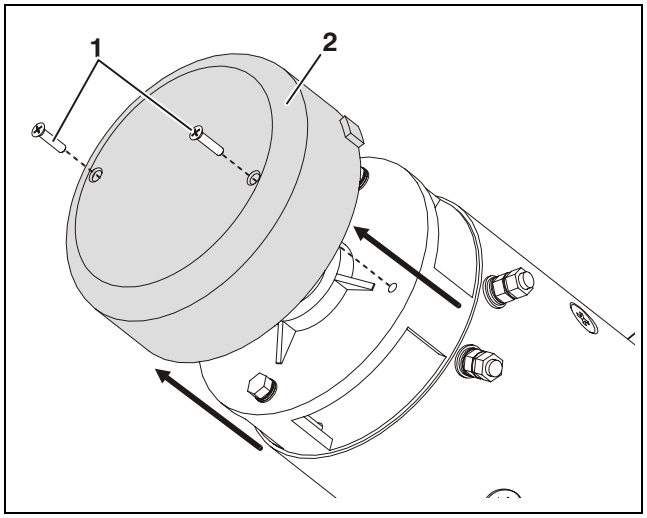

Motor Cap Installation

1. Cap Assembly Screws **2.** Cap Assembly

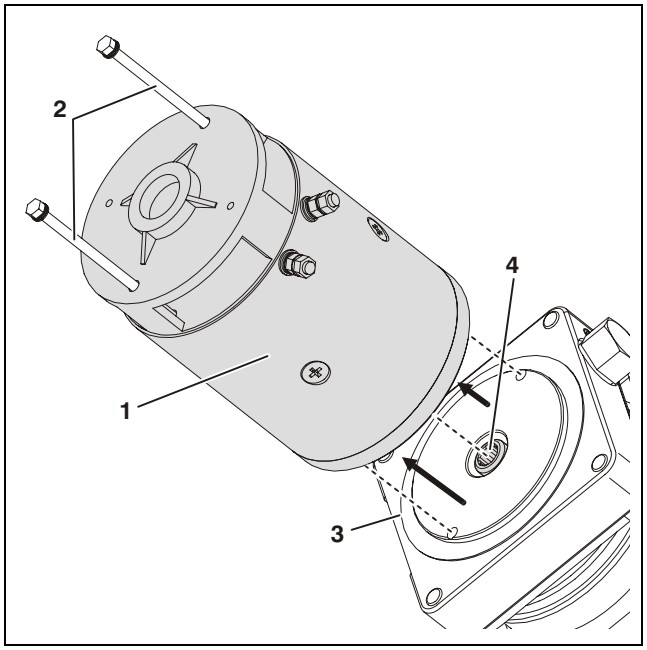

Motor Installation

1. Motor Assembly **3.** Pump End Head
2. Motor Assembly Screws **4.** Motor to Pump Coupler

Motor Brush Installation

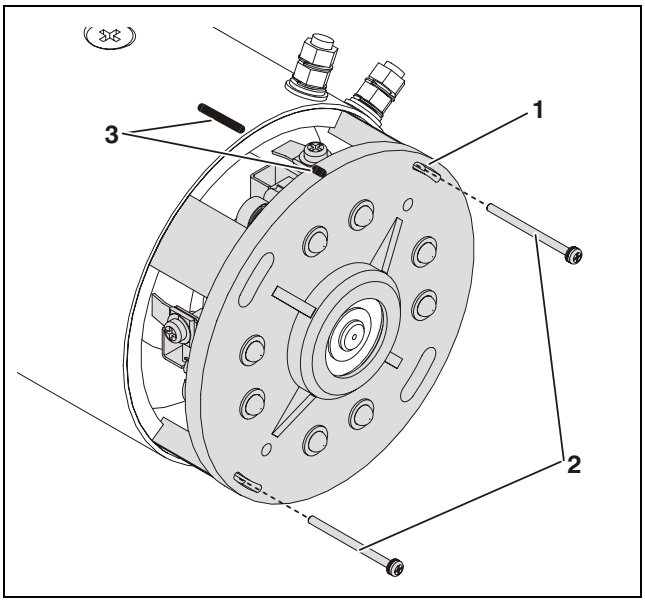

Brush Housing Installation

1. Brush Housing
2. Brush Housing Screws
3. Mark Front of Motor and Brush Housing for reference when reassembling.

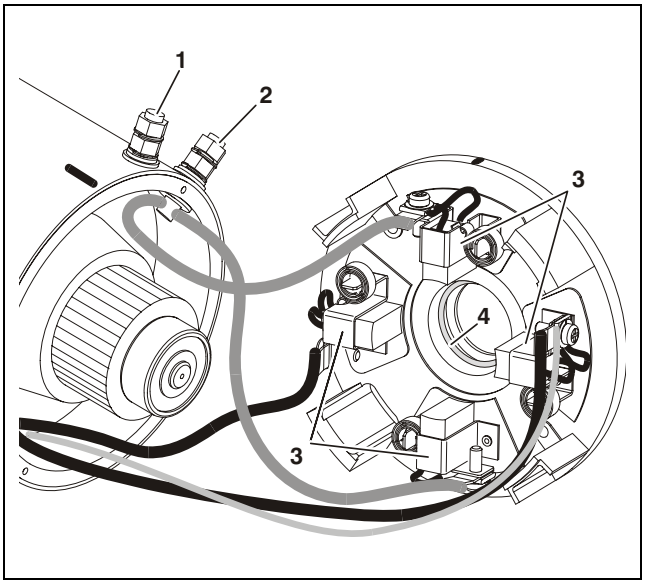

Brush Assembly Connections

1. Negative (–) Post **3.** Brush Assemblies
2. Positive (+) Post **4.** Spring Washer

Note: Length of wires to brush assemblies shown exaggerated for illustrative purposes.

https://truckmanualshub.com/

Once brush housing has been removed, inspect the rotor commutator for excessive wear before installing a new brush set.

The rotor commutator surface when new, is approximately 1/8 in. (3mm) in thickness.

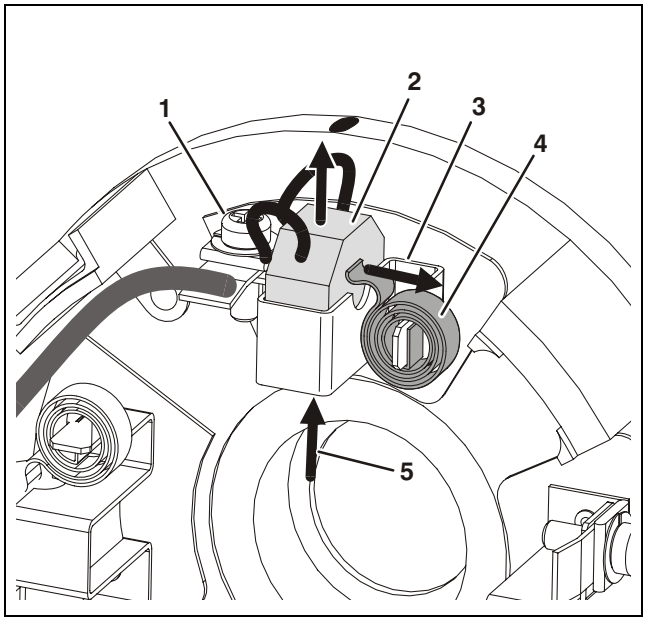

New Brush Installation

1. Brush Terminal Screw
2. Brush
3. Brush Holder
4. Brush Spring
5. (See Installation Note Below)

Installation the same for all four (4) brush assemblies.

Note: Using a clean towel, push each brush (2) up into it's holder (3), slide the spring (4) over the side of the brush. This will hold each brush in place and allow them to clear the rotor commutator during reassembly.

Clean the rotor commutator with a non-conductive electrical cleaner before assembling the brush housing to the motor housing.

Brush Housing Final Assembly Tips

It is easier to install the brush housing assembly by sliding the rotor assembly completely out of the other end of the motor housing, then attach the brush housing first. After the brush housing is installed look into the motor housing from the opposite end to check that the positive (+) post wires and static winding wires are positioned, not to block the holes for the motor mounting bolts, inside the motor housing.

After final assembly of the brush housing check that all brush terminal screws are tight and the brush springs are positioned properly before mounting the motor to the pump/motor end head.

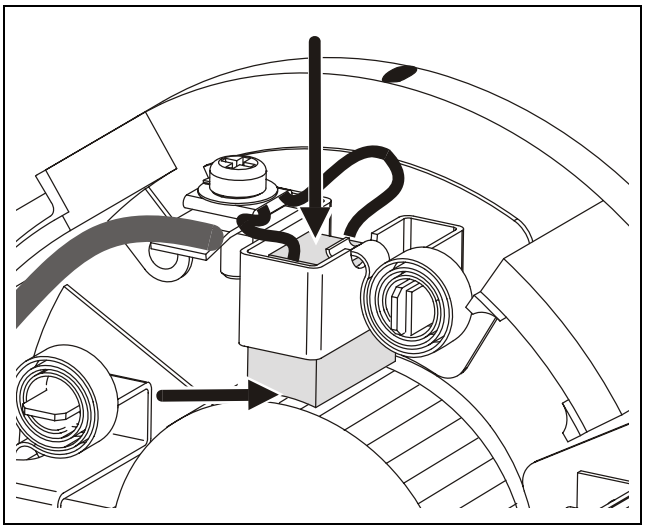

Brush Final Positioning

NOTICE

ONCE THE ROTOR ASSEMBLY IS IN PLACE, REMEMBER TO PUSH EACH BRUSH DOWN UNTIL THE BRUSH FACE IS IN CONTACT WITH THE COMMUTATOR ON THE ROTOR SHAFT AND THE BRUSH SPRING IS PUSHING DOWN ON TOP OF THE BRUSH.

https://truckmanualshub.com/

MONARCH BRAND PUMP - Brush Replacement

Motor Assembly - Remove/Install - Reference Marks

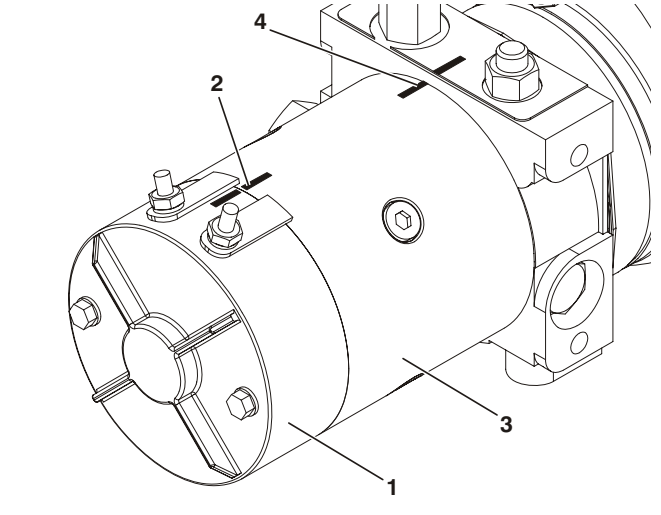

Pump Motor - Removal/Installation - Reference Marks

- For reference when reassembling, mark motor cover, housing and valve body position before disassembling.

1. Motor Top Cover
2. Cover/Housing Reference Mark
3. Motor Housing
4. Housing/Motor Valve Body Reference Mark
5. Motor Valve Body

Motor/Brush Cover - Remove/Install

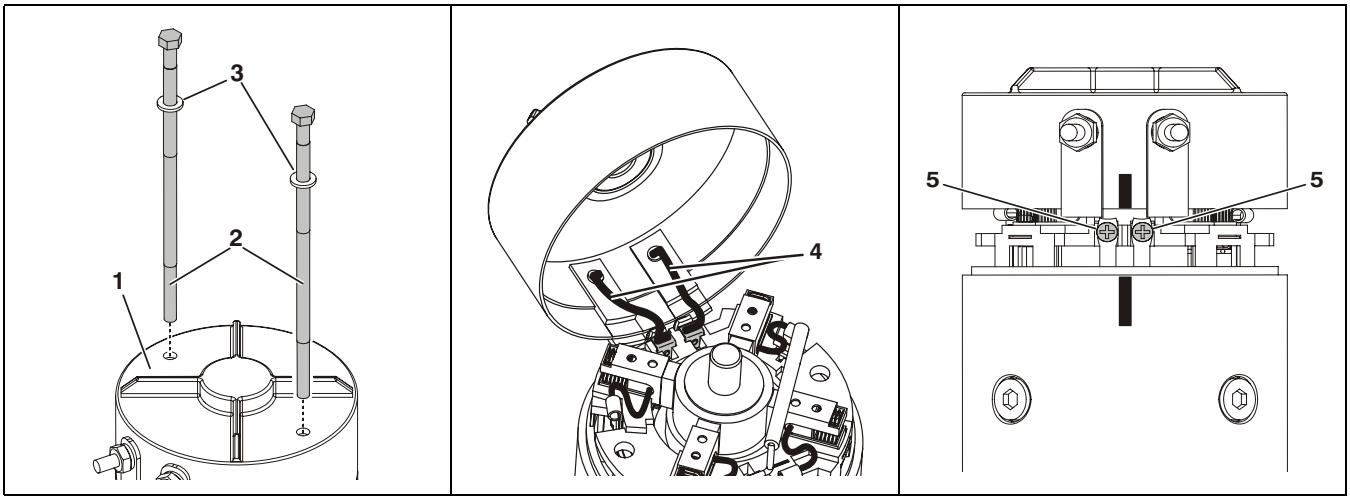

Motor/Brush Cover - Removal/Installation

1. Motor/Brush Cover (a)
2. Cover Screws (b)
3. Washers
4. Power Leads to Lead Clips (Soldered)
5. Power Lead Clip Attach Screws

NOTICE

REMOVE THE MOTOR COVER CAREFULLY, THE (SHORT) POWER LEADS INSIDE THE COVER FROM THE (+/–) POSTS ARE SOLDERED TO ATTACH CLIPS WHICH ARE FASTENED TO THE BRUSH CARRIER ASSEMBLY WITH SCREWS (ITEM-5). RAISE THE COVER STRAIGHT UP - REMOVE THE SCREWS - THEN HINGE THE COVER UP (SEE CENTER ILLUSTRATION) AND PRY THE CLIPS OFF OF THE BRUSH CARRIER ASSEMBLY TO COMPLETELY REMOVE THE MOTOR COVER.

NOTE: *(a) Once cover screws are removed, you may need to tap lightly around the edge of the top cover to separate it from the motor housing. Read the important note above before attempting to remove the cover.*
(b) These steel screws are threaded into the aluminum valve body, do not overtighten.

https://truckmanualshub.com/

Brush Carrier Assembly - Remove/Install

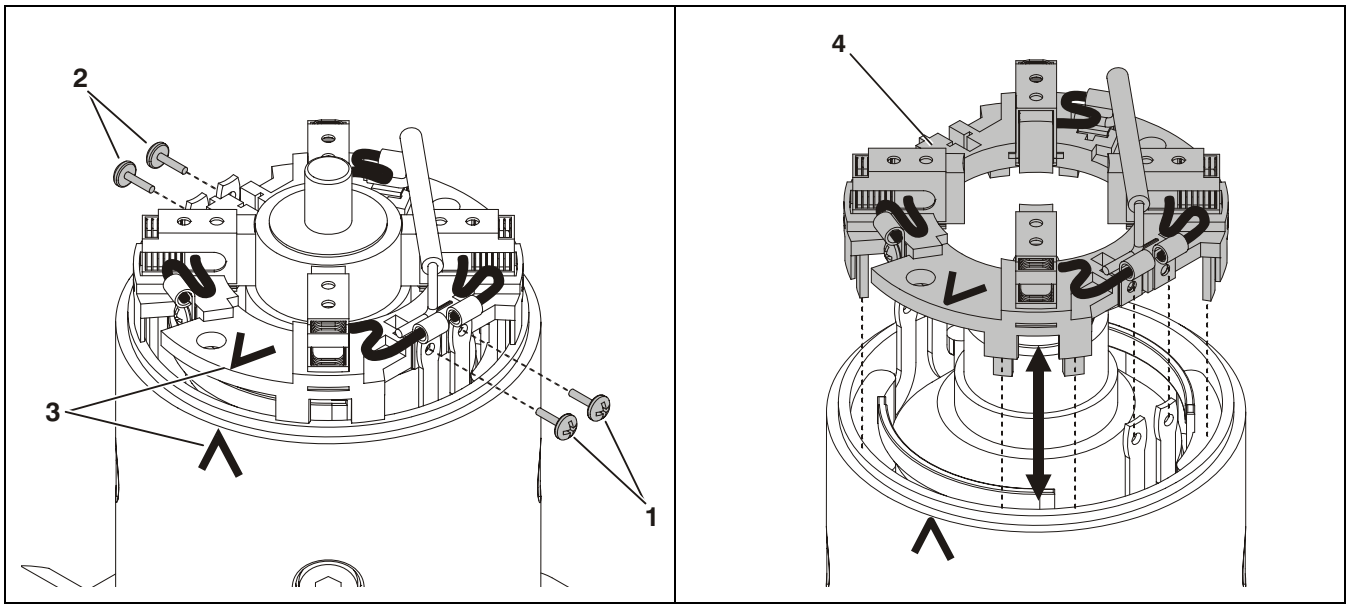

Brush Carrier Assembly - Remove/Install

1. Stator/Brush Carrier Screws (Pump Rear)
2. Stator/Brush Carrier Screws (Pump Front) (a)
3. Mark Brush Carrier Position on Motor Housing
4. Brush Carrier Assembly

NOTE: *(a) Removed previously with motor cover disassembly (shown for reference only).*

Brush Assembly - Remove/Install

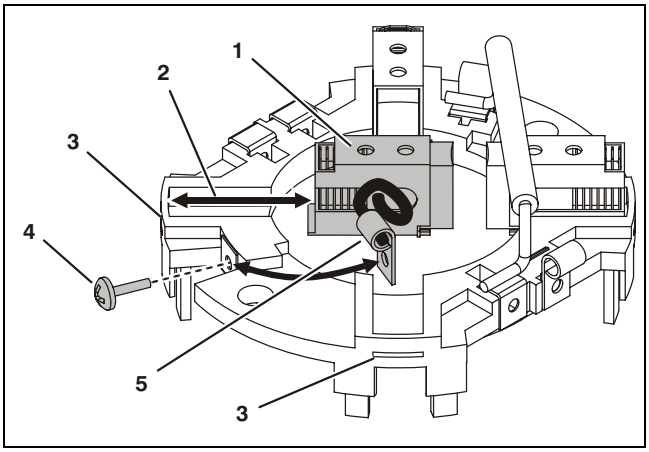

Brush Assembly - Remove/Install

1. Brush Assembly (a)
2. Brush Carrier Socket
3. Brush Tab Slot
4. Brush Terminal Screw
5. Brush Attach Terminal

NOTE: *(a) Slide brush assembly into socket until tab is in slot at rear of socket.*

https://truckmanualshub.com/

TANK AND PUMP REMOVAL - (All Pumps)

Tank Installation

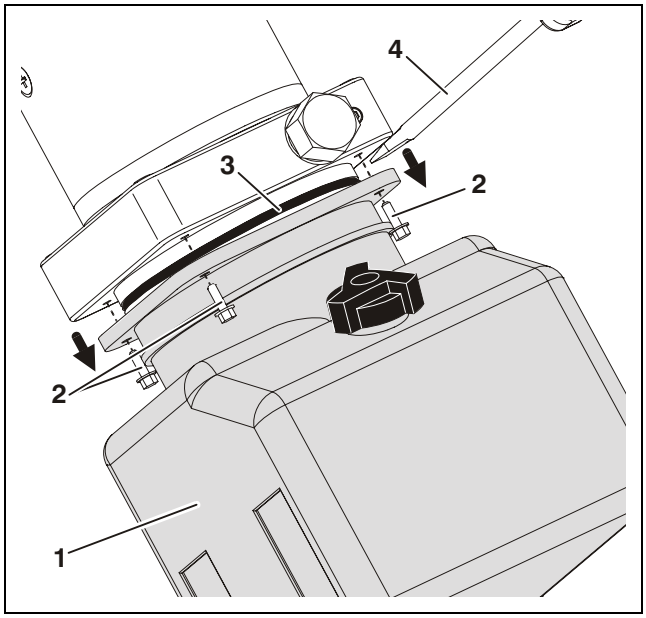

Tank Installation

1. Tank Assembly
2. Tank Screws (4)
3. O-Ring Seal
4. Use Screwdriver to pry tank away from pump head.

Filter Screen Installation

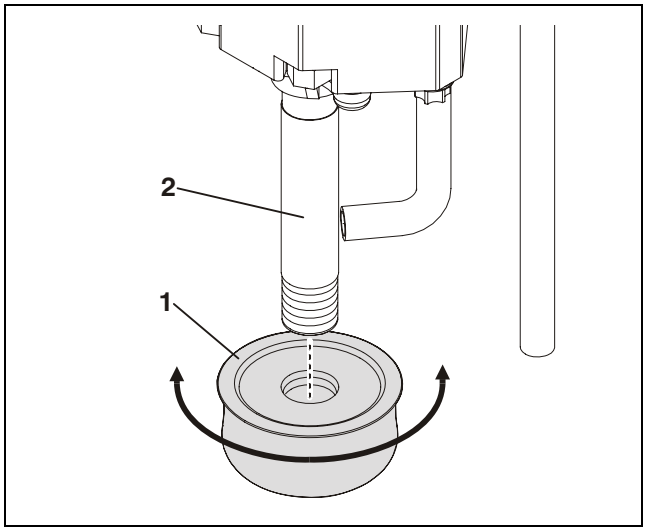

Filter Screen Installation

1. Filter Screen
2. Pump Pick-Up Tube

Pump Installation

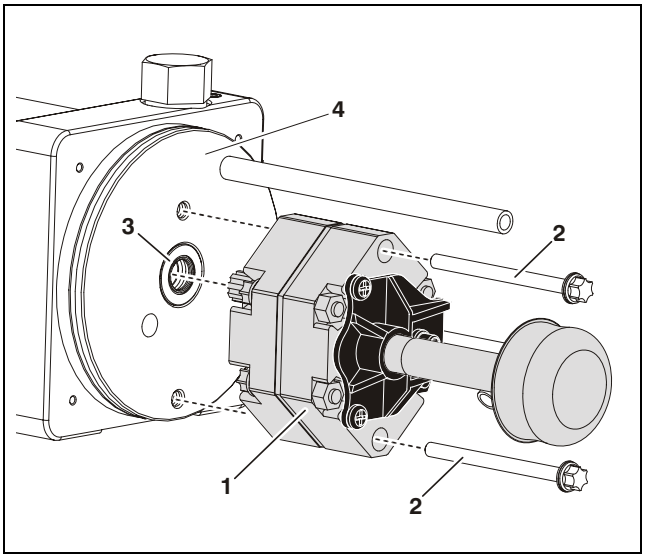

Pump Installation

1. Pump Assembly
2. Pump Assembly Screws
3. Pump Shaft Seal
4. Pump End Head

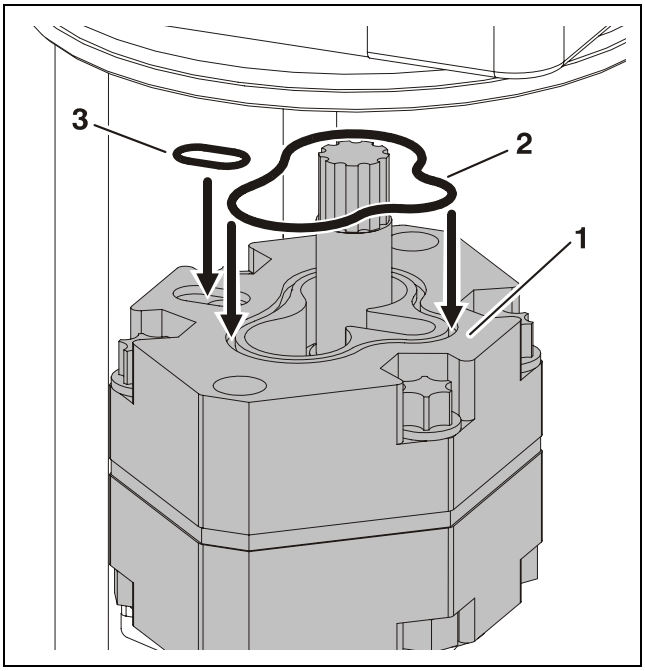

Pump O-Ring Installation

1. Pump Assembly
2. O-Ring Seal
3. O-Ring Seal

https://truckmanualshub.com/

Pressure Adjust Valve Installation

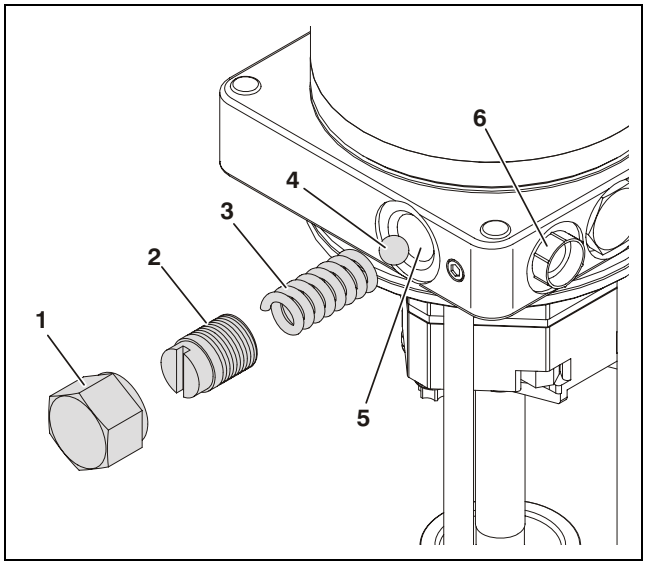

Pressure Adjust Valve Installation

1. Adjust Valve Cap
2. Adjustment Screw
3. Valve Spring
4. Valve Ball
5. Adjust Valve Port
6. Extend (Pressure) Port (Shown Plugged)

Note: Adjust pressure per specification shown in Section-1 of this Service Manual.

Pressure Check Valve Installation

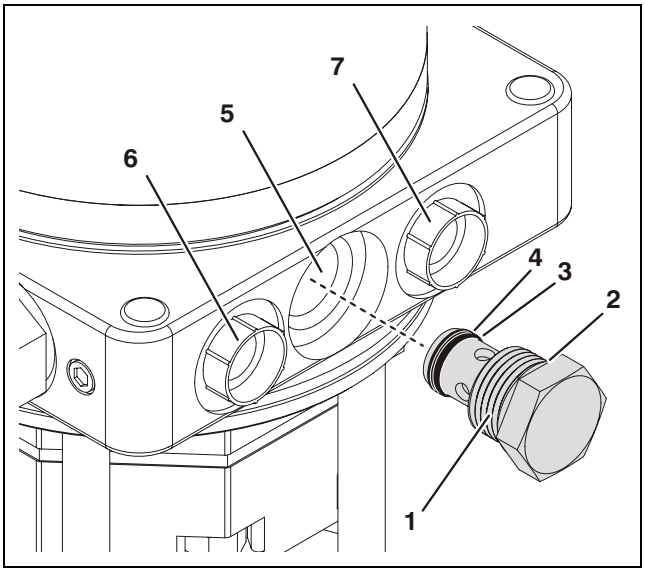

Pressure Check Valve Installation

1. Check Valve Assembly
2. O-Ring Seal
3. O-Ring Seal
4. Backing Ring
5. Check Valve Port
6. Extend (Pressure) Port
7. Return Port

Note: Extend (Pressure) and Return Ports Shown Plugged

https://truckmanualshub.com/

2.7 HYDRAULIC LIFT CYLINDER - REMOVAL, INSPECTION AND REBUILD

⚠ WARNING

HYDRAULIC CYLINDERS ARE DESIGNED TO HOLD HYDRAULIC FLUID UNDER HIGH PRESSURE. BE SURE ALL APPROPRIATE MEASURES ARE TAKEN TO RELIEVE RESIDUAL PRESSURE IN THE CYLINDER BEFORE DISCONNECTING LINES.

Cylinder Removal

1. Disconnect power source. *(Remove the DC power pack/charger assembly from back of mast, if so equipped)*.
2. Remove ground control (pump) cover.
3. Disconnect the hydraulic lines at the pump.
4. Using suitable lifting equipment, lay machine down horizontal onto the back of mast to allow access to the bottom of the machine. *(Preferably on an elevated work surface capable of supporting the full weight of the machine)*.
5. Slide *(extend)* the mast out the top about 2 ft. to 3 ft. to allow access to the cylinder attach setscrew on the attach block at the top of mast section-2.
6. Remove the cylinder attach setscrew from the attach block on top of mast section-2. *(Lowest set of sheaves)*.
7. Remove the protective mast cylinder/hydraulic line cover plate from the base frame under the mast.

NOTE: *(Use a container to catch the hydraulic oil from cylinder and hydraulic lines in next step, discard oil).*

8. Remove the hydraulic lines from the mast cylinder.
9. **Original Design Cylinder:** Remove the one (1) 5/16" bolt securing the cylinder to the cylinder mount and the four (4) 1/2" bolts securing the cylinder mount to the mast section-1 side rails.

   New Design Cylinder: Remove the snap-ring from either end of the cylinder mount pin running through the cylinder valve block. While supporting the cylinder remove the mounting pin.

NOTE: *In the following step the mast cylinder mount will be shimmed tight in the mast.*

10. Remove the cylinder mast mount from the mast.

NOTE: *In the following step the mast cylinder may be tight in the cylinder attach block at the top of the mast.*

11. Pull the mast cylinder out of the mast.

Cylinder Disassembly

1. Before disassembling the cylinder, clean away all dirt and foreign substances from openings, particularly the head area.

NOTE: *Always protect the chrome surface of the cylinder rod during assembly and disassembly. Any damage to this surface will require replacement of the rod.*

2. Extend the rod until the piston bottoms out against the cylinder head.
3. Compress the head retraining ring enough to allow the the cylinder head to be removed.
4. Carefully slide the head/rod/piston assembly out of the cylinder tube. A gentle tap on the head assembly may be required to remove the head from the cylinder tube.
5. Place the head/rod/piston assembly on a surface that will not damage the chrome.
6. Remove the piston locknut and separate the piston from the rod.
7. Slide the head off the rod from the piston end.

NOTE: *When removing the old seals use only blunt tools, be sure there are no sharp edges that may damage the seal grooves during removal. Scratching the groove may cause by-pass.*

8. Remove and discard all old seals.

Lift Cylinder Component Inspection

Cylinder Rod

There should be no scratches or pits deep enough to catch the fingernail. Pits that go to the base metal are unacceptable. Scratches that catch the fingernail but are not to the base metal, less than 0.5 inch long and primarily in the circumferential direction are acceptable provided they cannot cut the rod seal. Chrome should be present over the entire surface of the rod and the lack thereof is unacceptable. In the event that an unacceptable condition occurs, the rod should be repaired or replaced.

Cylinder Head

Visually inspect the inside bore for scratches or polishing. Deep scratches are unacceptable. Polishing indicates uneven loading and when this occurs, the bore should be checked for out-of-roundness. If out-of-roundness exceed 0.007", this is unacceptable. Check the condition of the dynamic seals (wiper, rod seals) looking particulary for metallic particles embedded in the seal surface. It is normal to cut the static seal on the retaining ring groove upon disassembly. Remove the rod seal, static o-ring and backup and rod wiper. Damage to the seal grooves, particularly on the sealing surfaces, is unacceptable. In the

https://truckmanualshub.com/

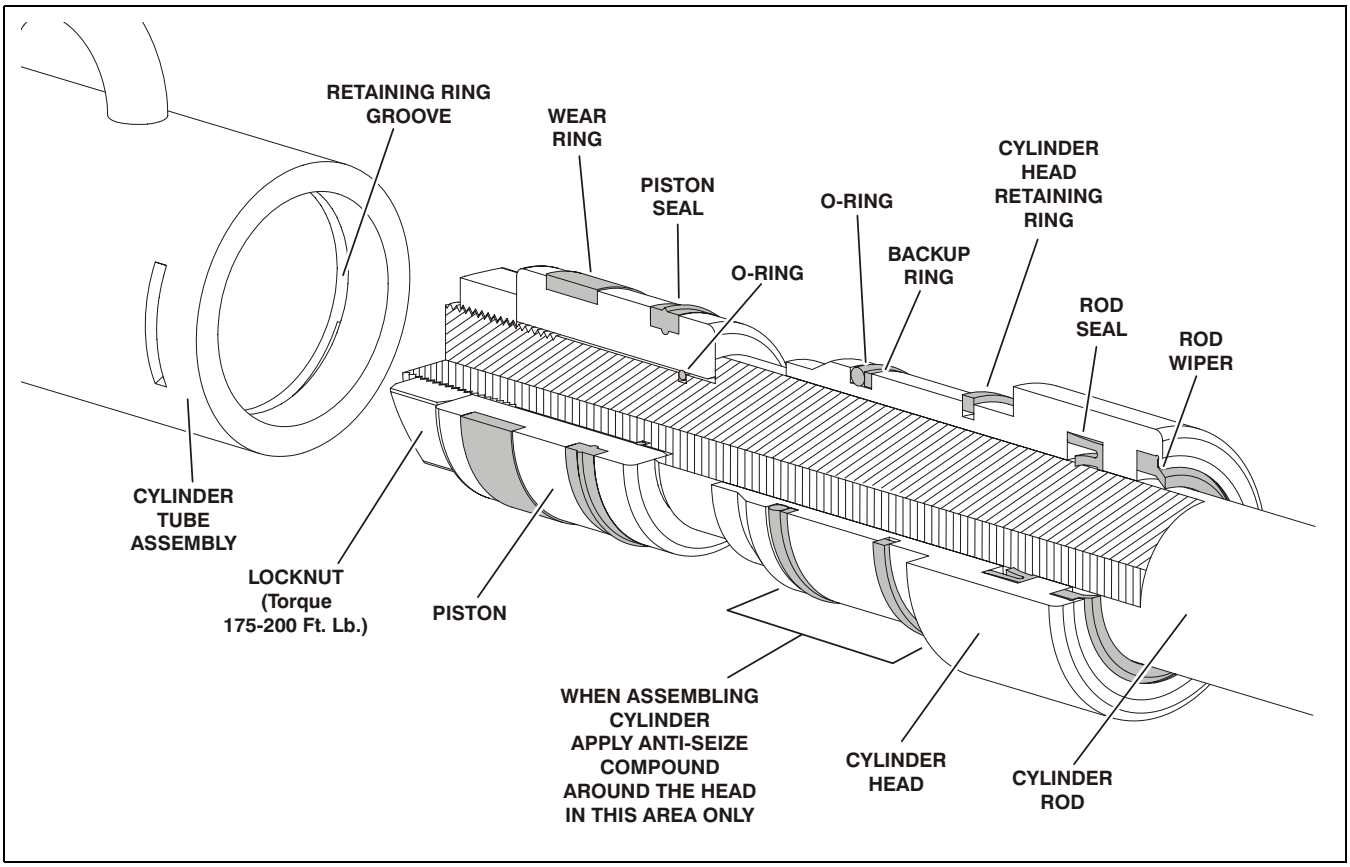

Figure 2-1. Lift Cylinder Internal Component Assembly Cross-Section.

event that an unacceptable condition occurs, the head should be replaced.

Piston

Visually inspect the outside surface for scratches or polishing. Deep scratches are unacceptable. Polishing indicates uneven loading and when this occurs, the diameter should be checked for out-of-roundness. If out-of-roundness exceeds 0.007", this is unacceptable. Check the condition of the dynamic seals and bearings looking particularly for metallic particles embedded in the bearing and in the piston seal surface. Remove the seals and bearings. Damage to the seal grooves, particularly on the sealing surfaces, is unacceptable. In the event that an unacceptable condition occurs, the piston should be replaced.

Tube Assembly

Visually inspect the inside bore for scratches and pits. There should be no scratches or pits deep enough to catch the fingernail. Scratches that catch the fingernail but are less than 0.5 inch long and primarily in the circumferential direction are acceptable provided they cannot cut the piston seal. The roughness of the bore should be between 10 and 20 μ inches RMS. Significant variation (greater than 8 μ inches difference) are unacceptable. In the event that an unacceptable condition occurs, the tube assembly should be repaired or replaced.

https://truckmanualshub.com/

Cylinder Assembly

(See Figure 2-1.)

1. Rinse the inside of the tube with hydraulic fluid and allow to drain. A high-pressure rinse followed by a wipe with a lint-free rag is preferable. Clean all internal components of any foreign material.
2. Lubricate the head and all seals with hydraulic fluid prior to installation. Install the seal, wiper, o-ring, back-up ring, and retraining ring to the cylinder head.
3. Lubricate the piston and all components with hydraulic fluid. Install the seal and wear ring to the piston.

NOTE: *Re-check that seals are not twisted or pinched and are properly seated.*

4. Place the rod on a clean table. Install the static o-ring seal into the groove on the piston end of the rod.
5. Install the head followed by the piston onto the rod noting the proper orientation of each component. Torque the piston nut to 175-200 ft. lbs.
6. When the rod assembly is ready to be installed into the tube, liberally apply an anti-seize lubricant to the head outer surface, especially the static seal.
7. Next dip the entire rod assembly into hydraulic fluid and stuff this assembly into the tube. Watch the seals as they pass over the rod port (if visible) to be sure they are not nicked or cut.
8. Install the head until the retaining ring seats in it's groove.

Installation

1. Remove the plastic plugs from the cylinder.
2. Pull rod out of cylinder approximately 3 ft.

NOTE: *The following step is easier done with two people, one to slide the cylinder into the mast, the other to guide the rod into the cylinder block at the top of the mast.*

3. Slide the cylinder into the mast and install the rod into the cylinder attach block.
4. Apply Loctite #222 (purple) to the setscrew securing the lift cylinder rod to the sheave wheel anchor block at the top of mast section-2.
5. Install the setscrew in the cylinder attach block at the top of the mast, coat the threads of the setscrew with Loctite *(RC/#640-blue)* before tightening.
6. **Original Design Cylinder Mount:** Install the cylinder mount and cylinder mounting plates into the bottom of the mast section-1. Shim to eliminate any side clearance to prevent any strain on the sides of the mast when the bolts are tightened.
7. **New Design Cylinder Mount:** Install the cylinder mounting plates at the bottom of the mast section-1. Mount plates two each side, using the the (2) two long pass through bolts and nuts, apply Loctite #242 to the bolt threads before tightening nuts.
8. **Original Design Cylinder:** Clamp the cylinder in the mounting journal of the cylinder mount. Apply Loctite #242 to the journal bolt threads and torque to 85 ft. lbs. Align the hole in the mounting journal with the hole in the cylinder and Install the (1) 5/16" bolt.

   New Design Cylinder: Install the mounting pin through the side mounting brackets and the cylinder valve body and through the mounting brackets on the other side of the mast. Install the snap rings to each end of the mounting pin.
9. Connect the hydraulic fittings and lines, *(new fittings should be used)*.
10. Slide the mast together *(stowed position)* from the top of the mast.
11. Stand machine upright on it's base wheels.
12. Connect the hydraulic line fittings at the pump.
13. Check oil level in the hydraulic oil reservoir, add oil to fill line, if necessary.
14. Install the ground station *(pump)* cover.
15. Set-up machine for operation and cycle mast *(up and down)* approximately 3 ft. to 4 ft. a few times.
16. Check the hydraulic oil reservoir again, add oil to the fill line.

https://truckmanualshub.com/

2.8 MAST ASSEMBLY AND DISASSEMBLY PROCEDURES

The SP Series personnel lift mast sections are contructed of extruded aluminum, protected with an anodized surface finish. The mast sections rails are interlocked into each other when assembled and are guided by slide pads mounted at the top and bottom of the rails on both sides of the mast section.

The current SP model mast assemblies have been designed with four (4) and five (5) mast sections;

Table 2-4. AM Series Mast Component Features

Model	No. of Mast Sections	Extend Device
12SP	4	Chain
15SP	5	Chain

When assembing mast sections carefully slide the mast sections together from bottom until mast ends are even, (*when sliding mast sections together be careful not to scratch the anodized surface in the slide pad channels)*. Assemble the hardware to the bottom of mast section first, then slide this section out the top of previous section and assemble hardware to the top of mast, *(See Figure 2-2.).* Always install slide pad shims with slide pads inserted into the slide pad channels, (ends of mast sections even).

NOTE: *The following procedures are used for both the four (4) and five (5) section masts. When referring to the mast sections in these procedures a split mast section number like 4/5 will refer to either section-4 or section-5 depending on which applies to your mast assembly. See Figure 2-3. & Figure 2-4.*

Mast Disassembly Procedure

(See Figure 2-2.)

1. After the platform and other hardware have been removed from the mast, and mast has been removed from machine, lay mast assembly down with the shortest mast section-4/5 on TOP and facing up.
2. Remove the sequencing retract cables from sides of mast assembly, the chain guard, and the mini covers from the top of each mast section.

Platform Section Removal

3. Remove chain adjust nuts from threaded ends of chain attached to the chain anchor plate on BOTTOM end of mast section-4/5 *(short, platform mounting section)*. Push threaded ends of chain through anchor plate
4. At TOP of mast section-4/5, pull chains out and allow to hang loose.

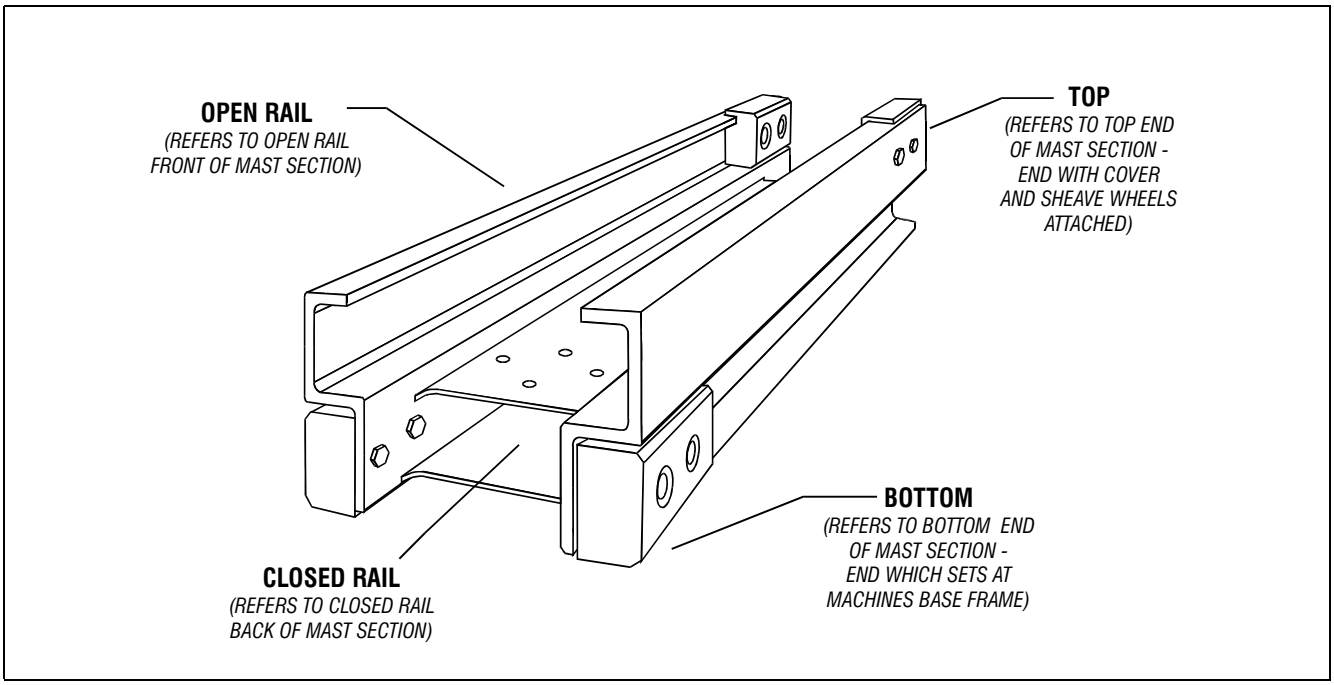

Figure 2-2. Mast Section - Assembly/Disassembly Reference.

https://truckmanualshub.com/

NOTE: *When sliding mast sections apart, be careful not to scratch or score the anodized finish in the slide pad channels.*

5. Carefully slide short mast section-4/5 out BOTTOM of mast section-3/4 rails. Disassemble slide pads, shims and cable anchor plate from mast section-4/5, if necessary.

Mast Section 4 Removal

NOTE: *Steps 6 through 10 will be used only for five (5) section mast assemblies. If disassembling a four (4) section mast go to step 11, Mast Section 3 Removal.*

6. Remove chain adjust nuts from threaded ends of chain attached to the chain anchor plate on BOTTOM end of mast section-4. Push threaded ends of cable through anchor plate.
7. At TOP of mast section-4, pull chains out and allow to hang loose, *(be certain floor surface is clean and free of any metal chips or debris which may stick to lubricated chains or lay chains in a clean bucket)*.
8. Slide mast section-4 out TOP of mast section-3 far enough to allow access to the chain sheave wheel assembly.
9. Remove countersunk flathead screws securing chain sheave wheel assembly attach bars on both side rails at TOP of mast section-4 and remove sheave wheel assembly.

NOTE: *When sliding mast sections apart, be careful not to scratch or score the anodized finish in the slide pad channels.*

10. Carefully slide mast section-4 out BOTTOM of section-2. Remove slide pads, shims and chain anchor plate, if necessary.

Mast Section 3 Removal

11. Remove chain adjust nuts from threaded ends of chain attached to the chain anchor plate on BOTTOM end of mast section-3. Push threaded ends of chain through anchor plate.
12. At top of mast section-3, pull chains out and allow to hang loose.
13. Slide mast section-3 out TOP of mast section-2 far enough to allow access to the chain sheave wheel assembly.
14. Remove countersunk-flathead screws securing chain sheave wheel assembly attach bars on both side rails at top of mast section-6 and remove sheave wheel assembly.
15. While mast section-3 is still extended from section-2 remove the bolts attaching the two (2) chain assembly anchor eyelets to the TOP of mast section-3. Remove chains.

NOTE: *When sliding mast sections apart, be careful not to scratch or score the anodized finish in the slide pad channels.*

16. Carefully slide mast section-3 out BOTTOM of section-2. Remove slide pads, shims and chain anchor plate, if necessary.

Mast Section 2 Removal

17. Slide mast section-2 out TOP of mast section-1 far enough to allow access to the chain anchor block/sheave wheel assembly.
18. Remove countersunk-flathead screws securing chain anchor block/sheave wheel assembly attach bars on both side rails at TOP of mast section-2.
19. Slide the chain anchor block/sheave wheel assemby and hydraulic cylinder out the TOP of mast section-2 far enough to allow removal of the sheave wheel attach bars, sheave wheels and sheave pin from the chain assembly anchor block.
20. Remove the snap ring from the pin attaching the chain anchor block and chain anchor plate assembly to the hydraulic cylinder rod end, then remove the pin. Lay the chain anchor block and chain assembly to side.
21. Remove the hydraulic cylinder through the BOTTOM of mast section-2, be careful not to nick or score cylinder rod surface while removing.

NOTE: *When sliding mast sections apart, be careful not to scratch or score the anodized finish in the slide pad channels.*

22. Carefully slide mast section-2 out BOTTOM of section-1. Remove slide pads and shims, if necessary.

Mast Section 1 Disassembly *(All Masts)*

23. Slide the TOP of the remaining mast section-1 out over edge of work surface and remove the bolts attaching the anchor blocks of the two (2) chain assemblies to mast section-1. Remove chain assemblies from mast and lay aside.
24. Remove slide pads and shims from mast section-1, is necessary.

Mast disassembly should now be complete.

https://truckmanualshub.com/

2.9 MAST ASSEMBLY

(See Figure 2-3., Figure 2-4. & Figure 2-5.)

Mast Section 1 - Assembly

1. Place mast section-1, rail (open) side up *(See Figure 2-1.)* on a clean, flat surface *(preferably a table or work bench capable of supporting the weight of the entire mast assembly)*. Slide mast out over end of work surface far enough to allow access to the chain anchor attach holes at top of mast.
2. Locate the two (2) single *(wide)* chain assemblies. Lay out each chain assembly with anchor block end towards mast, and notched end of block down, *(be certain floor surface is clean and free of any metal chips or debris which may stick to lubricated chains or lay chains in a clean bucket)*.
3. Insert the block anchor end (with notched end on bottom) into the top of mast section-1 and secure using two (2) 3/8"-16UNC x 2-1/2" long hex head bolts, flatwashers and nuts for each attach block. Place a flatwasher under bolt head and nut.

Mast Section 2 - Assembly

NOTE: *When sliding mast sections together, be careful not to scratch or score the anodized finish in the slide pad channels.*

4. Locate mast section-2, carefully slide mast section-2 closed rail into section-1 open rail. Slide sections together until ends are even.
5. Insert slide pads into the slide pad channels at bottom end of mast between section-1 and -2, *(one on each side of the mast)*, with beveled surface facing out towards section-1.
6. Thread slide pad attaching bolts, (two (2) 1/4"-20UNC x 3/8" long hex head bolts, place a flat washer under head of each bolt), through holes in mast section-2 inside rail, into the slide pad inserts. Thread in enough to hold pad in place.
7. Shim slide pads using the following steps:

NOTE: *Always use the an even amount of shim material behind slide pads on both sides of the mast rails. This will keep mast sections centered in rail channels and prevent any distortion of the mast section.*

   a. Start with a .036" thick shim and a .075" thick shim per side at each slide pad.
   b. Slide shims into place between slide pad and mast rail. Tighten the slide pad mounting bolts, be sure there are no air gaps between shims, shim and mast or shim and slide pad when tightened.
   c. Check mast section for side play. If play exists add .015" shims dividing the thickness equally between both sides of mast. Insert shims until the shims cannot be inserted halfway by hand with the mast pulled to the opposite side.
   d. When mast slide pads are shimmed properly, there should be no side to side movement of slide pad in rail channel. Mast sections should be snug in channels but still be able to slide in channel by hand.

8. Insert slide pads into the slide pad channels *(top of mast)* between section-1 and -2, (*one on each side of the mast)*, with beveled surface facing in towards section-2.

NOTE: *Before fastening and shimming the slide pad on the top left side of the mast, install a sequence cable bracket against the mast under the flatwasher.*

9. Thread slide pad attaching bolts, two (2) 1/4"-20UNC x 3/8" long hex head bolts, place a flat washer under head of each bolt, through holes in mast section-1 outside rail *(top of mast)* and into the slide pad inserts. Thread in enough to hold pad in place.
10. Shim per instructions in step 7, Mast Section 2 - Assembly.

NOTE: *If hydraulic cylinder needs to be extended, the protective caps on the extend and return ports will need to be temporarily removed. Be careful not to nick or scour rod surface when extending, also catch any oil draining out of cylinder to avoid spillage onto work area.*

11. Locate the hydraulic lift cylinder, slide the lift cylinder into the closed rail side of mast section-2 with rod end to top and port end to bottom of mast. Cylinder should extend out of mast on both ends. Return tube should be on right side when facing bottom of mast assembly.
12. **Original Design Cylinder Mount:** Install the cylinder mount and cylinder mounting plates into the bottom of the mast section-1. Shim to eliminate any side clearance to prevent any strain on the sides of the mast when the bolts are tightened.
13. **New Design Cylinder Mount:** Install the cylinder mounting plates at the bottom of the mast section-1. Mount plates two each side, using the the (2) two long pass through bolts and nuts, apply Loctite #242 to the bolt threads before tightening nuts.
14. **Original Design Cylinder:** Clamp the cylinder in the mounting journal of the cylinder mount. Apply Loctite #242 to the journal bolt threads and torque to 85

https://truckmanualshub.com/

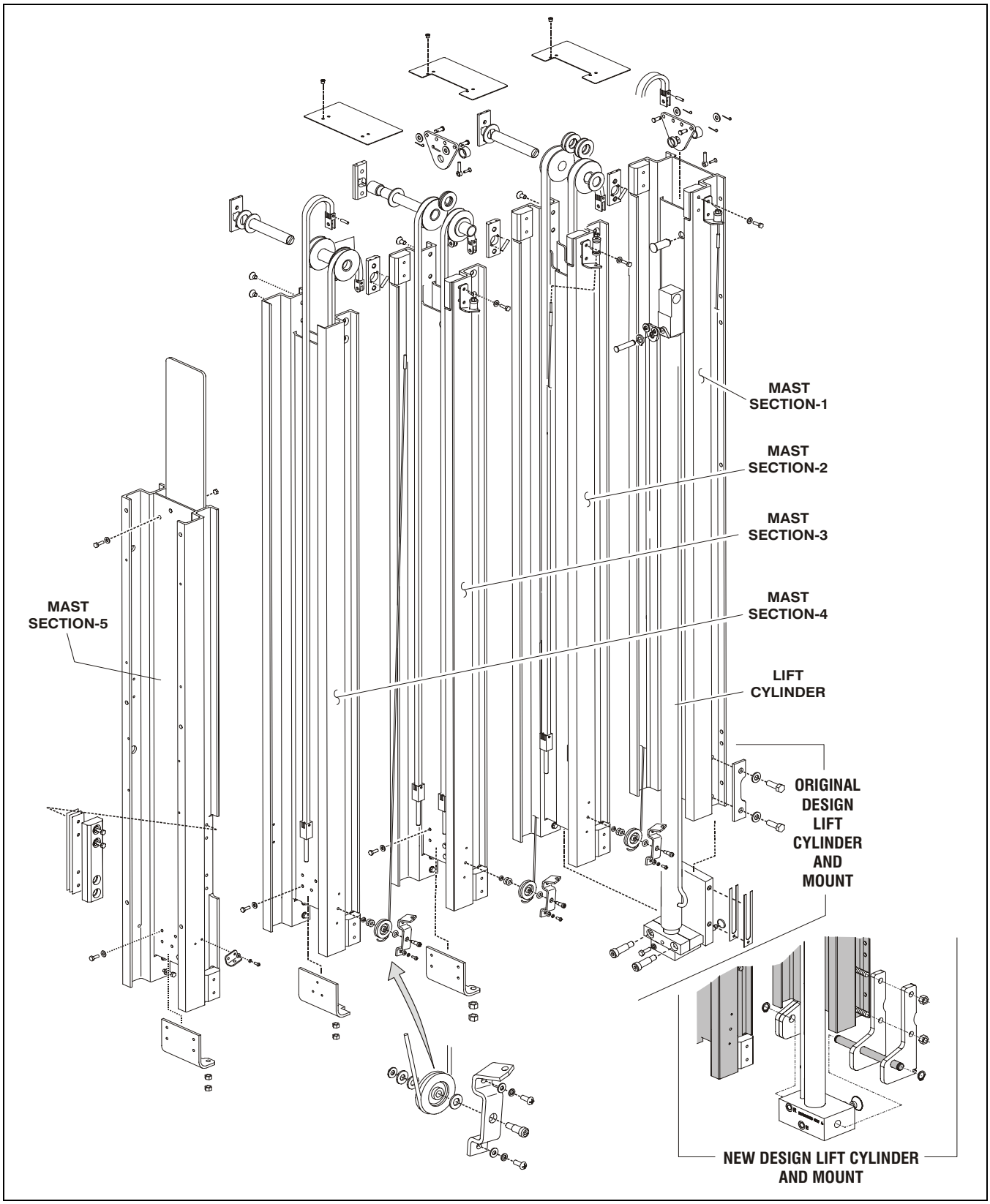

Figure 2-3. 15SP Mast Assembly Components. (5 Section)

https://truckmanualshub.com/

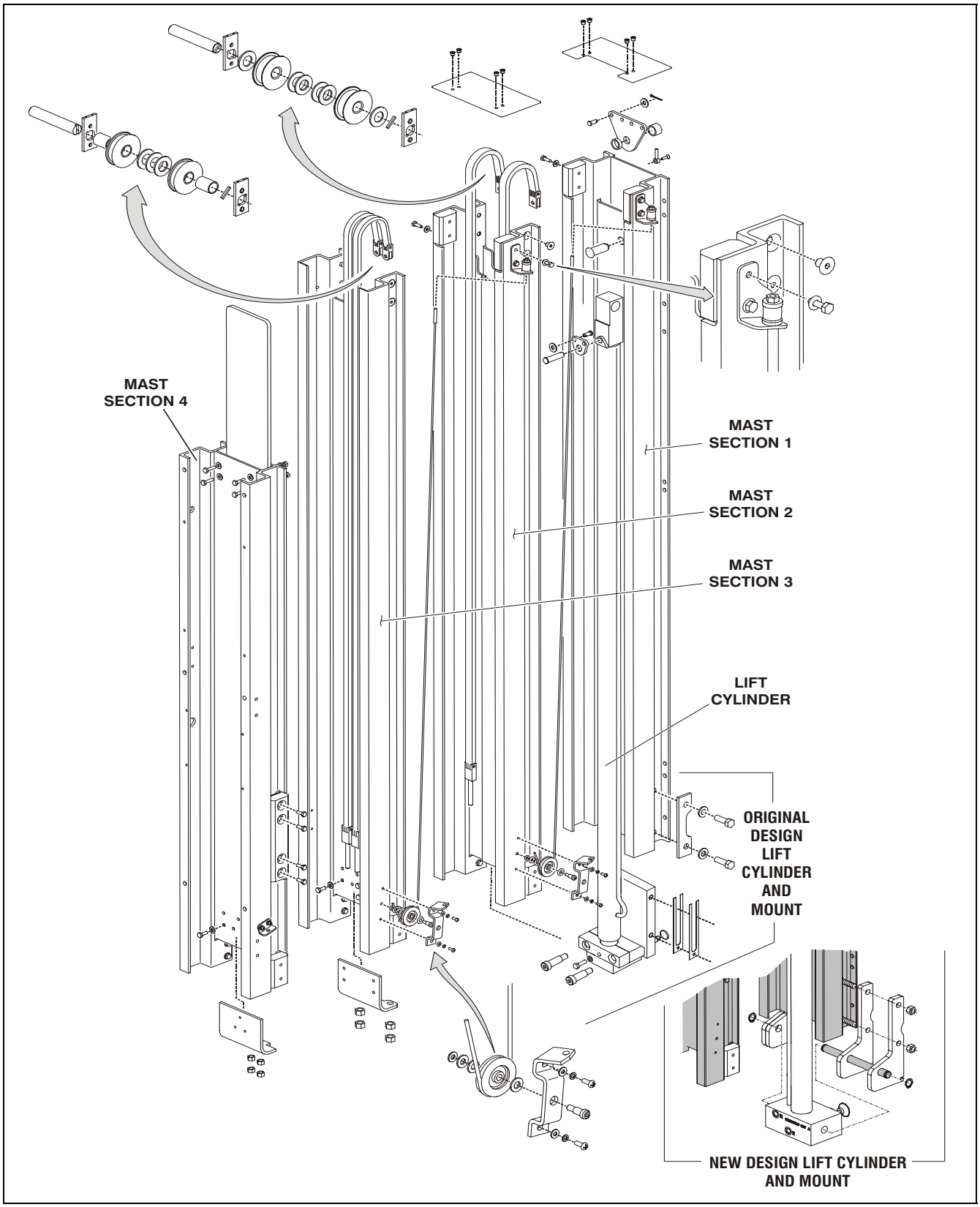

Figure 2-4. 12SP Mast Assembly Components. (4 Section)

https://truckmanualshub.com/

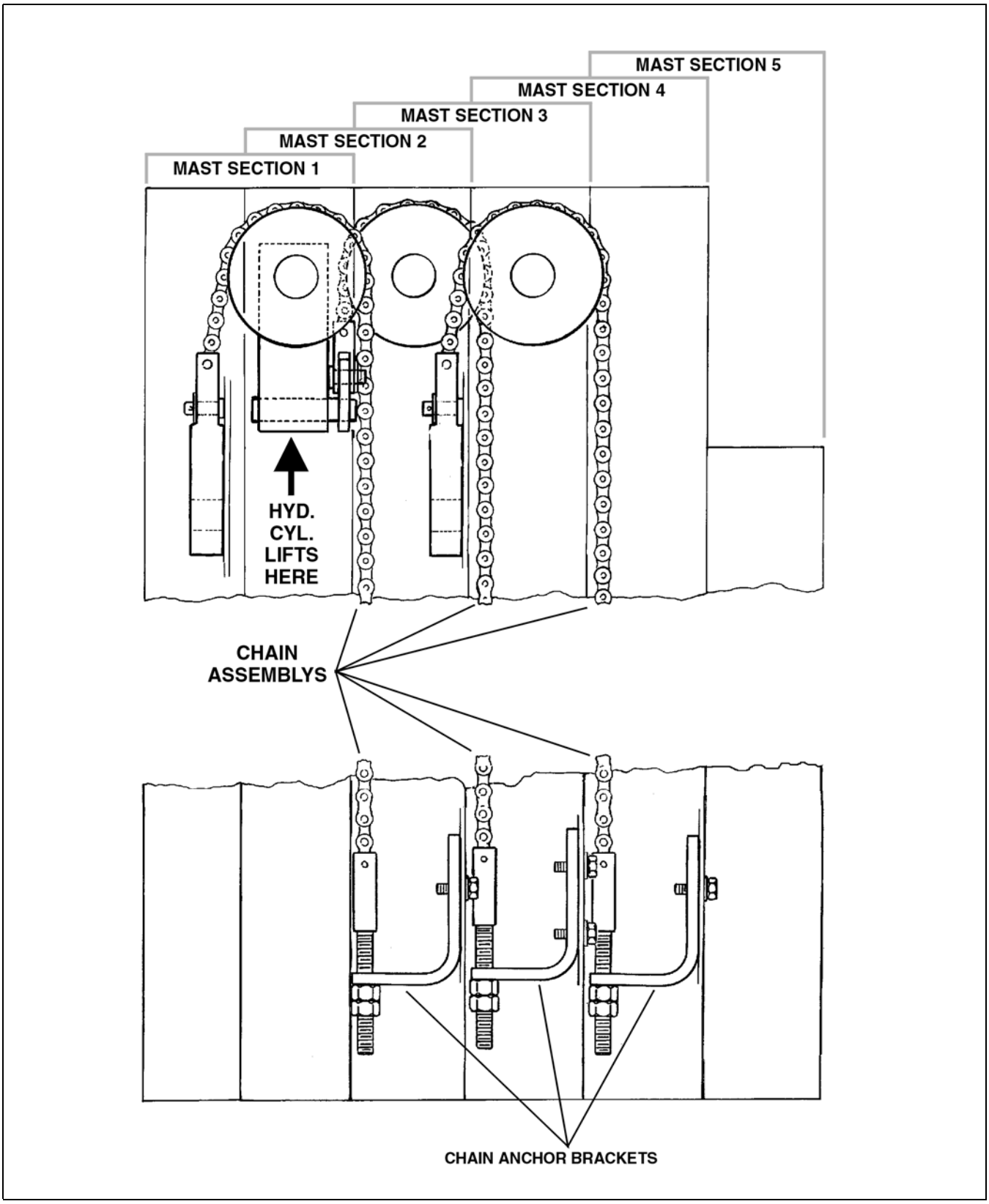

Figure 2-5. Mast Chain Routing Diagram.

https://truckmanualshub.com/

ft. lbs. Align the hole in the mounting journal with the hole in the cylinder and Install the (1) 5/16" bolt.

15. **New Design Cylinder:** Install the mounting pin through the side mounting brackets and the cylinder valve body and through the mounting brackets on the other side of the mast. Install the snap rings to each end of the mounting pin.
16. Slide the chain anchor block onto the cylinder rod end at the top of the lift cylinder. Locate the narrow chain assembly set *(single anchor plate with two narrow chains)*. Lay out chain assembly with anchor plate end towards mast, *(be certain floor surface is clean and free of any metal chip or debris which may stick to lubricated chains or lay chains in a clean bucket)*.
17. Align the holes in the cylinder rod, the chain anchor block and chain anchor plate and slide the attach pin through all, secure pin with snap ring.
18. Slide mast section-2 out of mast section-1 approximately one foot.
19. Assemble chain sheaves on chain assembly anchor block *(attached to cylinder rod end)* and attach to mast section-2 using following steps;
    a. Insert sheave pin through anchor block on cylinder rod end.
    b. Place sheave wheels *(for wide chain)* on sheave pin, one each side of anchor block.
    c. On outside of each sheave wheel, place a sheave pin attach bar, *(rectangular plate with threaded holes on each side of pin bore hole)*.
    d. Slide the whole anchor block assembly with sheave pin, wheels and pin attach bars into top of mast section-2. *(Position anchor block with narrow chains facing up)*.
    e. Attach to top of mast section-2 using two (2) 3/8"-16UNC x 1/2" long socket head-countersunk-flathead cap screws each side. Coat threads with Loctite #171 and tighten.
20. Slide mast section-2 back into section-1 until end are even.

Mast Section 3 - Assembly

NOTE: *When sliding mast sections together, be careful not to scratch or score the anodized finish in the slide pad channels.*

21. Locate mast section-3, carefully slide section-3 closed rail into section-2 open rail. Slide sections together until ends are even.
22. Locate one (1) of the chain bottom anchor plates *(one with threaded holes horizontally aligned to outside of bracket)*. Attach using outer set of holes in bottom of mast section-3 with two (2) 1/4"-20UNC x 3/4" long bolts, place a flatwasher under head of each bolt.
23. Slide mast section-3, approximately two feet out of the top of mast section-2.
24. Install the triangular shaped chain upper anchor plate to the top of mast section-3, using the remaining large pin and pin keeper.
25. Locate the remaining narrow chain set and attach them to the anchor plate just attached to the top of mast section-3 in the previous step. Allow to hang out the top of mast section-3 till later.
26. Insert the threaded the ends of chain assembly *(attached to top of mast section-1)*, into the opening between mast section-2 and mast section-3. Slide the threaded ends through the holes in bottom anchor plate attached to bottom of mast section-3. Loosely thread two (2) 3/8"-16UNC nuts onto stud threads on each chain. Chains will be adjusted later in assembly.
27. Assemble chain sheaves *(for narrow chain assembly)* to top of mast section-3 as follows;
    a. Locate the two (2) narrow chain sheave wheels and slide onto sheave pin.
    b. Slide two (2) short spacer tubes onto sheave pin, one each end of sheave pin to outside of sheave wheels.
    c. Place two (2) sheave pin attach bars, one each end of sheave pin to outside of space tubes.
    d. Holding complete sheave wheel assembly, slide assembly into top of mast section-3 and align threaded holes in sheave pin attach bars with holes in mast rails.
    e. Attach to top of mast section-3 using two (2) 3/8"-16UNC x 1/2" long socket head-countersunk-flathead cap screws, each side. Coat threads with Loctite #171 and tighten.

NOTE: *When sliding mast sections together, be careful not to scratch or score the anodized finish in the slide pad channels.*

28. Carefully slide mast section-3 into section-2 until ends are even. Check to make sure chain assembly *(wide chains)* are seating properly in chain anchor block chain sheave wheels attached to mast section-2.
29. Insert slide pads into the top end mast rails between section-2 and -3, *(one on each side of the mast)*, with beveled surface facing inward towards section-3.

https://truckmanualshub.com/

NOTE: *Before fastening and shimming the slide pad on the top left side of the mast, install a sequence cable bracket against the mast under the flatwasher.*

30. Thread slide pad attaching bolts, two (2) 1/4"-20UNC x 3/8" long hex head bolts, place a flat washer under head of each bolt, through holes in outside rail, on top of mast section-2 and into the slide pad inserts. Thread in enough to hold pad in place.
31. Shim per instructions in step 7, Mast Section 2 - Assembly.
32. Insert slide pads into the bottom end mast rails between section-2 and -3, *(one on each side of the mast)*, with beveled surface facing out towards section-2.
33. Thread slide pad attaching bolts, two (2) 1/4"-20UNC x 3/8" long hex head bolts, place a flat washer under head of each bolt, through holes on inside rail, on bottom end of mast section-3 and into the slide pad inserts. Thread in enough to hold pad in place.
34. Shim per instructions in step 7, Mast Section 2 - Assembly.

NOTE: *If assembling the 12SP (4 Section) mast, skip the following Mast Section 4 - Assembly steps and go directly to Platform Mounting Section - Assembly, Step 43.*

Mast Section 4 - Assembly

NOTE: *When sliding mast sections together, be careful not to scratch or score the anodized finish in the slide pad channels.*

35. Locate mast section-4, carefully slide section-3 closed rail into section-3 open rail. Slide sections together until ends are even.
36. Locate one (1) of the chain bottom anchor plates *(one with threaded holes horizontally aligned to center of bracket)*. Attach using holes in bottom of mast section-4 with three (3) 1/4"-20UNC x 3/4" long bolts, place a flatwasher under head of each bolt.
37. Slide mast section-4, approximately two feet out of the top of mast section-3.
38. Insert threaded ends of chain assembly *(attached to top of mast section-2)*, into the opening between mast section-3 and mast section-4. Slide the threaded ends through the holes in bottom anchor plate attached to bottom of mast section-4. Loosely thread two (2) 3/8"-16UNC nuts onto stud threads on each chain. Chains will be adjusted later in assembly.
39. Assemble chain sheaves *(for narrow chain assembly)* to top of mast section-4 as follows;
    a. Locate the two (2) narrow chain sheave wheels and slide onto sheave pin.
    b. Slide two (2) short spacer tubes onto sheave pin, one each end of sheave pin to outside of sheave wheels.
    c. Place two (2) sheave pin attach bars, one each end of sheave pin to outside of space tubes.
    d. Holding complete sheave wheel assembly, slide assembly into top of mast section-4 and align threaded holes in sheave pin attach bars with holes in mast rails.
    e. Attach to top of mast section-4 using two (2) 3/8"-16UNC x 1/2" long socket head-countersunk-flathead cap screws, each side. Coat threads with Loctite #171 and tighten.

NOTE: *When sliding mast sections together, be careful not to scratch or score the anodized finish in the slide pad channels.*

40. Carefully slide mast section-4 into section-3 until ends are even. Check to make sure chain assembly *(narrow chains)* are seating properly in chain anchor block chain sheave wheels attached to mast section-3.
41. Insert slide pads into the top end mast rails between section-3 and -4, *(one on each side of the mast)*, with beveled surface facing inward towards section-4.

NOTE: *Before fastening and shimming the slide pad on the top left side of the mast, install a sequence cable bracket against the mast under the flatwasher.*

42. Thread slide pad attaching bolts, two (2) 1/4"-20UNC x 3/8" long hex head bolts, place a flat washer under head of each bolt, through holes in outside rail on top of mast section-3 and into the slide pad inserts. Thread in enough to hold pad in place.
43. Shim per instructions in step 7, Mast Section 2 - Assembly.
44. Insert slide pads into the bottom end mast rails between section-3 and -4, *(one on each side of the mast)*, with beveled surface facing out towards section-3.
45. Thread slide pad attaching bolts, two (2) 1/4"-20UNC x 3/8" long hex head bolts, place a flat washer under head of each bolt, through holes on inside rail on bottom end of mast section-4 and into the slide pad inserts. Thread in enough to hold pad in place.

https://truckmanualshub.com/

46. Shim per instructions in step 7, Mast Section 2 - Assembly.

Platform Mounting Section - Assembly

47. Locate the remaing mast section-4/5 *(platform mounting - mast section).* Lay mast section on flat stable surface.

48. Attach the remaining chain bottom anchor plate *(one with threaded holes aligned at the outside of bracket)*. Attach through set of holes in bottom of mast section-4/5 with four (4) 1/4"-20UNC x 3/4" long bolts, place a flatwasher under head of each bolt.

NOTE: *The platform mounting section slide pads, are assembled differently than the slide pads for the other mast sections. Mast section-4/5 slide pads may need to be assembled/disassembled several times in order to determine the correct shim stock required for proper fit.*

49. Complete the following steps to determine shim stock thickness required for section-3/4;

NOTE: *Always use the an even amount of shim material behind slide pads on both sides of the mast rails. This will keep mast sections centered in rail channels and prevent any distortion of the section.*

a. Use two shim pieces per slide pad, a thick one and a thin one.
b. Start with a total thickness of approximately .035" and .075" thick shim stock.
c. Attach shim stock and slide pads to both sides of mast section-5/-6/-7 using five (5) 1/4"-20UNC x 1-1/4" long, hex head cap screws per side, with flatwasher under each bolt head. *(Assemble shim stock and slide pad to mast section rail with shim stock against rail and slide pad with beveled side out)*.
d. Carefully thread the slide pad mounting bolts with flatwashers through slide pads and shim stock into threads in mast section-5. Be certain there are no air gaps between shims, shim and mast or shim and slide pad when tightened.

NOTE: *Mast section-4/5 into section-3/4 fit should be very snug but still be able to be pushed together by hand. If too tight, remove section-4/5, disassemble slide pad and reduce thickness of shim stock.*

e. Begin sliding top of mast section-4/5 with closed rail down engaging the slide pads into slide pad channels at bottom of mast section-3/4's open rail. Continue to push section-4/5 into section-3/4 until BOTTOM ends of mast sections are even.
f. Check mast section for side play. If play exists use thicker shims dividing thickness equally between both sides of mast.
g. When mast slide pads are shimmed properly, there should be no side to side movement of slide pad in rail channel. Mast sections should be very snug in channels but still be able to slide in channel by hand.

50. Slide mast section-4/5 out even with top of section-3/4.

51. Insert threaded ends of chain assembly *(attached to top of mast section-2/3)* into the opening between mast section-3/4 and mast section-4/5. Slide the threaded ends through the holes in bottom chain anchor plate located on bottom of mast section-4/5. Loosely thread two (2) 3/8"-16UNC nuts onto stud threads on each chain. Chains will be adjusted later in assembly.

52. Slide mast section-4/5 back into mast section-3/4 until bottom ends of masts are even. Check to make sure chain set attached to top of section-2/3 is seating properly in cable sheave wheels attached to top of mast section-3/4. *(Mast section-2/3 may need to be restrained to keep it's slide pads from pushing out the bottom of mast sections-1/2)*.

53. Adjust top and bottom ends of mast sections so they are all even with each other. At bottom of mast assembly, thread all chain adjusting nuts on threaded ends until they are snug against the bottom anchor plates and all slack is removed from chains. Check that chains are seated in their sheave wheels at top of mast assembly.

54. Assemble the mini covers to the top of each mast section and the sequencing cables and hardware to the side of the mast assembly.

Mast assembly should now be complete.

2.10 MAST TO BASE FRAME INSTALLATION

1. Using an overhead crane or suitable lifting device capable of supporting the weight of base frame, attach a sling strap or chain to the front crossmember of the base frame, raise base frame.

2. Extend hydraulic cylinder out from bottom of mast assembly approximately one (1) foot. *(Caps on extend and return ports will need to be removed to extend cylinder. Catch any hydraulic fluid expelled from return port in a container to prevent spillage onto work area)*.

3. Bring base frame into position in front of mast assembly, *(base frame and mast assembly must be held at 90° angle to each other)*.

https://truckmanualshub.com/

4. Slide port end of hydraulic cylinder through hole in base frame cylinder mounting channel. *(Return port (tube side) of cylinder must be on right side facing bottom of base and mast)*.
5. Align threaded hole in side of hydraulic cylinder head with hole in tab on bottom side of cylinder mounting channel. Secure hydraulic cylinder to cylinder mounting channel tab using a 5/16"-18UNC x 5/8" long hex head bolt and flat washer.
6. Carefully push mast assembly and base assembly together until the four (4) holes on bottom rear of mast align with holes in the base frame mast support crossmember.
7. Attach mast to base using four (4) 3/8"-16UNC x 1" long hex head bolts, locknuts and flatwashers, *(place a flatwasher under bolt head and nut and mount with nuts on inside of frame).*
8. Locate the two (2) mast support braces, attach to sides of base frame using a 3/8"-16UNC x 1" long hex head bolt, nut and flatwashers each brace, *(place a flatwasher under bolt head and nut and mount with nuts on inside of frame. Use access hole in bottom of frame to attach nut inside frame)*.
9. Before setting machine upright on base, install a short 90° elbow fitting, flow control valve and another short 90° elbow fitting on the end of the flow control valve in the extend *(left)* port on bottom of hydraulic cylinder. Install a long 90° elbow fitting on return *(right)* port. Use sealant tape on fitting threads. Cap ports until hydraulic lines are installed.
10. Carefully set machine in an upright position on its base frame wheels.
11. Locate the mast support bracket. Attach mast support bracket to mounting holes halfway up back of mast using four (4) 3/8"-16UNC x 2-3/4" long hex head bolts, locknuts and flatwashers. *(Place a flatwasher under bolt head and nut and mount with nuts on inside of frame)*.
12. Using a 4 ft. level, ensure mast is set to vertical (plumb) on the base frame.
13. When mast is vertical *(plumb)*, attach support braces, *(bolted to base)*, to the mast support bracket, *(bolted to mast)*, using 3/8"-16UNC x 2-3/4" long hex head bolts, nuts and flatwashers. *(Place a flatwasher under bolt head and nut and mount with nuts on inside of bracket)*.
14. After securing mast to base frame, using 4 ft. level again check that mast is vertical *(plumb)* on base frame.

Mast installation should now be complete.

2.11 MAST CHAINS/CABLES AND SEQUENCING CABLES ADJUSTMENT

Mast Chain/Cable Adjustment

The intention of this procedure is to assure equal load distribution between the individual chains/cables of a mast section chain/cable set. Also to step each front mast section up approximately 1/4 in. (7mm) from the section behind it to allow clearance for the individual mast section covers.

Adjust using the following procedure;

1. With mast retracted, step into the platform and bounce your weight up and down a few times to be certain platform is at the bottom of travel. Be certain all chain/cable sets are seated in their sheaves properly at the top of each mast section.
2. Then with no load in the platform check the side profile of the top of the mast for the amount of adjustment necessary to obtain the 1/4 in. (7mm) step for mast sections-3 and up. *(See Figure 2-6.)*

NOTE: *Mast section-1 is fixed to the base and mast section-2 is attached to the lift cylinder, these sections require no adjustment.*

3. Adjust one mast section at a time starting from the back *(section-3, section-4, etc.)* of the mast and work forward. *(i.e.. if three is OK, then jump to four, etc.)*
4. To adjust, elevate the platform until the chain/cable anchor adjust nuts are accessible at the front and bottom of each mast section.

⚠ WARNING

NEVER WORK UNDER AN ELEVATED PLATFORM UNTIL PLATFORM HAS BEEN SAFELY RESTRAINED FROM ANY MOVEMENT BY BLOCKING OR OVERHEAD SLING.

5. Start with the mast section which needs adjustment and loosen the bottom *(jam)* nut on each chain/cable.
6. **Tighten** *(to raise mast section),* **or loosen** *(to lower mast section)* **the adjusting nut** against the anchor plate on each chain/cable. Adjust the nut the amount required to raise or lower the top of the mast section to match the side profile shown in Figure 2-6. when the mast is retracted.

NOTE: *It is more important that the (threaded ends) studs protruding on the adjustments are equal side to side on a mast section, than it is that the tension in the chains is equal. The chain equalizers will always assure equal tension, but if the adjustment isn't equal as described, the chains may tend to pull to*

https://truckmanualshub.com/

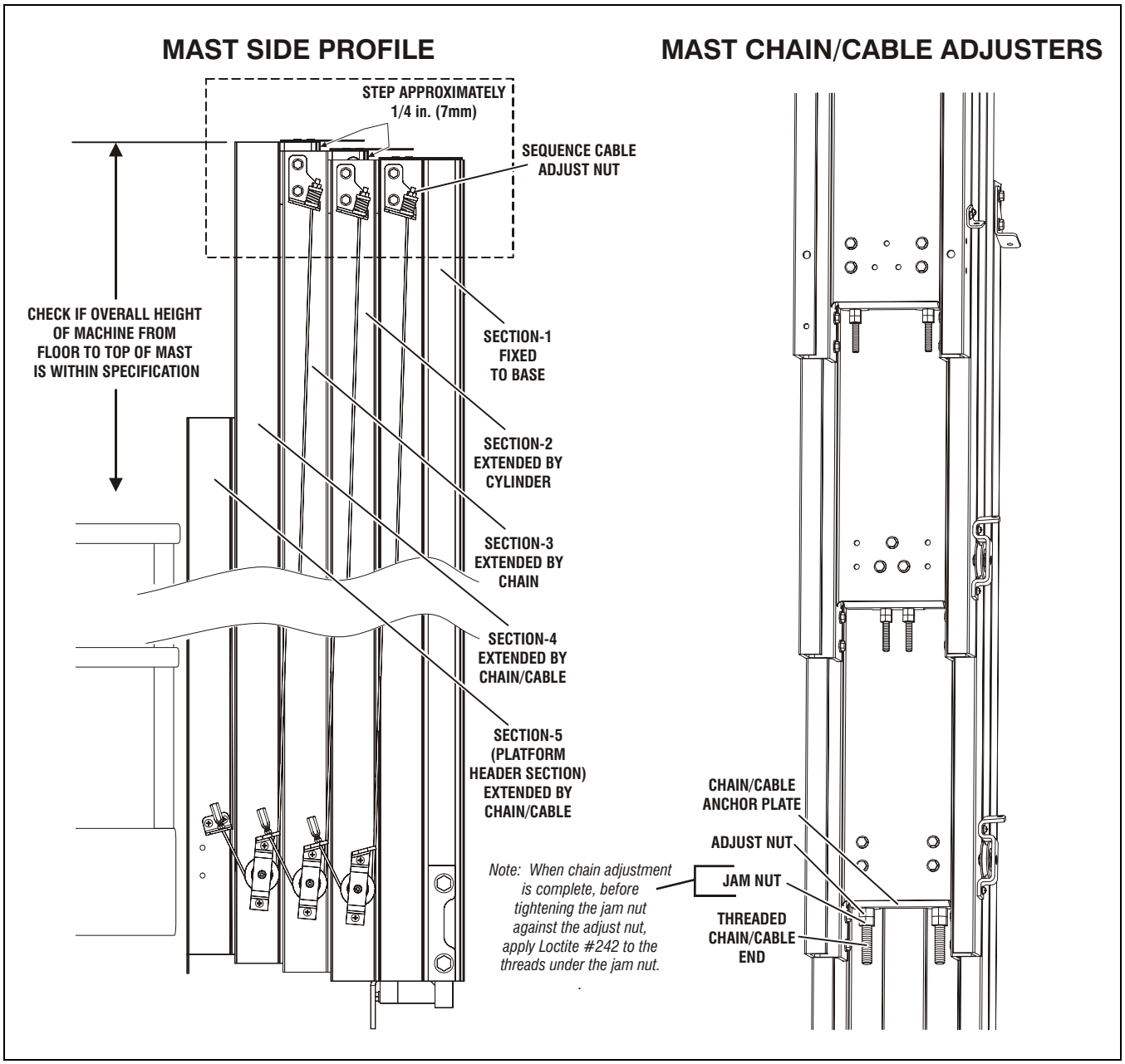

Figure 2-6. Mast Chain/Cable/Sequence Cable Adjustment Components. (Typical)

one side or the other.
The threaded end of the chain/cable may need to be restrained while tightening the adjust nut to keep the chain/cable from twisting.

7. Retract the mast all the way and check if the top of the mast sections appear as shown in Figure 2-6.
8. Repeat steps (1) through (7) for remaining mast sections.
9. Once mast section adjustment is completed, apply loctite #242 to the threads under the *(jam)* nuts that were loosened. Then re-tighten the loosened *(jam)* nuts until tight against the top *(adjust)* nut. Chain/cable should have slight tension but should not be taut.
10. After all mast adjustments are complete, if necessary adjust the bumpers on the underside of the stock-picker platform so the platform rests slightly above the base frame when it is lowered and empty.

https://truckmanualshub.com/

Sequencing Cable Adjustment

1. Retract mast completely, and check each sequencing cable on outside of masts for excessive slack. Adjust only to remove slack from cable.
2. Tighten nylock-nut just enough to remove excessive slack from sequencing cable. The springs should not be compressed more than 25% after adjusting.
3. Run mast through several cycles to verify cable/chain adjustments and ensure no interference exists between chain anchor brackets and mast.

2.12 SEQUENCE CABLE REPLACEMENT KIT

A sequence cable replacement kit is available from the JLG Parts Department to service broken or worn sequence cables. This kit consists of a replacement sequence cable with the threaded (top) end attached same as the top end of the factory cable. Also included is a clamp (drum/socket type) to secure the bottom end of the cable. Use the following procedure to install the replacement cable and clamp kit.

Remove Old Cable

1. Remove the locking nut from the threaded end of the cable at the top of the mast and then remove the spring cap, spring, and spacer washers if installed.
2. Slide the threaded top end out of the upper anchor bracket, then at the bottom end pull the cable out though the sheave pulley/anchor bracket until it is completely clear of the machine.

Replacement Cable Installation

3. Be certain the mast is completely retacted and at the bottom of travel. Check the mast "Side Profile" at the top of the mast as shown in Figure 2-6., adjust mast sections to proper height if necessary.
4. To determine where the clamp will be installed at the bottom of the replacement cable, temporarily assemble the new replacement cable to the top cable anchor bracket on the mast using the washers, spring, spring cap and lock nut previously disassembled. Thread the lock nut on until approximately 1/8 in. (3mm) of threads are exposed.
5. At the bottom of the mast, thread the loose end of the replacement cable through the proper sheave pulley and through the hole in the sheave pully/anchor bracket on the mast section ahead of the sheave pulley.
6. Grasp the cable and pull on the cable until the spring at the top of the cable is slightly compressed. Use a black marker to mark the cable on the top side of the sheave pully/anchor bracket. This will determine where the clamp (drum/socket) sleeve will be positioned on the cable.

NOTICE

DO NOT CUT THE CABLE AT THE MARKED POINT ON THE CABLE THIS IS ONLY USED AS A REFERENCE FOR POSITIONING THE CABLE SLEEVE WHICH WILL REST AGAINST THE ANCHOR BRACKET ONCE INSTALLED.

https://truckmanualshub.com/

Clamp Installation (Drum/Socket Type)

NOTICE

THE MANUFACTURER OF THE DRUM/SOCKET CLAMP RECOMMENDS THE USE OF THEIR CABLE CLAMP ASSEMBLY KIT (JLG P/N - 7023275) TO ASSEMBLE THE CLAMP TO THE WIRE ROPE. THE KIT CONSISTS OF VISE JAWS TO HOLD THE WIRE ROPE IN A VISE PROPERLY WITHOUT DAMAGING ANY ROPE STRANDS AND A PLUG DRIVER TO DRIVE THE PLUG INTO THE CENTER OF THE WIRE ROPE AND IS ALSO USED TO FORM THE STRANDS OF THE ROPE DURING ASSEMBLY.

NOTE: *The tools in the clamp assembly kit may be frabricated if necessary. The vise clamp consists of vise jaws with a hole drilled 1/32 in. smaller than the diameter of the wire rope you are working with (i.e. 1/8 in. rope - 3/32 in. hole.)*
The plug driver is a metal tube with a hole in the bottom to allow the strands of the wire rope to be shaped after the plug has been tapped into the center of the wire rope.

1. Using the recommended vise jaws, clamp the wire rope into a vise with the bottom edge of the black mark made on the wire rope resting just above the vise jaws.

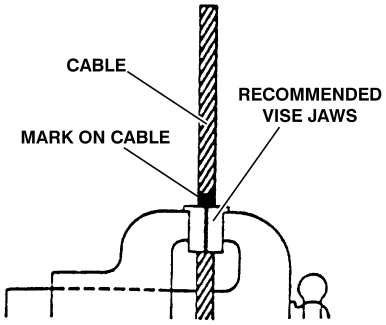

2. Twist the sleeve from the clamp kit onto the rope until it is flat against the vise jaws at the mark made made on the wire rope.

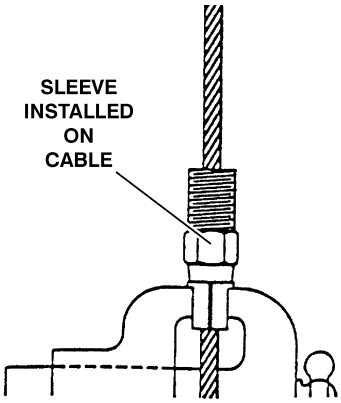

3. Use a suitable tool and cut the cable as shown in the illustration following. For 1/8 in. cable the recommended length is 5/8 in. past the end of the sleeve.

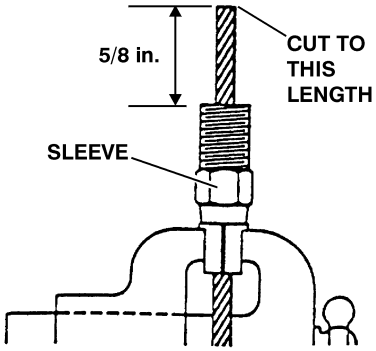

4. Unlay the cable strands by gently forcing a screwdriver between the outer strands to unlay the cable. When done properly the outer strands will form a symmetrical basket. Do not straighten out the spiral lay of the strands, unlay any wires that make up the strand, or allow the strands to cross each other inside the sleeve.

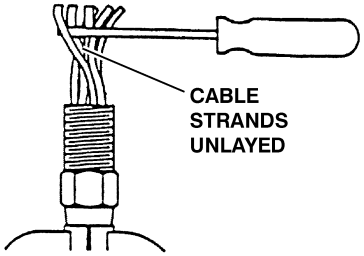

5. Install the plug supplied with the kit by placing the plug in the center of the strands starting with the small tapered end of the plug. Use a metal tube (plug driver) and hammer to drive the plug into the sleeve while assuring that the strands are spaced somewhat equally around the plug. Drive the plug until it is firmly seated and no more than 1/3 of the plug is visible from above the sleeve.

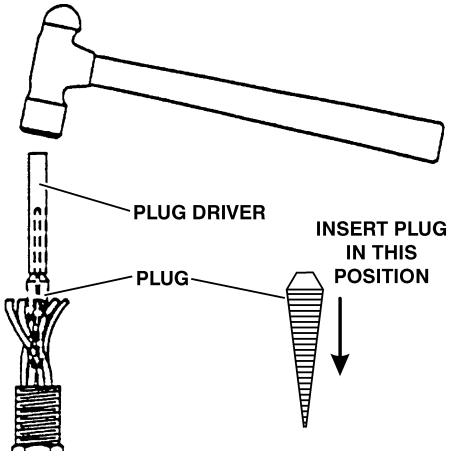

https://truckmanualshub.com/

6. Reclamp the assembly in the vise on the flats of the sleeve. Using the plug driver, a metal tube or pliers, bend the outer strands toward the center strands enough that the socket can be slipped over all the strands.

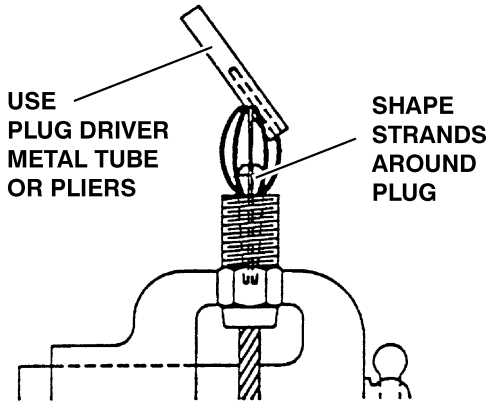

NOTE: *When assembling stainless steel parts all threads must be coated with a dry lubricant or an anti-sieze lubricant to prevent seizing.*

7. Coat the threads of the socket and sleeve with lubricant and install the socket by twisting it over the strands of the cable and engage the threads of the sleeve with the socket. Tighten until four threads or fewer are visible. If more than four threads are visible, proof load the cable and retighten the socket fitting. (There is no specific requirement for torque.)

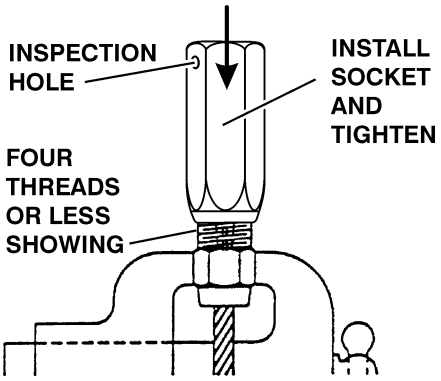

8. Inspect for proper assembly prior to loading the cable. Strands visible through the inspection hole are your assurance of a proper assembly.

NOTE: *The end of the rope may not be visible in the inspection hole after loading.*

9. Install cable on machine and adjust per instructions shown previously in Section 2.11, MAST CHAINS/ CABLES AND SEQUENCING CABLES ADJUSTMENT

https://truckmanualshub.com/

SECTION 3. TROUBLESHOOTING

3.1 GENERAL

This section contains troubleshooting information to be used for locating and correcting most of the operating problems which may develop in the aerial platform. If a problem should develop which is not presented in this section or which is not corrected by listed corrective actions, technically qualified guidance should be obtained before proceeding with any maintenance.

3.2 TROUBLESHOOTING INFORMATION

The troubleshooting procedures applicable to the aerial platform are listed and defined in Table 3-1., DC Unit - Troubleshooting.

Each malfunction within an individual group or system is followed by a listing of probable causes which will enable determination of the applicable remedial action. The probable causes and the remedial action should, where possible, be checked in the order listed in the tables.

It should be noted that there is no substitute for a thorough knowledge of the equipment and related systems.

It should be recognized that the majority of the problems arising in the machine will be centered in the hydraulic and electrical systems. For this reason, every effort has been made to ensure that all likely problems in these areas are given the fullest possible treatment. In the remaining machine groups, only those problems which are symptomatic of greater problems which have more than one probable cause and remedy are included. This means that problems for which the probable cause and remedy may be immediately obvious are not listed in this section.

The first rule for troubleshooting any circuit that is hydraulically operated and electrically controlled is to determine if the circuit is lacking hydraulic oil and electrical control power. This can be ascertained by overriding the bypass valve *(mechanically or electrically)* so that oil is available to the function valve, then overriding the function valve mechanically. If the function performs satisfactorily, the problem exists with the control circuit.

3.3 HYDRAULIC CIRCUIT CHECKS

The first reference for improper function of a hydraulic system, where the cause is not immediately apparent, should be the Hydraulic Diagram Circuit. The best place to begin the problem analysis is at the power source *(pump)*. Once it is determined that the pump is serviceable, then a systematic check of the circuit components, would follow.

NOTE: *For aid in troubleshooting, refer to Figure 3-5. for HYDRAULIC DIAGRAM circuit.*

3.4 ELECTRICAL SYSTEM - MULTIMETER BASICS

A wide variety of multimeters or Volt Ohm Meters (VOM) can be used for troubleshooting your equipment. A digital meter with reasonable accuracy (within 7%) is recommended for the measurements in these procedures. This section shows diagrams of a common, digital VOM configured for several different circuit measurements. Instructions for your VOM may vary. Please consult the meter operator's manual for more information.

Grounding

"Grounding the meter" means to take the black lead (which is connected to the COM (common) or negative port) and touch it to a good path to the negative side of the voltage source.

Backprobing

To "backprobe" means to take the measurement by accessing a connector's contact on the same side as the wires, the back of the connector. Readings can be done while maintaining circuit continuity this way. If the connector is the sealed type, great care must be taken to avoid damaging the seal around the wire. It is best to use probes or probe tips specifically designed for this technique, especially on sealed connectors. Whenever possible insert probes into the side of the connector such that the test also checks both terminals of the connection. It is possible to inspect a connection within a closed connector by backprobing both sides of a connector terminal and measuring resistance. Do this after giving each wire a gentle pull to ensure the wires are still attached to the contact and contacts are seated in the connector.

Min/Max

Use of the "Min/Max" recording feature of some meters can help when taking measurements of intermittent conditions while alone. For example, you can read the voltage applied to a solenoid when it is only operational while a switch, far from the solenoid and meter, is held down.

https://truckmanualshub.com/

Polarity

Finding a negative voltage or current reading when expecting a positive reading frequently means the leads are reversed. Check what reading is expected, the location of the signal and that the leads are connected to the device under test correctly. Also check that the lead on the "COM" port goes to the ground or negative side of the signal and the lead on the other port goes to the positive side of the signal.

Scale

M = Mega = 1,000,000 * (Displayed Number)

k = kilo = 1,000 * (Displayed Number)

m = milli = (Displayed Number) / 1,000

μ = micro = (Displayed Number) / 1,000,000

Example: 1.2 kΩ = 1200 Ω

Example: 50 mA = 0.05 A

Continuity Measurement Over Long Distances

When trying to determine continuity of a harness or wire, longer than the reach of standard instrument leads, is possible to perform the check without excessively long leads. Using the other wires in the harness one can determine the condition of a particular wire in the harness.

Requirements:

- Harness with at least three separate wires including the wire under test.
- These wires must be able to be isolated from other wires, etc.
- Jumper or method to connect contacts on one side of harness.
- Meter that can measure resistance or continuity.

Procedure

Test multimeter leads resistance. Subtract this value from the measured resistance of the wires to get a more accurate measurement.

Consult the circuit schematic to determine which wires to use in addition to wire under test, here called wire #1 and wire #2, and how to isolate these wires. These wires should appear in the same connectors as the wire under test or are within reach of the jumper.

1. Disconnect all connections associated with the wire under test and the two additional wires. If harness is not completely isolated disconnect battery terminals also, as a precaution.
2. Measure continuity between all three wires, the wire under test, wire #1 and wire #2. These should be open. If not, repair the shorted wires or replace the harness.
3. On one side, jumper from contact of wire #1 and wire #2.
4. Measure continuity between wire #1 and wire #2. If there is continuity, both wires are good and can be used for this test. If there is not continuity, either wire could be bad. Check connections and measurement setup. Redo measurement. If still no continuity, repair wires or consult schematic for other wires to use for test.
5. Jumper from wire under test to wire #1.
6. Measure continuity. If there is continuity, the wire under test is good. Resistance of a wire increases as the length increases and as the diameter decreases.

One can find the continuity of two wires, here #1 and #2, at once by following steps 1 through 4. If there is a problem the third wire is used to troubleshoot the other wires. To find the problem, start at step 1 and use the entire procedure.

https://truckmanualshub.com/

Voltage Measurement

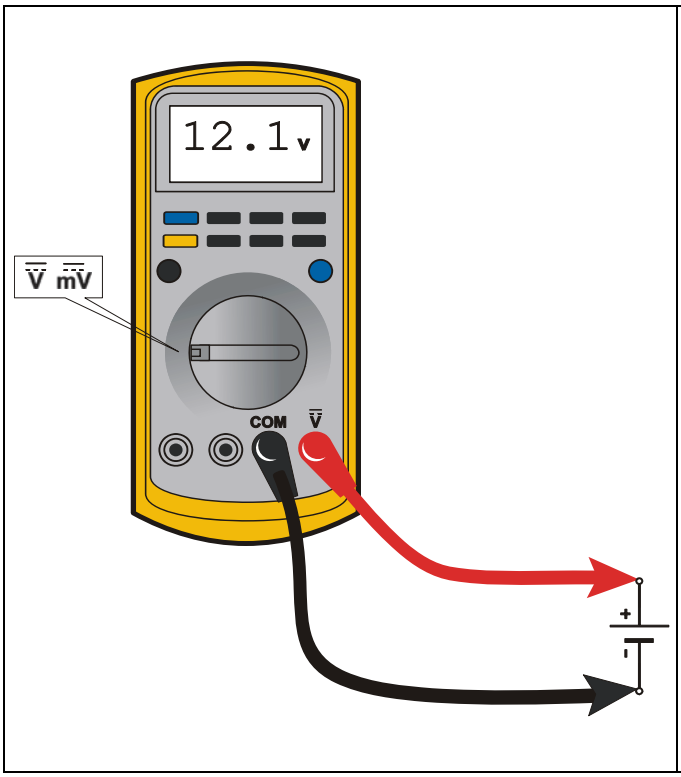

Figure 3-1. Voltage Measurement (DC)

- If meter is not auto ranging, set it to the correct range (See multimeter's operation manual)
- Use firm contact with meter leads

Resistance Measurement

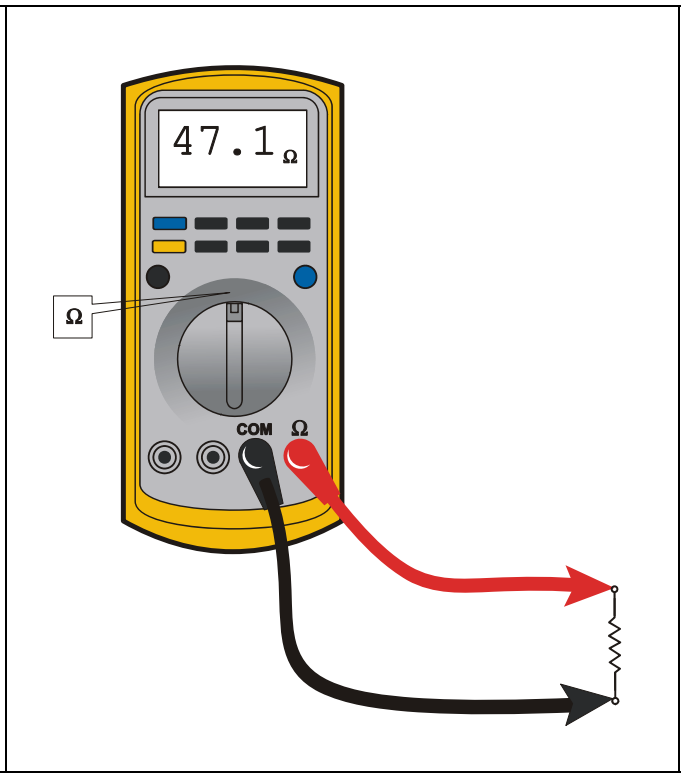

Figure 3-2. Resistance Measurement

- First test meter and leads by touching leads together. Resistance should read a short circuit (very low resistance)
- Circuit power must be turned OFF before testing resistance
- Disconnect component from circuit before testing
- If meter is not auto ranging, set it to the correct range (See multimeter's operation manual)
- Use firm contact with meter leads

https://truckmanualshub.com/

Continuity Measurement

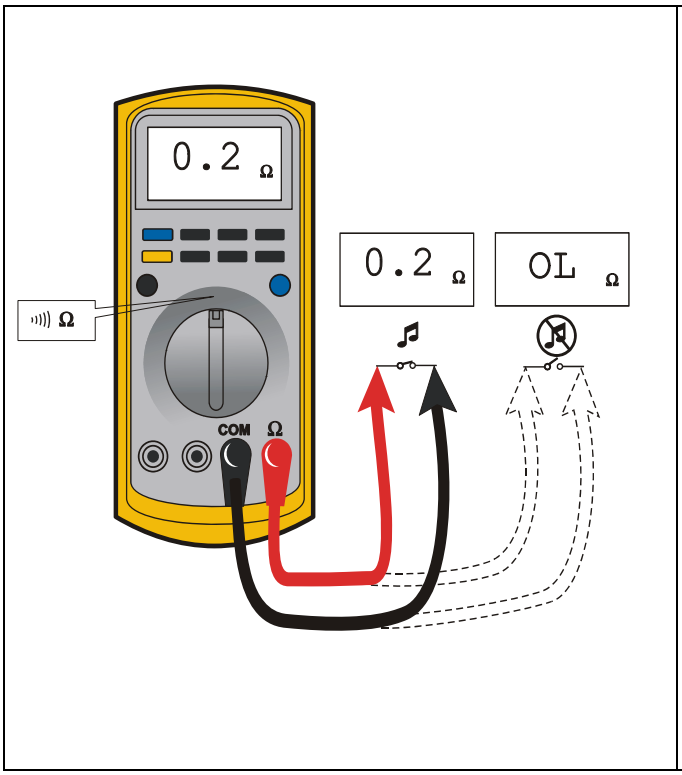

Figure 3-3. Continuity Measurement

- Some meters require a separate button press to enable audible continuity testing
- Circuit power must be turned OFF before testing continuity
- Disconnect component from circuit before testing
- Use firm contact with meter leads
- First test meter and leads by touching leads together. Meter should produce an audible alarm, indicating continuity

Current Measurement

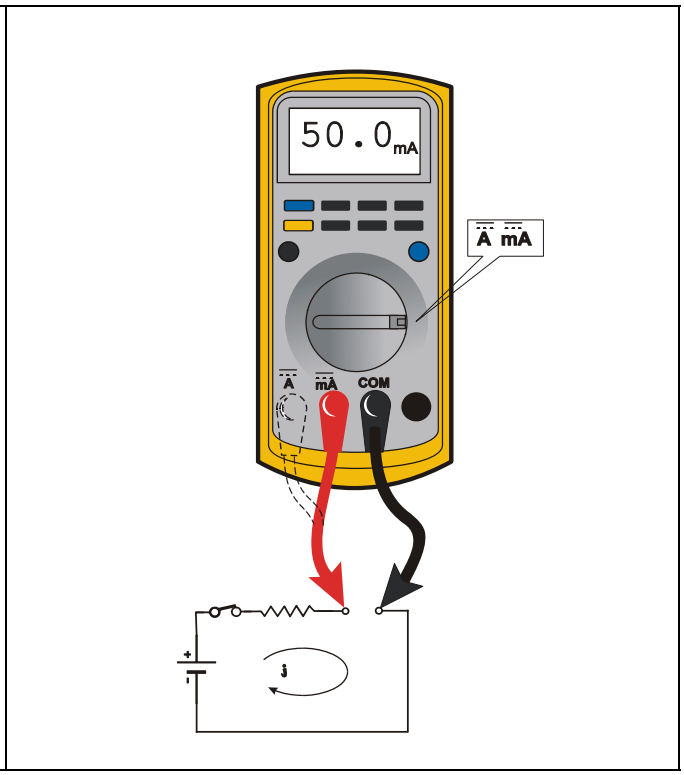

Figure 3-4. Current Measurement (DC)

- Set up the meter for the expected current range
- Be sure to connect the meter leads to the correct jacks for the current range you have selected
- If meter is not auto ranging, set it to the correct range (See multi meter's operation manual)
- Use firm contact with meter leads

https://truckmanualshub.com/

3.5 ELECTRICAL SWITCH TESTING

Basic Check

The following check determines if the switch is functioning properly, not the circuit in which the switch is placed. A switch is functioning properly when there is continuity between the correct terminals or contacts only when selected.

1. De-energize the circuit.
2. Isolate the switch from the rest of the circuit if possible. If not possible, keep in mind it may affect readings.
3. Access the terminals to the switch.
4. If the switch has two terminals:
   a. Measure resistance across the terminals.
   b. Change the switch position.
   c. Measure resistance again with the leads in the same positions. If the meter was reading short, it should read an open. If the meter was reading open it should read short.
5. If the switch has more than two terminals, consult the schematic or switch diagram to determine what terminals will be connected. The test is similar to testing a switch with two terminals.
   a. Place one meter lead on the common contact and the other on a different contact in the same circuit.
   b. Cycle through all positions of the switch. The meter should read short only when the switch connects the two terminals and open otherwise.
   c. If the switch has more than one common contact repeat the process for that circuit.

Limit Switches

Limit switches are used to control movement or indicate position. Mechanical limit switches are just like manually operated switches except that the moving object operates the switch. These switches can be tested the same way as a standard switch by manually operating the sensing arm.

Another type of limit switch used by JLG is the inductive proximity switch, also referred to as a "prox switch". Inductive proximity switches are actuated only by ferrous metal (metal that contains Iron, such as steel) near the switch. They do not require contact, and must be energized to actuate. These types of switches can be used to detect boom or platform position, for example. These switches have a sensing face where the switch can detect ferrous metal close to it. To find the sensing face, take note how the switch is mounted and how the mechanisms meet the switch. Test this type of switch as follows:

1. Remove prox switch from its mount.
2. Reconnect harness if it was disconnected for step 1, and turn on machine.
3. Hold switch away from metal and observe switch state in the control system diagnostics using the Analyzer. See vehicle or control system documentation on how to do this.
4. Place sensing face of switch on the object to be sensed by the switch. If that is not available, use a piece of ferrous metal physically similar to it. The switch state in the control system diagnostics should change.
5. When reinstalling or replacing switch be sure to follow mounting instructions and properly set the gap between the switch and object sensed.

Automatic Switches

If the switch is actuated automatically, by temperature or pressure for example, find a way to manually actuate the switch to test it. Do this either by applying heat or pressure, for example, to the switch. These switches may need to be energized to actuate.

1. Connect instrumentation to monitor and/or control the parameter the switch is measuring.
2. Observe switch state in control system with the Analyzer. See vehicle or control system documentation on how to do this.
3. Operate system such that the switch actuates. This could be going over a certain pressure or temperature, for example. The state indicated in the control system should change.

Switch Wiring - Low Side, High Side

When controlling a load, a switch can be wired between the positive side of the power source and the load. This switch is called a "high side" switch. The switch supplies the power to the load. When a switch is wired between the negative side of the power source and the load, it is a "low side" switch. The switch provides the ground to the load.

A low side switch will allow voltage to be present on the load. No power is applied because the switch is stopping current flow. This voltage can be seen if the measurement is taken with one test lead on the load and the other on the battery negative side or grounded to the vehicle. What is actually being measured is the voltage drop across the switch. This could mislead a technician into thinking the load is receiving power but not operating. To produce an accurate picture of power or voltage applied to the load, measure voltage across the load's power terminals. Also, the technician can measure the voltage at both power terminals with respect to battery ground. The difference between those two measurements is the voltage applied to the load.

https://truckmanualshub.com/

Table 3-1. DC Unit - Troubleshooting

TROUBLE	PROBABLE CAUSE	REMEDY
Platform does not rise.		
	Power source is OFF or unplugged.	Check power source or Ground Station Key Switch.
	Red emergency stop button is engaged (PUSHED IN) on either ground control station or on platform.	Disengage (TURN CLOCKWISE) red emergency button until it pops out.
	Foot Stop is not engaged.	Engage Foot Stop at either side of machine.
	Control relay not functioning.	Replace control relay.
	Motor start relay not functioning.	Replace motor start relay.
	Fuse(s) blown.	Replace blown fuse. If fuse blows again check electrical circuit for short circuit.
	Unit wiring not properly grounded.	Check all grounds in the wiring.
	Check for loose wire(s) on Floor Brake Limit Switch (causing an open circuit).	Properly reinstall wire to limit switch.
Platform lowers by itself.		
	Manual descent valve open.	Close manual descent valve.
	Hydraulic hose and/or fittings loose causing a hydraulic pressure leak.	Tighten hydraulic hose and/or fittings.
	Lift DOWN solenoid valve not functioning.	Replace Lift DOWN solenoid valve.
Unit leaking hydraulic oil.		
	Hydraulic hose and/or fittings loose.	Tighten hydraulic hose and/or fittings.
	Valve and/or plug loose.	Tighten valve and/or plug.
	Breather cap on tank is saturated or clogged with oil.	Replace breather cap on tank.
	Hydraulic oil tank over-filled.	Lower oil level to full mark on dipstick.
Unit lowers very slowly.		
	Flow control valve not functioning.	Replace flow control valve.

https://truckmanualshub.com/

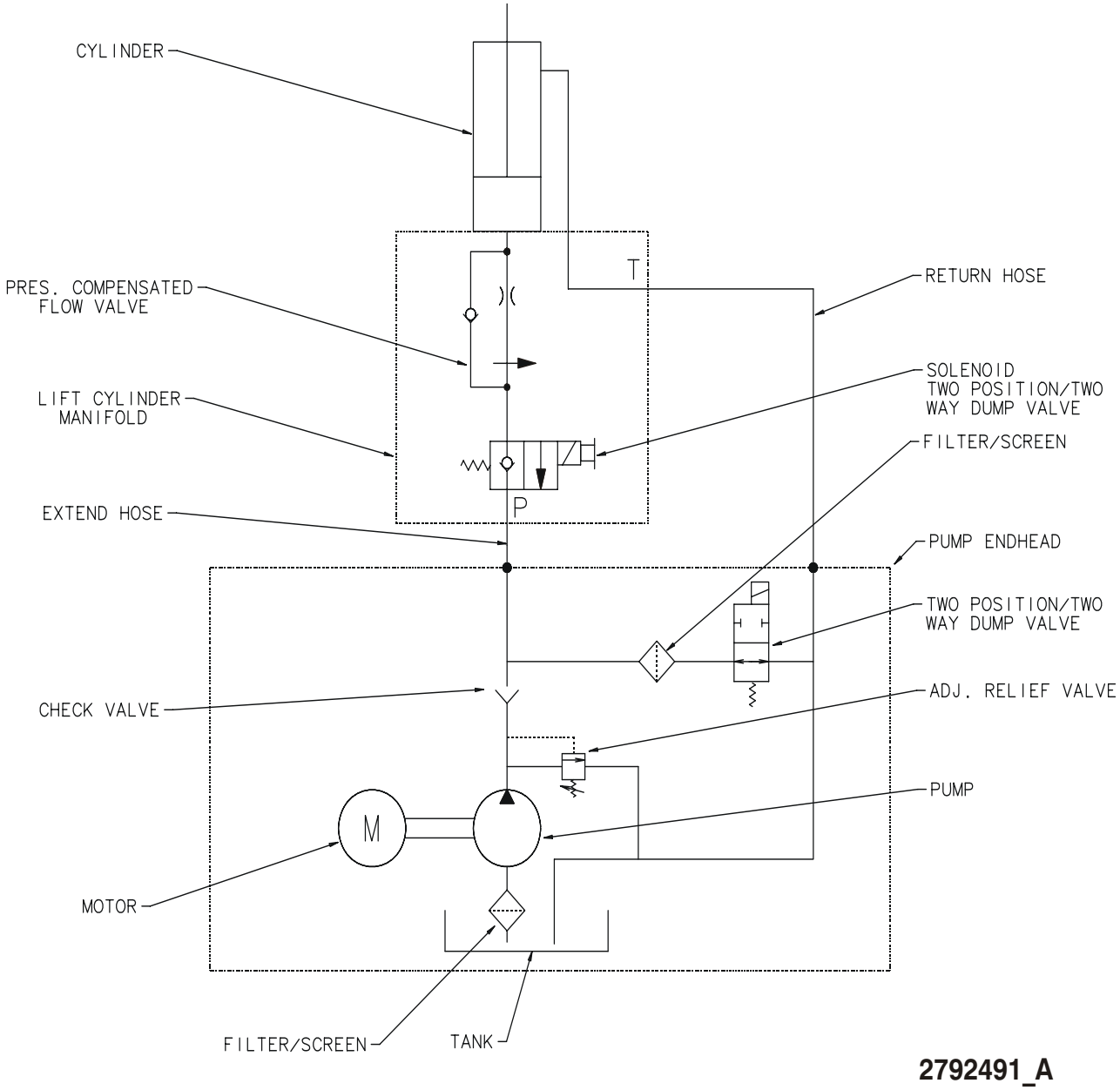

Figure 3-5. Hydraulic Schematic. (SP Series)

https://truckmanualshub.com/

4933188_C

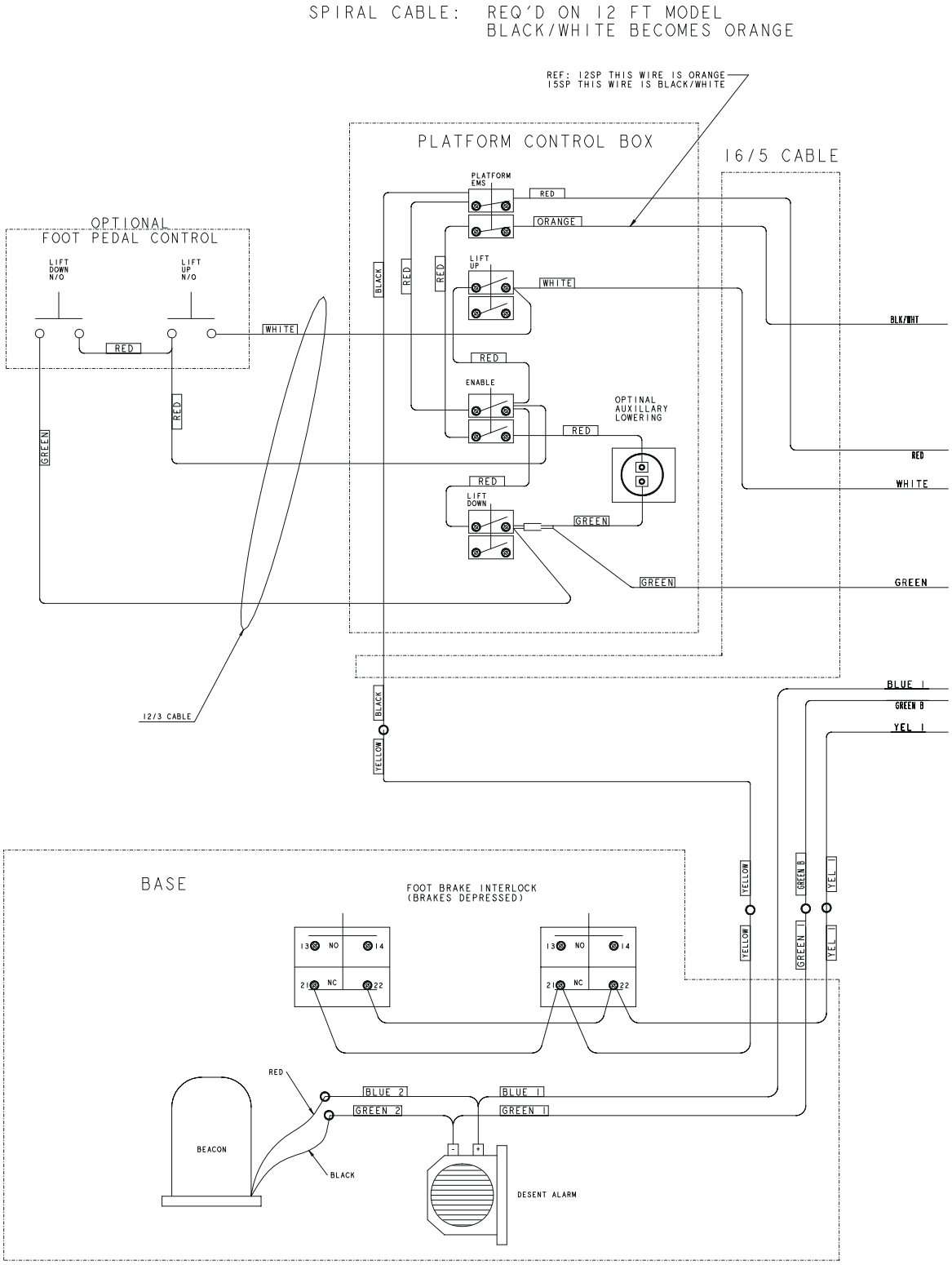

Figure 3-6. Electrical Diagram (Standard)

https://truckmanualshub.com/

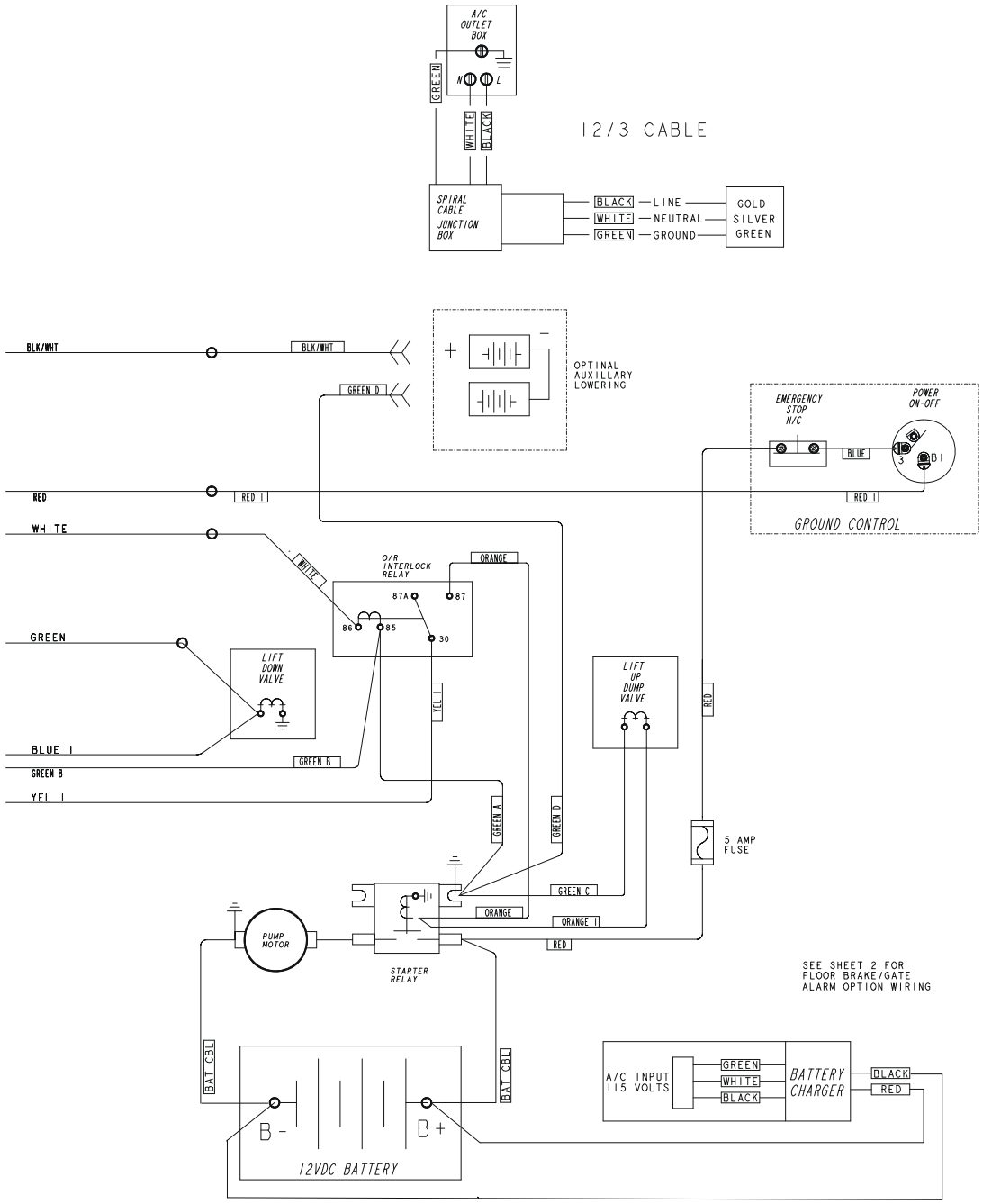

4933188_C

Figure 3-6., Electrical Diagram (Standard)

https://truckmanualshub.com/

4933188_C-2

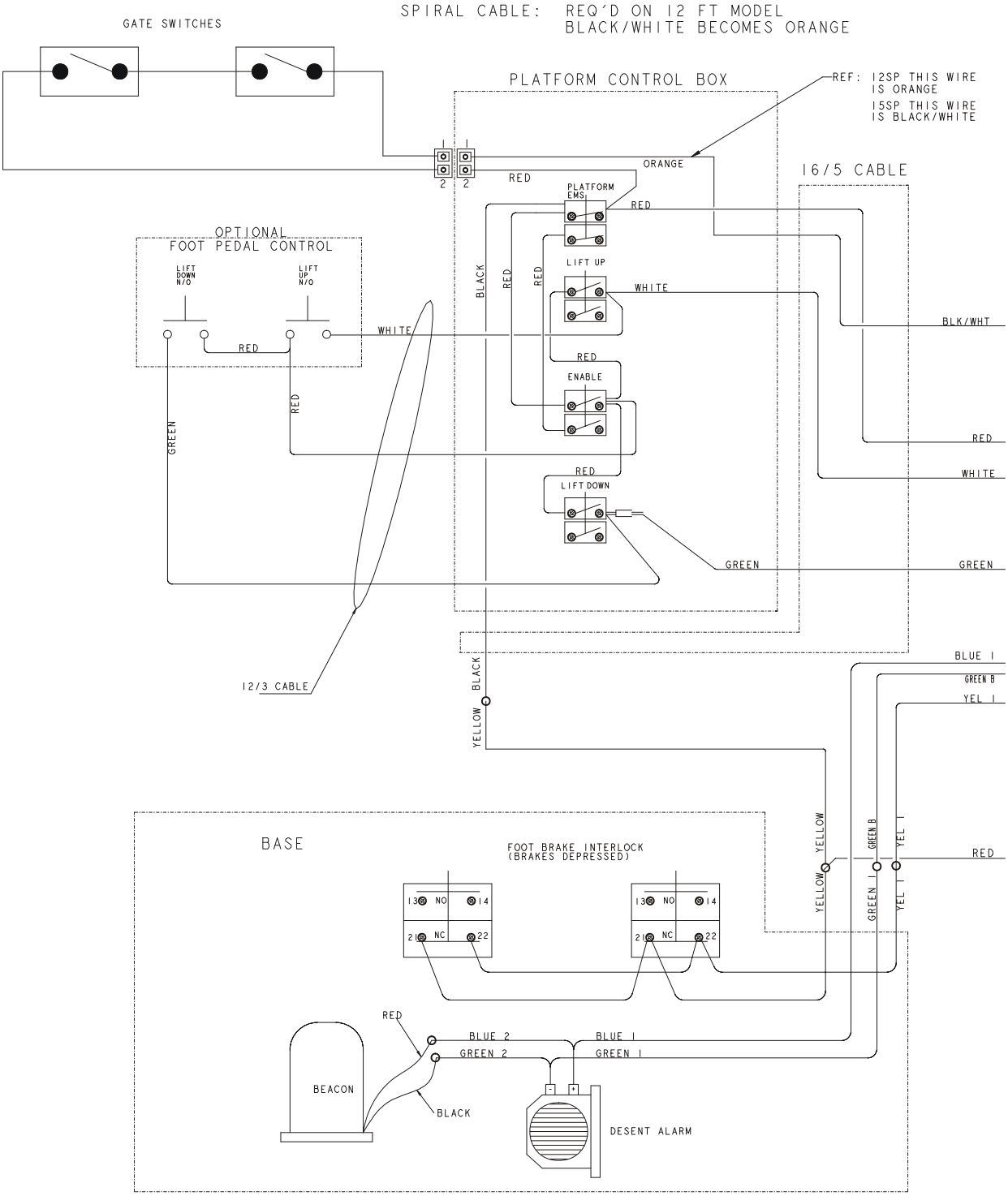

Figure 3-7. Electrical Diagram (With Floor Brake/Gate Alarm Option)

https://truckmanualshub.com/

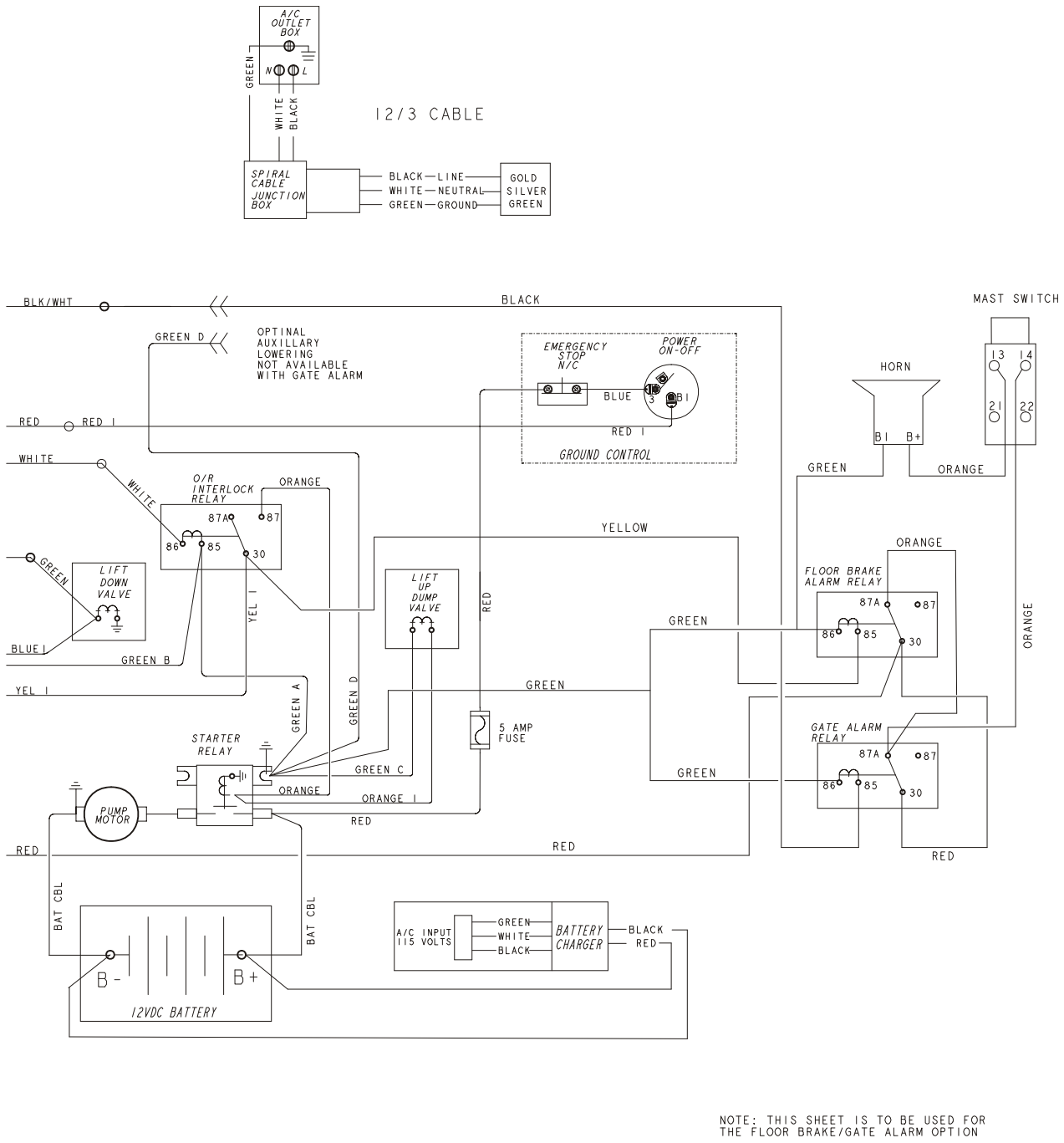

Figure 3-7., Electrical Diagram (With Floor Brake/Gate Alarm Option)

https://truckmanualshub.com/

NOTES:

https://truckmanualshub.com/

https://truckmanualshub.com/

3120755

An Oshkosh Corporation Company

Corporate Office
JLG Industries, Inc.
1 JLG Drive
McConnellsburg, PA 17233-9533 USA
(717) 485-5161 (Corporate)
(877) 554-5438 (Customer Support)
(717) 485-6417

Visit our website for JLG Worldwide Locations.
www.jlg.com