https://truckmanualshub.com/

DIECI AMERICAS TELEHANDLERS

MINI AGRI

26.6

dieci-americas.com

https://truckmanualshub.com/

PERFORMANCE

Vehicle model	MINI AGRI 26.6
Maximum capacity	5700 lb (2585 kg)
Maximum lifting height	18.6 ft (5.68 m)
Maximum horizontal extension	10.49 ft (3.2 m)
Fork swiveling angle	129°
Pull-out force	12387 lbf (5510 daN)
Towing force	9892 lbf (4400 daN)
Unladen mass	11244 lb (5100 kg)
Maximum climb angle	40%
Max speed (referred to wheels with maximum permitted diameter)	18.6 mph (30 km/h)

BOOM

Vehicle model	MINI AGRI 26.6
Lifting	9.34 s
Descent	4.86 s
Extension	7.3 s
Retraction	4.06 s
Forward swiveling	4.22 s
Reverse swiveling	2.66 s

ENGINE

Vehicle model	MINI AGRI 26.6
Brand	Kubota
Nominal power	74 HP (55 kW)
@rpm	2600 rpm
Operation	4-stroke
Injection	Electronic, Common Rail
Number and arrangement of cylinders	4, Vertical in line
Displacement	203 in^3 (3331 cm^3)
Consumption	380.00 lb/Hp h (231 g/kWh)
@rpm	2600 rpm
Emission standard	Stage V/Tier 4f
Exhaust gas treatment	Catalyst + Particulate filter (DOC+DPF)
Cooling system	Liquid
Intake	Turbo compressor

DIFFERENTIAL AXLES

Vehicle model	MINI AGRI 26.6
Type of axles	2 steering, with 4 epicycloidal reduction gears
Type of steering	4 wheels / transversal / 2 wheels
FRONT AXLE	Rigid
Rear axle	Swinging
Service braking	Oil bath on front axle
Parking braking	Negative actuation with electrical control

HYDRAULIC SYSTEM

Vehicle model	MINI AGRI 26.6
Hydraulic pump type	Gear pump for power steering and movements
Hydraulic pump capacity	21.1 gal/min (80 l/min)
Max. operating pressure	3336 psi (23 MPa)
Distributor control	Proportional 4 in1 Joystick

REFUELING

Vehicle model	MINI AGRI 26.6
Hydraulic system (total)	22.45 gal (85 l)
FUEL TANK	19.81 gal (75 l)

TRANSMISSION

Vehicle model	MINI AGRI 26.6
Transmission type	Single speed Hydrostatic transmission with variable displacement pump
Reversal	Electro-Hydraulic
Inching	With hydraulic pedal for controlled forward movement

TOWING CAPACITY

Vehicle model	MINI AGRI 26.6

TIRES

Vehicle model	MINI AGRI 26.6
Standard tires	12x16.5"

DIMENSIONS

https://truckmanualshub.com/

Vehicle model	MINI AGRI 26.6
A	9.3 in (235 mm)
B	38.8 in (985 mm)
C	92.5 in (2350 mm)
D	30.1 in (765 mm)
F	139.2 in (3535 mm)
G	162.4 in (4125 mm)
H	75.4 in (1915 mm)
L	59.4 in (1510 mm)
I	33.9 in (860 mm)
M	72.4 in (1840 mm)
P	73.4 in (1865 mm)
Q	154.5 in (3925 mm)
S	56.3 in (1430 mm)
T	2.8 in (70 mm)

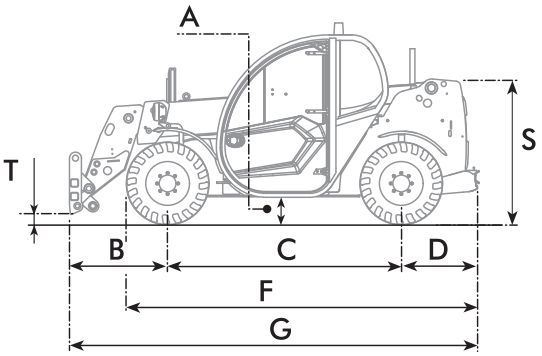

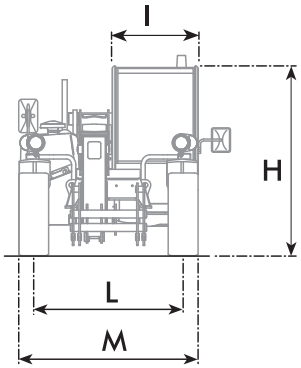

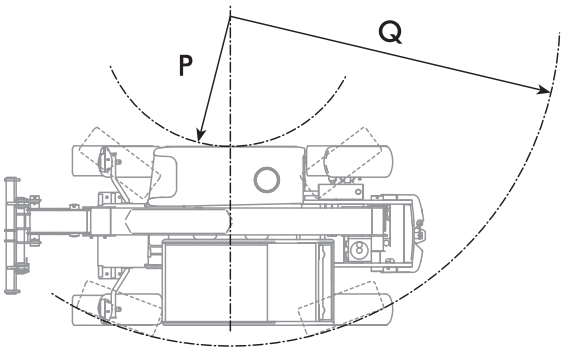

https://truckmanualshub.com/

MAX
5500 lb

24 in

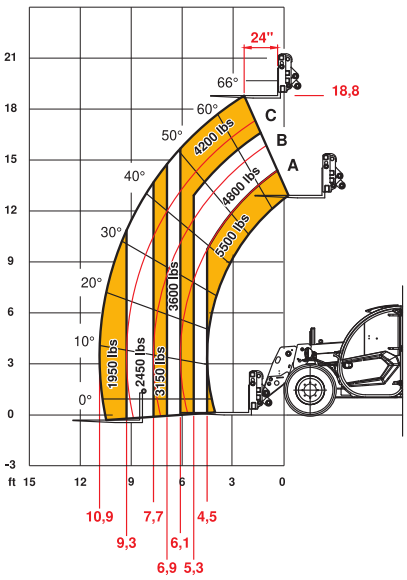

DOCDI0000969

18"

ANSI B56.6

26.6

Headquarter: 4200 White St. Suite 100, DFW, 76135 Texas
P: 844-257-2933 - F: 412.458.1084 - webiste: **www.dieci-americas.com**