https://truckmanualshub.com/

Table of Contents

SH290-3 Shop Manual

WLSM2903-00W

Page

About This Shop Manual

Safety 000-0-02-00-05 1
Introduction 000-0-03-00-05 2
Using Technical Information 000-0-04-00-05 3
Precautions for Use 000-0-05-00-10 4
Tightening Torque 000-0-06-00-06 22
Numerical Conversion Table 000-0-07-00-06 23

Specifications

Major Equipment Specifications

Equipment Configuration 290-2-01-00-11 26
Lower Mechanism 290-2-01-01-39 28
Upper Mechanism 290-2-01-02-38 31
Engine and Related Areas 290-2-01-03-39 32
Hydraulic System 290-2-01-04-40 35
Controls 290-2-01-05-41 38
Backhoe Attachments 290-2-01-06-41 40

Fuel / Lubricants and Filters

Main Body Lubricants 290-2-02-00-37 42

https://truckmanualshub.com/

Table of Contents

Page

Performances

Lifting Capacity 290-3-03-00-32 47
Lifting Position 290-3-03-01-01 51
Hydraulic Pump Control Curve 290-3-04-01-01 52

Disassembling and Maintenance Instructions for Main Body

Maintenance Instructions

Process Block Diagram for Lower Equipment 000-5-05-00-03 53
Tightening Torque for Major Parts 290-5-05-01-15 54

Lower Mechanism

Track Shoe 000-5-01-01-02 58
Travel Unit 000-5-01-02-03 62
Recoil Spring Assembly 000-5-01-03-04 65
Upper Roller 000-5-01-04-04 68
Lower Roller 000-5-01-05-04 70
Rotating Joint 200-5-01-06-05 72

Upper Mechanism

Swing Unit 290-5-02-01-24 74
Engine 290-5-02-02-22 76
Hydraulic Pump 290-5-02-03-19 77
Control Valve 290-5-02-04-19 78
Remote Control Valve 000-5-02-05-09 79
Operator’s Cab 000-5-02-06-06 80

Attachments 000-5-03-00-20 81

https://truckmanualshub.com/

Table of Contents

Page

Disassembling and Maintenance Instructions for Major Parts

Take-up Roller

Disassembling and Assembling Instructions 000-6-02-00-26 94

Assembly Drawings 300-6-02-01-08 100

Upper Roller

Disassembling and Assembling Instructions 000-6-03-00-24 101

Assembly Drawings 300-6-03-01-08 108

Lower Roller

Disassembling and Assembling Instructions 000-6-04-00-21 109

Assembly Drawings 300-6-04-01-07 115

Grease Cylinder

Disassembling and Assembling Instructions 000-6-05-00-23 116

Assembly Drawings 300-6-05-01-08 120

Rotating Joint

Disassembling and Assembling Instructions 000-6-06-00-23 121

Assembly Drawings 290-6-06-01-09 129

Air Conditioner

Disassembling and Assembling Instructions 000-6-08-00-05 130

Maintenance Standards

Check Sheets 000-6-10-00-08 137

Maintenance Standards Value Table. 290-6-10-01-15 149

List of Shims for Adjusting Attachment Gaps 000-6-10-02-02 152

Inspection Gauges. 300-6-10-03-08 157

https://truckmanualshub.com/

Table of Contents

Page

Disassembling and Maintenance Instructions for Major Hydraulic Components

Hydraulic Pump

Hydraulic Pump Maintenance 290-7-01-01-45 159
PTO Subassembly Maintenance 290-7-01-01-46 176
Gear Pump Handling 290-7-01-01-47 181
Regulator Handling 290-7-01-01-48 183
Regulator Maintenance 290-7-01-01-49 193

Travel Unit

Motor Maintenance 290-7-02-02-35 203
Reduction Gears Maintenance 290-7-02-03-05 218
Brake Valve Maintenance 290-7-02-04-03 231

Swing Unit

Motor Maintenance 290-7-03-02-29 237
Reduction Gears Maintenance 290-7-03-03-28 265

Control Valve 290-7-04-01-09 275

Cylinder

Structural Drawings 290-7-05-01-35 307
Maintenance Instructions 000-7-05-02-19 310
Special Jigs for Repair 000-7-05-03-06 339

Remote Control Valve

For Operation Use 000-7-06-01-15 363
For Travel Use 000-7-06-02-16 385

Solenoid Valve (4-way) 000-7-07-01-10 408

Cushion Valve 000-7-08-01-05 415

Instructions for Repair

Attachment Reinforcement Procedures 290-8-03-02-18 419

Platform Plate for Repair 290-8-07-01-01 426

https://truckmanualshub.com/

Safety

Second Edition:01/2002

⚠	**Sections marked with this symbol address extremely important safety issues.** Make sure to read and fully understand the sections before starting operations.

1. Before starting maintenance work, **read carefully and fully understand materials (instruction manual and maintenance manual)**.
2. Before disassembling and assembling, **take sufficient safety measures** to prevent accidents such as falling loads, being caught in or under the machine and burns.
   When working under the machine, use safety blocks to support the machine to avoid workers getting caught.
3. Cranes and other hoist equipment **must be operated by licensed operators**.
   a. Crane operators and slinging workers must be licensed.
   b. Make sure to inspect rigging.
4. **Wear proper clothing and protective gear** as necessary during inspection or maintenance
   (safety shoes, helmets, protective goggles, gloves, earplugs, dust mask and other protective devices).
5. **Always keep the work area clean** to avoid accidents such as skidding during travel and falling objects.
6. **Make sure to ventilate properly** when inspecting or servicing a machine indoors.
7. **Be prepared for any emergencies and take necessary fire preventative measures.**

https://truckmanualshub.com/

Introduction

Introduction

Appropriate operations, maintenance, inspections, troubleshooting, and repair of the machine are vital to keep it performing at its best and for the longest possible period of time, and to prevent it from breaking down.

This document includes a General Outline, Specifications (Performance), Troubleshooting and Disassembly/ maintenance instructions, which are necessary for inspection, troubleshooting and repair of the machine.

(Note: This Shop Manual is to be filed with the additional information to be added later.)

For details of the engine, refer to the maintenance manual published by the engine manufacturer.

For daily inspections and maintenance, see the Operator’s Manual to take advantage of the machine’s full performance.

Numerical values or others may be changed without notice due to design alterations or other reasons.

https://truckmanualshub.com/

Using Technical Information

Second Edition:01/2002

Symbols

The following symbols are used in this Shop Manual to bring your attention to the particularly important information for safety, quality, etc.

Symbol	Description	Symbol	Description
	Warning Indicates precautions for safe operations.		Weight Indicates the weight of parts to advise caution for the operation.
	Internal pressure Indicates that caution is needed because internal pressure exists.		Adjustment Indicates items that require adjustment.
	Caution Indicates precautions to avoid damage to devices.		Measurement Indicates items to be measured for inspections. (Dimensions and other information)
	Tightening torque Indicates specified tightening torques.		Measurement Indicates items to be measured for inspections. (Current, Voltage and other information)
	Lubrication Indicates parts to be lubricated with oil.		Visual inspection Indicates items to be inspected visually.
	Grease Indicates greasing points.		Cleaning Indicates items to be cleaned during disassembling and assembling.
	Adhesive Indicates application of adhesive or liquid packing.		
	Adding grease Indicates additional greasing.		
	Oiling Indicates adding of oil or other lubricants.		

MEMO

https://truckmanualshub.com/

Precautions for Use

Maintenance and inspection methods

- Before performing inspection and maintenance, read the “Inspection and Maintenance Section” thoroughly.

Inspect and maintain the machine on level ground

1. Choose a safe place with level and hard ground.
2. Lower the bucket to the ground,
3. Stop engine and remove key.
4. Apply brakes to the shoes.

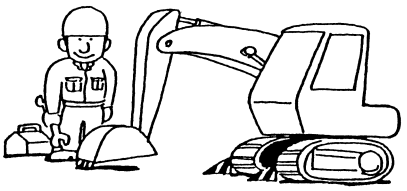

Display a sign “Inspection Under Way”

- Hang a plate indicating “Inspection / Maintenance Under Way” on the door or operating lever.

Important safety parts

- Parts related to safety and fire prevention are specifically referred to as “Important Safety Parts”. Replace these parts regularly.
- “Important Safety Parts” include parts which are difficult to determine the part life by their exterior appearance. Replace these parts regularly even if there are no apparent abnormalities.
- If any abnormality is found before the replacement interval, change and repair the part.

https://truckmanualshub.com/

Do not attempt to maintain moving parts

- Avoiding adjustments during driving if possible.
- Repair or adjustments are inevitable, two or more technicians should work jointly.
- Pay special attention and avoid entanglement of clothing in rotating parts.

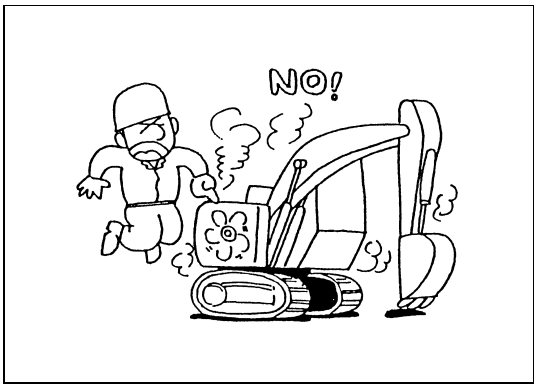

The machine is very hot right after the engine stops!

- All parts of the machine are very hot just after the engine stops. Touching anything may result in skin burns.
- Start inspection/maintenance after all parts have cooled down.

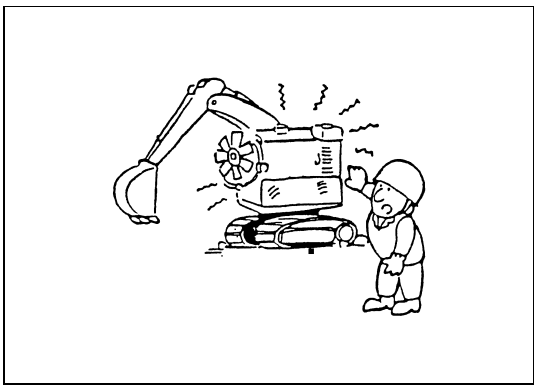

Opening hoods and covers

- Do not open the engine hood while the engine is rotating.
- Engage locks whenever you open the engine hood or covers.
- Do not open the engine when the wind is strong.

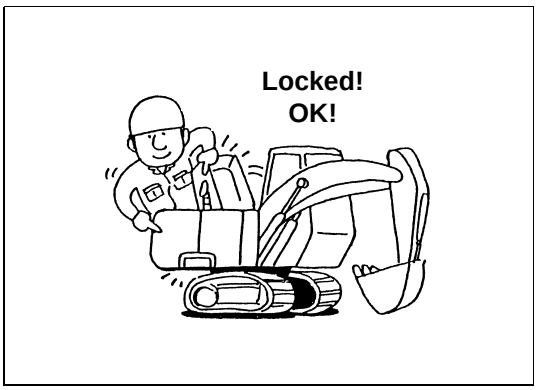

Fire prevention

- Use incombustible oils for cleaning parts.
- Extinguish flames which may cause fire hazards.
- Prepare fire extinguishing appliances such as extinguishers.
- Do not smoke while inspecting and maintaining the machine.

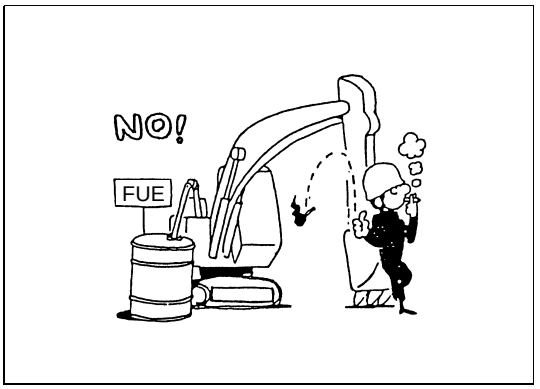

https://truckmanualshub.com/

Use protective appliances

- Wear protective goggles, helmets, safety shoes and gloves when conducting maintenance work.
- Always wear protective appliances when doing grinding and hammering work since metal debris flies out.

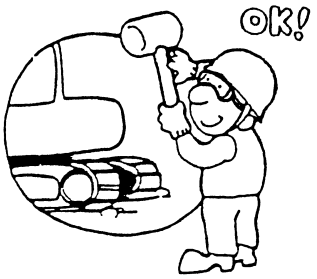

USE TOOLS IN A PROPER MANNER.

Conducting maintenance work in high places

- Put everything in order around the footing area.
- Do not spill oil or grease and do not leave tools lying around. Be careful not to slip while the machine is running.
- Use tools or handrails when climbing up or dismounting. Also, be careful of slippery surfaces.
- DO NOT jump from higher places.
- When working together, decide on and use signals.
- When working together, follow the instructions from the leader.

Holding attachments

- It is very dangerous to replace or repair joints/hoses while holding an attachment in the air. Always lower it to the ground or place it on blocks.

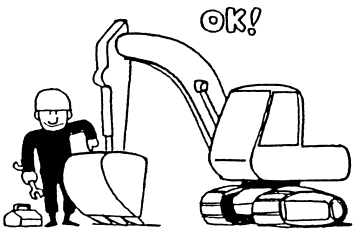

When conducting maintenance work underneath the machine

- When working under the machine, use safety supports or safety blocks under the crawlers to support the machine.

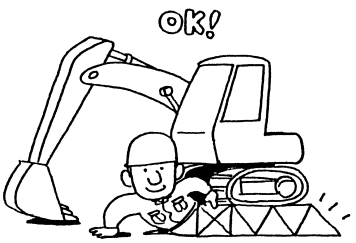

https://truckmanualshub.com/

Be prepared in case of emergency!

- Decide where to contact and how to handle the situation in case of an accident or fire. Additionally, investigate places where extinguishers and first-aid boxes are stored.

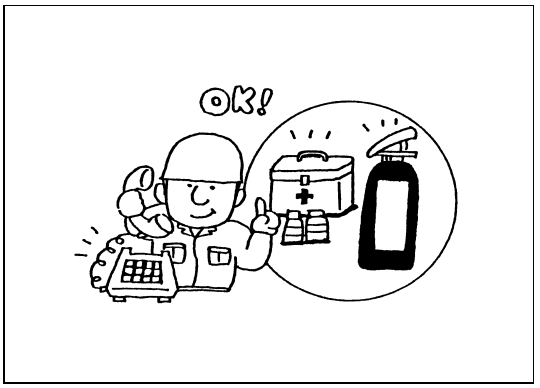

Release oil pressure before starting maintenance

- Prior to inspection/maintenance, release air pressure and oil pressure in circuits after the parts have cooled down.
- When servicing electric systems, disconnect the negative (-) battery terminal before starting the work.

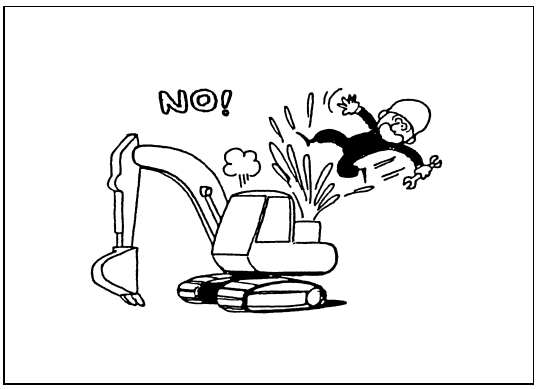

High pressure oil

- Pipes and equipment inside of the excavator are filled with high pressure oil.
- It is very dangerous to perform inspections/ maintenance when oil pressure exits, because the oil could flow out.
- If leakage of high pressure oil from a small hole contacts the skin or eyes, it may cause injury. If you touch high pressure oils, get medical treatment immediately.
- If the oil is hot, it may cause burns. Wear protective goggles and gloves when conducting inspection/ maintenance.

https://truckmanualshub.com/

Battery

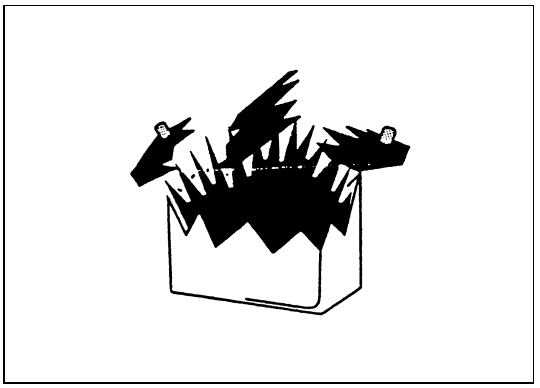

- Batteries emit flammable gases. Always keep flames away.
- The battery electrolyte contains dilute sulfuric acid. If the fluid touches the skin, immediately wash it off with water and then wash fully with soap. If it gets in the eyes, after flushing them with plenty of water, get medical help.
- Before checking and handling the battery, turn off the power supply (by placing the starter switch to OFF).
- If you use or recharge the battery while the battery electrolyte is lower than the lower level indicated on the side of the battery, it may cause breakage (explosion).
- Check the level of the battery electrolyte and battery mounting conditions, and check the voltage using a tester on a regular basis.

Removing the battery

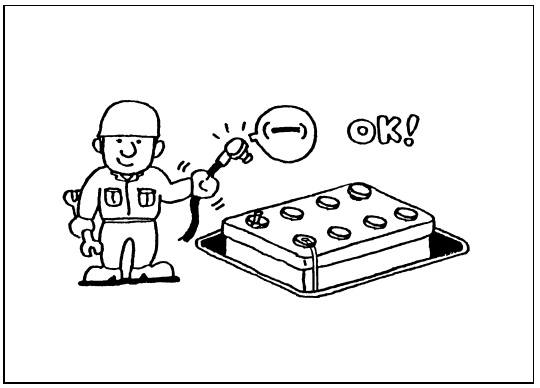

- Before inspecting the electric system, disconnect the negative (-) battery terminal.
- Batteries emit flammable gases and may cause ignition and explosion. Battery electrolyte contains dilute sulfuric acid. Handle the battery with extreme care.

Ventilation

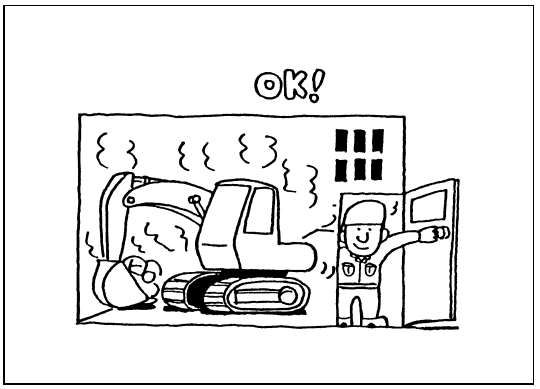

- When conducting maintenance work in poorly ventilated locations indoors, keep doors and windows open and ventilate air to avoid gas poisoning.

Handling high pressure hoses

- Kinks and cracks on high pressure hoses could cause breakage. Do not use any hoses with kinks and cracks.
- If fuel hoses or hydraulic oil hoses are loose or cracked, they could cause fire. Always repair them immediately.

https://truckmanualshub.com/

Parts that have been removed

- Place removed parts in a stable condition; otherwise, they may fall down and become dangerous.
- Keep children and bystanders away from the parts storage area.
- When the ground is not hard and solid, parts may sink or fall down from their own weight. Arrange the parts storage area in a place which has level and hard ground.
- If soil or dirt gets inside pipes, it could cause malfunction or errors. Plug or cap pipes of removed parts.

Use manufacturer's genuine parts

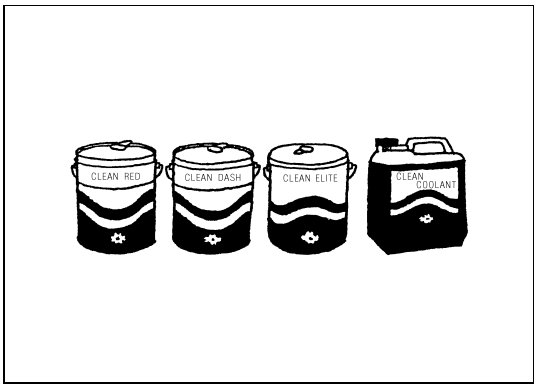

- Always use the manufacturer's genuine replacement parts, oils and greases. In addition, apply oils and greases compliant to temperature conditions.

  Major inspections and maintenance work should be conducted in our Service Shops.

First clean the machine, then check and repair it

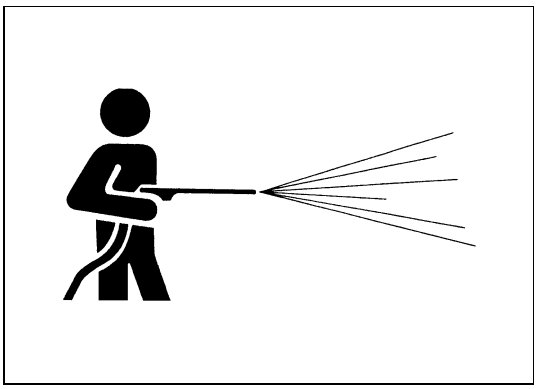

Cleaning machines makes it easy to detect failures and faults.

Keep the oil filler and oil level gauge clean and avoid dust and dirt entry.

Washing vehicles

1. When washing the machine, be careful not to splash the electrical equipment.
   - Monitors and electrical equipment in the operator's cab.
   - Do not apply steam directly to battery, connectors and other electrical equipment.
2. Do not apply high pressure washing steam directly to the radiators.

   Wash the radiator carefully and gently.

https://truckmanualshub.com/

Keep fluids free of water and dirt

When adding fuel/hydraulic oil/engine oil, keep them free of water, dust and other contaminants.

Do not add fuel or oil with the strainer removed from the filler port.

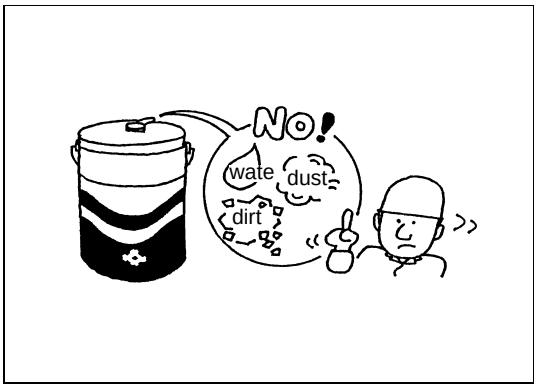

Draining oil and changing filters

- It is dangerous to drain water or oil and replace filters just after the engine stops. Carry out the work after each part has cooled down (approximately 20-40°C).
- When changing oil or changing filters, inspect the drained oil and old filters and check for metal debris or foreign substances.

If a large amount of metal debris is detected, contact our Service Shop for repairs.

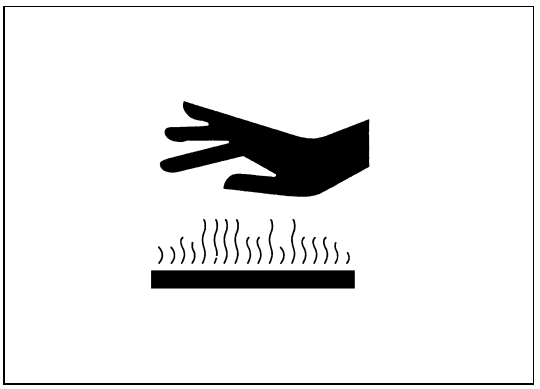

Disposal of waste fluids

- Do not pour waste fluids on the ground, or into rivers, lakes and marshes. They can harm the environment.
- When disposing of oil, fuel, coolant, solutions, filters and other harmful substances, follow local rules and regulations.

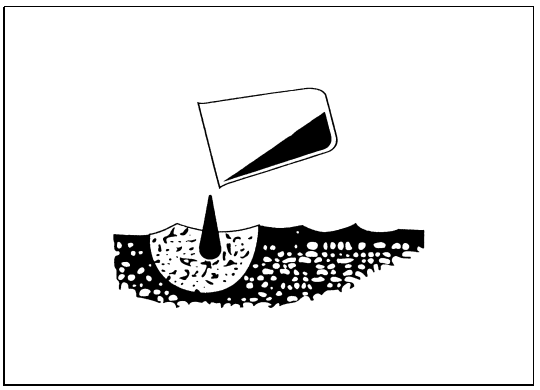

Use clean oil

1. Use clean oil and grease to avoid introducing dirt.
   - Use clean oil and grease.
   - Also use clean containers.
2. After filling grease, wipe any spilled grease or oil.
   - Wipe extra grease on operating/rotating parts.

https://truckmanualshub.com/

Keep lubricants at proper levels

- Lubricant levels that are either too high or too low are bad for proper machine operation. When checking and adding oil, maintain the proper levels.

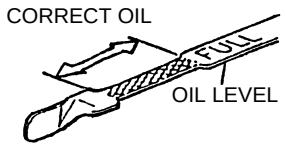

Welding and repairing

- Turn off the power supply. (Move the starter switch to the OFF position).
- If an electronic part (microcomputer) is attached, remove it (electronic components such as controllers).
- Set up a ground within 1 m from the area to be welded.
- Do not apply 200 V or more continuously.
- Do not put any seals or bearings between welded area and the ground.
- When welding or heating a painted area, remove the paint first. When heat is applied to a painted area, harmful fumes will be produced.
- If heat is applied near to a section where hydraulic equipment and pipes are located, flammable fumes or vapors may be produced and ignited.

Do not drop tools and parts

- When opening inspection windows or tank filler ports for inspection, be careful not to drop bolts/nuts and tools into them.
- Take out everything from your pockets to avoid dropping things.

Installing O-rings

- When removing sealing parts containing O-rings, clean the fitting faces.
- Be careful not to damage O-rings and assemble them by applying oil when attaching them.

https://truckmanualshub.com/

After finishing maintenance work

When working together, decide on and use signals.

1. After maintenance, make sure that at low idle there is no oil or water leakage from where the maintenance work was done (for approximately 5 minutes).
2. Operate each component slowly, and make sure that they work correctly.
3. Then, increase the engine revolutions and make sure there is no water or oil leakage.
4. Operate each component and make sure that there are no abnormalities.

Inspection and maintenance during cold seasons

1. Use fuel and lubricating oils and greases appropriate for the temperature conditions.
2. Check the battery charging rates.
3. Use anti-freeze (long-life coolant).
4. Remove mud and water attached to the vehicle body. Wipe off water drops on the cylinder rods.

Inspection and maintenance when the machine is used under special situations

When used under extremely hot conditions

1. Check/maintain cooling water and radiators.
2. Check and adjust the fan belt tension.

When used in a rocky place

Pay special attention to breakage of the suspension, loose bolts and nuts, cracks, and wear. Loosen the tension of the shoes by a small amount.

When used by the ocean

Wash salt off especially carefully. Take special care of electronic equipment, hydraulic cylinders and suspension to prevent corrosion.

When used at sites full of dust and sand

1. Check the elements of air cleaners more often, and clean or change the elements and dust cups regardless of replacement intervals.
2. Tighten caps fully to prevent dust and sand from entering the hydraulic oil tank.

When used in marshes or on soft ground

Lubricate and grease the parts earlier than usual. Daily grease any pins which have been submerged in muddy water. In addition, check and clean the suspension.

https://truckmanualshub.com/

⚠ WARNING

Release the hydraulic pressure when you service or inspect the machine.

RELEASE THE HYDRAULIC PRESSURE PRIOR TO SERVICING OR INSPECTING THE MACHINE.

To release hydraulic pressure

1. Lower the attachment to the ground.
2. Turn the starter switch to the "OFF" position and stop the engine.
3. Turn the starter switch to the "ON" position.
4. Gate lock lever must be released (to the operating position).
5. Move the right and left operational levers back and forth, and left to right, approximately ten times.
6. Turn the starter switch to the "OFF" position.
7. Release the pressure from the hydraulic oil tank.

   (To release pressure, push in the tip of breather rubber cap at the top of hydraulic oil tank.)

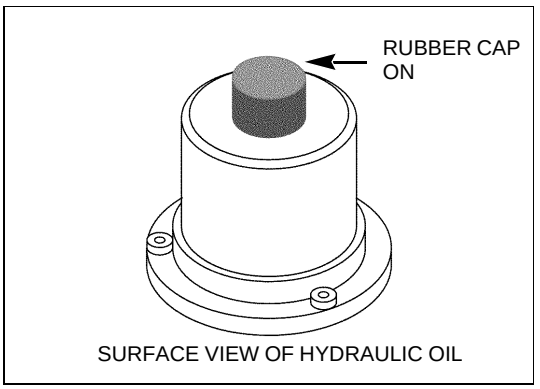

⚠ CAUTION

STOP THE ENGINE, PUSH THE PRESSURE RELEASE BUTTON. AND RELEASING AIR FROM THE TANK COMPLETELY.
BE CAUTIOUS NOT TO GET BURNED BY HYDRAULIC OIL OF HIGH TEMPERATURE.

https://truckmanualshub.com/

General Preparation for Disassembly

1. Pre-Disassembly Preparation

1.Cleaning before bringing machine into service shop

Remove mud and dirt completely before bringing the machine into the service shop. Carrying in mud and dirt into the service shop would decrease the cleaning efficiency during disassembly and increase the possibility of damage to the parts and contamination during reassembly.

2.Pre-disassembly preliminary survey

Before disassembling, conduct a sufficient preliminary survey and keep records. This will save costs for unnecessary disassembly labor and parts. It will be also useful in giving advice to the user to prevent reoccurrence of the problem in the future.

- Machine type, number and service meter readings.
- Reasons for disassembly
  Check the symptoms, locations and causes of the problem and reinspect if necessary.
- Air cleaner contamination and air leakage.
- Characteristics of fuel used, contamination to fuel element, water contamination into the fuel and fuel leakage, deformed pipes.
- Oil level, oil contamination (viscosity, color and impurities), water in the oil, oil leakage, clogging of the oil filter element
- Check the criterion values.
- V-belt and track tension.
- Defective parts, loose connections.
- Check the conditions when turning on the engine.

3.Disassembly preparation

In order to save unnecessary labor, reserve the facility and prepare tools, work place and parts shelf space according to the particular disassembly order and clean the place in advance.

2. Disassembling Precautions

1.Detaching parts

- Check the mounting conditions, their front/back, left/right and up/down relations and removing procedures before starting disassembly.
- Verify matching marks indicating mounting relations. If necessary, impress a mark clearly to avoid errors during reassembly.
- Use special disassembly tools for specified parts.
- If a part does not come off even after removing bolts and nuts, do not force it, but check the part to see where any problems exist and remove such a cause before disassembling it.
- Each unit, especially similar parts, should be placed orderly and tagged or marked with markers if necessary.
- Standard parts such as bolts and nuts should be stored with attention paid to mounting locations and quantities.

2.Checking and inspection during disassembly

- Because the important information for causes of the problem can be often found during disassembly, carefully observe seizure, interference or contacts of moving parts when proceeding with disassembly.
- Values such as end clearance, backlash or projection which will be used for later troubleshooting must be measured and recorded during disassembly.

3.Disassembling clearance adjustment parts

Shims and washers used for clearance adjustment should be stored so that they can be reassembled in the identical conditions.

https://truckmanualshub.com/

4.Disassembling linkage

The adjustment values of the rod should be kept as is whenever possible. If the adjustment value must be changed for disassembly, measure the length prior to disassembly and record it so that the same dimensions can be obtained at reassembly.

5.Disassembling tapered and fitted sections

If a tapered or fitted section that should fit tightly comes off easily, inspect that part to find out the cause so that the same problem will not occur after reassembly.

6.Disassembling bearings

- When removing bearings, use a jig as shown below rather than trying to remove them by force.

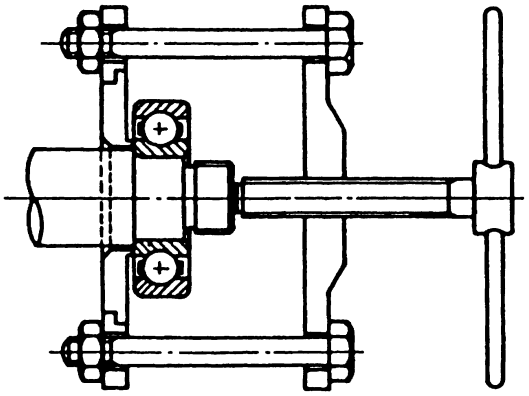

7.Disconnecting hydraulic lines

- Lower the attachment to the ground and turn off the engine.
- Release the air bleeder cap of the hydraulic tank.
- Operate each control lever several times to release the pressure from the lines to be removed.
- To disconnect a tube from another tube or a tube from a hose, grip the male end with a wrench and loosen the female nut end.

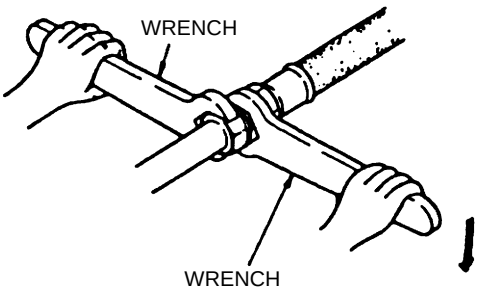

- Seal the removed tube or hose ends as well as the oil ports of each removed hydraulic component with a bull plug to prevent foreign substances from entering. Seal the oil ports of the tank with a plastic bag or its equivalent.
- Since hydraulic oil remains inside the tube or hose removed, drain oil into an appropriate container. If a large amount of hydraulic oil was spilled in the working area, spread absorbent materials such as sawdust over the spill.
- When removing the lines from the underneath of the chassis, be careful not to spill oil on yourself.
- Attach a tag with appropriate symbols or location for installation to each tube, hose and connecting location of hydraulic component lines for easy reinstallation.

8.Safety Work

- Keep the disassembly area tidy and clean.
- When loosening bolts or nuts, use the correct-size wrench and pull it back toward yourself.
  Using the wrong size wrench or loosening by pushing away from the body may cause the wrench or hands to slip leading to accident or injury.
- When working with two or more people, be sure to confirm signs to be used for safety before starting work.

https://truckmanualshub.com/

3. After Disassembly

1.Cleaning

- Clean the disassembled parts and arrange them by each component. Be especially careful to remove sludge or dust completely from the oil holes for each part and inside the pipes.
- Divide the solvent into two containers, one for removing dirt and one for finishing for efficient cleaning. When cleaning critical parts, divide the tubs further to avoid using dirty solvent.
- When cleaning bearings or other high precision parts, use kerosene or neutral absolute light oil.
- When cleaning large castings such as the cylinder head or block in a container, clean them in solvent of pH 10 to 12 at 50 to 70°C for 5 to 10 minutes and rinse thoroughly afterwards.
- When using special chemicals as cleansing agents, understand the proper usage thoroughly and be careful not to get it in your eyes or on your skin. Properly dispose of the used solvents.

2.Dust or rust prevention

- Cover the cleaned parts to prevent dust from entering. Use caps for ends of hoses and tubes.
- If it is assumed to take a long time before reassembling, use corrosion inhibitor.

https://truckmanualshub.com/

General Cautions for Assembly

1. Precautions for Assembly

1.Installing parts

- Prior to work, clean all parts and repair any damage. Dirt and dust have adverse effects on moving parts and can shorten the machine's life. Therefore, try to prevent them from entering as much as possible.
- A new part coated with corrosion inhibitor must have the coating removed before reassembly.
  Cleaning solvent: light oil, trichlene
- Parts with matching marks must be assembled with those marks aligned correctly.
- Use a press and proper tools for installing bearings, bushings, oil seals and other similar parts.
  Use special tools for assembling special parts as specified.
- Coat the surface of press-fit parts with molybdenum disulfide grease.

2.Tightening bolts and nuts

- Tighten bolts and nuts right to left and up and down alternatively so that tightening force is applied evenly.
- For bolts on essential areas, apply engine oil to the threaded portion so that tightening force is applied evenly without unnecessary engagement on the thread.

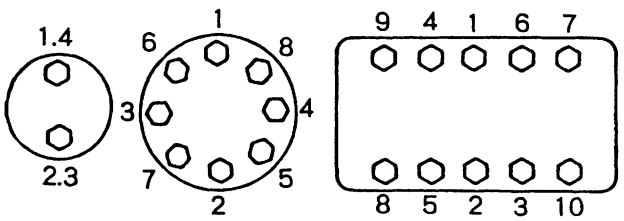

- For bolts and nuts in the areas that are difficult to check from outside, or for bolts and nuts in important areas, secure them using wires, cotter pins or folding washers.
- Clean bolts to which Loctite has been applied (identified as bolts with white substances when removed) with light oil or Tri hlene and dry them. After that, apply two or three drops of Loctite to the threaded portion of the bolts and fasten them.

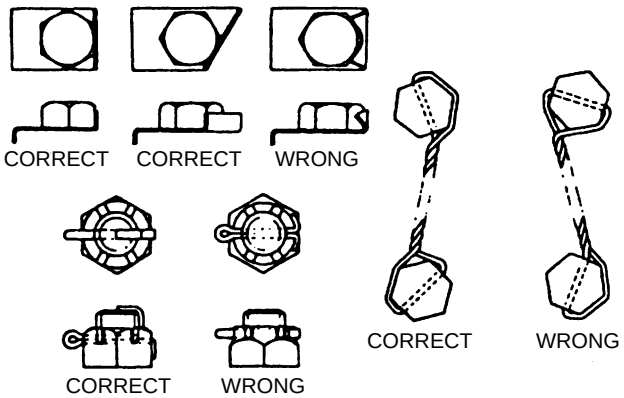

https://truckmanualshub.com/

3.Installing hydraulic lines

- Clean every tube with cleaning solvents (e.g. light oil, kerosene, trichlene) and blow dry with compressed air.
- Do not use liquid packing (ThreeBond).
- When installing high-pressure hoses, do not allow them any torsion. In addition, do not allow any other parts to interfere with the hoses that have no protective spring.
- Install them correctly, checking tags that have been attached during disassembly to each tube, hose or connecting section of hydraulic components.
- When connecting the lines, if a nut on one end alone is tightened fully, the other end may not be able to be accessed. Therefore, first finger tighten nuts on both ends and tighten them fully with even torque alternately.
- After completing connecting lines, run the engine at low speed and move each hydraulic component using control levers from the operator's seat to inspect and replenish oil in the hydraulic tank. If it is necessary to bleed air from the tank, loosen the air bleeding plug.

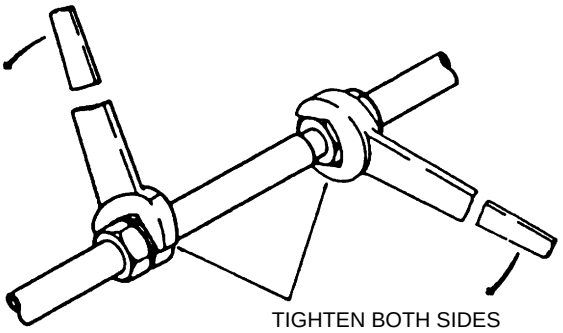

4.Inspection during assembly

Points such as end clearance, end plate, projection, joggling and backlash, which cannot be checked unless in the reassembly process, should be checked or measured before proceeding to the next step. Keep records for the important areas.

5.Assembling in clearance adjustment sections

- The shims and washers used in clearance adjustment sections should be reassembled to the identical locations from which they were removed unless they were worn or damaged.
- Confirm the adjustment value after reassembly.

6.Reassembling linkage

If no abnormality is found on linkages, assemble them with the rod adjustment value identical to that of pre-assembly.

7.Assembling tapered and fitted sections

- Repair and clean damaged areas before reassembling.
- If an area which should fit tightly goes in too easily, recheck the fit-in dimensions and correct any defect before reassembling.

8.Safety Work

- Keep the assembly area, tools, and hands tidy and clean.
- When tightening bolts or nuts, use the correct-size wrench and pull it back toward yourself to tighten. Using the wrong size wrench or tightening by pushing away from the body may cause the wrench or hand to slip leading to accidents or injuries.
- When working with two or more people, be sure to confirm signs to be used for safety before starting work.

https://truckmanualshub.com/

2. Handling common parts

1.Handling packing

- Replace packing, gasket, copper gaskets or other fluid sealing parts with new ones as a general procedure.
- Coat the gasket for particular areas with liquid gasket.

Cautions when applying liquid gasket

- Leather packing should be assembled after being immersed in oil.

2.O-rings

- If an O-ring has become hardened after a long storage, discard it even if it is unused.
- Use only O-rings specified in the parts description list. Especially for the lubricated areas in the engine, O-rings made of special materials like silicon rubber are used to improve heat resistance and prevent early deterioration. Use only genuine parts.
- Periphery of an O-ring is marked with either blue or green dots for identification purposes described below.
- Remove scratches, contaminants, paints, oil or old liquid gasket completely from the surfaces to which liquid gasket will be applied.
- Apply specified liquid gasket on the application surface evenly and dry the surface for a few minutes.
- When the surface becomes dry to the touch, attach the gasket.

Color	Class	Symbol	Hardness	Usage	Type of rubber
Blue 1 dot	JIS B 2401 1A	1A	70 ± 5	Mineral oil resistant and for low pressure	NBR
Blue 2 dots	JIS B 2401 1B	1B	90 ± 5	Mineral oil resistant and for high pressure	NBR
Red 1 dot	JIS B 2401 2	2	70 ± 5	Gasoline resistant	NBR
Yellow 1 dot	JIS B 2401 3	3	70 ± 5	Vegetable oil resistant	CR
No dot	JIS B 2401 4C	4C	70 ± 5	Heat and cold weather resistant	Silicon rubber
Green 1 dot	JIS B 2401 4D	4D	70 ± 5	Heat and oil resistant	Fluorine rubber

- Coat O-rings with oil before installing to avoid causing flaws.
  Pay special attention to silicon rubber, which is easily torn apart.

3.Handling oil seals

- Pay attention to the direction of oil seal lips.
- Be careful not to contaminate oil seals and make sure there is no rust or flaws (especially on lip surfaces).

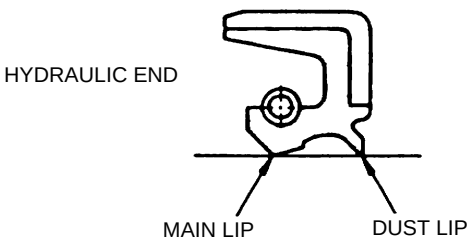

https://truckmanualshub.com/

- When assembling oil seals, apply grease following procedures below in order to prevent dry friction for initial stage of operations.
  - **a. Single lip type oil seal**
    Apply to entire periphery on the opposite side of lip's seal end uniformly with finger to the extent that it does not build up.
  - **b. Double lip type oil seal**
    Apply to 40 to 60% of the entire periphery of lip's space with finger.

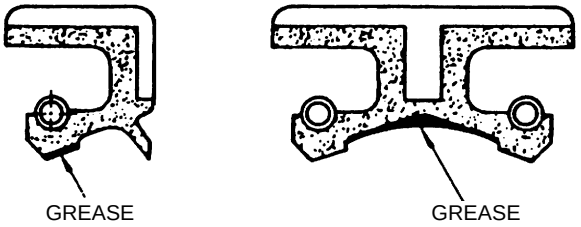

- Make sure that there is neither dust, flaw, nor rust on the contact surface (shaft area) of the oil seal and apply grease or oil for smooth installation.
- For checking a flaw on the lip surface, lightly sweep with a wire. If it catches, replace the oil seal.
- Install using a guide and jig as shown below to avoid damaging the oil seal lip.
- After the oil seal is pressed in, there should be no inclination.
  Inclination allowance: ≤0.2 mm / dia. 100 mm.
- When applying adhesive to the oil seal periphery, take care that it does not adhere to the lip surface. Use clean guides and jigs since adhesive on the jig could easily be transferred to the lip.

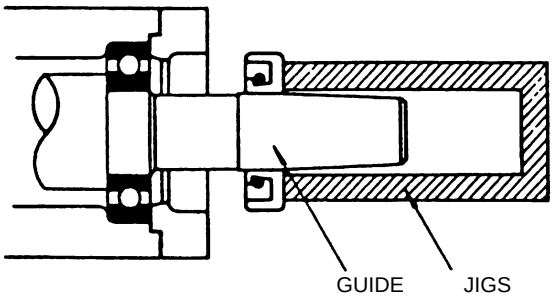

4.Handling bearings

Due to the extremely high precision of bearing, the following precautions should be observed.

a.Since dust adversely affects bearing wear, dust prevention measures should be carried out sufficiently during disassembly and reassembly. Do not unpack a bearing package until immediately before installation.

b.Avoid rough handling or shock on bearings. Do not allow a bearing to spin to the extent that it makes noise while cleaning with compressed air.

Cautions during bearing installation

a.Do not hit on neither the inner nor outer ring during bearing installation which causes indentation on the rolling surfaces.

b.If interference is required on the inner ring, press in with a jig as shown in the figure. **Bearing with large interference should be heat-treated. When using a heater, do not raise temperature to more than 120°C because that would decrease heat-treated hardness.**

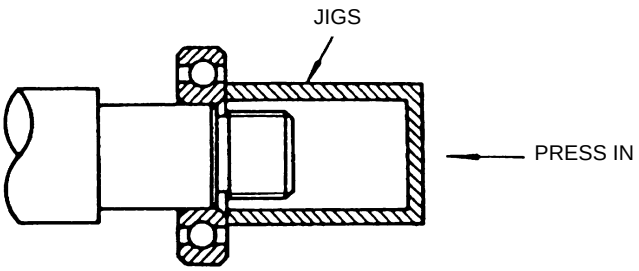

https://truckmanualshub.com/

c.Non-separating bearing which requires interference on both inner and outer rings should be pressed in with a jig as shown in the figure.

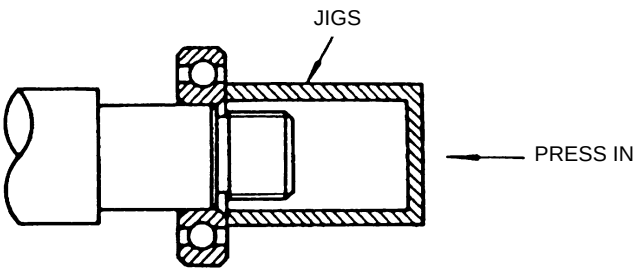

5. Handling snap ring

- When installing or removing a snap ring, use a snap ring pliers with special attention not to widen excessively.
- Make sure that it is completely fitted in the grooves after installation.

General Cautions When Performing Inspections

1. Cautions for inspections

1.Inspection after maintenance

When working together, decide upon and use signals.

a.After the maintenance, run the engine at low idling (for approximately 5 minutes) and make sure that no oil or water leakage is detected from locations where maintenance work was done.

b.Operate each component slowly and make sure that they work properly.

c.Increase the engine speed and make sure there is no water and oil leakage.

d.Operate each component and make sure that there are no abnormalities.

e.Operate the monitor and other electric parts to check that they function properly.

https://truckmanualshub.com/

Tightening Torque

1. Tightening Bolts and Nuts

- Tighten bolts and nuts right to left and up and down alternately so that tightening force is applied evenly.

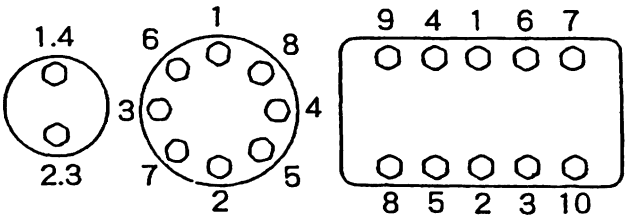

- For bolts on important areas, apply engine oil on the threaded portion so that tightening force is applied evenly without unnecessary engagement on the thread.
- For bolts and nuts in the areas that it is difficult to check from outside or bolts and nuts in important areas, secure them using wires, cotter pins or folding washers.

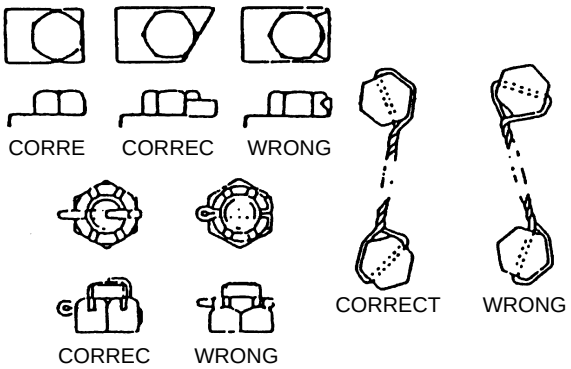

- Clean bolts to which Loctite was applied (identified as bolts with white substances when removed) with light oil and trichlene, and dry them. After that, apply two or three drops of Loctite to the threaded portion of the bolts and fasten them.

2. Retightening Torque Table

The tightening torque for the bolts and nuts not indicated in the manual is as follows:

Bolt Diameter (size)			M6	M8	M10	M12	M14	M16	M18	M20
Hexagon Bolt	Wrench	(mm)	10	13	17	19	22	24	27	30
	Tightening Torque	(kgf·m)	0.7	2.0	4.0	6.0	10.0	16.0	20.0	30.0
		(N·m)	6.9	19.6	39.2	58.8	98.1	156.9	196.1	294.2
Hexagon Socket Head Bolt	Wrench	(mm)	5	6	8	10	12	14	14	17
	Tightening Torque	(kgf·m)	0.9	2.2	4.3	8.0	12.0	18.0	25.0	35.0
		(N·m)	8.8	21.6	42.1	78.5	117.7	176.5	245.2	343.2

https://truckmanualshub.com/

Numerical Conversion Table

This section describes unit notation for numerical values.

1.About the SI unit system

Due to the amendment of the weights and measurements system in 1993, the gravitational system of units (old unit system) has been replaced with the SI unit system (new unit system).

In compliance with this amendment, our technical documents use the SI unit system for numerical values.

Be very careful when measuring hydraulic pressure and other values.

2.Differences between the gravitational system of units and the SI unit system

An overview of each unit system is described below.

Refer to JIS Z 8202 and JIS Z 8203 for specific details.

a.What is the gravitational system of units (old unit system)?

The gravitational system of units is a unit system that uses the meter (m) as the base unit for length and the second (s) as the base unit for time, and as the base unit of force, 1 kilogram of force (kgf) is defined as the force of gravity (= mass x gravitational acceleration) acting on an object with a mass of 1 kilogram-weight (kgw).

b.What is SI unit system (new unit system)?

The SI unit system uses the meter (m) as the base unit for length and the second (s) as the base unit for time, and as the base unit of force, 1 Newton (N) is defined to be the force that exerts gravitational acceleration on a mass of 1 kgw at the rate of one meter per second squared (m/s^2).

	Units Conversion Factor	
Gravitational unit	— × → ← ÷ —	SI unit
kgf	9.807	N
lbf	4.448	N
kgf·cm	0.0981	N·m
lbf·ft	1.356	N·m
lbf·in	0.113	N·m
kgf/cm^2	0.0981	MPa
atm	0.1013	MPa
lbf/in^2	0.0069	MPa
mm Hg	133.3	Pa
in Hg	3386	Pa
kgf·m/s	0.00981	kW
lbf·ft/s	0.00136	kW
PS	0.7355	kW
HP	0.746	kW
kgf·m	9.807	J
kcal	4186	J
$kgf·s/cm^2$	98067	Pa·s
PC	0.001	Pa·s
P	0.1	Pa·s
cSt	1×10^{-6}	m^2/s
St	0.0001	m^2/s

https://truckmanualshub.com/

Numerical Conversion Table

Torque **N·m → kgf·m**

kgf·m	0	1	2	3	4	5	6	7	8	9	kgf·m
	N·m	N·m	N·m	N·m	N·m	N·m	N·m	N·m	N·m	N·m	
—	—	9.81	19.61	29.42	39.23	49.03	58.84	68.65	78.45	88.26	—
10	98.07	107.87	117.68	127.49	137.29	147.10	156.91	166.71	176.52	186.33	10
20	196.13	205.94	215.75	225.55	235.36	245.17	254.97	264.78	274.59	284.39	20
30	294.20	304.01	313.81	323.62	333.43	343.23	353.04	362.85	372.65	382.46	30
40	392.27	402.07	411.88	421.69	431.49	441.30	451.11	460.91	470.72	480.53	40
50	490.33	500.14	509.95	519.75	529.56	539.37	549.17	558.98	568.79	578.59	50
60	588.40	598.21	608.01	617.82	627.63	637.43	647.24	657.05	666.85	676.66	60
70	686.47	696.27	706.08	715.89	725.69	735.50	745.31	755.11	764.92	774.73	70
80	784.53	794.34	804.15	813.95	823.76	833.57	843.37	853.18	862.99	872.79	80
90	882.60	892.41	902.21	912.02	921.83	931.63	941.44	951.25	961.05	970.86	90
100	980.67	990.47	1000.28	1010.08	1019.89	1029.70	1039.50	1049.31	1059.12	1068.92	100

Torque **kgf·m → N·m**

N·m	0	10	20	30	40	50	60	70	80	90	N·m
	kgf·m	kgf·m	kgf·m	kgf·m	kgf·m	kgf·m	kgf·m	kgf·m	kgf·m	kgf·m	
		1.020	2.039	3.059	4.079	5.099	6.118	7.138	8.158	9.177	
100	10.197	11.217	12.237	13.256	14.276	15.296	16.315	17.335	18.355	19.375	100
200	20.394	21.414	22.434	23.453	24.473	25.493	26.513	27.532	28.552	29.572	200
300	30.591	31.611	32.631	33.651	34.670	35.690	36.710	37.729	38.749	39.769	300
400	40.789	41.808	42.828	43.848	44.868	45.887	46.907	47.927	48.946	49.966	400
500	50.986	52.006	53.025	54.045	55.065	56.084	57.104	58.124	59.144	60.163	500
600	61.183	62.203	63.222	64.242	65.262	66.282	67.301	68.321	69.341	70.360	600
700	71.380	72.400	73.420	74.439	75.459	76.479	77.498	78.518	79.538	80.558	700
800	81.577	82.597	83.617	84.636	85.656	86.676	87.696	88.715	89.735	90.755	800
900	91.774	92.794	93.814	94.834	95.853	96.873	97.893	98.912	99.932	100.952	900
1000	101.972	102.991	104.011	105.031	106.050	107.070	108.090	109.110	110.129	111.149	1000

Pressure **kgf/cm^2 → kPa (1 kPa = 1/1000 MPa)**

kgf/cm^2	0	1	2	3	4	5	6	7	8	9	kgf/cm^2
	kPa	kPa	kPa	kPa	kPa	kPa	kPa	kPa	kPa	kPa	
		98.1	196.1	294.2	392.3	490.3	588.4	686.5	784.5	882.6	
10	980.7	1078.7	1176.8	1274.9	1372.9	1471.0	1569.1	1667.1	1765.2	1863.3	10
20	1961.3	2059.4	2157.5	2255.5	2353.6	2451.7	2549.7	2647.8	2745.9	2843.9	20
30	2942.0	3040.1	3138.1	3236.2	3334.3	3432.3	3530.4	3628.5	3726.5	3824.6	30
40	3922.7	4020.7	4118.8	4216.9	4314.9	4413.0	4511.1	4609.1	4707.2	4805.3	40
50	4903.3	5001.4	5099.5	5197.5	5295.6	5393.7	5491.7	5589.8	5687.9	5785.9	50
60	5884.0	5982.1	6080.1	6178.2	6276.3	6374.3	6472.4	6570.5	6668.5	6766.6	60
70	6864.7	6962.7	7060.8	7158.9	7256.9	7355.0	7453.1	7551.1	7649.2	7747.3	70
80	7845.3	7943.4	8041.5	8139.5	8237.6	8335.7	8433.7	8531.8	8629.9	8727.9	80
90	8826.0	8924.1	9022.1	9120.2	9218.3	9316.3	9414.4	9512.5	9610.5	9708.6	90
100	9806.7	9904.7	10002.8	10100.8	10198.9	10297.0	10395.0	10493.1	10591.2	10689.2	100

https://truckmanualshub.com/

Numerical Conversion Table

Pressure **kPa → kgf/cm^2 (1 kPa = 1/1000 MPa)**

kPa	0	100	200	300	400	500	600	700	800	900	kPa
	kgf/cm^2	kgf/cm^2	kgf/cm^2	kgf/cm^2	kgf/cm^2	kgf/cm^2	kgf/cm^2	kgf/cm^2	kgf/cm^2	kgf/cm^2	
		1.020	2.039	3.059	4.079	5.099	6.118	7.138	8.158	9.177	
1000	10.197	11.217	12.237	13.256	14.276	15.296	16.315	17.335	18.355	19.375	1000
2000	20.394	21.414	22.434	23.453	24.473	25.493	26.513	27.532	28.552	29.572	2000
3000	30.591	31.611	32.631	33.651	34.670	35.690	36.710	37.729	38.749	39.769	3000
4000	40.789	41.808	42.828	43.848	44.868	45.887	46.907	47.927	48.946	49.966	4000
5000	50.986	52.006	53.025	54.045	55.065	56.084	57.104	58.124	59.144	60.163	5000
6000	61.183	62.203	63.222	64.242	65.262	66.282	67.301	68.321	69.341	70.360	6000
7000	71.380	72.400	73.420	74.439	75.459	76.479	77.498	78.518	79.538	80.558	7000
8000	81.577	82.597	83.617	84.636	85.656	86.676	87.696	88.715	89.735	90.755	8000
9000	91.774	92.794	93.814	94.834	95.853	96.873	97.893	98.912	99.932	100.952	9000
10000	101.972	102.991	104.011	105.031	106.050	107.070	108.090	109.110	110.129	111.149	10000

https://truckmanualshub.com/

Equipment Configuration

Overall

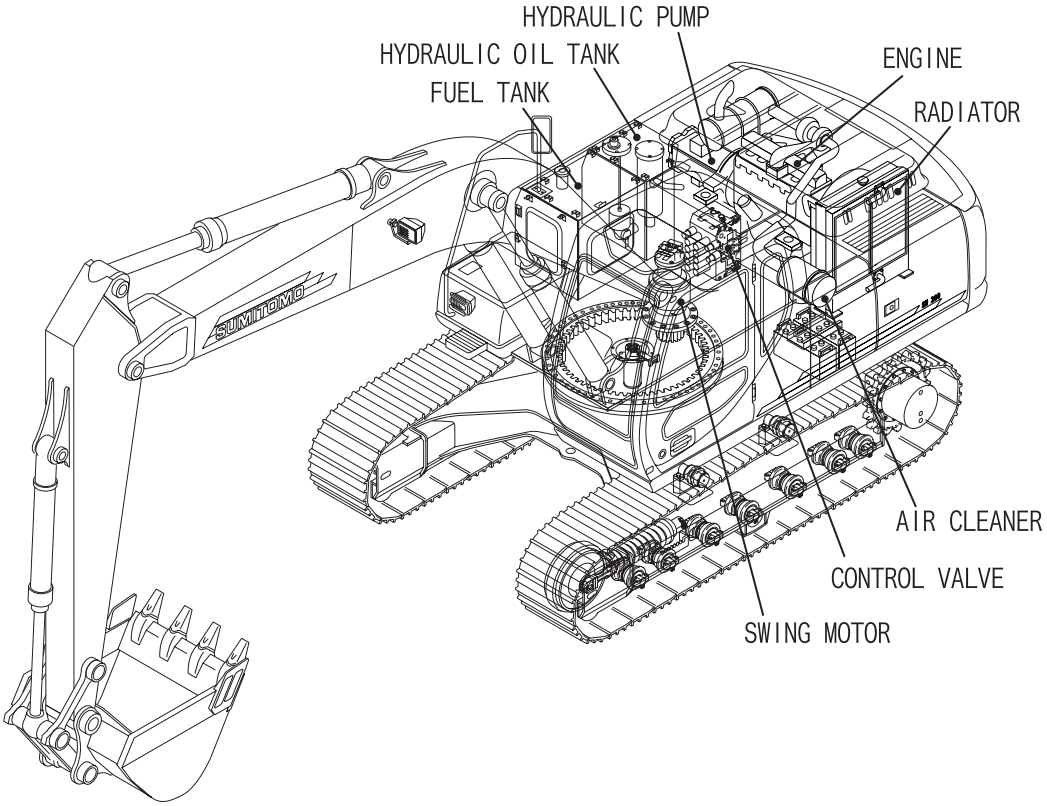

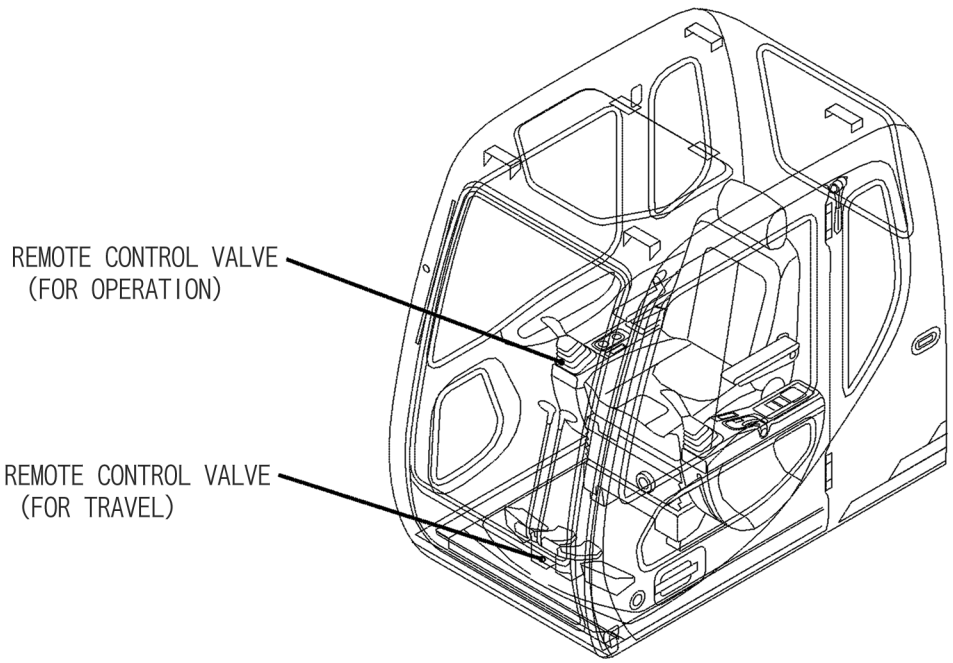

https://truckmanualshub.com/

Operator's Cab

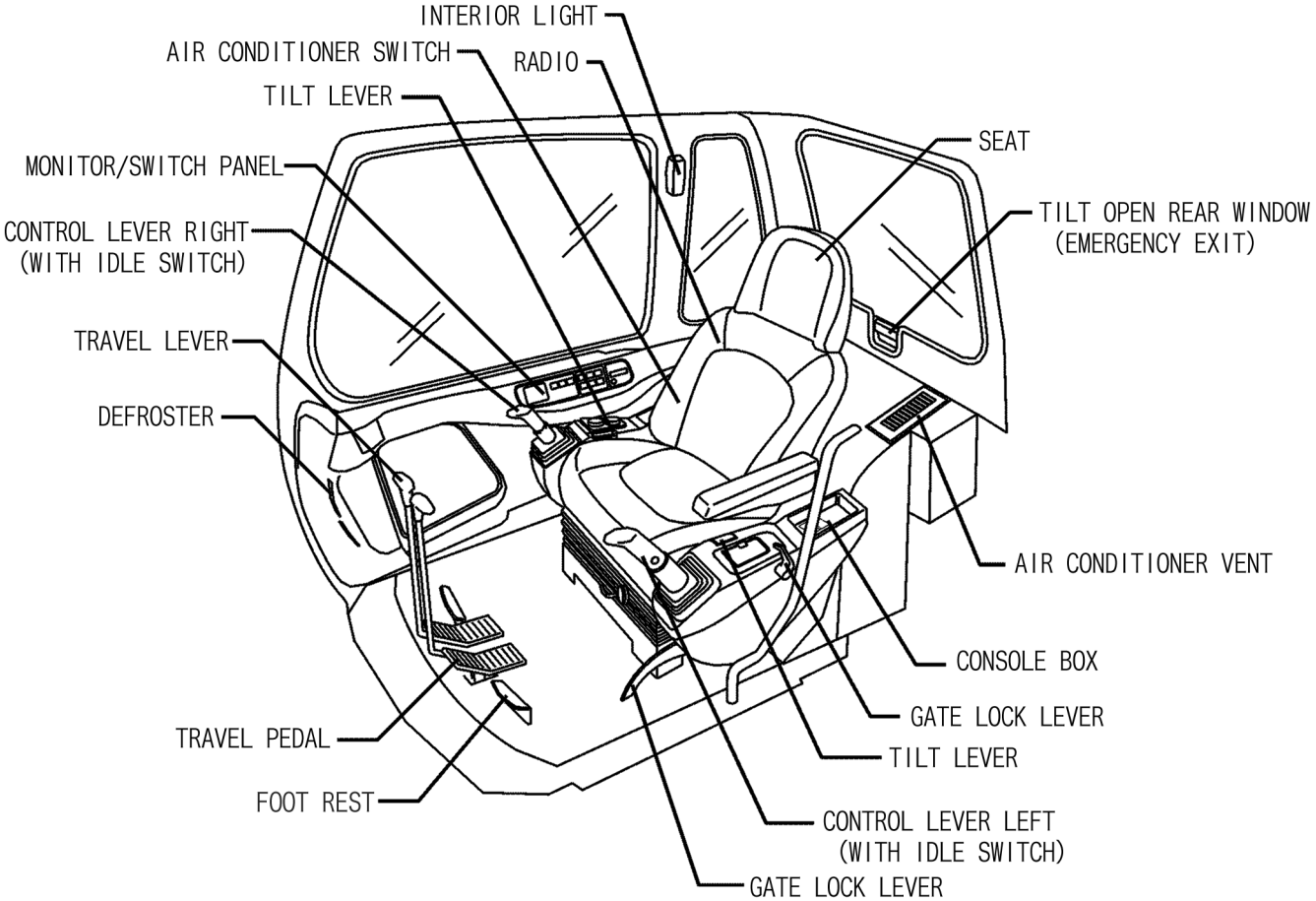

https://truckmanualshub.com/

Lower Mechanism
Assembly Diagrams

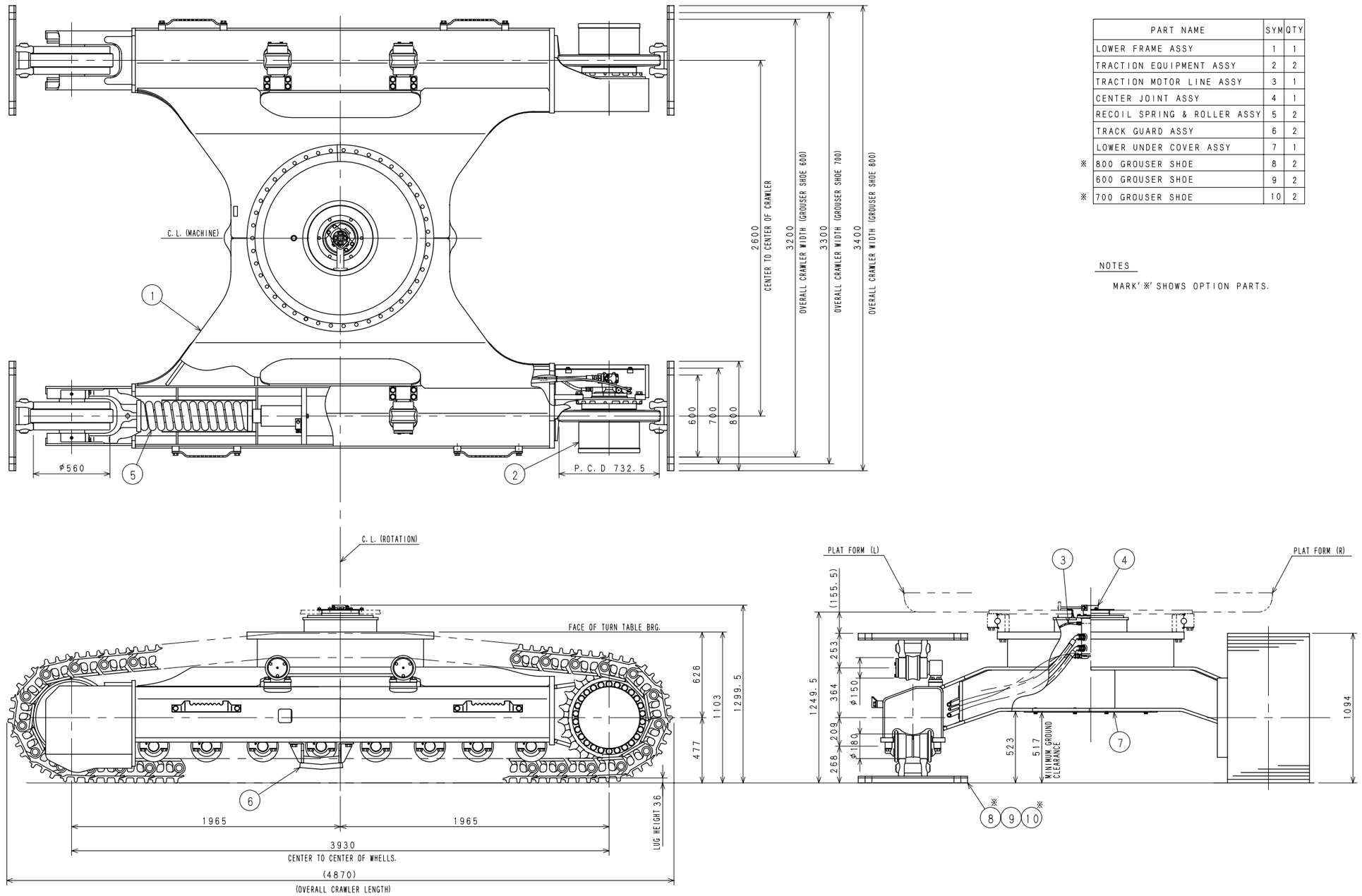

	PART NAME	SYM	QTY
	LOWER FRAME ASSY	1	1
	TRACTION EQUIPMENT ASSY	2	2
	TRACTION MOTOR LINE ASSY	3	1
	CENTER JOINT ASSY	4	1
	RECOIL SPRING & ROLLER ASSY	5	2
	TRACK GUARD ASSY	6	2
	LOWER UNDER COVER ASSY	7	1
※	800 GROUSER SHOE	8	2
	600 GROUSER SHOE	9	2
※	700 GROUSER SHOE	10	2

NOTES

MARK'※' SHOWS OPTION PARTS.

KBA1130Z-D01

https://truckmanualshub.com/

Travel Unit (with parking brake)

Sumitomo Part No.	KBA1319
Manufacturer	NABCO Ltd.
Motor type	Variable displacement piston motor (automatic 2-speed switch-over)
Displacement	244.3/141.1 cm^3/rev
Operating pressure	34.3 MPa
Operating flow	216.8 L/min
Reduction gears	
Reduction ratio	39.875
Parking brake	
Brake torque	902 N·m or over (excluding reduction gear)
Brake valve relief pressure	Cracking 35.8 to 37.2 MPa
Dry weight	365 kg

Take-up Roller

Sumitomo Part No.	KSA1064
Weight	154 kg

Upper Roller

Sumitomo Part No.	KBA1141
Weight	43.0 kg

Lower Roller (external roller)

Sumitomo Part No.	KSA1068
Weight	60.0kg

https://truckmanualshub.com/

Recoil Spring

Item	Sumitomo Part No.	
Yoke	KSA1065	39.8 kg
SEMS bolt M16x50	105R016Y050R	0.5 kg
Threaded rod	KSA1066	50.3 kg
Nut with deep grooves M76x6	165R064HSN	1.9 kg
Spring pin 10x100	338W100Z100B	0.1 kg
Recoil spring	KSA1297	102.4 kg
Grease assembly cylinder	KSA0832	41.3 kg
SEMS bolt M16x65	105R016Y065R	0.3 kg
Assembly	Total weight	240 kg
	Mounting length of spring:	779 mm

Shoes

	Sumitomo Part No.	
600 Grouser	KBA10020	2,191 kg
Link	KBA10050	One set
Shoe	KSA1121	47
Bolt	KSA1122	188
Nut	KSA1123	188

	Sumitomo Part No.	
700 Grouser	KBA10030	2,387 kg
Link	KBA10050	One set
Shoe	KSA1173	47
Bolt	KSA1122	188
Nut	KSA1123	188

	Sumitomo Part No.	
800 Grouser	KBA10040	2,595 kg
Link	KBA10050	One set
Shoe	KSA10060	47
Bolt	KSA1122	188
Nut	KSA1123	188

https://truckmanualshub.com/

Upper Mechanism

Swing Unit

Item	Specifications
Motor type	Fixed displacement piston motor (1)
Reduction gear type	Planetary gear 2 stage reduction system
Type of swing parking brake	Mechanical lock (swing lever/swing lock switch linkage type)

Sumitomo Part No.	KBC0120
Manufacturer	TOSHIBA MACHINE CO., LTD.
Motor type	Fixed displacement piston motor
Displacement	164.7 cm^3/rev
Operating pressure	29.4 MPa
Relief set pressure	29.3 ± 0.4 MPa at 100 L/min
Reduction gears	
Reduction ratio	27.143
Swing brake	
Brake torque	849 N·m or over
Brake release pressure	2.9 MPa
Dry weight	428 kg

https://truckmanualshub.com/

Engine and Related Areas

Engine

Sumitomo Part No.	KBH1010
Engine model name	ISUZU 6BGIT Diesel Engine
Engine type	4-cycle, water-cooled, in-line, direct-injection (electroric control)
Number of cylinders – Bore x Stroke	6 - dia. 105 mm × 125 mm
Displacement	6.494 L
Compression ratio	18.0
Rated output	132.4 ± 2.2 Kw / 2,200 min^{-1}
Maximum torque	600 N·m / approx.1,800 min^{-1}
Dry weight	Approximately 487 kg
Engine dimensions	L 1206 × W 814.6× H 996 mm
Oil pan	All direction 35°, inclinable
Cooling fan	7 blades, suction type, 650 mm in dia., resin; with bell-mouth type fan guide
Pulley ratio	0.88 (reduction)
Alternator	24 V × 50 A AC type
Starter-generator	24 V × 4.5 Kw reduction type
Coolant capacity	12.0 L (engine only)
Oil pan capacity	Maximum: 21.5 L Minimum: 16.4 L (excluding oil filter)
Direction of rotation	Right (viewed from fan side); compliant with
Conditions for rated output	JIS D 0006-1994
	With fan and generator
	Without muffler and air cleaner

https://truckmanualshub.com/

Muffler

Sumitomo Part No.	KBH0893
Manufacturer	TOUEI INDUSTRIAL Co., Ltd.
External dimensions	dia. 280 × 770 mm
Weight	16.0 kg

Air Cleaner (double element)

Sumitomo Part No.	KBH0886
Element (outer)	KBH0921
Element (inner)	KBH0922
Manufacturer	NIPPON DONALDSON LTD.
Weight	5.7 kg

Radiator

Sumitomo Part No.		KBH0890
Manufacturer		TOYO RADIATOR CO., LTD.
Oil cooler	Weight	34.0 kg
	Oil capacity	15.7 L
Radiator	Weight	50.0 kg
	Water capacity	20.0 L
Air cooler	Weight	18.0 kg
Total weight		165 kg

https://truckmanualshub.com/

Fuel Tank

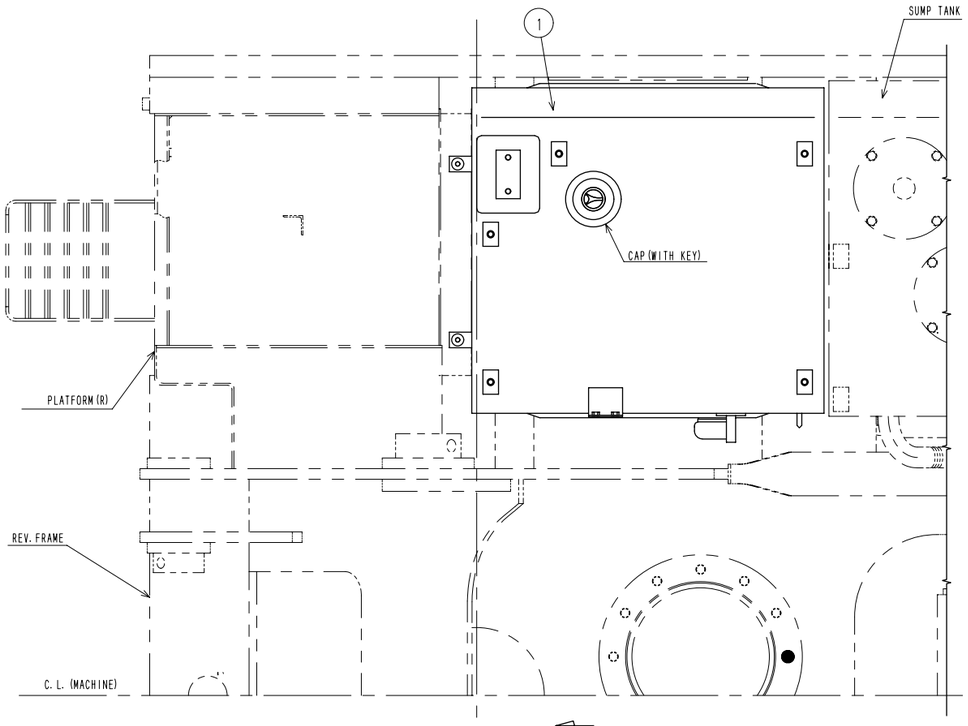

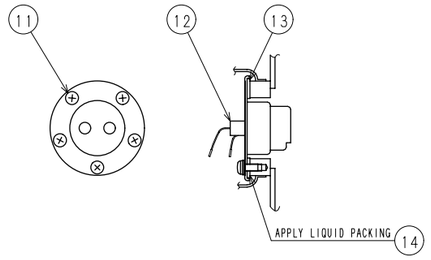

DETAIL-B

PART NAME	SYM	QTY
FUEL TANK	1	1
MISSING NUMBER	2	
NIPPLE	3	1
DRAIN COCK	4	1
SENSOR COVER	5	1
PLATE SHIM (t=0.8)	6	NEED
PLATE SHIM (t=2.0)	7	NEED
M16×65 HIGH STRENGTH BOLT	8	4
SPACER	9	4
LOCTITE 262	10	NEED
M5×12 PAN HEAD SCREW	11	5
FUEL SENSOR	12	1
NON-ASBESTOS PACKING	13	1
LIQID PACKING	14	NEED

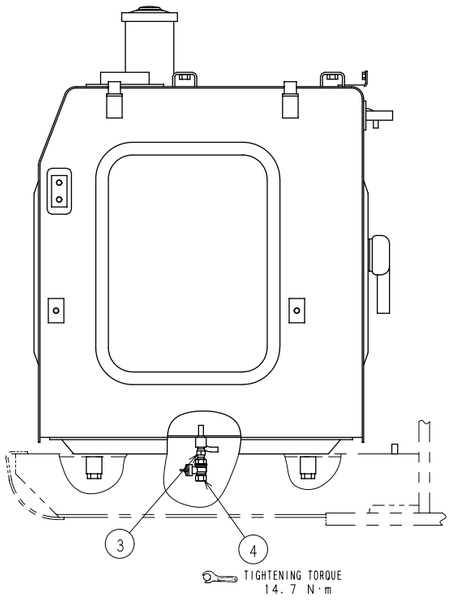

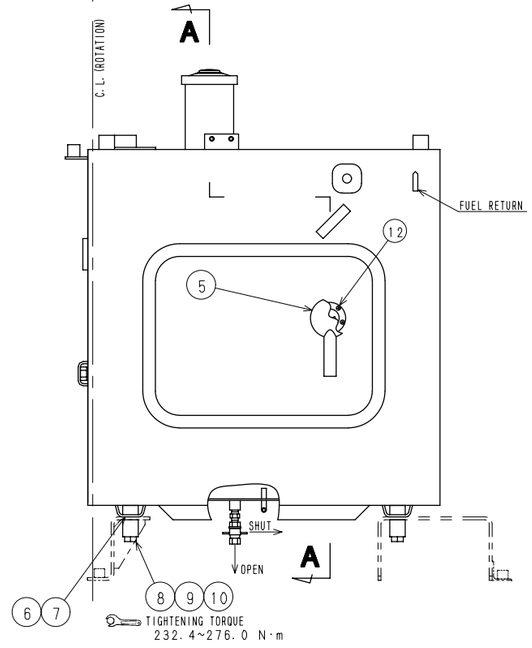

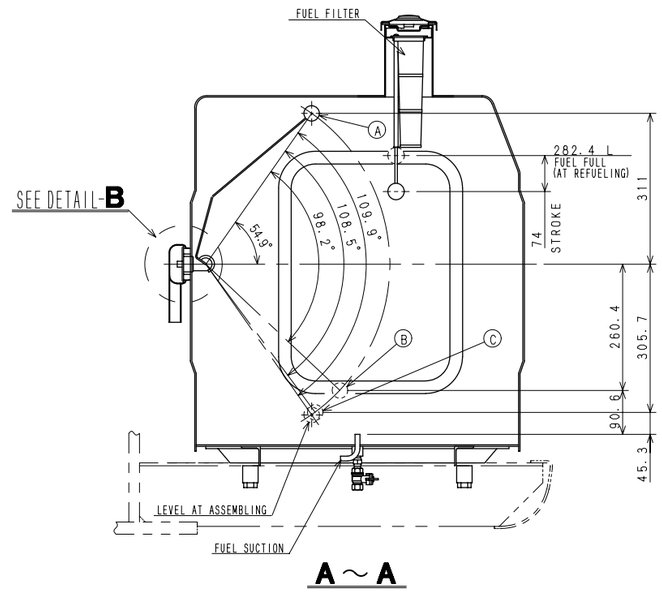

A ~ A

NOTES

1) CAPACITY OF THE FUEL TANK IS 340 L.

2) THE SCM MONITOR FUEL GAUGE IS SHOWN AS FOLLOWING DRAWING.

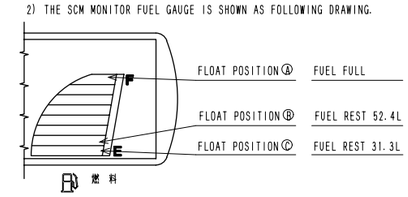

3) TIGHTEN BOLTS Ⓐ TO THE INDICATED TORQUE AFTER APPLYING LOCTITE #262 TO THE THREAD.

KRH1247Z-D06

https://truckmanualshub.com/

Hydraulic System

Hydraulic Pump

Sumitomo Part No.	KBJ2895
Manufacturer	Kawasaki Precision Machinery Ltd.
Type	Double variable displacement piston pump (1)
Displacement	97.2 cm^3/rev × 2
Rated operating pressure	34.3 MPa
Maximum operating pressure	37.3 MPa
Maximum flow	217 × 2 L/min at 2,230 min^{-1}
Pilot pump	
Type	Fixed displacement gear pump (1)
Displacement	10 cm^3/rev
Operating pressure	3.92 MPa
Maximum flow	22.3 L/min at 2,230 min^{-1}
Dry weight	139 kg

https://truckmanualshub.com/

Sump Tank

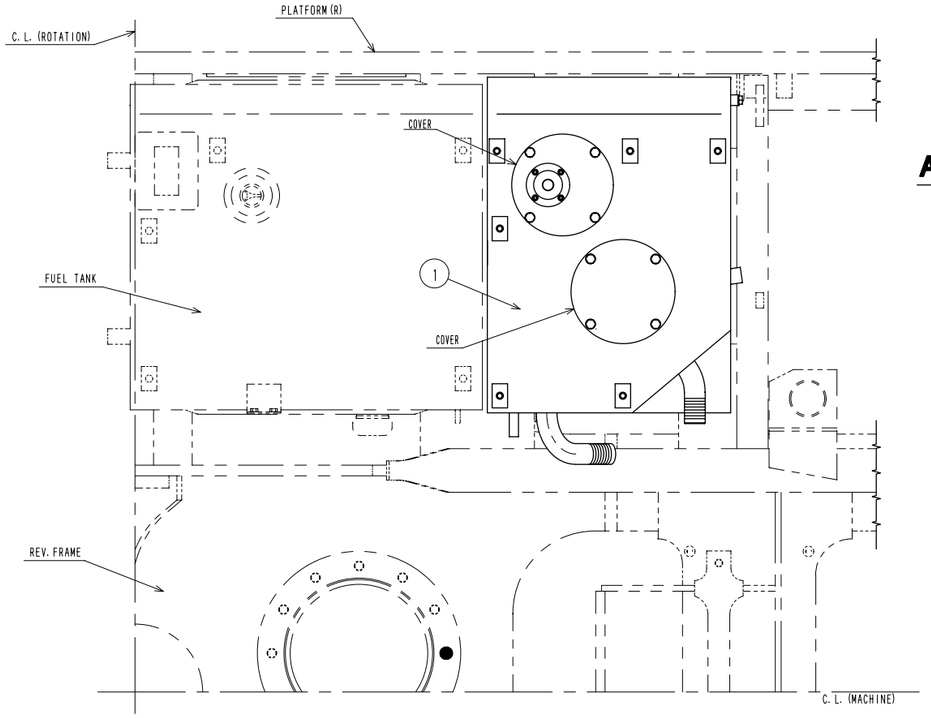

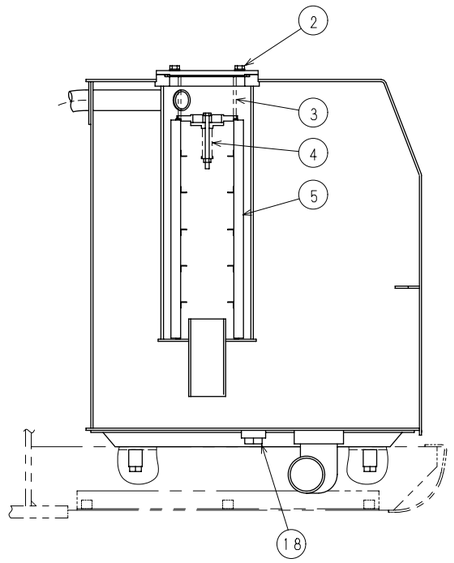

PART NAME	SYM	QTY
SUMP TANK	1	1
M10X20 SEMS BOLT	2	4
COMPRESSION SPRING	3	1
RELIEF VALVE	4	1
RETURN FILTER	5	1
OIL LEVEL GAGE	6	1
PLATE SHIM(t=0.8)	7	NEED
PLATE SHIM(t=2.0)	8	NEED
M16×70 HIGH STRENGTH BOLT	9	4
SPACER	10	4
LOCTITE 262	11	NEED
SPRING WASHER	12	4
M6×16 HEX SOCKET BOLT	13	4
AIR BREATHER	14	1
M10×30 SEMS BOLT	15	4
STRAINER	16	1
MISSING NUMBER	17	
PLUG G3/4	18	1

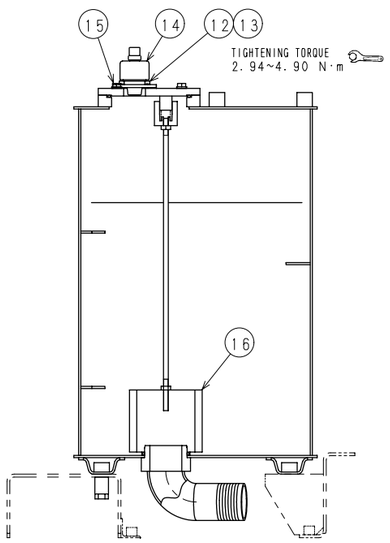

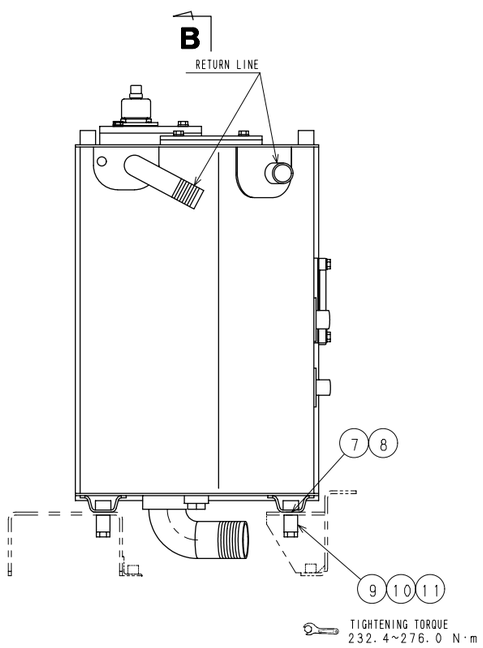

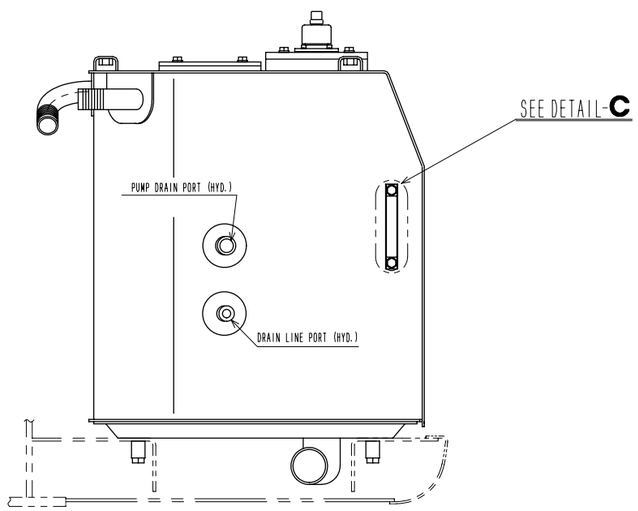

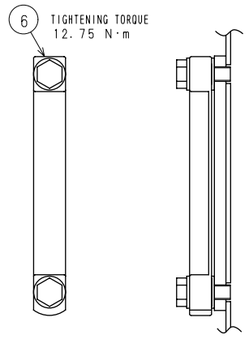

DETAIL-C

NOTES

1) THE SPECIFICATIONS OF SUMP TANK REFER TO THE BELLOWS.
   ·TANK CAPACITY:220L
   ·CAPACITY OF HYDRAULIC OIL:120L
2) TIGHTEN BOLTS ⑤ TO THE INDICATED TORQUE AFTER APPLYING LOCTITE #262 TO THE THREAD.
3) BE CAREFUL THAT PAINT AND GASOLINE NOT ADHERE TO HYD.OIL GAUGE. NO USE THINNER AND LIGHT OIL etc WHEN PAINT AND GASOLINE ADHERE TO HTD.OIL GAUGE.

KRJ5826Z-D04

https://truckmanualshub.com/

Rotating Joint

Sumitomo Part No.	KRA1875	
Operating pressure		
	High pressure passage (ABCD)	34.3 MPa
	Pilot port (F)	3.9 MPa
	Drain port (E)	0.5 MPa
Hydrostatic test pressure		
	High pressure passage (ABCD)	51.5 MPa
	Pilot port (F)	5.9 MPa
	Drain port (E)	1.0 MPa
Flow		
	High pressure passage (ABCD)	212.2 L/min
	Pilot port (F)	21 L/min
	Drain port (E)	10 L/min
Number of revolutions		15 min^{-1}
Torque	When pressurizing 2 ports	147 N·m
Hydraulic oil used		ISO VG46
Range of hydraulic oil temperature		-20 to +95°C
Port A	Forward right	G1/2-A Class
Port B	Forward left	G1/2-A Class
Port C	Backward right	G1/2-A Class
Port D	Backward left	G1/2-A Class
Port F	Pilot port	G1/4-A Class
Port E	Drain port	G1/4-A Class
Weight	29.2 kg	

Solenoid Valve

Sumitomo Part No.	KRJ6304	
Manufacturer	Uchida Hydraulics Co., Ltd.	
Valve specifications		
Maximum flow	P→B: 20 L/min	Other: 5 L/min
Rated pressure	4.41 MPa	
Solenoid specifications		
Operating voltage	DC 20 to 32 V	
Current	13.0 W (at 24 V, 20°C)	
Weight	6.0 kg	

https://truckmanualshub.com/

Controls

Remote Control Valve (left/right, travel operations)

Valve for Left/Right Operations		
Sumitomo Part No.		KRJ5804
Manufacturer		Kawasaki Precision Machinery Ltd.
Operating pressure		3.92 MPa
Secondary pressure		0.64 ± 0.1 to 2.45 ± 0.14 MPa: Primary short type
Operating angle	Ports 1, 3 Ports 2, 4	19 ± 1.9° 25 ± 2.5°
Operating torque	Port 1 Port 3 Ports 2, 4	1.18 to 2.67 N·m 0.94 to 2.38 N·m 1.37 to 3.19 N·m
Hydraulic oil		ISO VG46
Operating temperature range		-20 to 95°C
Weight		1.8 kg

Valve for Travel Operation		
Sumitomo Part No.		KRJ5803
Manufacturer		Kawasaki Precision Machinery Ltd.
Oparating pressure		3.92 MPa
Secondary pressure		0.64 ± 0.1 to 2.45 ± 0.14 MPa: Primary short type
Operating angle		12.4 ± 0.3°
Operating torque	 Valve damper	4.16 to 10.6 N·m 4.90 ± 0.98 N·m at 0.0275 m/s
Hydraulic oil		ISO VG46
Operating temperature range		-20 to 95°C
Weight		7.8 kg

https://truckmanualshub.com/

Control Valve

Sumitomo Part No.	KBJ3023
Manufacturer	KAYABA INDUSTRY Co., Ltd.
Maximum flow	217 L/min
Pressure setting for overload	39.2 ± 0.5 MPa
Pressure setting for main relief	34.3 ± 0.3 MPa
	37.3 ± 0.5 MPa (at boosting)
Operating temperature range	-20 to +95°C
Pressure setting for foot relief	$2.55\ ^{+0.3}_{0}$ MPa at 50 L/min
Functions	Straight travel circuit
	Boom UP; 2-speed, internal confluence for Arm
	Boom/arm load holding circuit
	Boom down regenerative circuit
	Arm IN forced regenerative circuit
	Variable throttle valve in the parallel circuit at arm
	Swing priority variable throttle valve
	Preliminary 2-speed confluence
Weight	187 kg

https://truckmanualshub.com/

Backhoe Attachments

Cylinder

Boom Cylinder R/L	
Sumitomo Part No.	KBV1688 / KBV1689
Manufacturer	KAYABA INDUSTRY Co., Ltd.
Cylinder bore	dia. 135 mm
Rod diameter	dia. 95 mm
Max. retracted length	1,918 ± 3.0 mm
Stroke	1,369 ± 2.0mm
Dry weight	235 kg

Arm Cylinder	
Sumitomo Part No.	KBV1897
Manufacturer	KAYABA INDUSTRY Co., Ltd.
Cylinder bore	dia. 150 mm
Rod diameter	dia. 105 mm
Max. retracted length	2,071 ± 3.0 mm
Stroke	1,438 ± 2.0mm
Dry weight	335 kg

Bucket Cylinder	
Sumitomo Part No.	KBV1790
Manufacturer	KAYABA INDUSTRY Co., Ltd.
Cylinder bore	dia. 130 mm
Rod diameter	dia. 90 mm
Max. retracted length	1,665 ± 3.0 mm
Stroke	1,073 ± 2.0mm
Dry weight	194 kg

https://truckmanualshub.com/

Attachments

◎ Standard bucket
● For general digging (specific gravity: 2.0 ton/m^3 or less)
○ For light digging (specific gravity: 1.6 ton/m^3 or less)
△ For loading only (specific gravity: 1.2 ton/m^3 or less)
x Do not use

Bucket Capacity (m^3)		1.0	1.1	1.3
Number of teeth		5	5	5
Width (mm)		1,255 (1,175)	1,331 (1,230)	1,511 (1,410)
Type of arm specified	Long arm (3.66 m)	◎	○	△
	Standard arm (3.20 m)	●	◎	○
	Short arm (2.67 m)	●	●	◎

https://truckmanualshub.com/

Fuel / Lubricants and Filters

Main Body Lubricants

1.Fuel / Lubricants for Different Ambient Temperature Settings

Consult your distributor for recommended fuel / lubricants when you operate the machine in temperatures other than between -20°C and 40°C.

Fuel / Oil

Refer to the table for proper fuel / oil according to the temperature range. Refer to *Grease / Oil and Elements* for proper oil levels.

Antifreeze

Add antifreeze when the temperatures falls below 0°C. As for the ratio, refer to the section for cold weather conditions.

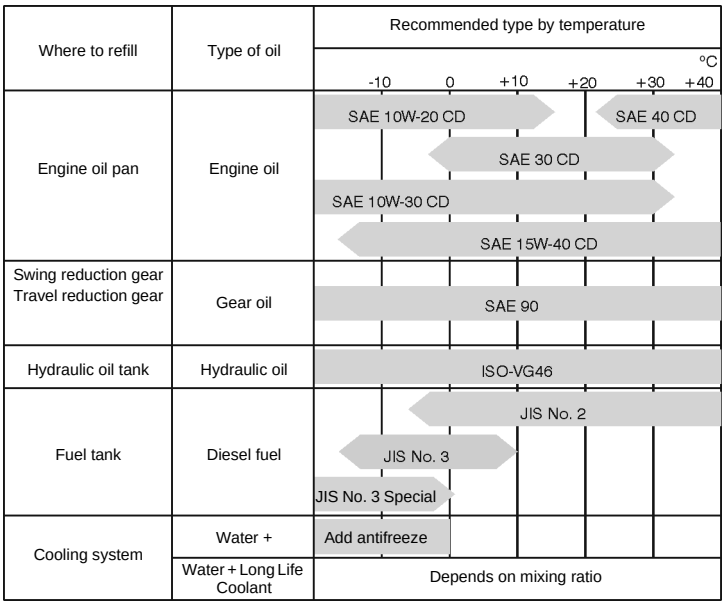

2. Genuine Sumitomo Parts and Elements

Listed below is our genuine oil. We guarantee the premium quality for heavy machinery use. We recommend that you use our genuine products to fully enhance the performance of your machine.

Type of oil	Name of genuine oil	Notes		Part No.
Engine oil	Clean Dash (for general use)	API-CD grade, SAE30	(20 l)	WEB0005
	Clean Dash (for cold weather)	API-CD grade, SAE10W-20	(20 l)	WEB0007
		API-CD grade, SAE10W-30	(20 l)	WEB0071
Gear oil	Clean Elite	API-GL-4 grade, SAE90	(20 l)	WEB0009
		API-GL-5 grade, SAE80W-90	(20 l)	WEB0075
Hydraulic oil	Clean Red ECO10000	ISO-VG46	(20 l)	WEB0150
Extreme pressure grease	Clean Cassette	Extreme pressure type EP Lithium grease No. 2	(400 g)	WEB0012
Lubricant	Clean Gold Spray	Molybdenum lubricant, spray type	(330 g)	WEB0001
	Clean Gold Grease	Molybdenum lubricant, grease	(2.5 kg)	WEB0002
Antifreeze	Clean Coolant	Long life coolant JIS Type 2 (L.L.C)	(4 l x 6)	WEB1007

https://truckmanualshub.com/

3. Disposable Items

Replace disposable items, such as filter elements and bucket teeth, either when the service intervals recommend or before they reach maximum life span. We recommend that you use our genuine parts / elements guaranteed for premium quality. Monitor those disposable items and replace when necessary. This will save your money in the long run.

The few items in parentheses ( ) in the list need to be replaced with the matching item to be replaced.

Name of disposable item		Quantity	Part No.	When to replace
Engine oil filter		1	KHH0533	Every 500 hrs.
Fuel filter element		1	KSP0281	Every 500 hrs.
		1	KHH10030	Every 250 hrs.
Fuel tank filter		1	KHH0500	—
Pilot oil filter	Element	1	KBJ1691	Every 2000 hrs.
	(O-ring)	(1)	KHJ1032 (JASO 6605-2053)	
Return filter element		1	KRJ3836	Every 2000 hrs.
Air cleaner element	Outer element	1	KBH0921	Every 1000 hrs.
	Inner element	1	KBH0922	Every 1000 hrs.
Air breather element	Element	1	KRJ3461	Every 1000 hrs.
	Packing	1	KRJ3463	—
Line filter	(when installed)	1	KRJ3547	—
Nephron filter	For hydraulic oil	1	KHJ1400	Every 2000 hrs.
Suction filter element		1	KRJ6214	Every 5000 hrs.
Air filter (air conditioner)	Outer element	1	KHR2772	Every 5000 hrs.
	Inner element	1	KHR2848	
Bucket	Point (Esco type) Locking pin	5 5	KBV0147 BLT0188	— —
	Side cutter (right) Side cutter (left) High-strength bolt High-strength nut	1 1 8 8	KRV1168 KRV1169 102R024Y065N 162R024VN	— — — —

https://truckmanualshub.com/

4. Grease / Oil and Elements Replacement

REF. NO.	DESCRIPTION	NO. POINTS	SPECIFICATION	INTERVAL (hr) 50	250	500	1000	2000	5000
①	FRONT ATTACHMENT PIN	14	EP. GREASE No. 2	○					
②	FRONT ATTACHMENT PIN(EMS)	3	EP. GREASE No. 2				○		
③	TURNTABLE BEARING	3	EP. GREASE No. 2			○			
④	SWING RING GEAR	33kg	EP. GREASE No. 2			○			
⑤	ENGINE OIL PAN	24ℓ	ENGINE OIL			◎			
⑥	SWING GEAR REDUCER	6ℓ	GEAR OIL		△		◎		
⑦	SWING GEAR REDUCER	0.8kg	EP. GREASE No. 2					○	
⑧	TRAVEL GEAR REDUCER	10.5ℓ×2	GEAR OIL		△		◎		
⑨	HYDRAULIC SUMP TANK	260ℓ	HYDRAULIC OIL						◎
⑩	ENGINE RADIATOR	33ℓ	WATER WITH LONG LIFE COOLANT	EVERY 2 YEARS					
⑪	FUEL TANK	340ℓ	LIGHT OIL	WHEN REQUIRED					
A	PILOT LINE FILTER	1	ELEMENT (KBJ1691)	△				◎	
B	FUEL FILTER	1	ELEMENT (KSP0281)			◎			
C	FUEL FILTER	1	ELEMENT (KHH10030)		◎				
D	ENGINE OIL FILTER	1	ELEMENT (KHH0533)			◎			
E	RETURN FILTER	1	ELEMENT (KRJ3836)	△				◎	
F	SUCTION FILTER	1	ELEMENT (KRJ6214)				□		◎
G	AIR CLEANER OUTER	1	ELEMENT (KBH0921)		□		◎		
H	AIR CLEANER INNER	1	ELEMENT (KBH0922)				◎		
I	AIR BREATHER	1	ELEMENT (KRJ3461)				◎		
J	NEPHRON FILTER	1	ELEMENT (KHJ1400)					◎	
K	AIR FILTER OUTER	1	ELEMENT (KHR2772)	□					◎
L	AIR FILTER INNER	1	ELEMENT (KHR2848)	□					◎

○ :LUBRICATE GREASE
△ :CHANGE INITIALLY
◎ :CHANGE OIL OR REPLACE ELEMENT
□ :CLEAN

RECOMMENDED GREASE AND OIL SPEC. ARE AS FOLLOWS.
EP. GREASE :LITHIUM GREASE NO.2
ENGINE OIL :API CD SAE 15W-40
GEAR OIL :API GL-4 SAE 90
HYDRAULIC OIL:ISO VG46

NOTES 1. LUBRICATION IS RECOMMENDED FOR THE FRONT ATTACHMENT PINS AFTER THE OPERATION IN THE WATER IS COMPLETED.
2. REFER TO RECOMMENDED OIL SPECIFICATIONS IN DETAIL SHOWN IN THE OPERATOR'S MANUAL.
3. THIS CHART IS PRIOR TO THE ENGINE INSTRUCTION MANUAL.
4. INTERVAL - HOURS ON THIS CHART ARE BASED ON FOLLOWING.
50 (OR WEEKLY) * 1000 (OR 6 MONTHS) *
250 (OR MONTHLY) * 2000 (OR 1 YEAR) *
500 (OR 3 MONTHS) * 5000 (OR 2.5 YEARS) * * WHICHEVER OCCURS FIRST
5. REMOVE THE AIR DEFLATION PLUG IN LUBRICATING GREASE FOR SWING GEAR REDUCER REFER TO THE OPERATOR'S MANUAL FOR DETAILS.

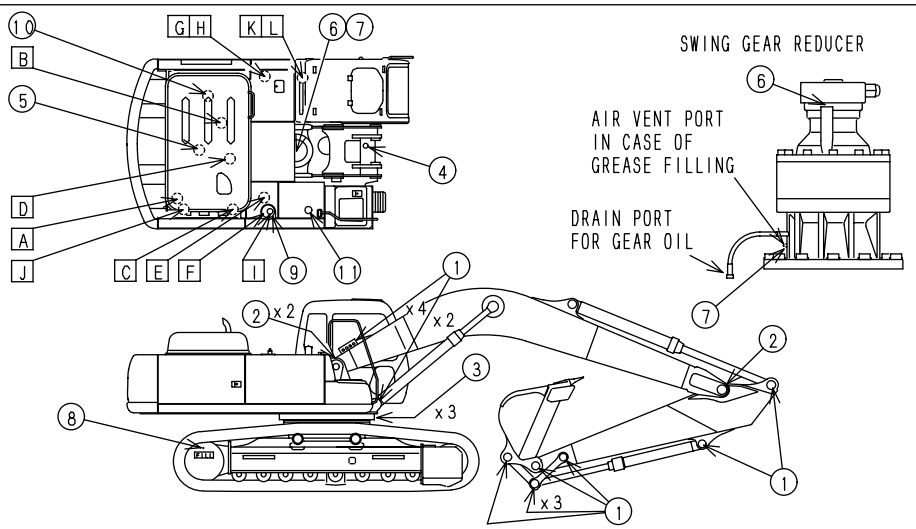

KBP10170-C00

https://truckmanualshub.com/

5. Replacement Intervals for Hydraulic Oil and Filters When Using Breaker

- When using the hydraulic breaker, the deterioration and/or contamination of hydraulic oil progresses faster compared to ordinary digging work. Be sure to carry out the maintenance more often. In addition, when replacing the hydraulic filters, also measure the cleanliness and deterioration of the oil.
- Replace the hydraulic oil and filter element, using the graph as a guideline, depending on the operation frequency of the breaker.
- If the breaker work continues during a short period of time and the hour meter exceeds 100 hours during the period, replace the element every 100 hours.
- Replace the return filter for the breaker at the same interval as the element. Additionally, if using a filter with indicator, change the filter according to the indicator's indication.

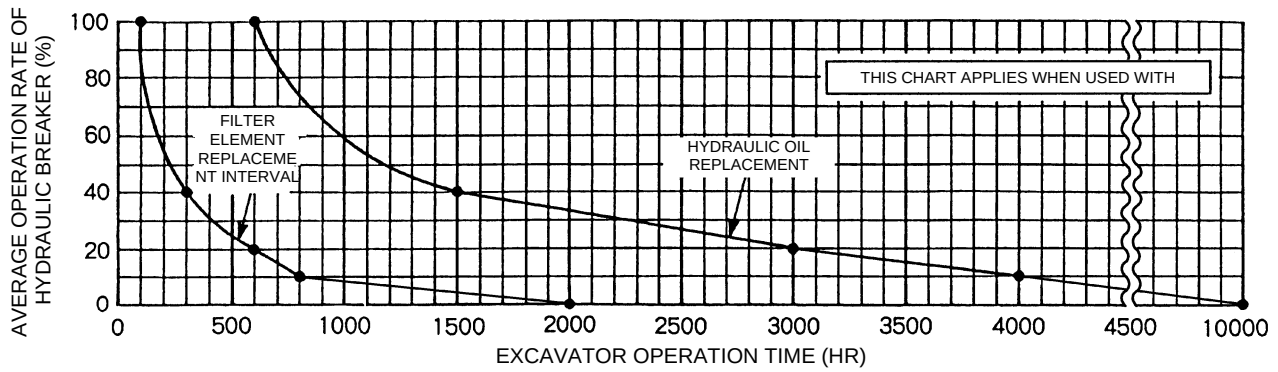

https://truckmanualshub.com/

Inspection and maintenance when using the breaker: we recommend having the hydraulic oil checked by specialists (sampling)

Contamination and deterioration of the hydraulic oil tends to progress quickly since breaker work is extremely harder for the hydraulic shovel compared with excavation work.

If the machine is continuously used with contaminated or deteriorated hydraulic oil, it can cause malfunction of the control valves, earlier wear of the hydraulic pumps and damage to the hydraulic circuits as a whole. Carry out inspection and maintenance of hydraulic oil periodically as outlined below:

Inspection and Maintenance of Hydraulic Oil and Filters Based on Frequency of Breaker Use													
Recommended Hydraulic Oil Servicing Intervals		Use frequency 100%			Use frequency 40%			Use frequency 20%			Use frequency 10%		
Inspection/Maintenance Location	Time	10	100	600	10	300	1500	10	600	3000	10	800	4000
Hydraulic Oil		○		◎	○		◎	○		◎	○		◎
Return Filter			◎			◎			◎			◎	
Suction Filter			✧	◎		✧	◎		✧	◎		✧	◎
Drain Filter			◎			◎			◎			◎	
Pilot Filter			◎			◎			◎			◎	
Nephron Filter			◎			◎			◎			◎	
Line Filter			◎			◎			◎			◎	
Measure hydraulic oil contamination		Every 200 Hrs			Every 300 Hrs			Every 600 Hrs			Every 800 Hrs		

○ Inspect, add ◎Change ✧Clean or change

When the hour meter exceeds 100 hours and breaker operations are done continuously for short periods, change the element each time.

https://truckmanualshub.com/

Lifting Capacity

Precautions for lifting loads with the hydraulic excavator.

■ **Discuss the procedures in advance**.

1. Operators and those who handle rigging must be trained for those specific purposes.
2. Use a sling that is sturdy enough. Also, use a device designed to prevent loads from falling.

■ **Take measures to ensure safe operation.**

1. Specify signals to be used for lifting loads and designate a signal person for the entire course of operation.

2. Work on a level surface. (Working on a slope can cause the machine to overturn and fall.)

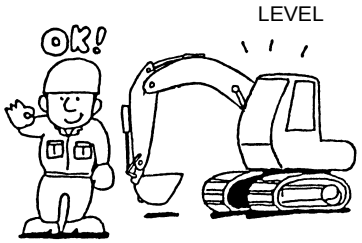

3. If you are on a slope, level out the footing before starting to work.

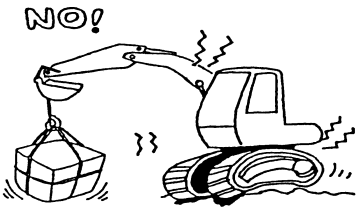

4. Do not allow anyone to be under the suspended load or at other dangerous areas.

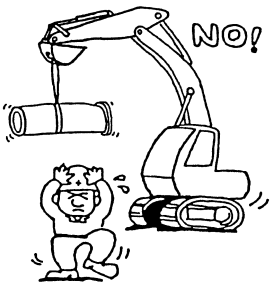

5. Do not lift a load exceeding the rated capacity. (The machine can overturn and jeopardize the safety of workers.)

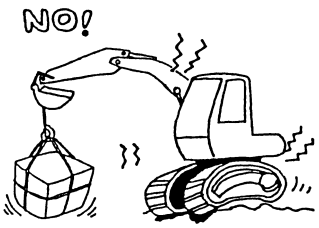

6. The wire ropes and the chains for rigging must be sturdy enough and be free of disfigurement and corrosion.

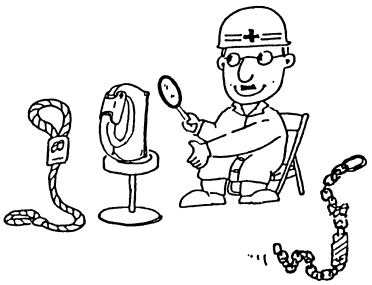

Use wire ropes with safety factor 6 or greater.
Use lifting chains with safety factor 5 or greater.

⚠ Caution

1. The operators must be trained specifically.
2. The weight of the loads and the rigging equipment combined must not exceed the maximum load value.
3. During the crane operations, lower the engine speed (mode L) and keep working at low engine speed.
4. Be extra careful while carrying out the swing operations. Move the machine slowly.
5. Do not leave the cab while you are suspending a load.
6. Do not travel any distance while you are suspending a load.
7. Sling the load in such a manner that the wire rope and the ring do not get detached from the hook.
8. If the bucket hook, or the rigging equipment gets damaged during operation, stop the procedure and make necessary repairs.
9. Please contact our authorized service shops when you wish to have hooks attached to your bucket.

Lifting Capacity

1. Lifting Capacities (Standard Arm)

Type of machine:	SH290-3	L:	3.2 m Arm length
Arm:	Standard arm	R:	Reach from swing center
Shoe:	600 Grouser Shoe	H:	Bucket hook height
Bucket:	1.1 m^3	W:	Lifting capacity

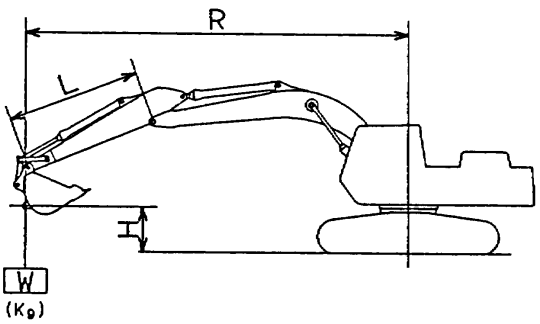

We: Frontal rating load

Ws: Lateral rating load

MAX: Rating load at height point H and at maximum working reach

(Maximum working reach: 9.11m) (Units: kg)

R \ H		Max W	Max R (m)	9 m	8 m	7 m	6 m	5 m	4 m	3 m	2 m
7 m	We	3710 *	7.54			4890 *					
	Ws	3710 *	7.54			4890 *					
6 m	We	3680 *	8.13		4100 *	5910 *					
	Ws	3680 *	8.13		4100 *	5830					
5 m	We	3740 *	8.57		5360 *	6640 *	7070 *				
	Ws	3740 *	8.57		4510	5700	7070 *				
4 m	We	3860 *	8.87		6460 *	7120 *	7830 *	8900 *			
	Ws	3660	8.87		4400	5520	7110	8900 *			
3 m	We	4050 *	9.04	4250 *	6660	7660 *	8680 *	10260 *	13020 *	15270 *	
	Ws	3460	9.04	3490	4270	5320	6800	9050	12910	15270 *	
2 m	We	4330 *	9.1	4870 *	6520	8080	9510 *	11550 *	15130 *	6610 *	
	Ws	3340	9.1	3410	4140	5130	6500	8570	12070	6610 *	
1 m	We	4730 *	9.05	5050 *	6390	7890	10090	12550 *	16480 *	6390 *	
	Ws	3300	9.05	3330	4030	4950	6250	8200	11520	6390 *	
0 m	We	5280 *	8.89		6290	7740	9870	13140 *	15670 *	7980 *	
	Ws	3340	8.89		3930	4810	6050	7940	11220	7980 *	
-1 m	We	5570	8.61		6220	7630	9730	13200	16890 *	10160 *	7190 *
	Ws	3470	8.61		3870	4720	5930	7800	11090	10160 *	7190 *
-2 m	We	5990	8.19		6200	7580	9670	13100 *	16420 *	12750 *	9690 *
	Ws	3720	8.19		3850	4680	5870	7740	11070	12750 *	9690 *
-3 m	We	6700	7.62			7600	9680	12470 *	15420 *	15840 *	12350 *
	Ws	4160	7.62			4690	5880	7760	11140	15840 *	12350 *
-4 m	We	7860 *	6.85				9340 *	11340 *	13880 *	17350 *	15340 *
	Ws	4920	6.85				5960	7860	11290	17350 *	15340 *
-5 m	We	7950 *	5.8					9480 *	11590 *	14220 *	
	Ws	6430	5.8					8040	11540	14220 *	

*Hydraulic pressure factor: 87.0%. Without asterisk: Stability factor: 75.0%

2. Lifting Capacities (Short Arm)

Type of machine:	SH290-3	L:	2.67m Arm length
Arm:	Short arm	R:	Reach from swing center
Shoe:	600 Grouser shoe	H:	Bucket hook height
Bucket:	1.1 m^3	W:	Lifting capacity

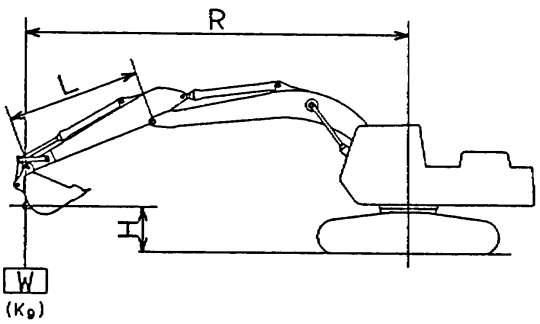

We: Frontal rating load

Ws: Lateral rating load

MAX: Rating load at height point H and at maximum working reach

(Maximum working reach: 8.66m) (Units: kg)

R \ H		Max W	Max R (m)	8 m	7 m	6 m	5 m	4 m	3 m	2 m
7 m	We	4750 *	7		4750 *					
	Ws	4750 *	7		4750 *					
6 m	We	4730 *	7.64		6660 *	7190 *				
	Ws	4730 *	7.64		5770	7190 *				
5 m	We	4800 *	8.1	5250 *	7190 *	7740 *				
	Ws	4380	8.1	4480	5640	7290				
4 m	We	4970 *	8.41	6770	7620 *	8460 *	9770 *	12010 *	16670 *	
	Ws	4020	8.41	4380	5480	7020	9370	12010 *	16670 *	
3 m	We	5240 *	8.6	6650	8110 *	9260 *	11080 *	14340 *		
	Ws	3780	8.6	4270	5290	6720	8880	12520		
2 m	We	5630 *	8.66	6520	8060	10000 *	12230 *	16160 *		
	Ws	3660	8.66	4160	5110	6450	8450	11790		
1 m	We	5730	8.61	6410	7890	10060	13030 *	13810 *		
	Ws	3620	8.61	4060	4960	6230	8130	11380		
0 m	We	5850	8.44	6330	7760	9880	13350	14650 *	7090 *	
	Ws	3680	8.44	3980	4850	6070	7940	11210	7090 *	
-1 m	We	6140	8.14	6290	7690	9780	13240	16720 *	10410 *	
	Ws	3850	8.14	3940	4780	5980	7840	11170	10410 *	
-2 m	We	6670	7.69		7670	9750	12900 *	15900 *	13900 *	10810 *
	Ws	4170	7.69		4770	5960	7830	11210	13900 *	10810 *
-3 m	We	7600	7.08		7730	9800	12020 *	14630 *	17950 *	14160 *
	Ws	4740	7.08		4810	6000	7890	11320	17950 *	14160 *
-4 m	We	8190 *	6.24			8640 *	10560 *	12760 *	15470 *	18000 *
	Ws	5790	6.24			6120	8030	11510	15470 *	18000 *
-5 m	We	7970 *	5.07				8110 *	9970 *		
	Ws	7970 *	5.07				8110 *	9970 *		

*Hydraulic pressure factor: 87.0%. Without asterisk: Stability factor: 75.0%

3. Lifting Capacities (Long Arm)

Type of machine:	SH290-3	L:	3.66 m Arm length
Arm:	Long arm	R:	Reach from swing center
Shoe:	600 Grouser shoe	H:	Bucket hook height
Bucket:	1.1 m^3	W:	Lifting capacity

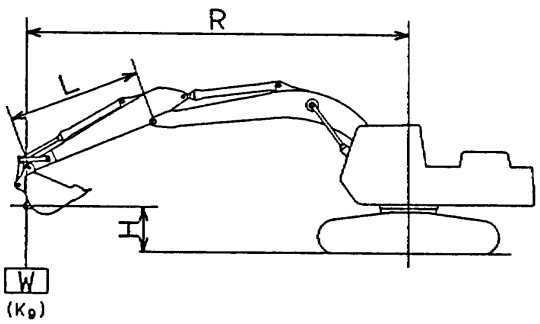

We: Frontal rating load

Ws: Lateral rating load

MAX: Rating load at height point H and at maximum working reach

(Maximum working reach: 9.6m) (Units: kg)

R \ H		Max W	Max R (m)	9 m	8 m	7 m	6 m	5 m	4 m	3 m	2 m
7 m	We	3100 *	8.13		3410 *						
	Ws	3100 *	8.13		3410 *						
6 m	We	3070 *	8.68		4450 *						
	Ws	3070 *	8.68		4450 *						
5 m	We	3100 *	9.09	3360 *	5220 *	6040 *					
	Ws	3100 *	9.09	3360 *	4540	5750					
4 m	We	3170 *	9.37	4260 *	6040 *	6650 *	7240 *				
	Ws	3170 *	9.37	3570	4420	5560	7190				
3 m	We	3310 *	9.54	4990 *	6610 *	7230 *	8130 *	9500 *	11820 *	16460 *	
	Ws	3120	9.54	3480	4280	5350	6870	9200	11820 *	16460 *	
2 m	We	3500 *	9.6	5370	6520	7830 *	9020 *	10890 *	14110 *	9780 *	
	Ws	3020	9.6	3390	4140	5140	6550	8390	12330	9780 *	
1 m	We	3780 *	9.55	5270	6370	7890	9810 *	12040 *	15790 *	7410 *	
	Ws	2980	9.55	3300	4000	4950	6270	8260	11660	7410 *	
0 m	We	4160 *	9.39	5190	6250	7720	9870	12820 *	16220 *	8000 *	4410 *
	Ws	3010	9.39	3230	3890	4790	6050	7950	11250	8000 *	4410 *
-1 m	We	4690 *	9.13	5140	6160	7590	9700	13170	16390 *	9550 *	6460 *
	Ws	3110	9.13	3180	3810	4670	5890	7760	11040	9550 *	6460 *
-2 m	We	5360	8.73		6120	7510	9600	13060	16670 *	11630 *	8570 *
	Ws	3310	8.73		3770	4610	5800	7660	10960	11630 *	8570 *
-3 m	We	5910	8.2		6120	7500	9570	12720 *	15910 *	14200 *	10860 *
	Ws	3650	8.2		3770	4590	5780	7650	10990	14200 *	10860 *
-4 m	We	6820	7.49			7550	9620	11840 *	14640 *	17420 *	13460 *
	Ws	4210	7.49			4640	5820	7710	11100	17420 *	13460 *
-5 m	We	7430 *	6.55				8430 *	10350 *	12720 *	15960 *	16570 *
	Ws	5230	6.55				5950	7850	11300	15960 *	16570 *
-6 m	We	7350 *	5.26					7850 *	9800 *	12080 *	
	Ws	7350 *	5.26					7850 *	9800 *	12080 *	

*Hydraulic pressure factor: 87.0%. Without asterisk: Stability factor: 75.0%

https://truckmanualshub.com/

Lifting Position

SH290-3 Lifting Position

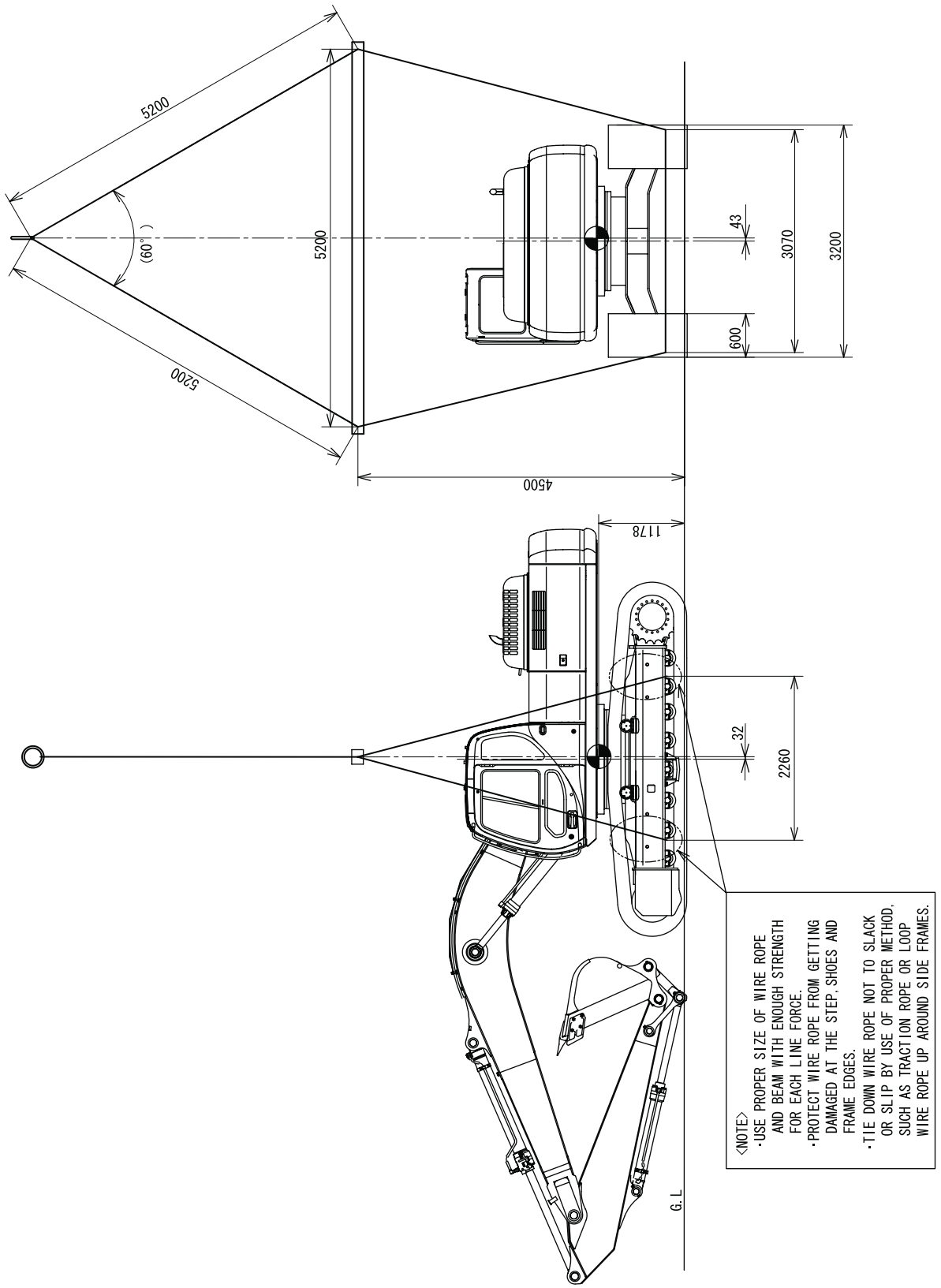

https://truckmanualshub.com/

Hydraulic Pump Control Curve

P-Q Line Diagram of Hydraulic Pump

Pressure in this curve shows total pressure (P_1+P_2) or Pf+Pr
(consumption Torque for Pilot Gear Pump is not included in Torque line graph)
I : Current valve for electromagnetic proportional pressure reducing valve
Pf : Power shift control pressure (at reference value)

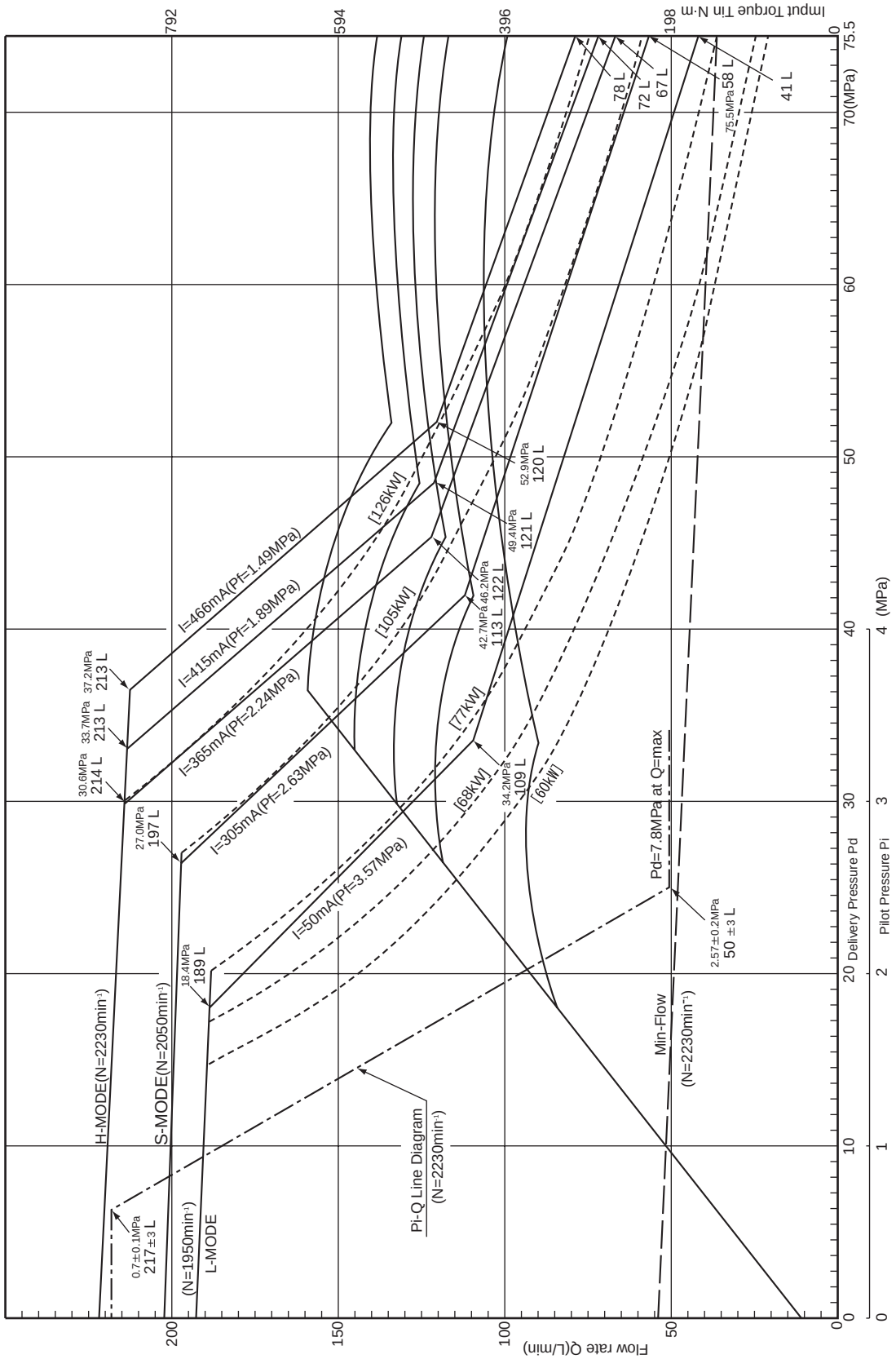

https://truckmanualshub.com/

Process Block Diagram for Lower Equipment

1. This diagram shows the disassembling procedure. For reassembling, the procedures are reversed.
2. For details on the topics in the square-cornered blocks ( ), refer to the disassembly and reassembly of each device.
3. For details on the topics in the blocks with rounded corners ( ), refer to the instructions for disassembly and maintenance of each device.

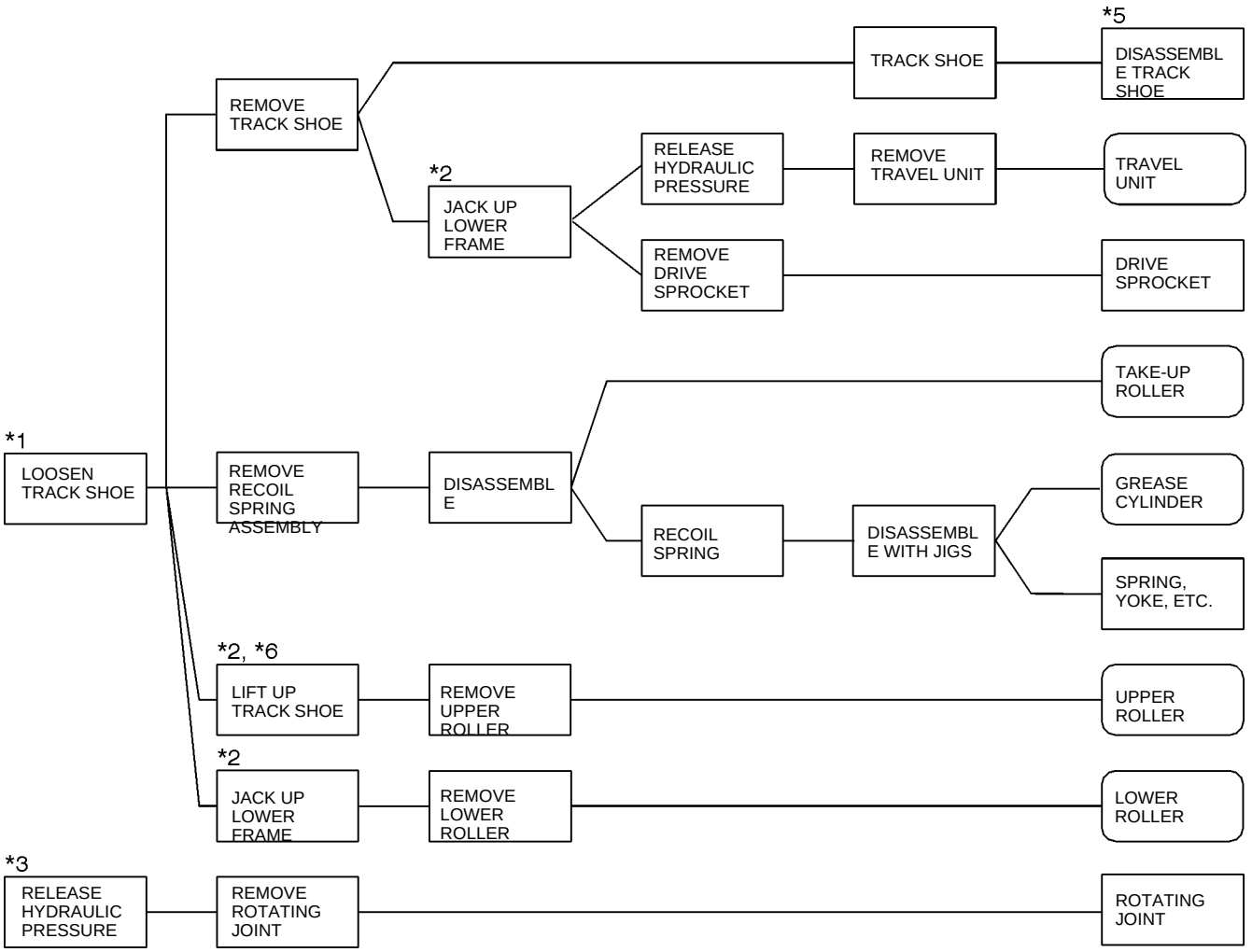

Items marked with an asterisk (*) in this drawing require the following preparation:

1. Refer to *Track shoe tension adjustment* (Instruction Manual).
2. Prepare protection blocks.
3. Refer to the *procedures for bleeding the hydraulic pressure*.
4. Prepare jigs for recoil spring disassembly and reassembly. Be sure you know how to use them.
5. Prepare a press for pulling out and press fitting track pins of track shoe.
6. Prepare a hydraulic jack.

https://truckmanualshub.com/

Tightening Torque for Major Parts

1. Tightening bolts and nuts

- Tighten bolts and nuts right to left and up and down alternatively so that tightening force is applied evenly.

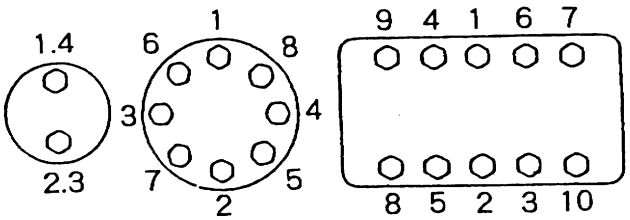

- For bolts on important areas, apply engine oil to the threaded portion so that tightening force is applied evenly without unnecessary engagement on the thread.
- For bolts and nuts in the areas that it is difficult to check from outside or bolts and nuts in important areas, secure them using wires, cotter pins or folding washers.

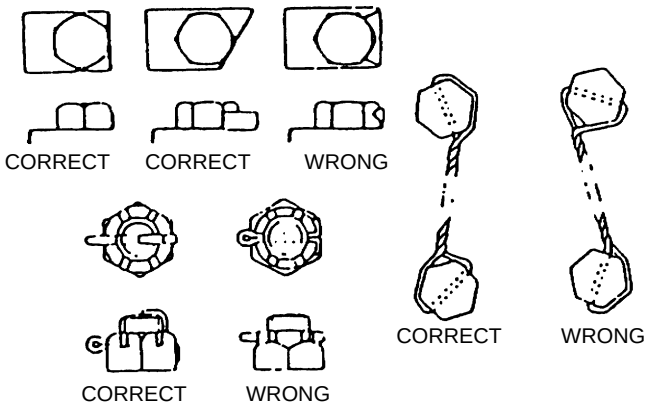

- Clean bolts to which Loctite was applied (identified as bolts with white substances when removed) with cleaning solution and dry them. After that, apply Loctite two or three drops to the threaded portion of the bolts and fasten them.

Inspection and Maintenance

Retightening bolts and nuts

1st Time Maintenance: First 50 hours for brand new machine - Maintenance Interval: Every 250 hours

Tighten and retighten bolts and nuts in each area according to the table below. Check bolts and nuts for looseness or falling prior to routine operation. If they are loosened, retighten them. If they are lost, reinstall them.

When using a brand new machine, inspect and retighten bolts and nuts at the first 50 hours and every 250 hours thereafter.

https://truckmanualshub.com/

2. Retightening Torque Table

No.	Tightening Point	Bolt Diameter	Wrench	(N • m)
(1)	Travel Unit	M24	36 mm	900 to 1051
(2)	Drive Sprocket	M20	30 mm	521 to 608
(3)	Track Guard	M24	36 mm	902 to 1049
(4)	Take-up Roller	M16	24 mm	267 to 312
(5)	Grease Cylinder	M16	24 mm	267 to 312
(6)	Upper (Carrier) Roller	M20	30 mm	521 to 608
(7)	Lower (Track) Roller	M24	36 mm	902 to 1049
8	Shoe Bolt	M24	36 mm	1236 to 1510
9	Counterweight	M30	46 mm	1059 to1235
10	Turntable Bearing (Lower Frame)	M24	36 mm	784 to 914
11	Turntable Bearing (Swing Frame)	M24	36 mm	784 to 914
(12)	Swing Unit	M24	36 mm	784 to 914
(13)	Engine (Engine Mount)	M16	24 mm	265 to 313
(14)	Engine Bracket	M10	17 mm	64 to 73
(15)	Radiator	M16	24 mm	147 to 177
(16) (17)	Hydraulic Pump	M10 M20	17 mm Hex. Socket	64 to 73 367 to 496
(18)	Hydraulic Oil Tank	M16	24 mm	233 to 276
(19)	Fuel Tank	M16	24 mm	233 to 276
(20)	Control Valve	M16	24 mm	267 to 312
(21)	Rotating Joint	M12	19 mm	109 to 127
22	Cab	M16	24 mm	78 to 80
23	Battery	M10	17 mm	20 to 29

NOTE: Use Loctite No. 262 (adhesive) equivalent on those parts with parenthesis and tighten to the torque listed in the above table.
Tightening torque is N•m÷9.8 = kgf•m.

The tightening torque for the bolts and nuts not listed above are as follows:

Bolt Diameter (size)			M6	M8	M10	M12	M14	M16	M18	M20
Hexagon Bolt	Wrench	(mm)	10	13	17	19	22	24	27	30
	Tightening Torque	(N•m)	6.9	19.6	39.2	58.8	98.1	156.9	196.1	294.2
Hexagon Socket Head Bolt	Wrench	(mm)	5	6	8	10	12	14	14	17
	Tightening Torque	(N•m)	8.8	21.6	42.1	78.5	117.7	176.5	245.2	243.2

https://truckmanualshub.com/

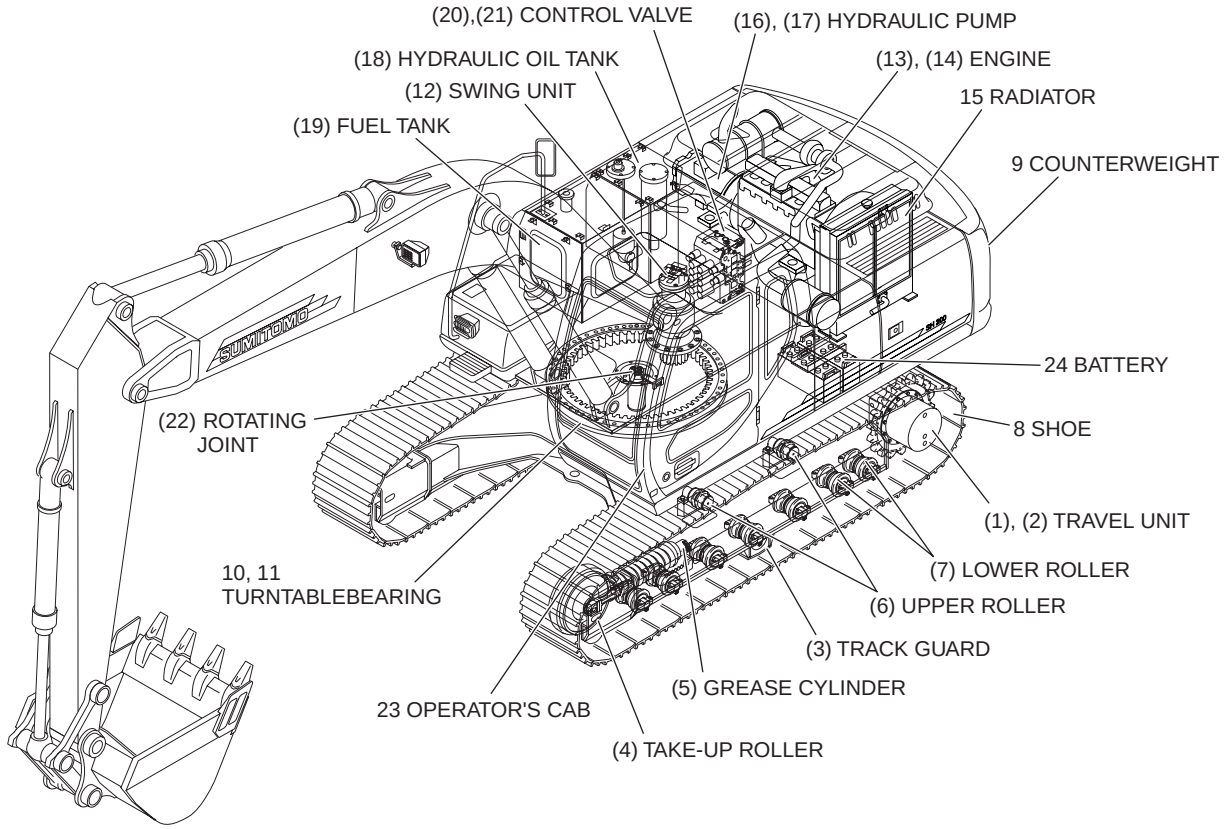

(1),(2)

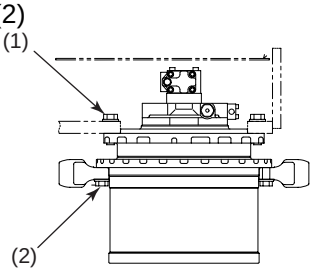

(3)

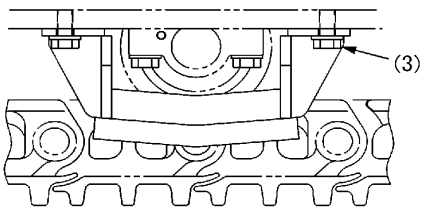

(4),(5),(6),(7),8

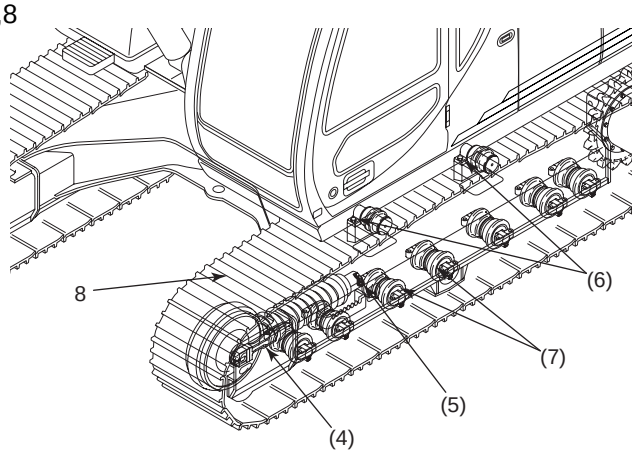

9

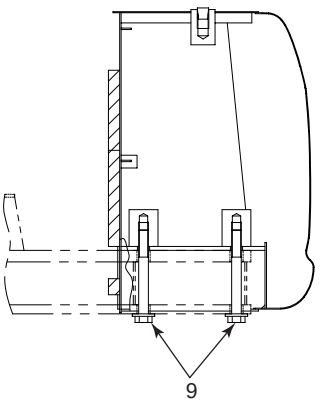

https://truckmanualshub.com/

10,11,(12)

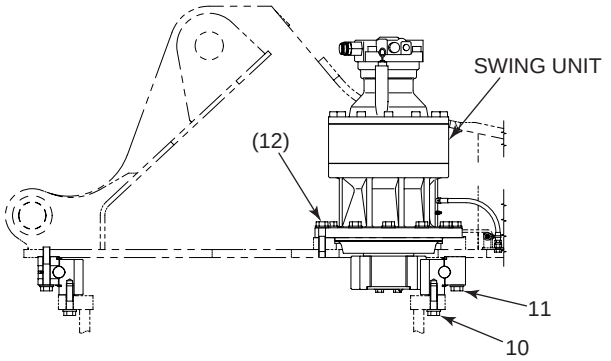

(13),(14)

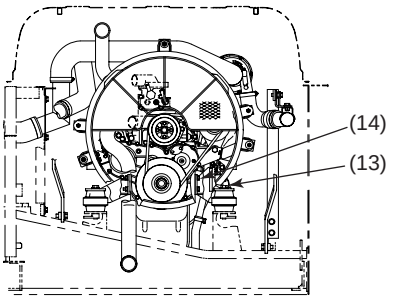

(15)

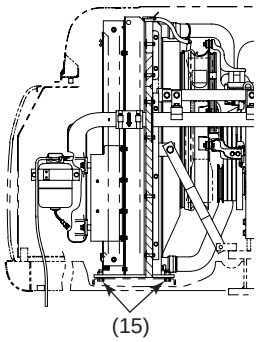

(16),(17)

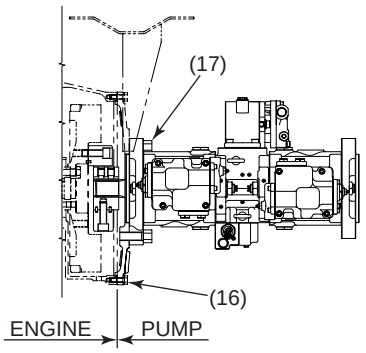

(18)

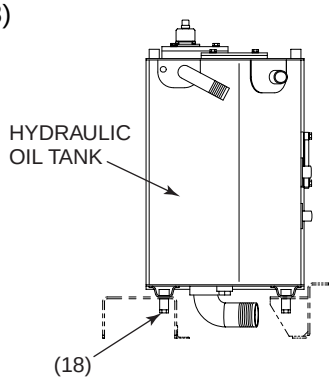

(19)

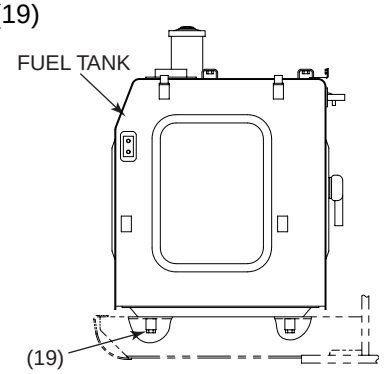

(20)

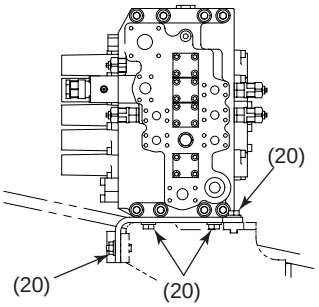

(21)

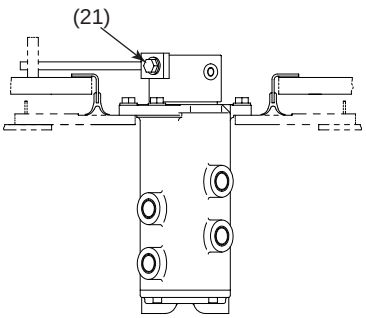

22

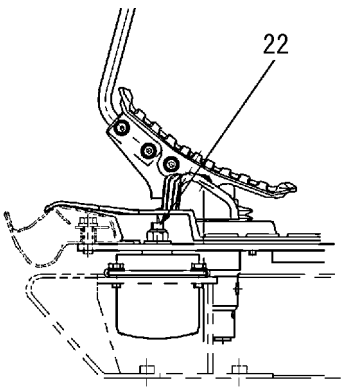

23

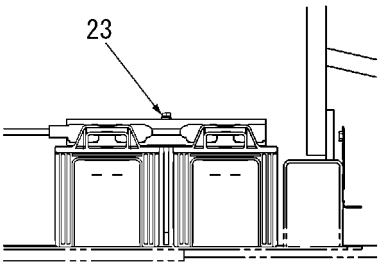

https://truckmanualshub.com/

Lower Mechanism

Track Shoe

SYMBOL	PART NAME
1	GROUSER SHOE
2	TRACK LINK ASSEMBLY
3	TRACK LINK (RIGHT)
4	TRACK LINK(LEFT)
5	MASTER LINK (RIGHT)
6	MASTER LINK(LEFT)
7	TRACK BUSHING
8	TRACK PIN
9	MASTER BUSHING
10	MASTER PIN
11	COLLAR
12	LOCKING PIN
13	SEAL
14	SHOE PLATE
15	SHOE BOLT
16	SHOE NUT

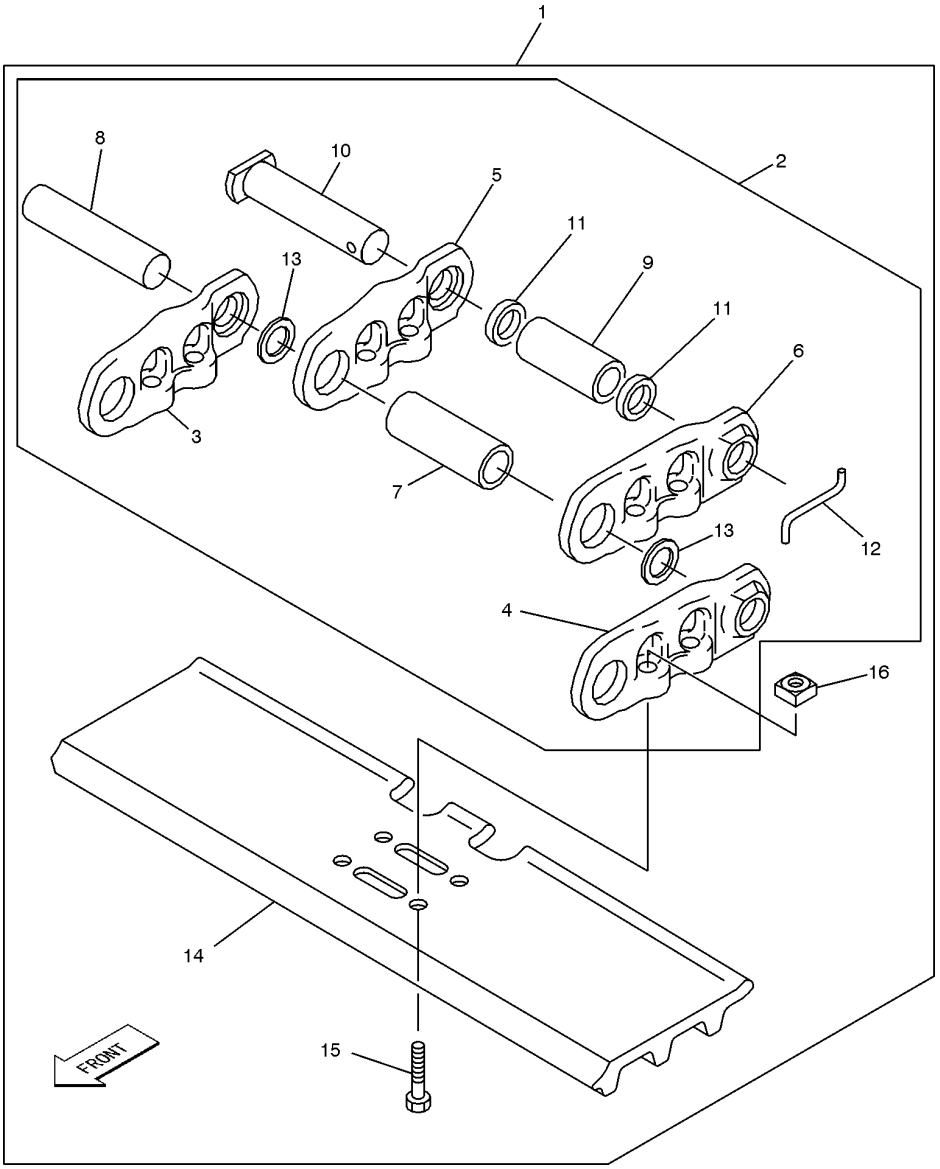

https://truckmanualshub.com/

1. Disassembly

1	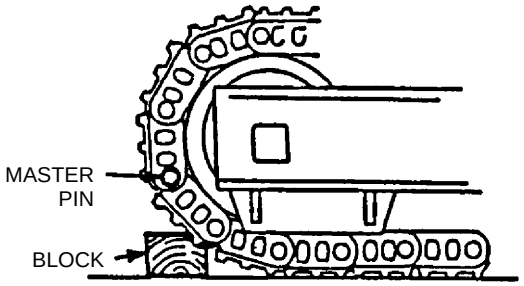	Position the master pin of the track shoe as shown in the drawing on the left. Place track shoe support blocks as shown in the drawing.
2	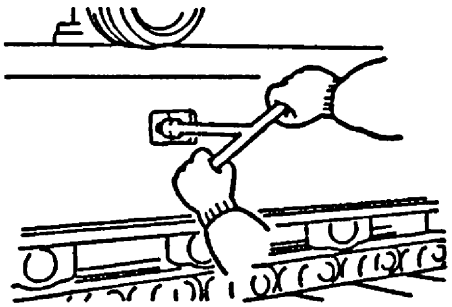	Loosen the track shoe. **CAUTION:** Discharge the grease from the grease cylinder gradually by loosening the cylinder check valve. Loosen the check valve slowly and carefully. Stop loosening when the grease starts to comes out. (If the valve is loosened too much, the extremely high pressure inside may cause grease to erupt or the plug to pop out.)
3	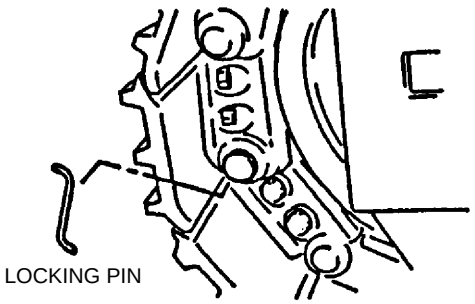	Separate the track shoe. • Remove the locking pin. • Pull out the master pin using a jig. • Remove the track shoe supporting blocks.
4	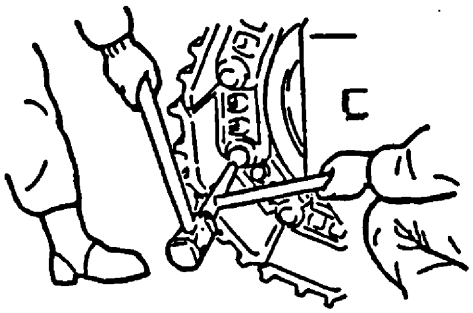	
5	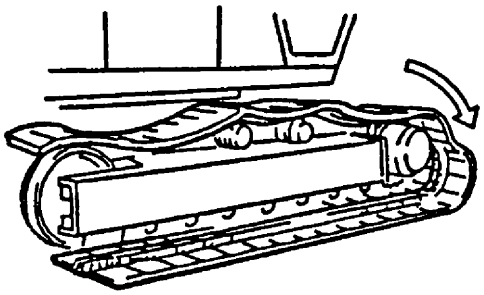	Lift one side of the lower frame about 20 cm and hold it there. **CAUTION:** Place protection blocks under the lower frame and secure them. Move the travel unit as shown in the drawing to the left to remove the track shoe.

https://truckmanualshub.com/

2. Assembly

1	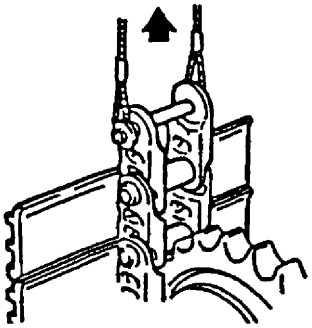	Lift the track shoe and align it to the drive sprocket.
2	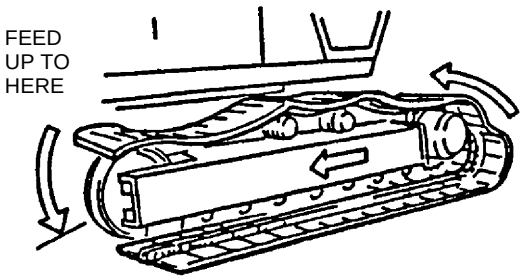	Feed the track shoe toward the take-up roller by moving the travel unit slowly as shown in the drawing to the left. **NOTE:** Be careful. Sudden and quick movements may cause the track shoe to jump and run off. (During work, lift the roller shoe using the steel bar when crossing over the upper roller.) Remove protection blocks and lower the lower frame.
3	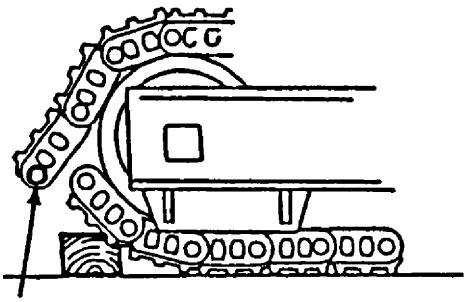	Wind the end of the track shoe onto the take-up roller of the track shoe. Connect the track shoe. • Place the track shoe support blocks. • Insert the master pin using a jig. • Insert a locking pin.
4	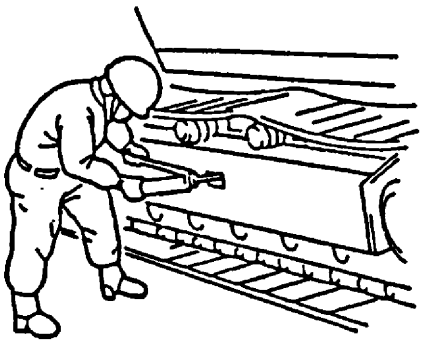	Adjust the track shoe to the specified tension. • Fasten the check valve to the original position. • Fill the grease cylinder with grease, while observing the track shoe tension. **NOTE:** For the track shoe tension adjustment, refer to *Inspection and Maintenance* in the *Instruction Manual*.

https://truckmanualshub.com/

3. Track link changing procedure

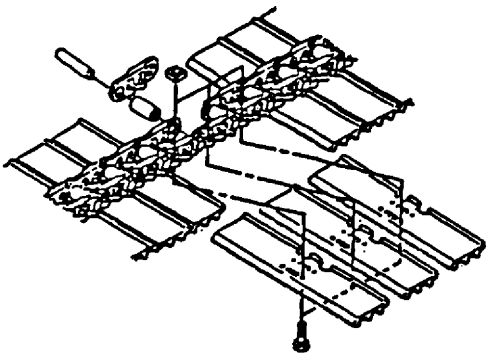

1. Remove the track shoe.
2. Remove bolts, nuts and shoe plates for three sections, including the sections on both sides of the damaged link section.
3. Pull the track pin using a jig.
4. Remove the damaged link.
5. Align a new track link.
6. Press fit the track pin using a jig.
7. Align the shoe plate and tighten the bolts to the specified torque.
8. Install the track shoe.

https://truckmanualshub.com/

Lower Mechanism

Travel Unit

SYMBOL	PART NAME
1	TRAVEL MOTOR
2	SEMS BOLT
3	LOCTITE 262
4	DRIVE SPROCKET
5	SEMS BOLT

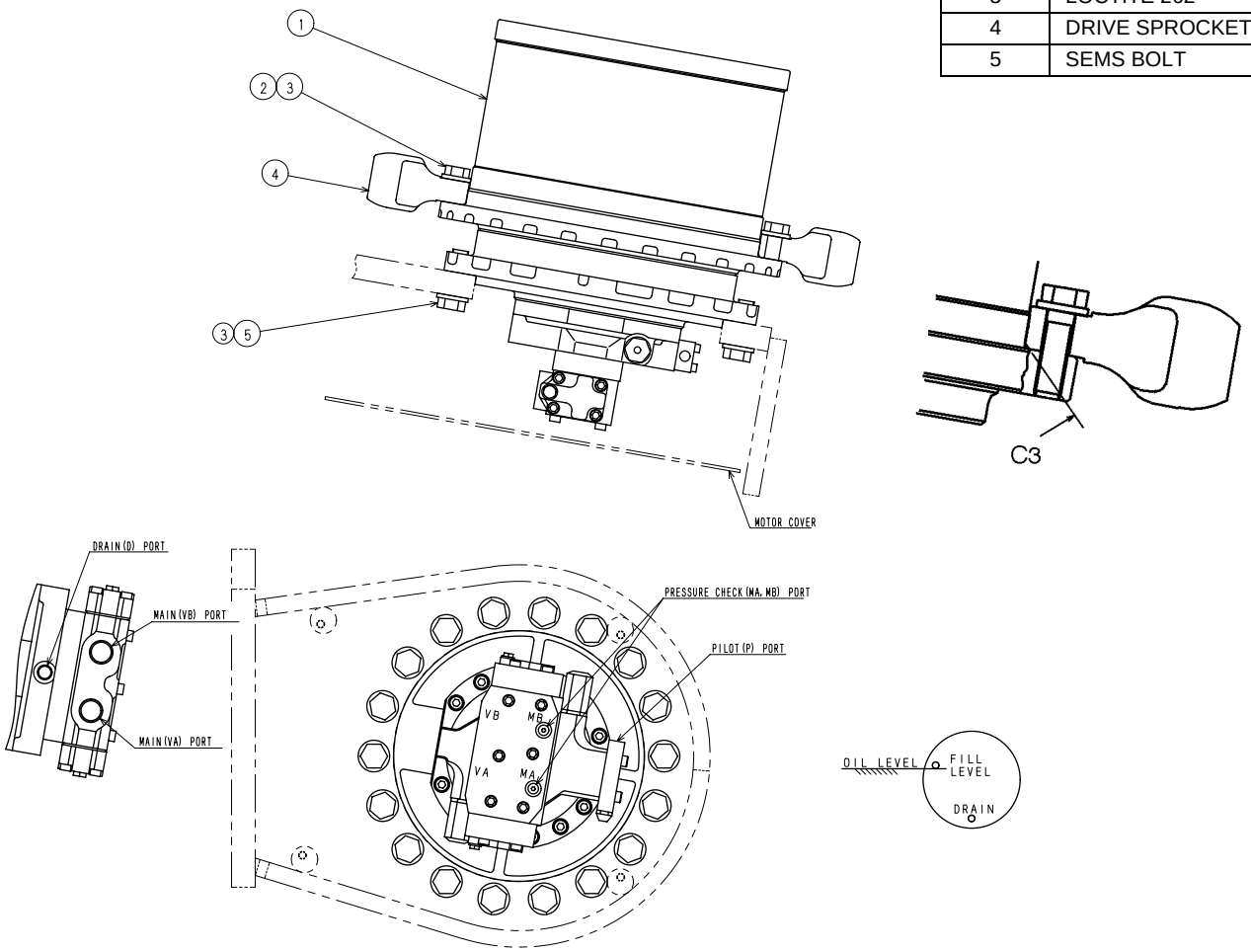

1. Precautions when assembling

1. Be careful to install the drive sprocket so that it is oriented correctly. (The chamfered side marked *C3* should be installed first on the motor.)
2. After degreasing, apply Loctite No. 262 to the threaded part of the sems bolts (2), (5) shown in the drawing above and tighten it to the specified torque.
3. Bleed air if the device will be run after the reassembly. (Fill hydraulic oil through the drain port (T), attach the hoses and run the motor slowly in one direction for a while.)
4. The reduction gear oil should reach the bottom side of the line on the oil level port (located at the center of the reduction gear cover).
5. To change the reduction gear oil, remove the drain plug on the reduction gear side, drain the oil, and refill the oil up to the line on the oil level port.

https://truckmanualshub.com/

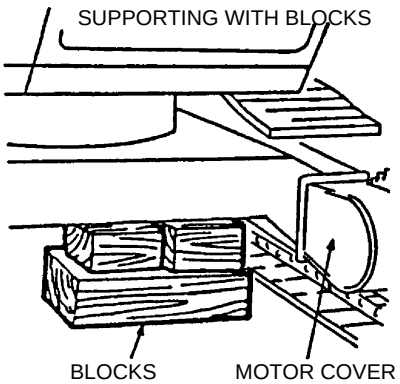

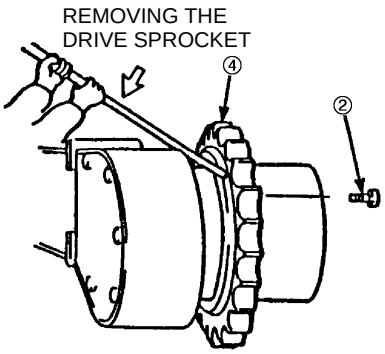

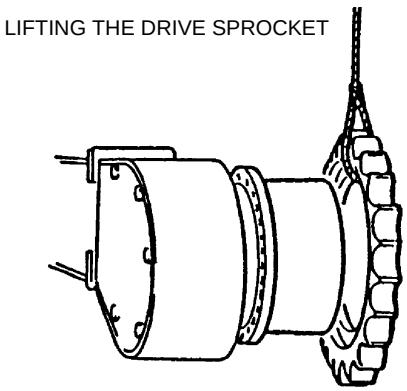

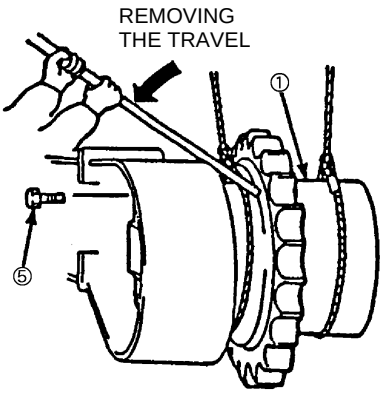

2. Disassembly

1. Remove track shoe.
   (See *Track Shoe, Disassembly.*)
2. Lift one side of lower frame about 20 cm and hold it there.
   (Lift it high enough for the drive sprocket to be removed from the track shoe.)
3. Place protection blocks under lower frame and secure them.
4. Stop engine and release pressure in hydraulic circuits.
   (See the *procedures for bleeding the hydraulic pressure* in *Precautions for Use* in *Chapter 0.*
5. Remove motor cover.
6. Remove drive sprocket mounting bolts (2).
7. Separate drive sprocket from mounting flange on travel unit using a steel bar.
8. Attach a lifting tool onto drive sprocket.
9. Using the lifting tool, lift the drive sprocket and remove it from the travel unit.
10. Attach marking tags to the travel motor hoses to tell them apart when they are reconnected.
11. Remove the hoses and put bull plugs or caps on them to keep out dust.
12. Attach the lifting tool onto the travel unit.
    NOTE: Lift the travel unit until the wire on the lifting tool is tense.
13. Remove travel unit mounting bolts (5).
14. Remove travel unit using a steel bar.

https://truckmanualshub.com/

3. Assembling

BOLT TIGHTENING ORDER:
TIGHTEN THE FOUR NUMBERED BOLTS EVENLY IN THE SEQUENCE SHOWN BELOW, AND THEN FASTEN THE REMAINING BOLTS.

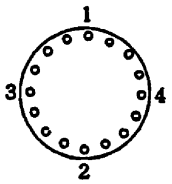

1. Lift travel unit and align it so that it fits on the frame. (Be careful of the fitting angles.)
2. Apply Loctite No. 262 to threads of travel unit mounting bolts (5) and finger tighten all mounting bolts.
3. Tighten travel unit mounting bolts (5) to the specified torque alternatively, up/down and left/right, so that the tightening force acts on them equally. (Refer to *Tightening torque* in the *Maintenance Instructions*.)
4. Lift drive sprocket and confirm that it is oriented correctly.
5. Align drive sprocket to mounting flange on the travel unit using a steel bar.
6. Apply Loctite No. 262 to threads of drive sprocket mounting bolts (2), and finger tighten all mounting bolts.
7. Tighten drive sprocket mounting bolts (2) to the specified torque alternatively, up/down and left/right, so that the tightening force acts on them equally. (Refer to *Tightening torque* in the *Maintenance Instructions*.)
8. Connect hoses to travel motor.
9. Check reduction gear oil level. Fill if necessary.
10. Bleed air from travel motor. (Fill motor with hydraulic oil)
11. Remove protection blocks.
12. Lower the lower frame on the track shoe.
13. Install track shoe. (See *Track Shoe, Assembly*)
14. Check to ensure that there is no oil leakage. If leakage is found, take appropriate measures.
15. Install motor cover.

https://truckmanualshub.com/

Lower Mechanism

Recoil Spring Assembly

SYMBOL	PART NAME
1	YOKE
2	SEMS BOLT
3	THREADED ROD
4	CASTLE NUT
5	SPRING PIN
6	SPRING
7	GREASE CYLINDER ASSEMBLY
8	O-RING
9	BACKUP RING
10	CHECK VALVE
11	DUST SEAL
12	PISTON ROD
13	GREASE CYLINDER
14	BRACKET
15	HIGH-STRENGTH BOLT
16	SPRING WASHER
17	SEMS BOLT

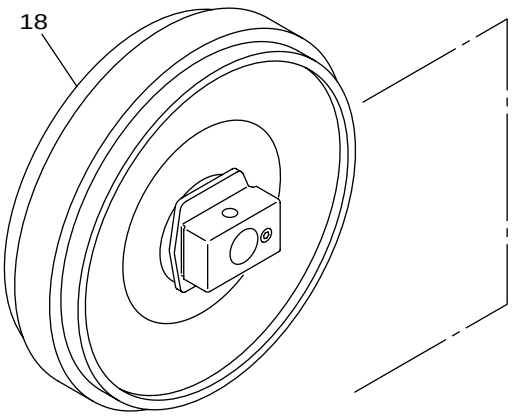

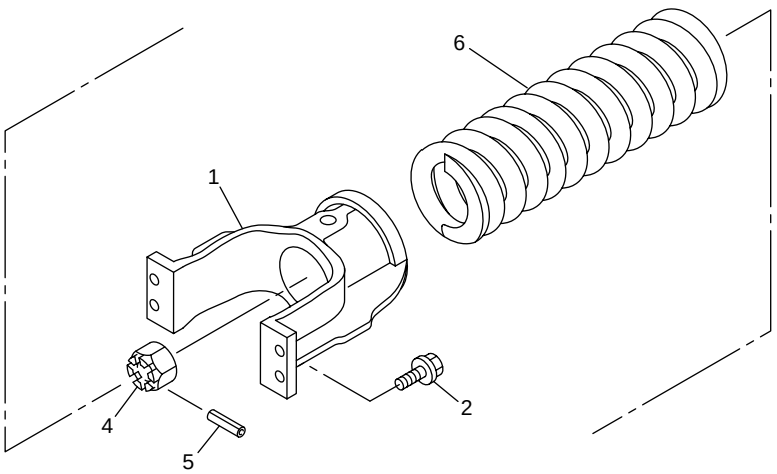

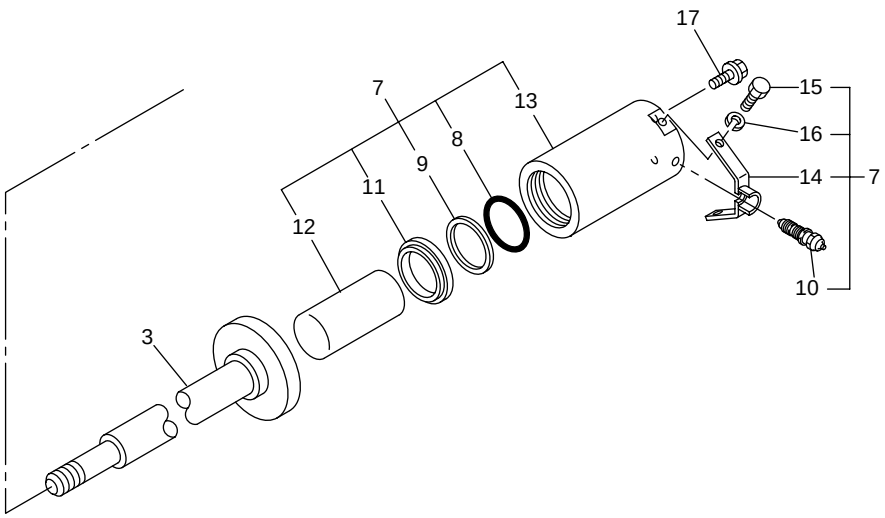

https://truckmanualshub.com/

Lower Mechanism

PULLING OUT THE ASSEMBLY

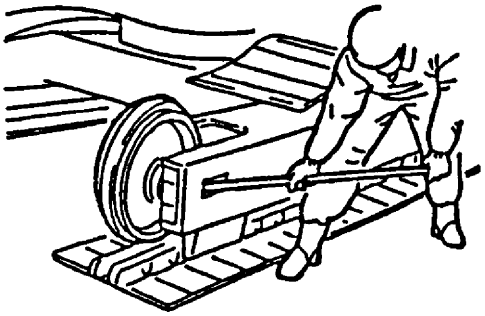

LIFTING THE ASSEMBLY

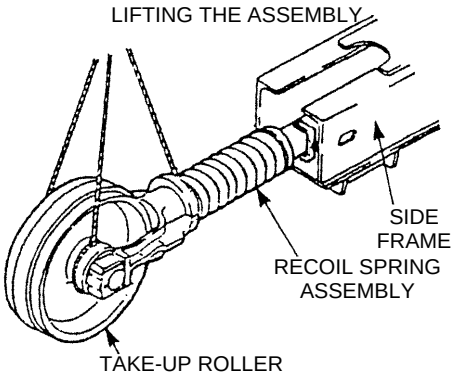

PLACING THE ASSEMBLY ON BLOCKS

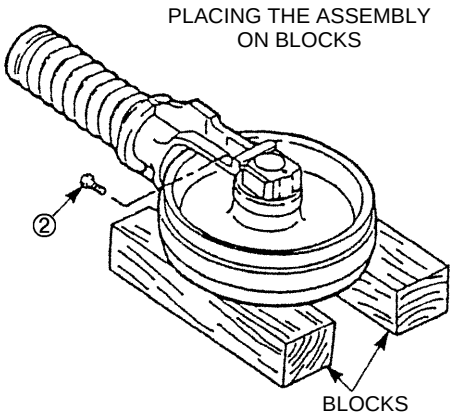

1. Disassembly

1. Remove the track shoe. (See *Track Shoe, Disassembly.*)
2. Pull out the recoil spring assembly from the side frame using a steel bar.
3. Attach a lifting tool to the recoil spring assembly.
4. Lift the recoil spring assembly out from the side frame using the lifting tool.
5. Place the recoil spring assembly on blocks.
6. Remove the take-up roller mounting bolts (2) to separate the take-up roller and coil spring.
7. Prepare hydraulic jack and jigs for recoil spring disassembling and reassembling.
8. Set recoil spring in jig as shown in the drawing to the left.
9. Raise the hydraulic jack to compress the spring.
10. Pull out the spring pin (5) and remove the castle nut (4).
11. Lower the hydraulic jack to restore the spring to its original position.
12. Take the recoil spring components out from the jig in the following order: yoke (1), spring (6) .
13. Remove the grease cylinder mounting bolts (17) them, remove the grease cylinder from the side frame.

2. Assembly

1. Apply Loctite No.262 to the grease cylinder mounting bolts (17).
2. Tighten the grease cylinder mounting bolts (17) according as the specified torque on the side frame.
   NOTE: Set it so that the grease cylinder check valve faces outward.
3. Set the recoil spring components in the recoil spring jig in the following order: spring (6) and yoke (1).
4. Raise the hydraulic jack to compress the spring.
5. Attach the castle nut (4) and lock it with spring pin (5).
6. Lower the hydraulic jack to restore the spring to the original position.
7. Remove the recoil spring from the jig.
8. Apply Loctite No. 262 to the take-up roller mounting bolts (2).
9. Tighten the take-up roller mounting bolts (2) to the specified torque to reassemble the take-up roller and recoil spring.

https://truckmanualshub.com/

Lower Mechanism

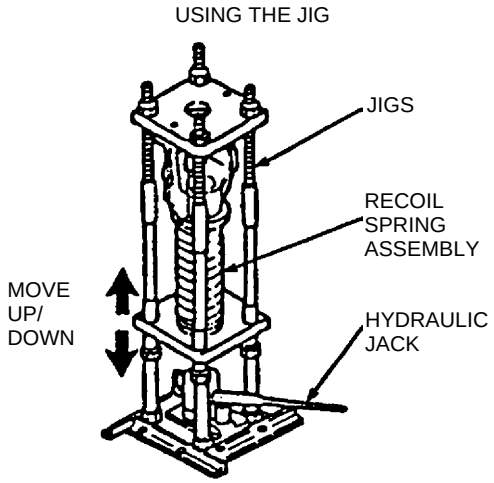

10. Attach lifting tool to recoil spring assembly.
11. Place recoil spring assembly on side frame using a lifting tool.
12. Set the recoil spring assembly in the side frame using a steel bar.
13. Install the track shoe. (See *Track Shoe, Assembly.*)

⚠	**CAUTION:** A jig should be used for disassembly and reassembly because the coil spring is compressed.

https://truckmanualshub.com/

Lower Mechanism

First Edition : 03/2005

Upper Roller

SYMBOL	PART NAME
1	LOWER ROLLER
2	SEMS BOLT
3	LOCTITE 262
4	SHIM

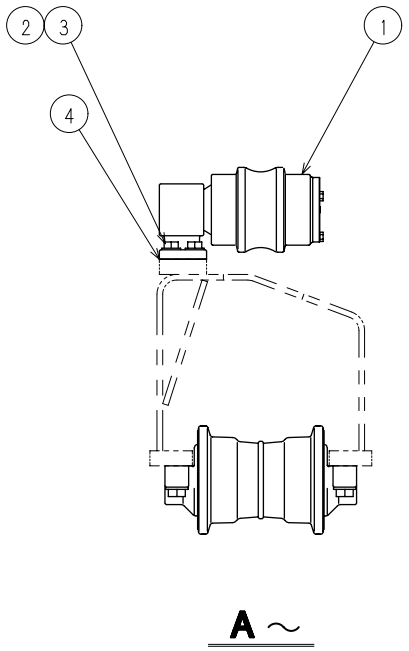

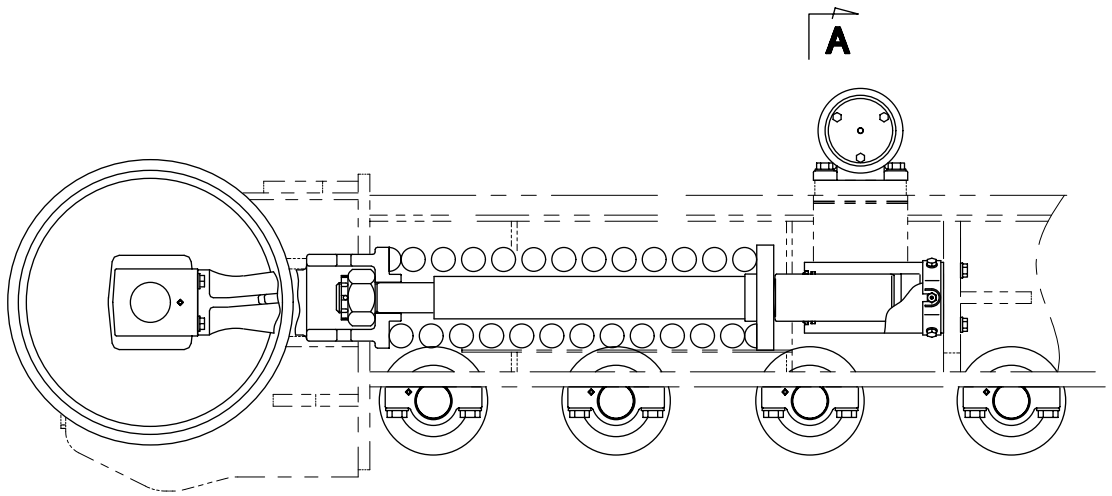

https://truckmanualshub.com/

Lower Mechanism

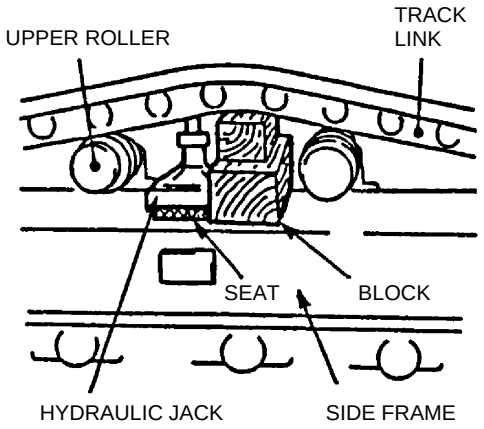

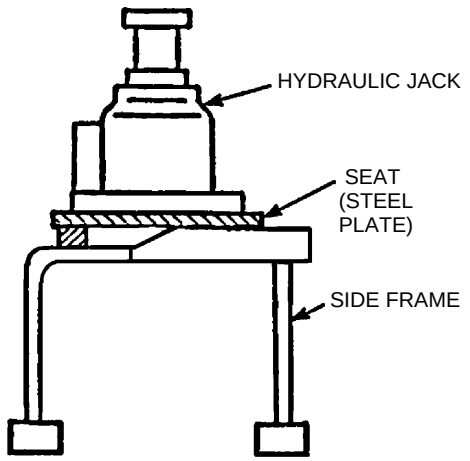

1. Disassembly

1. Loosen the track shoe. (See *Track shoe, Disassembly*)
2. Place the hydraulic jack as shown in the drawing to the left.
3. Using the hydraulic jack, lift the track shoe high enough that the upper roller can be removed.
4. Place blocks between the track shoe and side frame and secure them.
5. Loosen the upper roller mounting bolt (2) slightly (so that the bolt head comes off 2 to 4 mm).
6. Hit the upper roller gently with a copper hammer and detach it from the side frame.
7. Attach lifting tools on the upper roller.
8. Remove the upper roller by removing mounting bolts (2) completely while lifting the upper roller using the lifting tools.

   NOTE: Be careful to keep fingers and hands clear.

2. Assembly

1. Apply Loctite No. 262 to the upper roller mounting bolts (2).
2. Finger tighten all upper roller mounting bolts (2) while lifting the upper roller.

   NOTE: Adjust the position of the upper roller if necessary, using shims (4) so that the track links are evenly supported.
3. Tighten the upper roller mounting bolts (2) to the specified torque.
4. Remove the blocks and jack.
5. Fill grease into the grease cylinder and give the track shoe the specified tension.
   (See *Track shoe, Assembly*)

https://truckmanualshub.com/

Lower Mechanism

Lower Roller

SYMBOL	PART NAME
1	LOWER ROLLER
2	SEMS BOLT
3	LOCTITE 262

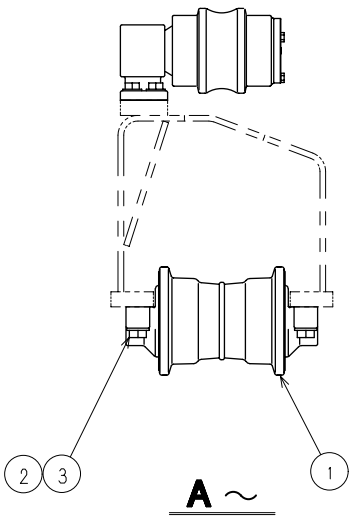

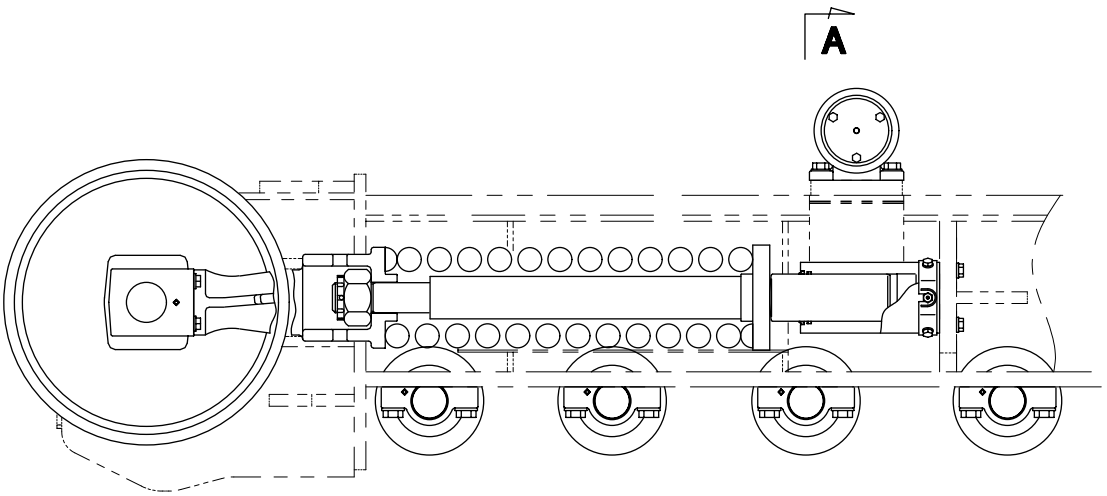

https://truckmanualshub.com/

Lower Mechanism

SUPPORTING THE FRAME WITH BLOCK

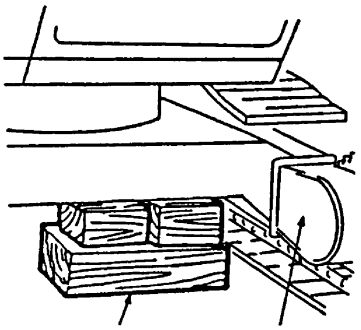

1. Disassembly

1. Loosen the track shoe. (See *Track Shoe*, *Disassembly*)
2. Remove the lower roller mounting bolts (2).
3. Lift one side of the lower frame about 20 cm and hold it there. (Lift it high enough that the lower roller can be removed from the track shoe.)
4. Place protection blocks under the lower frame and secure them.
5. Remove the lower roller from the track shoe.

2. Assembly

1. Place the lower roller on the track links with its fitting surface up.
2. Remove the protection blocks.
3. Lower the frame slowly and gradually to where the bolts can be installed.

   NOTE: Be careful to keep fingers and hands clear. (Keep the frame raised about 5 to 10 mm, instead of lowering it completely.)

PLACING THE LOWER ROLLER

FITTING SURFACE

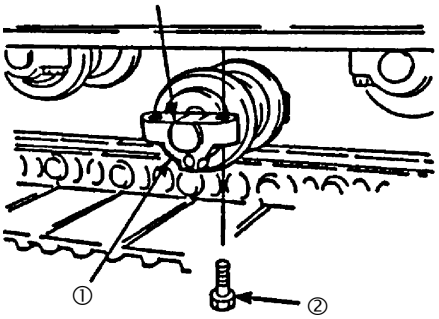

4. Align the lower roller to the frame fitting position.
5. Apply Loctite No. 262 to the lower roller mounting bolts (2).
6. Tighten the lower roller mounting bolts (2) to the specified torque.
7. Fill the grease cylinder with grease to give the track motor cover shoe the specified tension. (See *Track shoe*, *Assembly*)

https://truckmanualshub.com/

Lower Mechanism

Rotating Joint

SYMBOL	PART NAME
1	SEMS BOLT
2	LOCK BAR
3	ROTATING JOINT ASSEMBLY
4	HIGH STRENGTH BOLT
5	SEAL WASHER
6	SEAL CAP
7	RUBBER PACKING
8	SEAL RING

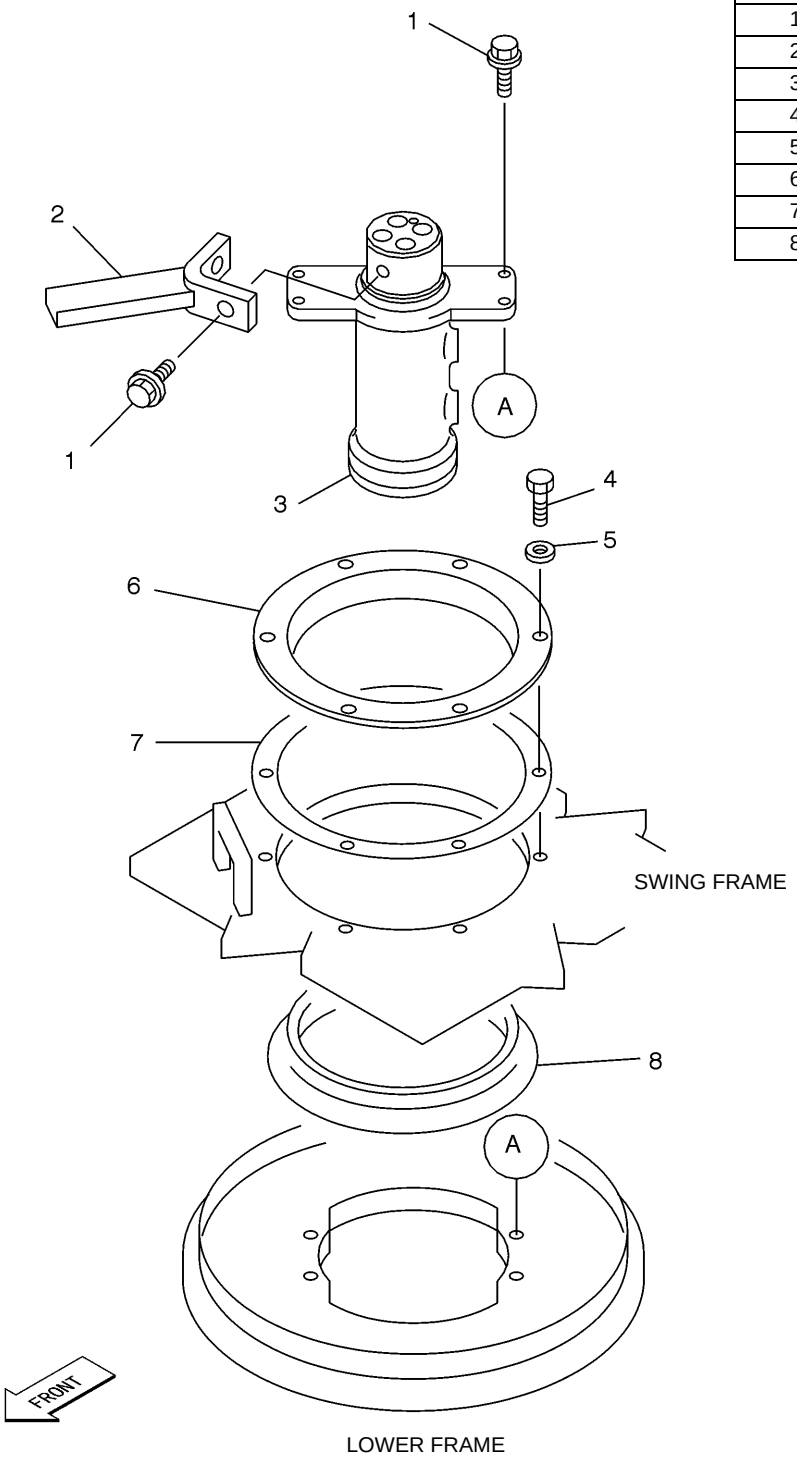

https://truckmanualshub.com/

Lower Mechanism

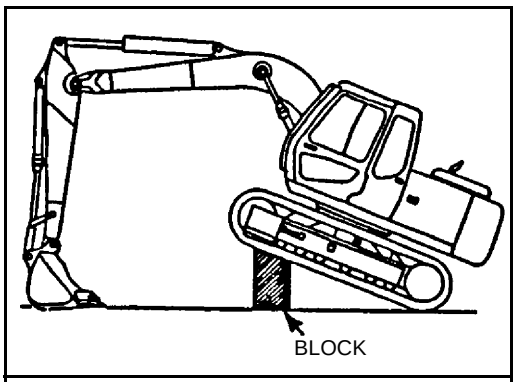

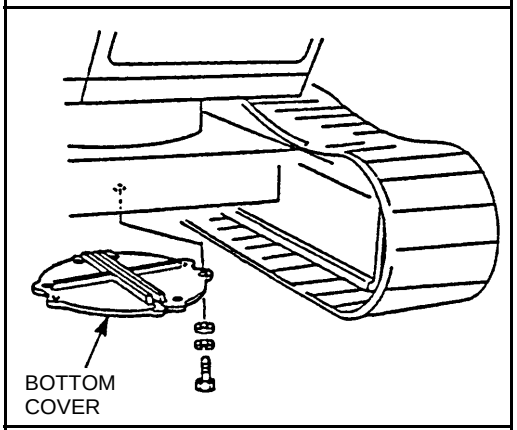

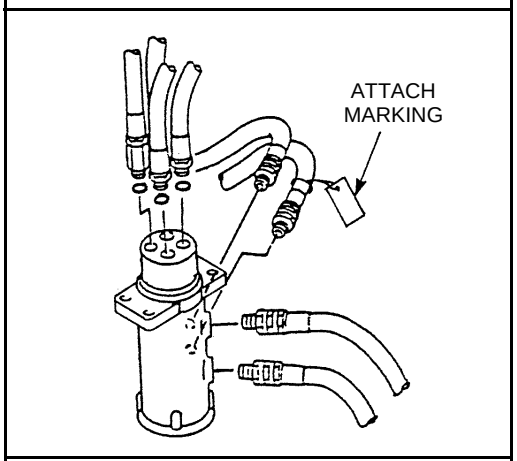

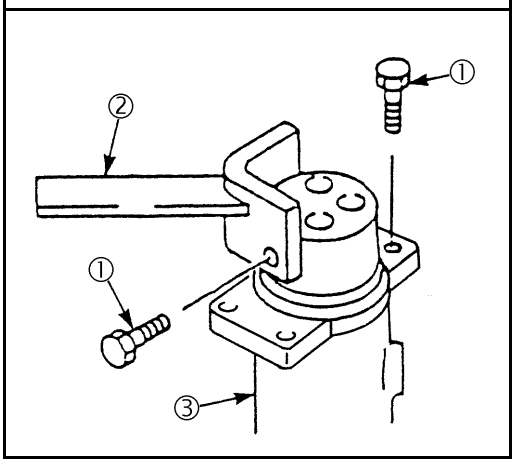

1. Disassembly

1. Jack up the body.
2. Stop the engine and release pressure in the hydraulic circuits. (Refer to the procedures for bleeding the hydraulic pressure in *Precautions for Use* in *Chapter 0*.)
3. Place protection blocks under the track shoe and secure them.
4. Remove the bottom cover.
5. Attach marking tags to the rotating joint hoses to tell them apart when they are reconnected.
6. Remove the hoses and put blank plugs or caps on them to keep out dust.
7. Remove the lock bar (2).
8. Remove the rotating joint mounting bolts (1).
9. Lift out the rotating joint.

2. Assembly

1. Align it so that it fits on the lower frame.
2. Tighten the rotating joint mounting bolts (1).
3. Apply Loctite No. 262 to the lock bar mounting bolts (1).
4. Tighten the lock bar mounting bolts (1) to the specified torque to install the lock bar (2). (See illustration.)
5. Connect the hoses.
6. Check to ensure that there is no oil leakage. If leakage is found, take appropriate measures.
7. Install the bottom cover.
8. Remove the blocks.
9. Lower the body.

https://truckmanualshub.com/

	290-5-02-01-24
Upper Mechanism	Page No. 1/ 2
	First Edition : 03/2005

Swing Unit

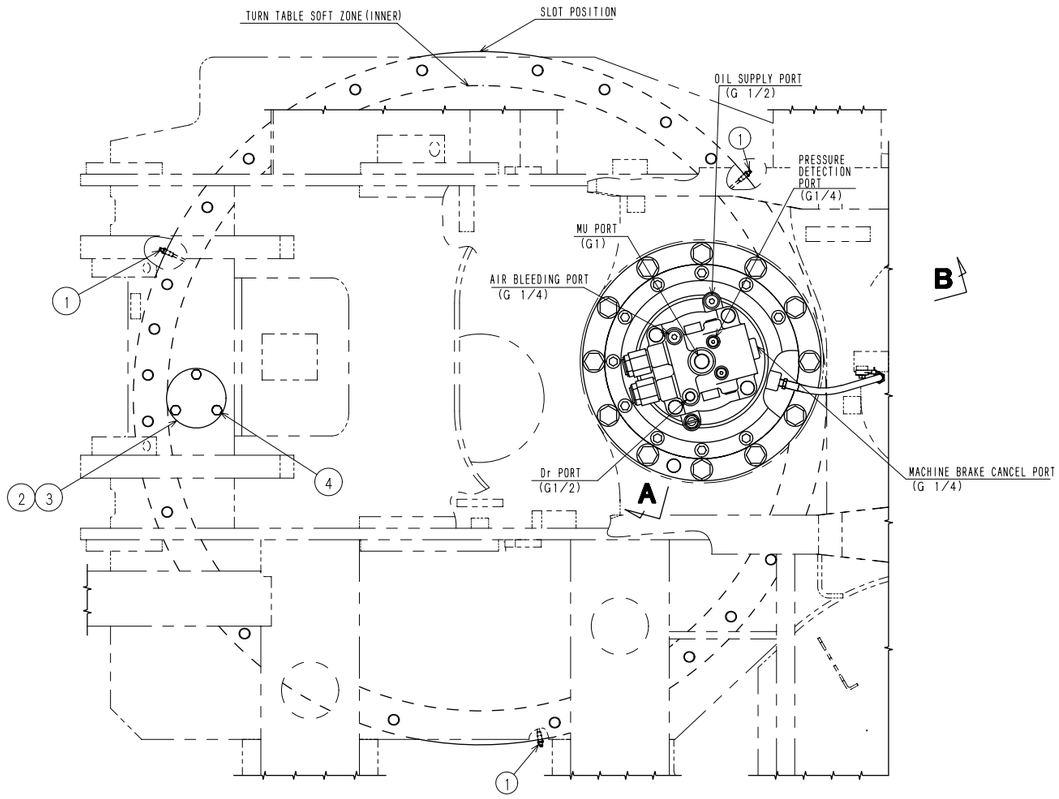

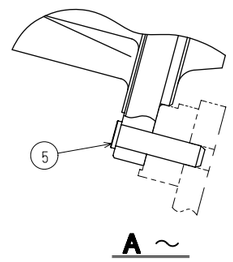

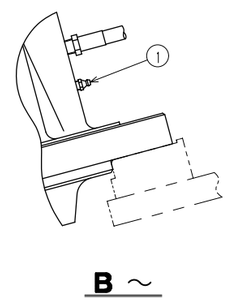

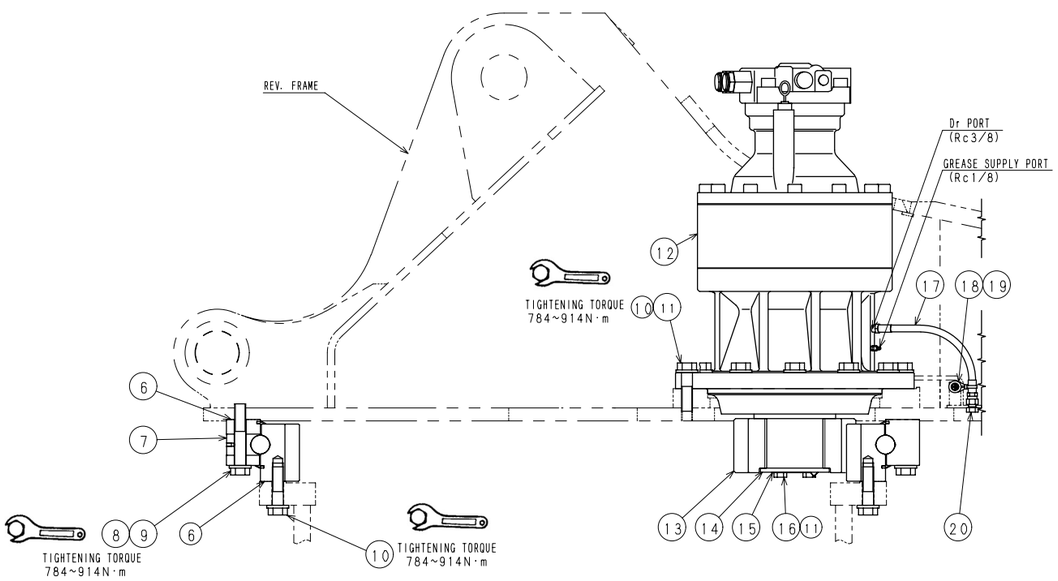

PART NAME	SYM	QTY
GREASE NIPPLE(A-R1/8)	1	4
COVER PLATE	2	1
CORK PACKING	3	1
SEMS BOLT M12X25	4	3
HEADED PIN	5	1
LIQUID PACKING 1104	6	NEED
TURN TABLE BEARING ASSY	7	1
HIGH STRENGTH BOLT M24X140	8	32
HIGH STRENGTH WASHER 24	9	32
SEMS BOLT M24X90	10	55
LOCTITE 262	11	NEED
REDUCTION GEARS	12	1
PINION GEAR	13	1
END PLATE	14	1
KEEPER WASHER	15	1
HIGH STRENGTH BOLT M16X40	16	2
HOSE ASSY	17	1
CLAMP	18	1
SPECIAL BOLT M8X25	19	1
PLUG G3/8	20	1

NOTES

1) APPLY LOCTITE #262 OR EQUAL TO THE THREAD AFTER REMOVING ANY OIL FILM.
2) BEFORE ASSEMBLY, APPLY LIQUID GASKET BETWEEN TURNTABIE BEARING AND LOWER FRAME.
3) FILL THE SWING MOTER CASING WITH WORKING OIL BEFORE OPERATION. AND THE AIR IN THE SWING MOTOR SHOULD BE BLED OFF.
4) COAT INNER PIN HALLS AND PINS WITH ANTI-SCDRING GREASE (SUMICO, LUBRICANT CO., LTD. ROCOL PASTE OR EQUIVALENT).
5) CONFILM NO-IRREGULAR NOISE AND VIBRATION AT LOW SPEED TURNING BEFORE HIGH SPEED TURNING AFTER ASSEMBLY OR AFTER LONG TERM STORAGE OF THIS MACHINE.

KBC0122Z-D03

https://truckmanualshub.com/

Upper Mechanism

Swing Reduction Gears

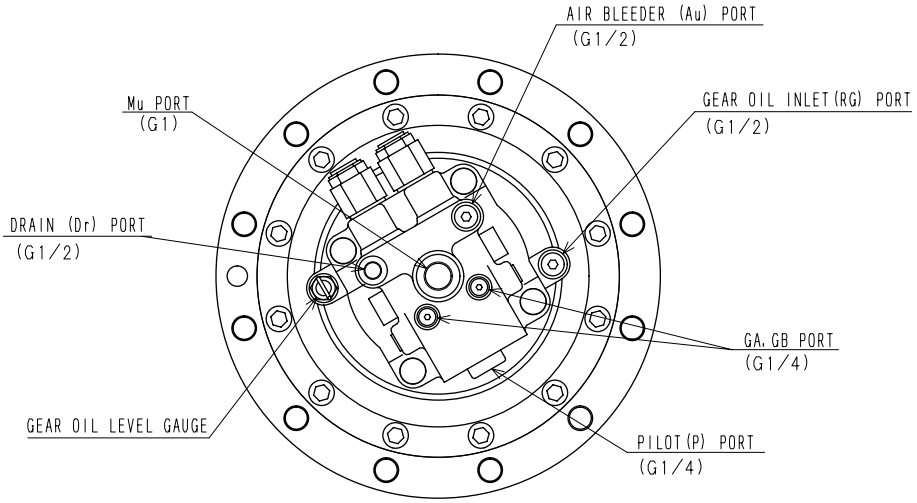

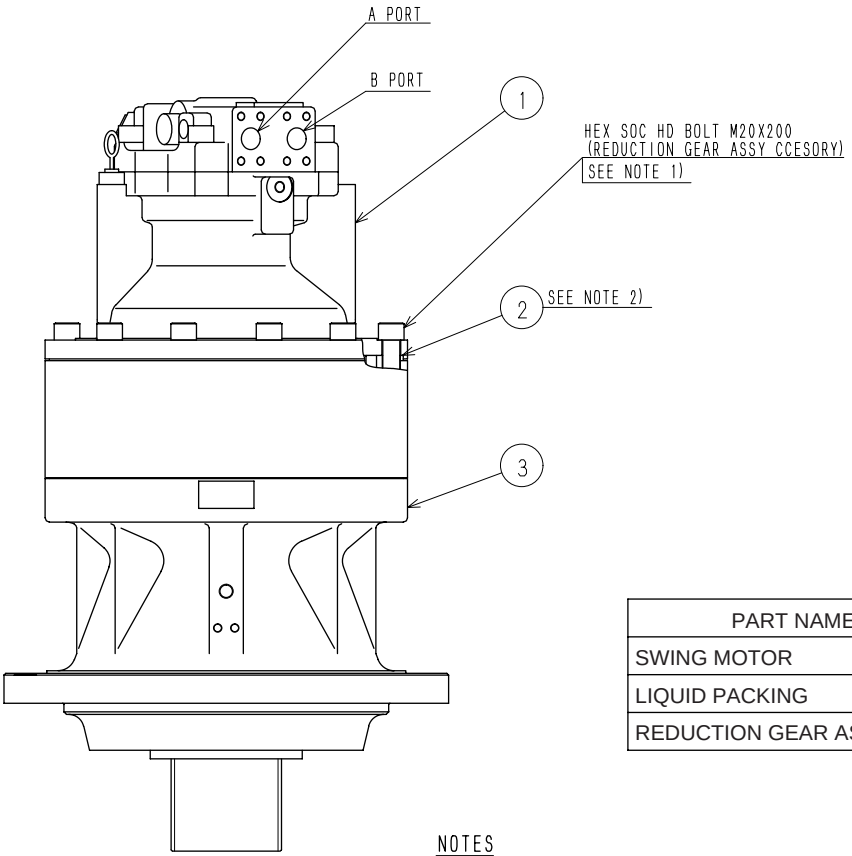

PART NAME	SYM	QTY
SWING MOTOR	1	1
LIQUID PACKING	2	NEED
REDUCTION GEAR ASSY	3	1

NOTES

1) FASTEN BOLTS M20X200 OF MOTOR BY REQUIRED TORQUE OF 568.4~649.7N·m WITH THE THREAD COATED WITH PACKING:LIQUID(THREE BOND 1360K).

2) ② PACKING:LIQUID(THREE BOND 1215) SHOULD BE APPLIED BETWEEN ① MOTOR:HYD. AND ③ REDUCTION GEAR.

3) LUBLICATE⑥ OIL:GEAR.

VISCOSITY CLASSIFICATION API GL-5 MORE THAN
SAE No. 90 MORE THAN

AMOUNT OF OIL 3.7L

KBC0120Z-C03

https://truckmanualshub.com/

	290-5-02-02-22
Upper Mechanism	Page No. 1/ 1
	First Edition : 03/2005

Engine

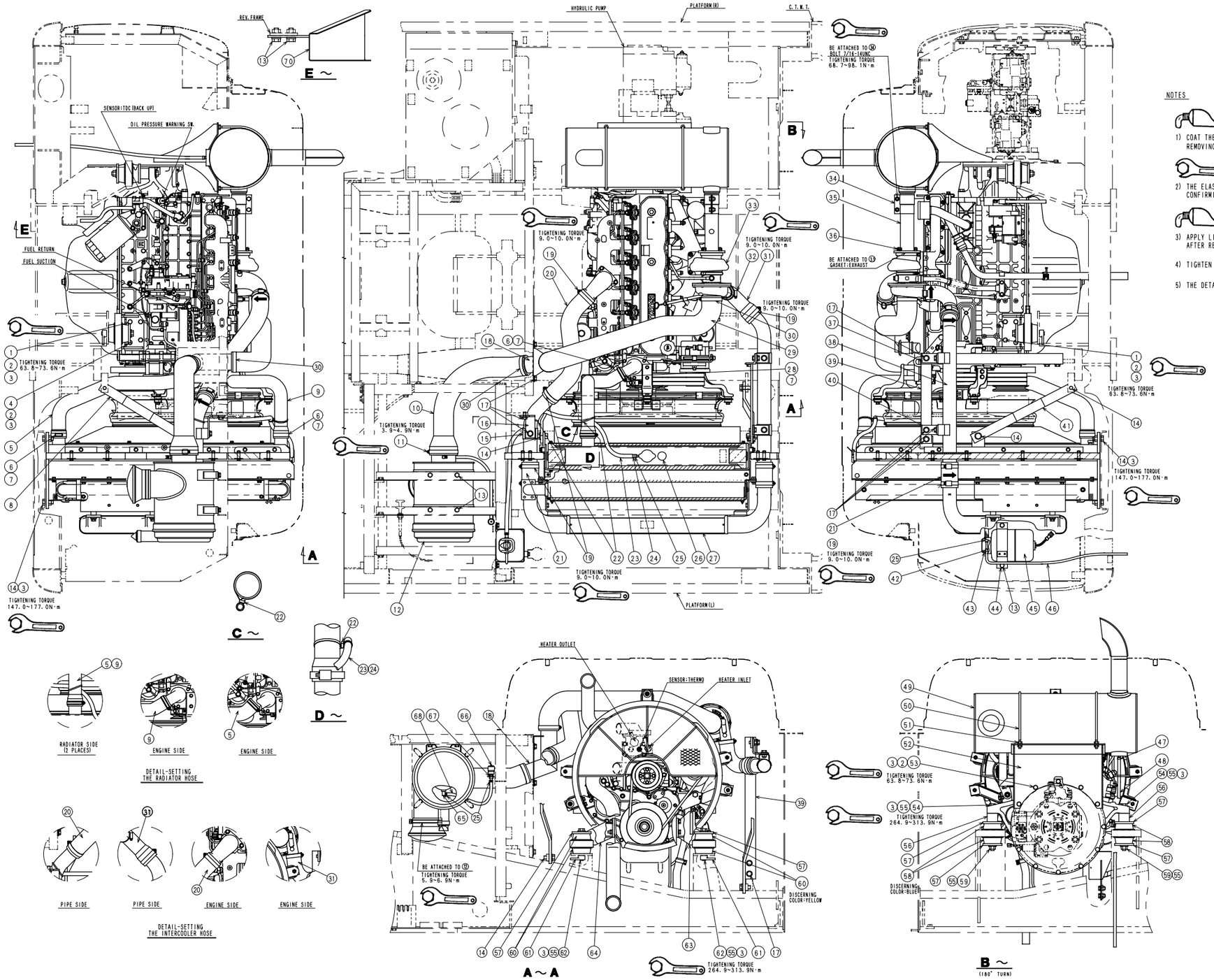

NOTES

1) COAT THE THREAD OF SYM ①④⑭⑤③⑤④⑥② WITH LOCTITE #262 OR EQUIVALENCE AFTER REMOVING ANY OIL FILM AND FASTEN BY TIGHTENING TORQUE.

2) THE ELASTIC RUBBERS OF SYM ⑤⑧⑥⑩ SHOULD BE ASSEMBLED AFTER CONFIRMING THE DISCRIMINATION COLOR.

3) APPLY LIQUID PACKING ⑦ TO THE CONNECTION OF RADIATOR HOSE AFTER REMOVING ANY OIL FILM AND FASTEN BY TIGHTENING TORQUE.

4) TIGHTEN UP THE HOSE BAND FROM THE DIRECTION ON THE DRAWING.

5) THE DETAIL OF SYM # TO BE REFERED TO ELEC. PARTS & WIRE HARNESS ASSY KHR3269Z-E

PART NAME	SYM	QTY
HIGH STRENGTH BOLT M10X1.25X25	1	7
HIGH STRENGTH WASHER 10	2	12
LOCTITE 262	3	NEED
HIGH STRENGTH NUT M10X1.25	4	1
RADIATOR HOSE	5	1
HOSE CLAMP 58-75	6	3
LIQUIED PACKING	7	NEED
RADIATOR STAY	8	1
RADIATOR HOSE	9	1
INLET AIR HOSE	10	1
CLIP:JUBILEE CLIP 6	11	1
AIR CLEANER	12	1
SEMS BOLT M10X25	13	8
SEMS BOLT M16X40	14	8
AIR-INLET PIPE(INTER COOLING)	15	1
BRACKET	16	1
SEMS BOLT M12X25	17	13
BRACKET(INLET HOSE)	18	1
HOSE CLAMP(HIGH TORQUE 70-92)	19	7
AIR HOSE(INTER COOLING)	20	1
AIR HOSE(INTER COOLING)	21	2
HARNESS BAND L=397	22	2
CORRUGATED TUBE 13X1600	23	1
RUBBER HOSE(L=1700)	24	1
HOSE BAND	25	4
LABEL(LONG LIFE COOLANT)	26	1
RADIATOR(STD) ASSY	27	1
HOSE CLAMP 50-65	28	1
AIR HOSE(INLET)	29	1
JUBILEE CLIP 77-95	30	3
AIR HOSE(INTER COOLING)	31	1
HOSE CLAMP(HIGH TORQUE 57-79)	32	1
DIESEL ENGINE	33	1
SEAL CLAMP	34	1
EXHAUST PIPE	35	1
HIGH STRENGTH NUT M8	36	8
BRACKET	37	1
AIR-INLET PIPE(INTER COOLING)	38	1
FRAME(INTER COOLING)	39	1
BRACKET	40	1
RADIATOR STAY	41	1
HOSE BAND	42	1
COVER(RESERVE TANK CAP)	43	1
HOLDER(RESERVE TANK)	44	1
RESERVE TANK	45	1
VINYL HOSE(L=700)	46	1
JUBILEE CLIP 000	47	1
TEFLON TUBE L=900	48	1
EXHAUST MUFFLER	49	1
U-BOLT	50	2
FLANGE NUT M10	51	8
MUFFLER BRAKET	52	1
HIGH STRENGTH BOLT M10X35	53	4
HIGH STRENGTH BOLT M16X210	54	2
HIGH STRENGTH WASHER 16	55	6
SPACER	56	2
PLATE	57	6
ELASTIC RUBBER	58	4
HIGH STRENGTH NUT M16	59	2
ELASTIC RUBBER	60	4
SPECIAL NUT	61	2
HIGH STRENGTH BOLT M16X140	62	2
ENGINE SUPPORT(FRONT)	63	1
ENGINE SUPPORT(FRONT)	64	1
ELBOW ADAPTER(AIR CLEANER)	65	1
VACUUM INDICATOR	66	1
INDICATOR JOINT	67	1
RUBBER HOSE(L=500)	68	1
ENGINE COTROLLER	69	1
BRACKET	70	1

KBH0956Z-E10

https://truckmanualshub.com/

Upper Mechanism

Hydraulic Pump

	PORT NAME	PORT SIZE
$A_{1,2}$	DELIVERY PORT	SAE6000psi 3/4″
B_1	SUCTION PORT	SAE2500psi $2^1/_2$″
D_r	DRAIN PORT	G 3/4-20
P_{sv}	SERVO ASSIST PORT	G 1/4-15
$P_{i1,i2}$	NEGATIVE CONTROL PORT	G 1/4-15
$a_{1,2,4}$	GUAGE PORT	G 1/4-15
A_3	GEAR PUMP DELIVERY PORT	G 1/2-19
B_3	GEAR PUMP SUCTION PORT	G 3/4-20

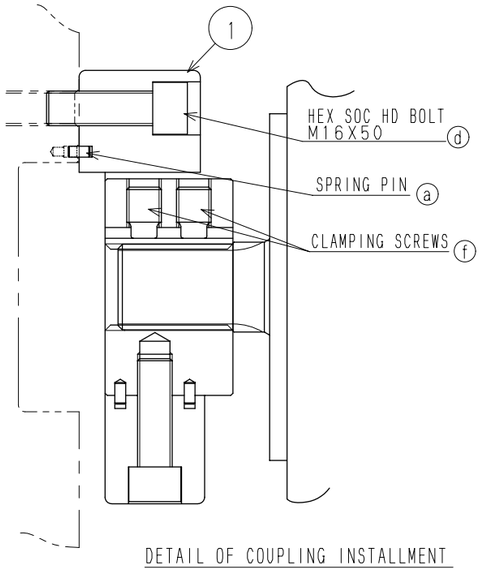

DETAIL OF COUPLING INSTALLMENT

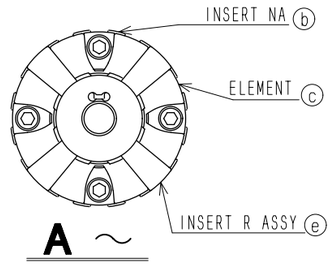

PART NAME	SYM	QTY
PUMP CUPLING	1	1
FLANGE	2	1
HEX SOC HD BOLT M20X55	3	4
LOCTITE 262	4	NEED
MISSING NUMBER	5	
SEMS BOLT M10X30	6	8
HYDRAULIC PUMP	7	1
RUBBER GROMMET	8	2

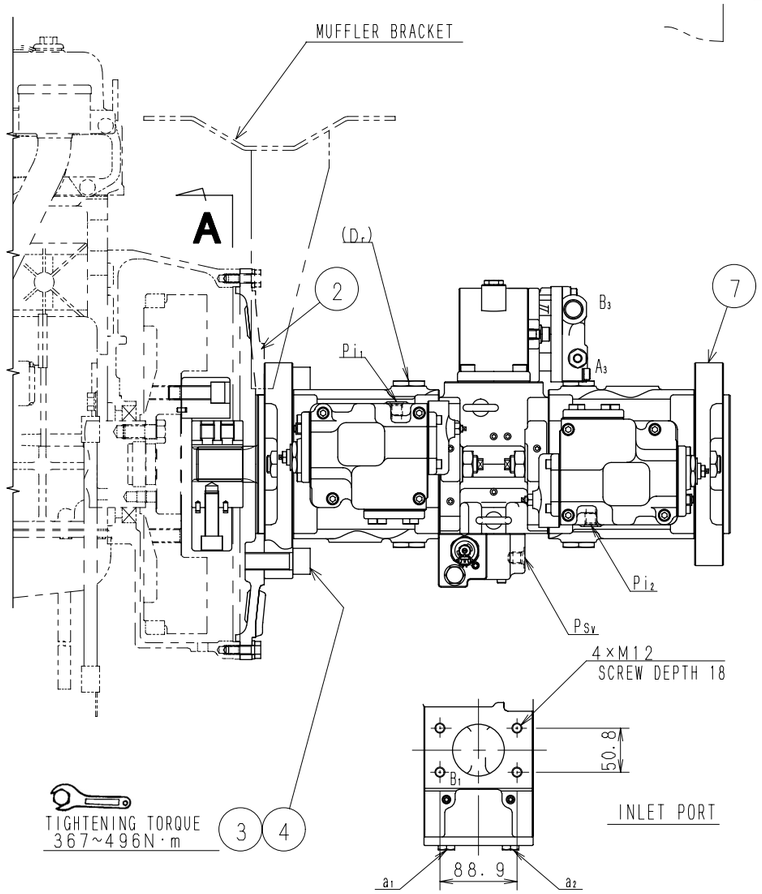

INLET PORT

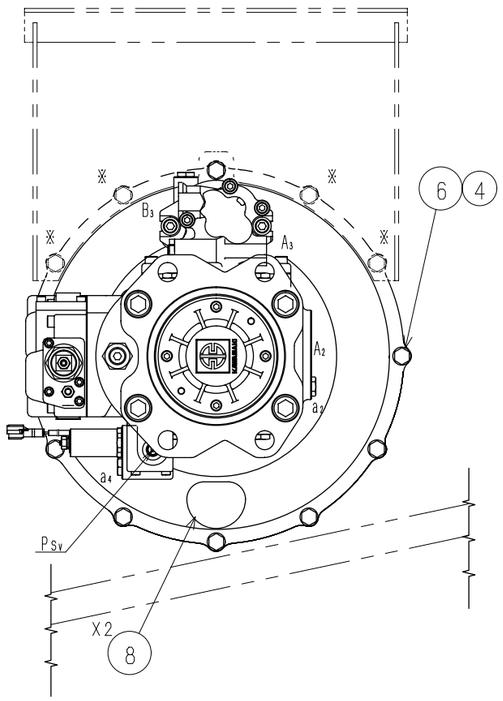

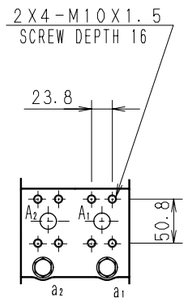

DELIVERY PORT

PROCEDURE OF ASSEMBLING

1. PROCEDURE TO FIX ELEMET ⓒ TO THE ENGINE FLYWHEEL.
   a. INSERT FOUR SPRING PINS ⓐ TO FLYWHEEL BY HUMMER.
   b. MAKE SUB ASSEMBLY PARTS WITH ⓒ AND ⓑ, THEN, INSTALL THE PARTS TO ⓐ WHICH IS INSTALL TO FIYWHEEL BY PLASTIC HUMMER, TEMPORALLY, FOUR PLACES.
   c. FIX COUPLING WITH ⓓ BY 205.9~225.6N·m, FOUR PLACES.
2. PROCEDURE TO FIX THE INSERT R ASSY ON THE PUMP SHAFT.
   a. INSTALL ⓔ TO PUMP SHAFT TO THE BOTTOM. THE DEPTH BETWEEN THE TIP FACE OF THE SHAHT AND THE FACE OF THE HUB SHOULD BE 6±3mm AS SHOWN "DETAIL OF COUPLING INSTALLMENT".
   b. TIGHTEN TWO CLAMPING SCREWS ⓕ BY LOW TORQUE, THEN, TIGHTENING TORQUE 98.1~196.1N·m.
3. PROCEDURE TO FIX THE PUMP TO THE ENGINE.
   a. INSTALL PUMP TO ENGINE CAREFULLY AS ⓒ FIT TO ⓔ.
   b. TIGHTEN THE BOLTS ⓗ TIGHTENING TORQUE 63.7~72.6N·m.

PROCEDURE OF DISASSEMBLING

1. REMOVE BOLTS FIXING THE PUMP TO THE ENGINE, PULL THE PUMP OUT OF THE ENGINE KEEPING HORIZONTAL AND SLOWLY.
2. LOSE ⓕ TO REMOVE ⓔ FROM PUMP.
3. REMORE ⓓ TO REMOVE ⓒ.

NOTES

1) LOCTITE #262 OR EQUAL SHOULD BE APPLIED ON THE THREAD OF THE BOLTS AFTER REMOVING THE OIL FILM. NOTE: ALL HEXAGON SOCKET HEAD CAP SCREWS FOR THE DRIVE PLATE COUPLING HAVE BEEN ALREADY DONE BY VENDER.
2) AFTER ASSEMBLED THE MACHINE OR LONG TERM STORAGE OF THE MACHINE, FILLED INSIDE OF THE PUMP WITH THE HYDRAULIC OIL FROM Dr PORT (AIR-BLEEDING PORT).
3) BOLTS INDICATED WITH THE MARK ※, ARE INCLUDED IN THE ENGINE ASSEMBLY DRAWING. (THEY ARE USED FOR THE PUMP AND FOR THE MUFFLER BRACKET).
4) THE PUMP SHAFT AND FLANGE SURFACES SHOULD BE CLEAND. (FOR REMOVING ANTI-RUST MATERIAL)

KBJ2823Z-C03

https://truckmanualshub.com/

Upper Mechanism

Control Valve

PART NAME	SYM	QTY
BRACKET	1	1
SEMS BOLT M16X40	2	8
LOCTITE 262	3	NEED
CONTROL VALVE	4	1

THE EXPLANATION OF CONTROL VALVE PORTS

LINE NAME	MAIN PORT	LINE NAME	MAIN PORT
BUCKET OPEN LINE	B7	OPTION CONFLUENCE LINE	P3, P4
BUCKET CLOSE LINE	A7	RETURN LINE	T1, T2
BOOM DOWN LINE	B8	NEGATIVE CONTROL	PS1,PS2
BOOM UP LINE	A8	TRUCTION PRESSURE MEASUREMENT	PT
TRAVEL LEFT FORWARD LINE	A6	RAISED PRESSURE	PH
TRAVEL LEFT BACKWARD LINE	B6	ATTACHMENTS PRESSURE MEASUREMENT	PP, PA
ARM OUT LINE	A5	DRAIN	Dr
ARM IN LINE	B5	LOAD HOLDING AT ARM	PC1
SWING RIGHT LINE	B3	LOAD HOLDING AT BOOM	PC2
SWING LEFT LINE	A3	BY PASS FILTER	T4
OPTION LINE	A2	HEAT LINE	T5
OPTION LINE	B2	SWING MOTOR MAKE UP	T3
TRAVEL RIGHT FORWARD LINE	A1	SWING PRIORITY	PC3
TRAVEL RIGHT BACKWARD LINE	B1	SWING PRIORITY RELEASE	Pbu
PRESSURE LINE	P1, P2		

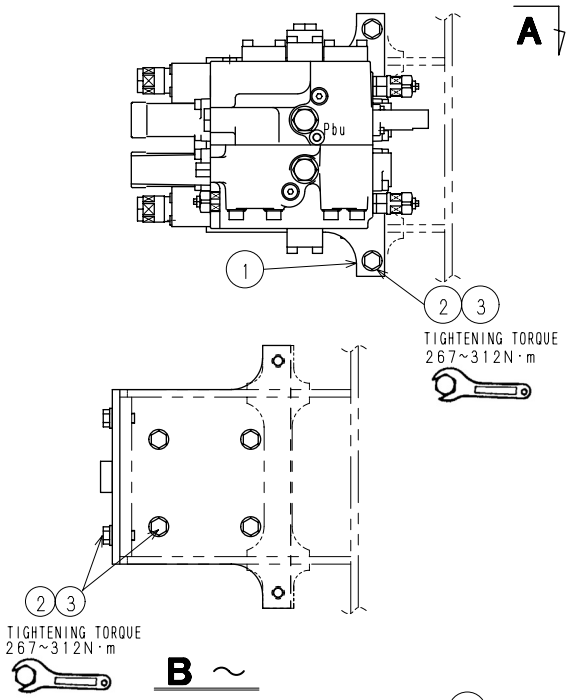

NOTES

LOCTITE #262 OR EQUAL SHOULD BE APPLIED ON THE THREAD OF THE BOLTS AFTER REMOVING THE OIL FILM.

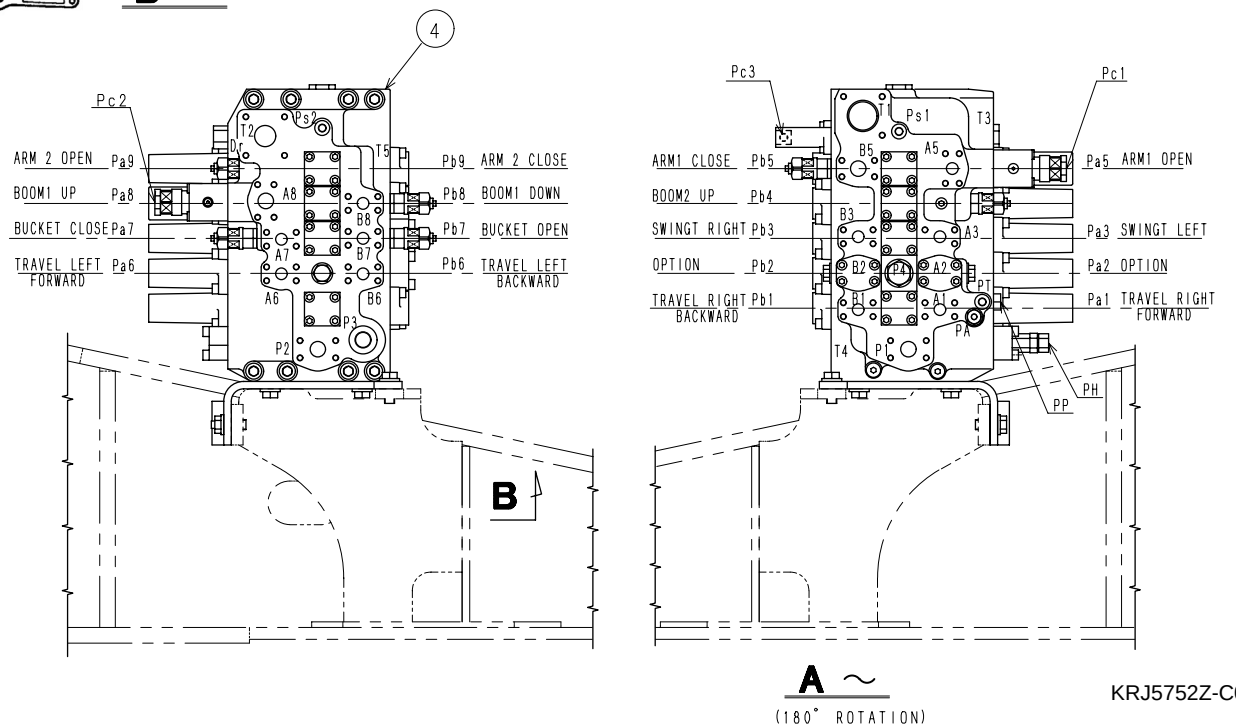

KRJ5752Z-C07

https://truckmanualshub.com/

Upper Mechanism

Remote Control Valve

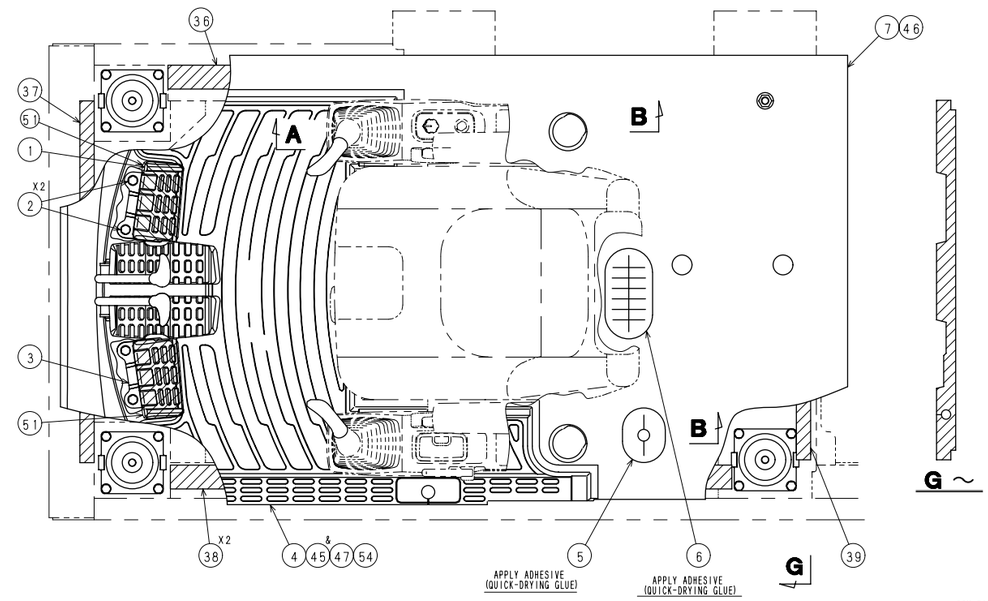

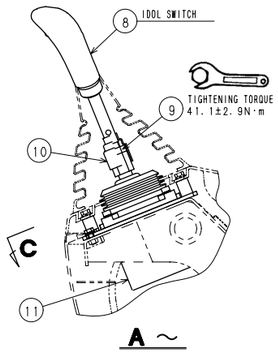

PROCEDURE FOR ASSEMBLING AND ADJUSTING THE HOSE GUARD.
WHEN ATTACH THE HOSE GUARD ⑫ TO BRACKET HOSE GUARD ⑬, SHOULD BE ADJUSTED THE DISTANCE BETWEEN EDGE OF GUARD HOSE ⑫ AND BRACKET HOSE GUARD ⑬. THE DISTANCE IS 20~25mm.

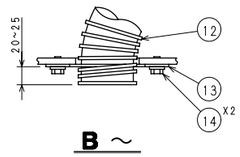

NOTES

1) PASTE SEAL:CUSHION ON THE PLATFORM.
2) SYM 41 REMOTE CONT VALVE. IS USED FOR THE MODEL WITH 2WAY SELECTR.
3) SYM 42 REMOTE CONT VALVE. IS USED FOR SH120-3(RV)MODEL.
4) SYM 43 MOUNT RUBBER ARE USED FOR SH120-3 RV MODEL.
5) SYM 45 MAT FLOOR IS USED FOR CRANE MODEL.
6) WARNING LABEL FOR MODELS MARKED ※ IS INCLUDED IN UG NAME PLATE.
7) OPR. LABEL AND HOLDER MARKED ◇ ARE USED FOR 2WAY MODELS.

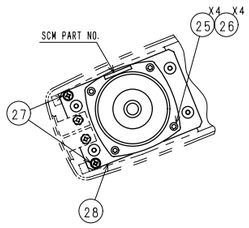

THE FIXING DRAWING OF RIGHT SIDE REMOTE CONTROL VALVE

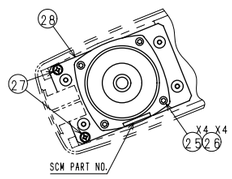

THE FIXING DRAWING OF LEFT SIDE REMOTE CONTROL VALVE

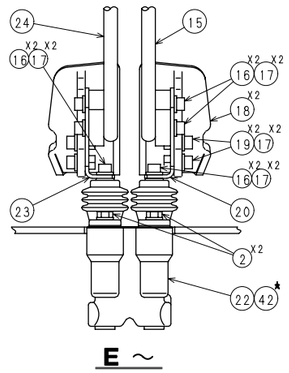

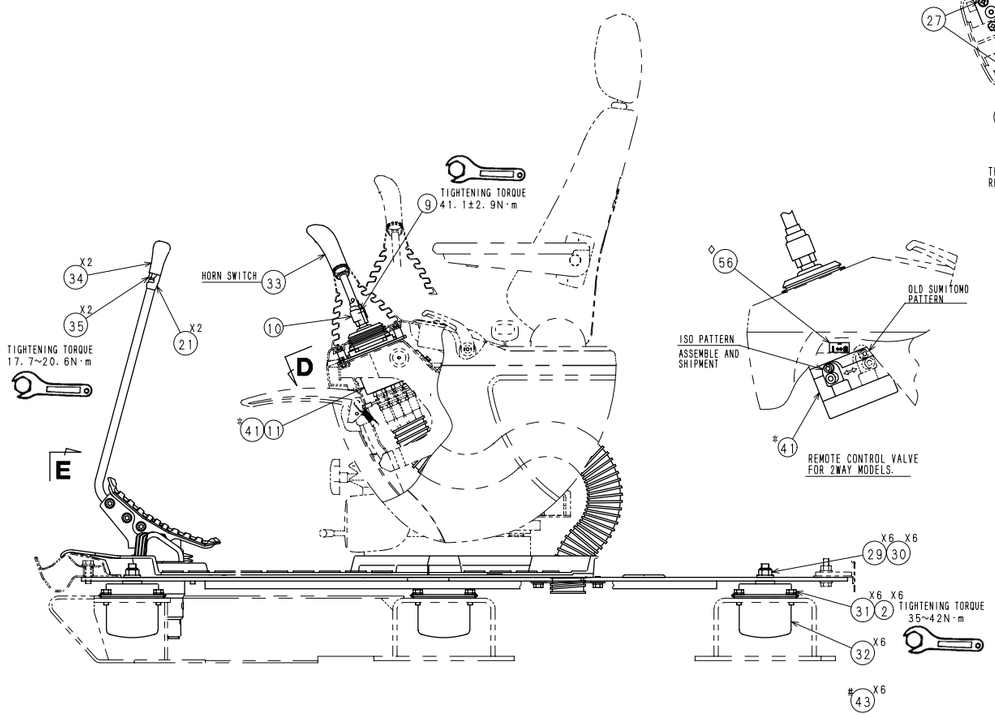

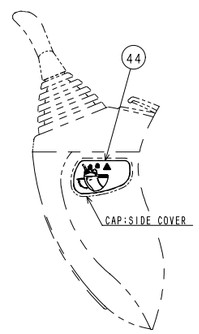

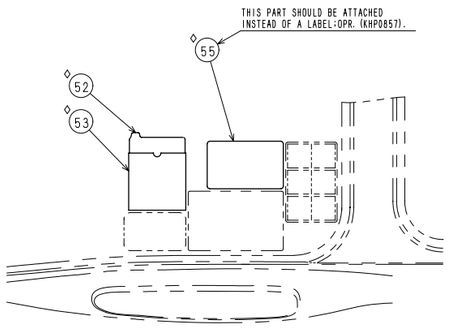

DETAIL OF OPR. LABEL(2WAY TYPE) (RIGHT SIDE OF CABIN)

	PART NAME	SYM	QTY
	FOOT REST(R)	1	1
	SEMS BOLT M10X25	2	32
	FOOT REST(L)	3	1
	FLOOR MAT(STANDARD)	4	1
	RUBBER GROMMET	5	1
	RUBBER GROMMET	6	1
	FLOOR	7	1
	KNOB(R)	8	1
	JAM NUT M14	9	2
	VINYL CAP	10	2
	REMOTE CONTROL VALVE	11	2
	HOSE GUARD(L=820)	12	2
	BRACKET(HOSE GUARD)	13	2
	SEMS BOLT M8X16	14	4
	TRAVEL LEVER(LEFT)	15	1
	HEX SOC HD BOLT M10X20	16	8
	HIGH STRENGTH WASHER 10	17	12
	PEDAL	18	2
	HEX SOC HD BOLT M10X25	19	4
	BRACKET(PEDAL LEFT)	20	1
	CAP(TRAVEL KNOB)	21	2
	REMOTE CONTROL VALVE	22	1
	BRACKET(PEDAL RIGHT)	23	1
	TRAVEL LEVER(RIGHT)	24	1
	HEX SOC HD BOLT M6X25	25	8
	QUADRATE SPRING WASHER 6	26	8
	HIGH STRENGTH BOLT M6X16	27	4
	BRACKET(REMOTE CONTROL VALVE)	28	2
	U-NUT M16	29	6
	SPECIAL WASHER	30	6
	LOCTITE 262	31	NEED
	RUBBER MOUNT	32	6
	KNOB (LEFT)	33	1
	KNOB(TRAVEL)	34	2
	HIGH STRENGTH NUT M12X1.25	35	2
	SEAL CUSHION	36	1
	SEAL CUSHION	37	1
	SEAL CUSHION	38	2
	SEAL CUSHION	39	1
	MISSING NUMBER	40	
*	REMOTE CONTROL VALVE	41	1
★	REMOTE CONTROL VALVE(TRAVEL)	42	1
#	RUBBER MOUNT	43	6
	WARNING LABEL(GATE LOCK)	44	1
&	FLOOR MAT(CRANE)	45	1
	FLOOR	46	1
	FLOOR MAT(BLADE)	47	1
	MISSING NUMBER	48	
	MISSING NUMBER	49	
	MISSING NUMBER	50	
	VINYL COVER(FOOT REST)	51	2
◇	OPERATION LABEL(2-WAY)	52	1
◇	HOLDER(OPERATION LABEL)	53	1
	FLOOR MAT(EXTINGUISHER EQUIPPED)	54	1
◇	WARNING LABEL	55	1
◇	INSTRUCTION LABEL	56	1

KRJ6188Z-E23

https://truckmanualshub.com/

	000-5-02-06-06
Upper Mechanism	Page No. 1/ 1
	Second Edition:03/2005

Operator's Cab

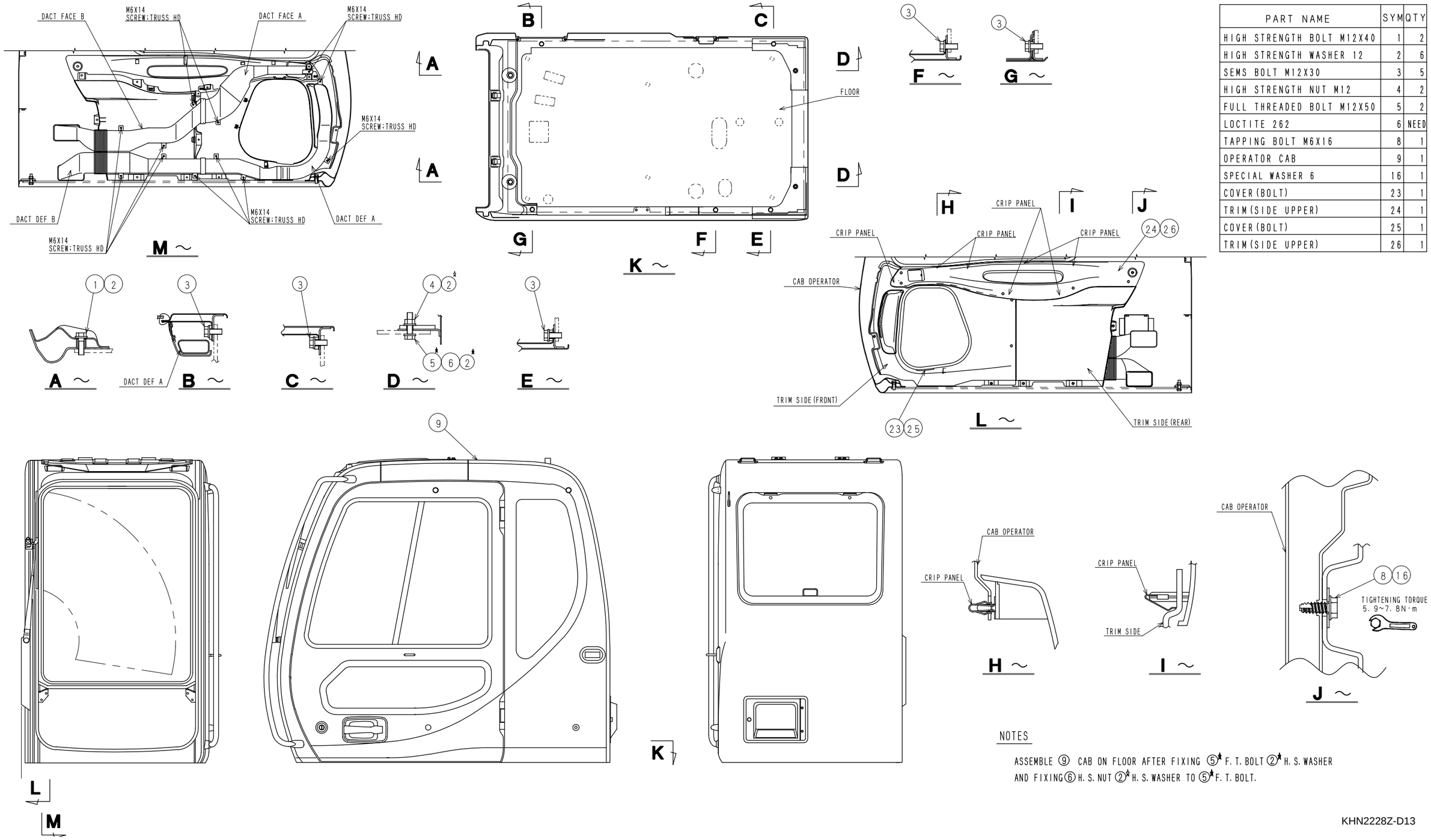

PART NAME	SYM	QTY
HIGH STRENGTH BOLT M12X40	1	2
HIGH STRENGTH WASHER 12	2	6
SEMS BOLT M12X30	3	5
HIGH STRENGTH NUT M12	4	2
FULL THREADED BOLT M12X50	5	2
LOCTITE 262	6	NEED
TAPPING BOLT M6X16	8	1
OPERATOR CAB	9	1
SPECIAL WASHER 6	16	1
COVER(BOLT)	23	1
TRIM(SIDE UPPER)	24	1
COVER(BOLT)	25	1
TRIM(SIDE UPPER)	26	1

NOTES

ASSEMBLE ⑨ CAB ON FLOOR AFTER FIXING ⑤★ F. T. BOLT ②★ H. S. WASHER AND FIXING ⑥ H. S. NUT ②★ H. S. WASHER TO ⑤★ F. T. BOLT.

KHN2228Z-D13

https://truckmanualshub.com/

1. Bucket Cylinder Removal and Installation

1-1. Removal

1	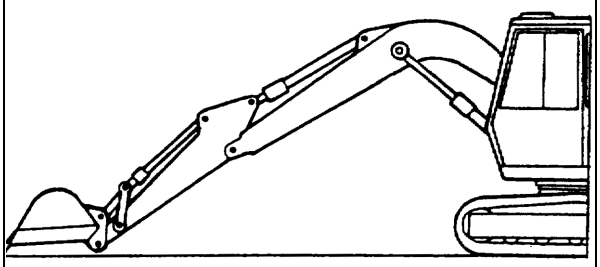	Lower the attachment to the ground.
2	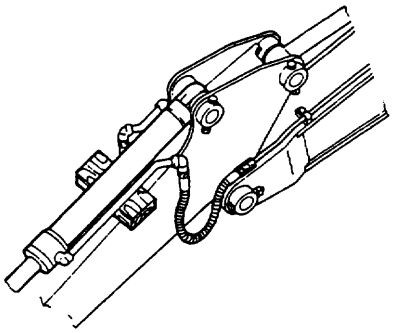	Put a block between the bucket cylinder and the arm.
3	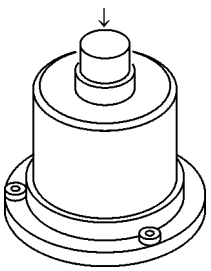 UPPER SIDE OF HYDRAULIC OIL	Stop the engine and release pressure in the hydraulic circuit. NOTE: Refer to the procedures for bleeding the hydraulic pressure in *Precautions for Use* in *Chapter 0* . When releasing pressure from the tank, stop the engine and press the button to completely release the internal pressure. The hydraulic oil may be hot, so be careful not to get burned.
4	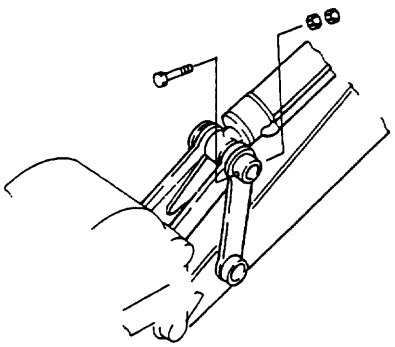	Remove nuts and bolt.

https://truckmanualshub.com/

5	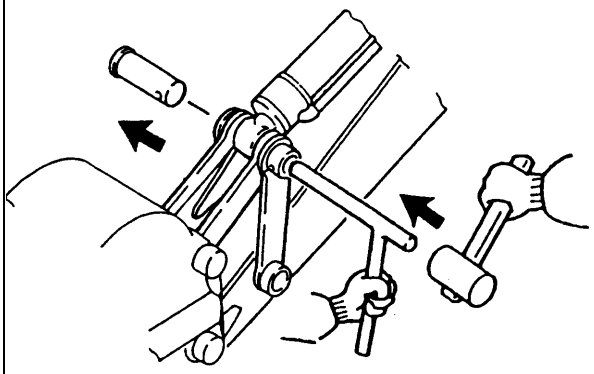	Drive out the pin, using a steel bar and hammer.
6	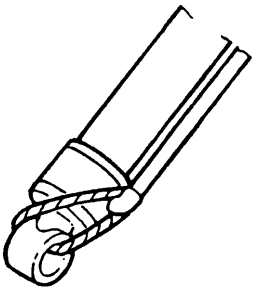	Fasten a wire to prevent the cylinder rod from extending.
7	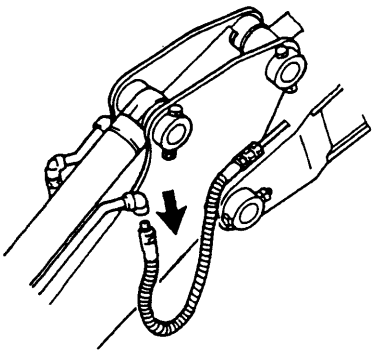	Remove the hoses. Install bull plugs or caps.
8	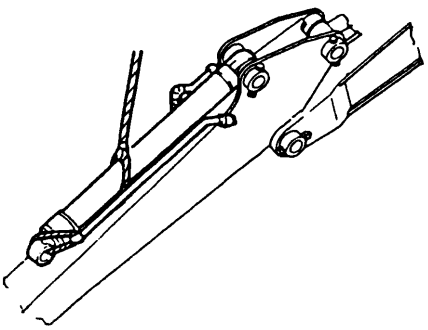	Lift the bucket cylinder, using a sling.

https://truckmanualshub.com/

9	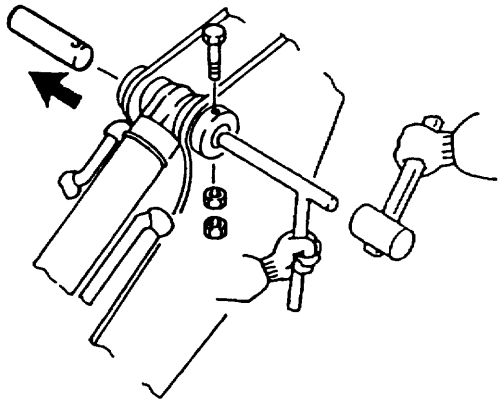	Remove the nuts and bolt. Drive out the pin, using a steel bar and hammer. Remove the bucket cylinder.

1-2. Installation

1	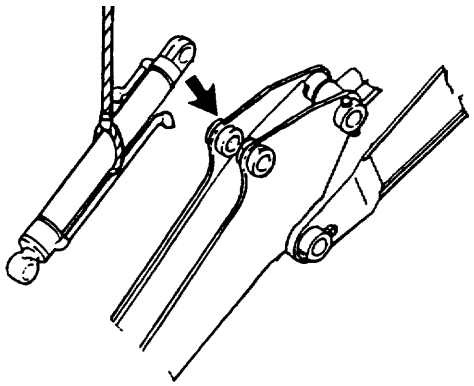	Lift the bucket cylinder and position it so that it is aligned for installation in the arm.
2	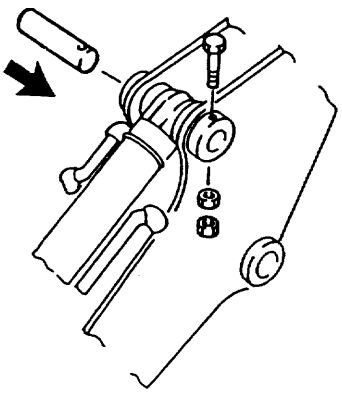	Install the pin and fasten it with a bolt and nuts.

https://truckmanualshub.com/

3	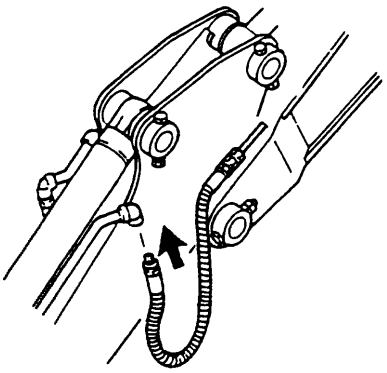	Connect the hose to the bucket cylinder.
4	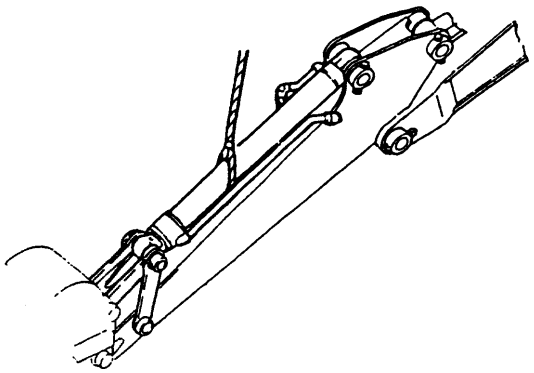	Position the cylinder head so that it is aligned for installation in the link.
5	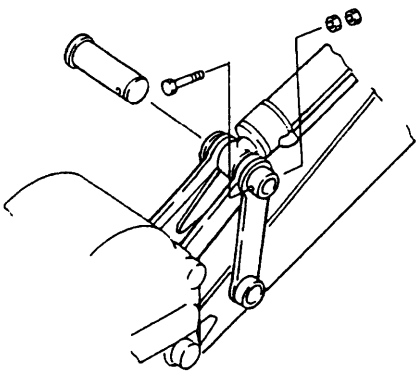	Install the pin and fasten it with a bolt and nuts. NOTE: Cycle the cylinder to bleed air from the cylinder. After leading air, check for oil leakage.

https://truckmanualshub.com/

2. Arm Cylinder Removal and Installation

2-1. Removal

1	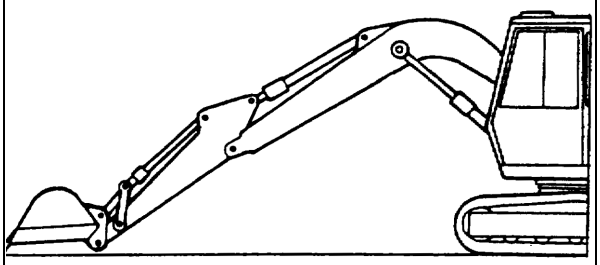	Lower the attachment to the ground.
2	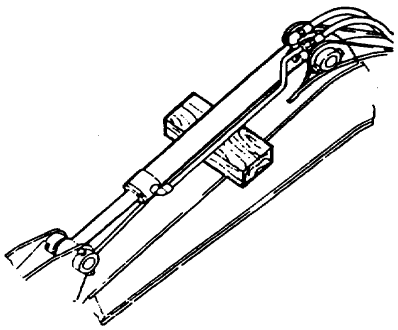	Put a block between the arm cylinder and the boom.
3	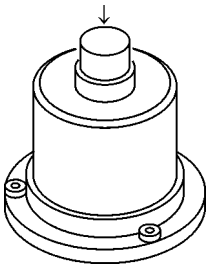 UPPER SIDE OF HYDRAULIC OIL TANK	Stop the engine and release pressure in the hydraulic circuit. NOTE: Refer to the procedures for bleeding the hydraulic pressure in *Precautions for Use* in *Chapter 0* . When releasing pressure from the tank, stop the engine and press the button to completely release the pressure. The hydraulic oil may be hot so be careful not to get burned.
4	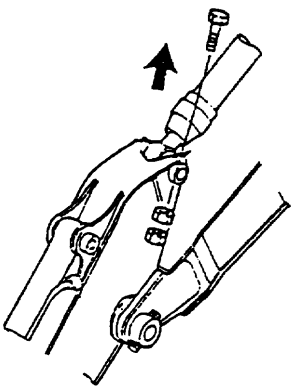	Remove nuts and bolt.

https://truckmanualshub.com/

5	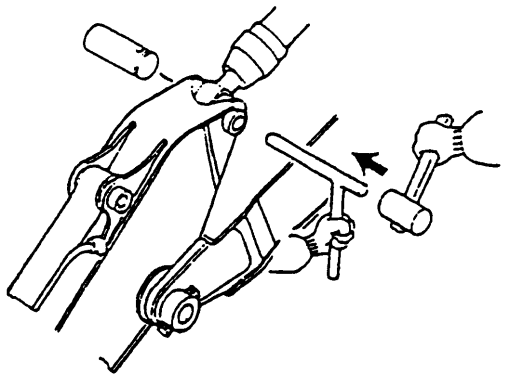	Drive out the pin, using a steel bar and hammer.
6	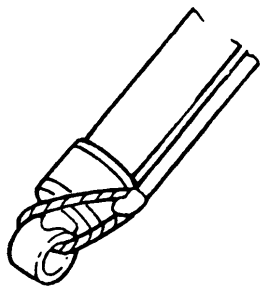	Fasten a wire to prevent the piston rod from extending.
7	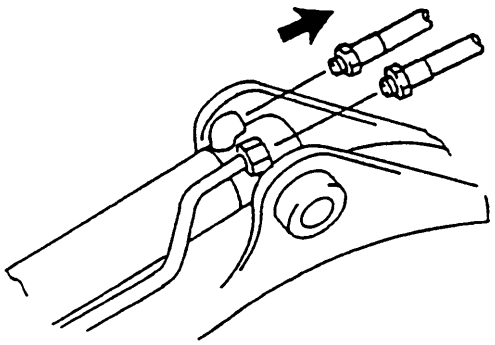	Remove the hoses. Install bull plugs or caps.
8	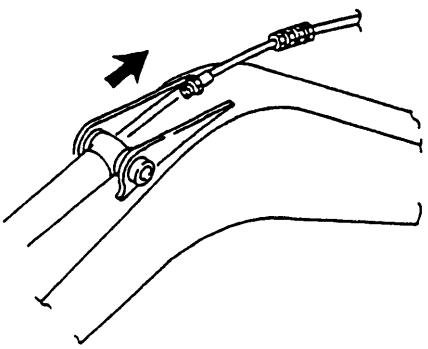	Remove the grease tube.

https://truckmanualshub.com/

9	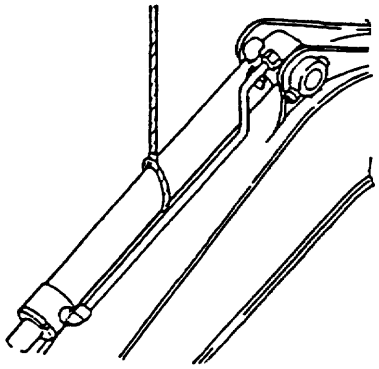	Lift the arm cylinder, using a sling.
10	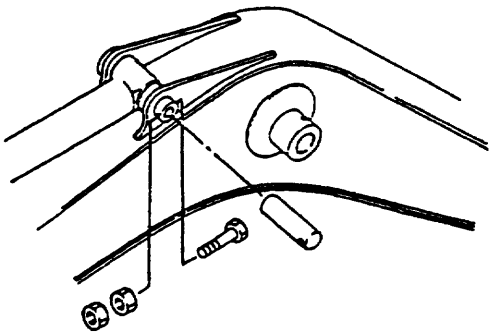	Remove the nuts and bolt. Drive out the pin, using a steel bar and hammer. Remove the arm cylinder.

2-2. Installation

1	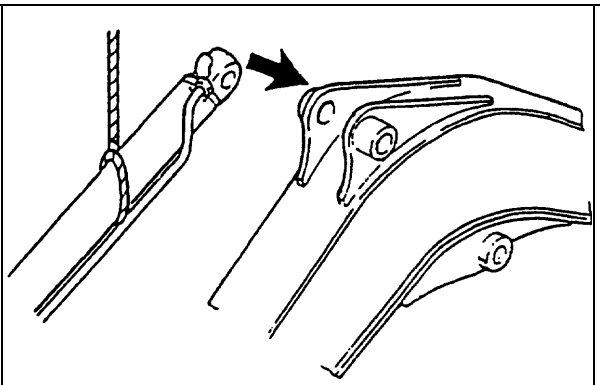	Lift the arm cylinder and position it so that it is aligned for installation in the boom.
2	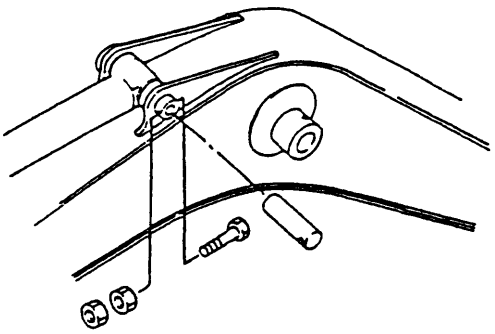	Install the pin and fasten it with a bolt and nuts.

https://truckmanualshub.com/

3	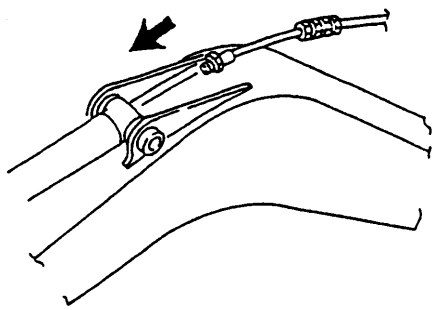	Install the grease tube to the arm cylinder.
4	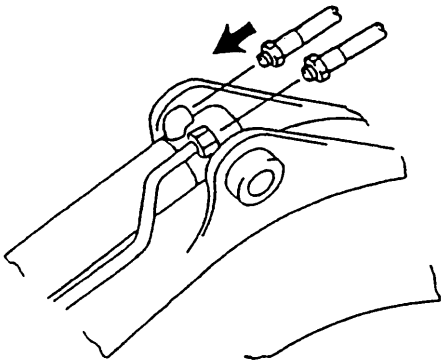	Connect the hoses to the arm cylinder.
5	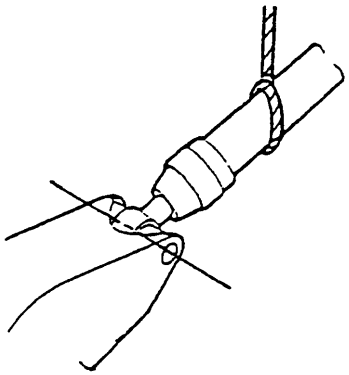	Position the cylinder head so that it is aligned for installation in the arm.
6	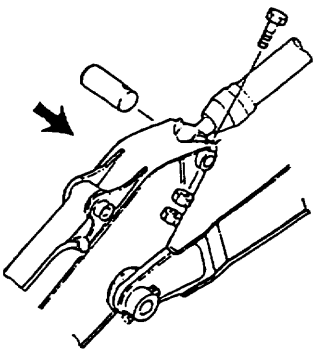	Install the pin and fasten it with a bolt and nuts. NOTE: Cycle the cylinder to bleed air from the cylinder. After bleeding air, check for oil leakage.

https://truckmanualshub.com/

3. Boom Cylinder Removal and Installation

3-1. Removal

1	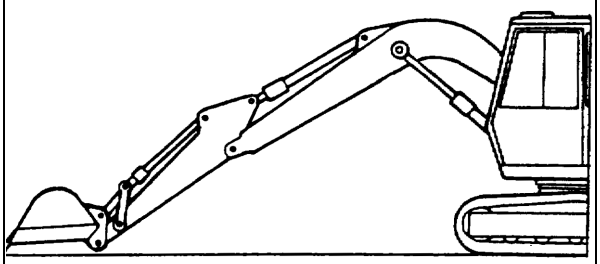	Lower the attachment to the ground.
2	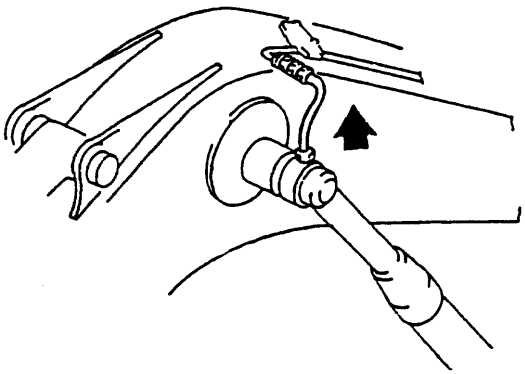	Remove the grease tube.
3	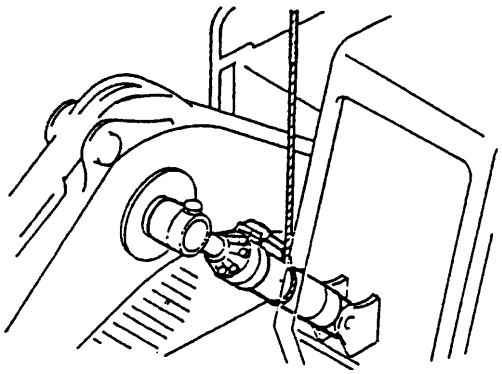	Attach a sling to the boom cylinder.

https://truckmanualshub.com/

4	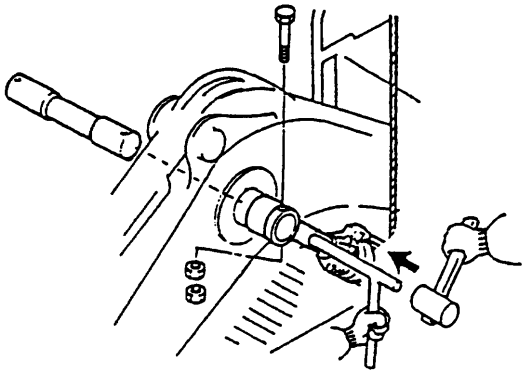	Remove the nuts and bolt to remove the collar. Pull out the pin, using a steel bar and hammer.
5	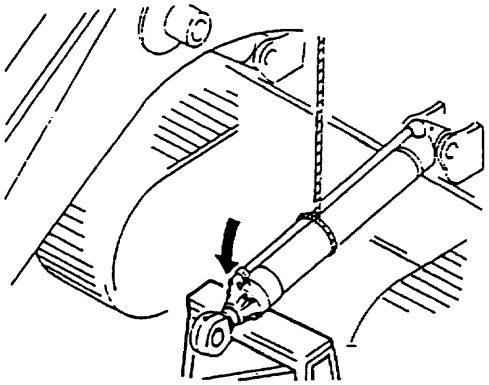	Lower the cylinder and place on a stand.
6	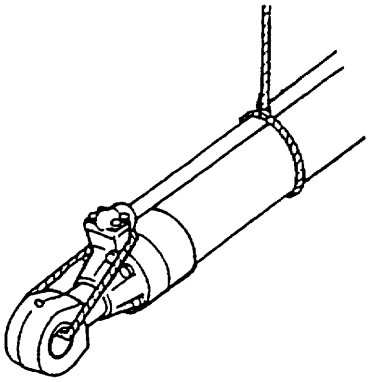	Attach a wire to prevent the cylinder rod from extending.
7	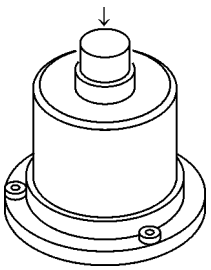 UPPER SIDE OF HYDRAULIC OIL TANK	Stop the engine and release pressure in the hydraulic circuit. NOTE: Refer to the procedures for bleeding the hydraulic pressure in *Precautions for Use* in *Chapter 0* .

https://truckmanualshub.com/

8	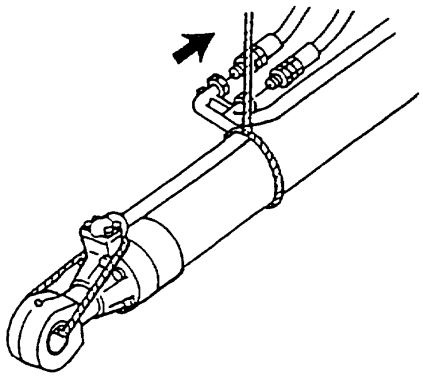	Remove the hoses. Install bull plugs or caps.
9	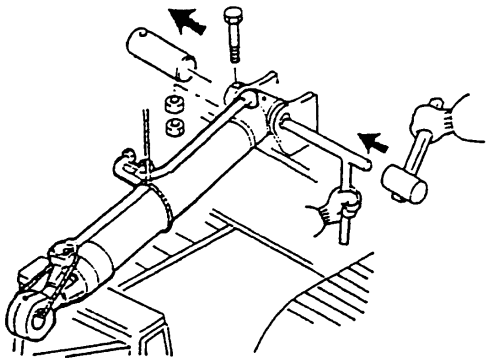	Remove the nuts and bolt and drive out the pin with a steel bar and hammer.
10	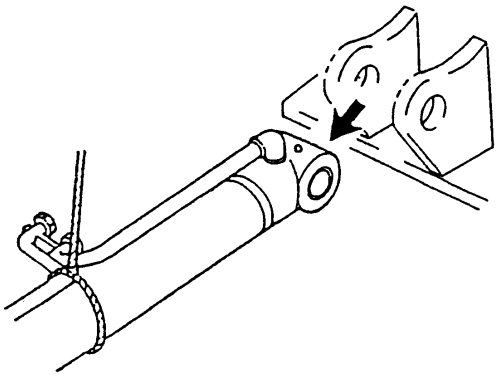	Remove the boom cylinder.

https://truckmanualshub.com/

3-2. Installation

1	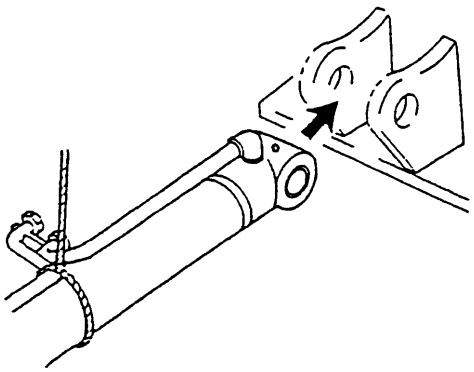	Lift the boom cylinder and position it so that it is aligned for installation in the frame.
2	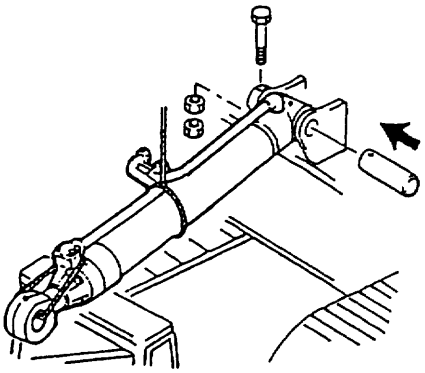	Install the pin and fasten it with a bolt and nuts.
3	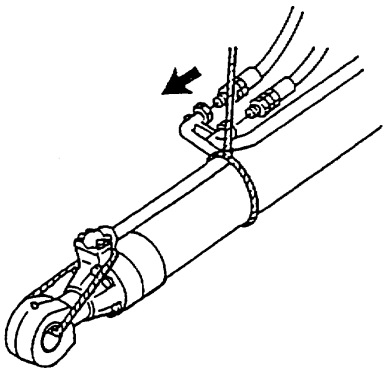	Connect the hoses to the boom cylinder.
4	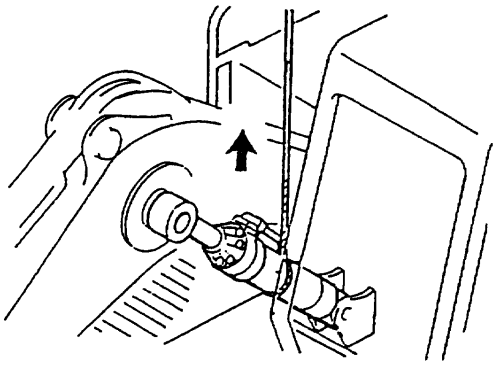	Position the cylinder so that the head is aligned for installation in the boom.

https://truckmanualshub.com/

5	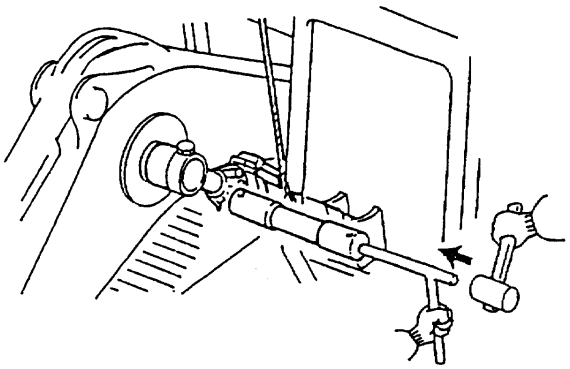	Install a pin with a steel bar and hammer.
6	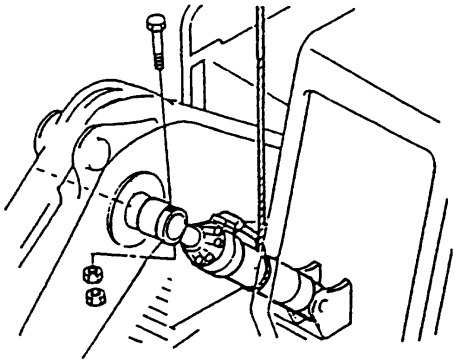	Attach the collar and install the bolt and nuts.
7	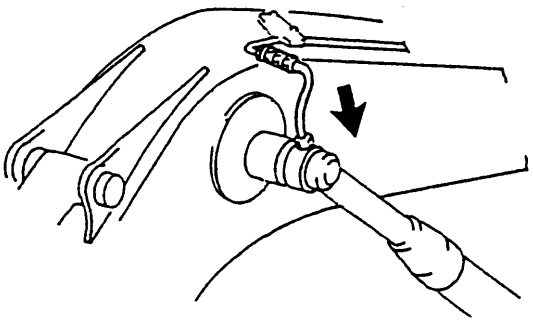	Connect the grease tube. NOTE: Cycle the cylinder to bleed air from the cylinder. After bleeding air, check for oil leakage.

https://truckmanualshub.com/

Take-up Roller

Disassembling and Assembling Instructions

1. Component Diagram

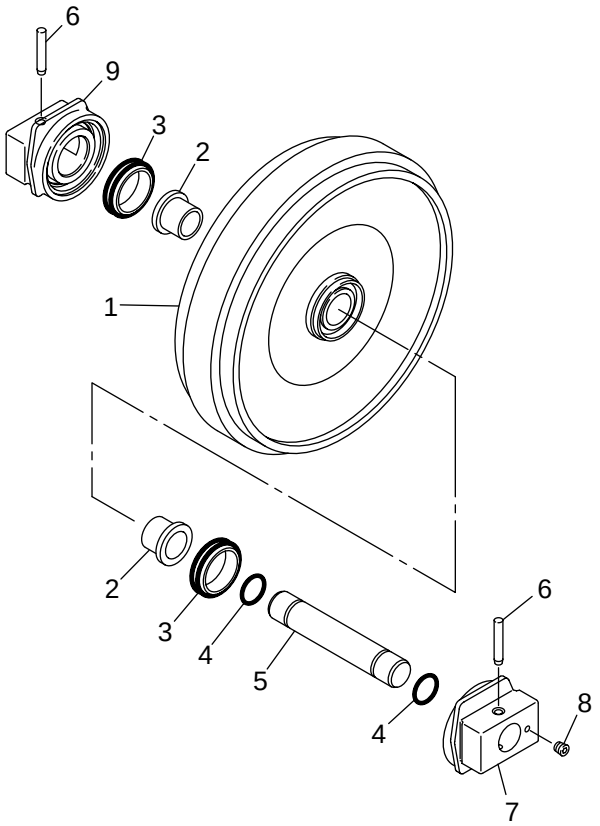

SYMBOL	PART NAME
1	TAKE-UP ROLLER
2	BUSHING
3	FLOATING SEAL
4	O-RING
5	SHAFT
6	HUB PIN
7	HUB (WITH PLUG)
8	PLUG
9	HUB (WITHOUT PLUG)

2. Tools and Jigs

2-1.Tools

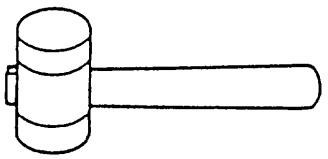

HAMMER

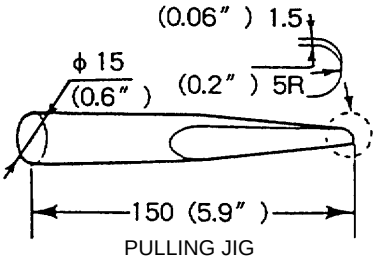

PULLING JIG

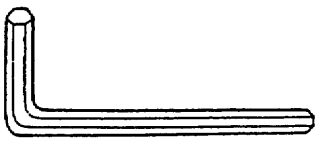

HEXAGON BAR WRENCH

2-2.Jigs

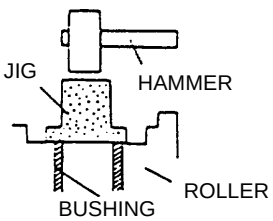

https://truckmanualshub.com/

3. Disassembling Instructions

3-1.Preparation

Prior to disassembly, take full preparatory measures.

a. Workbench with vises

Prepare a suitable workbench large enough to arrange and keep parts and perform the work.

b. Tools and Jigs

For tools and jigs, refer to the previous section.

3-2.General cautions

a. Handle precision parts carefully during the operation; do not drop or hit them on other parts during the operation.

b. Do not attempt to finish the operation quickly; do not forcedly pry or hit the parts.

Perform the operation carefully and patiently in order to prevent parts deformation, oil leakage and lower efficiency.

c. As disassembled parts tend to get rusted or collect dust and dirt, dust proof and rust prevention treatment should be applied immediately after disassembling the parts.

3-3.Disassembling procedure

1	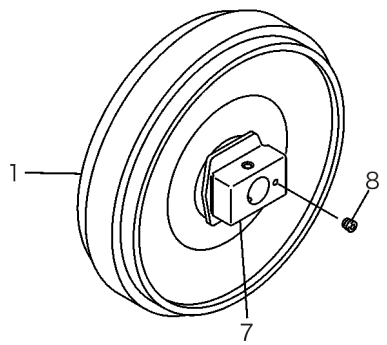	1. Clean the take-up roller with kerosene. 2. Remove the plug (8) from the hub (7) to drain the oil.
2	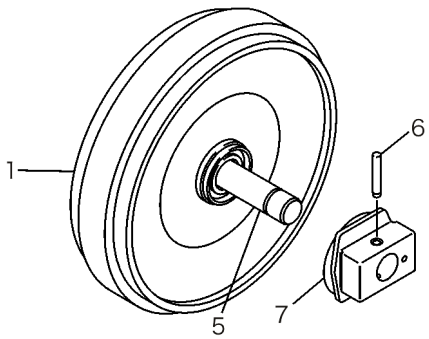	1. Remove the hub pin (6) from the shaft (5) (or hub (7)). The removal is to be performed on one side only. 2. Remove the hub (7) from the shaft (5). The removal is to be performed on one side only.

Take-up Roller

3	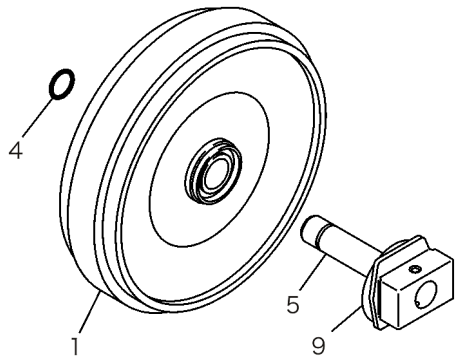	1. Remove the O-ring (4) from the shaft (5). 2. Pull out the shaft (5) from the take-up roller (1).
4	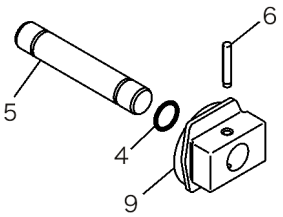	1. Remove the hub pin (6) from the shaft (5) (or hub (9)). 2. Remove the hub (9) from the shaft (5). 3. Remove the O-ring (4) from the shaft (5).
5	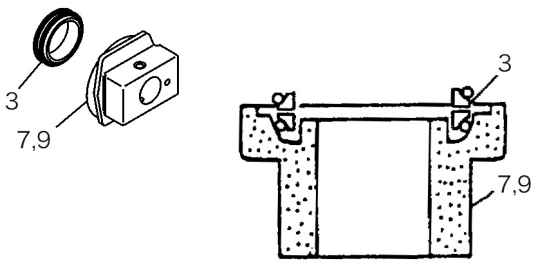	Remove the floating seals (3) from the hubs (7),(9).
6	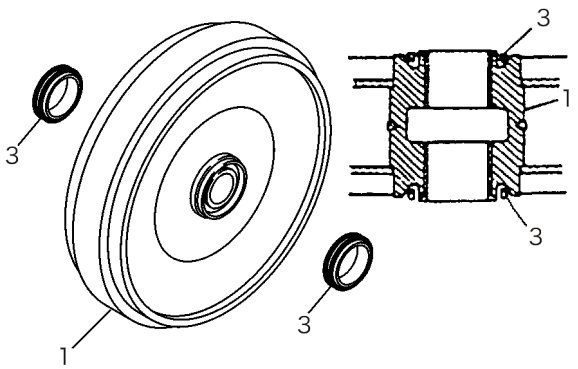	Remove the floating seals (3) from the take-up roller (1).

https://truckmanualshub.com/

7	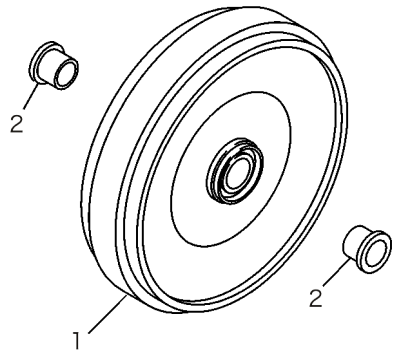	Remove the bushings (2) from the take-up roller (1) using pulling jigs, press and other instruments. ※ Do not attempt to disassemble bushings (2) unless they are unusable due to wear.
8	Cleaning Parts 1. Preparatory cleaning a. Place parts in the preparatory cleaning container containing cleaning oil. ※ Wash off deposited substances which may cause scratches. Leave the parts submerged in the kerosene until the dirt and grease come off and float up.	2. Finish cleaning a. Put the parts in the finish cleaning container containing cleaning oil and wash them by slowly moving them. b. Wipe off remaining cleaning oil with clean cloth. ※ Place the parts somewhere free of dust and moisture, and dry them using compressed air. After drying, apply engine oil to the parts.

4. Assembling instructions

4-1.Prior to assembly:

- Clean all the parts.
- Polish scratches, flashes or burrs using oil stones.
- Change sealing parts such as O-rings with new ones.

4-2.Assembling procedure

1	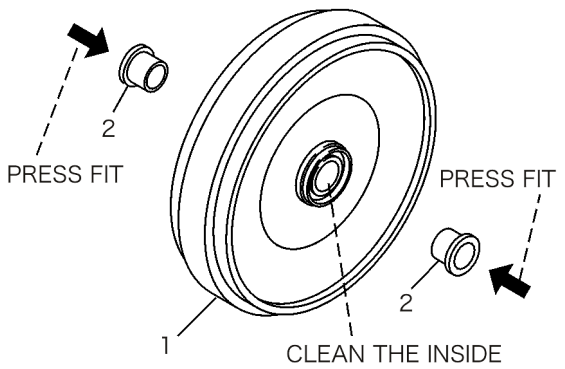	Install bushings (2) to the take-up roller (1) using a jig and hammer NOTE: Pay full attention when inserting the bushings (2) by hammering. Do not reuse bushings (2). 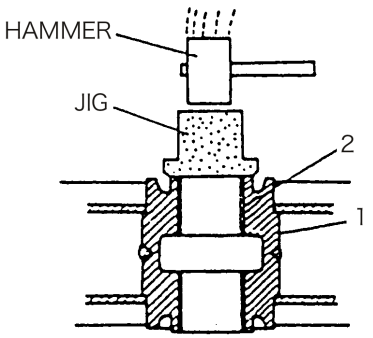

https://truckmanualshub.com/

2	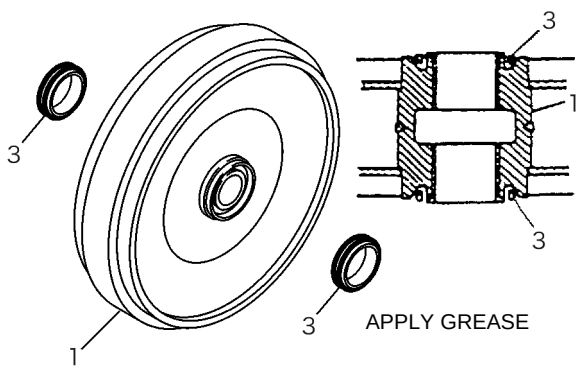	1. Install the floating seals (3) to take-up roller (1). 2. Apply grease to the floating seals. ※ Do not reuse floating seals (3).
3	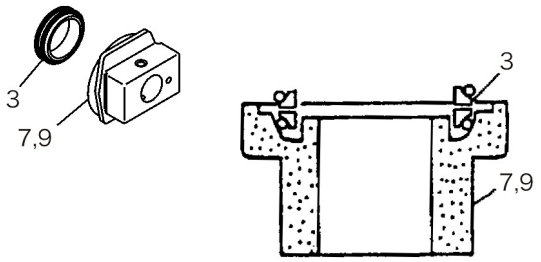	Install the floating seals (3) to the hubs (7),(9). ※ Do not reuse floating seals (3).
4	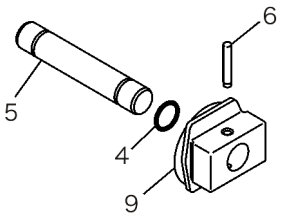	1. Install the greased O-ring (4) to the shaft (5). The installation is to be performed on one side only. 2. Install the shaft (5) to the hub (9) and secure them with a hub pin (6). ※ Do not reuse hub pin (6) and O-ring (4).
5	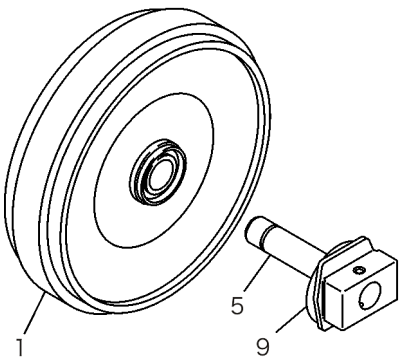	1. Apply grease on the surface of the shaft. 2. Install the shaft (5) to the take-up roller (1).

https://truckmanualshub.com/

Take-up Roller

6	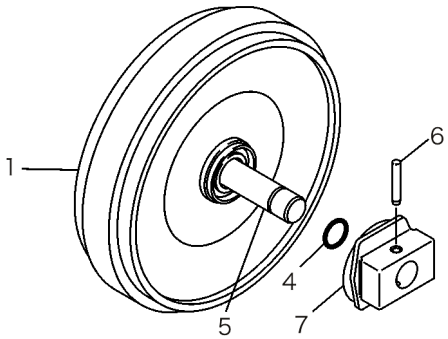	1. Install the greased O-ring (4) to the shaft (5). 2. Install the hub (7) to the shaft (5) and secure them with a hub pin (6). ※ Do not reuse hub pin (6) and O-ring (4).
7	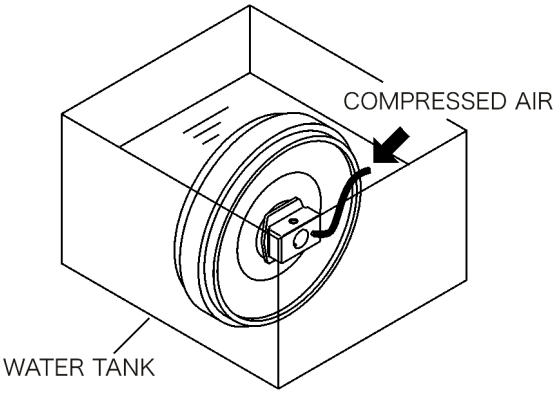	Check for leakage in the assembly using compressed air. Compressed air pressure: 0.2 MPa
8	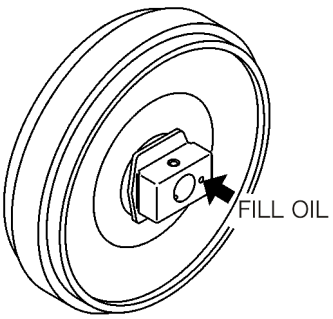	Fill engine oil through the plug.
9	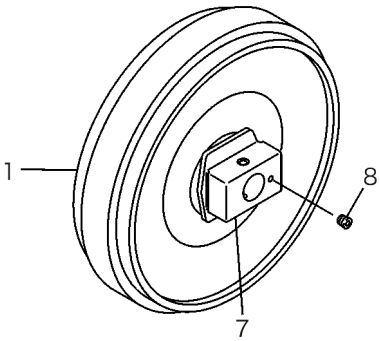	Install the plug (8). Clean the assembly and dry it using compressed air. Now the assembly has been completed.

	300-6-02-01-08
Take-up Roller	Page No. 1/ 1
	Second Edition:03/2005

Assembly Drawings

PART NAME	SYM	QTY
TAKE-UP ROLLER	1	1
BUSHING	2	2
FLOATING SEAL	3	2
O-RING 1A-G80	4	2
ROLLER SHAFT	5	1
HUB PIN	6	2
HUB(WITH PLUG)	7	1
PLUG 1/4	8	1
HUB(WITHOUT PLUG)	9	1

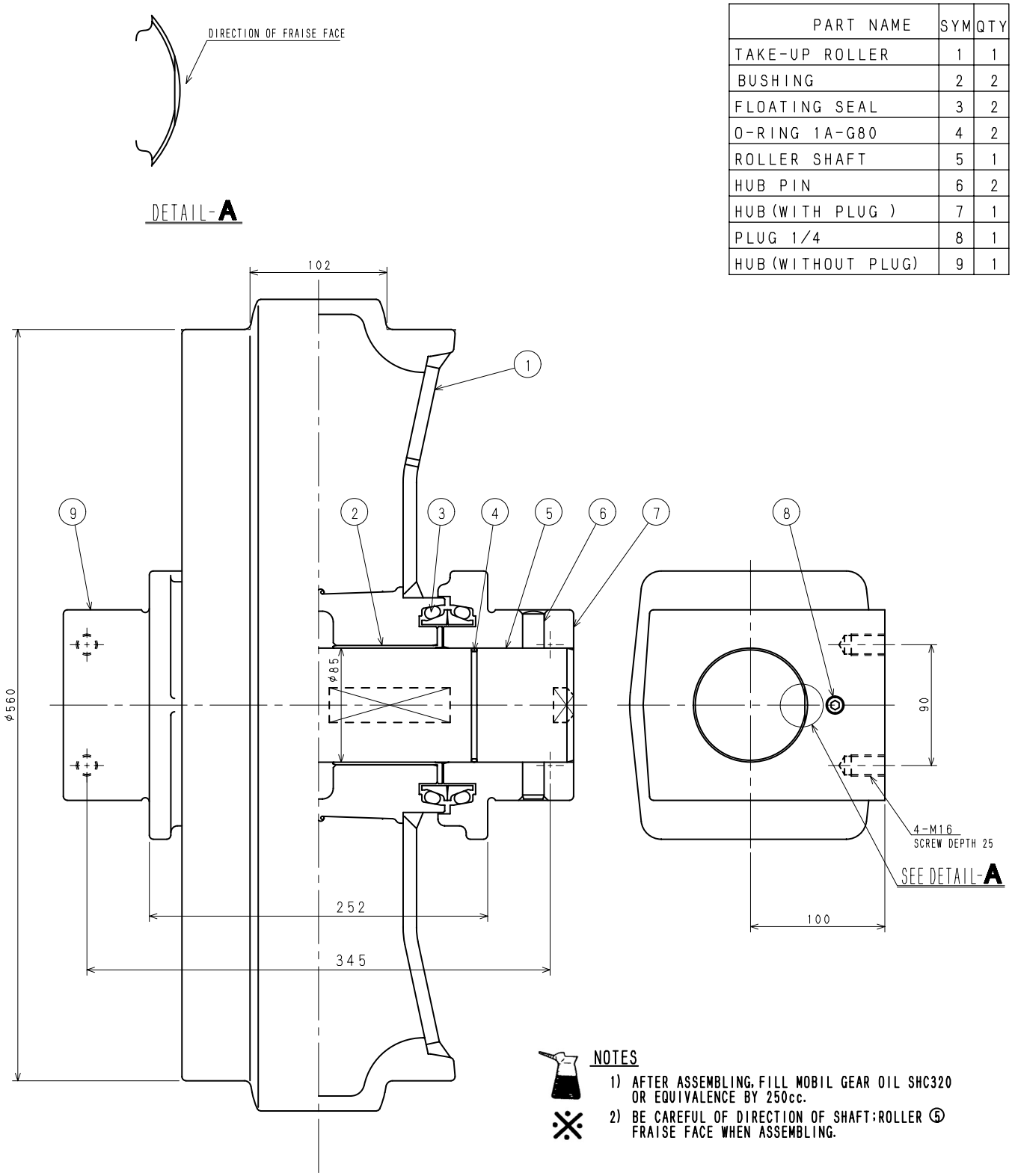

KSA1064Z-C01

https://truckmanualshub.com/

Upper Roller

Disassembling and Assembling Instructions

1. Component Diagram

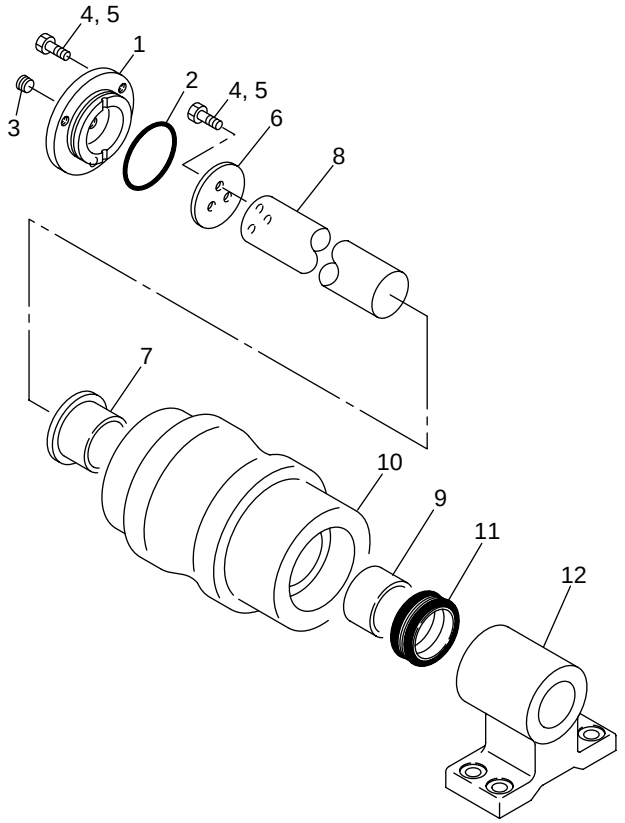

SYMBOL	PART NAME
1	COVER
2	O-RING
3	PLUG
4	HIGH STRENGTH BOLT
5	LOCTITE 262
6	THRUST PLATE
7	BUSHING
8	SHAFT
9	BUSHING
10	ROLLER
11	FLOATING SEAL
12	BRACKET

2. Tools and Jigs

2-1.Tools

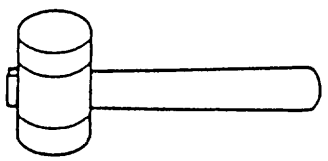

HAMMER

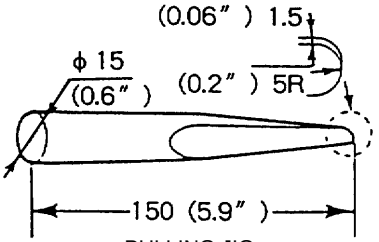

PULLING JIG

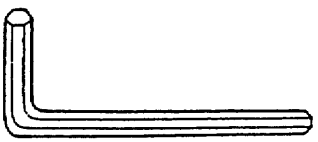

HEXAGON BAR WRENCH

2-2.Jigs

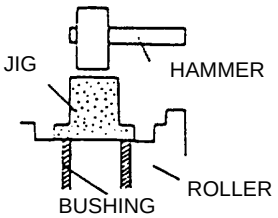

https://truckmanualshub.com/

3. Disassembling Instructions

3-1.Preparation

Prior to disassembly, take full preparatory measures.

a. Workbench with vises
   Prepare a suitable workbench large enough to arrange and keep parts and perform the work.

b. Tools and Jigs
   For the tools and jigs, refer to the previous section.

3-2.General cautions

a. Handle precision parts carefully during the operation; do not drop or hit them on other parts during the operation.

b. Do not attempt to finish the operation quickly; do not forcedly pry or hit the parts. Perform the operation carefully and patiently in order to prevent parts deformation, oil leakage and lower efficiency.

c. As disassembled parts tend to get rusted or collect dust and dirt, dust proof and rust prevention treatment should be applied immediately after disassembling the parts.

3-3.Disassembling procedure

1	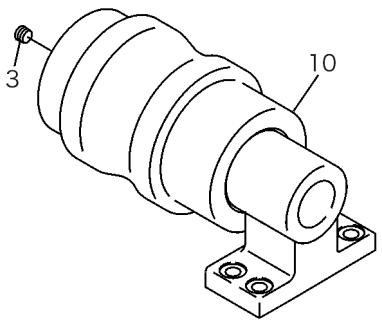	1. Clean the upper roller with kerosene. 2. Remove the plug (3) from the cover to drain the oil.
2	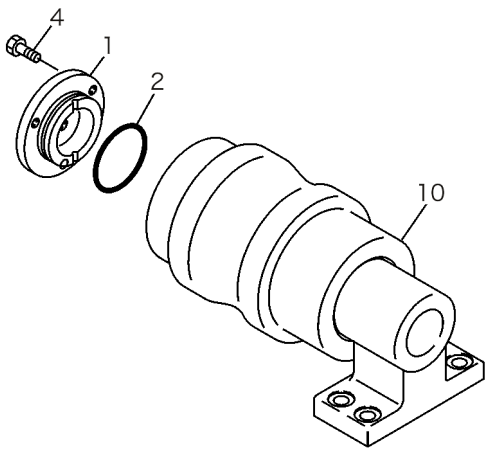	1. Remove the High strength bolts (4) and cover (1) from the upper roller (10). 2. Remove O-ring (2) from the cover (1).

https://truckmanualshub.com/

3	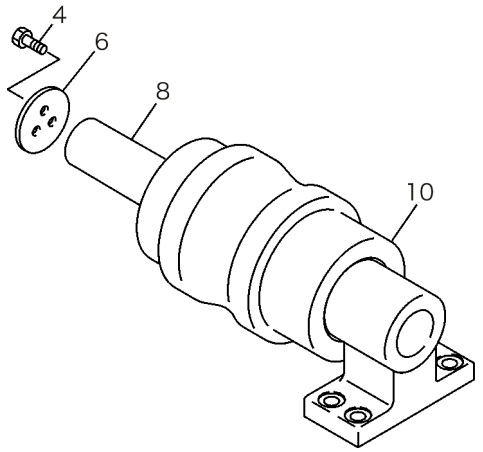	Secure the shaft on the bench with vises, remove the High strength bolts (4) and thrust plate (6) from the shaft (8).
4	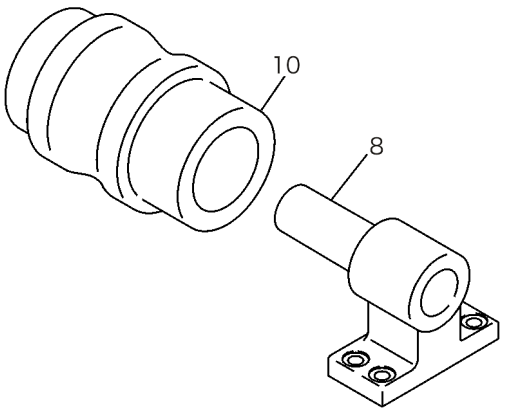	Pull out the roller (10) from the shaft (8).
5	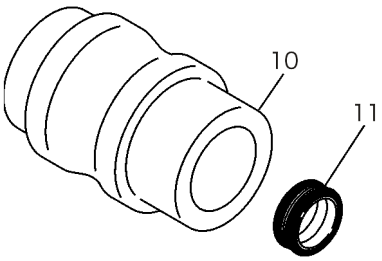	Remove the floating seal (11).
6	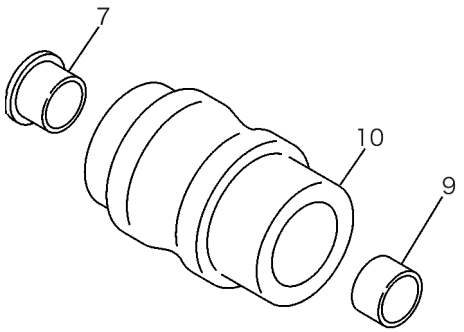	Remove the bushings (7),(9) from the roller (10) using press and pulling jig. Do not attempt to disassemble bushings (7),(9) unless they are unusable due to wear.

https://truckmanualshub.com/

7	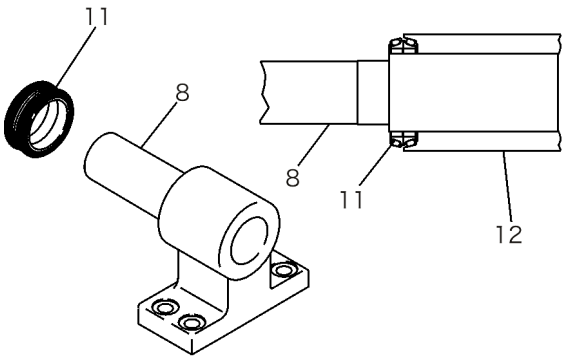	Remove the floating seal (11) from the bracket (12) using pulling jig.
8	Cleaning Parts 1. Preparatory cleaning a. Place parts in the preparatory cleaning container containing cleaning oil. ※ Wash off deposited substances which may cause scratches. Leave the parts submerged in the cleaning oil until the dirt and grease come off and float up.	2. Finish cleaning a. Put the parts in the finish cleaning container containing cleaning oil and wash them by slowly moving them. b. Wipe off the remaining cleaning oil with clean cloth. ※ Place the parts somewhere free of dust and moisture, and dry them using compressed air. After drying, apply engine oil to the parts.

https://truckmanualshub.com/

4. Assembling instructions

4-1.Prior to assembly:

- Clean all the parts.
- Polish scratches, flashes or burrs by using an oil stone.
- Replace sealing parts such as O-rings with new ones.

4-2.Assembling procedure

1	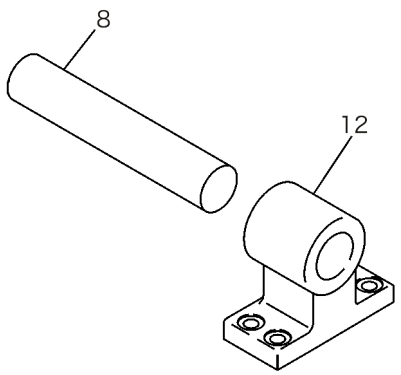	Press fit the shaft (8) into the bracket (12). Press fitting should be securely conducted through the side of the plug hole. ※ In an ordinary case, do not disassembly the bracket from the shaft. Reassembly will be a very difficult task.
2	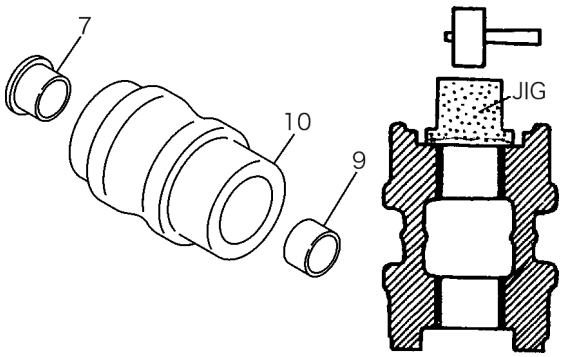	Install the bushings (7),(9) to the roller (10) using a jig and hammer. ※ Do not reuse bushings (7),(9).
3	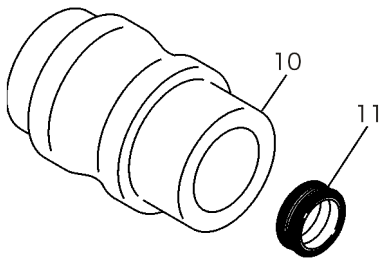	1. Install the floating seal (11) to the roller (10). 2. Apply oil to the surface (lip section) of the floating seal. ※ Do not reuse floating seal (11).

https://truckmanualshub.com/

4	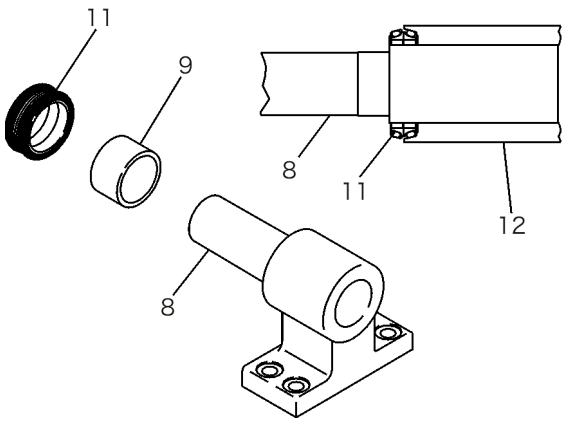	Install floating seal (11) to the bracket (12) and apply oil to the seal surfaces (lip section). ※ Do not reuse floating seal (11).
5	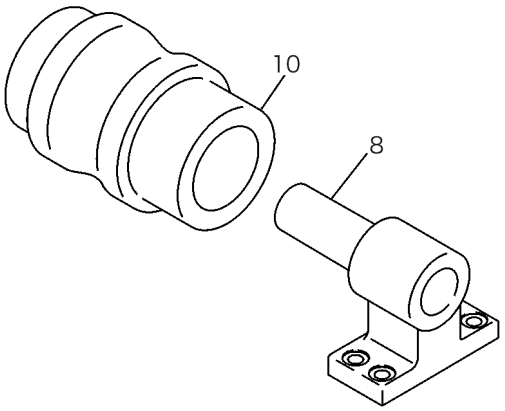	1. Apply grease on the surface of the shaft (8). 2. Install the roller (10) to the shaft (8).
6	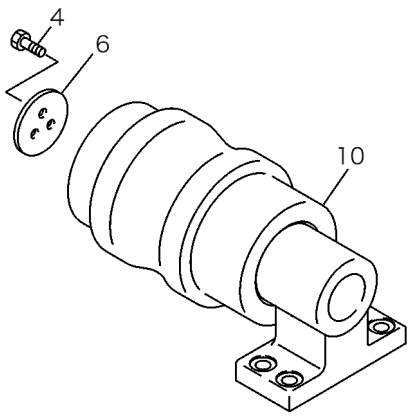	Install the thrust plate (6) to the shaft (8) with High strength bolts (4). Apply grease to inner side of the thrust plate (6). Apply Loctite No.262 to High strength bolts (4).

https://truckmanualshub.com/

Upper Roller

7	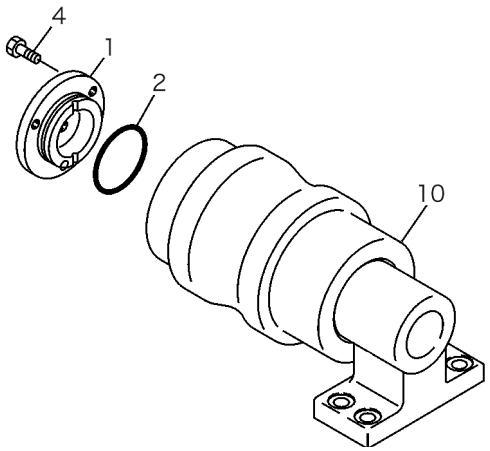	1. Install the grease applied O-ring (2) to the cover (1). 2. Place the cover (1), which has been installed with O-ring to the roller (10) and fasten them with High strength bolts (4). ※ Do not reuse O-ring. Apply Loctite No.262 to High strength bolts (4).
8	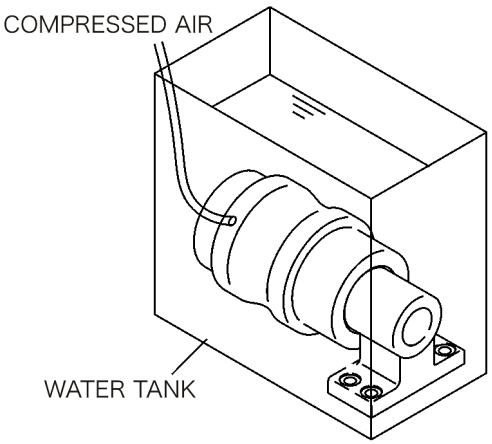	Check for leakage in the assembly using compressed air. Compressed air: 0.2 MPa
9	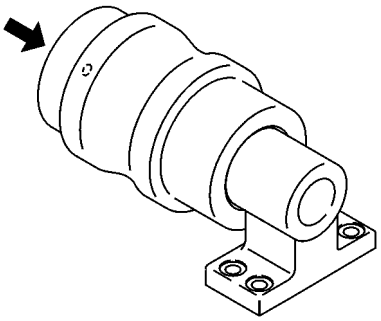	Fill engine oil through the plug hole.
10	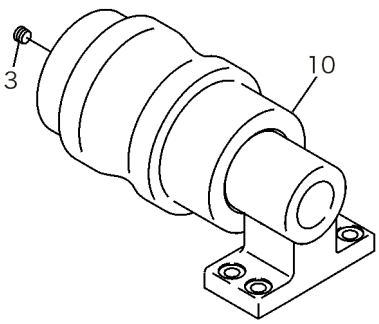	Install the plug (3). Clean the assembly and dry it using compressed air. Now the assembly has been completed.

https://truckmanualshub.com/

Upper Roller

Assembly Drawings

PART NAME	SYM	QTY
COVER	1	1
O-RING 1A-G90	2	1
PLUG 1/4	3	1
HIGH STRENGTH BOLT M10X30	4	6
LOCTITE 262	5	NEED
THRUST PLATE	6	1
BUSHING	7	1
ROLLER SHAFT	8	1
BUSHING	9	1
CARRIER ROLLER	10	1
FLOATING SEAL	11	1
BRACKET	12	1

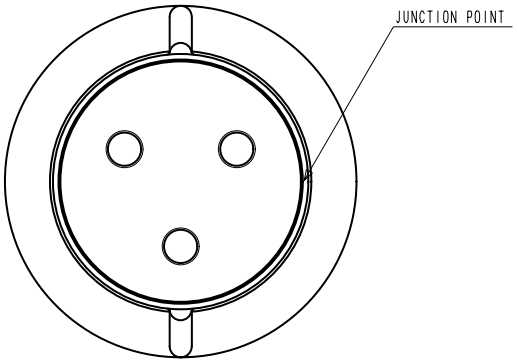

A ~

A

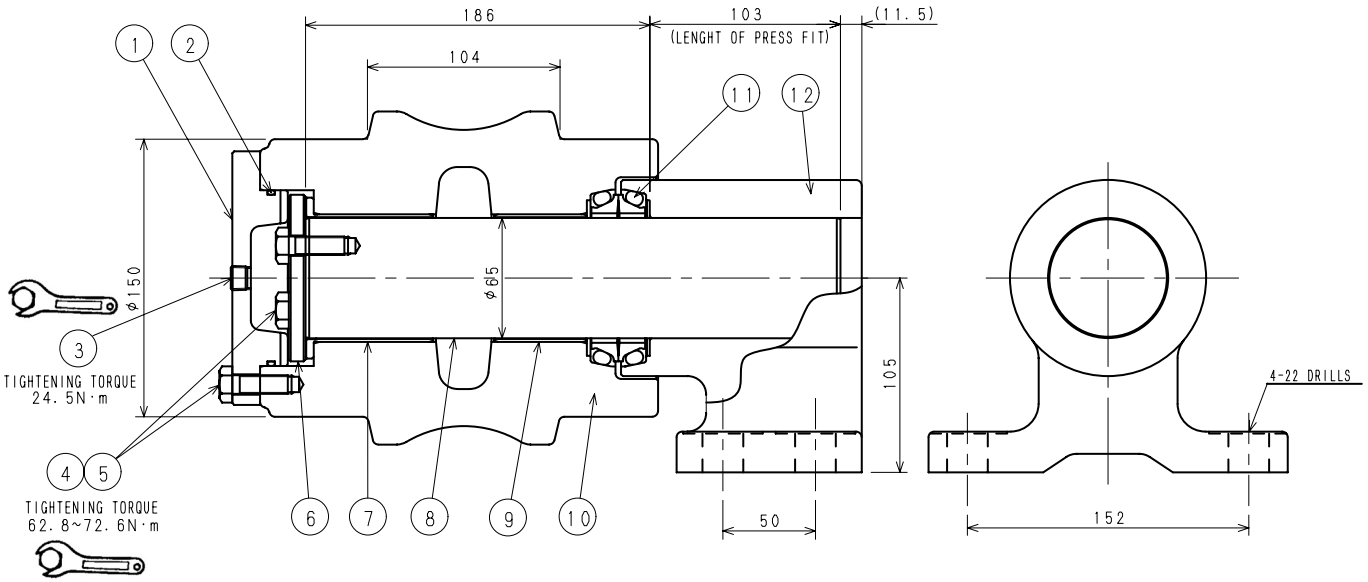

NOTES

1) AFTER ASSEMBLING, FILL 250cc OF MOBILE OIL SHC320 OR EQUIV.

2) ASSEMBLING THE SHAFT ⑧ WITH AND THE BLACKET ⑫ REQUIRES A PRESS-FIT. THE DIMENSIONAL RELATIONSHIP WITH THE SHAFT & THE COLLAR IS 186±0.2 AS SHOWN IN THE DRAWING.

3) ASSEMBLE THE BUSHINGS WITH THE ROLLER BY A PRESS FIT.
NOTE: THE SLIT OF BUSHING & THE GROOVE OF THE ROLLER SHOULD BE OUT OF PHASE WITH EACH OTHER.

KBA1141Z-C01

https://truckmanualshub.com/

Lower Roller

Disassembling and Assembling Instructions

1. Component Diagram

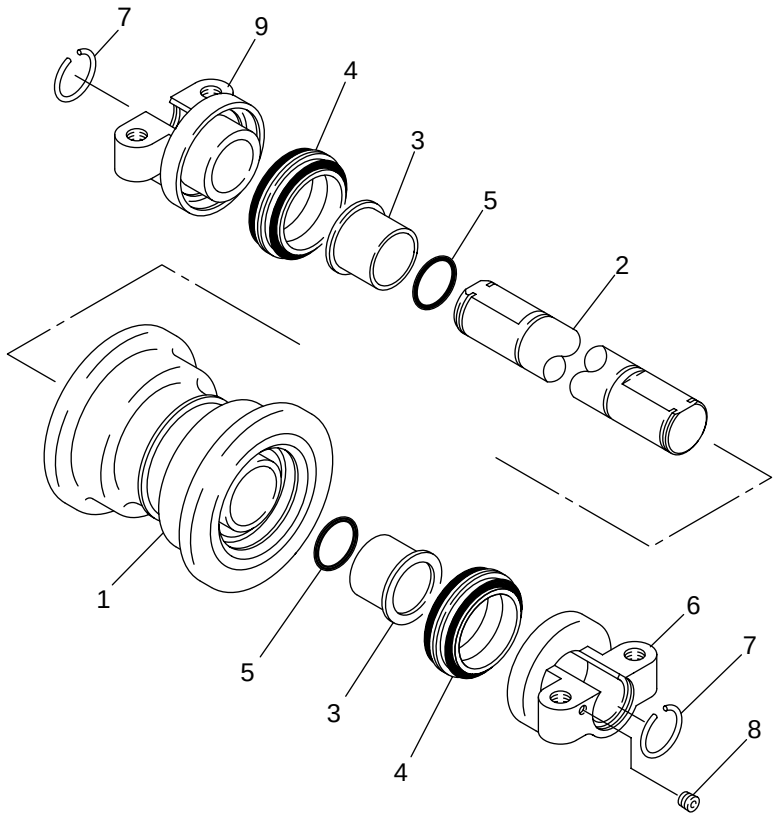

SYMBOL	PART NAME
1	ROLLER
2	SHAFT
3	BUSHING
4	FLOATING SEAL
5	O-RING
6	COLLAR (WITH PLUG)
7	WIRE CLIP
8	PLUG
9	COLLAR (WITHOUT PLUG)

2. Tools and Jigs

2-1.Tools

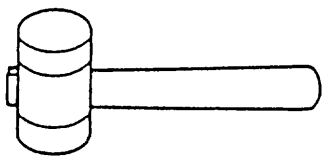

HAMMER

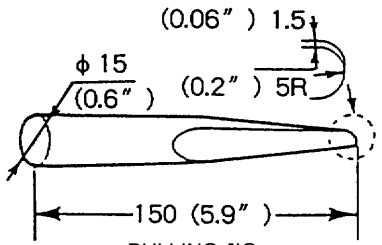

PULLING JIG

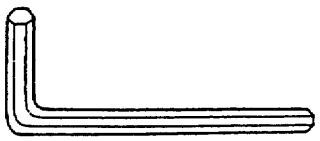

HEXAGON BAR WRENCH

2-2.Jigs

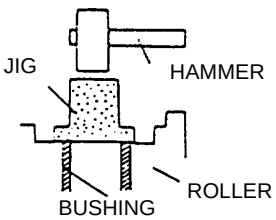

https://truckmanualshub.com/

3. Disassembling Instructions

3-1.Preparation

Prior to disassembly, take full preparatory measures.

a. Workbench with vises
   Prepare a suitable workbench large enough to arrange and keep parts and perform the work.

b. Tools and Jigs
   For the tools and jigs, refer to the previous section.

3-2.General cautions

c. Handle precision parts carefully during the operation; do not drop or hit them on other parts during the operation.

d. Do not attempt to finish the operation quickly; do not forcedly pry or hit the parts.
   Perform the operation carefully and patiently in order to prevent parts deformation, oil leakage and lower efficiency.

e. As disassembled parts tend to get rusted or collect dust and dirt, dust proof and rust prevention treatment should be applied immediately after disassembling the parts.

3-3.Disassembling procedure

1	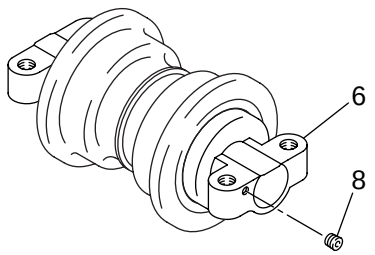	1. Clean the lower roller with kerosene. 2. Remove the plug (8) from the collar (6) to drain the oil.
2	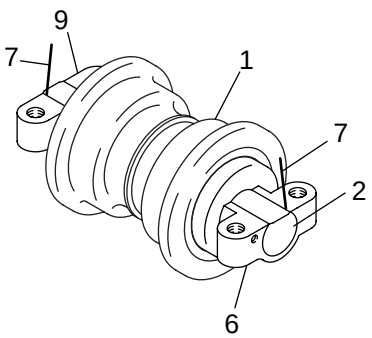	1. Remove the wire clips (7) from the shaft (2). 2. Remove the collars (6),(9) from the shaft (2).

https://truckmanualshub.com/

3	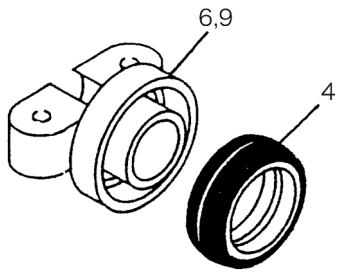	Remove the floating seals (4) from the collars (6),(9) using pulling jig.
4	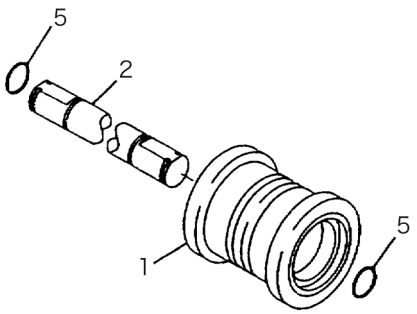	1. Remove the O-rings (5) from the shaft (2). 2. Draw out the shaft (2) from the roller (1).
5	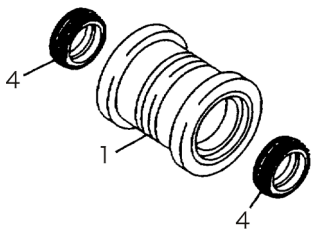	Remove the floating seals (4) from the roller (1).
6	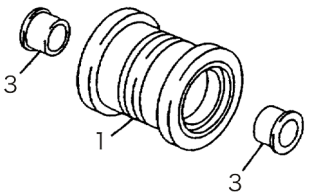	Remove the bushings (3) from the roller (1) using pulling jig and press.
7	Cleaning Parts 1. Preparatory cleaning a. Place parts in the preparatory cleaning container containing kerosene. ※ Wash off deposited substances which may cause scratches. Leave the parts submerged in the kerosene until the dirt and grease come off and float up.	2. Finish cleaning a. Put the parts in the finish cleaning container containing kerosene and clean them by slowly moving them. b. Wipe off kerosene with clean cloth. ※ Place the parts somewhere free of dust and moisture and dry them using compressed air. After drying, apply engine oil to the parts.

https://truckmanualshub.com/

4. Assembling instructions

4-1.Prior to assembly:

- Clean all the parts.
- Polish scratches, flashes or burrs by using an oil stone.
- Change sealing parts such as O-rings with new ones.

4-2.Assembling procedure

1	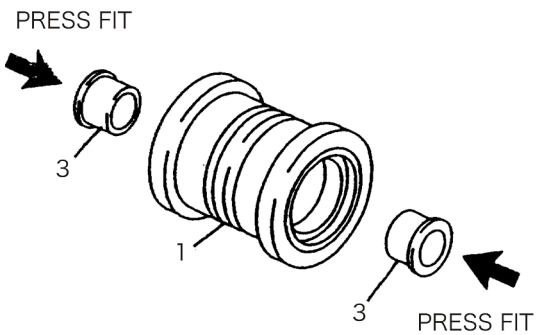	Install the bushings (3) to the roller (1) using jig and hammer. ※ Pay full attention when inserting the bushings by hammering. Do not reuse bushings (3). 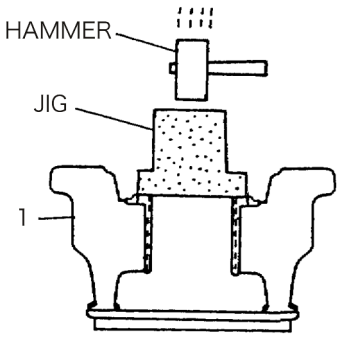
2	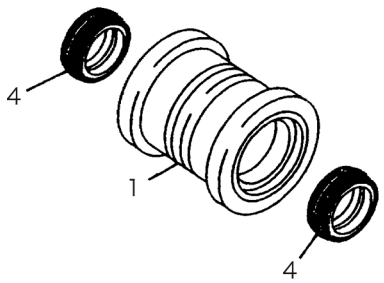	Install the floating seals (4) to the roller (1). ※ Do not reuse floating seals (4).
3	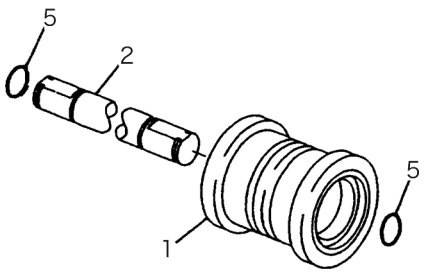	1. Apply grease to the surface of the shaft (2). 2. Install the shaft (2) to the roller (1). 3. Install the greased O-rings (5) to the shaft (2). ※ Do not reuse O-rings (5).

https://truckmanualshub.com/

4	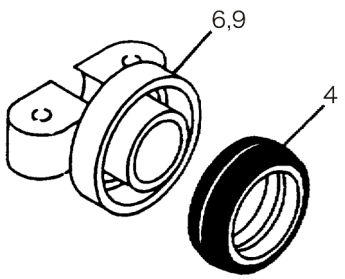	Install the floating seals (4) to the collars (6),(9). ※ Do not reuse floating seals (4).
5	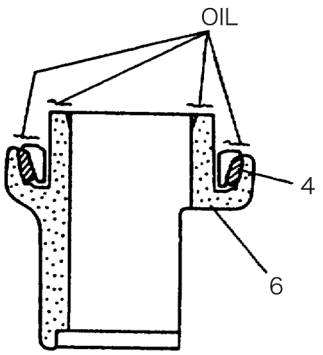	Apply oil to the surface (lip section) of the floating seal.
6	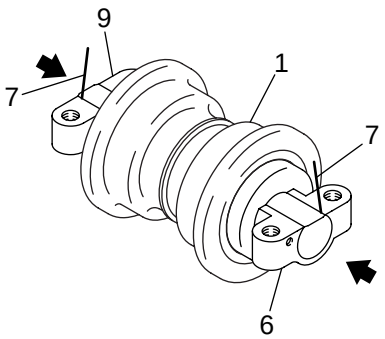	Press fit the collars (6),(9) to the shaft (2) and install the wire clips (7). (Temporary fastening) ※ Do not reuse wire clips (7).
7	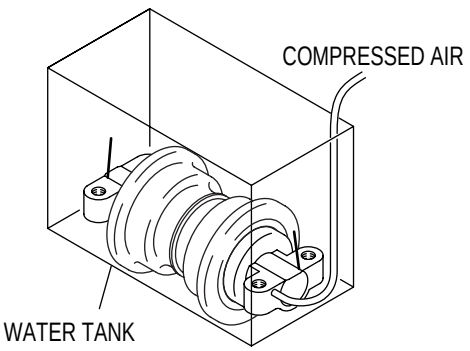	Check for leakage in the assembly using compressed air. Compressed air pressure: 0.2 MPa

https://truckmanualshub.com/

8	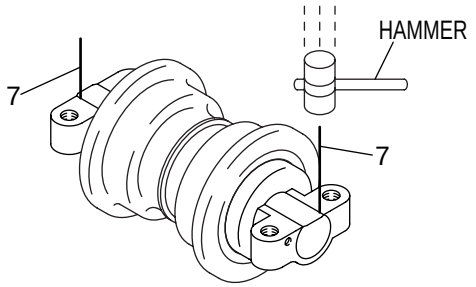	Install the wire clips (7) using a hammer. ※ Do not reuse wire clip (7).
9	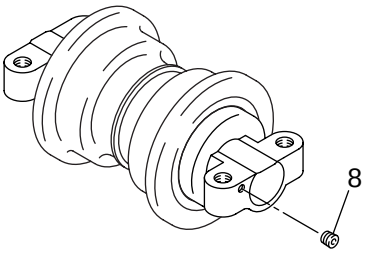	1. Fill engine oil through the plug hole. 2. Install the plug (8). Clean the assembly and dry them using compressed air. Now the assembly has been completed.

https://truckmanualshub.com/

Lower Roller

Second Edition:03/2005

Assembly Drawings

PART NAME	SYM	QTY
TRACK ROLLER	1	1
ROLLER SHAFT	2	1
BUSHING	3	2
FLOATING SEAL	4	2
O-RING 1A-G70	5	2
COLLAR(WITH PLUG)	6	1
WIRE CLIP	7	2
PLUG 1/4	8	1
COLLAR(WITHOUT PLUG)	9	1

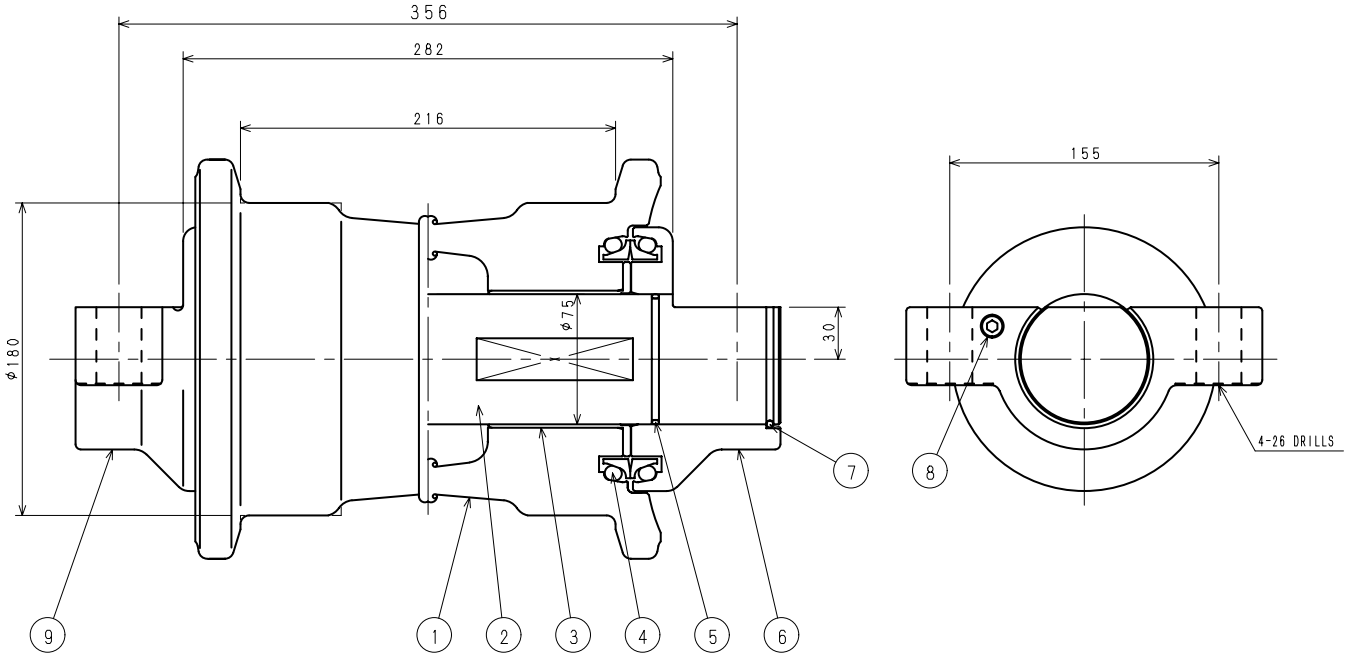

NOTES

AFTER ASSEMBLING, FILL MOBIL GEAR OIL SHC320 OR EQUIVALENT BY 280cc.

KSA1068Z-C02

https://truckmanualshub.com/

Grease Cylinder

Disassembling and Assembling Instructions

1. Component Diagram

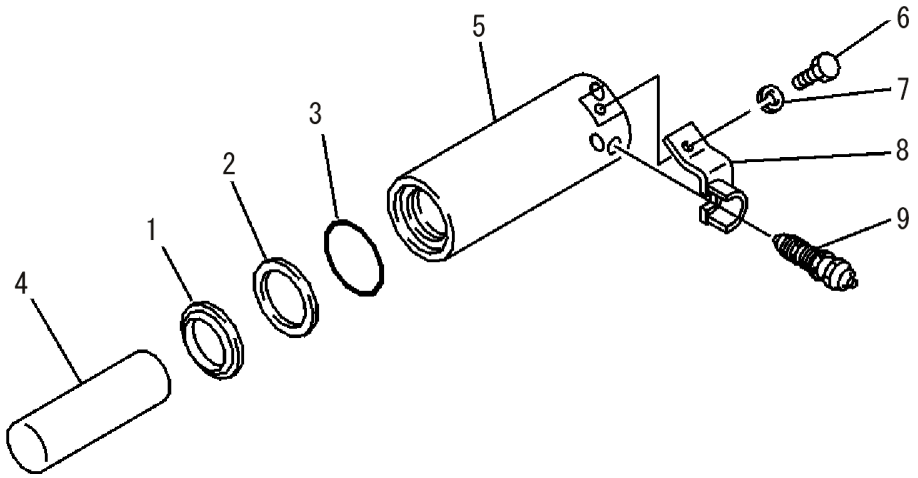

SYMBOL	PART NAME
1	DUST SEAL
2	BACKUP RING
3	O-RING
4	PISTON ROD
5	GREASE CYLINDER
6	HIGH STRENGTH BOLT
7	SPRING WASHER
8	BRACKET
9	CHECK VALVE

2. Tools and Jigs

2-1.Tools

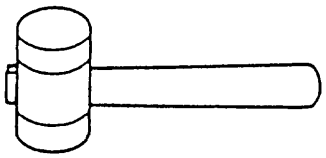

HAMMER

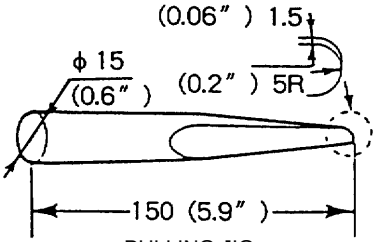

PULLING JIG

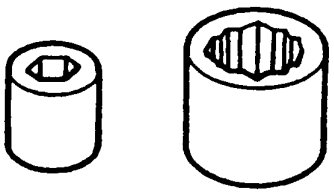

SOCKET

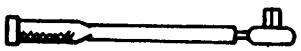

RATCHET HANDLE

2-2.Jigs

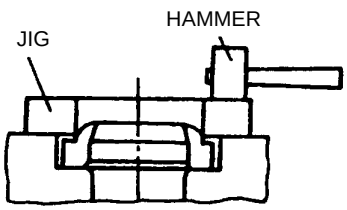

https://truckmanualshub.com/

3. Disassembling Instructions

3-1.Preparation

Prior to disassembly, take full preparatory measures.

a. Workbench with vises
   Prepare a suitable workbench large enough to arrange and keep parts and perform the work.

b. Tools and jigs
   For the tools and jigs, refer to the previous section.

3-2.General cautions

c. Handle precision parts carefully during the operation; do not drop or hit them on other parts during the operation.

d. Do not attempt to finish the operation quickly; do not forcedly pry or hit the parts.
   Perform the operation carefully and patiently in order to prevent parts deformation, oil leakage and lower efficiency.

e. As disassembled parts tend to get rusted or collect dust and dirt, dust proof and rust prevention treatment should be applied immediately after disassembling the parts.

3-3.Disassembling procedure

1	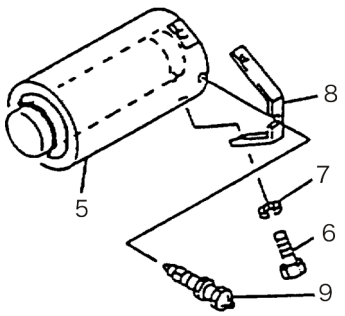	1. Clean grease cylinder with kerosene. 2. Remove bolts (6) and washers (7), and then remove the bracket (8). 3. Remove check valve (9) from grease cylinder (5).
2	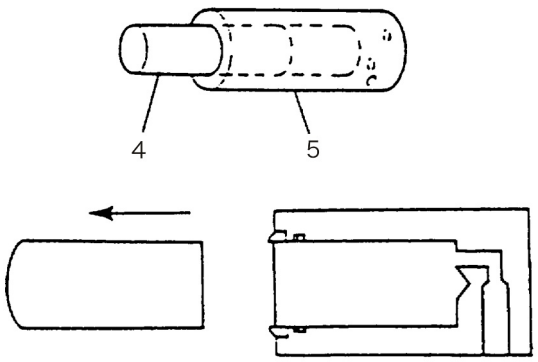	Draw out piston rod (4) from grease cylinder (5).

https://truckmanualshub.com/

3	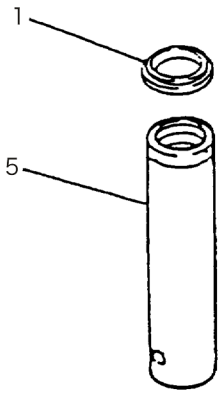	Remove dust seal (1) from grease cylinder (5) using a pulling jig.
4	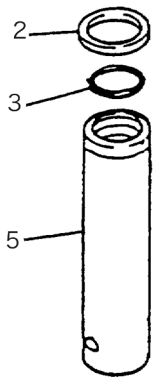	Remove back-up ring (2) and O-ring (3) from grease cylinder (5).

4. Assembling instructions

4-1.Prior to assembly:

- Clean all parts.
- Polish scratches, flashes or burrs using an oil stone.
- Change sealing parts such as O-rings with new ones.

4-2.Assembling procedure

1	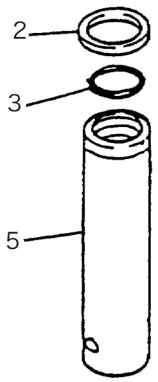	1. Install grease-applied O-ring (3) to grease cylinder (5). 2. Install back-up ring (2). ※ Do not reuse back-up ring (2) and O-ring (3).

https://truckmanualshub.com/

2	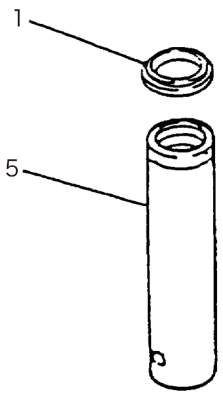	1. Install dust seal (1) to grease cylinder (5) using a jig and hammer. 2. Apply grease on lip section of dust seal. ※ Do not reuse dust seal (1). 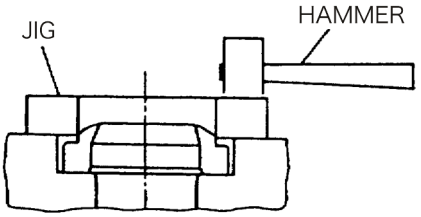
3	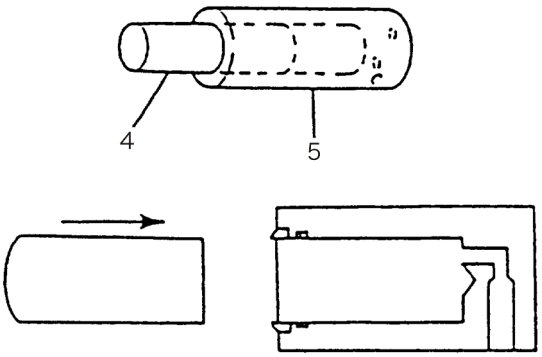	1. Apply grease on surface of piston rod (4). 2. Insert piston rod (4) into grease cylinder (5).
4	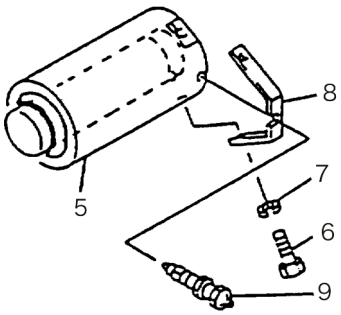	1. Install check valve (9) to grease cylinder (5) by applying specified tightening torque. 2. Install bracket (8), and then fasten it with bolts (6) and washers (7).

https://truckmanualshub.com/

Grease Cylinder

Second Edition : 03/2005

Assembly Drawings

PART NAME	SYM	QTY
DUST SEAL	1	1
BACKUP RING T-P100	2	1
O-RING 1B-P100	3	1
PISTON ROD	4	1
GREASE CYLINDER	5	1
HIGH STRENGTH BOLT M12X25	6	2
SPRING WASHER 12	7	2
BRACKET	8	1
CHECK VALVE	9	1

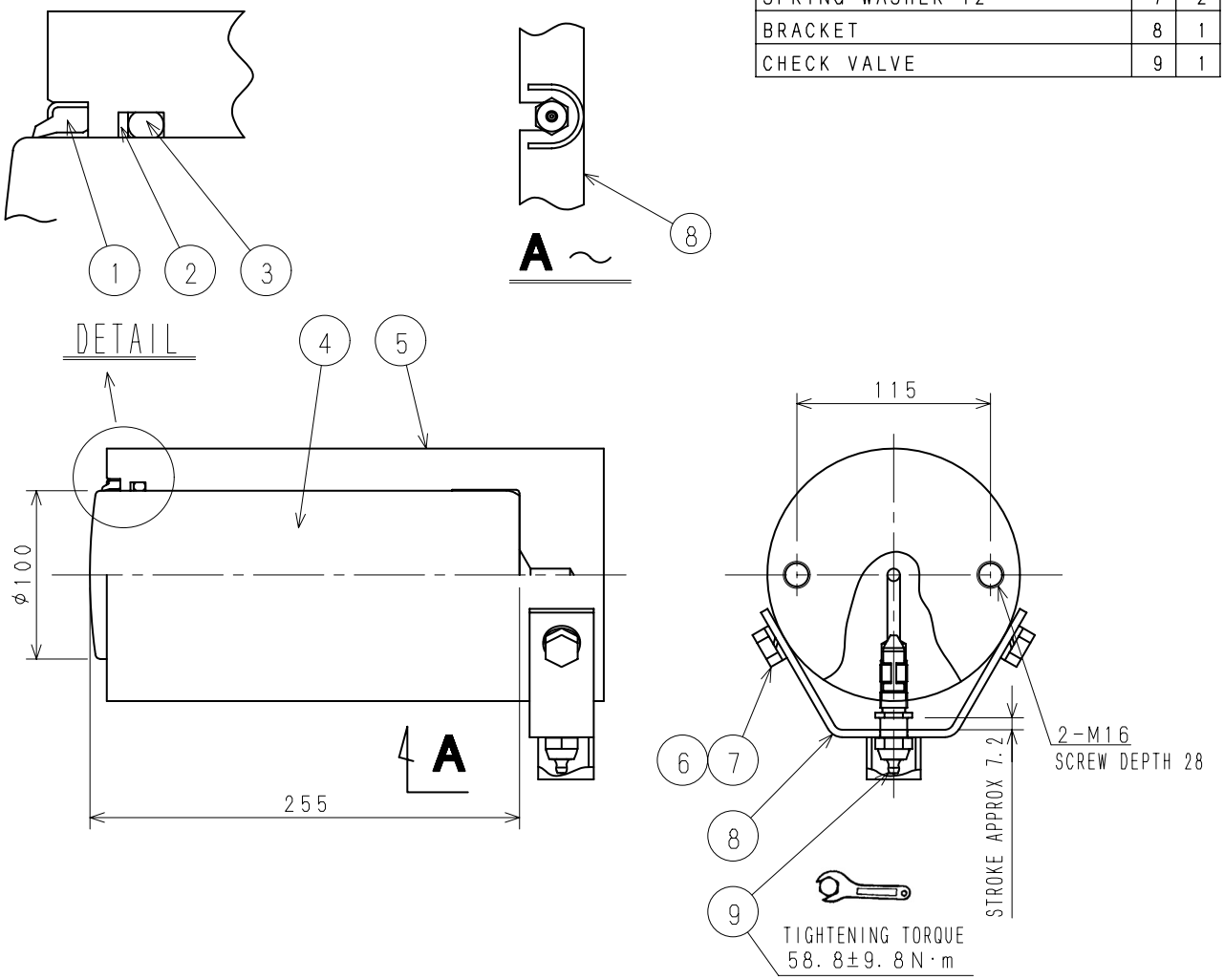

NOTES

1) NOTE: THE POSITION OF BACKUP-RING ② & O-RING ③, APPLY GREASE ON O-RING BEFORE ASSEMBLY.

※ 2) THE SPHERICAL SURFACE OF PISTON ROD ④ IS TOWARD THE OUTSIDE OF THE GREASE CYLINDER.

3) ASSEMBLE THE BRACKET ⑧ AS SHOWN IN THE DRAWING, AFTER ASSEMBLING THE CHECK VALVE.

KSA0832Z-B01

https://truckmanualshub.com/

Disassembling and Assembling Instructions

1. Functions

The rotating joint, which is located between the lower section and upper section of the central main body, enables the upper and lower sections to turn continuously in all directions without being interfered by torsion from the hydraulic system by coaxial rotations at the center of the turn, while feeding and receiving hydraulic oil to and from the travel motor via the control valves.

2. Component Diagram

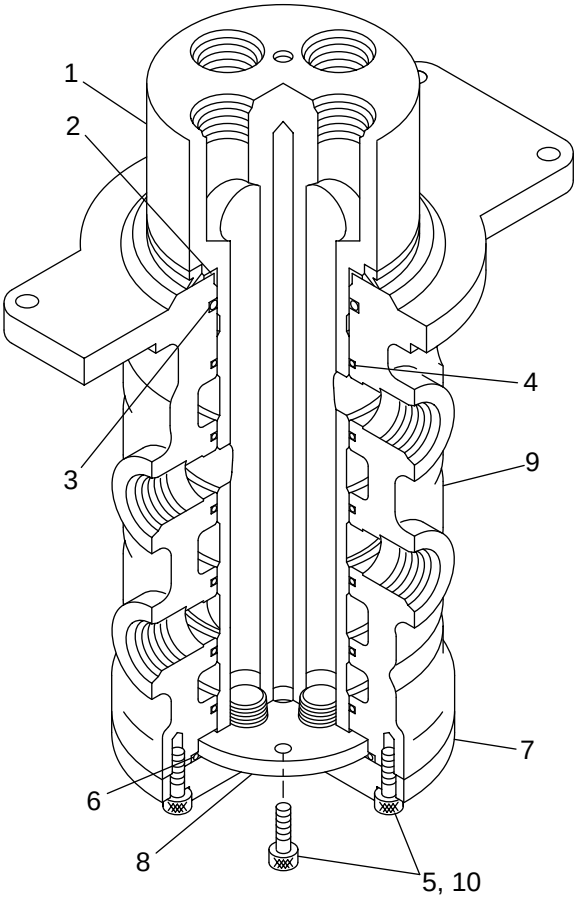

SYMBOL	PART NAME
1	AXLE
2	V-RING
3	O-RING
4	PACKING RING
5	HEXAGON SOCKET HED BOLT
6	O-RING
7	COVER
8	THRUST PLATE
9	ROTOR
10	LOCTITE 262

It consists of an inner axle, outer rotor, packing ring, O-ring, thrust plate and cover. There are ports and oil paths in the axle and rotor, each of which makes pairs. Packing rings and O-rings are inserted between the axle and rotor, which separate each oil path. In addition, the axle and rotor can rotate around each other and oil can flow freely between the axle and rotor via oil grooves.

https://truckmanualshub.com/

3. Tools and Jigs

3-1.Tools

(1) Hexagon bar spanner
(2) Torque wrench
(3) Box spanner
(4) Flash light
(5) Inspection mirror
(6) Brush (vinyl made)

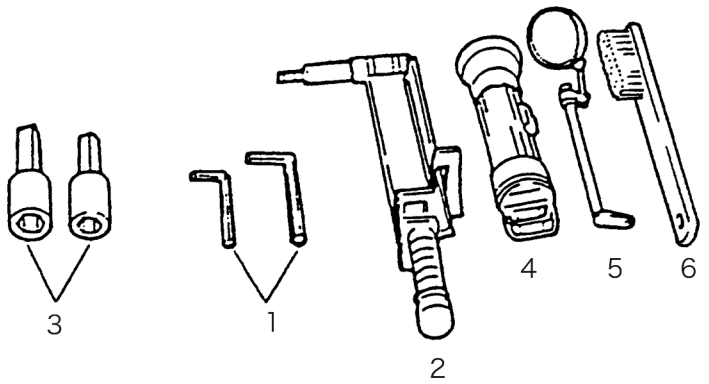

3-2.Jigs

Jig for pushing out axle

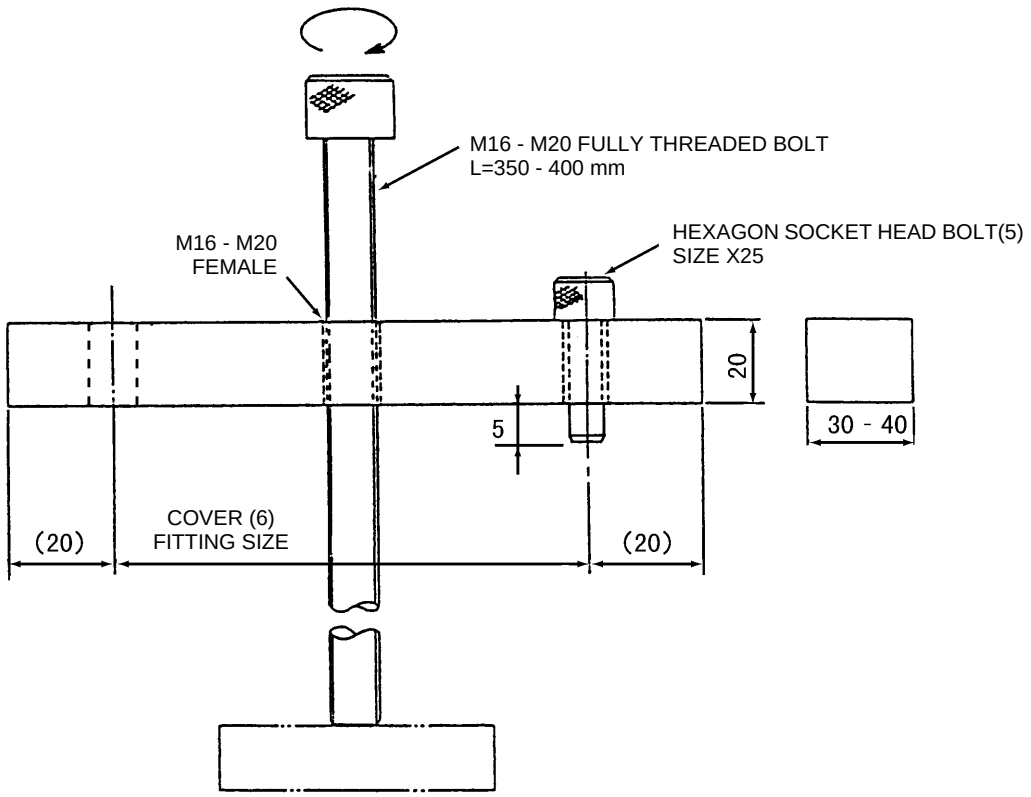

https://truckmanualshub.com/

4. Disassembling Instructions

4-1.Prior to disassembly

1. As this is a hydraulic device, follow the cautions below.
   - Rough handling should be avoided (e.g. forcedly prying and hitting).
   - Be careful when handling parts; do not drop or hit against other parts.
   - Do not allow foreign substances such as dirt or moisture to enter into the parts.
2. Always use jigs when disassembling axles and rotors.
3. Use a strongly-built, stable workbench which has enough space. The workspace should be clean and free of dirt and moisture. Remove all dirt and moisture before starting work.
4. Inspect the tools and jigs before starting work. Remove dirt and moisture to make them clean.
5. Use suitable tools and jigs which meet requirements for the job.
   Follow the procedure below to disassemble rotating joints.

4-2.Disassembling procedure

1	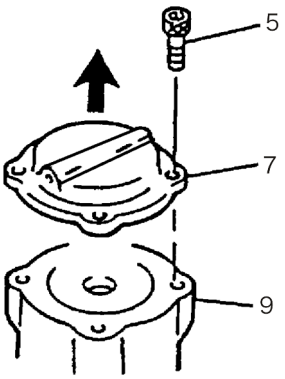	Remove the cover (7) together with the hexagon socket head bolts (5).
2	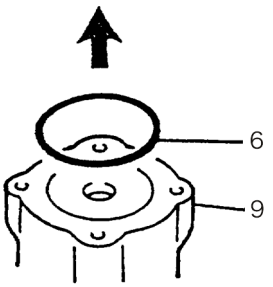	Remove the O-ring (6).

https://truckmanualshub.com/

3	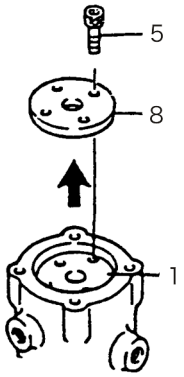	Remove the thrust plate (8) together with the hexagon socket head bolts (5).
4	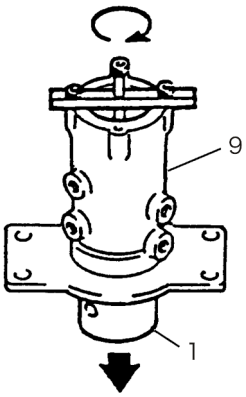	Push out the axle (1) from the rotor (9) using a jig. NOTE: Do not hit the parts with a hammer while carrying out this operation.
5	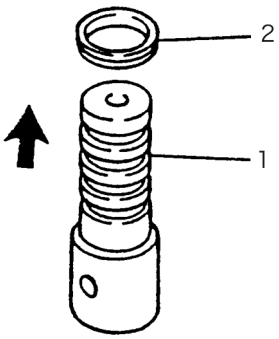	Remove the V-ring (2) from the axle (1).
6	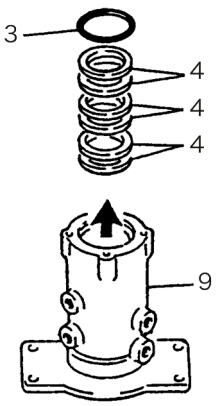	Remove the O-ring (3) and packing rings (4) from the rotor (9).

https://truckmanualshub.com/

5. Assembling Instructions

5-1.Prior to assembly:

- Clean all the parts.
- Polish scratches, flashes or burrs using an oil stone.
- Change sealing parts such as O-rings and packing ring with new ones.

  Prior to the disassembly described in the *Section 4-1*, perform the same cautions and measures mentioned in this section.

5-2. Assembling procedure

1	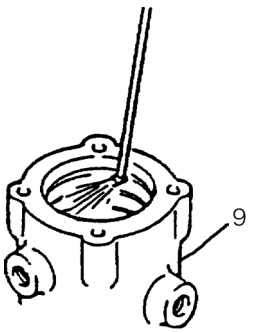	1. Clean the rotor (9) using cleaning liquid or compressed air. 2. After cleaning, check for scratches, flashes, burrs or dents on the inner sides or grooves of the rotor.
2	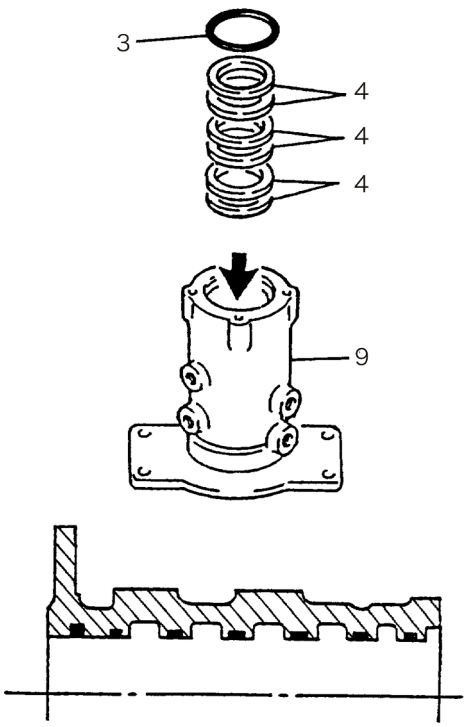	Check the number of packing rings (4) and the O-ring (3). Apply grease and install them following the steps shown below. 1. Set one packing rings (4) in each groove up to the second from the top. 2. Set the O-ring (3) in the top groove. ※ Do not reuse packing rings (4). Do not reuse O-ring (3).

3	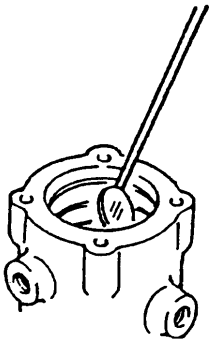	After installing O-ring and packing ring, check for extrusions or twists using a mirror. Also check for installation errors. After the check is complete, apply grease. After the grease application, check again for extrusion.
4	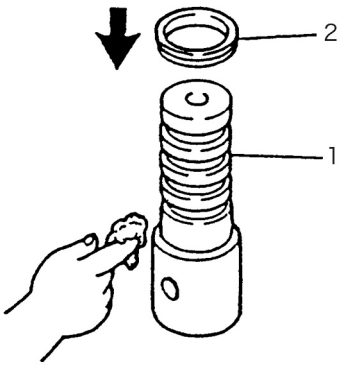	Install the V-ring (2) to the axle (1), and apply plenty of grease. Ensure that no water or dirt mixes into the grease. ※ Do not reuse V-rings (2).
5	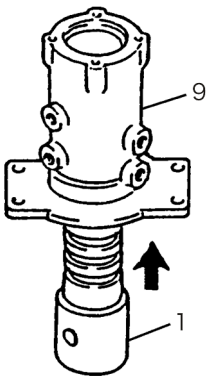	Install the axle (1) to the rotor (9). ※ Be careful not to cause any cuts or damage to the V-ring (2) while setting.
6	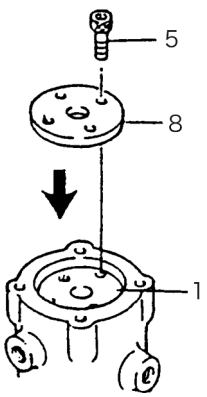	Apply Loctite No.262 to the hexagon socket head bolts (5) and install the thrust plate (8) to the axle (1) with the bolt by applying the specified tightening torque.

https://truckmanualshub.com/

7	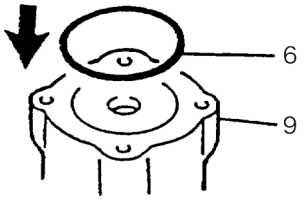	Install the O-ring (6) to the rotor (9). Do not reuse O-ring (6).
8	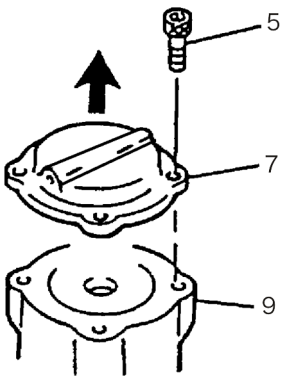	 Apply Loctite No.262 to the hexagon socket head bolts (5) and install the cover (7) to the rotor (9) with the bolt by applying the specified tightening torque.

6. Storage Instructions

6-1. Storing products

1. The limit to long-term storing of rotating joints is one year. Generally, rotating joints which have been stored for over one year are required to carry out overhaul and exchange of all seals and inspections on parts for abnormality such as rust occurrence.
2. Store rotating joints by keeping level with the ground as shown in the figure to the right.
3. If rotating joints which have been stored for more than one year are used, perform all checks for oil leakage from the sealing parts in operation.
4. When storing rotating joints, carry out rust preventive measures as follows:

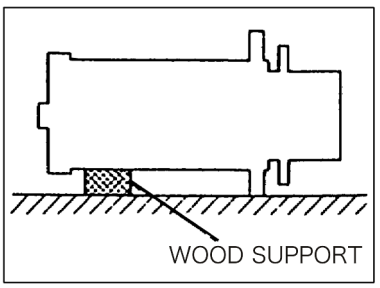

SAFETY	**NO FIRE**

KEEP FIRE AWAY DURING OPERATION

https://truckmanualshub.com/

a. Remove dirt, waste and moisture using a clean cloth.
   When rusted, take necessary measures to stop and prevent rust.
b. Degrease fully using a cleaning agent (petroleum solvent) or trichlene.
c. Remove fingerprints using methyl alcohol or fingerprint remover and dry them to make a completely clean surface.
d. Cleaning should be done by brushing or wiping off with a clean cloth.
e. Cleaning should not be carried out on sections which will be damaged if the solution is attached (e.g. coated sections, rubber used parts).

Internal Rust Prevention

In order to prevent rust caused by dew condensation, fill volatile corrosion inhibitor and put a polyethylene plug.

External Rust Prevention

Carry out rust prevention on uncoated sections in the following steps:

a. Apply corrosion preventive agent to fitting flange or port screw sections by brushing. Apply corrosion preventive oil uniformly to all surfaces in other sections.
b. After applying the corrosion preventive agent, the treated items should be covered with vinyl sheets or VPI papers and stored in a well ventilated place. Additionally, the cover should be fixed with tape if necessary.
c. Rotating joints should be stored in an appropriate place.
   (Store them in a clean, dry place which is not subject to wind, rain, or direct sunlight.)
   If they are stored in an inappropriate place, an overhaul may be required even within the above-mentioned overhaul period.

6-2.Storing parts

1. Storing Metal Items
   a. Corrosion Preventive Method
      After carrying out cleaning operations following *Section 6-1*, apply the corrosion preventive agent by brushing.
      Cover the treated items with vinyl sheets or VPI papers.
      Additionally, fix the cover with tape if necessary.
   b. Storing Method
      Corrosion prevention treated items should be stored by lining up on a shelf piece by piece. Never pile them up.
2. Storing Rubber Items
   a. Storing Method
      In order to prevent aging, rubber items such as O-rings should be stored in a place which is not exposed directly to sunlight or heat.
   b. Storing Period
      Storing period should be 1 year at the longest. Do not use items which have been stored longer than 1 year.

	290-6-06-01-09
Rotating Joint	Page No. 1/ 1
	First Edition : 03/2005

Assembly Drawings

PART NAME	SYM	QTY
AXLE	1	1
V-RING V-80A	2	1
O-RING 1B-P80	3	1
PACKING RING	4	7
HEX SOC HD BOLT M8X25	5	8
O-RING 1B-G100	6	1
COVER	7	1
THRUST PLATE	8	1
ROTOR	9	1
LOCTITE 262	10	NEED
NAME PLATE	11	1
DRIVE SCREW	12	2

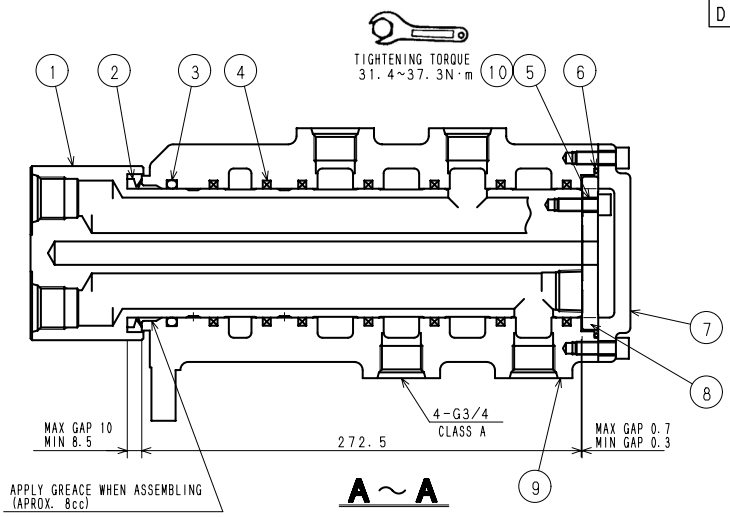

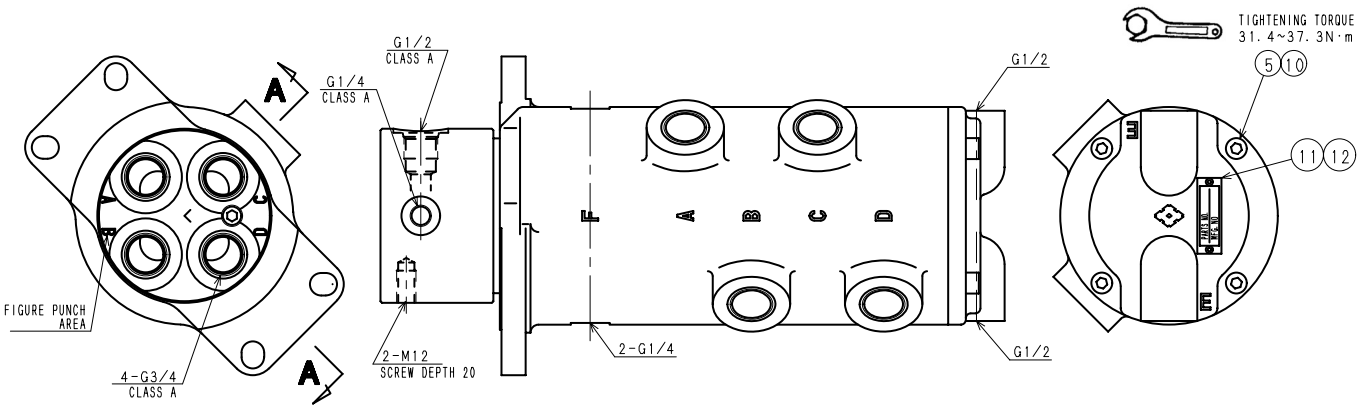

KRA1875X-C00

https://truckmanualshub.com/

Disassembling and Assembling Instructions

1. Precautions for Work

1. When fastening the piping connection for refrigerating circuits, apply special oil (SP-10) to O-rings and fasten the connecting parts using tightening torque shown in Table 1. Further, tighten screws and bolts using torque shown in Table 2.

Table 1

	Pipe fastening section	Tightening torque N·m
1	D hose and compressor (M8 bolt)	20 to 30
2	S hose and compressor (M8 bolt)	20 to 30
3	D hose and condenser (1/2 inch nut)	20 to 25
4	Condenser and L hose (L pipe) (8 mm nut)	12 to 15
5	L hose (L pipe) and receiver dryer (M 6 bolt)	8 to 12
6	S hose, L hose and expansion valve (M6 x P1.25)	8 to 12

Table 2

Category	Type	Nominal diameter (mm)	Pitch (mm)	Tightening torque N·m
Bolt	7T	M6	1.0	8 to 12
		M8	1.25	20 to 30
		M10 (air conditioning unit mounting section)	-	17 to 19
		M10	1.25	40 to 54
		M10	1.5	37 to 51
	9T	M8	1.25	24 to 36
		M10	1.25	56 to 76
		M10	1.5	53 to 72
Nut	Pipe diameter	8 mm	1.5	12 to 15
		1/2 inch	1.5	20 to 25
		5/8 inch	1.5	30 to 35

※ 2. About oil capacity for compressors

SD7H13WM7359 X1 Series compressors are filled with 135 cc of oil (SP-10). Low oil level may cause it to seize up at high speeds and reduce durability while excessive oil may reduce its cooling performance. While the air conditioning is running, the oil is distributed in the refrigerating circuits. Therefore, the oil level must be adjusted following the instructions in Table 3 when changing parts.

https://truckmanualshub.com/

Table 3

Replacement part	Oil level adjustment
Compressor	1. Measure the oil volume in compressor that is removed. 2. Remove all the oil except that remaining in the compressor that was removed from the brand new compressor. Example: If 30 cc of oil remains in the removed compressor (for a SD7H13WM7359 compressor), remove 105 cc from the brand new compressor. (135 cc – 30 cc = 105 cc)
Evaporator	Refill 40 cc.
Condenser	Refill 40 cc.
Receiver dryer	Refill 20 cc.

※

NOTE: The oil type is different according to compressors. Refer to the nameplate attached to the compressor, which has indications for the oil type.

※ 3. Before starting the operation, stop the engine and turn off the power for air conditioner related devices.

※ 4. Avoid water or dust from entering the refrigerating circuits. In addition, do not leave the piping unattached from the machine.

Avoid conducting piping removal or fitting work under rainy conditions.

※ 5. When the work is completed, check that the faulty parts have been fully repaired by running the air conditioner.

https://truckmanualshub.com/

2. Disassembling and Assembling Air Conditioning Unit

1. Name for each part of air conditioning unit

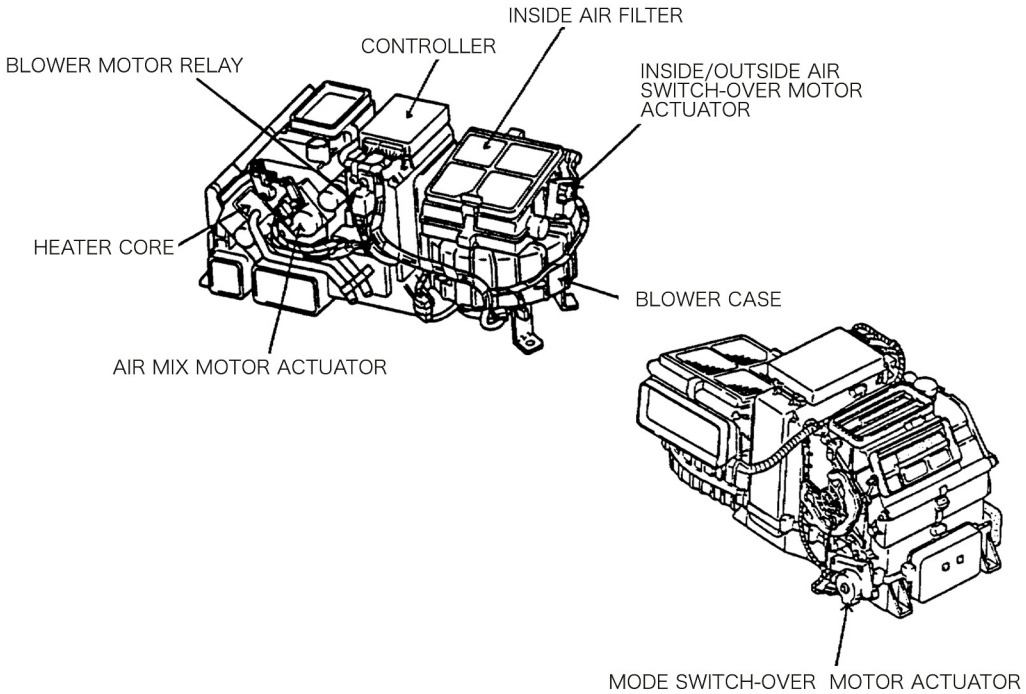

2. Removing the intake case and blower case:
   a. Remove the inside air filter, and remove the 4 screws (5 x 14) to remove the intake case.
   b. Remove the blower case by removing the 3 screws (5 x 14) that mount the blower case to the unit case.

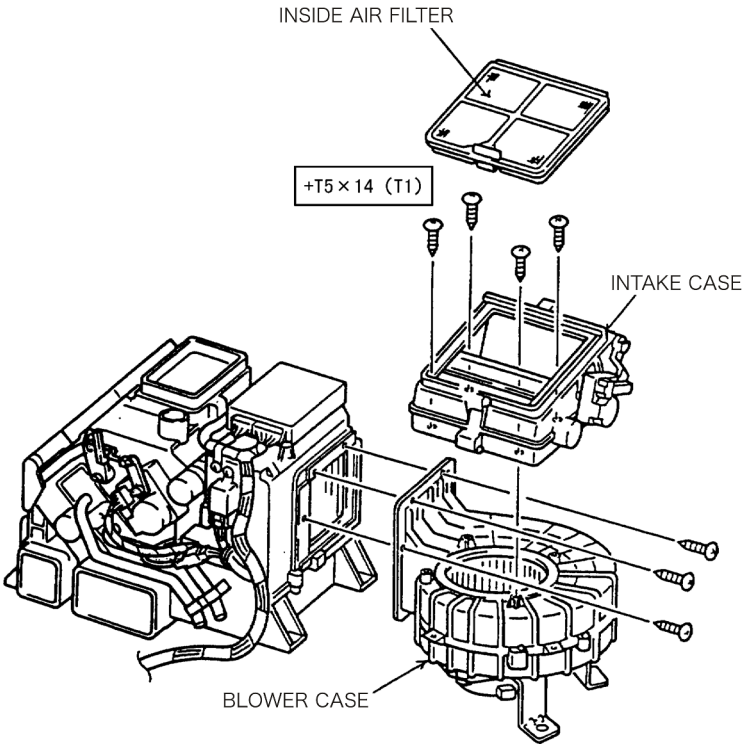

https://truckmanualshub.com/

3. Removing the blower motor and blower controller:
   a. After removing the cooling hose, remove the 3 bolts (5 x 16) fitted under the blower case and pull out the blower motor.

NOTE: Do not remove the fan from the blower motor.

   b. Remove the 2 screws (4 x 14) under the blower case and pull out the blower controller.

NOTE: Do not disassemble the blower controller.

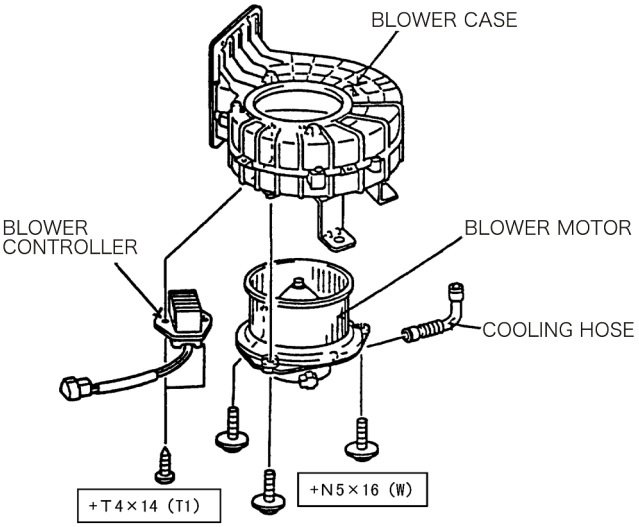

4. Removing the heater core:
   a. Drain the cooling water, detach the heat hose and then remove the 2 screws (5 x 16).
   b. Remove the pipe clamp and the AHC bracket, and then pull out the heat core.

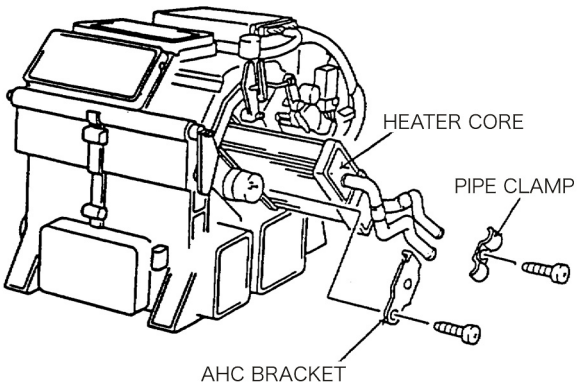

5. Removing the upper and lower cases of the air conditioning unit:
   a. Remove the rod D from the rod holder mounted on the lever of the mode motor actuator.
   b. Remove the motor actuator mounted on the lower unit case and the upper unit case by removing 3 screws.
   c. Remove the 11 mounting screws (5 x 16) from the lower unit case and the upper unit case.
   d. Pull upward the upper unit case, paying attention not to have evaporation sensor cords caught by the case.

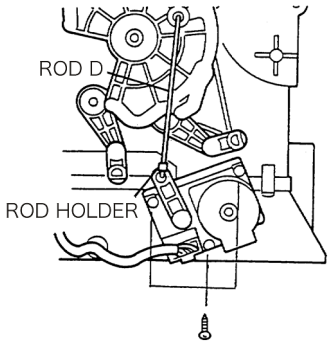

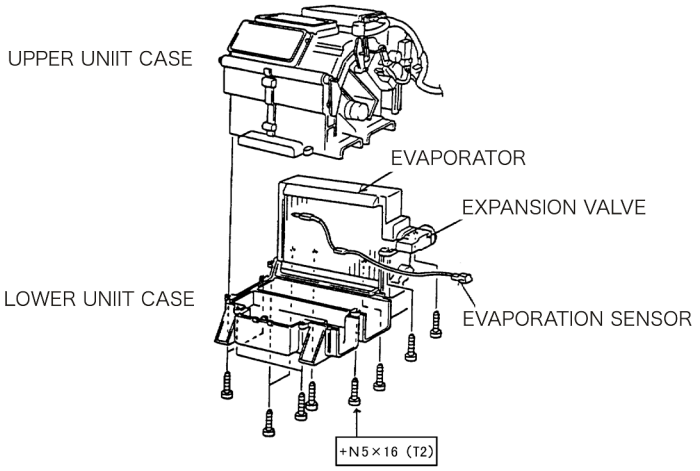

6. Changing the evaporator and the expansion valve:
   a. Pull out the evaporator with its heat insulating material attached from the lower unit case.
   b. Pull out the evaporation sensor with its sensor holder attached from the evaporator.
   c. Remove the 2 hexagonal bolts (M5x40) from the evaporator, and then, remove the expansion valve from evaporator.
   d. Install O-rings (5/8 and 1/2 NFO rings) onto a new evaporator and then fit the expansion valve.

※ Special care should be taken while installing to avoid O-ring engagement.

※ Do not reuse O-rings.

※ Install O-rings with bare hands.

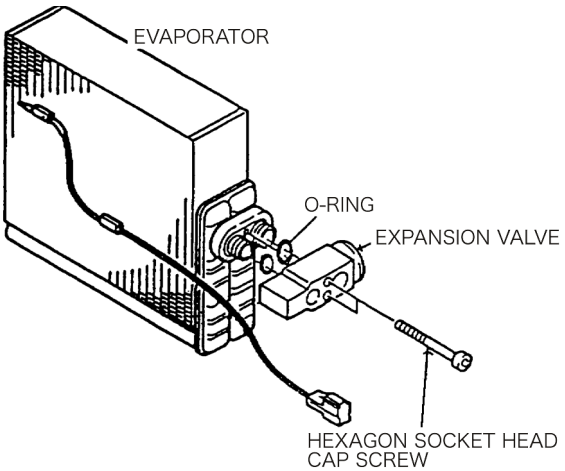

https://truckmanualshub.com/

7. Installing the evaporation sensor:

※ Attach the evaporation sensor to the holder, place the tip of the holder and sensor in place as shown in the figure below.

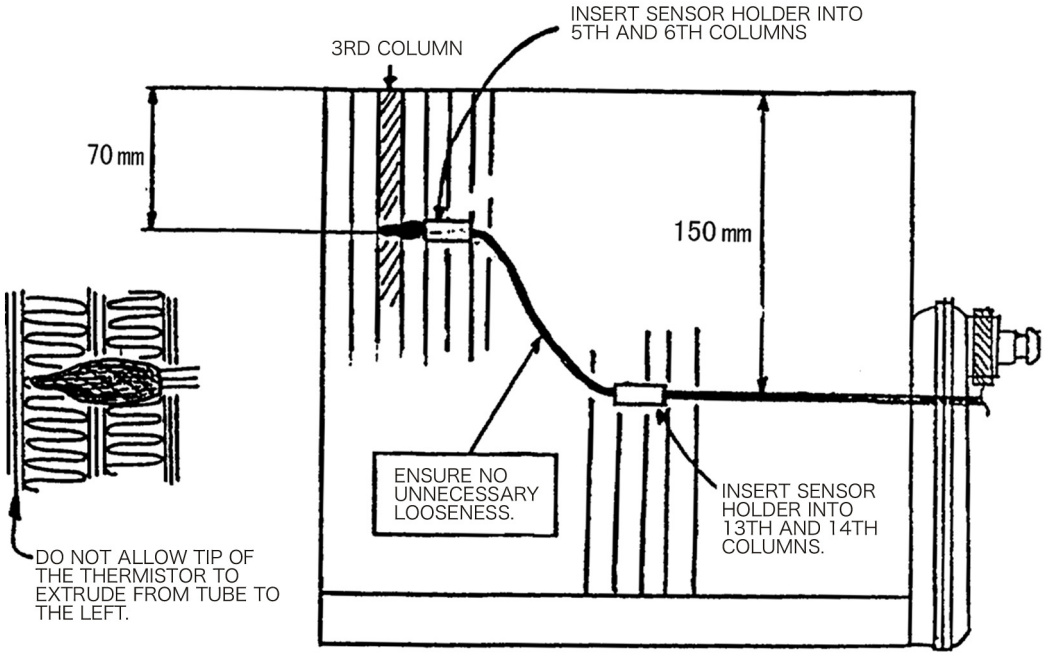

8. Replacement of the motor actuator:

   Replacement of mode motor actuator:

   a. Remove the rod clamp C interlocking the mode motor actuator and mode cam by pushing to the direction of ARROW.
   b. Remove 3 mounting screws from the motor actuator and remove the motor actuator with its rod clamp and lever attached from the unit.
   c. Remove the rod clamp and lever. Then, install them on a new motor actuator in the reverse order of the disassembly.

MODE SWITCH-OVER MOTOR ACTUATOR

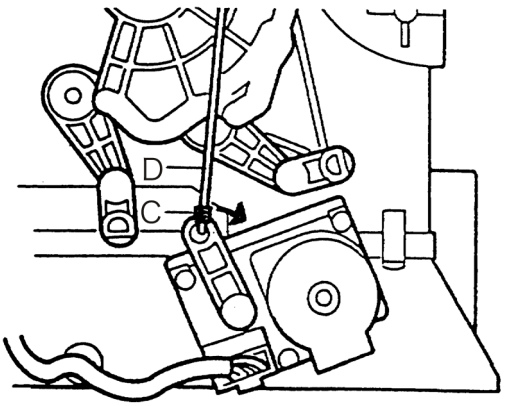

https://truckmanualshub.com/

Replacement of the air mix motor actuator:

a. Remove the rod B from the lever by pushing the rod clamp A, which is attached on the lever of the motor actuator, to the direction of ARROW.
b. Remove the 3 mounting screws from the motor actuator, and remove the motor actuator with its rod clamp and lever attached from the unit.
c. Remove the rod clamp and lever from the motor actuator. Install a new motor actuator in the reverse order of the disassembly.

AIR MIX MOTOR ACTUATOR

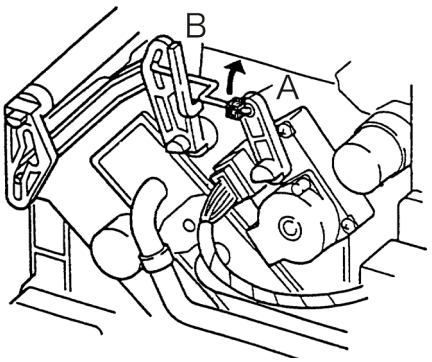

Replacement of the inside/outside air switch-over motor actuator:

a. Remove the screw fixing the motor actuator with its lever E attached, and remove the motor actuator.
b. Remove the lever from the motor actuator. Install a new motor actuator in the reverse order of the disassembly.

INSIDE/OUTSIDE AIR SWITCH-OVER MOTOR ACTUATOR

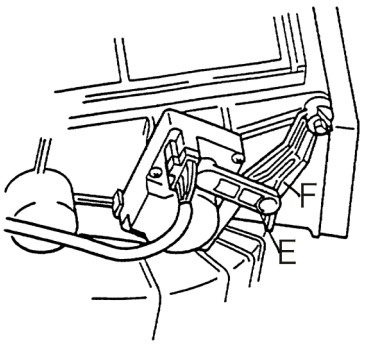

https://truckmanualshub.com/

Check Sheets

1. Drive Sprocket

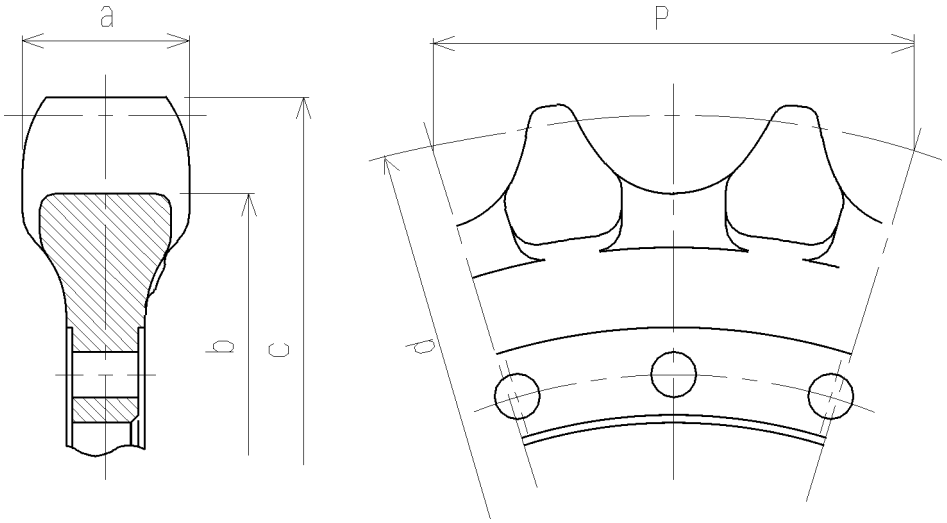

NOTES: For measuring gauges, refer to the reference data for inspection gauge.
Use the *Maintenance Standard Value Table* for determination.

Part Name	Symbol	Measured dimensions (mm)	Determination	Measures
Drive sprocket	a		Good / No good	Buildup welding or replacement
	b	Diameter:	Good / No good	
	c		Good / No good	
	d	Diameter:	Good / No good	
	p		Good / No good	

https://truckmanualshub.com/

2. Take-up Roller

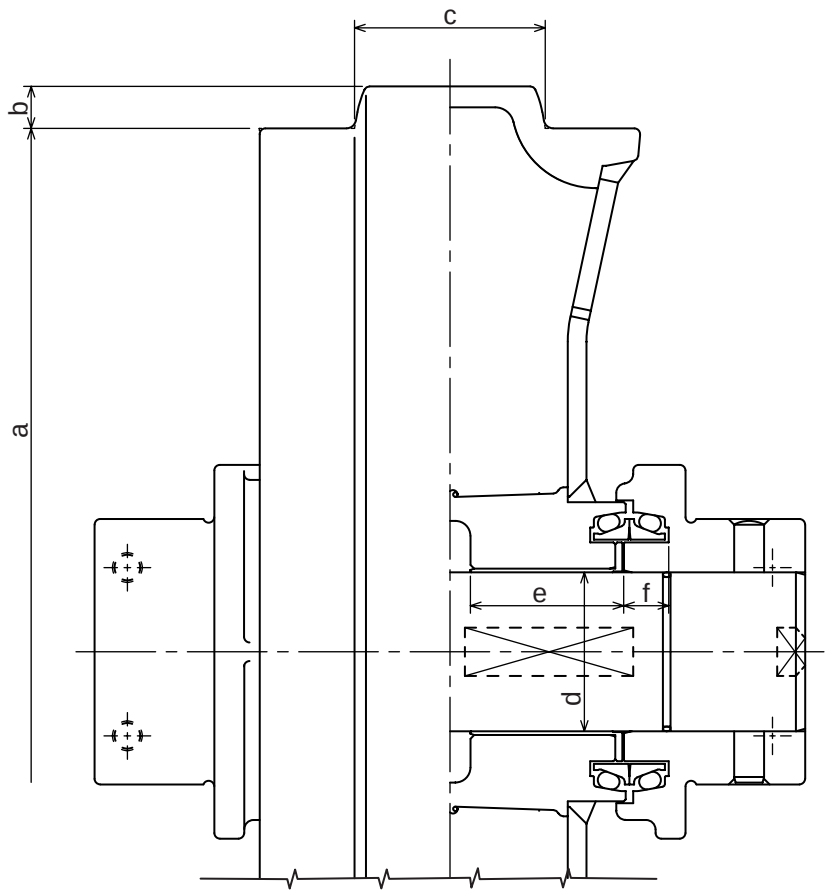

NOTES: For measuring gauges, refer to the reference data for inspection gauge.
Use the *Maintenance Standard Value Table* for determination.

Part Name	Symbol	Measured dimensions (mm)	Determination	Measures
Take-up roller	a	Diameter:	Good / No good	Buildup welding or replacement
	b		Good / No good	
	c		Good / No good	
Shaft	d	Diameter:	Good / No good	Replacement
Bushing	d	Diameter:	Good / No good	Replacement
	e		Good / No good	
Hub	f		Good / No good	Replacement

https://truckmanualshub.com/

3. Upper Roller

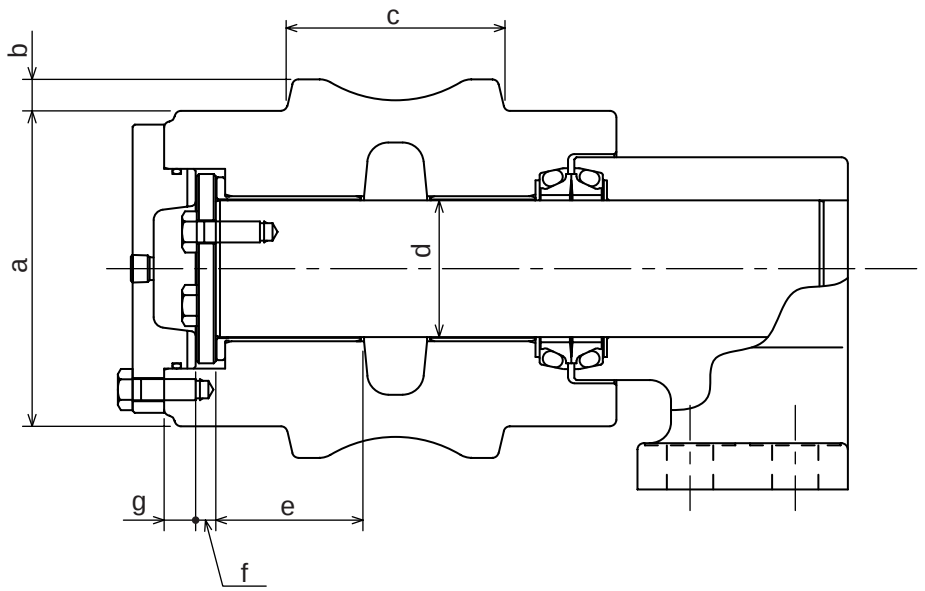

NOTES: For measuring gauges, refer to the reference data for inspection gauge.
Use the *Maintenance Standard Value Table* for determination.

Part Name	Symbol	Measured dimensions (mm)	Determination	Measures
Upper roller	a	Diameter:	Good / No good	Buildup welding or replacement
	b		Good / No good	
	c		Good / No good	
Shaft	d	Diameter:	Good / No good	Replacement
Bushing	d	Diameter:	Good / No good	Replacement
Bushing	e		Good / No good	Replacement
Thrust plate	f		Good / No good	Replacement
Cover	g		Good / No good	Replacement

https://truckmanualshub.com/

4. Lower Roller (External)

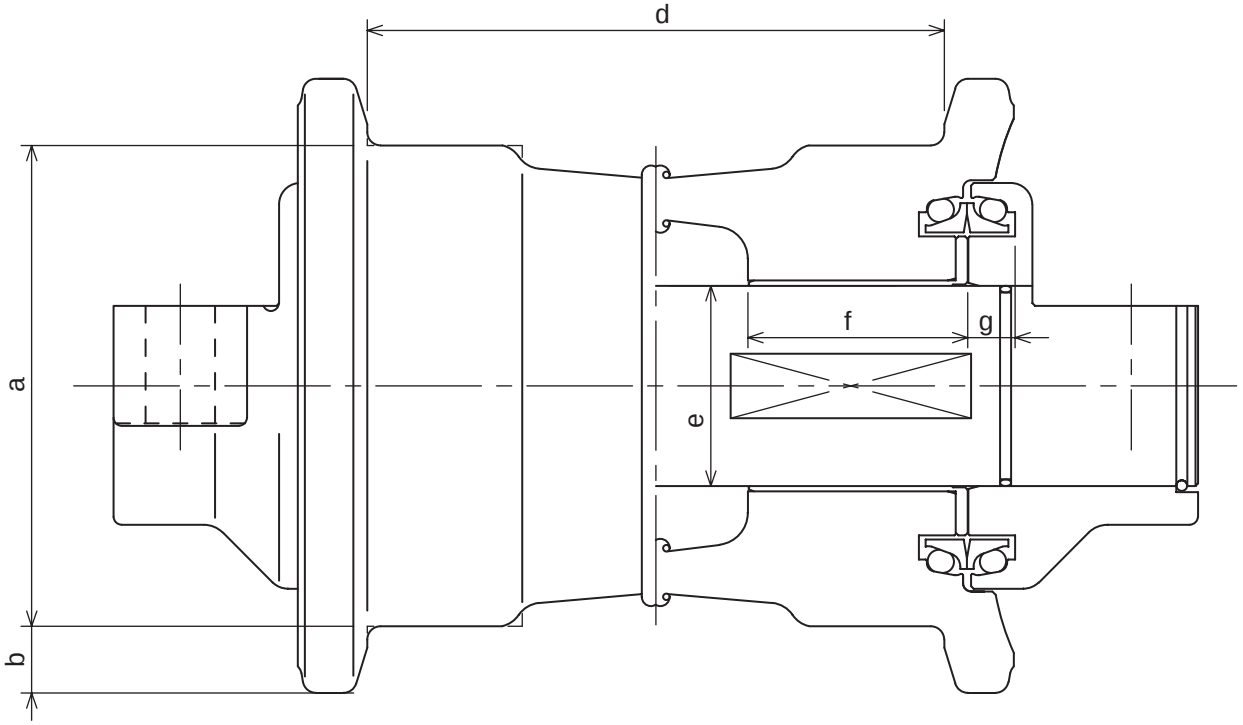

NOTES: For measuring gauges, refer to the reference data for inspection gauge.
Use the *Maintenance Standard Value Table* for determination.

Part Name	Symbol	Measured dimensions (mm)	Determination	Measures
Lower roller	a	Diameter:	Good / No good	Buildup welding or replacement
	b		Good / No good	
	d		Good / No good	
Shaft	e	Diameter:	Good / No good	Replacement
Bushing	e	Diameter:	Good / No good	Replacement
	f		Good / No good	
Collar	g		Good / No good	Replacement

5. Track Shoe (Grouser Shoe)

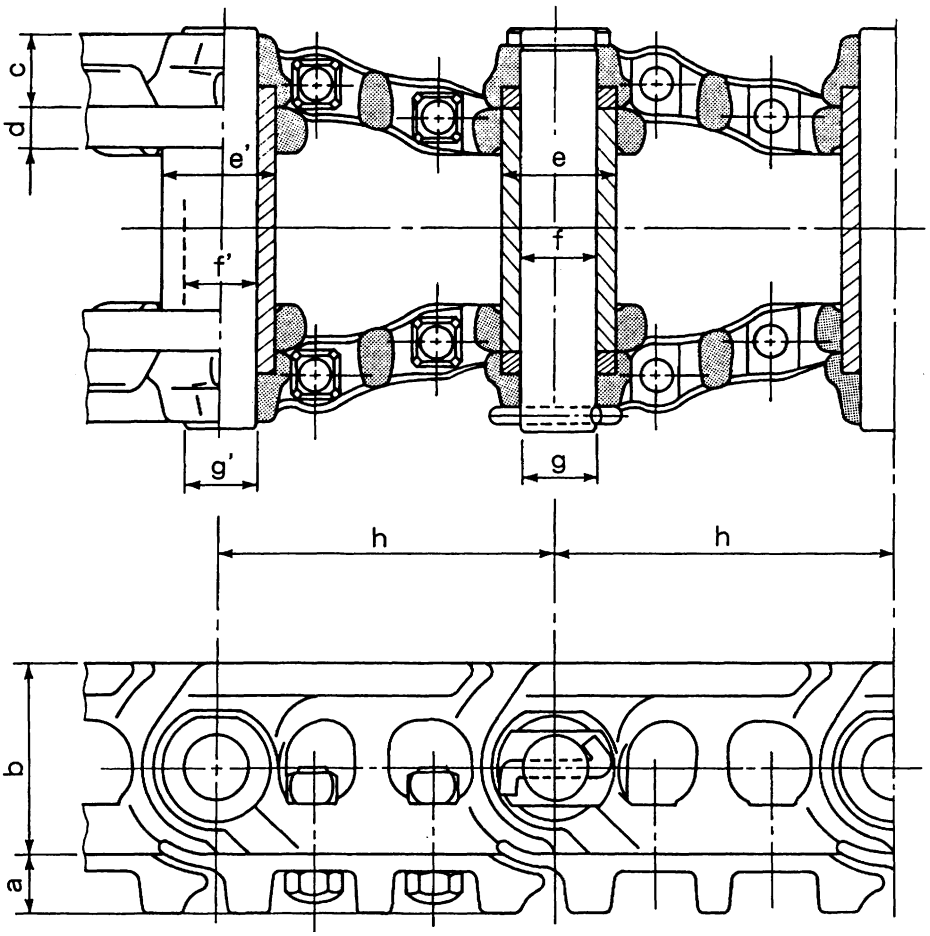

NOTE: Use the *Maintenance Standard Value Table* for determination.

Part Name	Symbol	Measured dimensions (mm)	Determination	Measures
Shoe plate	a		Good / No good	Replacement
Link	b		Good / No good	Buildup welding or replacement
	c		Good / No good	
	d		Good / No good	
Master bushing	e	Diameter:	Good / No good	Replacement
	f	Diameter:	Good / No good	
Master pin	g	Diameter:	Good / No good	Replacement
Link pitch	h		Good / No good	Replacement
Track bushing	e'	Diameter:	Good / No good	Replacement
	f'	Diameter:	Good / No good	
Track pin	g'	Diameter:	Good / No good	Replacement

https://truckmanualshub.com/

6. Attachment (Back Hoe)

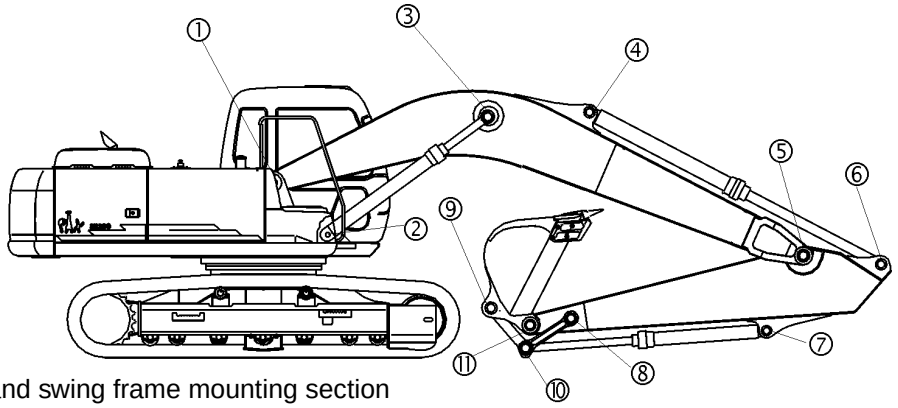

① Boom and swing frame mounting section

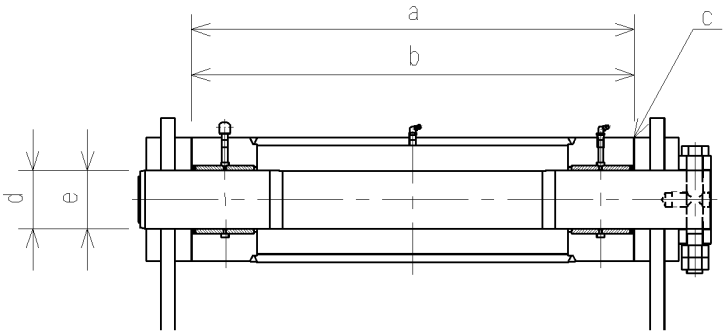

② Boom cylinder and swing frame mounting section

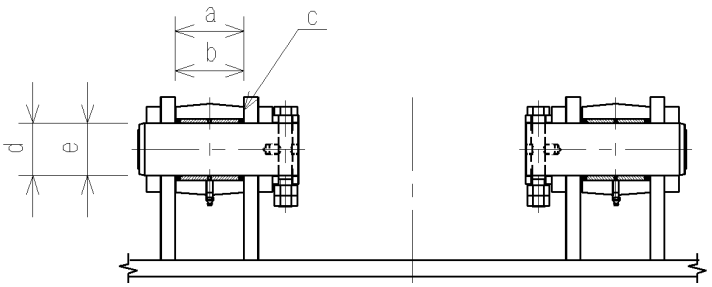

NOTE: Use the *Maintenance Standard Value Table* for determination.

Part Name	Symbol	Measured dimensions (mm)	Determination	Measure
① Boom and swing frame mounting section				
Swing frame	a		Good / No good	-
Boom	b		Good / No good	Replacement
Clearance	c (a - b)		Good / No good	Adjust by shims
Pin	d	Diameter:	Good / No good	Replacement
Bushing (boom)	e	Diameter:	Good / No good	Replacement
② Boom cylinder and swing frame mounting section				
Swing frame	a		Good / No good	-
Boom cylinder (foot section)	b		Good / No good	Replacement
Clearance	c (a - b)		Good / No good	Adjust by shims
Pin	d	Diameter:	Good / No good	Replacement
Bushing (boom cylinger)	e	Diameter:	Good / No good	Replacement

https://truckmanualshub.com/

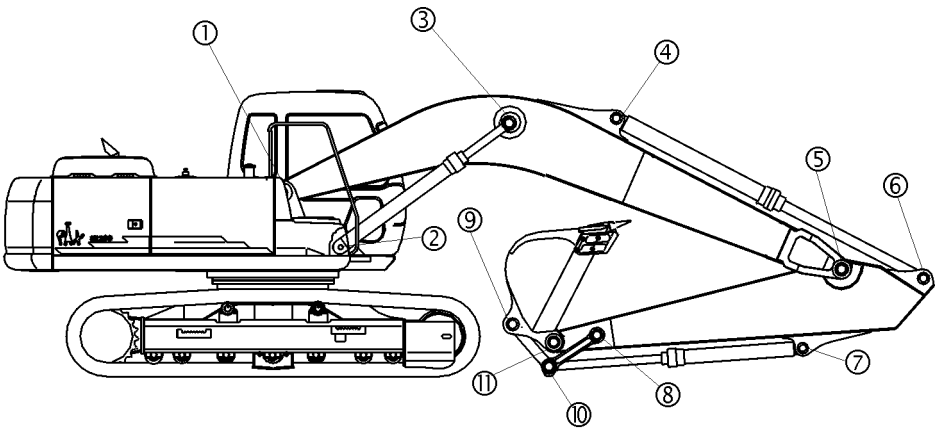

③ Boom and boom cylinder mounting section

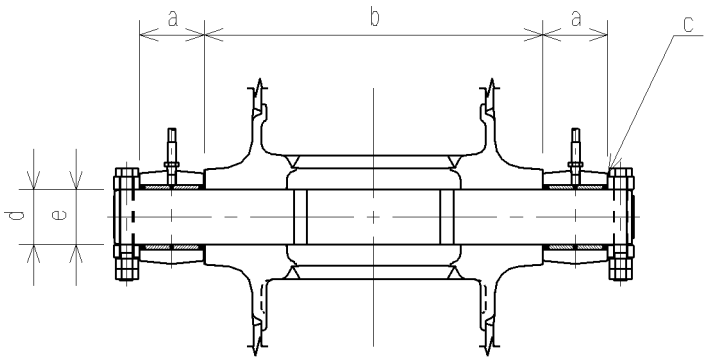

④ Boom and arm cylinder mounting section

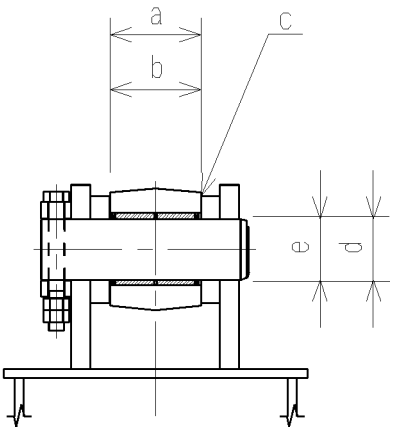

NOTE: Use the *Maintenance Standard Value Table* for determination.

Part Name	Symbol	Measured dimensions (mm)	Determination	Measure
③ Boom and boom cylinder mounting section				
Boom cylinder (top section)	a		Good / No good	Replacement
Boom	b		Good / No good	Replacement
Clearance	c		Good / No good	Adjust by shims
Pin	d	Diameter:	Good / No good	Replacement
Bushing (boom cylinder)	e	Diameter:	Good / No good	Replacement
④ Boom and arm cylinder mounting section				
Boom	a		Good / No good	Replacement
Arm cylinder (foot section)	b		Good / No good	Replacement
Clearance	c (a - b)		Good / No good	Adjust by shims
Pin	d	Diameter:	Good / No good	Replacement
Bushing (arm cylinder)	e	Diameter:	Good / No good	Replacement

https://truckmanualshub.com/

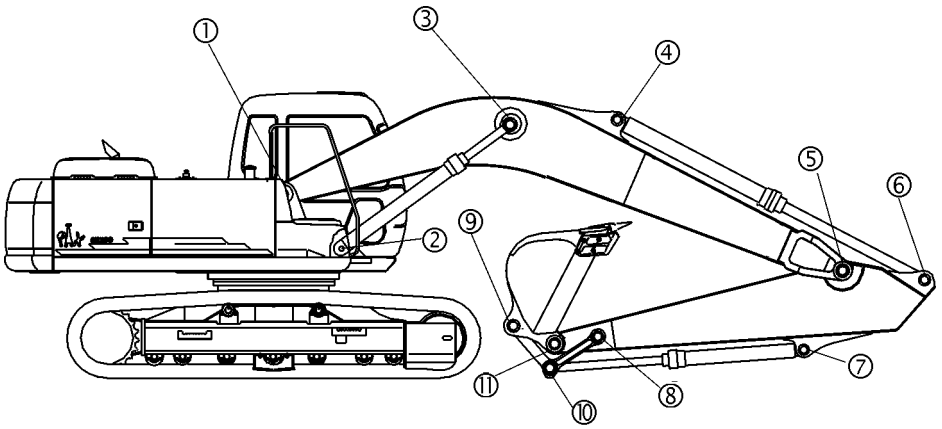

⑤ Boom and arm mounting section

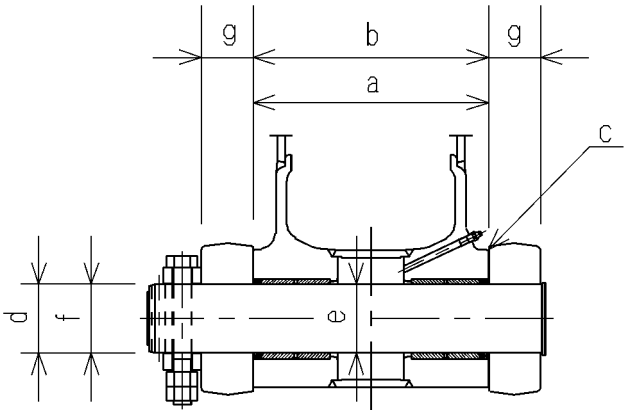

NOTE: Use the *Maintenance Standard Value Table* for determination.

Part Name	Symbol	Measured dimensions (mm)	Determination	Measure
⑤ Boom and arm mounting section				
Boom	a		Good / No good	Replacement
Arm	b		Good / No good	Replacement
Clearance	c		Good / No good	Adjust by shims
Pin	d	Diameter:	Good / No good	Replacement
Bushing (arm)	e	Diameter:	Good / No good	Replacement
Bushing (boom)	f	Diameter:	Good / No good	Replacement
Boom	g		Good / No good	Replacement

https://truckmanualshub.com/

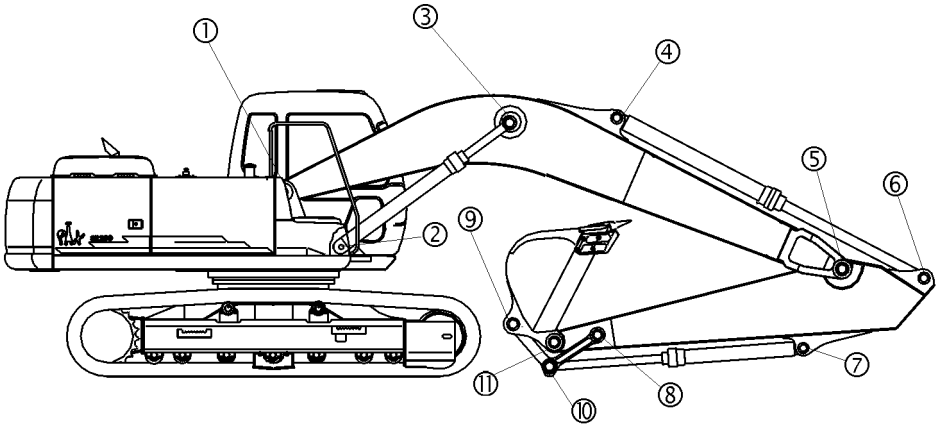

⑥ Arm and arm cylinder mounting section

⑦ Arm and bucket cylinder mounting section

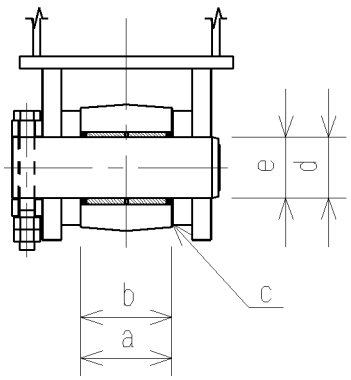

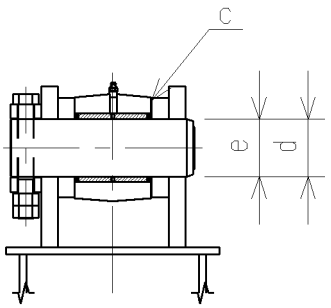

NOTE: Use the *Maintenance Standard Value Table* for determination.

Part Name	Symbol	Measured dimensions (mm)	Determination	Measure
⑥ Arm and arm cylinder mounting section				
Arm	a		Good / No good	Replacement
Arm cylinder (top section)	b		Good / No good	Replacement
Clearance	c (a - b)		Good / No good	Adjust by shims
Pin	d	Diameter:	Good / No good	Replacement
Bushing (arm cylinder)	e	Diameter:	Good / No good	Replacement
⑦ Arm and bucket cylinder mounting section				
Arm	a		Good / No good	Replacement
Bucket cylinder (foot section)	b		Good / No good	Replacement
Clearance	c (a - b)		Good / No good	Adjust by shims
Pin	d	Diameter:	Good / No good	Replacement
Bushing (bucket cylinder)	e	Diameter:	Good / No good	Replacement

https://truckmanualshub.com/

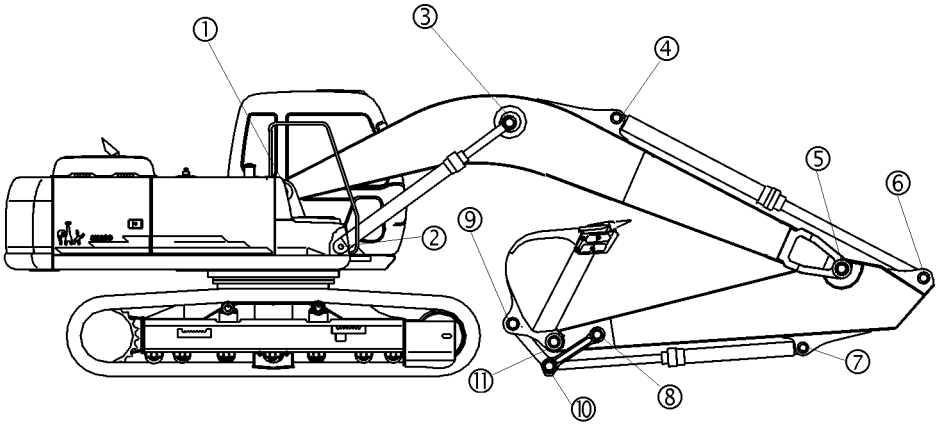

⑧ Arm and arm link mounting section

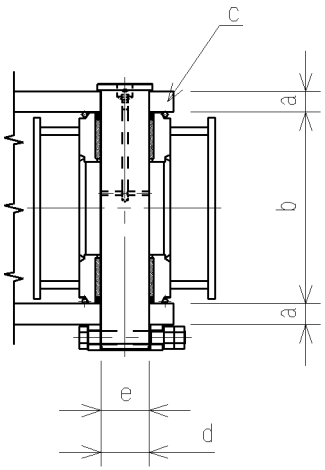

⑨ Bucket and bucket link mounting section

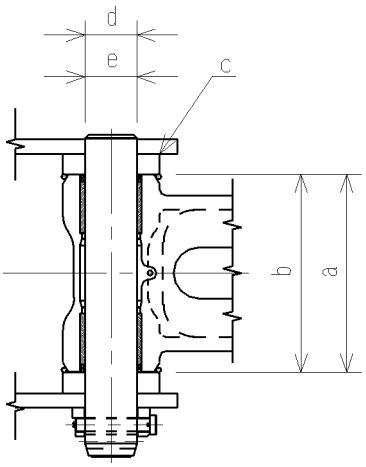

NOTE: Use the *Maintenance Standard Value Table* for determination.

Part Name	Symbol	Measured dimensions (mm)	Determination	Measure
⑧ Arm and arm link mounting section				
Arm link	a		Good / No good	Replacement
Arm	b		Good / No good	Replacement
Clearance	c		Good / No good	Adjust by shims
Pin	d	Diameter:	Good / No good	Replacement
Bushing (arm)	e	Diameter:	Good / No good	Replacement
⑨ Bucket and bucket link mounting section				
Bucket	a		Good / No good	Replacement
Bucket link	b		Good / No good	Replacement
Clearance	c		Good / No good	Adjust by shims
Pin	d	Diameter:	Good / No good	Replacement
Bushing (bucket link)	e	Diameter:	Good / No good	Replacement

https://truckmanualshub.com/

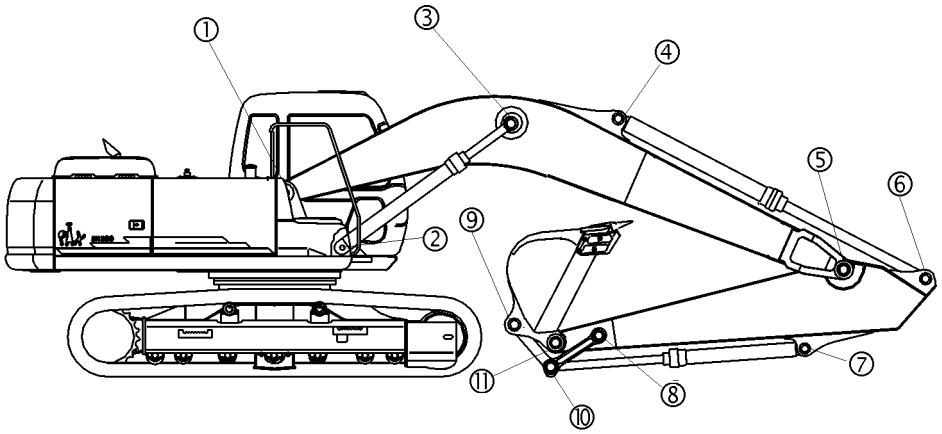

⑩ Bucket link and bucket cylinder mounting section

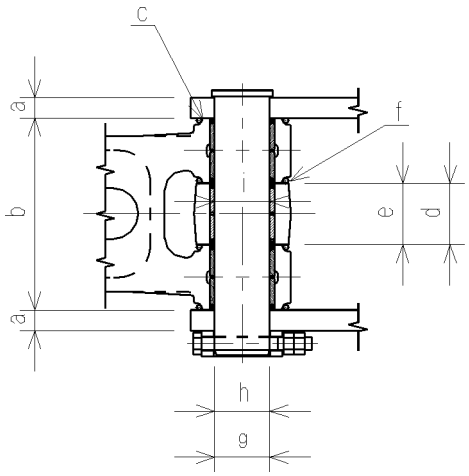

NOTE: Use the *Maintenance Standard Value Table* for determination.

Part Name	Symbol	Measured dimensions (mm)	Determination	Measure
⑩ Bucket link and bucket cylinder mounting section				
Arm link	a		Good / No good	Replacement
Bucket link	b		Good / No good	Replacement
Clearance	c		Good / No good	Adjust by shims
Bucket link	d		Good / No good	Replacement
Bucket cylinder (top section)	e		Good / No good	Replacement
Clearance	f (d - e)		Good / No good	Adjust by shims
Pin	g	Diameter:	Good / No good	Replacement
Bushing (bucket link)	h	Diameter:	Good / No good	Replacement
Bushing(bucket cylinder)	i	Diameter:	Good / No good	Replacement

https://truckmanualshub.com/

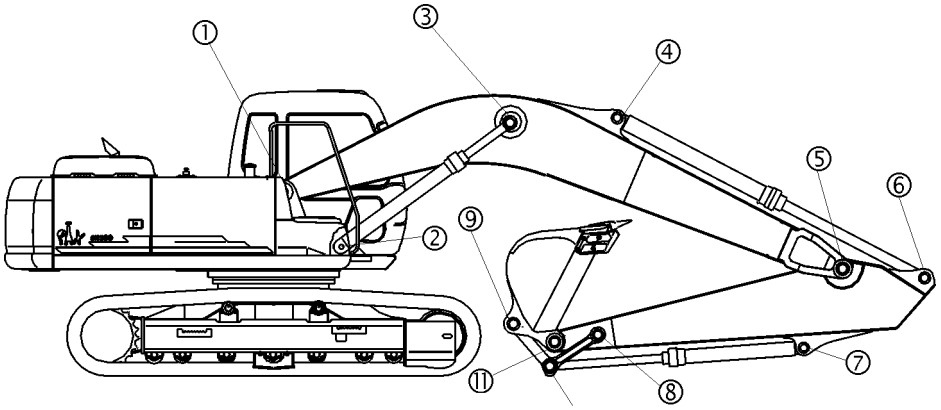

⑪ Bucket and arm mounting section

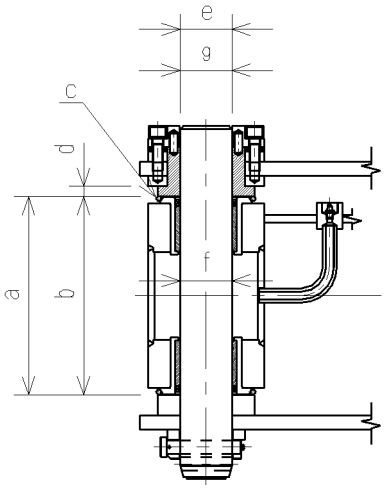

NOTE: Use the *Maintenance Standard Value Table* for determination.

Part Name	Symbol	Measured dimensions (mm)	Determination	Measure
⑪ Bucket and arm mounting section				
Bucket	a		Good / No good	Replacement
Arm	b		Good / No good	Replacement
Clearance	c (a - b)		Good / No good	Adjust by shims
Bushing (bucket)	d		Good / No good	Replacement
Pin	e	Diameter:	Good / No good	Replacement
Bushing (arm)	f	Diameter:	Good / No good	Replacement
Bushing (bucket)	g	Diameter:	Good / No good	Replacement

https://truckmanualshub.com/

Maintenance Standards Value Table

1.Lower

(Units: mm)

No.	Symbol	Part Name	Reference value	Use limit
1	a	Drive sprocket	83	73
	b		ø660.7	ø649.2
	c		ø748	ø738
	d		ø732.5	—
	p		215.9	—
2	a	Take-up roller	ø560	ø550
	b		22.5	—
	c		102	92
	d	Shaft	ø85	ø84
	d	Bushing	ø85	ø86
	e		82	81
	f	Hub	19	18.6
3	a	Upper roller	150	140
	b		15	—
	c		104	—
	d	Shaft	ø65	ø64
	d	Bushing	ø65	ø66
	e		69	68
	f	Thrust plate	9	8.5
	g	Cover	15	14.5
4	a	Lower roller	180	170
	b		25	20
	d		216	224
	e	Shaft	ø75	74
	e	Bushing	ø75	ø76
	f		ø82	ø81
	g	Collar	17.5	17.0
5	a	Shoe plate	49	34
	b	Link	129	124
	c		42.9	41
	d		28.9	27
	e	Master bushing	ø71.32	ø67
	f		ø47.75	ø50.4
	g	Master pin	ø46.83	ø45
	h	Link pitch	215.9	—
	e’	Track bushing	ø71.32	ø67
	f’		ø47.75	ø50.4
	g’	Track pin	ø47.2	ø45

https://truckmanualshub.com/

2.Attachment

(Units: mm)

No.	Symbol	Part Name	Reference value	Use limit
1	a	Swing frame	696	706
	b	Boom	695.5	693.5
	c	Clearance	0.5~3.0	Shim adjustment
	d	Pin	ø100	ø99
	e	Bushing (boom)	ø100	ø101.5
2	a	Swing frame	109	115
	b	Boom cylinder (foot section)	108	106
	c	Clearance	1.0~2.5	Shim adjustment
	d	Pin	ø95	ø94
	e	Bushing (boom cylinder)	ø95	ø96.5
3	a	Boom cylinder (top section)	108	106
	b	Boom	528	522
	c	Clearance	1.0~2.5	Shim adjustment
	d	Pin	ø95	ø94
	e	Bushing (boom cylinder)	ø95	ø96.5
4	a	Boom	124	130
	b	Arm cylinder (foot section)	123	121
	c	Clearance	0.5~3.0	Shim adjustment
	d	Pin	ø95	ø94
	e	Bushing (arm cylinder)	ø95	ø96.5
5	a	Boom	330	333.5
	b	Arm	329.5	327.5
	c	Clearance	1.0~2.5	Shim adjustment
	d	Pin	ø100	ø99
	e	Bushing (arm)	ø100	ø101.5
	f	Bushing (boom)	NON	NON
	g	Boom	82	80
6	a	Arm	139	144
	b	Arm cylinder (top section)	138	136
	c	Clearance	0.5~3.0	Shim adjustment
	d	Pin	ø95	ø94
	e	Bushing (arm cylinder)	ø95	ø96.5

https://truckmanualshub.com/

(Units: mm)

No.	Symbol	Part Name	Reference value	Use limit
7	a	Arm	116	122
	b	Bucket cylinder (foot section)	115	113
	c	Clearance	0.5~3.0	Shim adjustment
	d	Pin	ø80	ø79
	e	Bushing (bucket cylinder)	ø80	ø81.5
8	a	Arm link	40	38
	b	Arm	317	315
	c	Clearance	1.0~1.5	Shim adjustment
	d	Pin	ø80	ø79
	e	Bushing (arm)	ø80	ø81.5
9	a	Bucket	326	331
	b	Bucket link	325	322
	c	Clearance	1.0~3.5	Shim adjustment
	d	Pin	ø90	ø89
	e	Bushing (bucket link)	ø90	ø91.5
10	a	Arm link	40	38
	b	Bucket link	316	314
	c	Clearance	1.5~2.5	Shim adjustment
	d	Bucket link	106	109
	e	Bucket cylinder (top section)	105	102
	f	Clearance	-0.5~2.0	Shim adjustment
	g	Pin	ø90	ø89
	h	Bushing (bucket link)	ø90	ø91.5
	i	Bushing (bucket cylinder)	ø90	ø91.5
11	a	Bucket	326	332
	b	Arm	325	323
	c	Clearance	1.0~3.5	Shim adjustment
	d	Bushing (bucket)	16	10
	e	Pin	ø90	ø89
	f	Bushing (arm)	ø90	ø91.5
	g	Bushing (bucket)	ø90	ø91.5

https://truckmanualshub.com/

List of Shims for Adjusting Attachment Gaps (Continued)

(Units: mm)

Part No.	I.D.	O.D.	Shim Thickness	Material
KMV0650	30.2	50	0.4	SPCC
KMV0651	30.2	50	0.8	SPCC
KMV0652	30.2	50	1.6	SPHC
KMV0653	30.2	50	3.2	SPHC
KMV0654	30.2	50	4.5	SS00
KMV0655	30.2	50	6.0	SS00
KMV0912	32	45	0.4	SPCC
KMV0913	32	45	0.8	SPCC
KMV0914	32	45	1.2	SPCC
KHV0327	36	65	1.2	SPHC
KHV0316	36	70	1.2	SPHC
KHV0315	41	75	1.2	SPHC
KHV0324	41	80	1.2	SPHC
KHV0317	41	90	1.2	SPHC
KAV0058	43	90	1.6	SPHC
KHV0347	46	80	1.2	SPHC
KAV0180	46	80	1.6	SPHC
KAV0682	46	90	1.2	SPHC
KHV0299	46	100	1.2	SPHC
KHV0328	51	85	1.2	SPHC
KAV0160	51	85	1.6	SPHC
BHV1030	51	90	1.2	SPHC
BHV1031	51	90	2.6	SPHC
KHV0330	51	95	1.2	SPHC
KAV0813	51	100	1.2	SPHC
KAV1951	51	100	2.6	SPHC
KAV0061	51	101.6	1.6	SPHC
KHV0348	51	105	1.2	SPHC
KAV0805	51	120	1.2	SPHC
KAV0812	56	90	1.2	SPHC
KAV0558	56	100	1.2	SPHC
BHV1033	56	100	2.6	SPHC
KHV0298	56	105	1.2	SPHC
KAV0395	56	110	0.8	SPHC
KAV0060	56	110	1.6	SPHC
KAV0396	56	115	1.2	SPHC
KAV0427	56	120	1.2	SPHC
KMV0771	60.5	76	1.2	SPHC
KAV0161	61	90	1.6	SPHC

https://truckmanualshub.com/

List of Shims for Adjusting Attachment Gaps (Continued)

(Units: mm)

Part No.	I.D.	O.D.	Shim Thickness	Material
KAV0811	61	110	1.2	SPHC
KNV0230	61	110	1.2	SPHC
KAV0059	61	110	1.6	SPHC
KHV0286	61	120	1.2	SPHC
KAV0801	61	130	1.2	SPHC
KMV0942	61	140	3.2	SPHC
KMV1246	61	160	1.2	SPHC
KMV0693	65.5	90	1.2	SPHC
KNV0538	66	100	1.2	SPHC
KLV0034	66	110	1.2	SPHC
KNV0535	66	120	1.2	SPHC
KMV0122	66	130	1.2	SPHC
KHV0273	66	150	1.2	SPHC
KHV0458	66	170	1.2	SPHC
KNV0696	71	110	1.2	SPHC
KNV0539	71	130	1.2	SPHC
KRV0823	71	130	1.2	SPHC
KMV0144	71	135	1.2	SPHC
KMV0145	71	135	2.6	SPHC
KMV0774	71	150	1.2	SPHC
KMV0775	71	150	2.6	SPHC
KMV0941	71	150	3.2	SPHC
KNV0189	71	150	1.2	SPHC
KRV1176	76	130	1.2	SPHC
KRV1177	76	140	1.2	SPHC
KRV1584	76	140	1.2	SPHC
KHV0169	76	140	1.2	SPHC
KNV0534	76	160	1.2	SPHC
KRV2264	76	180	1.2	SPHC
KAV0776	77	120	1.2	SPHC
KSV0141	78	170	1.2	SPHC
KSV0142	78	170	2.6	SPHC
KSV0143	78	170	3.2	SS00
KAV0095	81	105	1.6	SPHC
KLV0170	81	110	1.2	SPHC
KRV1197	81	140	1.2	SPHC
KRV0822	81	150	1.2	SPHC
KRP1350	81	150	2.6	SPHC
KLV0035	81	170	1.2	SPHC

https://truckmanualshub.com/

List of Shims for Adjusting Attachment Gaps (Continued)

(Units: mm)

Part No.	I.D.	O.D.	Shim Thickness	Material
KSP0408	81	200	1.2	SPHC
KSP0409	81	200	2.6	SPHC
KBV0122	82	120	3.2	SS00
KBV0123	82	120	4.5	SS00
KBV0124	82	120	6.0	SS400
KBV0373	82	180	1.0	SPCC
KRV1178	86	130	1.2	SPHC
KRV1585	86	150	1.2	SPHC
KHV0170	86	150	1.2	SPHC
KBV0389	87	210	1.0	SPCC
KBV0390	87	210	1.6	SPCC
BHV1030	90	51	1.2	SPHC
KBV0837	91	135	1.2	SPHC
KSV0477	91	145	1.2	SPHC
KSP0411	91	145	2.6	SPHC
KMV0121	91	159	1.2	SPHC
KBV0769	91	160	1.2	SPHC
KSP0269	91	160	2.6	SPHC
KBV0764	91	165	1.2	SPHC
KRV0559	91	180	1.2	SPHC
KRV1180	91	190	1.2	SPHC
KSP0412	91	200	1.2	SPHC
KSP0413	91	200	2.6	SPHC
KBV0381	92	180	1.0	SPCC
KBV0382	92	180	1.6	SPCC
KBV0383	92	180	2.0	SPCC
KBV0384	92	180	3.2	SS00
KBV0377	92	220	1.0	SPCC
KBV1749	96	140	1.2	SPHC
KNV0468	96	150	1.2	SPHC
KSP0828	96	150	1.2	SPHC
KBV1629	96	170	1.2	SPHC
KBV0361	97	250	1.0	SPCC
KBV0362	97	250	1.6	SPCC
BHV1032	100	56	1.2	SPHC
KSV0478	101	160	1.2	SPHC
KSP0415	101	160	2.6	SPHC
KSP0416	101	180	1.2	SPHC
KSP0417	101	180	2.6	SPHC
KBV0474	101	219	1.2	SPHC

https://truckmanualshub.com/

List of Shims for Adjusting Attachment Gaps (Continued)

(Units: mm)

Part No.	I.D.	O.D.	Shim Thickness	Material
KBV0369	102	210	1.0	SPCC
KSV0138	103	190	1.2	SPHC
KSV0139	103	190	2.6	SPHC
KSV0140	103	190	3.2	SS00
KSV0135	103	213	1.2	SPHC
KSV0136	103	213	2.6	SPHC
KSV0137	103	213	3.2	SS00
KSP0827	106	170	1.2	SPHC
KHV0190	111	150	1.2	SPHC
KSP0418	111	180	1.2	SPHC
KSP0419	111	180	2.6	SPHC
KTV0533	111	190	1.2	SPHC
KSV0476	111	230	1.2	SPHC
KBV0214	112	150	6.0	SS400
KBV0215	112	150	9.0	SS400
KBV0357	112	270	1.0	SPCC
KHV0193	121	155	1.2	SPHC
KMV1517	121	220	0.4	SPHC
KMV1518	121	220	0.6	SPHC
KMV1519	121	220	0.8	SPHC
KHV0296	121	230	1.2	SPHC
KTV0534	121	250	1.2	SPHC
KWV0101	131	170	1.2	SPHC
KSV0839	131	200	1.2	SPHC
KHV0287	131	240	1.2	SPHC
KTV0850	141	225	1.2	SPHC
KHV0297	141	240	1.2	SPHC
KHV0288	151	300	1.2	SPHC
KUV0080	171	280	1.2	SPHC

https://truckmanualshub.com/

List of Shims for Adjusting Attachment Gaps (for Boom Foot)

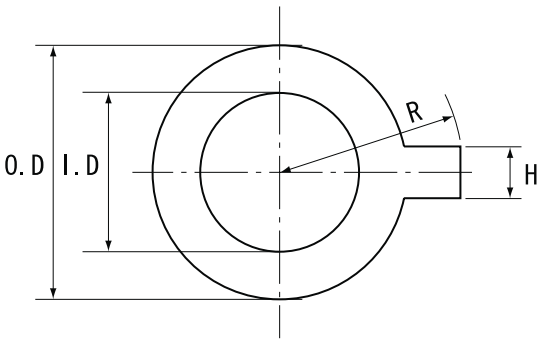

Part No.	I.D.	O.D.	R	H	Shim Thickness	Material
KNV1132	76	160	100	30	1.2	SPHC
KRV2390	91	190	115	30	1.2	SPHC
KBV1441	101	220	130	30	1.2	SPHC
KBV1748	101	230	135	30	1.2	SPHC
KSV1805	111	240	140	30	1.2	SPHC

https://truckmanualshub.com/

Inspection Gauges

For Drive Sprocket Use

(Units: mm)

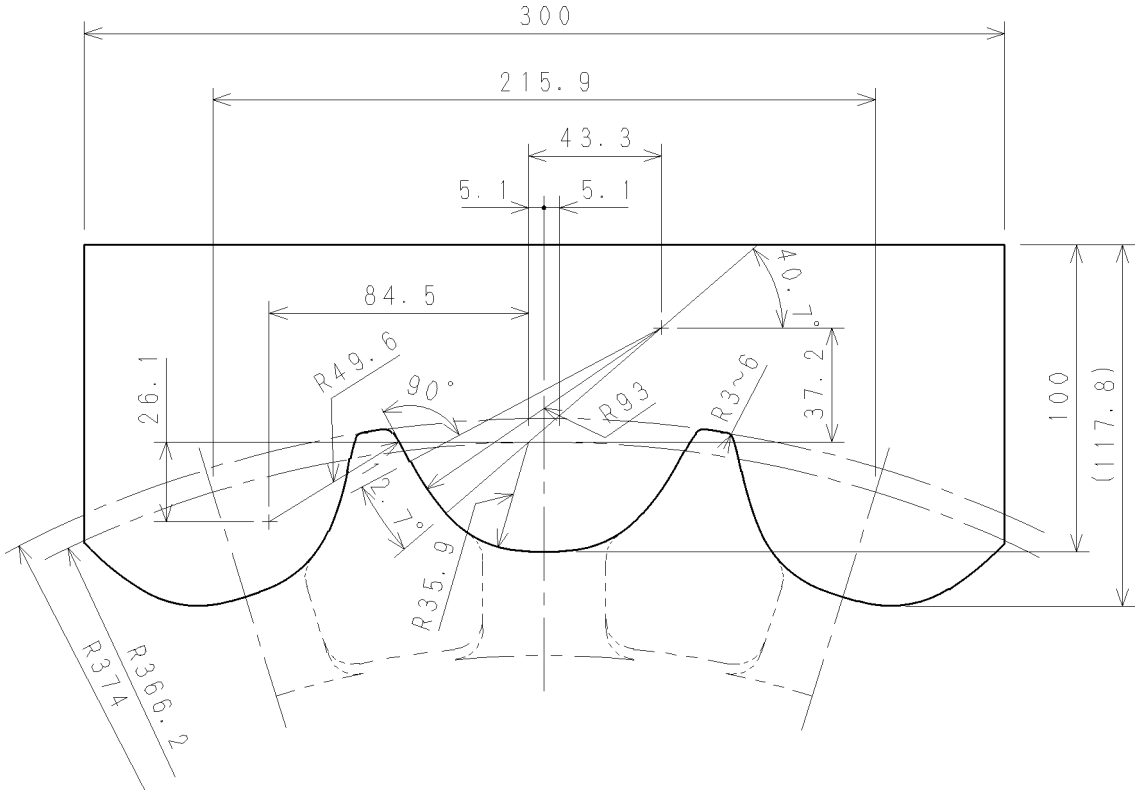

For Take-up Roller Use

(Units: mm)

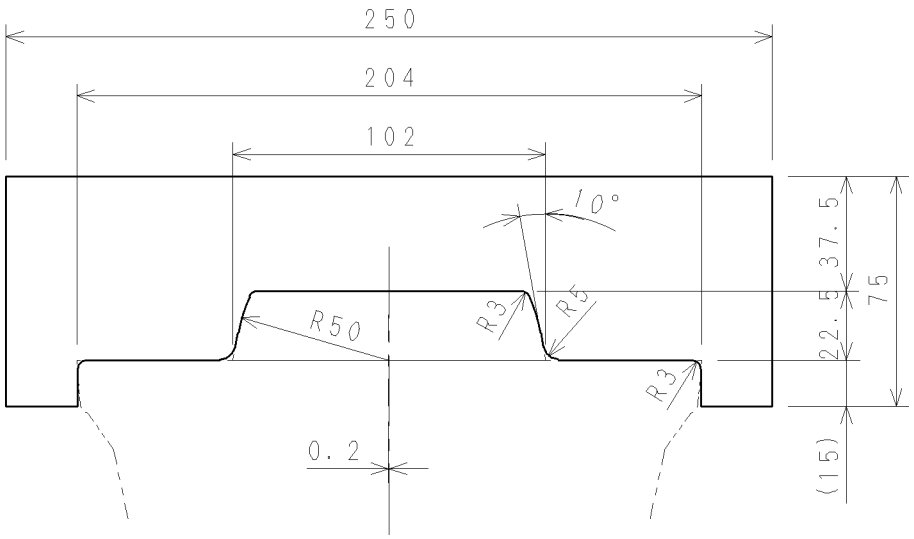

https://truckmanualshub.com/

Inspection Gauges

For Upper Roller Use

(Units: mm)

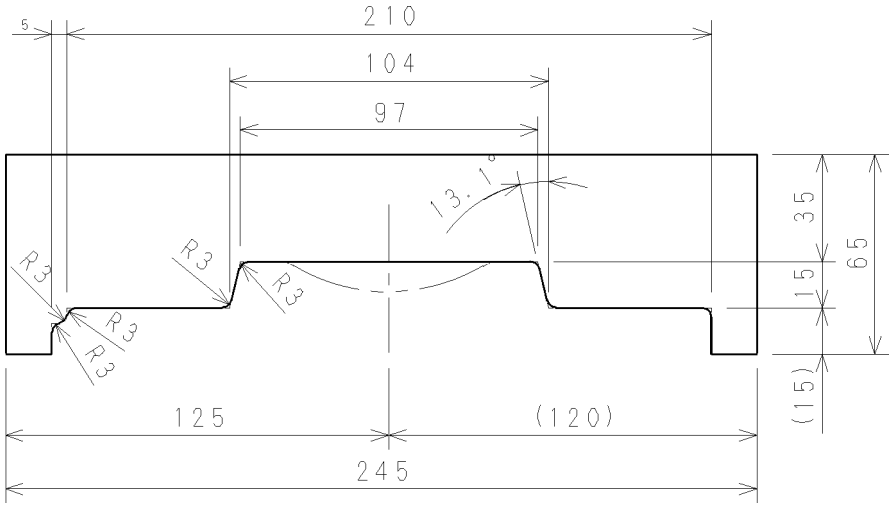

For Lower Roller Use

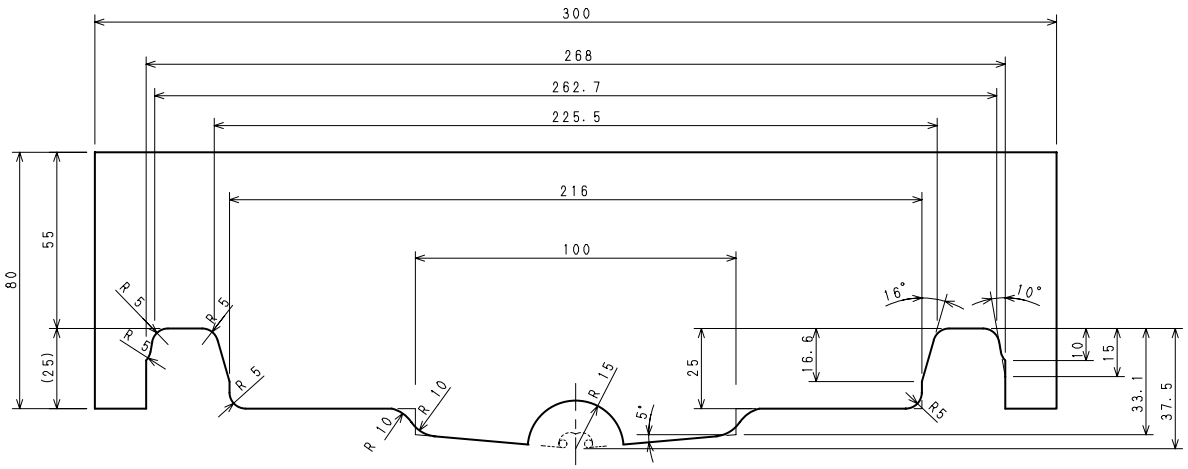

https://truckmanualshub.com/

Hydraulic Pump Maintenance

1. Pump Main Body – Disassembling and Assembling Instructions

1-1. Tools

Tools required for disassembling and assembling K3V/K5V pump are shown in the following table. Bolts and plugs are different depending on the type. Circles (○) indicate required tools.

Tool name and size		Pump type				Part Name			
Tool name	B	K5V80 K3V63	K5V140 K3V112	K3V140	K5V200 K3V180	Hexagon socket head bolt	Rc filling plug (Rc screw)	PO plug (G screw)	Hexagon screw set screw
Hexagon bar spanner 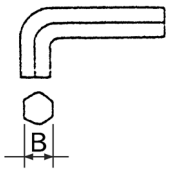	2					—	—	—	M4
	2.5					—	—	—	M5
	3					—	—	—	M6
	4	○	○	○	○	M5	BP-1/16	—	M8
	5	○	○	○	○	M6	BP-1/8	—	M10
	6	○	○	○	○	M8	BP-1/4	PO-1/4	M12 M14
	8	○		○	○	M10	BP-3/8	PO-3/8	M16 M18
	10					M12	BP-1/2	PO-1/2	M20
	12					M14	—	—	—
	14	○				M16 M18	BP-3/4	PO-3/4	—
	17		○	○	○	M20 M22	BP-1	PO-1, 1 1/4, 1 1/2	—
	19					M24 M27	—	—	—
	21					—	—	—	—
	22					M30	—	PO-2	—
Ring spanner Socket wrench Double head (single head) wrench	19	○	○	○	○	M12	M12	VP-1/4	—
	22					—	—	VP-3/8	—
	24		○	○	○	M16	M16	—	—
	27	○		○	○	M18	M18	VP-1/2	—
	30		○	○	○	M20	M20	—	—
	36		○	○	○	—	—	VP-3/4	—
	41					—	—	VP-1	—
	50					—	—	VP-11/4	—
	55					—	—	VP-11/2	—
Adjustable wrench	—					1 Medium size			
Screwdriver	—	○	○	○	○	2 Minus type screwdrivers, medium size			
Hammer	—	○	○	○	○	1 Plastic hammer			
Pliers	—	○	○	○	○	TSR - 160 for stop ring			
Steel bar	—	○	○	○	○	Steel bar for key aproxmately 10×8×200			
Torque wrench	—	○	○	○	○	Wrenches capable of tightening to the torque spec.			

https://truckmanualshub.com/

1-2. Disassembling instructions

Disassemble the pump following the steps described below after reading the entire disassembling instructions.

The numbers inside parentheses next to the part names indicate the part numbers on *cross-sectional view of pump.*

This is a disassembling instruction for both the single pump and the tandem type double pump. When disassembling, confirm the type of pump. In case of the double pump, be carefull not to mix up the parts for each pump.

No.	Procedures	Notes	Types
1	Choose a work area for disassambly.	1. Choose a clean area. 2. Place a rubber plate or cloth on a workbench to prevent scratches on the parts.	
2	Remove debris or rust from the surface of pump with cleaning oil or equivalent.		
3	Remove the drain port plug (468) and drain the oil from the pump casing.	In case of the tandem type pump. Drain from each plug on the front pump and rear pump.	
4	Disconnect the hexagon socket head bolts (412), (413) and remove PTO subassembly. 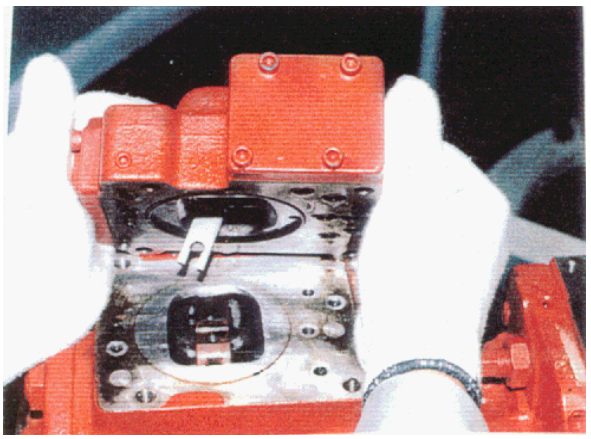	1. Refer to the regulator sub-section for disassembling the regulator. 2. Refer to the PTO subsection for disassembling the PTO subassembly.	
5	Loosen the hexagon socket head bolts (401), which lock the swash plate support (251), pump casing(271), and valve block (312).	If a gear pump and others are attached to the back side of the pump, this procedure should be done after disconnecting the gear pump and others.	

https://truckmanualshub.com/

No.	Procedures	Notes	Types
6	Place the pump horizontally with the regulator installation side facing down on the workbench and disconnect the pump casing (271) and valve block (312). 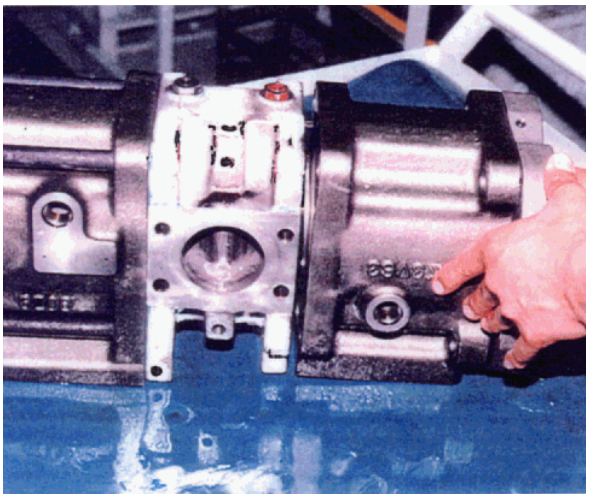	1. When placing the pump with the regulator installation side facing down, make sure that the workbench is covered with rubber plates or equivalent to prevent damage on the installation side. 2. When disconnecting the pump casing and valve block, remove the 1st gear at the same time.	
7	Pull out the cylinder block (141) from the pump casing (271) along the direction of the drive shaft (111) and remove the piston (151), set plate (153), spherical bush (156), and cylinder spring (157) at the same time. 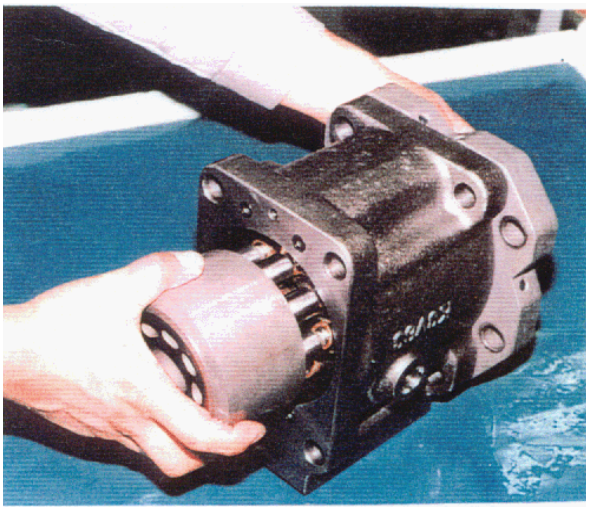	Handle with care to prevent scratches on the frictional surfaces of the cylinders, spherical bush, and swash plate, etc.	All types

https://truckmanualshub.com/

No.	Procedures	Notes	Types
8	Disconnect the hexagon socket head bolts (406) and remove the seal cover (F) (261). 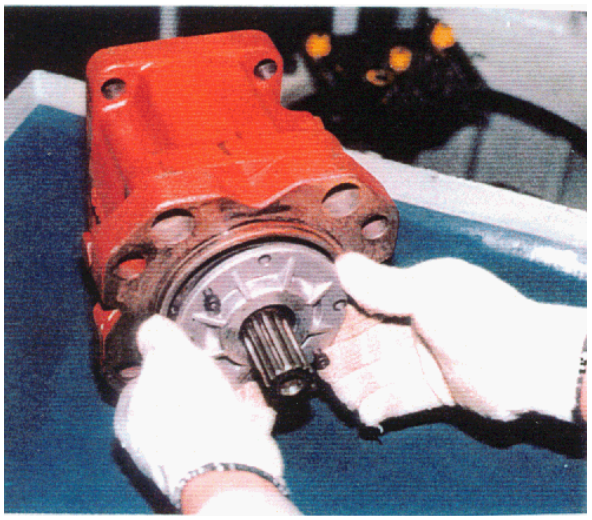	1. Remove the seal cover (F) with a bolt inserted in the tapping hole for easier operation. 2. Handle with care when removing the seal cover (F), to prevent scratches on the oil seal, which is attached to the seal cover (F).	Size of tapping hole: K5V80 M6 K3V63 M6 K3V112 M8 K3V140 M8 K3V180 M8 K3V280 M8 K5V140 M8 K5V200 M8
9	Disconnect the hexagon socket head bolts (406) and remove the seal cover(R) (263).		
10	Tap lightly from the pump casing side on the mounting flange part on the swash plate support (251) and detach the swash plate support from the pump casing. 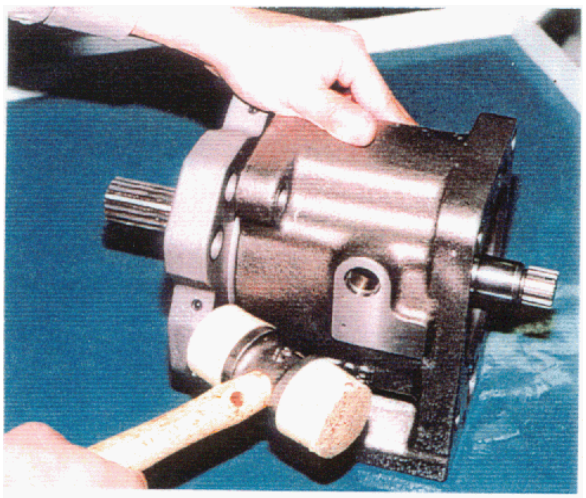		

https://truckmanualshub.com/

No.	Procedures	Notes	Types
11	Remove the shoe plate (211) and swash plate (212) from the pump casing (271). 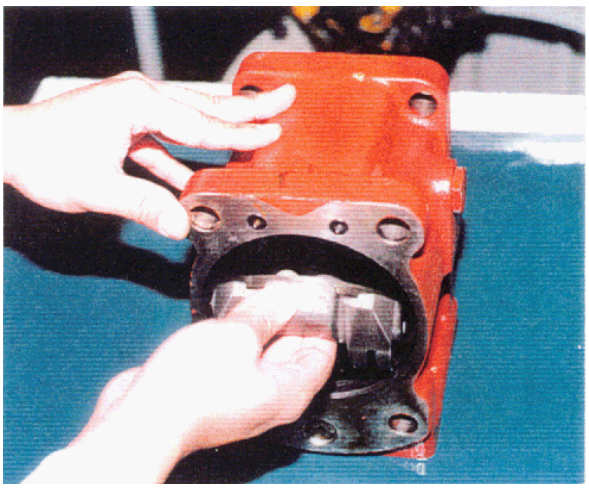		
12	Tap lightly on the shaft end of the drive shafts (111), (113) with a plastic hammer or equivalent and remove the drive shaft from the swash plate support. 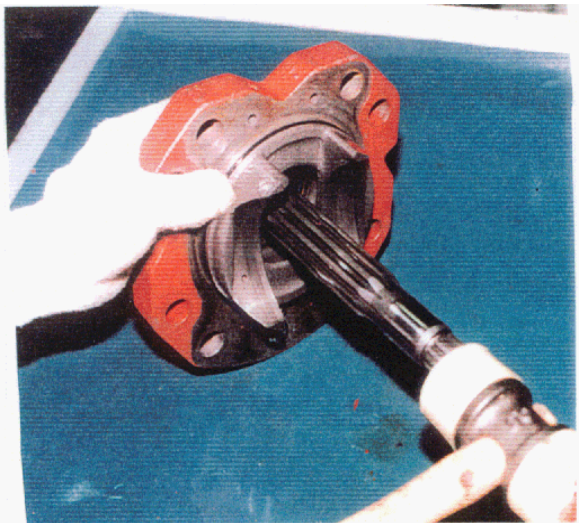		

https://truckmanualshub.com/

No.	Procedures	Notes	Types
13	Remove the valve plates (313), (314) from the valve block (312). 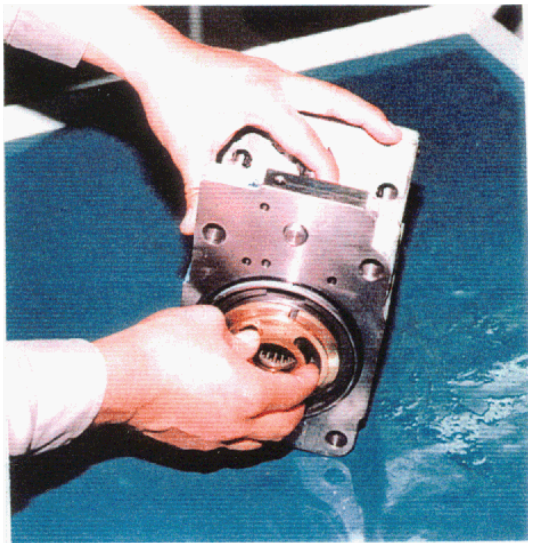	They may be removed during the procedure 6.	All types
14	If necessary, remove the stopper (L) (534), stopper (S) (535), servo piston (532), tilting pin (531) from the pump casing (271) and needle bearing (124) from the valve block (312).	1. When removing the leaning pin, use appropriate tools to prevent damage to the top of the leaning pin. 2. Be careful not to damage the servo piston because Loctite is applied to the connecting part of the leaning pin and the servo piston. 3. The needle bearing should not be removed except when it wears out. 4. Do not loosen the hexagonal nut for the valve block and swash plate support. Loosening the nut causes the flow rate to change.	All types

https://truckmanualshub.com/

1-3. Assembling instructions

Installation will be done in the opposite order of the disassembling procedure; however, keep in mind the following notes.

1. Make sure to repair the damaged parts and prepare replacement parts beforehand.
2. Clean each part with cleaning oil and install them after air-blowing them.
3. When installing the sliding parts or bearings, make sure to apply clean lubricant.
4. Replace sealing parts such as O-rings and oil seals with new one as a general rule.
5. Use torque wrenches for each mounting bolt and plugs, etc. and tighten with the standard torque shown in *Maintenance Standards*.
6. In case of a tandem pump, be careful not to mix up the parts for the front pump and rear pump.

No.	Procedures	Notes	Types
1	Install the swash plate support (251) on the pump casing (271) with light strokes of a hammer. 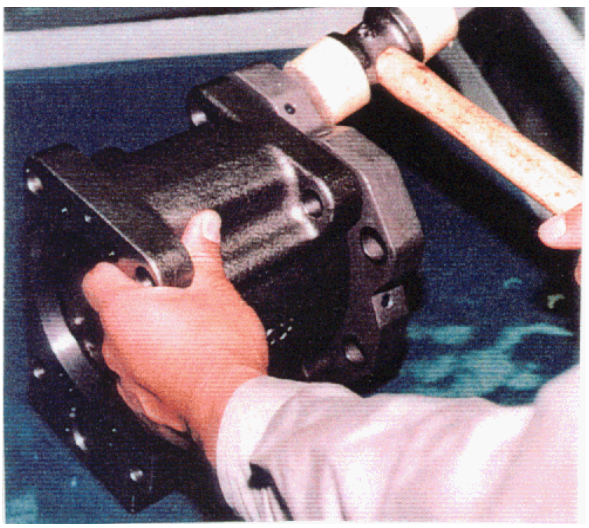	1. When you remove the servo piston, leaning pin, stopper (L), and stopper (S), install them on the pump casing before performing the further procedure. 2. When fastening the servo piston and leaning pin, use appropriate tools to prevent damages on the top of the leaning pin and feed back pin. Also, apply Loctite (medium strengh) to the threaded part.	All types

No.	Procedures	Notes	Types
2	Place the pump casing with the regulator installation side facing down, push down the tilting pin (531) of the swash plate, and install the swash plate (212) on the swash plate support (251) properly. 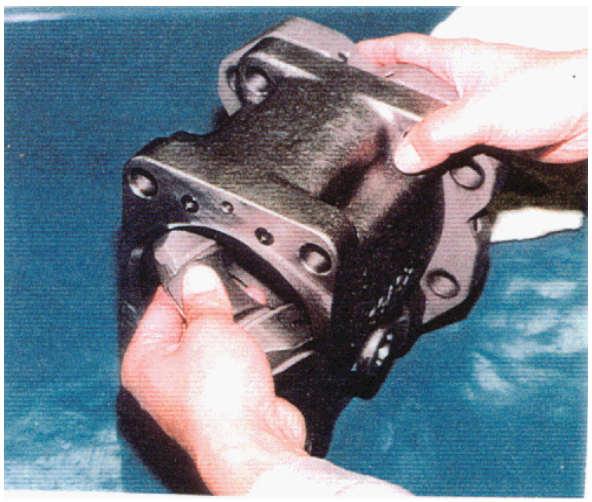	1. Make sure the swash plate moves smoothly by pushing it with finger tips of both hands. 2. Apply grease on the swash plate, swash plate support or other moving part for the easy installation of the drive shaft.	All types
3	Install the drive shaft (111), which are attached with the bearing (123), bearing spacer (127), and stop ring (824), on the swash plate support (251). 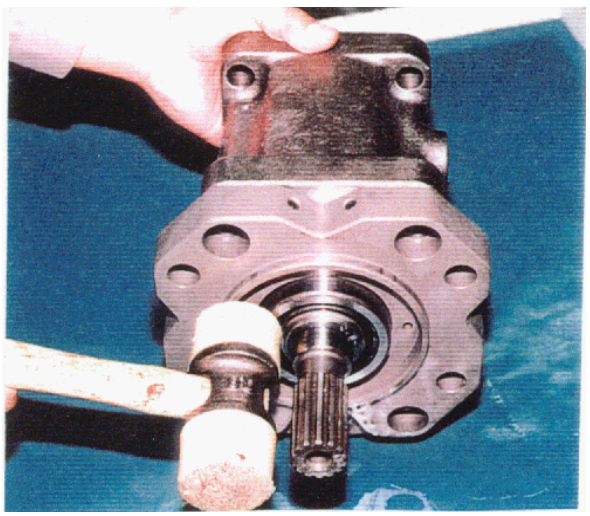	1. Do not hit the drive shaft with a hammer, etc. 2. Fit the outer ring of the bearing with a light strokes of a plastic hammer and make sure that it is fit firmly using a steel bar or equivalent.	All types

https://truckmanualshub.com/

No.	Procedures	Notes	Types
4	Assemble the seal cover (F) (261) with the pump casing (271), and secure them with hexagon socket head bolts (406). 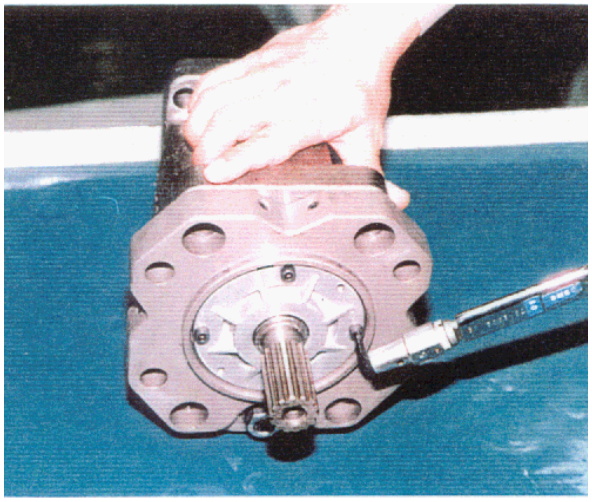	1. Apply grease lightly on the oil seal inside the seal cover (F). 2. Make sure not to damage the oil seal when handling it. 3. In case of a tandem pump, attach the seal cover (R) (263) or seal cover (262) in the same way.	All types
5	Assemble the piston cylinder subassembly (cylinder block [141] piston sub [151,152] set plate [153], spherical bush [156], cylinder spring [157]), and insert them into the pump casing aligning the phase angle of the spline with the spherical bush and cylinder. 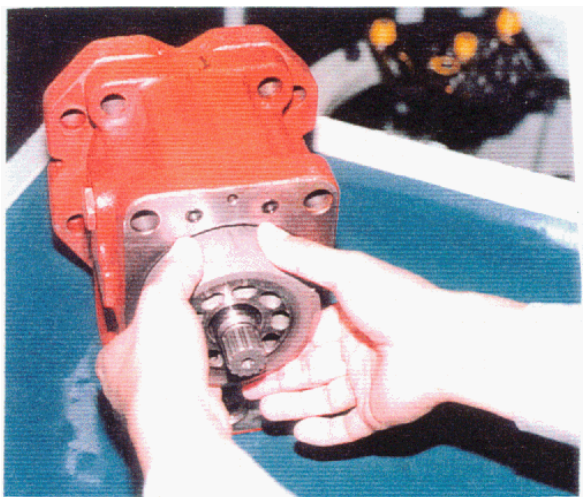		All types

https://truckmanualshub.com/

No.	Procedures	Notes	Types
6	Install the valve plate (313) on the valve block (312) with the pins aligned. 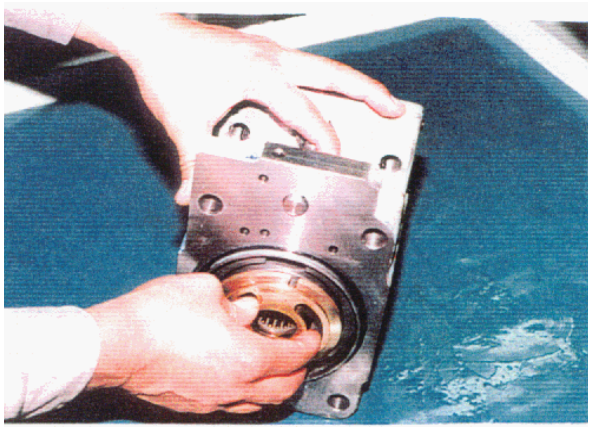	Be careful not to mix up the inlet and outlet direction on the valve plate.	
7	Install the valve block (312) on the pump casing (271), tighten the hexagon socket head bolts (401). 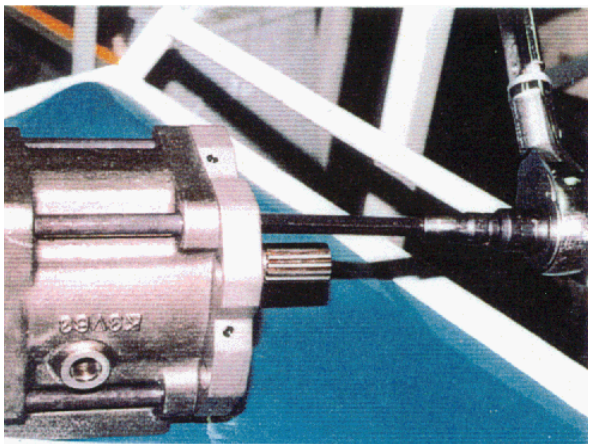	1. Assemble the pump on the rear side first. 2. Be careful not to mix up the orientation of the valve block. <u>In case of the pump for clock wise rotation</u> (viewed from the input shaft side) position of the discharge port :left side. [position of the regulator : above] <u>In case of the pump for counter clock wise rotation</u> (viewed from the input shaft side) position of the discharge port :right side. [position of the regulator port : above]	

https://truckmanualshub.com/

No.	Procedures	Notes	Types
8	Clamp the feedback pin of the tilting pin on the feedback lever of the regulator, install the PTO subassembly, and fasten the hexagon socket head bolts (412), (413). 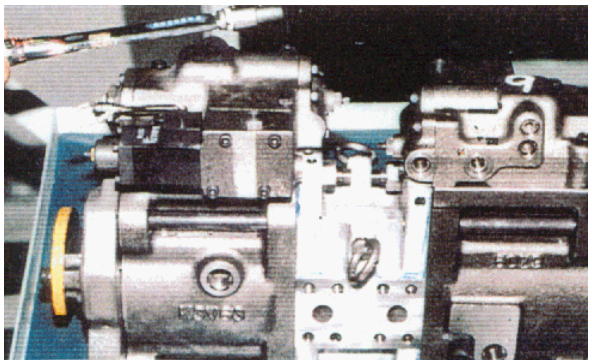	Be careful not to mix up the regulator for the front use and the rear use.	All types
9	Install the drain port plug (468) to complete the procedure.		All types

https://truckmanualshub.com/

2. Pump Main Body – Maintenance Standards

2-1. Replacement standard for worn-out parts

If the wear on a part exceeds the standards below, replace or readjust the part.

Names and inspection items	Standard size / recommended value of replacement				Actions
	Pump types				
	K3V63, K5V80	K3V112, K5V140	K3V140	K3V180, K5V200	
Clearance between the piston and cylinder bore (D - d)	0.028 / 0.056	0.039 / 0.067	0.043 / 0.070	0.0375 / 0.078	Replacement of piston or cylinder
Loseness of piston, shoe, and caulking (d)	0 - 0.1 / 0.3	0 - 0.1 / 0.3	0 - 0.1 / 0.3	0 - 0.1 / 0.35	Replacement of piston and shoe assembly
Thickness of shoe (t)	3.9 / 3.7	4.9 / 4.7	5.4 / 5.0	5.4 / 5.0	Replacement of piston and shoe assembly
Free height of cylinder spring (L)	31.3 / 30.5	41.1 / 40.3	47.9 / 47.1	40.9 / 40.1	Replacement of cylinder spring
Combined height of pressure plate and spherical bush (H - h)	19.0 / 18.3	23.0 / 22.0	23.7 / 22.7	23.7 / 22.7	Replacement of pressure plate and spherical bush

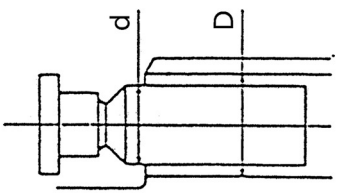

Clearance between the piston and cylinder bore : D-d

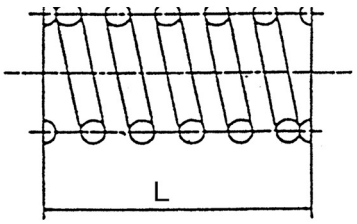

Free height of cylinder spring : L

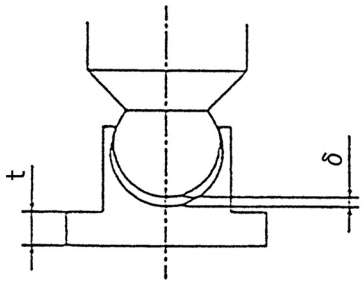

Loseness of piston, shoe, and caulking : δ
Thickness of shoe : t

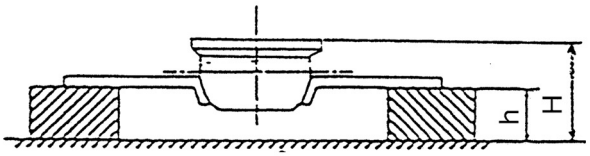

Combined height of pressure plate and spherical bush : H-h

https://truckmanualshub.com/

2-2. Repair standards for cylinder, valve plate and swash plate (shoe plate)

Valve plate (sliding part) Swash plate (shoe plate area) Cylinder (sliding part) Each surface roughness	Surface roughness when modification is required	3-Z
	Standard face roughness (modified value)	0.4 z or less (lapping)

2-3. Tightening torque

Part Name	Size	Tightening torque (N·m)	Tool name (mm)	
Hexagon socket head bolt (Material SCM435)	M5	6.9	B=4	Hexagon bar wrench
	M6	11.8	5	
	M8	29.4	6	
	M10	56.9	8	
	M12	98.1	10	
	M14	156.9	12	
	M16	235.4	14	
	M18	333.4	14	
	M20	431.5	17	
Rc plug (Material SCM45C) NOTE: Wrap seal tape with 1.5 to 2 rotations.	R 1/16	6.9	4	
	R 1/8	10.3	5	
	R 1/4	17.2	6	
	R 3/8	34.3	8	
	R 1/2	49.0	10	
PO Plug (Material S45C)	G 1/4	29.4	6	
	G 1/2	98.1	10	
	G 3/4	147.1	14	
	G 1	186.3	17	
	G 1 1/4	264.8	17	
	G 1 1/2	274.6	17	

https://truckmanualshub.com/

3. Troubleshooting

3-1. General precautions

Following are countermeasures if you find abnormality during the operation of Kawasaki swash plate type axial piston pump and motor.

General precautions are:

1. Considerations before starting repair.
   Determine the characteristics of the abnormality before starting repair. Consider if the cause is originated from the wrong circuit, failure of regulator, or attached valve. Double check that the problem involves the pump motor.
2. Before disassembling a system, make sure to read through the service manual. Conduct the disassembly in a correct manner.
3. When disassembling a system, be careful not to allow dust to enter.
4. Parts are finished precisely. Be careful not to damage them when handling.

3-2. Troubleshooting for the pump main body

Pumps are often attached to a regulator, attached valves and attached pumps. It can be difficult to find the cause of the problem. Checking the following points is useful to identify the problem area.

1. Filter check and drain oil check
   Check the filter element. Check if a considerable amount of contamination is found.
   It is normal that a little amount of metal dust originated from abrasion of the shoe or cylinders is seen. However, if the amount of metal dust is extremely high in the filter, the shoe might be damaged. Check drain oil of inside the pump casing, as well.
2. Abnormal noise / abnormal vibration
   Check for abnormal noise or abnormal vibration in the main pump. Examine if the sound repeats with regular frequency such as, a hunching sound in the regulator or hunching sound of the valve relief.
   If there is an abnormal vibration or sound, cavitation or damage inside the pump should be considered.
3. When using two pumps.
   If piping uses two single pumps or two motors, change the pipe of each pump.
   By changing the pipe, the problem can be identified whether it is caused by a pump failure or a piping failure after the pump.
4. Perform pressure measurement.
   If the problem is related to the controlling function, examine the problem areas using pressure measurement tools instead of performing overhaul inspection.

3-3. Overload on the motor

Causes	Countermeasures	Notes
1. Rotational speed-check if pressure is set higher than expected value.	Set pressure at an expected value.	
2. Check if the torque set of the regulator is high.	Recheck the regulator.	Refer to the regulator instruction manual.
3. Damage and burning on the internal parts of the pump.	Replacement of damaged parts.	Check filter and drain oil for abnormal dust from abrasion.
4. Wrong piping for the regulator.	Correct the regulator piping.	

https://truckmanualshub.com/

3-4.When pump flow rate declines significantly or discharging pressure does not increase.

Causes	Countermeasures	Notes
1. Faulty regulator.	Repair the regulator.	Refer to the regulator instruction manual.
2. Damage and burning on the internal parts of the pump.	Replacement of damaged parts.	Check filter and drain oil.
3. Attached faulty pump.	Replace damaged parts.	Disconnect the attached pump and check the shaft coupling section.
4. Attached faulty valve.	Check attached valve. (Check especially poppets and seat springs.)	Refer to the attached valve instruction manual.
5. Wrong regulator piping.	Correct the regulator piping.	

3-5. Abnormal noise / abnormal vibration

Causes	Countermeasures	Notes
1. Cavitation	Prevention of cavitation. Check hydraulic oil for white turbidness.	• Boost pressure is too low. • Failure of auxiliary pump • Air is drawn from the intake pipe. • Intake resistance is too high.
2. Damage on the shoe caulking area.	Replacement of piston shoe, shoe plate or others.	
3. Cracks on the cylinder	Replacement of the cylinder	
4. Failure of pump installation	Reinstallation	
5. Hunching of the regulator	Repair of the regulator	Refer to the regulator instruction manual.
6. Hunching of the relief valve on the attached valve	Repair the attached valve.	Refer to the attached valve instruction manual.

	2 9 0 - 7 - 0 1 - 0 1 - 4 5
Hydraulic Pump	**Page No. 16/17**
	First Edition : 03/2005

Exploded View of Pump

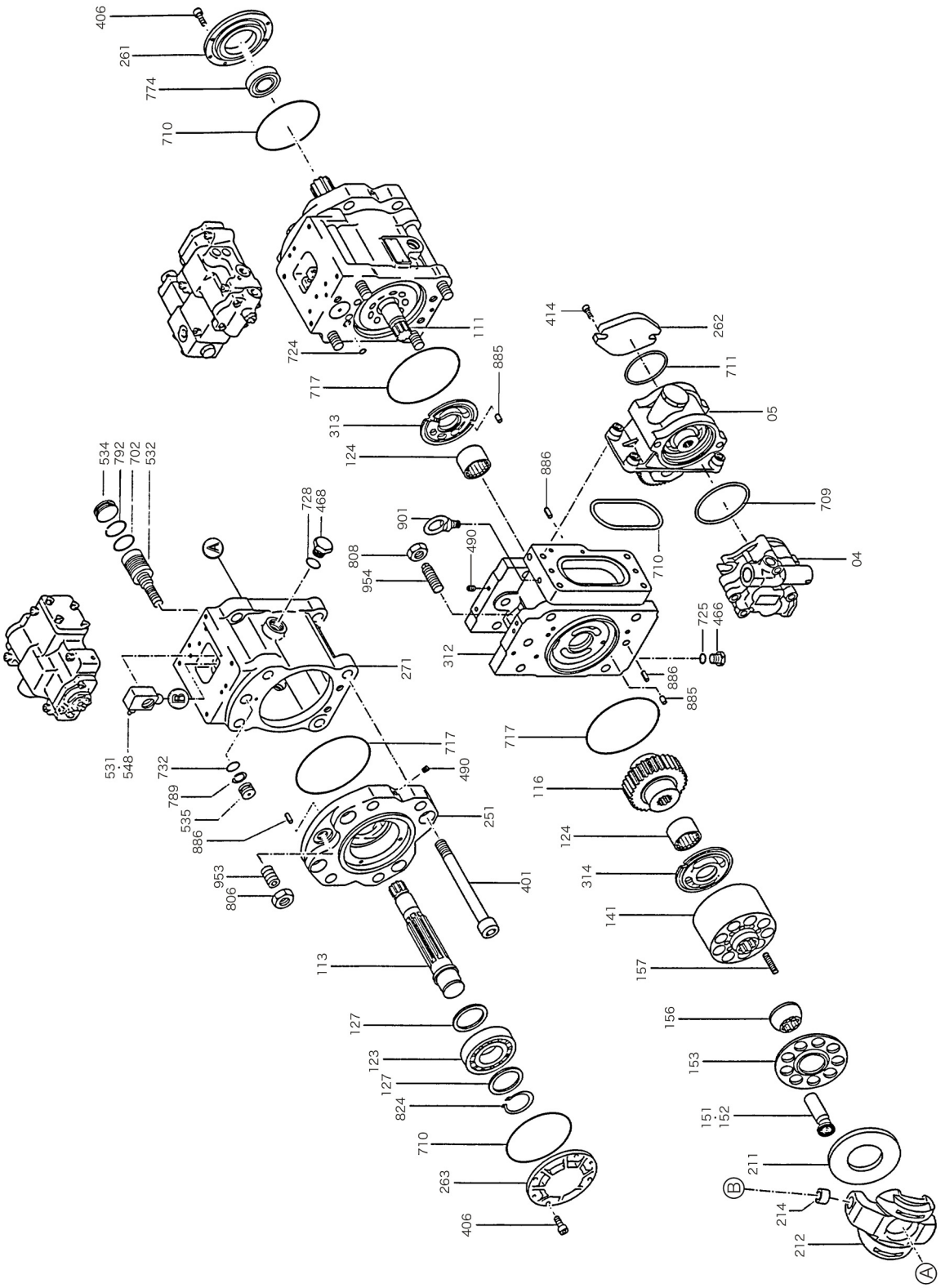

https://truckmanualshub.com/

	290-7-01-01-45
Hydraulic Pump	Page No. 17/17
	First Edition : 03/2005

Cross-Sectional View of Pump

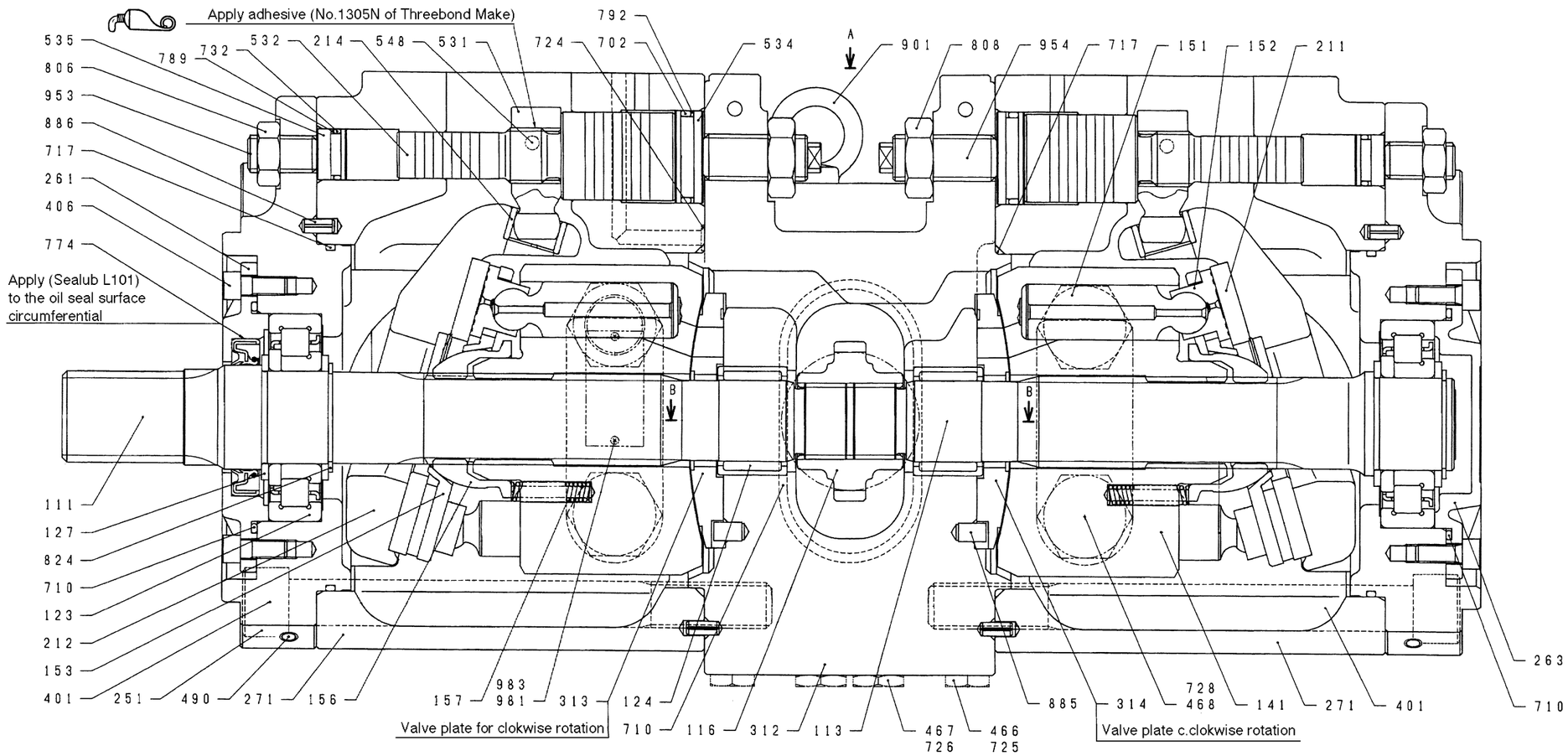

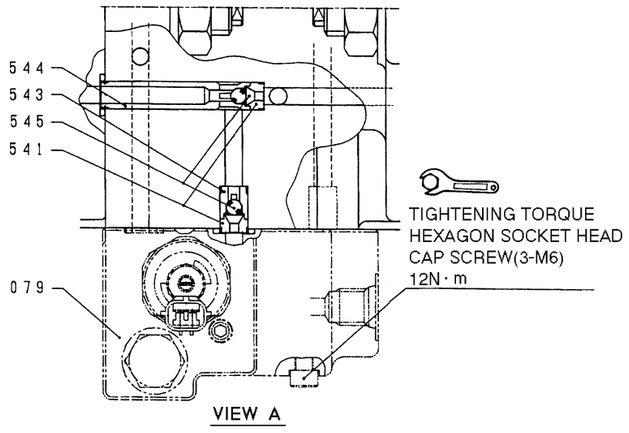

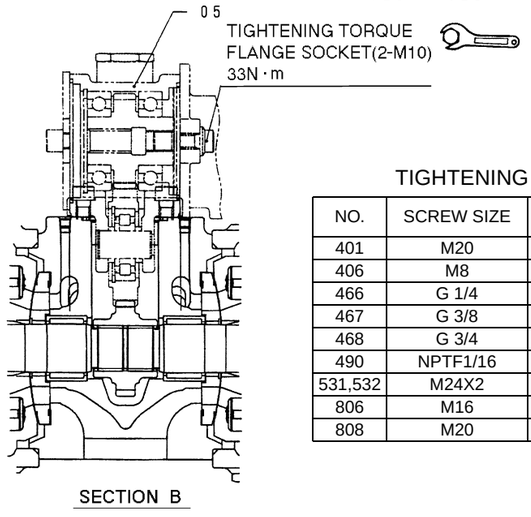

TIGHTENING TORQUE

NO.	SCREW SIZE	TIGHTENING TORQUE N•m
401	M20	430
406	M8	29
466	G 1/4	36
467	G 3/8	74
468	G 3/4	170
490	NPTF1/16	8.8
531,532	M24X2	240
806	M16	130
808	M20	240

NO.	PART NAME	QTY
530	TILTING PIN ASSY	2ST
079	PROPORTIONAL REDUCING VALVE ASSY	1ST
042	CHECK VALVE ASSY	2ST
041	CHECK VALVE ASSY	2ST
030	SWASH PLATE ASSY	2ST
014	CYLINDER (L) ASSY	1ST
013	CYLINDER (R) ASSY	1ST
011	PISTON ASSY	2ST
05	PTO ASSY	1ST

NO.	PART NAME	QTY
983	PIN	2
981	NAME PLATE	1
954	SET SCREW	2
953	SET SCREW	2
901	EYE BOLT	2
886	SPRING PIN	4
885	VALVE PLATE PIN	2
824	STOP RING	2
808	NUT	2
806	NUT	2
792	BACKUP RING	2
789	BACKUP RING	2
774	OIL SEAL	1
732	O-RING	2
728	O-RING	4
726	O-RING	2
725	O-RING	6
724	O-RING	16
717	O-RING	4
710	O-RING	2
702	O-RING	2
548	FEED BACK PIN	2
545	STEAL BALL	4
544	STOPPER 2	2
543	STOPPER 1	2
541	SEAT	4
535	STOPPER (S)	2
534	STOPPER (L)	2
532	SERVO PISTON	2
531	TILTING PIN	2
490	PLUG	27
468	PLUG	4
467	PLUG	2
466	PLUG	2
406	HEXAGON SOCKET HEAD BOLT	8
401	HEXAGON SOCKET HEAD BOLT	8
314	VALVE PLATE (L)	1
313	VALVE PLATE (R)	1
312	VALVE BLOCK	1
271	PUMP CASING	2
263	SEAL COVER (R)	1
261	SEAL COVER (F)	1
251	SWASH PLATE SUPPORT	2
214	TILTING BUSH	2
212	SWASH PLATE	2
211	SHOE PLATE	2
157	CYLINDER SPRING	18
156	SPHARICAL BUSH	2
153	SET PLATE	2
152	SHOE	18
151	PISTON	18
141	CYLINDER BLOCK	2
127	BEARING SPACER	4
124	NEEDLE BEARING	2
123	ROLLER BEARING	2
116	1ST GEAR	1
113	DRIVE SHAFT (R)	1
111	DRIVE SHAFT (F)	1

https://truckmanualshub.com/

PTO Subassembly Maintenance

1. Disassembling and Assembling Instructions

1-1. Tools

Tools required for disassembling and assembling PTO subassembly are shown on the following table.

Tools	Bolt Size	Part Name
Hexagon bar wrench	10	Hexagon socket head bolt (M10) Flange socket (M10)
Pliers TRR150 TRR200	—	Locking ring RR-20 Locking ring RR-72

1-2. Disassembling instructions

Disassemble PTO subassembly following the steps described below after reading the entire disassembling instructions.

The numbers inside parentheses next to the part names indicate the part numbers on cross-sectional view of PTO subassembly.

No.	Procedure	Note
1	Choose a work area for disassembly.	1. Choose a clean area. 2. Place rubber plates or cloth on a workbench to prevent scratches on the parts.
2	Remove debris or rust on the surface of pump with cleaning solvent or equivalent.	
3	Remove drain port plug (468) on the pump casing and drain oil.	Drain oil from each plug on the front pump and the rear pump.
4	Disconnect the flange socket and remove the gear pump.	
5	Disconnect flange sockets (435) and remove PTO subassembly. 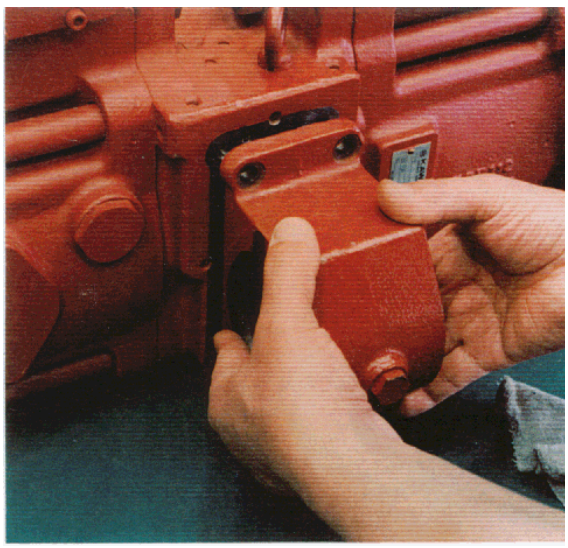	

https://truckmanualshub.com/

No.	Procedure	Note
6	Disconnect locking ring (827), remove idle shaft (115), and pull out 2nd gear (117), the roller bearing (126) and bearing spacer (128). 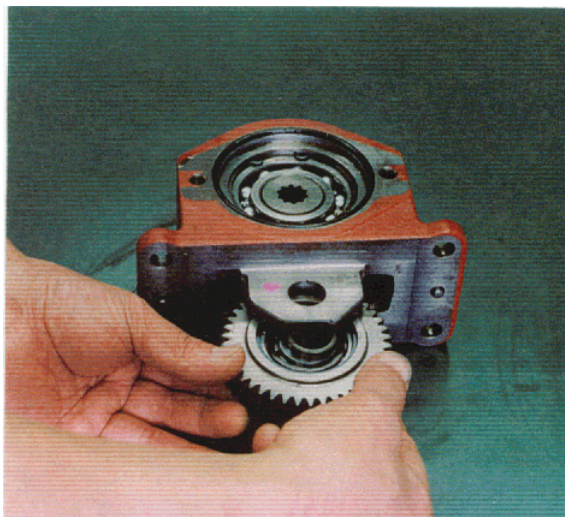	The roller bearing (126) cannot be removed from 2nd gear (117).
7	Disconnect locking ring (825) and remove 3rd gear (118) and ball bearing (125). 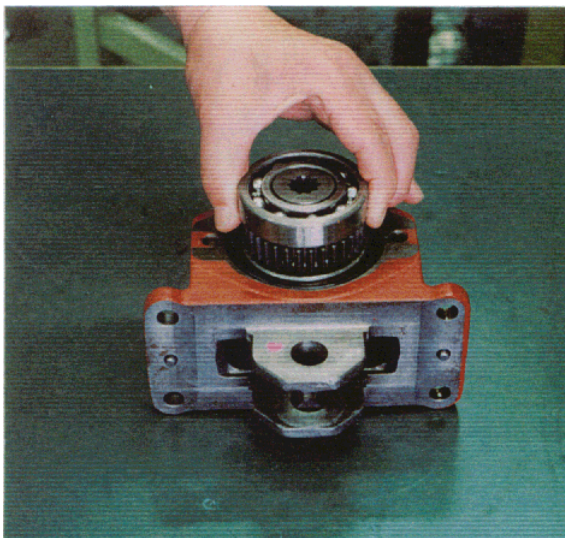	The ball bearing (125) cannot be removed from 3rd gear (118).

https://truckmanualshub.com/

1-3. Assembling instructions

Installation is done in the opposite order of disassembly; however, keep in mind the following notes.

1. Make sure to repair the damaged parts and prepare replacement parts beforehand.
2. Clean each part with solvent and install them after air-blowing them.
3. When installing the sliding parts or bearings, make sure to apply clean lubricant.
4. Replace sealing parts such as O-rings and oil seals with new ones as a general rule.
5. Use appropriate torque wrenches to tighten mounting bolts, plugs and others to the specified torques stated in the *Maintenance Standards*.

2. Maintenance Standards

2-1. Replacement standard for worn-out parts

When pitting appears on the gear surface of 2nd gear (117) or 3rd gear (118) (Size of 1 pit: 1 mm or larger; Area ratio: 5% or larger), replace it. When damage is excessive, replace the part.

2-2. Tightening torque

Part Name	Size	Tightening torque N·m
Hexagon socket head bolt (made of SCM435)	M10	33.3
Flange socket	M10	33.3

https://truckmanualshub.com/

Exploded View of PTO Subassembly

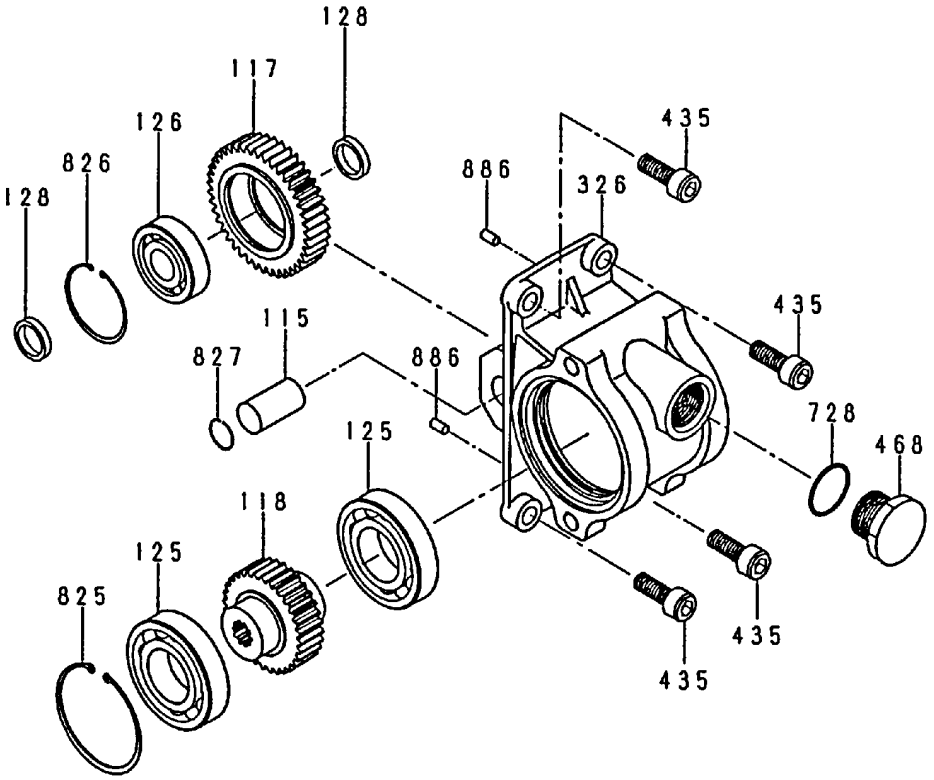

Hydraulic Pump

Cross-sectional View of PTO Subassembly

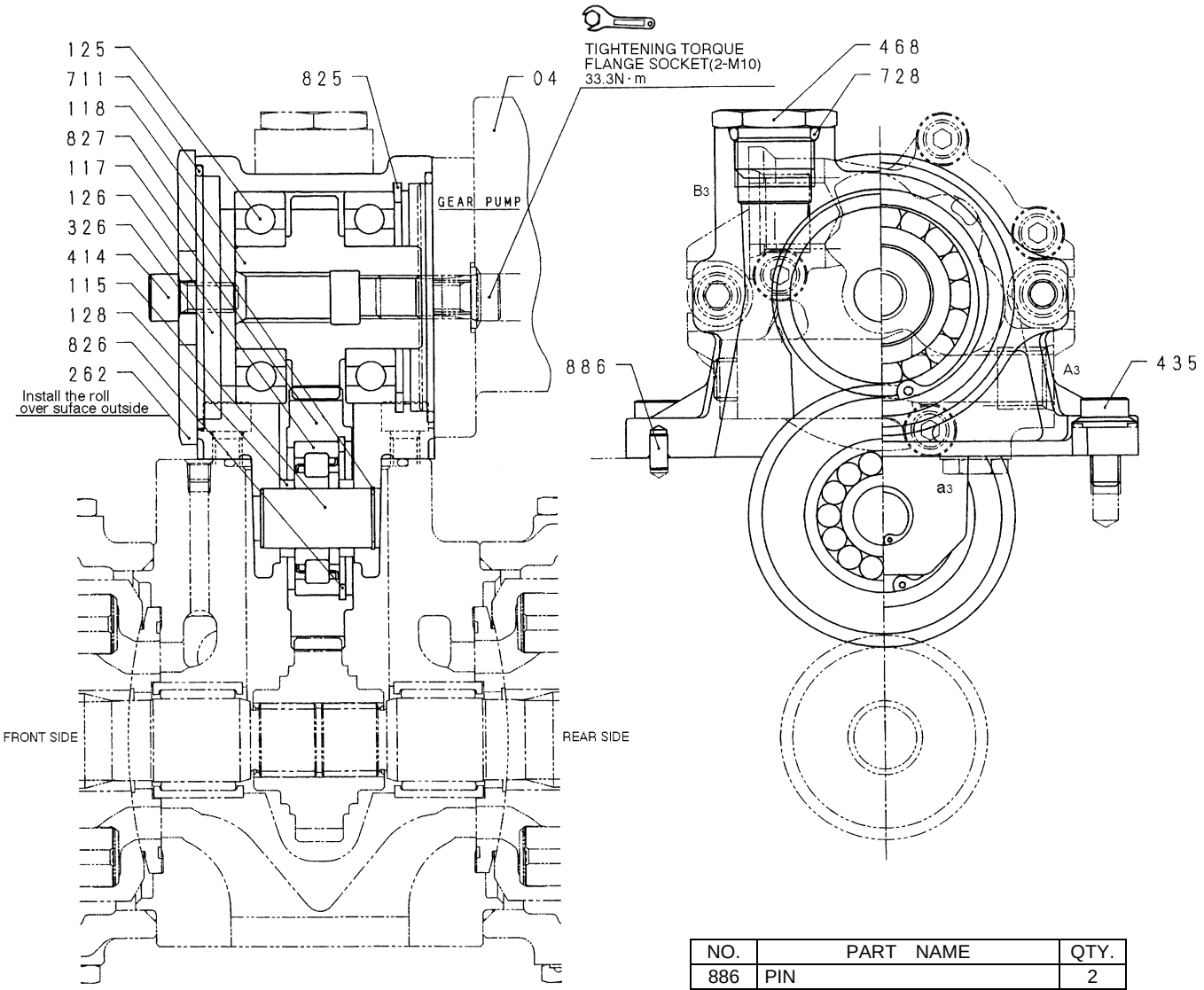

TIGHTENING TORQUE

NO.	SCREW SIZE	TIGHTENING TORQUE N·m
414, 435	M10	33.3
468	G 3/4	73.5

NO.	PART NAME	QTY.
886	PIN	2
827	LOCKING RING	1
826	LOCKING RING	1
825	LOCKING RING	1
728	O-RING	1
711	O-RING	1
468	VP PLUG	1
435	FLANGE SOCKET	4
414	HEXAGON SOCKET HEAD BOLT	2
326	GEAR CASE	1
262	COVER	1
128	BEARING SPACER	2
126	ROLLAR BEARING	1
125	BALL BEARING	2
118	3RD GEAR	1
117	2ND GEAR	1
115	IDLER SHAFT	1
-	PTO SUB ASSY.	1
04	GEAR PUMP	1

https://truckmanualshub.com/

Gear Pump Handling

1. Structure and Function

Structure

Casing is consists of the front case (361) and the gear case (351), and includes a pair of drive gear (353), a pair of Idle gear (354) and relief valve which sets up the discharging oil pressure.The relief valve is consists of the filter (355), poppet (307), seat (308), spring (310), ring (309), adjusting screw (311) and lock nut (312).For avoiding the oil leak to the outside, the front case is equipped with the square ring (700) and the O-ring (709).

Function

Inhaled oil from the suction port B_3 is dischaged by the drive gear and the Idle gear from the discharge port A_3.The relief valve keeps the pressure of the discharging oil 3.9MPa.Surplus discharging oil is discharged from the tank port through the relief valve.

https://truckmanualshub.com/

2. Assembly drawing

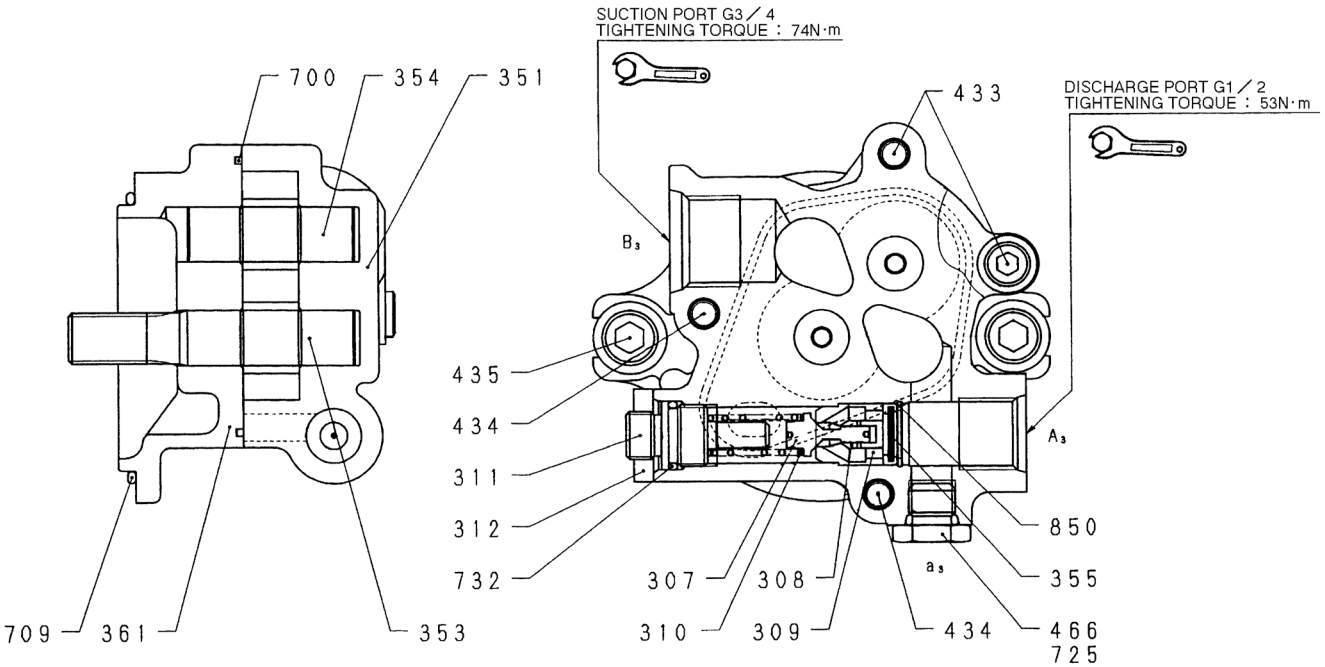

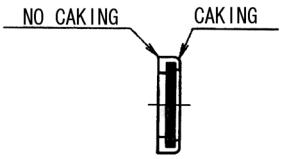

NOTES

1. After assembling check that the drive gear turns smoothly. (TORQUE : BELOW 0.1N・m)
2. When assembling, pour enough oil on the sliding surfaces.
3. The filter must be assembled with its non caked surface firmly contacting with the bottom surface of the recess.

TIGHTENING TORQUE

NO.	SCREW SIZE	TIGHTENING TORQUE N•m
312	M14 × 1.5	29
433,434	M8	17
435	M10	33
466	G1/4	16

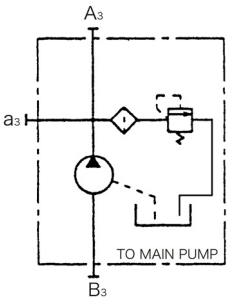

NO.	PART NAME	QTY	NO.	PART NAME	QTY
307	POPPET	1	433	FLANGE SOCKET	2
308	SEAT	1	434	FLANGE SOCKET	2
309	RING	1	435	FLANGE SOCKET	2
310	SPRING	1	466	VP PLUG	1
311	ADJUSTING SCREW	1	700	SQUARE RING	1
312	LOCK NUT	1	709	O-RING	1
351	GEAR CASE	1	725	O-RING	1
353	DRIVE GEAR	1	732	O-RING	1
354	IDLE GEAR	1	850	LOCKING RING	1
355	FILTER	1			
361	FRONT CASE	1			

https://truckmanualshub.com/

Regulator Handling

1. Description

The regulator KR 3*-9N** for KAWASAKI incline type axial piston pump K3V/K5V Series use is composed of the following control mechanism.

1. Power control

   As the discharge pressure P_1 at the self pump and discharge pressure P_2 at the counterpart pump rise, restrain the input torque to a constant value or less by reducing the pump incline rotation angle (discharge flow) automatically (when the number of revolutions is constant, the input power is kept constant).

   As this is a simultaneous total power mechanism, overload on the motor is automatically prevented. It is operated by the sum of load pressures at the two pumps of the tandem type double pumps. And the regulators of the each pump are kept at the same incline rotation angle (discharge flow), under the state where the power control is activated.

2. Power shift control

   Set power values can be shifted by changing command current values for the electromagnetic proportional pressure-reducing valve that is attached to the regulator.

   There is only one electromagnetic proportional pressure-reducing valve but the secondary pressure Pf (power shift pressure) is introduced into the power control section in the regulator of each pump through the passage inside the pump. Each pressure is shifted into the same set power value. As the pump's output power can be changed to an arbitrary value through this mechanism, it is possible to obtain optimal power according to the work condition.

3. Flow control

   By changing pilot pressure Pi, the pump incline rotation angle (discharge flow) can be arbitrarily controlled.

   This regulator adopts a negative flow control (negative control) method where the discharge flow Q decreases as the pilot pressure Pi increases. Through this mechanism, a pilot pressure matching the flow required for the work is instructed, the pump discharges only the required flow, thus no useless power is consumed.

This regulator has those three control mechanisms above described, but each control works in a combined way. The priority is given to the low incline rotation (low flow) command by mechanical computing which is to be described later.

https://truckmanualshub.com/

2. Description of Operation

2-1.Flow control

As shown in the figure on the right, the pump discharge flow is controlled arbitrarily by pilot pressure Pi.

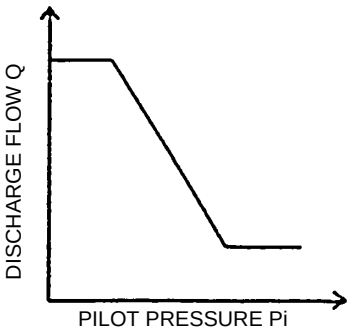

2-1-1. Flow decrease operation

When pilot pressure Pi rises, pilot piston (643) moves to the right and stops at a position where the force of pilot spring (646) and the oil pressure force are balanced. As Pin (875) fixed on lever 2 (613) is fitted in the grooved section [Section A] made on the pilot piston, when the pilot piston moves, lever 2 turns around the fixation point as a fulcrum due to the function center plug (614) and pin (875). As pin (897) fixed on feedback lever (611) is projected into the larger hole section on lever 2 [Section C], pin (897) moves to the right as lever 2 rotates. The part formed with two surfaces [Section D] on the feedback lever has the pin (548) fixed onto incline rotation pin (531) which oscillates the swash plate, the feedback lever rotates with Section D as its fulcrum when pin (897) moves. As the feedback lever has spool (652) jointed to it via pin (874), the spool moves to the right.

When the spool moves, discharge pressure P_1 is communicated with Port Cl through the spool and is introduced into the servo piston's large diameter part. The discharge pressure P_1 is always introduced into the servo piston's small diameter part but the servo piston moves to the right because of the differential area, and the incline rotation angle is reduced.

When the servo piston moves to the right, Point D also moves to the right. As the spool has a return spring (654) fitted and the spring force to pull to the left always acts on the spool, pin (897) is pushed against the larger hole section [Section C] on the lever 2. Therefore, the feedback lever turns around Point C as its fulcrum as Point D moves, and the spool moves to the left.

In junction with this movement, the opening between the sleeve (651) and spool (652) starts closing gradually and the servo piston stops at the position where the opening has completely closed.

2-1-2. Flow increase operation

When pilot pressure Pi decreases, pilot piston (643) moves to the left by the force of pilot spring (646) and lever 2 (613) turns around Point B as its fulcrum. As pin (897) is pushed against the larger hole section [Section C] on lever 2 by return spring (654) via spool (652), pin (874) and feedback lever (611), the feedback lever turns around Point D as its fulcrum as the lever 2 rotates and the spool moves to the left.

As Port Cl is opened to the tank port when the spool moves, the pressure in the large diameter part is released and the servo piston moves to the left by action of discharge pressure P_1 in the small diameter section. As a result, the flow increases.

As the servo piston moves, Point D moves to the left, the feedback lever turns around Point C as its fulcrum, and the spool moves to the right. The spool continues to move until the spool sleeve opening is closed. It stops at the position where the opening has been closed.

https://truckmanualshub.com/

2-2. Power control

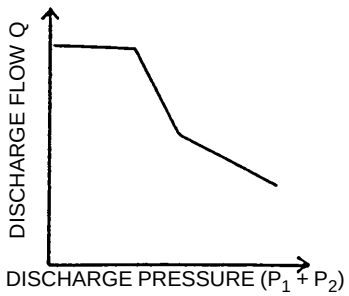

As shown in the figure on the right, the overload on the motor is prevented by reducing the pump incline rotation angle when the load pressure rises.

As this regulator has adopted a simultaneous constant power control method, the incline rotation angles of two pumps (displacement) are controlled at the same value as shown in the following equation:

$$Tin = \frac{P_1 * q}{2\pi} + \frac{P_2 * q}{2\pi} = \frac{(P_1 + P_2) * q}{2\pi}$$

Since the operation of power control is the same as described in the flow control, its brief description is given below.

(For the detailed operations of each part, refer to *2-1. Flow control*.)

2-2-1. Overload preventive operation

When the discharge pressure P_1 at the self pump or the discharge pressure P_2 at the counterpart pump rises as P_1 and P_2 act on the stepped section of compensator piston (621), compensator rod (623) is pushed to the right and moves to the position where the forces of the outer spring (625) and inner spring (626) are balanced with the hydraulic oil force. The motion of the compensation rod is transferred to lever 1 via pin (875) and lever 1 turns around the center of pin (875) (Point E) fixed on casing (601). As pin (897) fixed on feedback lever (611) is projected into the larger hole section on the lever 1 [Section F], the feedback lever turns around Point D as its fulcrum and spool (652) moves to the right as the lever 1 rotates.

When the spool moves, discharge pressure P_1 is introduced into the servo piston's larger diameter part via Port Cl. As a result, the servo piston moves to the right, the pump discharge flow is reduced and overload on the motor is prevented.

The motion of the servo piston is transferred to the feedback lever via Point D, the feedback lever turns around Point F as its fulcrum, and the spool moves to the left. The spool moves until the opening between the spool and sleeve (651) is closed. It stops at the position where the opening has been just closed.

2-2-2. Flow return operation

When the discharge pressure P_1 at the self pump or the discharge pressure P_2 at the counterpart pump falls, compensator rod (623) is pushed back by the force of springs (625), (626) and lever 1 turns around Point E. The feedback lever turns around Point D as its fulcrum as lever 1 rotates, and the spool moves to the left. Therefore, Port Cl is opened to the tank port, the pressure in the large diameter part of the servo piston is released and the servo piston moves to the left, as a result, the pump discharge flow increases.

The motion of the servo piston is transferred to the spool through the feedback mechanism, and the mechanism continues to operate until the opening between the spool and sleeve is closed.

https://truckmanualshub.com/

2-3. Low incline rotation (low flow) command priority mechanism

As described above, an incline rotation command to the flow control or power control is transferred to the feedback lever and spool via the larger hole section [Sections C and F] on lever 1 and lever 2, but only the lever which makes the incline rotation smaller can contact pin (897). On the other hand, the hole (dia. 8) on the side under the command of larger incline rotation is not in contact with pin (897) and in a free state because Sections C and F have a structure where pin (dia. 4) is projected into the large holes (dia. 8). Through this mechanical selection method, priority is given to a command which belongs to the low incline rotation side at the flow control and power control.

2-4. Power shift control

As shown in the figure on the right, pump's set power is controlled arbitrarily by power shift pressure Pf. When power shift pressure Pf increases, since compensator rod (623) moves to the right via pin (898) and compensator piston (621), the pump inline rotation angle decreases and set power increases as described in *2-2-1. Overload preventive operation* in *2-2. Power control*. On the contrary, as power shift pressure Pf decreases, the set power increases.

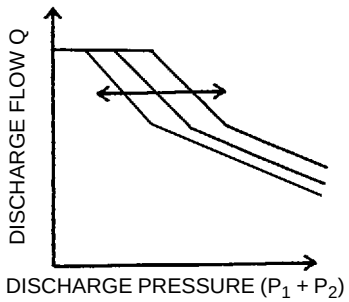

3. Adjusting the Regulator

The maximum flow, minimum flow, power controlling characteristics and flow controlling characteristics can be adjusted by using adjusting screws on this regulator.

(Each adjustment is shown in *List of adjustments for regulator*.)

3-1. Adjusting maximum flow

Loosen hexagon nut (808), and fasten (or loosen) set screw (954) to do adjustment. The maximum flow, but not other controlling characteristics will change.

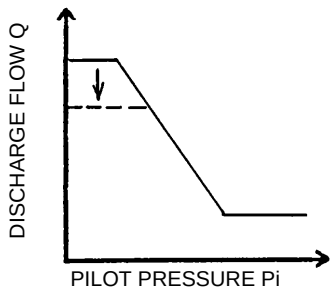

3-2. Adjusting minimum flow

Loosen hexagon nut (808), and fasten (or loosen) hexagonal socket set screw (953) to do adjustment. As with adjusting maximum flow, other controlling characteristics do not change but if it is fastened too far, required power may increase at the time of maximum discharge pressure (at the time of relief). This needs special attention.

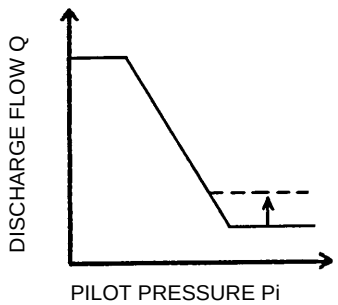

https://truckmanualshub.com/

3-3. Adjusting input power

As this is a simultaneous total power mechanism, when changing set power, do the same amount of adjustment by using the adjusting screws on both front and rear pumps. Changes in pressure by adjustment are valves where pressures of two pumps increase at the same time.

3-3-1. Adjusting outer spring

Loosen Lock nut (630), and fasten (or loosen) adjusting screw C (628) to do adjustment. If the adjusting screw is fastened, the input power moves to the right as shown in the figure on the right and the input power increases. If the adjusting screw C is rotated by N turns, the setting on the inner spring changes. Once rotate back adjusting screw Q1 (925) by N x A turns in the reverse direction.

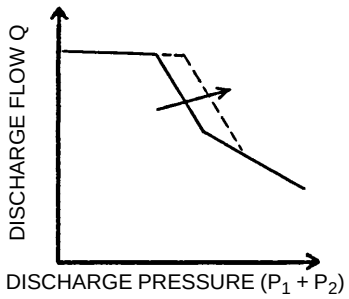

3-3-2. Adjusting inner spring

Loosen hexagon nut (801), and fasten (or loosen) adjusting screw Q1 (925) to do adjustment. If the adjusting screw is fastened, the flow increases as shown in the figure on the right and the input power increases.

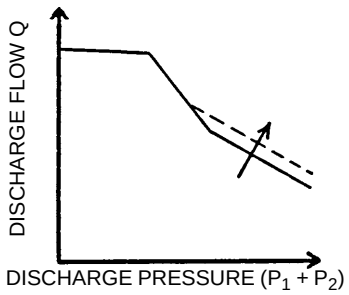

3-4. Adjusting flow controlling characteristics

Loosen hexagon nut (801), and fasten (or loosen) hexagonal socket set screw (924) to do adjustment. If the adjusting screw is fastened, the control line moves to the right as shown in the figure on the right.

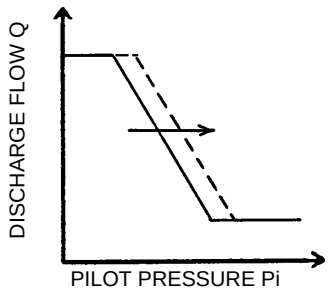

https://truckmanualshub.com/

4. Troubleshooting

If malfunctions possibly caused by regulator occurs, disassemble and reassemble it referring to the maintenance instructions.

4-1. Motor Overloading

Apply a load onto each pump separately and find out which pump (front or rear) is abnormal? If both are abnormal, first check the following (1), (2):

If only one side is available, start from (3).

1. Check that the power shift command current value is normal.
2. Lower power shift pressure.
   - Check for dither on the amplifier
   - Replace electromagnetic proportional pressure-reducing valves
3. Compensation piston/compensation rod sticking
   - Disassemble and clean
4. Pin (898) sticking
   - Disassemble and clean

4-2. Maximum flow is not available

1. Ensure that pilot pressure Pi is normal.
2. Pilot piston sticking
   - Disassemble and clean
3. Spool sticking
   - Disassemble and clean

NOTE: If the parts have deep scratches, replace the parts.

https://truckmanualshub.com/

Attachements

List of adjustments for regulator

Regulator type:			KR3G-9N49
Adjusting Maximum Flow		Adjusting screw (954) Fastening (turns)	+1/4
		Changes in flow (L/min.)	-6.4
Adjusting Minimum Flow		Adjusting screw (953) Fastening (turns)	+1/4
		Changes in flow (L/min.)	5.1
Adjusting Input Power	Adjusting outer spring	Adjusting screw (628) Fastening (turns)	+1/4
		Changes in compensation control start pressure (MPa)	1.75
		Changes in input torque (N·m)	49.1
		A	1.7
	Adjusting inner spring	Adjusting screw (925) Fastening (turns)	+1/4
		Changes in flow (L/min.)	11.7
		Changes in input torque (N·m)	52.9
Adjusting Flow Controlling Characteristics		Adjusting screw (924) Fastening (turns)	+1/4
		Changes in flow control start pressure (MPa)	0.17
		Changes in flow (L/min.)	14.5

	2 9 0 - 7 - 0 1 - 0 1 - 4 8
Hydraulic Pump	**Page No. 8/10**
	First Edition : 03/2005

Exploded Veiw of Regulator

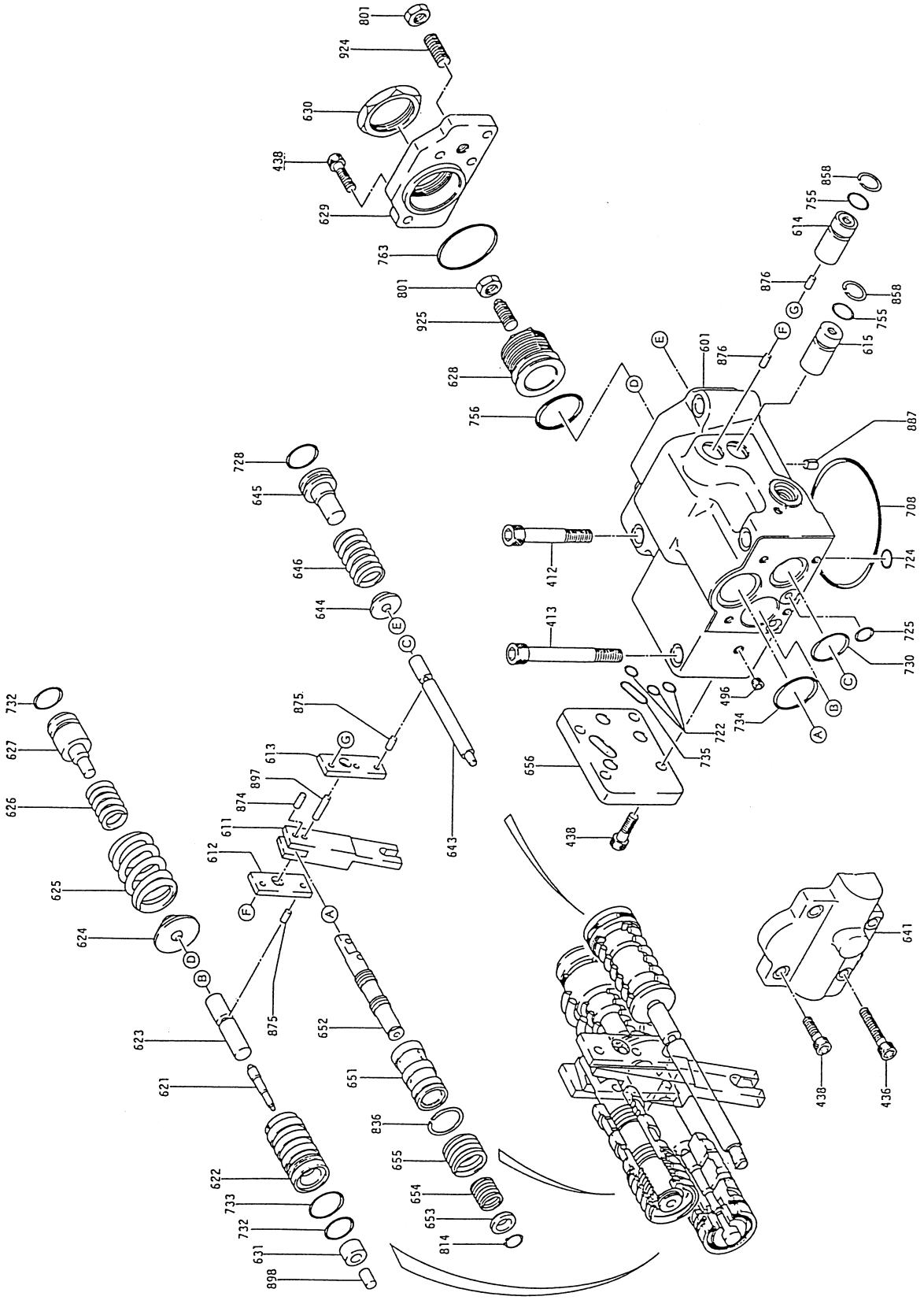

https://truckmanualshub.com/

Explanatory Diagram of Regulator Operation

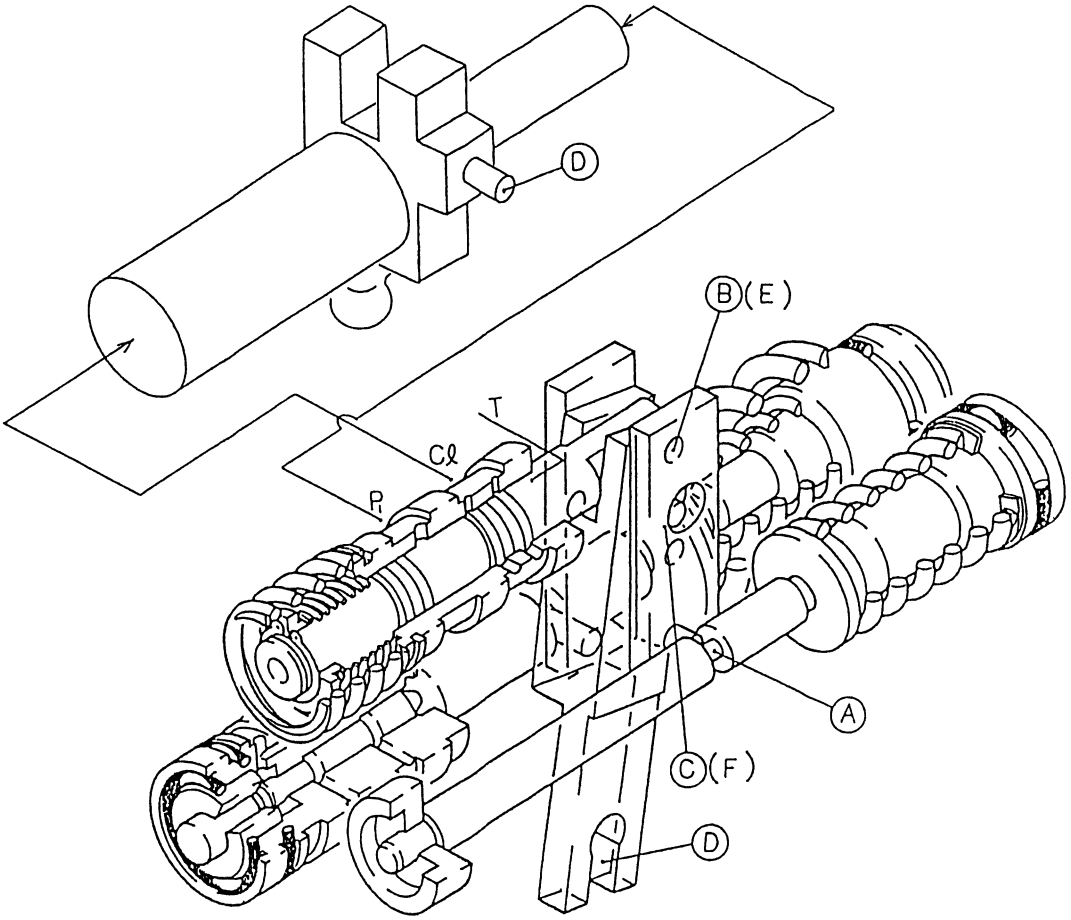

https://truckmanualshub.com/

Cross-sectional View of Regulator

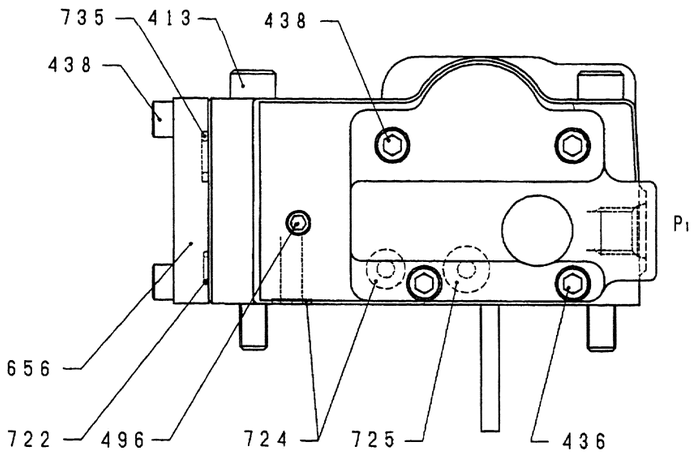

VIEW C

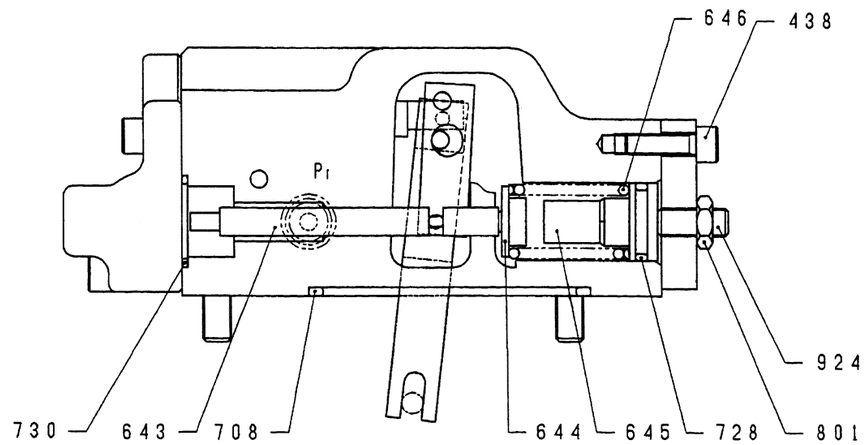

SECTION B - B

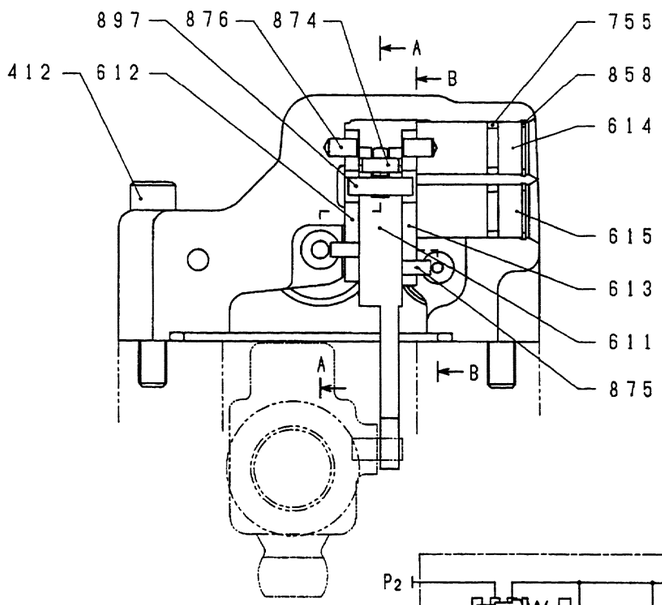

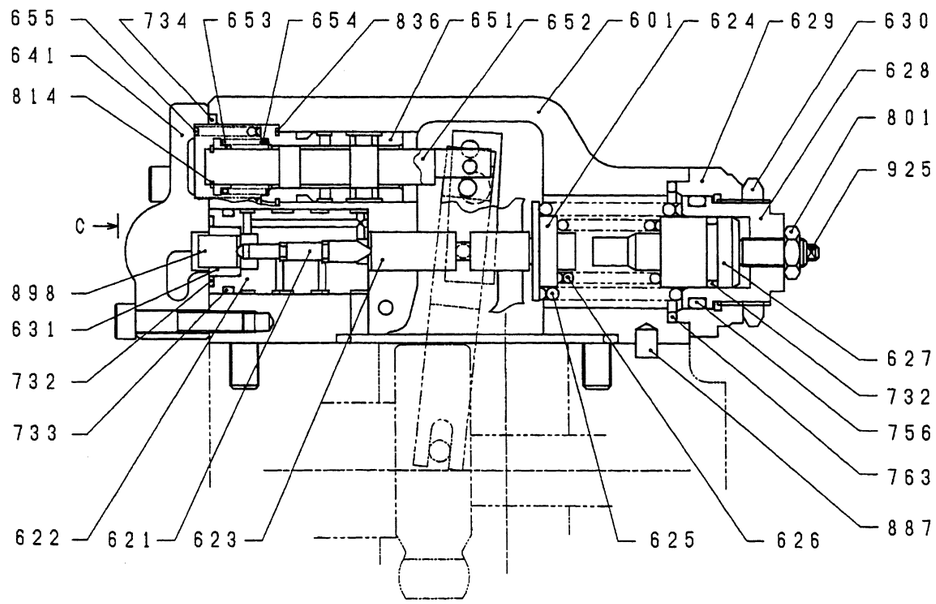

SECTION A - A

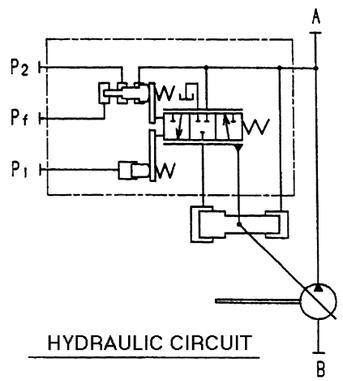

HYDRAULIC CIRCUIT

TIGHTENING TORQUE

NO.	SCREW SIZE	TIGHTENING TORQUE N • m
412,413	M8	29
436,438	M6	12
496	NPTF1/16	8.8
630	M30 × 1.5	160
801	M8	16

No.	PART NAME	QTY
925	ADJUSTING SCREW (Q1)	1
924	SET SCREW	1
898	PIN	1
897	PIN	1
887	PIN	1
876	PIN	2
875	PIN	2
874	PIN	1
858	LOCKING RING	2
836	SNAP RING	1
814	STOP RING	1
801	NUT	2
763	O-RING	1
756	O-RING	1
755	O-RING	2
735	O-RING	1
734	O-RING	1
733	O-RING	1
732	O-RING	2
730	O-RING	1
728	O-RING	1
725	O-RING	1
724	O-RING	9
722	O-RING	3
708	O-RING	1
656	BLOCK COVER	1
655	SET SPRING	1
654	RETURN SPRING	1
653	SPRING SEAT	1
652	SPOOL	1
651	SLEEVE	1
646	PILOT SPRING	1
645	ADJUSTING RING (Q)	1
644	SPRING SEAT (Q)	1
643	PILOT PISTON	1
641	PILOT COVER	1
631	PF SLEEVE	1
630	LOCK NUT	1
629	COVER (C)	1
628	ADJUSTING SCREW (C)	1
627	ADJUSTING RING (C)	1
626	INNER SPRING	1
625	OUTER SPRING	1
624	SPRNG SEAT (C)	1
623	COMPENSATOR ROD	1
622	PISTON CASE	1
621	COMPENSATOR PISTON	1
615	ADJUSTING PLUG	1
614	CENTER PLUG	1
613	LEVER (2)	1
612	LEVER (1)	1
611	FEEDBACK LEVER	1
601	CASING	1
496	PLUG	5
438	HEXAGON SOCKET HEAD BOLT	10
436	HEXAGON SOCKET HEAD BOLT	2
413	HEXAGON SOCKET HEAD BOLT	2
412	HEXAGON SOCKET HEAD BOLT	2
-	REGULATOR ASSY	1

https://truckmanualshub.com/

Regulator Maintenance

1. Disassembling Precautions

1. This regulator is composed of small precision components. Disassembling and reassembling it involves complicated procedures. We therefore recommend that you replace the entire regulator assembly. However, if you must proceed and disassemble the regulator, thoroughly read the instructions before you do so.
2. The numbers inside parentheses next to the part names indicete the part numbers on cross-sectional view of regulator.

2. Tools

Tool Name	Tool Size
Hexagon bar wrench	4, 5, 6 (size B, mm)
Socket wrench, double- (single-) ended wrench	
Adjustable wrench	Small size (maximum 36 mm)
Screw driver	
Plastic hammer	
Torque wrench	
Pliers	For stop rings, two
Steel bar	Diameter 4 or less Length = 100
Tweezers	
Bolt	M4, length = approx. 50

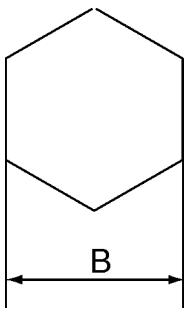

https://truckmanualshub.com/

3. Disassembling Instructions

	Procedures	Precautions
1	Pick a work area for disassembling the regulator.	1. Choose a clean area. 2. Place a rubber sheet or cloth on the workbench so parts do not become scratched.
2	Remove debris or rust from the surface of regulator with a solvent.	
3	Remove hexagon socket head bolts (412), (413), and remove the regulator body from the pump body. 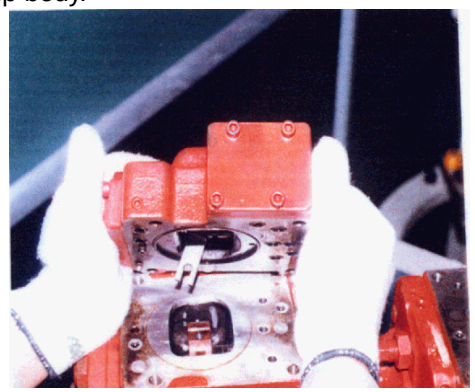	Do not lose the O-rings.
4	Remove hexagon socket head bolts (438) to remove cover (C) (629). 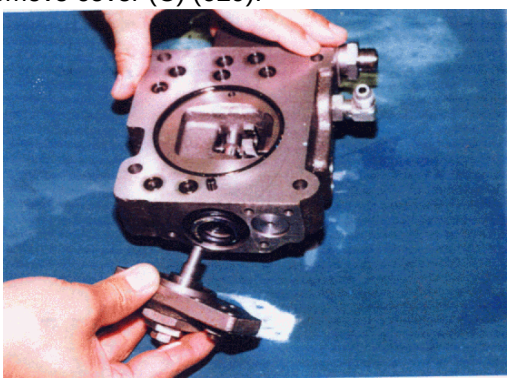	Adjusting screws (C) , (Q1) (628), (925), adjusting ring (C) (627), lock nut (630), hexagon nut (801), and set screw (924) are fitted on the cover (C). Do not loosen those screws and nuts. If loosened, the pressure and flow settings will be altered.

https://truckmanualshub.com/

	Procedures	Precautions
5	After removing cover (C) (629) subassembly, remove outer spring (625), inner spring (626) and spring seat (C) (624) from the compensating section. Also, pull out adjusting ring (Q) (645), pilot spring (646) and spring seat (644) from the pilot section. 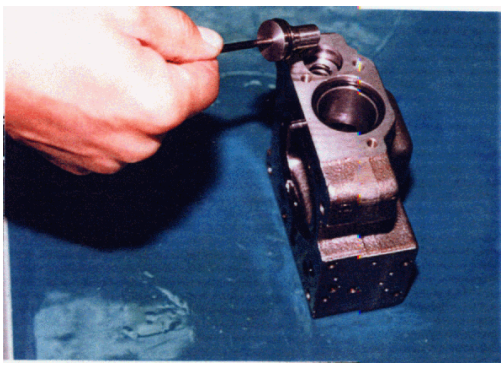	Adjusting ring (Q) (645) comes out easily when you use an M4 bolt to pull it out.
6	Remove hexagon socket head bolts (436), (438) and remove pilot cover (641). After you remove the pilot cover, remove set spring (655) from the pilot section. 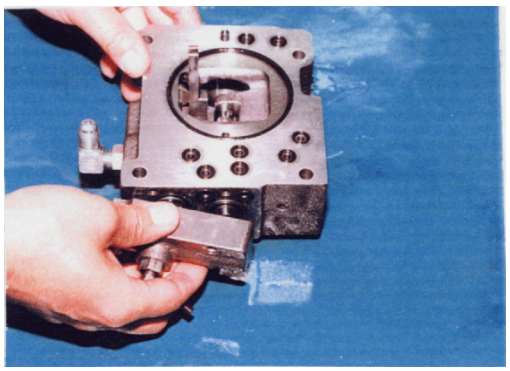	
7	Remove stop ring (814) to remove spring seat (653), return spring (654), and sleeve (651). 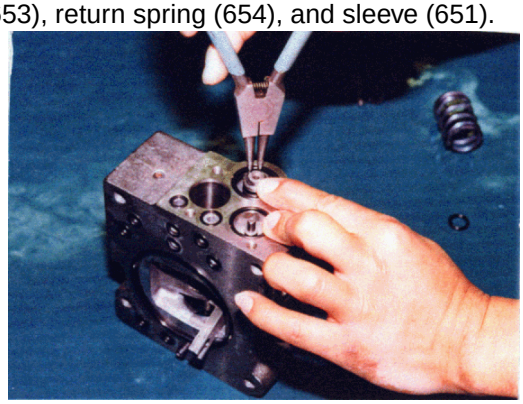	1. A snap ring (836) is fitted onto the sleeve (651). 2. Return spring (654) will pop out while removing stop ring (814); do not lose it.

https://truckmanualshub.com/

	Procedures	Precautions
8	Remove locking ring (858), and remove center plug (614) and adjusting plug (615). 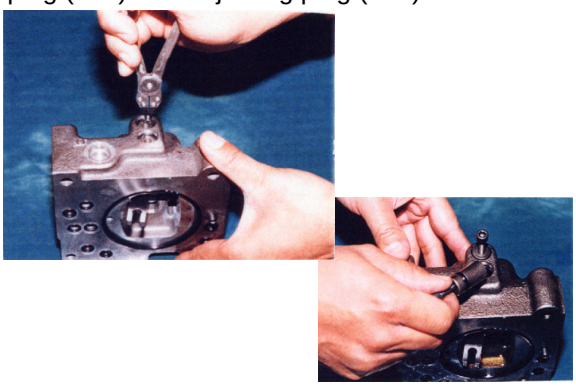	Center plug (614) and adjusting plug (615) can be easily pulled out if you use an M6 bolt.
9	Remove lever 2 (613). Leave pin (875) in. 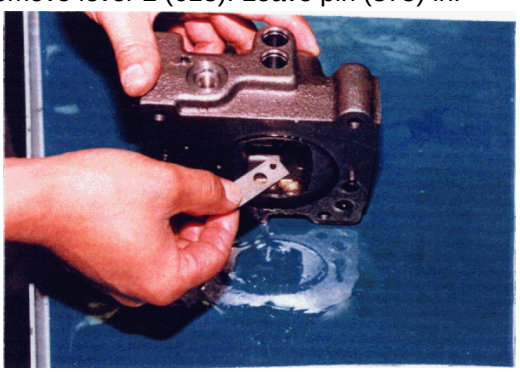	Tweezers will facilitate the process.
10	Pull out pin (874) and remove feedback lever (611). 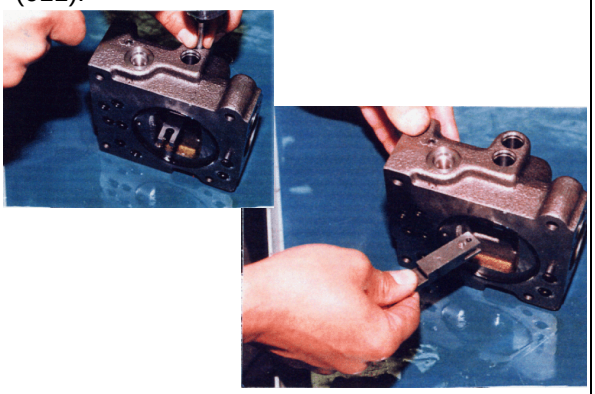	Push out pin (874) (pin dia. 4) from top with a fine steel rod. Avoid hitting lever 1 (612) during this process.
11	Remove lever 1 (612). Leave pin (875) in.	
12	Pull out pilot piston (643) and spool (652).	
13	Pull out piston case (622), compensator piston (621), and compensator rod (623). Now the regulator is completely disassembled.	Piston case (622) can be removed by pushing out the compensator rod (623) from the opposite side of the piston case.

NOTE: The components are small. Be very careful not to lose them.

https://truckmanualshub.com/

4. Assembling Instructions

NOTE: Although you can reverse the disassembling procedures to reassemble the regulator, here are some precautions you should keep in mind.

- If a part gets damaged during disassembling, replace it or make all necessary repairs. Keep your shelves stocked with replacement parts.
- The mixture of foreign substances can cause malfunctions. Clean parts thoroughly with cleaning solvents, air dry them, and pick a clean area for work.
- All bolts and plugs are to be tightened to the specified tightening torque.
- Always apply clean hydraulic oil to the sliding parts before assembling them.
- As a rule, replace seals such as O-rings.

	Procedures	Precautions
1	Install compensator rod (623) into the compensator hole on the casing (601).	
2	The pin that is press-fitted onto the lever 1 (612) is to be inserted in the compensating groove. After you insert the pin, install lever 1 onto the pin that is press-fitted onto the casing.	
3	Install spool (652) and sleeve (651) into the spool hole on the casing.	1. Ensure that the spool and sleeve slides smoothly in casing without engagement. 2. The spool must be oriented properly. 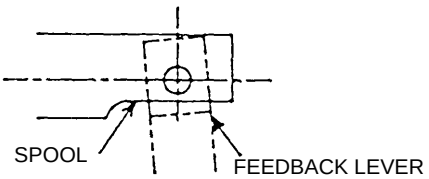

https://truckmanualshub.com/

	Procedures	Precautions
4	Install feedback lever (611), align the pinholes on the feedback lever, and insert pin (874).	1. You can facilitate the process by slightly inserting the pin into the feedback lever beforehand. 2. The feedback lever must be facing the right direction. 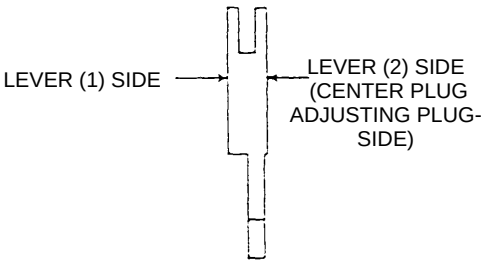
5	Install pilot piston (643) into the negative control hole on casing.	Ensure that the pilot piston slides smoothly without engagement.
6	The pin that is press-fitted onto lever 2 (613) is to be inserted in the groove on pilot piston. Insert the pin and install lever 2. 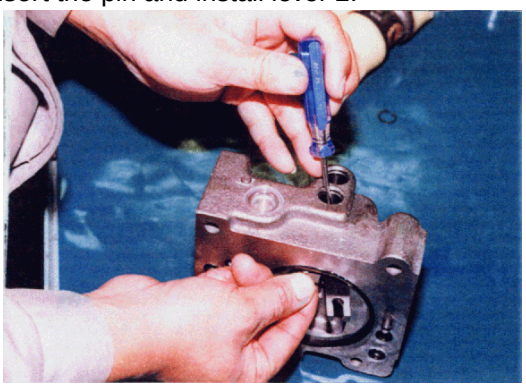	
7	The pin that is press-fitted into center plug (614) goes into the pin hole on lever 2. Install the center plug (614) in this manner, and install locking ring (858). 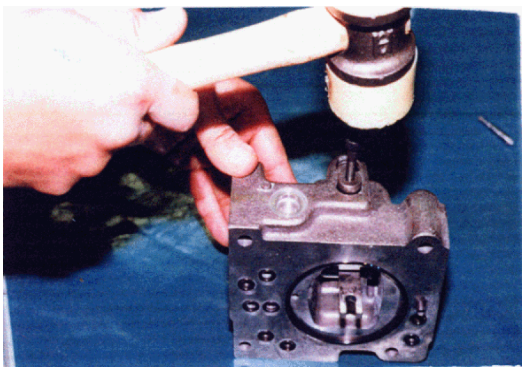	

https://truckmanualshub.com/

	Procedures	Precautions
8	Insert adjusting plug (615) and install the locking ring.	1. Ensure that you placed the center plug and the adjusting plug in the respective holes. 2. At this point, move the feedback lever to see it is not loose and there is no engagement.
9	Install return spring (654) and spring seat (653) into the spool hole, and install stop ring (814). 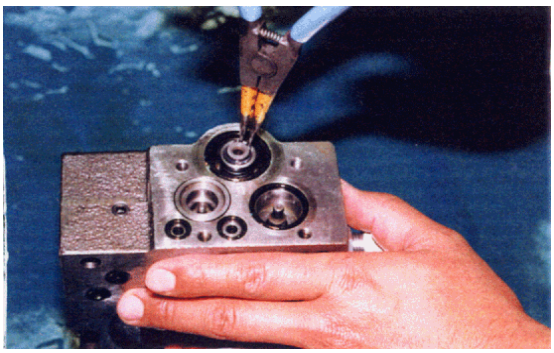	
10	Install set spring (655) into the spool hole, install compensator piston (621) and piston case (622) into the compensating hole, fit pilot cover (641), and fasten hexagon socket head bolts (436). 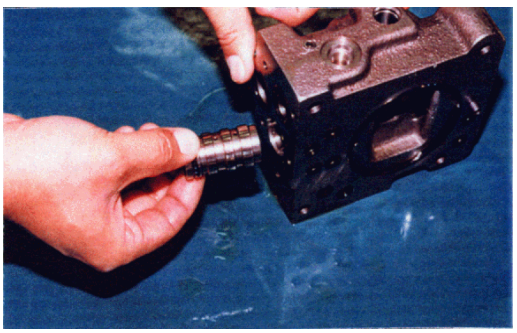	
11	Install spring seat (644), pilot spring (646), adjusting ring (Q) (645) into the pilot hole, then fit spring seat (624), inner spring (626), outer spring (625) into compensating hole. 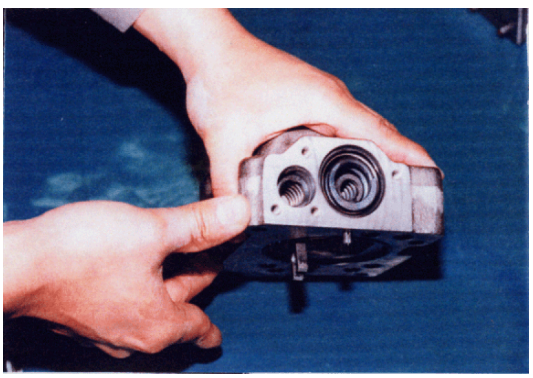	The spring seat must face the right direction.

https://truckmanualshub.com/

	Procedures	Precautions
12	Install cover (C) (629), into which you have already set adjusting screws (628) and (925), adjusting ring (C) (627), lock nut (630), hexagon nut (801), and adjusting screw (924). Then fasten hexagon socket head bolts (438) to complete the assembly. 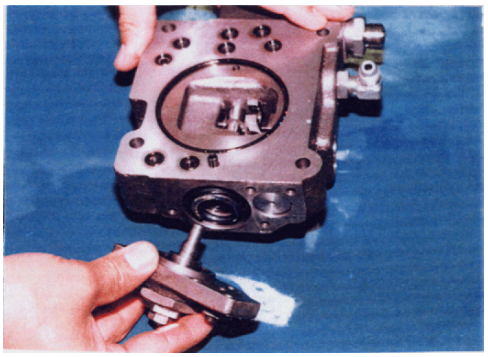	

	2 9 0 - 7 - 0 1 - 0 1 - 4 9
Hydraulic Pump	**Page No. 9/10**
	First Edition : 03/2005

Exploded Veiw of Regulator

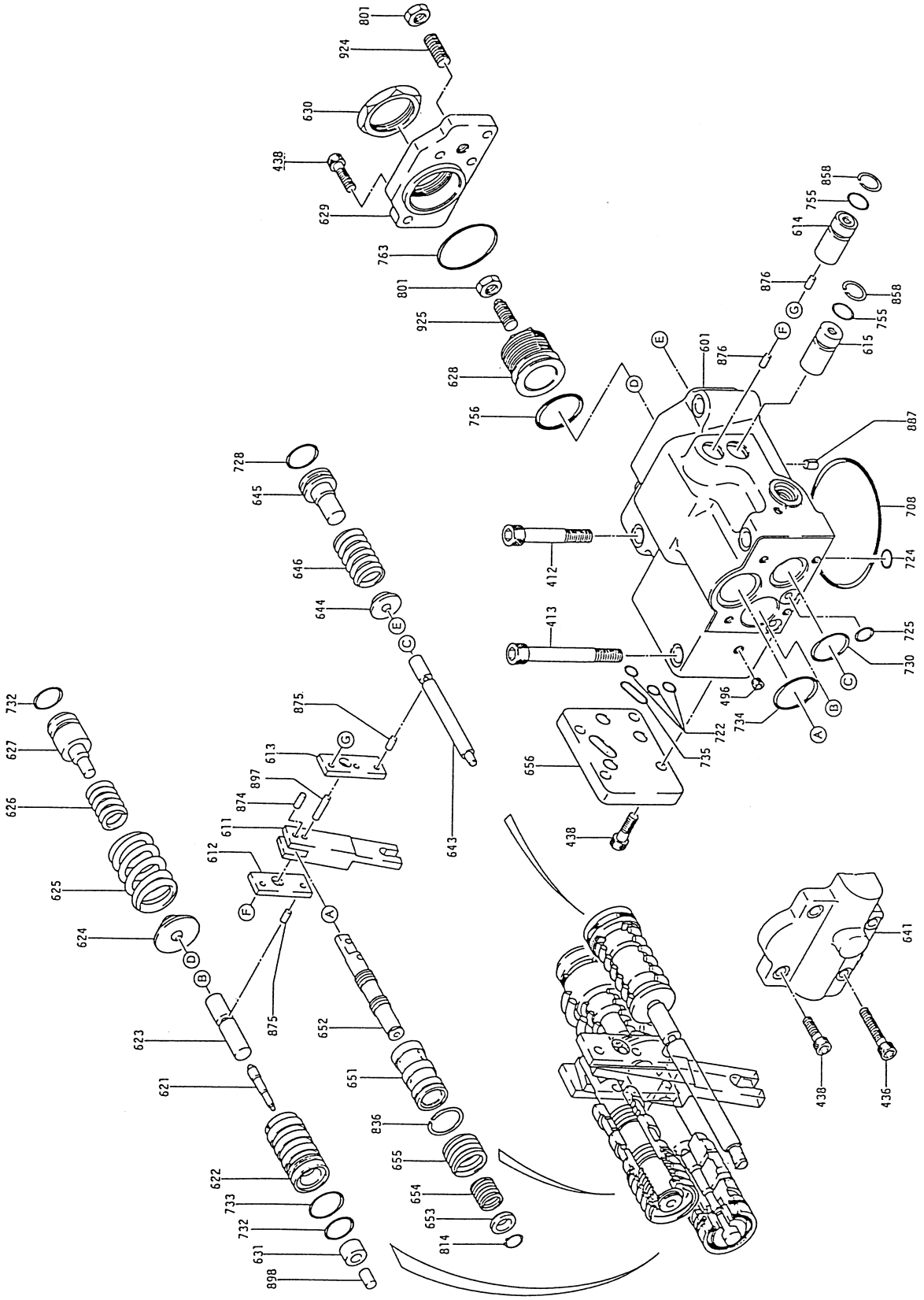

https://truckmanualshub.com/

Cross-sectional View of Regulator

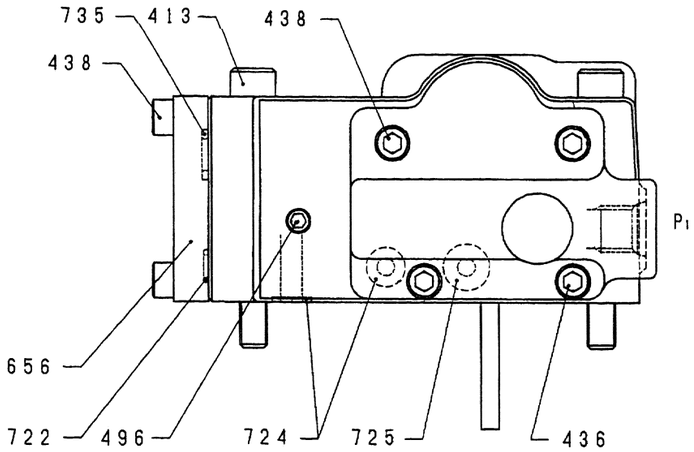

VIEW C

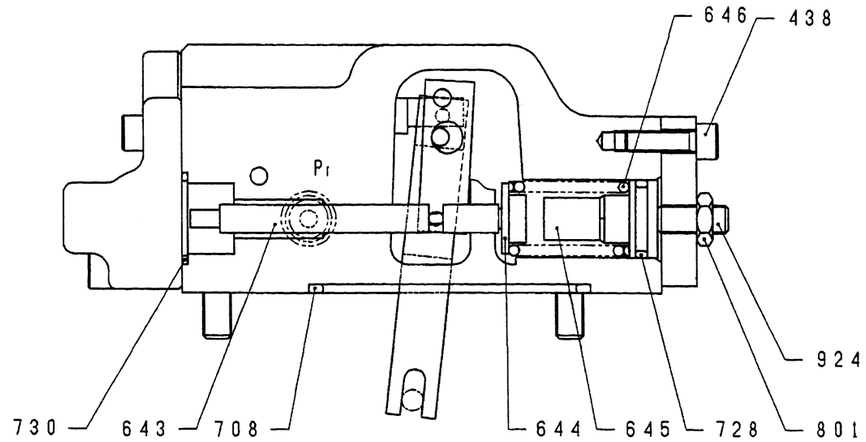

SECTION B - B

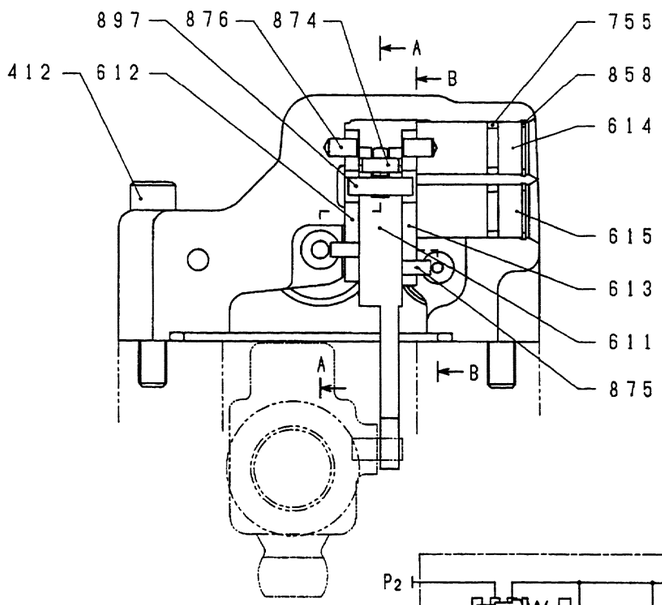

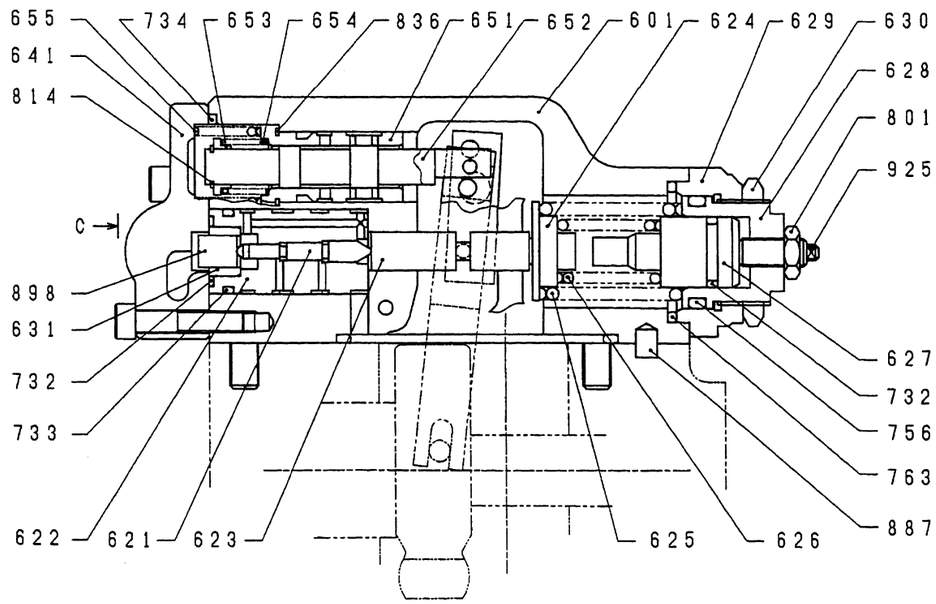

SECTION A - A

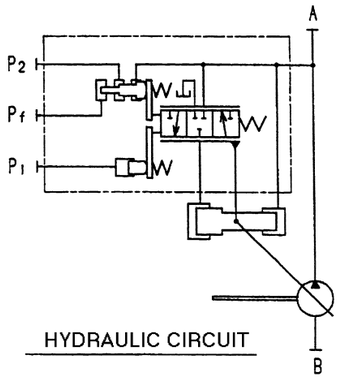

HYDRAULIC CIRCUIT

TIGHTENING TORQUE

NO.	SCREW SIZE	TIGHTENING TORQUE N•m
412,413	M8	29
436,438	M6	12
496	NPTF1/16	8.8
630	M30 × 1.5	160
801	M8	16

No.	PART NAME	QTY
925	ADJUSTING SCREW (Q1)	1
924	SET SCREW	1
898	PIN	1
897	PIN	1
887	PIN	1
876	PIN	2
875	PIN	2
874	PIN	1
858	LOCKING RING	2
836	SNAP RING	1
814	STOP RING	1
801	NUT	2
763	O-RING	1
756	O-RING	1
755	O-RING	2
735	O-RING	1
734	O-RING	1
733	O-RING	1
732	O-RING	2
730	O-RING	1
728	O-RING	1
725	O-RING	1
724	O-RING	9
722	O-RING	3
708	O-RING	1
656	BLOCK COVER	1
655	SET SPRING	1
654	RETURN SPRING	1
653	SPRING SEAT	1
652	SPOOL	1
651	SLEEVE	1
646	PILOT SPRING	1
645	ADJUSTING RING (Q)	1
644	SPRING SEAT (Q)	1
643	PILOT PISTON	1
641	PILOT COVER	1
631	PF SLEEVE	1
630	LOCK NUT	1
629	COVER (C)	1
628	ADJUSTING SCREW (C)	1
627	ADJUSTING RING (C)	1
626	INNER SPRING	1
625	OUTER SPRING	1
624	SPRNG SEAT (C)	1
623	COMPENSATOR ROD	1
622	PISTON CASE	1
621	COMPENSATOR PISTON	1
615	ADJUSTING PLUG	1
614	CENTER PLUG	1
613	LEVER (2)	1
612	LEVER (1)	1
611	FEEDBACK LEVER	1
601	CASING	1
496	PLUG	5
438	HEXAGON SOCKET HEAD BOLT	10
436	HEXAGON SOCKET HEAD BOLT	2
413	HEXAGON SOCKET HEAD BOLT	2
412	HEXAGON SOCKET HEAD BOLT	2
-	REGULATOR ASSY	1

https://truckmanualshub.com/

Motor Maintenance

1. Structural Drawing

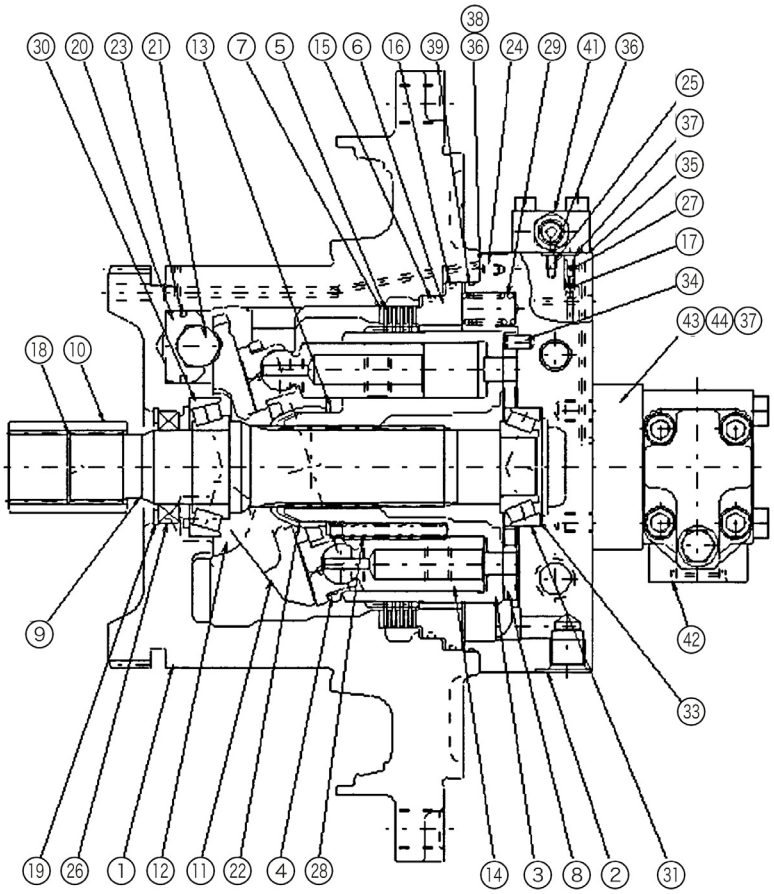

Figure 1. Motor structural drawing

1. CASING
2. REAR COVER
3. CYLINDER BLOCK
4. SHOE RETAINER
5. FRICTION PLATE
6. BRAKE PISTON
7. SEPARATOR PLATE
8. VALVE PLATE
9. SHAFT
10. COUPLING
11. SHOE PLATE
12. BALL JOINT
13. SPRING BEARING
14. PISTON ASSEMBLY
16. D-RING (LARGE)
17. CHECK VALVE
18. C-SHAPED SNAP RING (FOR HOLE)
19. CIRCULAR SNAP RING
20. INCLINED PISTON
21. STEEL BALL
22. PIVOT
23. PISTON SEAL
24. M6 THROTTLE (0.6)
25. M6 THROTTLE (0.8)
26. OIL SEAL
27. CHECK VALVE SPRING
28. CYLINDER SPRING
29. BRAKE SPRING
31. BEARING HR32207C
32. HEXAGON SOCKET HEAD BOLT M18×50
33. SHIM
34. PARALLEL PIN 8 X 12
35. O-RING 1B P6
36. O-RING 1B P8
37. O-RING 1B P9
38. O-RING 1B S10
39. O-RING 215.57 X 2.62
40. OVERLOAD VALVE ORV-240L6
41. PILOT VALVE MRC03
42. BRAKE VALVE RBV-24DL5
43. SPACER
44. O-RING 1B G35

https://truckmanualshub.com/

2. Disassembly and Assembly

2-1. Preparation

1. Tools required

Table 1

Item Name	Specifications
Hexagon wrench	Width across flats 5, 6, 10, 14
Wrench	Width across flats 19, 27, 32, 35
Pliers for snap rings	For shaft: dia. 45
Pliers for snap rings	For hole: dia. 32 to dia. 80
Plastic hammer	
Screwdriver	Flathead, middle-sized, two
Torque wrench	0 to 324 N·m
Gear (bearing) puller	Dimensions to be added: 75 (diameter) x 45 (width) e.g. ASAHI GP75 e.g. L160, W70, H37, 20x100 slotted hole
Pressing jig	Two required 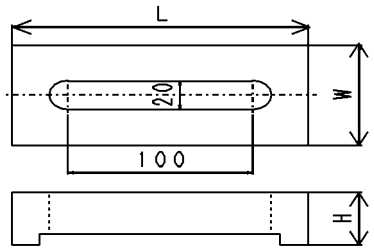
Oil seal inserting jig	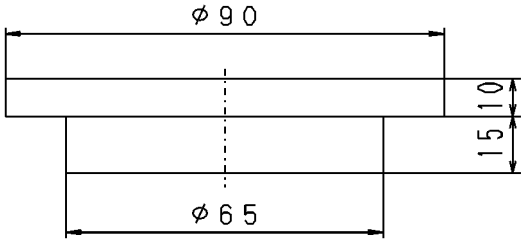
Brake piston inserting jig	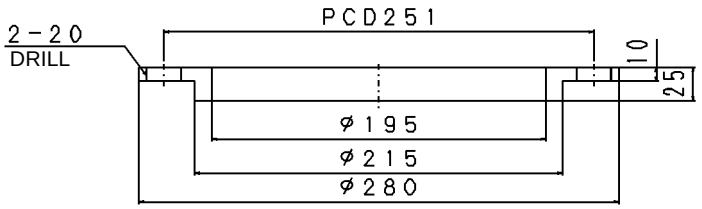
Other Treated oil (white kerosene) Grease Hydraulic oil Waste cloth Compressed air	

https://truckmanualshub.com/

2-2. Disassembly

2-2-1. General precautions

※ 1. Hydraulic devices are made of precision components in general and structurally have small spaces. Disassembling/assembling must be done in a clean area free of dust. Tools and treated oil must also be clean and must be handled with care.

※ 2. If devices are removed from the main machine, first clean the surrounding areas of the port, then plug the ports and handle with utmost care to keep dust/water from entering the inside.

※ 3. Review the sectional drawings prior to disassembling and obtain the parts required according to the specific purpose/scope of the job. Do not reuse seals and O-rings that have been disassembled. Also, some parts must be replaced as subassembly because those parts are not supplied singly. * Refer to parts catalog and obtain those prior to disassembling.

※ 4. Pistons and cylinders when they are brand new do not need to be assembled in a particular order. When disassembling, however, they need to be marked if they are to be used again. Before removing the pistons from the cylinders, mark them all so they can be put together in the exact order they were assembled originally.

⚠ 5. Keep hands and fingers away from small gaps or crevices among parts. Lifted loads also require extra attention since they may fall on your foot.

2-2-2. Disassembling instructions

1. Removing the attached valves

   Remove the attached valves before the disassembling of the motor section.

   ※ It is best to remove only the valves that are affected by the particular disassembling job and leave other valves attached. However, the brake valve (42) has to come out for all motor disassembling jobs.

   a. Remove the brake valve (42) and the spacer (43).
   b. Remove the pilot valve (41).
   c. Remove the check valve (17).
   d. Remove the overload valve (40).
   e. Remove the coupling (10).

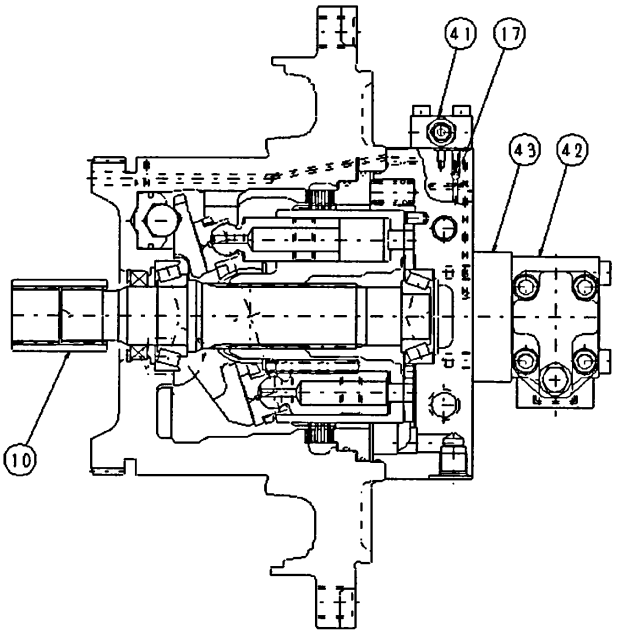

Figure 2. Removing the attached valves

https://truckmanualshub.com/

2. Disassembling the motor
   a. Place the motor shaft horizontally and pull out the hexagon socket head bolts (32) except for two on opposing corners on the top and the bottom.
   b. Gradually loosen those two remaining bolts together.
   c. Remove the rear cover (2) and the brake springs (29). During this procedure, the cylinder block (3) must be kept from coming out with the rear cover (2).

※ Also, the valve plate (8), the brake springs (29) or the O-ring (36) must not be dropped here.

※ If the cylinder block (3) sticks and comes out with the rear cover (2), draw out the rear cover while pressing the cylinder block (3) through the oil hole of the rear cover (2) using an end of a rounded bar (5 to 8 mm). The end of the bar must be kept from touching the surrounding parts.

   d. Keep the cylinder block (3) in its position and remove the valve plate (8).

※ Mark the valve plate (8) and the rear cover (2) to differentiate the front from the back at assembly.

   e. Press the cylinder block (3) onto the pressing jig using the removed hexagon socket head bolts (32) to push out the inner race of the bearing (31).
   f. Place the gear (bearing) puller over the inner race of the bearing (31) to remove the bearing.

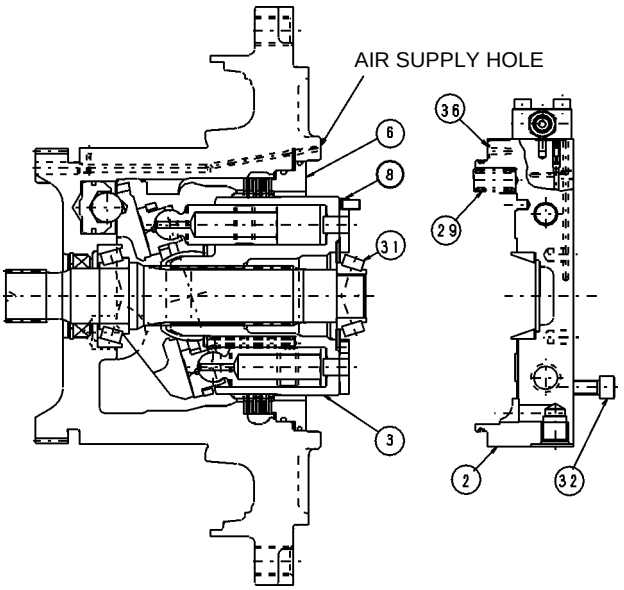

Figure 3. Removing the rear cover

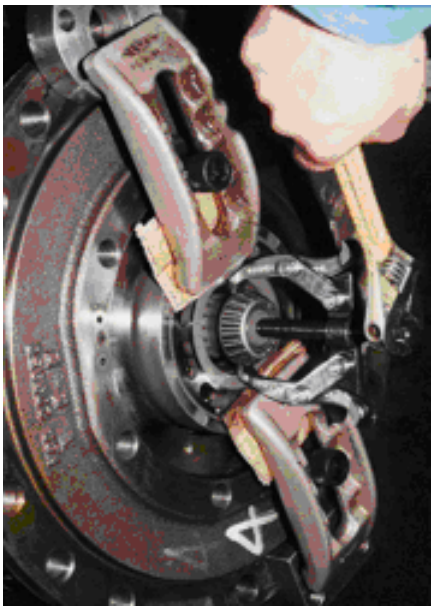

Figure 4. Removing the rear bearing

https://truckmanualshub.com/

g. Secure the brake piston (6) with hand and push the brake piston (6) out by supplying air through the brake release oil hole.

⚠ The procedure requires extra attention: the piston may pop out due to the air pressure.

h. Take a soft material like a sheet of paper and roll it into a tube to use for marking without scratching parts. Insert this into the piston assemblies (14) hole and mark the circumference of the cylinder block (3).

i. Remove the cylinder block (3), the spring bearing (13) and the cylinder springs (28).

j. Remove the separator plates (7) and the friction plates (5).

k. Remove the 9 piston assemblies (14), the shoe retainer (4) and the ball joints (12) all at the same time.

※ After removing the piston assemblies (14) and the shoe retainer (4), align the markings and have them inserted in the cylinder block.

This has to be done so the piston will be assembled into the original hole later.

※ Handle with care to avoid damaging each sliding surface. Once damaged, it cannot be used any longer.

※ The piston and the shoe are crimped and cannot be disassembled.

NOTE: The procedures above are for the motor as a single unit, but can also be applied on models with reduction gears. The disassembling for those can be conducted in the same manner. The job with these models may be easier because there is less vibration due to larger shafts.

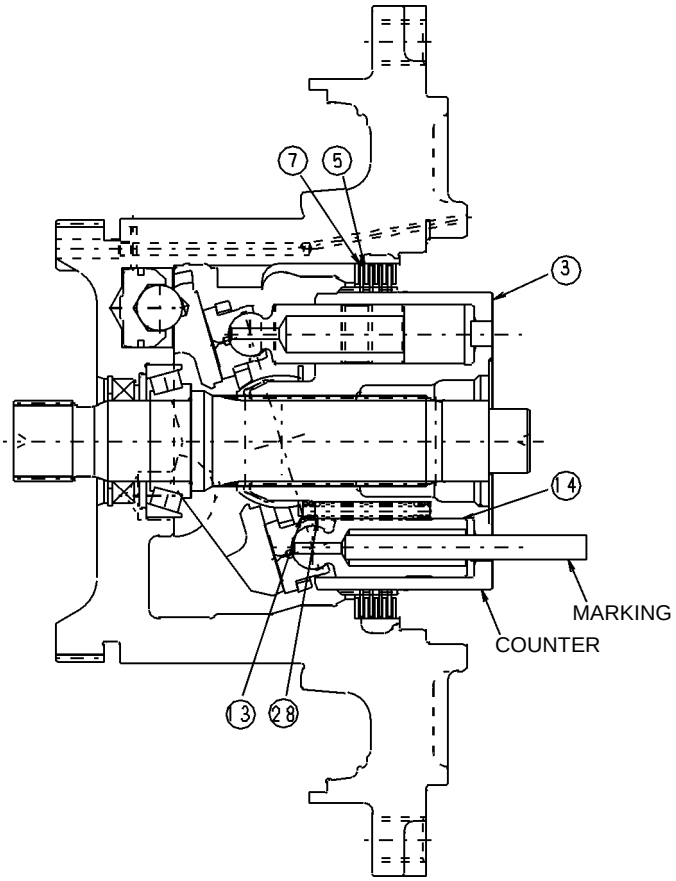

Figure 5. Removing the cylinder block

https://truckmanualshub.com/

l. Remove the shoe plate (11).

m. Do not remove the inclined piston (20). In the event that this must come out, secure it by hand and push out by blowing air into the hole as shown in the Figure.

n. The shaft (9) will come out on its own.

o. Remove the circular snap ring (19) and take out the oil seal (26).

p. When changing the bearings, inner and outer races are to be removed also with a bearing puller. Each must be replaced as an assembly.

※ A shim (33) is inserted underneath the outer race of the bearing (31). The shim must be put back in the same manner as it was in the assembling procedure.

※ When replacing parts relating to the bearing interference such as bearings (30, 31), shaft (9), casing (1), rear cover (2) and so on, shim (33) need to be adjusted for thickness.

Gently place the bearing and measure the gap for shims. Then replace with the appropriate shims that match the gap and adjust the bearing gap to 0 to 0.1 mm. Separate jig or tools will be required for determining the thickness for shims. Please contact our service department.

※ The pivot (22) should not be removed. If this has to come out for some reason, mark on the shoe plate (11) before removal.

※ Do not remove the oil seal (26). Once removed, this must be replaced with a new seal.

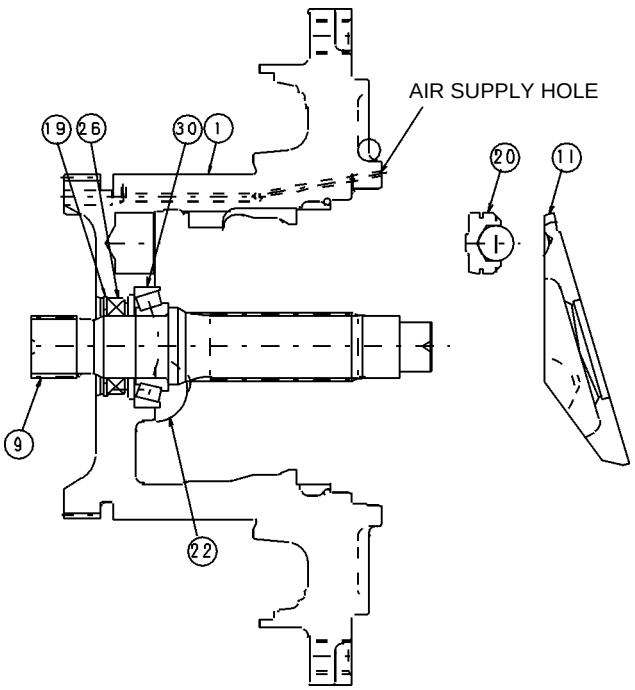

Figure 6. Removing the shoe plate

https://truckmanualshub.com/

q. Selecting the shim thickness for taper roller bearing

※ This procedure is required with replacing a motor casing (1), rear cover (2), shaft (9) or bearing (30 or 31).

1) Refer to the illustration on the right and measure the assembled dimension of E.

※ Keep the shaft (9) from tipping.

2) Measure the dimension of F on the rear cover side.
Measure the four orthogonal points on the circumference and obtain the average.

3) S refers to the thickness of a shim (33) to be used. The gap Y will be as follows:
Y = F - (E + S)

4) In this case, select one or two shims so the gap Y will be 0 to 0.1 mm.

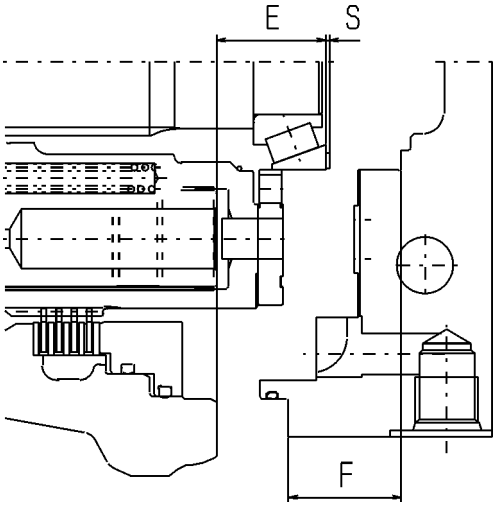

Figure 7. Selecting the shim thickness

3. Disassembling the overload valve

a. Using the hexagonal across flats part of the socket (40-1), remove the valve from the rear cover (2) as an assembly.

b. As a general rule, the overload valve should be handled as an assembly. In case it needs to be disassembled, take out the inner parts after the plug (40-5) is removed from the socket (40-1).

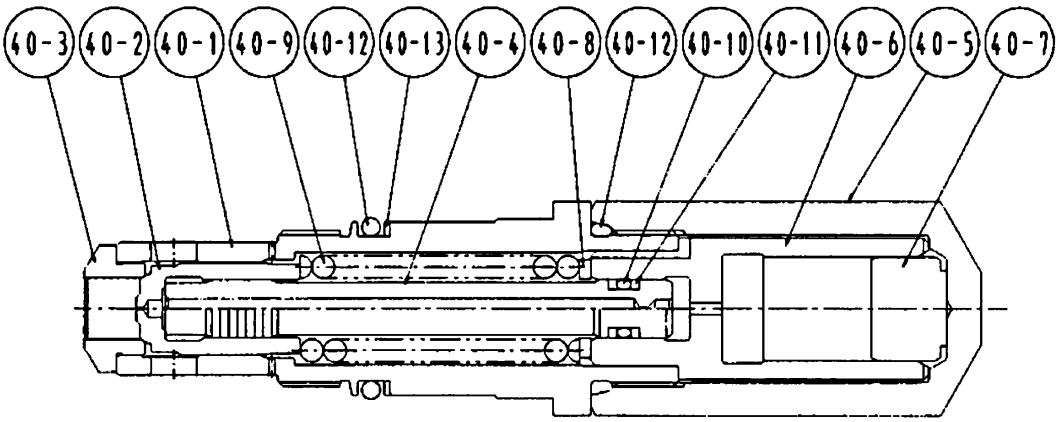

Figure 8. Disassembling the overload valve

https://truckmanualshub.com/

2-3. Assembly

2-3-1. General precautions

※ 1. Clean parts well with treated oil and blow-dry with air.

2. Apply clean hydraulic oil to sliding parts prior to assembling.

3. Keep hands and fingers away from small gaps or crevices among parts. Lifted loads also require extra attention since they may fall on your foot.

2-3-2. Assembling instructions

1. Apply grease to the outer perimeter of the oil seal (26) as well as to the inner perimeter of the casing (1). Use jigs to gently and evenly tap the oil seal (26) into casing (1) without slanting.
2. Secure the oil seal (26) with the circular snap ring (19).
3. Insert the outer race of the bearing (30) (loose fit) into the casing (1) and press fit the inner race (interference fit) into the shaft (9).

※ Heating the inner race to approximately (but not exceeding) 100°C facilitates the insertion process here.

4. Place the shaft (9) into the casing (1). Prior to this procedure, grease must be applied to the working surface that contacts the oil seal (26).
5. Insert the inclined piston (20).
6. Insert the pivot (22) into the side where the markings match. Also, if the machine had been in use for a long time prior to servicing, insert in the direction so the sliding traces on the spherical part of the shoe plate (11) match the contact traces.

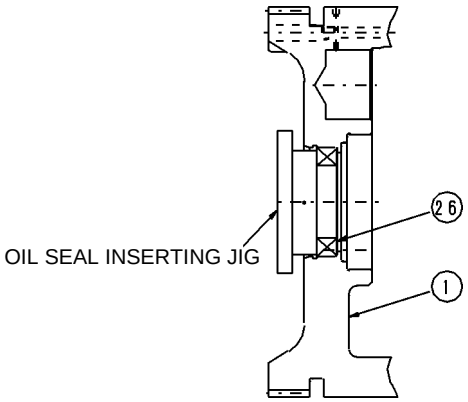

Figure 10. Installing the oil seals

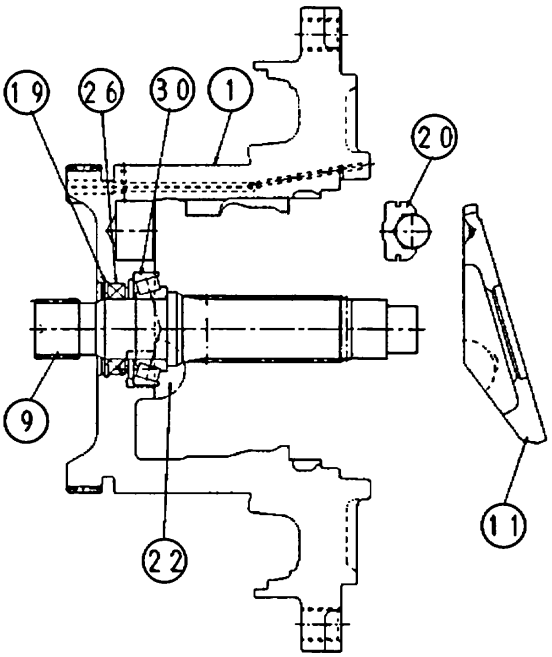

Figure 9. Installing the shoe plate

https://truckmanualshub.com/

7. Apply liberal amount of grease to the spherical section of the shoe plate (11) (three locations), then install.
8. Place the piston assemblies (14), shoe retainer (4), ball joints (12), spring bearing (13) and cylinder springs (28) into the cylinder block (3) as shown in the figure, and insert the whole assembly into the shaft (9).

※ The piston assemblies (14) must be assembled into the original hole.

9. Gently tap and insert the inner race of the bearing (31) into the edge of the shaft (9).
10. The separator plates (7) and the friction plates (5) need to be installed alternately and completely. Start with a separator plates (7) and finish with one also.
11. Insert the D-rings (15), (16) into the brake piston (6), then install the piston into the casing (1) using the inserting jig.

※ The brake piston has two D-rings (15), (16) of different sizes attached to it. The D-ring (16) with a larger diameter is to be placed into the hole first, and the D-ring (15) with a smaller diameter will be placed next. The smaller D-ring (15) cannot be visually inspected at the time of insertion. Avoid pressing with excessive force since this may cause chipping of the D-ring by the casing (1) hole.

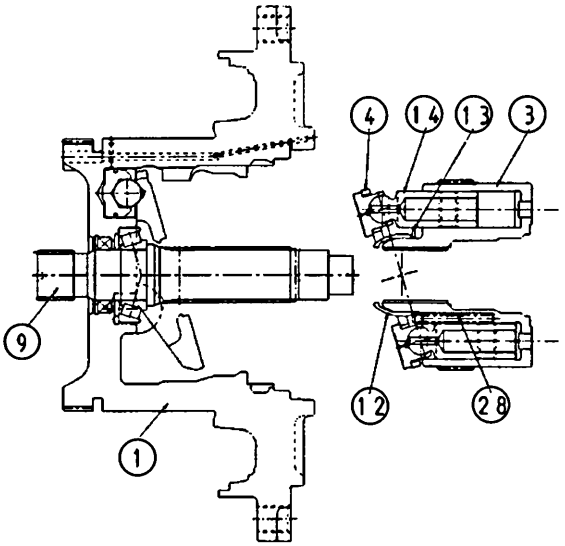

Figure 11. Installing the piston assembly

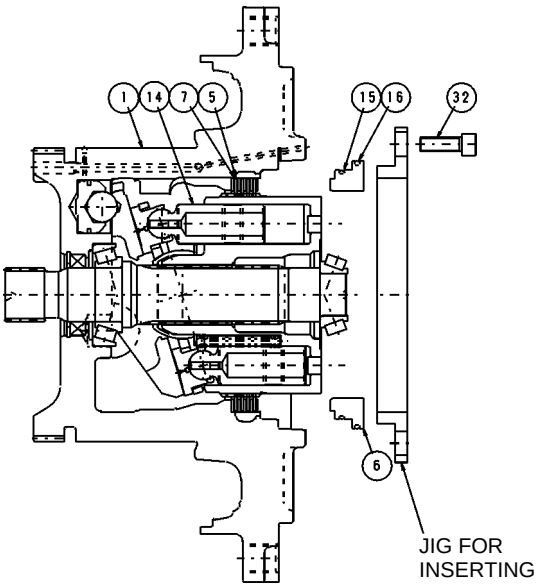

Figure 12. Installing the brake piston

https://truckmanualshub.com/

12. Use the markings placed at disassembly as a guide, and place the valve plate (8) in the rear cover (2). Attach the brake springs (29) and the O-ring (38). Insert the rear cover (2) into the casing (1). Then fasten the hexagon socket head bolts (32).

※ Ensure that the rear cover (2) has O-rings (36), (38) attached.

※ Remember to install the shim (33) if the outer race of the bearing (31) has been removed.

13. Install the coupling (10).

The hexagon socket head bolts (32) tightening torque is 323.4 N·m.

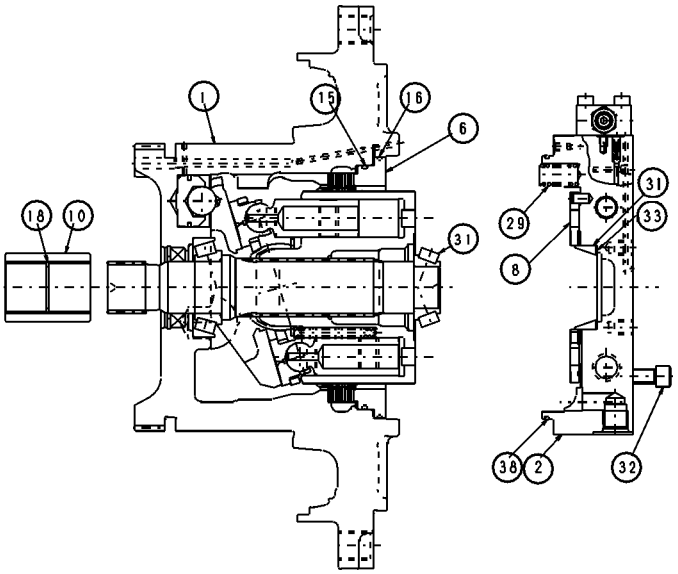

Figure 13. Installing the rear cover

https://truckmanualshub.com/

3. Maintenance Standards

3-1. Maintenance standards for parts

The chart below provides the standard values (versus the actual measurements of parts at disassembly) upon which the determination should be made if a part is reusable or not. The chart, however, should only be used as a general guideline. The decision to replace or not should be made based on the following factors versus the information in the chart: how the machine had been performing prior to disassembling, whether the part suffers obvious external damage or discoloration, the purpose of disassembling, or the expected life left of the part.

Items to measure and methods of measurement	Criterion and Remedy			
1. Sliding surfaces on cylinder block, valve plate and shoe plate. Measure the roughness of the sliding surfaces of these parts using surface roughness gauge.	Table 2. Items and what to be inspected	Surface roughness: standard	Surface roughness: acceptable limit	Remedy
	Surface roughness of cylinder block, valve plate and shoe plate	0.4 Zμ or below	3.0 Zμ or below	Repair or replace.
	Attention! Lapping is required to repair the surface roughness of cylinder block and valve plate. (Lapping material: # 1200)			
Measure the hardness of the sliding surfaces of shoe plate using hardness meter.	Table 3. Items and what to be inspected	Hardness: standard	Hardness: acceptable limit	Remedy
	Shoe plate	HS78 or above	HS74	Replace.
2. Clearance between piston and cylinder block. Measure the outer diameter of piston and the inner diameter of cylinder using a micrometer at 3 locations at least in the longitudinal direction. The maximum outer diameter is represented as d, minimum diameter as d_1, maximum hole diameter as D and minimum diameter as D_1.	Table 4. Items and what to be inspected	Standard	Allowable values	Remedy
	Outer diameter of piston d-d_1 Inner diameter of cylinder bore D_1-D Clearance D-d	0.01 mm 0.01 mm 0.037 to 0.047 mm	0.05 mm 0.022 mm 0.065 mm	Replace piston or cylinder block.
	Attention! All 9 pistons must be replaced together if replacement is necessary.			

https://truckmanualshub.com/

Items to measure and methods of measurement	Criterion and Remedy			
3. Looseness on piston and shoe Hold the shoe on the surface plate with jigs and pull out the piston upwards to measure looseness δ of the piston and shoe.	Table 5. Items and what to be inspected	Standard dimensions	Allowable values	Remedy
	Looseness of the crimping area of piston and shoe	0 to 0.1 mm	0.3 mm	Replace piston.

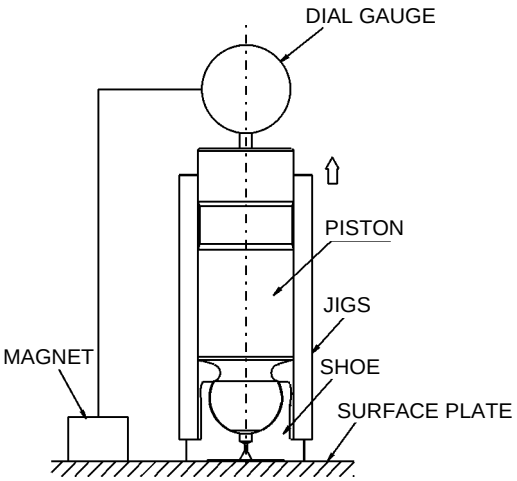

Figure 15. Measurement

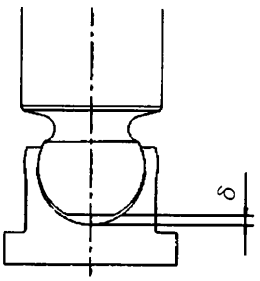

Figure 14. Looseness of crimping area

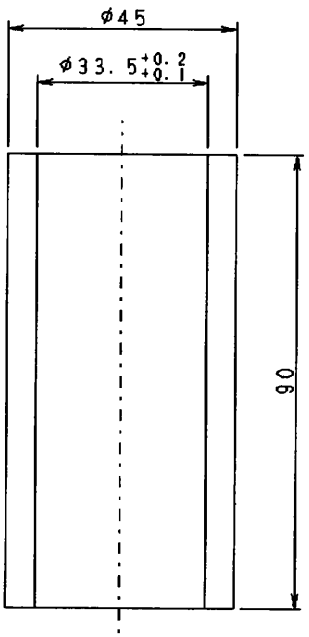

Figure 16. Jigs

Items to be measured and methods of measurement	Criterion and Remedy			
4. Negative braking force When the assembling is complete, measure the torque at start of rotation by placing a torque wrench at the end of the output shaft.	Table 6. Items and what to be inspected	Standard values	Allowable values	Remedy
	Brake torque	902 N·m	814 N·m	Separator plate Friction plate Spring Replace all of the above.

https://truckmanualshub.com/

Items to be measured and methods of measurement	Criterion and Remedy
5. Shaft Use a roughness gauge and measure the extent of wear on the seal of the shaft. 6. Bearing Replace bearing	Usable up to 0.05 mm of wear with steps. Attention! Replace the oil seal (26) also when replacing the shaft. Attention! The thickness of the shim (33) needs to be adjusted when replacing the shaft. The bearings (30), (31) need to be replaced before the hour meter records 10,000 hours of operation. Attention! Replace the inner and the outer race also when replacing the bearing. Attention! The thickness of the shim (33) needs to be adjusted when replacing the bearing.
7. Spline Replace parts when the wear of the spline exceeds the allowable limit.	The spline is reusable up to the 0.3 mm of wear with steps at the contact surface.
8. Overload relief valve section The pressure check and the adjustment of the overload relief section cannot be done unless the applicable test bench is available.	Replace as a subassembly every 10,000 hours according to the main machine's hour meter.

3-2. Tightening torque

Use torque wrenches for mounting bolts and plugs in each section of the motor and tighten to the torque values shown below.

Table 7. Tightening Torque List

Code	Item Name	Size	Tightening Torque
32	Hexagon Socket Head Bolt	M18	324 N·m
40	Overload valve	M27	98.1 to 117.6 N·m
41-10	Hexagon Socket Head Bolt	M8	19.6 N·m
42-14	Hexagon Socket Head Bolt	M12	78.4 N·m

https://truckmanualshub.com/

4. Causes of Errors and Remedies

Described below are the measures to be taken when failures are found during operation of a hydraulic motor.

4-1. General precautions

1. Points to be considered and reviewed prior to the start of servicing
   Evaluate the nature of the abnormality and try to remember if the same problem has occurred previously.
   Try to determine once more if the motor is the cause of the problem.
2. Avoid dust.
   Very often, the main cause of wear is found to be dust. Extra attention is needed during disassembly to prevent dust from entering the motor.
3. Handling of parts
   Handle parts carefully. The moving parts especially require special attention to prevent damage.
4. The seat surface of an O-ring needs to be protected with care during installation. It is recommended that O-rings be replaced when disassembling.

4-2. Causes of errors and remedies

1. The hydraulic motor does not start.

Symptom	Cause of error	Remedy
Pressure does not rise.	Malfunctioning of built-in relief valve.	Repair or replace relief valve.
Pressure does rise.	1. Negative brake is not released. (Blockage in the release pressure passage.) 2. Friction plate or separator plate in the negative section sticks. 3. Brake piston in the negative brake section sticks. 4. The sliding part is seized.	1. Check throttle for blockage, then clean or replace. 2. Replace friction plate or separator plate. 3. Repair or replace the brake piston peripheral. 4. Inspect/repair/replace piston, shoe, shoe plate, cylinder block, valve plate, etc.

https://truckmanualshub.com/

2. The hydraulic motor only starts weakly.

Symptom	Cause	Remedy
There is a delay in brake release time, although the pressure setting is correct.	Malfunctioning of brake valve.	Inspect the brake valve, then repair or replace.
Negative brake does get released, but the start-up is delayed.	The viscosity of hydraulic oil is too high.	Increase the oil temperature.
Negative brake does get released, but the start-up is weak.	1. Negative brake is not completely released (blockage in the release pressure passage). 2. Relief valve has dust/dirt engaged. 3. The sliding part is seized.	1. Inspect the throttle for blockage. 2. Clean the relief valve, inspect or replace the seat surfaces. 3. Inspect/repair/replace the sliding parts.

3. The revolutions do not reach the programmed value.

Symptom	Cause	Remedy
Revolutions do not reach the programmed value.	1. The inflow volume of oil is not sufficient. 2. Wear or large scratches are found on the shoe, cylinder block, or valve plate.	1. Check the pump delivery and the hydraulic circuit to motor. 2. Inspect/repair/replace parts.

4. The brake does not work.

Symptom	Cause	Remedy
Brake does not work.	Malfunctioning of negative brake. 1. Friction plate is worn out. 2. Spring suffers a breakage.	Inspect/repair/replace the brake piston, friction plate, spring or other parts.

5. Oil leakage.

Symptom	Cause	Remedy
Oil leakage	1. Bolts and pugs are loose. 2. O-ring is damaged. 3. There is a leak into the gear casing.	1. Retighten to specified torque. 2. Replace O-rings. 3. Replace the oil seal.

6. The gear does not switch from high to low speed.

Symptom	Cause	Remedy
Gear does not switch from high speed to low.	Spool sticking in the pilot valve.	Replace pilot valve assembly.

https://truckmanualshub.com/

Reduction Gears Maintenance

1. Structural Drawing

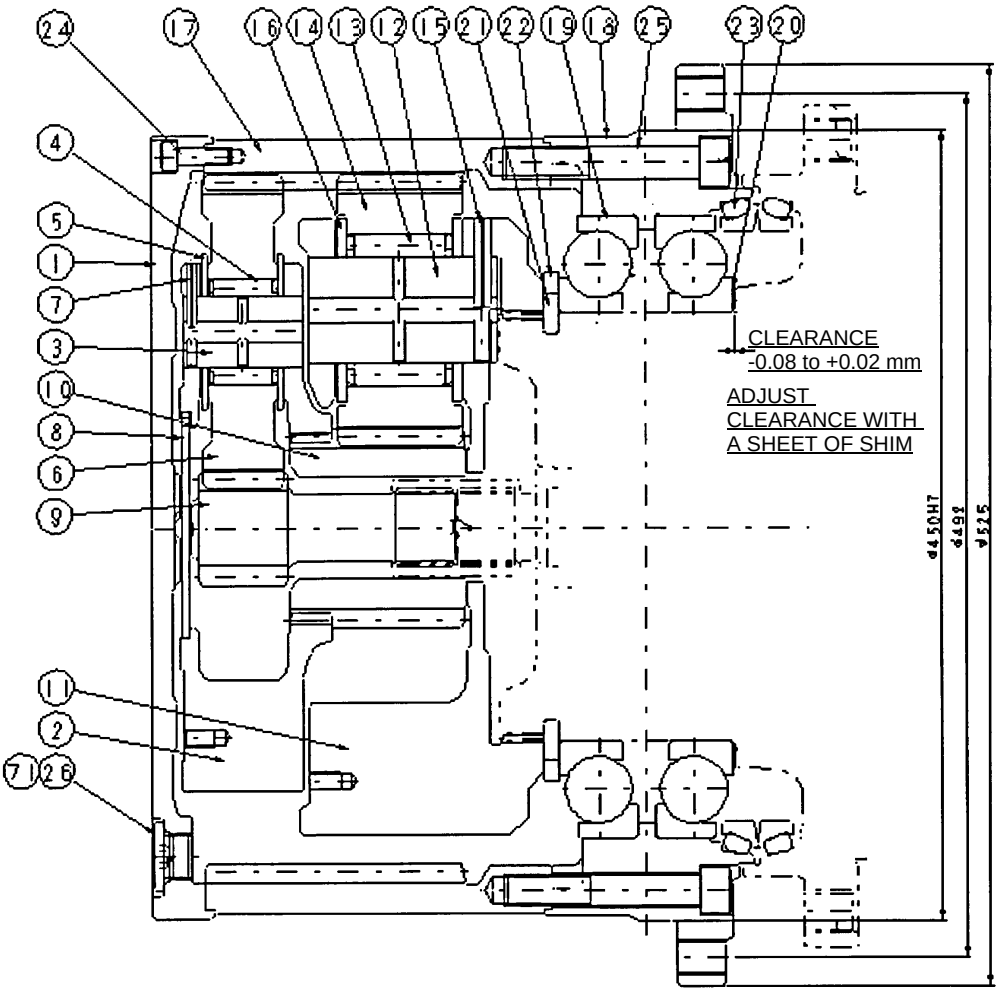

Figure 1. Reduction gear structure

1. COVER
2. CARRIER 1
3. CARRIER PIN 1
4. NEEDLE BEARING
5. THRUST WASHER 1
6. PLANETARY GEAR 1
7. SPRING PIN 4X32
8. THRUST PLATE
9. SUN GEAR 1
10. SUN GEAR 2
11. CARRIER 2
12. CARRIER PIN 2
13. NEEDLE BEARING
14. PLANETARY GEAR 2
15. SPRING PIN 8X36
16. THRUST WASHER 2
17. RING GEAR
18. HOUSING
19. ANGULAR BEARING
20. SHIM
21. LOCK WASHER
22. SUPPORT RING
23. FLOATING SEAL 368
24. HEXAGON SOCKET HEAD BOLT M10×30
25. HEXAGON SOCKET HEAD BOLT M18×110
26. PLUG G 3/4
71. O-RING 1BP243/14

https://truckmanualshub.com/

2. Disassembly and Assembly

2-1. Tools

Prior to disassembling and assembling, prepare the following tools, jigs and measuring instruments:

Code	Name	Summary
1	Torque wrench	For 0 to 490 N·m use
2	Hexagon bar wrench	Width across flats 8 mm, 14 mm
3	Cradle	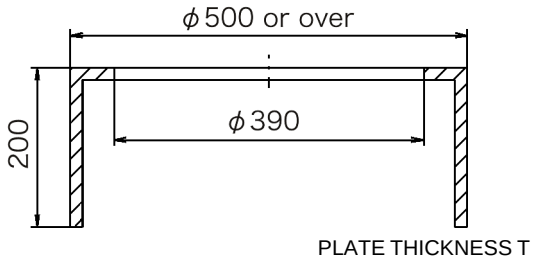
4	Micro depth gauge	0 to 15 mm
5	Calipers	0 to 150 mm
6	Eye bolt	M10, M20, 3 for each
7	Pin	For spring pin insertion use dia. 4.5 x 80, dia. 9.5 x 60
8	Press	For angular bearing insertion and lock washer installation use (pressure 3 tons)
9	Others	Treated oil, solution, gear oil, grease Loctite No. 242, No. 515 Seal tape, cloth, etc.

2-2. Disassembly

1. Preparation for Disassembling
   a. It is common that a reduction unit which has been dismounted from the machine is covered with dirt or dust. Wash and dry the exterior of the unit.
   b. Loosen the drain and filler plug (26) to drain oil in the reduction unit.
   If the oil is still hot, internal pressure still remains.
   Care should be taken because the oil can blow out.
   c. Placing counter marks
   Place counter marks on the outer side of each mating face in order to put the faces back into their original locations when assembling.

NOTE: Numbers in parentheses following the part names shown in the description below correspond to symbols in the structural drawings.

https://truckmanualshub.com/

2. Installing travel unit onto cradle

   Remove M10 hexagon socket head bolts (24) which are screwed into three locations on the cover (1) at equal intervals, and attach eyebolts in place of them. Then, lift the cover and install the cradle with the cover facing upward and the motor downward.

   Safety is priority while disassembling. Be careful and avoid hands from being caught between parts or lifted parts from falling on your foot.

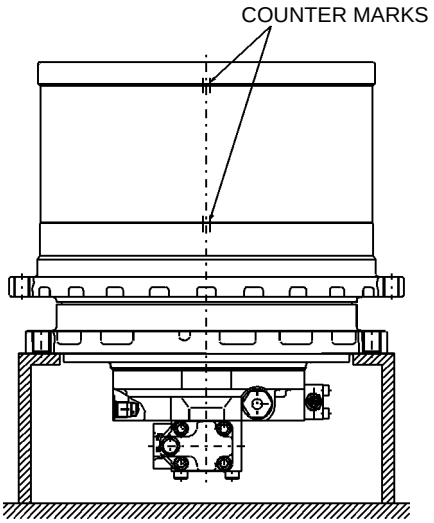

3. Removing covers

   a. Remove the remainder of M10 hexagon socket head bolts (24).

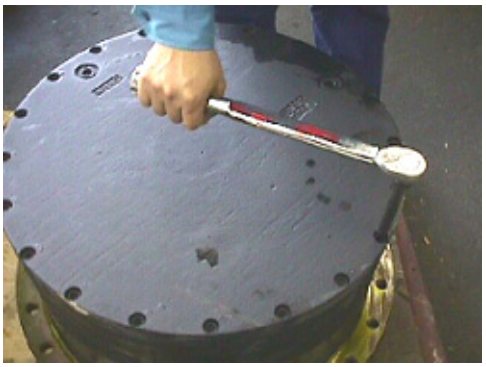

   b. Sealing material is applied to the contact surface between the cover (1) and ring gear (17). Therefore, remove the cover (1) by patching the protruding part of the cover and hitting it diagonally upwards.

https://truckmanualshub.com/

4. Removing carrier 1 assembly
   a. Remove the thrust plate (8).
   b. Remove the sun gear 1 (9).
   c. Attach three M10 eyebolts onto the carrier 1 (2) and remove carrier 1 assemblies (2, 3, 4, 5, 6 and 7).

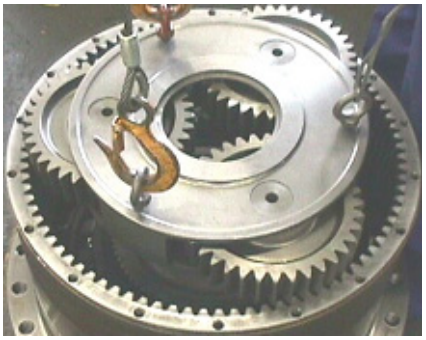

5. Removing carrier 2 assembly
   a. Remove the sun gear 2 (10).
   b. Attach three M10 eyebolts onto the carrier 2 (11) and remove carrier 2 assemblies (11, 12, 13, 14, 15 and 16).

6. Removing housing assembly
   a. Remove the support ring (22).

   b. Remove the lock washer (21) by placing a screw driver or equivalent to the washer's split part and tapping the driver with a hammer.

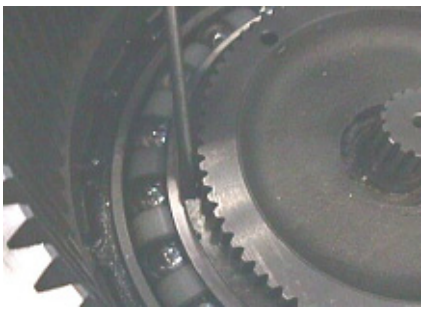

   c. Attach eyebolts on three locations at equal intervals among the M10 screw holes on the ring gear (17), and remove the housing assembly [ring gear (17), housing (18), bearing (19) and floating seal (23)] while lifting it evenly.

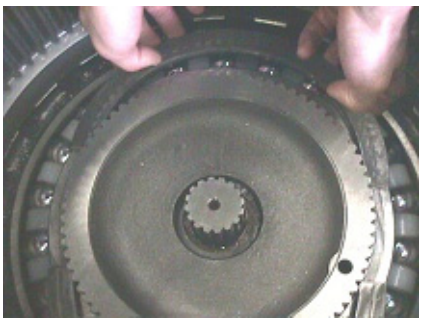

https://truckmanualshub.com/

7. Disassembling housing subassembly
   a. Place the assembly on the cradle with the ring gear (17) facing downward and the housing (18) upward. Put counter marks on the housing and the peripheral of ring gear.
   b. Remove the floating seal (23) from the housing (18).
   c. Remove M18 hexagon socket head bolts (25) with two bolts left diagonally.
   d. The ring gear (17) can be easily removed from the housing (18) by slightly hitting the heads of the bolts with a hammer while having those two bolts loosened.

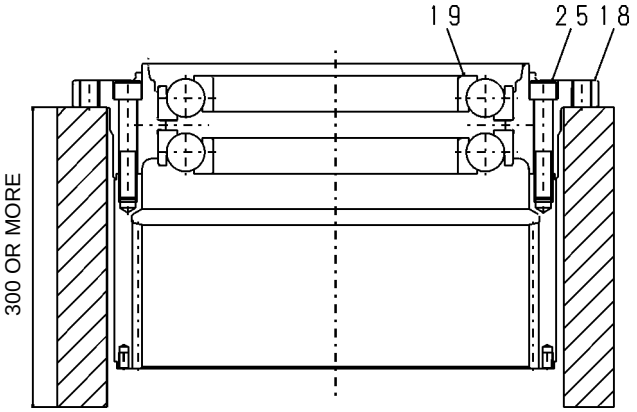

THREE EQUAL HEIGHT METAL

※ Handle with care to avoid damage to the sliding surfaces of the floating seal (23) and O-rings.

※ The circumference of bearing (19) and the inner diameter of housing (18) are extremely firmly attached.

Do not disassemble them except for when bearings must be replaced.

When removing bearings from the housing, do not reuse them. Replace them with new ones.

8. Removing floating seals

   Remove the floating seal (23) from the motor side.
9. Disassembling carrier 1 assembly

※ When reusing carrier pins 1 (3), store them by putting the marks so that the holes in the carrier 1 (2) and carrier pins 1 (3) can be matched in the same pair as before disassembling.

https://truckmanualshub.com/

a. Push the spring pins (7) into the carrier pins 1 (3).
b. Remove carrier pins 1 (3) from the carrier 1 (2).
c. Remove the thrust washers 1 (5), planetary gears 1 (6) and needle bearings (4).

d. Pull out the spring pins (7) temporarily from the carrier pins 1 (3).

※ Always replace three of them together in pairs when changing carrier pins 1 (3) or planetary gears 1 (6).

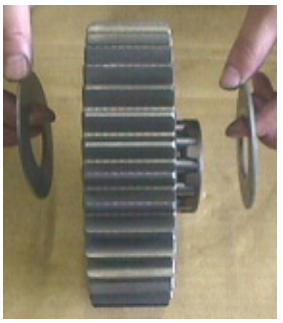

10. Disassembling carrier 2 assembly

※ When reusing carrier pins 2 (12), store them by putting the marks so that the holes in the carrier 2 (14) and carrier pins 2 (12) can be matched in the same pair as before disassembling.

a. Push the spring pins (15) into the carrier pins 2 (12).
b. Remove carrier pins 2 (12) from the carrier 2 (11).

c. Remove the thrust washers 2 (16), planetary gears 2 (14) and needle bearings (13).
d. Pull out the spring pins (15) temporarily from the carrier pins 2 (12).

※ Always replace three of them together in pairs when changing carrier pins 2 (12) or planetary gears 2 (14).

https://truckmanualshub.com/

2-3. Assembly

1. General Precautions

   a. Wash each part with treated oil, then dry it completely with air. For the surfaces to which Loctite is applied, degrease with thinner or equivalent.
   b. Check for any abnormality on each part.

   c. Tighten hexagon socket head bolts upon application of Loctite No. 242.
   d. Apply a thin coat of gear oil to assembly parts prior to the assembly.
   e. Be careful and avoid hands from being caught between parts or parts from falling on your foot while lifting them.

2. Assembling carrier 2 assembly

   a. Insert the planetary gears 2 (14), needle bearings (13) and thrust washers 2 (16) into the carrier 2 (11).
   b. Insert the carrier pins 2 (12) into the carrier 2 (11) with its spring pin hole direction aligned.

   c. Insert the spring pins (15) into carrier 2 (11) and carrier pins 2 (12). (Hammer them down 1 or 2 mm deep below the hitting surface.)
   d. Crimp them on two 180° symmetrical locations.

3. Assembling carrier 1 assembly

   a. Insert the planetary gears 1 (6), needle bearings (4) and thrust washers 1 (5) into the carrier 1 (2).
   b. Insert the carrier pins 1 (3) into the carrier 1 (2) with its spring pin hole direction aligned.

   c. Insert the spring pins (7) into carrier 1 (2) and carrier pins 1 (3). (Hammer it down 1 or 2 mm deep below the hitting surface.)
   d. Crimp them on two 180° symmetrical locations.

https://truckmanualshub.com/

4. Installing floating seals
   Install the floating seal (23) for the motor side.

5. Assembling housing assembly
   a. Apply Loctite No. 515 to the mating surfaces of housing (18) and ring gear (17).
   b. Attach three M20 eyebolts on the housing (18) and lift it with a wire to install onto the ring gear (17) with the counter marks aligned.
   c. Apply Loctite No. 242 to 22 M18x110 hexagon socket head bolts (25) and fasten them with tightening torque of 378 N·m.

   d. Install the floating seal (23) for the housing side.
   ※ Clean the area where floating seal is to be installed, to make it free of foreign substances such as oil dust, paints or other.
   ※ Apply a thin coat of gear oil onto the sliding part of floating seal. (Do not apply gear oil to the O-rings.)
   ※ Install O-rings without any twisting.
   ※ Ensure that the floating seal (23) is properly located between the housing and the motor in parallel as shown in the Figure.

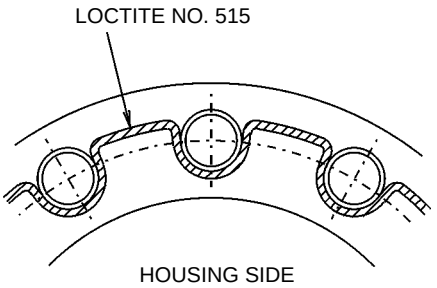

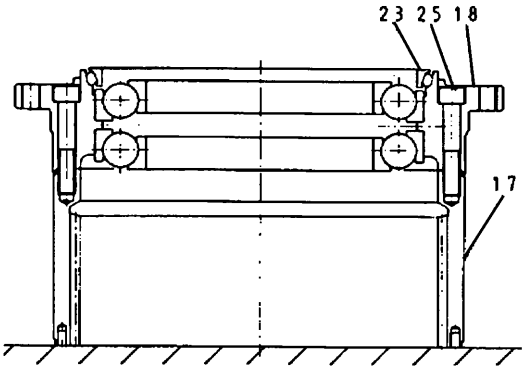

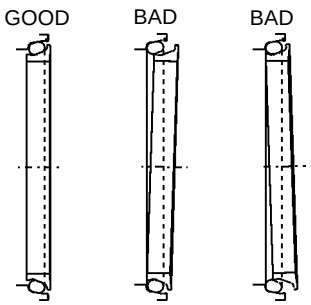

https://truckmanualshub.com/

6. Selecting shim thickness for angular bearings

NOTE: This process is necessary when any motor (casing), housing (18), bearing (19) or lock washer (21) is changed. As is not the case, use the old shim (20) as they are.

a. Press two inner races of the bearings (19) equally, and measure the assembly width of inner race (A).
b. Measure the assembly width of motor bearing (B).
c. Measure the groove width of motor (C).
d. Measure the width of lock washer (21) (D).
The measurement should be conducted on four orthogonal points on the circumference and their average should be calculated.

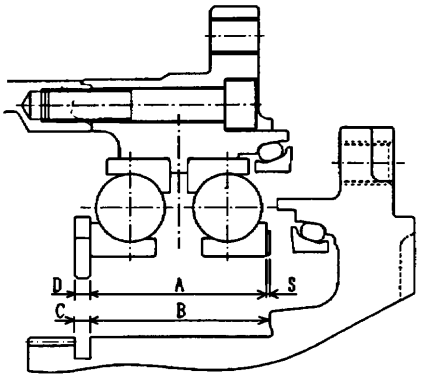

e. Suppose the thickness of a shim (20) to be used is S, the space X is expressed as follows:
X = (B + C) - (A + D + S)
f. In this unit case, select one shim to make the space X as follows:
-0.08 to 0.02 mm
(+ value is space, while - value is extrusion.)

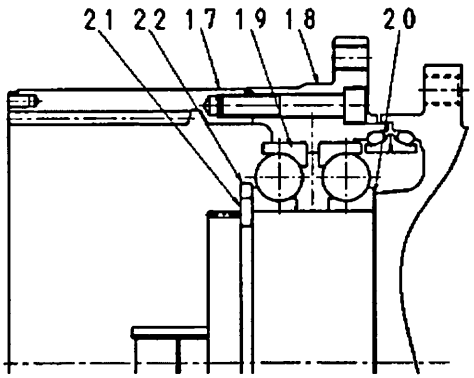

7. Press fitting the motor

a. Place the motor on a level place with its shaft upward, and put the shim (20) selected in the above mentioned step on the end face of the bearing insertion section on the motor.
b. Attach three M10 eyebolts to the ring gear (17) to lift, and then, insert the bearings (19) attached to the inner diameter of the housing (18) into the motor by lowering it slowly vertically along with the motor's center. With a press, press and insert the inner race section of bearings (19) into the deep end.
c. Engage the lock washer (21) into the groove while pressing the flange part of housing (18) with a press.
d. Insert the support ring (22) into the outer side of lock washer (21).

https://truckmanualshub.com/

8. Assembling carrier 2 assembly
   a. Place the carrier 2 assembly into the ring gear (17) so that the three planetary gears 2 (14) are located as shown in the Figure, and then, engage them into the spline of the motor.
   b. Insert the sun gear 2 (10).

※ The reason why the carrier 2 assembly is reassembled as shown in the Figure is to facilitate proper oil lubrication. Please follow this assembly procedure.

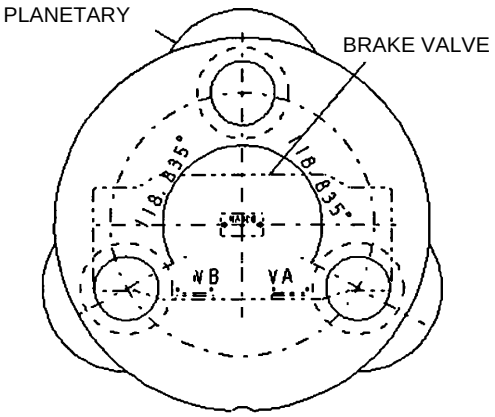

9. Assembling carrier 1 assembly
   a. Install the carrier 1 assembly into ring gear (17) and adjust its position by manually rotating the planetary gears 1 (6) to engage it into the sun gear 2 (10).
   b. Insert the sun gear 1 (9).
   c. Engage the thrust plate (8) into the carrier 1 (2).

10. Installing cover
   a. Apply Loctite No. 515 to the mating surfaces of cover (1) and ring gear (17), and install the cover (1) onto the ring gear (17).
   b. Apply Loctite No. 242 to 18 M10 hexagon socket head bolts (24) and fasten them with tightening torque of 68.6 N·m.

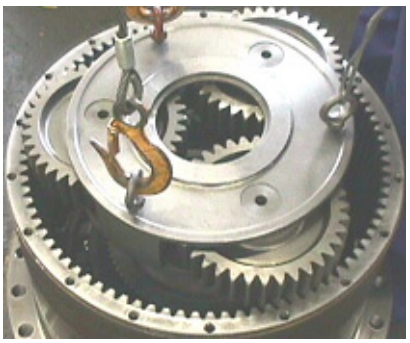

11. Refilling gear oil
   Fill gear oil (SAE90, API Classification GL-4, 11 liters) from the filler port and install plug G3/4 (26) onto the cover (1) with tightening torque of 147 N·m.

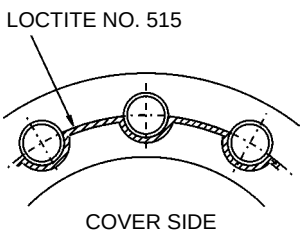

https://truckmanualshub.com/

3. Maintenance

3-1. Inspections prior to assembling

1. Thrust washers
   a. Inspect if there is any seizure, abnormal wear, uneven wear or other.
   b. Check that the wear is within allowable values.
2. Gears
   a. Check for pitching and seizure on the face of tooth.
   b. Check the color on the root of tooth to find out cracks.
3. Bearing
   Make sure that there are no noises or engagement by manually rotating the bearing.
4. Floating seal
   Check if there is any damage on the sliding faces of O-rings.

https://truckmanualshub.com/

3-2. Parts maintenance

Reference valves are shown below to determine whether parts are reusable or not based on measured valves when disassembling. However, these are general criteria; the range of parts to be replaced should be decided according to the performances before disassembling, obvious damage or discoloration on the external appearances of the parts, purpose of disassembling and remaining life to be expected.

Maintenance Reference

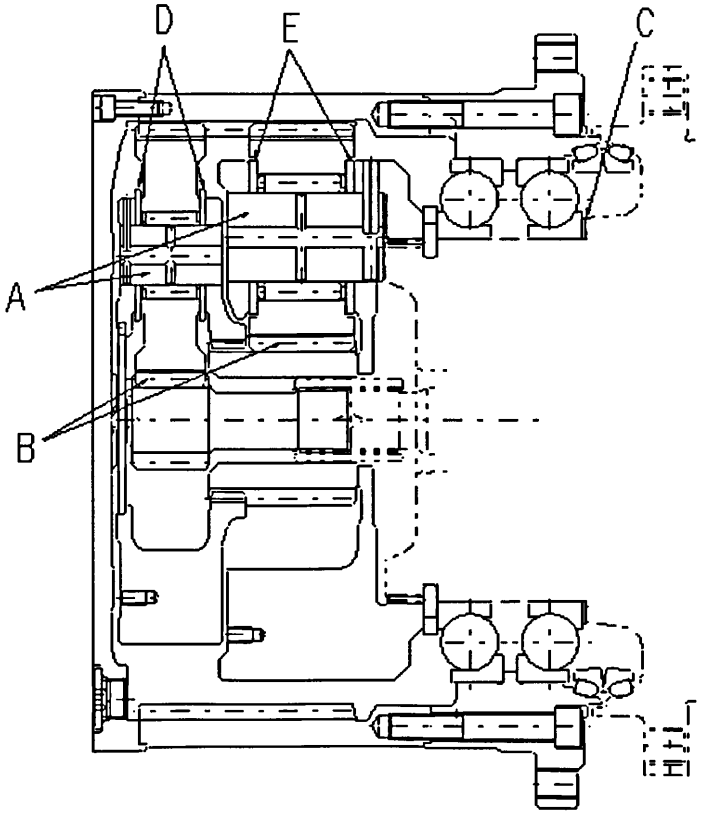

Mark	Item	Reference Value	Allowable Value	Remedy
A	Wear on the planetary shaft	Smooth, no abnormal wear and seizure	Smooth, no abnormal wear and seizure	Replace all three together.
B	Conditions on face of tooth and root of tooth	Smooth, no abnormal wear and seizure	No pitching of dia. 1.6 or more, no cracks on the root of tooth	Replace all three planetary gear together.
C	Thrust spaces in the inner race of angular bearing	-0.08 to 0.02 (Interference) (Space)	-0.08 to 0.02 (Interference) (Space)	Changing shim (See *2-3. 6*)
D	Thickness of thrust washer 1	2.7 ± 0.2	Wear 0.1	Replace.
E	Thickness of thrust washer 2	3.2 ± 0.2	Wear 0.1	Replace.

https://truckmanualshub.com/

3-3. Tightening torque

Fasten them by using torque wrench.

Symbol	Item Name	Size	Tightening Torque
24	Hexagon socket head bolt	M10x30	68.6 N·m (upon application of Loctite No. 242)
25	Hexagon socket head bolt	M18x110	378 N·m (upon application of Loctite No. 242)
26	Plug	G3/4	147 N·m

3-4. Check after assembling

1. Check oil level

   After assembling the travel unit, loosen the level plug and check whether the gear oil comes out by placing it with its shaft level and the cover's drain port directly down.

2. Rotation test

   Place the reassembled travel unit on the hydraulic test stand and rotate it without load. Check for any abnormal noises or oil leakage at this point. This inspection can be also conducted by lifting the track with attachment after mounting it onto the hydraulic shovel.

https://truckmanualshub.com/

Brake Valve Maintenance

1. Structure and Operation

1-1. Dimensional outline drawing

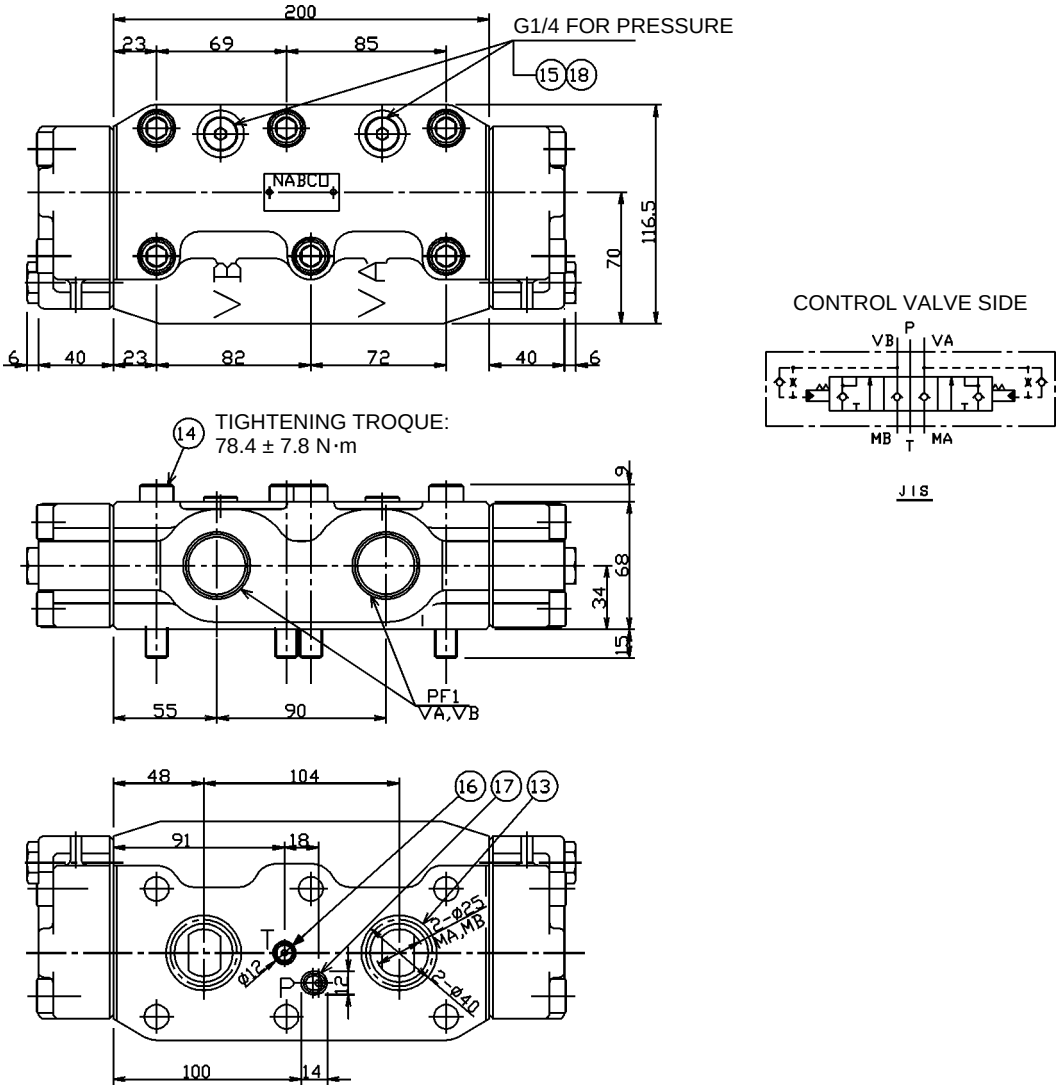

Figure 1. Dimensional outline drawing

https://truckmanualshub.com/

1-2. Structural drawing

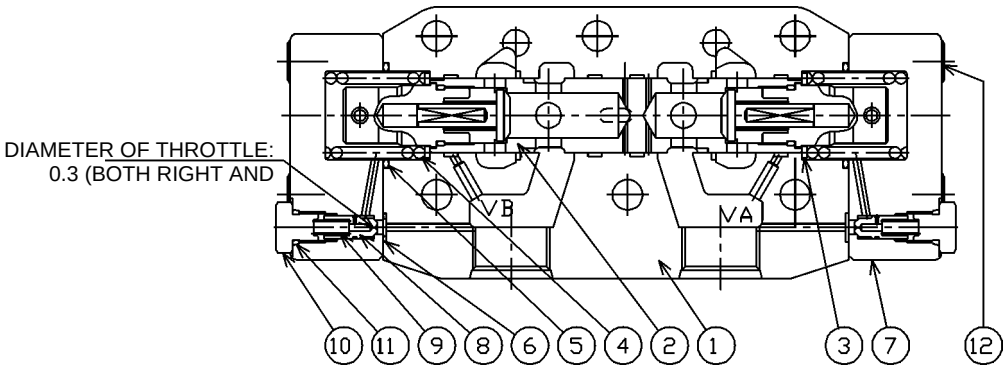

1. MAIN BODY	8. THROTTLE VALVE	15. PLUG
2. SPOOL	9. SPRING	16. O-RING
3. SPRING BEARING	10. PLUG	17. O-RING
4. SPRING	11. O-RING	18. O-RING
5. O-RING	12. HEXAGON SOCKET HEAD BOLT	
6. O-RING	13. O-RING	

Figure 2. Structural drawing

https://truckmanualshub.com/

2. Disassembly and Assembly

2-1. Preparation for disassembling

Hydraulic devices all consist of precision components and require extra attention during disassembly/ assembly. Select a clean place to conduct the procedures.

The valve must be handled with utmost care to prevent dirt or soil from entering the inside.

After the valve has been removed from the hydraulic motor, the following must be done:

a. Place blind plugs in the Ports VA and VB.
b. Place labels (or adhesive strips) on mating faces.

Clean the assembly exterior before the start of disassembly to ensure a clean condition. Work should be carried out on a proper work bench with a clean sheet of paper/rubber placed on top. Handle each part carefully to avoid any dents or scratches.

Refer to Tools Required in this section for the necessary tools for valve disassembly/assembly. They should be obtained prior to the work along with treated oil, hydraulic oil, grease, etc.

2-2. Tools required

Tools required	Width across flats	Caution
Hexagon wrench	6	For symbol 15 in Figure 1
Hexagon wrench	10	For symbol 14 in Figure 1
Hexagon wrench	10	For symbol 12 in Figure 2
Wrench	19	For symbol 10 in Figure 2

2-3. Disassembling instructions

1. Remove the valve from the hydraulic motor and place on the work bench. Remove the O-rings (13, 16 and 17) on the gasket surface.
2. Loosen the hexagon socket head bolts (12) and remove the covers (7).
3. Pull out the O-rings (5), (6), spring (4) and spring bearings (3).
4. ※ Pull out the spool (2) from the main body (1). This is as far as the spool can be disassembled because it is attached to the thread with an adhesive.
5. Pull out the plugs (10) on the covers (7), springs (9) and throttle valves (8).

https://truckmanualshub.com/

2-4. Assembly

※ 1. After the disassembly and the inspections are completed, clean all parts with clean treated oil and inspect the following prior to assembly:

At the end of inspection, coat the parts with hydraulic oil.

After disassembly, clean all parts with clean treated oil and inspect the following:

At the end of inspection, coat the parts with hydraulic oil.

a. Spool
   No burr, dirt, dents, rust, etc. in the oil grooves.
b. Sliding part
   All parts move smoothly. No rusting in grooves, holes and passages.
c. Check valve
   No dents or damage in seat surface.
d. Seal surfaces (mating faces)
   No burr, dirt, rust, etc.
e. Throttle valve
   No dents, damage or throttle blockage in seat surface.
f. Seals
   As a rule, change seals at every disassembly. If damages are found on the body or spool as a result of the inspection above, replacement must be done as an assembly.

2. Precautions for Disassembling
   a. Work should be conducted in a clean area.
   b. Make sure that each part is assembled into the original location.
   c. Scratches made during disassembly can be removed by oil stones, etc.
   d. Applying a light amount of hydraulic oil to parts will facilitate the installation.
   e. O-rings should be renewed as a rule.

2-5. Tightening torque

Hexagon socket head bolt (12)	M12x45	98.1 N·m
Hexagon socket head bolt (14)	M12x80	78.5±7.8 N·m
Plug (10)	G 1/4	24.5 to 29.4 N·m
Hexagon socket head plug (15)	G 1/4	24.5 to 29.4 N·m

https://truckmanualshub.com/

2-6. Assembling instructions

1. Install the throttle valves (8) and the springs (9) onto the covers (7) and secure them with the plugs (10), to which the O-rings (11) is installed.
2. Install the O-ring (18) onto plug (15) and fasten the plug onto the main body (1).
3. Install the O-rings (5), (6) onto the main body (1).
4. Install the spool (2), spring bearings (3) and springs (4) in this particular order onto the main body (1). The orientation of the spool must be correct when it is installed.
5. Install the covers (7) on the main body (1) with the hexagon socket head bolts (12).
6. Install the O-rings (13, 16 and 17) on the mating face with the motor.

3. Causes of Errors and Remedies

1. The hydraulic motor does not start.

Symptom	Cause	Remedy
Pressure does not rise.	Malfunctioning of relief valve integrated in hydraulic motor.	Repair or replace the relief valve.
Pressure does rise.	Spool malfunctioning. • Spool is sticking to the main body. • Blockage in the throttle valve hole.	Repair or replace.
	Negative brake does not get released. • The orientation of the spool is not proper - right and left backwards.	Install the spool in the proper direction.

2. The hydraulic motor starts weakly.

Symptom	Cause	Remedy
There is a delay in brake activation, although the pressure setting is correct.	Spool malfunctioning. • Spool is sticking to the main body.	Repair or replace.
Brake works properly, but the start-up is delayed.	The viscosity of hydraulic oil is too high.	Warm or change the hydraulic oil.
Brake works properly, but the starting is weak.	Negative brake is not completely released. • Blockage in the negative brake pilot passage.	Check or clean the passage for negative brake, which is integrated in the hydraulic motor.

https://truckmanualshub.com/

3. The brake does not work.

Symptom	Cause	Remedy
The reversing brake works.	Spool malfunctioning. • Spool is sticking to the main body. • The check valve sticks or has dirt engaged. • Blockage of the throttle valve hole.	Repair or replace.

4. Abnormal noise.

Symptom	Cause	Remedy
Strong vibration and noises are generated when the brake is slowly operated or is simultaneously operated with a circuit other than the motor.	Spool malfunctioning. • Air remains in the circuit and valve.	Bleed air.
	Spool sticking.	Repair or replace.

5. The machine hunts going downhill or experiences strong hunting during inching.

Symptom	Cause	Remedy
Machine hunts excessively during inching.	Spool malfunctioning. • Spool is sticking to the main body. • Malfunctioning of throttle valve seat.	Repair or replace.
	Interference with the negative brake. • Fatigue or breakage of spring in the spool edge section.	Repair or replace.

https://truckmanualshub.com/

Motor Maintenance

1. Precautions for Use

1. Handling

   When transporting and storing the unit, handle and keep it vertically with its output shaft facing downward.

   When lifting the motor, screw a clean lift gear screw into the makeup port (G1) located at the center of the motor cover. Always handle it using this lifting gear. Do not lift the motor by putting a wire across the relief valve because lifting this way causes excessive load on the relief valve and leads to deformation and malfunction.

2. Piping

   Required dimensions for piping fittings are determined beforehand according to the outline drawing. Make sure that the piping is configured with hoses or steel pipes and has a structure where no extra force is applied to the motor and pipe attachment sections. Note that rubber seal caps should be removed from ports when piping. For drain piping, use larger diameter pipes to lower the inner pressure in the motor case.

   If the piping is connected to the return pipe for other devices, abnormal back-pressure may apply to the inside of the motor case when returned oil is suddenly discharged. This can cause damage to the oil seals. Pay full attention. Keep the peak pressure in the motor case below 0.3 MPa.

3. Hydraulic oil and oil temperature

   For operating hydraulic oil, anti-wear mineral oil type hydraulic oil equivalent to ISOVG nos. 32 to 56, with viscosity of 10 to 200 mm^2/s is recommended.

   When using biodegradable hydraulic oil, consult with us. Use of biodegradable hydraulic oil may reduce performance and endurance.

4. Preparatory operation

   Upon completion of piping, flush fully the pipes and check the parts installed following the circuit. Bleed air from the inside of the motor case and fill it with hydraulic oil. If you attempt to operate the motor without filling hydraulic oil in the motor case, it may cause internal breakage. After all conditions are met, start and operate the motor for 10 to 15 minutes at low speeds. Confirm that there are no abnormal noises or vibrations. Then, move to high-speed and high-load operations.

5. Mechanical brake

   Use the mechanical brake for parking purposes.

   Dynamic use or use when slipping may cause abnormal wear on the brake plate.

6. Relief Valve

   The relationship between set pressure and adjusting screw fastening volume for the relief valve is as shown below, but do not adjust the pressure unless the set pressure has been confirmed.

   Pressure change by one full turn of adjusting screw → approximately 4.8 MPa

   Adjustment range:

   Fastening direction, length 3.5 mm from the end surface of lock nut to the adjusting screw
   Loosening direction, length 12.4 mm from the end surface of lock nut to the adjusting screw

https://truckmanualshub.com/

2. Troubleshooting

Described below are measures to be taken when any abnormalities or malfunctions are found while the hydraulic motor is used.

Details on disassembling/inspection and reassembling are also described later but careful handling is absolutely needed to avoid any damage to the sliding parts of the motor while conducting these procedures.

Table 1

Symptom	Cause	Exterior inspection	Remedy	Repairs
Does not rotate	Motor's internal breakage	Measure drain output.	If motor supply input is equal to the drain output, there is high possibility of breakage in sliding section. Disassembling/ inspection is required.	See Table 2.
	Motor's internal breakage	Open the inlet and outlet ports on the motor and apply pilot pressure of 2.9 to 4.9 MPa to the brake relief port. Then attempt to rotate the output shaft with torque of 30 to 40 N·m.	If the output shaft does not rotate smoothly with the torque stated to the left, there is high possibility of internal breakage. Disassembling/ inspection is required.	Replace damaged parts or motor assembly.
	Incorrect settings at relief valve in the circuit	Measure load pressure with pressure gauge.	Reset to specified set pressure.	
Excessive slippage	Wear or damage in the sliding part of the motor and in the high pressure seal section	Measure drain output.	If the drain output is more than 2.5 L / min., the leakage is too high. Disassembling/ inspection is required.	See Table 2.
	Oil temperature is too high and there is excessive internal leakage inside the motor	Measure oil temperature.	Lower the oil temperature.	
Lack of torque Abnormal noises	Wear or seizure of the motor sliding section	Open the inlet and outlet ports on the motor and apply pilot pressure of 2.9 to 4.9 MPa to the brake relief port. Then attempt to rotate the output shaft with a torque of approx. 30 to 40 N·m.	If the output shaft does not rotate smoothly with the torque stated to the left, there is high possibility of internal breakage. Disassembling/ inspection is required.	Inspect parts (a) to (e) listed in Table 2, and also the bearings. Change them if any abnormality is found.
	Incorrect settings at relief valve in the circuit	Measure load pressure with pressure gauge.	Reset to specified set pressure.	

https://truckmanualshub.com/

Symptom	Cause	Exterior inspection	Remedy	Repairs
Lack of torque Abnormal noises (cont.)	Motor's internal breakage	Check whether there are any foreign metal substances in the motor oil drain and drain filters.	If any foreign metal substances are found, there is high possibility of motor's internal breakage. Disassembling/ inspection is required.	Repair or replace damaged parts. Motor assembly replacement.
	A lot of air is mixed in the oil	Check the oil in the tank and motor case.	Bleed air completely.	
	Looseness on tightening sections	Looseness on piping fixtures. Check for looseness on the fixture mounting bolts, motor mounting bolts and bolts on the motor.	Fasten them with proper tightening torque.	
Abnormal heat	Seizure of motor's sliding and rotating sections	Check for foreign metal substances in the motor oil drain and drain filters. Apply pilot pressure of 2.9 to 4.9 MPa to the brake relief port and attempt to rotate the output shaft with torque of 30 to 40 N·m.	If any foreign metal substances are found or the output shaft does not rotate smoothly with the torque above, there is a high possibility of internal breakage. Disassembling/ inspection is required.	Repair or replace damaged parts. Motor assembly replacement.
Oil leakage from mating faces	O-ring is damaged.			Replace O-rings.
	Oil seal surface is damaged.			Repair or replace seal surfaces.
	Loose bolts	Check for loose bolts.	Fasten them with proper tightening torque.	
Oil leakage from oil seal.	Wear or damage on the lips of oil seal			Replace oil seal.
	Wear or damage on seal sections of shaft			Repair or replace motor assembly.
	Abnormal pressure in the case	Check the internal pressure and drain output in the case.	Internal pressure in the case should be 0.3 MPa or less. If drain output is too large, disassembly/ inspection is required.	Replace oil seal. Repair or replace damaged parts. Motor assembly replacement.

https://truckmanualshub.com/

Table 2

Letter	Parts to be inspected	Repairs
a	Wear in the sliding part of balance plate (24)	Repair or replace parts.
b	Damage in the sliding section of the cam plate (7)	Repair parts or replace the motor.
c	Damage in the sliding section of the piston assembly (9)	Repair parts or replace the motor.
d	Wear in piston outer diameter of the piston assembly (9)	Repair parts or replace the motor.
e	Wear in piston hole of the cylinder (27)	Replace motor.
f	Damage in Teflon ring (17)	Replace parts.

https://truckmanualshub.com/

3. Maintenance Reference Table

Table 1

Part name	Locations to be inspected and measured	Reference valves (tolerance limits)	Measuring instruments	Instructions for repair and remedies
Piston assembly (9)	Roughness on shoe sliding face	0.8 S	Surface roughness gauge	Repair with paper lap.
	Groove depth in shoe sliding section	0.45 mm or more	Micrometer	Replace with new ones.
	Looseness on the ball joint section between piston and shoe	0.4 mm or less	Dial gauge	Replace with new ones.
	Piston diameter	Almost no wear. If scratches or seizure are found, replace with new ones.		
Cam plate (7)	Surface roughness	0.8 S	Surface roughness gauge	Lap
Cylinder (27)	Roughness on the edge	0.4 S	Surface roughness gauge	Lap
	Piston hole	Almost no wear. If scratches or seizure are found, replace the motor.		
Balance plate (24)	Surface roughness	0.8 S	Surface roughness gauge	Lap
Piston assembly (9) Cylinder (27)	Clearance between piston diameter and cylinder bore	0.04 mm or less	Micrometer Air micrometer	Motor replacement

Table 2

Part name	Inspection and Maintenance Reference
Taper roller bearing (4) Needle bearing (25)	Replace bearings with new ones every 3,000 hours even if they function normally. Additionally, always replace bearings when reassembling, even if it's within 3,000 hours.
Oil seal (3)	If damage is found on the lip, replace it with a new one. Additionally, replace seals with new ones every 3,000 hours even if they function normally with no leaking. Additionally, always replace seals when reassembling, even if it's within 3,000 hours.
O-rings (12), (14), (20), (32), (33), (34) and (41)	If damage is found on O-ring, replace it with a new one. Additionally, replace rings with new ones every 3,000 hours even if they function normally with no leaking. Additionally, always replace rings when reassembling, even if it's within 3,000 hours.
Backup rings (31) and (35)	Always replace rings when reassembling.

https://truckmanualshub.com/

4. Disassembling Instructions

4-1. Removing relief assembly and others

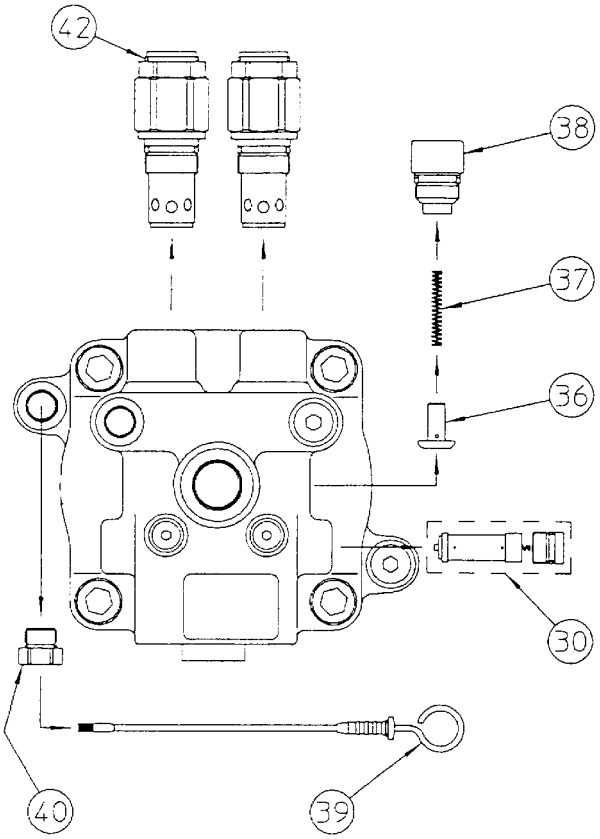

Remove the relief assemblies (42) (WAF 46), caps (38) (WAF 14), springs (37), checks (36), and bypass valve assemblies (30) (WAF10), level gauge (39) and cap (40) (WAF 27), which are attached to the main motor body.

※ Always install the relief assemblies (42), caps (38), springs (37), checks (36), and bypass valve assemblies (30) into their original locations when reassembling them.

4-2. Place counter marks on the mating faces of the motor.

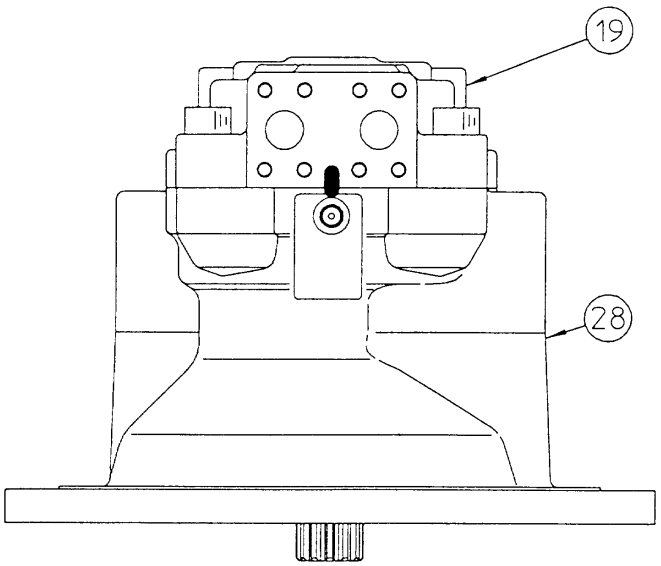

It is useful for reassembly to place counter marks on the mating faces of the cover (19) and housing (28) using paint or an equivalent.

https://truckmanualshub.com/

4-3. Loosening tightening bolts

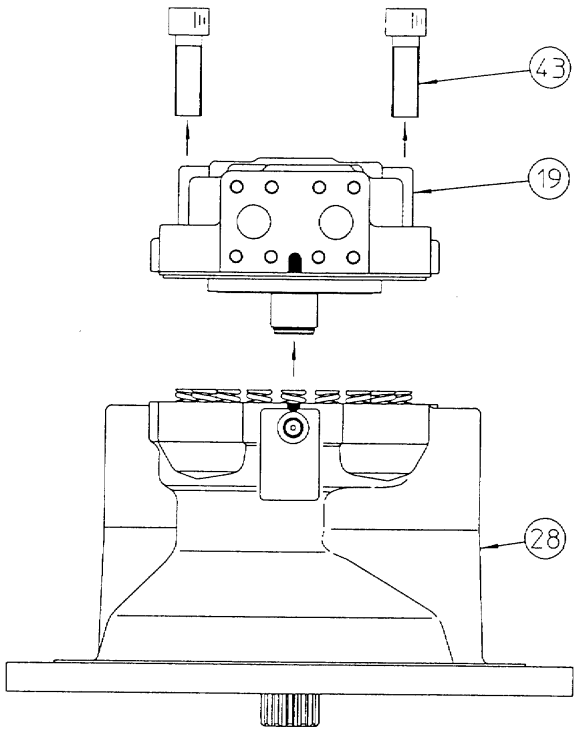

Loosen the socket head bolts (43) (WAF 17) and remove the cover (19) by lifting it while placing it with the motor output shaft facing downward.

4-4. Removing inner rings

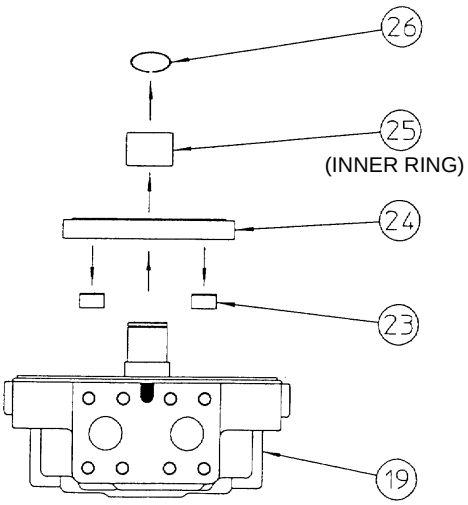

Remove the snap ring (26) using a scriber and take out the inner ring of needle bearing (25) and balance place (24).

Then, take out the pistons (23) from the balance plate (24).

※ Careful handling is needed to avoid damage or deformation by excessive force to the sliding surface of the balance plate (24).

※ The balance plate (24) has its own assembling direction with the cover (19). It is wise to put marks on the plate to tell the assembling direction with the cover (19) when reassembling.

https://truckmanualshub.com/

4-5. Removing O-rings

Remove the O-ring (14) from the cover (19).

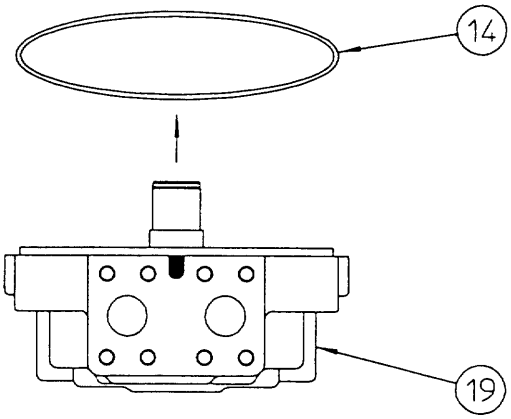

4-6. Removing bushings

Remove the bushings (16) with Teflon rings (17) and scrowaves (18) from the cover (19).

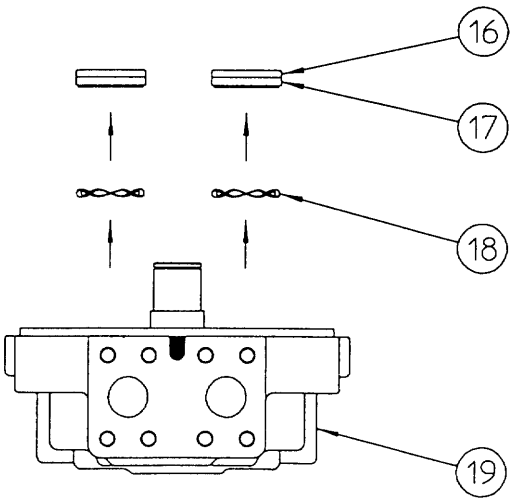

https://truckmanualshub.com/

4-7. Removing springs

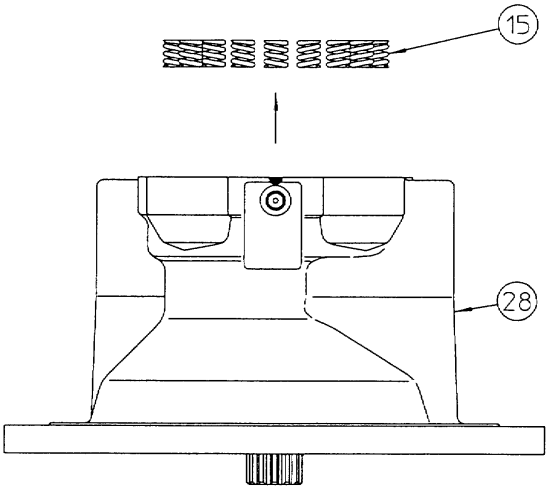

Remove the springs (15) from the piston (13) in the brake section.

※ Measures should be taken to easily find out the assembling position of the springs (15) onto the piston (13).

4-8. Removing piston in the brake section

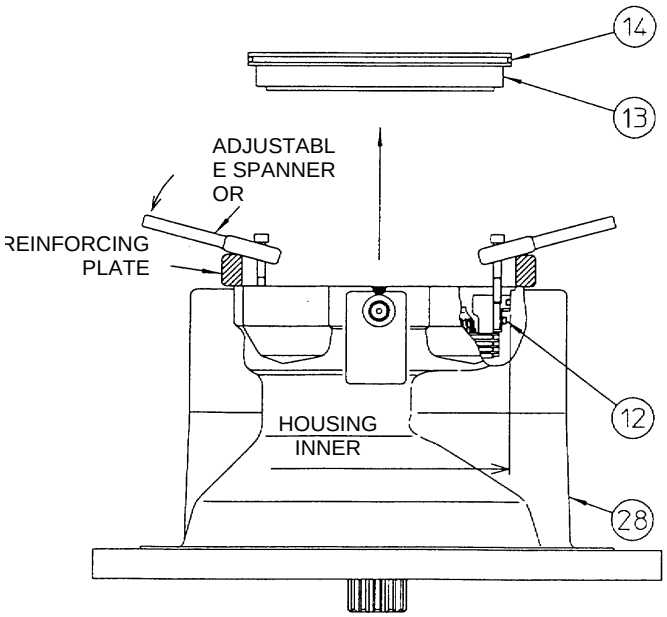

It can be difficult to withdraw the piston (13) from the housing (28) because of sliding resistance caused by the interference of the O-rings (12), (14). Therefore, it is recommended that the piston be taken out (as shown in the left drawing) by using the tap holes (M6) provided on the piston (13).

Then, take out the O-ring (12) from the housing (28) and the O-ring (14) from the piston (13).

※ Place the reinforcing plate at the outer side from the inner diameter of the housing (28).

https://truckmanualshub.com/

4-9. Removing friction and counterpart plates

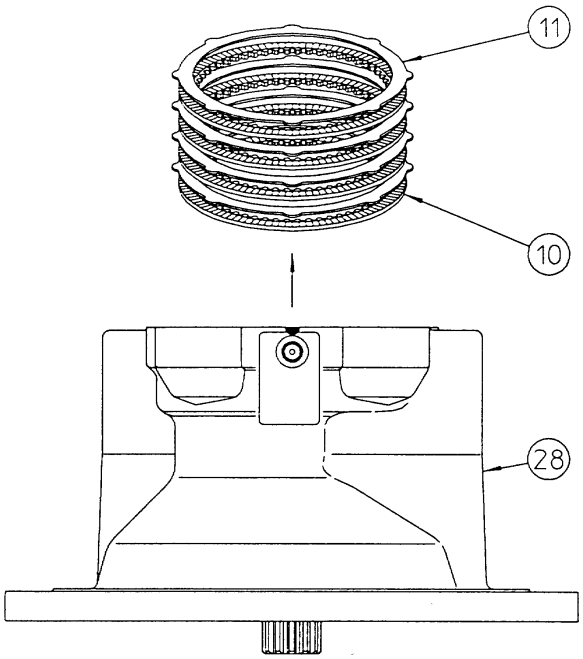

Remove the friction plates (10) and the counterpart plates (11).

4-10. Removing cylinder assembly

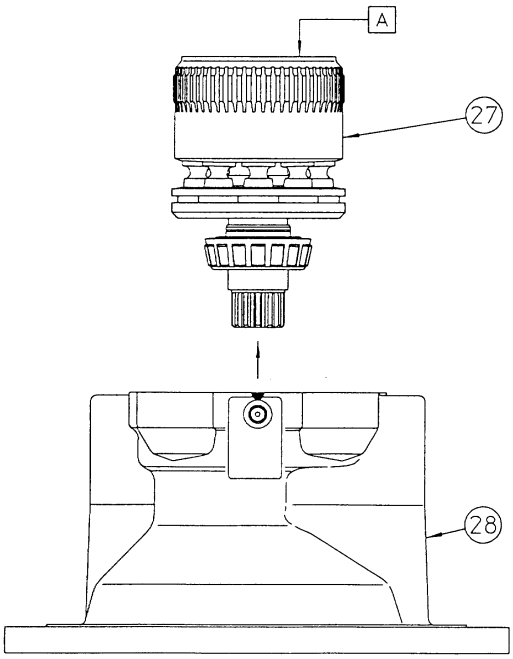

Grasp the end part of the cylinder (27) and draw out the cylinder assembly from the housing (28).

※ Special attention should be taken not to drop the cylinder (27). It will be slippery with oil.

※ At this stage, only the outer ring of the taper roller bearing (4) and the oil seal (3) remain in the housing (28).

※ Protect the end section (A) of the cylinder (27) with a soft cloth or equivalent to avoid scratches on its sliding surface.

※ Place counter marks or numbers on the piston hole and piston assemblies (9) of the cylinder (27) so that the piston assemblies can be reassembled into the same original hole.

https://truckmanualshub.com/

4-11. Removing outer rings of taper roller bearing

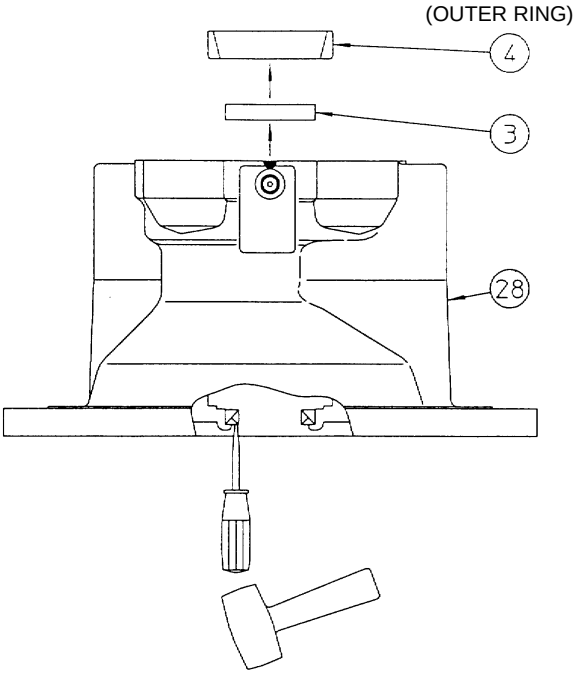

Remove the outer ring of the taper roller bearing (4) from the housing (28). Then, pull out the oil seal (3) by tapping it with a screwdriver and hammer.

※ Do not reuse the oil seal (3).

.

4-12. Disassembling the cylinder assembly

4-12-1. Withdrawing inner rings and taper roller bearings

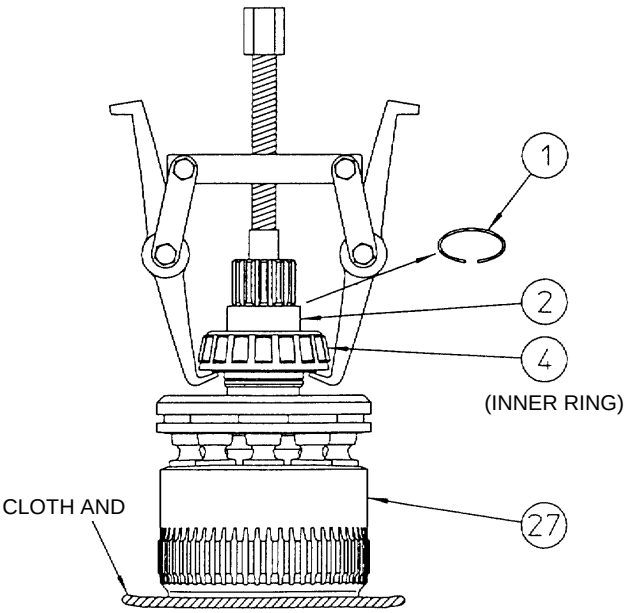

Remove the snap ring (1) using a scriber and put a gear puller over two locations on the inner rings of the taper roller bearing (4) and the end part on the spline of cylinder (27). Pull them out together with the inner ring (2).

https://truckmanualshub.com/

4-12-2.

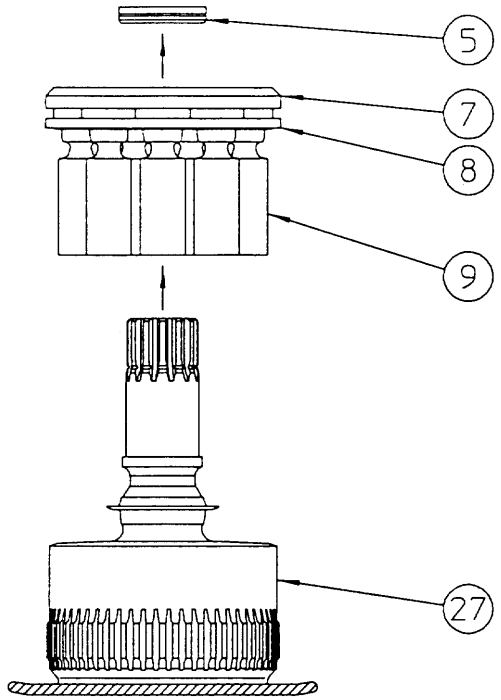

Pull the collar (5) out of the cylinder (27).
Withdraw the cam plate (7), return plate (8) and piston assemblies (9) all together from the cylinder (27).

4-12-3.

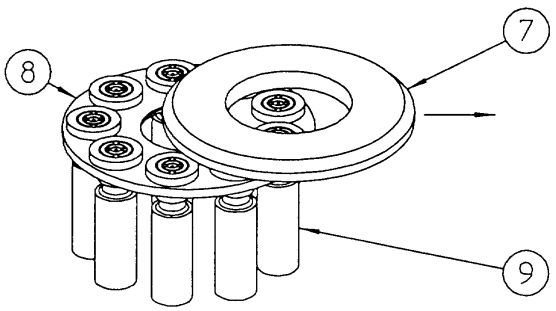

Take out the cam plate (7) by sliding it on the sliding surface of the piston assemblies (9).

※ Careful handling is required to prevent damage to the sliding surfaces on the cam plate (7) and piston assemblies (9).

https://truckmanualshub.com/

4-12-4.

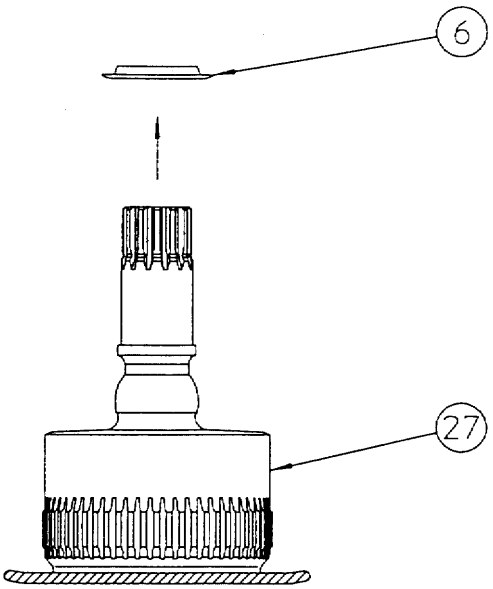

Withdraw the backing spring (6) from the cylinder (27).

Now the disassembly has been completed.

https://truckmanualshub.com/

5. Assembling Instructions

5-1. Preparations

5-1-1.

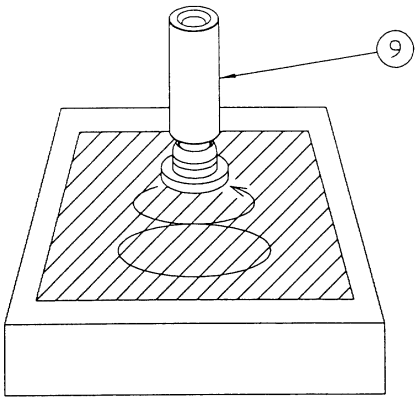

Prior to assembling, carry out the following preparations: Check each part for scratches caused by use or disassembling; if scratch is present, remove the scratch using oil stones or sand papers (with appropriate grains), as necessary. Then, wash it with clean-treated oil and air-dry it.

5-1-2.

※ Replace seal parts with new ones.

5-1-3.

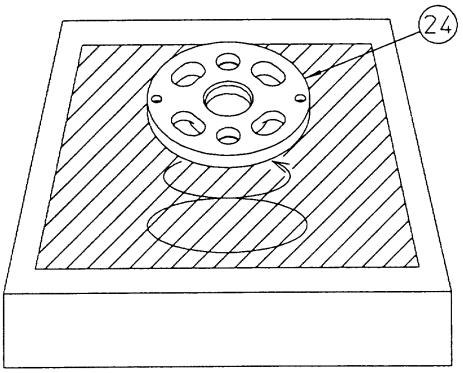

Polish sliding surfaces of the piston assembly (9), cam plate (7), and balance plate (24) on a surface plate using no. 2000 papers.

5-1-4.

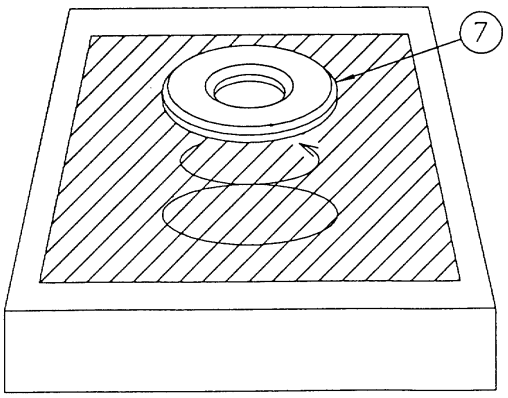

Apply clean hydraulic oil to the sliding parts when they are ready for assembly.

https://truckmanualshub.com/

5-2. Assembling cylinder assembly

5-2-1.

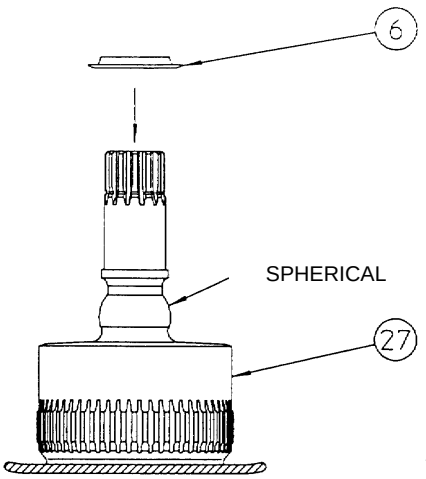

Apply hydraulic oil to the spherical section [contact part with backing spring (6)] in the cylinder (27) and install the backing spring (6).

5-2-2.

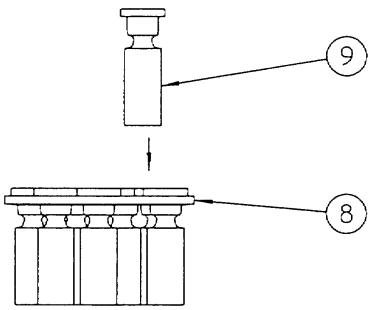

Insert the piston assemblies (9) into the hole in the return plate (8).

5-2-3.

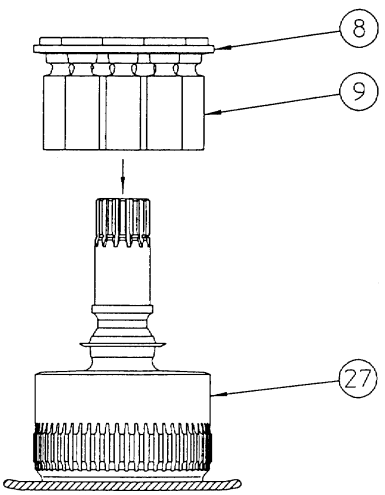

Install the piston assemblies (9) and return plate (8) together onto the cylinder (27).

※ At this time, install the piston assemblies (9) into the same hole in which it was installed before disassembly.

Apply hydraulic oil to the piston holes of the cylinder (27) when installing.

https://truckmanualshub.com/

5-2-4.

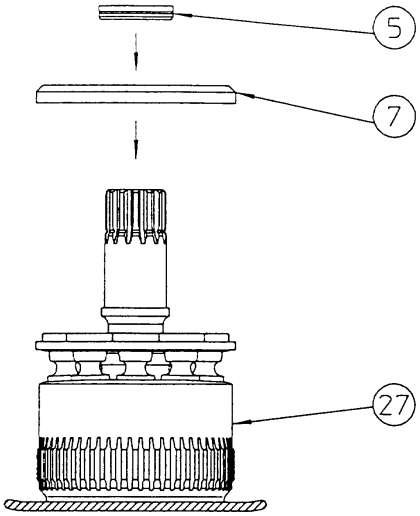

Apply hydraulic oil to the sliding faces of the shoe in the piston assemblies (9), and install the cam plate (7) on the cylinder (27).

Install the collar (5) onto the cylinder (27).

5-2-5.

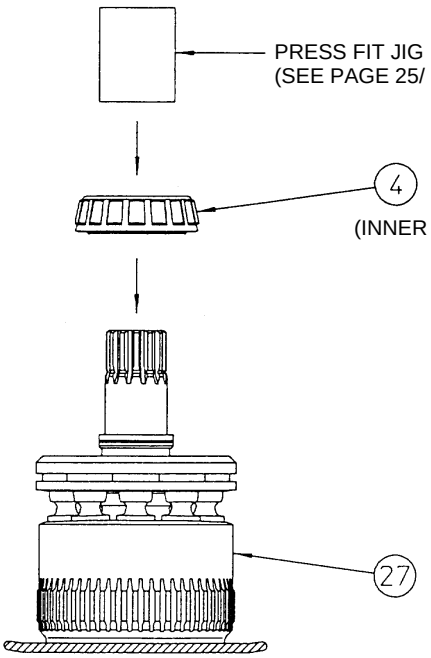

Install the inner ring of the taper roller bearing (4) into the cylinder (27) with a hand press or press fit jig.

※ A piece of soft cloth or equivalent should be used to protect the end face of the cylinder (27) from damage while press fitting.

https://truckmanualshub.com/

5-2-6.

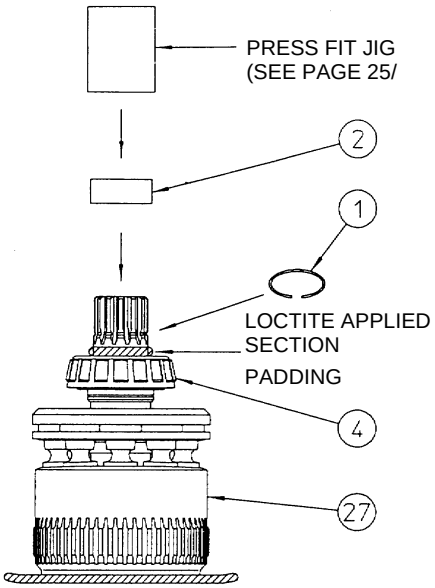

Clean the area on which the inner ring for the cylinder (27) is to be installed, and apply a thin coat of sealing material (Loctite nos. 515, 518 or equivalent) to it after degreasing. Then, install cleaned and degreased inner ring (2) onto the cylinder using press fit jig. Finally, install the snap ring (1).

※ Careful handling is needed to prevent sealing materials from sticking onto the roller of the taper roller bearing (4).

※ Completely wipe off the sealing materials extruding from the gap between the inner ring (2) and taper roller bearing (4).

5-3. Installing oil seals

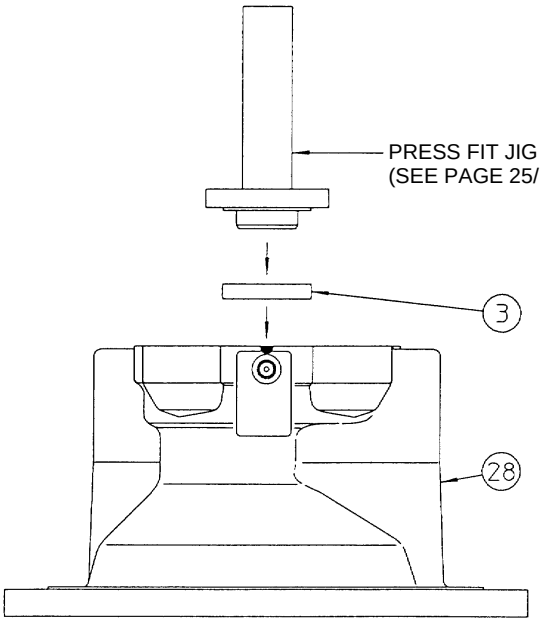

Clean and degrease the section of the housing (28) onto which the oil seal are to be installed. Then, degrease the outer surface of the oil seal (3) and apply liquid packing (ThreeBond 1211 White or equivalent). Then, install it onto the housing (28) using the press fit jig.

※ Pay attention to the fitting directions of the oil seal (3).

TAPER ROLLER BEARING

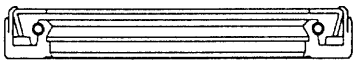

CYLINDER OUTPUT SHAFT SIDE

https://truckmanualshub.com/

5-4. Installing outer ring of the taper roller bearing

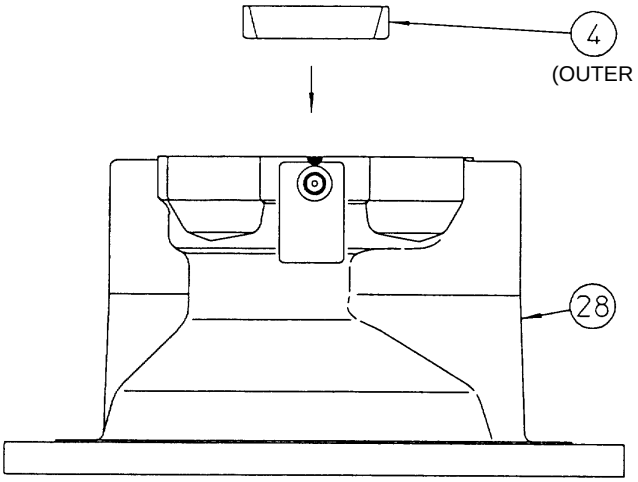

Install the outer ring of the taper roller bearing (4) onto the housing (28).

5-5. Installing cylinder assembly

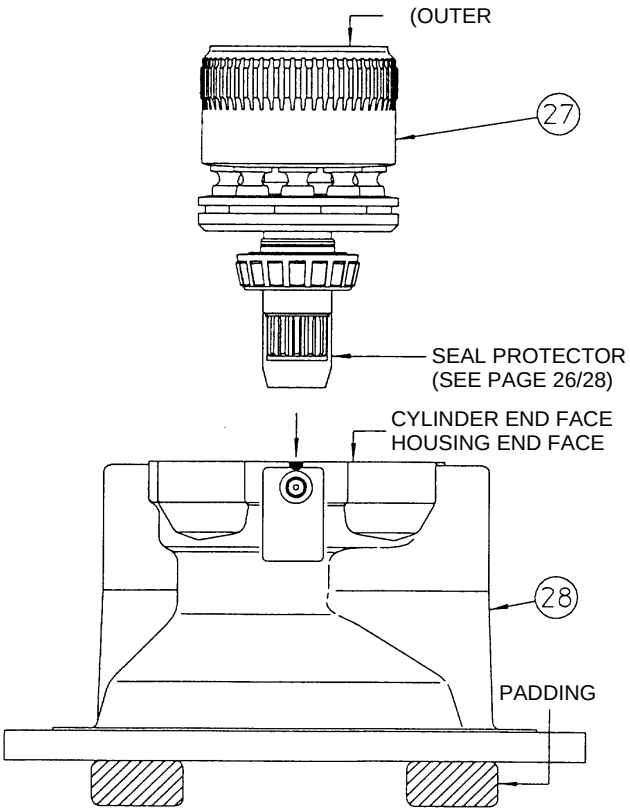

Apply a thin coat of grease to the lip surface of the oil seal (3) and slowly install the cylinder (27) into the housing (28) while holding the end faces of the cylinder (27). At this time, use seal protectors together with them on the spline section of the cylinder (27).

When installing the cylinder assembly, make sure that the backing spring (6) is seated firmly in the counter bore section of the return plate (8).

When installing the cylinder assembly, the spline shaft of the cylinder (27) will come out of the end face of the housing (28). Place 30 to 50 mm thick padding under the lower surface of the housing (28).

Ensure that the end of the cylinder (27) is approximately 15.3 mm lower than the housing (28). A lesser amount of sinking indicates that the cam plate (7) is not seated properly in the counter bore section of the housing (28). Carefully place the housing horizontally with its higher slope surface down and shake the cylinder (27) slightly up and down to seat the cam plate (7) in place.

https://truckmanualshub.com/

5-6. Installing friction plates and counterpart plates

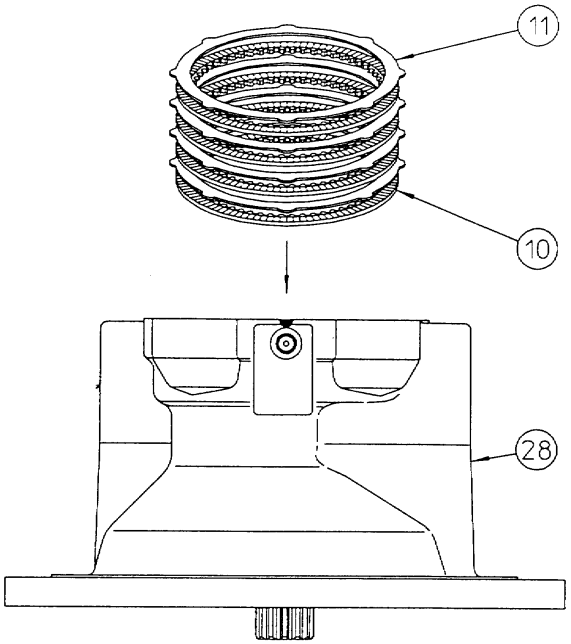

Install the friction plates (10) and counterpart plates (11).

Apply hydraulic oil to both sides of each plate.

5-7. Installing O-rings

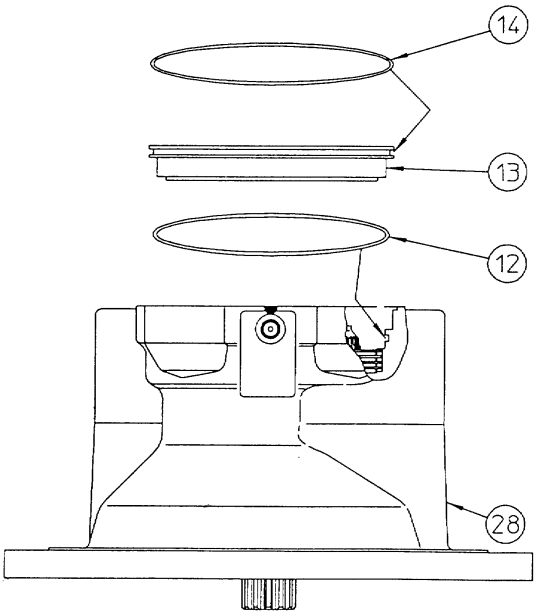

Install an O-ring (12) onto the housing (28) and another O-ring (14) onto the piston (13).

Apply grease to O-rings (12), (14).

https://truckmanualshub.com/

5-8. Assembling brake pistons

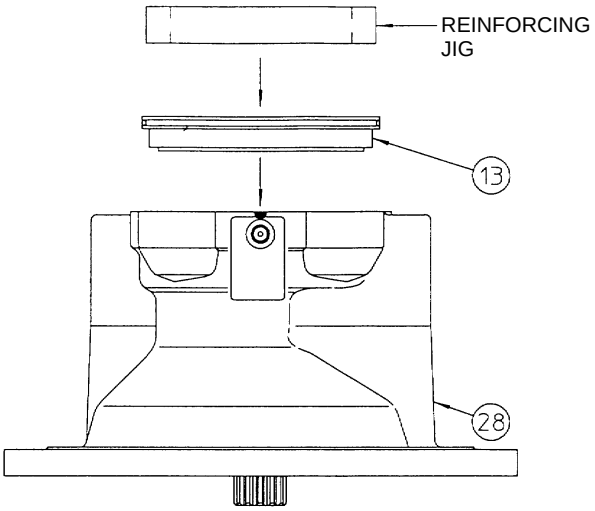

Apply hydraulic oil to the outer sliding surface section of the piston (13) and install the piston onto the housing (28).

※ Press the piston (13) while placing the whole piston level because it is hard to install due to the piston's interference with O-rings (12), (14).

5-9. Installing springs

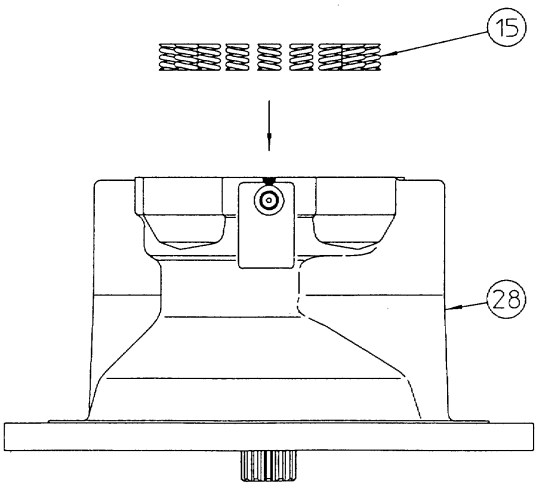

Install the springs (15) into the piston (13) in the brake section.

※ Install the springs (15) into the same location before disassembly.

https://truckmanualshub.com/

5-10. Assembling balance plates

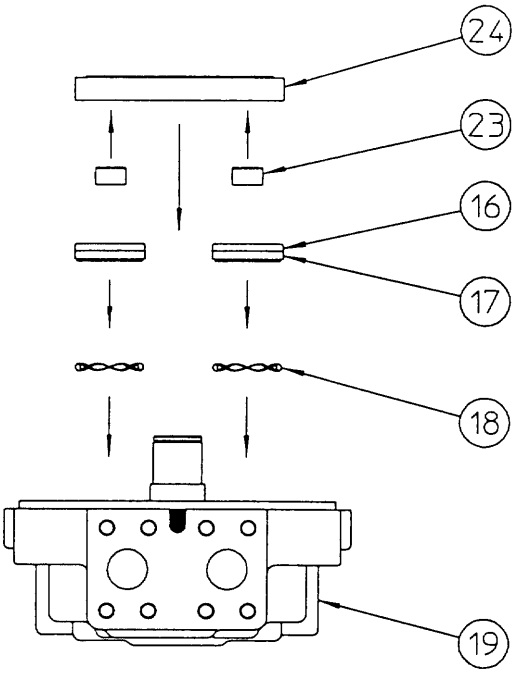

Install the bushings (16) with a teflon rings (17) and scrowaves (18) into the bushing hole on the cover (19).

Install the balance plate (24) integrated with the piston (23) onto the cover (19).

※ Pay attention to the installation directions for the balance plate (24) and cover (19), which were marked before disassembly.

Apply plenty of grease to the pistons (23) and pins (22) for the cover (19) (rotation stopper for the balance plate) and install the balance plate on the cover side.

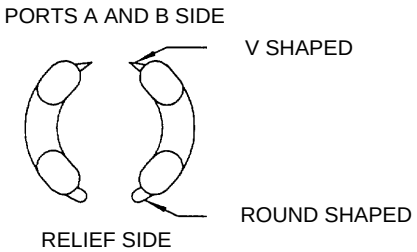

5-11. Assembling inner ring

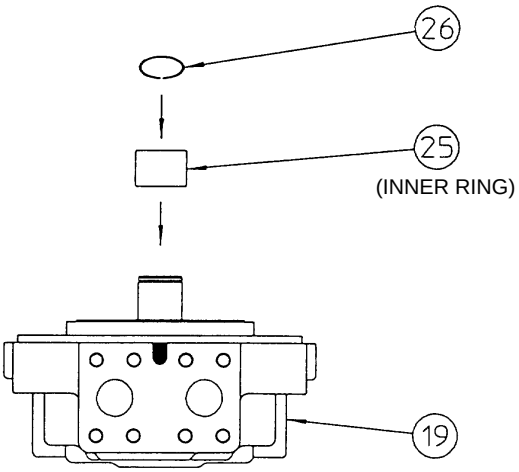

Press fit the inner ring for the needle bearing (25) onto the cover (19) and install the snap ring (26).

https://truckmanualshub.com/

5-12. Installing O-rings

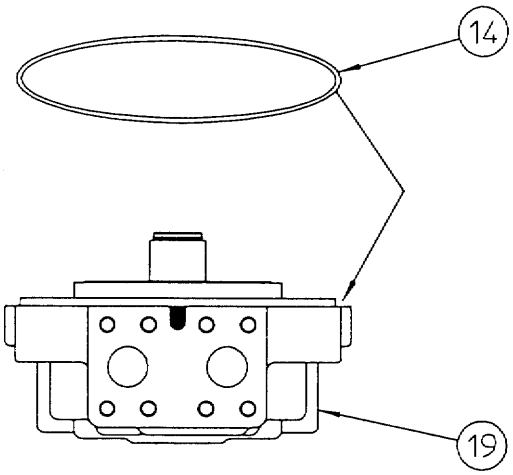

Install the O-ring (14) onto the cover (19).

Apply grease to the O-ring (14).

5-13. Applying liquid packing

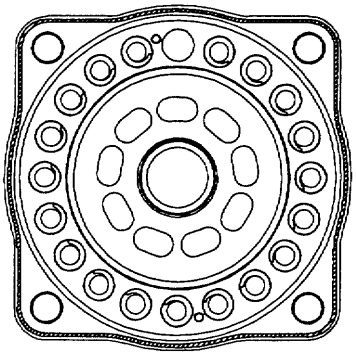

LIQUID PACKING APPLIED

Clean and degrease the mating faces of the housing (28) and the cover (19), and then apply liquid packing (ThreeBond 1211 White or equivalent) to them as shown in the left Figure.

https://truckmanualshub.com/

5-14. Installing covers

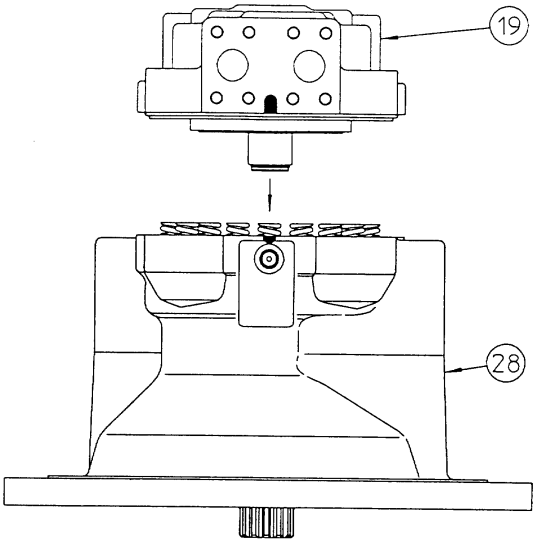

Clean and degrease the faces of the cover (19) to be mated with the housing (28), and then lift the cover (19) to install into the housing (28).

※ Match the positions of counter marks which were made on the housing (28) and the cover (19) before disassembly.

※ At this point, there is an approximately 4 mm gap between the housing (28) and the cover (19).

5-15. Tightening bolts

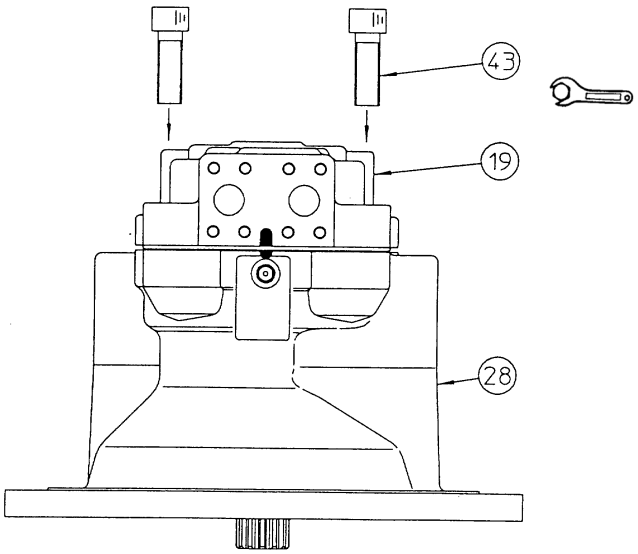

(Tighten the cover (19) to the housing (28))

Fasten socket head bolts (43) (WAF 17) with tightening torque of 392 N·m.

※ In order to install housing (28) and cover (19) straight, tighten 4 bolts (43) evenly, alternating from one bolt to the other until reaching recommended torque.

https://truckmanualshub.com/

5-16. Assembling relief assembly and others

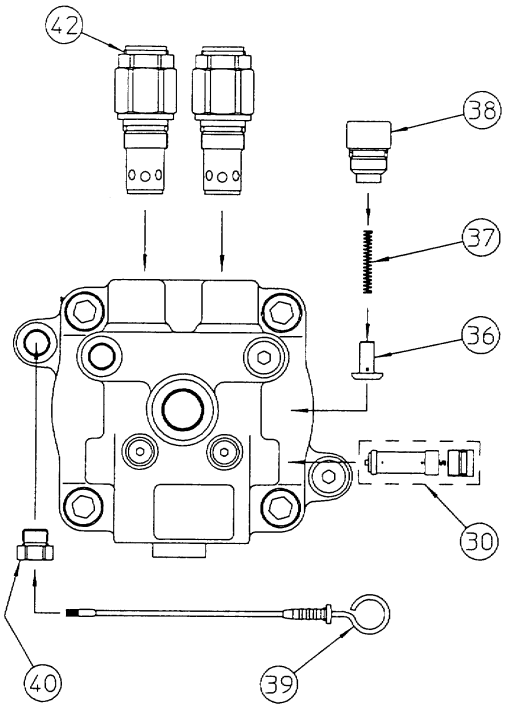

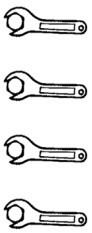

Install the relief assemblies (42) (WAF: 46) onto the cover (19) with tightening torque of 137 N·m. Install the checks (36) and springs (37) onto the cover (19), and fasten the caps (38) (WAF 14) onto the cover (19) with tightening torque of 137 N·m. Then install the bypass valve assemblies (30) (WAF 10) onto the cover (19) with tightening torque of 78 N·m. Finally, install the cap (40) (WAF 27) onto the housing (28) with tightening torque of 49 N·m, and insert a level gauge (39).

※ Always install the relief assemblies (42), caps (38), springs (37), checks (36) and bypass valve assemblies (30) into their original locations.

5-17. Verifying installation

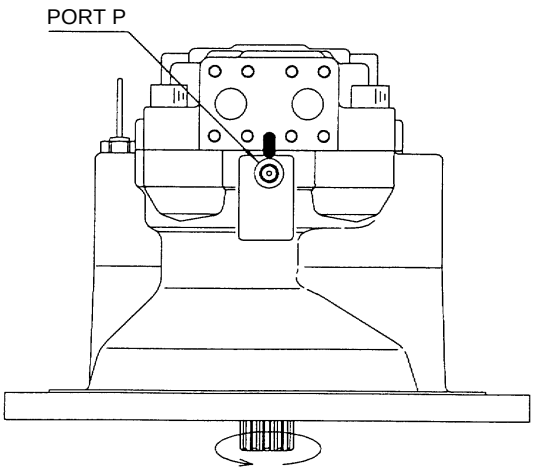

Open the entry and exit ports and apply pilot pressure of 2.9 to 4.9 MPa to the brake relief port. Then make sure that the output shaft can be smoothly rotated, one turn or more, with torque of 30 to 40 N·m. If it does not rotate properly, it is suspected that assembly is not completed correctly. Disassemble once again and readjust it.

Make sure that drain port is released.

Now the assembling procedure has been completed.

※ Ensure that the set pressure on the relief valves (42) indicates a normal pressure after the hydraulic motor is installed onto this machine.

https://truckmanualshub.com/

Press fitting jig for inner ring (2) and taper roller bearing (4)

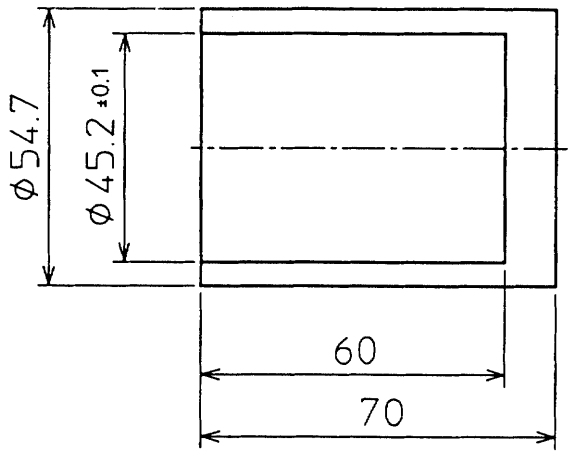

Installation jig for oil seal (3)

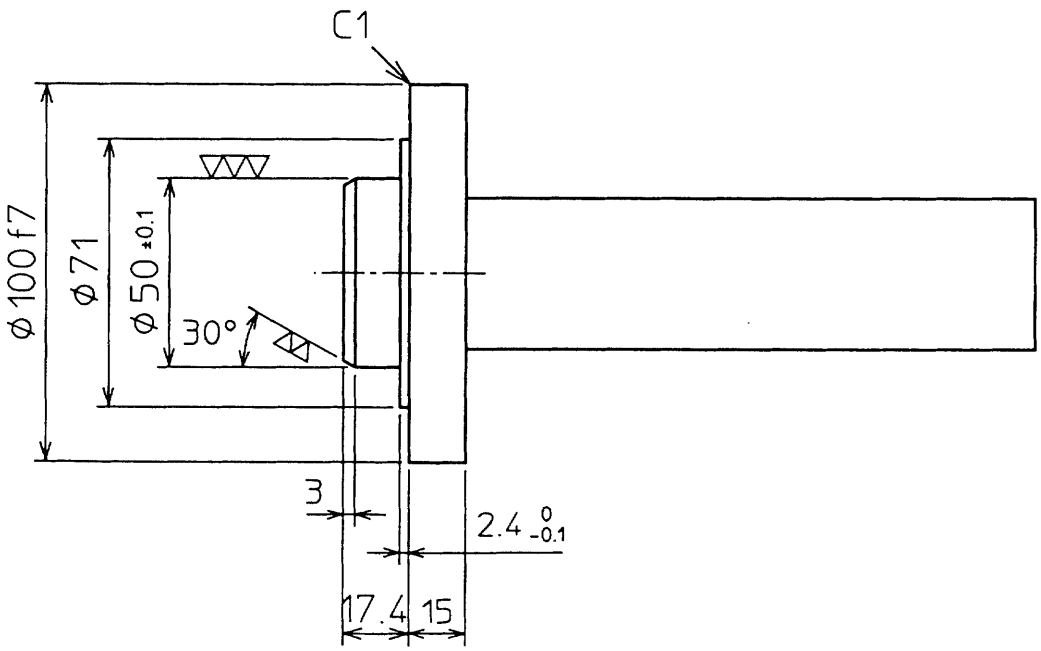

https://truckmanualshub.com/

Seal protector

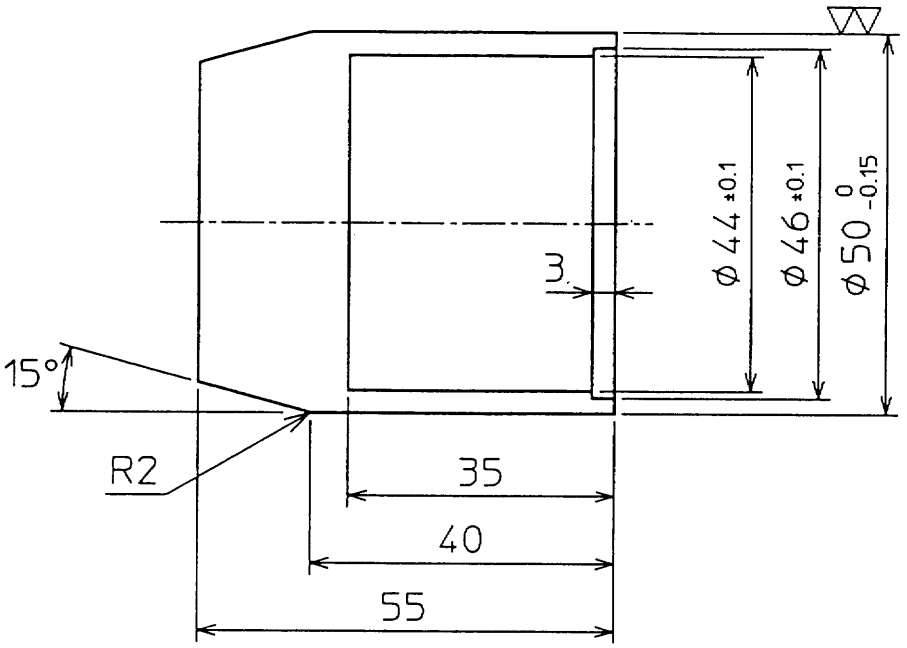

Installation jig for brake piston (13)

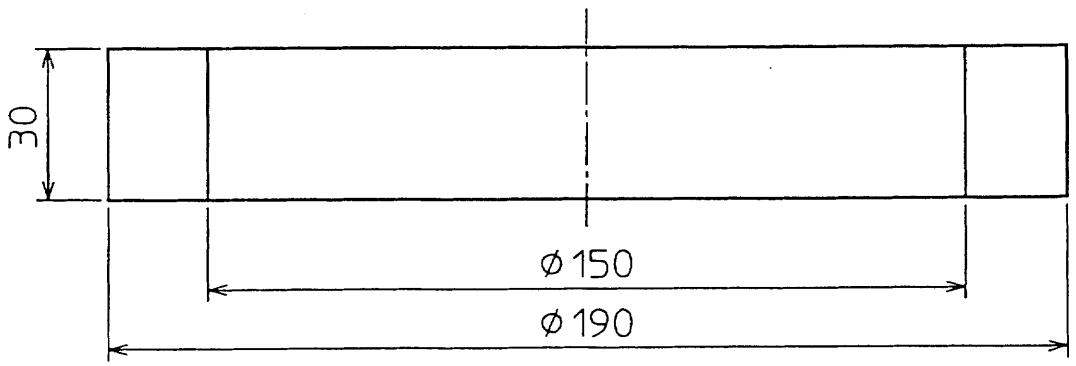

https://truckmanualshub.com/

Internal Structural Drawing

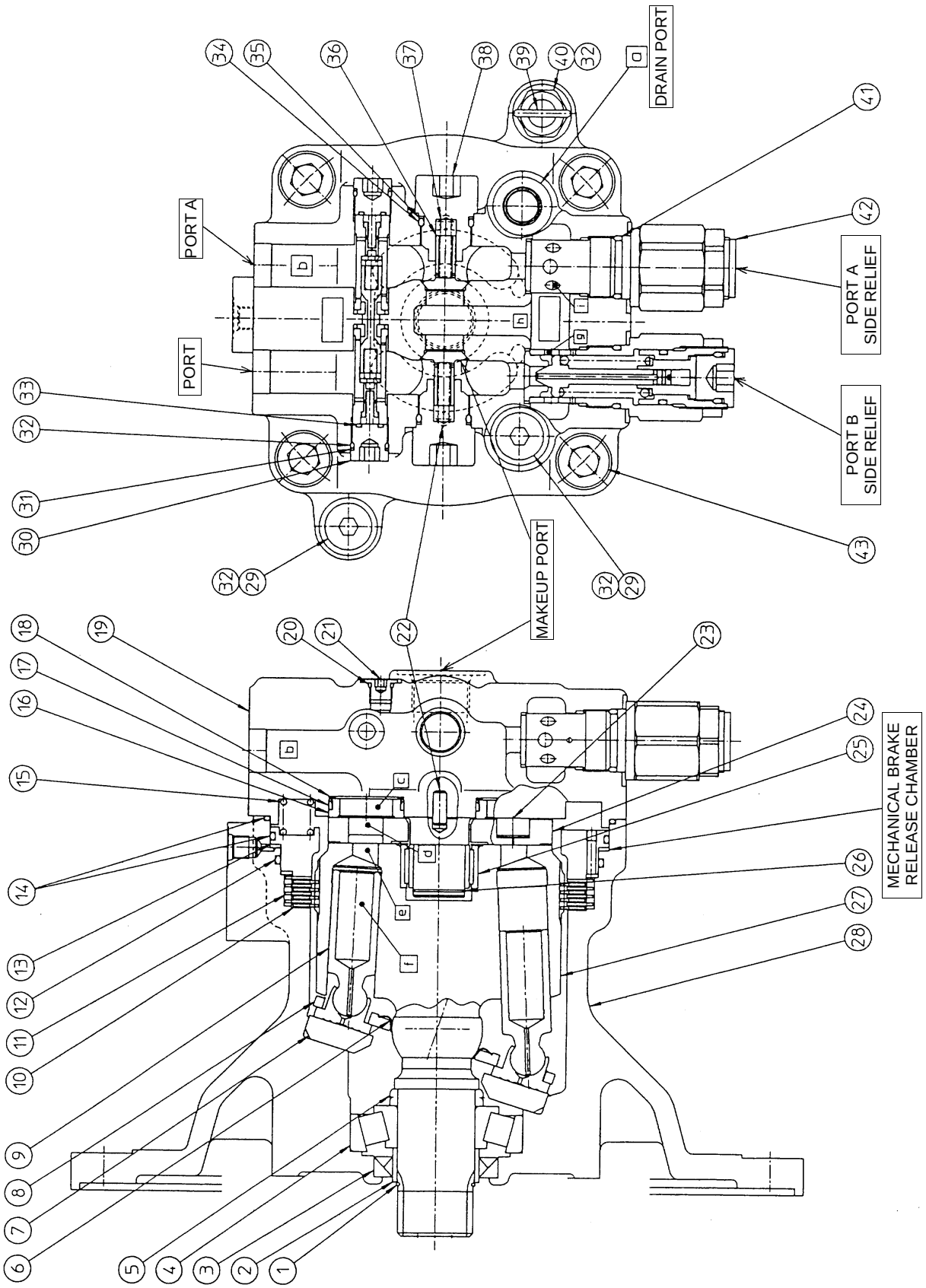

https://truckmanualshub.com/

Internal Structural Drawing of Externally Adjusted Shockless Relief Valve

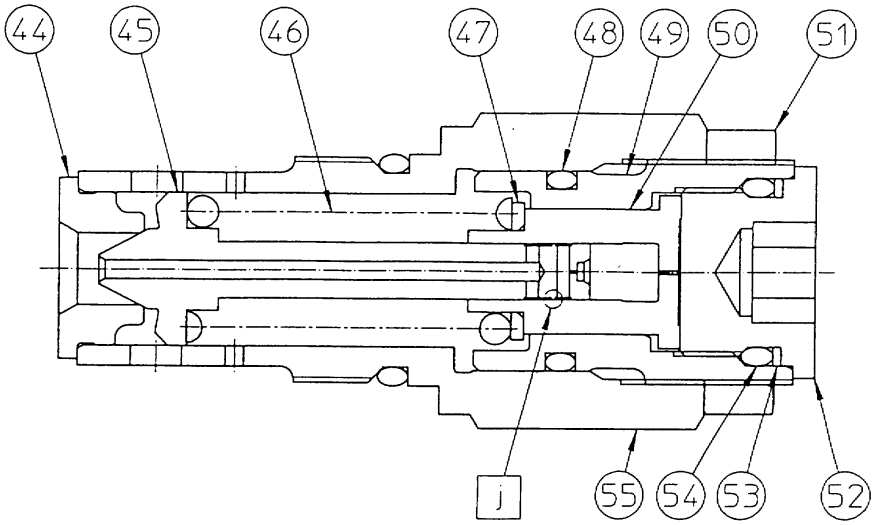

Internal Structural Drawing of Bypass Valve

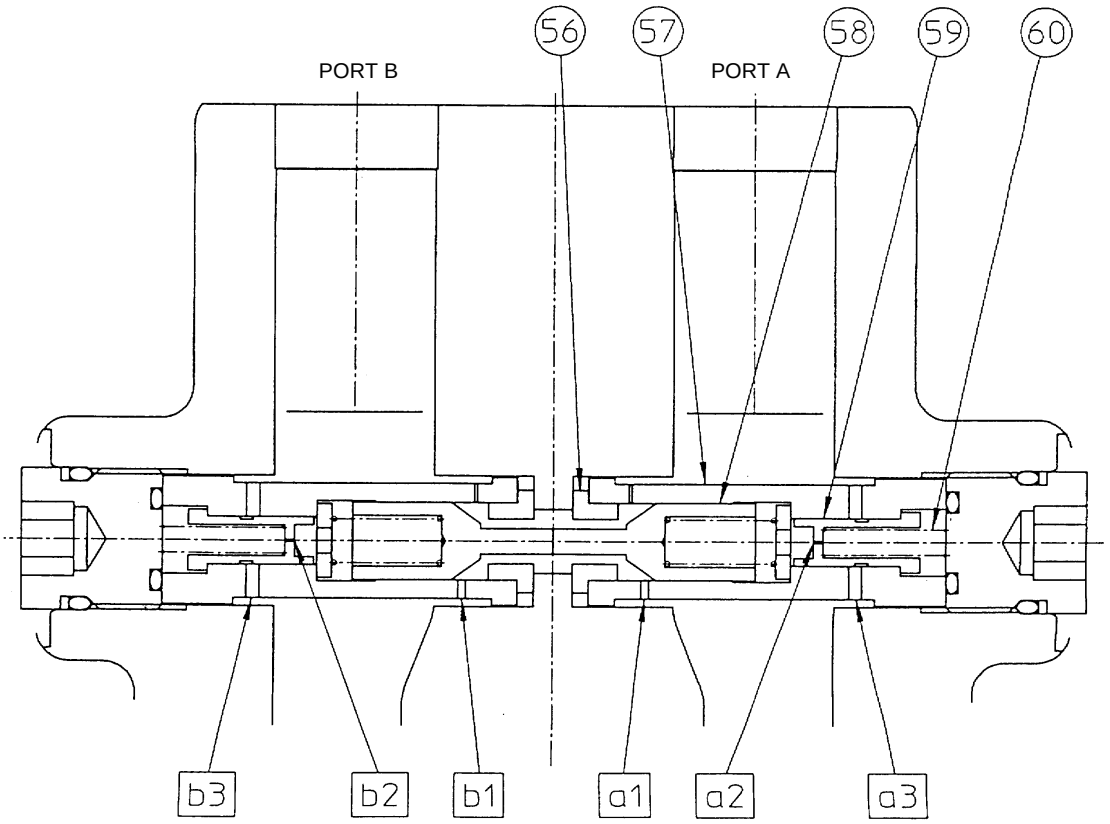

https://truckmanualshub.com/

Reduction Gears Maintenance
Assembling Instructions

1. Assembling Case Subassembly

1-1. Assembling carrier No. 1 subassembly

※ Since those parts are to be crimped, they cannot be reassembled. Careful assembly is essential.

1. Insert planetary gear No. 1 (26) and side plate No. 1 (28) (one plate) sequentially into planetary pin No. 1 (27) (Photo 1).
2. Place planetary carrier No. 1 (25) on the jig with the inner tooth gear counterbore facing up.
3. ※ Press fit planetary pin No. 1 (27) so the notch on the flange section faces the circumference of outer side of planetary carrier No. 1 (25) (Photo 2). The engagement of side plate No. 1 (28) must be closely monitored here. Leave the subassembly for 5 to 6 seconds with the press fitting force applied, then release the pressure and remove from jig. Never use a hammer to hit into the subassembly. This will result in damage because it galls the planetary carrier bore and reduces the holding strength of a pin.
4. Turn over the Carrier No. 1 Subassembly (Photo 3).
   Crimp in the following steps: Rotate the planetary gear No. 1 (26) manually to check there is no rotational irregularity or engagement.

PHOTO 1

PHOTO 2

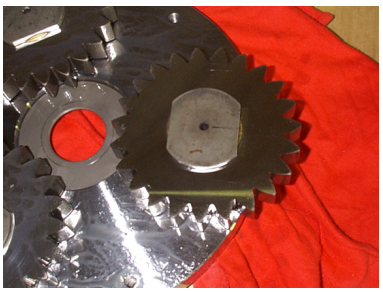

PHOTO 3

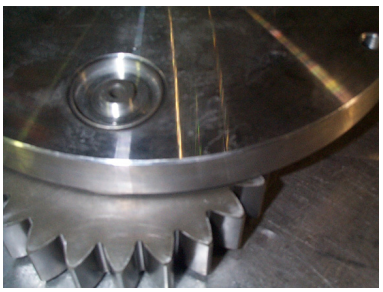

5. Crimp by opening the end of planetary pin (No. 1) (27) with crimping jig (Photo 4) (Photo 5).
   Crimping may produce string-like chips. Eliminate all if this happens.
6. Rotate planetary gear No. 1 (26) manually to check again that there is no engagement or rotational irregularity. If found, reassemble using new parts (Photo 6).

PHOTO 4

PHOTO 5

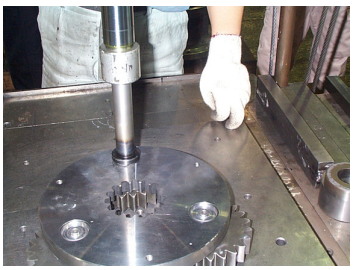

PHOTO 6

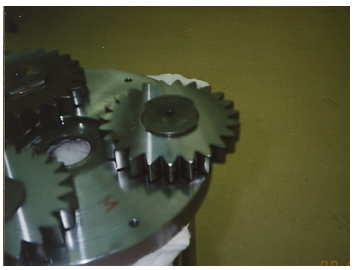

Repeat steps (1) through (6) above on other 3 locations to finish the procedure.

https://truckmanualshub.com/

1-2. Assembling carrier No. 2 subassembly

1. Slide planetary gear No. 2 (30) and side plate No. 2 (32) from the side of planetary carrier No. 2 (29) to place in the proper location (Photo 7).
2. Insert planetary pin No. 2 (31) through the upper pin hole of planetary carrier No. 2 (29). The spring pin insertion holes on planetary pin No. 2 (31) and planetary carrier No. 2 (29) (see Step 3) must be oriented properly (Photo 8).

PHOTO 7

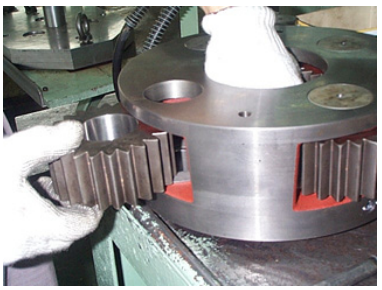

PHOTO 8

3. Ensure that the spring pin insertion holes on planetary carrier No. 2 (29) and planetary pin No. 2 (31) are aligned. Drive the spring pin (10x40) (33) with the jig (see Photo 9), monitoring the orientation (marked surface upward) and the depth (1 mm). After the pin is driven in, crimp by deforming the spring pin hole: hammer approx. 1 mm from the spring pin hole using a punch (See Photo 10).
4. Rotate planetary gear No. 2 (30) manually to check there is no engagement or rotational irregularity (See Photo 11). If found, refer to *2. Disassembling Carrier No. 2 Subassembly* (Page 8/10) to first disassemble, then reassemble according to the instructions in *1-2* on this page.

   A new spring pin (33) must be used in reassembly. (Reusing the spring pin that has gone through disassembly may reduce the holding force which could lead to breakage.)

PHOTO 9

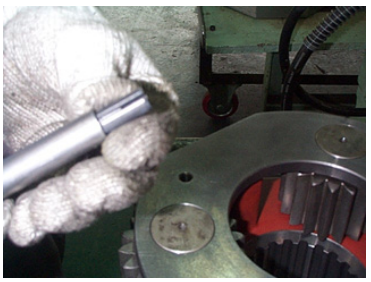

PHOTO 10

PHOTO 11

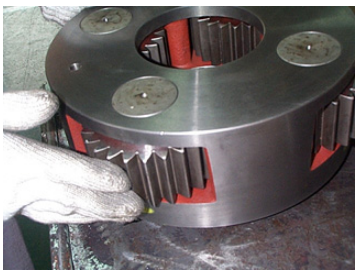

Repeat steps (1) through (4) above on other 4 locations to finish the procedure.

https://truckmanualshub.com/

1-3. Assembling shaft subassembly

This section describes the assembling of subassembly through shrinkage fit.

1. Use a bearing heater and heat the roller bearing (16) (Photo 12) and the pipe spacer (19) (Photo 13) to approximately 50°C higher than the outside temperature. Since the roller bearing (16) is made of resin, use caution to avoid deforming from overheating. (The temperature must be below 120°C.)
2. Place the gear shaft (20) on a workbench. The end surface with the two tapped areas should be facing up (Photo 14).
3. Watch the upward/downward orientation and insert the pipe spacer (15) (Photo 14).
4. Remove the roller bearing (16) from the bearing heater, then insert (Photo 14).

PHOTO 12

PHOTO 13

PHOTO 14

5. Once the temperature of the roller bearing (16) reaches the outside air temperature range, apply grease (KHP1406) to the inside of roller bearing (16) (Photo 15).
6. Watch the upward/downward orientation and insert the bearing cover (17) (Photo 16).
7. ※ Remove pipe spacer (19) from the bearing heater and insert observing the upward/downward orientation (Photo 16).
8. Once the temperature of the pipe spacer (19) reaches the outside air temperature range, turn over and apply grease to the inside of the roller bearing (16) (Photo 15). Add an additional mound of grease as well (Photo 17).

PHOTO 15

PHOTO 16

PHOTO 17

https://truckmanualshub.com/

1-4. Assembling the case subassembly

1. Place gear case (8) upside down (with larger flange upward) on the surface plate (Photo 18).
2. Use the lifting tap holes (M16, 2 locations) on the gear shaft (20) to lift the shaft subassembly (1-3) with a crane and place it into the gear case (8) (Photo 18).
3. Install the wire (18). Ensure that the shaft subassembly (1-3) is installed securely. Insecure fitting may lead to dislodging of the shaft subassembly (1-3), which could cause damage to the subassembly (Photo 19).

PHOTO 18

PHOTO 19

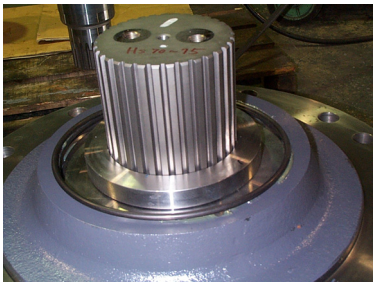

4. Turn over the case subassembly and place on the jig. Use caution to prevent the shaft end from hitting the ground. (It may cause the shaft to fall out.)
5. Apply liquid packing (KSC0189: ThreeBond 1208B) (13) (Photo 20) to the outer circumference of the oil seal (12). Then, press fit using the jig. Apply a thin coat of lithium grease to lubricate the lip seal and press fit carefully to avoid damage to the lips (Photo 21).

PHOTO 20

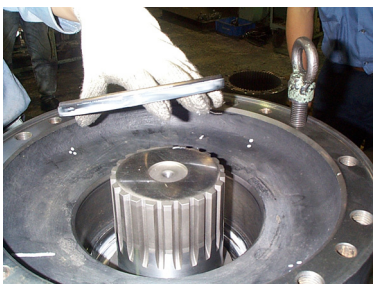

PHOTO 21

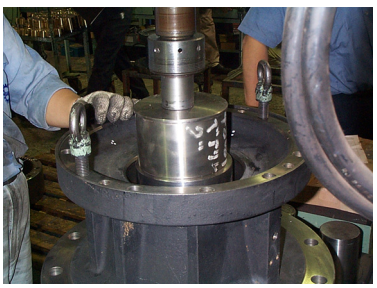

6. Watch the upward/downward orientation and insert the pipe spacer (10) (Photo 22).

PHOTO 22

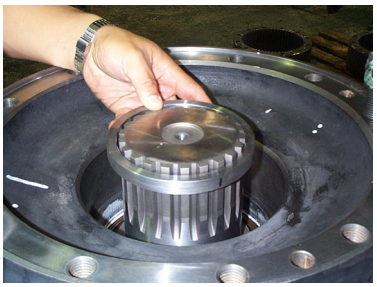

7. Press fit roller bearing (9) onto gear case (8) using a jig (Photo 23).
8. Punch the knock pins (7) on 4 locations (Photo 24).
9. Degrease the end surface of gear case (8) and apply a uniform coat of liquid packing (KTH0086: ThreeBond 1215) (22) (Photo 24).

PHOTO 23

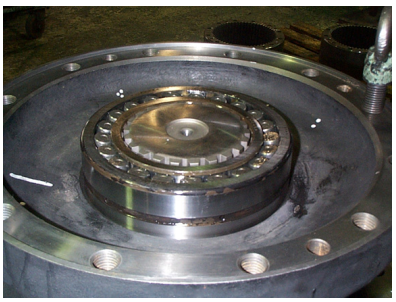

PHOTO 24

10. Watch the upward/downward orientation, as well as the knock pins (7) positions, and install the ring gear (6). Fasten with 3 jig bolts (M20x200, hexagon socket head bolts) and 3 spacers (outer dia. = 27.2, inner dia. = 21.6, height = 20) (Photo 25).
11. Screw the plugs with nylon seals (11), (14) onto the drain port on the gear case (8) side (Photo 26).

PHOTO 25

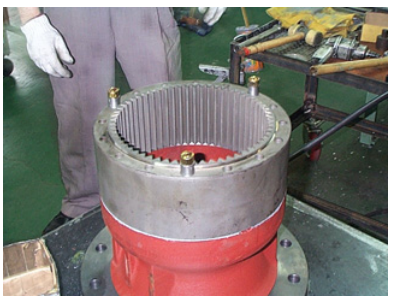

PHOTO 26

https://truckmanualshub.com/

2. Assembling the Swing Reduction Gears

1. Place the case subassembly (1-4) on the jig.
2. Use the lifting taps (M10, 2 locations) on the planetary carrier No. 2 (29) to lift and place the carrier No. 2 subassembly (1-2) with a crane on the case subassembly (1-4) (See Photo 27). Rotating the carrier a little will facilitate the assembly.
3. Insert the sun gear No. 2 (5) (Photo 28).

PHOTO 27

PHOTO 28

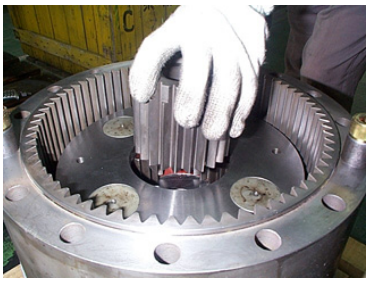

4. Insert the thrust plate (2) into the sun gear No.2 (5) on the end surface (Photo 29).
5. Insert the carrier No. 1 subassembly (1-1) (Photo 30).

PHOTO 29

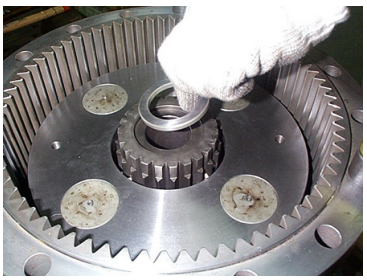

PHOTO 30

6. Watch the upward/downward orientation and insert the sun gear No. 1 (1) carefully (Photo 31).

PHOTO 31

https://truckmanualshub.com/

7. Make sure that the distance between the end surface of the sun gear No.1 (1) and the ring gear (6) is 1.04 to 3.70 mm [i.e. (1) is lower than (6)] (Photo 32). If the distance falls short of reaching 1.04 mm:
   - Gear shaft (20) and the roller bearing (16) are dislocated.
   - The roller bearing (9) is not inserted completely.
   - Foreign substances are engaged.

   If the distance is larger than 3.70 mm:
   - The wire (18) is not installed properly.
   - The ring gear (6) is not completely tightened into the gear case (8).
   - Foreign substances are engaged.

   Consider the above and conduct disassembly/assembly again (Photo 32).
8. Remove the jig bolts and spacers used during the assembly of the case subassembly (1-4). Degrease the end surface of the ring gear (6) and apply a uniform coat of liquid packing (KTF0086 ThreeBond 1215) (22) (Photo 33).

PHOTO 32

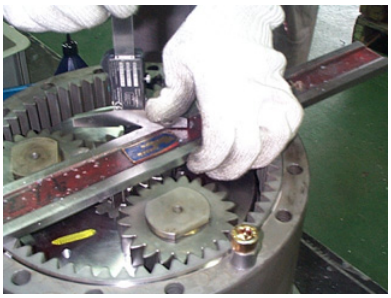

PHOTO 33

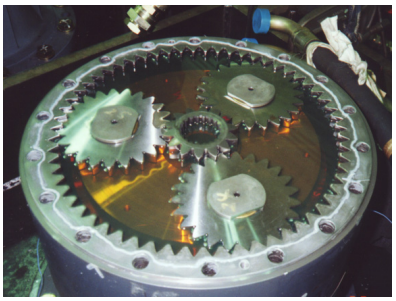

9. Install the swing motor. Then degrease the thread of the hexagon socket head bolts M20x200 (23) first, and apply liquid packing (KSC0188:ThreeBond 1360K) (24). Tighten 12 locations by applying the torque of 568.4 to 649.7 N·m (Photo 34 and Photo 35).

PHOTO 34

PHOTO 35

10. Refill 6 liters of gear oil (Viscosity Grade: GL-4 or higher).

https://truckmanualshub.com/

Disassembling Instructions

1. Disassembling the swing reduction gears

The procedures in this section are basically the reverse of those described in *2. Assembling the Swing Reduction Gears*. Refer to 2*. Assembling the Swing Reduction Gears* (Page 6/10) for the disassembly of swing reduction gear.

1. Remove the plug with nylon seal (11) and drain the gear oil.
2. Remove all hexagon socket head bolts (M20 x200) (23) (Photo 35).
3. Use a crane to gradually lift and remove the swing motor.
4. Remove the sun gear No. 1 (1) and the carrier No. 1 subassembly (1-1) (Photo 31 and Photo 30).
5. Use the lifting taps (M10, 2 locations) on planetary carrier No. 2 (29) to slowly lift and remove the carrier No. 2 subassembly (1-2) (Photo 27).
6. Remove the sun gear No. 2 (5), which is remaining on the shaft.

2. Disassembling the carrier No. 1 subassembly

The disassembly of this component is not possible due to the fact that it is crimped.

3. Disassembling the carrier No. 2 subassembly

1. Use the jig and press the spring pin (33) (10x40) securely into the planetary carrier No. 2 (29). Use caution and avoid applying excessive force to prevent the planetary carrier No. 2 (29) pin hole bore from getting damaged.
2. Gently tap through the casting hole at the bottom of planetary carrier No. 2 (29) and remove the planetary pin No. 2 (31). Use caution to prevent the planetary gear No. 2 (30) and the side plate No. 2 (32) from falling off.
3. Draw out the spring pin (33) through the spring pin hole of planetary pin No. 2 (31). If it is necessary to use a vise on the planetary pin No. 2 (31), use cloth, etc. to avoid damage to the pin.
4. Repeat Steps (1) through (3) on the four locations.

4. Disassembling the case subassembly

1. Turn over the case subassembly.
2. Remove the wire (18).
3. Use the lifting tap holes (M16, 2 locations) on the gear shaft (20) end and draw out the shaft subassembly (1-3).

5. Disassembling the shaft subassembly

The component is not intended for disassembly.

https://truckmanualshub.com/

Reduction Gear Swing Assembly Drawing

PART NAME	SYM	QTY
SUN GEAR No. 1	1	1
THRUST PLATE	2	1
PLANETARY CARRIER No. 1 ASSY	3	1
PLANETARY CARRIER No. 2 ASSY	4	1
SUN GEAR No. 2	5	1
RING GEAR	6	1
KNOCK PIN	7	4
GEAR CASE	8	1
ROLLER BEARING	9	1
PIPE SPACER	10	1
PLUG(WITH NYLON SEAL)	11	1
OIL SEAL	12	1
LIQUID PACKING	13	NEED
PLUG(WITH NYLON SEAL)	14	2
PIPE SPACER	15	1
ROLLER BEARING	16	1
BEARING COVER	17	1
SPECIAL WIRE	18	1
PIPE SPACER	19	1
GEAR SHAFT	20	1
GREASE(LITHIUM, NO. 2)	21	kg 1.2
LIQUID PACKING	22	NEED
HEX SOC HD BOLT M20X200	23	12
LIQUID PACKING	24	NEED

NOTES

1) COAT THE THREAD WITH LIQUID GASKET(THREEBOND 1360K) AND FASTENED BY TIGHTENING TORQUE.
2) PAINT FLUID PACKING-THREEBOND 1215 ON THREE COMBINED SURFACES.
3) PAINT THREE BOND 1208B ON FIXING PART OF OIL SEAL&SEAL RETAINER.
4) AFTER LUBRICATE THE GREASE ㉑(LITHIUM GREASE) TO SEAL-LIP⑫, THEN, ASSEMBLE IT USING GUIDE TO INSERT.
5) ROLLOR BEARING⑯IS FORCE FITED TO GEAR SHAFT ⑳, AFTER LUBRICATE GREASE ㉑ INSEDE BY TILT OUTER LING.
6) LUBRICATE GREASE ㉑(LITHIUM GREASE), 1200g(AMOUNT OF NOTES 5 AND 6) ABOUT HATCHING AREA IN DWG AFTER ASSEMBLE ⑮⑯⑳.
7) LUBRICATE LITHIUM GREASE㉑ON THE INNER SURFACES OF GEAR CASE ⑧ (GREASE ROOM AND THE SURFACE CONTACTED WITH ROLLER BEARING⑯).
8) SEE THAT ※ CLEARANCE IS LESS THAN 2+1.3mm AFTER FINISHING ASSEM. WITH ROTATING SUN GEAR SYM. ① BY HAND-OPERATED WAY, CHECK THE GEAR ROTATE SMOOTHLY AND DOESN'T GENERATE FOREIGN SOUND.

KSC0252Z-C00

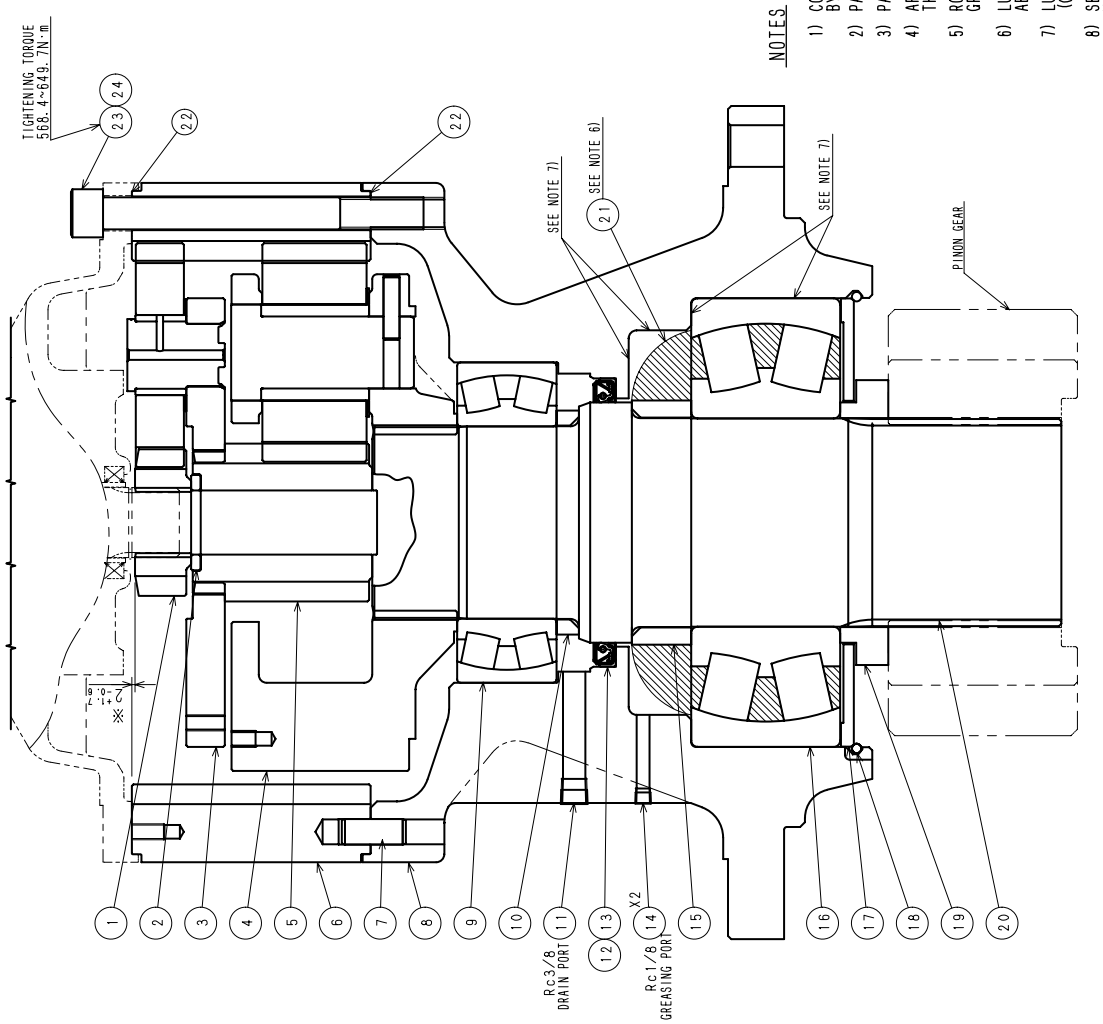

https://truckmanualshub.com/

Planetary Carrier No.1 Assembly Drawing

PART NAME	SYM	QTY
PLANETARY CARRIER No.1	25	1
PLANETARY GEAR No.1	26	3
PLANETARY PIN No.1	27	3
SIDE PLATE No.1	28	3

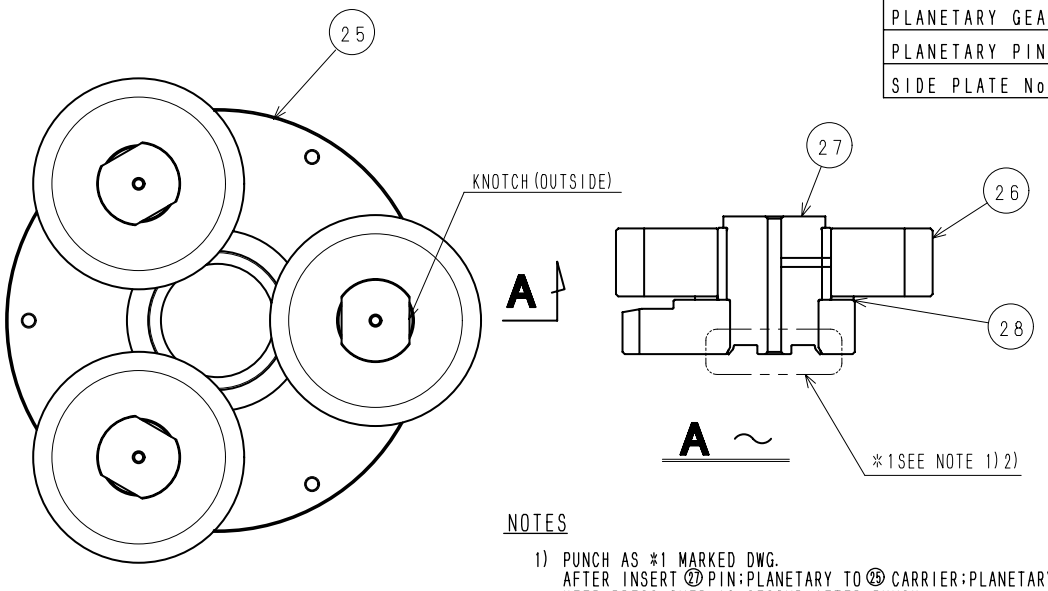

NOTES

1) PUNCH AS *1 MARKED DWG.
AFTER INSERT ㉗ PIN;PLANETARY TO ㉕ CARRIER;PLANETARY.
KEEP PRESS OVER 10 SECOND AFTER PUNCH.
2) FREE FROM HARMFULL LAP & BURR AFTER PUNCH.

KSC0245X-B00

Planetary Crarrier No.2 Assembly Drawing

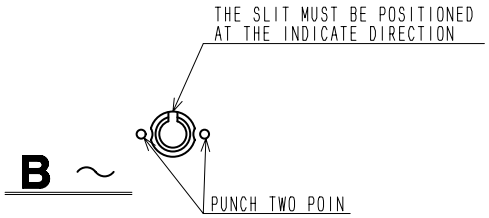

PART NAME	SYM	QTY
PLANETARY CARRIER No.2	29	1
PLANETARY GEAR No.2	30	4
PLANETARY PIN No.2	31	4
SIDE PLATE No.2	32	4
SPRING PIN 10X40	33	4

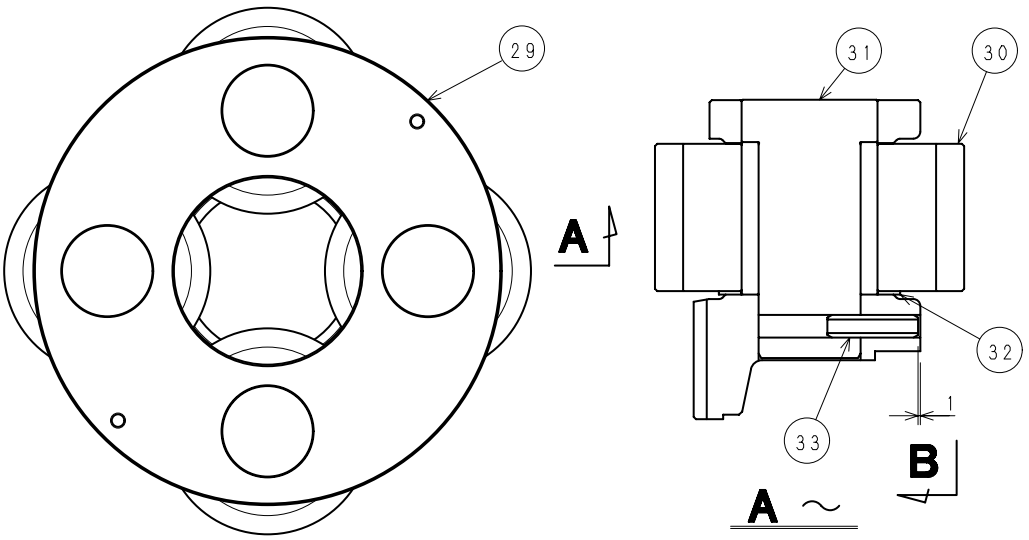

KSC0246X-B00

https://truckmanualshub.com/

Maintenance Instructions

Disassembly

1. Disassembly Precautions

1. Stop the engine after the pressure in the actuator has been released. Otherwise, it is very dangerous because highly pressurized oil may erupt or parts may abruptly pop out. When the valves are partially disassembled while they are still attached to the main body, the following special precaution should be taken:

   If disassembly of the short cap assembly is attempted with insufficient pressure release or the bucket not firmly placed on the ground, the poppet will pop out and the bucket will drop at the same time, which causes a very dangerous situation. Therefore, place the bucket firmly on the ground and release pressure completely before disassembling.
2. Release air pressure in the tank.
3. Clean well areas neighboring the location to be disassembled and take caution to prevent foreign substances from entering into the valves while disassembling.
4. Put tags on the disassembled parts to easily identify the assembly locations.
5. Replace all disassembled seals (O-rings, backup rings) with new ones.
6. Do not change spools because they are selectively matched with their valve housings.

2. Disassembly Procedure (See the *Service Parts List* for reference numbers.)

2-1. Disassembling the main spool section

1. Loosen and remove the socket head bolts (74: 2 locations for each section, width across flats, 8) on the caps (8: 8 locations) and caps (9: 2 locations).
2. As necessary, loosen and remove the plug assembly (73: width across flats, 6) and plug (91: width across flats, 19).
3. Remove O-ring (7: one location for each section) from the valve housings (1), (13).
4. Pull out each spool from the valve housing as a subassembly.

※
1. Be careful not to cause any dents or scratches while pulling out the spool.
2. Place tags on each spool to easily identify the locations when assembling.

5. Loosen and remove the socket head bolts (74: 2 locations for each section, width across flats, 8) on the caps (10: 3 locations) and caps (12: 7 locations).
6. As necessary, loosen and remove the plug assembly (73: width across flats, 6).
7. Remove O-rings (7: one location for each section) from the valve housings (1), (13).
8. Disassemble the spool assembly

※
1. Use blocks (see the drawing above) to fasten the spool between them with a vise in order to avoid damage to the periphery of the spool.
2. Use an industrial dryer and heat spool peripheral to break down the adhesive, which is applied around the threaded part of the spool end.
3. The heating temperature should be 200 to 250°C. Heat until the spool end becomes loose enough to remove immediately after heating.
4. If overheated, replace the spring with a new one.

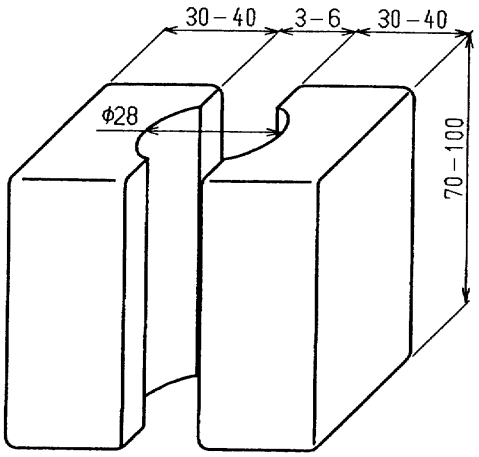

SPOOL DISASSEMBLY/ASSEMBLY BLOCKS

https://truckmanualshub.com/

a. Loosen the spool ends (width across flats, 8) in the spool assemblies (2 to 6), (14 to 17) to disassemble the spring seats and springs.

b. Poppets, springs and plugs are integrated into the spool within the assemblies (3), (14). Do not disassemble them unless it is necessary.

   If it is necessary to disassemble them, heat the spool peripheral and break down the adhesive around the threaded section to remove the plug.

   When assembling, always replace O-rings and backup rings with new ones.

2-2. Disassembling the arm 1 parallel tandem spool section

1. Loosen and remove the socket head bolts (78: width across flats, 5) on the cap (18).
2. Remove O-ring (23) from the cap (18).
3. Pull out the spool (19) from the valve housing as a subassembly.
4. Disassemble the spool assembly

※
1. Use blocks (see the drawing on the previous page) to fasten the spool between them with a vise in order to avoid damage to the periphery of the spool.
2. Use an industrial dryer and heat spool peripheral to break down the adhesive, which is applied around the threaded part of the spool end.
3. The heating temperature should be 200 to 250°C. Heat until the spool end becomes loose enough to remove immediately after heating.
4. If overheated, replace the spring with a new one.

a. Loosen the spool end (22: width across flats, 5) in the spool (19) and disassemble the spring seats (20) and spring (21).

https://truckmanualshub.com/

2-3. Disassembling the arm regenerative relief valve (for a subassembly contained in the assembly, it is expressed as assembly No. – subassembly No.)

1. Danger! Parts can pop out due to unreleased internal pressure when removing plugs.
2. Loosen plugs slowly and make sure that there is no resistance due to unreleased pressure. Then, start disassembling.

1. Loosen and remove the plug (24: width across flats, 32), and then, remove O-ring (25).
2. Pull out spring (26) and spool (27-1) from the sleeve (27-2).
3. Pull out the sleeve (27-2) from the valve housing.
4. Remove the piston (27-3), O-ring (30) and backup ring (31) from the sleeve (27-2).

2-4. Disassembling the load check valve section

1. Danger! Parts can pop out due to unreleased internal pressure when removing plugs.
2. Loosen plugs slowly and make sure that there is no resistance due to unreleased pressure. Then, start disassembling.

1. Loosen and remove the socket head bolts (75: 4 locations for each section, width across flats, 8) on the flanges (37: 8 locations).
2. Remove the spring (35), poppet (34) [poppet (51)] and O-ring (36) from the valve housing.

NOTE: Please note that there is no poppet or spring in the straight travel valve section (Section H-H).

3. Loosen and remove the socket head bolts (75: width across flats, 8) on the flanges (52: 2 locations).
4. Remove the spacer (53) from the valve housing and remove the O-ring (54) and backup ring (55) from the spacer (53).
5. Remove the spring (35) and poppet (34) from the valve housing.
6. Loosen and remove the plug (72: width across flats, 8). (Section C-C)
7. Remove the spring (33) and poppet (32) from the valve housing.
8. Loosen and remove the plug (72: width across flats, 8). (Section L-L)
9. Remove the spacer (57), spring (33) and poppet (32) from the valve housing.
10. Loosen and remove the plug (92: width across flats, 36). (Section G-G)
11. Loosen and remove the socket head bolts (96: 4 locations, width across flats, 8) on the flange (43).
12. Remove the spring (45), poppet (44) and O-ring (36) from the valve housing.
13. Loosen and remove the plug (46: width across flats, 27) and O-ring (47).
14. Remove the spring (48) and poppet (49) from the valve housing.

https://truckmanualshub.com/

2-5. Disassembling the anti-drift valve section (for a subassembly contained in the assembly, it is expressed as assembly No. – subassembly No.)

1. Danger! Parts such as seals can pop out due to unreleased internal pressure when removing anti-drift valve assemblies.
2. Loosen socket head bolts slowly and make sure that there is no resistance due to unreleased pressure. Then, start disassembling.

1. Loosen and remove the socket head bolts (76: 4 locations for each section, width across flats, 8) on the anti-drift valve assembly (67: 2 locations).
2. Remove the O-rings (41), (42) from the valve housing, and remove the O-ring (40-4) from the spacer assembly.
3. Screw the socket head bolt (78: M6 x 1) into the spacer and remove the space assembly (40) from the valve housing.
4. Remove the O-ring (40-2) and backup ring (40-3).
5. Remove the spring (39) and poppet (38) from the valve housing.
6. Disassemble the anti-drift assembly

1. Danger! Parts can pop out due to unreleased internal pressure when internal parts of the anti-drift valve are disassembled while the valve is attached to the valve housing.
2. Loosen the plug assembly (67-14) and plug (67-3) slowly and make sure that there is no resistance due to unreleased pressure. Then, start disassembling.

a. Loosen and remove the plug assembly (67-14: width across flats, 38) and remove the O-ring.
b. Remove the piston (67-4), spool (67-5) and spring (67-7).
c. Loosen and remove the plug (67-3: width across flats, 38) and remove the O-ring (67-13).
d. Remove the sleeve (67-6) and poppet (67-2) from the body, and remove the O-rings (67-9 and 10) and backup rings (67-11 and 12) on the sleeve peripheral.
e. Take out the spring seat (67-16) and spring (67-8) from the bottom of the hole.
f. As necessary, loosen and remove the plug assembly (67-15: width across flats, 5).

NOTE: Do not disassemble the steel balls (67-17) because they are press-fitted into the body.

2-6. Disassembling the relief valve

1. Loosen and remove the plug on the main body mounting section when removing the relief valve.
2. Do not loosen the plug or lock nut for adjusting the set pressure.
3. Danger! If the plug for adjusting the set pressure rotates, the set pressure changes.

1. Loosen and remove the overload relief valves (69: 6 locations, width across flats, 32).
2. Loosen and remove the main relief valve (68: width across flats, 32).
3. Loosen and remove the relief valve assembly (70: 2 locations, width across flats, 32) and remove the O-rings (70-5 and 6).

https://truckmanualshub.com/

2-7. Disassembling the auxiliary section

1. Loosen and remove the socket head bolts (75: width across flats, 8) on the cap (88: 2 locations) and remove the O-ring (89).
2. Loosen and remove the plug assembly (87: 2 locations, width across flats, 24) and remove the O-ring and backup ring.

2-8. Disassembling other plugs

1. Loosen and remove the plug assembly (60: width across flats, 27) and remove the O-ring. (Section J-J)
2. Loosen and remove the plug (61: width across flats, 22) and remove the O-ring (62). (Section K-K)
3. Loosen and remove the orifice plug (63: width across flats, 5). (Section A1-A1)
4. Loosen and remove the plug assembly (92: width across flats, 36) and remove the O-ring.
5. Loosen and remove the plug assembly (72: width across flats, 8) and remove the O-ring.
6. Loosen and remove the plug assembly (73: width across flats, 6) and remove the O-ring.

2-9. Disassembling the valve housing uniting bolt

※
1. Do not disassemble the uniting bolt (77) unless it is necessary.
2. If disassembly is necessary, the work should be carried out by placing the main body on a level workbench.
3. Prepare replacement O-rings (65 and 66).

1. Loosen and remove the socket head bolts (77: 8 locations, width across flats, 14). Remove the washers (81: 8 locations).
2. Remove the O-rings (65), (66) on the mating faces of the valve housing.

Cleaning

Clean all disassembled parts completely with clean mineral oil.

Dry them with compressed air and place each part on a clean paper or vinyl sheet for inspection.

Inspection

Inspect all surfaces of each part for burrs, scratches, dents or other damage.

1. Check for scratches or cuts on the surface of the load check sheet in the valve housing and make sure there are no dents, dirt or rust. If scratches are small, remove them with an oilstone.
2. Ensure that there are no scratches, dents or other damage on spool peripheral. If scratches are small, remove them with an oilstone.
3. All sliding parts should move smoothly.
   Additionally, there should be no foreign substances in any grooves or passages.
4. Any broken, extremely deformed or worn springs should be replaced with new ones.
5. If the relief valve malfunctions, inspect it following the maintenance instructions in *Relief Valve*.
6. All O-rings and backup rings attached to the disassembled parts should be replaced with new ones.
7. Make sure that there are no remaining paint pieces around holes on the body and plug seats. (Paint pieces inside the valve can cause engagement and blockage and lead to malfunctions and oil leakage.)

Assembly

1. Assembly Precautions

1-1. Precautions for handling O-rings

1. Do not use O-rings that have been deformed/defective or damaged while handling.
2. For sufficient lubrication, apply grease or hydraulic oil to O-rings and O-ring fitting surfaces to facilitate smooth attachment.
3. Do not expand O-rings to the extent that they deform permanently.
4. When inserting O-rings, do not place them by rolling. (Distorted O-rings cannot be recovered by themselves after insertion, and this could cause oil leakage.)

1-2. Precautions for handling spools

1. Always observe specified torque. Applying excessive torque to threaded parts can cause spool malfunctions.
2. Be careful that each spool, spring and spool end are installed exactly the same way as before disassembly.

1-3. How to apply adhesive (male and female sections of the part where adhesion is necessary)

1. Cleaning (degreasing)
   Clean by vapor degreasing using acetate or ether or clean with alkali washing agent.
2. Drying
   Dry the adhesion surfaces by blowing clean air or natural drying.
   Insufficient drying lowers adhesive effects.
3. Primer application
   Lightly spray a hardening accelerator, “Loctite Primer T” onto the adhesive surfaces and leave for at least 3 to 5 minutes to dry.
4. Applying adhesive
   Apply a small portion of adhesive (Loctite No. 271 or equivalent) to 2 or 3 threads of the entry part in the spool female screw.
   At this time, be careful to mount it so that the applied part does not touch the spring sheet.

https://truckmanualshub.com/

2. Subassembly Assembly Procedure

※ Prior to assembly, check the number of each part, its installation location, necessary tools and other necessary information.

2-1. Assembling the spool assembly (main spool)

1. Apply adhesive to the threaded part of spools (2 to 6), (14 to 17), and install spring sheets, springs and spool ends.
2. Hold the spool between the blocks (used in the disassembly procedure) and fasten them with a vise and tighten the spool end with specified torque. Torque value: 20 to 22 N·m.

※
1. Do not apply too much adhesive. Be careful not to allow the adhesive to enter the inside of the parts.
2. Do not apply torque exceeding specified value. Doing so may cause poor spool operation.
3. Pay special attention. Two types of springs are used.

2-2. Assembling the arm 1 parallel tandem spool assembly

1. Apply adhesive to the threaded part of the spool (19) and install the spring sheet (20), spring (21) and spool end (22).
2. Hold the spool between the blocks (used in the disassembly procedure) and fasten them with a vise and tighten the spool end with specified torque. Torque value: 19 to 22 N·m.

※
1. Do not apply too much adhesive. Be careful not to allow the adhesive to enter the inside of the parts.
2. Do not apply torque exceeding specified value. Doing so may cause poor spool operation.

2-3. Assembling the anti-drift valve assembly

1. Install the O-rings (67-9 and10) and backup rings (67-11 and 12) onto the peripheral grooves of the sleeve (67-6).

※
1. Pay attention to the installing positions of the O-ring and backup ring.
2. Reversed positions can cause O-ring breakage and lead to a larger natural drop of the actuator.

2. Insert the poppet (67-2) and spool (67-5) into the sleeve hole.
3. Install the spring sheet (67-16) in the smaller diameter part of the poppet end, and place the spring (67-8) on them. Insert them all together with a sleeve into the body (67-1).

Apply grease to the seat before installing so that the spring and spring sheet can be firmly placed on the seat.

4. Install the spring (67-7) and piston (67-4) onto the plug (67-3).
5. Fasten the plug assembly (67-14) attached with O-ring onto the plug (67-3). Torque value: 147 to 157 N·m.
6. Fasten the plug (67-3) attached with O-ring (67-13) onto the body (67-1). Torque value: 147 to 157 N·m.
7. Fasten the plug assembly (67-15) attached with O-ring onto the body (67-1). Torque value: 14 to 18 N·m.

https://truckmanualshub.com/

3. Control Valve Main Body Assembly Procedure

3-1. Assembling the relief valve

※
1. Always fasten the plug on the main body mounting section when installing relief valves.
2. Do not fasten the plug and lock nut for adjusting the set pressure.
3. Danger! If the plug for adjusting the set pressure rotates, the set pressure changes.

1. Screw and fasten the main relief valve (68). Torque value: 78 to 88 N·m.
2. Screw and fasten the overload relief valves (69: 6 locations) into each section. Torque value: 78 to 88 N·m.
3. Screw and fasten the relief valve assembly (70: 2 locations) attached with O-rings. Torque value: 103 to 113 N·m.

3-2. Assembling the load check valve

1. Attach O-rings (36) to Arm 1 and 2 (Section D - D), Boom 1 and 2 (Section E - E), Swing and Bucket (Section F - F) sections, and install the poppet (34) and spring (35) onto them.
   Place the flange (37) and fasten with socket head bolts (75). Torque value: 58 to 64 N·m.
2. Attach O-ring (36) to Travel section (Section H - H), and install the poppet (51) and spring (35) onto it.
   Place the flange (37) and fasten with socket head bolts (75). Torque value: 58 to 64 N·m.
3. Attach O-ring (36) to Straight Travel section (Section H - H), and fasten the flange (37) with socket head bolts (75). Torque value: 58 to 64 N·m.
4. Install the poppet (34) and spring (35) to Common section (Section I - I), and insert the spacer (53) attached with O-ring (54) and backup ring (55).
   Fasten the flange (52) with socket head bolts (75). Torque value: 39 to 44 N·m.

※
1. Pay attention to the installing positions of the O-ring and backup ring.
2. Reversed positions can cause O-ring breakage and lead to an external oil leakage.

5. Attach O-ring to the backup section (Section G - G) and install the poppet (44) and spring (45).
   Place the flange (43) and fasten them with socket head bolts (96). Torque value: 58 to 64 N·m.
   Screw and fasten the plug assembly (92) attached with O-ring. Torque value: 205 to 227 N·m.
6. Install the poppet (49) and spring (48) onto Travel section (Section G - G).
   Screw and fasten the plug (46) attached with O-ring (47). Torque value: 107 to 117 N·m.
7. Install the poppet (32) and spring (33) onto Arm 1 parallel tandem section (Section C - C).
   Screw and fasten the plug assembly (72) attached with O-ring. Torque value: 73 to 79 N·m.
8. Install the poppet (32), spring (33) and spacer (57) onto Arm 2 parallel tandem section (Section L - L).
   Screw and fasten the plug assembly (72) attached with O-ring. Torque value: 73 to 79 N·m.

https://truckmanualshub.com/

3-3. Assembling the anti-drift valve

1. Place O-rings (41), (42) onto the fitting surfaces on the anti-drift valve assemblies of Arm 1 section (Section D - D) and Boom 1 section (Section E - E).
2. Assemble the poppet (38) and spring (39) and install the spacer assembly (40) attached with O-ring and backup ring.

※
1. Pay attention to the installing positions of the O-ring and backup ring.
2. Reversed positions can cause O-ring breakage and lead to an external oil leakage.
3. Make sure that O-ring (40-4) is attached onto the spacer assembly and it is installed in the correct direction.

3. Install the anti-drift valve assemblies (67: 2 locations) and fasten them with socket head bolts (76). Torque value: 39 to 44 N·m.

3-4. Assembling the auxiliary section

1. Install the caps (88: 2 locations) attached with O-ring (89) and fasten them with socket head bolts (75). Torque value: 58 to 64 N·m.
2. Screw and fasten the plug assemblies (87: 2 locations) attached with O-ring and backup ring. Torque value: 78 to 88 N·m.

3-5. Assembling the arm regenerative relief valve

1. Install the O-rings (30) and backup rings (31: 2 locations) onto the sleeve (28).
2. Install the piston (29) and spool (27) onto the sleeve and insert them into the valve housing.
3. Place the spring (26) inside the plug (24) attached with O-ring (25) and screw and fasten them into the valve housing. Torque value: 103 to 113 N·m.

3-6. Assembling the arm 1 parallel tandem spool

1. Install the spool (19) as a subassembly into the valve housing.

※ After inserting the spool, make sure that there is no roughness or sticking by sliding the spool.

2. Place the cap (18) attached with O-ring (23) and fasten them with socket head bolts (78). Torque value: 8.8 to 10.8 N·m.

https://truckmanualshub.com/

3-7. Assembling the main spool

1. Install the O-rings (7: 20 locations) on the cap mating surfaces of the valve housing.
2. Install the spool assemblies (2 to 6), (14 to 17) as a subassembly into the same position before disassembly.

> ※
> 1. Install the spool slowly with its direction aligned straight to the hole.
> 2. After inserting spool, make sure that there is no roughness or sticking by sliding the spool.
> 3. If the spool is inserted when there is roughness or sticking, the spool can malfunction.

3. Install the caps (10: 3 locations) and caps (12: 7 locations) and fasten them with socket head bolts (74). Torque value: 39 to 44 N·m.
4. Install the caps (8: 8 locations) and caps (9: 2 locations) and fasten them with socket head bolts (74). Torque value: 39 to 44 N·m.

> ※ The caps (9), (10) have to be installed in specific directions.

5. Screw and fasten the plug assembly (73) attached with O-ring onto the long caps of Boom 2 (Section E - E) and Straight Travel (Section H – H) sections. Torque value: 19 to 22 N·m.
6. Screw and fasten the plug assembly (73) attached with O-ring onto the short caps of Backup (Section G - G) and Straight Travel (Section H – H) sections. Torque value: 19 to 22 N·m.
7. Screw and fasten the plug (91) attached with O-ring onto the long cap of Backup (Section G - G) section. Torque value: 19 to 22 N·m.

> ※
> 1. Be careful and do not apply excessive torque when fastening the cap onto the plug.
> 2. Excessive torque may destroy the threaded part of the cap.

3-8. Assembling other plugs

1. Screw and fasten the plug assembly (60) attached with O-ring. Torque value: 103 - 113 N·m.
2. Screw and fasten the plug (61) attached with O-ring (62). Torque value: 39 to 44 N·m.
3. Screw and fasten the orifice plug (63). Torque value: 14 to 18 N·m.
4. Screw and fasten the plug assembly (92) attached with O-ring. Torque value: 205 to 227 N·m.
5. Screw and fasten the plug assembly (72) attached with O-ring. Torque value: 73 to 79 N·m.

https://truckmanualshub.com/

Relief Valve

1. Instructions for Disassembling and Assembling the Relief Valve

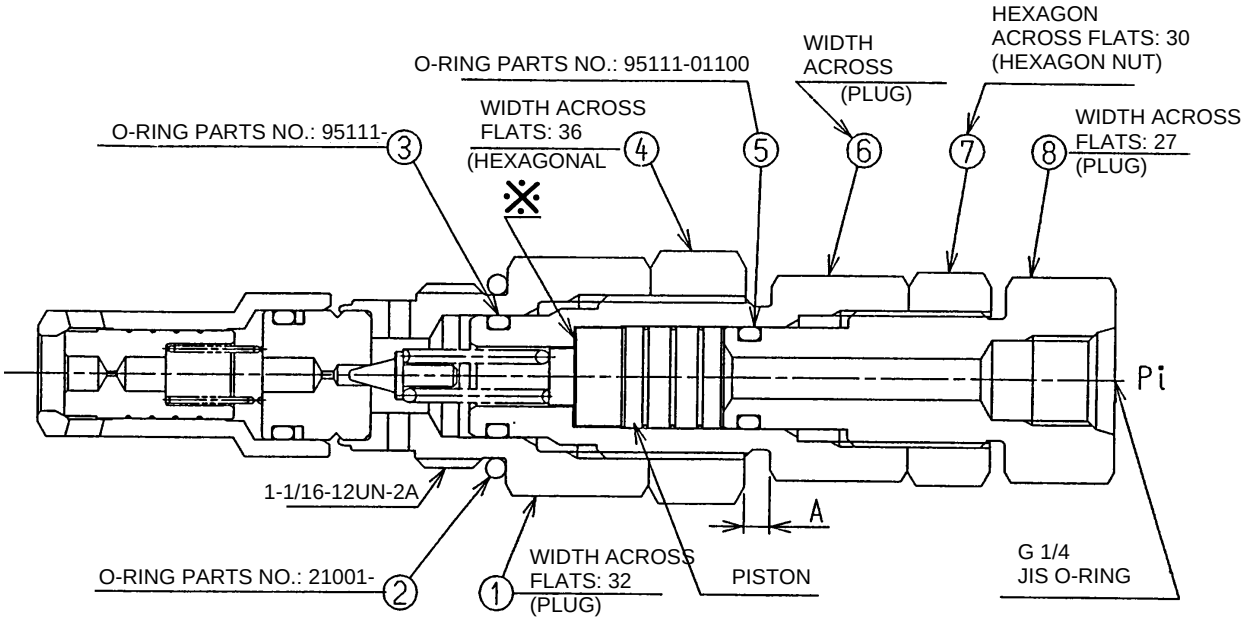

A. Disassembly

This product has to be replaced as an assembly.

When replacing, loosen the plug (1: width across flats, 32) with spanners, and remove O-ring (2).

If oil leakage from the nut (4) is found, loosen the nut (4) and plug (1) and replace O-ring (3).

If oil leakage from the nut (7) is found, loosen the nut (7) and plug (8) and replace O-ring (5).

B. Assembly

Make sure that there are no dirt and paint pieces around the threaded part of the plugs (1, 6 and 8) and nuts (4 and 7) before installing new O-rings.

Also clean the relief valve fitting section sufficiently. Then, install the relief valve and fasten the plug (1: width across flats: 32). Torque value: 78 to 88 N·m.

If the adjuster kit was disassembled, adjust the pressure following the instructions in section *4. Adjusting the relief valve*.

※ The specified tightening torque values are all for under wet conditions (with hydraulic oil applied).

https://truckmanualshub.com/

2. Instructions for Disassembling and Assembling the Overload Relief Valve

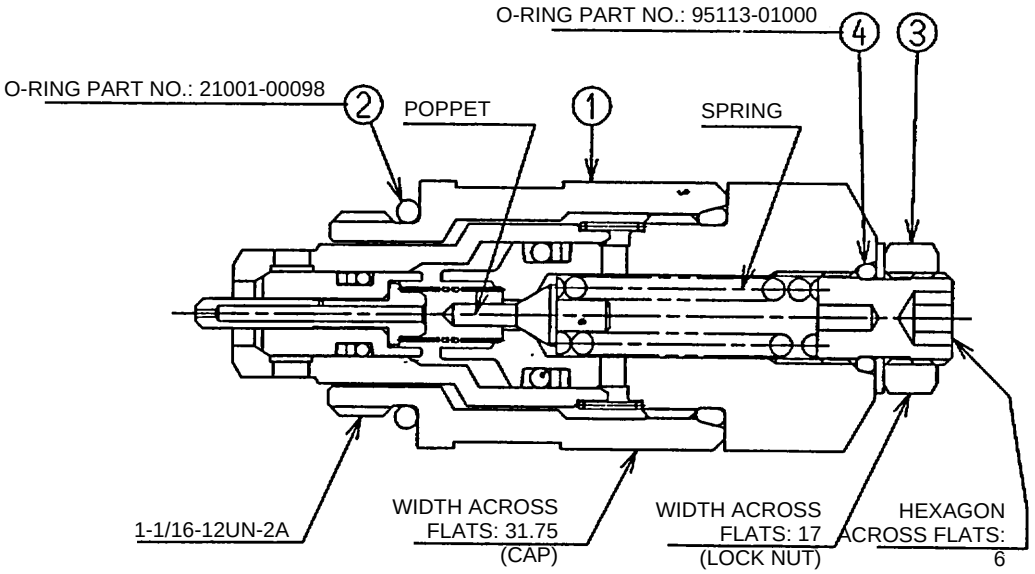

A. Disassembly

This product has to be replaced as an assembly.

When replacing, loosen the cap (1: width across flats, 31.75) with spanners and remove O-ring (2).

If oil leakage from the adjuster kit section (3) is found, loosen the adjuster kit to replace O-ring (4).

※ When disassembling the adjuster kit, pay attention to parts popping out caused by the spring and/or the poppet being misplaced.

B. Assembly

Make sure that there are no dirt and paint pieces around the threaded part of the cap (1) before installing new O-rings (2).

Also clean sufficiently the relief valve attaching section on the valve housing. Then, install the relief valve and fasten the cap (1: width across flats: 31.75). Torque value: 78 to 88 N·m.

If the adjuster kit was disassembled, adjust the pressure following the instructions in section *4 Adjusting relief valve* after cleaning sufficiently around the threaded section.

※ The specified tightening torque values are all for under wet conditions (with hydraulic oil applied).

https://truckmanualshub.com/

3. Instructions for Disassembling and Assembling the Low Pressure Relief Valve

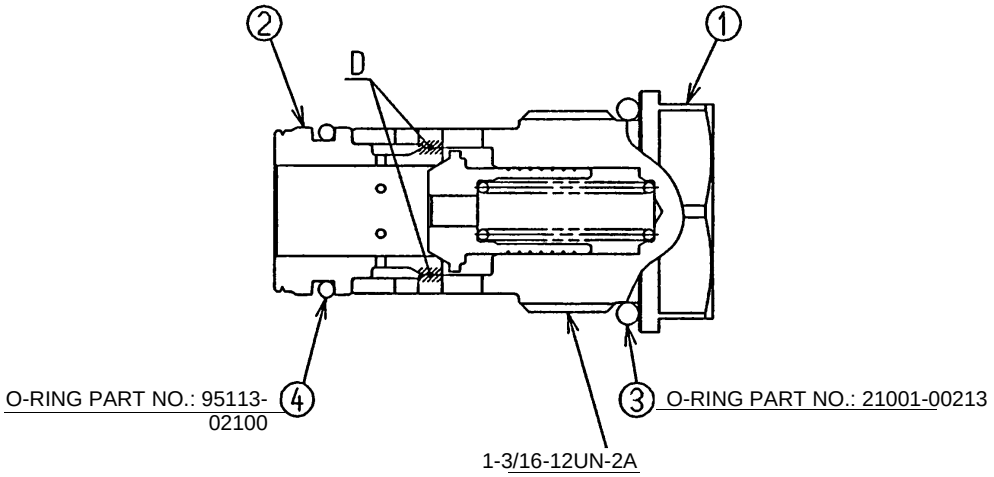

A. Disassembly

This product should be replaced as an assembly because it is press-fit at Section D. Do not try to disassemble.

B. Assembly

- Make sure that there are no dirt and paint pieces around the threaded part of the plug (1) before installing new O-ring (3).
- Install new O-ring (4) onto the sleeve (2).
- Clean sufficiently the relief-valve-attaching-section on the valve housing. Then, fasten the plug (1) (width across flats: 32) of the relief valve assembly. Torque value: 103 to 113 N·m.

※ The specified tightening torque values are all for under wet conditions (with hydraulic oil applied).

https://truckmanualshub.com/

4. Adjusting the Relief Valves

4-1. Main relief valve

1. Attach an accurate pressure gauge to the entry circuit.
2. Run the pump at rated revolutions.
3. Switch over the spool in the control valve. Read the value on the pressure gauge when the cylinder is at the end of the stroke.

> ※ Change the spool over for the actuator whose set pressure on the overload relief valve is higher than the set pressure on the main relief valve.

4. High pressure setting (one-step) (See the drawing on Page 11/32.)
   a. Tighten the plug (8) until the piston hits the end face of the plug (6) (marked with *). During this procedure, tightening torque for plug (8) should be no greater than 19.6 N·m. Ensure that the plug (6) will not be rotated when tightening the plug (8) (A dimension: 4 mm or greater).
   b. Tighten the plug (6) under the conditions of step (a) and adjust the pressure. (Tighten the plug (11) slowly observing the pressure gauge: 28.4 MPa of pressure increase per a turn of the plug.)
   After setting the pressure, lock the plug with hexagonal nut (4).
5. Low pressure setting (two-step)
   Loosen the plug (8) under the conditions described in *4. High pressure setting* and adjust the pressure.
   (When the plug (8) is loosened, the piston moves to the right in the drawing, the spring load decreases: 21.3 MPa of pressure decrease per a turn of the plug.)
   After setting the pressure, lock the plug with hexagon nut (7).
6. Once again, by increasing the pressure, make sure that the specified pressure is gained.

4-2. Overload relief valve

> ※ If the set pressure on the overload relief valve is higher than one on the main relief valve, do not adjust the overload relief valve. Replace it with a preset relief valve as an assembly.

1. Switch over the spool in the control valve. Read the value on the pressure gauge when the cylinder is at the end of the stroke.
2. Turn the adjuster clockwise until the required pressure is obtained.
   Reference no. 69, 6 locations in total: 21.2 MPa of pressure increase per a turn of the adjuster.
3. When the specified pressure is reached, press the adjuster to prevent its turning and tighten the lock nut.
   Torque value: 27.5 to 31.4 N·m.
4. Once again, by increasing the pressure, make sure that the specified pressure is gained.

https://truckmanualshub.com/

Installation

1. Ensure that piping does not give any extra external load on the valve.
2. Tighten all the mounting bolts uniformly.
3. Welding should not be carried out too close to the valve. Otherwise, the seals can be damaged by excessive heat or spatter.
4. To prevent dirt from entering, keep the curing materials on until the piping is conducted.

Operation

1. Before operating the machine, ensure that the hydraulic circuit and hydraulic oil are clean.
2. For oil, use hydraulic fluid designed for oil pressure whose aniline point is between 82 and 113°C.
3. Do not increase the relief valve pressure more than the specified set pressure.
4. The set pressure difference between main relief valve and overload relief valve should be 2.0 MPa or more.
5. Idle the machine sufficiently before starting the work.

   In particular, in order to prevent sticking caused by spool's heat shocks, it is necessary to take the following precautions to start operating the machine when the temperatures of the hydraulic oil and valve are low:
   - Avoid a sudden continuous operation on the main relief valve and overload relief valve. Attempt to increase the temperatures in each section uniformly by operating the machine to allow the hydraulic oil to circulate in each actuator.
   - Fine operation or combined operation may cause partial heat in each orifice section. Do not perform these operations suddenly when it is cold.

https://truckmanualshub.com/

Troubleshooting

Control valve in general

Problems	Possible causes	Countermeasures
Spool does not move.	1. Oil temperature has abnormally risen.	Remove any part causing resistance to oil flow in piping.
	2. Dirty hydraulic oil	Change oil and clean circuit at the same time.
	3. Over-tightening of piping port joints	Check torque.
	4. Deformed valve housing by incorrect mounting	Loosen mounting bolts and check their condition.
	5. Pressure is too high.	Check pressure by placing a pressure gauge between pump and cylinder port.
	6. Deformed spool	Replace valve as an assembly.
	7. Damaged return spring	Replace damaged parts.
	8. Dislocated spring or cap	Loosen cap first, and then center and retighten it.
	9. Temperature is not uniform inside the valve.	Warm up entire circuit.
	10. Valve is blocked with dirt.	Eliminate dirt (flushing).
	11. Lack of pilot pressure	Check pilot valve and pilot relief pressure.
Load cannot be held.	1. Oil leakage from cylinder	Check seals in cylinder for damage.
	2. Oil bypasses spool.	Check spool for damage.
	3. Oil leakage from overload relief valve	Clean valve housing seats and relief valve seats.
	4. Oil leakage from anti-drift valve	Disassemble anti-drift valve and clean seat section in each part. If damage is found in seat section, replace poppet or apply lapping to poppet together with the section. If any abnormality is found on anti-drift valve, replace spool and sleeve at the same time because they are press-fit.
Load drops when switching spool from neutral to raised position.	1. Load check valve is blocked with dirt.	Disassemble and clean check valve.
	2. Damage on poppet or seats in the check valve	Replace poppet or apply lapping to poppet and seats.

https://truckmanualshub.com/

Relief valve

Problems	Possible causes	Countermeasures
Pressure does not rise at all.	1. Main poppet, sleeve or pilot poppet sticks and keeps open, or seats in valve are blocked with dirt.	Replace relief valve.
Unstable relief pressure	1. Seats in pilot poppet are damaged.	
	2. Piston or main poppet sticks.	
Incorrect relief pressure	1. Wear in seats due to dirt	
	2. Looseness in lock nut and adjuster	Reset pressure and tighten lock nut to specified torque.
Oil leakage	1. Damage on relief valve seats	Replace relief valve.
	2. Each part sticks due to dirt.	
	3. Worn O-rings	Replace O-rings for adjuster or in mounting section.

Hydraulic system in general

Problems	Possible causes	Countermeasures
Hydraulic system malfunctions or does not operate at all.	1. Faulty pump	Check pressure or replace pump.
	2. Faulty relief valve	Replace relief valve.
	3. Faulty cylinder	Repair or replace it.
	4. High load pressure on pump	Check circuit pressure.
	5. Cracks on the valve	Replace valve as an assembly.
	6. Spool does not move with a complete stroke.	Check spool for its movement.
	7. Oil level in tank is too low.	Refill hydraulic oil.
	8. Filter blockage in circuit	Clean or change filter.
	9. Restricted circuit piping	Check piping.

https://truckmanualshub.com/

Parts List

Item No.	Part Name	Qty.
1	Valve housing	1
2	Spool assembly (Arm 2)	1
3	Spool assembly (Boom 1)	1
4	Spool assembly (Bucket)	1
5	Spool assembly (Travel)	2
6	Spool assembly (Straight travel)	1
7	O-ring	20
8	Cap	8
9	Cap	2
10	Cap	3
11	Number not used	-
12	Cap	7
13	Valve housing	1
14	Spool assembly (Arm 1)	1
15	Spool assembly (Boom 2)	1
16	Spool assembly (Swing)	1
17	Spool assembly (Backup)	1
18	Cap	1
19	Spool	1
20	Spring seat	2
21	Spring	1
22	Spool end	1
23	O-ring	1
24	Plug	1
25	O-ring	1
26	Spring	1
27	Spool assembly	1
28	Number not used	-
29	Number not used	-
30	O-ring	1
31	Backup ring	2
32	Poppet	2
33	Spring	2
34	Poppet	8
35	Spring	9
36	O-ring	9
37	Flange	8
38	Poppet	2
39	Spring	2

Item No.	Part Name	Qty.
40	Spacer assembly	2
41	O-ring	2
42	O-ring	2
43	Flange	1
44	Poppet	1
45	Spring	1
46	Plug	1
47	O-ring	1
48	Spring	1
49	Poppet	1
50	Steel ball	1
51	Poppet	1
52	Flange	2
53	Spacer	2
54	O-ring	2
55	Backup ring	2
56	Number not used	-
57	Spacer	1
58	Number not used	-
59	Number not used	-
60	Plug assembly	1
61	Plug	1
62	O-ring	1
63	Orifice plug	1
64	O-ring	1
65	O-ring	14
66	O-ring	7
67	Anti-drift valve assembly	2
68	Relief valve kit	1
69	Relief valve kit	6
70	Relief valve assembly	2
71	Number not used	-
72	Plug assembly	8
73	Plug assembly	4
74	Socket-head bolt	40
75	Socket-head bolt	44
76	Socket-head bolt	8
77	Socket-head bolt	8
78	Socket-head bolt	2

https://truckmanualshub.com/

Control Valve

Item No.	Part Name	Qty.
79	Name plate	1
80	Drive screw	4
81	Washer	8
82	Number not used	-
83	Number not used	-
84	Number not used	-
85	Number not used	-
86	Number not used	-
87	Plug assembly	2
88	Cap	2
89	O-ring	2
90	Number not used	-
91	Plug	1
92	Plug assembly	2
93	Number not used	-
94	Number not used	-
95	Number not used	-
96	Socket-head bolt	4
97	Plug assembly	1

https://truckmanualshub.com/

Reference Diagram 1/3

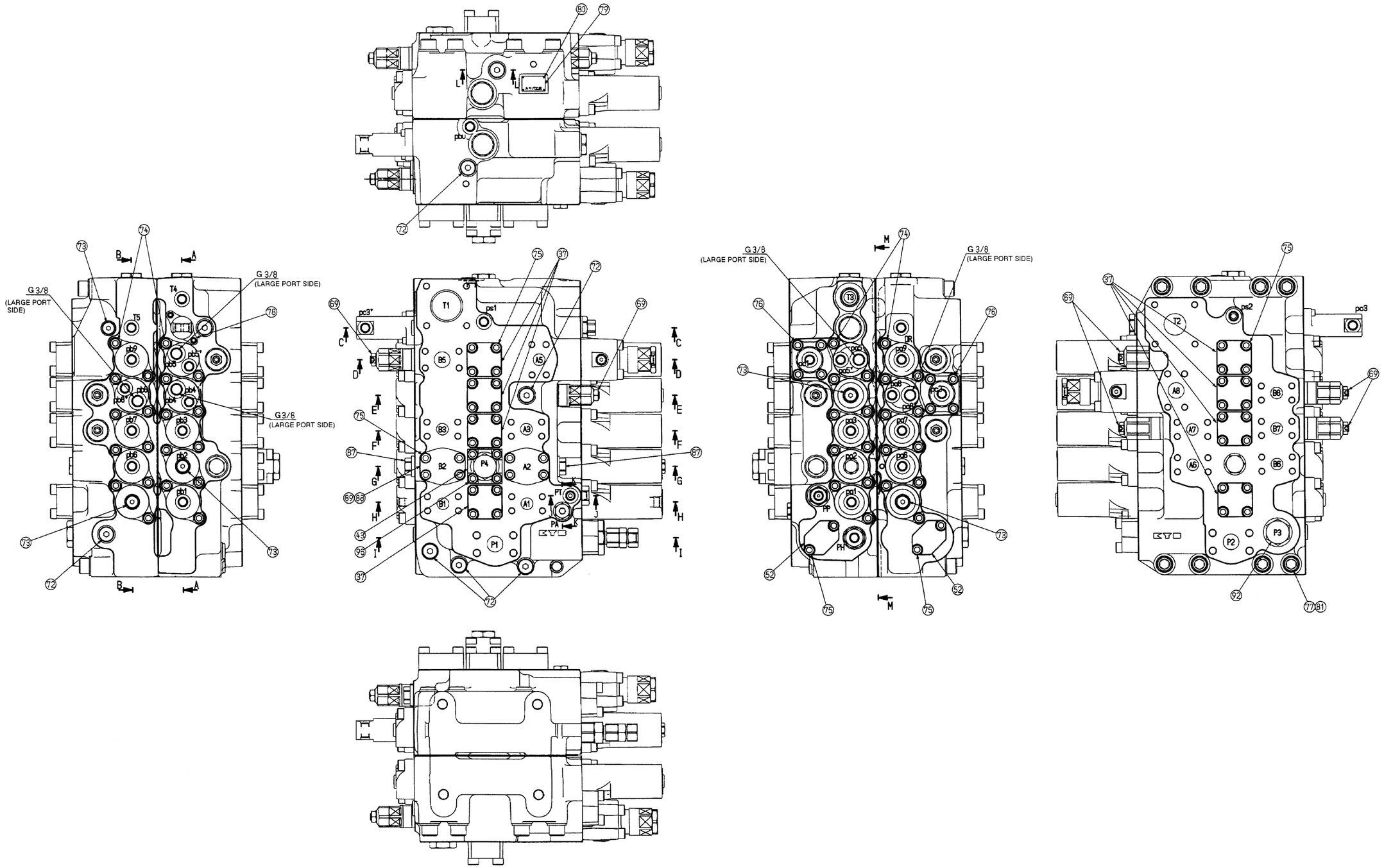

https://truckmanualshub.com/

Reference Diagram 2/3

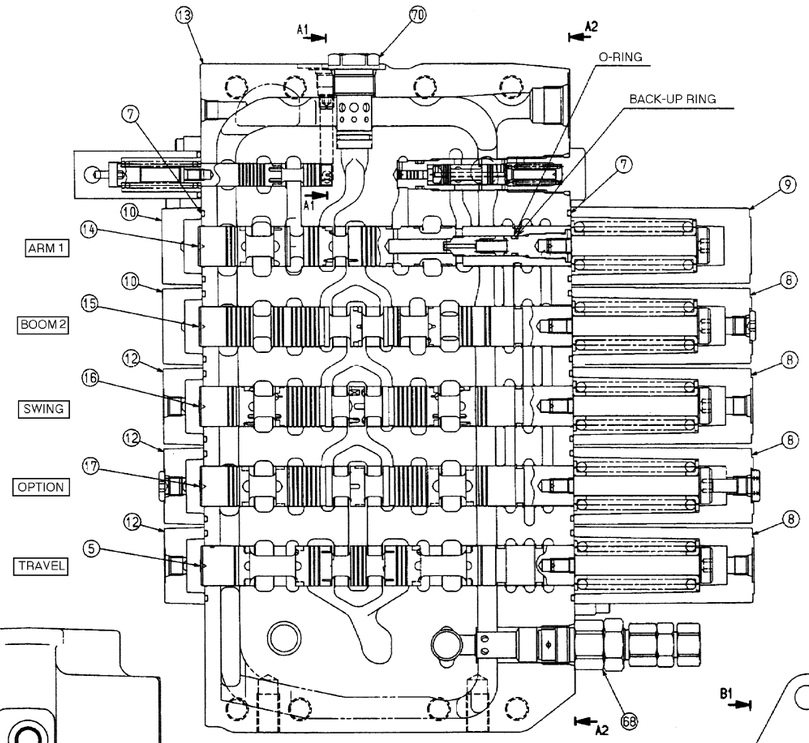

SECTION A～A

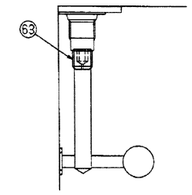

SECTION A1～A1

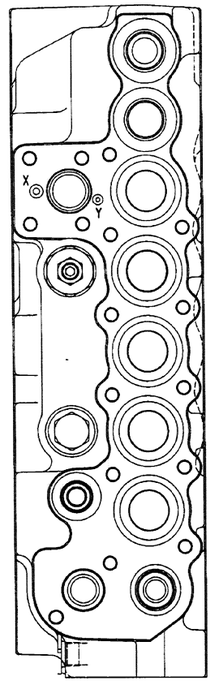

SECTION A2～A2

X (O-RING)— ㊶ (1 PLACES)
Y (O-RING)— ㊷ (1 PLACES)

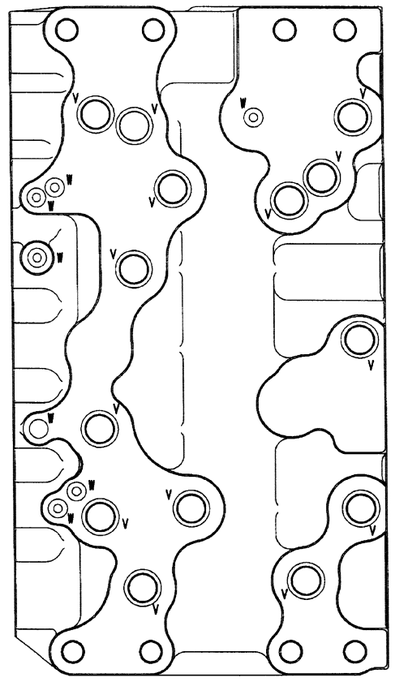

SECTION M～M

V (O-RING) — ⑥⑤ (14 PLACES)
W (O-RING) — ⑥⑥ (7 PLACES)

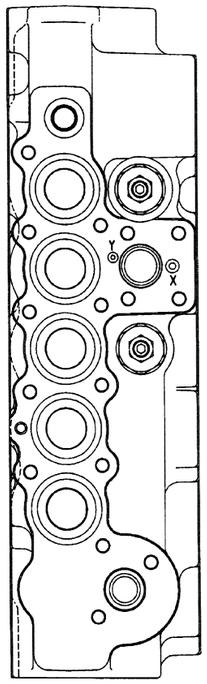

SECTION B1～B1

X (O-RING)— ㊶ (1 PLACES)
Y (O-RING)— ㊷ (1 PLACES)

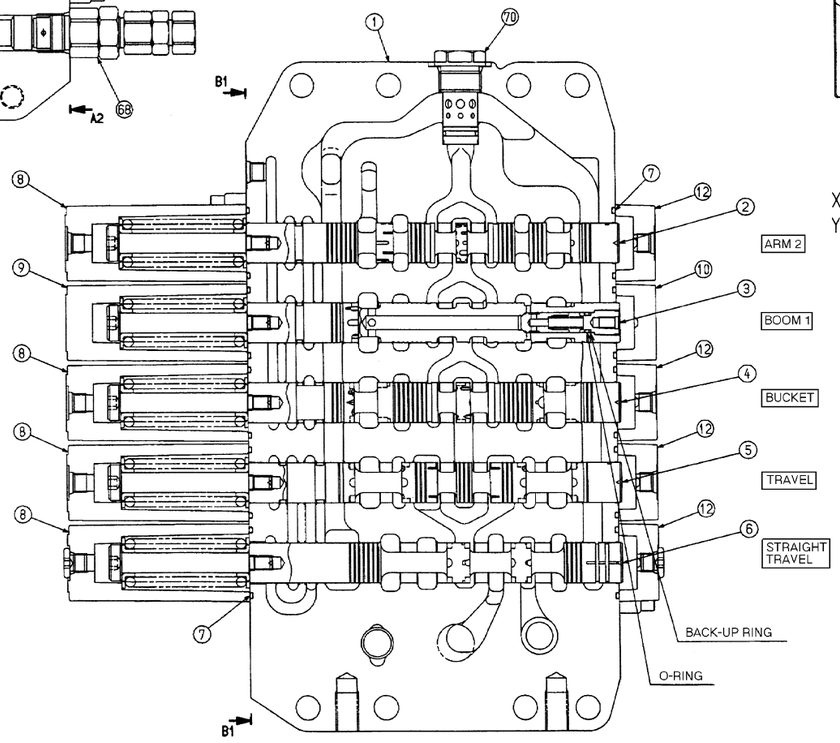

SECTION B～B

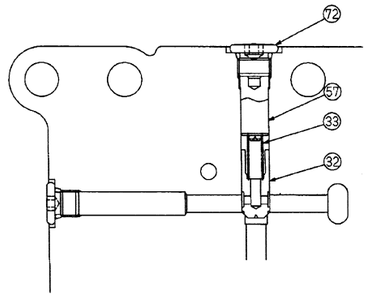

SECTION L～L

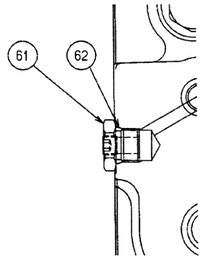

SECTION K～K

https://truckmanualshub.com/

Reference Diagram 3/3

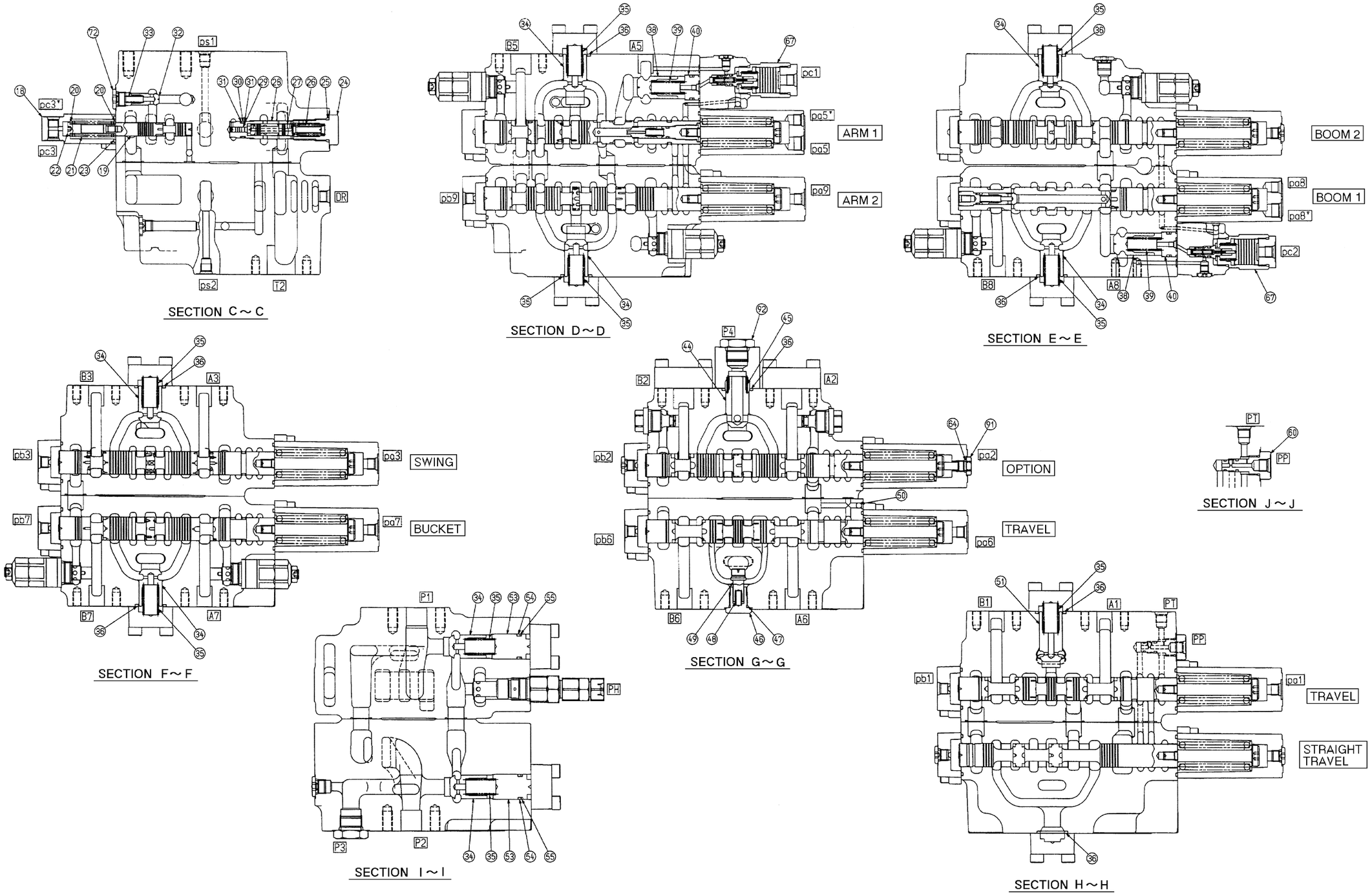

https://truckmanualshub.com/

Service Parts

REFERENCE NO. 2: SPOOL ASSEMBLY

Arm 2

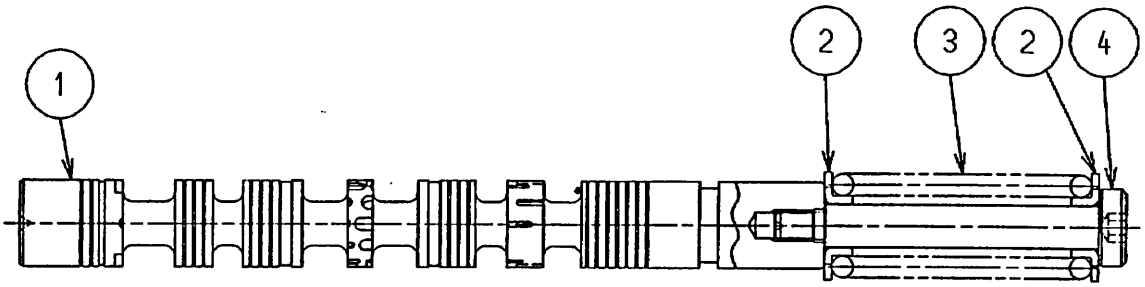

ITEM NO.	PART NAME	QTY.
1	SPOOL	1
2	SPRING SEAT	2
3	SPRING	1
4	SPOOL END	1

Reference No. 3: Spool Assembly

Boom 1

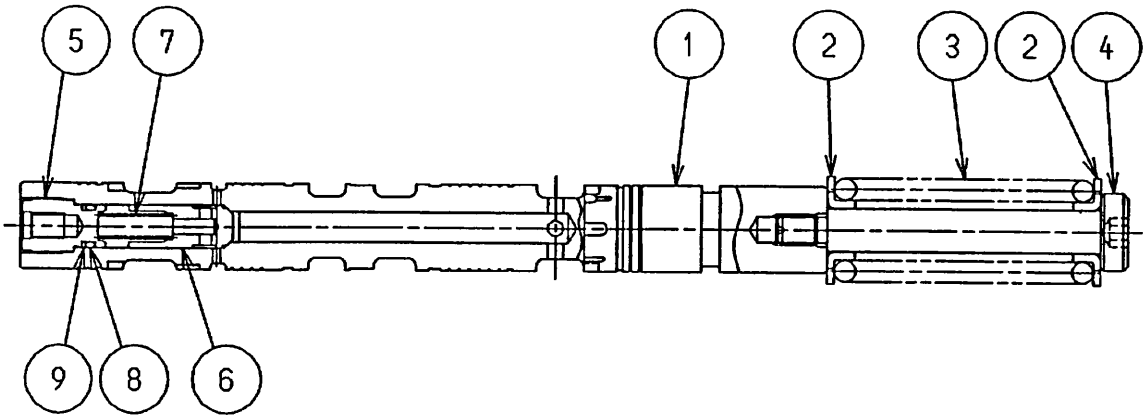

ITEM NO.	PART NAME	QTY.
1	SPOOL	1
2	SPRING SEAT	2
3	SPRING	1
4	SPOOL END	1
5	PLUG	1
6	POPPET	1
7	SPRING	1
8	O-RING	1
9	BACKUP RING	1

https://truckmanualshub.com/

Reference No. 4: Spool Assembly

BUCKET

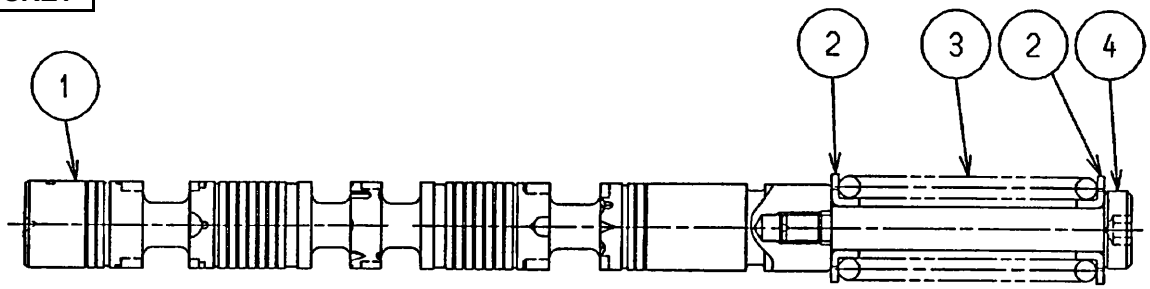

ITEM NO.	PART NAME	QTY.
1	SPOOL	1
2	SPRING SEAT	2
3	SPRING	1
4	SPOOL END	1

Reference No. 5: Spool Assembly

TRAVEL

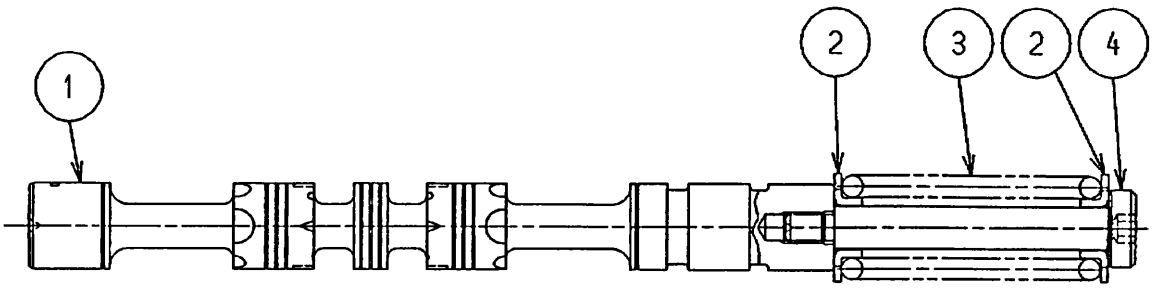

ITEM NO.	PART NAME	QTY.
1	SPOOL	1
2	SPRING SEAT	2
3	SPRING	1
4	SPOOL END	1

https://truckmanualshub.com/

Reference No. 6: Spool Assembly

STRAIGHT TRAVEL

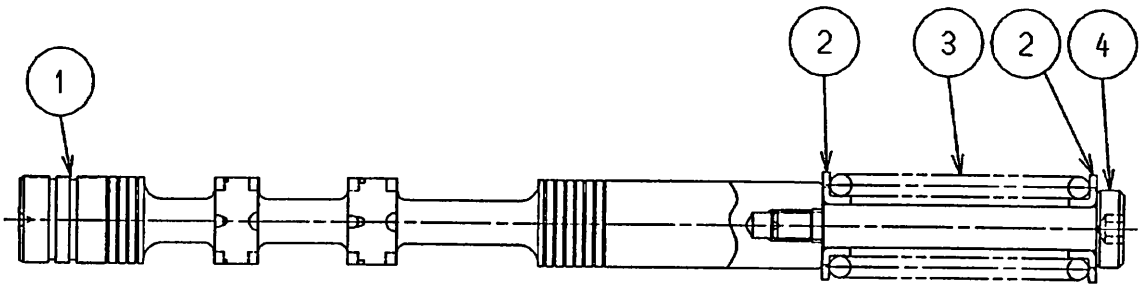

ITEM NO.	PART NAME	QTY.
1	SPOOL	1
2	SPRING SEAT	2
3	SPRING	1
4	SPOOL END	1

Reference No. 14: Spool Assembly

ARM 1

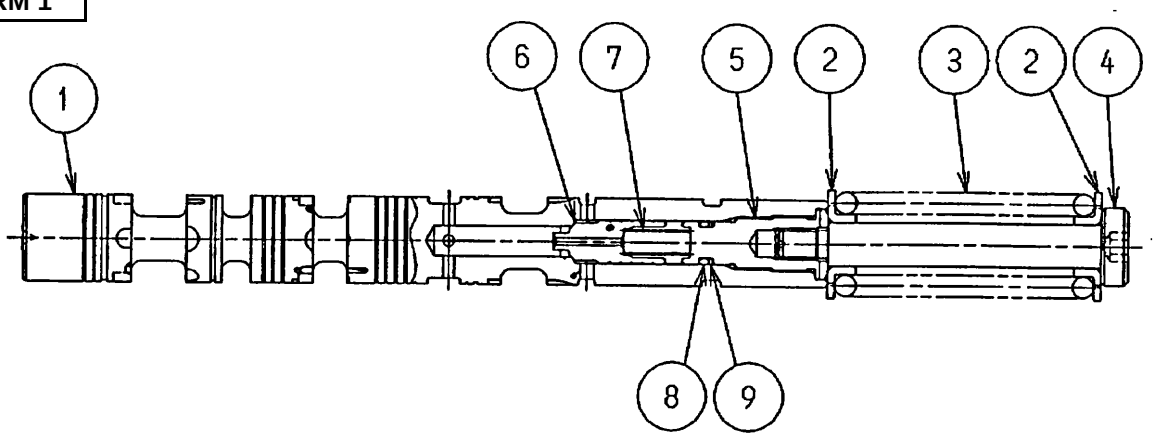

ITEM NO.	PART NAME	QTY.
1	SPOOL	1
2	SPRING SEAT	2
3	SPRING	1
4	SPOOL END	1
5	PLUG	1
6	POPPET	1
7	SPRING	1
8	O-RING	1
9	BACKUP RING	1

https://truckmanualshub.com/

Reference No. 15: Spool Assembly

BOOM 2

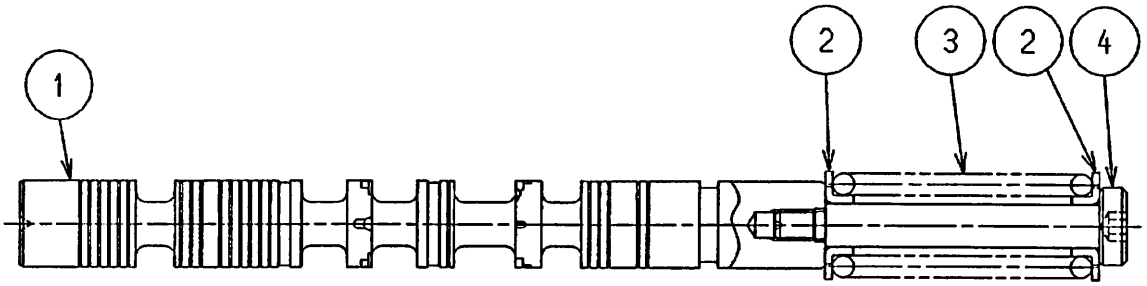

ITEM NO.	PART NAME	QTY.
1	SPOOL	1
2	SPRING SEAT	2
3	SPRING	1
4	SPOOL END	1

Reference No. 16: Spool Assembly

SWING

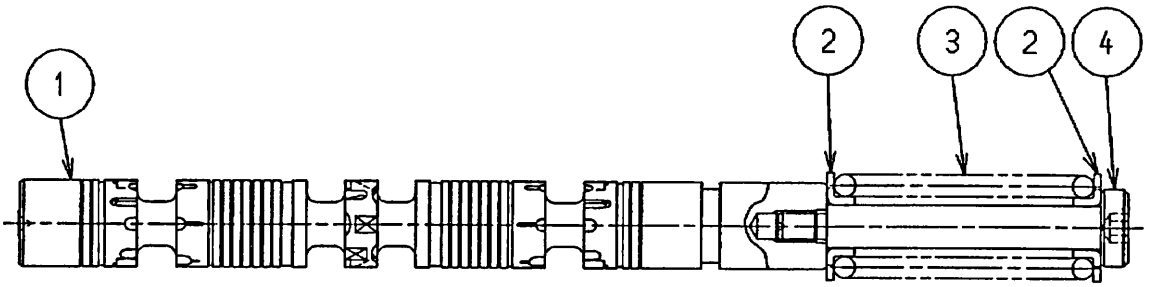

ITEM NO.	PART NAME	QTY.
1	SPOOL	1
2	SPRING SEAT	2
3	SPRING	1
4	SPOOL END	1

https://truckmanualshub.com/

Reference No. 17: Spool Assembly

BACKUP

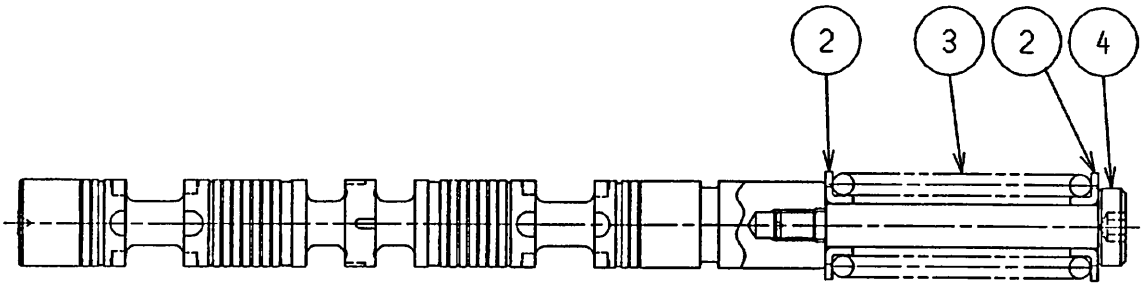

ITEM NO.	PART NAME	QTY.
1	SPOOL	1
2	SPRING SEAT	2
3	SPRING	1
4	SPOOL END	1

Reference No. 27: Spool Assembly

ARM REGENERATION

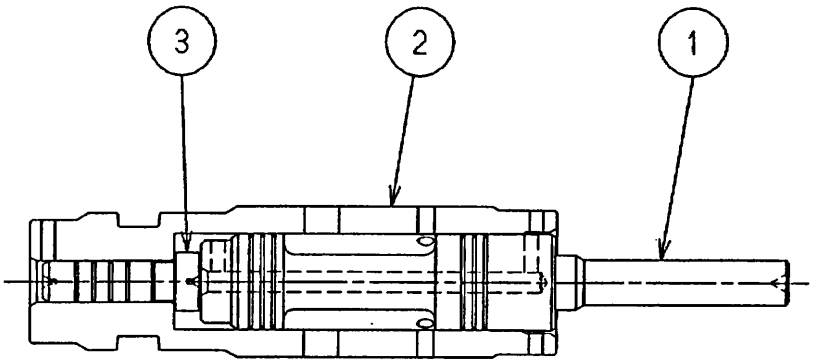

ITEM NO.	PART NAME	QTY.
1	SPOOL	1
2	SLEEVE	1
3	PISTON	1

https://truckmanualshub.com/

Reference No. 40: Spacer Assembly

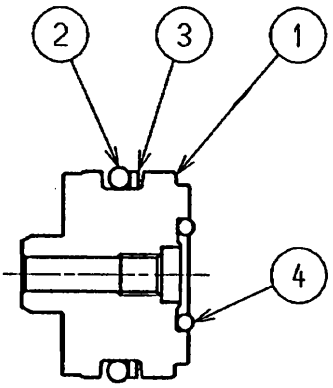

ITEM NO.	PART NAME	QTY.
1	SPACER	1
2	O-RING	1
3	BACKUP RING	1
4	O-RING	1

Reference No. 60: Plug Assembly

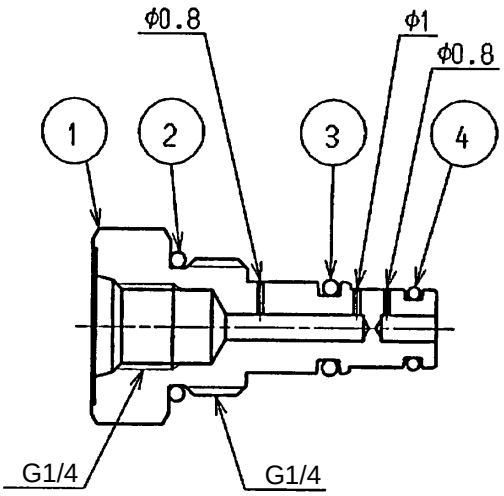

ITEM NO.	PART NAME	QTY.
1	PLUG	1
2	O-RING	1
3	O-RING	1
4	O-RING	1

https://truckmanualshub.com/

Reference No. 67: Anti-drift Valve Assembly

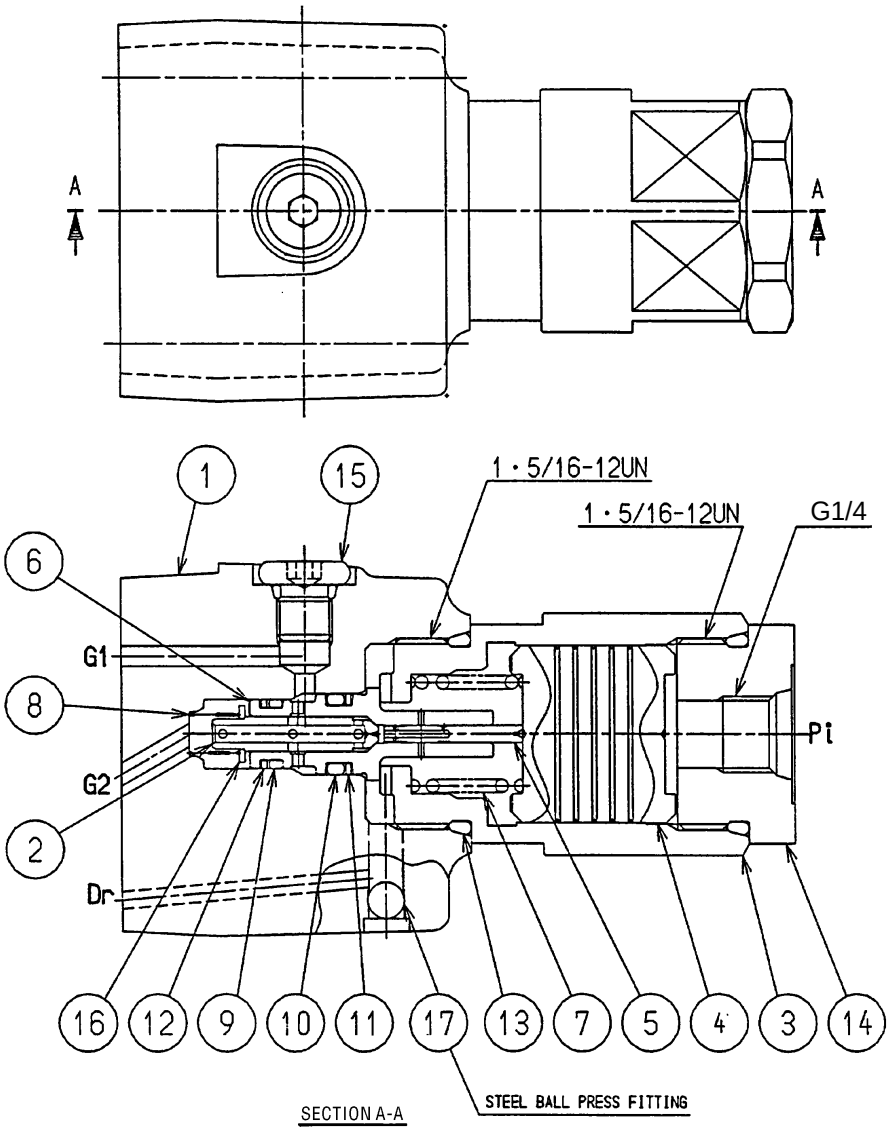

ITEM NO.	PART NAME	QTY.
1	BODY	1
2	POPPET	1
3	PLUG	1
4	PISTON	1
5	SPOOL	1
6	SLEEVE	1
7	SPRING	1
8	SPRING	1
9	O-RING	1
10	O-RING	1
11	BACKUP RING	1
12	BACKUP RING	1
13	O-RING	1
14	PLUG ASSEMBLY	1
15	PLUG ASSEMBLY	1
16	SPRING SEAT	1
17	STEEL BALL	1

https://truckmanualshub.com/

Reference No. 68: Relief Valve Kit

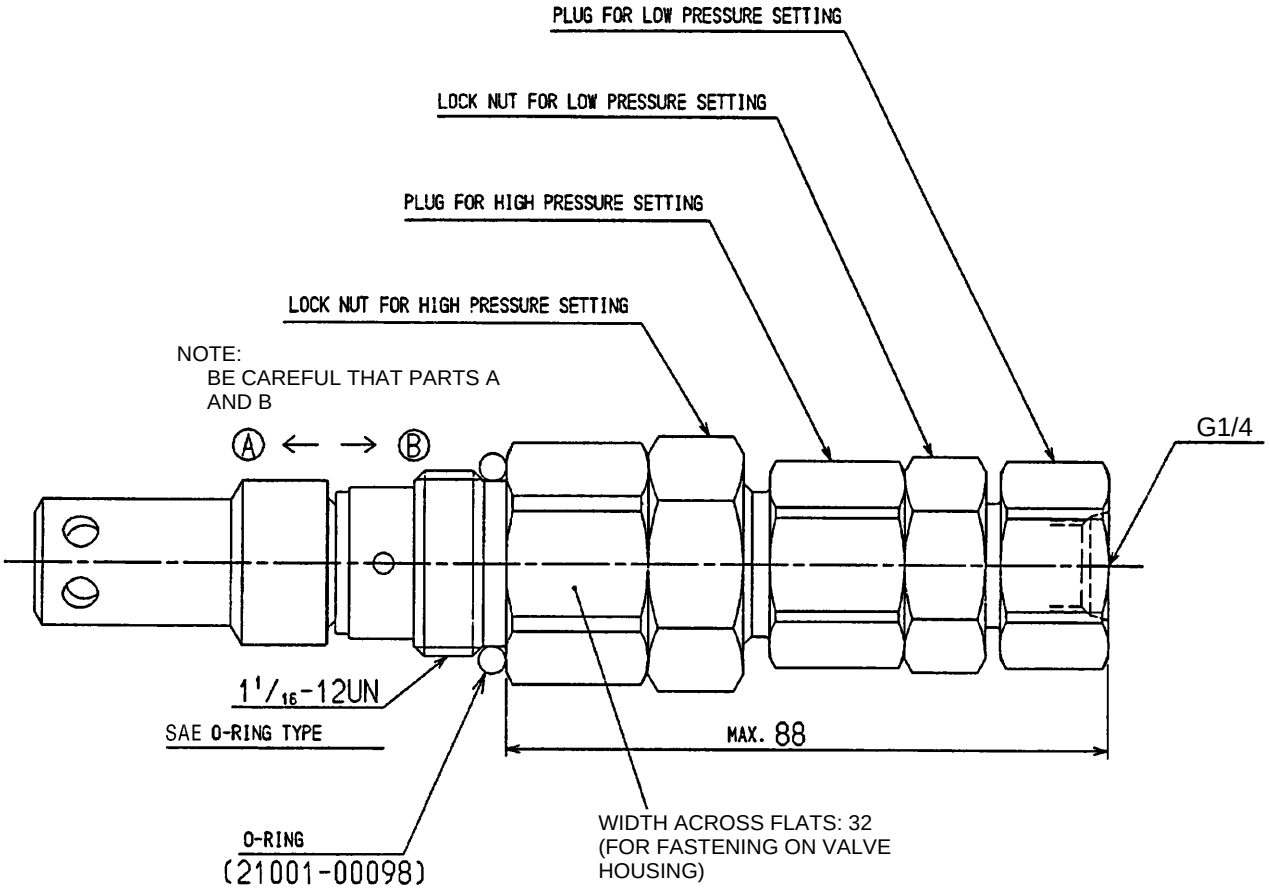

RELIEF VALVE SET PRESSURE MPa	FLOW L/min
Hi: 37.3 ± 0.5	165
Lo: 34.3 ± 0.3	190

https://truckmanualshub.com/

Reference No. 69: Relief Valve Kit

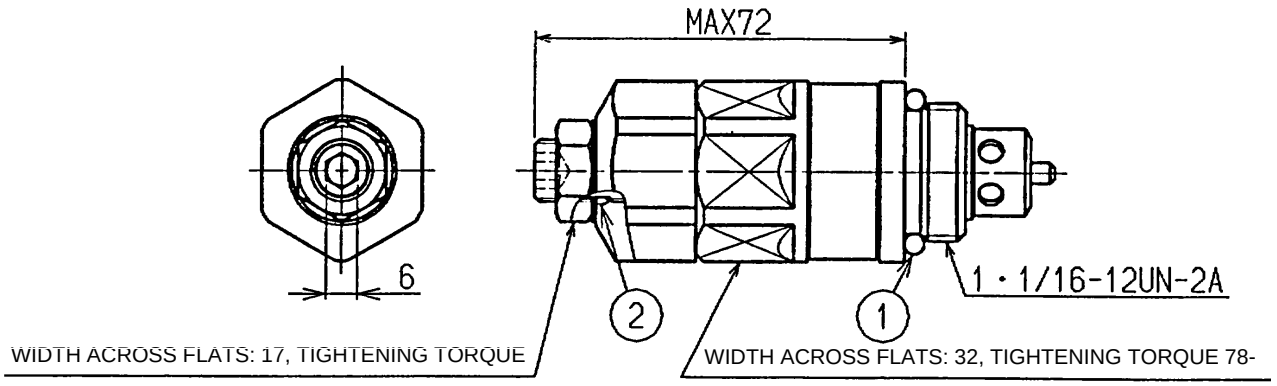

RELIEF VALVE SET PRESSURE MPa	SETTING FLOW L/min
39.2 ± 0.5	20

- PRESSURE ADJUSTMENT RANGE: 20.6 TO 39.2 MPa
- CHANGE RATE OF PRESSURE PER TURN: APPROX. 21.2 MPa (VARIABLE)

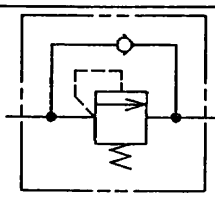

RELIEF VALVE SYMBOL

ITEM NO.	PART NAME	QTY.
1	O-RING	1

Reference No. 70: Relief Valve Assembly

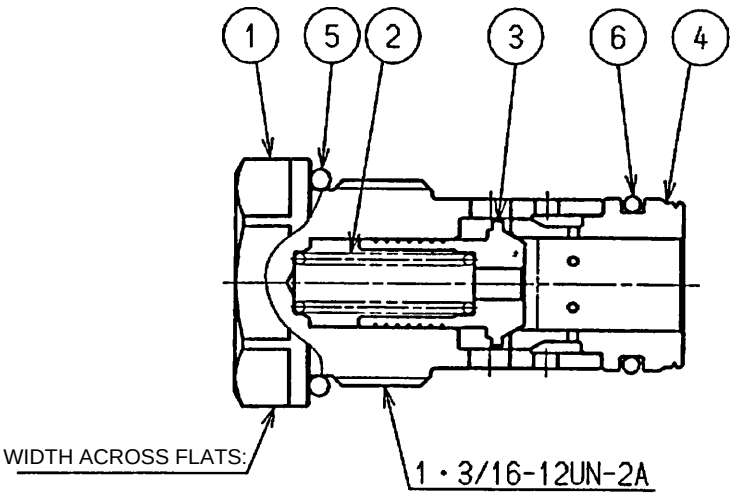

ITEM NO.	PART NAME	QTY.
1	PLUG	1
2	SPRING	1
3	POPPET	1
4	SLEEVE	1
5	O-RING	1
6	O-RING	1

https://truckmanualshub.com/

Reference No. 87: Plug Assembly

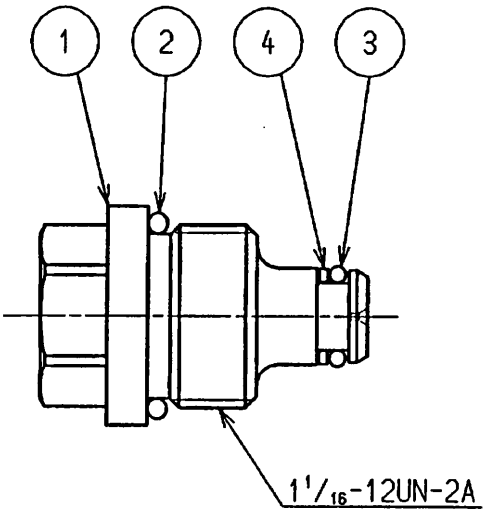

ITEM NO.	PART NAME	QTY.
1	PLUG	1
2	O-RING	1
3	O-RING	1
4	BACKUP RING	1

https://truckmanualshub.com/

	290-7-05-01-35
Cylinder	Page No. 1/ 3
	First Edition : 03/2005

Structural Drawings
Boom cylinder

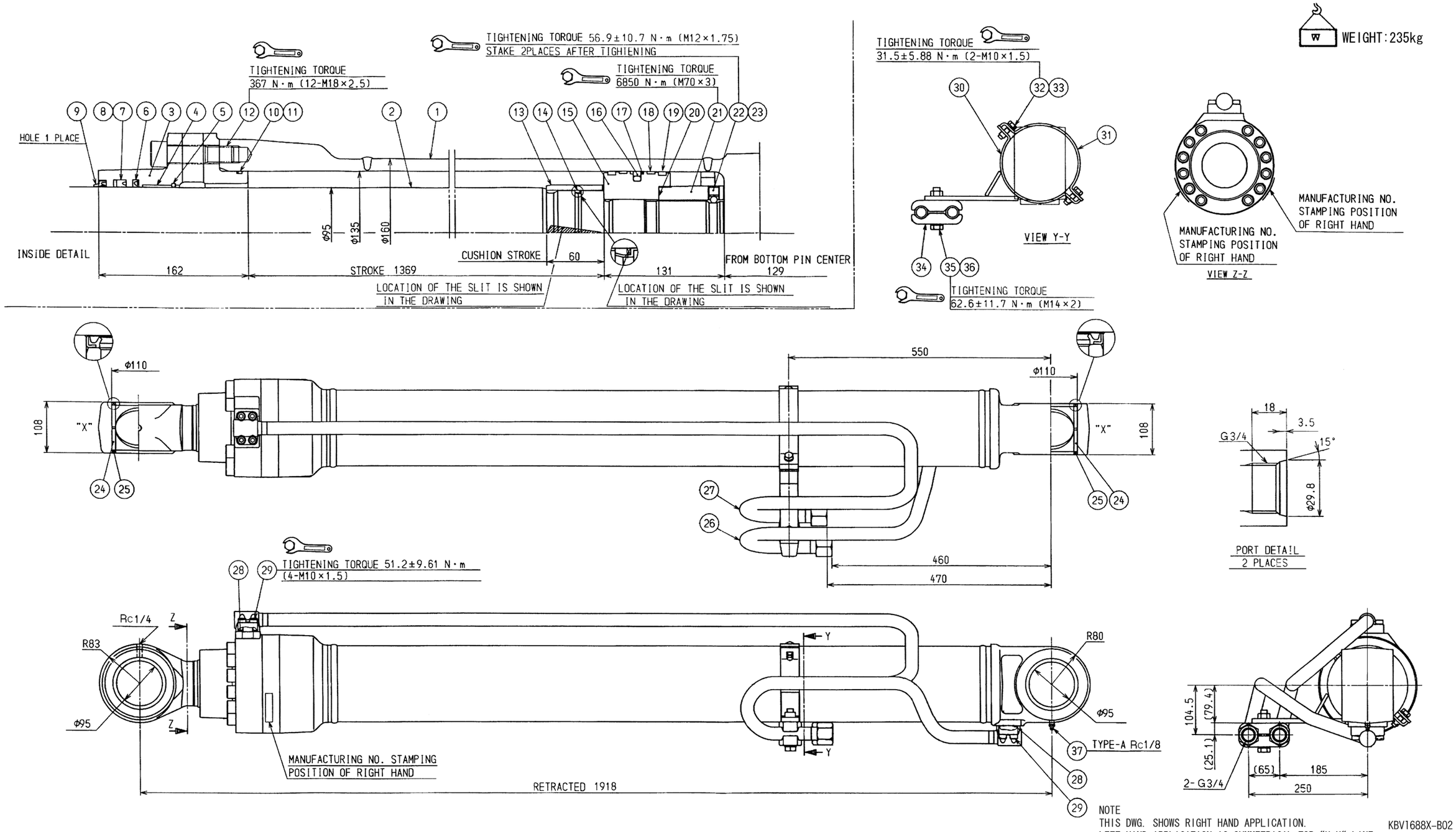

NOTE
THIS DWG. SHOWS RIGHT HAND APPLICATION.
LEFT HAND APPLICATION IS SYMMETRICAL FOR "X-X" LINE.

KBV1688X-B02
KBV1689X-B02

https://truckmanualshub.com/

Arm Cylinder

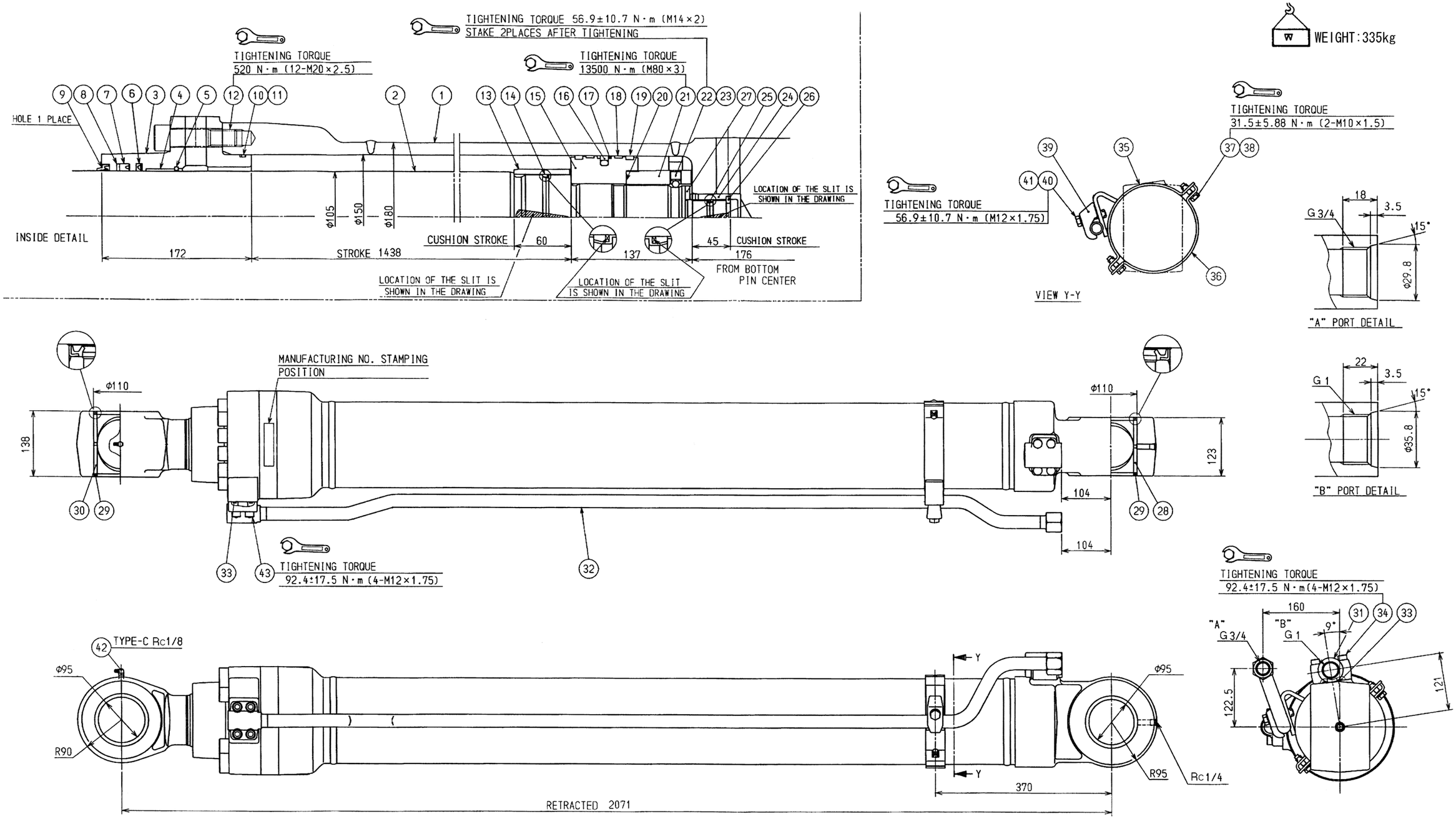

KBV1897X-B03

https://truckmanualshub.com/

Bucket Cylinder

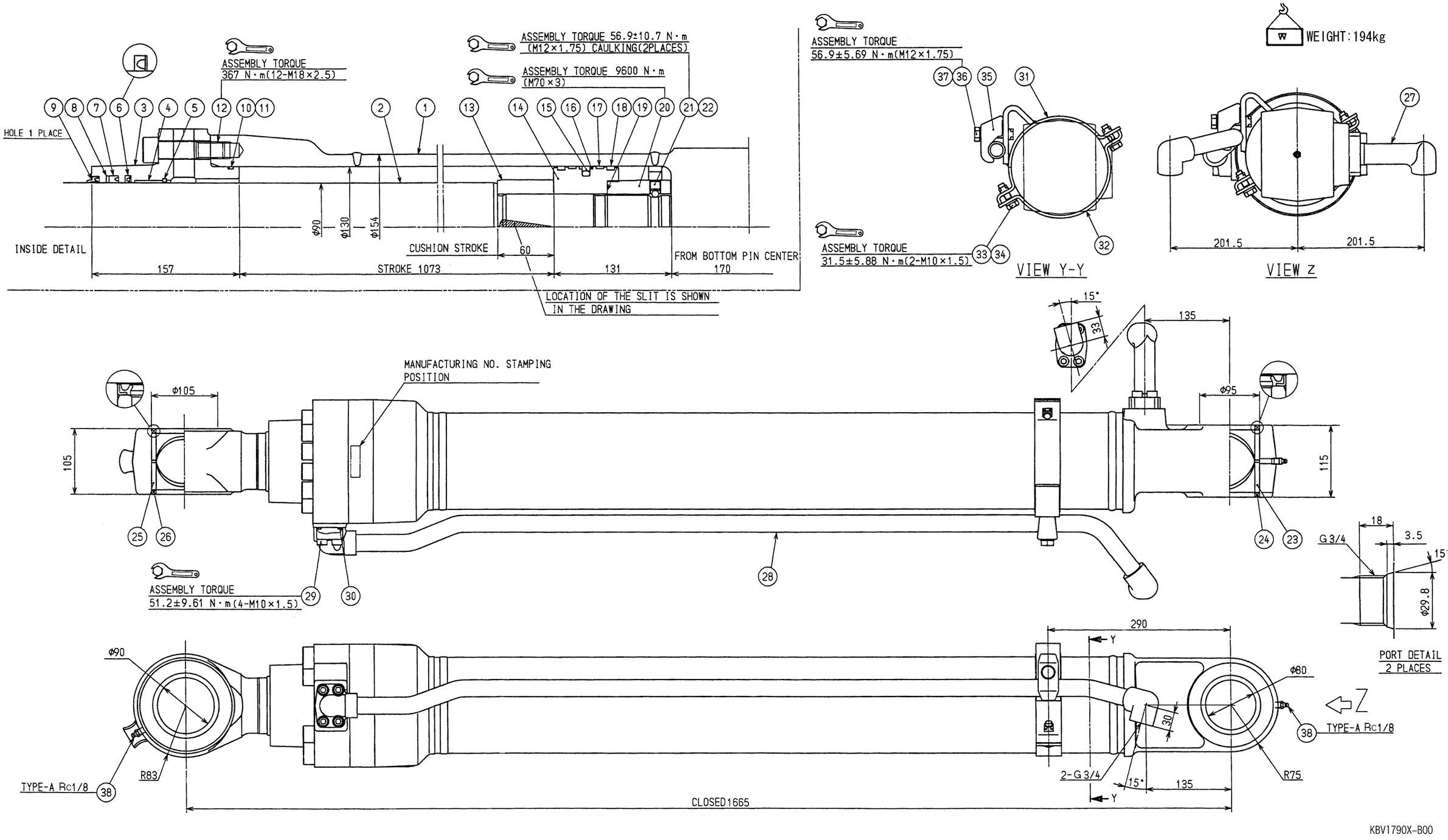

https://truckmanualshub.com/

Maintenance Instructions

1. Description of Functions

1-1. Basic functions

The hydraulic piston system is a kind of hydraulic actuator which converts hydraulic energy supplied from the hydraulic pump into a larger force for linear movement via a piston. In addition, it switches its operational direction between extension and retraction by way of lever operation on the hydraulic oil direction switch-over valve.

This larger force, linear movement, and operational direction switching over are the basic functions.

1-2. Function by section

1. Cylinder head assembly

The piston assembly has a bearing function for the piston rod (2) provided by means of bushing (4) press fitted into the inside surface of cylinder head (3). It prevents external oil leakage by means of a buffer ring (6), U-ring (7) and backup ring (8) inserted into the inside surface of cylinder head. It also prevents dust from the outside by means of a wiper ring (9) press fitted into the inside surface of the cylinder head.

Engaging with the cushion bearing (13) at the cylinder's most extended position, it generates high pressure in the cushion chamber and this softens the cylinder's impact at the most extended position.

In addition, it also supplies and drains high-pressure oil from the inside of cylinder tube to the ports.

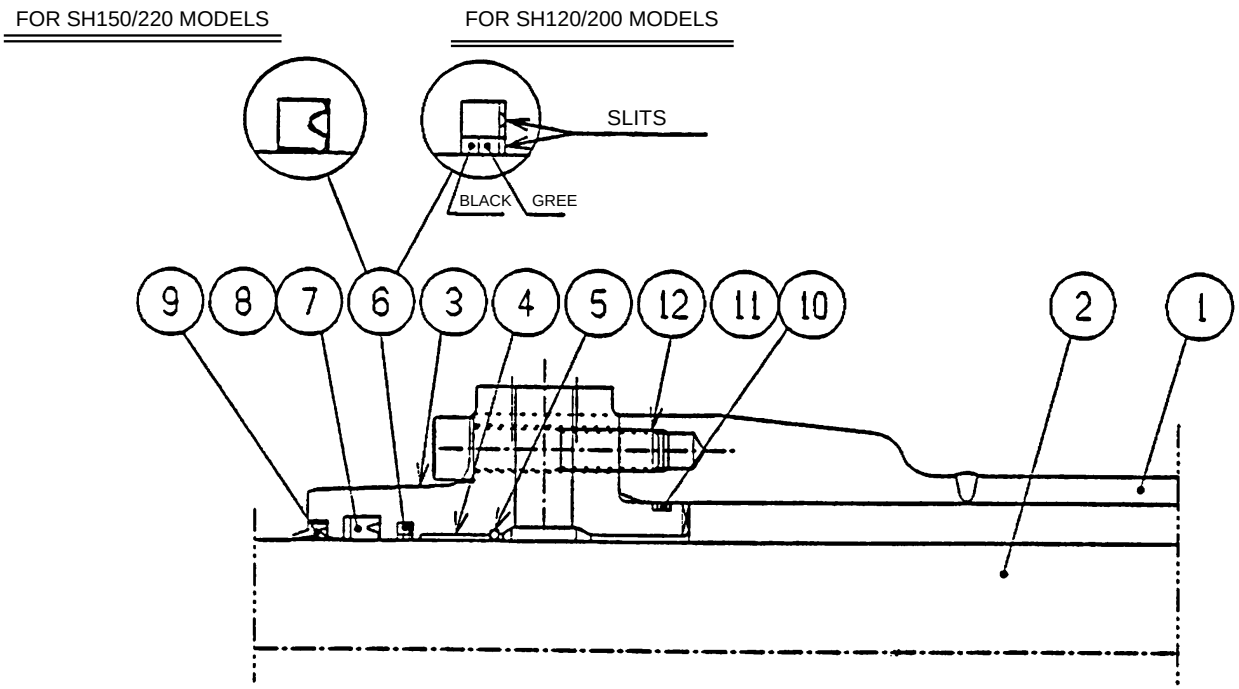

Bushing (4)

The bushing is press fitted into the inner face of the cylinder head and is in contact with the piston rod. It reduces eccentricity, which adversely affects the seal performance, by sharing lateral load applied on the cylinder together with the slide ring located on the outer circumference of the piston, performing high-bearing linear motion against the piston rod, as well as supporting one end of the piston rod.

Buffer ring (6)

The buffer ring is composed of a slide ring and a square ring and is located between the U-ring and bushing. It prolongs the life of the U-ring, which is the main seal, by relieving high pressure with the auxiliary seal which is directly in contact with the high pressure oil in the cylinder, and reducing the load acting on the U-ring.

https://truckmanualshub.com/

U-ring (7)

The U-ring is located between the wiper ring and the buffer ring. The U-ring seals the annular space formed between the piston rod and cylinder head against the pressure oil between the U-ring and the backup ring. It also forms suitable oil films on the piston rod to prevent rust.

Wiper ring (9)

The wiper ring is located at the opening end where the piston rod enters into and exits from the cylinder. It prevents dust and water from entering into the rod seal section of the U-ring and the buffer ring in the cylinder from the outside. It also scrapes off mud attached on the surfaces of piston rod through piston rod movements.

2. Piston assembly

The piston assembly prevents pressure oil from leaking from one chamber to the other chamber by the insertion of seal ring (16) in the center of the piston (15). It has a bearing function to receive lateral cylinder load by the insertion of the slide ring (18) on both ends of the seal ring. It also has a bearing function and a function to capture contaminants by the insertion of slide ring (19) in the outer side.

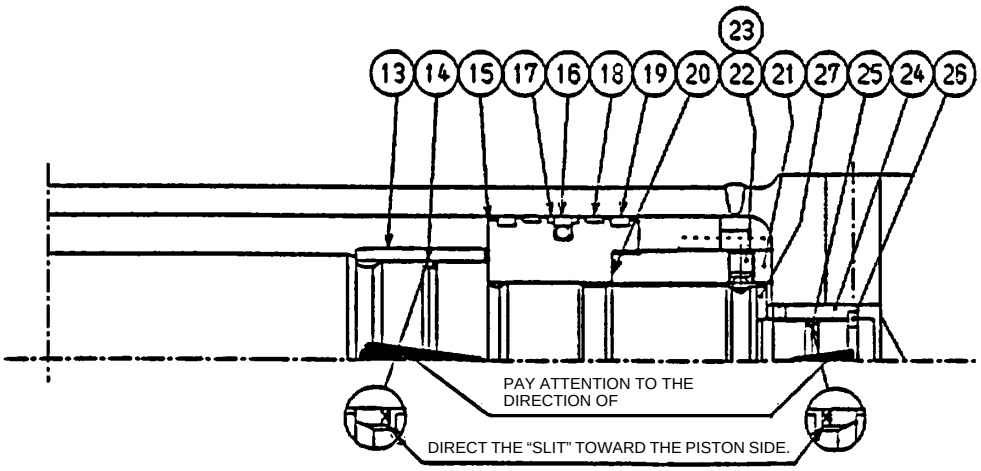

Seal ring (16)

The sealing, which is located at the center of the piston, seals the annular space formed between the piston and cylinder tube by using O-ring tension. It divides into high pressure and low pressure chambers by using the piston as a boundary.

Slide ring (18) and (19)

The slide rings are located at both ends of the seal ring and are in contact with the inner surface of the cylinder tube. They reduce eccentricity, which adversely affects the seal performances, by sharing lateral load applied on the cylinder together with the bushing located on the inner surface of the cylinder head. They also perform high-bearing linear motion against the cylinder tube inner surface, as well as supporting one end of the piston rod. The slide ring (19) submerges and captures contaminants engaged between the cylinder tube and the slide ring.

https://truckmanualshub.com/

Cushion bearing (13) and (24)

The cushion bearings are located at the stepped section between the piston and the piston rod. The cushion bearings soften the impact by forming annular space in conjunction with the cylinder bottom, by restricting oil, and by reducing the cylinder's collision speeds at the most extended position of the cylinder, at the most retracted position between the cylinder head and cylinder.

3. Pipes (28) and (29)

   A pair of pipes are located on each port on the extension and retraction side on the cylinder tubes (1). The pipes supply and drain high-pressure oil from the flexible hose connection end to the cylinder tube port.

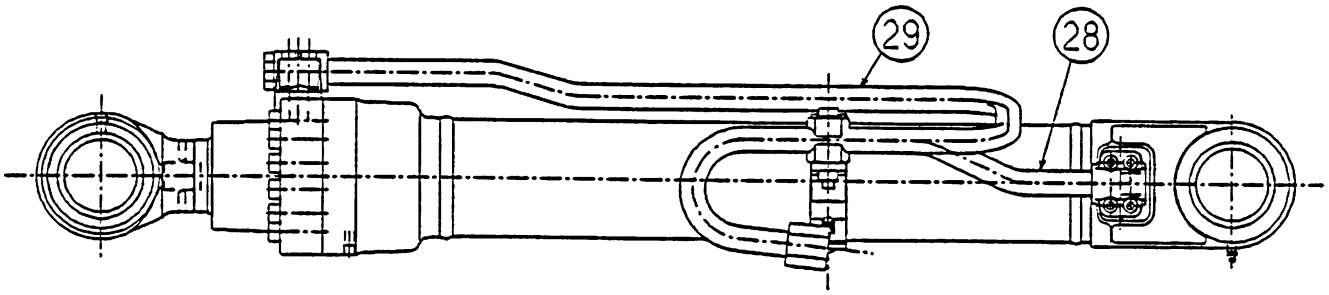

https://truckmanualshub.com/

2. Operating Principles of Cylinder

The cylinder is a hydraulic device, to which the Pascal's Principle applies, and is run by pressure oil filled from the outside.

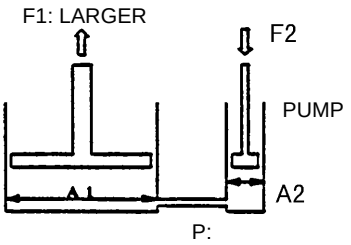

Force generated by cylinder is a product of receiving area A1 which is moved by receiving pressure and pressure P.

$$F1 = A1xP \qquad P = \frac{F2}{A2} \qquad F1 = A1x\frac{F2}{A2}$$

In general, pressure receiving areas in a cylinder are different in the sectional area of the piston rod between the extension side and the retraction side.

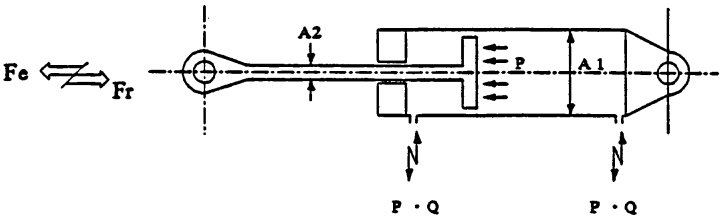

Q IS THE FLOW RATE OF HYDRAULIC OIL SUPPLIED TO THE CYLINDER

Thrust: Extension side $Fe = PxA1$

Retraction side $Vr = Px(A1 - A2)$

Speed: Extension side $Ve = \frac{Q}{A1}$

Retraction side $Vr = \frac{Q}{A1 - A2}$

When the cylinder is pushed or pulled by external force, the oil in the cylinder is pushed out. If this oil is restricted, the cylinder movement is limited.

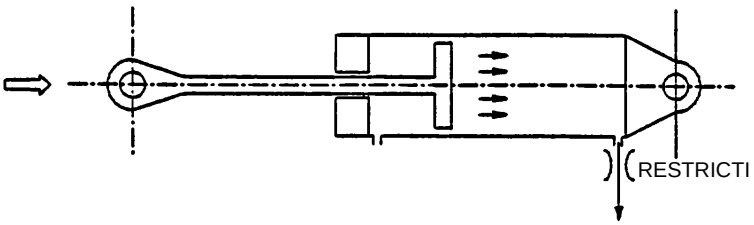

https://truckmanualshub.com/

The cushion in the cylinder reduces cylinder's operating speeds and softens the impact at the stroke end by automatically restricting the pressure oil that flows out at the end of stroke.

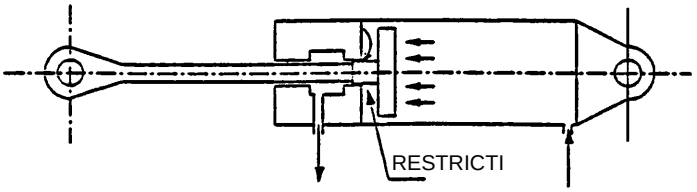

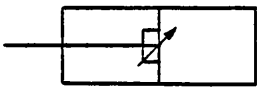

Since the pressure receiving areas are different at the extension side and the retraction side, if the outflow oil is shut off at the rod side and is pressurized at the bottom side, larger pressure is generated.

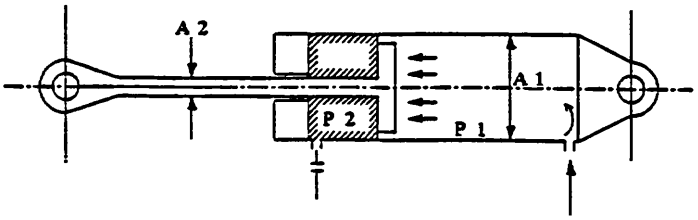

$$P2 = P1 \times \frac{A1}{A1 - A2}$$

When the cushion is working, two forces (external force [inertia force] and force of pressure oil supplied from the pump) act on the cylinder. As the pressure is intensified on the pressure oil supplied from the pump, as shown in the figure above, if the external force and restriction are the same, the cushion at the extension side works less effectively than the one at the retraction side .

If air remains in the cylinder, the cylinder can not move smoothly. In addition, if pressurized quickly, heat is generated by air adiabatic compression and the packing may burn.

Air, which is contained in the oil, will remain as bubbles when the pressure is suddenly reduced.

Before starting the operation, move the cylinder softly several times at full strokes to bleed air in the cylinder to prevent accidents.

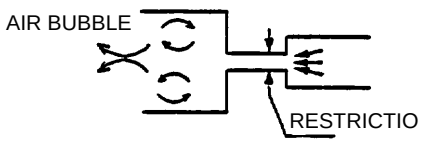

https://truckmanualshub.com/

3. Precautions for Handling: Cautions

3-1. When installing the cylinder on the machine

※ When installing the cylinder onto the machine, lift the cylinder while ensuring its safety.

Lifting the cylinder by its piping section is not only dangerous but also may cause damage to the cylinder.

Fix the rod at its most retracted position by using a band or the like. Otherwise, the rod can pop out. In addition, the damaged rod could be unusable.

※ Welding after installing cylinder may cause serious damage to the cylinder.

Electric welding on the cylinder and even at a location far from the cylinder may cause sparks in the cylinder, resulting in the need for cylinder replacement.

※ When painting the machine, use masking tape on the cylinder.

If the cylinder is operated when there is paint on the rod surface and wiper ring, the wiper ring will not work correctly, and contaminants and paints easily get into the cylinder, which may lead to damage to seal parts or extreme shortening of the life of cylinder.

※ Clean the cylinder before installing.

3-2. Precautions for use

※ Use them under specified conditions.

If you use hydraulic oil other than the specified one, sealing parts could deteriorate very quickly, leading to breakage.

Setting the relief valve at a higher value than shown in the assembly drawing is dangerous because it may result in damage to the cylinder.

General sealing materials are damaged quickly under high temperatures (approximately 100°C or higher) and cold temperatures (-20°C or colder).

In this case, as special seals are required, please confirm the suitability of the seal with your cylinder.

The first major cause of cylinder defaults is oil leakage caused by damaged rods.

Careful operating is needed to avoid damage.

※ Before operating, warm the cylinder fully.

If the cylinder has been used for a long time, the seal parts in cylinder become stuck with metal on the sliding surface. Avoid sudden operations under maximum pressure, at high speeds.

If the cylinder is brand new or has been left without being operated for a long time, a lot of air has accumulated and prevents smooth movement of the cylinder.

Furthermore, pressuring quickly without bleeding causes heat due to air adiabatic compression, which burns and carbonizes the sealing parts. As a result, the performance can be significantly reduced.

Before starting the operation, move the cylinder slowly several times without load at full stroke to remove air from the inside of the cylinder.

※ Keep a safe fixed position when temporarily stopping or storing.

Cylinders cannot be kept in a given position for a long time while attached to the machine.

Cylinder oil leaks and the volume of the hydraulic oil in the cylinder may change due to the changes in hydraulic oil temperature. As a result, the extended or retracted cylinder may make the machine move unexpectedly. This is a very dangerous situation.

Always temporarily stop or store the cylinder in a safe fixed position.

https://truckmanualshub.com/

3-3. Maintenance and inspection precautions

Always conduct daily maintenance and inspections.

"Daily maintenance and inspections" are the key to maintaining and proloning the full performance of the cylinder.

Follow *4. Maintenance/Inspections and Servicing* to achieve full performance. Always remove mud, water, dust and grease attached to the rod.

Wipe off the wiper ring and sealing sections with a cloth instead of washing with water.

If leaving without being used for a week or longer, apply corrosion inhibitor to the surface of the rod for rust proofing.

For part replacement, use SUMITOMO parts.

If you use parts other than SUMITOMO parts, you may not gain the expected full performance. It is recommended that you always use SUMITOMO parts.

We also manufacture dedicated jigs designed to make it possible to perform disassembling and reassembling work safely and quickly.

※ Special care should be also directed to disassembling and reassembling.

It is particularly dangerous to disassemble the cylinder head while it is still attached to the machine because the machine may move unexpectedly. Always disassemble the cylinder after dismounting it from the machine.

If you reassemble the cylinder with dirty hands, contaminants may get into the cylinder. This shortens life and also damage other hydraulic devices. Try to reassemble cylinders under clean conditions.

Tighten threaded parts by following and using tightening torque shown in the drawing.

Too high and too low torque may damage screws.

Observe the cylinder storing standards.

https://truckmanualshub.com/

4. Maintenance/Inspection and Servicing

To gain full functions of hydraulic cylinder for a long time, conduct periodic inspections and servicing based on the inspection table below.

Repair faulty sections as soon as possible.

※ **NOTE:** When conducting routine inspections and servicing, the first priority should be placed on the operator's safety. Conduct the operation using common knowledge and expertise.

Locations for inspection/ servicing	Inspecting and servicing points	Daily	Monthly	Annually	Notes
Appearance	Is cylinder clean (especially sliding part of the rod)?	❍			
	Is there any oil leakage from the piping fitting part?		❍		
	Is there any paint peeling, scaling or rust?	❍			
Operation	Is movement smooth? Any abnormal noises?	❍			
	Is response good?	❍			
	Is there any oil leakage from the sliding parts?	❍			
	Is there any internal leakage?			❍	
	Is working pressure normal?		❍		
	Is set pressure on over load relief valve normal?		❍		
Hydraulic oil	Is the hydraulic oil dirty or deteriorated?		❍		
	Is the hydraulic oil changed regularly?			❍	
	Are filters changed regularly?		❍		
Fitting section onto the main machine	Is there enough grease on the pins?		❍		
	Do the pins make noise or seize up?	❍			
	Is there any looseness or wear on the pins?	❍			
	Are the pin seals normal?		❍		
	Are there any loose or missing screws?	❍			
	Retighten fitting screws.			❍	
Piston rod	Is there any wear on sliding parts?			❍	If the sliding part of the rod is exposed for a long time, apply corrosion inhibitor.
	Are there any scratches or dents on the sliding parts?	❍			
	Is plating scraped off on the sliding part?	❍			
	Are any sliding parts bent?		❍		
	Are there any cracks on or damage to welded parts?	❍			
Cylinder tubes (including piping)	Are any bolts, nuts (screws) loose?	❍			
	Retighten bolts and nuts (screws).			❍	
	Are there any cracks on or damage to welded parts?	❍			
	Are there any cavity or dents on the tube?	❍			

https://truckmanualshub.com/

5. Error Diagnosis

Hydraulic cylinder errors and their remedy measures

It is not easy to locate faulty parts. General symptoms, possible reasons and remedy measures are shown in the table below. For repairs, refer to the possible causes and remedy measures in the table.

However, it is often the case that machine troubles occur because not only one part but many other relating parts have problems.

Measures other than ones shown in the table may be required.

Item	Symptom
1	Oil leakage on the sliding section of piston rod (for assessment values, refer to *7-4 Inspections after assembly*).
2	Oil leakage from cylinder head fitting section
3	Oil leakage from welded section between pipe and cylinder tube
4	Bad operation

Item	Symptom	Related parts	Error Item	Preventive/remedy measures
1	Oil leakage on piston rod sliding section	Piston rod	Scratches and rust caught by claws on the sliding surface	1. Remove scratches with oilstone and smooth the sliding surfaces (less than 1.5s). If the oil leakage persists after smoothing the rod surfaces, disassemble and inspect the rod because of possible damage in the U-ring caused by the scratches. 2. If scratches and rust are too widespread to repair, replace piston rod and seals such as U-ring, wiper ring, etc. and piston rod bearing materials.
			Plating is flaking	1. Re-plate or replace piston rod. 2. At this time, check seals and piston rod bearing materials, and if damage is found, replace them.
		Rod packing (buffer ring and U-ring)	Foreign substances engaged in the inside and outside surfaces	1. Remove foreign substances. 2. If a packing is damaged, replace it.
			Scratches on inside and outside surfaces	Replace.
			Lips and grooves are locally carbonized (burned).	1. Regarded as burning damage by air adiabatic compression caused by remaining air in the cylinder. 2. Perform initial operation at low pressure and low speed to bleed air fully after changing packing.

https://truckmanualshub.com/

Item	Symptom	Related parts	Error Item	Preventive/remedy measures
1	Oil leakage on piston rod sliding section	Rod packing (buffer ring and U-ring)	Packing has lost rubber elasticity and is crumbling. The whole lip is also missing.	1. Replace. 2. The life of the packing or hydraulic oil deterioration or high temperature may be the cause. a. Change hydraulic oil. b. Check hydraulic oil temperature. (The oil temperature should be 80°C or less.) c. Check for uneven hot temperatures.
			Heel part of the packing. Too much extrusion	1. Replace. 2. Abnormal high pressure may act on the packing. a. Check the pressure when starting operation. b. Abnormality in the buffer ring if the buffer ring is attached. Inspect buffer rings.
		Backup ring	Visible distortion	1. Change rod packings together, as a general rule. (Buffer rings should be replaced at the same time if attached.) 2. Abnormally high pressure may have caused this. In this case, check it by following the same steps described above for the packing heel extrusion.
		Wiper ring	Foreign substances engaged in the lip	Remove foreign substances.
			The lip is damaged. Other abnormal damages	Replace.
		Bearing material (bushing)	Extreme wear, the clearance with piston rod exceeds the allowable maximum value (see *7-3. Maintenance reference*)	Replace.
			Significant damage in sliding surfaces	1. Replace. 2. Inspect the piston rod.
		Cylinder head	Scratches or rust in seal fitting area.	1. Remove scratches and rust with an oil stone. 2. If repair is not possible, replace the cylinder head.

https://truckmanualshub.com/

Item	Symptom	Related parts	Error Item	Preventive/remedy measures
2	Oil leakage from cylinder head fitting section	O-ring	Foreign substances on the inside and outside surfaces Damaged O-ring	1. Remove foreign substances. 2. If O-ring is damaged, replace it. 3. Inspect the tube inside: If scratches and rust are found, smooth the surfaces with oilstone. 4. Check O-ring grooves in the cylinder head: Same as above 5. Check backup rings: If distortion or extrusion is found, replace it. Change O-rings after confirming items above.
		Backup ring	Distortion and extrusion.	Change together with O-ring.
		Cylinder head	Looseness	1. Disassemble cylinder head to check O-rings and backup rings. If damage is found, replace it. 2. Check tube and cylinder head threaded sections to ensure that there is no damage. If damage is found, replace it. 3. Upon completion of inspection, fasten with specified tightening torque. Refer to *Tightening torque*.
		Bolt	Looseness, extension and breakage	Replace all bolts and fasten them with specified tightening torque.
		Cylinder tubes	Abnormal swelling	Replace with new ones. Oil leakage on the fitting section may be caused by abnormally high pressure (including cushion pressure). Check for bulging, deformation and circuit pressure on the tubes.
3	Oil leakage from welded section between pipe and cylinder tube	Cylinder tube pipe (hollow piston rod)	Cracks on welded section	Replace with a new one. ※ **CAUTION:** Cracks will progress and end up with breakage. • Breakage is a very dangerous condition. • If cracks are found, immediately stop the operation and replace the parts. • No effect can be gained if additional welding is performed on cracked surfaces.

https://truckmanualshub.com/

Item	Symptom	Related parts	Error Item	Preventive/remedy measures
4	Bad operation 4-1 Does not move smoothly	Piston rod, cyclinder tubes	Curved too much; exceeds specified curve distortion level. (For curve distortion, see the corresponding section in *7-3. Maintenance reference*)	Replace with a new one. Check seals and sliding materials also because they may be damaged. If abnormality is found, replace.
		Cylinder tubes	Dents	Replace with new ones. Same as above described, check seals and sliding materials.
		Piston rod, cylinder tubes, sliding materials	Abnormal wear and damage on the sliding parts Foreign substances engaged in the piston and cylinder head sliding parts	1. Replace with new ones. Same as above described, check seals and sliding materials. 2. Remove foreign substances. Same as above described, check seals and sliding materials.
	4-2 Internal oil leakage makes the piston rod extend or retract or fall abnormally while operating or can not give specified speed output.	Piston seal	Damage such as scratches and wear is found.	Replace with a new one. Also check the cylinder's inner face.
		Cylinder tubes	Scratches and rust on the inside surface.	1. Remove scratches and rust by honing or with oilstone to smooth the surfaces. If scratches are too big to repair, replace cylinder tubes with new ones. 2. Replace piston seals with new ones.
		Piston nut	Loose tightening	Fasten with specified tightening torque. Refer to *Tightening torque*.
		Valves	Leakage from valves	Check the valve leakage volume and repair if necessary.
		※ **CAUTION:** Hydraulic oil tends to expand and shrink according to changes in temperature and pressure. This also causes cylinders to extend and retract; therefore, we sometimes see this as internal oil leakage. Check internal oil leakage under a given pressure condition.		

https://truckmanualshub.com/

Item	Symptom	Related parts	Error Item	Preventive/remedy measures
4	4-3 Operation is not stable.	Air	Air remains in the cylinder.	1. Bleed air. a. Cylinder without air bleeder: Bleed air by operating the cylinder several full strokes under low pressure and at a slow speed. b. Cylinder with air bleeder: To prevent high temperature inside the cylinder, remove the load and loosen air bleeder to release air fully. When the cylinder stops suddenly, it can extend or retract to a certain extent. This phenomenon is caused by hydraulic oil compressibility. This phenomenon tends to occur especially on long stroke cylinders.
	4-4 Strong impact when switching over between extension and retraction	Pin bushing Pin	Too much clearance between the fitting section and pin bushing	Measure the dimensions of pin and pin bushing, replace the parts that exceed the measured dimensions.
	4-5 Cylinder sliding operation makes noise.	Lubrication	Lack of lubrication	Lubricate.
		Pin bushing Pin	Scuffing on fitting surfaces	Replace with a new one and lubricate.
	※ **CAUTION:** Hydraulic oil tends to expand and shrink according to changes in temperature and pressure. This also causes cylinders to extend and retract; therefore, we sometimes see this as internal oil leakage. Check internal oil leakage under given temperature and pressure conditions.			

https://truckmanualshub.com/

6. Storage Standards

We take all possible measures at the time of shipping hydraulic cylinders. However, in order to avoid trouble when storing them, please handle them following the precautions below.

6-1. Storing one unit only (as a general rule, store indoors)

Avoid a place with high temperature and high humidity or a place where corrosive gas or liquid is stored. Store the unit off the floor. To prevent condensation due to temperature difference, we conduct inspections by using test oil with a given volume of volatile corrosion inhibitor, retract the piston rod using super dry air (dew point 35°C), put caps when shipping.

Therefore, do not leave a cylinder with the cap removed or drain the remaining oil from the cylinder without clear intention.

Storage for more than 2 months	Storage for more than 6 months (3 months for single-acting cylinder)	Storage for more than one year
1. Clean dust from the cylinder and apply corrosion inhibitor to flange section, piston rod and other locations that rust easily.	1. Using clean hydraulic oil, let the cylinder reciprocate to introduce corrosion inhibitor into the cylinder following the steps described in the left column for 2 month storage.	1. As packing may be deteriorated, it is desired to disassemble and inspect, and replace the packing. Also, check rust conditions on the cylinder inner walls.
	2. If the cylinder does not operate, add corrosion inhibitor only.	2. If cylinders, which have been stored for a long time, are used as they are, there is possibility of oil leakage because of temporary poor sealing conformity.
3. Care is needed to avoid falling, collision, dislodgment and dents while storing.		

https://truckmanualshub.com/

6-2. At the time of installing devices

1. Operate cylinder at least once every 6 months.
2. Keep the piston rod in its retracted position, avoid exposure to outside air and apply corrosion inhibitor or grease to the exposed parts at least once a month.
3. Careful handling is necessary to avoid damage to piston rods.
4. If cylinders are placed under conditions where they are exposed to salty wind (e.g. during exports), always apply corrosion inhibitor to piston rods and protect them as much as possible with polyethylene or V.C.I paper.
5. Solutions such as corrosion inhibitors may have adverse effects on sealing materials. Therefore, careful selection and handling is required to avoid getting oil on dust seals. (Recommended corrosion inhibitors are listed below.)

6-3. Recommended corrosion inhibitors

Cylinder Internal use	Volatile corrosion inhibitors (V. C. I) (a) Fellow Guard #1009 (U.S.C. KK) (b) Knuckle Oil #105S (PARKER KOSAN) Amount to be added for (a) and (b) is within 3 to 5% per volume of hydraulic oil: Fellow Guard: 5/100.0 Knuckle Oil: 3/100.0
For piston rod use	P-1300 (NIHON SEKIYU), Solvent cutback type
Machined surfaces except for oil tight parts	NP-1 to NP-3 (solvent cutback type corrosion inhibitor JIS Z-1801-1960) NP-4 to NP-6 (rust preventive petrolatum JIS Z-1802-1962) Choose either one of the above.

https://truckmanualshub.com/

7. Instructions for Disassembling and Assembling

7-1. Preparation

Before starting the disassembly, prepare the following items:

1. Prepare a workbench
   Choose and prepare a stable and strongly built workbench large enough to arrange and keep parts and perform jobs.
2. Prepare tools and materials
   Prepare the required tools and materials shown in *7-5. Required tools*.

7-2. General precautions for work

1. Before disassembly, fully rinse soil and dust attached to the cylinder outside walls.
2. As each part is a precision component, handle parts carefully and do not drop them or allow them to hit each other.
3. Do not attempt to hit or pry parts forcedly because they are tightly fitted. Take time and carry out the operation carefully in order to avoid causing burrs or damage resulting in inability to reassemble a part, oil leakage or lower efficiency.
4. If components are left disassembled or half-disassembled, the parts may rust because of moisture and dirt. Rust prevention and dirt-proofing should be considered if the operation is suspended for unavoidable reasons.

7-3. Maintenance reference

For sliding parts and sealing parts, replace them following the items below:

1. Bushing	When a whole quarter of the circumference has worn and turned reddish copper color
2. Seals and slide rings	Replace with new ones when disassembling cylinders
3. Pin bushing	When serious scuffing has occurred

https://truckmanualshub.com/

7-4. Inspections after assembly

Operational checks without load	Ensure no abnormality on each section and smooth motion when operating at full stroke more than 5 times.					
Dimensional check	Confirm the most extracted length and the stroke shown in the drawing.					
Pressure tightness check	Ensure that there is no looseness, permanent deformation and external leakage when applying the test pressure instructed in the drawing at each stroke end for 3 minutes or more.					
External leakage check	Check oil leakage volume at the rod section. (Refer to *Values to assess oil leakage at the rod* shown below)					
Internal leakage check	Units: ml/10 min					
	Inner diameter (mm)	Oil leakage volume	Inner diameter (mm)	Oil leakage volume	Inner diameter (mm)	Oil leakage volume
	32	0.4	100	4.0	160	10.0
	40	0.6	125	5.6	180	12.6
	50	1.0	140	6.0	200	15.6
	63	1.6			220	20.0
	80	2.3			250	22.0

Values to assess oil leakage at the rod

Assess the conditions of oil rings after 20 strokes under oil temperatures of 20°C to 40°C.

If the oil ring shows the state “A” shown below, it is abnormal; take measures following *5. Error Diagnosis*.

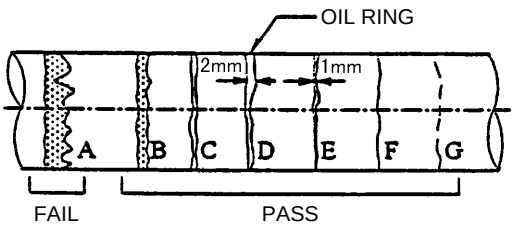

https://truckmanualshub.com/

7-5. Required tools

General tools

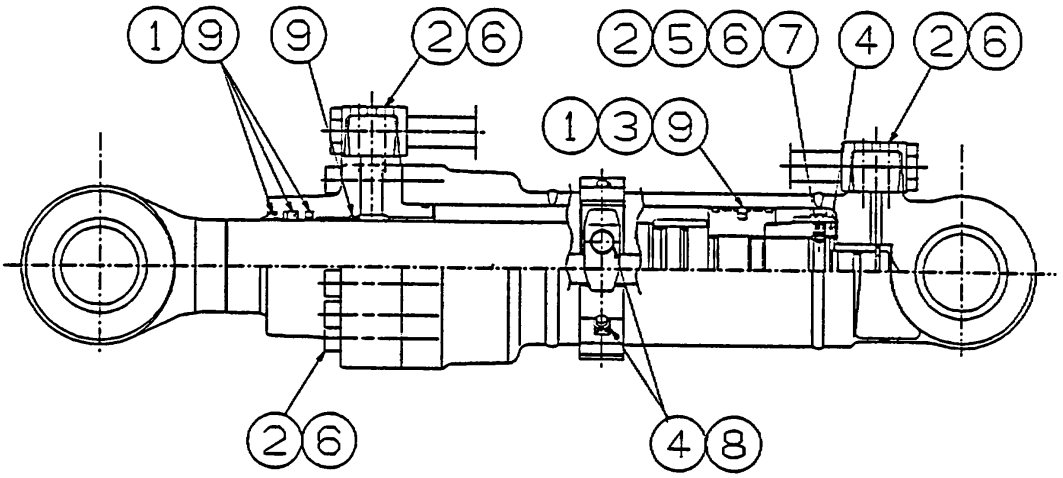

Region	Tool Name	Quantity
1	Screwdriver 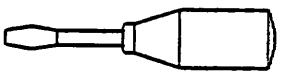	1
2	Hexagon bar spanner 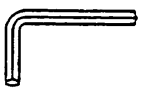	Complete set
3	Vise 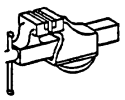	1
4	Spanner (For piston nut use)	Complete set
5	Punch 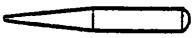	1
6	Torque wrench 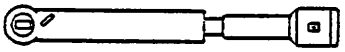	Complete set
7	Hammer 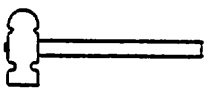	1
8	Monkey wrench 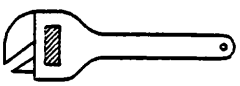	1
9	Spatula 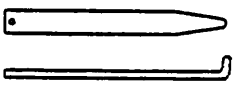	A pair

https://truckmanualshub.com/

Special jigs

The following special jigs are required when installing cylinders.

Refer to the special jigs for repair.

Jig Name	Schematic drawing
For DU bushing pull-out/press fit use	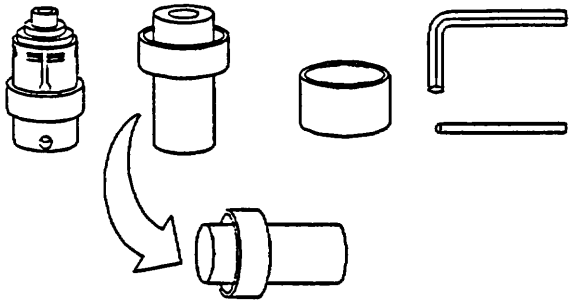
For wiper ring press fit use	
For seal ring correction use	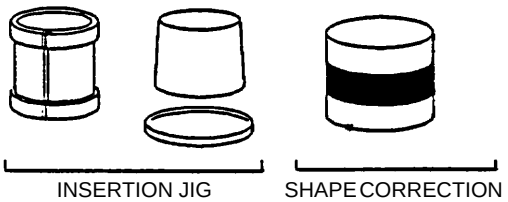
For cylinder head insertion use	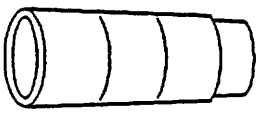
For piston insertion use	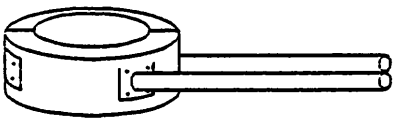

https://truckmanualshub.com/

7-6. Instructions for disassembling

1. Drain oil.
2. Remove piping.
3. Secure cylinder.
   Secure the cylinder in a vertical or horizontal position.
   Vertical securing facilitates the disassembly and reassembly.
   When securing it, stop rotations and axial movement using the bottom pin holes.
4. Loosen and remove 12 cylinder head tightening bolts using hexagonal bar spanner.
   Inserting a pipe as shown below facilitates the operation.

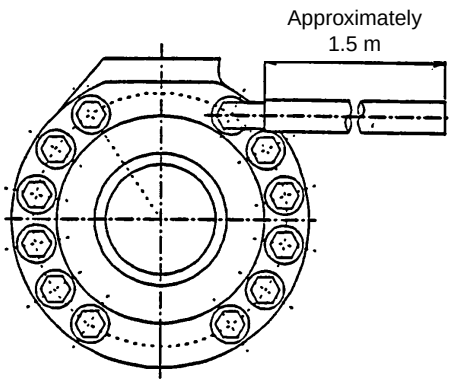

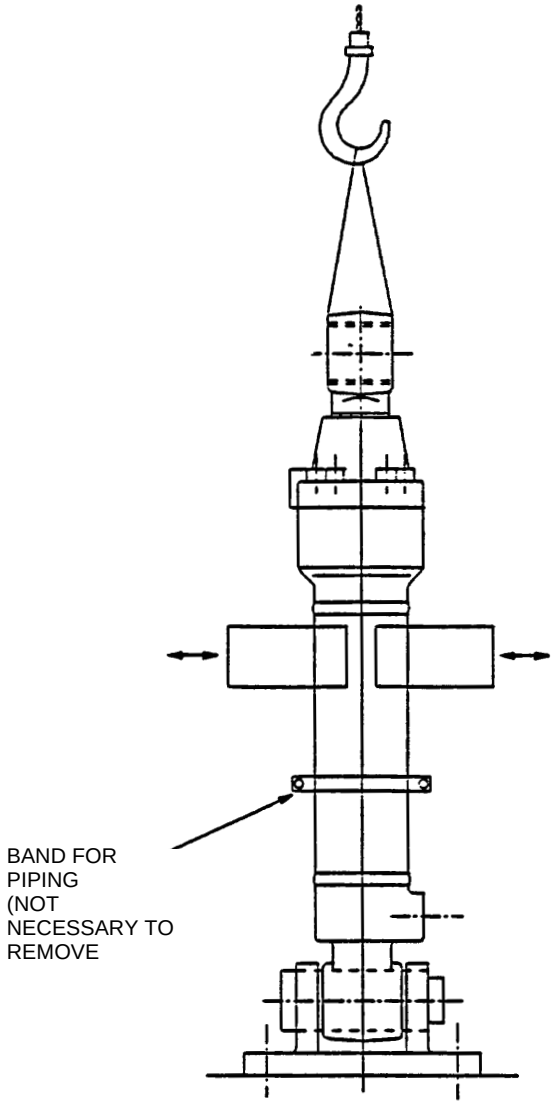

5. Pull out the piston rod.
   a. Ensure that the piping ports are open.
   b. Place an oil sump at the port on the retraction side (cylinder head).
   c. Pull the cylinder head slowly with the piston head fully pulled.
   d. Pull out the cylinder head together with the piston rod and place them on the sleeper.

※ **CAUTION:**

When carrying out this operation in a vertical position, pay special attention to the following:

When the piston rod is first pulled out with all the screws on the cylinder head removed, pulling the cylinder head out from the tube makes a space between the piston rod and piston. In this situation, it is possible that when the cylinder head reaches a given height, it may slide down suddenly, causing injury to the operator. **Always keep the cylinder head in contact with the piston** while carrying out this operation.

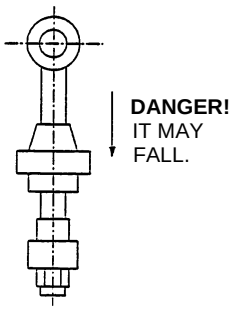

WHEN PERFORMING THE OPERATION IN A VERTICAL

https://truckmanualshub.com/

CAUTION:
When the piston rod is pulled out in a horizontal position, it may drop immediately after it is pulled out, causing damage to the parts. Pull out the rod using a sleeper to hold it in a horizontal position.

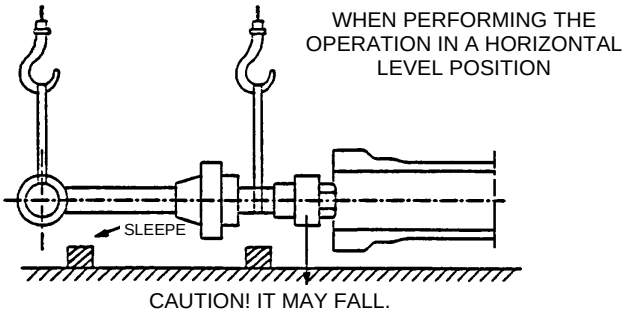

6. Secure the piston rod.
   a. Stop rotations using the rod head width across flats or pin holes.
7. Remove piston nuts.
   a. Remove set screws.
      Crimp with a punch in two places after installing the set screws.
      Loosen the set screws with a hand drill after removing the crimped parts.
   b. Remove the steel ball located behind the set screw.

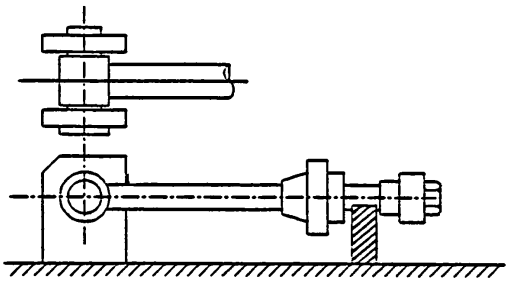

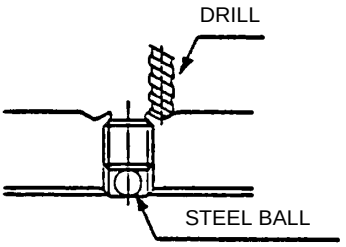

   c. Remove piston nuts.
      The piston nuts are tightened to the torque listed in the assembly drawing.
      To loosen the piston nut, about 1.5 times as much torque is required.
      If larger torque is necessary, prepare a powered wrench that utilizes a hydraulic jack or a hydraulic cylinder.

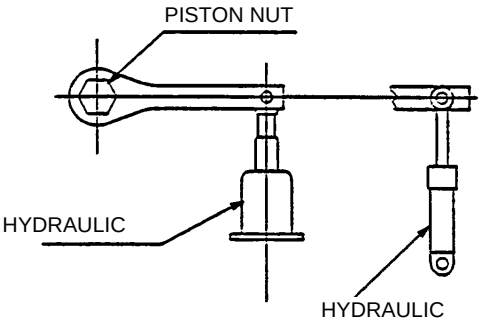

8. Remove piston, cushion bearing, and cylinder head in this order.

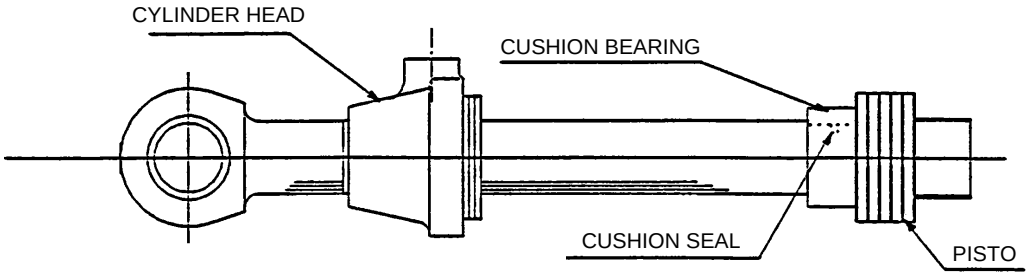

9. Disassembly on the retraction side (arm cylinder)

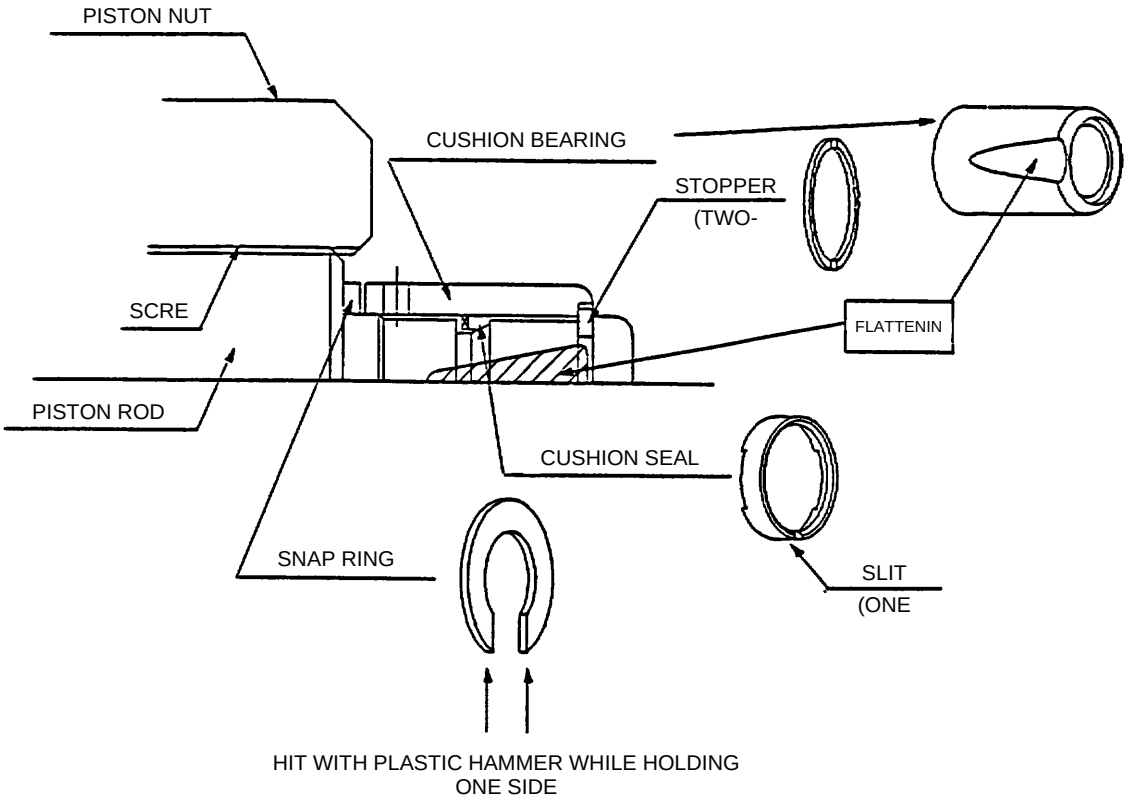

   a. Remove piston nut. With the nut attached, the disassembly cannot proceed.
   b. Remove snap ring. Remove it by softly hitting with a plastic hammer while being careful to avoid damage to piston rod and cushion bearing.
   c. Slide cushion bearing to the threaded side of the piston rod, and the stopper (two-piece) will come off.
   d. Remove cushion bearing.
   e. The cushion seal has a one slit. Use it to enlarge the opening.
10. Remove piston seal.
   a. The slide ring and backup ring can be easily removed manually.
   b. Cut and remove the seal ring by placing a screwdriver on the ring as shown in the right figure and hitting it with a hammer.
   c. Pull out and remove O-ring with a spatula.
   d. Do not reuse the removed seal parts.

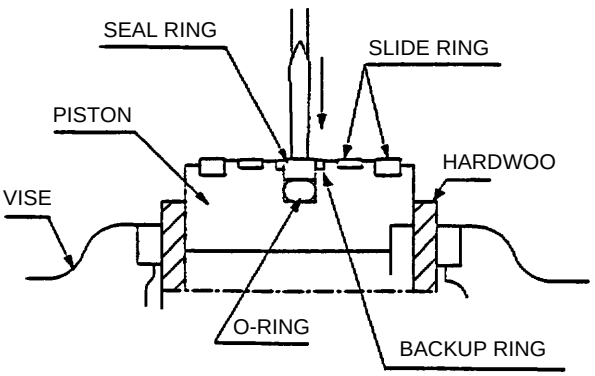

11. Disassembling buffer ring
   a. Buffer rings (Teflon seal) is fitted in the inner grooves of the cylinder head.
      When removing this seal, pierce it with a sharp tool and lift it up, then insert a spatula and remove it.
   b. Do not reuse the removed seals.

https://truckmanualshub.com/

12. Disassembling U rings, backup rings and wiper ring.
    a. Remove U-ring and back-up ring using screwdriver or equivalent.
    b. Wiper rings are press fitted.
       Pierce with a tool such as screwdriver on the rubber, hit the tool and remove it.
    c. Do not reuse the removed seal parts.

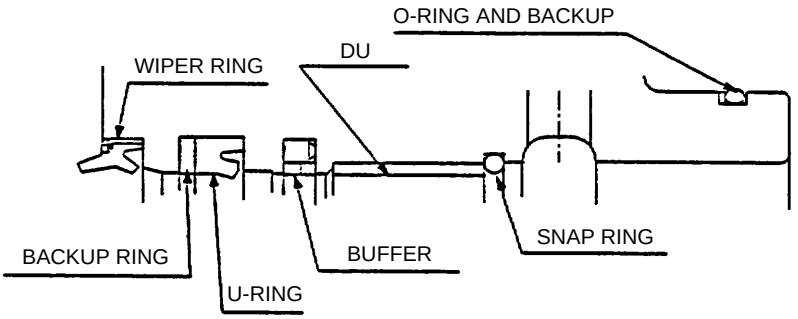

13. Disassembling DU bushing
    a. Remove the snap ring by prying with a screwdriver from the cylinder head.
    b. Push out the DU bushing with a press using a jig.
14. Cleaning and Storage
    a. Apply hydraulic oil to the removed parts after cleaning with white kerosene. Cover and store them.
    b. If components are left disassembled, they may not operate fully as expected after reassembly because of rusting and dust.

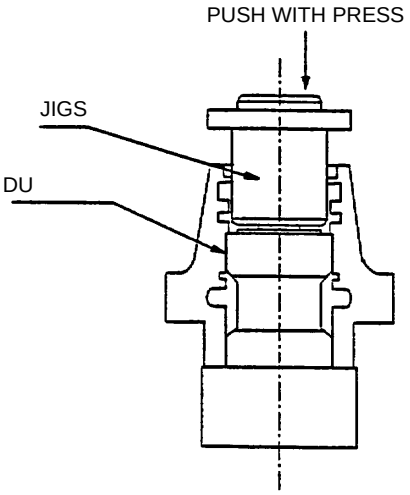

HOW TO DISASSEMBLE DU BUSHING

https://truckmanualshub.com/

7-7. Instructions for assembly

※ **CAUTION:**
Careful handling is needed when reassembling because peeled paint from parts may enter into the cylinder.

※ 1. Changing seals

a. Change all seals when the cylinder is disassembled.

b. O-ring
Before fitting backup rings and O-rings, clean the fitting grooves fully. Foreign substances in the grooves may cause oil leakage. Pay attention to the positions of backup rings.
Apply grease or hydraulic oil before fitting to the backup ring and O-ring to make them move smoothly.
If they do not move smoothly, the O-ring will distort when being installed and cause oil leakage.

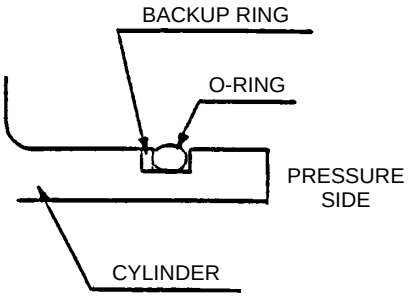

2. Cylinder head

a. Press fit the DU bushing with press using a jig.

b. Press fit the wiper ring with press using a jig.

c. Fit backup ring and U-ring in the U-ring groove in this order.
Ensure that there is no remaining permanent deformation such as creases after fitting.

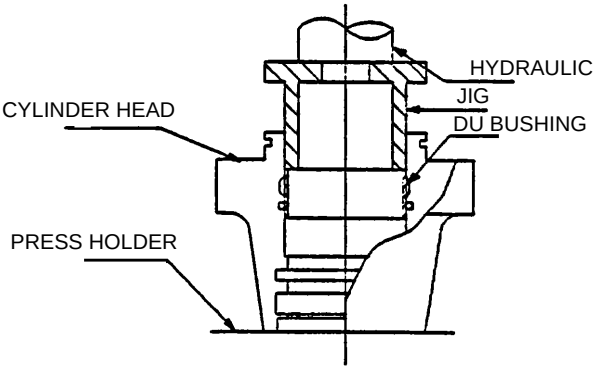

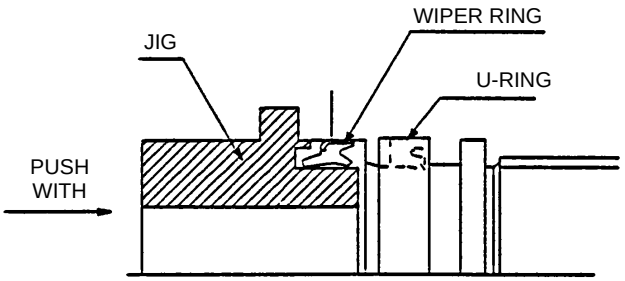

https://truckmanualshub.com/

3. Buffer ring assembly (3 piece structure)
   (Note: one piece structure for SH150/220)
   a. Install the backup ring and slide ring in this order by forming U-shape with the fingers, placing them into the groove and pushing out them toward the outer circumference after fitting the square ring in the groove. If the rings are shaped with too small a radius, creases will remain after fitting. Therefore, use a radius of 6 mm or more to make a curve. Ensure that there is no crease after fitting.
      Pay attention to the fitting directions of seals.
      Reversing them will cause high pressure between the seal and U-ring and lead to deformation on the cylinder head.

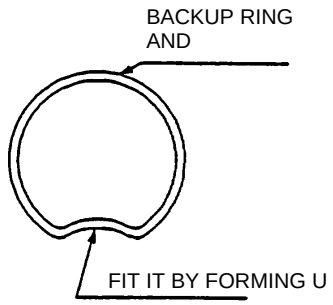

   b. Fit DU bushing locking snap ring.

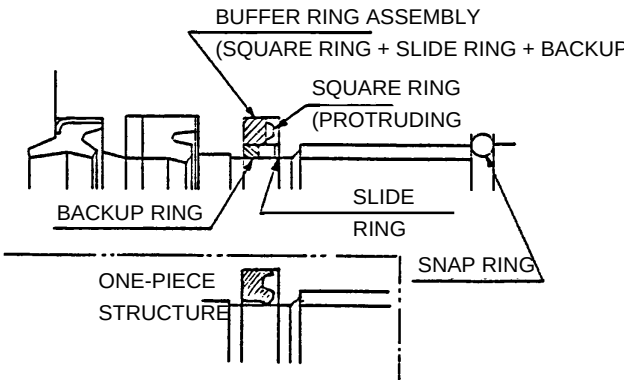

4. Piston
   a. Place the piston on the press and install a seal ring using a jig as shown in the figure to the right.
      (Pre-fit O-ring and back up ring to one side.)
   b. Immediately after fitting seal ring and backup ring on the other side, correct the seal ring using a correction jig so that it does not remain expanded.
      (This must be strictly observed.)

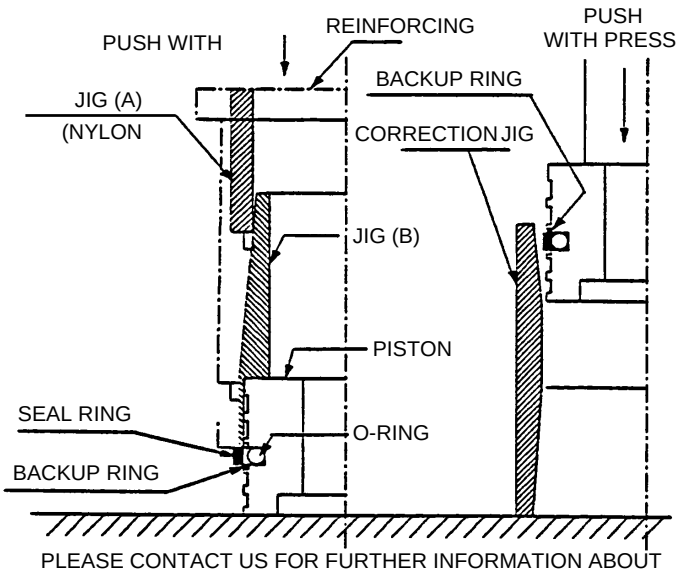

https://truckmanualshub.com/

5. Assembling piston rod
   a. Secure the piston rod.
   b. Engage the cylinder head.
      Care must be taken to confirm that the lips of the wiper ring and the U-ring are not engaged with the stepped part.

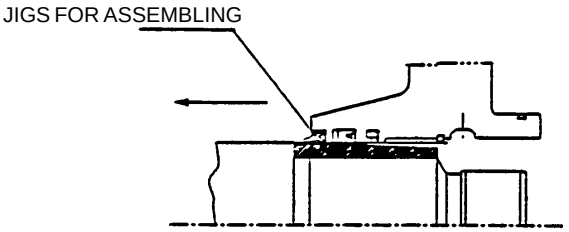

   c. Engage cushion seal, cushion bearing and piston. (Cushion seals are not required for bucket cylinders)
      Then, fit shim and fasten the piston nut. (Direct the “slit” on the cushion seal toward the piston side.)

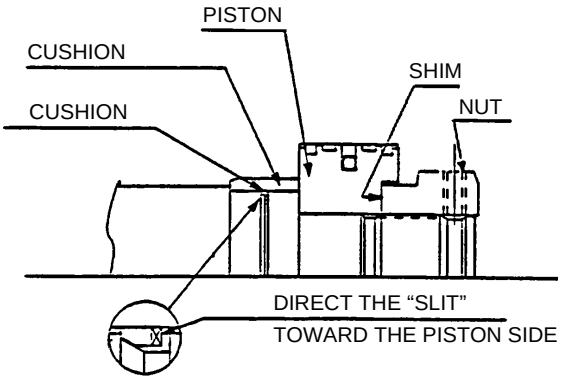

   d. Tighten piston nuts using torque listed in the assembly drawing. Pay attention to a lack of tightening torque because it may cause internal leakage, loose nuts, and screw breakage.
   e. After tightening the piston nut, put in the steel ball and tighten set screw using torque listed in the assembly drawing.
      Crimp with a punch at two places on the outer circumference.

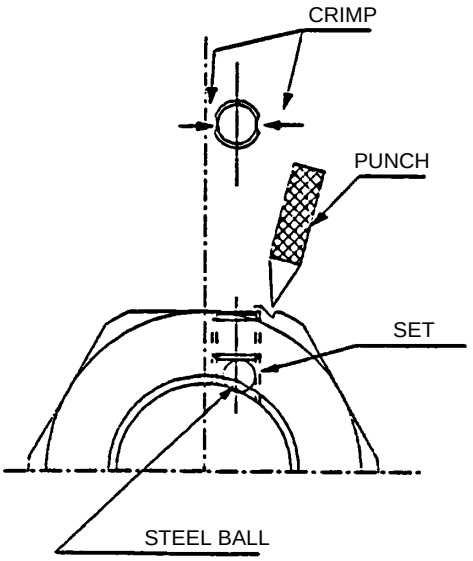

https://truckmanualshub.com/

6. Installing cushion bearing on the retraction side
   a. Install the cushion bearing before fitting the piston nut.
      With nut attached, the installation cannot proceed.
   b. Insert the cushion seal into the groove by facing its slit processed side toward the threaded side.
   c. Install the cushion bearing by facing the flattened part as shown in the drawing.
   d. Insert stopper into the groove.
   e. Push the cushion bearing up to the stopper fully and knock in the snap spring.
      Softly hit it with a plastic hammer while paying attention to avoid damage to the rod and cushion bearing.

※ **CAUTION:** Be aware that installing directions of cushion seals and cushion rings are different.
Make sure that the cushion ring moves smoothly up/down and right/left after fitting snap rings.

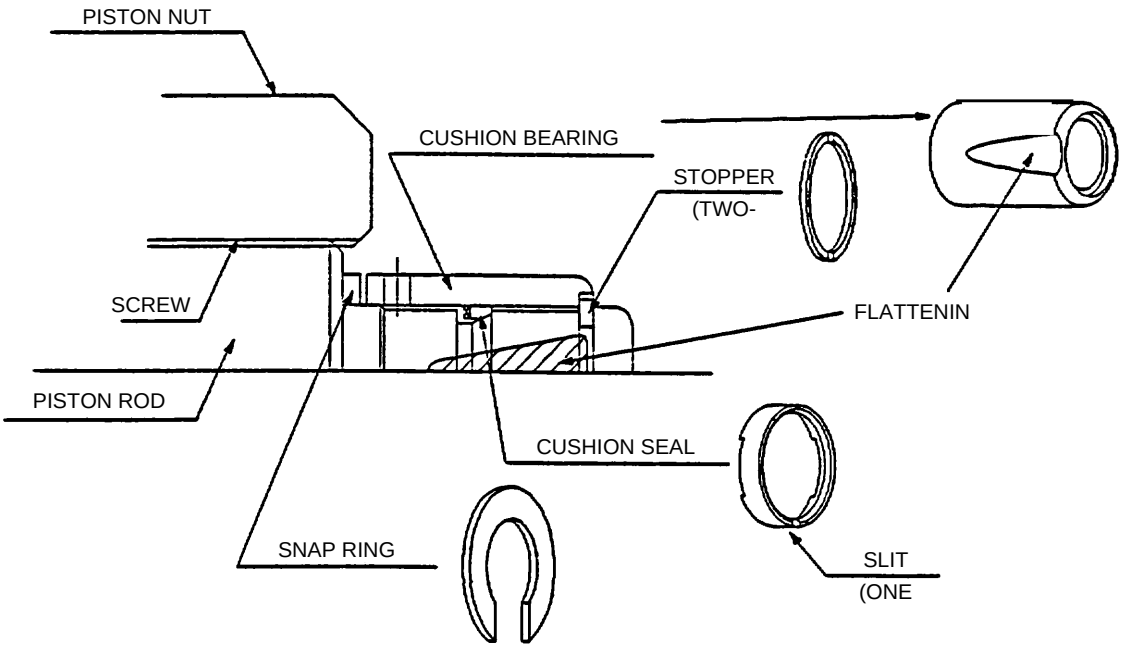

7. Insert the piston rod into the tube.
   a. Secure the tube vertically or horizontally.
      Insert the piston rod into the tube.
      When securing vertically, piston rod enters into the tube by the act of its self-weight.
      When securing horizontally, push in using lever hoist or forklift.
   b. Careful handling is needed to prevent the slide ring from dropping when the piston enters the tube.

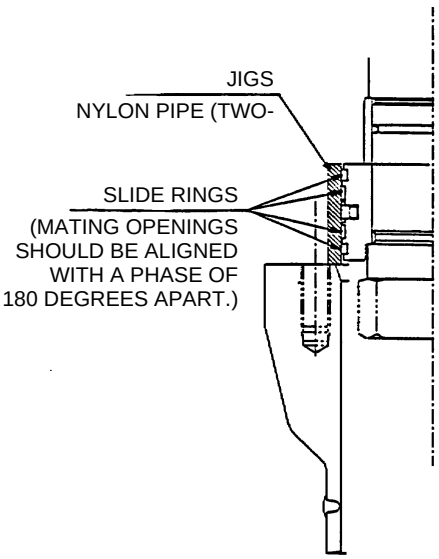

https://truckmanualshub.com/

8. Installing cylinder head
   a. Align the cylinder head according to the assembly drawing and set the tightening bolts by specified torque in the order shown in the drawing after fastening them alternatively.

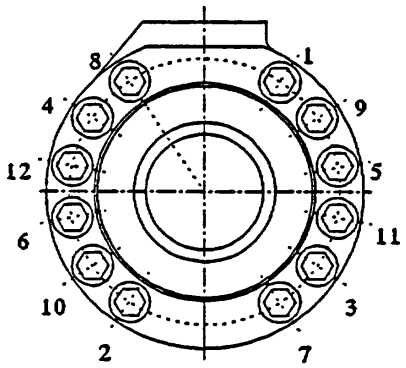

SETTING ORDER FOR TIGHTENING

9. Fitting piping
   a. Ensure that the O-rings are placed correctly in the grooves.
   b. First, fit the bolts for port sections.
   c. Tighten the bolts using torque listed in the assembly drawing.
   d. Tighten the band for piping using torque listed in the assembly drawing so that there is no gap.

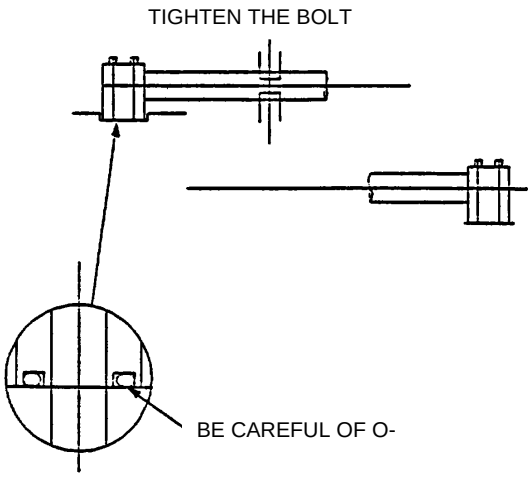

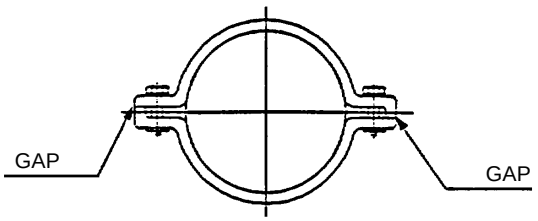

BAND FOR PIPING

https://truckmanualshub.com/

7-8. Trial run

1. After fitting the cylinder on the machine, move slowly more than 8 times at the full stroke by operating the switch-over valve. The inside of the cylinder will be filled with oil.
   Quick and sudden movement at the initial stage can cause aeration by the hydraulic oil.
2. If air bleeder is attached (boom cylinder), apply pressure to bleed by making its air bleeding side the pressured side (return oil side).
3. Lubricate pins on both ends.

Use limits

Wear limits on piston rod outside surfaces

Nominal diameter (mm)	Minimum outer diameter (mm)	Measures
50 to 80	-0.023	Replacement or re-plating
85 to 120	-0.027	Replacement or re-plating

Wear limits on rod bushing inside surfaces

Nominal diameter (mm)	Standard inner diameter (mm)	Maximum inner diameter (mm)	Measures
55 to 75	+0.06 to +0.19	+0.30	Replace bushing
80 to 120	+0.06 to +0.195	+0.30	Replace bushing

Wear limits of piston slide ring thickness

Nominal diameter (mm)	Standard thickness (mm)	Minimum thickness (mm)	Measures
95 to 160	2.42 to 2.48	2.37	Replace slide ring
165 to 250	2.92 to 2.98	2.87	Replace slide ring

https://truckmanualshub.com/

Special Jigs for Repair

1. Dimensions of Tools

Wrench for piston nuts

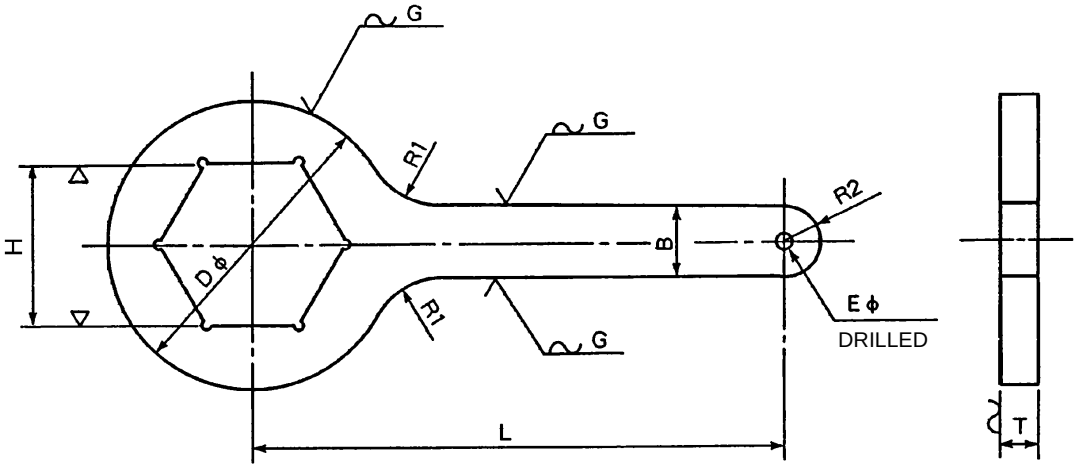

Unit: mm

Piston nut		Wrench size							
Nominal diameter	Width across flats	H	D	L	B	T	E	R1	R2
M45	70 +0 -1.2	70 +0.8 -0.3	130	350	40	20	20	50	20
M48	75 +0 -1.2	75 +0.8 -0.3	140	350	40	20	20	50	20
M52	80 +0 -1.2	80 +0.8 -0.3	150	350	40	20	20	50	20
M55	85 +0 -1.4	85 +0.8 -0.3	160	350	40	20	20	50	20
M58	85 +0 -1.4	85 +0.8 -0.3	160	350	40	20	20	50	20
M62	90 +0 -1.4	90 +0.8 -0.3	160	350	40	20	20	50	20
M65	95 +0 -1.4	95 +0.8 -0.3	170	350	40	20	20	50	20
M68	100 +0 -1.4	100 +0.8 -0.3	180	400	50	25	25	50	25
M70	100 +0 -1.4	100 +0.8 -0.3	180	400	50	25	25	50	25
M75	110 +0 -1.4	110 +0.8 -0.3	190	400	50	25	25	50	25
M80	115 +0 -1.4	115 +0.8 -0.3	200	400	50	25	25	50	25

CAUTION: Use wrenches of S45C steel with the hardness ranging from HB201 to 269.

https://truckmanualshub.com/

2. Handling the Jigs for Cylinder Repair

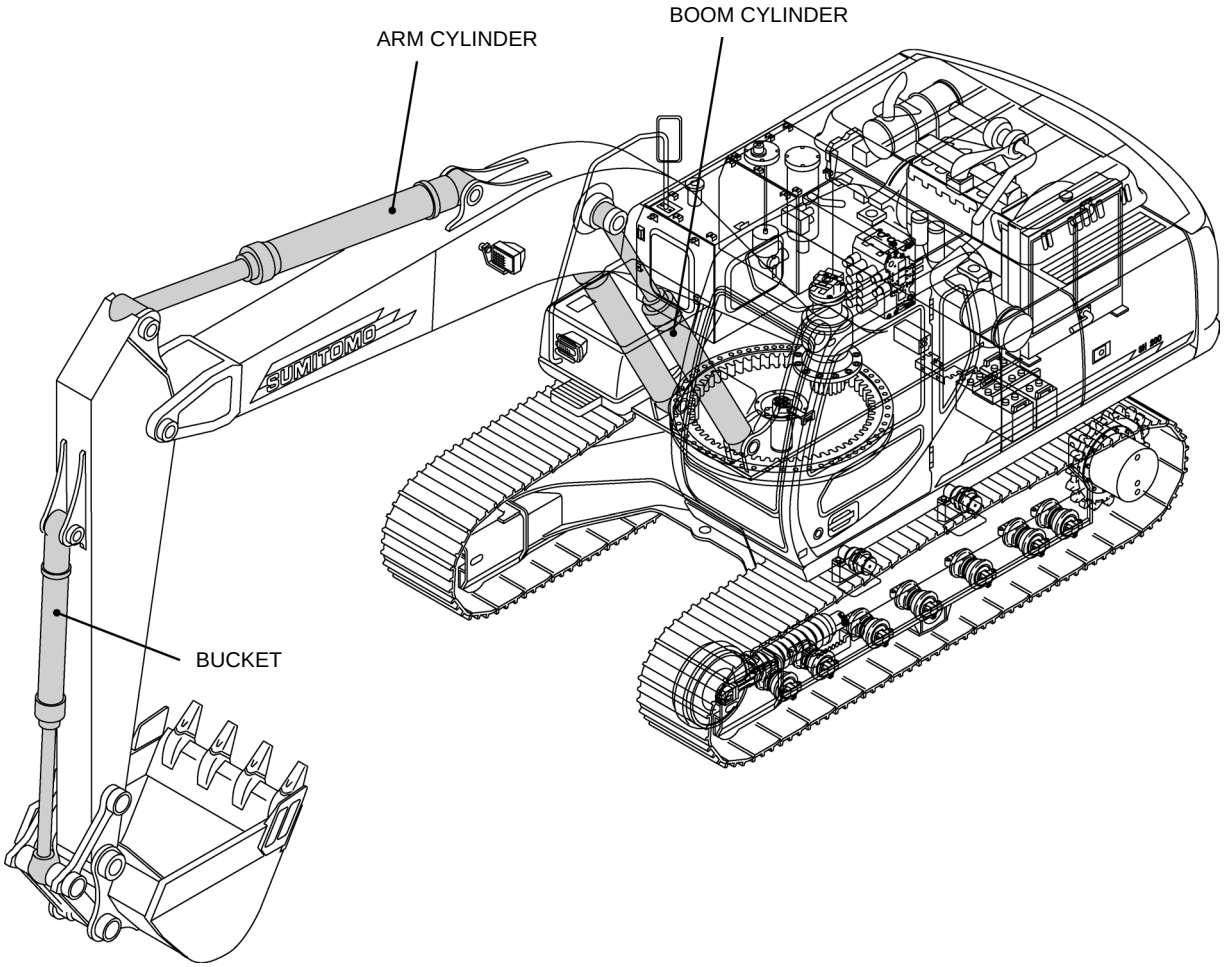

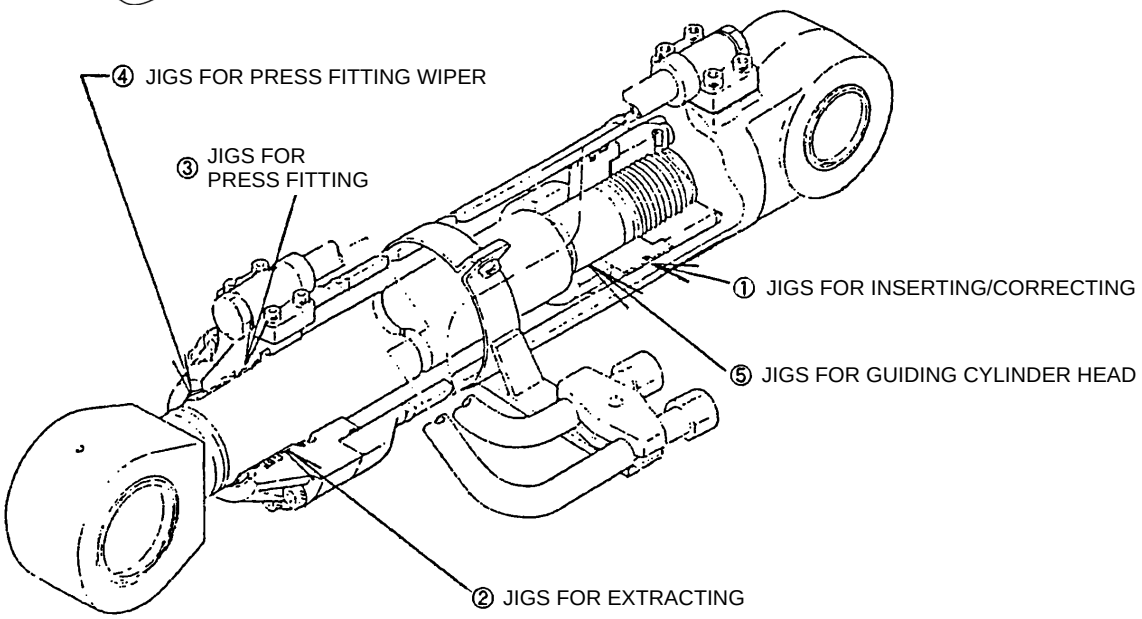

https://truckmanualshub.com/

2-1. Structure and features of jigs for cylinder repair

2-1-1. Jigs for insertion and correction of seal rings

a. Structure of jigs

Item Number	Item Name	Quantity	Remarks
KHV0530	Seal ring insertion/correction jig set	1	
	Inner guide	(1)	
	Outer guide	(1)	
	Plate	(1)	
	Correction	(1)	

Note: The item number indicates that the item is intended for seal rings with the tube diameter of 120 mm.

b. Features

Although it normally requires a tremendous amount of time and effort to insert a seal ring due to its extreme hardness, the use of the jig facilitates quick, easy and secure seal ring insertion into a piston without scratching the seal ring.

2-1-2. Jigs for injection and ejection of bushings and wiper rings

a. Structure of jigs

Item Number	Item Name	Quantity	Remarks
KHV0514	Bushing and wiper ring injection/ejection jig set	1	The jigs for press fitting bushings can be used for this job.
	Chuck assembly	(1)	
	Retainer	(1)	The jigs for press fitting wiper rings can be used for this job.
※	Block	1	Prepare this item at each service shop.
※	Lever	1	Prepare this item at each service shop.
※	Hexagon bar wrench	1	Prepare this item at each service shop.

Note: The item number indicates that the item is intended for bushings with the rod diameter of 80 mm.

b. Features

It normally requires a tremendous amount of time and effort to extract a bushing because it is press fit with a hydraulic press near the center of the cylinder head.

The use of the jig, however, facilitates quick, easy and secure extraction of a bushing from a cylinder head without scratching the inner surface of the cylinder head.

https://truckmanualshub.com/

2-1-3. Jigs for insertion of cylinder heads

a. Structure of jigs

Item Number	Item Name	Quantity	Remarks
KHV0550	Jigs for insertion of cylinder heads	1	

Note: The item number indicates that the item is intended for cylinder heads with the rod diameter of 80 mm.

b. Features

This special jigs facilitate quick, easy and secure slide fit of a cylinder head assembly to a piston rod without scratching any seals.

https://truckmanualshub.com/

2-2. List of Jigs

2-2-1. Jigs for insertion and correction of seal rings

MODEL	CYL. NAME	REPRESENTATIVE PART	BORE DIA.	PART No. KHV0150	KHV0525	KHV0526	KHV0527	KHV0528	KHV0529	KHV0530	KHV0531	KHV0532	KHV0533	KHV0534	KHV0535	KHV0536	--	KHV0537	KHV0538	KHV0539	--	KHV0540	--	KHV0541	--	KHV0542
				85	95	100	105	110	115	120	125	130	135	140	145	150	155	160	165	170	175	180	185	190	195	200
SH75X-3 / SH80-3	BOOM	KAV2034	110					○																		
	ARM	KAV2035	95		○																					
	BUCKET	KAV2036	85	○																						
	BLADE	KAV2085	100			○																				
(SH80-3)	SWING	KAV2787	95		○																					
SH75XU-3	BOOM	KAV2088	110					○																		
	ARM	KAV2037	95		○																					
	BUCKET	KAV2089	85	○																						
	OFFSET	KAV2038	95		○																					
	BLADE	KAV2085	100			○																				
SH125X-3 / SH135X-3	BOOM	KWV2135	105				○																			
	ARM	KNV1681	115						○																	
	BUCKET	KWV2192	95		○																					
	OFFSET	KWV2367	110					○																		
SH125XU-3 / SH135XU-3	BOOM	KWV2110	105				○																			
	ARM	KWV2112	105				○																			
	BUCKET	KWV2138	95		○																					
	OFFSET	KWV2139	120							○																
	BLADE	KWV2367	110					○																		
SH225X-3	BOOM	KRV3280	125								○															
	ARM	KRV2954	135										○													
	BUCKET	KRV2955	115						○																	
	BLADE	KRV3282	130									○														
SH120-3	BOOM	KNV1615	105				○																			
	ARM	KNV1617	115						○																	
	BUCKET	KNV1618	95		○																					
SH200-3 / SH200-LC	BOOM	KRV3234	120							○																
	ARM	KRV3236	135										○													
	BUCKET	KRV3237	115						○																	
SH220-3 / SH220-LC	BOOM	KBV1543	125								○															
	ARM	KBV1544	145												○											
	BUCKET	KBV1546	130									○														
SH300-3 / SH350HD-3	BOOM	KSV1393	145												○											
	ARM	KSV1395	170																	○						
	BUCKET	KSV1396	150													○										
SH400-3	BOOM	KTV1467	170																			○				
	ARM	KTV1461	190																					○		
	BUCKET	KTV1459	165																○							
SH450HD-3	BOOM	KTV1467	170																		○					
	ARM	KTV1464	200																							○
	BUCKET	KTV1459	165																○							

https://truckmanualshub.com/

2-2-2. Jigs for injection and ejection of bushings and wiper rings

MODEL	CYL.NAME	REPRESENTATIVE PART	PART No.	KHV0130	KHV0140	KHV0511	KHV0512	KHV0513	KHV0514	KHV0515	KHV0516	KHV0517	KHV0518	KHV0519	KHV0520	KHV0521	KHV0522	---	KHV0523	---	KHV0524
			ROD DIA.	55	60	65	70	75	80	85	90	95	100	105	110	115	120	125	130	135	140
SH75X-3 / SH80-3	BOOM	KAV2034	70				○														
	ARM	KAV2035	60		○																
	BUCKET	KAV2036	55	○																	
	BLADE	KAV2085	60		○																
(SH80-3)	SWING	KAV2787	55	○																	
SH75XU-3	BOOM	KAV2088	70				○														
	ARM	KAV2037	60		○																
	BUCKET	KAV2089	55	○																	
	OFFSET	KAV2038	55	○																	
	BLADE	KAV2085	60		○																
SH125X-3 / SH135X-3	BOOM	KMV2135	75					○													
	ARM	KNV1681	80						○												
	BUCKET	KMV2192	65			○															
	BLADE	KMV2367	70				○														
SH125XU-3 / SH135XU-3	BOOM	KMV2110	75					○													
	ARM	KMV2112	75					○													
	BUCKET	KMV2138	65			○															
	OFFSET	KMV2139	65			○															
	BLADE	KMV2367	70				○														
SH225X-3	BOOM	KRV3280	90								○										
	ARM	KRV2954	95									○									
	BUCKET	KRV2955	80						○												
	BLADE	KRV3282	80						○												
SH120-3	BOOM	KNV1615	70				○														
	ARM	KNV1617	80						○												
	BUCKET	KNV1618	65			○															
SH200-3 / SH200-LC	BOOM	KRV3234	85							○											
	ARM	KRV3236	95									○									
	BUCKET	KRV3237	80						○												
SH220-3 / SH220-LC	BOOM	KBV1543	90								○										
	ARM	KBV1544	105											○							
	BUCKET	KBV1546	90								○										
SH300-3 / SH350HD-3	BOOM	KSV1393	100										○								
	ARM	KSV1395	120														○				
	BUCKET	KSV1396	105											○							
SH400-3	BOOM	KTV1467	115													○					
	ARM	KTV1461	130																○		
	BUCKET	KTV1459	115													○					
SH450HD-3	BOOM	KTV1467	115													○					
	ARM	KTV1464	140																		○
	BUCKET	KTV1459	115													○					

https://truckmanualshub.com/

2-2-3. Jigs for insertion of cylinder heads

PART No.	ROD DIA.	ROD THREAD SIZE	CUSHION TYPE	MODEL	CYL. NAME
KHV10160	55	M42	FASTENED	SH75X-3	BUCKET
				SH75XU-3	BUCKET
KHV10170	55	M45	FASTENED	SH80-3	SWING
				SH75XU-3	OFFSET
KHV10180	60	M45	FASTENED	SH75X-3	ARM
				SH75XU-3	ARM
				SH75XU-3	BLADE
KHV10190	65	M52	FASTENED	SH125XU-3	OFFSET
KHV0545	65	M48	FASTENED	SH120-3	BUCKET
				SH125X-3	BUCKET
				SH125XU-3	BUCKET
KHV0546	70	M48&M52	FLOATING	SH120-3	BOOM
KHV0547	70	M48	FASTENED	-	-
KHV10200	70	M52	FASTENED	SH75X-3	BOOM
				SH75XU-3	BOOM
				SH125XU-3	BLADE
KHV0548	75	M48&52	FLOATING	SH125X-3	BOOM
				SH125XU-3	BOOM
				SH125XU-3	ARM
				SH150-3	BUCKET
KHV0549	75	M52	FASTENED	SH225XTN-3	BUCKET
KHV0550	80	M58	FLOATING	SH120-3	ARM
				SH125X-3	ARM
				SH150-3	BOOM
KHV0551	80	M62	FASTENED	SH200-3	BUCKET
KHV0552	80	M65	FASTENED	-	-
KHV0553	85	M62&M65	FLOATING	SH200-3	BOOM
KHV0554	90	M65&M70	FLOATING	SH150-3	ARM
				SH220-3	BOOM
				SH225-3	BOOM
KHV0555	90	M70	FASTENED	SH220-3	BUCKET
KHV0556	95	M70	FLOATING	SH200-3	ARM
				SH250-3	BOOM
KHV0557	100	M70&M80	FLOATING	SH300-3	BOOM
KHV0558	105	M80	FLOATING	SH220-3	ARM
				SH250-3	ARM
KHV0559	105	M80	FASTENED	SH300-3	BUCKET
KHV0560	110	M80&M85	FLOATING	-	-
KHV0561	110	M85	FASTENED	-	-
KHV0562	115	M85	FLOATING	SH400-3	BUCKET
KHV0563	115	M85	FASTENED	SH400-3	BUCKET
KHV0564	120	M95	FLOATING	SH225TN-3	ARM
				SH300-3	ARM
KHV0565	125	-	-	-	-
KHV0566	130	M95	FLOATING	SH400-3	ARM
KHV0567	135	-	-	-	-
KHV0568	140	M105	FLOATING	SH450-3	ARM
				SH800-3	BOOM

https://truckmanualshub.com/

2-3. Handling jigs

2-3-1. Inserting/correcting seal rings

1	Installing an O-ring 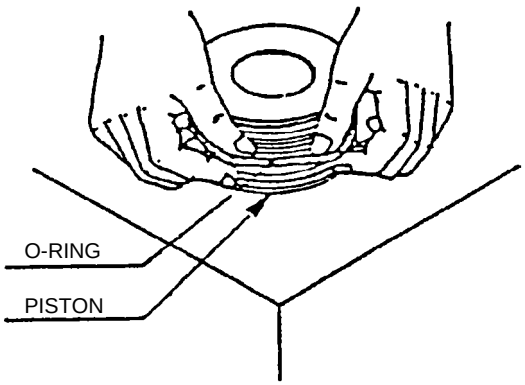 	Stretch the O-ring by hand and install it in the groove of the piston. ※ Install O-rings securely without distorting them. Distorted O-rings will cause oil leakages. 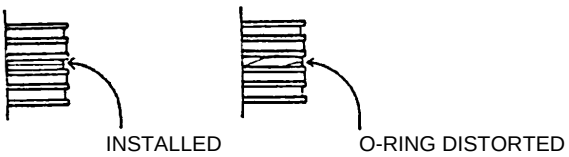
2	Attaching the inner guide jig 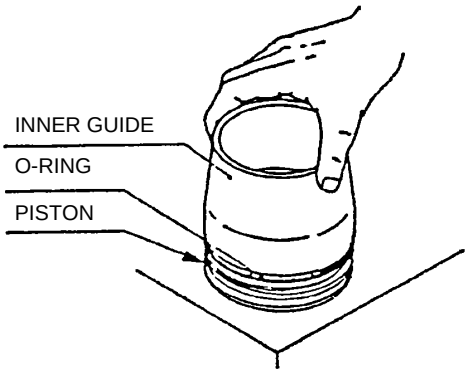 	Install the inner guide jig from the top side of the piston. ※ Carefully install the thin edge of the inner guide jig on the top of the piston. 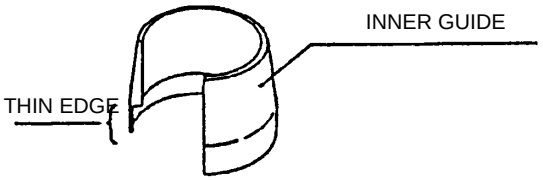
3	Installing a seal ring 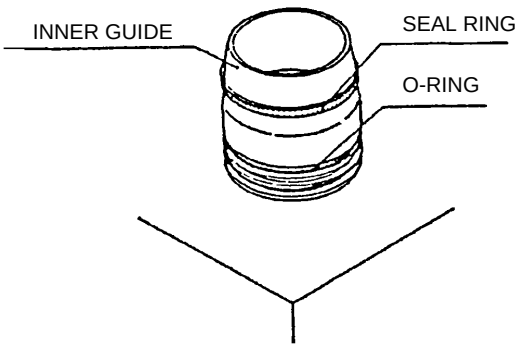 	Apply hydraulic oil to the perimeter of the inner guide and place the seal ring level with the inner guide. ※ Use caution to keep foreign substances such as dirt, particles and lint from the outside of the inner guide jig.

https://truckmanualshub.com/

4	Installing an outer guide jig 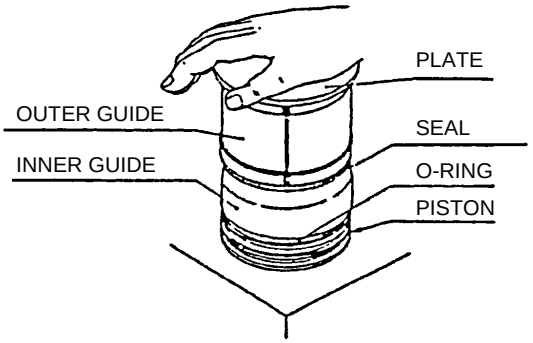 	Place a plate on top of the outer guide jig and press down with hand until the seal ring contacts the outer guide jig. ※ The seal ring must not be installed in the inner guide jig, nor could it be at an angle.
5	Press fitting 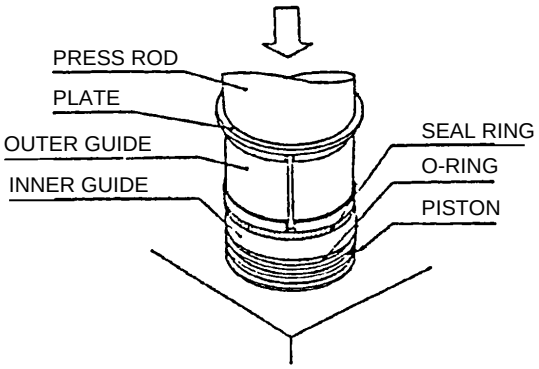 	Use a press and push down the seal ring until it fits in the groove of the piston. ※ Use caution while pushing down the seal ring because it may not be properly fit in the groove if it is at an angle in the inner guide jig. Installation of the ring must be carried out swiftly.
6	Removing the jigs 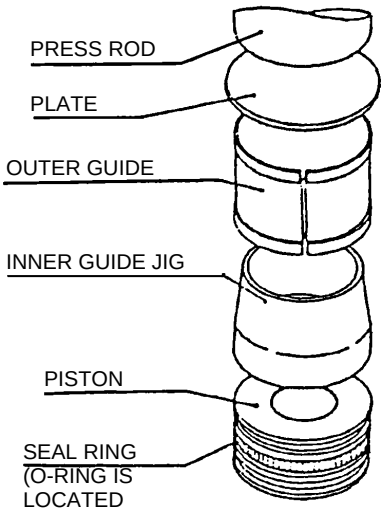 	Remove the jigs in the following order, once confirmed that the seal ring has been completely installed in the groove of the piston. 1. Remove the press rod. 2. Remove the plate. 3. Remove the outer guide jig. 4. Remove the inner guide jig. The installation of a seal ring is now complete. The instructions for aligning a seal ring using a correction jig will be given next.

https://truckmanualshub.com/

7	Preparing a correction jig 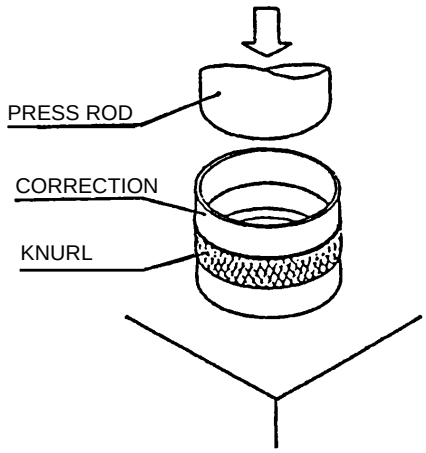 	Place a correction jig under a press. ※ Apply a light coat of oil to the tapered area of the correction jig and place the jig with the tapered side up. Use caution to keep foreign substances such as dirt, particles and lint off the jig.
8	Inserting a piston 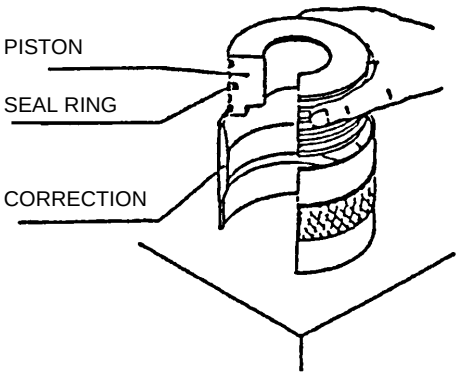 	Install a seal ring to the piston and slowly insert into the correction jig. ※ Insert the piston into the correction jig so that the piston rests level.
9	Press fitting 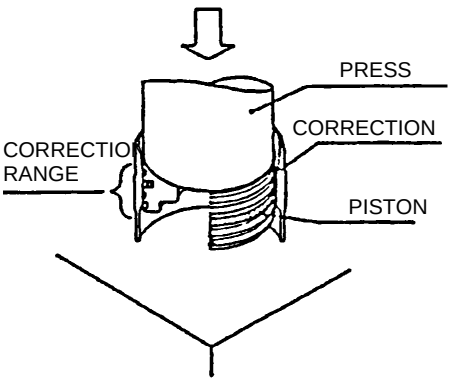 	

https://truckmanualshub.com/

10	Removing the correction jig 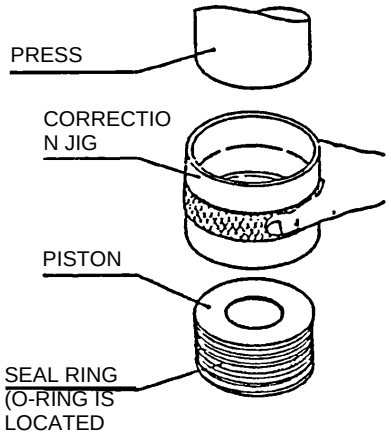 	After the alignment of the seal ring has been completed, remove the jig in the following order. 1. Remove the press rod. 2. Remove the correction jig. The installation and the alignment of the seal ring is now complete.

※ Other precautions

1. A specific cylinder bore size requires a specific jig. Refer to the applicable table to choose the correct jig for a specific bore size.
2. The lower part of the inner guide is structurally very thin, requiring extra care and attention for handling and storage.

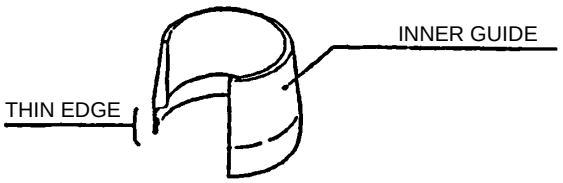

3. Clean the seal, piston and jigs with compressed air or by other suitable method before installation. Insufficient cleaning may lead to failures such as oil leakage due to foreign substances (dirt, etc.).

https://truckmanualshub.com/

2-3-2. Extracting bushings

1	Setting the cylinder head 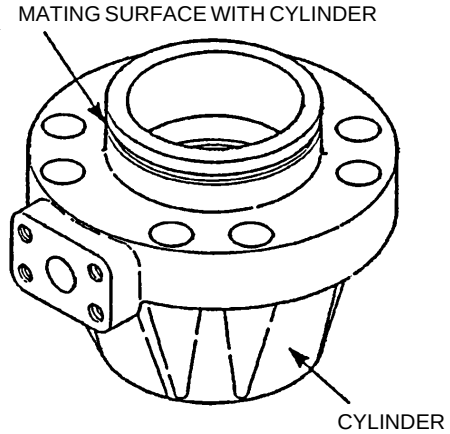 	Place the cylinder head on a workbench with the mating surface with the cylinder tube up. ※ The workbench must be clean. Use caution to keep the pipe joint portion from getting scratched by foreign substances such as dirt and particles.
2	Extracting the snap ring 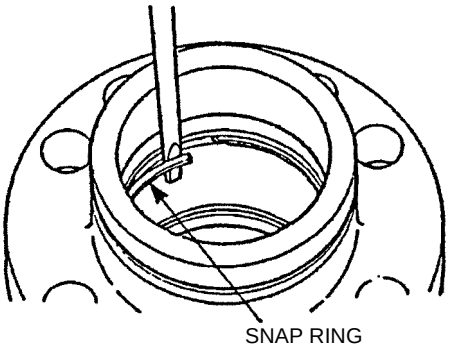 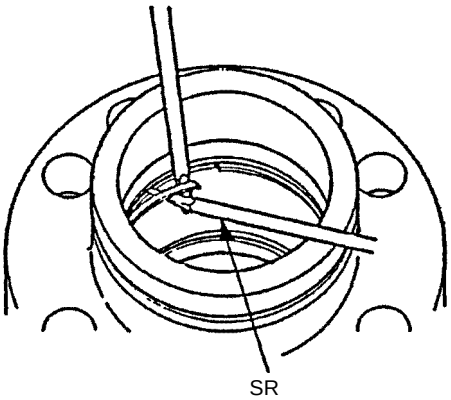 	Remove the snap ring that is assembled inside the cylinder head for preventing the bushing from falling out. ※ Secure the cylinder head with a vise, etc. Using the tip of the jig, pry out and remove the snap ring.

3	Setting the chuck assembly (jig) 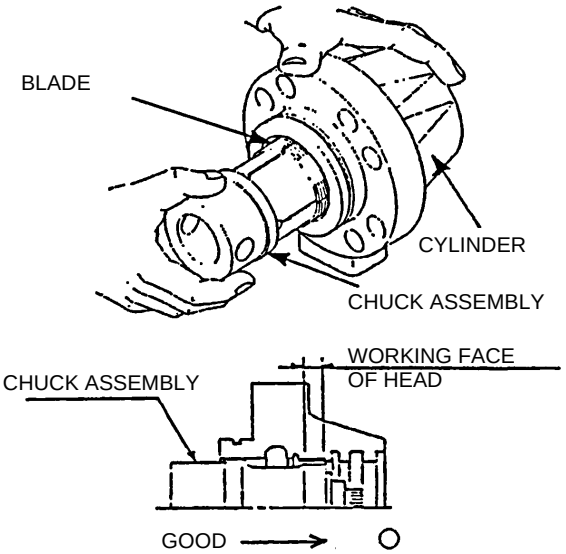 	Gradually insert the chuck assembly in the cylinder head until the blade of the chuck assembly reaches the edge of the bushing. ※ 1. Gradually insert the chuck assembly in cylinder head. Use extra caution to prevent the inner surface of the cylinder head and such from getting damaged by the blade. 2. Also use caution to keep the blade from sticking out the end of bushing. 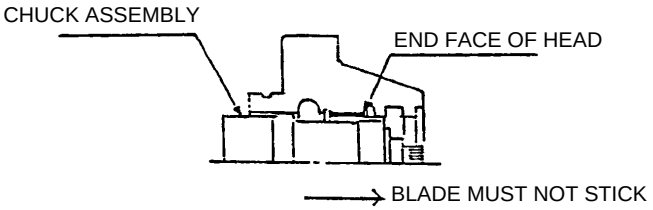
4	Temporal tightening 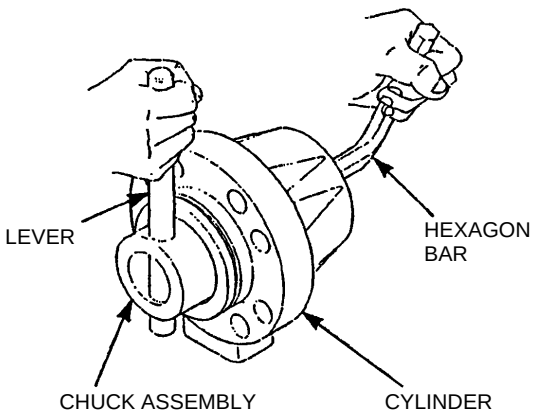 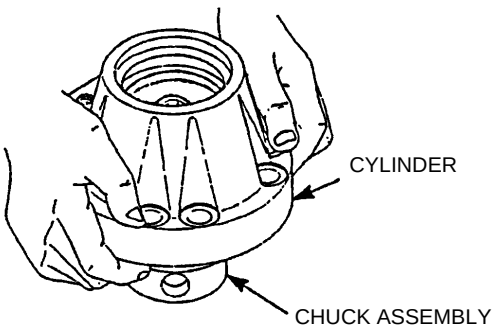 	1. Insert the hexagon bar wrench in the head of the chuck assembly (jig). Also, insert a lever in the round hole on the end section of the chuck assembly at the same time. 2. Tip the hexagon bar wrench and the lever back and forth and tighten the chuck assembly to the point that the jig does not fall out with the cylinder head lifted up. ※ Less than 5 kgf·cm of tightening torque is good enough. ※ With the chuck assembly installed in the cylinder head, firmly grasp both ends of the cylinder head and carefully move to the press workbench.

https://truckmanualshub.com/

5	Attachment the retainer (jig) 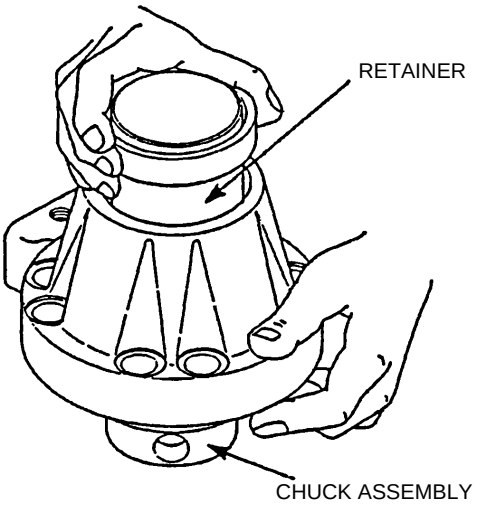 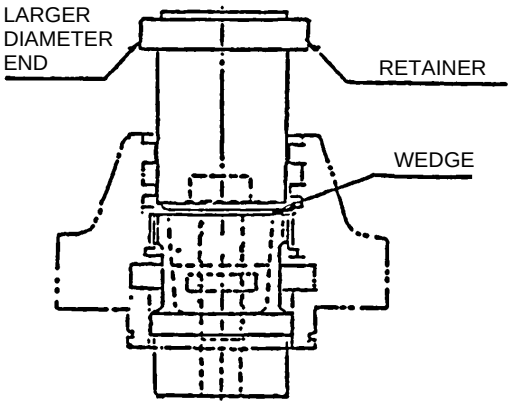 	Place the retainer gently on the notches of the wedge, which is inside the chuck assembly (jig), so the wedge will be covered by the retainer. ※ 1. Place the retainer with its larger diameter end up. See the figure to the left. 2. The workbench must be clean. Use caution to keep the chuck assembly bottom from getting scratched by foreign substances such as dirt and particles. Keep it from tipping, also.
6	Secondary tightening 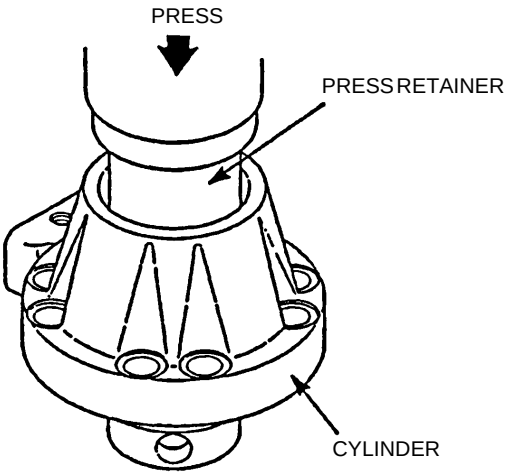 	Gradually press down the top of the retainer (jig) so the blade section of the chuck assembly jig bites into the bushing face. ※ Apply 2 to 3 tons of press load. ※ The retainer jig must be used for the pressing procedure.

https://truckmanualshub.com/

7 Preparing the block (jig)

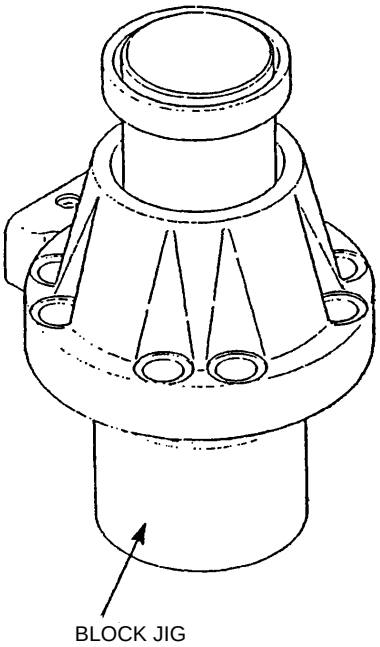

Place the cylinder head on top of the block with the shaft centers aligned.

Refer to the table and choose the block with the proper figuration and size.

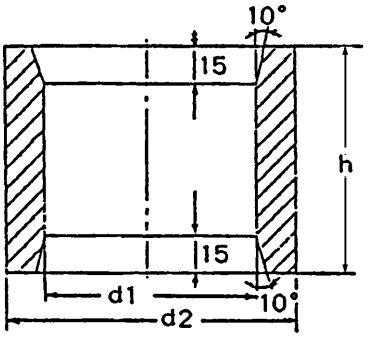

Category	d1	d2	h	Nominal size
For dia. 75	82	110	80	75
80	87	112	80	80
85	92	124	80	85
90	97	130	80	90
95	102	136	80	95
100	107	140	80	100
105	112	146	80	105
110	117	150	80	110

8 For extracting bushings

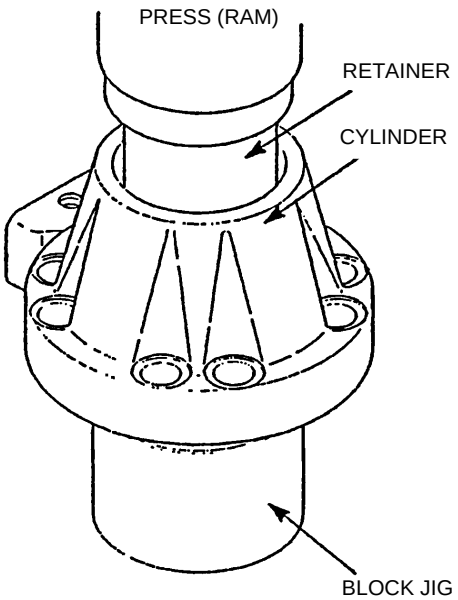

1. Move the block (jig) and the cylinder head assembly (with the retainer jig and the chuck assembly jig attached) directly underneath the press.
2. Gradually press down the top of the retainer (jig) until the bushing comes out from the cylinder head (until the bottom of the chuck assembly jig falls on the bench and you actually hear it.)

※ Usually a load of 3 tons or less is needed for the extraction.

※ The stroke of press ram is approximately 32 to 52 mm, depending on the size of the cylinder head.

※

1. A retainer must be used for the pressing procedure.
2. If the shaft centers of the block and the cylinder head assembly do not align with each other, stop the procedure, move the block and align the shaft centers before resuming the operation.

https://truckmanualshub.com/

9	Removing the chuck assembly (jig) with the bushing attached 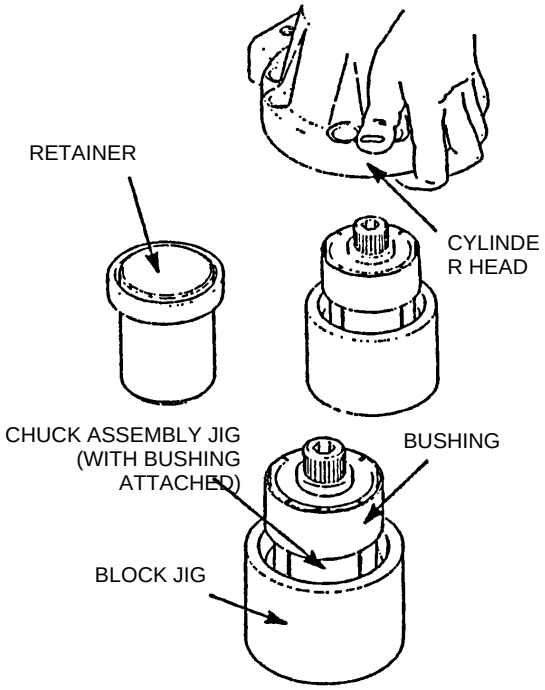 	1. Pull the cylinder head assembly (with the retainer jig and the chuck assembly jig attached) and the block (jig) toward you from right beneath the press. Remove the retainer from the cylinder head. Grab both ends of the cylinder head with both hands and move from there. 2. Remove the assembly with the bushing attached out of the block and move to the workbench. ⚠ Do not ever attempt to work under the press. Stay safe.
10	Removing the bushing 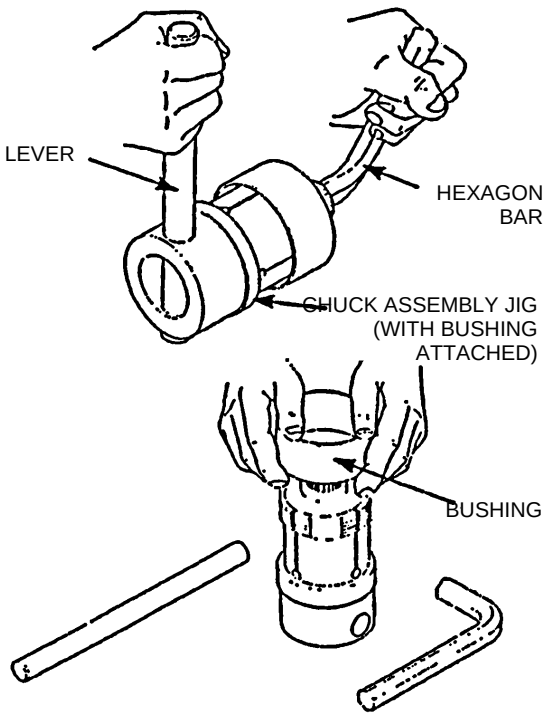 	1. Place the chuck assembly with the bushing attached (jig) sideways on the workbench. Insert the hexagon bar wrench in the adjuster head on the chuck assembly tip, plus insert the lever into the round hole at the back of the chuck assembly at the same time. 2. Tip the hexagon bar wrench and the lever back and forth to loosen the adjuster. 3. Reposition the chuck assembly so it stands vertically. Rotate the adjuster with fingers until about 5 mm of the wedge comes out. 4. Verify that the bushing is disconnected from the blade section of the chuck, then gently remove the bushing from the assembly. ※ The workbench must be clean. Use caution to keep the chuck bottom and the periphery from getting scratched by foreign substances such as dirt and particles. Keep it from tipping also.

https://truckmanualshub.com/

11	Tightening back the adjuster 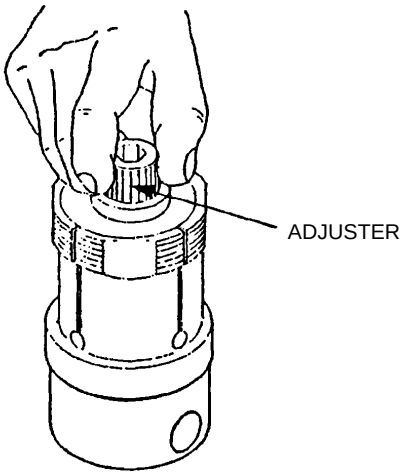 	Once the bushing is removed from the chuck assembly (jig), rotate its adjuster with fingers and tighten until there is no gap between the adjuster and the top surface of the wedge. ※ Do not remove the adjuster and the wedge from the chuck assembly. Keep them in the condition as close to the original as possible.

※ **Other precautions**

1. A specific piston rod diameter requires a specific jig. Refer to the applicable table to choose the correct jig for a specific diameter size.
2. The blade section of the chuck assembly is a vital portion and must be handled and stored with extreme care.

https://truckmanualshub.com/

2-3-3. Press fitting bushings

1	Setting the cylinder head 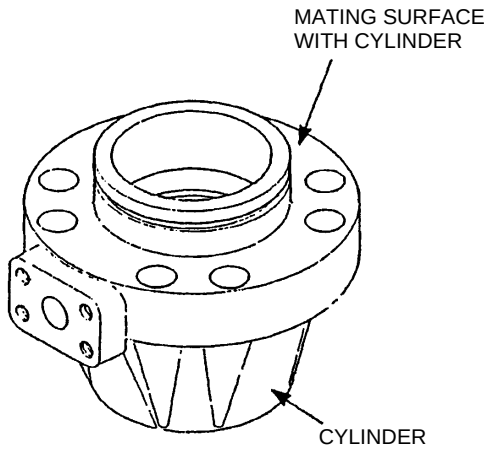 	Place the cylinder head on the workbench with the mating surface with the tube up. ※ 1. The workbench must be clean. Use caution to keep the cylinder head bottom from getting scratched by foreign substances such as dirt and particles. Keep it from tipping also. 2. Before starting the procedure, remove foreign substances thoroughly with air, etc.
2	Temporarily setting the bushing 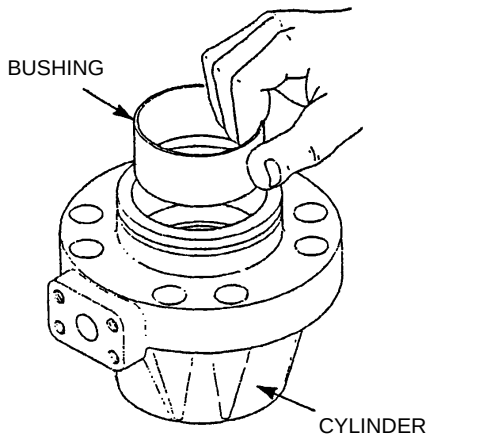 	Temporally place the bushing level inside the cylinder head. ※ Verify that inner/outer surfaces of the bushing are free of foreign substances.
3	Setting the chuck assembly (jig) 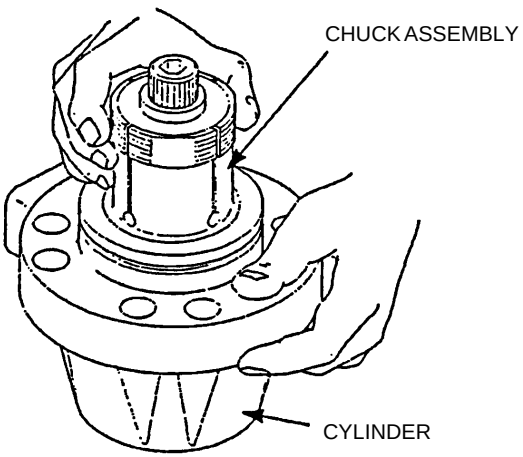 	Secure the chuck assembly with fingers and gradually insert into the cylinder head. ※ Verify that the chuck assembly adjuster sits by the wedge with no gap in between. 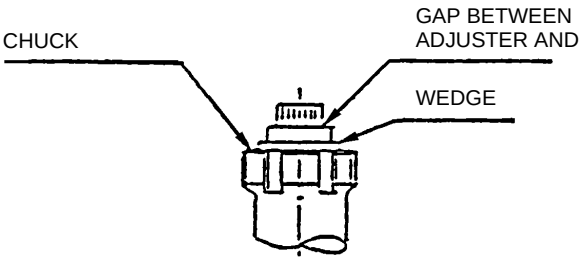

https://truckmanualshub.com/

4	Attaching the retainer (jig) 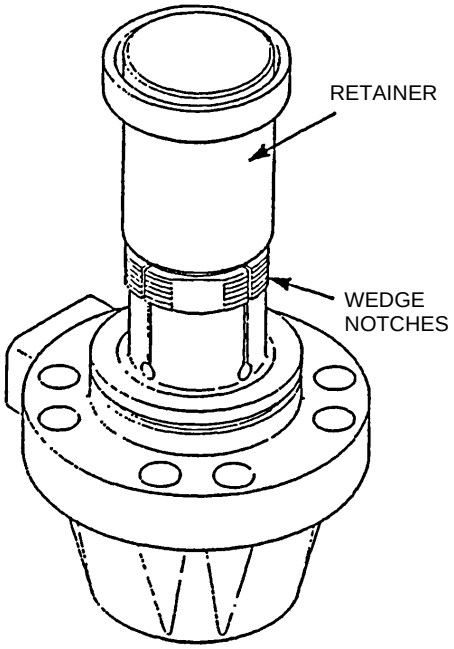 	Align and gently place the retainer on the notches of the wedge in the chuck assembly. ※ Place the retainer with its larger diameter end up. See the figure to the right.
5	Preparing for press fitting 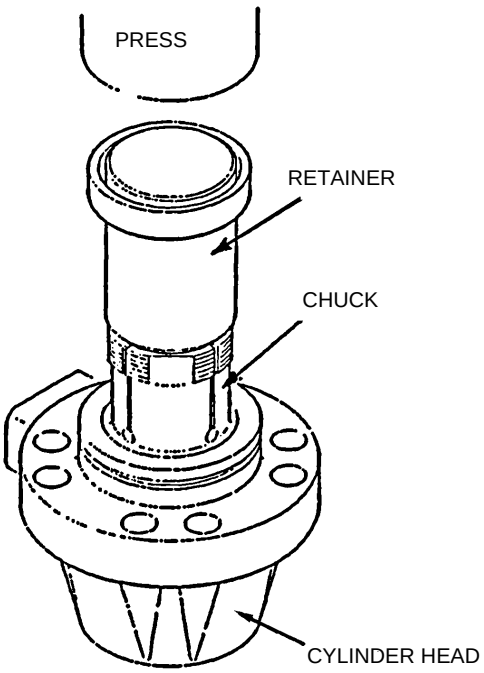 	With the retainer (jig) and the chuck assembly (jig) attached, move the cylinder head right underneath the press. ※ Align the press (ram) axis with the retainer and the chuck assembly axes. 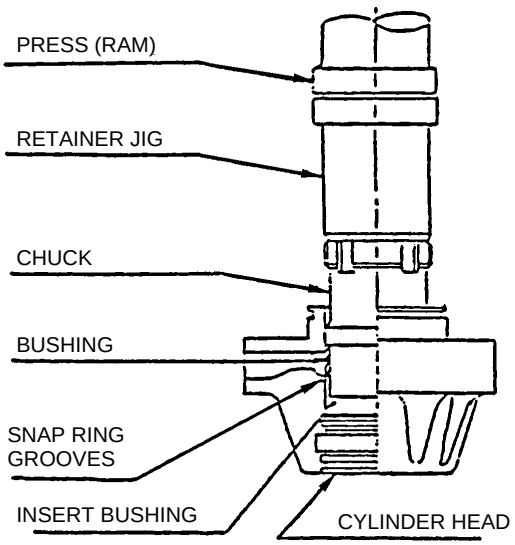

https://truckmanualshub.com/

6	Press fitting the bushing 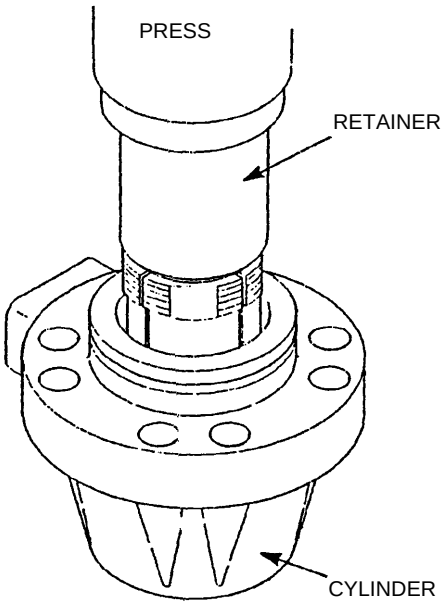 	Use a press to push down the bolt head of the adjuster until the bushing reaches the proper position in the cylinder head. Keep the press load below 5 tons. ※ Check to see if the bushing edge sits at the back of the snap ring grooves. Press fit again if not.
7	Removing the retainer (jig) and the chuck assembly (jig) 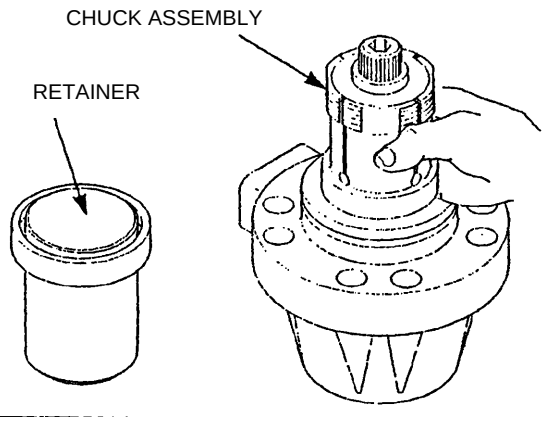 	Once the press fitting of the bushing is complete, remove the retainer and the chuck assembly from the cylinder head. Then, attach the seals and press fit the wiper ring. ※ Examine to see if the bushing is press fit properly.

※ **Other precautions**

1. A specific piston rod diameter requires a specific jig. Refer to the applicable table to choose the correct jig for a specific diameter size.
2. The blade section of the chuck assembly is a vital portion and must be handled and stored with extreme care.

https://truckmanualshub.com/

2-3-4. Press fitting wiper rings

1	Setting the cylinder head 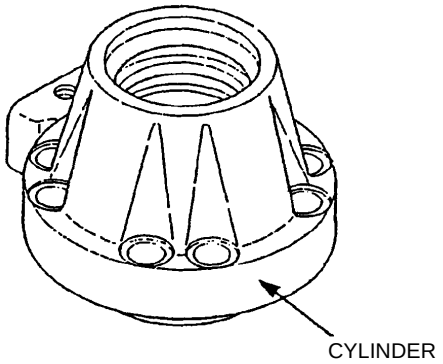 	Place the cylinder head on a workbench with the mating surface with the tube facing down. ※ The workbench must be clean. Use caution to keep the cylinder head bottom from getting scratched by foreign substances such as dirt and chips from cutting.
2	Inserting the wiper ring 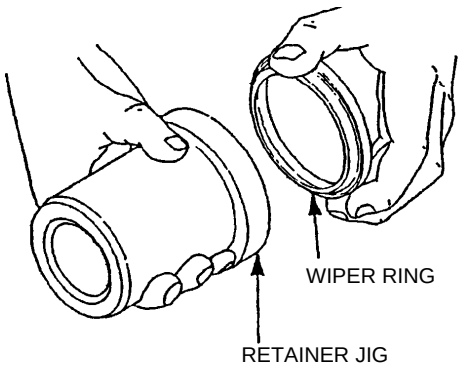 	Insert the lip side of the wiper ring so it faces the retainer (jig) grooves. ※ Make sure that the receiver area of the retainer for the wiper ring is free of dirt or foreign substances. Remove with air, etc., if any, before starting the procedure.
3	Attaching the retainer (jig) 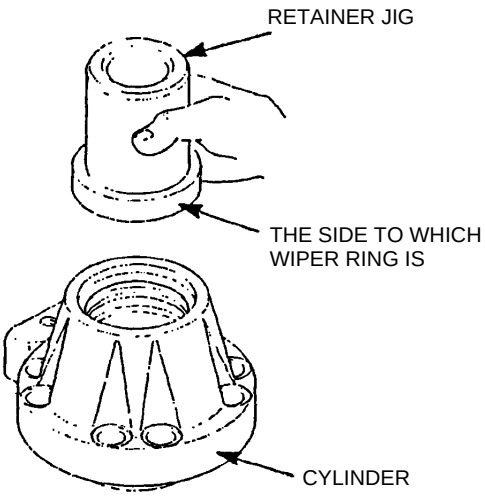 	Gently place the retainer on top of the cylinder head with the side for wiper ring insertion facing down. ※ Place the retainer gently on top of the cylinder head making sure that it is level with the work bench.

https://truckmanualshub.com/

4	Preparing for press fitting 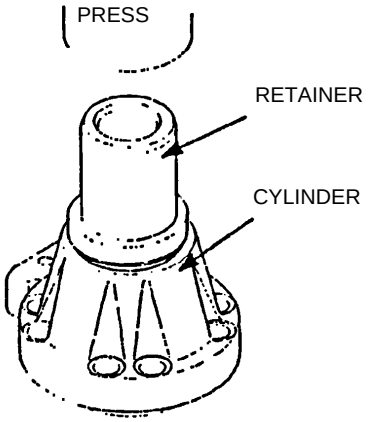 	With the retainer (jig) on top, move the cylinder right underneath the press. ※ Align the press (ram) axis with the retainer axis. 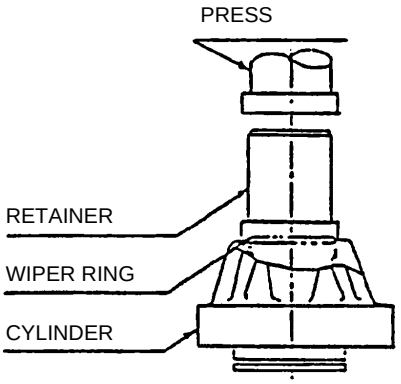
5	Press fitting the wiper ring 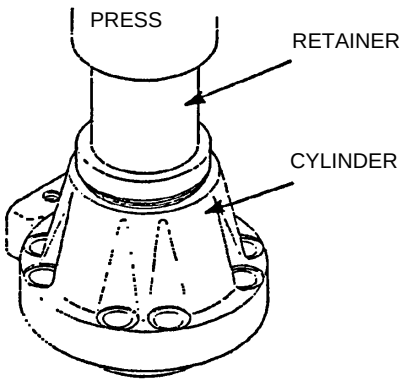 	Use a press to push down the retainer (jig) head until the wiper ring reaches the proper position in the cylinder head. ※ Keep the press load below 1 ton. ※ Press fit until the jaws of the retainer reach the end of the cylinder head.
6	Removing the retainer (jig) 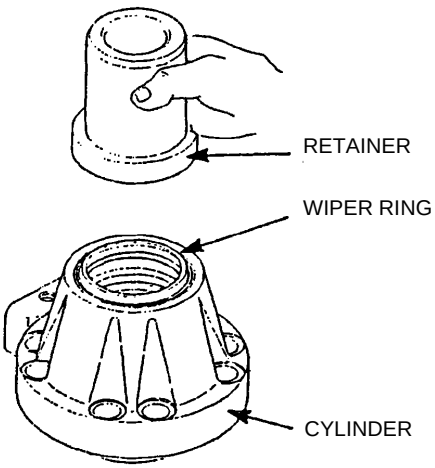 	Once the press fit of the wiper ring is complete, remove the retainer from the cylinder head. ※ Examine if the wiper ring is properly press fit.

https://truckmanualshub.com/

2-3-5. Inserting cylinder head

1	Securing the piston rod 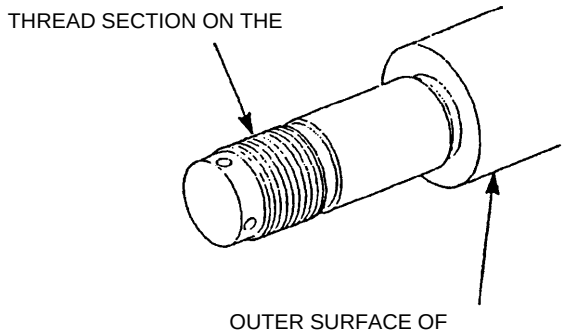 	Position the piston rod thread in a direction for carrying out the procedure the easiest, then secure. ※ Use extreme care while handling the piston rod to avoid scratches on the outer surface.
2	Attaching the guide (jig) 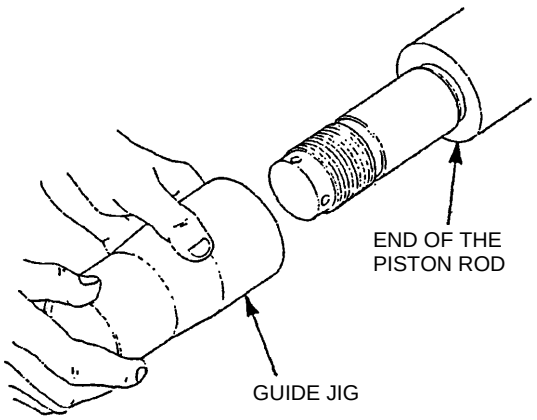 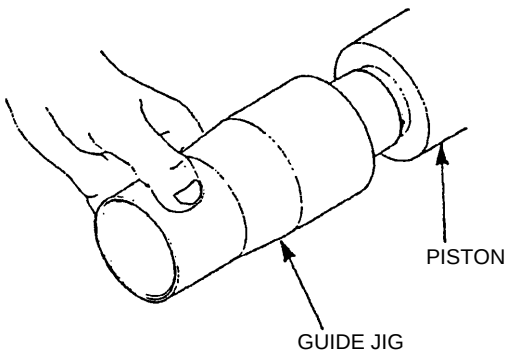 	With the larger diameter side of the guide facing down, insert till it reaches the end of the piston rod notch. ※ 1. Use caution and avoid scratches on the piston rod thread while inserting the guide to the piston rod. 2. Use caution to keep the piston rod thread and the outer surface of the notches from getting scratched by foreign substances such as dirt and chips from cutting.

https://truckmanualshub.com/

3	Inserting the cylinder head 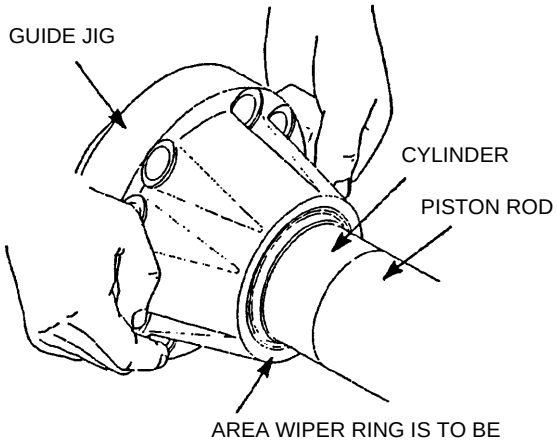 	Push in the cylinder head assembly till it reaches the proper position: let the assembly slide on the outer surface of the guide (jig) with the side to attach the wiper ring facing the piston rod head. ※ 1. Firmly grab the cylinder assembly by both hands. Use extreme care and do not allow it to drop on your foot. 2. Applying a thin coat of oil to the guide and the outer surface of the piston rod facilitates smooth insertion.
4	Removing the guide (jig) 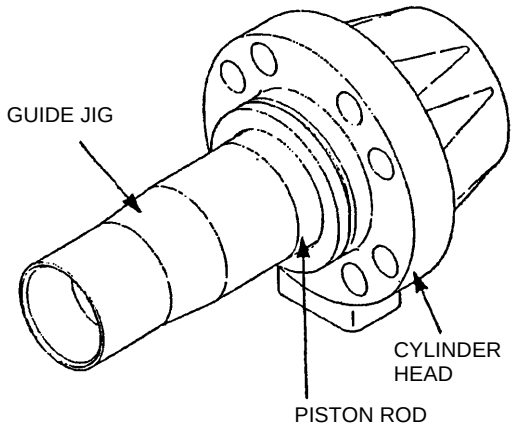 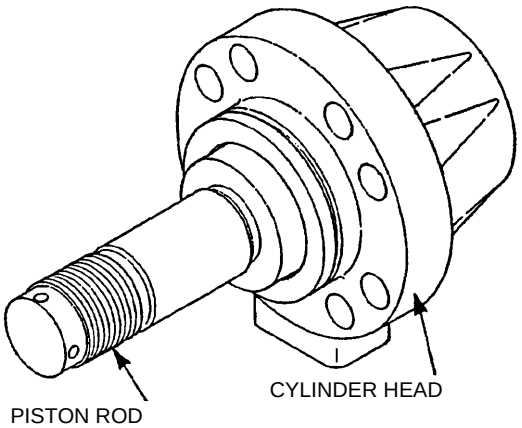 	Check to confirm that the cylinder head assembly is completely inserted into the piston rod.Then remove the guide from the piston rod. Then, assemble the piston and the other parts on the piston rod. ※ When removing the guide, use extra care to keep the piston rod thread from being damaged.

https://truckmanualshub.com/

For Operation Use

1. Safety Information

1-1. Notes for these instructions

To use this device safely, always read carefully and fully understand these instructions before operating or maintaining/inspecting the device. Particularly, read carefully and strictly observe the *Safety Precautions*.

Always keep these instructions at hand and store in a safe place.

1-2. Safety precautions

Before using this device, read the *Safety Precautions* section carefully and try to use it properly.

These precautions described here are intended to show how to use this device in a proper manner and prevent injury to the operator or other people, or damage to the device.

These precautions are classified into two categories in order to indicate possible results according to the seriousness of hazard or damage and imminent levels if devices are handled in an improper manner: *WARNING* and *CAUTION*.

As all precautions are very important safety information, always follow them.

1. Precautions when operating devices

   When operating this device, observe the following items:

⚠	1. Before starting this device, ensure that nobody and no objects are near the machine or within the working range. 2. If the machine indicates any dangerous behavior, immediately stop the device which supplies the machine with hydraulic pressure. 3. When abnormality (noises or oil leakage) occurs, immediately stop operation and take necessary measures. It may cause breakage and injury.

⚠	1. When operating the device for the first time, ensure that the hydraulic circuits and electric cables are correctly set and there are no loose connections before starting the operation. 2. Do not use the devices in other than specified manners described in dimensional outline drawings. 3. While operating, be careful and keep your hands and body away from the devices as they often get hot due to the increased oil temperature. It may cause burns. 4. Use specified hydraulic oils, and control their contamination level using estimated values. It may cause malfunction and breakage. 5. Always install filters at the entry side of the device described in the dimensional outline drawing.

2. Precautions when handling devices

   When handling devices, observe the following items:

⚠	1. To avoid injury while handling devices, wear protective gear as necessary. 2. Carefully select suitable work methods according to the weight of a product and working postures to avoid a caught hand or low back damage. 3. Do not apply extra external force by putting yourself on, hitting or dropping the device. It may cause malfunction, breakage and oil leakage. 4. Completely wipe hydraulic oil from devices and the floor. It may cause devices to drop or injury by slipping.

https://truckmanualshub.com/

3. Precautions when installing and removing devices

⚠	1. Prior to the operation, always turn off the power on the device and ensure that the motor and engine have stopped completely. In addition, check that the pressure in the hydraulic piping is zero. Release the remaining pressure in the accumulator by operating device lever more than 10 times. 2. Installation, removal, piping and wiring should be carried out by qualified technicians only. (Qualified technician: one who has acquired a Hydraulics Adjustment 2nd Grade Certificate or equivalent, or has had service training held by our company's business department.) 3. Clean the fitting holes and surfaces. It may cause breakage and oil leakage due to poorly tightened bolts and defective sealing. 4. When installing, always use specified bolts and apply specified torque to tighten the product. Do not install products in other than a specified manner. If this is neglected, it may cause malfunction, breakage and oil leakage.

4. Precautions when maintaining and storing

⚠	1. Never attempt to modify products by yourself. 2. Do not disassemble and assemble products without notifying us. The product will not function fully to its specified performance and may cause errors or accidents. When disassembling and assembling is urgently needed, it should be done by qualified technicians only. As described in *5*, however, performance and functions are only guaranteed on products that have passed our performance and operation tests conducted by us. 3. When transporting and storing products, take necessary measures for dust proofing and rust prevention according to conditions such as atmosphere temperature and humidity. 4. When using products that were stored for a long time, seals may need to be replaced.

5. Precautions regarding performance/function

⚠	As this product is one of the essential safety devices, performances and functions are only guaranteed on products that have passed our performance and operation tests conducted by us. Do not disassemble and assemble this product unless you fully understand the precaution described above.

https://truckmanualshub.com/

1-3. Exemption from liability

The following items are to be exempted:

1. Irresistible force (natural disasters) and external factors (accidents)
2. Wrong use and misuse
   - Use other than that specified
   - Use under different conditions from those specified
   - Execution of prohibited items
   - Execution of items other than specified in manuals (operation, maintenance and inspection order)
   - Failure of items specified in instruction manuals (operation, maintenance and inspection order)
3. Unsafe conduct
4. Performances and functions of the device which has been disassembled and assembled by your company or a third party.

2. Description

The pilot valve is a pressure reducing valve type remote control valve, integrating 4 pressure reducing valves to control secondary pressure in one valve casing. Adjusting the inclination of the operating section controls output pressures.

3. Specifications

Primary pressure	Maximum pressure 6.9 MPa
Secondary pressure	0 to 4.4 (Maximum control pressure) MPa
Allowable back pressure	Maximum 0.3 MPa
Rated flow	20 L/min
Operating inclination	± 19°, ± 25° (single)
Mass	1.9 kg
Piping	To obtain better response, suitable piping is inner diameter 8, length 3 M. In addition, the return oil should be directly returned to the tank to avoid the influence of back pressure.

https://truckmanualshub.com/

4. Structure

The structure of a pilot valve is as shown in the assembly sectional drawing (Page 21/22). The casing has openings along the vertical axis, in which pressure reducing valves are integrated.

The pressure reducing valve section consists of spools (201), springs (241) for setting secondary pressure, return springs (221), spring seats 1 (216) and washers 2 (217). The spring (241) for setting secondary pressure is configured to obtain reduced secondary pressures of 0.49 to 0.98MPa (depending on models). The spool (201) is pushed against the push rod (212) by the return spring (221).

As the push rod (212) is pressed down when the operating part of the handle is inclined, the spring seat 1 (216) is also lowered at the same time, as a result, the settings of the spring for setting secondary pressure (241) change.

The casing (101) and port plate (111) have oil entry ports P (Primary pressure) and exit ports T (Tank), and the secondary pressure is delivered from the ports 1, 2, 3 and 4.

5. Functions

5-1. Basic functions

The pilot valve is a valve designed for controlling the strokes and directions of the control valve spool. This is achieved by acting output pressures from the pilot valve on the end of the control valve spool.

To meet requirements for this function, the pilot valve is composed of the following segments:

1. Entry port (P) through which the hydraulic pump supplies oil
2. Multiple output ports (1, 2, 3 and 4) which are designed to apply pressure supplied from the entry port on the end of spool in the control valve.
3. Tank port (T) which is required to control the output pressures described above.
4. Spool which connects an output port to the entry port or tank port.
5. Mechanical measures including springs which act on the spool described above in order to control output pressure.

5-2. Major component functions

The function of the spool (201) is to receive pressure oil supplied from the hydraulic pump at the port P, and by switching the oil paths, to introduce the pressure oil at port P to output ports (1, 2, 3 and 4) or introduce to port P. It is the role of the spring for setting secondary pressure (241) to determine output pressure by acting on this spool (201).

The push rod (212) is inserted in the plug (211) so that it can slide and change the deflection of the spring for setting secondary pressures (241).

The return spring (221), regardless of the output pressure, acts on the casing (101) and spring seat (216) to return the push rod (212) in the direction of zero displacement, ensuring that the spool (201) can return to its neutral position. This return spring also functions as reaction spring, to give good operational responsiveness.

https://truckmanualshub.com/

6. Operation

This section describes the operation of pilot valves based on the Hydraulic Oil Circuit Drawing (Figure 1) and Operation Description Diagrams (Figures 2 through 4). Figure 1 shows a typical usage of the pilot valve.

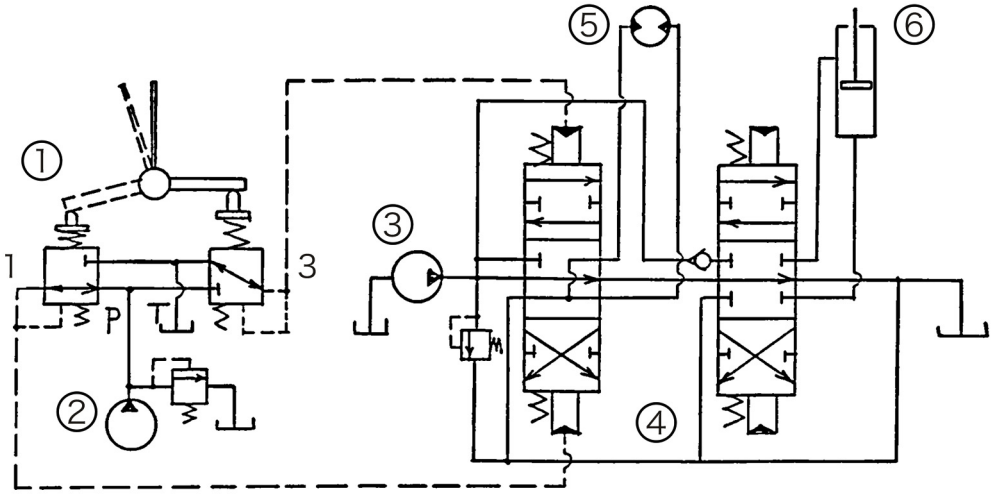

(1) PILOT VALVE (2) PILOT PUMP (3) MAIN PUMP
(4) CONTROL VALVE (5) HYDRAULIC MOTOR (6) HYDRAULIC CYLINDER

Figure 1. An example of pilot valve use

6-1. When the handle is in neutral (see Figure 2)

The force of the spring for setting secondary pressures (241), which determines the output pressure on the pilot valve, is not applied on the spool (201). Therefore, the spool (201) is pushed upward by the return spring (221) (by the spring seat 1 (216)), the output ports (2, 4) are connected with the port T. At this moment, the output pressure is equal to the tank pressure.

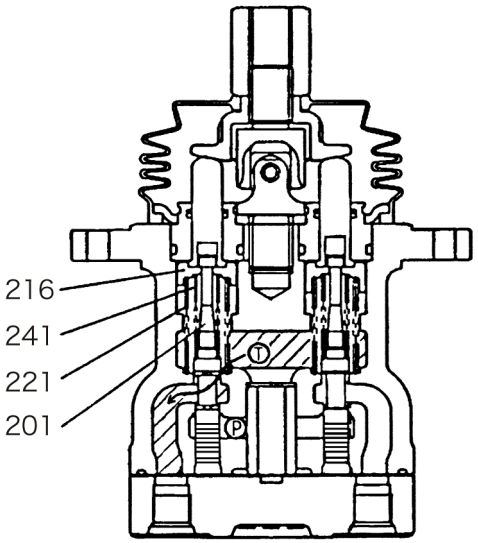

Figure 2. When the handle is in neutral

https://truckmanualshub.com/

6-2. When the handle is inclined (see Fig. 3)

As the push rod (212) is pushed in by inclining the handle, the spool (201) (spring seat 1 (216)) moves downward and the port P and ports (2, 4) are connected. As a result, the oil supplied from the pilot pump flows into ports (2, 4), thus generating pressure.

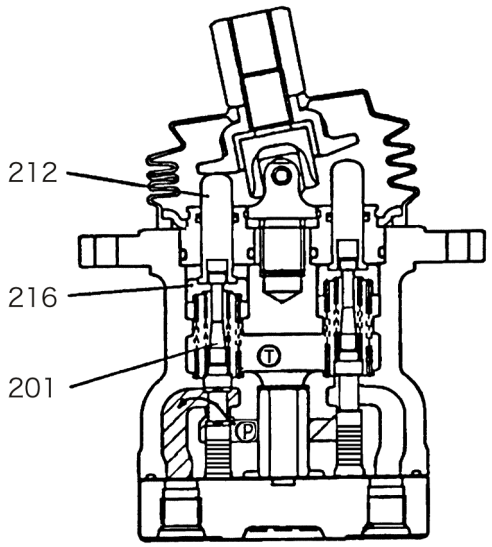

Figure 3. When the handle is inclined

6-3. When the handle is held (see Fig. 4)

When the pressures at ports (2, 4) rise up to a pressure equivalent to the force of the spring (241), which was set by inclining the handle, the hydraulic force and the force of the spring are in balance. When the pressures at ports (2, 4) are more than the set pressure, ports (2, 4) and port P close and ports (2, 4) and port T open. When the pressures at ports (2, 4) are less than the set pressure, ports (2, 4) and port P open and ports (2, 4) and port T close. As a result, secondary pressures are maintained constantly.

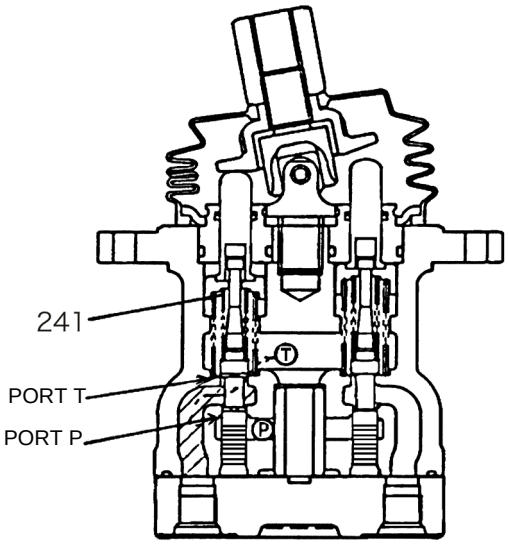

Figure 4. When the handle is held
(THE SECONDARY PRESSURE IS MORE THAN THE SET PRESSURE)

6-4. Operation in ranges where the handle is greatly inclined (depends on models)

In some models, when the handle is inclined more than a given degree, the upper end of the spool touches the bottom part of the push rod bore and the output pressure remains equal to the port P pressure as connected.

What's more, if a structure where the spring seat and spring are integrated in the inside of push rod is used, when the handle is inclined more than a given degree, the bottom part of the push rod bore contacts the spring, and the force of the spring causes the secondary pressure gradient to change. Afterwards, the bottom part of the push rod bore contacts the upper end of the spring seat; thus the output pressure remains equal to the port P pressure as connected.

https://truckmanualshub.com/

7. Maintenance Procedures

7-1. Required tools and tightening torque

Tool	Dimension (mm)	Part Number	Part Name	Screw Size	Tightening Torque (N·m)
Hexagon bar wrench	6	125	Hexagon socket head bolt	M8	20.6 ± 1.5
Wrench	22	312	Adjusting nut	M14	68.6 ± 4.9
	32	302	Circular plate	M14	
Special jig (See drawing, P22/22)	24	301	Joint	M14	47.1 ± 2.9

Other:

- Volatile corrosion inhibitor
- White kerosene
- High-temperature grease
- Sandpaper (#1000, #2000)
- Oil stone
- Vise

7-2. Maintenance standards

Servicing/ Inspection Items	Standards	Notes
Leak amount	Handle in neutral: 1000 cc/min. or more In operation: 2000 cc/min. or more Replace pilot valve assembly in either case above.	Conditions: Primary pressure: 2.94 MPa Oil viscosity: 23 cst
Spool	Replace the pilot valve assembly if its sliding part is worn more than 10 µm more than the non-sliding part.	The situation shown in the left is regarded in terms of leak amount as almost the same conditions described above.
Push rod	Replace if the tip is worn 1 mm or more.	
Looseness in the operating section	Replace if looseness of 2 mm or more caused by wears is found in the circular plate (302) and joint (301) in the operating section.	Adjust and rectify any looseness caused by poor tightening in the connection.
Stability of operation	If abnormal noises, hunting, primary pressure decrease or any other problems occur while in operation and are not rectified by the measures described in *8. Troubleshooting*, change the complete pilot valve assembly.	

NOTE: 1. It is recommended that sealing parts such as O-rings should be replaced every time they are disassembled. However, they can be reused after confirming no damage.
2. Always replace seal washer (121) when a hexagon socket head bolt (125) is loosened.

https://truckmanualshub.com/

7-3. Disassembling instructions

1. Preparation
   a. Prepare a non-rattle, stable and strongly built workbench large enough to arrange and keep parts and perform jobs.
   b. Prepare the tools and materials shown in *7-1*.
2. General precautions for work
   a. As each part is a precision component, handle parts carefully and do not drop or hit each other.
   b. Do not attempt to hit or pry parts forcedly although you think they are tightly fitted. Take time and carry out the operation carefully in order to avoid causing burrs or damage that may prevent assembly or result in oil leakage or lower efficiency.
   c. If components are left disassembled or half-disassembled, the parts may rust because of moisture and dirt. Rust prevention and dirt proofing should be considered if the operation is suspended for unavoidable reasons.

Disassembling Procedures

1. Clean pilot valve with white kerosene.
2. Secure pilot valve on vice using a copper plate (or lead plate).
3. Remove bellows (501).
   - Put blind plug in each port.
   - Be careful not to break the bellows (501).

https://truckmanualshub.com/

4. Remove the adjusting nut (312) and circular plate(302) by applying spanners with their width across flats on the adjusting nut and the circular plate.

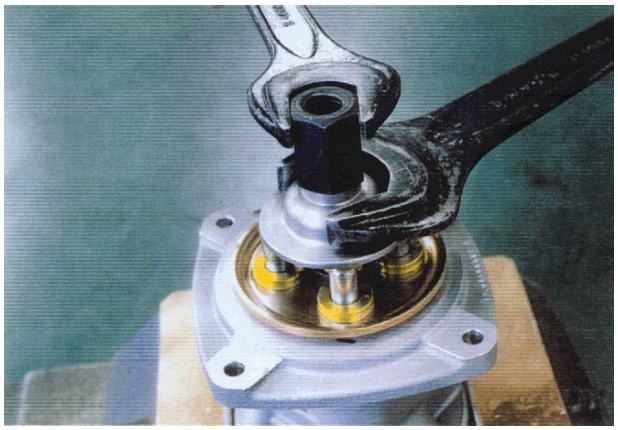

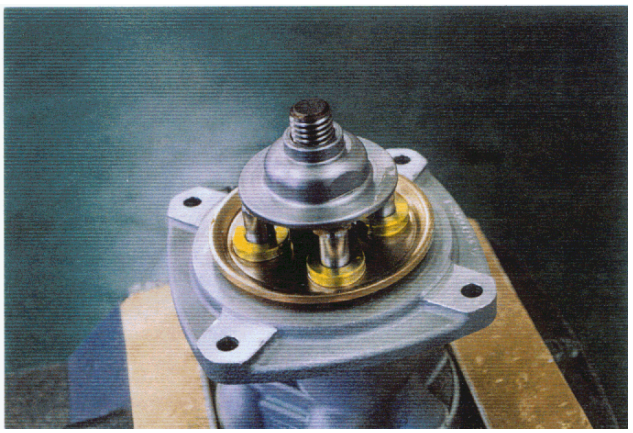

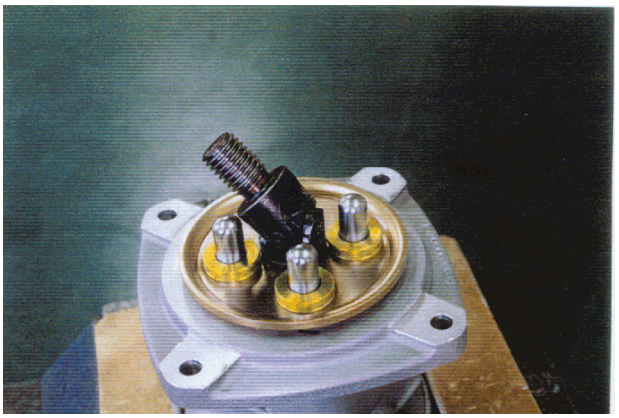

5. Turn counter-clockwise and loosen the joint (301) using a jig.

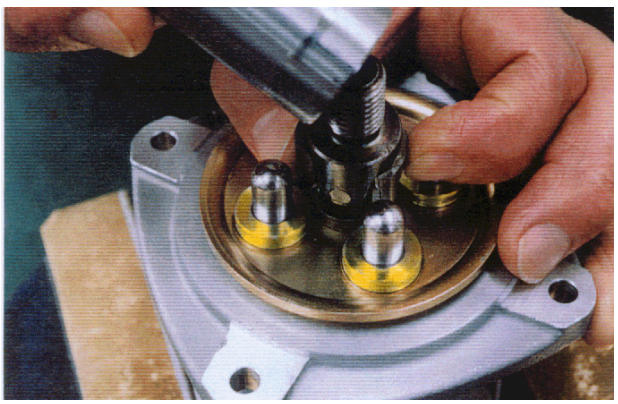

This photo shows how to fit the jig.

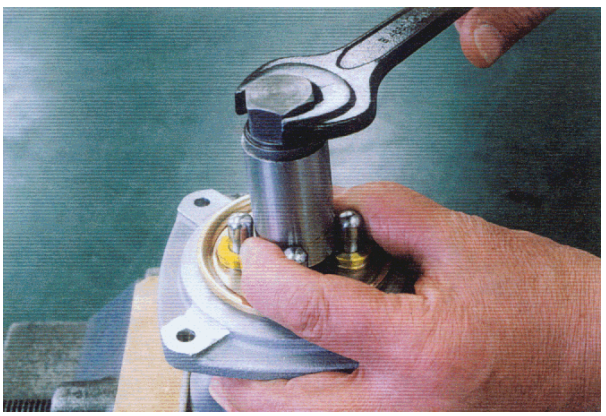

- If the return spring (221) is strong, the plate (151), plugs (211) and push rods (212) come forward at the same time when the joint (301) is loosened.
  When drawing out the joint, be careful that these parts do not pop out.

https://truckmanualshub.com/

6. Remove plate (151).

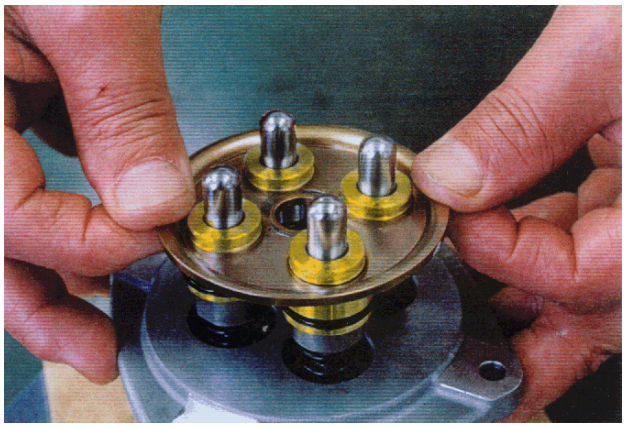

When the return springs (221) is strong.

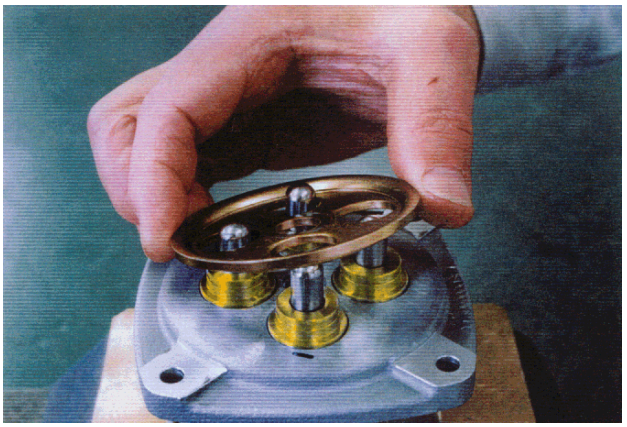

When the return springs (221) is weak.

7. When the return springs (221) is weak, it is necessary to pull up using a minus driver because the plugs (211) remains inserted in the casing (101) by the action of the O-rings sliding resistance.

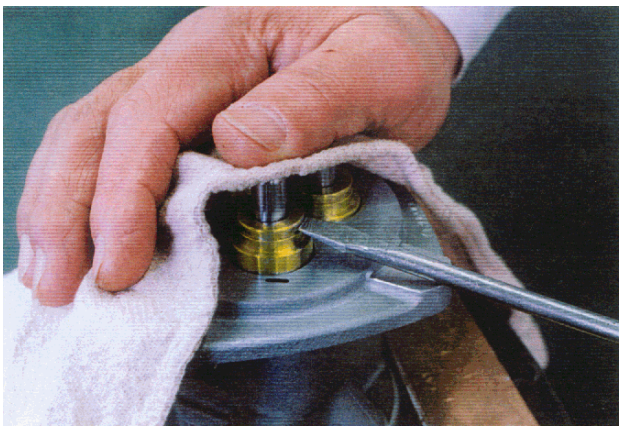

※
- Pull up the plug using the outer side of the plug, avoiding damage to the plugs (211) due to the unbalanced load.

⚠ Be careful when drawing it out, the plugs (211) sometimes may pop out by the action of the return springs (221).

https://truckmanualshub.com/

8. Draw out the push rods (212), plugs (211), pressure reducing valve assembly and return springs (221) from the casing (101).

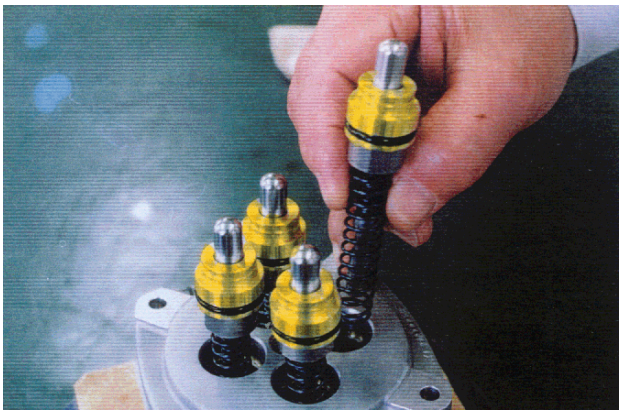

- Record the positional relationship between the components and casing holes.

9. Secure the pilot valve on the vise by facing port plate (111) upward.
10. Loosen and remove the hexagon socket head bolts (125) using a hexagon bar spanner.

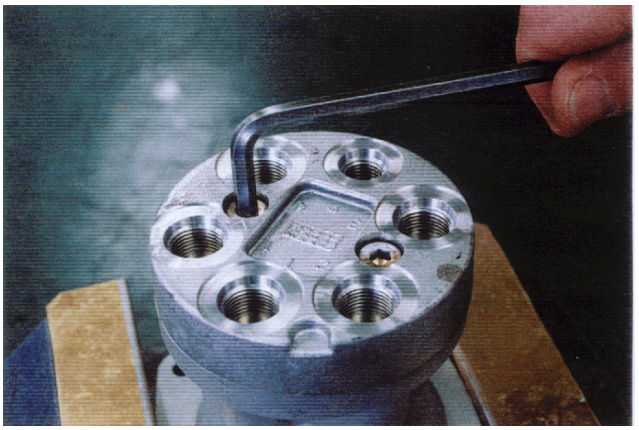

11. Remove also the port plate (111) and O-ring (122) from the casing (101). Draw out the bushing (131) from the casing (101).

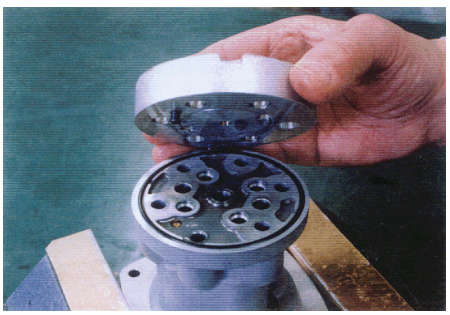

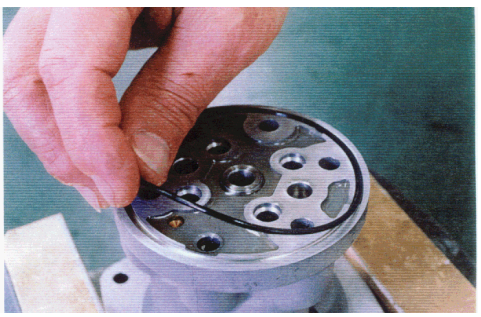

https://truckmanualshub.com/

12. Disassemble the pressure reducing valve in the following order: Move the spring seat vertically while pushing in the spring seats (216) and bending the secondary pressure springs (241). Then, remove the spools (201) through the larger opening. Then, separate spools (201), spring seats (216), secondary pressure springs (241) and washers 2 (217).

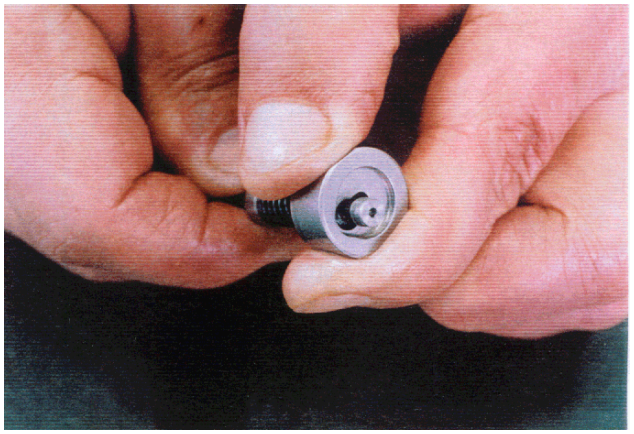

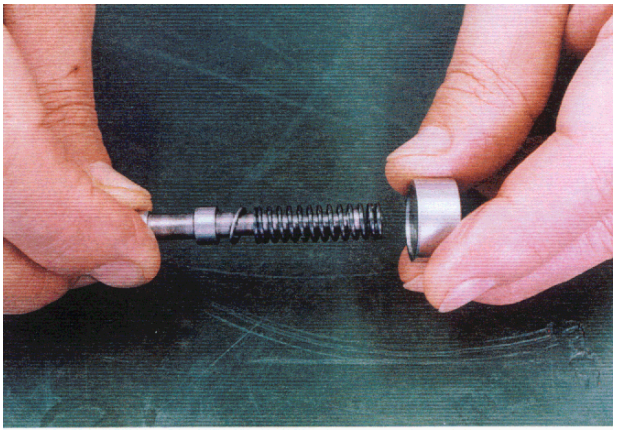

※ • Be careful not to damage the surfaces of the spools (201).

※ • Do not press the spring seats (216) downward more than 6 mm.

※ • Treat as an assembly even when disassembled.

13. Draw out the push rods (212) from the plugs (211).

https://truckmanualshub.com/

14. Remove the O-rings (214) and seals (213) from the plugs (211).

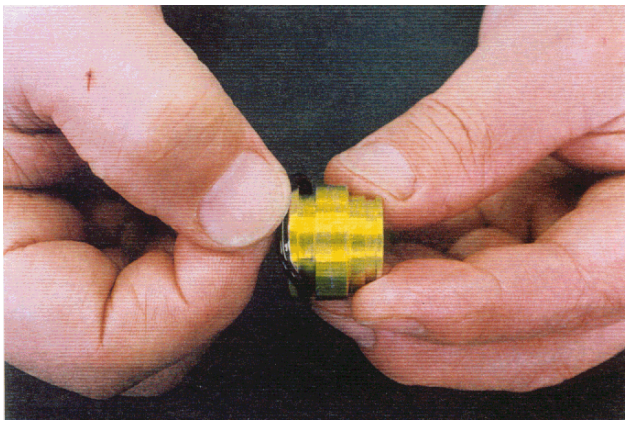

Remove the seals (213) using a small minus screwdriver.

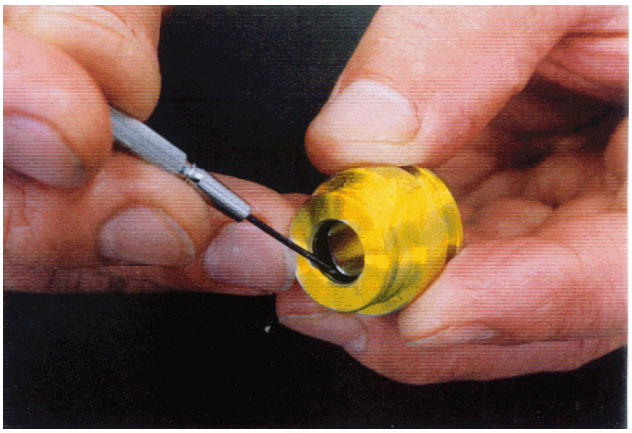

15. Cleaning each part
    a. Put and wash the parts in the preparatory cleaning container containing white kerosene (preparatory cleaning).
    b. Put the parts in the finish cleaning container containing white kerosene to wash the inside fully by gradually rotating them (finish cleaning). Wipe off white kerosene attached to the parts using a clean cloth.

※ • Washing the dirty parts in the oil without preparatory cleaning tends to cause damage. Leave the parts submerged in the kerosene until the dirt and grease come off freely and float up.

※ • If the contaminated white kerosene is used, the parts may be damaged, which results in lower performance after assembling. Therefore, contamination control on the kerosene is essential.

※ • Do not attempt to dry parts using compressed air because dirt and moisture in the air may cause damage and rust on the parts.

16. Rust prevention for each part
    a. Apply corrosion inhibitor to each part.

※ • If parts are left as is after cleaning, they will rust and will not function fully after assembling.

https://truckmanualshub.com/

7-4. Assembling instructions

1. Preparation
   a. Prepare a similar workbench, tools and materials shown in *7-3 Disassembling Instructions*.
2. General precautions for operations
   a. Observe the same precautions described in the Disassembling Section.
   b. Before assembling, remove metal chips and foreign substances from all parts, and ensure that there are no burrs or dents to the parts.
   If burrs and dents are found, remove them with an oil stone.
   c. As a general rule, O-ring should be replaced with new ones.
   d. Install O-ring carefully and do not damage them.
   (a small amount of grease should be applied to make them smooth.)
   e. When installing parts, it is recommended that grease should be used to avoid dropping.
   f. Tighten bolts up to tightening torque listed in *7-1 Required Tools and Tightening Torque*.
   Measure torque using a torque wrench.
   g. Upon completion of assembling, put blind plugs on all ports to prevent dirt from entering.
3. Assembling Procedures
   a. Assemble the bushing (131) and O-ring (122) in the casing (101).

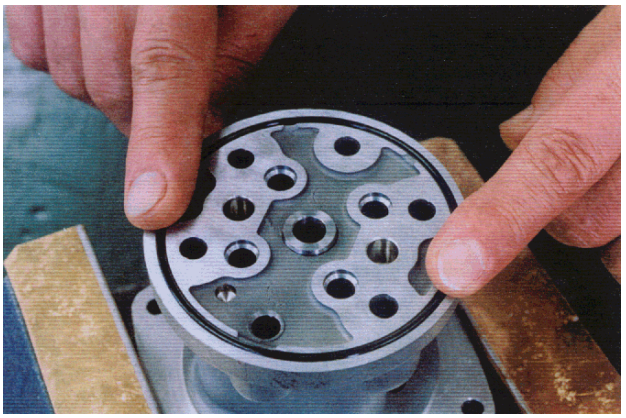

   b. Fit the port plate (111) to the casing (101) using the hexagon socket head bolts (125) and seal washers (121).

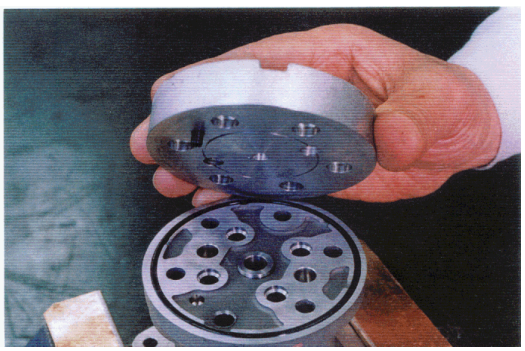

※ • Check the assembling positions so that the spring pin (126) are inserted into the casing holes.

※ • Replace the seal washers (121).

https://truckmanualshub.com/

c. Tighten the hexagon socket head bolts (125) by specified torque.

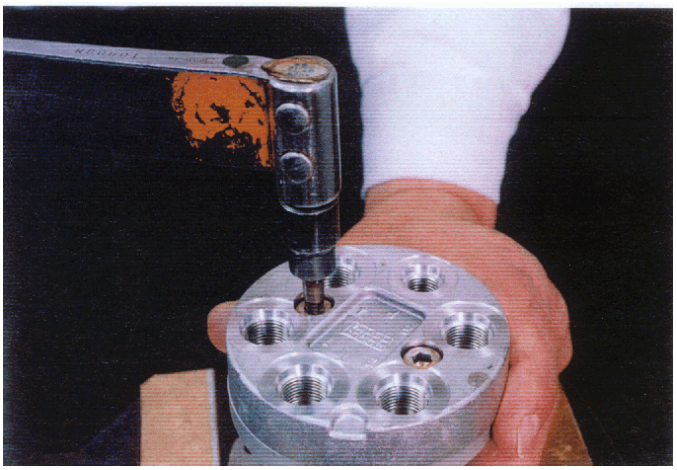

※ • Tighten two screws gradually and alternately.

d. Insert the washers 2 (217), secondary pressure springs (241) and spring seats (216) into the spools (201) in this order.
Then, move the spring seats (216) vertically while pushing in the spring seats (216) and bending the secondary pressure springs (241), and install them to the spools (201) through the larger hole.

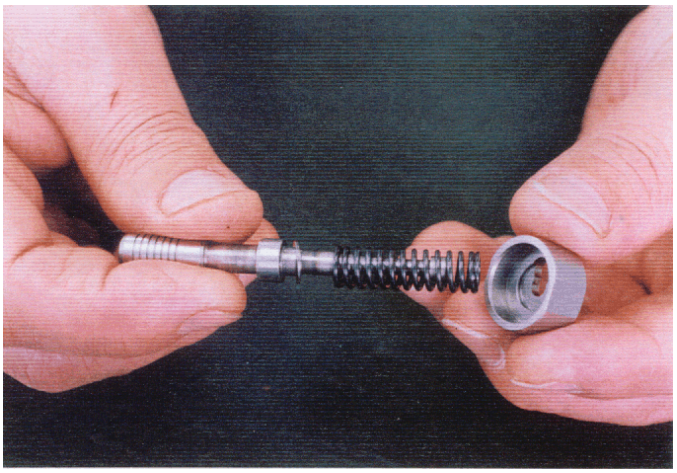

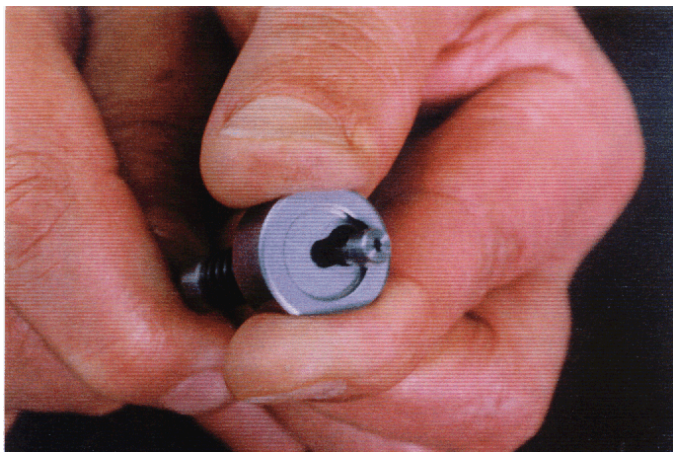

※ • Do not press the spring seat downward more than 6 mm.

https://truckmanualshub.com/

e. Install the return springs (221) to the casing (101). Fit the pressure reducing valve assembly into the casing (101).

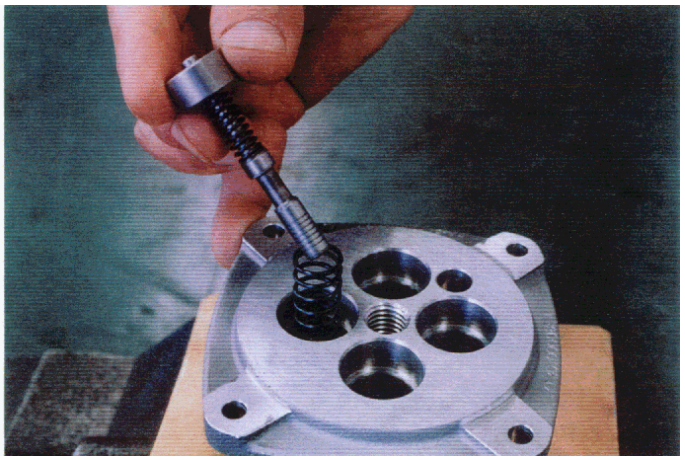

※ • Install the spring in the position before disassembling.

f. Install the O-rings (214) to the plugs (211).

g. Install the seals (213) to the plugs (211).

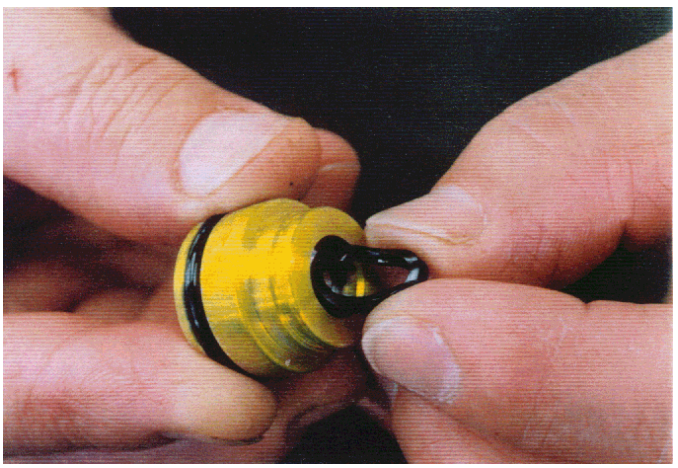

※ • Install the seals (213) with its lip as shown in the figure below.

https://truckmanualshub.com/

h. Install the push rods (212) into the plugs (211).

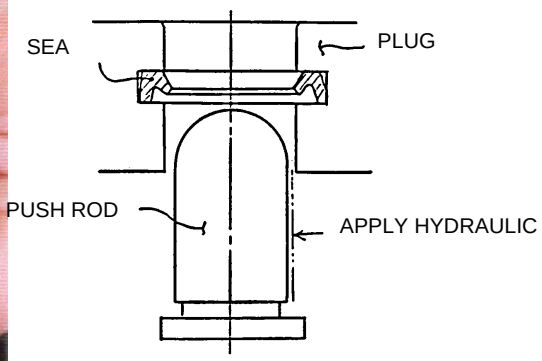

- Apply hydraulic oil to the surfaces of the push rod.

i. Install the plug assembly to the casing (101). When the return springs (221) is weak, the O-rings (214) stops by the action of sliding resistance.

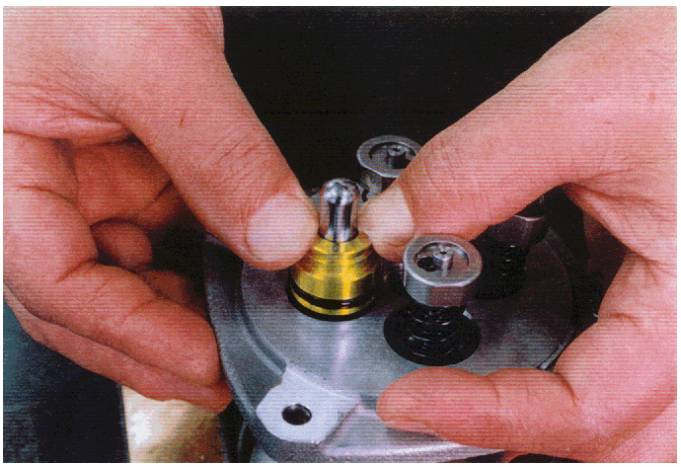

- Do not pry the spools (201). This will damage the holes of the casing (101).
- If the return springs (221) are strong, install the four springs at the same time into the joint (301) using a plate (151).

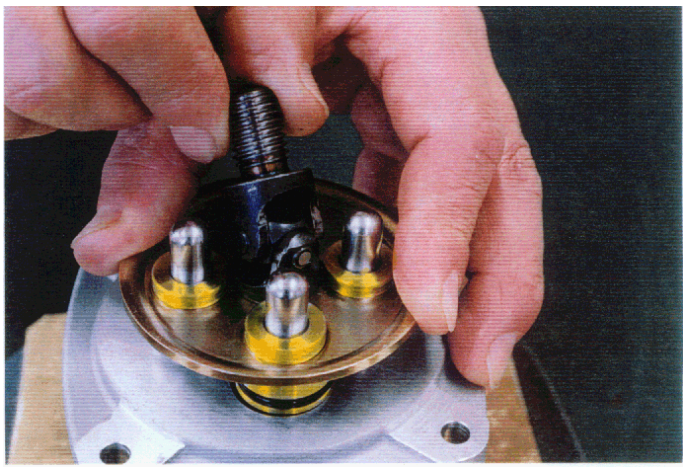

- Be careful that the plug assembly and plate (151) do not pop out.

j. Install plate (151).

https://truckmanualshub.com/

k. With jig, tighten the joint (301) to the casing (101) by applying specified torque.

Photo above shows how to install the jig.

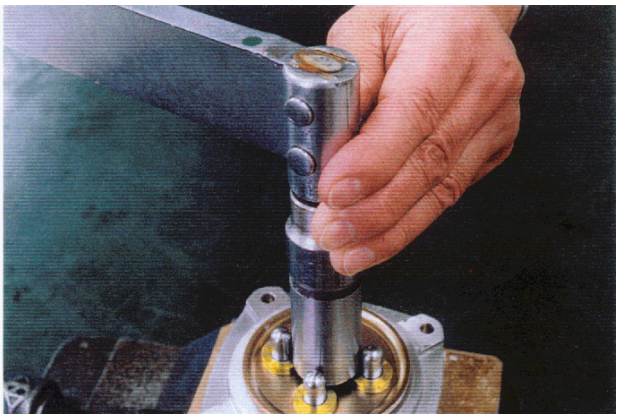

l. Install the circular plate (302) to the joint (301).

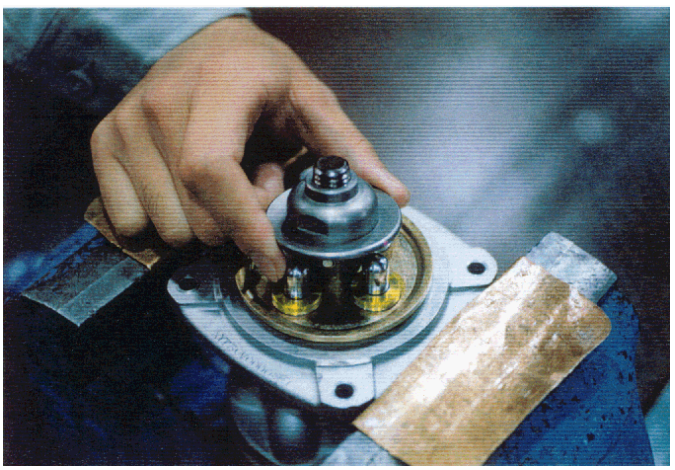

- Screw the circular plate up to the position where the circular plate contacts the four push rods (212) equally.
  Ensure that the circular plate (302) screwing position is correctly adjusted as its over screwing position leads to increases in secondary pressures when the lever is in neutral and causes operational errors.

https://truckmanualshub.com/

m. Install the adjusting nut (312), fix the circular plate (302) by applying spanner with its width across flats on the circular plate, and tighten the adjusting nut by specified torque.

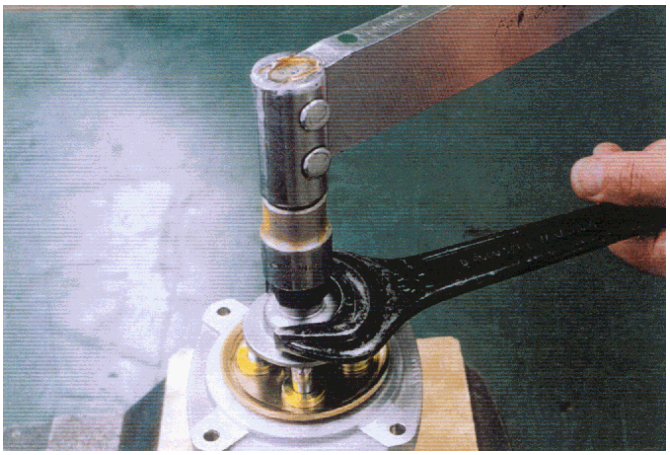

※ • Do not move the circular plate (302) while tightening.

n. Apply grease on the rotating part of the joint (301) and the top of the push rods (212).

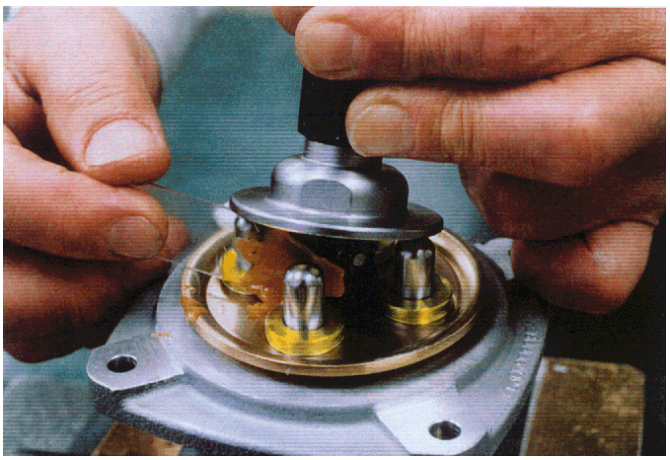

o. Install the bellows (501).

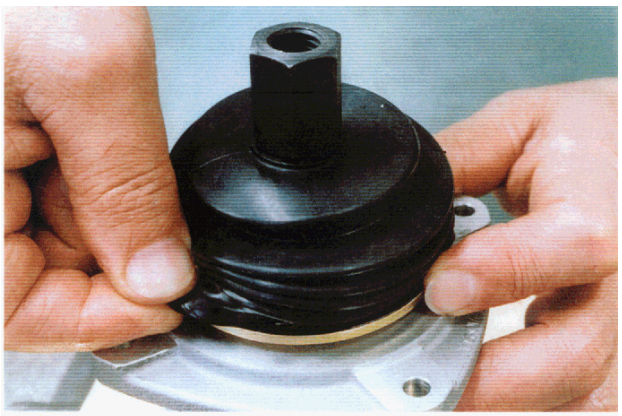

※ • Be careful not to break the bellows (501).

p. Fill volatile corrosion inhibitor through each port plug and put blind plugs.

https://truckmanualshub.com/

8. Troubleshooting

It is not easy to find the faulty part. The following table lists some possible problems. As repairs are not easy, refer to the possible causes and countermeasures in the table.

The table below shows general symptoms/possible causes and countermeasures. However, as a machine's trouble is generally caused not by a single faulty component but by other related components as well, it may be necessary to apply measures other than those listed in the Table.

The table shown below does not necessarily include all possible causes and remedies. Therefore, the technician in charge of repairs must further investigate problems and their causes as necessary.

Problem	Causes	Countermeasures
Secondary pressure does not rise	1. Lower primary pressure	Ensure given primary pressure
	2. Breakage and fatigue of secondary pressure spring (241)	Replace with new one
	3. Abnormally large gap between spool (201) and casing (101)	Replace as a remote valve complete assembly
	4. Loose handle section	Disassemble/assemble and replace handle section
Unstable secondary pressure	1. Engaged sliding part	Repair engaged part
	2. Fluctuations in tank line pressure	Direct return to oil tank
	3. Entrapped air in piping	Bleed air by several operations
High secondary pressure	1. High tank line pressure	Direct return to oil tank
	2. Engaged sliding part	Repair engaged part

Cross-sectional View of Pilot Valve Assembly

TIGHTENING TORQUE LIST

NO.	SCREW SIZE	TIGHTENING TORQUE
125	M8	20.6 ± 1.5 N·m
301	M14	47.1 ± 2.9 N·m
312	M14	68.6 ± 4.9 N·m

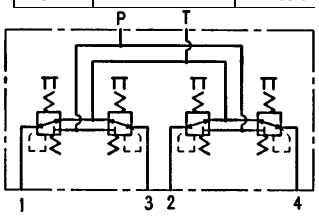

HYDRAULIC SYMBOL

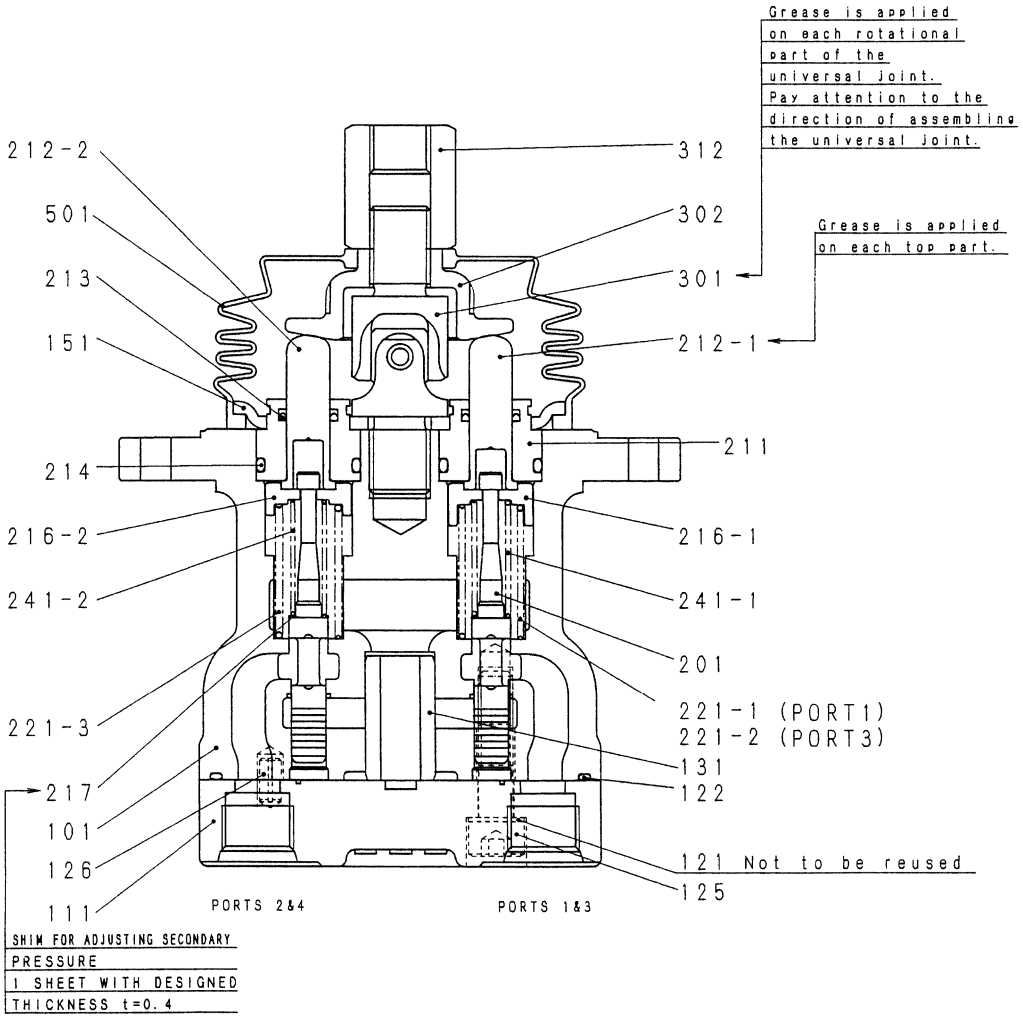

NO.	PART NAME	QTY.	NO.	PART NAME	QTY.
101	CASING	1	216-1	SPRING SEAT 1	2
111	PORT PLATE	1	216-2	SPRING SEAT 1	2
121	SEAL WASHER	2	217	WASHER 2	4
122	O-RING	1	221-1	SPRING	1
125	HEXAGON SOCKET HEAD BOLT	2	221-2	SPRING	1
126	SPRING PIN	1	221-3	SPRING	2
131	BUSHING	1	241-1	SPRING	2
151	PLATE	1	241-2	SPRING	2
201	SPOOL	4	221-1	SPRING	2
211	PLUG	4	241-2	SPRING	2
212-1	PUSH ROD	2	301	JOINT	1
212-2	PUSH ROD	2	302	CIRCULAR PLATE	1
213	SEAL	4	312	ADJUSTING NUT	1
214	O-RING	4	501	BELLOWS	1

Cross-sectional and Detailed Views of Special Jig Assembly

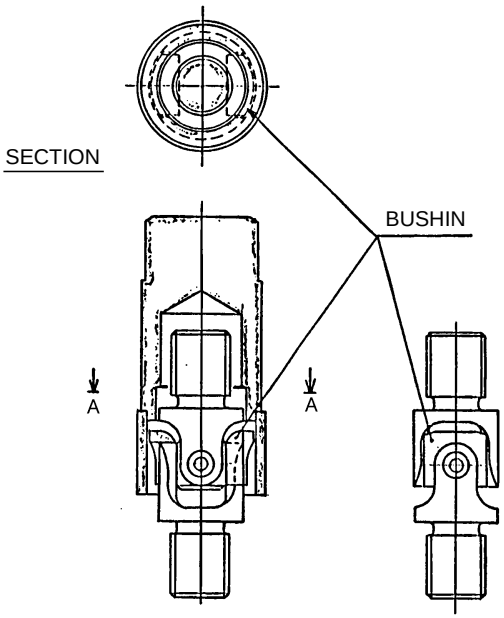

JOINT ASSEMBLY

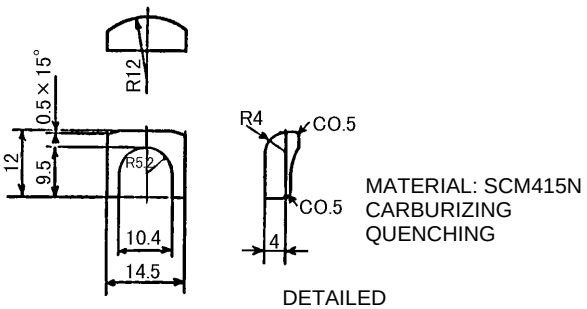

DETAILED DRAWING OF

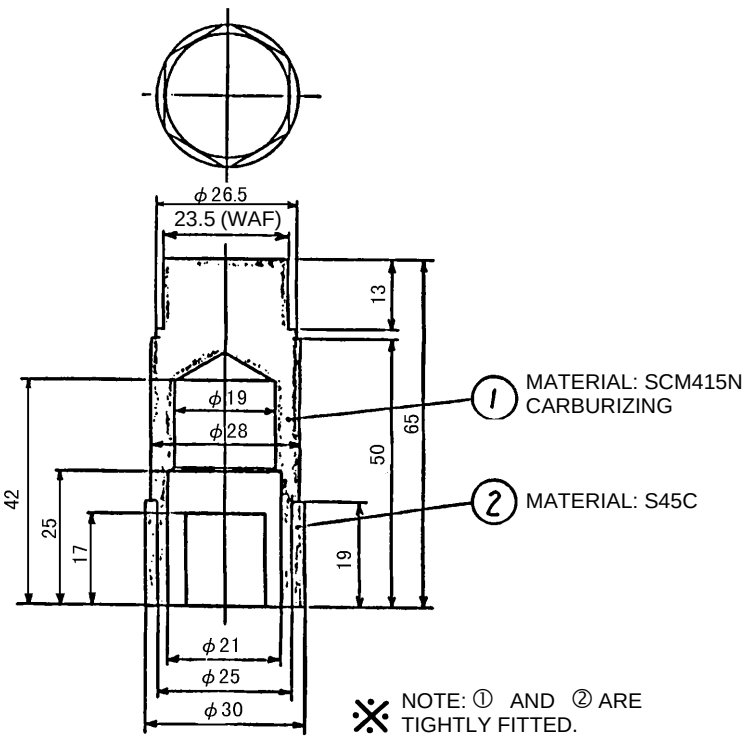

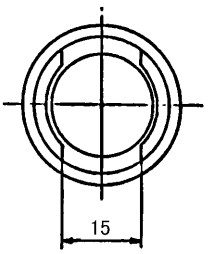

DETAILED DRAWING OF JIG

https://truckmanualshub.com/

Remote Control Valve

For Travel Use

1. Cross-sectional View of the Assembly

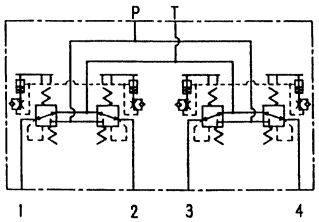

HYDRAULIC SYMBOL

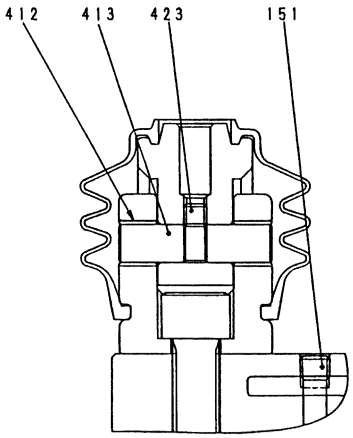

SECTION B - B

TIGHTENING TORQUE LIST

NO.	SIZE	TIGHTENING TORQUE
151	NPTF1/16	6.9 ± 1 N·m
271	M12	78.5 ± 9.8 N·m
423	M6	6.9 ± 1 N·m (APPLY LOCTITE NO. 241)

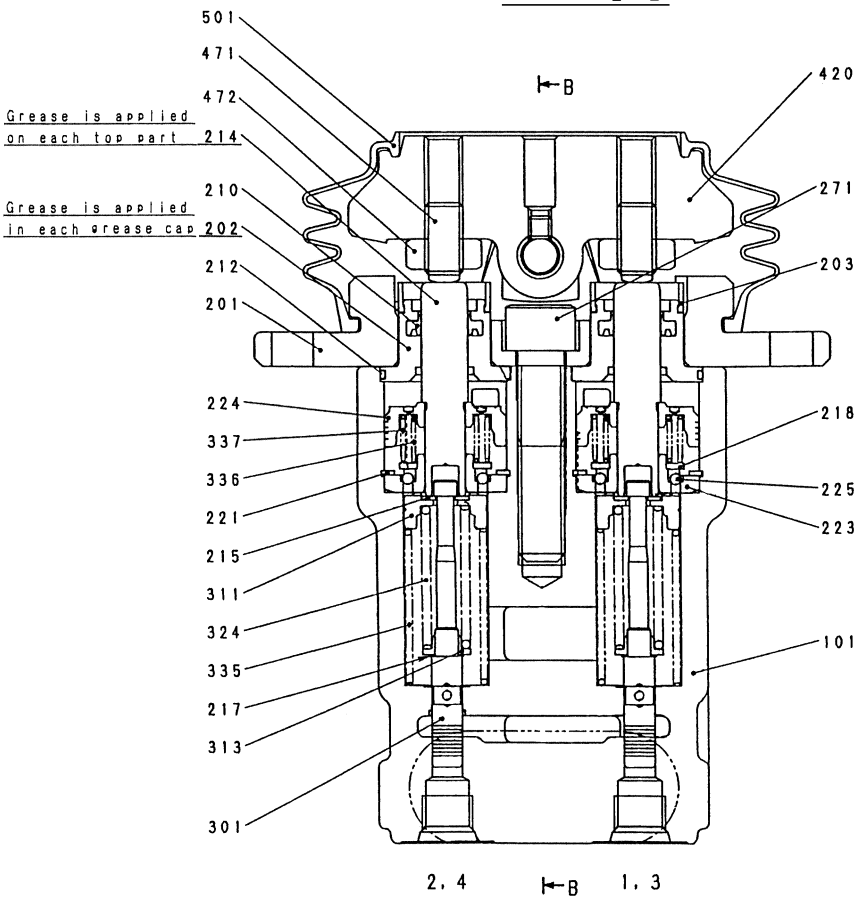

501	BELLOWS	2
472	LOCK NUT	4
471	SET SCREW	4
423	HEXAGON SOCKET SET SCREW	2
420	CAM	2
413	CAM SHAFT	2
412	BUSHING	4
337	SPRING	4
336	SPRING	4
335	SPRING	4
324	SPRING	4
313	WASHER 3	4
311	SPRING SEAT	4
301	SPOOL	4
271	HEXAGON SOCKET HEAD BOLT	2
225	STEEL BALL	12
224	PISTON	4
223	BUSHING	4
221	RETAINING RINGS	4
218	SPRING SEAT	4
217	WASHER 2	4
215	WASHER 1	8
214	PUSH ROD	4
212	O-RING	4
210	NHU PACKING	4
203	GREASE CUP	4
202	PLUG	4
201	COVER	2
151	PLUG	2
101	CASING	1
NO.	PART NAME	QTY.

NOTE:

1. SPRAY CORROSION INHIBITOR TO INSIDE BELLOWS.

https://truckmanualshub.com/

2. Specifications

1. Primary Pressure	Max. 9.8 MPa
2. Secondary Pressure	0 to 4.4 MPa (Stroke End Maximum Control Pressure)
3. Allowable Back Pressure	0.3 MPa
4. Rated Flow	10 L/min
5. Operation Angle	±12.4°
6. Hydraulic Oil	Mineral Hydraulic Oil
7. Usable Temperature Range	-20°C to +75°C
8. Weight	RCVD8C [without pedal] 8.7 kg
9. Filter	Use a filter (40 mesh or more) at entry of P-port to prevent spool sticking.

https://truckmanualshub.com/

3. Actuation

The remote control valve with self-contained dumper (called remote control valve with dumper) is a valve which has the dumping function located inside the valve main body in order to provide smooth operation.

The actuation of the remote control valve with dumper is explained in *3-1. Reduction valve, 3-2. Operating parts dumping mechanism* and in the illustrations of the *Hydraulic Circuit, Cross-sectional View of the Assembly* and *Explanatory Diagram of Dumping Actuation*. Below is an example of typical usage of the remote control valve.

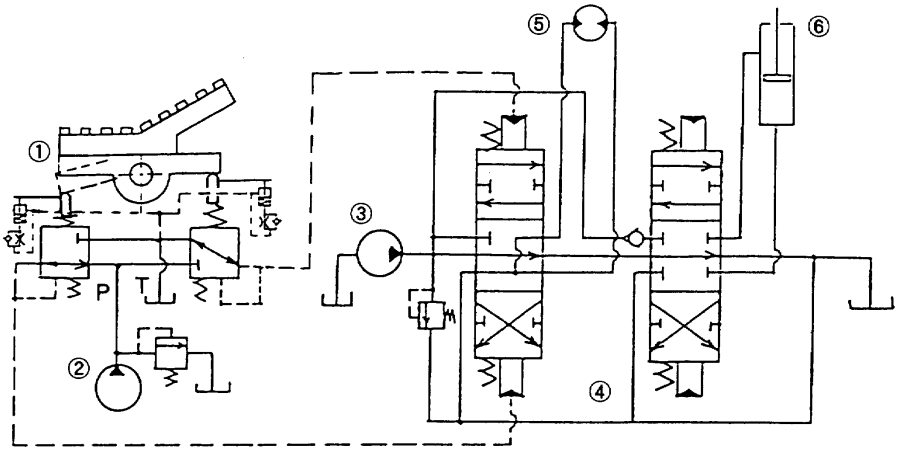

① REMOTE CONTROL	③ MAIN PUMP	⑤ HYDRAULIC
② PILOT PUMP	④ CONTROL	⑥ HYDRAULIC

Hydraulic Circuit

3-1. Reduction valve

1. When in neutral

   The spool (301) is pushed up by the reset spring (335) through the spring seat (311) and washer 1 (215) and is in the neutral position as shown in the assembly cross section illustration. Consequently, the output port is connected only to port T because of the switching of the spool, so the pressure of the output ports 1, 2 is the same as that of port T.

2. When remote control valve is out of the neutral position

   In referring to the Assembly Sectional Drawing, when the cam (420) is rotated clockwise the push rod (214) on port 1 side is pushed down and the same spool is moved downwards through the washer 1, spring seat, spring for 2nd pressure setting (324), washer 2 (217), and washer 3 (313). Consequently, ports P and 1 are connected and the oil supplied from the pilot pump flows to port 1 and produces pressure.

   When the pressure at port 1 reaches the pressure equivalent to spring force for 2nd pressure setting set by the tilting of the operating part, the oil pressure on the spool and spring force reach a balance and port 1 output pressure is maintained at a constant level.

   The spool on port 2 side maintains neutral position and the return oil from the control valve is released through port T.

   Also, depending on the specifications, when the operating part approaches maximum angle, the push rod directly touches the spool end and thereby pushes in the spool which results in the connection of port P and output port so that the pressure becomes equal.

https://truckmanualshub.com/

3-2. Dumping mechanism of the operating part

1. When in neutral position

   The push rod is pushed up by the dumping springs (336, 337) through the piston (224) and is in the position as shown in the *Cross-sectional View of the Assembly*.

2. Operation from central to tilted (refer to *Explanatory Diagram of Dumping Actuation No. 1*)

   Referring to the *Cross-sectional View of the Assembly*, if the cam is rotated clockwise, the push rod on port 1 side is pushed downward and the piston moves downward.

   At this time, the oil inside the dumping piston is released through the restriction hole and the pressure created at that time is the dumping force.

   On the other hand, the push rod on port 2 side moves upward by the dumping spring through the piston.

   At this time, tank oil flows through the ball check part (3 places) which is made up of the bushing (223) and steel ball (225) located inside the dumping piston area. The oil outside the piston area flows through the passage from the upper part of the casing to port T.

3. Operation going from full tilt to the opposite direction (refer to *Explanatory Diagram of Dumping Actuation No. 2*)

   Referring to the *Cross-sectional View of the Assembly*, after the cam is tilted fully in the clockwise direction, when it is rotated counterclockwise, the push rod on port 2 side is pushed down and the piston moves downward.

   At this time, the oil inside the dumping piston area is released through the restriction hole and the pressure created then is the dumping force.

   On the other hand, the push rod on the port 1 side is moved upward by the reset spring (335) and dumping spring.

   At this time, tank oil flows through the ball check (3 places) which is made up of the bushing and steel ball located inside the dumping piston area. The oil outside the piston area flows through the passage from the upper part of the casing to tank port.

   In other words, from neutral to full tilting position or from full tilting to neutral position, the valve is constructed so that dumping force works for either tilting operation.

1. Actuation of the remote control valve when the lever is moved from a neutral position to a tilted position

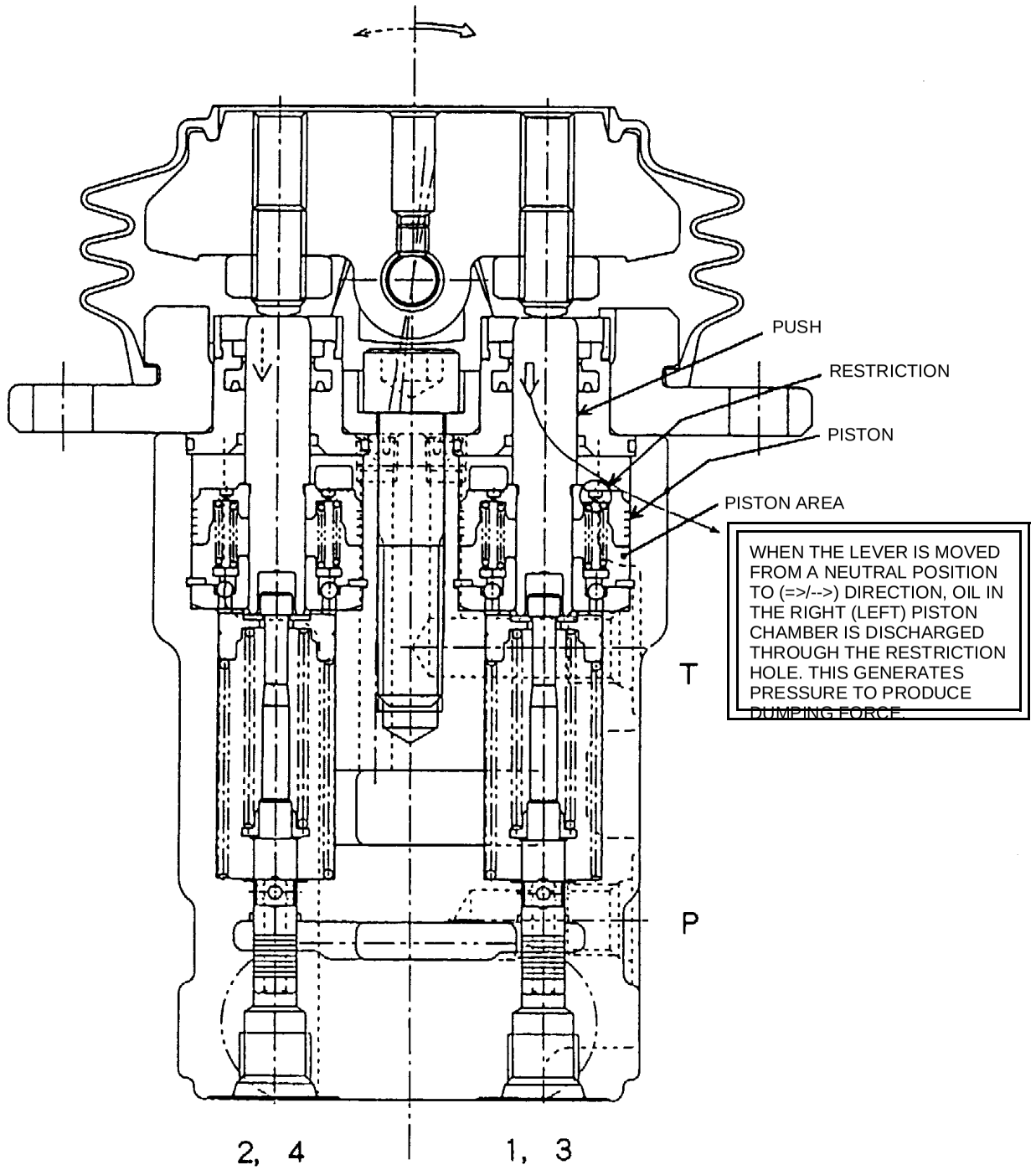

2. Diagram of the lever tilted and operation when the lever is moved to the opposite direction

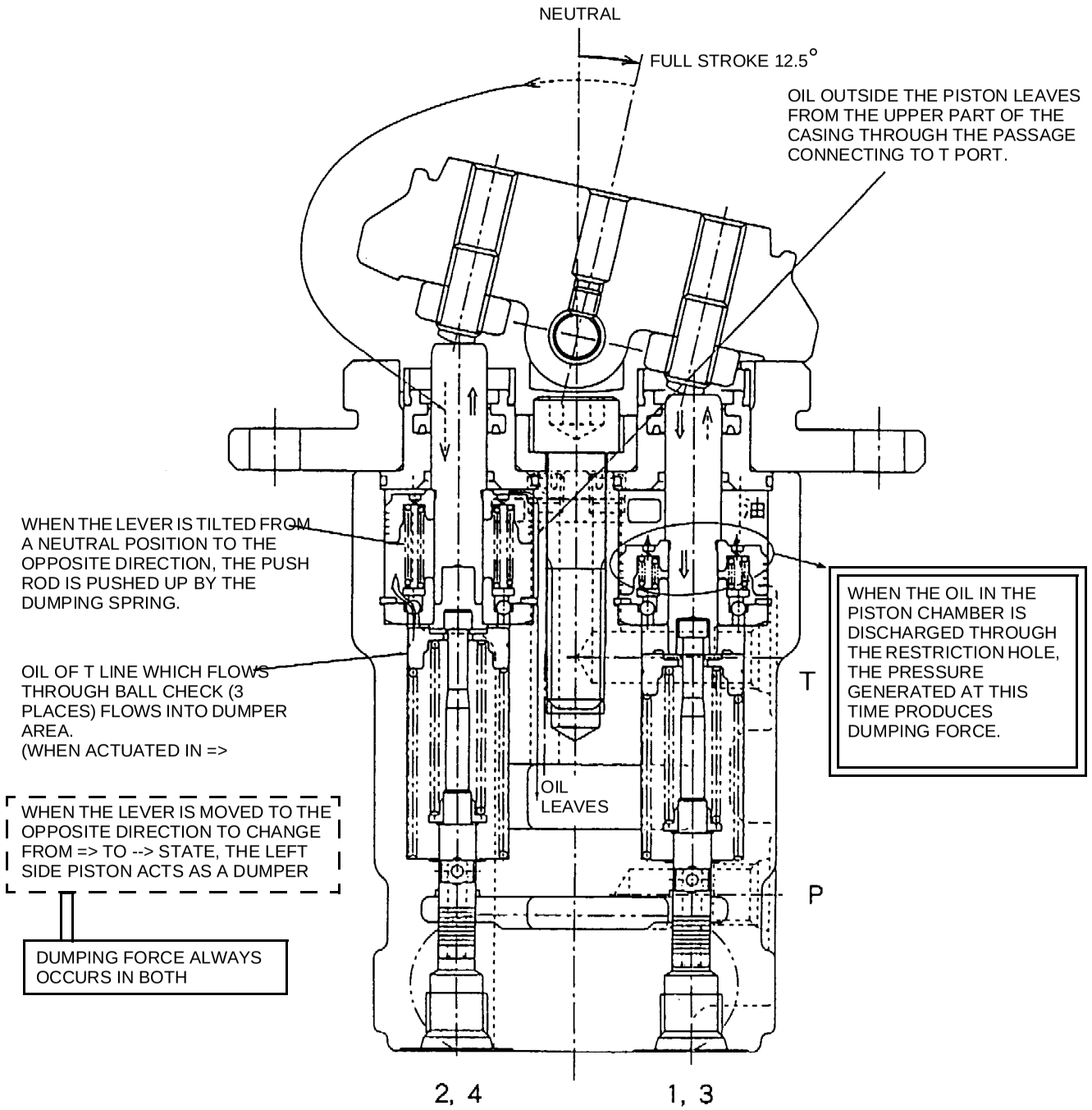

Explanatory Diagram of Dumping Actuation

https://truckmanualshub.com/

https://truckmanualshub.com/

4. Maintenance Procedures

4-1. Special jigs for disassembly and assembly

1. Special jig 1 (For disassembing bushing)

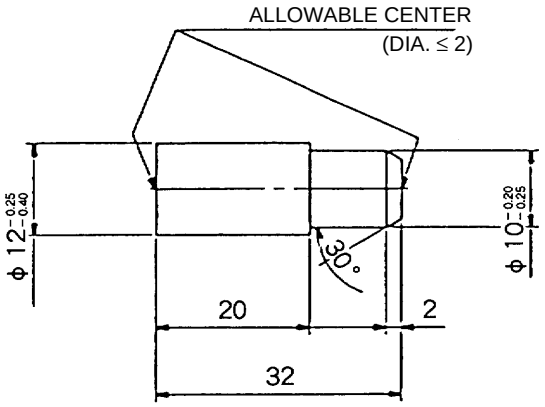

2. Special jig 2 (For assembling retaining ring)

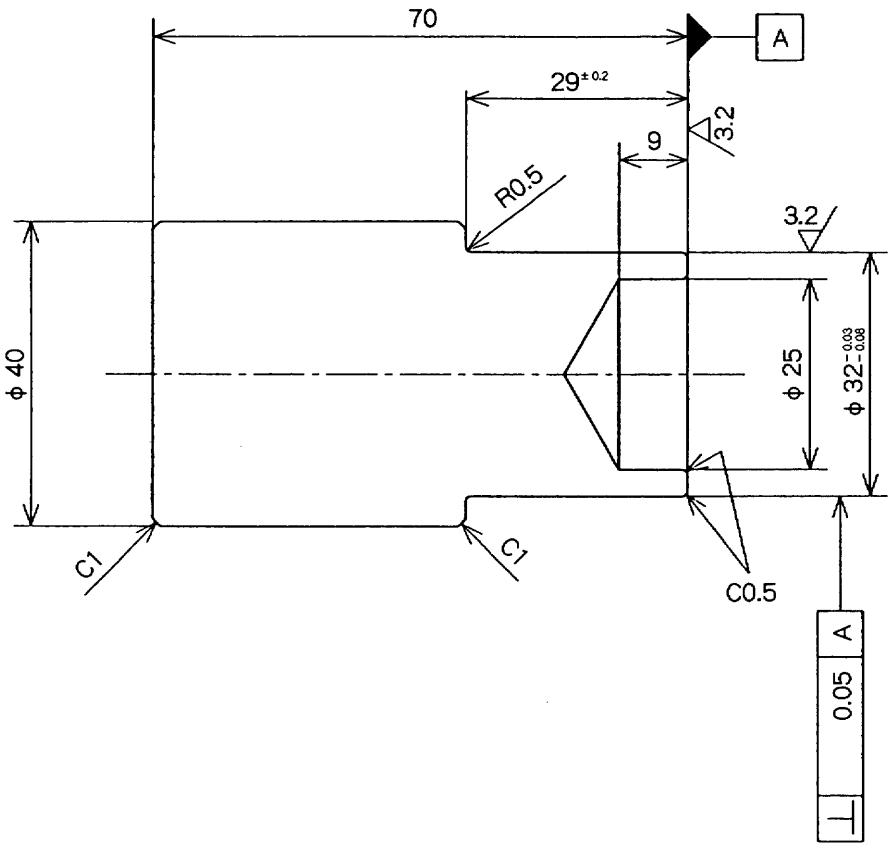

https://truckmanualshub.com/

4-2. Disassembling procedures

1. Preparation
   a. Prepare a work bench large enough for placing the parts and sturdy so that parts do not fall off or move during work.
   b. Prepare the tools and materials.

※ 2. General precautions regarding the work
   a. Each part is precision-made, so handle them with the utmost care and do not bump them together or drop them.
   b. Carry out the work carefully and do not hit or force parts because they are tight. Burrs may develop or the parts may be damaged such that they cannot be assembled or be the cause of oil leakage or lowered performance.
   c. If the parts are left disassembled as is, rust may occur due to the humidity or contamination, so if stopping the work is unavoidable, take steps to prevent rust or dust.
3. Disassembling procedures
   a. Clean the remote control valve with cleaning oil.
      - Put a blind plug in each port.
   b. Secure the remote control valve in the vise using a buffer plate.
      Remove the bellows (501) from the covers (201) and lift off the cover.

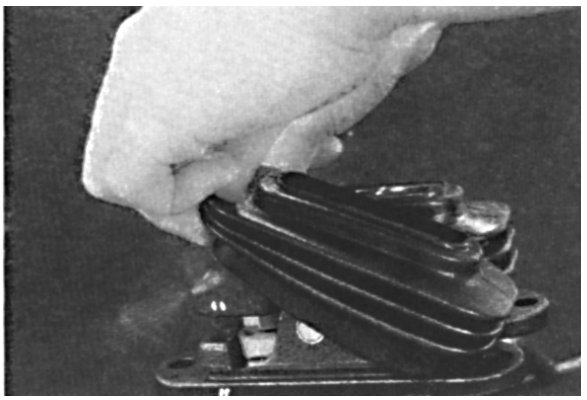

   c. Use an allen wrench on the hexagon socket set screws (423) to loosen it.
      ⚠ Loctite No. 241 has been applied and the tightening torque is high, so be careful.

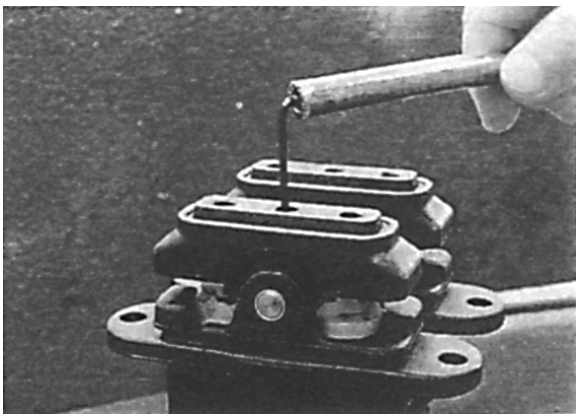

https://truckmanualshub.com/

d. Place a round bar (less than dia. 8) to the end of the cam shafts (413) and lightly tap with a hammer to remove it.

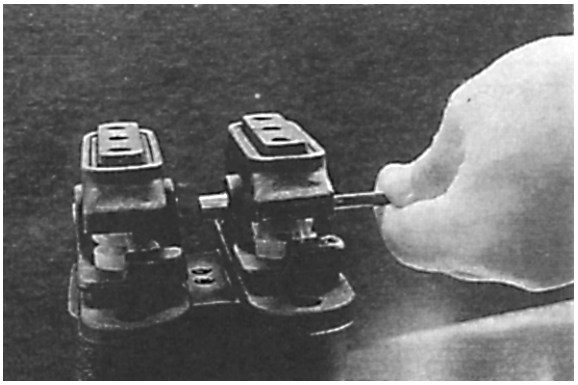

e. Remove the cams (420) with the set screws (471), and lock nuts (472) attached to it as an assembly.

※ Make a record of the relationship of positions of the cam and the covers (201).

⚠ When removing, the push rods (214) may pop out, so be cautious.

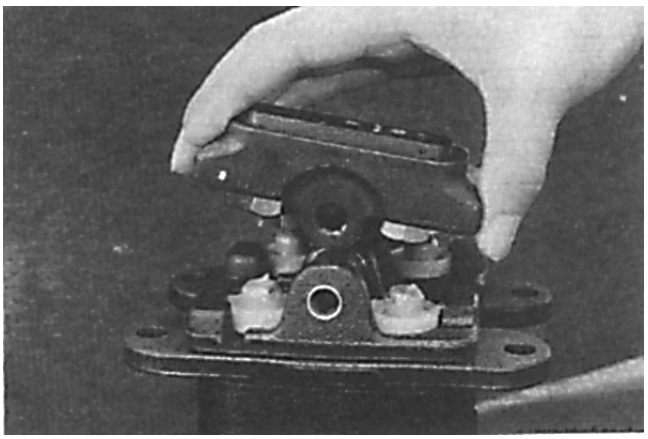

f. Use an allen wrench on the hexagon socket head bolts (271) to loosen it.

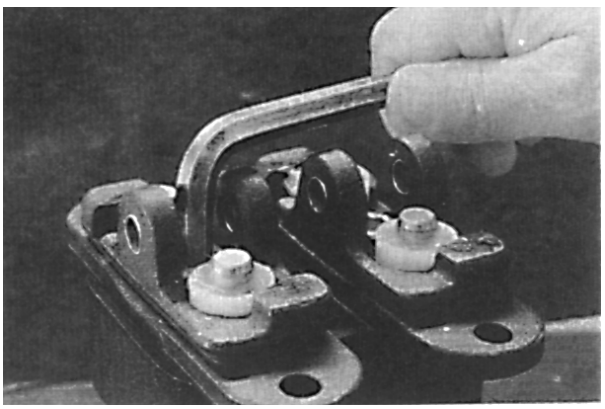

https://truckmanualshub.com/

g. Remove the covers (201).

※ Make a record of the relationship of positions of the cover and the casing (101).

⚠ When removing, the push rods (214) and plugs (202) may pop out due to the dumping springs (336), (337) so be cautious. (The plug remains in the casing only because of the O-rings (212) sliding resistance.)

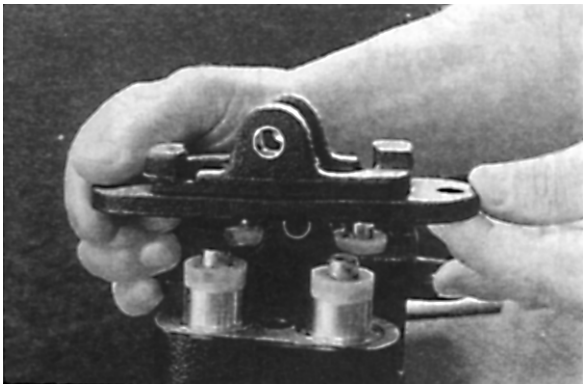

h. Pull the push rod from the plug.

※ Make a record of the relationship of positions of the plug and the push rod.

※ Be careful not to scratch the surface of the push rod.

⚠ When removing, the plug may pop out so be cautious.

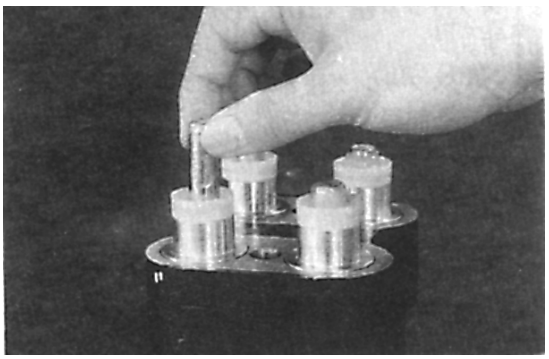

i. Remove the plug with the grease cups (203) and NHU packings (210) attached to it.

※ Make a record of the relationship of positions of the plug and the casing.

⚠ When removing, the piston may pop out due to the dumping spring, so be cautious.

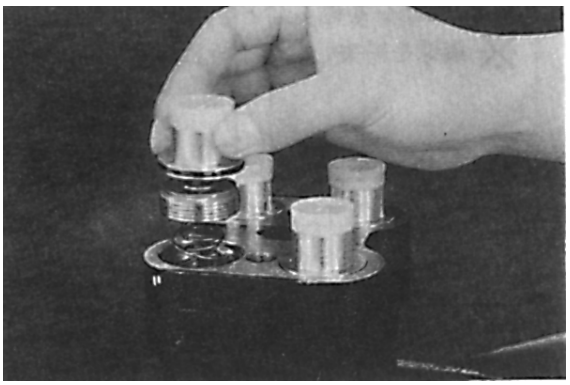

j. Remove the pistons (224).

※ Make a record of the relationship of positions of the piston and the casing hole.

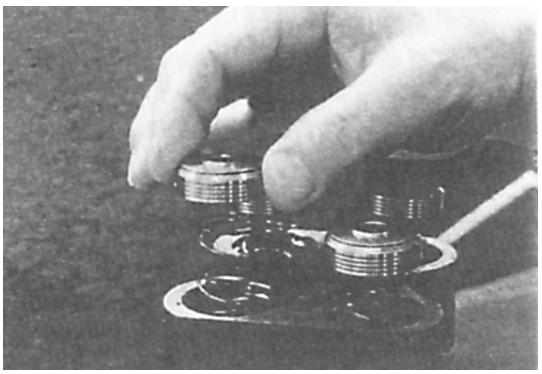

https://truckmanualshub.com/

k. Remove the dumping springs (336), (337) from the casing.

※ Make a record of the relationship of positions of the dumping spring and the casing hole.

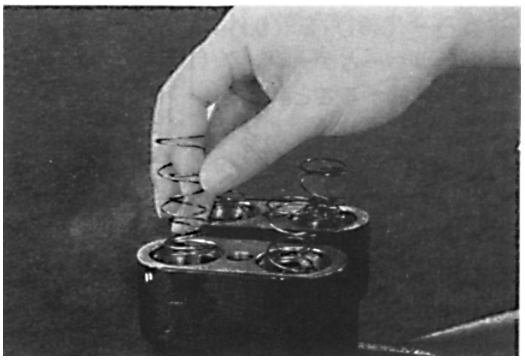

l. Remove the spring seats (218) from the casing.

※ Make a record of the relationship of positions of the spring seat and the casing hole.

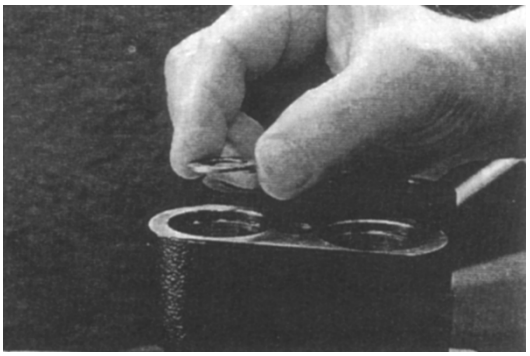

m. Use a magnet to remove the steel balls (225).

※ Be careful not to misplace the steel balls.

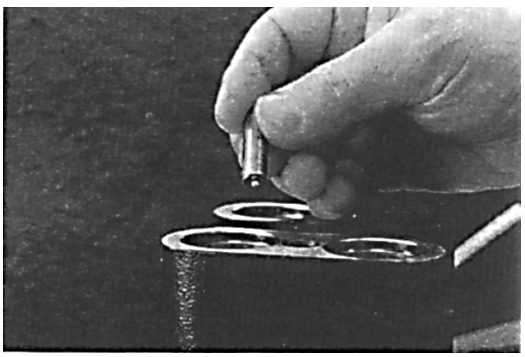

n. Remove the retaining rings (221) from the casing using pliers.

※ Make a record of the relationship of positions of the retaining ring and the casing hole.

⚠ When removing, the bushing may pop out due to the return springs (335) so be cautious.

※ Be careful not to scratch the inside of the casing.

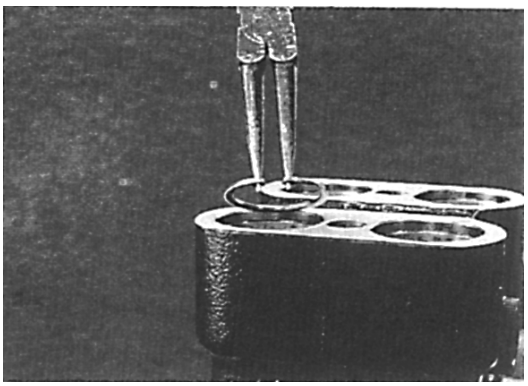

https://truckmanualshub.com/

o. Remove the bushings (223) from the casing using tweezers.

※ Make a record of the relationship of positions of the bushing and the casing hole.

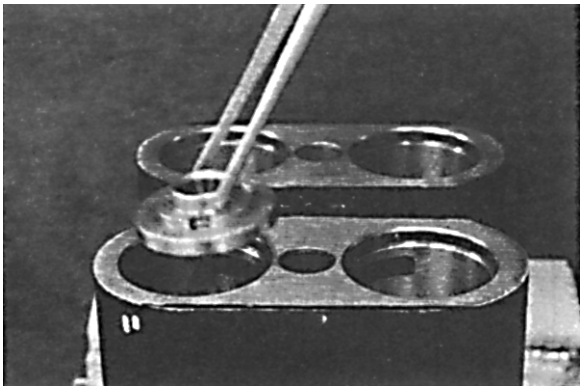

p. Remove the pressure reduction valve assembly, return springs (335) from the casing.

※ Make a record of the positioning with the casing hole.

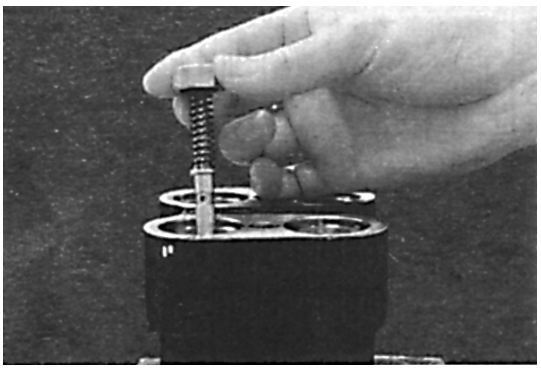

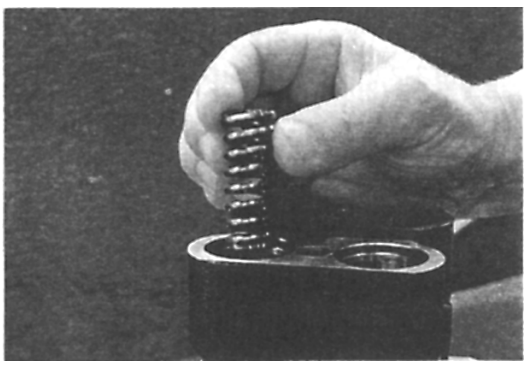

q. Place the covers (201) on a level surface and align the special jig 1 to the bushings (412) and tap it lightly with a hammer to remove the bushing.

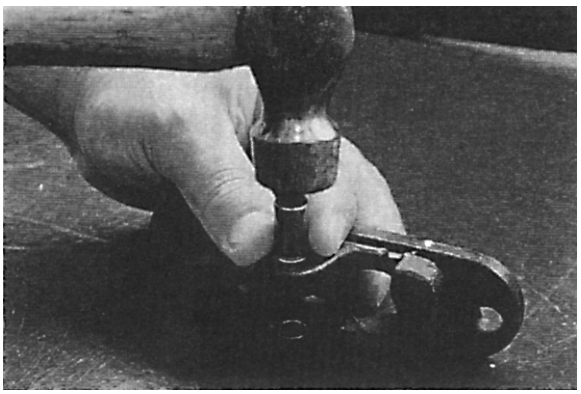

https://truckmanualshub.com/

r. Secure the cam assembly with a vise and loosen the lock nuts (472) with a wrench. Remove the lock nut and set screws (471).

※ The set screw is necessary for neutral adjustment during assembly so if it does not require replacement, treat it as part of the cam assembly.

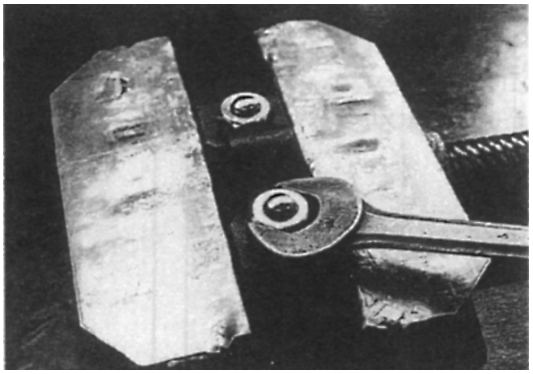

s. To disassemble the pressure reduction valve assembly, stand the spools (301) on a level work bench, pull the spring seats (311) down and remove the two semicircular washers 1 (215) with a small screwdriver.

※ Be careful not to scratch the surface of the spool.

※ Do not pull down the spring seat by more than 4 mm.

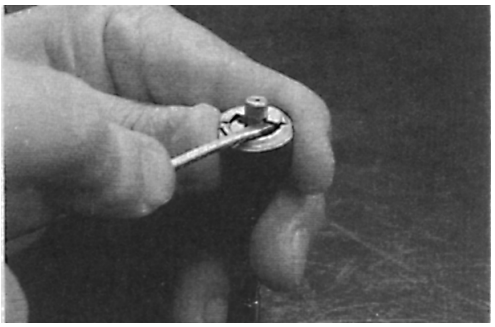

t. Separate the spools (301), spring seats (311), secondary pressure setting spring (324), washers 2 (217) and washers 3 (313).

※ Keep the parts of the assembly together until reassembly.

※ Washer 2 is for pre-set adjustment of the secondary pressure setting spring and the thickness varies with each spool assembly. In some cases, it is not used.

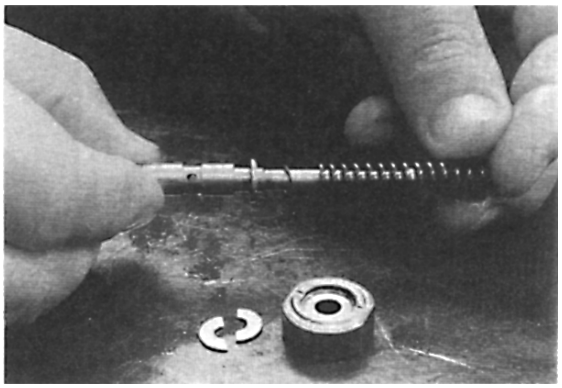

u. Remove the grease cups (203) from the plug (202).

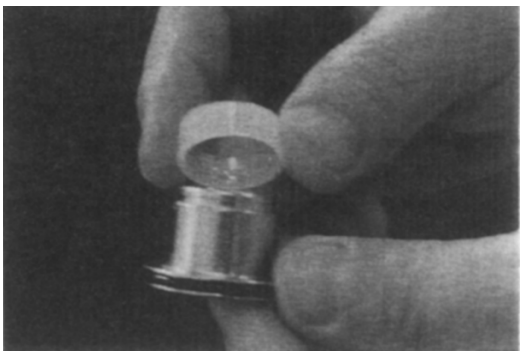

https://truckmanualshub.com/

v. Remove the NHU packings (210) from the plug. Use a small straight screwdriver to remove the packing.

※ Be careful not to scratch the inside of the plug.

w. Remove the O-rings (212) from the plug.

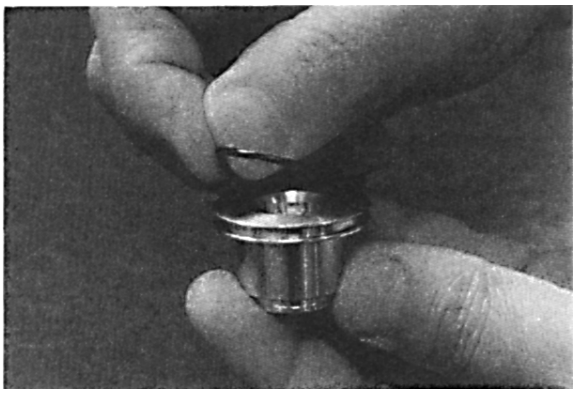

x. Washing each part

- Place each part in the container with cleaning oil for rough washing and wash. (Rough washing)

※ Do not attempt to wash dirty parts immediately after placing in the cleaning oil because scratches and other damage easily occur. Soak the parts in the oil until contaminants or grease become soft and float.

※ Dirty cleaning oil can cause damage to the parts which will lead to poor performance after reassembling, so properly control the quality of the cleaning oil.

- Place each part in the container with cleaning oil for finishing and slowly rotate so that the inside of the parts also become clean. (Finishing washing) Wipe off the cleaning oil from each part with a clean cloth.

※ Drying with compressed air can lead to scratching and rusting of the parts due to contamination or water in the air, so do not do it.

y. Rust prevention for each part

Apply corrosion inhibitor to each part.

※ If the parts are left as is after washing, rusting will occur and lower the performance after reassembling.

https://truckmanualshub.com/

4-3. Assembling procedures

1. Preparations
   a. Prepare a work bench and tools and materials in the same manner as for disassembly.

※ 2. General precautions regarding the work
   a. Follow the same general precautions for disassembly.
   b. Remove any metallic bits or foreign matter from all the parts before assembling and check to see if there are any burrs or dents on the parts. If there are, remove with an oil stone.
   c. O-rings and NHU packings are to be replaced by new parts.
   d. When installing the O-rings and NHU packings, be careful not to damage them. (Apply a small amount of grease for smoothness.)
   e. To prevent parts from falling during installation, apply a coat of grease on them.
   f. Tighten the bolts according to the torque shown on the *Cross-sectional View of the Assembly*.
   g. After assembling, place stoppers on all the ports to prevent contamination.
3. Assembly procedures
   a. Assemble the washers 3 (313), washers 2 (217), secondary pressure setting springs (324) and spring seats (311) in order onto the spools (301).

※ Washer 2 is for pre-set adjustment of the secondary pressure setting spring and the thickness varies with each spool assembly. In some cases, it is not used.

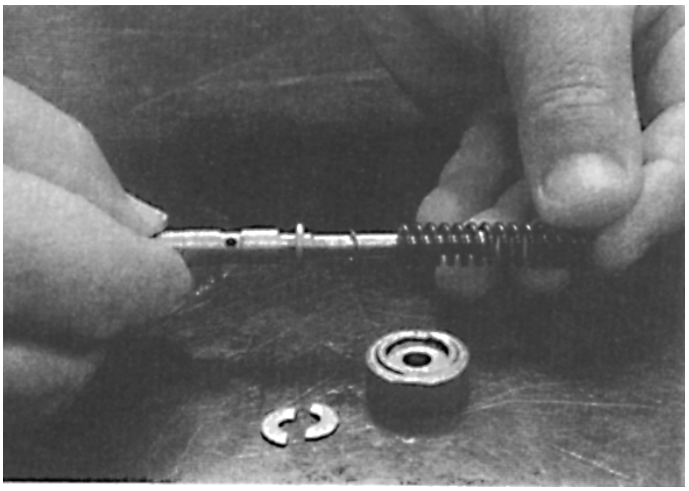

https://truckmanualshub.com/

b. Stand the spools (301) on a level work bench, push the spring seats (311) down and assemble the two semicircular washers 1 (215) into the top of the spring seat, such that they do not overlap.

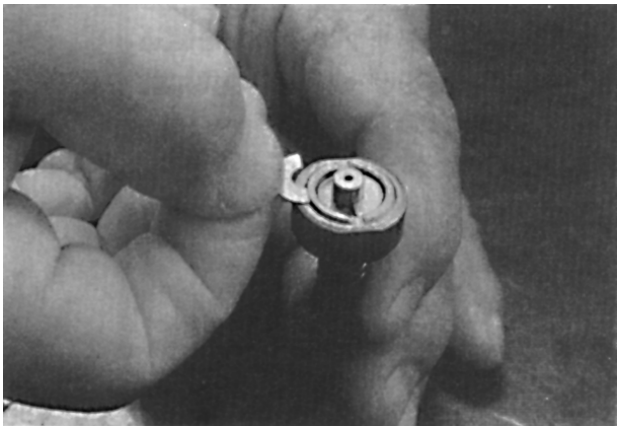

※ Assemble washer 1 with the sharp edge up so that it attaches to the spool head.

※ Do not pull down the spring seat by more than 0.157” (4 mm).

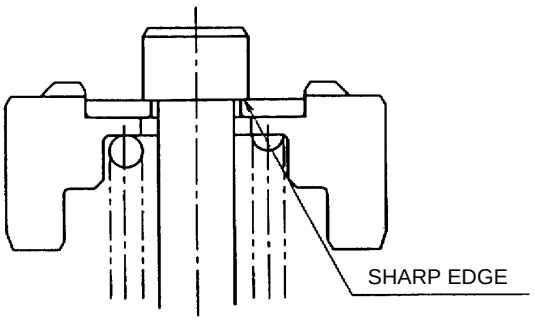

c. Assemble the return springs (335) into the casing.

※ Assemble it to the original location before disassembly.

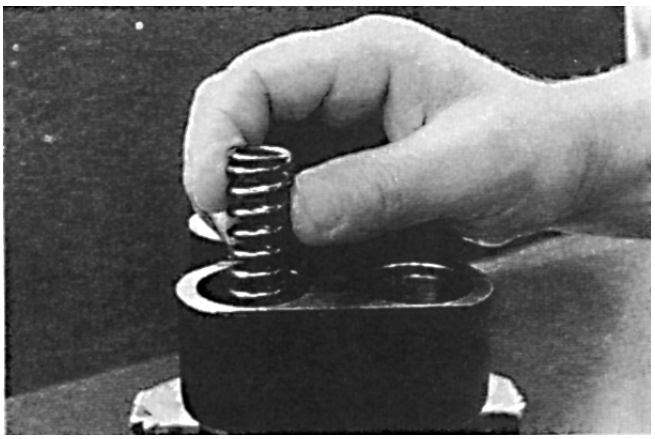

d. Assemble the pressure reduction valve sub-assembly, which was assembled in steps (a) and (b), into the casing.

※ Assemble it to the original location before disassembly.

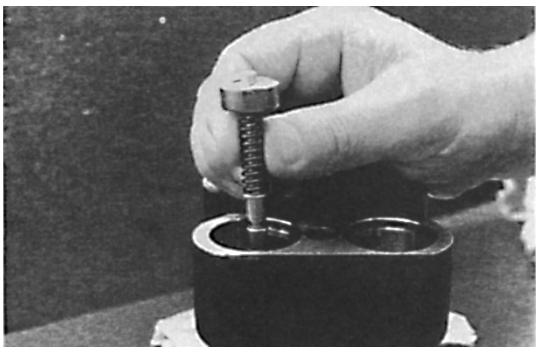

https://truckmanualshub.com/

※ When assembling the pressure reduction valve sub-assembly, be careful not to hit the spool end sharply with the casing corner.

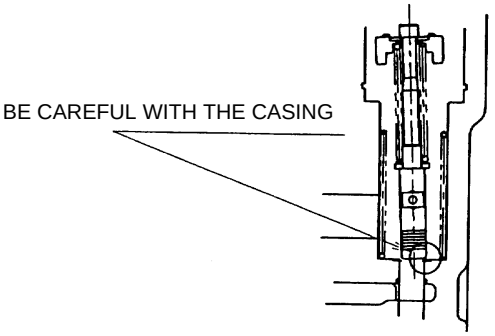

e. Assemble the bushings (223) into the casing on top of the spring seats (311).

※ Assemble it to the original location before disassembly.

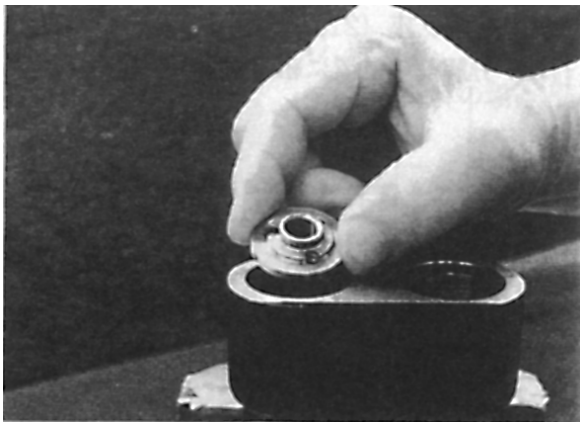

f. Temporarily assemble the retaining rings (221) into the casing hole using pliers.

※ Assemble it to the original location before disassembly.

※ Temporarily assemble so that it is level.

※ Be careful not to scratch the inside of the casing.

※ Place the sharp end of the retaining ring upward when temporarily assembling.

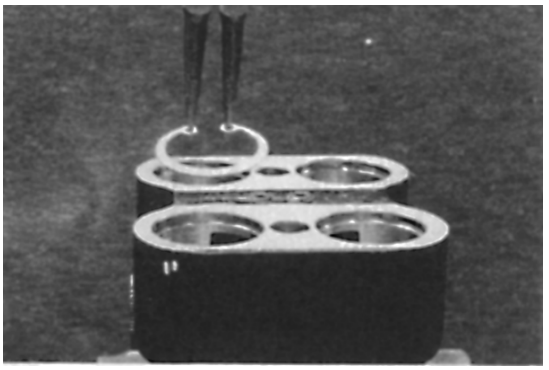

g. Set the special jig 2 into the casing hole and place the retaining ring so that it fits into the groove by pushing it in together with the return spring and bushing.

※ Insert slowly to prevent scratching the inside of the casing.

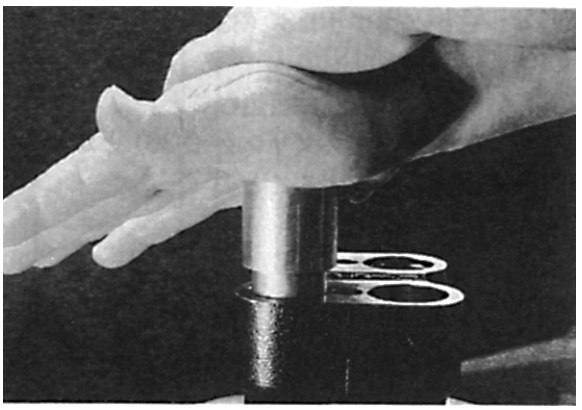

https://truckmanualshub.com/

h. Assemble the steel balls (225) into the bushing.

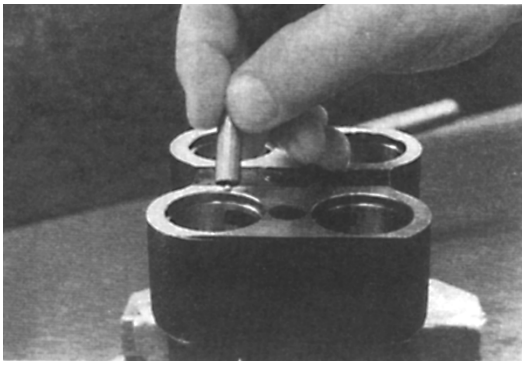

i. Assemble the spring seats (218) into the bushing.

※ Assemble it to the original location before disassembly.

j. Assemble the dumping springs (336) into the casing.

※ Assemble it to the original location before disassembly.

k. Assemble the dumping springs (337) into the casing.

※ Assemble it to the original location before disassembly.

※ Be careful that it does not engage with the dumping springs (336).

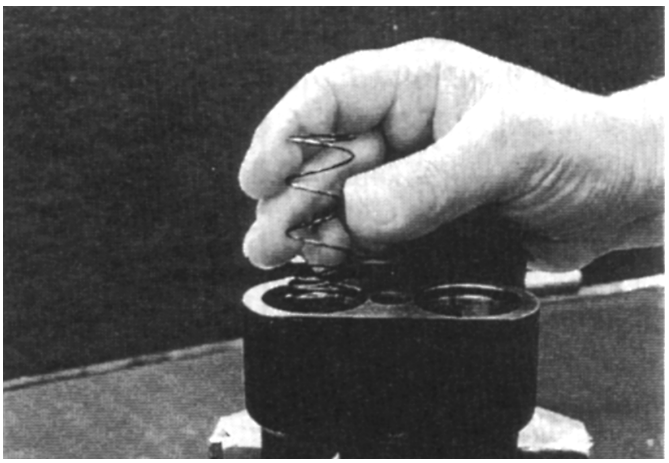

https://truckmanualshub.com/

l. Assemble the pistons (224).

※ Assemble it to the original location before disassembly.

m. Assemble the O-rings (212) into the plugs (202).

n. Assemble the NHU packings (210) into the plug.

※ When assembling the NHU packings, be careful of the direction. (See the illustration below.)

※ Apply a small amount of grease before assembling the NHU packings.

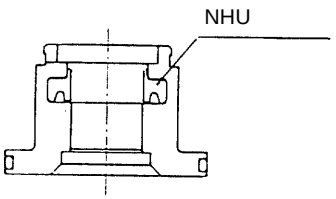

https://truckmanualshub.com/

o. Assemble the grease cups (203) onto the plug.

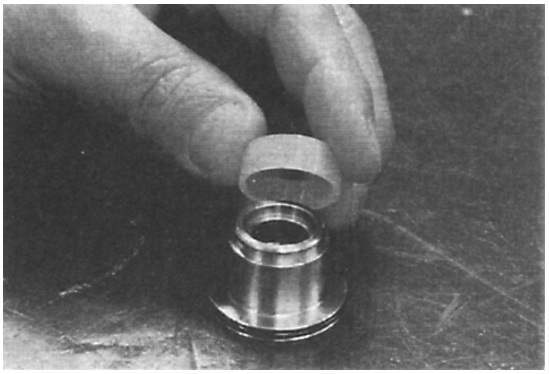

p. Assemble the push rods (214) into the plug.

※ Apply hydraulic oil to the push rod before assembling it.

※ The lip of the NHU packings is easily damaged, so do not push it with force.

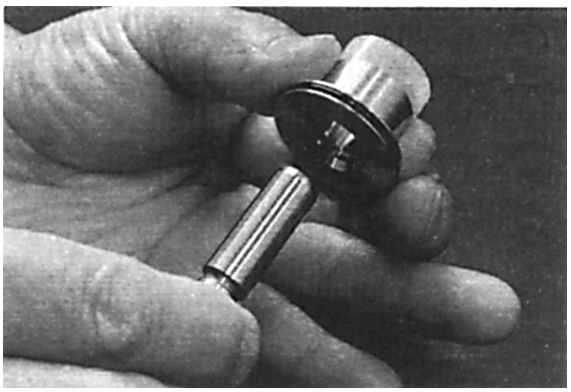

q. Assemble the push rod sub-assembly, which was assembled in steps (m) through (p), into the casing.

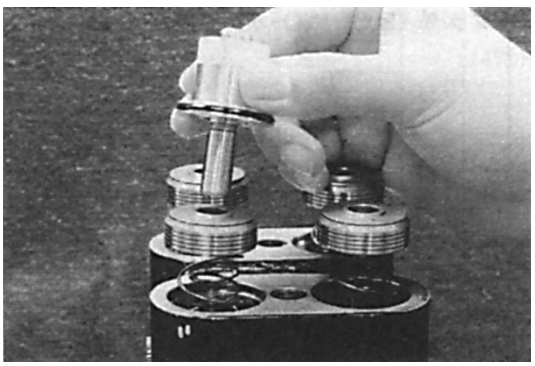

r. Use special jig 1 on the covers (201) and align the bushings (412). Lightly tap with a hammer and press fit it.

※ The bushing end may pop out from the inside of the cover so be careful.

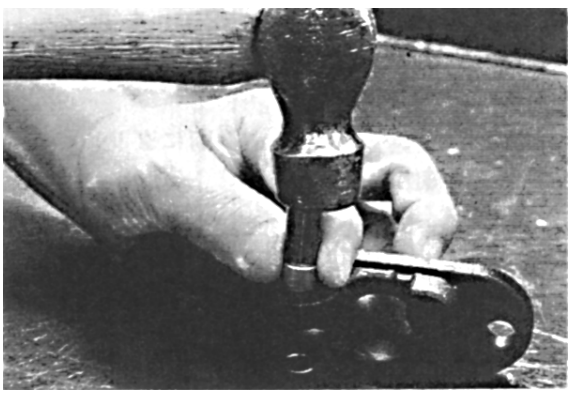

https://truckmanualshub.com/

s. Assemble the cover into the casing.

※ Assemble it to the original location before disassembly.

※ The cover may push up due to the dumping springs (336), (337) so be careful.

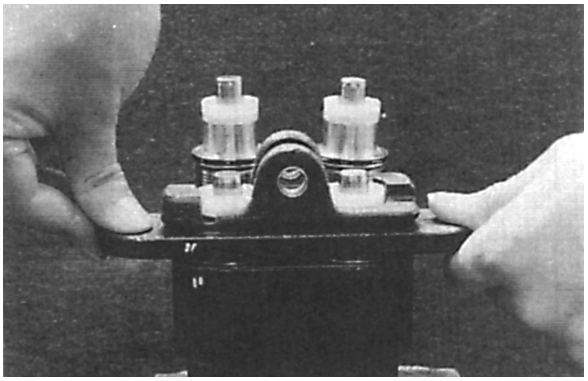

t. Tighten the hexagon socket head bolts (271) to the specified torque.

※ Make sure that the cover is level.

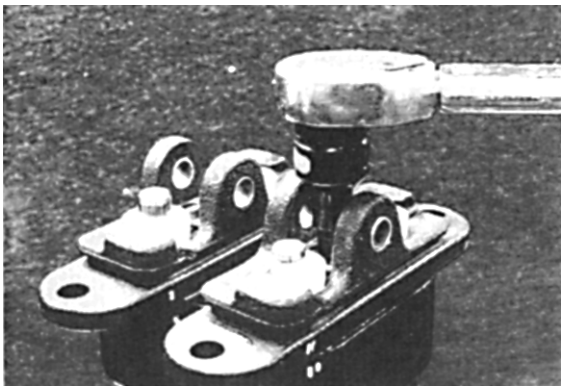

u. Temporarily assemble the set screws (471) and lock nuts (472) to the cams (420).

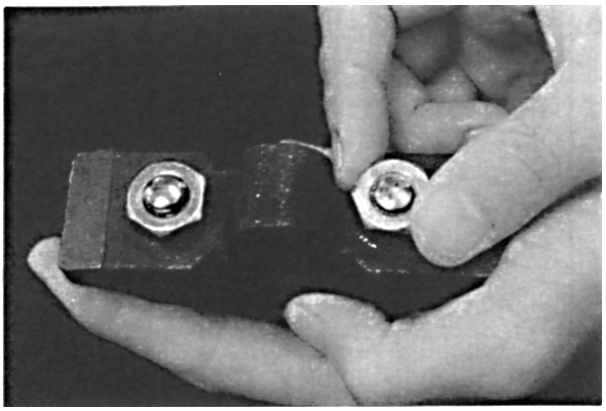

v. Assemble the cams (420) to the cover.

※ Assemble it to the original location before disassembly.

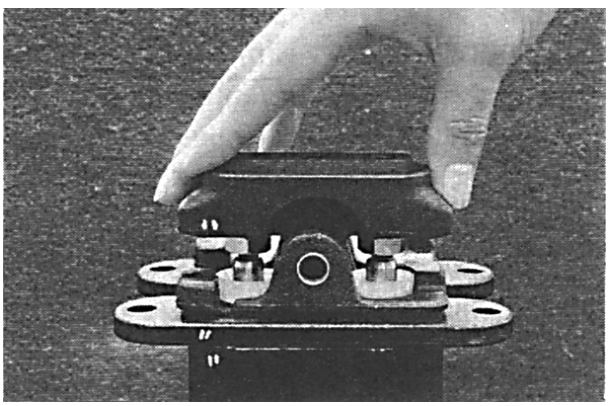

https://truckmanualshub.com/

w. While pushing the cams (420), insert the cam shafts (413) from the outside.

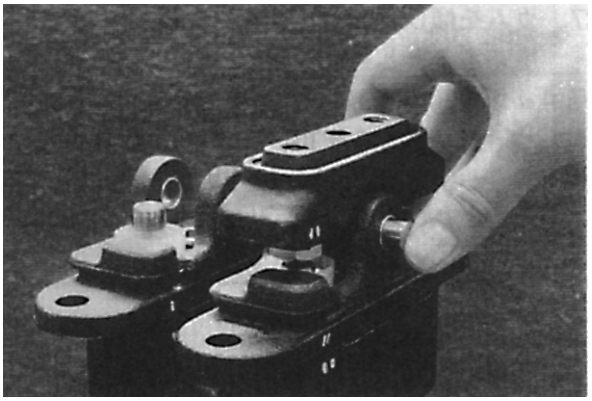

x. Apply Loctite No. 241 or its equivalent to the surface of the hexagon socket set screws (423).

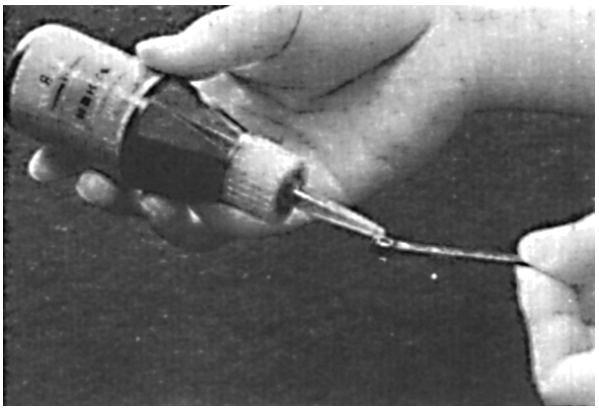

y. Tighten the hexagon socket set screws (423) to the specified torque.

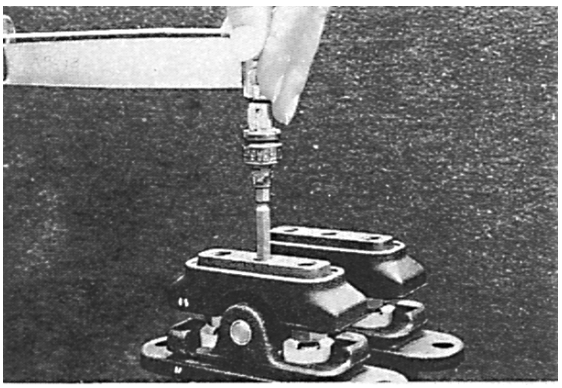

z. Adjust the height of the set screw so that upper surface of the cams (420) and the lower surface of the cover are level. Also rotate the cam to the left and right, confirming that there is no neutral backlash and then tighten the lock nuts (472) to the specified tightening torque.

※ Even if the push rods (214) is pushed too much by the set screw, backlash will occur when in neutral and will cause forward movement when the engine is started, so caution is needed.

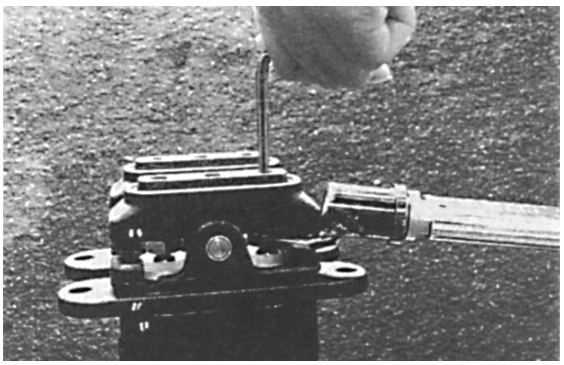

https://truckmanualshub.com/

aa. Tilt the cam and apply grease to the push rod upper part and inject grease into the grease cups (203) of the plugs (202).

※ Use a spatula-type tool made of soft material to apply or inject the grease in order not to scratch the surfaces of the push rod or plug.

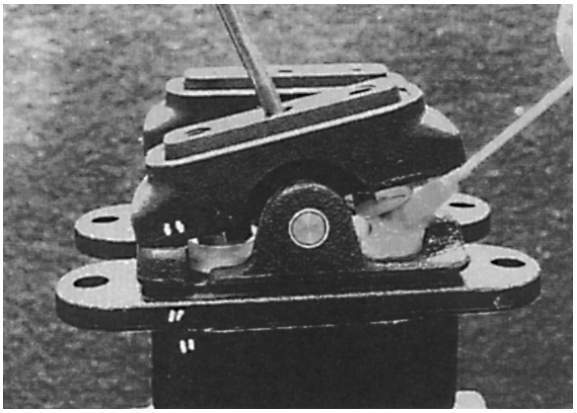

ab. After fitting the upper end of the bellows (501) into the cam, fit the lower end into the groove of the cover.

※ Before fitting the lower end of the bellows into the groove of the cover, spray the inner parts of the bellows with corrosion inhibitor.

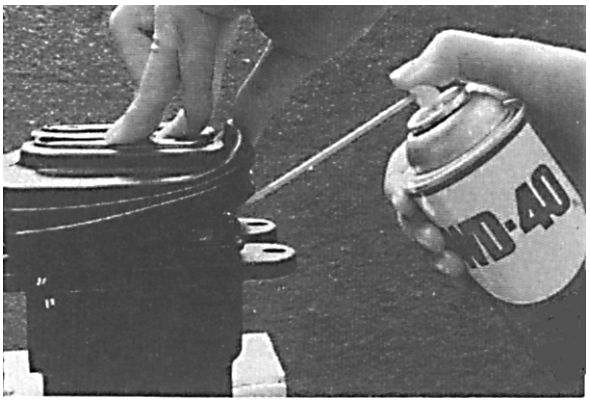

※ If the bellows are not fit properly into the groove or is twisted when installed, water and contamination resistance will be adversely effected, so be cautious.

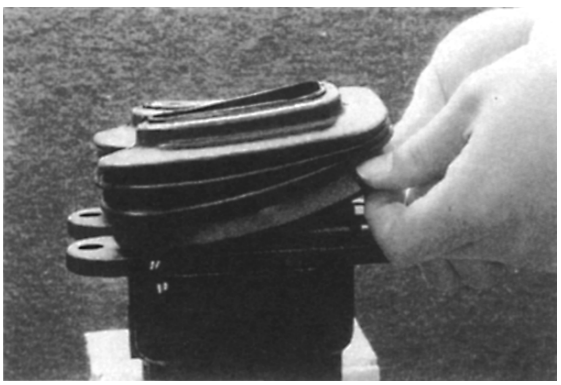

https://truckmanualshub.com/

5. Troubleshooting

It is not easy to discover the point which is out of order. In the chart below, some possible problems are listed.

Repair is difficult so refer to the possible causes and countermeasures listed in the chart.

In the chart below the general problems, possible causes and countermeasures are shown. However, in most cases the machine trouble is due not to the malfunction of just one part but to the part and the others related to it.

It is important to note that there are other measures that need to be taken which are not listed on this chart.

The chart below does not include all possible causes and countermeasures. Therefore, the person in charge of repairs must help to identify the problem and its causes.

Problem	Causes	Countermeasures
Secondary pressure does not increase.	1. Insufficient primary pressure. 2. Secondary pressure setting spring (324) is broken or worn out. 3. Clearance between spool and casing is extremely wide. 4. Backlash in operating part.	1. Obtain primary pressure. 2. Replace with new part. 3. Replace spool and casing as an assembly. 4. Disassemble, assemble and replace operating parts.
Secondary pressure is unstable.	1. Sliding parts are caught. 2. Variation in tank line pressure. 3. Mixture of air in the lines.	1. Repair the part. 2. Return directly to tank. 3. Operate several times to release the air.
Secondary pressure is high.	1. Tank line pressure is high. 2. Sliding parts are caught.	1. Return directly to tank. 2. Repair the part.
No dumping	1. Air is trapped in the piston area. 2. Sliding parts are caught. 3. Settling of dumping spring (336, 337) 4. Clearnance between dumping spring (224) and casing is abnormally large. 5. Malfunction of check valve. 6. Restriction hole of dumping piston is abnormally large.	1. Operate several times and release air. 2. Repair part where catching occurs. 3. Replace with new part. 4. Replace dumping piston, casing assembly. 5. Disassemble and investigate check valve. 6. Replace dumping piston.
Dumping torque is heavy.	1. Sliding parts are caught. 2. Clogging of dumping piston restriction hole.	1. Repair part where catching occurs. 2. Repair or replace dumping piston.

	0 0 0 - 7 - 0 7 - 0 1 - 1 0
Solenoid Valve (4-Way)	Page No. 1/ 7
	First Edition : 03/2005

1. Assembly Drawing

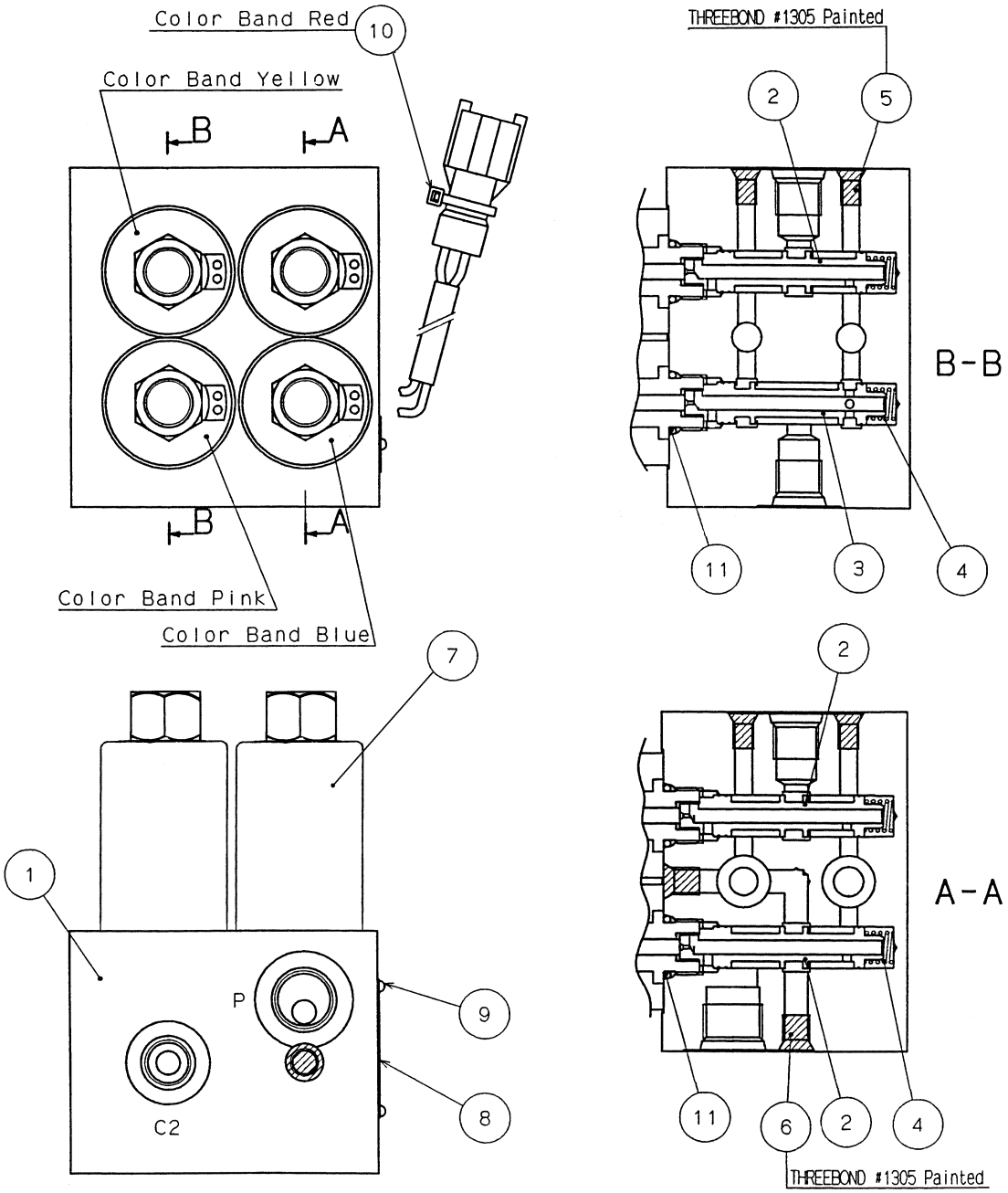

No.	PART NAME	QTY	No.	PART NAME	QTY
1	BODY	1	7	SOLENOID	4
2	SPOOL	3	8	NAME PLATE	1
3	SPOOL	1	9	DRIVE SCREW	2
4	SPRING	4	10	COLOR BAND	1
5	PLUG	2	11	O-RING	4
6	PLUG	1			

https://truckmanualshub.com/

2. Theory of operation

The hydraulic pressured oil delivered from port P is supplied to the electromagnetic valves, S1 to S3 when the electromagnetic selector valve SP is energized, and the hydraulic pressured oil is supplied to the ports, C1 to C3, according to the energization on the electromagnetic selector valves S1 to S3.

Electromagnetic selector valves S1, and 3:
Oil passes through when energized

Electromagnetic selector valve S2:
Oil passes through when not energized

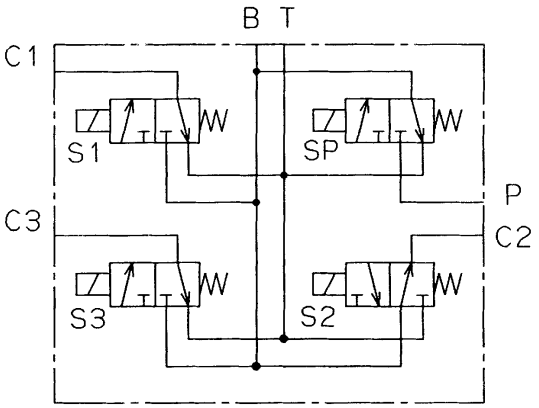

3. Maintenance

3-1. Precautions when disassembling and assembling

1. Disassemble and store O-rings and parts carefully to avoid damage.
2. If the O-ring is scratched, replace with a new one.
3. Install all the parts in the correct directions.
4. Assembly should be done in the reverse order of disassembly. Be careful to avoid foreign substances such as dirt from entering.

3-2. Disassembling and assembling electromagnetic selector valve section

1. Remove the hexagon nut on the solenoid valves (7) to remove the coil.
   (Required tool: 19 mm spanner)
2. Remove the tube carefully to avoid damage to the hexagon corners of the tube.
   (Required tool: 21 mm spanner)
3. Take out the spools (2), (3) and springs (4).

https://truckmanualshub.com/

4. Assembly should be done in the reverse order of disassembly. Tighten the tube carefully to avoid damage to the hexagon corners of the tube.

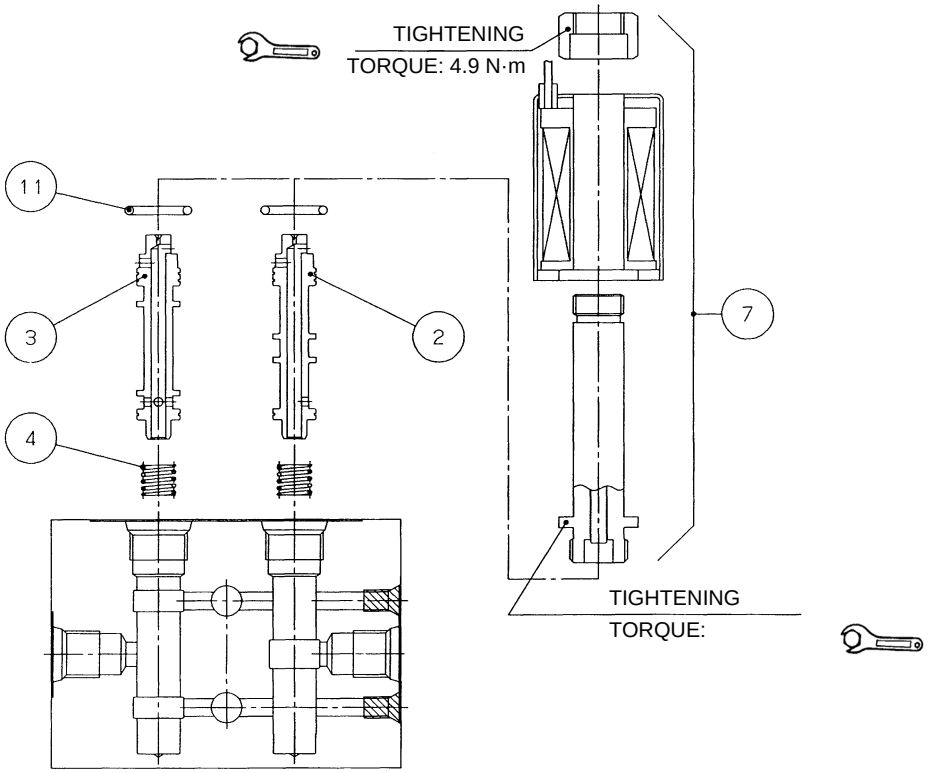

ELECTRONIC SELECTOR VALVE S1 AND S3 ASSEMBLY —> ITEM NUMBER (2)

https://truckmanualshub.com/

3-3. Maintenance standards

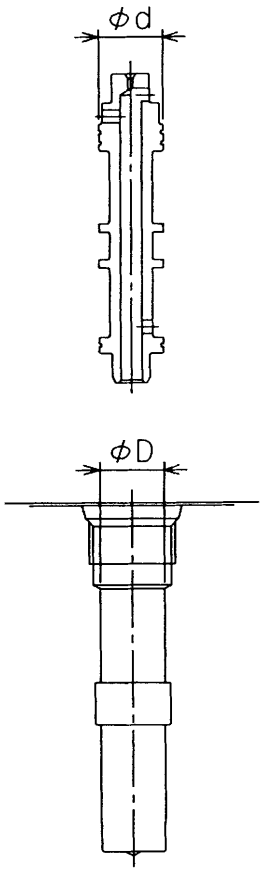

Measure the clearance between the body and spool.
Clearance = dia. D – dia. d
Reference value: approximately 0.01 mm

3-4. Troubleshooting

Fault Symptom	Cause	Remedy
Spool malfunction	Does not operate due to foreign substances	Remove foreign substances, disassemble, clean and exchange the hydraulic oil.
	Damaged parts, abnormal wear	Replace the valve.
Solenoid malfunction	Loose terminal	Insert the terminal securely.
	Damaged coil	Replace the solenoid.
	Lead disconnection	
External leakage	Loose screws	Retighten by applying specified torque.
	Damaged O-ring	Replace the O-ring.

https://truckmanualshub.com/

4. Safety Precautions

To avoid serious accident and personal injury, read carefully and fully understand the safety precautions and instructions for use before using hydraulic valves and amplifiers.

In addition, always ensure that safety is the utmost priority and handle devices following all laws and regulations regarding safety described below.

Safety related standards:

1. Labor, Occupational Safety and Health Law
2. Fire Protection Law
3. Explosion Protection Classification
4. General Rules for Hydraulic Systems: JIS B 8361

4-1. Warning sign definitions

⚠	**DANGER**	If this displayed notice is not observed, personal accidents such as death or serious injury will result.
⚠	**WARNING**	If this displayed notice is not observed, personal accidents such as death or serious injury may result.
⚠	**CAUTION**	If this displayed notice is not observed, injury or physical damage may result.

4-2. Safety cautions on product use

1. Identifying Products

⚠	**WARNING**	Ensure that the product is a correct type by checking its nameplate or marking.
⚠	**DANGER**	Under the atmosphere where explosion or combustion may be caused, always use products suitable for the conditions only by confirming with explosion protection certified symbols displayed on the products.
⚠	**CAUTION**	Under the atmosphere exposed to splashes or excessive moisture, select products suitable for the conditions.

2. Precautions When Handling Products

⚠	**CAUTION**	To prevent injury, wear protective gear according to the situation.
⚠	**CAUTION**	Carefully select suitable work methods according to the weight of the product and working postures to avoid a caught hand or lower back damage.
⚠	**CAUTION**	To prevent electric shocks, fire and noises, ground leads should be securely connected when grounding is necessary for the devices.
⚠	**CAUTION**	Do not apply more force than necessary when handling wiring and connectors.

https://truckmanualshub.com/

CAUTION To avoid malfunction, breakage and oil leakage, do not apply external force on products by putting yourself on or hitting or dropping them.

CAUTION Always wipe off hydraulic oil attached to products or on floors to avoid dropping or slipping.

3. Precautions When Installing and Removing

CAUTION To avoid poorly tightened bolts and defective sealing, clean the fitting surfaces and holes.

CAUTION To prevent breakage and oil leakage, always use specified bolts and apply specified torque to fasten them.

CAUTION Select suitable types and sizes of electric lines according to the specifications, and install them securely to avoid loose wiring.

CAUTION Do not energize both solenoids at the same time when double solenoid valves are used.

CAUTION Installation, removal, piping and wiring should be carried out by qualified technicians only.

WARNING Installation, removal, piping and wiring should be done after confirming that the power supply is turned off and the device is completely stopped. In addition, carry out the operation after confirming that the internal pressure in the hydraulic circuits is zero.

WARNING Electric wiring work should be performed by qualified technicians only. To avoid electric shocks, always turn off the power before starting the work.

WARNING Install relief valves to control the maximum pressure near the pump delivery side (except for pumps with pressure compensating functions, together with a clear description that no relief valves are required).

4. Precautions When Operating

WARNING When operating the device for the first time, ensure that the hydraulic circuits and electric cables are correctly set and there are no loose connections before starting the operation.

WARNING Conduct bleeding following the instruction manual.

https://truckmanualshub.com/

WARNING Starting the device should be done while the pressure on the pressure control equipment such as relief valves are set low, checking that the pressure is low enough by using pressure gauges.

Ensure that the operating conditions are normal and then gradually increase the pressure to the normal operation. Again, check that the operating pressures are within the normal ranges.

Slowly operate the handle of the pressure control valve since quick handling is dangerous.

CAUTION Keep your body and hands away from the product while it is in operation, because it becomes very hot and may cause burns.
Special attention is necessary to the surfaces of solenoids as they become very hot.

CAUTION Use products in a proper manner following their specs described in catalogs, drawings, specifications and instruction manuals (maximum pressure, maximum flow, temperature range, maximum switching frequency, etc.).

WARNING When abnormality occurs while operating the device, stop it immediately, turn off the power, and take necessary measures. Breakage, fire and injury may take place.

CAUTION Use hydraulic oils specified in the product specification and control their contamination level by using estimated values.

5. Precautions When Maintaining and Storing

WARNING Never attempt to modify products.

CAUTION If valves are needed to disassemble and assemble, only qualified technicians should perform the operation following the instruction manual. Disassembly is not allowed on some valves.

If disassembly is not allowed, do not attempt disassembly.

CAUTION When transporting products, take necessary measures for dust proofing and rust prevention according to conditions such as atmosphere temperature and humidity.

CAUTION When storing devices for a long term, take possible measures to the circuits to prevent the hydraulic oil from dropping from the piping.

The piping and the inside of the devices can rust. When the hydraulic oil drips, the device can not draw the oil again without bleeding.

https://truckmanualshub.com/

Cushion Valve

1. Assembly Drawing

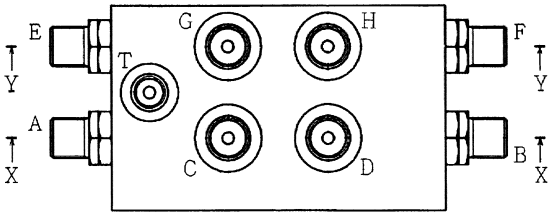

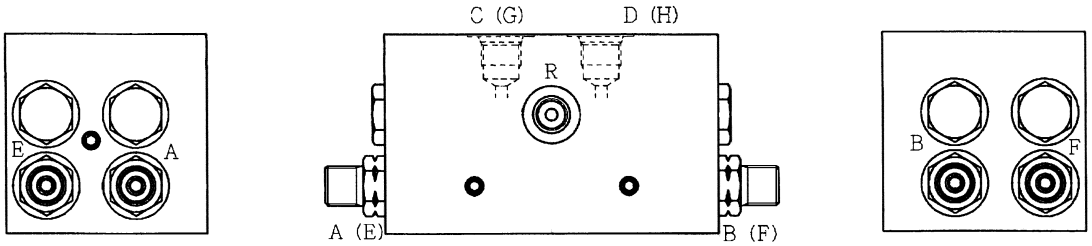

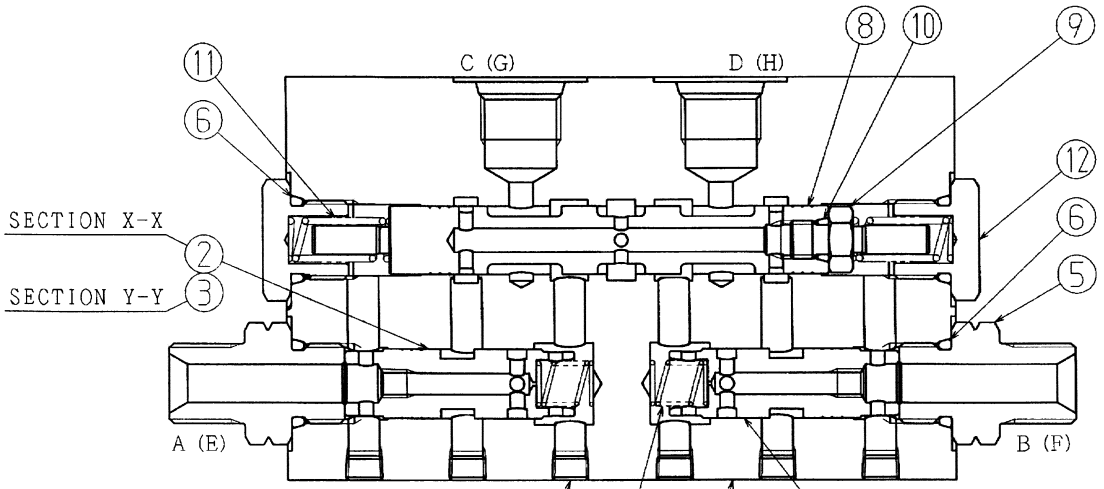

SECTION X-X (Y-Y)

TIGHTENING TORQUE LIST

NO.	SCREW SIZE	TIGHTENING TORQUE
5, 12	G 3/8	39.2 ～ 49.0N•m
13	NPTF 1/16	9.5 ～ 10.0 N•m

No.	PART NAME	QTY	No.	PART NAME	QTY
1	BODY	1	8	SPOOL	2
2	SPOOL	1	9	CAP SCREW	2
3	SPOOL	1	10	O-RING	2
4	SPOOL	1	11	SPRING	4
5	PLUG	4	12	PLUG	4
6	O-RING	8	13	PLUG	17
7	SPRING	4	18	SPOOL	1

https://truckmanualshub.com/

2. System Drawing

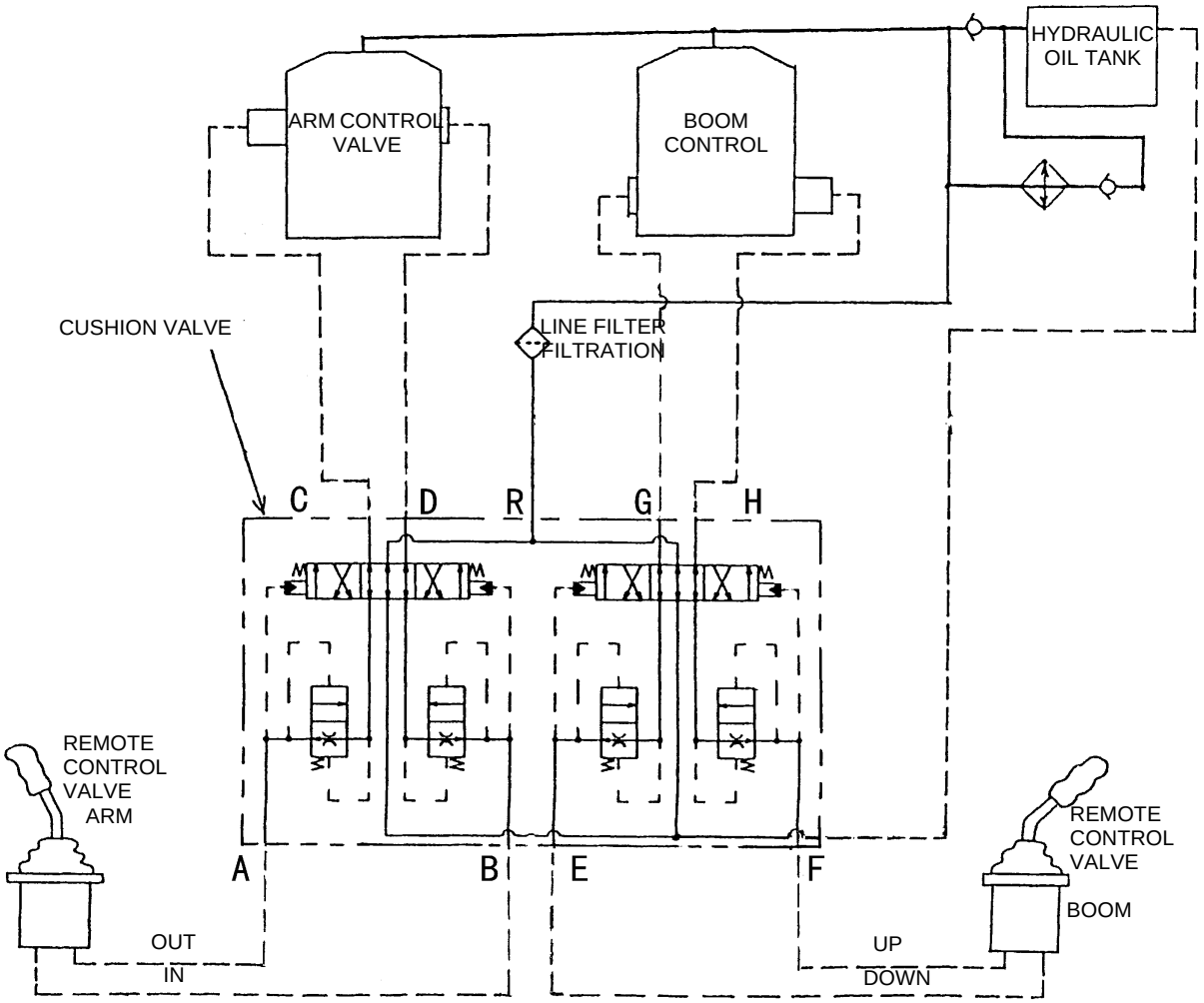

https://truckmanualshub.com/

3. Operational Description

1.Lever in neutral

a. The heat oil separated from the oil cooler line enters the cushion valve Port R.
b. Then, the oil passes the reverse notch spool and goes through passages e and f. After passing the outer circumference of each cushion spool, the oil returns to the hydraulic oil tank via the cushion valve Port T.

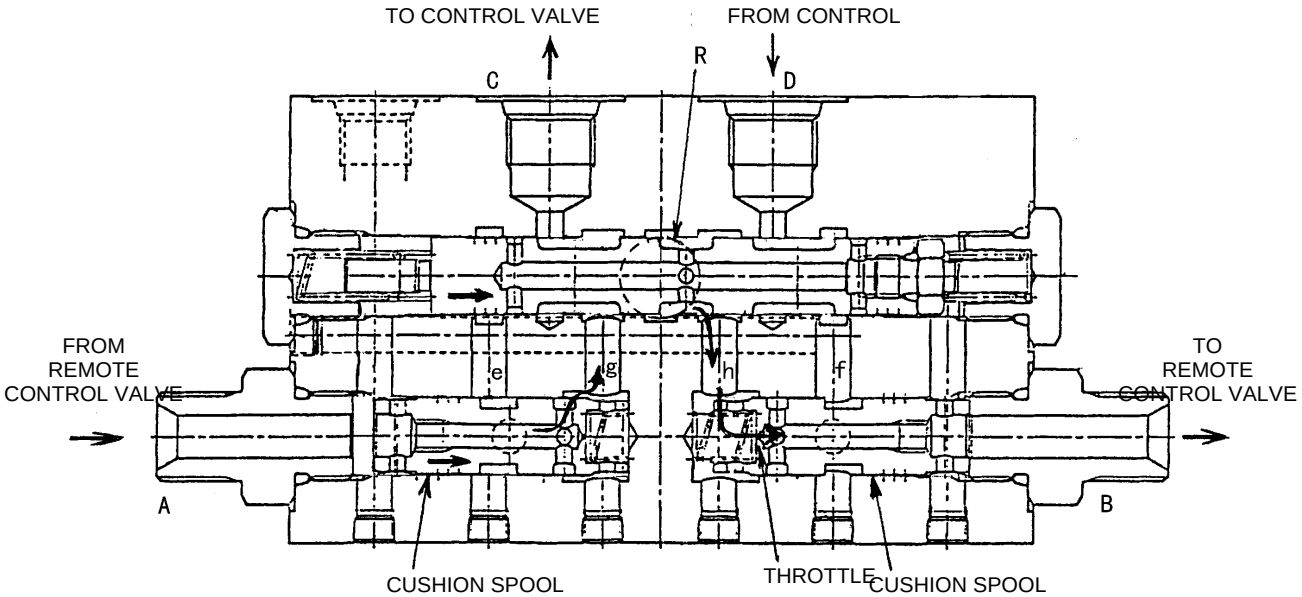

2.Arm OUT, operating

a. Pilot pressure enters the cushion valve at Port A from the remote control valve. As this pilot pressure enters the left end of the cushion spool and the left end of the reverse notch spool, each spool moves to the right.
b. The pilot pressure in the cushion spool enters the chamber g via the spool opening.
Then, the pressure passes the outer circumference of the reverse notch spool and goes into the control valve via Port C.
c. The pilot pressure return oil from the control valve passes the outer circumference of the reverse notch spool and goes into the chamber f via Port D. Then, the oil passes the outer circumference of the cushion spool and returns to the hydraulic oil tank through Port T.
d. At this time, as the reverse notch spool is switched over to the right, the passages e and f are closed to the heat oil at the Port R. Therefore, the oil passes passage h and enters the left end of the cushion spool. The heat oil passes the cushion spool throttle and enters the remote control V via Port B. (The heat oil releases the remote control valve.)

https://truckmanualshub.com/

3.Arm OUT, stopped

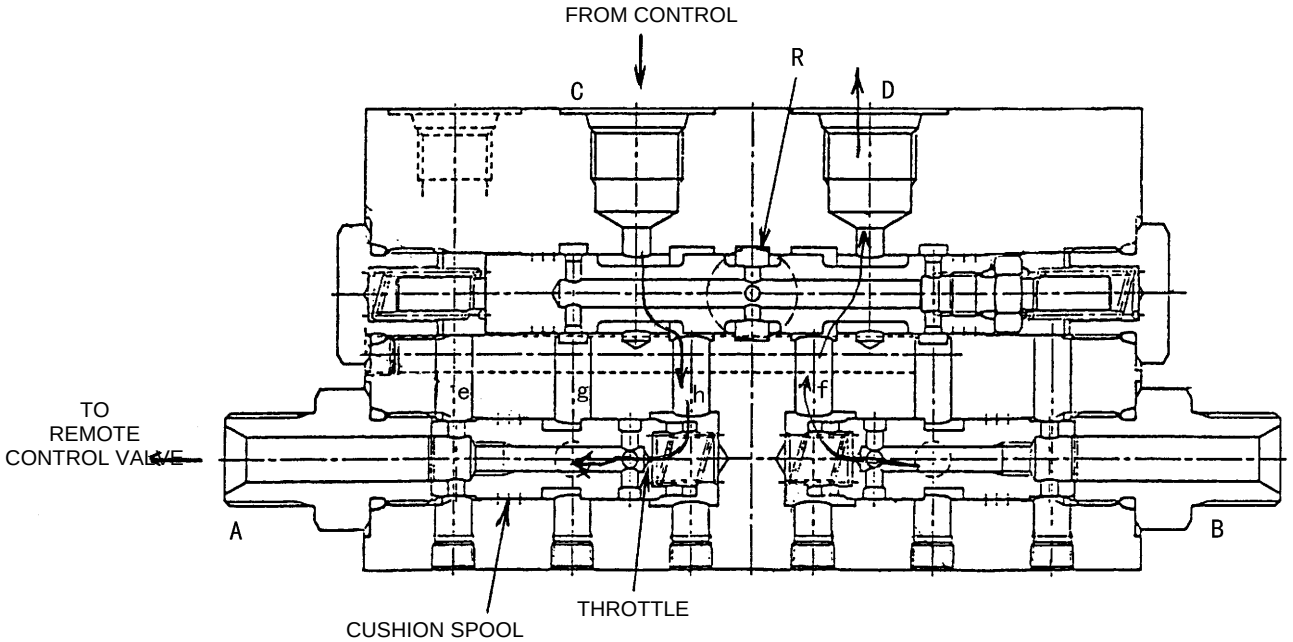

a. As the pilot pressure from the remote control valve stops, the reverse notch spool returns to the neutral position.
b. The cushion spool also returns to the neutral position and the pilot return oil from the control valve passes the throttle.
c. Due to this restricting effect, the spool of the main control valve returns gradually to the neutral position.

https://truckmanualshub.com/

Attachment Reinforcement Procedures

1. SH290-3 Reinforcement Parts List

Place	Code	Part No.	Shape	Qty	Outer shape (mm) / Weight (kg)
Boom	1	KBV2024	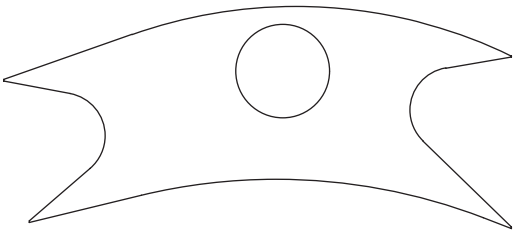	2	t9 × 870 × 2080 124.8
Standard Arm	2	KBV1526	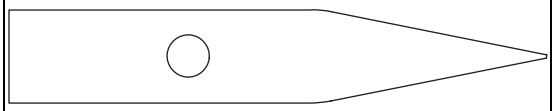	1	t9 × 260 × 1500 21.2
	3	KBV2025	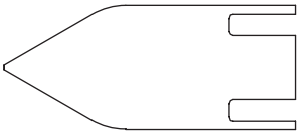	1	t9 × 280 × 650 9.5
	4	KBV1524	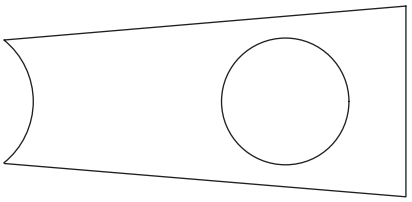	1	t9 × 270 × 560 6.5
	5	KBV1525	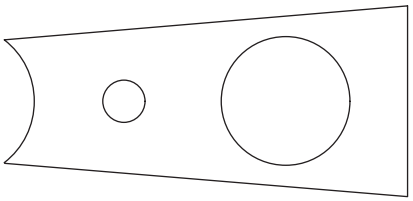	1	t9 × 270 × 560 6.3
	6	KBV1532	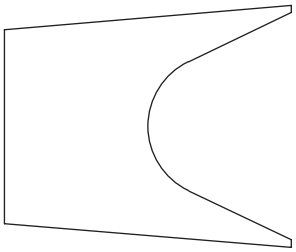	2	t9 × 340 × 400 11.1
	7	KBV2026	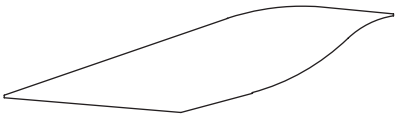	2	t9 × 180 × 880 13.7
	8	KBV1527	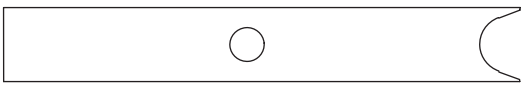	1	t9 × 260 × 1800 30.5

https://truckmanualshub.com/

Attachment Reinforcement Procedures

Place	Code	Part No.	Shape	Qty	Outer shape (mm) / Weight (kg)
Long Arm	9	KBV1526	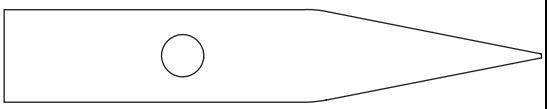	1	t9 × 260 × 1500 21.2
	10	KBV2025	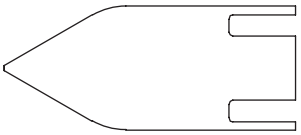	1	t9 × 280 × 650 9.5
	11	KBV1524	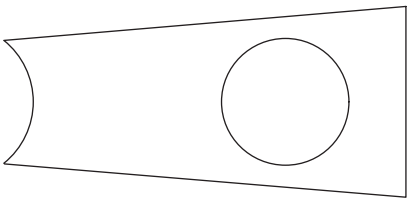	1	t9 × 270 × 560 6.5
	12	KBV1525	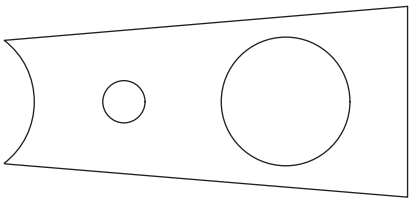	1	t9 × 270 × 560 6.3
	13	KBV1532	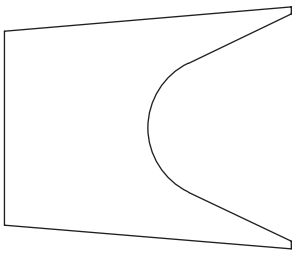	2	t9 × 340 × 400 11.1
	14	KBV2027	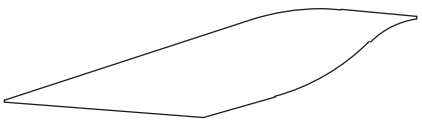	2	t9 × 180 × 930 14.9
	15	KBV1527	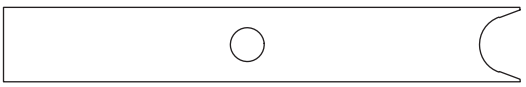	1	t9 × 260 × 1800 30.5

https://truckmanualshub.com/

Attachment Reinforcement Procedures

Place	Code	Part No.	Shape	Qty	Outer shape (mm) / Weight (kg)
Short Arm	16	KBV1526	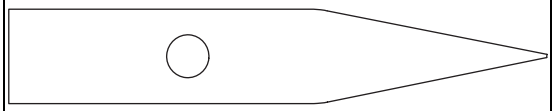	1	t9 × 260 × 1500 21.2
	17	KBV2025	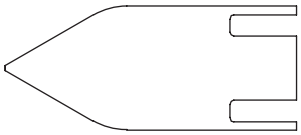	1	t9 × 280 × 650 9.5
	18	KBV1524	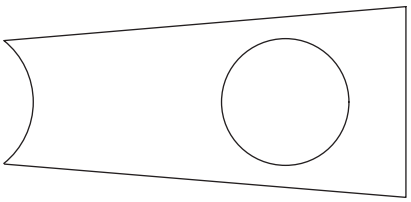	1	t9 × 270 × 560 6.5
	19	KBV1525	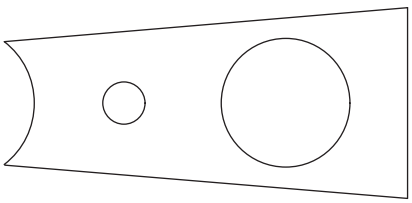	1	t9 × 270 × 560 6.3
	20	KBV1532	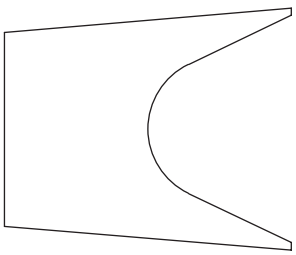	2	t9 × 340 × 400 11.1
	21	KBV2028	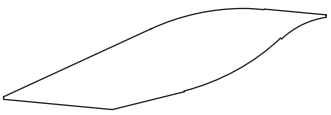	2	t9 × 170 × 730 10.6
	22	KBV1527	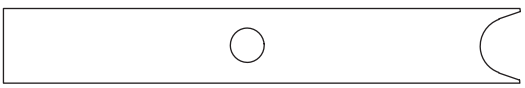	1	t9 × 260 × 1800 30.5

2. SH290-3 Boom Reinforcement Diagram

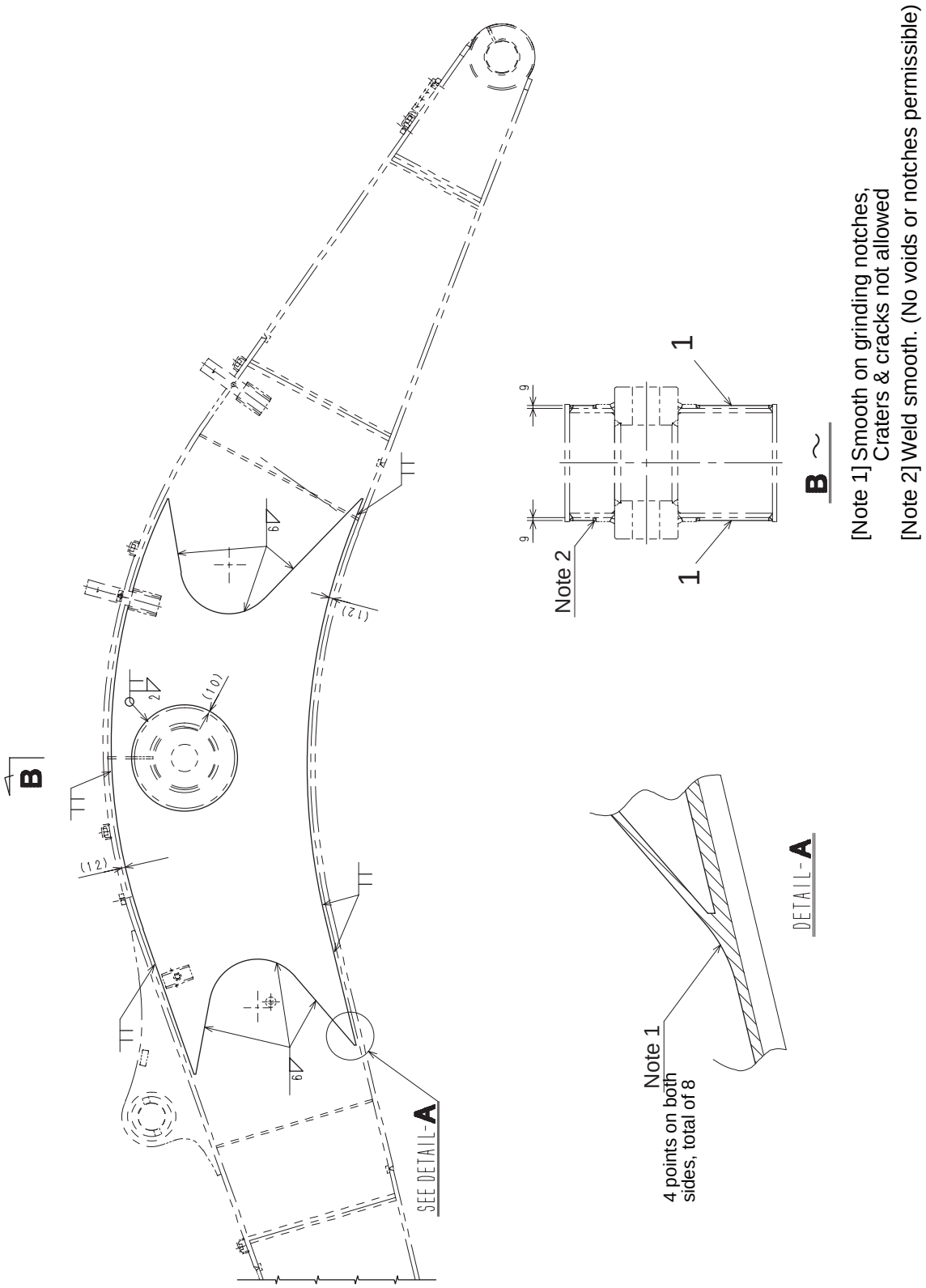

KBV2017X-C00

3. SH290-3 Standard Arm (3.2m) Reinforcement Diagram

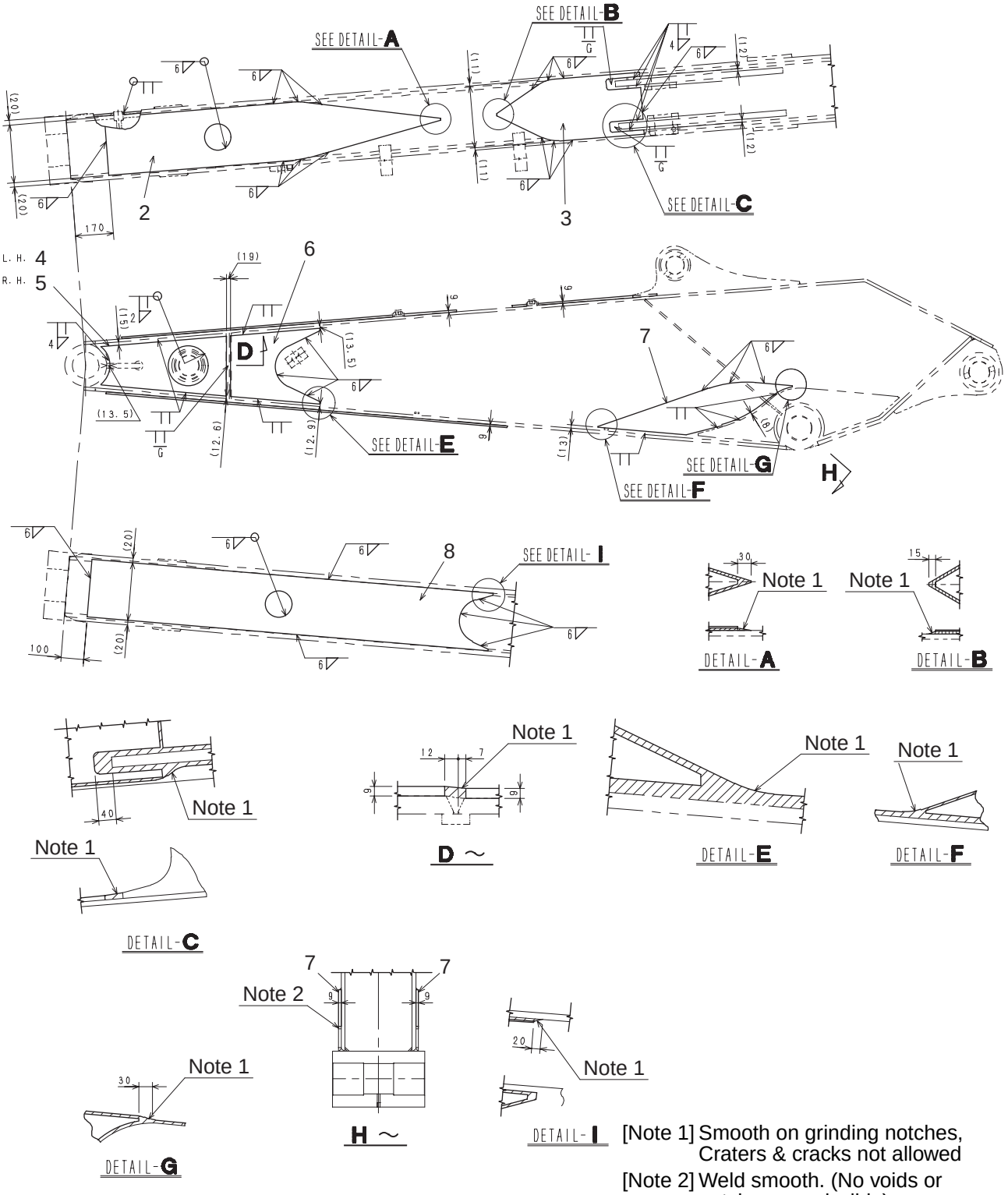

[Note 1] Smooth on grinding notches, Craters & cracks not allowed

[Note 2] Weld smooth. (No voids or notches permissible)

KBV2021X-D00

https://truckmanualshub.com/

4. SH290-3 Long Arm (3.66m) Reinforcement Diagram

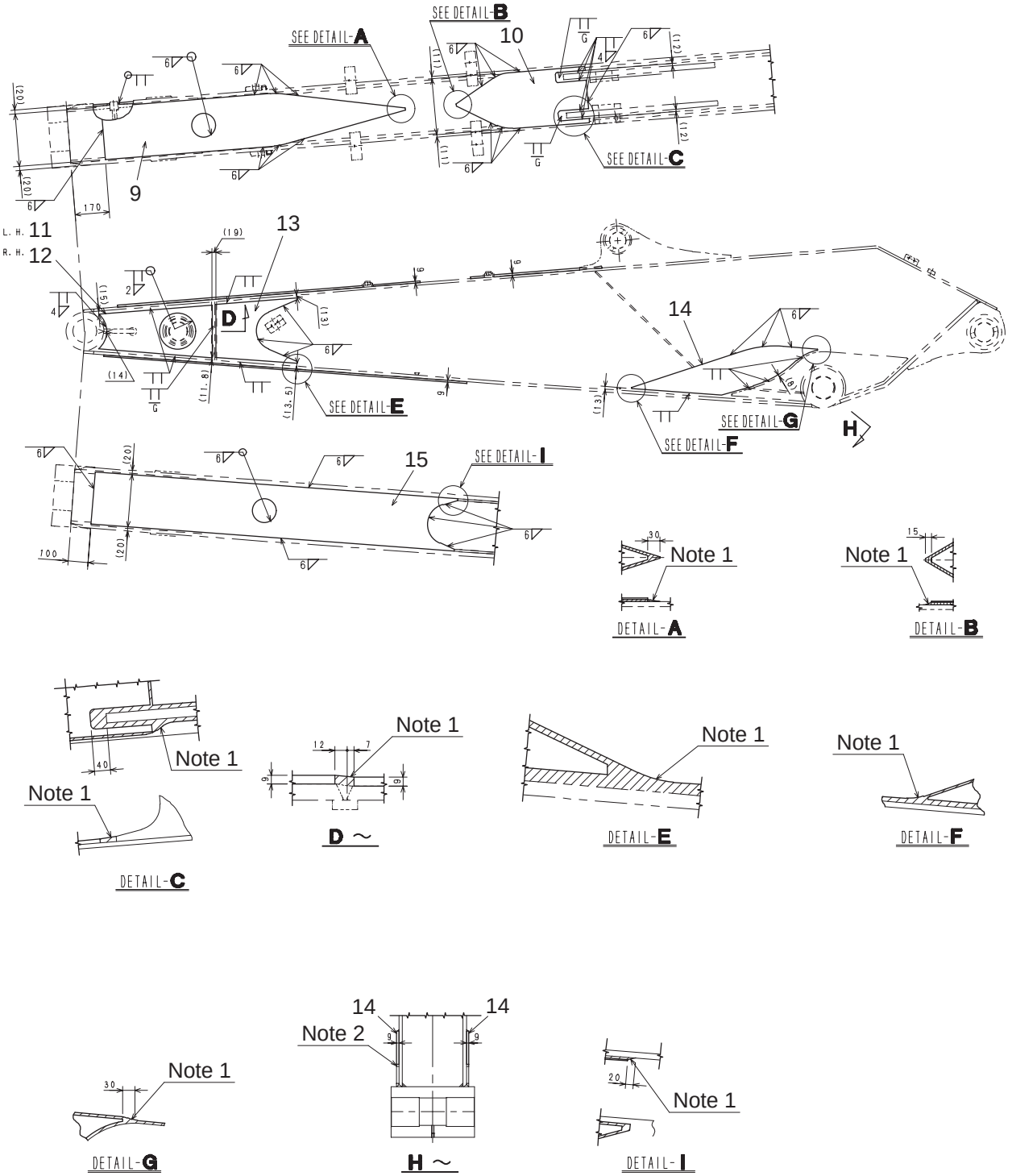

[Note 1] Smooth on grinding notches, Craters & cracks not allowed

[Note 2] Weld smooth. (No voids or notches permissible)

KBV2022X-D00

https://truckmanualshub.com/

5. SH290-3 Short Arm (2.67m) Reinforcement Diagram

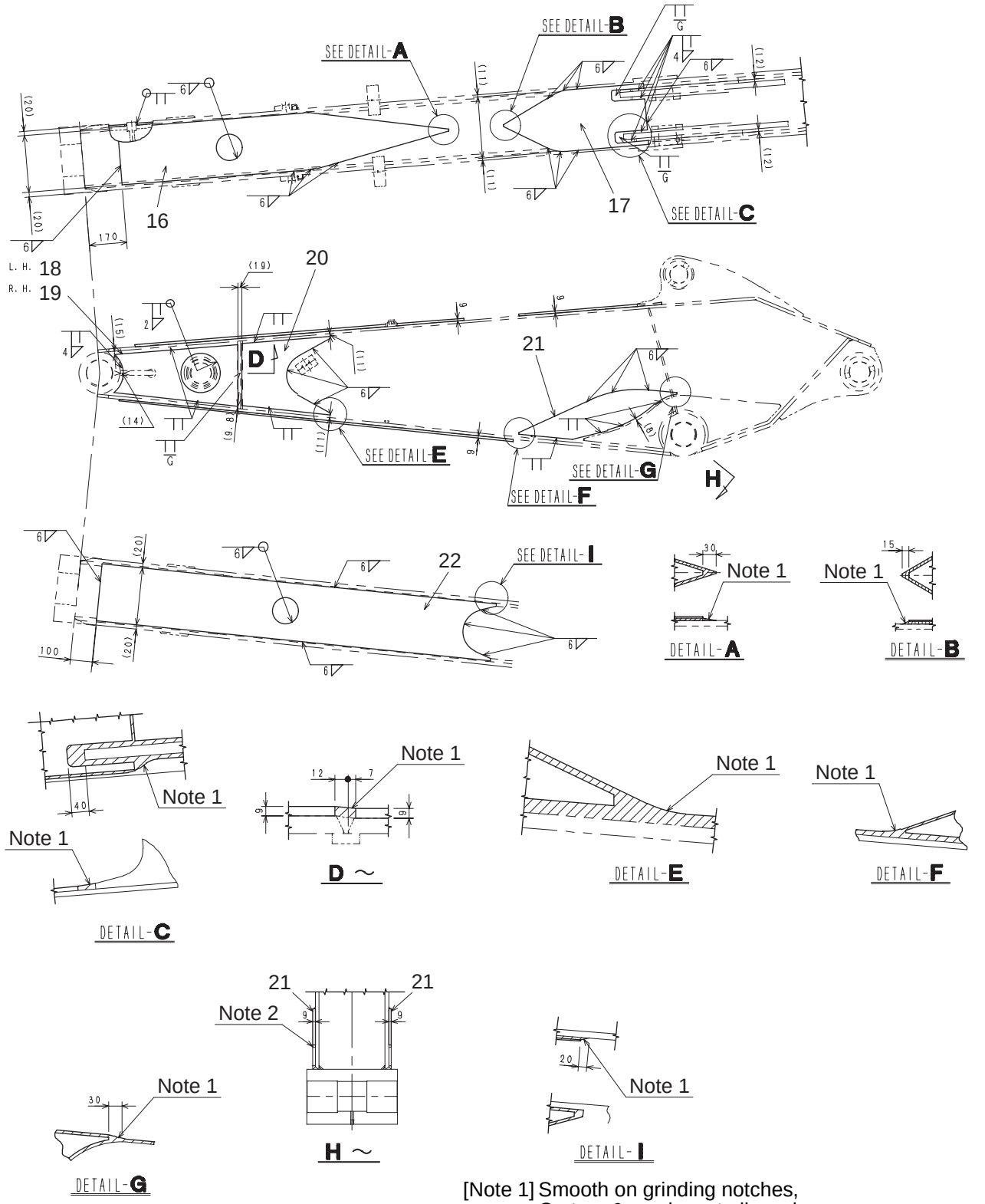

[Note 1] Smooth on grinding notches,
Craters & cracks not allowed

[Note 2] Weld smooth. (No voids or notches permissible)

KBV2023X-D00

https://truckmanualshub.com/

	290-8-07-01-01
Platform Plate for Repair	Page No. 1/ 1
	First Edition : 03/2005

1. Right side Platform

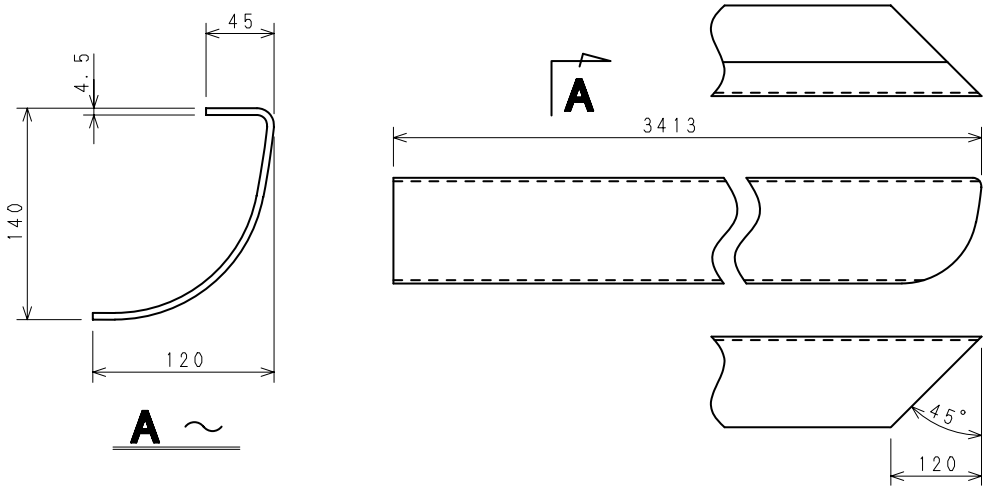

PART NO.	WEIGHT(kg)
KBB0838	29.1

2. Left side Platform

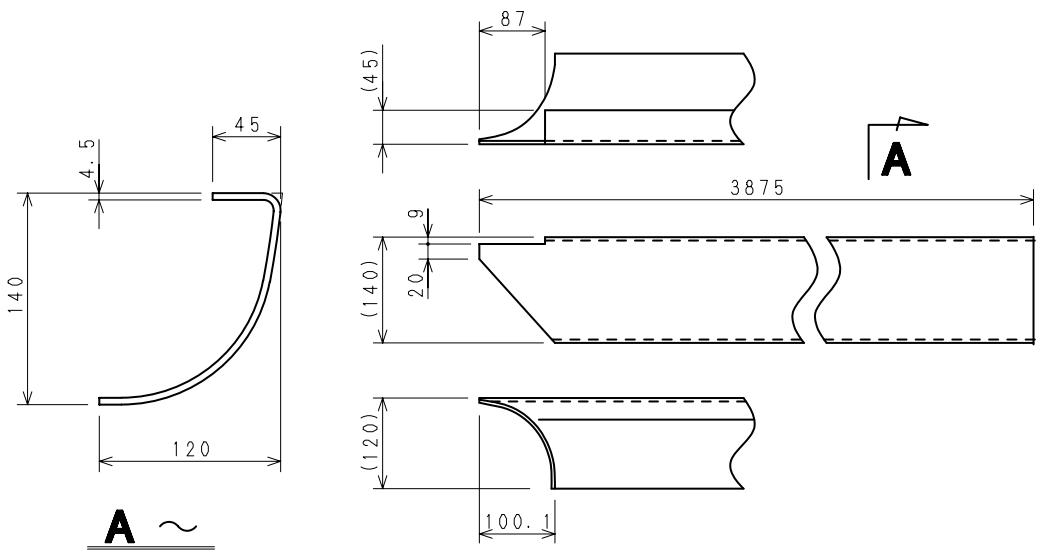

PART NO.	WEIGHT(kg)
KBB0839	33.1