https://truckmanualshub.com/

WORKSHOP MANUAL

3/4 LD, CODE1-5302-556 ENGINE SERIES

3LD 450
3LD 510
3LD 450/S
3LD 510/S
4LD 640
4LD 705
4LD 820

3rd edition

LOMBARDINI intermotor SLANZI SERVICE

TECO/ATL AUTHOR	BOOK CODE	MODEL No.	DATE OF ISSUE	REVIEW 02	DATE	APPROVAL	
	1-5302-556	50839	01-94		30.11.2001		1

Downloaded from www.Manualslib.com manuals search engine

https://truckmanualshub.com/

INTRODUCTION

This handbook provides the main information concerning the repair of the following LOMBARDINI Diesel engines **3LD 450, 3LD 510, 3LD 451/S, 3LD 510/S, 4LD 640, 4LD 705, 4LD 820,** which are air-cooled, provided with direct injection and revised on the 30-11-2001.

INDEX OF CHAPTERS

I	MODEL AND IDENTIFICATION	Page	3
II	CHARACTERISTIC CURVES	"	4
III	MAINTENANCE RECOMMENDED OIL, CAPACITIES	"	5
VI	TROUBLE SHOOTING	"	6
V	DISASSEMBLING AND REASSEMBLING	"	7
VI	LUBRICATION CIRCUIT	"	18
VII	FUEL/INJECTION CIRCUIT	"	20
VIII	ELECTRIC CIRCUIT	"	22
IX	ELECTRIC EQUIPMENT	"	23
X	ADJUSTMENTS	"	25
XI	UPKEEPING	"	27
XII	TECHNICAL DATA	"	28
XIII	MAIN DRIVING TORQUES	"	29
XIV	USE OF SEALANT	"	30
XV	CLAMPING TORQUES	"	31

Downloaded from www.Manualslib.com manuals search engine

https://truckmanualshub.com/

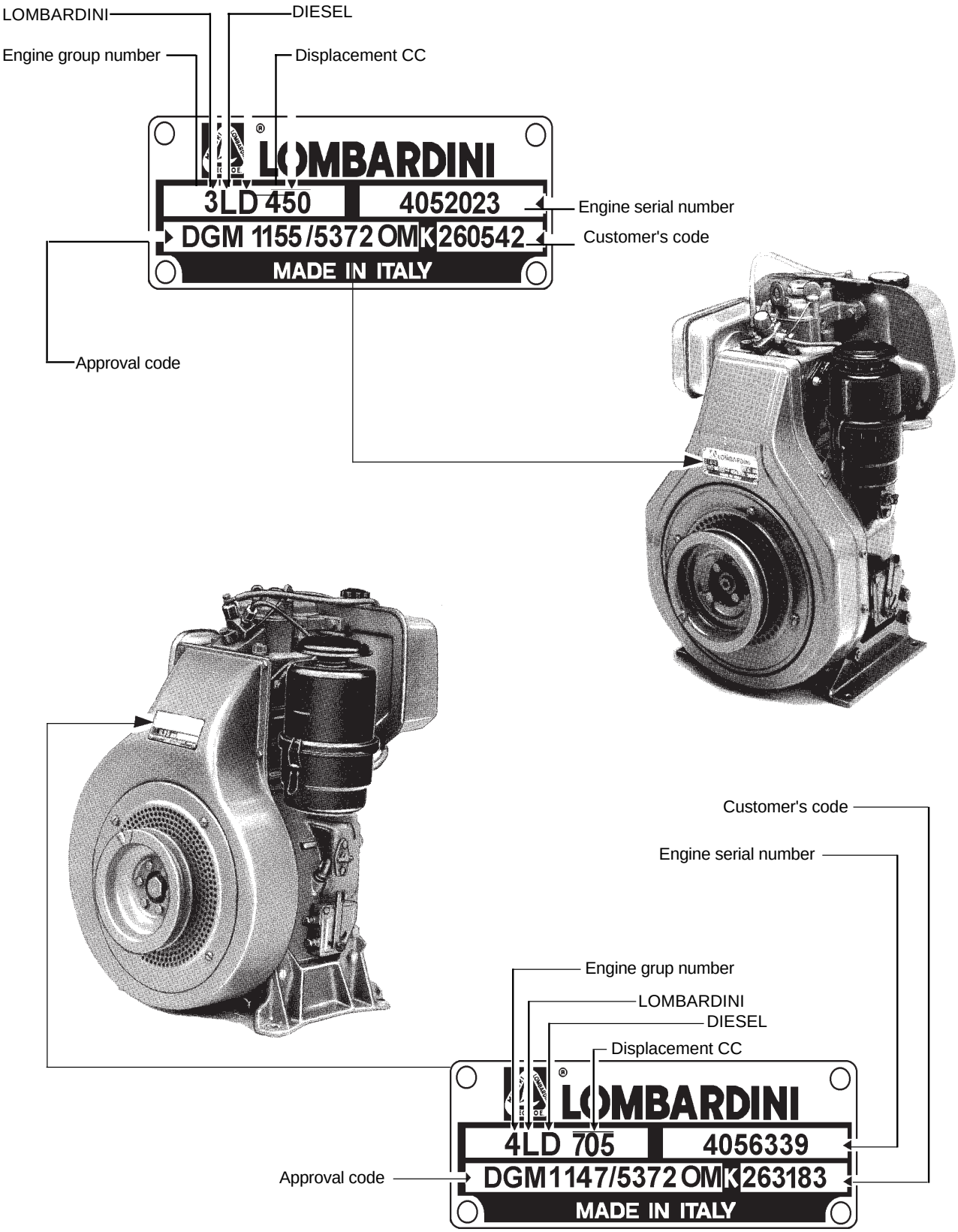

Downloaded from www.Manualslib.com manuals search engine

https://truckmanualshub.com/

CHARACTERISTIC CURVES CONCERNING POWER, TORQUES AND SPECIFIC CONSUMPTION

3LD 450

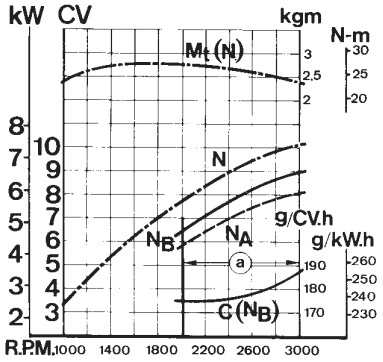

3LD 510

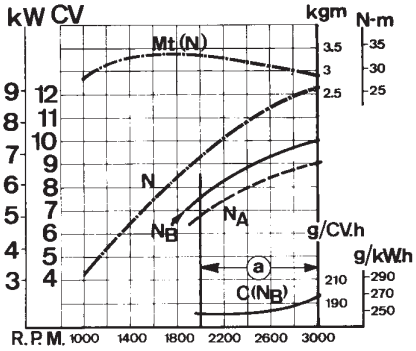

4LD 640

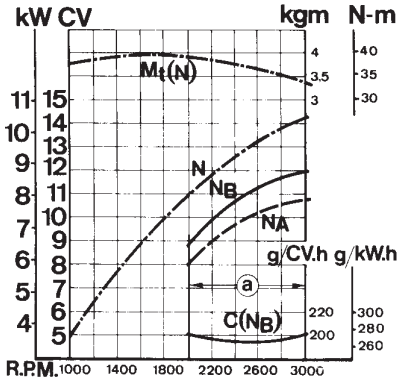

4LD 705

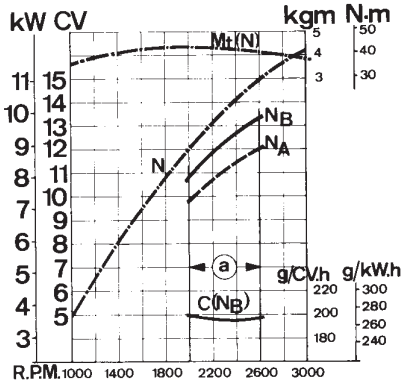

4LD 820

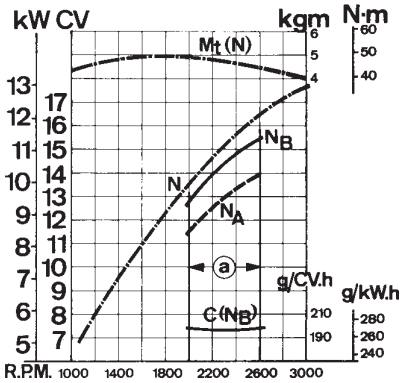

N (80/1269/EU - ISO 1585)	**AUTOMOTIVES POWER** : Discontinuous services at variable rpm and load.
NB (ISO 3046 - 1 IFN)	**NON-OVERLOADABLE POWER:** Continuous light services at constant rpm and variable load.
NA (ISO 3046 - 1 ICXN)	**CONTINUOUS OVERLOADABLE POWER:** Continuous heavy-duty services at constant rpm and load.

The above mentioned power levels refer to the engine equipped with air filter, standard silencer, suction fan - which previously underwent a breaking-in period - at 20°C ambient conditions, at 1 bar.
The maximum power is guaranteed with a 5% tolerance.
These powers are reduced of abt. 1% every 100 m height and of 2% for every 5°C exceeding 25°C.

C (NB): Specific fuel consumption at NB power
M T : Torque at N power
ⓐ : Continuous service field of use. For any purpose out of this field of use, please contact company LOMBARDINI.

Downloaded from www.Manualslib.com manuals search engine

https://truckmanualshub.com/

OPERATION	DETAIL		INTERVALS (HOURS)								
				10	50	125	250	500	1000	2500	5000
CLEANING	AIR FILTER (OIL-BATH) (*)			●							
	HEAD AND CYLINDER FINS (*)						●				
	FUEL TANK								●		
	INJECTORS							●			
CHECK	LEVEL	AIR FILTER OIL		●							
		SUMP OIL		●							
		BATTERY LIQUID			●						
	FUEL HOSE COUPLING FASTENING							●			
	VALVE AND ROCKER ARM CLEARANCE							●			
	INJECTOR SETTING							●			
CHANGE		AIR FILTER(**) (***)		●							
		SUMP (***)			□		●				
	OIL FILTER CARTRIDGE				□		●				
	FUEL FILTER CARTRIDGE						●				
OVERHAUL	PARTIAL (****)									●	
	GENERAL										●

□ First replacement.
(*) In particular running conditions even every day.
(**) In particularly dusty environments every 4-5 hours.
(***) See prescribed oil.
(****) It includes the check of cylinders, segments, guides, valve seat springs and grindings, head and cylinder descaling, injection pump and injector checks.

RECOMMENDED OIL
AGIP DIESEL SIGMA S SAE 30-40 MIL-L-2104 C ESSOLUBE D3 specification, MIL-L-2104 D and UNIFARM specification MIL-L-2104 C. For Countries in which AGIP and ESSO products are not available, the prescribed oil is API SERVICE CD for diesel engines or oil which should be in conformity with the MIL -L-2104 C and MIL -L-2104D military specifications.

RATING

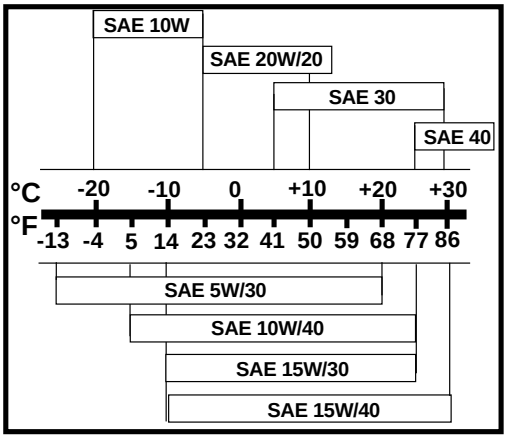

CAPACITIES IN LITERS

Standard fuel tank
3LD450, 3LD510, 3LD451/S, 3LD510/S = 5.3
4LD 640, 4LD705, 4 LD 820 = 7.2

Standard oil sump:
3LD450, 3LD510, 3LD451/S, 3LD510/S =1.75
4LD640, 4LD705, 4LD 820 = 2.60

Air filter oil bowl = 0.3
For special filters, tanks and oil sumps, please follow LOMBARDINI instructions.

Downloaded from www.Manualslib.com manuals search engine

https://truckmanualshub.com/

IV TROUBLE SHOOTING

This table shows some possible causes concerning malfunctions that could arise during the machine running. Always, systematically carry out simpler checks before any disassembly or replacement.

	PROBABLE CAUSES	TROUBLE									
		It does not start	It starts but does not stop	It does not ac-celerate	Inconsistent rpm	B l a c k smoke	White smoke	Low oil pressure	Oil level increase	Excessive oil consumption	Oil and fuel leakage from the exhaust
FUEL CIRCUIT	Clogged pipings	●									
	Clogged fuel filter	●	●	●							
	Presence of air in the fuel circuit	●	●	●							
	Clogged tank breather	●	●	●							
	Faulty fuel pump	●	●								
	Blocked injector	●									
	Blocked injection pump valve	●									
	Wrong injector setting					●					
	Plunger excessive leakage								●		
	Stuck injection pump delivery control	●		●	●						
	Wrong injection pump delivery setting			●		●					
LUBRICATION	High oil level				●		●			●	
	Blocked pressure relief valve							●			
	Worn oil pump							●			
	Presence of air inside the oil intake pipe							●			
	Faulty pressure gauge or switch							●			
	Clogged oil intake duct							●			
ELECTRICAL EQUIPMENT	Discharged battery	●									
	Inefficient or wrong cable connection	●									
	Faulty starting switch	●									
	Faulty starting motor	●									
MAINTENANCE	Clogged air filter	●		●		●					
	Excessive idle operation						●				●
	Incomplete running-in						●				
	Overloaded engine			●		●					
SETTINGS AND REPAIRINGS	Advanced injection	●									
	Delayed injection					●					
	Incorrect governor tinkage adjustment	●			●						
	Broken or loose govener spring			●							
	Low idling setting		●		●						
	Worn or stuck piston rings						●			●	●
	Worn or scored cylinders						●			●	●
	Worn valve guides						●			●	●
	Sticking valves	●									
	Worn crankshaft-connecting rod bearings							●			
	Non-sliding speed governor leverage	●	●		●						
	Crank shaft not turning freely					●					
	Cylinder head gasket	●									

Downloaded from www.Manualslib.com manuals search engine

https://truckmanualshub.com/

DISASSEMBLY AND REASSEMBLY

Apart from disassembly and reassembly operations, this chapter also includes checks, setting up, dimensions, repairs and running instructions.
It is necessary to use LOMBARDINI original spare parts for a correct repair.

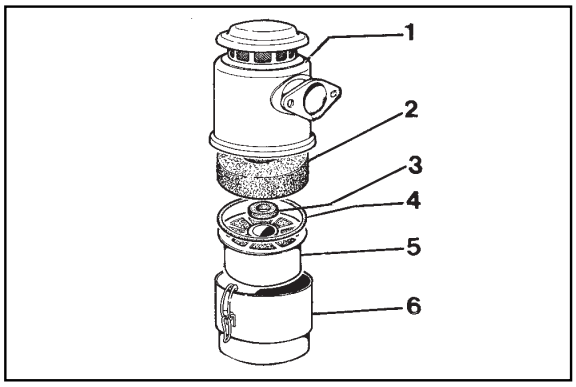

1

Oil-bath air filter (standard)
Oil-bath type with double filtering mass.
The lower mass is made of metal, while the upper is made of polyurethan.
Check the gasket conditions and replace them in case they are damaged.
Make sure that the weldings are not damaged.
Carefully clean the lower body and the filtering masses using some gas oil, blow the lower mass with compressed air and dry the upper mass by means of a cloth. Fill with engine oil filter to the indicated level.
While reassembling, tighten the nuts at 25 Nm (3LD450, 3LD510, 3LD451/S, 3LD 510/S), at 30 Nm (4LD 640, 4LD 705, 4LD 820)
Details:

1 Upper body
2 Filtering mass made of polyurethan
3 Internal sealing ring
4External sealing ring
5 Filterning mass
6 Bowl

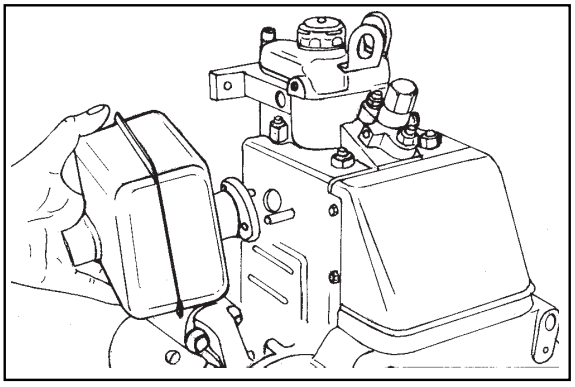

2

Silencer (standard)
Make sure that it is free from any carbon and oily residues, if contaminated, replace it. While reassembling it, replace the gaskets and tighten the brass nuts at 25 Nm.

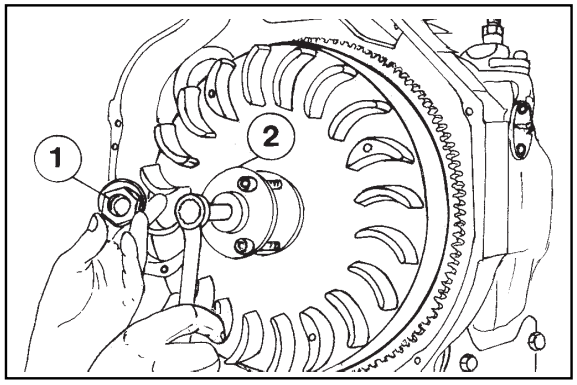

3

Flywheel
Clockwise unscrew nut **1** and remove the flywheel using the puller **2** Part. no. 7271-3595-050 for 3LD 450, 3LD 451/S, 3LD510, 3LD510/S, while for 4LD 640, 4 LD 705, 4LD 820 use puller with Part. no. 7271-3595-048.
Check that the starter ring gear, when it is present, and the conic surface of the driving shaft coupling hole are intact.
While reassembling, tighten the screws 1 at 170 Nm for 3LD 450, 3LD 451/S, 3LD510, 3LD 510/s and at 350 Nm for 4LD 640, 4LD 705, 4LD 820.

Note: The flywheels of the left-hand engines (3LD 451/S, 3LD 510/S) have a blading turned in the opposite direction and the nut **1** shall be anticlockwise unscrewed.

Downloaded from www.Manualslib.com manuals search engine

https://truckmanualshub.com/

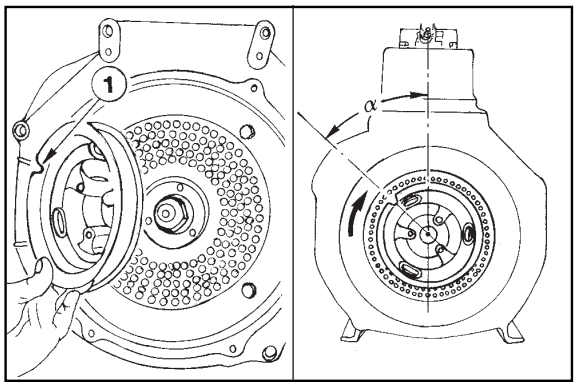

4 5

Starting pulley

In order to carry out any easier staring, it is necessary to place the driving shaft at the TDC (Top dead center) and to assemble the pulley with notch 1 moved back at (45°) according to the rotation direction of the engine, as per picture 4 and 5 .

Tighten the screws at 35 Nm for 3LD 450, 3LD 451/S, 3LD510, 3LD 510/S, at 40 Nm for 4LD 640, 4LD 705, 4LD 820.

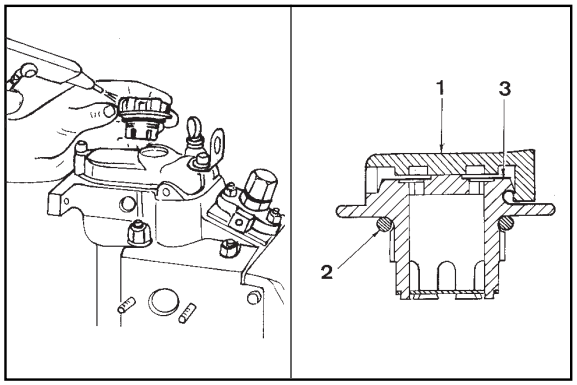

6 7

Vent plug

Components

1 Vent plug and oil refiling
2 O-ring
3 Diaphragm

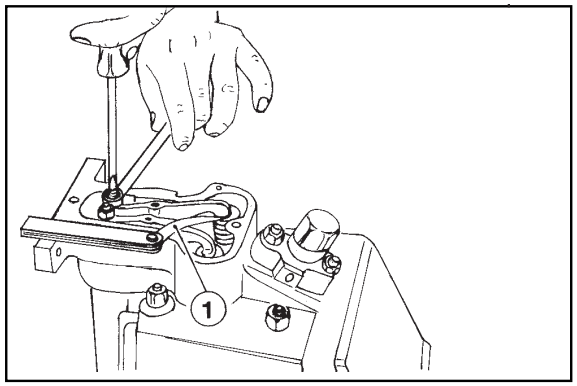

8

Valve/rocker arm clearance

Place the piston at the compression top dead centre.

Place thickness gauge **1** between the valve stem and the rocker arm; cold-adjust the clearance at 0.15 ÷0.20 mm for both valves.

Tighten the rocker arm box cap at 20 Nm.

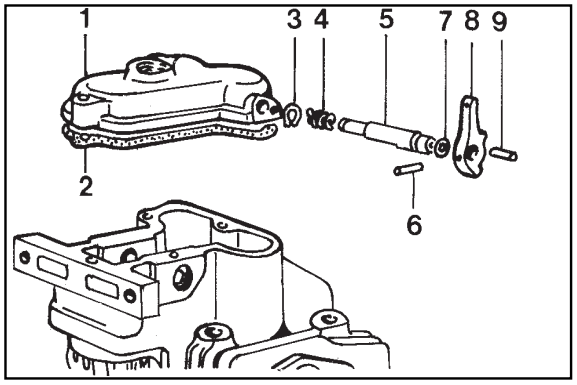

9

Decompression (by request)

Components:

1 Cover
2 Gasket
3 Lock ring
4 Spring
5 Shaft
6 Pin
7 Ring
8 Lever
9 Pin

The engine rocker arm cover can be equipped with a decompression device which compresses the exhaust valve at the TDC (top dead centre), lowering it of abt. 1mm. during the starting phase. The lowering is adjusted by the gaskest thickness 2. Make sure that the lever turns for abt. half a stroke before it actuates the valve.

Warning!

The use of decompression to stop the engine may cause serious damages.

Downloaded from www.Manualslib.com manuals search engine

https://truckmanualshub.com/

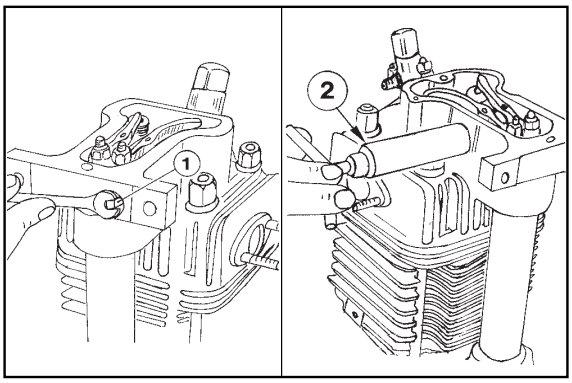

10 11

Rocker arm pin, extraction

Before extracting the rocker arm pin in 3LD 450, 3LD 451/S, 3LD 510, 3LD510S engines, unscrew screw **1**, as per picture 10.

Extract the pin using tool **2** Part. no. 7276-3595-040, picture 11 also for 4LD 640, 4LD 705, 4LD 820 engines.

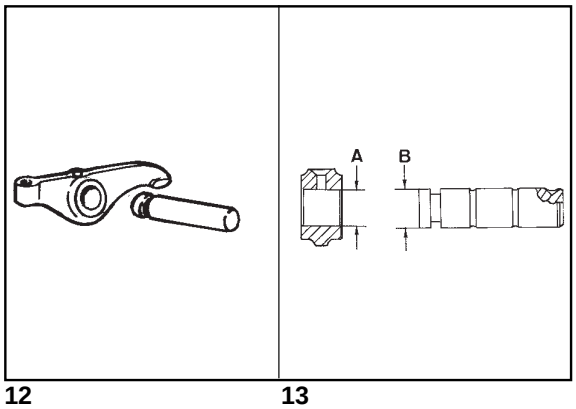

12 13

Rocker arm pin and hole

Dimensions (mm)

A = 15.032 ÷ 15.050

B = 14.989 ÷ 15.000

Clearances

(A-B) = 0.032 ÷ 0.061

(A-B) = worn limit = 0.120

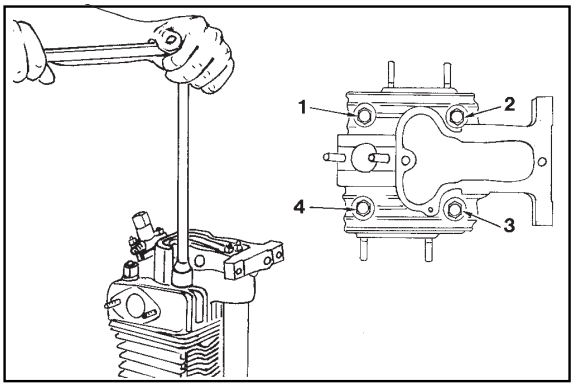

14

Head

Do not disassemble while it is hot as to avoid any possible distortion.

If the head surface is distorted, smooth it by removing up to 0.3 mm thickness.

Always replace the copper gasket, see picture 34 for the choice of thickness.

Gradually tighten the nuts according to the following order **1**, **3**, **2**, **4**, at 50 Nm for 3LD 450, 3LD 451/S, 3LD 510, 3LD510/S, and at 80 Nm for 4LD 640, 4LD 705, 4LD 820.

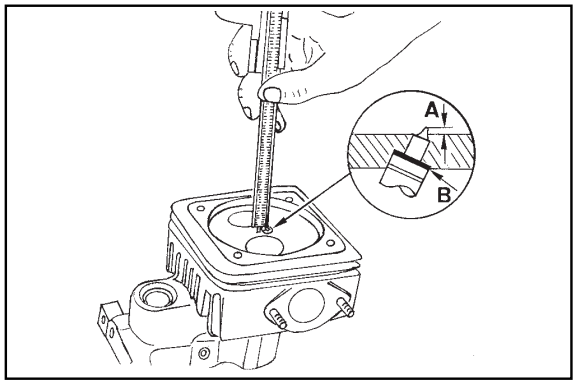

15

Injector, projection

The projection of the nozzle ends **A** with respect to the head surface shall be:

2.5÷3 mm for 3LD 450, 3LD 451/S

3÷3.5 mm for 3LD 510, 3LD 510/S

3.5÷4 mm for 4LD 640, 4LD 705, 4LD 820

Adjust by means of a copper gasket **B** having a thickness of 0.5 mm, 1 mm, 1.5mm .

Downloaded from www.Manualslib.com manuals search engine

https://truckmanualshub.com/

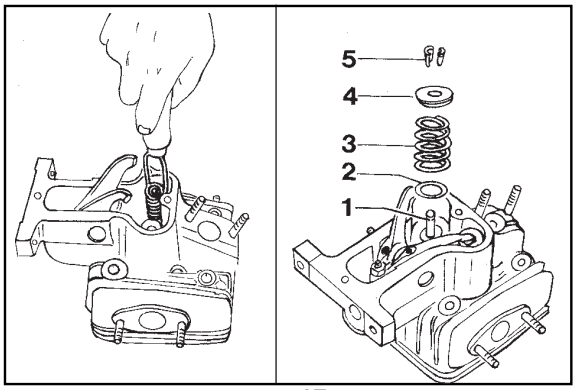

16 17

Valves

1 Valve stem
2 Spring holding disk
3 Spring
4 Cap
5 Cotters

Note: In order to remove the cotters, put a shim under the valve head and strongly press, as shown in picture 16.

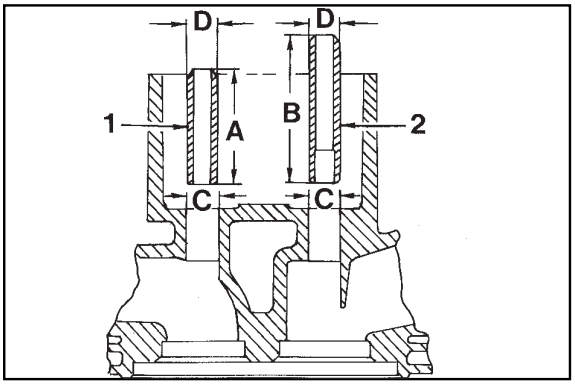

18

Valves guides and housings
1 Exhaust valve guide
2 Intake valve guide
Dimensions (mm):
3LD 450, 3LD 451/S, 3LD 510, 3LD 510/S
A = 43.80 ÷ 44.20 **B** = 55.80 ÷ 56.20
C = 11.00 ÷ 11.018 **D** = 11.05 ÷ 11.06
4LD 640, 4LD 705, 4LD 820
A = 47.80 ÷ 48.20 **B** = 65.80 ÷ 66.20
C = 12.000 ÷ 12.018 **D** = 12.05 ÷ 12.06

Note: Valve guides with an external dia. increased of 0.5 mm can be used as spare parts; in this case it is necessary to increase the housing **C** of 0.5 mm for the assembly.

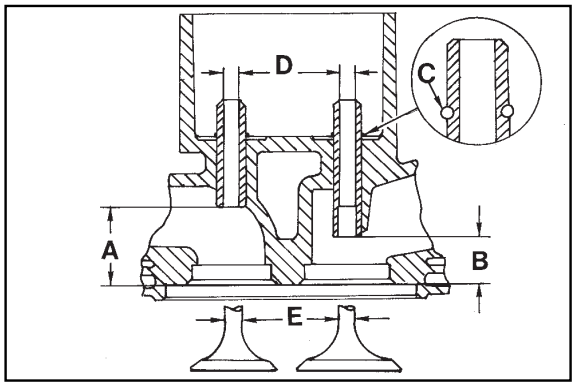

19

Valve guides insertion
Heat the head at 160° ÷ 180°. Force the guides according to **A** and **B** distance with respect to the head surface.
3LD 450, 3LD 451/S, 3LD 510, 3LD 510/S
A = 30.80 ÷ 31.2 **B** = 18.8 ÷ 19.2
4LD 640, 4LD 705, 4LD 820
A = 35.8 ÷ 36.2 **B** = 17.8 ÷ 18.2
Note: if the guides are supplied with the housing for the lock ring **C**, insert the ring, then drive the guides without worrying about **A** and **B**.

Valve guide dimensions and clearances
3LD 450, 3LD 451/s, 3LD 510, 3LD 510/S (mm):
D = 7.030 ÷ 7.050 **E** = 6.985 ÷ 7.000
(D-E) = 0.030 ÷ 0.065 **(D-E)** limit= 0.13
4LD640, 4LD 705, 4LD 820
D = 8.030 ÷ 8.050 **E** = 7.985 ÷ 8.000
(D-E) = 0.030 ÷ 0.065 **(D-E)** limit =0.13

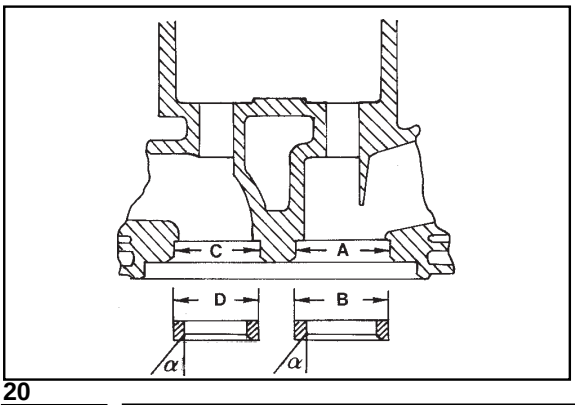

20

Valve housings and seats
3LD 450, 3LD 451/S, 3LD 510, 3LD 510/S (mm);
A = 34.99 ÷ 35.01 **C** = 30.99 ÷ 31.01
B = 35.10 ÷ 35.12 **D** = 31.10 ÷ 31.12
4LD 640, 4LD 705, 4LD 820 (mm):
A = 42.99 ÷ 43.01 **C** = 36.99 ÷ 37.01
B = 43.12 ÷ 43.14 **D** = 37.10 ÷ 37.12

Drive the seats in the housings and mill at 45°.

Downloaded from www.Manualslib.com manuals search engine

https://truckmanualshub.com/

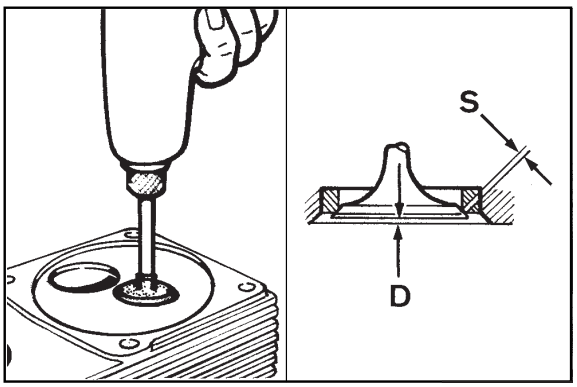

21 22

Valve seat grinding

After milling, grind with fine emery paste in engine oil bath.
The **S** sealing surface shall not exceed 2 mm.
Embed valves **D** after grinding for 3LD 450, 3LD 451/S, 3LD 510, 3LD 510/S = 0.55 ÷ 1.05 mm; for 4LD 640, 4LD 705, 4LD 820 = 0.45 ÷ 0.95 mm.

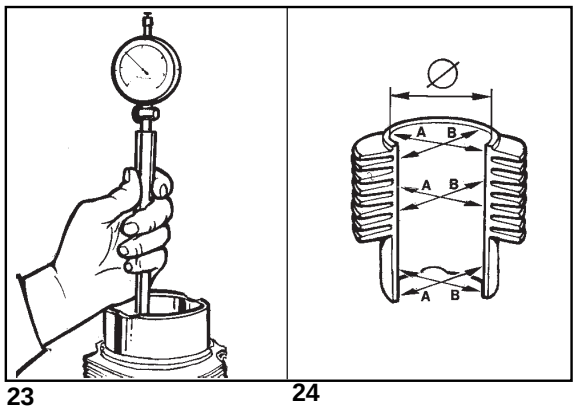

23 24

Cylinder and piston

Set a bore gauge to zero with a calibrated ring. Check the dia. **Ø** at points **A** and **B** at three different heights, see pictures 23 and 24.
In case of wear exceeding 0.06 mm to the maximum value prescribed, grind the cylinder at the subsequent increased value.
The increases suggested are 0.50 and 1.00 mm.
Measure the piston **Q** dia. (picture 26) at **A** height from the skirt base:
A = 17 mm (3LD 450, 3LD 451/S, 4LD 820)
A = 12 mm (3LD 510, 3LD 510/S)
A = 22 mm (4LD 640, 4LD 705)
Remove the stop rings and extract the piston pin, picture 25.
Remove the piston rings and clean the slots.
Replace the piston as well as the segments in case the dia. wear exceeds 0.05 mm as regards to the minimum value prescribed.

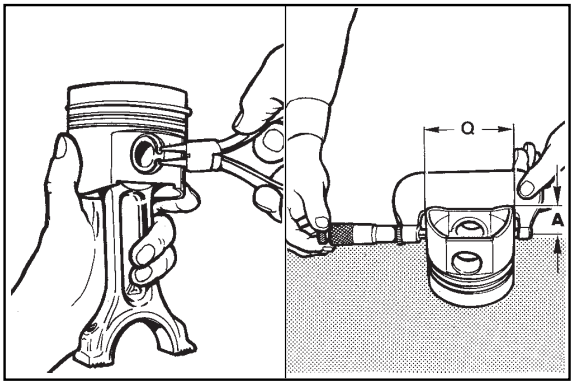

25 26

Dimensions (mm)

ENGINES	Ø	Q	(Ø-Q)
3LD 450, 3LD 451/S 3LD 510, 3LD 510/S	85.00 ÷ 85.02	84.925 ÷ 84.945	0.05 ÷ 0.09
4LD 640 4LD 705 4LD 820	95.00 ÷ 95.02 100.00 ÷ 100.02 102.00 ÷ 102.02	94.88 ÷ 94.90 99.83 ÷ 99.85 101.85 ÷ 101.89	0.10 ÷ 0.14 0.15 ÷ 0.19 0.11 ÷ 0.17

Note: Even if 3LD 450, 3LD 451/S and 3LD510, 3LD510/S pistons have the same bore, they differ in other dimensions, thus they are not interchangeable.

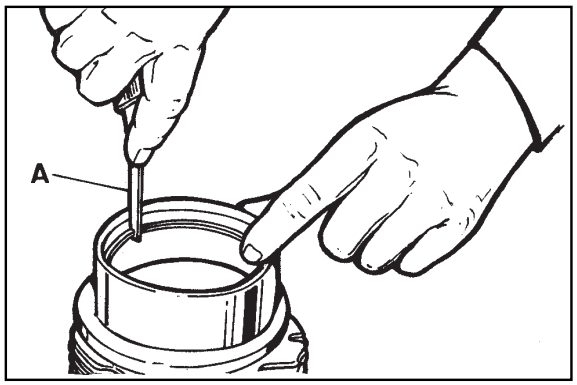

27

Distance among segment ends (mm)

Insert the piston ring in the lower part of the cylinder, then measure the distance among the points.
3LD 450, 3LD 451/S, 3LD510, 3LD 510/S
1st piston ring (chromium plated) **A** = 0.30 ÷ 0.50
2nd piston ring (torsional) **A** = 0.30 ÷ 0.50
3rd piston ring (scraper ring) **A** = 0.25 ÷ 0.50
4LD 640, 4LD 705, 4LD 820
1st piston ring (chromium plated) **A** = 0.40 ÷ 0.65
2nd piston ring (torsional) **A** = 0.40 ÷ 0.65
3rd piston ring (torsional) **A** = 0.40 ÷ 0.65
4th piston ring (oil scraper ring) **A** = 0.30 ÷ 0.60

Downloaded from www.Manualslib.com manuals search engine

https://truckmanualshub.com/

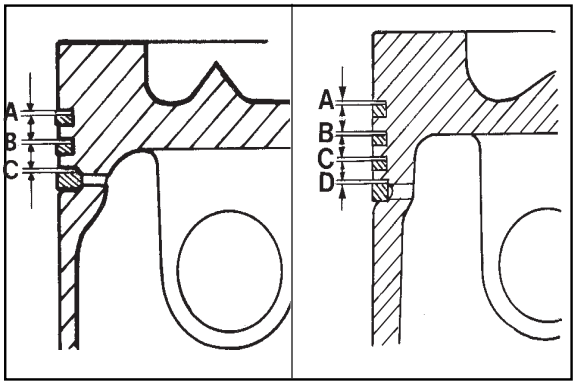

28 29

Piston ring - Clearances among slots (mm)

3LD 450, 3LD 451/S, 3LD 510, 3LD 510S, picture28
A = 0.08 ÷ 0.09
B = 0.06 ÷ 0.07
C = 0.05 ÷ 0.06

4LD 640, 4LD 705, 4LD 820, picture 29
A = 0.12 ÷ 0.14
B = 0.07 ÷ 0.09
C = 0.07 ÷ 0.09
D = 0.06 ÷ 0.08

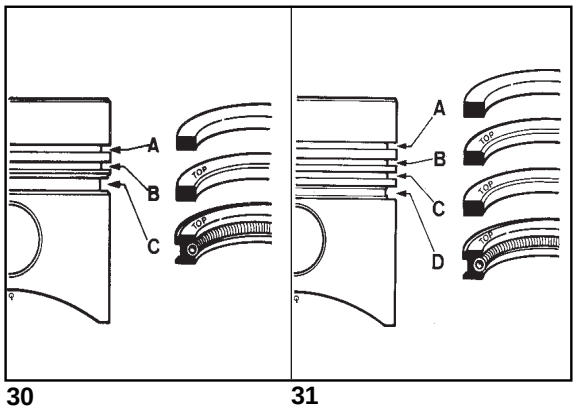

30 31

Piston ring assembly order
3LD 450, 3LD 451/S, 3LD 510, 3LD 510/S, picture 30
A = slot for first piston ring (chromium plated)
B = slot for piston ring segment (torsional)
C = slot for third piston ring (oil scraper ring)

4LD 640, 4LD 705, 4LD 820, picture 31
A = slot for first piston ring (chromium plated)
B = slot for second piston ring (torsional)
C = slot for third piston ring(torsional)
D = slot for fourth piston ring(oil scrarper ring)

Note: before inserting the piston in the cylinder, oil the piston ringwith engine oil and turn them, thus the cuts are misaligned.

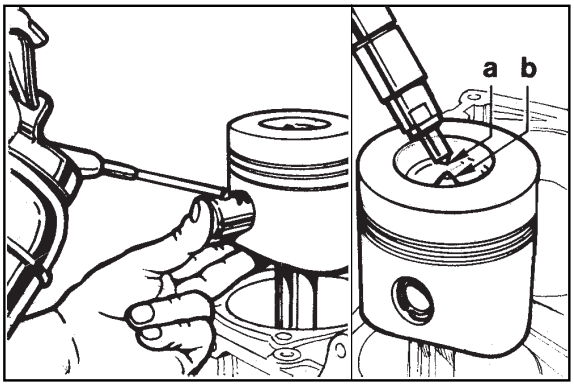

32 33

Piston reassembly
Couple the piston with the connecting rod, thus the combustion chamber centre **B** is perpendicularly under end **A** of the nozzle housed inside the head.
Lubricate the piston pin and insert it in the piston, lightly pressing with your thumb.
Make sure that the two stop rings are well housed inside their seats.

Downloaded from www.Manualslib.com manuals search engine

https://truckmanualshub.com/

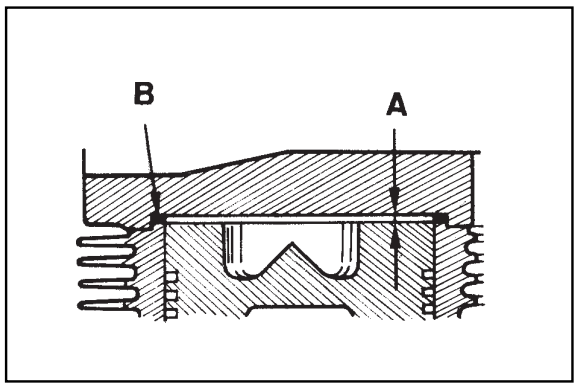

34

Clearance volume
A = Clearance volume
B = Head gasket

The thickness **B** head gasket determines the clearance volume **A** which shall be 0.75 ÷ 0.90 mm for 3LD 450, 3LD 451/S, 3LD 510, 3LD 510/S and 0.80 ÷ 1.00 mm for 4LD 640, 4LD 705, 4LD 820.
Measure the piston crown position as to the cylinder surface and chose a gasket having a suitable thickness.
Always consider that the piston at the top dead centre could be at the same level, either under or over the cylinder.

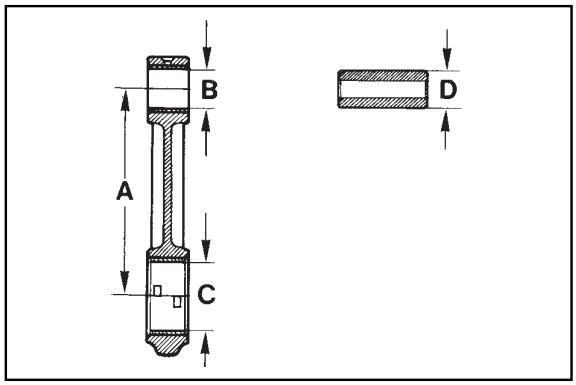

35

Connecting rod equipped with bearings and piston pin
For 3LD 450, 3LD 451/S, 3LD 510, 3LD 510/S
Dimensions (mm)
A = 144.05 ÷ 145.05
B = 23.02 ÷ 23.03 (with driven and machined bearing)
C = 42.028 ÷ 42.052 (with bearing tightening at 3 Nm)
D = 27.995 ÷ 23.000
For 4LD 640, 4LD 705, 4LD 820
Dimensions (mm)
A = 162.95 ÷ 163.05
B = 28.02 ÷ 28.03
C = 55.40 ÷ 55.43
D = 27.995 ÷ 28.000
The connecting rod big end bearings are supplied either at nominal value and diminished to 0.25 and 0.50 mm.

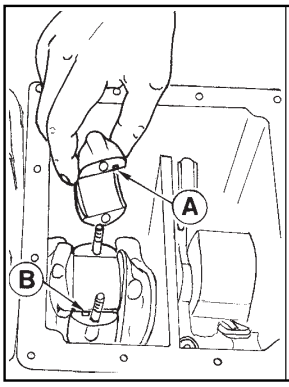

36

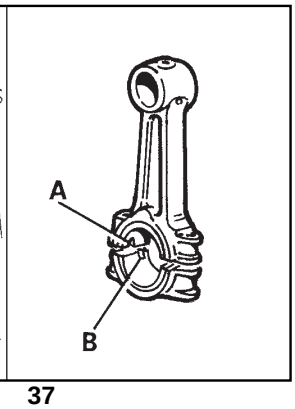

37

Connecting rod, big end bearings
While reassembling, the A and B centering marks should not be on the same side.
Tighten the screws at 30 Nm for 3LD 450, 3LD 451/S, 3LD 510, 3LD 510/S and at 45 Nm for 4LD 640, 4LD 705, 4LD 820.

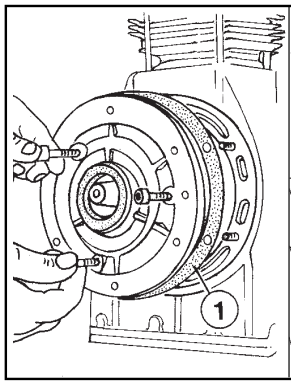

38

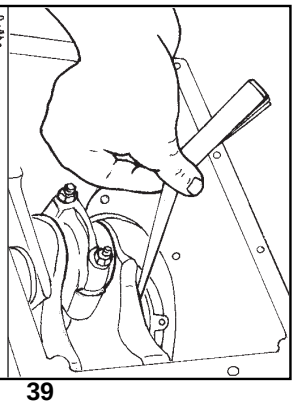

39

Main bearing on flywheel side
Extract the bearing using three screws, as per picture 38.
While reassembling, replace gasket **1**. Check that the oil seal ring is intact. Tighten the screws at 25 Nm.

Drive shaft axial clearance
After having screwed the main bearing on the flywheel, check drive shaft axial clearance. Its value is 0.10 ÷ 0.40 mm for 3LD 450, 3LD 451/S, 3LD 510, 3LD 510/S and 0.10 ÷ 0.30 mm for 4LD 640, 4LD 705, 4Ld 820.
The adjustment is carried out by changing the gasket **1** thickness.

Downloaded from www.Manualslib.com manuals search engine

https://truckmanualshub.com/

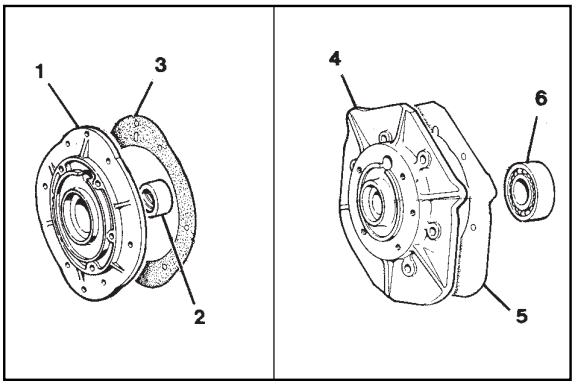

40 41

Side distributor port
It can be found in engines equipped with industrial type drive shaft. The gaskets **3** and **5**, thanks to their thickness, assure the oil seal and affect the camshaft axial clearance, as well. For the check, see information hereunder.

Components
For 3LD 450, 3LD 510 picture 40
1 Port **2** Bush **3** Gasket
Fix the door at its base at 25 Nm.

For 4LD 640, 4LD 705, 4LD 820 picture 41
4 Port **5** Gasket **6** Ball bearing
Fix the port at its base at 40 Nm.

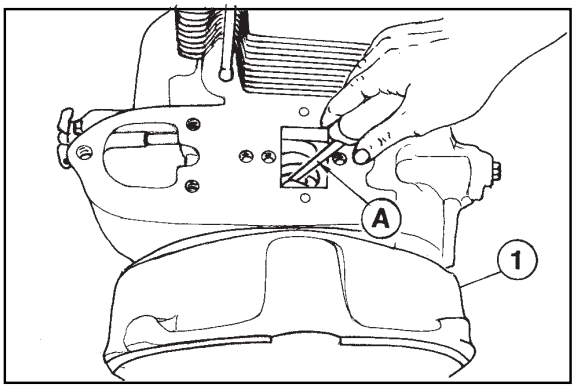

42

Camshaft axial clearance
Carry out this check before assembling the head. Fix the side distributor port or bell **1** at 25 Nm. Remove the intake and exhaust tappets and with an implement operate on the camshaft forward and backward in an axial direction.
The axial clearance **A** shall be:
A = 0.20 ÷ 0.60 mm 3LD 450, 3LD 451/S, 3LD 510, 3LD 510/S.
A = 0.15 ÷ 0.65 mm for 4LD 640, 4LD 705, 4LD 820.
Adjust the clearance by changing the gasket thickness between the distributor port (if it is assembled) or bell 1 and the base; it is forbidden to assemble more than one gasket.

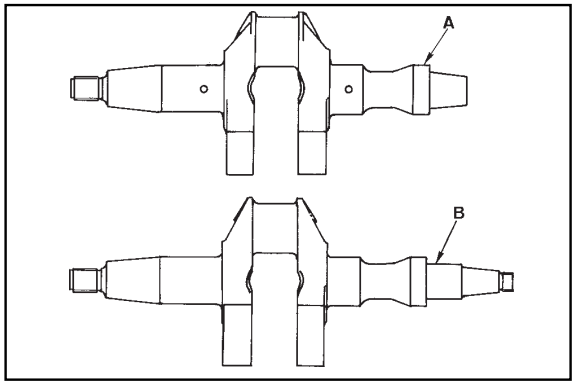

43

Drive shaft
There are two types of standard drive shafts:
A Automotive type (agricultural machines)
B industrial type (motor pumps generating set, etc.)

Note: For left-handed engines, i.e 3LD 510/S, the drive shaft turns anticlockwise (seen from the flywheel position) and their thread is clockwise on the power takeoff side as well as on the flywheel side.

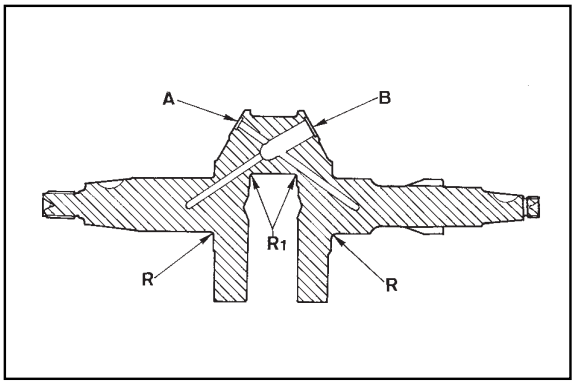

44

Drive shaft lubrication ducts
Remove the caps, clean the ducts **A** and **B** with a point and blow them with compressed air.
Replace the caps by caulking them on their seat, then check their seal.

Drive shaft connecting radius
R = 3 mm
R1 = 3.5 mm

Note: When the main journal and the crank are ground, it is essential to reset **R** and **R1** values in order to avoid any possible breaking of the drive shaft.

Downloaded from www.Manualslib.com manuals search engine

https://truckmanualshub.com/

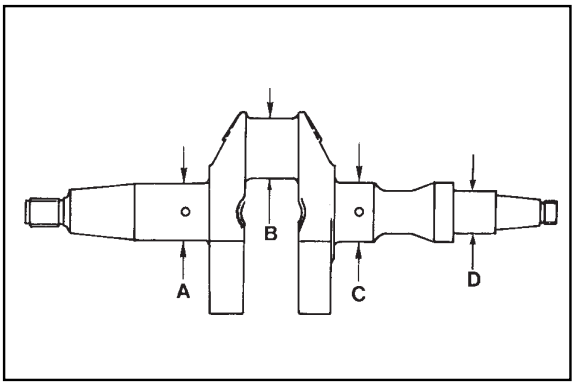

45

Drive shaft main journal and crank diametres (mm)

3LD 450, 3LD 510, 3LD 451/S, 3LD 510/S
A = 39.990 ÷ 40.000
B = 41.987 ÷ 42.000
C = 41.990 ÷ 42.000
D = 29.990 ÷ 30.000

4LD 640, 4LD 705, 4LD 820
A = 44.900 ÷ 45.000
B = 55.340 ÷ 55.353
C = 44.900 ÷ 45.000
D = 29.990 ÷ 30.000

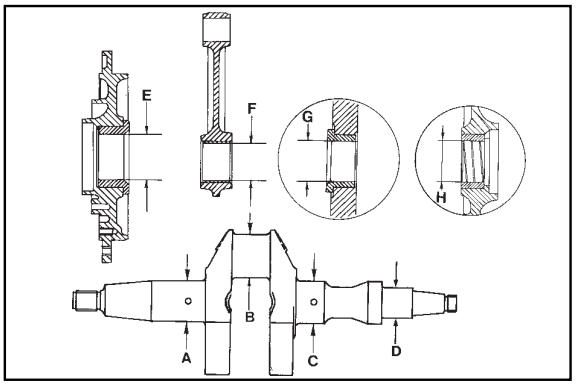

46

Drive shaft internal diam. crankshaft bearing / connecting rod head and clearances regarding their respective pins (mm)
3LD 450, 3LD 510, 3LD 451/S, 3LD 510/S
E = 40.040 ÷ 40.050 **F** = 42.028 ÷ 42.052
G = 42.04 ÷ 42.05 **H** = 30.07 ÷ 30.09
A, B, C, D, see picture 45
E - A = 0.040 ÷ 0.060 worn limit 0.12
F - B = 0.028 ÷ 0.065 worn limit 0.13
G - C = 0.040 ÷ 0.060 worn limit 0.12
H - D = 0.070 ÷ 0.10 worn limit 0.18
4LD 640, 4LD 705, 4LD 820
E = 45.045 ÷ 45.070 **F** = 55.40 ÷ 55.43 **G** = 45.045 ÷ 45.070
A, B, C, D, see picture 45
E - A = 0.065 ÷ 0.080 worn limit 0.16
F - B = 0.051 ÷ 0.10 worn limit 0.18
G - C = 0.45 ÷ 0.080 worn limit 0.16

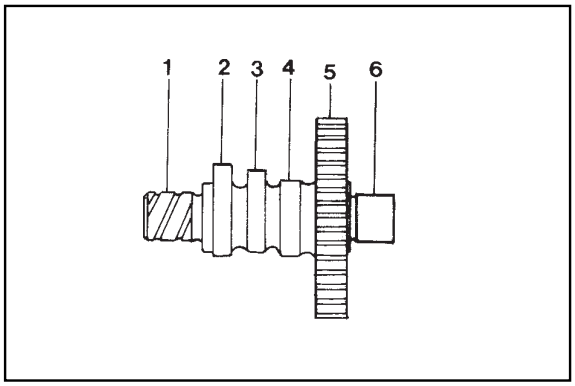

47

CAMSHAFT
Components:
1 Base side pin
2 Intake cam
3 Injection cam
4 Exhaust cam
5 Gear
6 Side distributor port pin

Note: The two engine series 3LD 450, 3LD 510 and 4LD 640, 4LD 820 have the same camshaft; it differs in 3LD 451/S and 3LD 510/S left-handed engines.

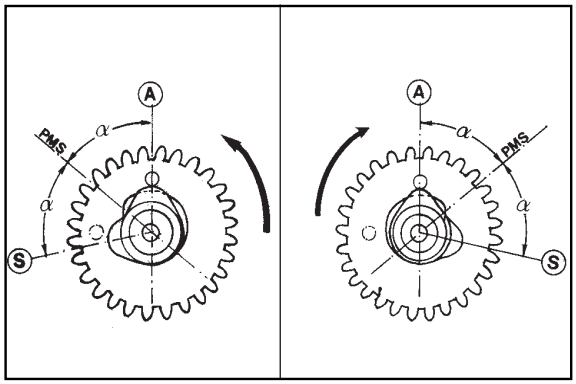

48 49

Camshaft intake and exhaust cam timing
For 3LD 450, 3LD 510, 4LD 640, 4LD 705, 4LD 820, see picture 48.
Clockwise rotation.
TDC = Top dead centre of the piston
A = Intake cam axis
S = Exhaust cam axis
at = 50° 30' ÷ 51° 30'

For 3ld 451/S, 3LD 510/S, see picture 49
Clockwise rotation
TDC= Top dead centre of the piston
A = Intake cam axis
S = Exhaust cam axis
at = 50° 30' ÷ 51° 30'

Downloaded from www.Manualslib.com manuals search engine

https://truckmanualshub.com/

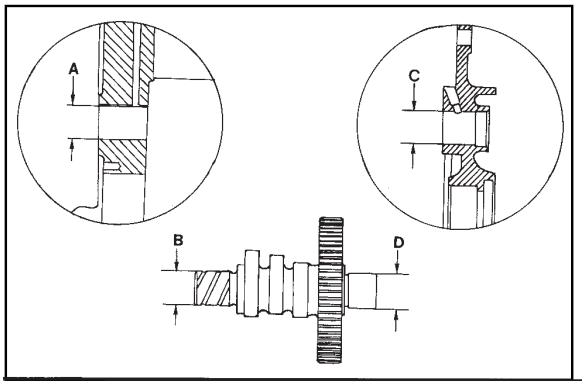

50

Camshaft pin and housing dimensions (mm)
A = 18.000 ÷ 18.018 (housing on the base)
B = 17.945 ÷ 17.975
C = 18.000 ÷ 18.018 (housing on the port)
D = 17.945 ÷ 17.975

A-B and **C-D** = 0.025 ÷ 0.073 Worn limit = 0.13

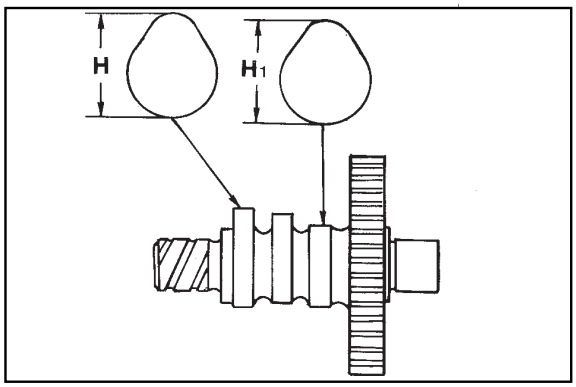

51

Camshaft intake and exhaust cam height.
The two cam heights are different.

Dimensions (mm) :
H = 33.92 ÷ 34.02 (intake cam)
H1 = 33.42 ÷ 33.52 (exhaust cam)

If the cam wear exceeds the agreed minimum value of 0.1 mm for **H** and **H1** , replace the camshaft.

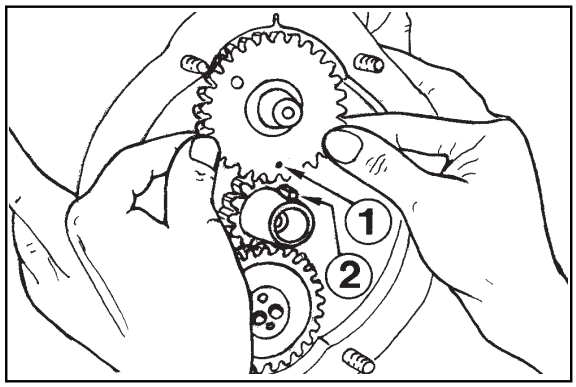

52

Distribution timing
assemble the camshaft gear by coinciding reference 1 with reference 2 of the gear (camshaft key).

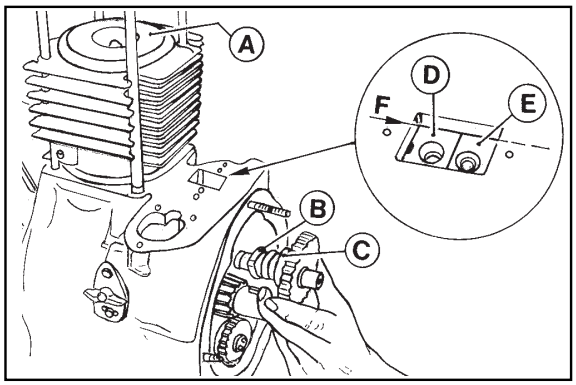

53

Distribution timing without following the references
Place piston **A** at the top dead centre.
Insert the camshaft, thus the intake cam **B** and the exhaust cam **C** are well balanced (while the intake opens, the exhaust closes).
Insert the respective tappets **D** and **E**.
Carry out the check: the intake **D** and exhaust **E** tappets laid on their cams shall be at the same level **F**.

Downloaded from www.Manualslib.com manuals search engine

https://truckmanualshub.com/

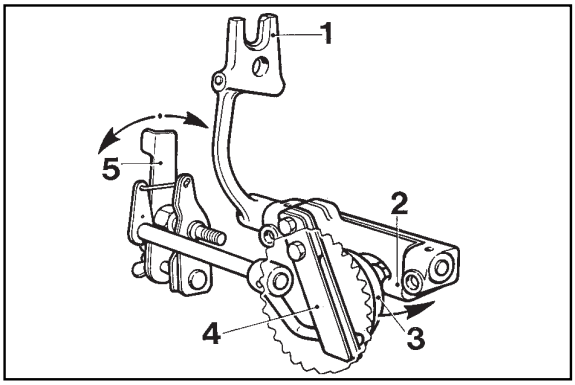

54

Speed governor

It has a centrifugal system with 6 balls housed in the gear, which is directly operated by the drive shaft.

The balls, moved at the gear periphery by a centrifugal force, axially shift the bell **3**, which actuates the fork **2** connected to lever **1** in order to determine the injection pump rack rod position. A spring with two plates **4**, energized by the accelerator control **5**, opposes the action of the governor cetrifugal force. The balance between the two forces keeps the rpm rate constant with the change of load.

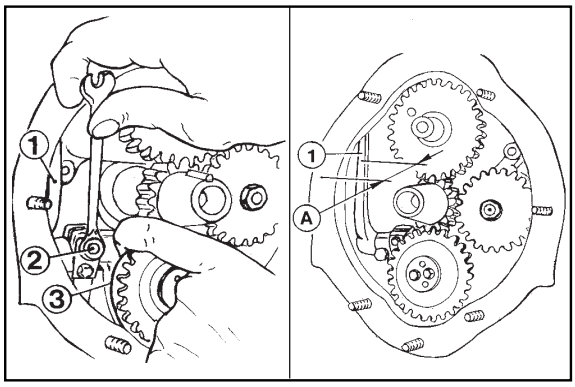

55 56

Timing of the speed governor

Adjust the injection pump control lever **1** thus, when the governor is closed, it is placed at distance **A** as to the external surface of the base.

- Loosen the screw **2**.
- Close the governor (move the mobile bell **3** towards the operator, picture 55).
- Place lever **1** at **A** distance, picture 56 (22 mm for 3LD 450, 3LD 510, 3LD 451/S, 3LD 510/S and 28 mm for 4LD 640, 4LD 705, 4LD 820).
- Tighten the screw **2**.

Downloaded from www.Manualslib.com manuals search engine

https://truckmanualshub.com/

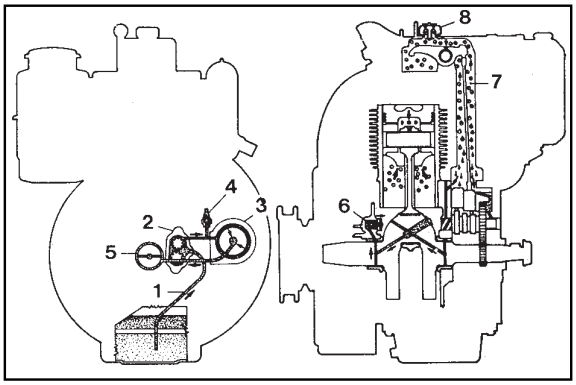

57

Lubrication circuit
Details:
1 Intake pipe
2 Oil pump
3 Oil filter
4 Pressure switch
5 Crankshaft bearing
6 Pressure adjusting valve
7 Tappet rod protection pipe
8 Vent and oil filler plug.

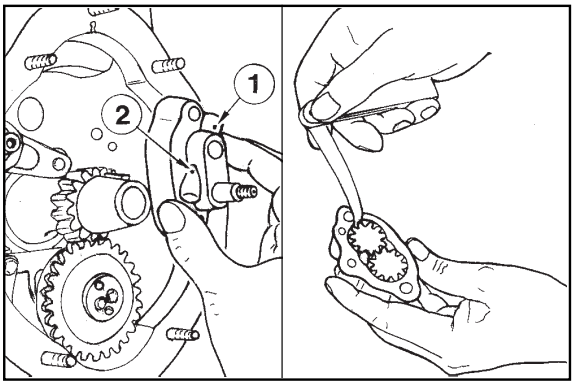

58 59

Oil pump
Make sure that the gear teeth are intact and check that the clearance between the gear periphery and the pump case does not exceed 0.15 mm and that the drive shaft can easily turn with an axial clearance not exceeding 0.15 mm.
Check that the gear lubrication holes **1** and **2** are not clogged.
Tighten the pump case at 30 Nm.
Tighten the pump control gear at 20 Nm.
The oil pumps for 3LD 451/S and 3LD 510/S engines, which turn anticlockwise (from flywheel position), are different, see information below.

Downloaded from www.Manualslib.com manuals search engine

https://truckmanualshub.com/

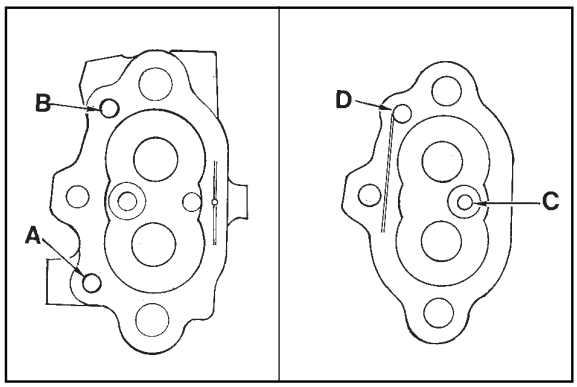

60 61

Oil pump, difference between clockwise rotation pump and anticlockwise pump

The difference between the oil pump on clockwise rotation engines and the anticlockwise one is the suction duct provided either with the pump case and with the base.

See picture 60 for anticlockwise rotation engines from flywheel position (3LD 451/S, 3LD 510/S).

A =Intake

B = Delivery

Picture 61, for clockwise rotation engines, seen from the flywheel side (3LD 450, 3LD 510, 4LD 640, 4LD 705, 4LD 820)

C = Intake

D = Delivery

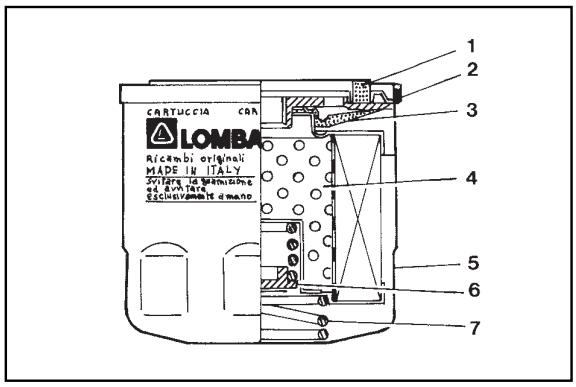

62

Oil filter cartridge

Componens:

1 Gasket
2 Assembly
3 Antidrainage rubber cap
4 Filter element
5 Bowl
6 By-pass valve
7 Spring

Features:

Maximum operating pressure: 7 bars

Maximum operating temperature: -25° + 150°C

Filtering degree: 20 µm

By-pass valve setting: 1÷ 1.4

Total filtering surface: 750 cm^2

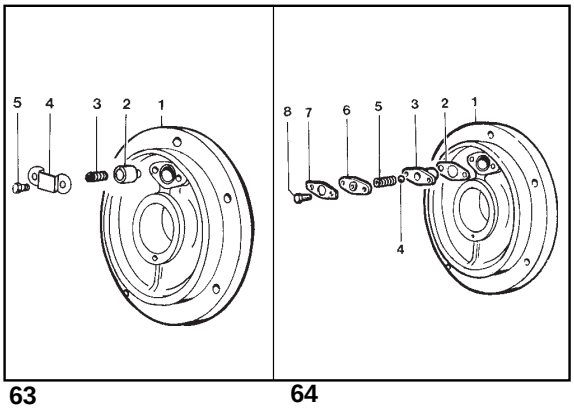

63 64

Oil pressure regulating valve

It is housed in the flywheel side main bearing

For 3LD 450, 3LD 451/S, 3LD 510, 3LD 510/S, see picture 63

1 Support
2 Valve
3 Spring
4Sheet metal
5 Screw

Tighten the support at 25 Nm.

For 4LD 640, 4LD 705, 4LD 820,see picture 64

1 Support
2 Gasket
3 Valve support
4 Ball
5 Spring
6 Flange
7 Plate
8 Screw

Tighten the support at 40 Nm.

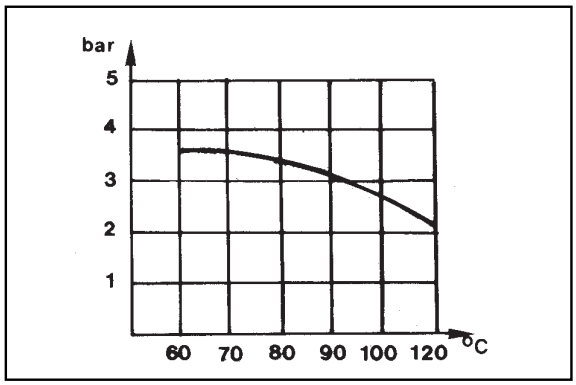

65

Oil pressure check

After the assembly operation, fill the engine with oil and fuel; connect a 10 bars pressure gauge to the fitting on the oil filter.

Start the engine and check the pressure reaction according to oil temperature.

Oil pressure curve with the engine at its maximum speed

It is shown on the filter and obtained with the engine at 3000 rpm at **N** power; the pressure is expressed in bars and the temperature in degrees Celsius. The curve represents the pressure minimum value, while its maximum value is 5 bars. The minimum oil pressure (1200 rpm) with the oil temperature at 100° C shall not be lower than 0.8 bars.

Note: When the engine has been run in, the oil lubrication maximum temperature shall be lower than the following addition: ambient temperature + 95° C.

Downloaded from www.Manualslib.com manuals search engine

https://truckmanualshub.com/

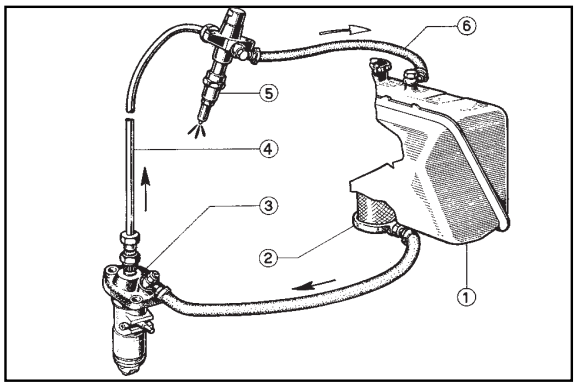

66

Standard feeding/injection circuit
Components:
1 Tank
2 Filter
3 Pump
4 Pipe
5 Injector
6 Injector waste pipe

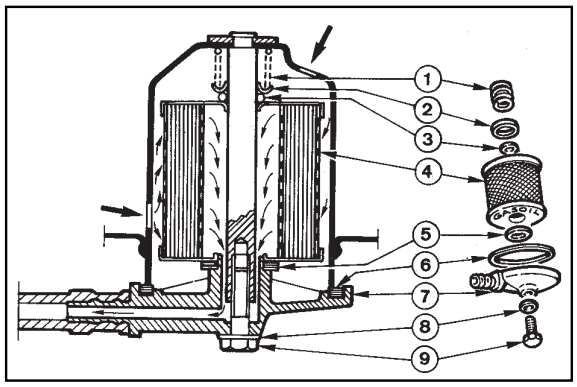

67

Fuel filter inside the tank (standard)
Details:

1 Spring
2 Disk
3 Ring
4 Cartridge
5 Gasket
6 Gasket
7 Cover
8 Ring
9 Bolt

Cartridge features:
Filtering degree = 7 µm
Filtering surface = 390 cm^2

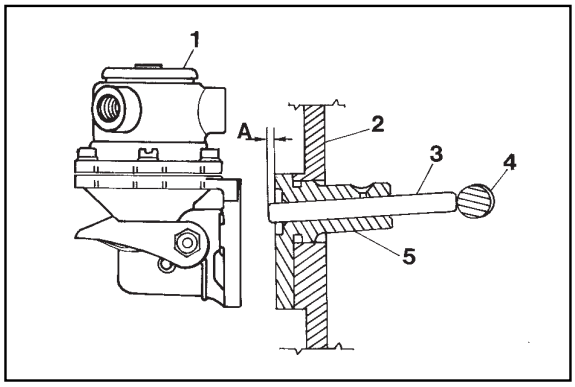

68

Feeding pump (by request)
Features: at 1500 rpm of the control eccentric, the minimum delivery is 60 l/h, while the automatic adjustment pressure is 4 ÷ 5 m column of water.

Feeding pump rod projection
Details:
1 Feeding pump
2 Base
3 Rod
4 Oil pump drive shaft eccentric
The check shall be carried out with the eccentric **4** at rest.
The projection A of rod 3 is 0.8 ÷ 1.2 mm; it shall be adjusted with the following supplied gaskets having a thickness of 0.50; 0.80 and 1.0 mm.
Rod length = 65.4 mm for 3LD 450, 3LD 451/S, 3LD 510, 3LD 510/S and 75.2 mm for 4LD 640, 4LD 705, 4LD 820.

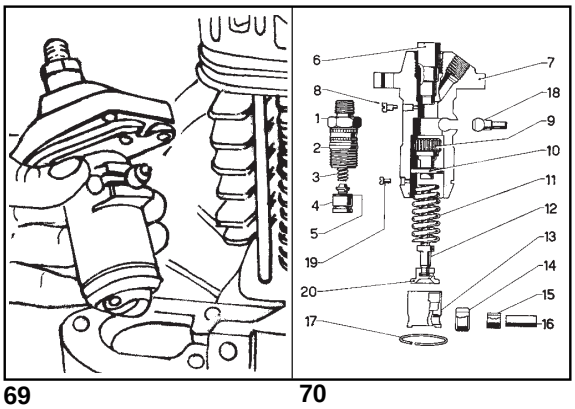

69 70

Injection pump
Components:

1 Delivery fitting
2 O-ring
3 Spring
4 Delivery valve
5 Gasket
6 Barrel
7 Pump case
8 Eccentric
9 Sector gear
10 Spring bearing cap
11 Spring
12 Pumping piston
13 Tappet case
14 External roller
15 Internal roller
16 Pin
17 Lock ring
18 Rack rod
19 Lock pin
20 Collar

Tighten the pump at its base at 30 Nm.

Downloaded from www.Manualslib.com manuals search engine

https://truckmanualshub.com/

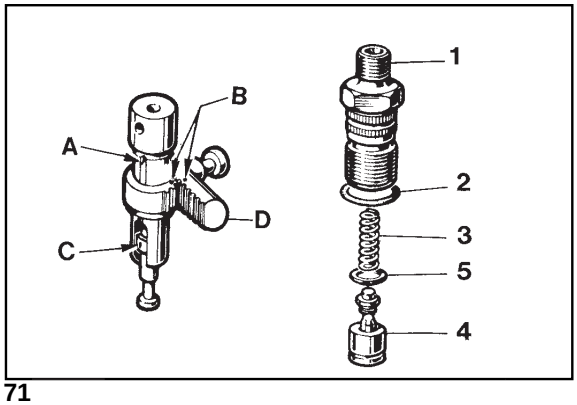

71

Injection pump assembly

Insert the cylinder **6** in the pump case **7**, engaging the slot **A** in the eccentric **8**.

Insert the delivery valve **4**, copper gasket **5**, spring **3** O ring **2**, then tighten the fitting at 3.5 ÷ 40 Nm.

Assemble the rack rod **18** and sector gear **9** coinciding points **B**.

Insert the upper collar **10**, spring **11** and piston **12** with reference **C** on the same side of the slot **A** (if it is assembled on the opposite side, the engine revs out).

Assemble the collar **20**, the tappet **13** with rollers **14**, **15** and pin **16**. While pressing on the tappet, insert the pin 19 and the ring **17**.

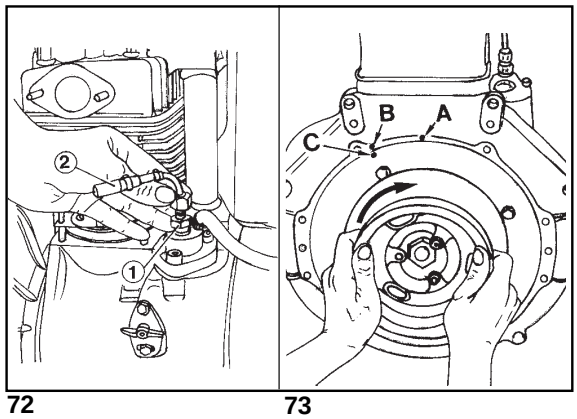

72 73

Advanced injection (static)

Disconnect the diesel oil thrust pipe fitting, being careful not to loosen also the pump delivery fitting **1**, then screw the tester for the advanced injection check **2**. Fill the tank, checking that the fuel level is at least 10 cm above the tester. Place the accelerator lever halfway. Turn the flywheel towards the engine rotation direction and make sure that the fuel arrives at the tester assembled on the injection pump delivery fitting. Repeat this operation; during the compression phase, operate slowly and immediately stop when the fuel moves into the tester hole; move the flywheel 3 mm back; this is the static advanced injection. If C does not coincide with B but comes before, add some shims under the pump, otherwise, remove the shims if C is beyond **B**.

Note: By removing or adding a 0.1 mm shim under the pump, it is possible to delay or advance **C**, which is after **B**.

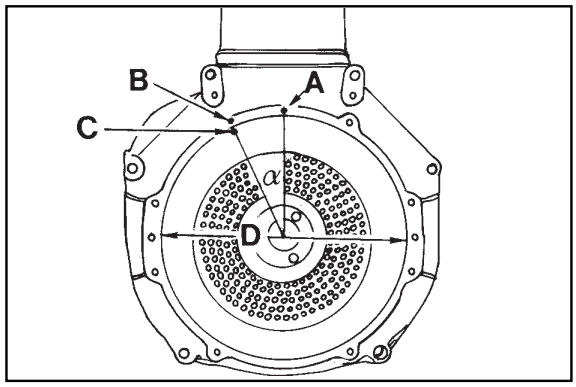

74

Advanced Injection references on the conveyor and flywheel protection disk

A Piston reference at top dead centre
B Injection advance reference as to A
A ÷ B Distance in mm
C Reference of piston in injection advance position
a Reference in degrees
D Flywheel protection disk diameter

.

ENGINES	(A-B)mm	amm	D (3LD)mm	D (4LD)mm
3LD 450, 3LD 451/S 3LD 510, 3LD 510/S	58 ÷ 63	24 ÷ 26	276	310
4LD 640, 4LD 705, 4LD 820	65 ÷ 70			
4LD 820 at 2600 rpm	60 ÷ 65	22° ÷ 24°		

Note: 1° stands for 2.7 mm on dia. D= 310 mm; on dia. D = 276 mm, 1° stands for 2.4 mm.

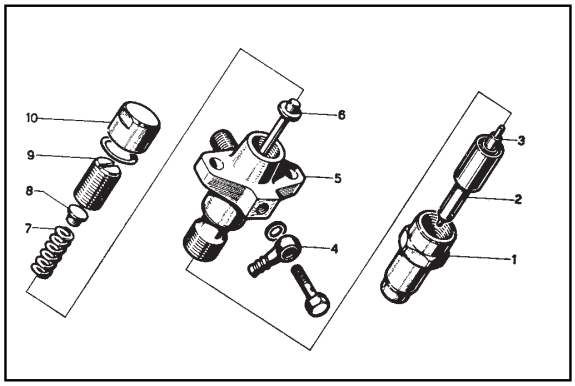

75

Injector

Components:

1 Ring nut - **2** Nozzle **3** Needle **4** Fitting **5** Nozzle bearing **6** Pressure rod **7** Spring **8** Spring seat **9** Union **10** Ring nut

Setting

Connect the injector to a manual pump and check that the setting pressure is 190 ÷ 200 bars. If necessary adjust, actuating the union **9**.While replacing the spring, the setting shall be carried out at a pressure higher than 10 bars (200 ÷210 bars) in order to counterbalance the running adjustments. Check the needle valve seal by slowly activating the manual pump up to abt. 170 bars. In case of dripping, replace the nozzle. Tighten the injector to the head at 15 Nm for 3LD 450, 3LD 451/S, 3 LD 510, 3 LD 510/S and at 20 Nm for 4LD 640, 4LD705, 4LD 820.

Note: A new injector is currently assembled, its components are different, though the setting remains the same.

Downloaded from www.Manualslib.com manuals search engine

https://truckmanualshub.com/

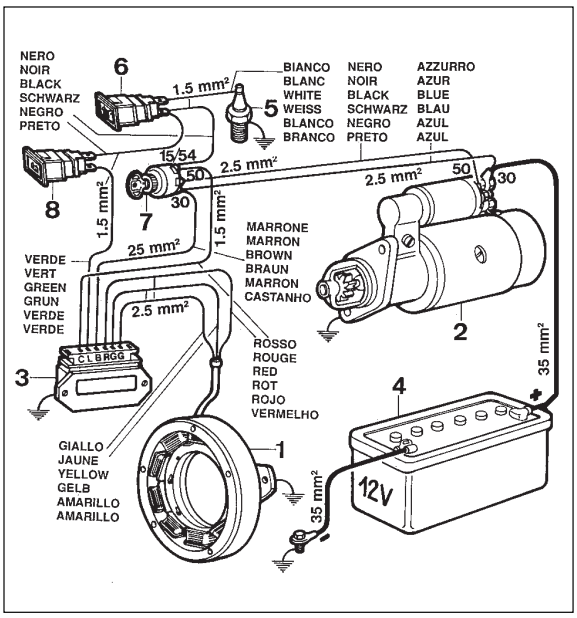

76

12 V 14 A electrical ignition, diagram with voltage regulator , battery recharge lamp and manostat

Components:
1 Alternator
2 Starting motor
3 Voltage regulator
4 Battery
5 Oil pressure switch
6 Oil pressure lamp
7 Ignition switch
8 Battery recharge lamp

Note: The batteries, which are not supplied by Lombardini, shall have a 12 V voltage and the following capacity:

3LD 450, 3lD 451/S, 3LD 510, 3LD 510/S = 45 Ah
4LD 640 = 55 Ah
4LD 705 = 66 Ah
4LD 820 = 70 Ah

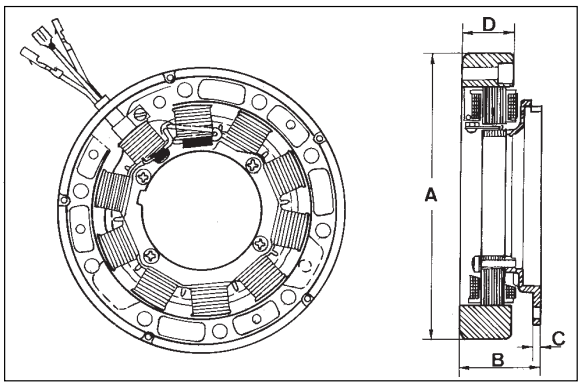

77

12.5 V 14 A alternator
It is equipped with a fixed rotor assembled on the main journal, while the pivoting rotor is housed inside the flywheel.

Dimensions (mm):
A = 159
B = 44.5
C = 4
D = 28.5

Note: The clearance between inductor and rotor (air gap) shall be 0.5 ÷ 0.6 mm.

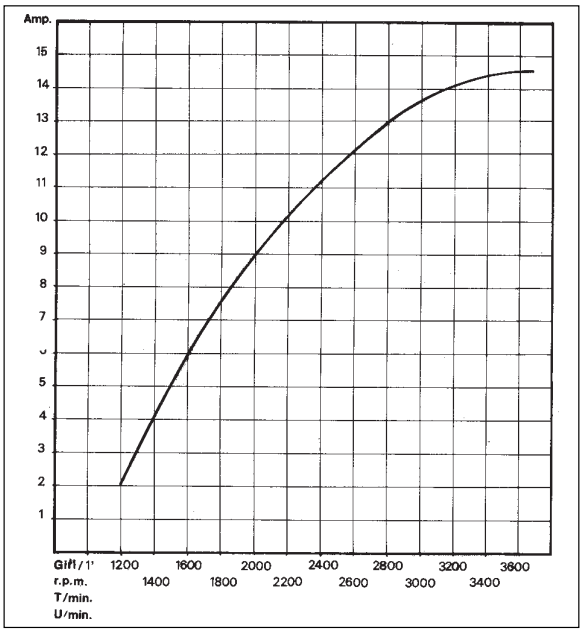

78

12,5 V, 14 A alternator battery recharge curve
It is carried out at + 25° C ambient temperature, 12.5 V battery voltage.

Downloaded from www.Manualslib.com manuals search engine

https://truckmanualshub.com/

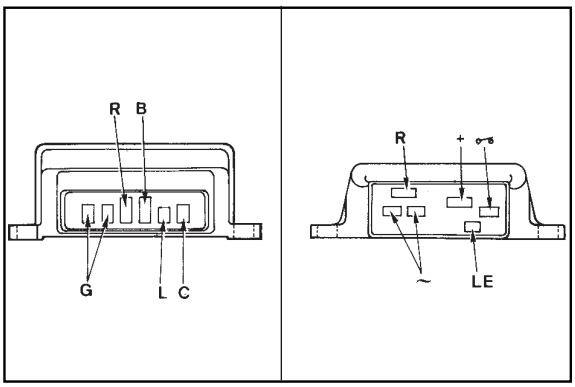

79 80

Voltage regulator
There are two different types of regulators: one with make SAPRISA, ALTECNA, NICSA and the other with make DUCATI.

ALTECNA SAPRISA NICSA	Cable colours	DUCATI	Tab dimensions	
			Width	Thickness
~	yellow	G	6.25	0.8
R	red	R	9.50	1.2
+	red	B	9.50	1.2
LE	green	L	4.75	0.8
∞	brown	C	6.25	0.8

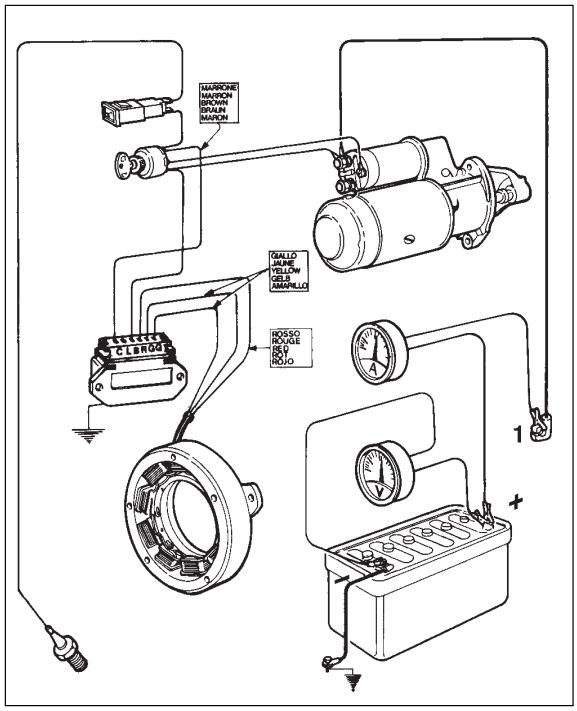

81

Voltage regulator, running check
Make sure that the connections are in compliance with the diagram.
Remove the respective clamp from the battery positive pole.
Insert a voltmeter with direct current between the two poles of the battery.

Connect a 20A ammeter at direct current between the positive pole and cable **1** respective clamp.
Start a few times until the battery voltage goes down to 13 V.
When the battery voltage reaches 14.5 V, the ammeter current will drop to a value near zero.
If the voltage is lower than 14 V and the recharge current is zero, replace the regulator.

Note: The voltage regulator does not work when not earthed and the battery is completely discharged.

Warning: when the engine runs, do not remove the battery cables and do not take the key off the control board.
Do not place the regulator near heat sources, a temperature exceeding 75° C could cause damages.
Avoid any electric welding either on the engine and on the equipment.

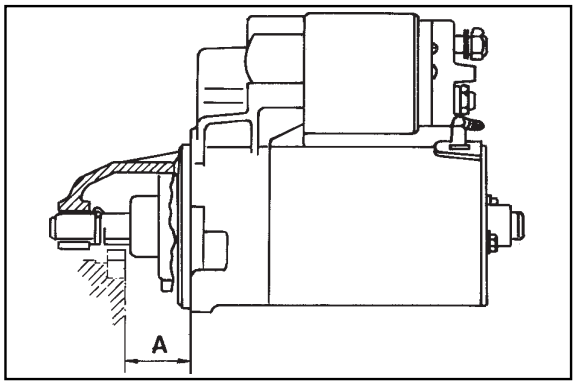

82

Bosch DW (L) 12 V 1, 1 KW type, starting motor
For 3LD 450, 3LD 510
Anticlockwise rotation direction (seen from the flywheel side)
A = 29.5 ÷ 31.5 mm (rim surface and motor flange distance)

Note: For any possible repairs, please contact bosch service centres.

Downloaded from www.Manualslib.com manuals search engine

https://truckmanualshub.com/

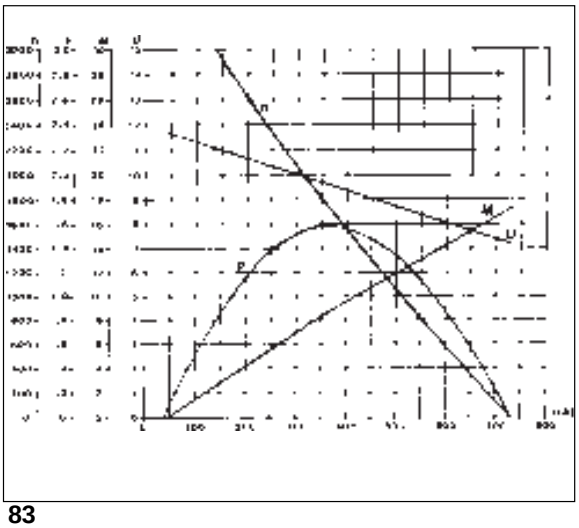

Characteristic curves for Bosch DW(L) 12V 1.1 kW type, starting motor

83

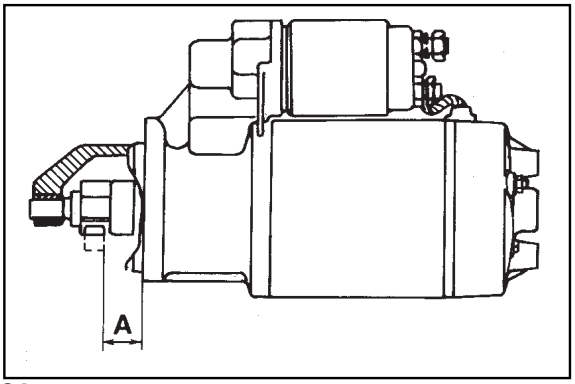

Bosch JF(L) 12V 2.5 kW type, starting motor
For 4LD 640, 4LD 705, 4LD 820
Anticlockwise rotation (seen from the pinion side)
A = 23 ÷ 25 mm

84

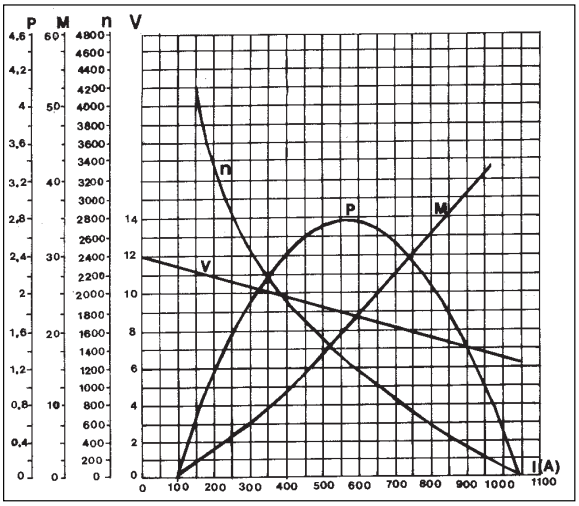

Characteristic curves for Bosch JF(L) 12V 2,5 kW type starting motor

85

Downloaded from www.Manualslib.com manuals search engine

https://truckmanualshub.com/

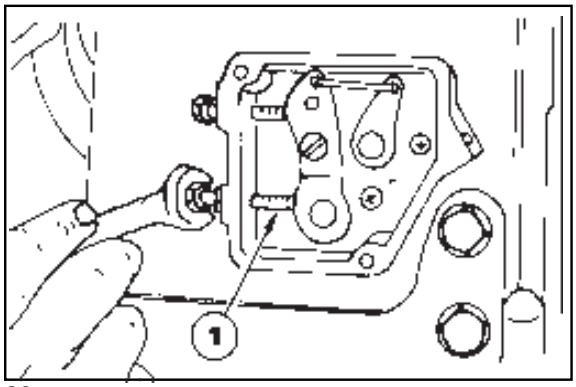

86

Minimum rpm adjustment at idle running (standard)
After filling the engine with oil and fuel, start and warm up the engine for 10 minutes.
Actuating the adjusting screw **1**, set the idling at 1150 rpm; then fasten the lock nut.

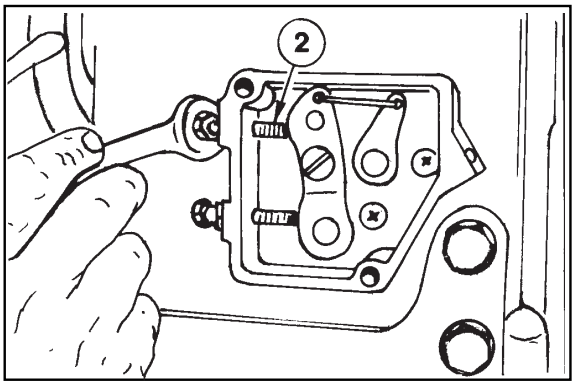

87

Peak rpm adjustment at idle (standard)
After adjusting the minimum rpm, set the screw 2 and adjust the peak rpm at 3200 rpm at idle; then fasten the lock nut.

Note: The peak rpm standard idle adjustment of 4LD 820 shall be carried out at 2800 rpm.

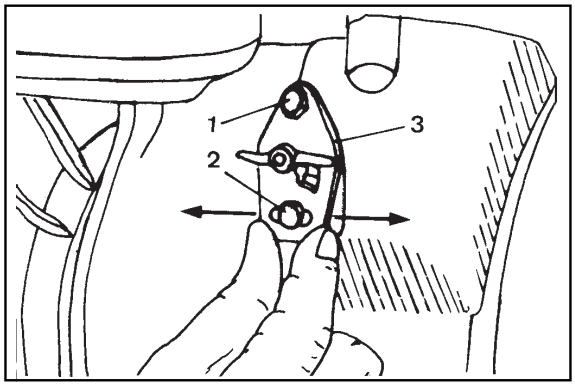

88

Injection pump delivery adjustment (standard)
This adjustment shall be carried out with the engine at dynamometric brake, otherwise the resulting adjustment could be approximate; in this case operate as it follows.

· Unloose the screws **1** and **2** by 1/4 of a turn
· Move the limiting device **3**, thus the screw **2** stays in the centre of the slot. Tighten the screws **1** and **2**.

Carry out the exhaust smoke check as it follows:
· Abruptly start the accelerator at idle.
In case of a quick pickup with light exhaust smoke to the Bosch scale index **3**, this means that the limiting device is correctly adjusted.
· In case of a slow pickup without smoke, move the limiting device towards the left (pumping duration increase).
· In case of a rapid pickup with thick smoke (exceeding index **3** of Bosch scale), move the limiting device towards the right (pump duration decrease).

Downloaded from www.Manualslib.com manuals search engine

https://truckmanualshub.com/

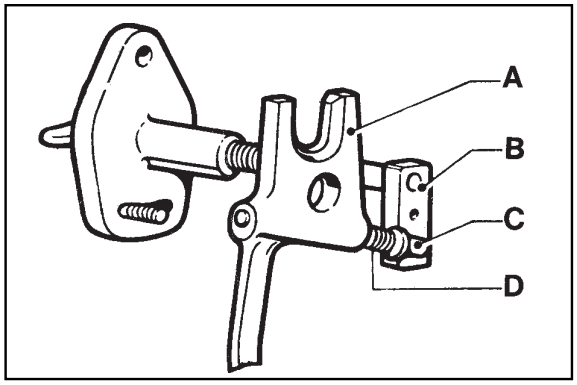

89

Limiting device for injection pump delivery and torque gearing device

It is housed in the pump control lever **A** and it is constituted of a spring on cam **B**, limiting the stroke of the same lever **A**.

At the torque rate, the spring flexure, subject to the accelerator control action, allows a further stroke of lever **A,** thus an increased delivery of the injection pump.

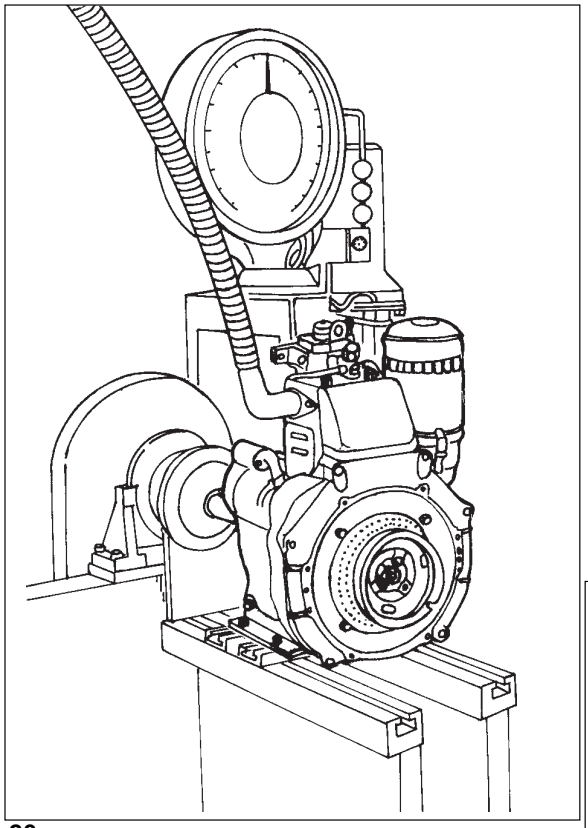

90

Adjustment of injection pump delivery with braked engine

1) Bring the engine to its idling point .
2) Move the delivery limiting device 3 towards the left, see picture 88
3) Operate the engine until it reaches the power and rpm required by the manufacturer of the equipment.
4) Make sure that the consumption is in compliance with the values specified in the table of the adjustments (see information below).
If the consumption is in compliance with the fixed values, it is essential to change the balance conditions measured on the brake, operating either on the load and on the regulator.
When the engine is steady, carry out the consumption check again.
5) Move the limiting device 3 towards the right, as per picture 88, until the engine rpm number descreases. Lock the limiting device by means of the two screws.
6) Completely release the brake and check the rpm at which the engine settles. The speed governor performances shall be in compliance with the class required by the manufacturer of the equipment.
7) Stop the engine.
8) When the engine is cold, check the valve clearance again.

Required adjustments (the most demanded)

Engine	Rpm	Kw power	Specific fuel consumption *	
			Time secs for 100 cc.	r/kW.h
3LD 450	3000	N 7,5	140-146	272-283
3LD 450	3600	NB 7	143-149	285-299
3LD 510	3000	N 9	117-122	272-283
4LD 640	3000	N 10,5	96-100	284-295
4LD 705	3000	N 10,8	96-100	276-287
4LD 705	2600	N 10	108-113	263-277
4LD 820	2600	N 12,1	87-92	258-273

* The specific consumption values indicated are valid after abt. 100 working hours.

Downloaded from www.Manualslib.com manuals search engine

https://truckmanualshub.com/

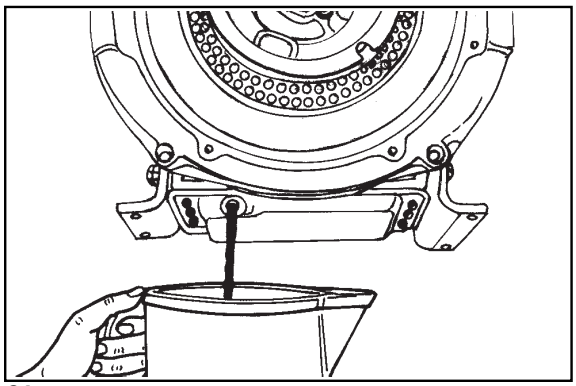

91

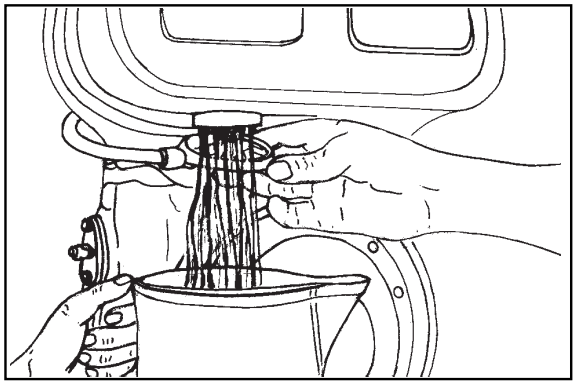

92

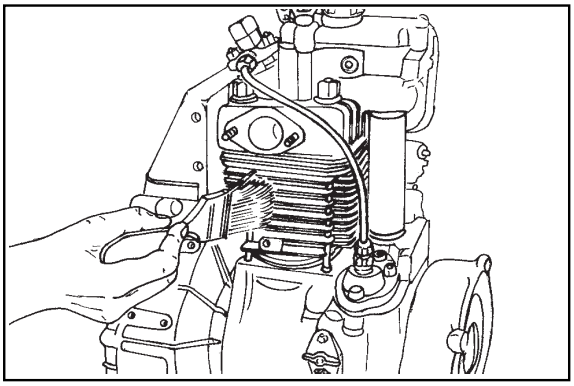

93

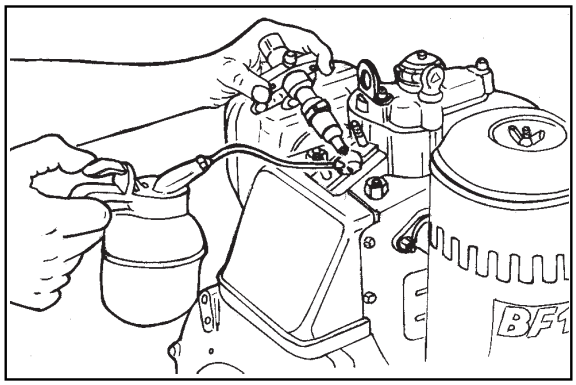

94

UPKEEPING

The engines to be stored for more than 30 days shall be prepared as follows:

Temporary protection (1÷ 6 months).

- Start the engine at idle and at a minimum rpm for at least 15 minutes.
- Fill the sump with protection oil MIL -1-644-P9 and operate for 5 ÷ 10 minutes at 3/4 of maximum speed.
- When the engine is heated, empty the sump and refill with new normal oil (picture 91).
- Remove the fuel filter cover and empty the tank (picture 92).
- Desassemble the fuel filter, replace the cartridge and, if it is not dirty, reassemble it.
- Carefully clean fins, cylinder and head (picture 93).
- Seal with adhesive tape all the openings.
- Remove the injector, (pictureaw) pour abt. a spoon of oil SAE 30 into the cylinder and manually turn in order to spread the oil. Reassemble the injector.
- Spray SAE 10W oil in the exhaust and intake duct, rocker arms, valves, tappets, etc. and protect with some grease the parts which are not painted.
- Wrap the engine in plastic cloth.
- Keep it in a dry place, possibly not in direct contact with the ground and away from high voltage electric lines.

Permanent protection (over 6 months)

Apart from the previous instructions, we advise you to:

- Treat the lubrication and injection system, together with the mobile parts, with rust preventing oil having MIL-L-21260 P 10 2nd degree features , SAE 30 (i.e.ESSO RUST - Ban 623 - AGIP, RUSTIA C. SAE 30). Run the engine equipped with rust preventing oil and let the exceeding oil off.
- Coat the external non-painted surfaces with rust preventing oil, having the MIL - C - 16173D features - 3rd degree (For example ESSO RUST BAN 398 - AGIP, RUSTIA 100/F).

Preparation for the setting at work

- Clean the external part of the engine.
- Remove all protections and coverings.
- Remove the rust preventer from the external part by means of a suitable solvent or degreasing product.
- Desassemble the injector, fill it with normal oil, pivot the drive shaft of some turns, then desassemble the sump and let the oil containing the protective element off.
- Check the injector, valve clearance, head tightening, oil and air filter setting. If the engine has been stored for quite a long period (over 6 months), check a bearing in order to find any possible trace of corrosion.

Downloaded from www.Manualslib.com manuals search engine

https://truckmanualshub.com/

3LD450, 3LD510, 4LD640, 4LD705, 4LD820 FEATURES

ENGINE TYPE			3LD450	3LD510	4LD640	4LD705	4LD820
Cylinders		N.	1	1	1	1	1
Bore		mm	85	85	95	100	102
Stroke		mm	80	90	90	90	100
Displacement		Cm³	454	510	638	707	817
Compression ratio			17,5:1	17,5:1	17,0:1	17,0:1	17,0:1
rpm			3000	3000	3000	3000	3000
KW Power	N DIN 70020 - 80/1269/CEE - iso 1585		7,5	9,0	10,5	12,0	13
	NB DIN 6271 - ISO 3046 - 1 IFN		6,6	7,3	8,8	9,9 D	11,4 D
	NA DIN 6271 - ISO 3046 - 1 ICXN		6,0	6,6	7,9	8,8 D	10,3 D
Peak torque *		Nm RPM	28,5 @ 1700	32,8 @ 1800	38,7 @ 1700	43,1 @ 2000	48 @ 1600
Fuel specific consumption		l/h	1,7	1,9	2,4	2,6***	3,0***
Oil consumption		Kg/h	0.007	0.008	0.024	0,030***	0,035***
Dry weight		Kg.	57	60	100	100	105
Combustion air volume at 3000 rpm		l./1'	560	630	780	770 D	890 D
Cooling air volume at 3000 rpm		l./1'	9000	9000	12000	10400 D	10400 D
Max. axial load permissible for drive shaft in two directions		Kg.	250	250	300	300	300
Max. inclination	instantaneous	a	35°	35°	35°	35°	35°
	extended to 1 h.	α	30°	30°	25°	25°	25°
	permanent	α	****	****	****	****	****

* It stands for power
** It stands for NB power
*** It stands to NB power at 2600 rpm
**** According to the application
D at 2600 rpm

Note: For LDA 450, LDA 510, LDA 96, LDA 97, LDA 820 out-of-production engines, the repair specifications are equal to those of the engines specified in the table. 3 LD 451/S, 3LD 510/S engines, which are currently produced, not specified in the table, turn anticlockwise (seen from the flywheel side), and are provided with the same feature as 3LD450 and 3LD510engines.

TECO/ATL AUTHOR
BOOK CODE 1-5302-556
MODEL No. 50839
DATE OF ISSUE 01-94
REVIEW 02
DATE 30-11-2001
APPROVAL

Downloaded from www.Manualslib.com manuals search engine

https://truckmanualshub.com/

3LD 450 - 3LD 510 - 3LD 451/S - 3LD 510/S MAIN DRIVING TORQUES

POSITION	REFERENCE (Picture NO.)	Dia. /Pitch (mm)	Torque (Nm)
Injection pump union	71	18x1.5	40
Connecting rod	36	8x1.25	30
Clutch bearing bell bolt	-	14x1.5	250
Flanging bell	-	8x1.25	25
Clutch bell (industrial engine)	-	16x1.5	80
Rocker arm box cap	8	8x1.25	20
Oil sump	-	6x1	10
Oil pump case	58	8x1.25	30
Air filter	1	8x1.25	25
Oil filter	-	8x1.25	25
Oil pump gear	58	8x1.25	20
Injector towards the head	75	8x1.25	15
Rocker arm fulcrum pin for injection pump	-	14x1.5	60
Gear pin for speed governor	-	10x1.5	40
Engine foot	-	8x1.25	40
Injection pump	69	8x1.25	25
Distributor side port	40	8x1.25	25
Oil pressure switch	-	12x1.5	35
Starting pulley	4	8x1.25	35
Main bearing on flywheel side	63	8x1.25	25
Sump oil drain bolt	-	10x1.5	35
Cylinder	14	10x1.5	50
Flywheel	3	20x1.5	170

MAIN DRIVING TORQUES 4LD 640 - 4LD 705 - 4LD 820

POSITION	Reference (picture no.)	Dia. / Pitch (mm)	Torque (Nm)
Injection pump unit	71	18x1.5	40
Connecting rod	36	10x1.5	45
4LD 820 clutch bearing bell bolt	-	14x1.5	280
4LD 640, 4LD clutch bearing bell bolt	-	14x1.5	250
Bolt for hub	-	14x1.5	280
Flanging bell	-	10x1.5	40
Rocker arm box cap	8	8x1.25	20
Oil sump	-	8x1.25	25
Oil pump case	58	8x1.25	40
Air filter	1	10x1.5	50
Oil filter	-	8x1.25	25
Oil pump gear	58	8x1.25	20
Injetor towards the head	75	8x1.25	20
Rocker arm pin for injection pump control	-	8x1.25	30
Gear pin for speed governor	-	10x1.5	40
Engine foot	-	10x1.5	40
Injection pump	69	8x1.25	30
Distributor side port	41	10x1.5	40
Oil pressure switch	-	12x1.5	35
Starting pulley	4	10x1.5	40
Main bearing on flywheel side	64	10x1.5	40
Sump oil drain bolt	-	14x1.5	70
Cylinder head	14	12x1.5	80
Flywheel	3	20x1.5	350

Downloaded from www.Manualslib.com manuals search engine

https://truckmanualshub.com/

USE OF DOPE FOR 3LD 450 - 3LD 510 - 3LD 451/S - 3LD 510/S

POSITION	TYPE OF SEALANT
Clutch bearing bell and embedded hexagonal-head screws	LOCTITE 270
Control pin threading	LOCTITE 270
Coupling nipple for oil filter cartridge	LOCTITE 270
Stud bolt for clamping on engine head	LOCTITE 270
Stud bolt for clamping on main bearing flywheel side	LOCTITE 270
Stud bolt for clamping on distributor port side	LOCTITE 270
Stud bolt on engine bell	LOCTITE 270
Clamping screw for pin regulator	LOCTITE 270
Clamping screw for baffle on air conveyor	LOCTITE 270
Stud bolt for clamping on engine flange bell	LOCTITE 270
Rocker arm fulcrum pin for injection pump control	LOCTITE 270
Bracket clamping screw on side plates	LOCTITE 270
Stud bolt for clamping at feeding pump	LOCTITE 270

USE OF DOPE FOR 4LD 640 - 4LD705 - 4LD 820

POSITION	TYPE OF SEALANT
Bearing on port or bell	LOCTITE 270
Regulating pin threading	LOCTITE 270
Stud bolt for clamping on engine head	LOCTITE 270
Stud bolt for clamping on main bearing on flywheel side	LOCTITE 270
Stud bolt for clamping on distribution side	LOCTITE 270
Lock screw for rocker arm pin	LOCTITE 270
Clamping screw for regulating pin	LOCTITE 270
Industrial port	DOW CORNING Q3 - 7091SILICONE
Stud bolt for clamping on feeding pump	LOCTITE 270

Downloaded from www.Manualslib.com manuals search engine

https://truckmanualshub.com/

DRIVING TORQUES FOR STANDARD SCREWS

NAME						
Dia. per pitch (mm)	R ≥ 800 N/mm²		R ≥ 1000 N/mm²		R ≥ 1200 N/mm2	
	Nm	Kgm	Nm	Kgm	Nm	Kgm
4x0.70	3.6	0.37	5.1	0.52	6	0.62
5x0.80	7	0.72	9.9	1.01	11.9	1.22
6x1.00	12	1.23	17	1.73	20.4	2.08
7x1.00	19.8	2.02	27.8	2.84	33	3.40
8x1.25	29.6	3.02	41.6	4.25	50	5.10
9x1.25	38	3.88	53.4	5.45	64.2	6.55
10x1.50	52.5	5.36	73.8	7.54	88.7	9.05
13x1.75	89	9.09	125	12.80	150	15.30
14x2.00	135	13.80	190	19.40	228	23.30
16x2.00	205	21.00	289	29.50	347	35.40
18x2.50	257	26.30	362	37.00	435	44.40
20x2.50	358	36.60	504	51.50	605	61.80
22x2.50	435	44.40	611	62.40	734	74.90
24x3.00	557	56.90	784	80.00	940	96.00

Downloaded from www.Manualslib.com manuals search engine

https://truckmanualshub.com/

GENERAL ALPHABETICAL INDEX

Adjustments
Advanced injection
Advanced injection reference on conveyor and
Air filter
Alternator
Battery characteristic curve
Bosch DW(L) starting motor
Bosch JF(L) starting motor
Camshaft
Camshaft axial clearance
Camshaft intake and exhaust cam timing
Camshaft, intake and exhaust cam height
Characteristic curves
Characteristic curves of Bosch JF(L) starting motor
Characteristic curves of Bosch DW(L) starting motor
Clearance volume
Connecting rod equipped with bearings and piston pin
Cylinder and piston
Decompression
Disassembly/reassembly
Distributor side port
Sealant use
Drive shaft
Drive shaft axial clearance
Drive shaft crankshaft bearing/connection rod head
Drive shaft fitting radii
Drive shaft lubrication ducts
Drive shaft main journal and crank dia.
Driving torques
Electric circuit
Electric equipment
Electric starting diagram
Fuel/injection circuit
Flywheel
flywheel protection disk
Fuel filter
Fuel pump
Fuel pump rod projection
Head
Big end bearing connecting rod
Idling adjustment
Injection pump
Injection pump assembly
Injection pump delivery adjustment
Injection pump delivery adjustment with braked engine
Injection pump delivery limiting device
Injector
Injector projection
Lubrication circuit
Main bearing on flywheel side
Main driving torque
Maintenance
Maintenance, prescribed oil, refuellings
Oil filter cartridge
Oil pressure check
Oil pressure curve with engine at its peak rpm
Oil pressure regulating valve
Oil pump
Oil pump, difference between clockwise and anticlockwise rotation
Peak rpm adjustment
Permanent protection
Pin and housing dimensions for camshaft
Preparation for the setting at work
Prescribed oil
Reassembly of piston
Capacities
Registration code and identification
Repairing
Rocker arm pin extraction
Rocker arm Pin/Hole
Rocker arm valve clearance
Piston rings assembly order
Piston rings, distance among ends
Setting
Silencer
Speed governor
Speed governor, timing
Starting pulley
Temporary protection
Timing system
Timing system without considering any reference
Upkeeping
Valve clearance housings
Valve guide clearance dimensions
Valve guide insertion
Valve seat grinding
Valve seat housings
Valves
Vent plug
Voltage regulator
Voltage regulator running check

Downloaded from www.Manualslib.com manuals search engine

https://truckmanualshub.com/

42100 Reggio Emilia, Italy
Via Cav. del Lavoro Adelmo Lombardini,2
Casella Postale 1074
Tel. (0522) 3891 - Telex: 530003 Motlom I
Telegr: Lombarmotor - Telefax (0522) 389465

La Lombardini si riserva il diritto di modificare in qualunque momento i dati contenuti in questa pubblicazione.
Lombardini se réserve le droit de modifier, à n'importe quel moment, les données reportées dans cette publication.
Data reported in this issue can be modified at any time by Lombardini.
Lombardini behält sich alle Rechte vor, die hierin enthaltenen Angaben jederzeit zu ändern.
La Lombardini se reserva el derecho de modificar sin previo aviso los datos de esta publicación.

Downloaded from www.Manualslib.com manuals search engine