https://truckmanualshub.com/

WORKSHOP MANUAL

9 LD Engine Series

cod. 1-5302-286

UNI EN ISO 9001 - cert. n° 0446
ISO/TS 16949 - cert. n° 3792

LOMBARDINI SERVICE
A KOHLER COMPANY

https://truckmanualshub.com/

https://truckmanualshub.com/

9 LD Engine Series

PREFACE

- Every attempt has been made to present within this service manual, accurate and up to date technical information. However, development on the **LOMBARDINI** series is continuous.
  Therefore, the information within this manual is subject to change without notice and without obligation.

- The information contained within this service manual is the sole property of **LOMBARDINI**.
  As such, no reproduction or replication in whole or part is allowed without the express written permission of **LOMBARDINI**.

Information presented within this manual assumes the following:

1 - The person or people performing service work on **LOMBARDINI** series engines is properly trained and equipped to safely and professionally perform the subject operation;

2 - The person or people performing service work on **LOMBARDINI** series engines possesses adequate hand and **LOMBARDINI** special tools to safely and professionally perform the subject service operation;

3 - The person or people performing service work on **LOMBARDINI** series engines has read the pertinent information regarding the subject service operations and fully understands the operation at hand.

- This manual was written by the manufacturer to provide technical and operating information to authorised **LOMBARDINI** after-sales service centres to carry out assembly, disassembly, overhauling, replacement and tuning operations.

- As well as employing good operating techniques and observing the right timing for operations, operators must read the information very carefully and comply with it scrupulously.

- Time spent reading this information will help to prevent health and safety risks and financial damage.
  Written information is accompanied by illustrations in order to facilitate your understanding of every step of the operating phases.

LOMBARDINI SERVICE
A KOHLER COMPANY

https://truckmanualshub.com/

REGISTRATION OF MODIFICATIONS TO THE DOCUMENT

Any modifications to this document must be registered by the drafting body, by completing the following table.

Drafting body	Document code	Model N°	Edition	Revision	Issue date	Review date	Endorsed
CUSE/ATLO	1-5302-286	50494	**3°**	**2**	06-88	26.11.2008	

https://truckmanualshub.com/

This manual contains pertinent information regarding the repair of LOMBARDINI air-cooled, direct injection Diesel engines type **9 LD 625-2 - 625-2 EPA - 626-2 - 626-2 NR:** updated November 26th, 2008.

TABLE OF CONTENTS

1 GENERAL REMARKS AND SAFETY INFORMATION 9-11

General safety during operationg phases 11
General service manual notes 9
Glossary and terminology 9
Safety and environmental impact 11
Safety and warning decals 10
Safety regulations 10
Warranty certificate 9

2 TECHNICAL INFORMATION 12-21

Approval data 14
Main components 15
Manufacturer and engine identification 14
Overall dimension 20
Performance diagram 18
Table of likely anomalies and their symptoms 12
Technical specifications 16
Trouble shooting 12

3 MAINTENANCE - RECOMMENDED OIL TYPE - REFILLING 22-25

ACEA Regulations - ACEA Sequences 23
API / MIL Sequences 23
Extraordinary maintenance 22
Fuel recommendations 25
International specifications 23
Lubricant 23
Ordinary maintenance 22
Prescribed lubricant 24
Routine engine maintenance 22
SAE Classification 23

4 DISASSEMBLY / REASSEMBLY 26-51

Air cleaner 26
Camshaft 45
Camshaft end play 46
Camshaft timing 46
Center main bearing support, locating screw. 42
Checking main journals and crank pins 43
Clearance between main journals/crank pins and connecting rod bearings 44
Clogging indicator 28
Compression release 32
Connecting rod 39
Connecting rod alignment 40
Connecting rod big end bearing 40
Connecting rod small end bushing 40
Connecting rod weight 40
Cooling fan 30
Crankshaft 42
Crankshaft center main bearing support 42
Crankshaft end play 45

https://truckmanualshub.com/

Crankshaft journal radius ... 43
Crankshaft lubrication ducts ... 42
Crankshaft removal ... 42
Crankshaft timing gear ... 41
Cylinder ... 36
Cylinder head ... 33
Dimensions and clearance between guides and valves ... 35
Dimensions of camshaft journals and housings ... 45
Dry air cleaner ... 27
Dry air cleaner, Donaldson type ... 27
Electronic speed governor ... 49
Exhaust manifold ... 28
External alternator blower control belt - Disassembly ... 29
External alternator blower control belt - Reassembly ... 29
External alternator blower control belt – Tension check ... 29
External alternator control belt ... 29
Flywheel ... 31
Fuel tank ... 29
Governor springs with rocker arm system ... 49
Governor springs with single-spring system ... 49
Head seal thickness ... 39
How to measure camshaft journals and housings ... 45
How to measure intake/exhaust cam height ... 46
How to measure main bearing inside diameter ... 43
Hub ... 30
Hydraulic pump ... 47
Hydraulic pump components (1 P) ... 48
Hydraulic pump p.t.o ... 47
Injector ... 32
Injector for EPA and 97/68 CE engines ... 33
Injector projection ... 33
Intake manifold ... 28
Internal alternator ... 30
Main bearing and connecting rod big end bearing inside diameter ... 44
Main bearing housings ... 44
Main bearing support, flywheel side ... 41
Main bearing support, gear side ... 41
Main bearing supports ... 41
Main bearíng supports - Dimensions ... 44
Main journal and crank pin diameter ... 43
Manifolds, intake/exhaust ... 28
Mechanical speed governor ... 48
Mechanical speed governor components ... 48
Oil vapour separator ... 28
Oil-bath air cleaner ... 26
Piston ... 37
Piston - Refitting ... 39
Piston clearance ... 39
Piston rings - End gaps (mm) ... 38
Piston rings - Fitting sequence ... 38
Piston weight ... 38
Pistons ringis - Clearance between grooves (mm) ... 38
Pulley guard - Shroud - Side plates ... 30
Pushrod tube ... 36
Recommendations for disassembling and assembling ... 26
Recommendations for overhauls and tuning ... 26
Rocker arm assembly ... 32
Rocker arms ... 31
Shroud support (Gear cover plate) ... 31
Speed governor wiring diagram ... 50
Table “Clearance between main bearings and main bearing housings” ... 45
Table “Piston and cylinder types and sizes" ... 37
Valve / Rocker arm clearance ... 31
Valve guide insertion ... 35
Valve guides and valve guide housings ... 35
Valve material ... 34

https://truckmanualshub.com/

Valve seat grinding ... 36
Valve seats and housings ... 36
Valve springs ... 34
Valve stem sealing rings - Reassembly ... 34
Valve timing - Angles ... 47
Valve timing check ... 47
Valve timing without considering timing marks ... 46
Valves ... 34

5 LUBRICATION SYSTEM ... 52-55

Lubrication system and breather recirculation system ... 52
Lubrication system with oil radiator circuit ... 53
Oil filter cartridge (external) ... 54
Oil pressure check ... 55
Oil pressure curve with engine at full speed ... 55
Oil pressure curve with engine at idle speed ... 55
Oil pressure relief valve ... 54
Oil pump ... 53
Oil radiator ... 55
Standard lubrication system circuit ... 52

6 FUEL SYSTEM ... 56-65

Fuel feeding / injection circuit with external fuel filter ... 56
Fuel feeding / injection circuit with external fuel filter and double solenoid valve ... 56
Fuel feeding / injection circuit with external fuel filter and QSD (Quick Stop System) ... 57
Fuel feeding / injection circuit with fuel filter inside the fuel tank ... 56
Fuel feeding / injection circuit with fuel filter inside the fuel tank and double solenoid valve ... 56
Fuel feeding /injection circuit ... 56
Fuel feeding pump components ... 58
Fuel filter ... 57
Fuel filter (inside fuel tank) ... 57
Fuel filter, external ... 57
Fuel lift pump ... 57
How to check injection pump delivery valve sealing ... 60
How to check plunger and barrel for internal leakage ... 59
How to mount injection pump on the engine ... 61
How to reassemble injection pump components ... 61
Injection advance adjustment ... 63
Injection pump ... 58
Injection pump for EPA engines ... 59
Injection pump for Standard and 97/68 CE engines ... 58
Injection pump/mechanical speed governor timing ... 62
Injection static advance adjustment ... 62
Injector ... 64
Injector setting ... 65
Piston fuel lift pump (on request) ... 58
Plunger and Barrel Assembly ... 59
Size P injector, for 97/68 CE and EPA engines ... 65
Size P nozzle, for 97/68 CE and EPA engines ... 65
Size S Injector, only for standard engines ... 64
Size S Nozzle, only for standard engines ... 64
(Static) injection timing ... 62
Table “Conversion for establishing advance” ... 63
Test data for injection pump delivery ... 60

7 ELECTRIC SYSTEM ... 66-75

Alternator ... 67
Alternator - 12 V, 14 A ... 68
Alternator - 12 V, 18A ... 67

https://truckmanualshub.com/

Alternator - 24 V, 6 A 67
Alternator battery charger curve - 24 V, 6 A 68
Alternator battery charger curve - external, 12 V, 33 A 69
Alternator battery charger curve (12 V, 18 A) 67
Alternator battery charger curve standard - 12 V, 14 A 68
Alternator, external - 12 V, 33 A 69
Characteristic curves for starting motor type Bosch - 12 V, 1.7 kW 72
Characteristic curves of the 24 V 1.6 kW starting motor 73
Checking for cable continuity 69
Direct stop electromagnet 75
Direct stop electromagnets 74
Electric starting layout with internal alternator 66
Electrical starting layout with external alternator 66
How to check voltage regulator for proper operation 70
Magnetization checking tool 68
Pre-heating glow plug 74
Reverse electromagnet – FIRE version 74
Starting motor 72
Starting motor type Bosch DW (R) 12 V, 1.7 kW 73
Voltage regulator 70
Voltage regulator - 12 V, 30 A 71
Voltage regulator - 12V, 26A, with “W” terminal 71
Voltage regulator - 12V, 30A, with “W” terminal 71

8 SETTINGS 76-79

Full speed setting in no-load conditions (standard) 76
Idling speed setting in no-load conditions 76
Injection pump delivery setting 76
Injection pump delivery setting with dynamometric brake 77
Injection pump delivery limiting and extra fuel device 76
Injection pump delivery setting without dynamometric brake 77
Required settings (as most commonly applies) 78
Setting the stop limit stop 78
Speed adjustments 76

9 STORAGE 80-81

Engine storage 80
Preparing the engine for operation after protective treatment 81
Protective treatment 80

10 TORQUE SPECIFICATIONS AND USE OF SEALANT 82-84

Table of tightening torques for standard screws (coarse thread) 84
Table of tightening torques for standard screws (fine thread) 84
Table of tightening torques for the main components 82

11 SPECIAL TOOLS 85

Special tools and equipment for maintenance 85

https://truckmanualshub.com/

WARRANTY CERTIFICATE

- The products manufactured by Lombardini Srl are warranted to be free from conformity defects for a period of 24 months from the date of delivery to the first end user.
- For engines fitted to stationary equipment, working at constant load and at constant and/or slightly variable speed within the setting limits, the warranty covers a period up to a limit of 2000 working hours, if the above mentioned period (24 months) is not expired.
- If no hour-meter is fitted , 12 working hours per calendar day will be considered.
- For what concerns the parts subject to wear and deterioration (injection/feeding system, electrical system, cooling system, sealing parts, non-metallic pipes, belts) warranty covers a maximum limit of 2000 working hours, if the above mentioned period (24 months) is not expired.
- For correct maintenance and replacement of these parts, it is necessary to follow the instructions reported in the documentation supplied with each engine.
- To ensure the engine warranty is valid, the engine installation, considering the product technical features, must be carried out by qualified personnel only.
- The list of the Lombardini authorized dealers is reported in the “Service” booklet, supplied with each engine.
- Special applications involving considerable modifications to the cooling/lubricating system (for ex.: dry oil sump), filtering system, turbo-charged models, will require special written warranty agreements.
- Within the above stated periods Lombardini Srl directly or through its authorized network will repair and/or replace free of charge any own part or component that, upon examination by Lombardini or by an authorized Lombardini agent, is found to be defective in conformity, workmanship or materials.
- Any other responsibility/obligation for different expenses, damages and direct/indirect losses deriving from the engine use or from both the total or partial impossibility of use, is excluded.
- The repair or replacement of any component will not extend or renew the warranty period.

Lombardini warranty obligations here above described will be cancelled if:

- Lombardini engines are not correctly installed and as a consequence the correct functional parameters are not respected and altered.
- Lombardini engines are not used according to the instructions reported in the “Use and Maintenance” booklet supplied with each engine.
- Any seal affixed to the engine by Lombardini has been tampered with or removed.
- Spare parts used are not original Lombardini.
- Feeding and injection systems are damaged by unauthorized or poor quality fuel types.
- Electrical system failure is due to components, connected to this system, which are not supplied or installed by Lombardini.
- Engines have been disassembled, repaired or altered by any part other than an authorized Lombardini agent.

- Following expiration of the above stated warranty periods and working hours, Lombardini will have no further responsibility for warranty and will consider its here above mentioned obligations for warranty complete.

- Any warranty request related to a non-conformity of the product must be addressed to the Lombardini Srl service agents.

GENERAL SERVICE MANUAL NOTES

1 - Use only genuine Lombardini repair parts.
Failure to use genuine Lombardini parts could result in sub-standard performance and low longevity.

2 - All data presented are in metric format. That is, dimensions are presented in millimeters (mm), torque is presented in Newton-meters (Nm), weight is presented in kilograms (Kg), volume is presented in liters or cubic centimeters (cc) and pressure is presented in barometric units (bar).

GLOSSARY AND TERMINOLOGY

For clarity, here are the definitions of a number of terms used recurrently in the manual.

- **Cylinder number one:** is the timing belt side piston .
- **Rotation direction:** anticlockwise «viewed from the flywheel side of the engine».

https://truckmanualshub.com/

SAFETY AND WARNING DECALS

- Important remarks and features of the text are highlighted using symbols, which are explained below:

Danger – Attention
This indicates situations of grave danger which, if ignored, may seriously threaten the health and safety of individuals.

Caution – Warning
This indicates that it is necessary to take proper precautions to prevent any risk to the health and safety of individuals and avoid financial damage.

Important
This indicates particularly important technical information that should not be ignored.

SAFETY REGULATIONS

- **LOMBARDINI** Engines are built to supply their performances in a safe and long-lasting way.
  To obtain these results, it is essential for users to comply with the servicing instructions given in the relative manual along with the safety recommendations listed below.
- The engine has been made according to a machine manufacturer's specifications and all actions required to meet the essential safety and health safeguarding requisites have been taken, as prescribed by the current laws in merit.
  All uses of the engine beyond those specifically established cannot therefore be considered as conforming to the use defined by **LOMBARDINI** which thus declines all liability for any accidents deriving from such operations.
- The following indications are dedicated to the user of the machine in order to reduce or eliminate risks concerning engine operation in particular, along with the relative routine maintenance work.
- The user must read these instructions carefully and become familiar with the operations described.
  Failure to do this could lead to serious danger for his personal safety and health and that of any persons who may be in the vicinity of the machine.
- The engine may only be used or assembled on a machine by technicians who are adequately trained about its operation and the deriving dangers.
  This condition is also essential when it comes to routine and, above all, extraordinary maintenance operations which, in the latter case, must only be carried out by persons specifically trained by **LOMBARDINI** and who work in compliance with the existing documentation.
- Variations to the functional parameters of the engine, adjustments to the fuel flow rate and rotation speed, removal of seals, demounting and refitting of parts not described in the operation and maintenance manual by unauthorized personnel shall relieve **LOMBARDINI** from all and every liability for deriving accidents or for failure to comply with the laws in merit.
- On starting, make sure that the engine is as horizontal as possible, unless the machine specifications differ.
  In the case of manual start-ups, make sure that the relative actions can take place without the risk of hitting walls or dangerous objects, also considering the movements made by the operator.
  Pull-starting with a free cord (thus excluding self-winding starting only), is not permitted even in an emergency.
- Make sure that the machine is stable to prevent the risk of overturning.
- Become familiar with how to adjust the rotation speed and stop the engine.
- Never start the engine in a closed place or where there is insufficient ventilation.
  Combustion creates carbon monoxide, an odourless and highly poisonous gas.
  Lengthy stays in places where the engine freely exhausts this gas can lead to unconsciousness and death.
- The engine must not operate in places containing inflammable materials, in explosive atmospheres, where there is dust that can easily catch fire unles specific, adequate and clearly indicated precautions have been taken and have been certified for the machine.
- To prevent fire hazards, always keep the machine at least one meter from buildings or from other machinery.
- Children and animals must be kept at a due distance from operating machines in order to prevent hazards deriving from their operation.
- Fuel is inflammable.
  The tank must only be filled when the engine is off.
  Thoroughly dry any spilt fuel and move the fuel container away along with any rags soaked in fuel or oil.
  Make sure that no soundproofing panels made of porous material are soaked in fuel or oil.
  Make sure that the ground or floor on which the machine is standing has not soaked up any fuel or oil.
- Fully tighten the tank plug each time after refuelling.
  Do not fill the tank right to the top but leave an adequate space for the fuel to expand.
- Fuel vapour is highly toxic.
  Only refuel outdoors or in a well ventilated place.
- Do not smoke or use naked flames when refuelling.
- The engine must be started in compliance with the specific instructions in the operation manual of the engine and/or machine itself.
  Do not use auxiliary starting aids that were not installed on the original machine (e.g. Startpilot').
- Before starting, remove any tools that were used to service the engine and/or machine.
  Make sure that all guards have been refitted.

https://truckmanualshub.com/

- During operation, the surface of the engine can become dangerously hot.
  Avoid touching the exhaust system in particular.
- Before proceeding with any operation on the engine, stop it and allow it to cool.
  Never carry out any operation whilst the engine is running.
- The coolant fluid circuit is under pressure.
  Never carry out any inspections until the engine has cooled and even in this case, only open the radiator plug or expansion chamber with the utmost caution, wearing protective garments and goggles. If there is an electric fan, do not approach the engine whilst it is still hot as the fan could also start operating when the engine is at a standstill.
  Only clean the coolant system when the engine is at a standstill.
- When cleaning the oil-cooled air filter, make sure that the old oil is disposed of in the correct way in order to safeguard the environment.
  The spongy filtering material in oil-cooled air filters must not be soaked in oil.
  The reservoir of the separator pre-filter must not be filled with oil.
- The oil must be drained whilst the engine is hot (oil T ~ 80°C).
  Particular care is required to prevent burns.
  Do not allow the oil to come into contact with the skin.
- Pay attention to the temperature of the oil filter when the filter itself is replaced.
- Only check, top up and change the coolant fluid when the engine is off and cold.
  Take care to prevent fluids containing nitrites from being mixed with others that do not contain these substances since "Nitrosamine", dangerous for the health, can form.
  The coolant fluid is polluting and must therefore be disposed of in the correct way to safeguard the environment.
- During operations that involve access to moving parts of the engine and/or removal of rotating guards, disconnect and insulate the positive wire of the battery to prevent accidental short-circuits and to stop the starter motor from being energized.
- Only check belt tension when the engine is off.
- Only use the eyebolts installed by **LOMBARDINI** to move the engine.
  These lifting points are not suitable for the entire machine; in this case, the eyebolts installed by the manufacturer should be used.

GENERAL SAFETY DURING OPERATING PHASES

– The procedures contained in this manual have been tested and selected by the manufacturer's technical experts, and hence are to be recognised as authorised operating methods.
– A number of procedures must be carried out with the aid of equipment and tools that simplify and improve the timing of operations.
– All tools must be in good working condition so that engine components are not damaged and that operations are carried out properly and safely.
  It is important to wear the personal safety devices prescribed by work safety laws and also by the standards of this manual.
– Holes must be lined up methodically and with the aid of suitable equipment. Do not use your fingers to carry out this operation to avoid the risk of amputation.
– Some phases may require the assistance of more than one operator. If so, it is important to inform and train them regarding the type of activity they will be performing in order to prevent risks to the health and safety of all persons involved.
– Do not use flammable liquids (petrol, diesel, etc.) to degrease or wash components. Use special products.
– Use the oils and greases recommended by the manufacturer.
  Do not mix different brands or combine oils with different characteristics.
– Discontinue use of the engine if any irregularities arise, particularly in the case of unusual vibrations.
– Do not tamper with any devices to alter the level of performance guaranteed by the manufacturer.

SAFETY AND ENVIRONMENTAL IMPACT

Every organisation has a duty to implement procedures to identify, assess and monitor the influence of its own activities (products, services, etc.) on the environment.
Procedures for identifying the extent of the impact on the environment must consider the following factors:

- Liquid waste
- Waste management
- Soil contamination
- Atmospheric emissions
- Use of raw materials and natural resources
- Regulations and directives regarding environmental impact

In order to minimise the impact on the environment, the manufacturer now provides a number of indications to be followed by all persons handling the engine, for any reason, during its expected lifetime.

- All packaging components must be disposed of in accordance with the laws of the country in which disposal is taking place.
- Keep the fuel and engine control systems and the exhaust pipes in efficient working order to limit environmental and noise pollution.
- When discontinuing use of the engine, select all components according to their chemical characteristics and dispose of them separately.

https://truckmanualshub.com/

TROUBLE SHOOTING

THE ENGINE MUST BE STOPPED IMMEDIATELY WHEN:

1) - The engine rpms suddenly increase and decrease;
2) - A sudden and unusual noise is heard;
3) - The colour of the exhaust fumes suddenly darkens;
4) - The oil pressure indicator light turns on while running.

TABLE OF LIKELY ANOMALIES AND THEIR SYMPTOMS

The following table contains the possible causes of some failures which may occur during operation.
Always perform these simple checks before removing or replacing any part.

POSSIBLE CAUSE		PROBLEM										
		Engine does not start	Engine starts but stops	No acceleration	Non-uniform speed	Black smoke	White smoke	Oil preassure too low	Overheats	Inadequate performance	Excessive oil consumption	High noise level
FUEL CIRCUIT	Obstructed fuel line	■	■		■					■		
	Fuel filter clogged	■	■	■	■					■		
	Air or water leaks in fuel system	■	■	■	■					■		
	The tank cap vent hole is clogged	■	■	■								
	No fuel	■	■									
	Faulty fuel feeding pump	■	■	■	■					■		
	Extra fuel control level sticking					■			■			
COOLING CIRCUIT	Clogged air filter	■	■	■	■	■			■	■		
	Cooling circuit clogged					■			■	■		
SETTINGS REPAIRS	Incorrect governor linkage adjustment	■			■							
	Governor spring broken or unhooked		■	■								
	Low idle speed		■									
	Rings worn or sticking	■					■		■	■	■	
	Worn cylinder	■					■		■	■	■	
	Worn main con rod-rocker arm bearings							■	■	■	■	■
	Badly sealed intake valve	■							■	■	■	
	Head tightening nuts loose	■										■
	Damaged cylinder head gasket	■							■	■		■
	Excessive valve-rocker arm clearance									■		■
	No clearance between valves and rocker arms	■										
	Valves sticking or damaged	■										■
	Defective timing system											■
	Bent rods			■		■			■	■		■
	Crankshaft not turning freely	■				■			■	■		

https://truckmanualshub.com/

POSSIBLE CAUSE		PROBLEM										
		Engine does not start	Engine starts but stops	No acceleration	Non-uniform speed	Black smoke	White smoke	Too low oil pressure	Overheats	Inadequate performance	Excessive oil consumption	High noise level
INJECTION	Damaged, blocked or dirty injector	■				■	■			■		■
	Injection pump valve damaged	■					■					
	Injector not adjusted	■				■						
	Hardened pump control rod	■		■	■					■		
	Broken or loose supplementary start-up spring	■										
	Worn or damaged pumping element	■			■	■				■		
	Incorrect tuning of injection components (delivery balancing advance)	■		■	■	■			■	■		■
	Extra fuel control level sticking					■			■			
LUBRICATION CIRCUIT	Oil level too high				■		■		■		■	
	Oil level low							■	■			■
	Oil pressure valve blocked or dirty							■				
	Oil pressure regulator not adjusted							■				
	Worm oil pump							■	■			
	Oil sump suction line clogged							■	■			
	Faulty pressure gauge or pressure switch							■				
	Blocked draining pipe							■				
ELECTRIC SYSTEM	Discharged battery	■										
	Cable connection uncertain or incorrect	■										
	Faulty starting switch	■										
	Faulty starting motor	■										
MAINTENANCE	Excessive idle operation						■				■	
	Incomplete run-in						■			■	■	
	Overloaded engine		■	■	■	■			■	■	■	■
	Non-conforming engine oil								■		■	

https://truckmanualshub.com/

MANUFACTURER AND ENGINE IDENTIFICATION

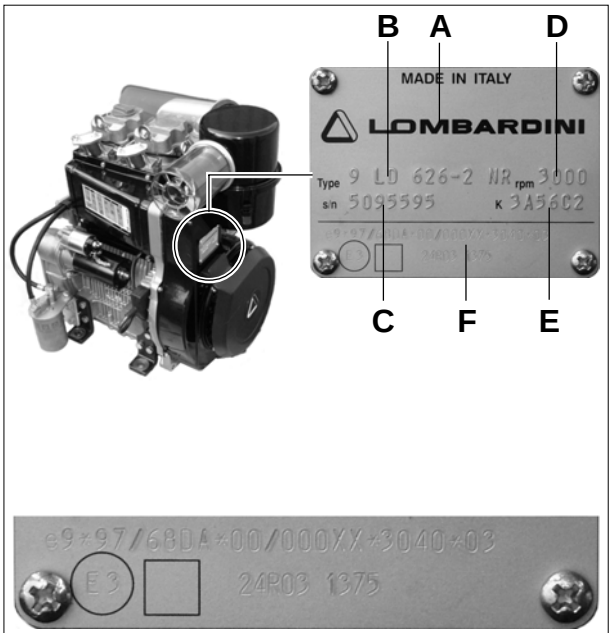

The identification plate shown in the figure can be found directly on the engine.
It contains the following information:

A) Manufacturer's identity
B) Engine type
C) Engine serial number
D) Maximum operating speed
E) Number of the customer version (form K)
F) Approval data

Approval data

The approval reference directives EC are on the engine identification plate.

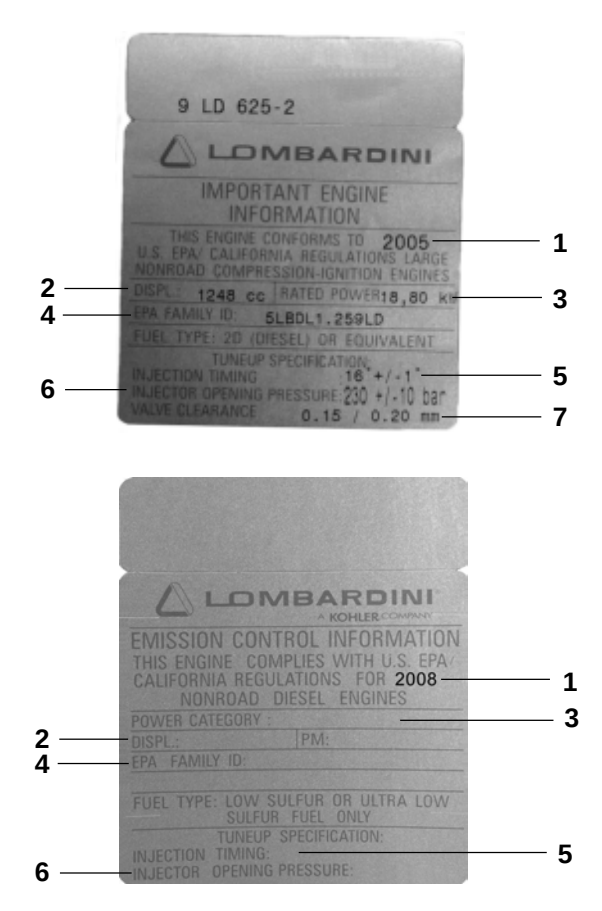

The data plate for EPA Standards is applied on the air intake cowling.
It contains the following information:

1) Current year
2) Engine displacement
3) Rated power, measured in kW
4) EPA family ID
5) Injection timing
6) Injection opening preassure
7) Valve clearance

https://truckmanualshub.com/

MAIN COMPONENTS

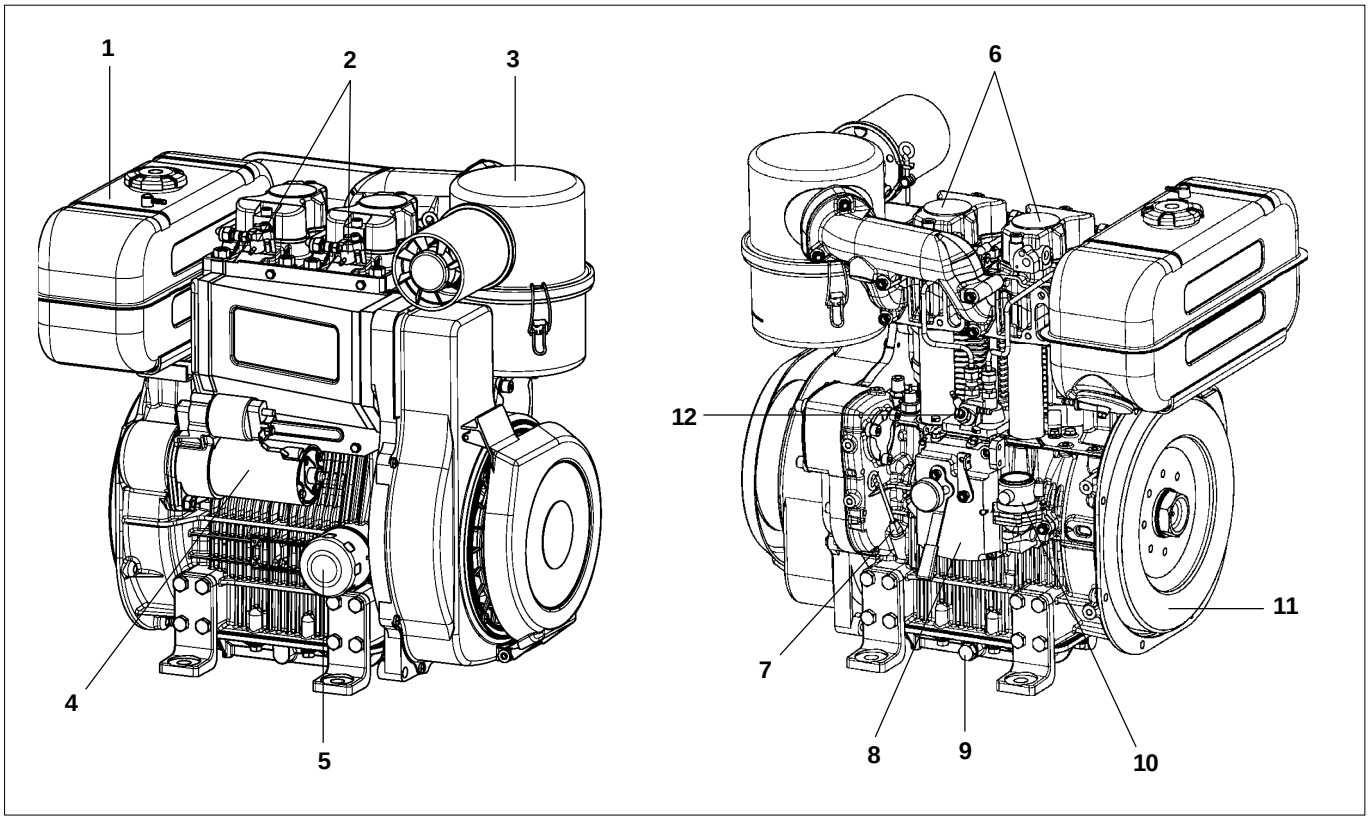

Components:

1) Fuel tank
2) Injectors
3) Air cleaner
4) Starting motor
5) Oil filter
6) Rocker arm cover
7) Oil dipstick
8) Throttle and stop controls
9) Oil drain plug
10) Fuel feeding pump
11) Flywheel
12) Injection pump

https://truckmanualshub.com/

TECHINICAL SPECIFICATIONS

			9 LD engine type		
			625-2	625/626-2 NR CE	625-2 EPA
GENERAL DETAILS					
Operating cycle		Four-stroke diesel			
Cylinders		n°	2 in line		
Bore x stroke		mm	95x88	95x88	95x88
Displacements		cm^3	1248	1248	1248
Compression rate			17.5:1	20.0:1	21.0:1
Intake		Oil bath air cleaner with cyclonic prefilter or dry air cleaner			
Cooling		Air (fan integral to the flywheel)			
Crankshaft rotation		Counter-clockwise (from flywheel side)			
Combustion sequence		Driving shaft degrees	180°		
Timing system		Rods and rocker arms			
Valves		n°	2 per cylinder		
Shaft		Side camshaft in the crankcase			
Tappets		Mechanic			
Fuel injection		Direct			
Dry weight of engine		Kg	110	110	110
Maximum tilt while operating		Momentary	35°	35°	35°
Maximum tilt while operating		Up to 1 hour	25°	25°	25°
Combustion air volume at 3000 r.p.m.		l/min	1600	1600	1600
Cooling air volume at 3000 r.p.m.		l/min	26300	26300	26300
POWER AND TORQUE					
Maximum operating speed		r.p.m.	3000	3000	3000
Maximum power	N (80/1269/CEE) ISO 1585	kW/CV	20.7/28	-	-
	NB ISO 3046 IFN		18.8/25.5	18.8/25.5	18.8/25.5
	NA ISO 3046 ICXN		16.9/23	16.9/23	16.9/23
Maximum torque*		Nm/Kgm	73./7.4	67/6.8	68/6.9
Axial load allowed on crankshaft		Kg	300	300	300
CONSUMPTION AT MAXIMUM POWER					
Specific fuel onsumption		g/kWh - g/CV1h	253-186	258-190	258-190
Oil consumption		Kg/h	0.013	0.013	0.013

* 2200 rpm x 9LD 625-2; 2000rpm x 9LD625/626 -2 NR/CE and 1700rpm x 9LD 625-2 EPA

https://truckmanualshub.com/

		9 LD engine type		
		625-2	625/626-2 NR CE	625-2 EPA
FUEL SUPPLY CIRCUIT				
Fuel type	Automotive diesel fuel (minimum cetane: 51)			
Fuel supply	Mechanical fuel lift pump (diaphragm or pistons)			
Fuel filter, internal				
Filtering surface	cm^2	460	460	460
Filter capacity	µm	7	7	7
Fuel filter, external				
Filtering cartridge		PF 904	PF 904	PF 904
Filtering surface	cm^2	5000	5000	5000
Filter capacity	µm	2÷3	2÷3	2÷3
Maximum operating pressure	bar	4	4	4
LUBRICATION CIRCUIT				
Type of lubrication	Completely forced			
Circuit supply	Gear pump			
Maximum oil quantity	including filter (l)	3.1	3.1	3.1
Maximum oil quantity	excluding filter (l)	2.8	2.8	2.8
Oil pressure at min. speed (oil temperature: 120°C)	bar	0.6	0.6	0.6
Oil pressure switch	Unipolar system			
Operating pressure (min. value)	bar	0.3	0.3	0.3
Oil filter cartridge, external				
Maximum operating pressure	bar	13	13	13
Maximum combustion pressure	bar	20	20	20
Filter capacity	µm	15	15	15
By-pass valve setting	bar	1.5÷1.7	1.5÷1.7	1.5÷1.7
Filtering surface	cm^2	745	745	745
ELECTRICAL SYSTEM				
Alternator, Internal Standard (nominal voltage)	V	12	12	12
Alternator, Internal Optional (nominal voltage)	V	24	24	24
Alternator, External Optional (nominal voltage)	V	12	12	12
Alternator, Internal Standard (nominal current) *	A	14	14	14
Alternator, Internal Optional (nominal current) *	A	6	6	6
Alternator, External Optional (nominal current) *	A	33	33	33
Starter motor power (Bosh GF)	kW	1.7	1.7	1.7
Starter motor power (Bosh DW (R))	kW	1.6	1.6	1.6

* (see “Alternator battery charger curve” page 66 ÷ 69)

https://truckmanualshub.com/

PERFORMANCE DIAGRAM

9 LD 625-2 EPA @ 3000 r.p.m.

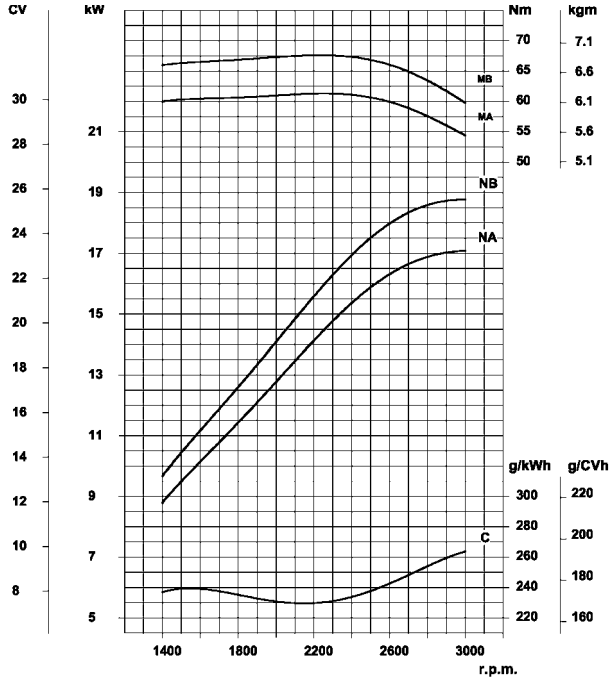

9 LD 625 NR @ 2800 r.p.m.

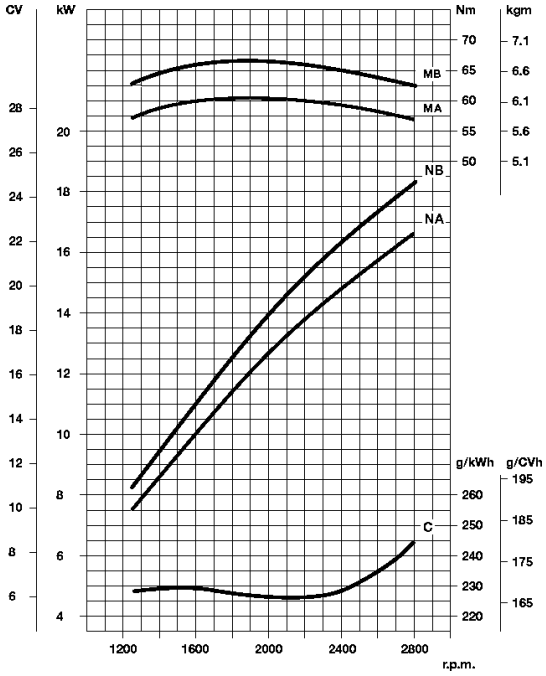

9 LD 625 @ 3000 r.p.m.

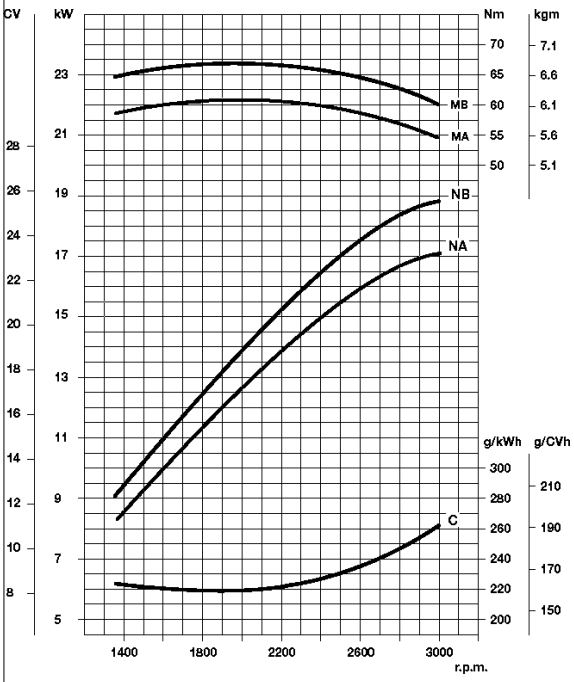

9 LD 626-2 @ 3000 r.p.m.

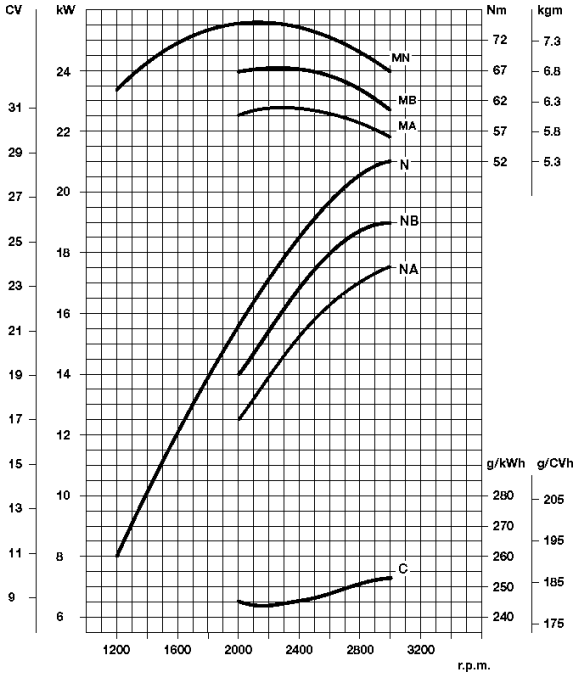

https://truckmanualshub.com/

9 LD 626-2 B2 NR @ 2800 r.p.m.

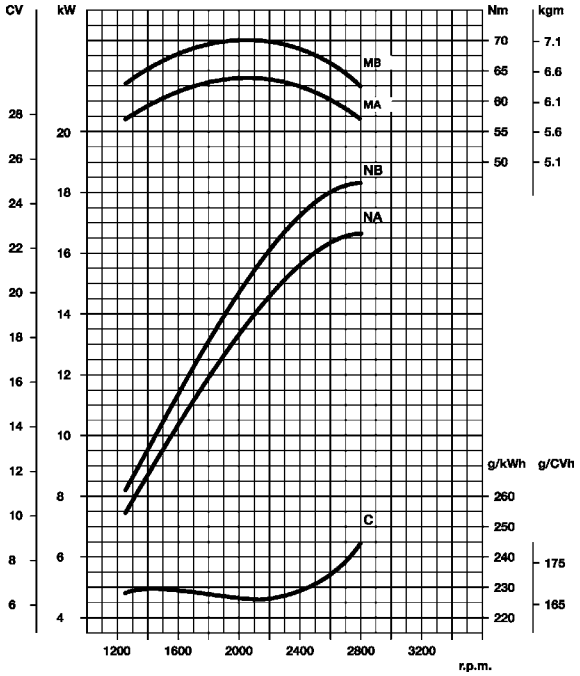

9 LD 626 NR @ 3000 r.p.m.

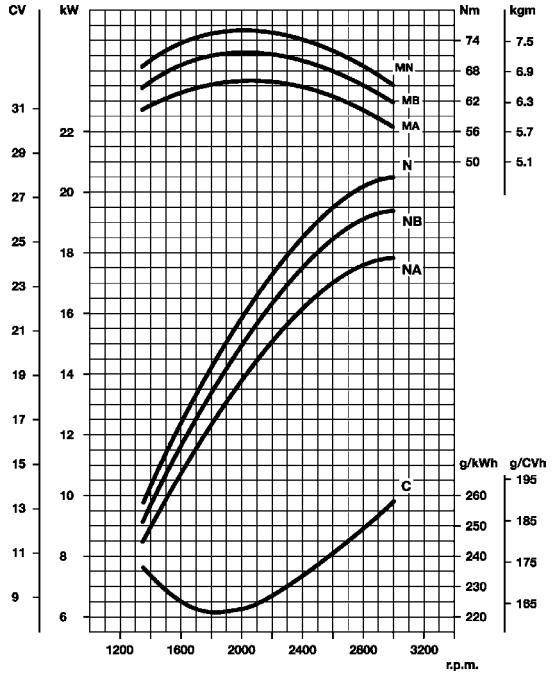

N (80/1269/CEE - ISO 1585): Automotive rating, intermittent operation with variable speed and variable load.
NB (ISO 3046/1 - IFN): Rating with no overload capability, continuous light duty operation with constant speed and variable load.
NA (ISO 3046/1 - ICXN): Continuous rating with overload capability, continuous heavy duty with constant speed and constant load.

C (NB) : Specific fuel consumption at NB power
Mn : Torque at N.

The above power values refer to an engine fitted with air cleaner and standard muffler, after testing and at the environmental conditions of 20°C and 1 bar. Max. power tolerance is 5%. Power decreases by approximately 1% every 100 m di altitude and by 2% every 5°C above 25°C.

Note: Consult LOMBARDINI for power, torque curves and specific consumptions at rates differing from those given above.

Important

Non-approval by Lombardini for any modifications releases the company from any damages incurred by the engine.

https://truckmanualshub.com/

OVERALL DIMENSION

9 LD 561-2
9 LD561-2/L
9 LD 625-2

9 LD 626-2
9 LD 626-2 NR

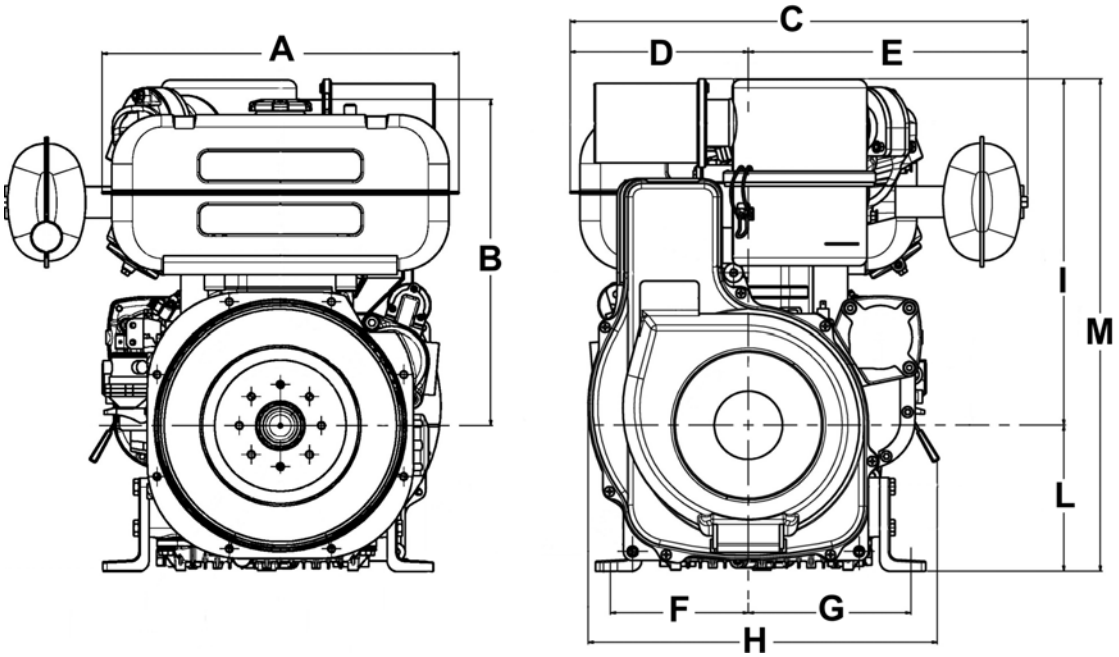

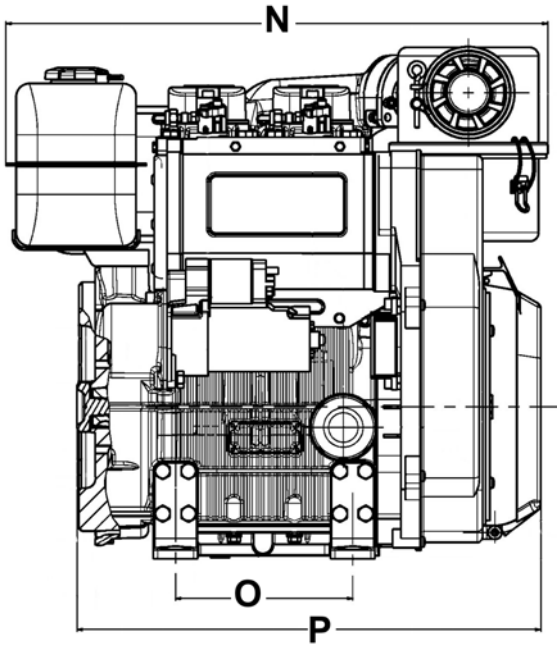

DIMENSIONI mm - MESURES mm - DIMENSION mm - EINBAUMAßE mm - DIMENSIONE mm - DIMEN0ÇÕES (mm)													
A	434	**C**	557	**E**	340	**G**	198	**I**	421	**M**	599	**O**	207
B	397	**D**	217	**F**	168	**H**	425	**L**	178	**N**	633	**P**	542

https://truckmanualshub.com/

https://truckmanualshub.com/

ROUTINE ENGINE MAINTENANCE

Important

Failure to carry out the operations described in the table may lead to technical damage to the machine and/or system

EXTRAORDINARY MAINTENANCE

AFTER THE FIRST 50 WORKING HOURS	Engine oil replacement.	Oil filter replacement.

ORDINARY MAINTENANCE

OPERATION DESCRIPTION		FREQUENCY x HOURS							
			10	125	250	500	1000	2500	5000
CHECK	ENGINE OIL LEVEL		■						
	OIL BATH AIR CLEANER	(***)	■						
	DRY AIR CLEANER	(***)	■						
	FUEL PIPES		■						
	EXTERNAL ALTERNATOR BELT TENSION	(**)		■					
	COOLING SYSTEM CLEANING	(***)		■					
	VALVE-ROCKER ARMS CLEARANCE ADJUSTMENT				■				
	SETTING AND INJECTORS CLEANING				■				
	RUBBER INTAKE HOSE (DRY AIR CLEANER - INTAKE MANIFOLD)				■				
	FUEL TANK CLEANING						■		
	ALTERNATOR AND STARTING MOTOR							■	
REPLACEMENT	ENGINE OIL	(*)			■				
	EXTERNAL OIL FILTER	(*)			■				
	FUEL FILTER	(*)			■				
	EXTERNAL ALTERNATOR BELT					■			
	RUBBER INTAKE HOSE (DRY AIR CLEANER - INTAKE MANIFOLD)	(**)					■		
	FUEL PIPES	(**)						■	
	DRY AIR CLEANER EXTERNAL CARTRIDGE	(***)	AFTER 6 CHECKS WITH CLEANING						
	DRY AIR INTERNAL EXTERNAL CARTRIDGE	(***)	AFTER 3 CHECKS WITH CLEANING						
OVERHAUL	PARTIAL							■	
	TOTAL								■

(*) - **In case of low use: every year.**

(**) - **In case of low use: every 2 years.**

(***) - **The period of time that must elapse before cleaning or replacing the filter element depends on the environment in which the engine operates. The air filter must be cleaned and replaced more frequently In very dusty conditions.**

https://truckmanualshub.com/

LUBRICANT

SAE Classification

In the SAE classification, oils differ on the basis of their viscosity, and no other qualitative characteristic is taken into account.
The first number refers to the viscosity when the engine is cold (symbol W = winter), while the second considers viscosity with the engine at régime.
The criteria for choosing must consider, during winter, the lowest outside temperature to which the engine will be subject and the highest functioning temperature during summer.
Single-degree oils are normally used when the running temperature varies scarcely.
Multi-degree oil is less sensitive to temperature changes.

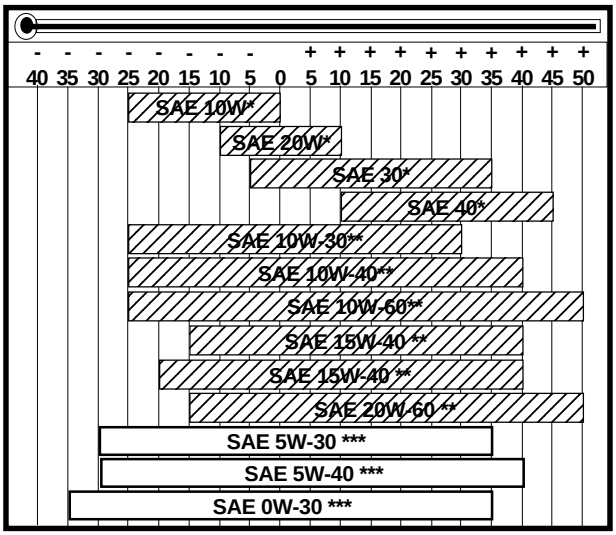

SAE- Grade

** Mineral base*
*** Semi-synthetic base*
**** Synthetic base*

International specifications

They define testing performances and procedures that the lubricants need to successfully respond to in several engine testing and laboratory analysis so as to be considered qualified and in conformity to the regulations set for each lubrication kind.
A.P.I : (American Petroleum Institute)
MIL : Engine oil U.S. military specifications released for logistic reasons
ACEA : European Automobile Manufacturers Association
Tables shown on this page are of useful reference when buying a kind of oil.
Codes are usually printed-out on the oil container and the understanding of their meaning is useful for comparing different brands and choosing the kind with the right characteristics.
Usually a specification showing a following letter or number is preferable to one with a preceding letter or number.
An SF oil, for instance, is more performing than a SE oil but less performing than a SG one.

ACEA Regulations - ACEA Sequences

Petrol

A1 = Low-viscosity, for frictions reduction
A2 = Standard
A3 = High performances

Light duty diesel engines

B1 = Low-viscosity, for frictions reduction
B2 = Standard
B3 = High performances (indirect injection)
B4 = High quality (direct injection)

Heavy duty diesel engines

E1 = OBSOLETE

E2 = Standard
E3 = Heavy conditions (Euro 1 - Euro 2 engines)
E4 = Heavy conditions (Euro 1 - Euro 2 - Euro 3 engines)
E5 = High performances in heavy conditions (Euro 1 - Euro 2 - Euro 3 engines)

API / MIL Sequences

	DIESEL								PETROL							
API	CH-4	CG-4	CF-4	CF-2	CF	CE	CD	CC	SC	SD	SE	SF	SG	SH	SJ	SL
MIL					L- 46152 D / E											

CURRENT — OBSOLETE

https://truckmanualshub.com/

PRESCRIBED LUBRICANT

AGIP SUPERDIESEL MULTIGRADE 10W40	specifications	**API CF4 / SG ACEA B2 - E2 MIL - L-4165 D/E**

In the countries where AGIP products are not available, use oil API SJ/CF for Diesel engines or oil corresponding to the military specification MIL-L-4165 D/E.
For a temperature of -10°C an oil with a **5W40** viscosity is recommended.
For a temperature of -15°C an oil with a **0W30** viscosity is recommended.

9 LD ENGINES OIL CAPACITY		
OIL VOLUME AT MAX LEVEL (OIL FILTER INCLUDED)	Litres	**3.1**
OIL VOLUME AT MAX LEVEL (WITHOUT OIL FILTER)	Litres	**2.8**

Danger - Attention

- **The engine may be damaged if operated with insufficient lube oil.**
- **It is also dangerous to supply too much lube oil to the engine because a sudden increase in engine rpm could be caused by its combustion.**
- **Use proper lube oil preserve your engine.**
  Good quality or poor quality of the lubricating oil has an affect on engine performance and life.
- **If inferior oil is used, or if your engine oil is not changed regularly, the risk of piston seizure, piston ring sticking, and accelerated wear of the cylinder liner, bearing and other moving components increases significantly.**
- **Always use oil with the right viscosity for the ambient temperature in which your engine is being operated.**

Danger - Attention

- **The used engine oil can cause skin-cancer if kept frequently in contact for prolonged periods.**
- **If contact with oil cannot be avoided, wash carefully your hands with water and soap as soon as possible.**
- **Do not disperse the oil in the ambient, as it has a high pollution power.**

https://truckmanualshub.com/

FUEL RECOMMENDATIONS

Purchase diesel fuel in small quantities and store in clean, approved containers. Clean fuel prevents the diesel fuel injectors and pumps from clogging. Do not overfill the fuel tank.
Leave room for the fuel to expand. Immediately clean up any spillage during refueling.

Never store diesel fuel in galvanized containers; diesel fuel and the galvanized coating react chemically to each other, producing flaking that quickly clogs filters or causes fuel pump or injector failure.

High sulfur content in fuel may cause engine wear. In those countries where diesel has a high sufur content, its is advisable to lubricate the engine with a high alkaline oil or alternatively to replace the lubricating oil recommended by the manufacturer more frequently. The regions in which diesel normally has a low sulfur content are Europe, North America, and Australia.

PRESCRIBED LUBRICANT	
Fuel with low sulphur content	**API CF4 - CG4**
Fuel with high sulphur content	**API CF**

FUEL TYPE
For best results, use only clean, fresh, commercial-grade diesel fuel. Diesel fuels that satisfy the following specifications are suitable for use in this engine: ASTM D-975 - 1D or 2D, EN590, or equivalent.

FUELS FOR LOW TEMPERATURES

It is possible to run the engine at temperatures below 0°C using special winter fuels. These fuels reduce the formation of paraffin in diesel at low temperatures. If paraffin forms in the diesel, the fuel filter becomes blocked interrupting the flow of fuel.

Fuel can be:	- Summer	up to	0°C
	- Winter	up to	-10°C
	- Alpine	up to	-20°C
	- Arctic	up to	-30°C

BIODIESEL FUEL
Fuels containing less than 20% methyl ester or B20, are suitable for use in this engine. Biodiesel fuels meeting the specification of BQ-9000, EN 14214 or equivalent are recommended. DO NOT use vegetable oil as a biofuel for this engine.
Any failures resulting from the use of fuels other than recommended will not be warranted.

AVIATION FUEL
Aviation fuels suitable for use in this engine include JP5, JP4, JP8 and, JET-A (if 5 percent oil is added).

EMISSION CONTROL INFORMATION

LOW SULFUR FUEL OR ULTRA LOW SULFUR FUEL ONLY

EPA /CARB emission label must be attached near the fuel inlet.

Capacities standard fuel tank	Litres	**10**
As for filters, tanks and special crankcases please refer to LOMBARDINI instructions.		

https://truckmanualshub.com/

RECOMMENDATIONS FOR DISASSEMBLING AND ASSEMBLING

Important

To locate specific topics, the reader should refer to the index.

- Besides disassembly and reassembly operations this chapter also includes checking and setting specifications, dimensions, repair and operating instructions.
- Always use original LOMBARDINI spare parts for proper repair operations.
- The operator must wash, clean and dry components and assemblies before installing them.
- The operator must make sure that the contact surfaces are intact, lubricate the coupling parts and protect those that are prone to oxidation.
- Before any intervention, the operator should lay out all equipment and tools in such a way as to enable him to carry out operations correctly and safely.
- For safety and convenience, you are advised to place the engine on a special rotating stand for engine overhauls.
- Before proceeding with operations, make sure that appropriate safety conditions are in place, in order to safeguard the operator and any persons involved.
- In order to fix assemblies and/or components securely, the operator must tighten the fastening parts in a criss-cross or alternating pattern.
- Assemblies and/or components with a specific tightening torque must initially be fastened at a level lower than the assigned value, and then subsequently tightened to the final torque.

RECOMMENDATIONS FOR OVERHAULS AND TUNING

Important

To locate specific topics, the reader should refer to the index.

- Before any intervention, the operator should lay out all equipment and tools in such a way as to enable him to carry out operations correctly and safely.
- The operator must comply with the specific measures described in order to avoid errors that might cause damage to the engine.
- Before carrying out any operation, clean the assemblies and/or components thoroughly and eliminate any deposits or residual material.
- Wash the components with special detergent and do not use steam or hot water.
- Do not use flammable products (petrol, diesel, etc.) to degrease or wash components. Use special products.
- Dry all washed surfaces and components thoroughly with a jet of air or special cloths before reassembling them.
- Apply a layer of lubricant over all surfaces to protect them against oxidation.
- Check all components for intactness, wear and tear, seizure, cracks and/or faults to be sure that the engine is in good working condition.
- Some mechanical parts must be replaced *en bloc*, together with their coupled parts (e.g. valve guide/valve etc.) as specified in the spare parts catalogue.

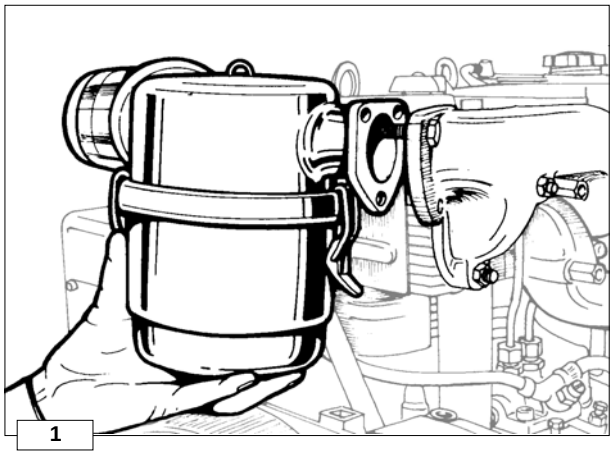

1

AIR CLEANER

Oil-bath air cleaner

Check gaskets and replace if necessary.
Check that flange weld is free of porosity or defective spots.
Carefully clean bowl and filtering element with Diesel oil and blow through with compressed air.
Top up with engine oil to the mark.

❍ When refitting tighten nuts at 25 Nm.

➲ See page 22 for periodic maintenance details.

https://truckmanualshub.com/

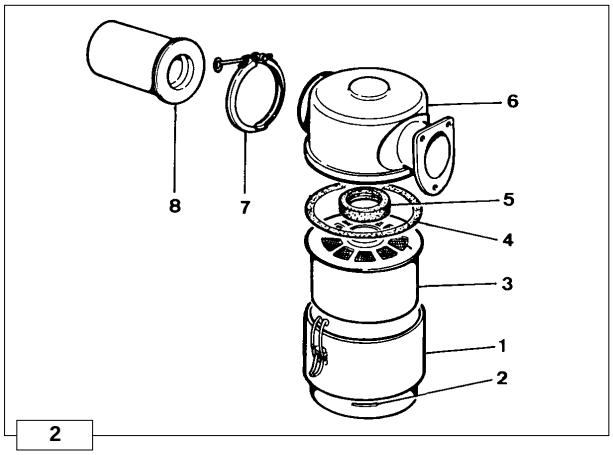

2

Components:

1 Bowl
2 Oil level mark
3 Filtering element
4 Seal ring
5 Internal seal ring
6 Cover
7 Clamp
8 Prefilter

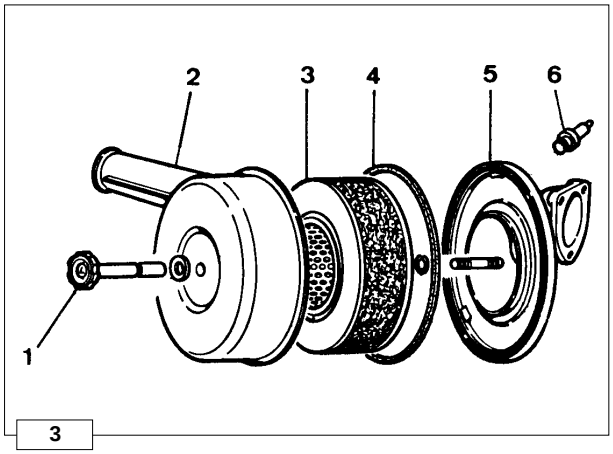

3

Dry air cleaner

Components:
1 Hand wheel
2 Cover
3 Cartridge
4 Seal ring
5 Bracket
6 Clogging indicator

Important
Replace cartridge immediately when indicator shows that is clogged.

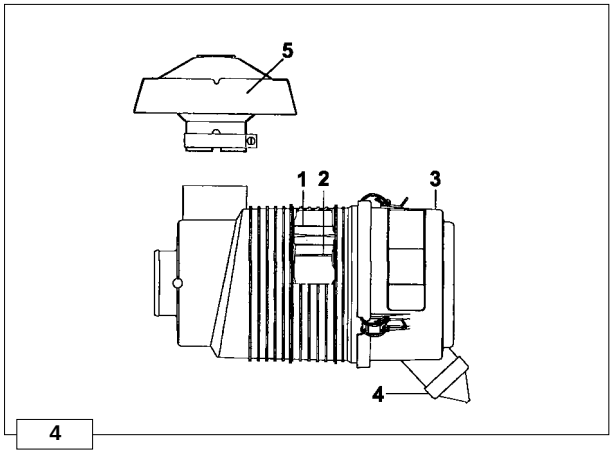

4

Dry air cleaner, Donaldson type

Danger - Attention
Never clean the filter element using highly flammable solvents. It could cause an explosion!

➲ In order to know how often you should check and replace the air filter cartridge and the rubber hose (air filter – intake manifold) see page 22.

1 Main cartridge
2 Safety cartridge
3 Axial cover
4 Scavenging valve
5 Cap complete with clamp

Scavenging valve **4** must be positioned as in figure 4.

Danger - Attention
During repair operations, when using compressed air, wear eye protection.

The cartridge can be cleaned by blowing compressed air breadthways outside and inside the cartridge, at a pressure not greater than 5 atmospheres, or in necessity case by knocking the front of the cartridge several times against a flat surface.
Use a lamp to check that the filter element is not damaged or inspect it against the light while slanted.
In case of doubt, install a new cartridge.

https://truckmanualshub.com/

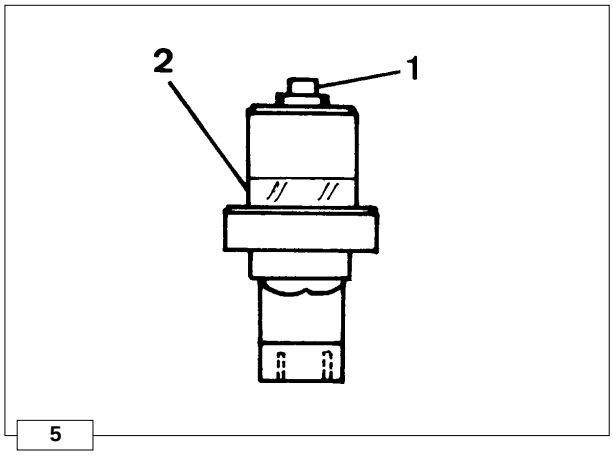

5

Clogging indicator

Components:
1 Reset button
2 Transparent indicator

Note: Indicator is calibrated at 600÷650 mm column of water.

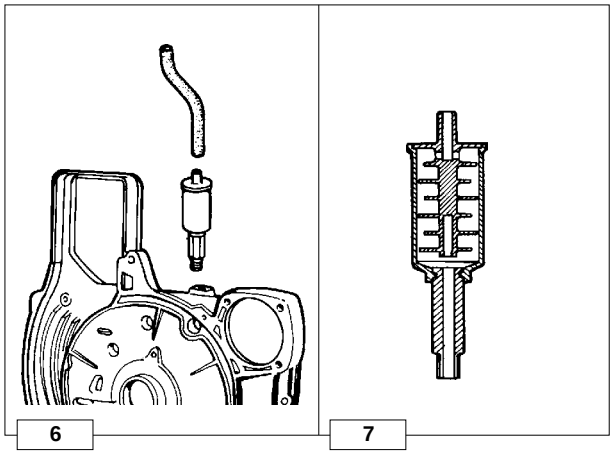

6 7

Oil vapour separator

Fitted on engines with dry air cleaner.
Screw it out of the air conveyor support, carefully wash with gasoline inside and blow out with compressed air.
When refitting replace the copper gasket and connect the oil vapour separator with intake manifold by means of the special rubber hose.

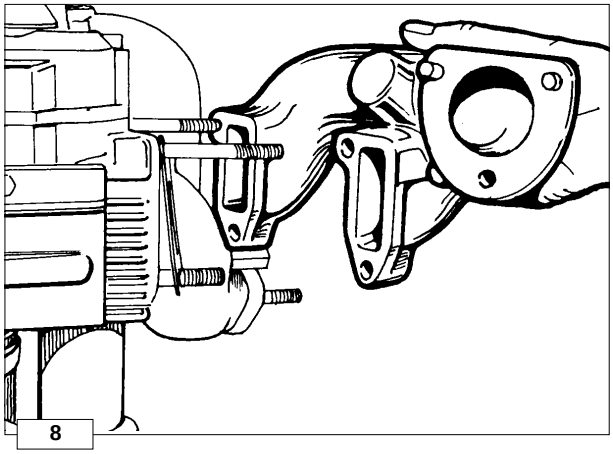

8

MANIFOLDS, INTAKE/EXHAUST

Intake manifold

To avoid flange breakage check that heads are in line before tightening nuts.
Check flange surface for warpage and correct if necessary.
Replace gaskets.

❍ Tighten nuts at 25 Nm.

Note: In case of low temperature starting we can supply a manifold with possibility of fitting a glow plug with air preheating.

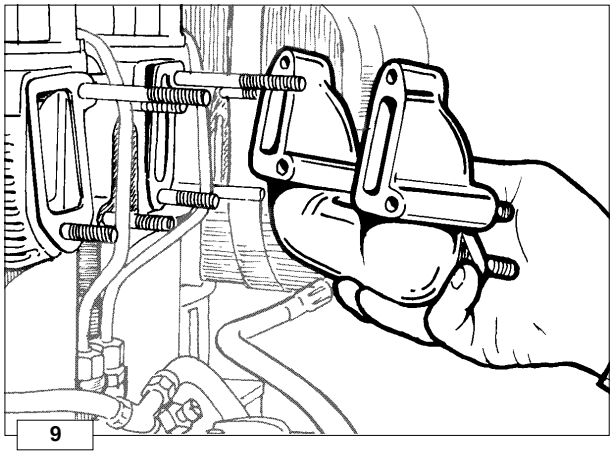

9

Exhaust manifold

Check that the inside is clean.
To avoid flange breakage check that heads are in line before tightening nuts.
Replace gaskets.

❍ Tighten nuts at 20 Nm.

https://truckmanualshub.com/

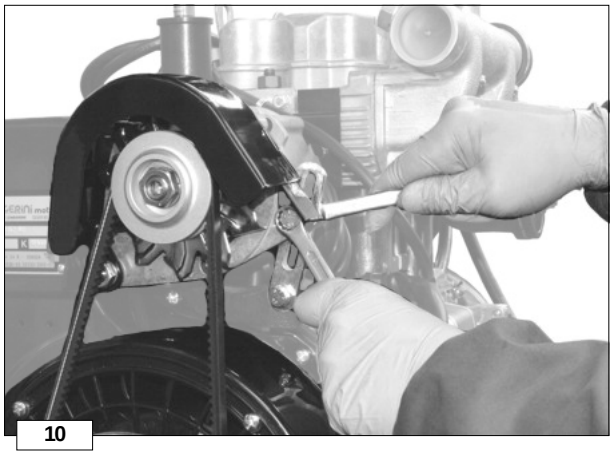
10

EXTERNAL ALTERNATOR CONTROL BELT
(only for engines with external alternator)

External alternator blower control belt - Disassembly

Release the two alternator fastening bolts.
Unscrew the fastening nuts of the belt guard and remove it.
Remove the **V** belt.

➲ See page 22 for periodic maintenance details.

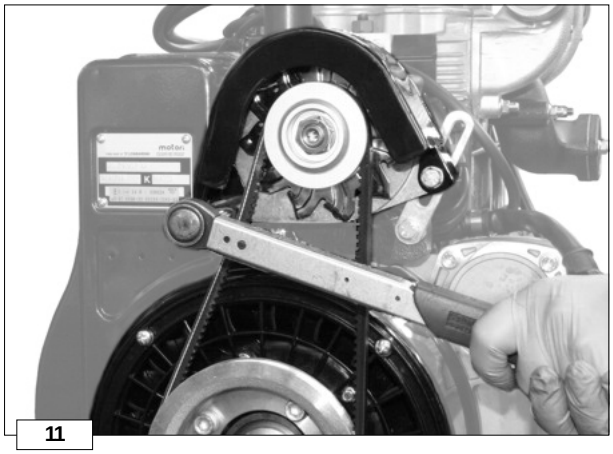
11

External alternator blower control belt – Tension check

Important
Carry out checks only after isolating the positive battery cable to prevent accidental short-circuiting and, consequently, the activation of the starter motor.

Tension the belt if it flexes more than 1 cm exerting a pressure of 10 kg.

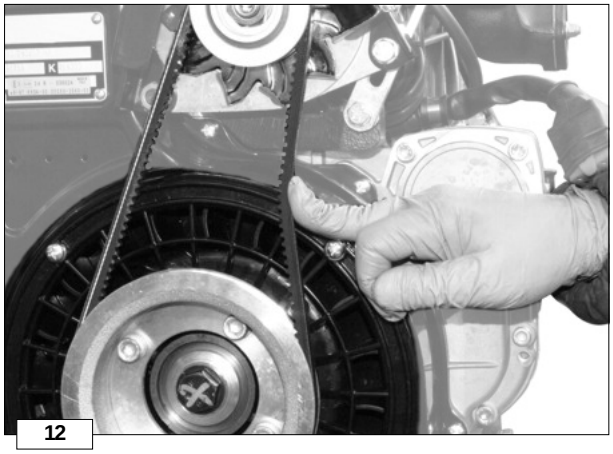
12

External alternator blower control belt - Reassembly

Install the belt and the belt guard.
Force the alternator outwards and temporarily tighten the fastening bolts.
Make sure that the belt tension is within the required parameters (see “External alternator blower control belt – Tension check”, Fig. 11).

❍ Tighten the fastening bolts to a final torque of 30 Nm (8x1.25) and 50 Nm (10x1.50).

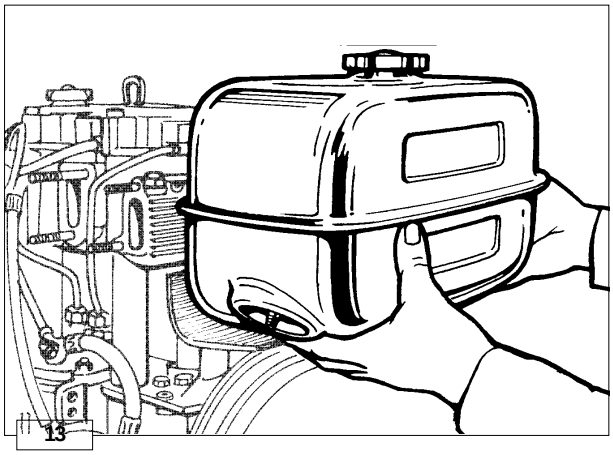
13

FUEL TANK

After disconnecting the fuel pipes unscrew the anchoring brackets' screws and remove the fuel tank.
Completely empty the tank and check that no impurities are found inside.
If the fuel tank is fitted wth an internal fuel filter remove and replace the cartridge.
Check that cap breather hole is not clogged.
Remove the tank support.

❍ When refitting tighten the support screws at 40 Nm and the bracket screws at 8 Nm.

➲ See page 57 for refitting internal fuel filter.

https://truckmanualshub.com/

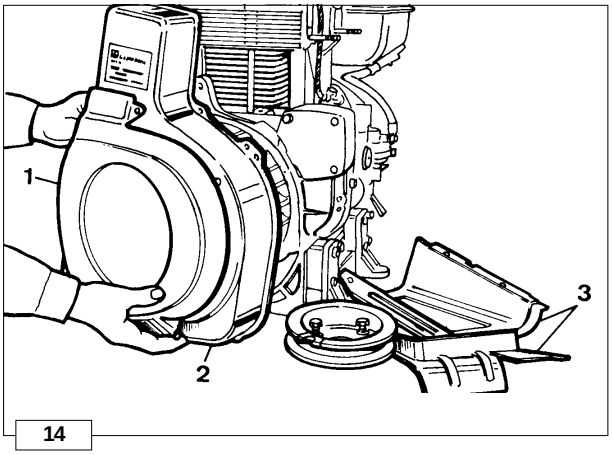

14

Pulley guard - Shroud - Side plates

Components:
1 Pulley guard
2 Shroud
3 Side plates

The pulley guard is made of sound deadening material: it reduces the noise that both the pulley and the fan tend to amplify.
Shroud and side plates are made of ANTIFON, an elastic layer which absorbs the noise caused by the plate vibrations.

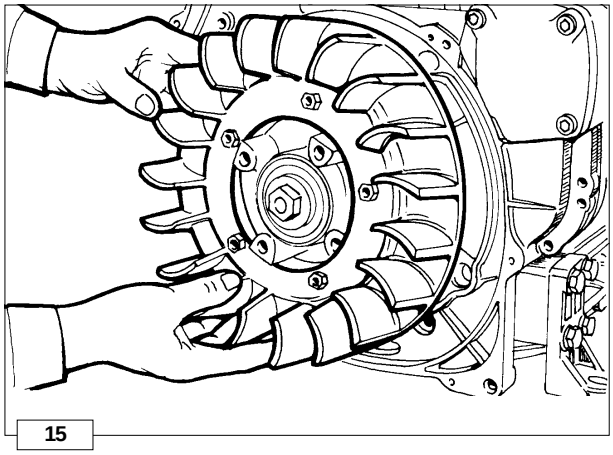
15

Cooling fan

Carefully clean and check all blades and inserts. Replace the fan even if there is only a single damaged blade or only a single released insert.

➲ See page 16 for cooling air flow.

❍ Tighten the fan's fixing screws at a torque of 10 Nm.

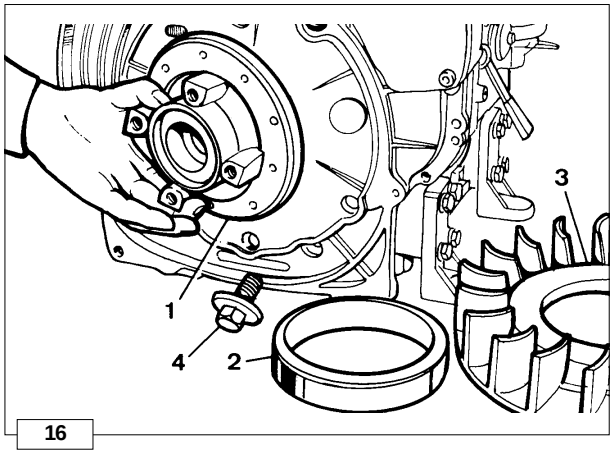

16

Hub

Components:
1 Hub
2 Alternator rotor
3 Fan
4 Bolt

The hub holds the alternator rotor and the cooling fan.

❍ Unscrew the bolt clockwise and tighten at 160 Nm when refitting.

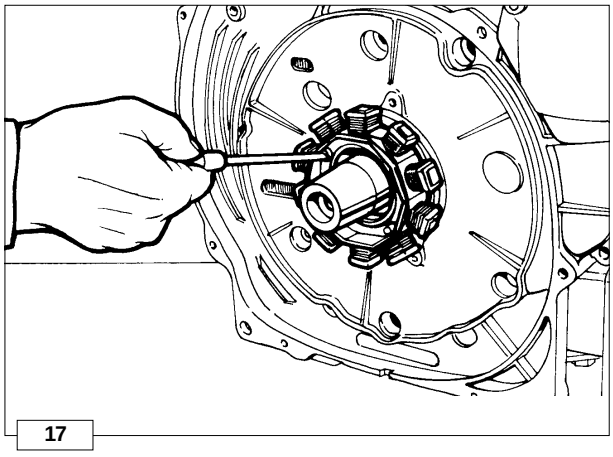
17

Internal alternator

Remove stator and place it inside the rotor to prevent metal particles from being attracted by the magnets.

❍ When refitting tighten rotor screws and stator bolts at 10 Nm.

➲ See page 67 ÷ 69 for alternator characteristics.

https://truckmanualshub.com/

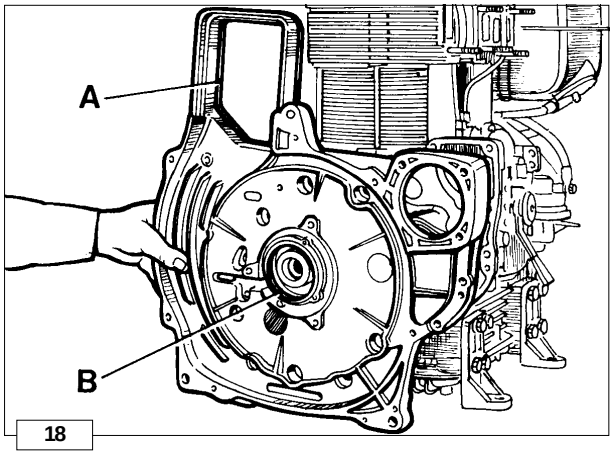

18

Shroud support (Gear cover plate)

Loosen screws and remove shroud support very carefully to avoid damage to the oil seal ring.
When refitting check that gaskets **A** and oil seal ring **B** are well inside their housings.

❍ Tighten screws at 25 Nm.

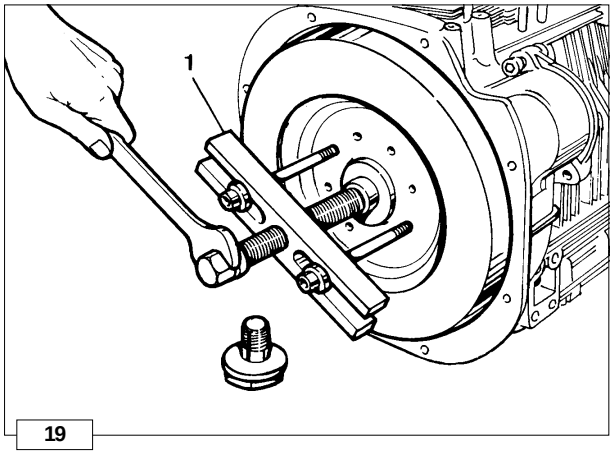

19

FLYWHEEL

Remove flywheel with puller **1** (part N°. 7271-1460-119).
Check starter ring gear and tapered crankshaft mating surfaces.

❍ When refitting tighten bolt al 300 Nm.

In order to replace the ring gear, it is necessary to disassemble the flywheel.

Cut the ring gear in several places using a chisel and remove it.

Important
Remove any debris and carefully clean the ring gear.

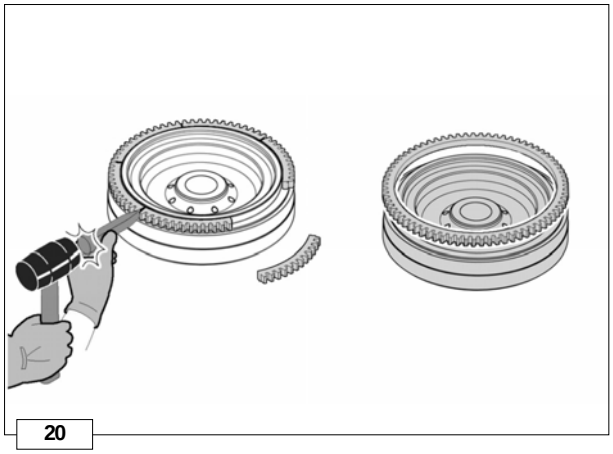
20

Heat the new ring gear uniformly and keep it at a temperature of 300°C for15÷20 minuti.

Danger – Attention
Risk of burning: be careful of hot surfaces.

Insert the ring gear into its seat and place it carefully on the rim of the flywheel.
Leave to the ring gear to cool gently before reassembling the flywheel.

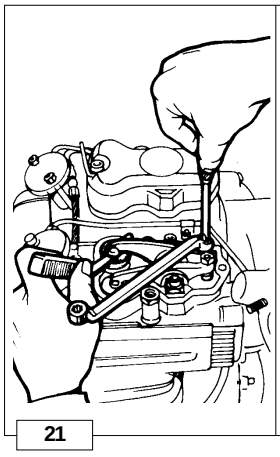
21

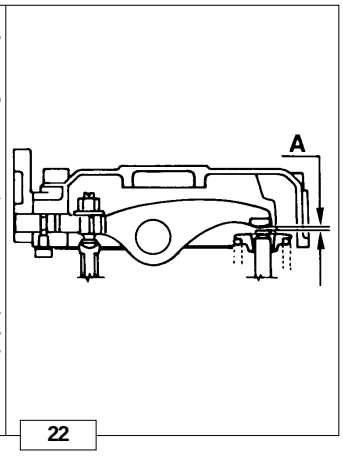

22

ROCKER ARMS

Valve / Rocker arm clearance

Important
Setting should be performed when the engine is cold.

Remove rocker arm cover and check gaskets for breakage.

Bring each cylinder piston to top dead center on the compression stroke and set clearance **A** al 0.15÷0.20 mm for intake and 0.30÷0.35 mm for exhaust.

❍ When refitting tighten cover screws by 20 Nm.

https://truckmanualshub.com/

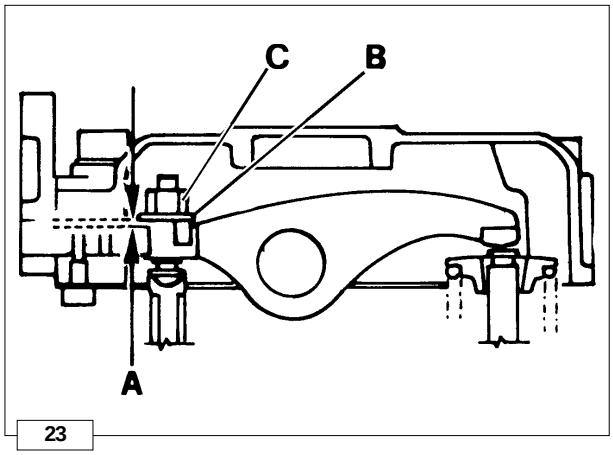

23

Compression release (optional)

Bring piston to top dead center on the compression stroke.
Unscrew rocker arm cover side plug and measure clearance **A** between lever and rocker arm, which must be 0.30÷0.40 mm.
For setting purposes remove the rocker arm cover, unscrew the lock nut **C** and set clearance **A** by changing the height of the shims under the plate **B**.
Set the valve/rocker arm clearance, see "Valve / Rocker arm clearance" on page 31.
Reassemble the rocker arm cover and check the decompression lever clearance again.

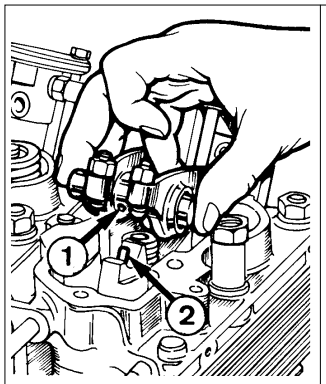

24

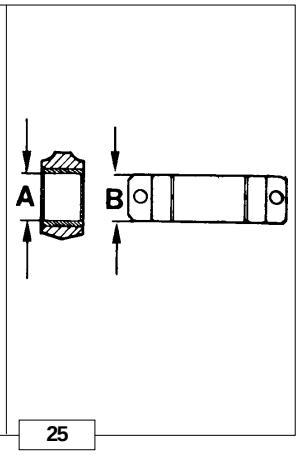

25

Rocker arm assembly

Components:
1 Bore
2 Lubrication tube

Dimensions (mm):
A = 18.032÷18.050
B = 17.989÷18.000

If clearance (**A** - **B**) exceeds 0.135 mm replace shaft and rocker arms.

Caution – Warning
When retitting check that lubrication tube perfectly matches with the journal bore.

On slow engines, which are set to 1,500 – 1,800 rpm, the rocker arms differ from the standard version in the upper part of the lubrication channel.

❍ Tighten the rocker arm shaft fastening screws to the head at a torque of 25 Nm.

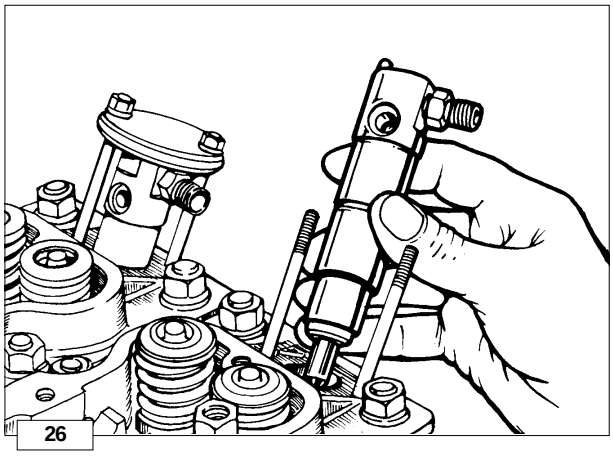
26

INJECTOR

Clean injector and check calibrated pressure as indicated on page 65.
When refitting check that it correctly protrudes from the cylinder head plane.

❍ Tighten the fixing nuts at 10 Nm.

❍ Tighten the high-pressure pipe union at 25 Nm.

https://truckmanualshub.com/

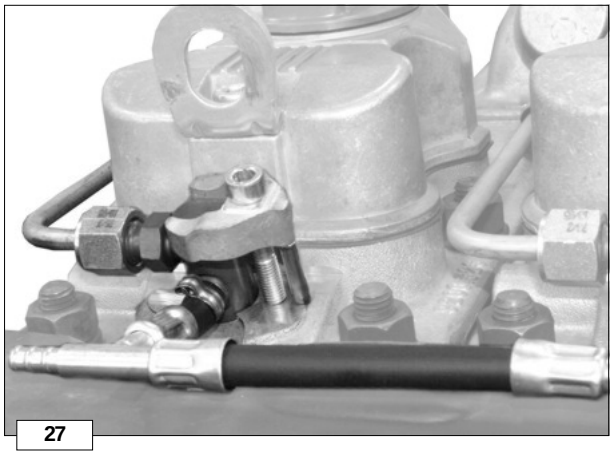

27

Injector for EPA and 97/68 CE engines

The injector is attached to the cylinder head via a forked bracket.

❍ Tighten the fixing bracket screw at 10 Nm.

❍ Fix the high-pressure hose union to the injector union at 25 Nm.

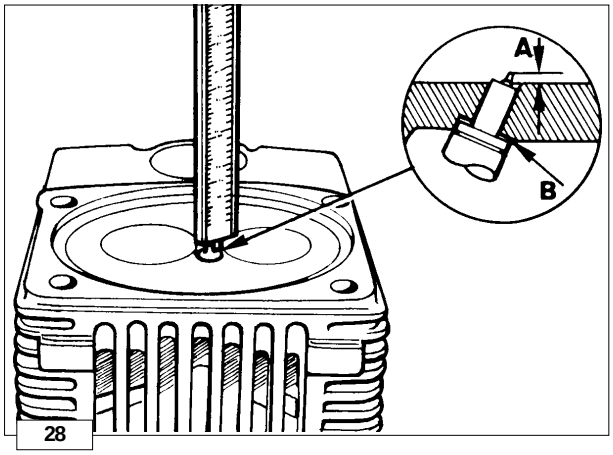

28

Injector projection

The end of nozzle **A** should project 3.0÷3.5 mm. from the cylinder head plane.
Adjust injector projection by means of copper shims **B** measuring 0.5, 1.00 and 1.50 mm in thickness.

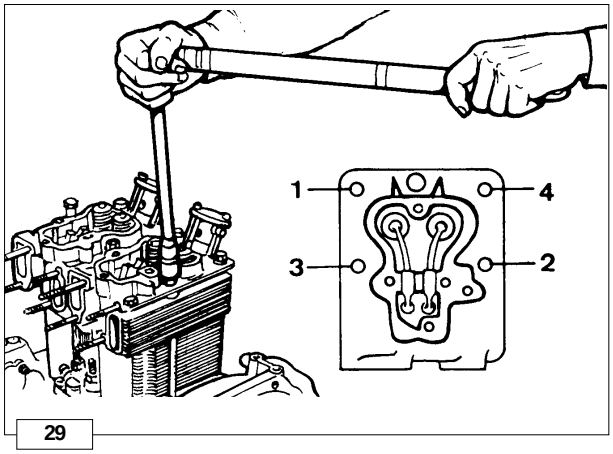

29

CYLINDER HEAD

Important
Do not remove it when hot to avoid deformation.
The cylinder heads must be tightened with the exhaust or intake manifold mounted to keep them lined up.

If cylinder head is deformed level it off by removing a maximum of 0.3 mm.
When refitting tighten only if sure that rocker arm lubrication tube is well inside its holes, and that the rubber seals of the tappet hose are assembled and inserted correctly into their seats.
Always replace copper head gasket: see page 39 for choosing the right thickness.

❍ Progressively tighten nuts in the **1**, **2**, **3**, **4** sequence at 55 Nm.

https://truckmanualshub.com/

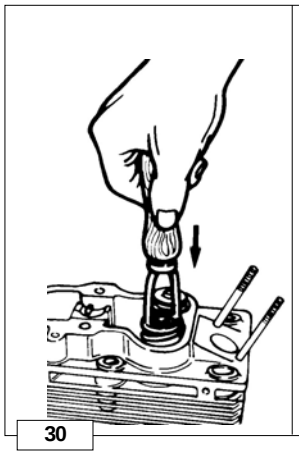
30

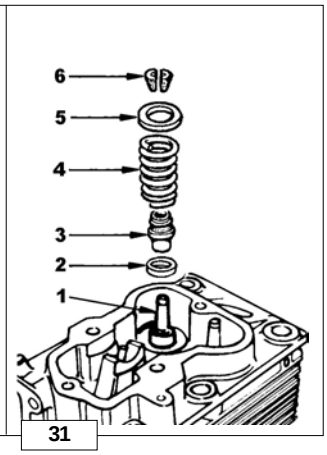

31

Valves

Components:
1 Intake valve
2 Spring seat
3 Valve stem seal ring
4 Spring
5 Retainer
6 Half collets

To remove half collets firmly press down as shown in the figure.

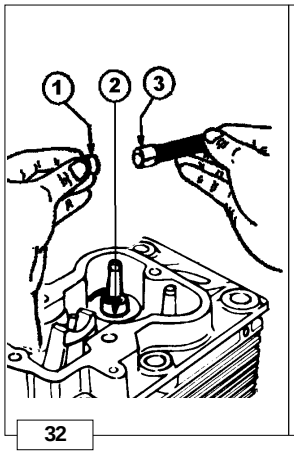

32

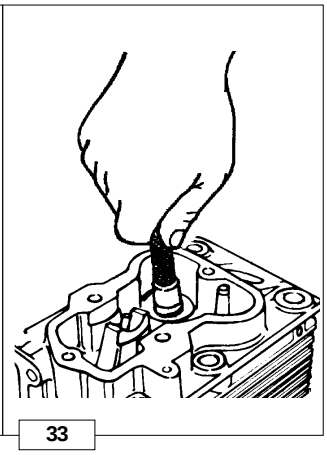
33

Valve stem sealing rings - Reassembly

Lubricate the inside of the sealing ring with Molikote BR2 Plus and insert them all the way onto the guides using tool 1460-108.
To prevent deformation of the sealing ring **1** as it is inserted onto the valve guide **2** insert it onto tool **3**.
Lubricate valve stem with the same type of grease; insert the valves into the guides rotating them particularly as they enter the sealing ring.

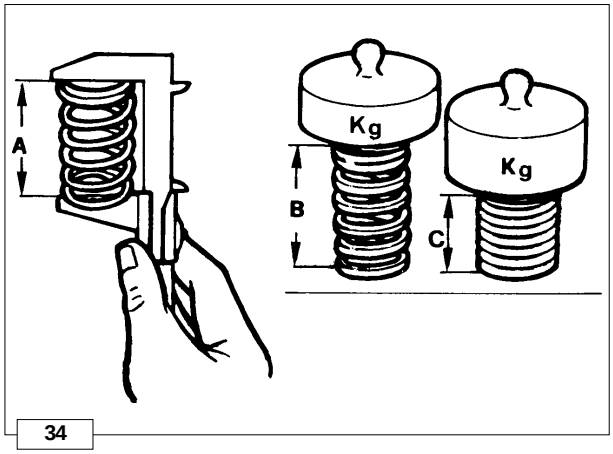

34

Valve springs

Measure free length with a gauge.
Using a dynamometer check that the spring length under two dìfferent loads corresponds to the values below:

Free length **A** = 52 mm
Length **B** compressed by a 210.6 N = 35.8 mm
Length **C** compressed by a 340.6 N = 25.8 mm

Replace spring if length is 1 mm or more below the stated values.

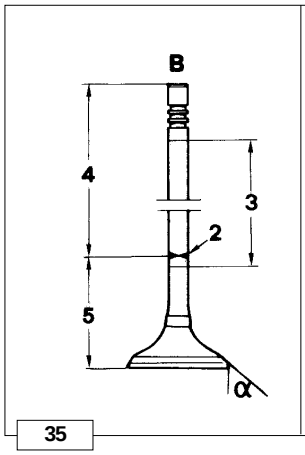

35

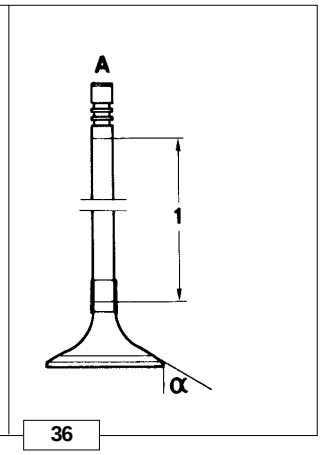

36

Valve material

Intake valves A
Material: X 45 Cr Si 9-3 UNI En 10090
1 Chromium-plated portion
a 45.5° ÷ 45.75°

Exhaust valve B
Shaft and head are made of 2 different materials.
2 Welded portion
3 Chromium-plated portion
4 Portion made of X 45 Cr Si 9 - 3 UNI EN 10090
5 Portion made of X 55 Cr Mn Ni N 20 - 8 UNI EN 10090
a 45.5° ÷ 45.75°

https://truckmanualshub.com/

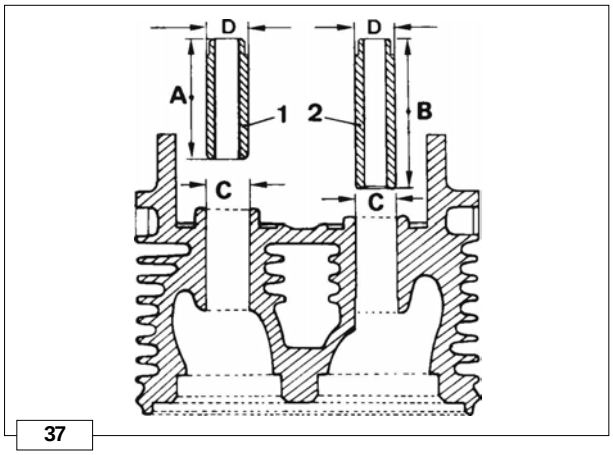

37

Valve guides and valve guide housings

Starting from engine No. 2883619 intake and exhaust valve guides are both made of phosphoric cast iron.

Components:
1 = Exhaust valve guide
2 = Intake valve guide

Ref.	*Dimensions* (mm)
A	42.0
B	48
C	14.000 ÷ 14.018
D	14.045 ÷ 14.056

Valve guides with outside diameter increased by 0.5 mm. are also available;in such cases valve guide bore **C** shouid also be increased by 0.5 mm.

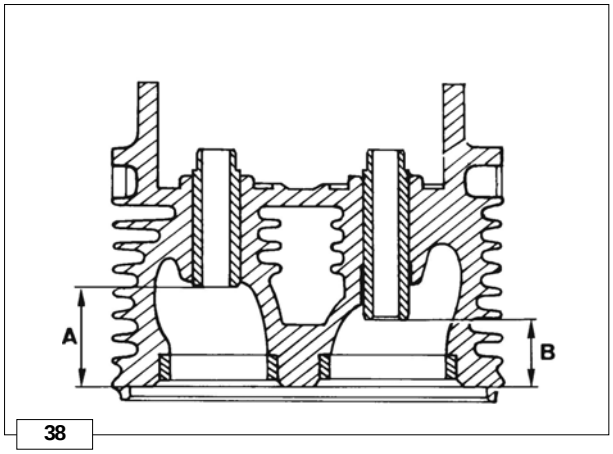

38

Valve guide insertion

Heat cylinder head up to 160÷180°C
Press guides considering the **A** and **B** distances from the head plane.

Ref.	*Dimensions* (mm)
A	30,80÷31,20
B	24,80÷25,20

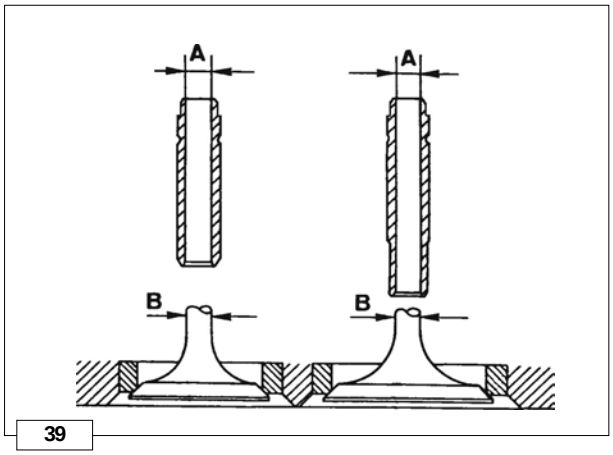

39

Dimensions and clearance between guides and valves

Ref.	*Dimensions* (mm)	*Clearance* (mm)	*Limit value* (mm)
A	8,025÷8,040*	0,025÷0,055	0,15
B	7,985÷8,000		

* with driven guide.

https://truckmanualshub.com/

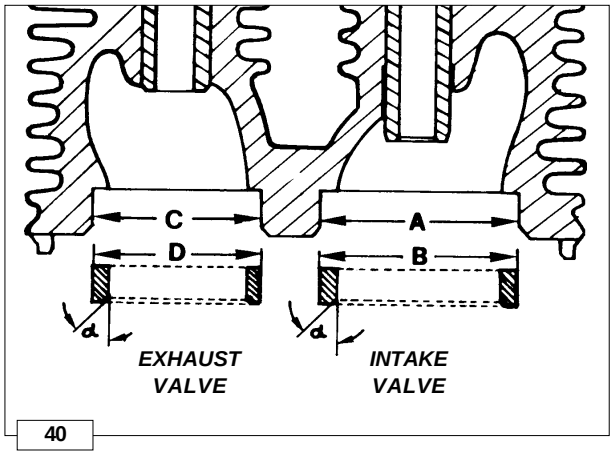

40

Valve seats and housings

Ref.	*Dimensions* (mm)
A	40.000 ÷ 40.016
B	40.081 ÷ 40.095
C	34.000 ÷ 34.016
D	34.081 ÷ 34.095

Press valve seats into the housings and cut at 45°.

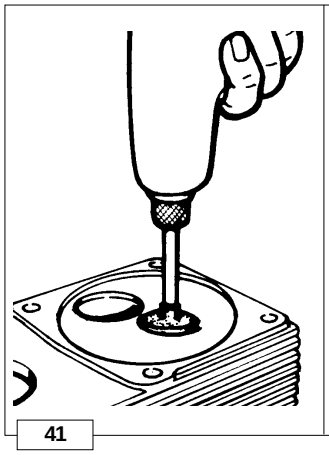

41

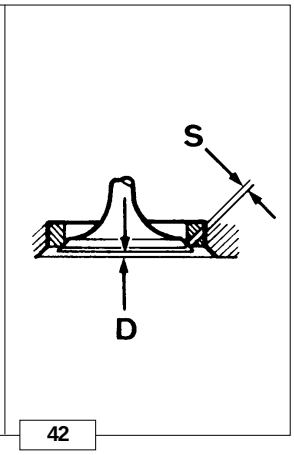

42

Valve seat grinding

After cutting grind valve seats with fine emery paste in oil suspension. The sealing surface **S** should not exceed 2 mm.
Valve recess after grinding **D** = 0.75÷1.25 mm; maximum worn limit 1.65 mm.

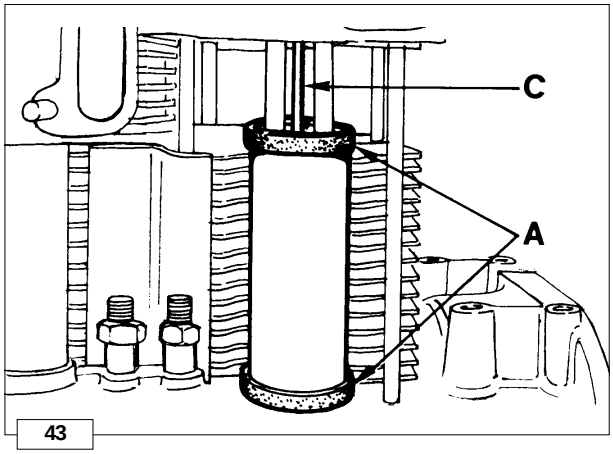

43

Pushrod tube

When refitting cheek that gaskets **A** and rocker arm lubricatíon tube **C** are well inside their seats.

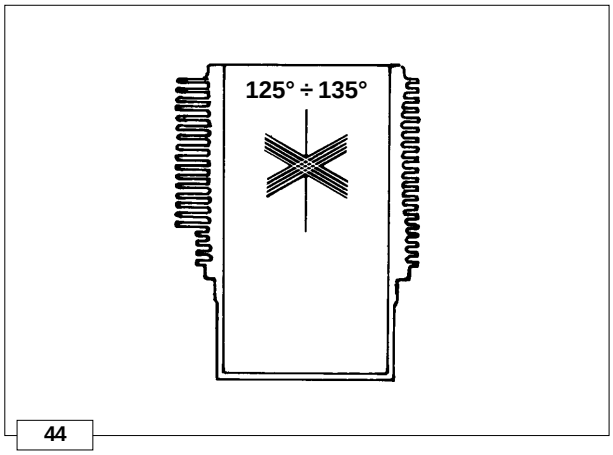

44

CYLINDER

Checks and cylinder roughness

Fins must be intact.
Cross hatch pattern must range between 125°÷135°: they must be uniform and clear in both directions.
Average roughness should range between 0.35 and 0.60 µm.

https://truckmanualshub.com/

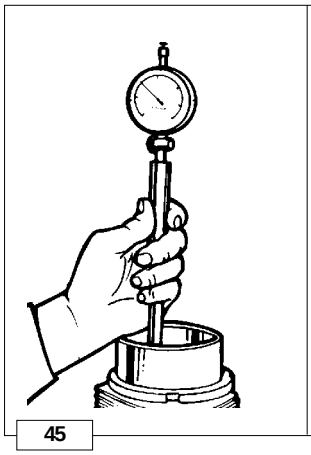
45

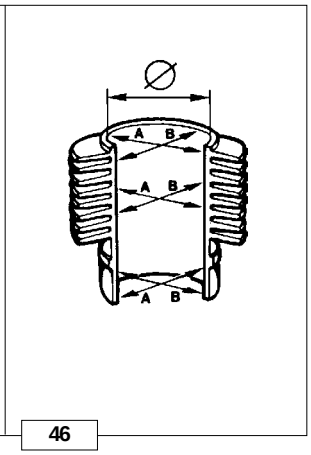

46

Measure diameter size between two diametrically opposed points at three different heights.

➲ As per the cylinder sizes, see Table “Piston and cylinder types and sizes".

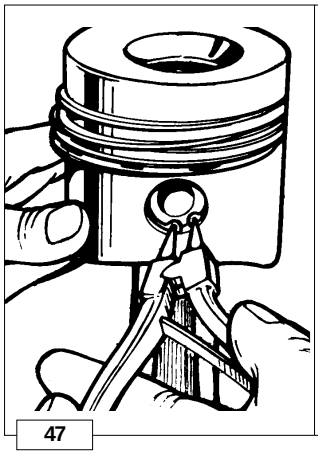
47

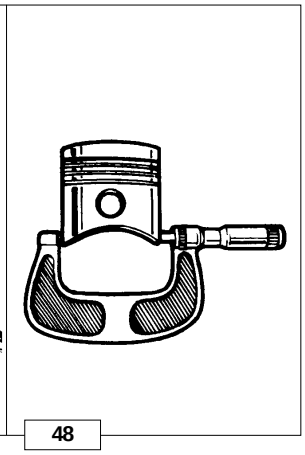
48

PISTON

Remove circlips and remove piston pin.
Remove piston rings and clean grooves.
Measure diameter at 17 mm from the bottom of skirt.

Table “Piston and cylinder types and sizes"

Class	*Ø Piston (mm)*	*Ø Cylinder (mm)*	*Clearance (mm)*
A	94.92 ÷ 94.93 *	95.00 ÷ 95.01 **	0.07 ÷ 0.09
B	94.93 ÷ 94.94 *	95.01 ÷ 95.02 **	
C	94.94 ÷ 94.95 *	95.02 ÷ 95.03 **	

* In case of diameter wear above 0.05 mm replace piston and piston rings.

** In case wear exceeds 0.10 mm, bore the cylinder and fit oversize piston and rings.
In case of less wear replace piston rings only.

Note: Oversize pistons of 0.5 and 1 .0 mm are available (only for standard and 97/68 CE engines).

Important
The cylinder heads must be tightened with the exhaust or intake manifold mounted to keep them lined up.
The cylinder and piston must be replaced with a new cylinder and piston of the same class.

https://truckmanualshub.com/

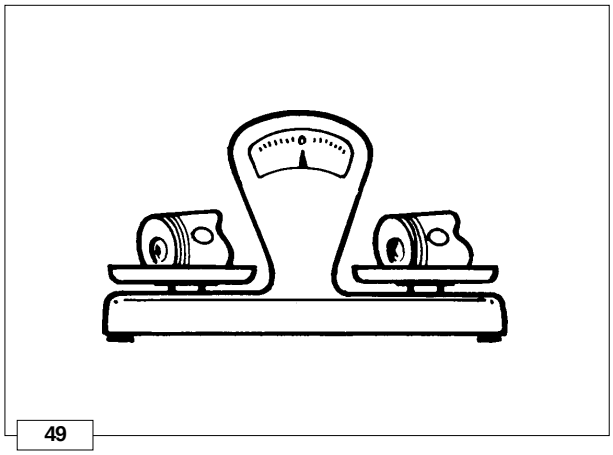
49

Piston weight

Weigh pistons when replacing them in order to avoid unbalance.

Important
The difference in weight should not exceed 6 g.

50

Piston rings - End gaps (mm)

Place piston rings squarely into the unworn part of the lower cylinder and measure the end gap.

		A
1°	Chromium-plated ring	0.40mm÷0.65mm
2°	Torsional internal tapered ring	0.40mm÷0.65mm
3°	Oil control ring	0.30mm÷0.60mm

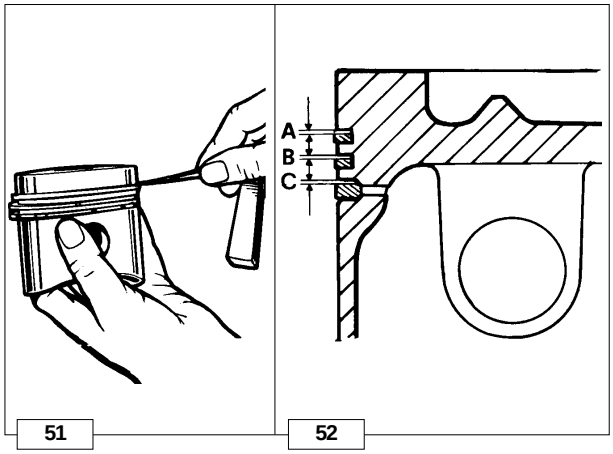

51 52

Pistons ringis - Clearance between grooves (mm)

Ref.	*Dimensions* (mm)	*Limit value* (mm)
A	0,07÷0,11	0,20
B	0,05÷0,09	0,16
C	0,04÷0,08	0,15

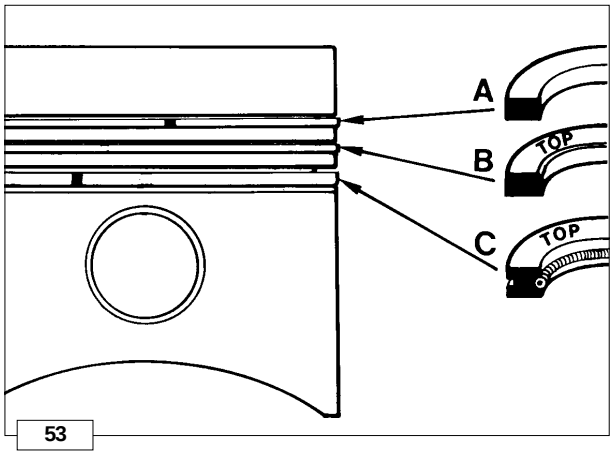

53

Piston rings - Fitting sequence

A = 1° Chromium-plated ring
B = 2° Torsional (internal tapered) ring
C = 3° Oil control ring

Important
Before fitting the piston into the cylinder stagger the ring gaps at 120°.

https://truckmanualshub.com/

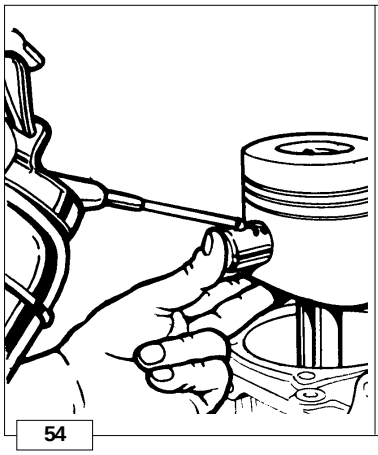
54

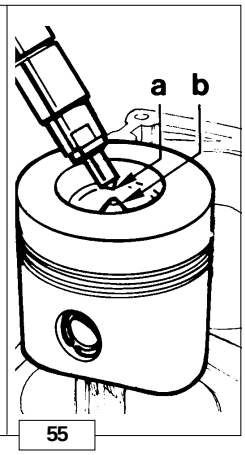

55

Piston - Refitting

Connect piston to connecting rod in a way that the combustion chamber centre **b** is at right angle under nozzle tip **a**.
Lubricate piston pin and introduce it into the piston by exerting pressure with your thumb.
Check that both circlips are well inside their seats.

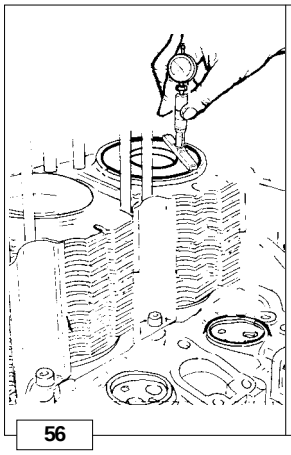
56

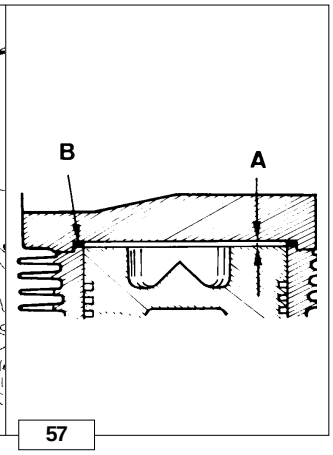

57

Piston clearance

Piston clearance = 0.65 ÷ 0.70 mm, for standard engines
= 0.55 ÷ 0.60 mm, for 97/68 CE and EPA engines

The piston in the **TDC** (top dead centre) position may extend or be short of the upper surface of the cylinder.
Use a dial indicator to measure the difference between the two surfaces (piston crown and upper cylinder surface) and use a suitable thickness copper gasket **B** for the cylinder head to adjust the clearance volume **A**.

(See image below)

Head seal thickness

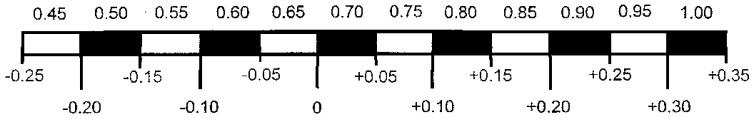

Distance between the piston at the top dead centre and the cylinder surface

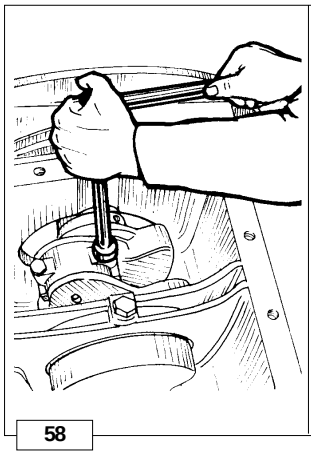
58

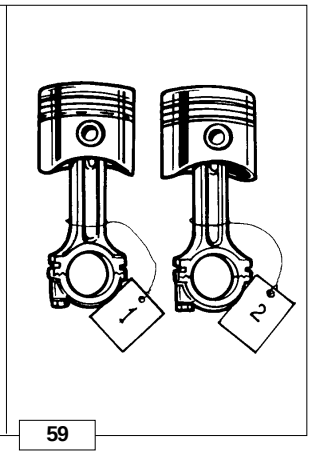

59

CONNECTING ROD

Remove the oil sump.
Remove the connecting rod cap.

Important
Both connecting rod/piston units should be fitted back into the corresponding cylinders; mark them so as to identify the correct combination during reassembly.

➲ See page 40 for specifications as to the tightening of the connecting rod big end bearing.

https://truckmanualshub.com/

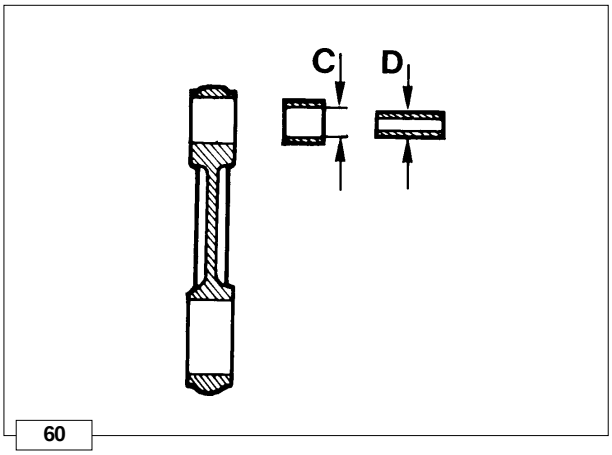

60

Connecting rod small end bushing

Dimensions and clearance (mm):
C = 25.020÷25.030 (with machined bushing in place)
D = 24.995÷25.000
(C-D) = 0.020÷0.035
(C-D) maximum worn limit = 0.070

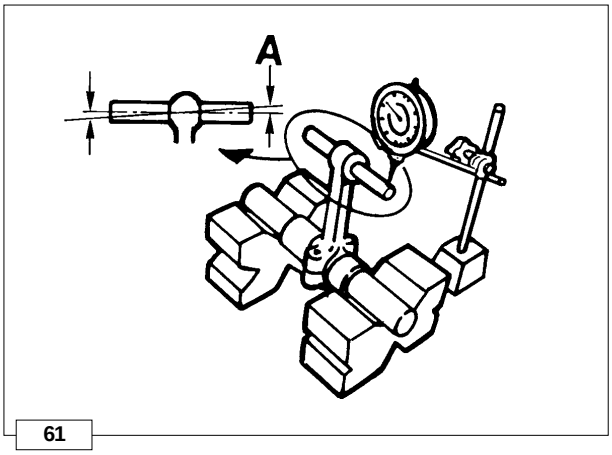

61

Connecting rod alignment

Check alignment of small end and big end bearing bores using fitted mandrels; axial mis-alignment **A** = 0.02 mm; maximum limit = 0.05 mm.

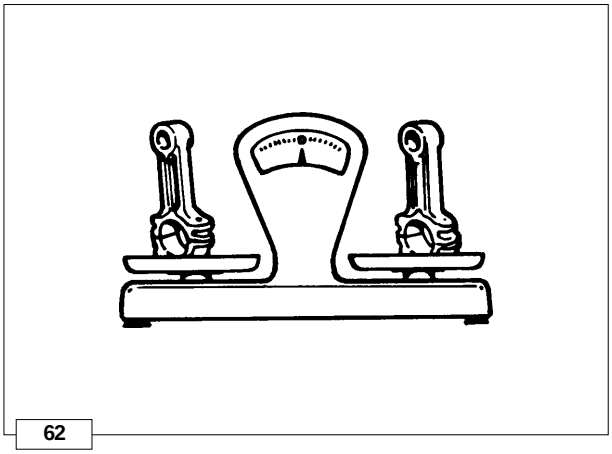

62

Connecting rod weight

Weigh connecting rods when replacing them in order to avoid unbalance.

Important
The difference in weight should not exceed 10 g.

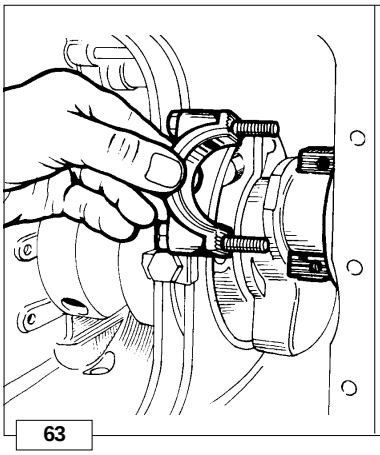

63

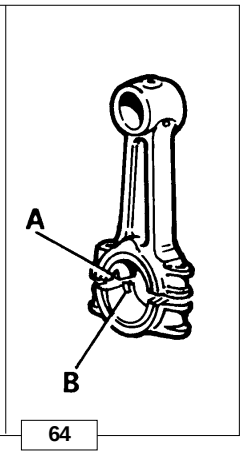

64

Connecting rod big end bearing

Both centering notches of the bearings **A** and **B** must be on the same side when refitting.

❍ Tighten bolts at 40 Nm.

➲ See page 44 for dimensions.

https://truckmanualshub.com/

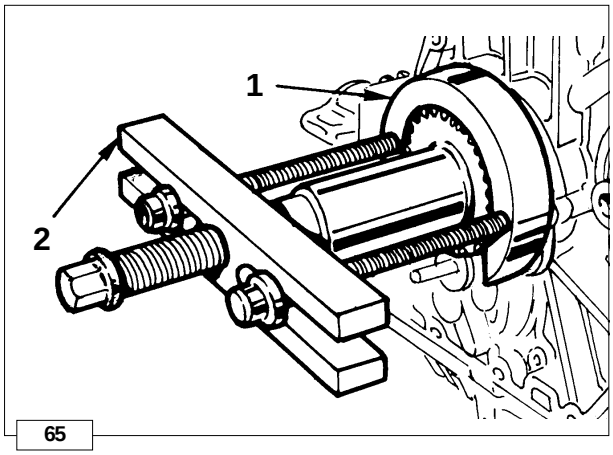

65

CRANKSHAFT TIMING GEAR

Disassembly:
Use tool **1** (Part N°. 7560-4000-052) and puller **2** (Part N°. 7271-1460-119) to remove the gear.

Reassembly:
Heat the gear uniformly and keep it at a temperature of 300 °C for 15 – 20 minutes.

Caution – Warning
Danger of burning: pay attention to the hot surfaces.

Insert the gear into its seat by inserting the activation key into the gear opening and push until it comes into contact with the driving shaft.
Let it slowly cool down.

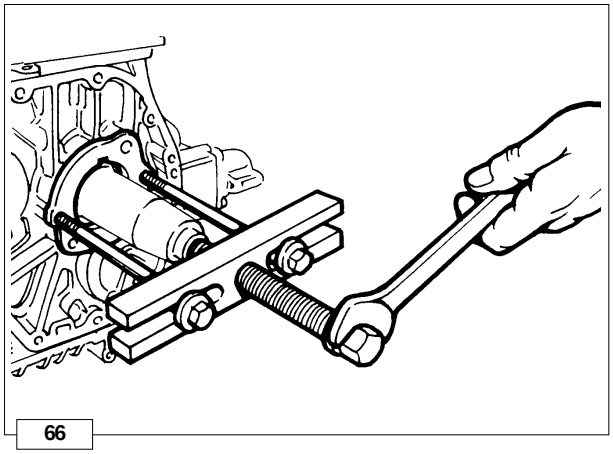
66

MAIN BEARING SUPPORTS

Main bearing support, gear side

Remove main bearing by means of two M8x1.25 screws with fully threaded length of 40 mm or a puller (Part N°. 7271-1460-119).

Note: To avoid deformation it is not recomended to replace the bearing bushing, complete assembly's of bushing and support are available in standard, 0.25 mm and 0.50 mm undersize configurations as spare parts.

❍ When refitting tighten the screws at 30 Nm.

➲ See page 44 ÷ 45 for dimensions.

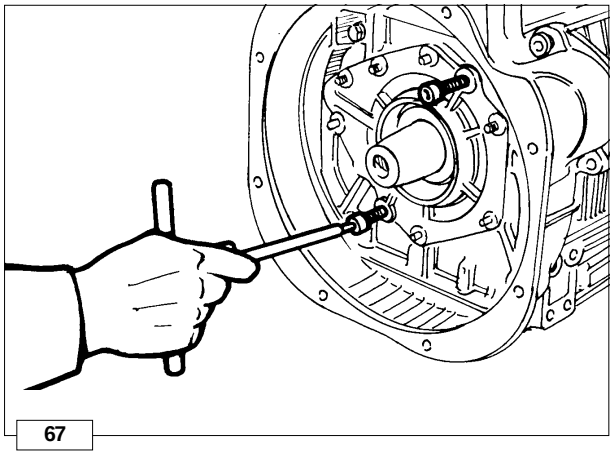
67

Main bearing support, flywheel side

Remove it by means of two M8x1.25 screws with fully threaded length of 40 mm.
Check oil seal ring and replace if warped, hardened or worn-out.

❍ When refitting, tighten nuts at 30 Nm.

➲ See end float on page 45 for gasket replacement detaiis.

➲ See page 44 ÷ 45 for dimensions.

https://truckmanualshub.com/

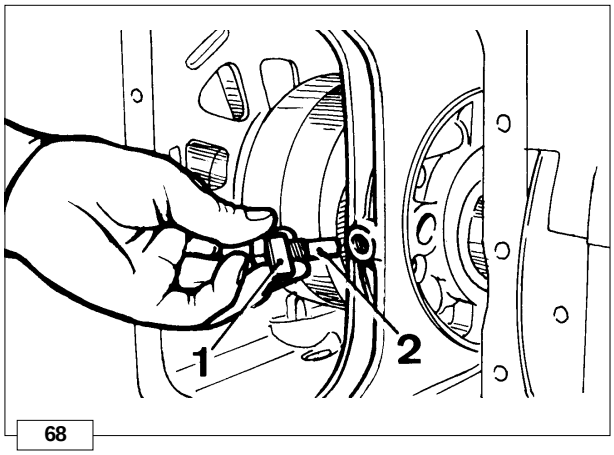

68

CRANKSHAFT

Center main bearing support, locating screw.

Straighten plate **1** and unscrew screw **2** before removing crankshaft.

❍ When assembling tighten the screw at a torque of 30 Nm.

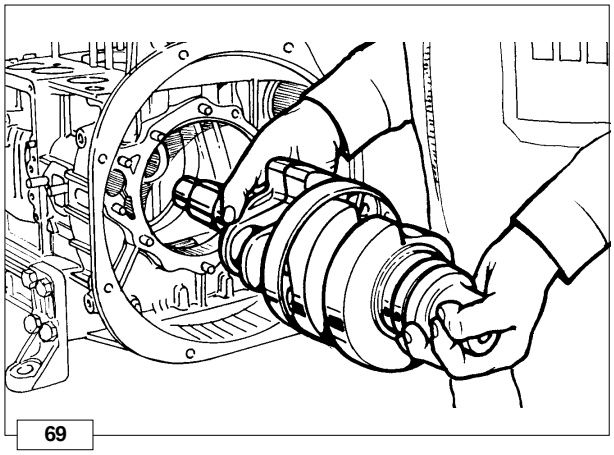

69

Crankshaft removal

To pull out the crankshaft tap lightfy on the timing side end using a copper-headed hammer.
When refitting align center main bearing support so that the locating screw hole coincides with the crankcase hole.

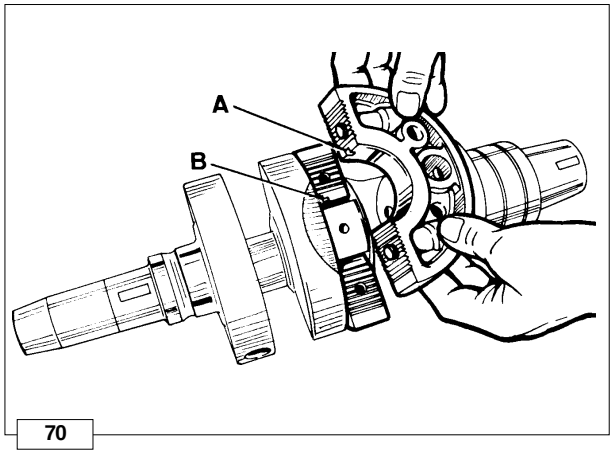

70

Crankshaft center main bearing support

When refitting, both centering notches **A** and **B** must be located on the same side.

❍ Tighten screws at 25 Nm.

➲ See page 44 ÷ 45 for dimensions.

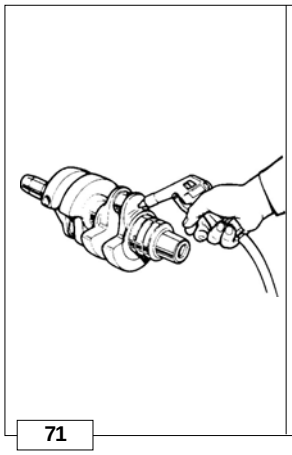

71

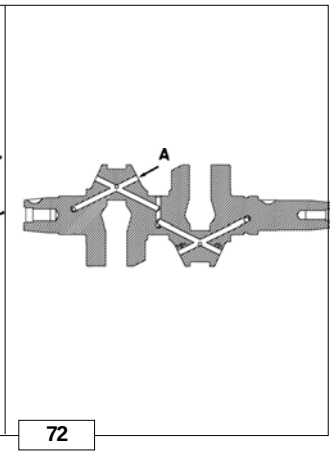

72

Crankshaft lubrication ducts

Danger - Attention
During repair operations, when using compressed air, wear eye protection.

Remove plugs, clean duct **A** with a pointed tool and blow in compressed air. Screw plugs again and check for sealing.

https://truckmanualshub.com/

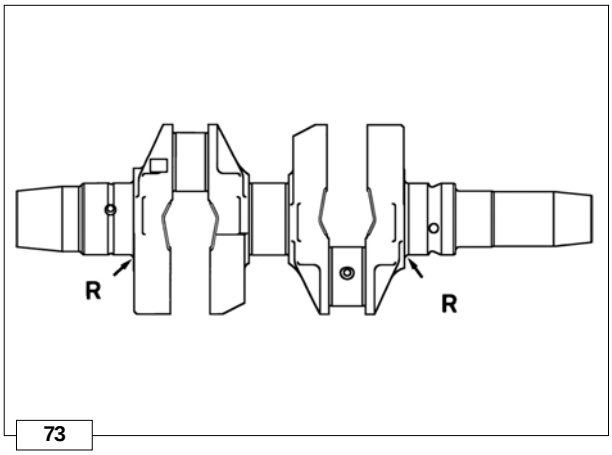

73

Crankshaft journal radius

The radius **R** connecting journals to shoulders is 2.8÷3.2 mm.

Important
When grinding external main journals restore the R value to original specification.

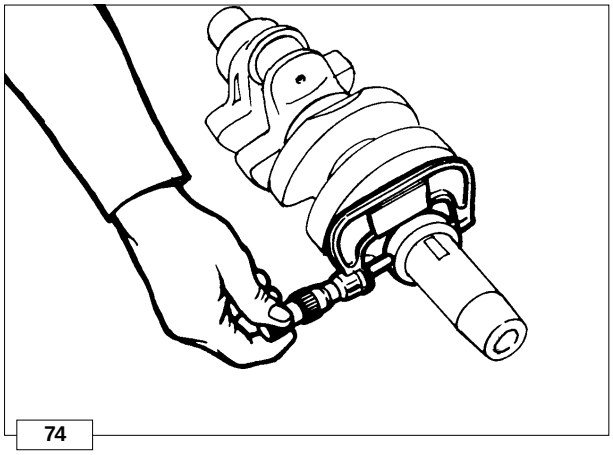

74

Checking main journals and crank pins

Use an outside micrometer gauge.

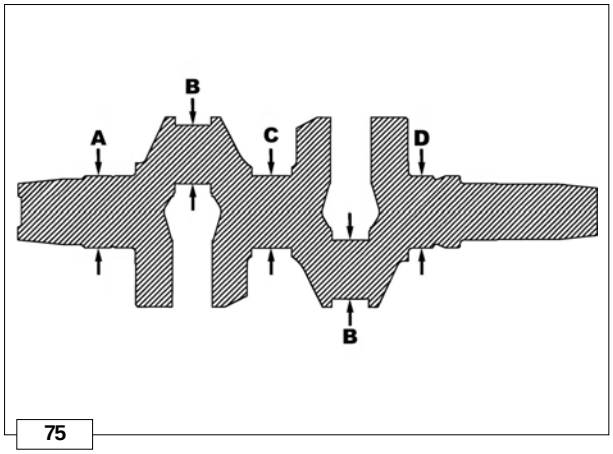

75

Main journal and crank pin diameter

Ref.	*Dimensions* (mm)
A	54.931÷54.950
B	45.500÷45.516
C	55.331÷55.350
D	54.931÷54.950

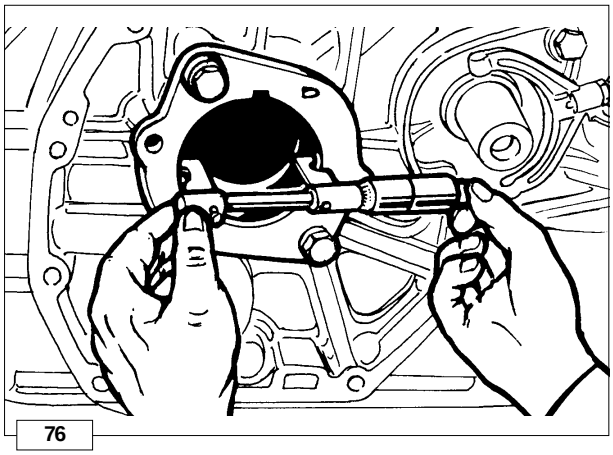

76

How to measure main bearing inside diameter

Use an inside micrometer gauge.

https://truckmanualshub.com/

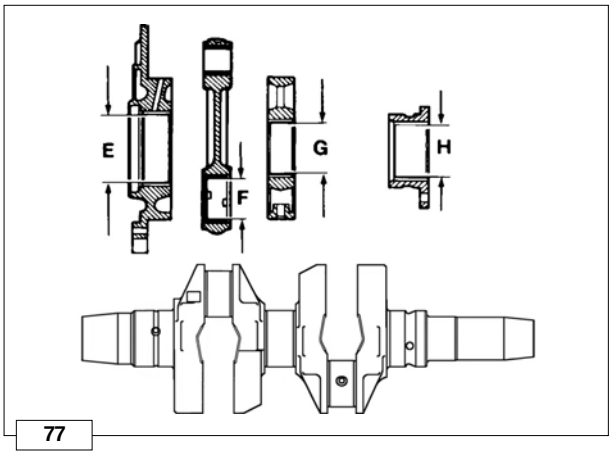

77

Main bearing and connecting rod big end bearing inside diameter

Ref.	*Dimensions* (mm)
E	55.000÷55.020
F	45.548÷45.578
G	55.404÷55.435
H	55.000÷55.020

The above dimensions refer to driven in or tightened bearings.

Note: Both main bearings and connecting rod big end bearings are available with inside diameter size measuring 0.25 and 0.50 mm less than the standard version.

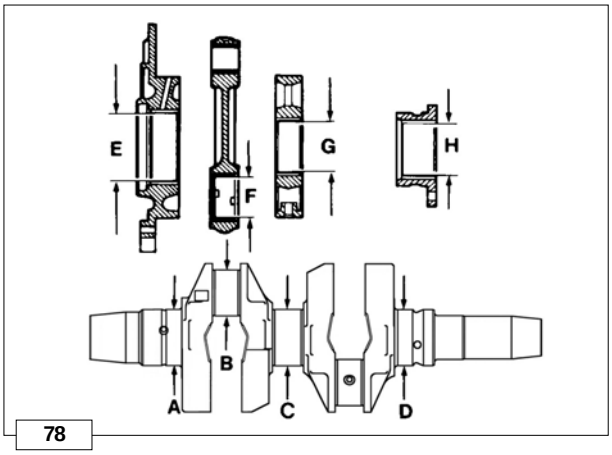

78

Clearance between main journals/crank pins and connecting rod bearings

Ref.	*Clearance* (mm)	*Limit value* (mm)
E-A	0.050÷0.089	0.180
F-B	0.032÷0.078	0.150
G-C	0.054÷0.104	0.190
H-D	0.050÷0.089	0.180

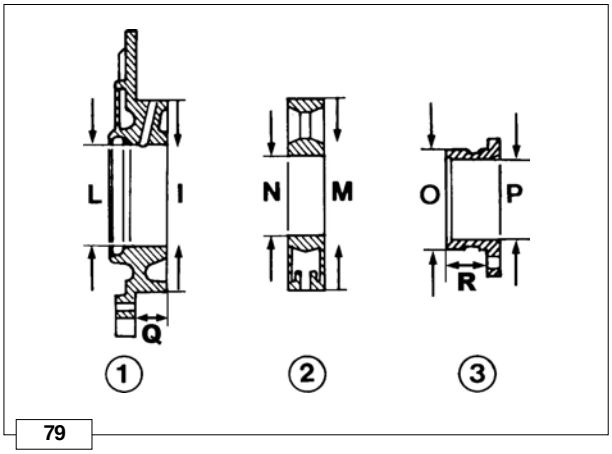

79

Main bearíng supports - Dimensions

1 Flywheel side
2 Central
3 Gear side

Ref.	*Dimensions* (mm)
I	149.000 ÷ 149.020
L	60.000 ÷ 60.020
M	147.000 ÷ 147.018
N	59.074 ÷ 59.093
O	75.990 ÷ 76.010
P	60.000 ÷ 60.020
Q	23.95 ÷ 24.05
R	31.10 ÷ 31.20

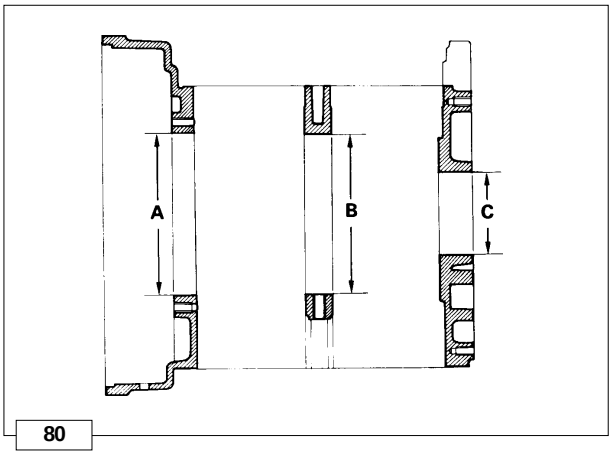

80

Main bearing housings

Ref.	*Dimensions* (mm)
A	149,000÷149,020
B	147,000÷147,020
C	76,000÷76,020

https://truckmanualshub.com/

Table "Clearance between main bearings and main bearing housings"

Ref.	*Clearance* (mm)	*Limit value* (mm)
A-I	-0.020 ÷ 0.020	0.03
B-M	-0.018 ÷ 0.020	0.03
C-O	-0.010 ÷ 0.030	0.04

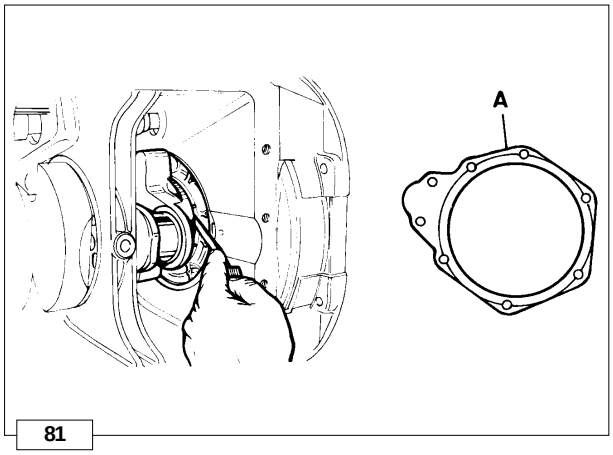

81

Crankshaft end play

When refitting crankshaft check end play by means of a thickness gauge; this value should be 0.08 ÷ 0.38 mm and can be set by changing the thickness of gasket **A** which is located on the flywheel-side main bearings. Gaskets with thickness of 0.30 and 0.50 mm can be supplied.

Important
Replace the main bearings 1 and 3 (Fig. 79) if the axial clearance value still turns out to be too high even with a seal having a smaller thickness (fig. 79).

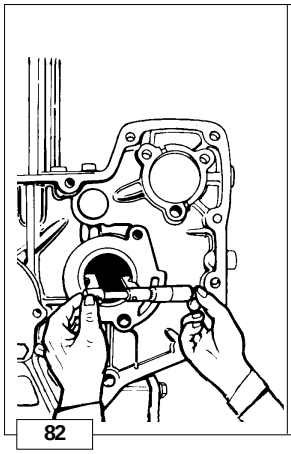
82

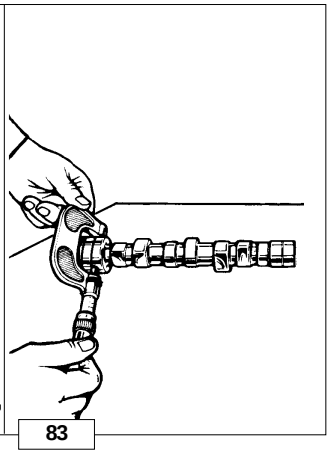
83

CAMSHAFT

How to measure camshaft journals and housings

Use an inside micrometer gauge for housings and an outside micrometer gauge for journals.

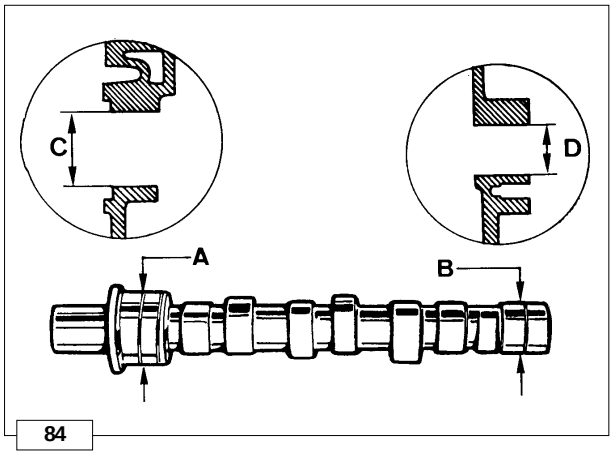

84

Dimensions of camshaft journals and housings

Ref.	*Dimensions* (mm)	*Clearance* (mm)	*Limit value* (mm)
A	41.940÷41.960	0.040÷0.085	0.160
C	42.000÷42.025		
B	27.940÷27.960	0.040÷0.085	0.150
D	28.000÷28.025		

https://truckmanualshub.com/

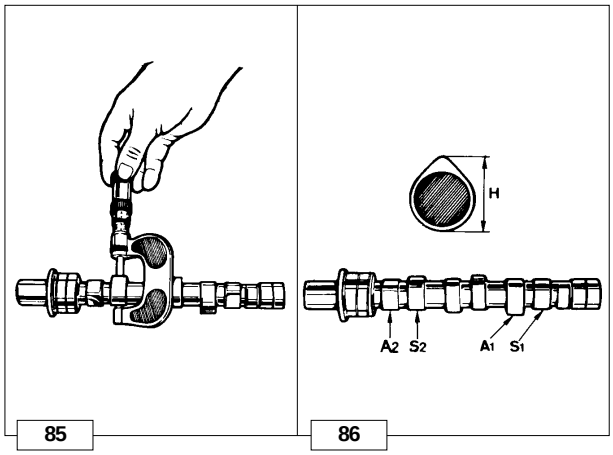

How to measure intake/exhaust cam height

A1 = 1 st cylinder intake cam
S1 = 1 st cylinder exhaust cam
A2 = 2nd cylinder intake cam
S2 = 2nd cylinder exhaust cam

Exhaust and intake cams feature the same height **H**.

H = 33.625 ÷ 33.650 mm

Replace camshaft if **H** is 0.1 mm below the given value.

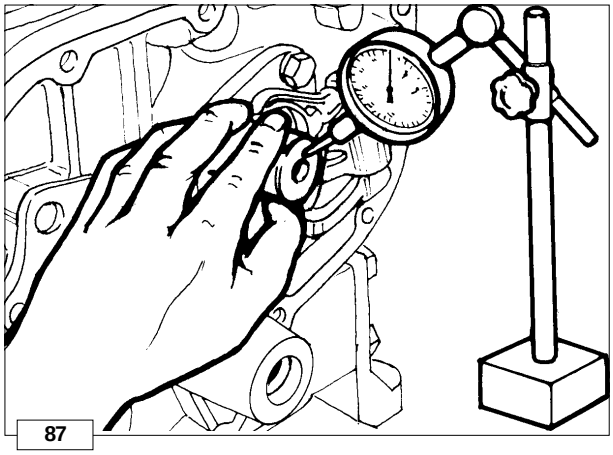

Camshaft end play

End play should be 0.10÷0.25 mm; check by means of a dial gauge pushing or pulling camshaft as required.

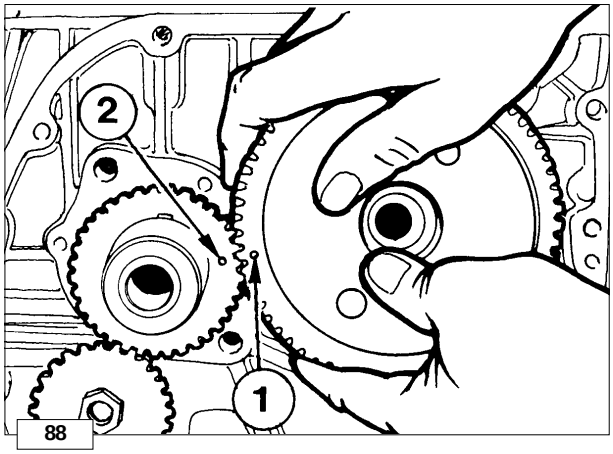

CAMSHAFT TIMING

Fit camshaft gear by making timing mark **1** coincide with timing - mark **2** on the crankshaft timing gear.

❍ Tighten camshaft boll at 60 Nm.

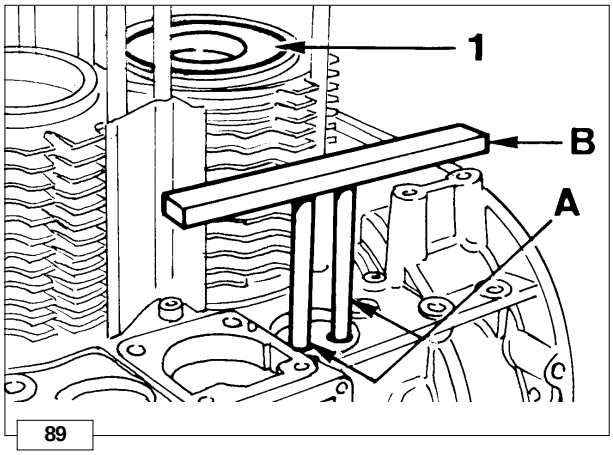

Valve timing without considering timing marks

Locate piston **1** (on flywheel side) at the top dead centre.
Position two small cylinders **A** of the same height onto the tappets.
Rotate camshaft stopping when cylinder **1** tappets are in overlap position (intake open, exhaust closed).
By means of ruler **B** check that tappets are at the same height.
Engage camshaft gear with crankshaft gear.

https://truckmanualshub.com/

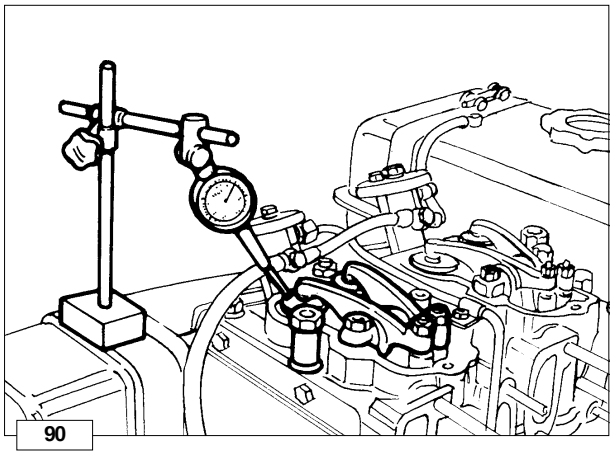

90

Valve timing check

Check valve timing at the crankshaft.
The values shown are checked at the flywheel circumference (with flywheel of 291 mm. diameter each degree corresponds to 2.5 mm).
Set valve clearance at 0.65÷0.70 mm (after checking restore the value at 0.15÷0.20 mm).
Set dial gauge on intake valve to a zero value; by rotating the driving shaft according to its direction of rotation you can measure **α** (intake valve opening advance referred to top dead centre **S**) and **ß** (intake valve closing delay referred to bottom (**I**) dead centre).
Follow the same procedure for exhaust valves checking **γ** (exhaust valve opening advance) and **δ** (exhaust valve closing delay).

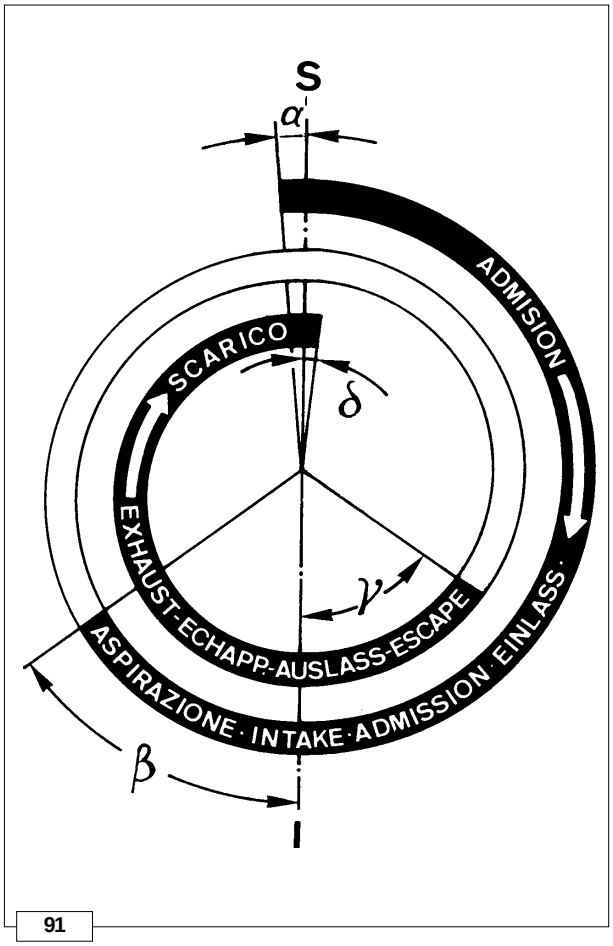

91

Valve timing - Angles

The angle values are determined by turning the driving shaft clockwise

S = Piston at top dead centre
I = Piston at bottom dead centre

α = Intake valve open
β = Intake valve closed
γ = Exhaust valve open
δ = Exhaust valve closed

Timing angles for checking puposes
(valve clearance = 0,65÷0,70 mm)

α = 1° before **S**
β = 21° after **I**
γ = 23° before **I**
δ = 1° after **S**

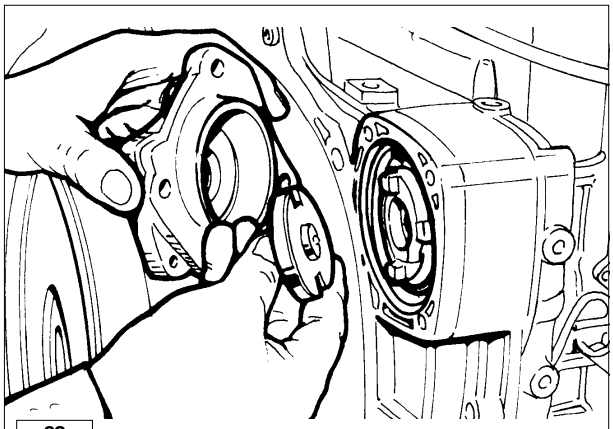

92

HYDRAULIC PUMP

Hydraulic pump p.t.o

A hydraulic pump of group 1 (**1P**) or 2 (**2P**) can be installed on the gear side, 3rd p.t.o.

https://truckmanualshub.com/

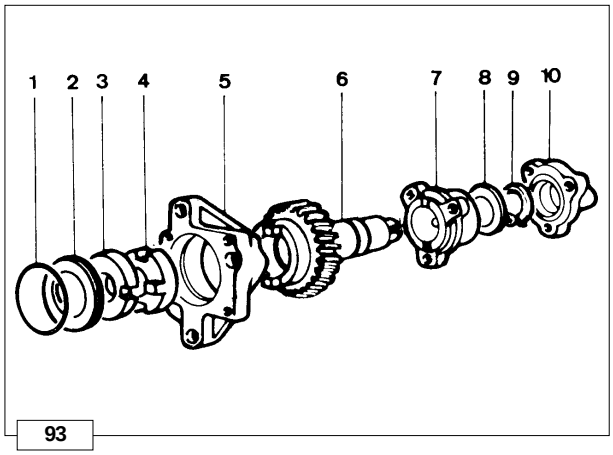

93

Hydraulic pump components (1 P)

1 Seal ring
2 Centering ring
3 Coupling
4 Half coupling
5 Flange
6 Gear
7 Bracket
8 Thrust washer
9 Stop ring
10 Cover

The maximum total torque is thus 30 Nm corresponding to 12.5 HP at 3000 r.p.m. Reduction ratio 1:1.

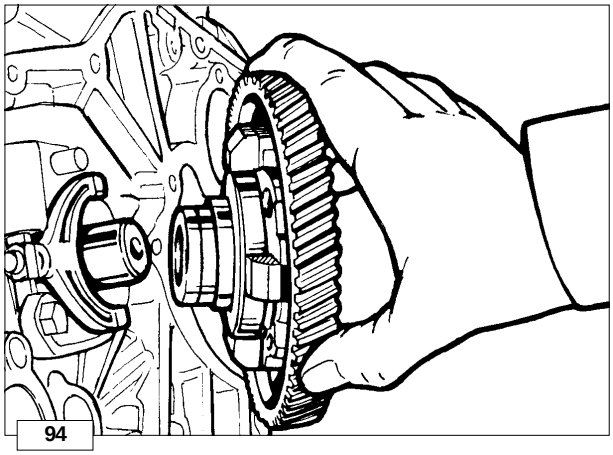

94

MECHANICAL SPEED GOVERNOR

Weight-type governor housed inside the camshaft drive gear.

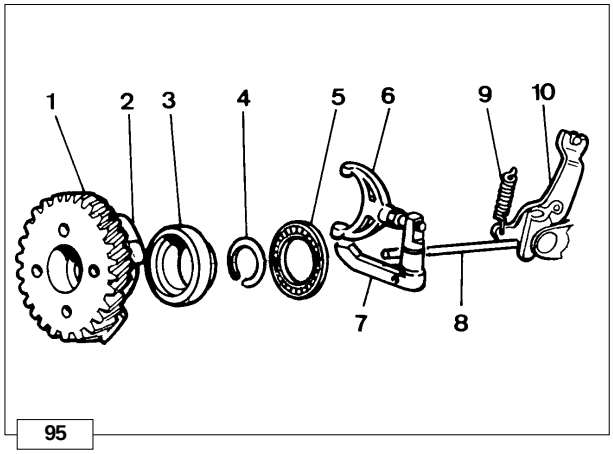

95

Mechanical speed governor components

1 Gear
2 Weight
3 Mobile bell
4 Stop ring
5 Thrust washer
6 Yoke
7 Lever
8 Drive rod
9 Governor spring
10 Rack control lever

Weights are moved to the periphery by the centrifugal force and thus axially shift a mobile bell connected to the injection pump rack control lever by a linkage.
A spring placed under tension by the accelerator control offset the weight centrifugal force.
Balance between the two forces keeps speed at an almost constant level in spite of load variations.

➲ See page 62 for timing.

https://truckmanualshub.com/

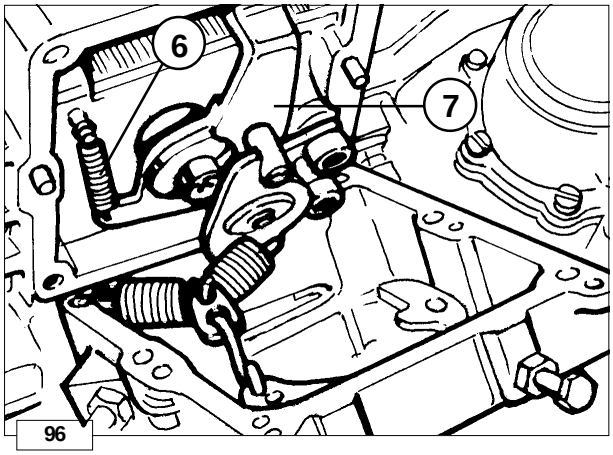

96

Governor springs with rocker arm system

The system features two springs anchored to a rocker arm and allows for minimal r.p.m. changes at low speed levels.

The device is operated automatically: when the engine is stopped spring **6** acts on injection pump control yoke **7** providing maximum fuel delivery, until the engine starts and the governor controls the iniection pump rack.

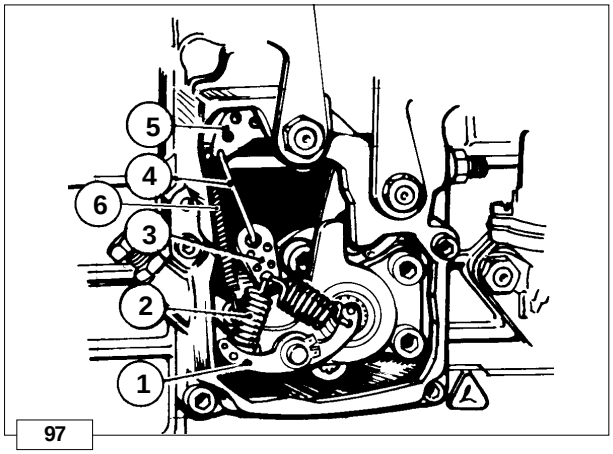

97

Components:

1 Rocker arm for spring anchoring
2 Governor springs
3 Plate
4 Link
5 Throttle lever
6 Supplementary start-up fuel spring

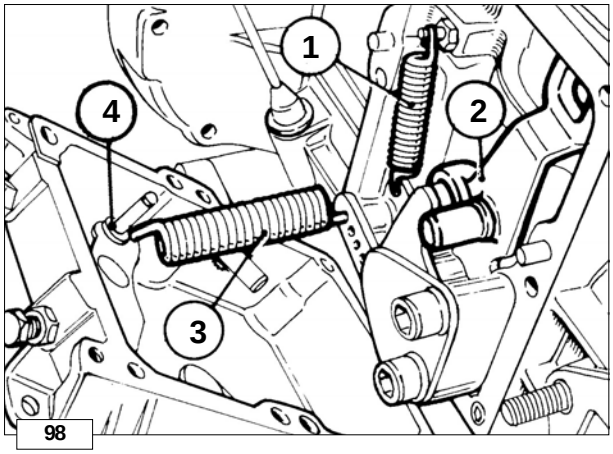

98

Governor springs with single-spring system

1 Extra fuel spring
2 Injection pump control lever
3 Governor spring
4 Throttle lever

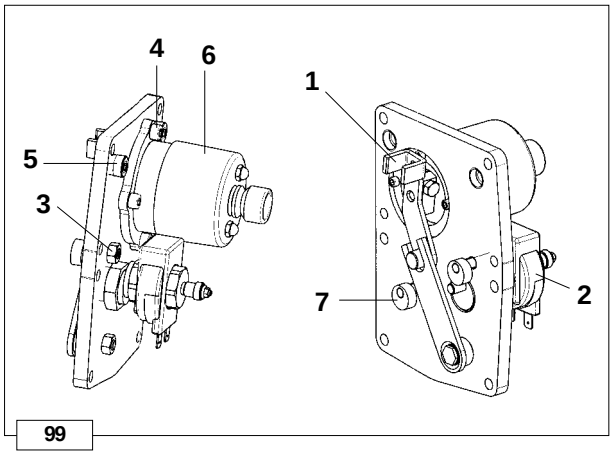

99

ELECTRONIC SPEED GOVERNOR
(optional)

1 Injection pump control lever
2 Electromagnet
3 Eccentric screw
4 Conical plug
5 Conical plug
6 Actuator
7 Eccentric screw

Assemble the entire plate by centring it on the reference pins and make sure that the injection pump rack rod pin is inside lever "**1**". Fix the plate by using the specific screws for its model.

https://truckmanualshub.com/

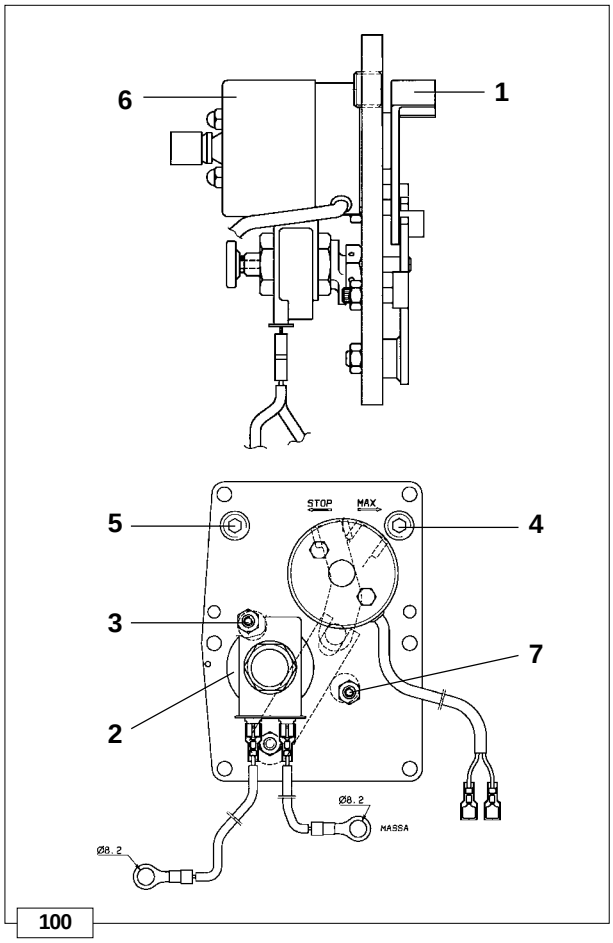

100

Adjustment of the stroke end (STOP):

1 - Remove the conical plug "**5**".
2 - Through the eccentric "**7**" position and check by sight that the lever in stop position is at the extreme left.
3 - From this position, always acting on the eccentric screw "**7**", move the control lever 1,0 ÷ 1,5 mm to right.
4 - Lock the lock nut of the screw "**7**".
5 - Reassamble the conical plug "**5**".

Adjustment of extra fuel delivery:

1 - Remove the conical plug "**4**".
2 - Power the electromagnet "**2**" with a 12V voltage and make sure that the plunger has moved. In this case you will hear the typical activated magnet sound.
3 - Feed actuator "**6**" with a tension of 12V (put between the actuator and the 12V a 10 Amp. fuse): the actuator tension will cause the pump delivery control lever to move to the right.
4 - By the eccentric screw "**3**" place and check by sight that the lever in Max position is at the extreme right; from this position, always acting on the screw "**3**", move the delivery control lever by 1,0 ÷ 1,5 mm to the left .
5 - Lock the lock nut of screw "**3**".
6 - Remove feeding from actuator "**6**" e electromagnet "**2**".
7 - Reassamble the conical plug "**4**".

Speed governor wiring diagram

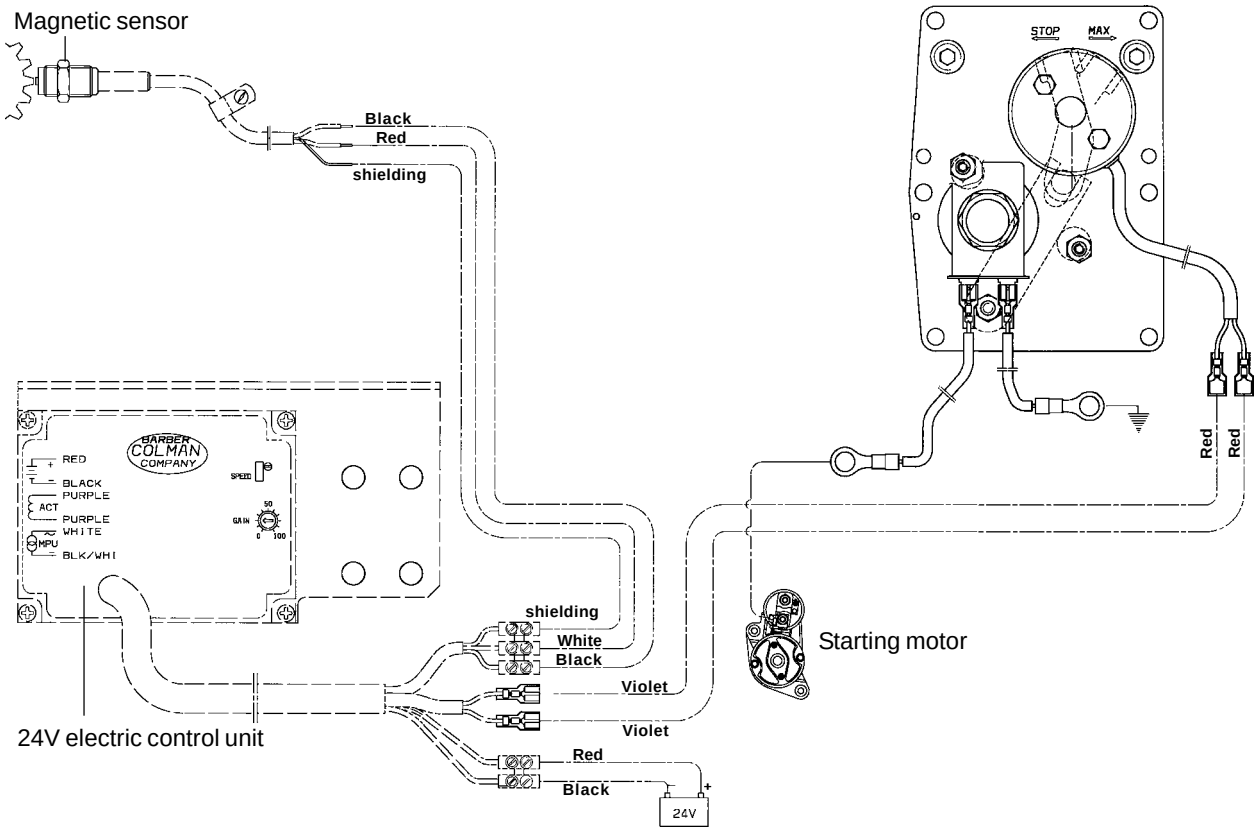

101

https://truckmanualshub.com/

https://truckmanualshub.com/

LUBRICATION SYSTEM AND BREATHER RECIRCULATION SYSTEM

Danger – Attention

- **The engine can be damaged if allowed to operate with insufficient oil. It is also dangerous to add too much oil because its combustion may lead to a sharp increase in the rotation speed.**
- **Use suitable oil in order to protect the engine. Nothing more than lubrication oil can influence the performances and life of an engine.**
- **Use of an inferior quality oil or failure to regularly change the oil will increase the risk of piston seizure, will cause the piston rings to jam and will lead to rapid wear on the cylinder liner, the bearings and all other moving parts. Engine life will also be notably reduced.**
- **The oil viscosity must suit the ambient temperature in which the engine operates.**

Danger – Attention

- **Old engine oil can cause skin cancer if repeatedly left in contact with the skin and for long periods of time. Wear protective gloves to avoid touching used oil.**
- **If contact with the oil is unavoidable, you are advised to wash your hands with soap and water as soon as possible. Dispose of old oil in the correct way as it is highly polluting.**

Standard lubrication system circuit

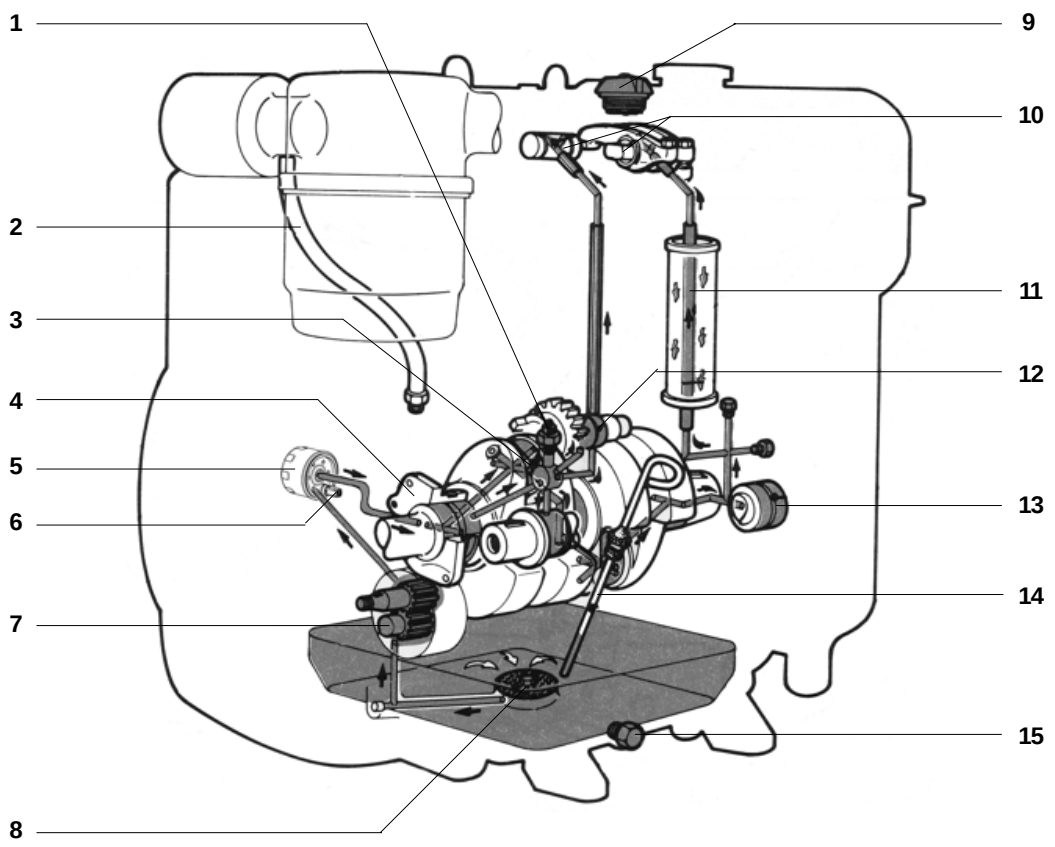

102

Components:

1) Oil preassure gauge
2) Breather
3) Connecting rod big end bearing
4) Crankshaft main bearing on gear side
5) Cartridge filter
6) Oíl pressure relief valve
7) Oil pump
8) Internal filter
9) Oil fill plug
10) Rocker arm shafts
11) Pushrod protection tube
12) Hydraulic pump gear
13) Camshaft joumal on fiywheel side
14) Oìl dipstick
15) Oil drain plug

https://truckmanualshub.com/

Lubrication system with oil radiator circuit

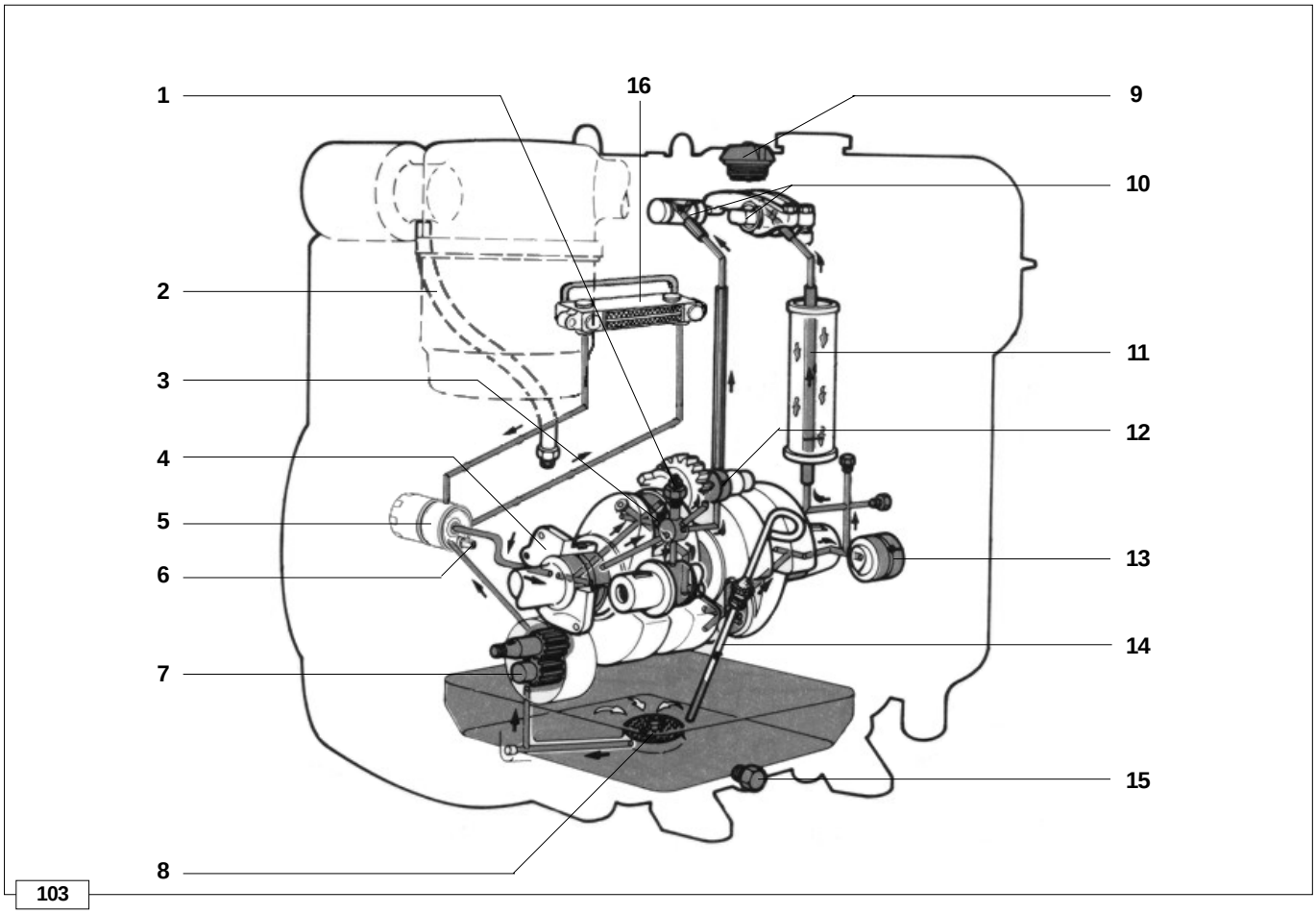

Components:

1) Oil pressure gauge
2) Breather
3) Connecting rod big end bearing
4) Crankshaft main bearing on gear side
5) Cartridge filter
6) Oíl pressure relief valve
7) Oil pump
8) Internal filter
9) Oil fill plug
10) Rocker arm shafts
11) Pushrod protection tube
12) Hydraulic pump gear
13) Camshaft joumal on fiywheel side
14) Oìl dipstick
15) Oil drain plug
16) Oil radiator

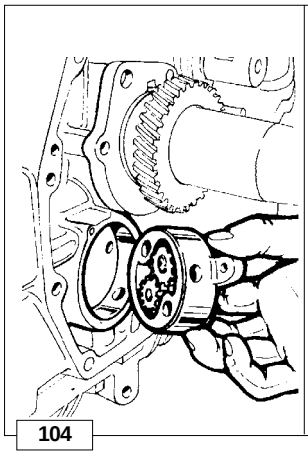
104

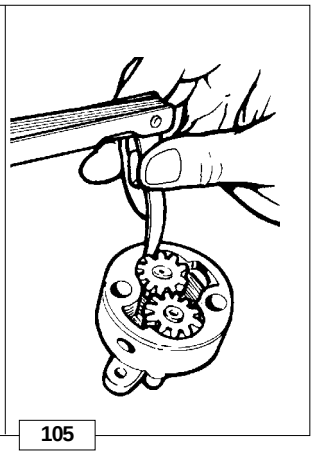
105

OIL PUMP

Check that the gear teeth are intact and that clearance between gear edge and pump body does not exceed 0.15 mm.
Furthermore check that the control shaft is free to rotate with end float not exceeding 0.15 mm.
Oil pump delivery at 3000 r.p.m. is 9 liters/min.

https://truckmanualshub.com/

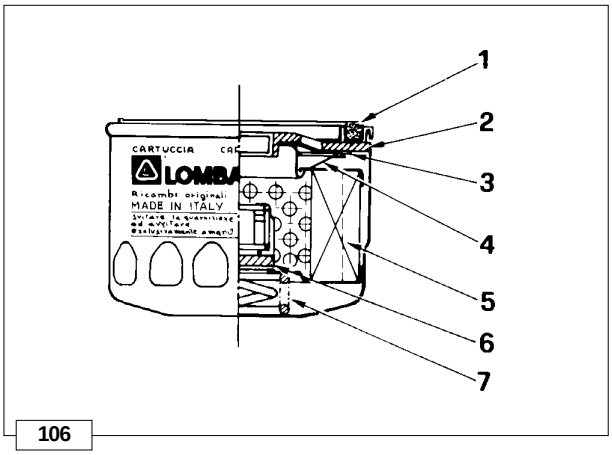

106

OIL FILTER CARTRIDGE (EXTERNAL)

Components:
1 Gasket
2 Plate
3 Gommino
4 Spring
5 Filter element
6 Bypass valve
7 Spring

➲ For characteristics see page 17.

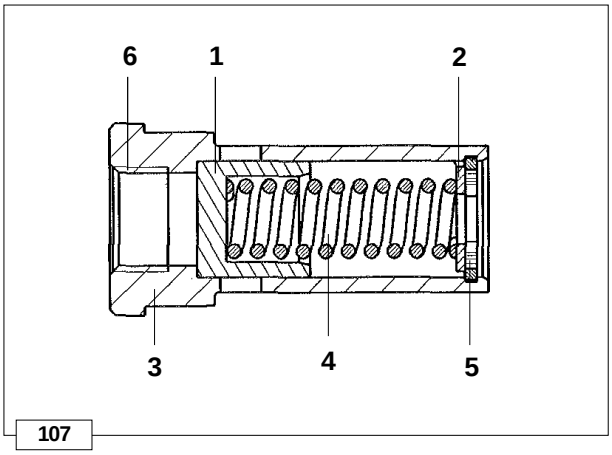

107

OIL PRESSURE RELIEF VALVE

Details:

1 Plunger
2 Washer
3 Valve body
4 Spring
5 Ring snap
6 M9x1 threading for puller

Operation start pressure ..... 5 bar.

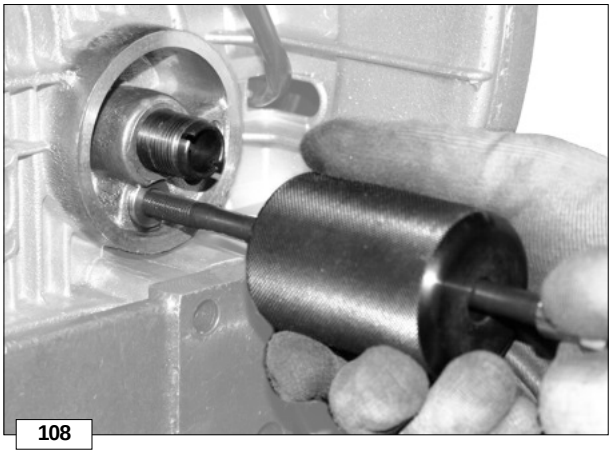

108

Disassembly:

Before removing the oil pressure regulating valve, remove the oil filter by using an appropriate wrench.

Remove the regulating valve using a hammer puller equipped with a M9x1 threaded terminal.

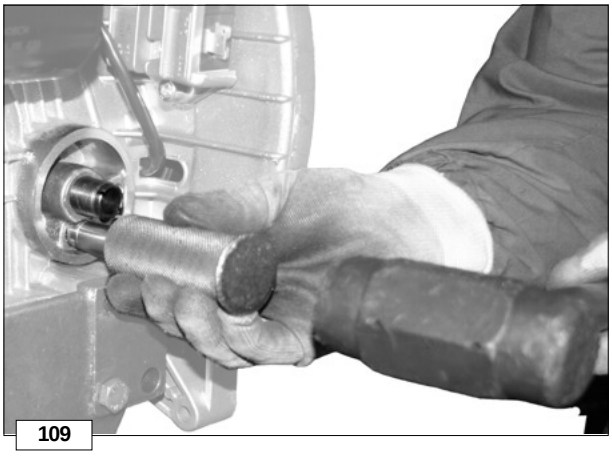

109

Reassembly:

Make sure that the valve seat is free of scratches and scores which could reduce the pressure seal.

Insert the entire oil pressure valve into its housing by keeping it in line. Make sure that the valve is completely assembled to the engine guard by means of a pad.

https://truckmanualshub.com/

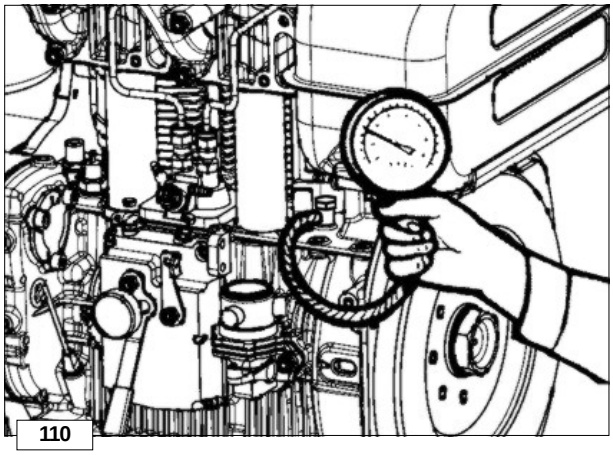

110

OIL PRESSURE CHECK

Once the engine is fitted fill with oil and fuel; connect a 10 bar pressure gauge to the fitting.
Start the engine and check pressure as a function of the oil temperature .

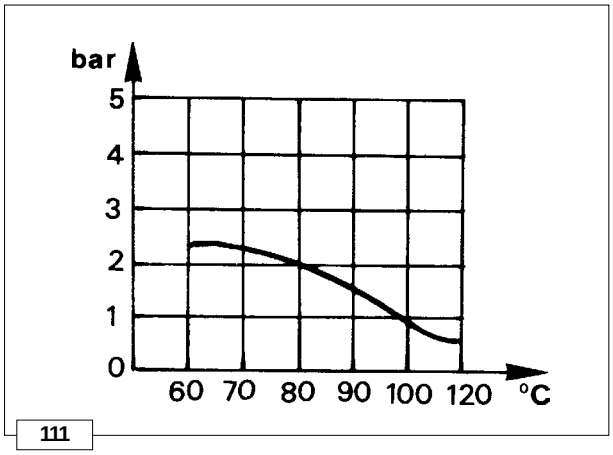

111

Oil pressure curve with engine at idle speed

The curve is obtained at the oil filter lever with constant engine speed of 1200 r.p.m. in no-load conditions and at a room temperature of + 25°C.
Pressure is given in bar and temperature in centigrades.

If the oil pressure value is below the indicated one, please check all components indicated on page 52 ÷ 53.

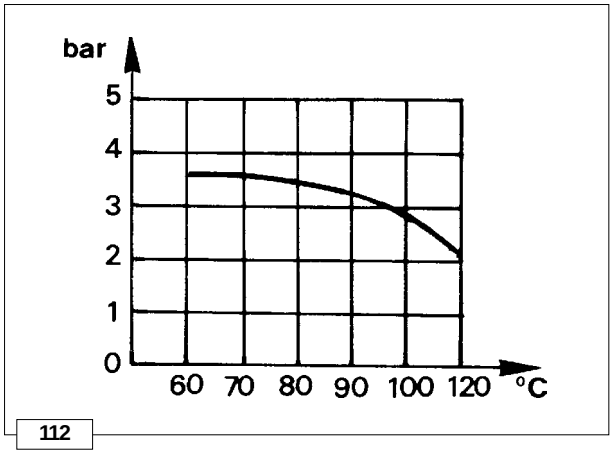

112

Oil pressure curve with engine at full speed

The curve is obtained at the oil filter level with engine working at 3000 r.p.m. and max. power at + 25°C room temperature.
Pressure is given in bar and temperature in centigrades.

If the oil pressure value is below the indicated one, please check all components indicated on page 52 ÷ 53.

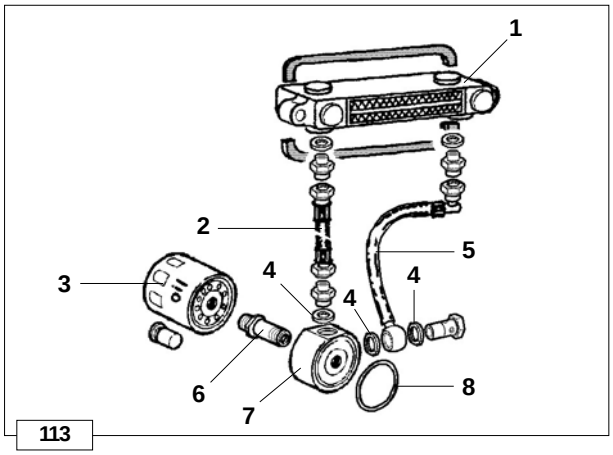

113

OIL RADIATOR
(on request)

Components:

1 Radiator
2 Return pipe
3 Oil filter
4 Copper gasket
5 Delivery hose
6 Union
7 Oil detection flange
8 O-ring

https://truckmanualshub.com/

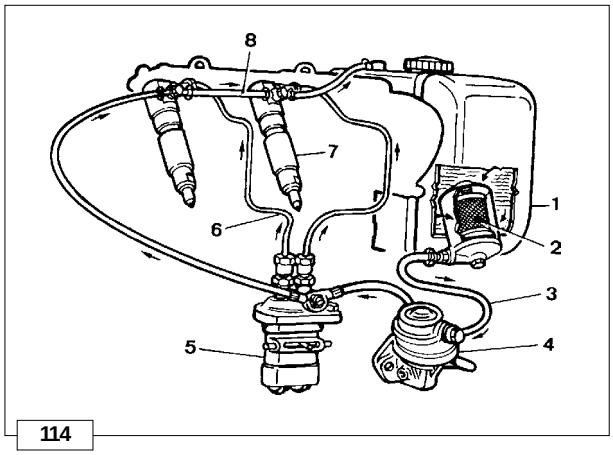

114

FUEL FEEDING / INJECTION CIRCUIT

Fuel feeding / injection circuit with fuel filter inside the fuel tank

Components:

1 Fuel tank
2 Fuel filter
3 Fuel feeding tube
4 Fuel lift pump
5 Injection pump
6 High-pressure pipe
7 Injector
8 Injector exhaust pipe

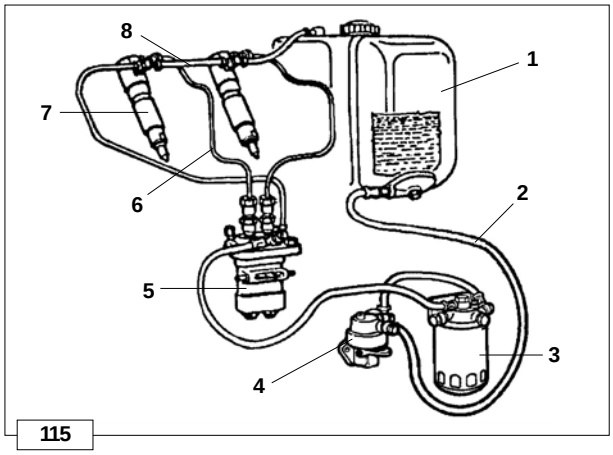

115

Fuel feeding / injection circuit with external fuel filter

Components:

1 Fuel tank
2 Fuel feeding tube
3 Fuel filter
4 Fuel lift pump
5 Injection pump
6 High-pressure pipe
7 Injector
8 Injector exhaust pipe

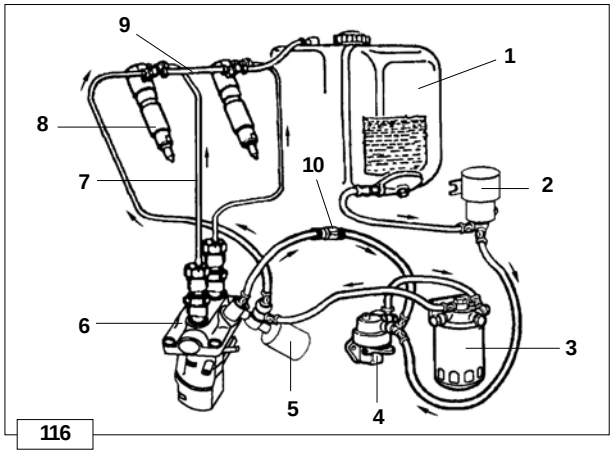

116

Fuel feeding / injection circuit with external fuel filter and double solenoid valve

Components:

1 Fuel tank
2 Solenoid valve
3 Fuel filter
4 Fuel lift pump
5 Solenoid valve
6 Injection pump
7 High-pressure pipe
8 Injector
9 Injector exhaust pipe
10 Non-return valve

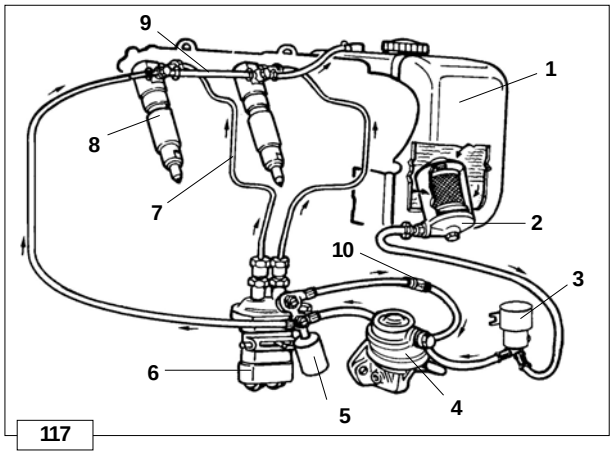

117

Fuel feeding / injection circuit with fuel filter inside the fuel tank and double solenoid valve

Components:

1 Fuel tank
2 Fuel filter
3 Solenoid valve
4 Fuel lift pump
5 Solenoid valve
6 Injection pump
7 High-pressure pipe
8 Injector
9 Injector exhaust pipe
10 Non-return valve

https://truckmanualshub.com/

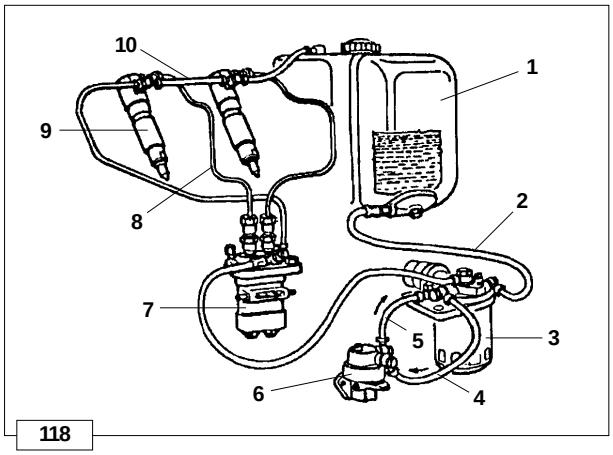

118

Fuel feeding / injection circuit with external fuel filter and QSD (Quick Stop System)

Components:

1 Fuel tank
2 Fuel feeding tube
3 Fuel filter
4 Fuel lift pump intake tube
5 Fuel lift pump delivery tube
6 Fuel lift pump
7 Injection pump
8 High-pressure pipe
9 Injector
10 Injector exhaust pipe

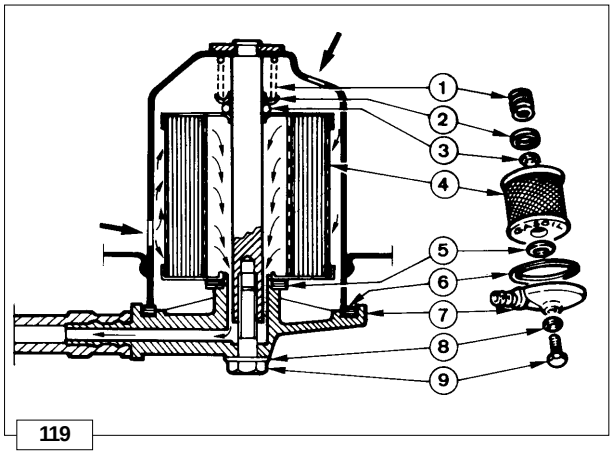

119

FUEL FILTER

Fuel filter (inside fuel tank)

Components: **1** Spring
2 Disc
3 Ring
4 Cartridge
5 Gasket
6 Gasket
7 Cap
8 Ring
9 Screw

➲ For characteristics see page 17.

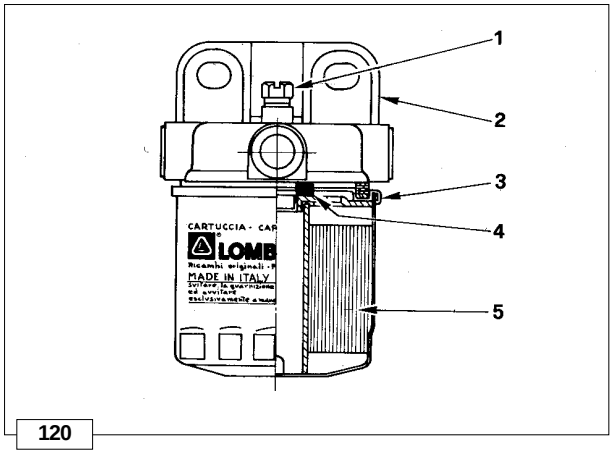

120

Fuel filter, external

1 Air relief valve
2 Support
3 Cartridge
4 Gasket
5 Filtering element

➲ For characteristics see page 17.

➲ For maintenance see page 22.

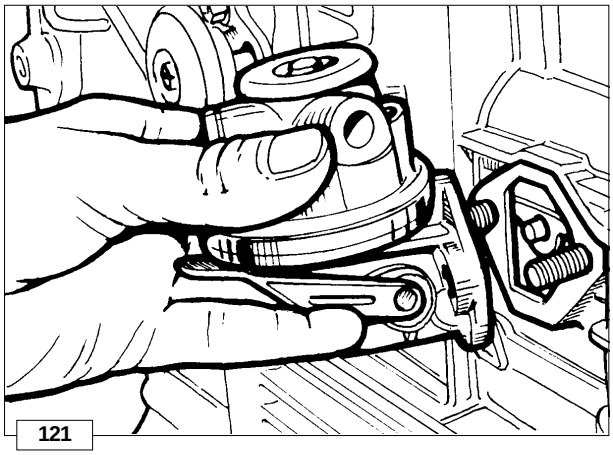
121

FUEL LIFT PUMP

The fuel lift pump is of the diaphgragm type operated by a camshaft eccentric through a drive rod.
It features an external lever for manual operation.

https://truckmanualshub.com/

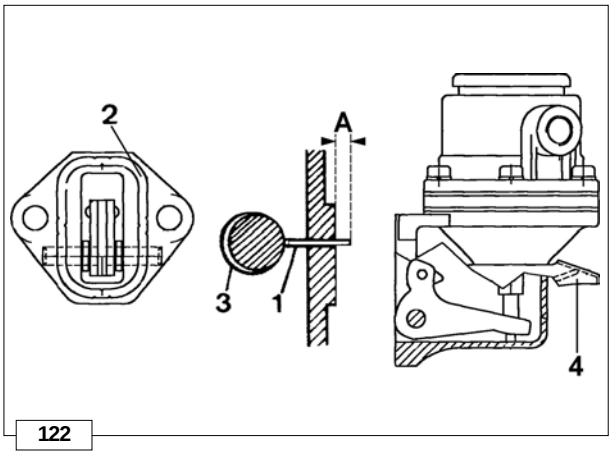

122

Fuel feeding pump components

Components:

1 Drive rod: - length: 32,55 ÷ 32,65 mm
- measured protrusion **A**: 1,47 ÷ 2,07 mm
2 Gasket
3 Camshaft eccentric
4 Manual priming lever

Characteristics:
when the control eccentric rotates at 1000 r.p.m. minimum delivery is 73 l/h while self-regulation pressure is 0.5 ÷ 0.7 bar.

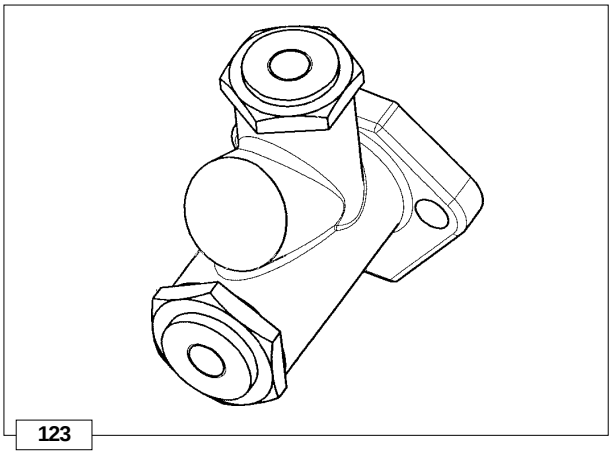
123

Piston fuel lift pump (on request)

Characteristics:
when the control eccentric rotates at 1000 r.p.m. minimum delivery is 65 l/h while self-regulation pressure is 1.5 ÷ 2.5 bar.

Important
The drive rod and its protrusion do not change in relation to the diaphragm pump.

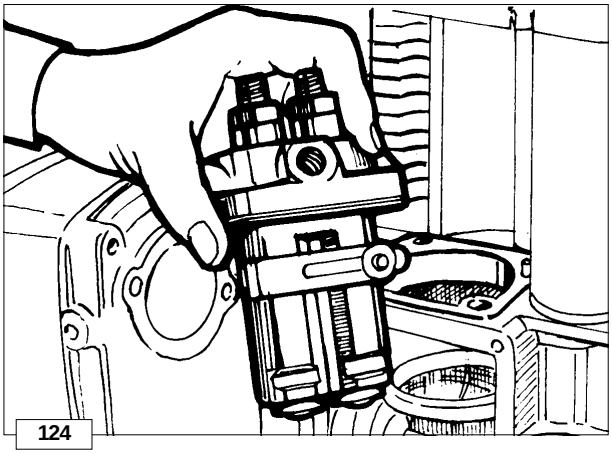
124

INJECTION PUMP

The injection system consists of a single-body pump with plungers featuring constant stroke and feeding one cylinder each.
The pump, mounted on the crankcase is directly operated by the camshaft.
Speed governor, extra fuel and stop device are separate from the pump (see pages 48, 49, 50 and 78).

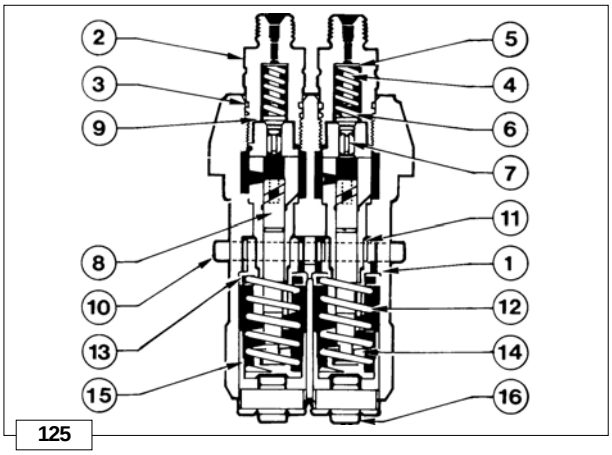

125

Injection pump for Standard and 97/68 CE engines

Components:

1 Pump body
2 Holder-delivery valve
3 O-ring
4 Filter
5 Shim
6 Valve spring
7 Delivery valve
8 Plunger and barrel assembly
9 Gasket
10 Rack
11 Metering sleeve
12 Tappet spring
13 Upper retainer
14 Lower retainer
15 Tappet
16 Tappet roller

https://truckmanualshub.com/

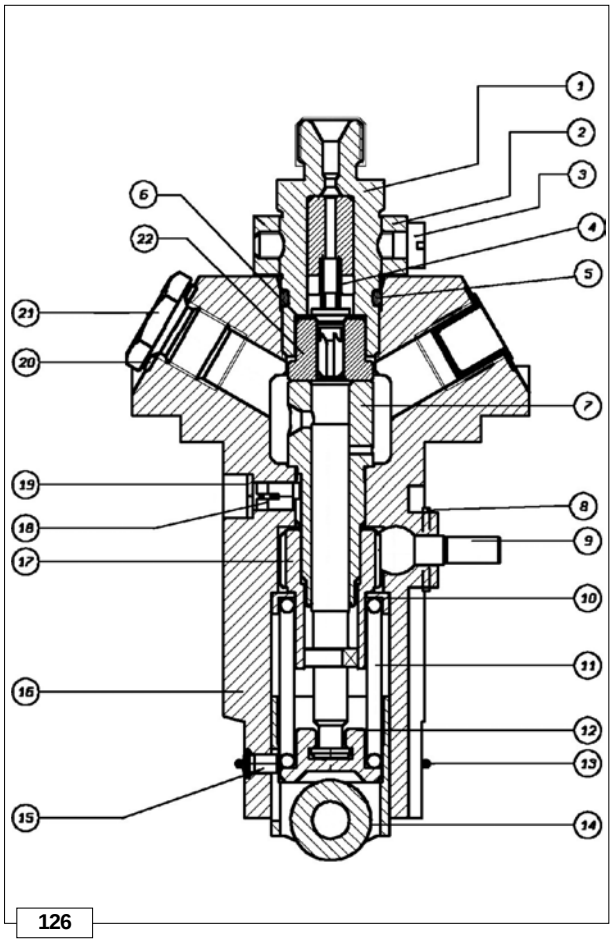

126

Injection pump for EPA engines

Components:

1 Holder-delivery valve
2 Locking nut clamp
3 Screw
4 Valve-Spring
5 O Ring
6 Copper gasket
7 Plunger and barrel assembly
8 Pin spring
9 Rack
10 Seat spring
11 Spring tappet
12 Seat phasing
13 Ring snap
14 Tappet assembly roller
15 Pin tappet driver
16 Pump housing
17 Metering sleeve
18 Pin barrel locating
19 Copper gasket
20 Gasket fibre seal
21 Threaded cap
22 Delivery valve assembly

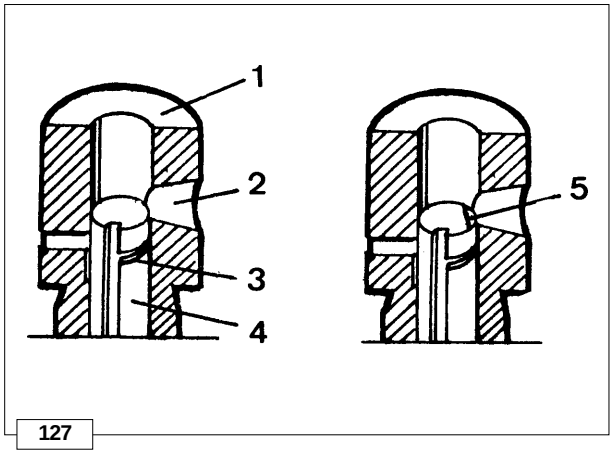

127

Plunger and Barrel Assembly

1 Barrel
2 Fuel feeding port
3 Control helix
4 Plunger
5 Retardation notch

Plunger diameter is 7.5 mm.

Important
Every plunger matches with its own barrel. For this reason they are not interchangeable.

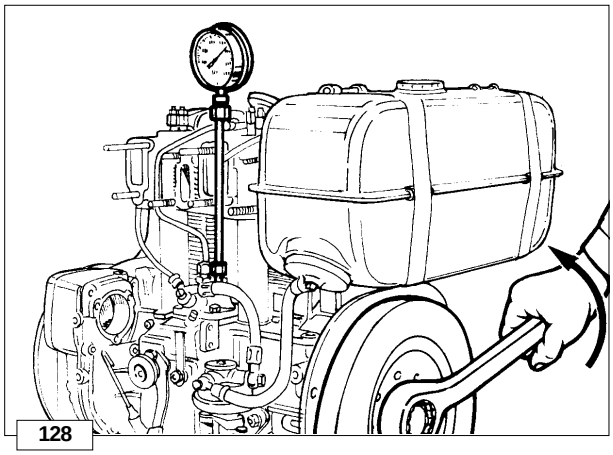
128

How to check plunger and barrel for internal leakage

This operation is only indicative since pressure changes depending on the pumping speed.
Connect the delivery union with a 600 bar pressure gauge with safety valve.
Adjust rack rod at half-stroke.
Turn flywheel according to its direction of rotation so that the plunger puts the circuit under pressure.
Replace plunger if the displayed pressure is below 300 bar.
Repeat the same operation for the other plunger.

https://truckmanualshub.com/

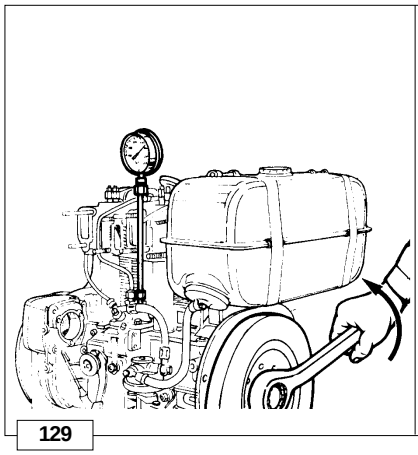

129

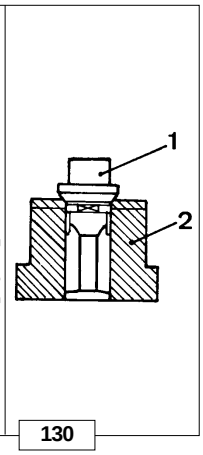

130

How to check injection pump delivery valve sealing

Components:
1 Valves
2 Seat

Adjust pump rack at half-stroke.
Turn flywheel according to its direction of rotation so that the plunger puts the circuit under pressure.
During this operation the displayed pressure will gradually reach a peak followed by a sudden drop which corresponds to valve closing.
Pressure drop should be 30÷50 bar.
Replace the valve if pressure drop is below this value.
Repeat the same operation for the other plunger.

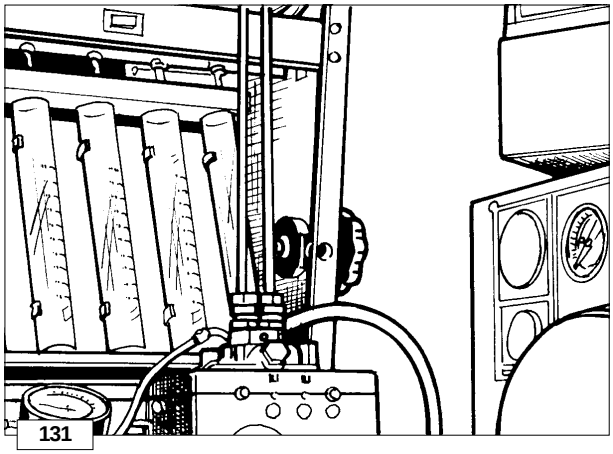

131

Test data for injection pump delivery

Check only maximum plunger difference by positioning rack rod according to the indicated delivery value.

9 LD 625-2 - 626-2 - 625/626 CE

Control rod max. force	Rod stroke from max deliv. point	R.P.M.	Delivery	Max. plunger difference
Newton	mm		mm^3/stroke	mm^3/stroke
0,50	10	1500	34÷37	3
	13	500	7÷11	3
	0	150	70÷78	--------
	10	500	22÷26	3

9 LD 625-2 EPA

Control rod max. force	Rod stroke from max deliv. point	R.P.M.	Delivery	Max. plunger difference
Newton	mm		mm^3/stroke	mm^3/stroke
0,50	9.5	1500	34÷37	3
	11.5	500	3÷7	3
	0	150	60÷68	--------
	9.5	500	13÷18	3

https://truckmanualshub.com/

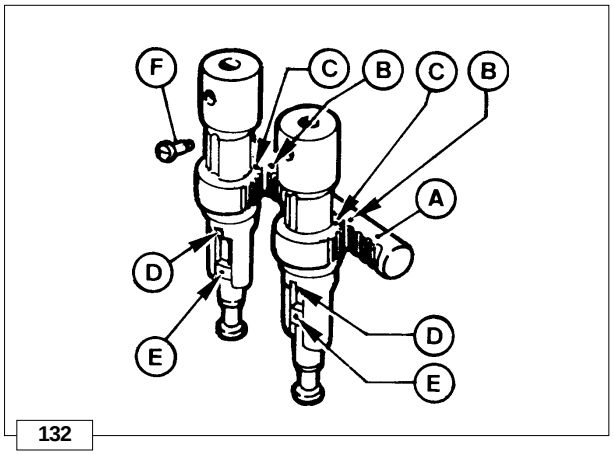

132

How to reassemble injection pump components

After replacing the worn-out components, reassemble the pump as follows:

- Introduce sector gears into the pump body by making reference points **C** match with the **B** points on the rack.
- Fix barrels with the eccentric screws **F** on the pump body.
- Fit valves with seats, springs, fillers and delivery unions tightening them at 35 ÷ 40 Nm.
- Fit plungers by making reference points **E** match with the sector gear **D** points.
- Fix retainers and springs; lock tappet with special stop.
- Check that both plungers have the same delivery by performing the necessary measurements at the test bed; if delivery is not the same set screw **F**.

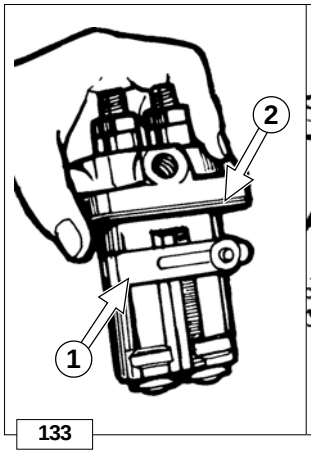

133

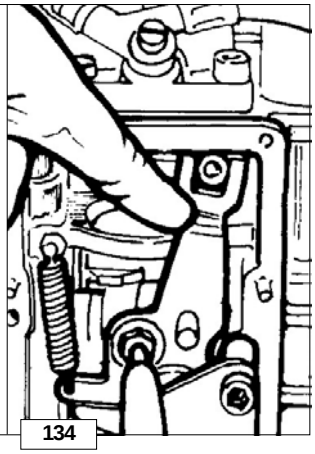
134

How to mount injection pump on the engine

During reassembly, make sure the adjustment rod pin **1** is correctly inserted into the opposite seat in the adjustment lever.

➲ See “Injection advance adjustment” on page 63 for the choice of the seals **2**.

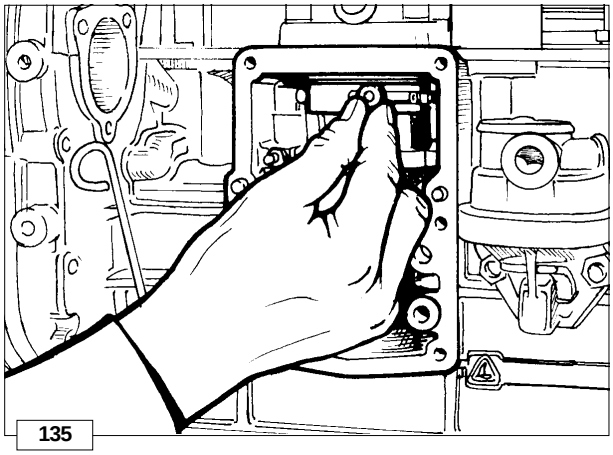
135

❍ Tighten screws at 25 Nm.

Check that rack rod slides smoothly: if not, the engine may fail to start or hunt.

https://truckmanualshub.com/

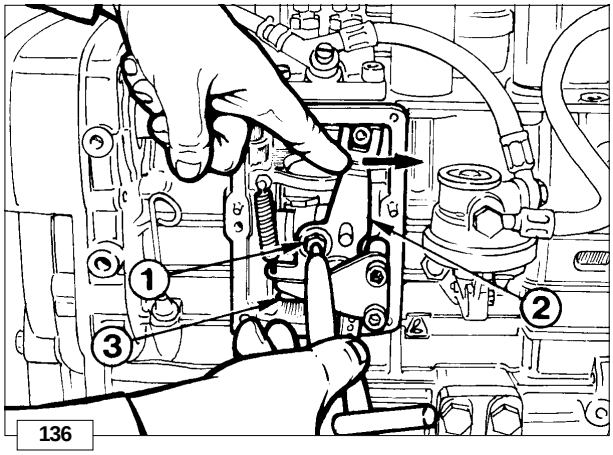

136

Injection pump/mechanical speed governor timing

Loosen screw **1**
Move injection pump lever **2** to maximum delivery (to the right).
Check that drive rod **3** closes the speed governor; keeping lever **2** pressed to the right the drive rod should have no clearance.
Tighten screw **1**.

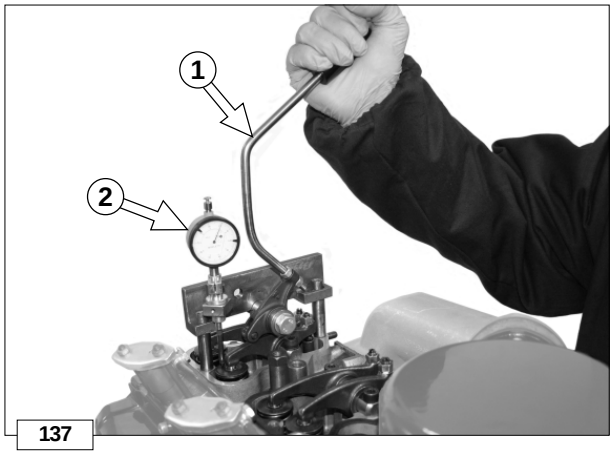

137

(STATIC) INJECTION TIMING

Injection static advance adjustment

1 Remove rocker arm covers and high-pressure pipes.

2 Select the cylinder on which the injection static advance check will be carried out.

3 Assemble the valve lowering tool (1460.285) by fastening it to the fixing holes of the rocker arm cover screws.

4 Before tightening the tool fixing screws, make sure that the dial indicator tracer is correctly placed on the intake valve collar.

5 Place the auxiliary tank at a higher height than the one of the injection pump (~30-40 cm).

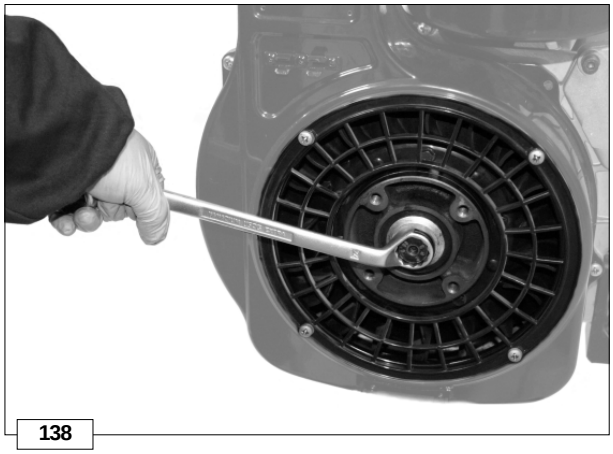
138

6 Connect the tank to the injection pump fuel supply hole.

7 Slowly rotate the crankshaft clockwise keeping lever **1** lowered and the valve positioned on the piston crown, until the dial indicator **2** shows the maximum measurement.

8 Set the maximum measurement dial indicator to zero which is equivalent to the compression top dead centre.

9 Assemble the advance tester **4** (serial number 1460.024) on the injection pump delivery union of the cylinder corresponding to the one on which the valve lowering tool has been previously installed.

10 Rotate the crankshaft clockwise by approximately 45°.

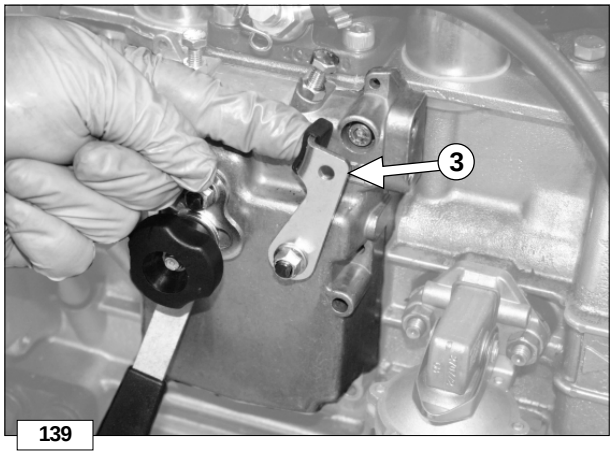

139

11 Rotate the crankshaft alternately until the fuel leaks out from tester **4** with a certain pressure.

12 Position the stop lever **3** half a stroke so that the plunger delay mark is excluded and keep the lever in this position.

https://truckmanualshub.com/

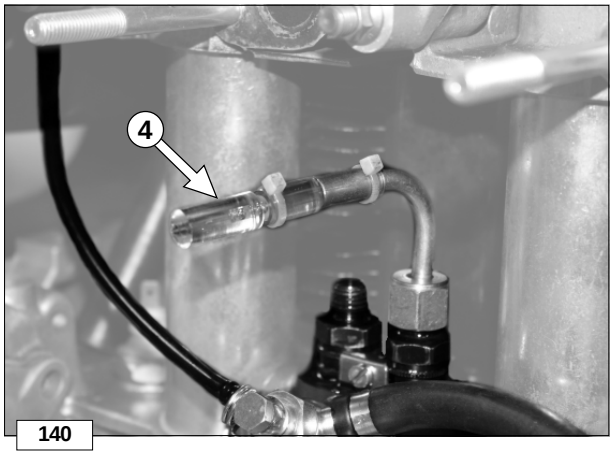

140

13 Turn the flywheel slowly and clockwise. Stop turning as soon as you notice that the fuel is moving inside tester **4**.

14 Move lever **1** again so as to lower the valve and bring it again in contact with the piston.

15 Measure the piston lowering value and bring it again in contact with the piston.

16 Convert the registered value from millimetres to degrees (see Table "Conversion for establishing advance").

Table "Conversion for establishing advance"

Engine type	R.p.m.	Advance degrees	Piston lowering value (mm)
9LD625/2	3000	26° ± 1° *	24° 4.94 25° 5.34 26° 5.76 27° 6.21
9LD626/2			
9LD625/2 EPA	3000	17° ± 1° *	15° 1.96 16° 2.22 17° 2.51 18° 2.81
9LD625/2 CE NR	3000	18° ± 1° *	17° 2.51 18° 2.81 19° 3.12
9LD626/2 CE NR	2800	17° ± 1° *	16° 2.22 17° 2.51 18° 2.81

* Check values.

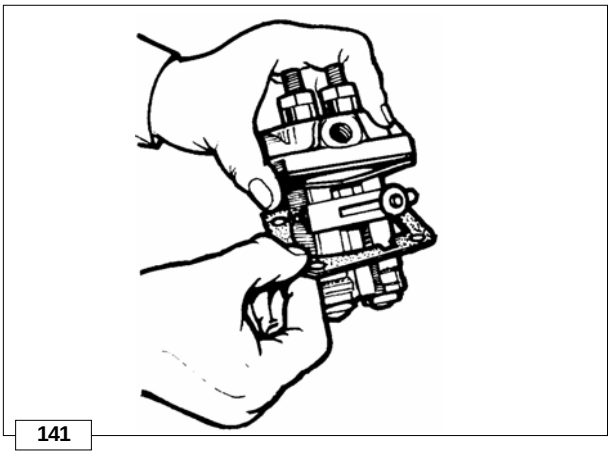
141

Injection advance adjustment

If the values indicated in the table do not correspond to the detected ones, follow the operations as written below:

1) Delayed Injection Advance: remove the shims under the pump until the detected value corresponds to the one indicated in the Table "Conversion for establishing advance"

2) Advanced Injection Advance: add shims under the pump until the detected value corresponds to the one indicated in the Table "Conversion for establishing advance".

Note: By removing or adding a 0.1 mm shim under the pump, it is possible to advance or delay the injection by about 1°.

https://truckmanualshub.com/

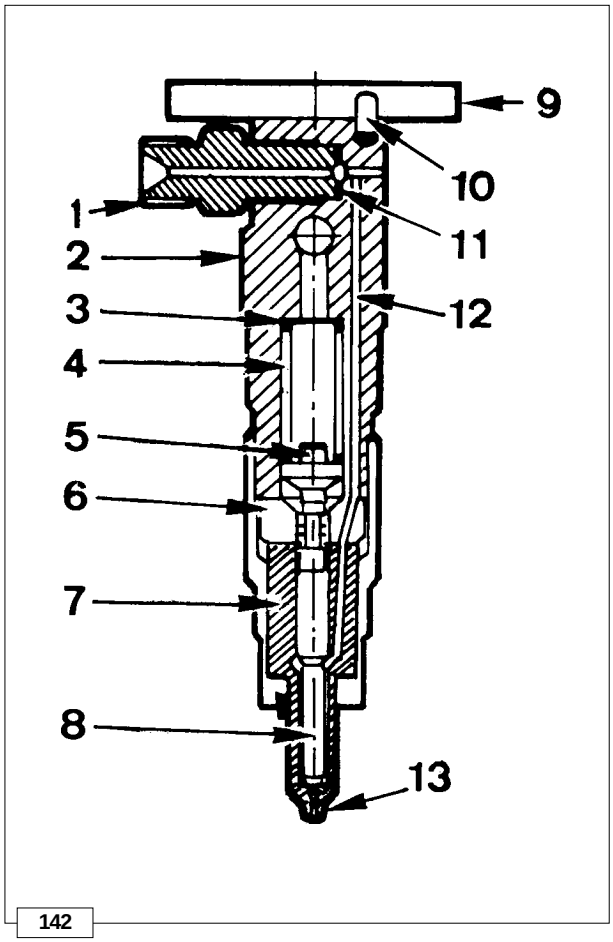

142

INJECTOR

Size S Injector, only for standard engines

Components:
1 Intake fitting
2 Nozzle holder
3 Shim
4 Spring
5 Pressure rod
6 Intermediate flange
7 Nozzle
8 Needle valve
9 Fixing flange
10 Taper pin
11 Gasket
12 System duct
13 Sump

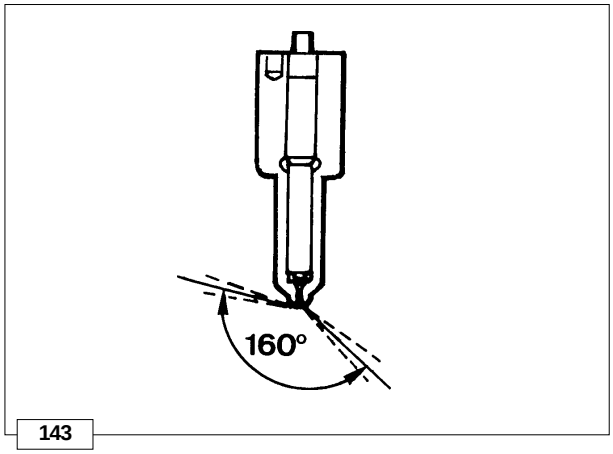

143

Size S Nozzle, only for standard engines

Features:
Hole number and diameter ..... 4x0.28 mm.
Jet angles ..... 160°.
Needle valve elevation ..... 0.20 ÷ 0.22 mm

Clean nozzle tip with a brass brush.
Check that holes are not obstructed using a mandrel with steel wìre with 0.28 mm diam.

❍ When refitting tighten ring nut at 60 Nm.

https://truckmanualshub.com/

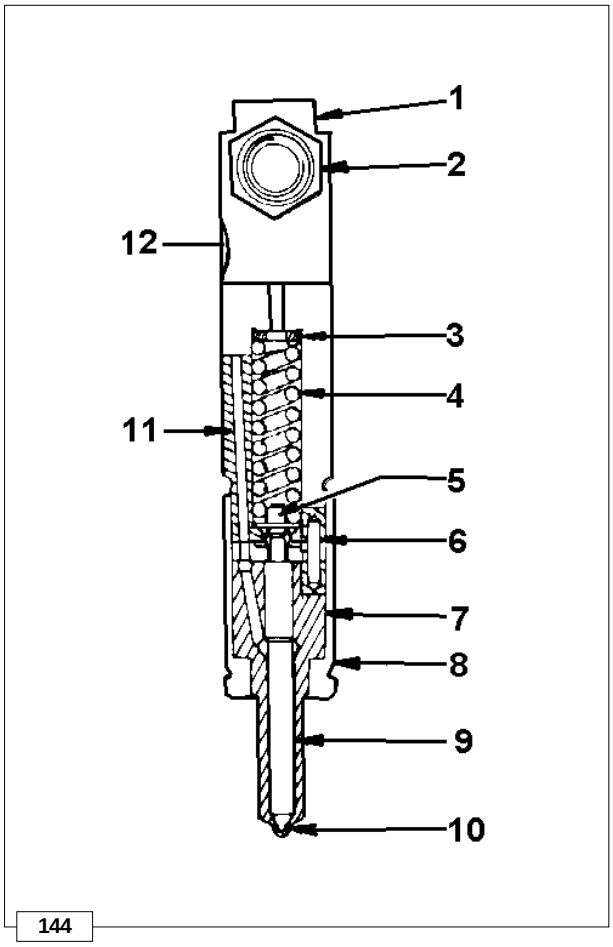

144

Size P injector, for 97/68 CE and EPA engines

Components:

1 Injector housing
2 Intake fitting
3 Shim
4 Spring
5 Pressure rod
6 Taper pin
7 Nozzle
8 Cup
9 Needle valve
10 Sump
11 System duct
12 Overflow pipe

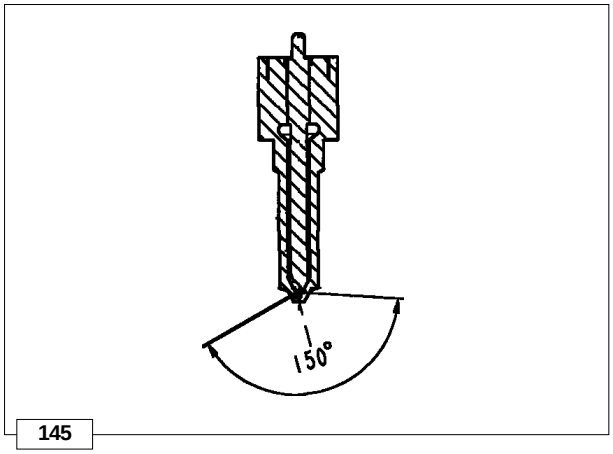

145

Size P nozzle, for 97/68 CE and EPA engines

Features:
Hole number and diameter ..... 5 x 0.23 mm.
Jet angles ..... 150°.
Needle valve elevation ..... 0.200 ÷ 0.205 mm

Clean nozzle tip with a brass brush.
Check that holes are not obstructed using a mandrel with steel wìre with 0.23 mm diam.

❍ When refitting tighten ring nut at 42 ÷ 48 Nm.

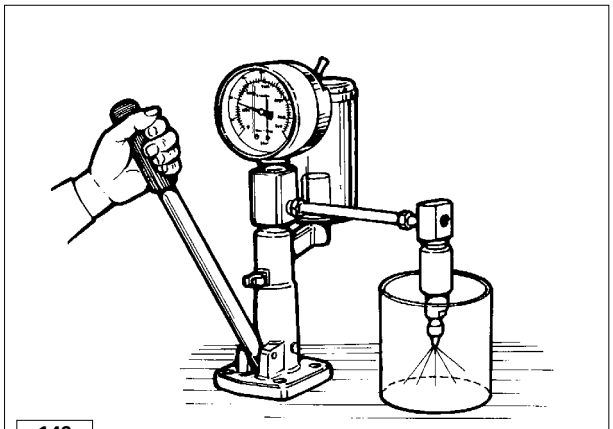
146

Injector setting

Connect the injector to a diesel injector calibration pump.
Check needle valve sealing by slowly moving hand pump until approximately 180 bar and maintain this pressure for 10 seconds.
Chek that setting pressure is 210 ÷220 bar for standard engines (245 ÷ 230 bar for EPA e CE engines); make the required adjustments, if any, by modifying the adjusting shim height.

When replacing the spring, setting should be performed at a 10 bar greater pressure (255÷265 bar) to allow for bedding during operation.
Replace nozzle in case of dripping.

https://truckmanualshub.com/

Electric starting layout with internal alternator

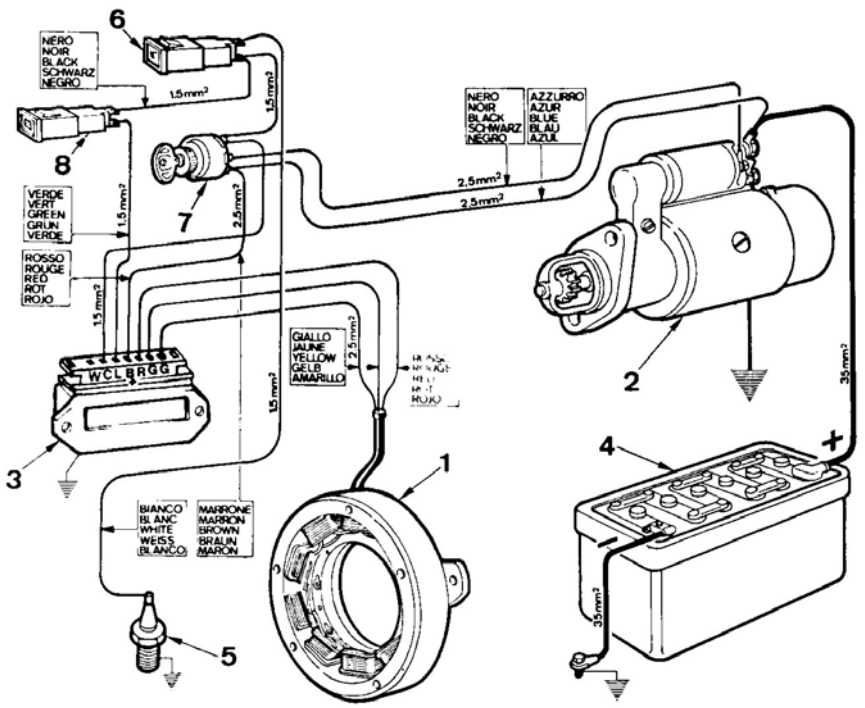

Components:

1 Alternator
2 Starting motor
3 Voltage regulator
4 Battery
5 Pressure switch
6 Oil pressure warning light
7 Key switch
8 Battery charging light

Note: Battery, which is not supplied by Lombardini, should feature 12 V voltage and capacity not below 70 Ah.

147

Electrical starting layout with external alternator

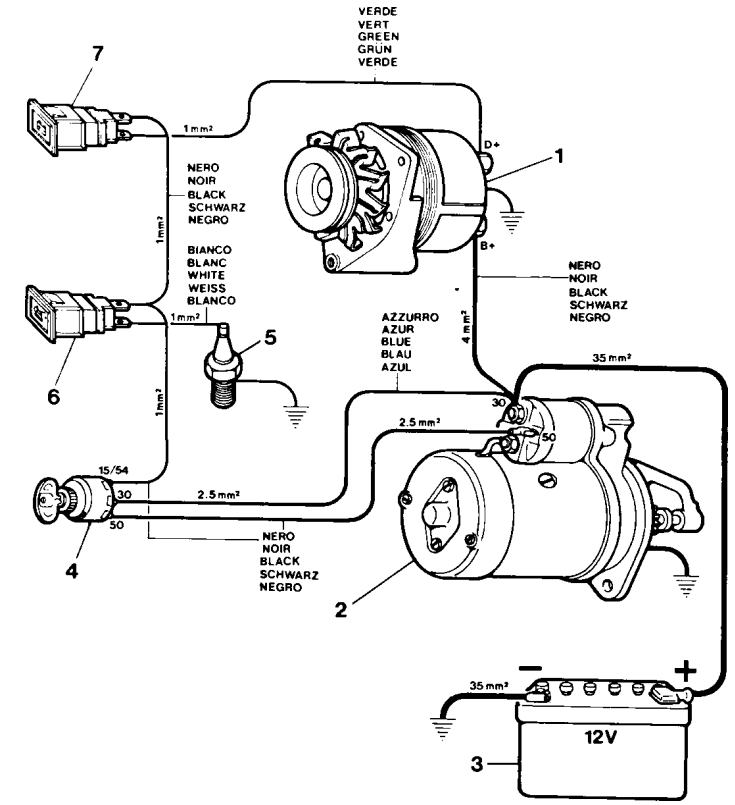

Components:
1 Alternator
2 Starting motor
3 Battery
4 Key switch
5 Pressure switch
6 Oil pressure warning light
7 Battery charging light

Note: Battery, which is not supplied by Lombardini, should feature 12 V voltage and capacity not below 70 Ah.

148

https://truckmanualshub.com/

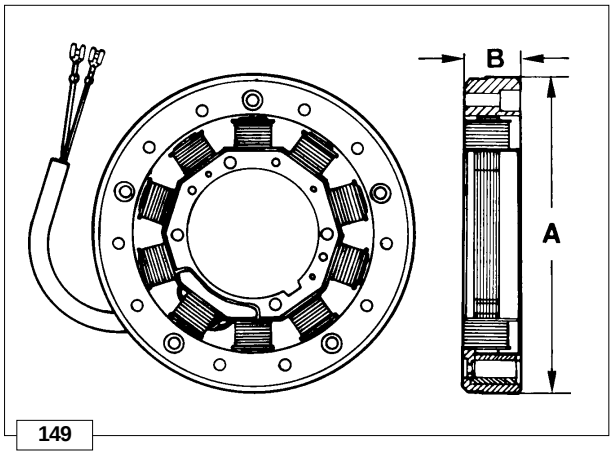

149

ALTERNATOR

Alternator - 12 V, 18A

Features a fixed armature winding mounted on the air shroud bracket. The rotating permanent magnet inductor is located in the fan spindle. Only the two yellow cables are at output.

Dimensions (mm):
A = 158.80÷159.20
B = 27.50÷27.90

Note: Clearance between armature wìnding and inductor (air gap) must b 0.48÷0.60 mm.

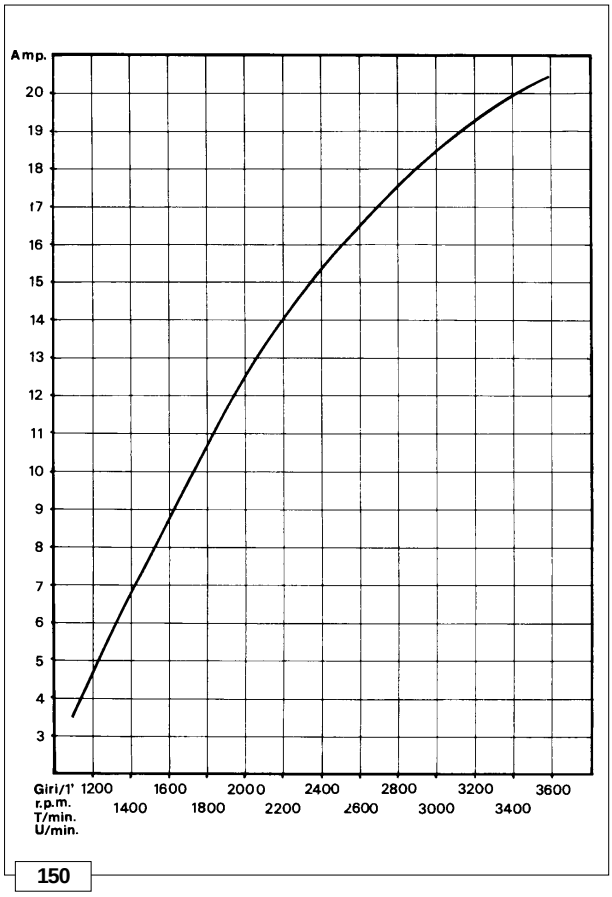

150

Alternator battery charger curve (12 V, 18 A)

This curve is obtained at +25°C with 12.5 V battery voltage.

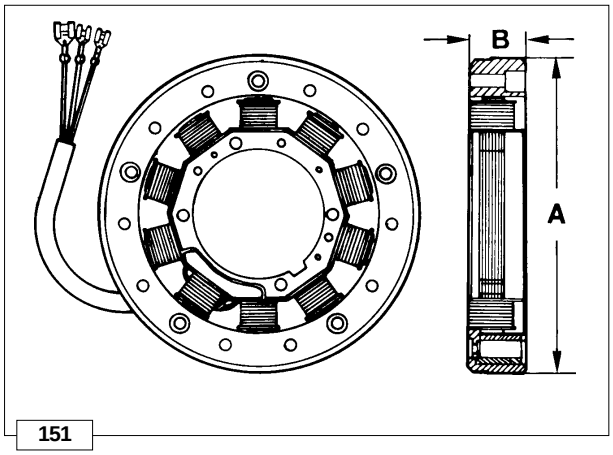

151

Alternator - 24 V, 6 A

Features a fixed armature winding mounted on the air shroud bracket. The rotating permanent magnet inductor is located in the fan spindle. There are the two yellow cables and one red cable at output.

Dimensions (mm):
A = 158.80÷159.20
B = 27.50÷27.90

Note: Clearance between armature winding and inductor (air gap) should be 0.48÷0.60 mm.

https://truckmanualshub.com/

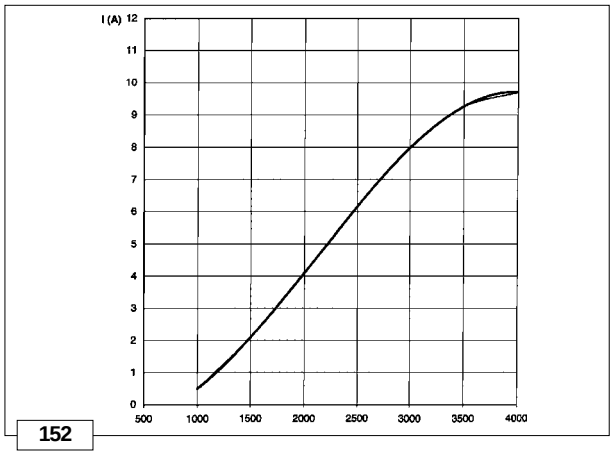

152

Alternator battery charger curve - 24 V, 6 A

The curve was obtained at room temperature of +20°C with 25 V battery voltage.

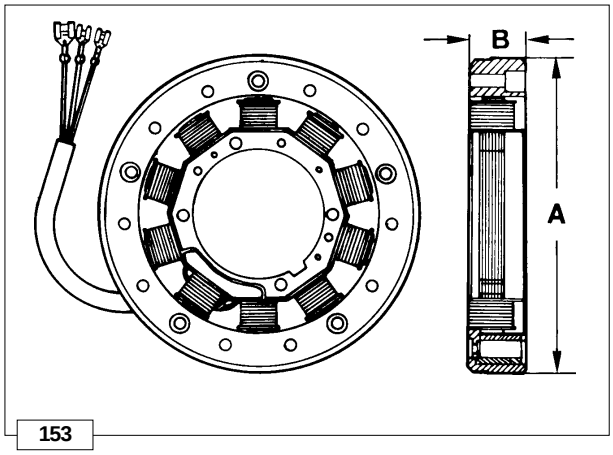

153

Alternator - 12 V, 14 A

Features a fixed armature winding mounted on the air shroud bracket. The rotating permanent magnet inductor is located in the fan spindle. There are the two yellow cables and one red cable at output.

Dimensions (mm):
A = 158.80÷159.20
B = 27.50÷27.90

Note: Clearance between armature winding and inductor (air gap) should be 0.48÷0.60 mm.

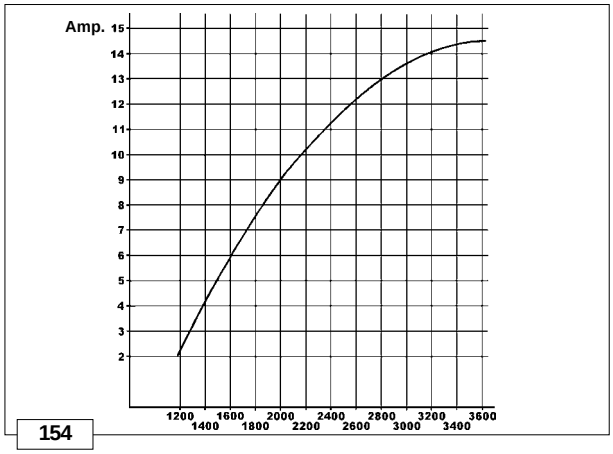

154

Alternator battery charger curve standard - 12 V, 14 A

The curve was obtained at room temperature of +25°C with 12,5 V battery voltage.

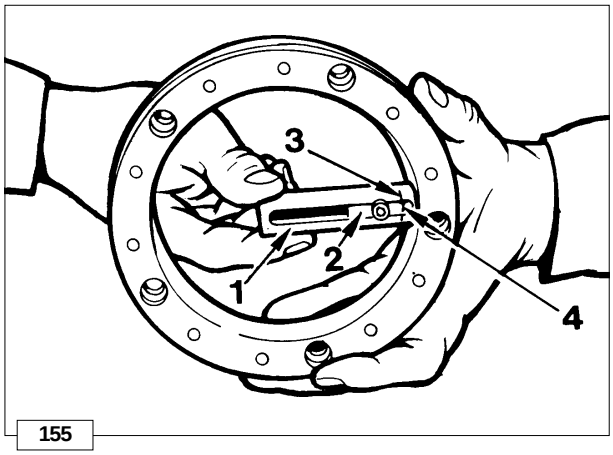

155

Magnetization checking tool (Part No. 7000-9727-001)

Components:
1 Casing
2 Slider
3 Casing reference line
4 Slider reference line

Rest the tool end horizontally onto the magnetic poles.
Hold slider so that its reference line coincides with the casing reference line.
Release slider: if no attraction occurs the rotor is demagnetized, in this case replace alternator.

https://truckmanualshub.com/

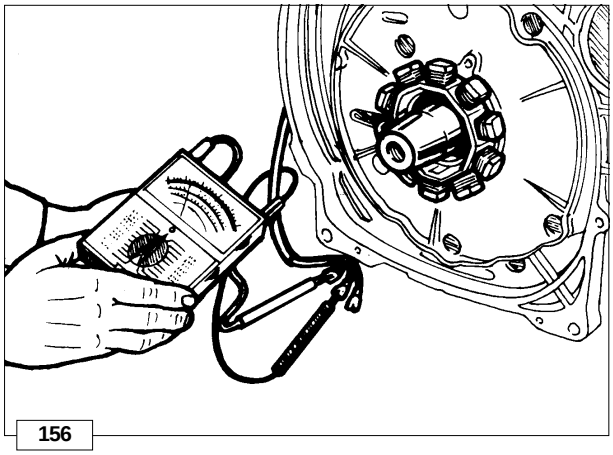

156

Checking for cable continuity

Check that stator windings have no unsoldered connections, burnt areas or grounded wìres.
Using an ohmmeter check for continuity between the red cable and the two yellow ones.
Furthermore, check that they are insulated from the ground.

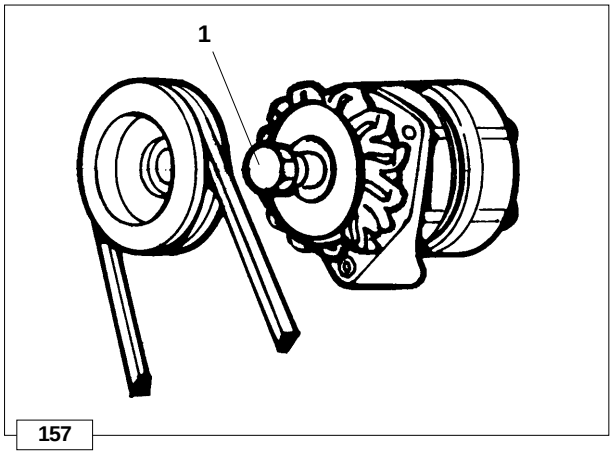

157

Alternator, external - 12 V, 33 A

The alternator is of the claw-pole rotor type with built-in voltage regulator. The rotating motion is conveyed by the engine through a "V" belt and sheave.

Features:
Rated voltage 12V
Max. current ..... 33 A (at 7000 alternator r.p.m./min.).
RH direction of rotation.

❍ Tighten the nut **1** at a torque of 70 Nm.

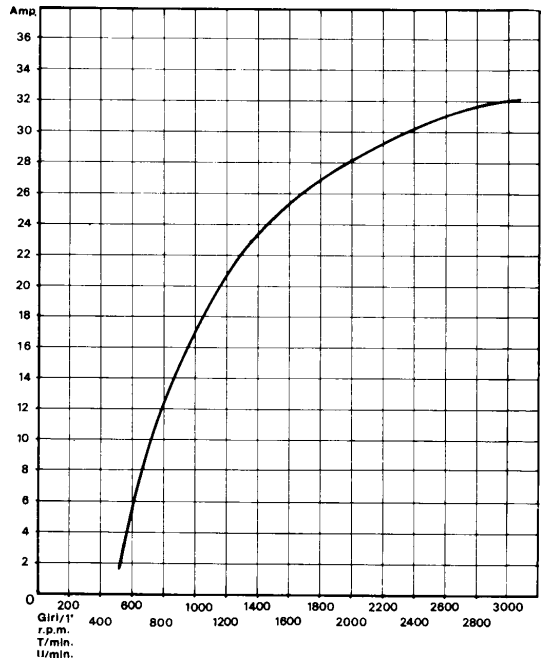

158

Alternator battery charger curve - external, 12 V, 33 A

The curve was obtained at room temperature of + 25°C.
Battery terminal voltage is 12.5 V.
The r.p.m. shown on the table refers to the engine.

https://truckmanualshub.com/

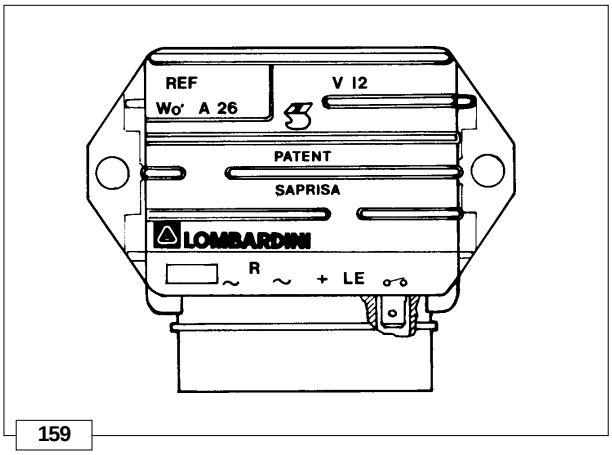

159

VOLTAGE REGULATOR

Type LOMBARDINI, supplied by SAPRISA and DUCATI: Voltage 12 V, max. current 26A.

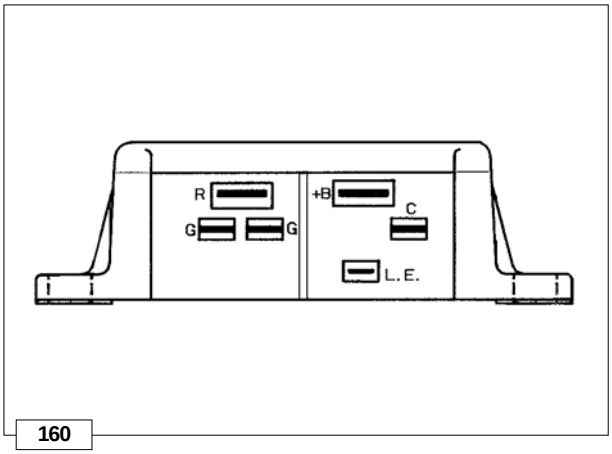

160

To avoid wrong connections 3 different sizes are supplied.

Connections	Dimensions (mm)	
	Width	Thickness
~	6.35	0.80
R	9.50	1.12
+	9.50	1.12
LE	4.75	0.50
o o	6.35	0.80

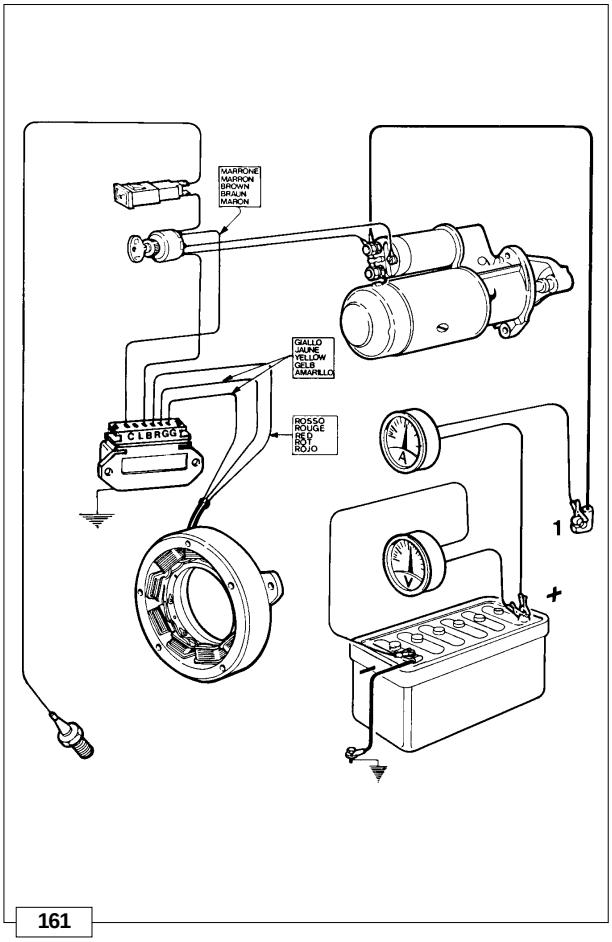

161

How to check voltage regulator for proper operation

- Check that connections correspond to the layout.
- Disconnect the terminal from the battery positive pole.
- Connect a d.c. voltmeter between the two battery poles.
- Fit an ammeter between the positive pole and the **B+** of the voltage regulator (corresponding to ref. **1** in the picture).
- Start a couple of times until battery voltage drops below 13 V.
- When battery voltage reaches 14.5 V the ammeter current suddenly drops down to almost zero.
- Replace regulator if recharge current is zero with voltage below 14V.

Caution - Warning

- **When the engine is running do not disconnect battery cables or remove the key from the control panel.**
- **Keep regulator away from heat sources since temperatures above 75°C might damage it.**
- **No electric welding on engine or application.**

https://truckmanualshub.com/

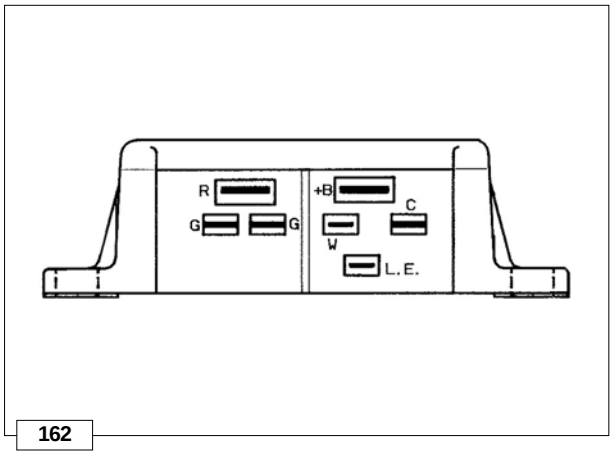

162

Voltage regulator - 12V, 26A, with “W” terminal

“W” pole tab:
Width = 4,75 mm;
Thickness= 0,5 mm.

➲ See page 70 for tag dimensions.

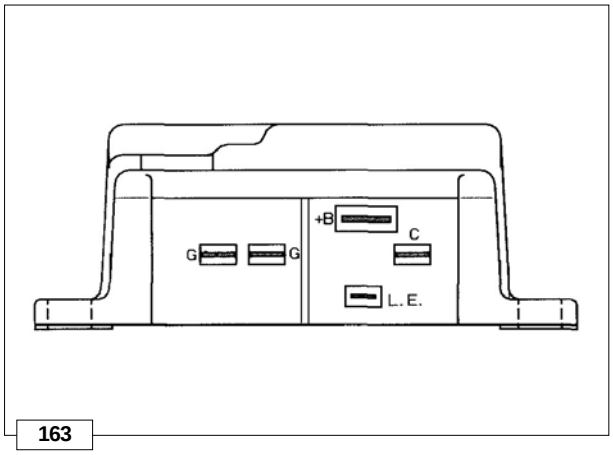

163

Voltage regulator - 12 V, 30 A

The voltage regulator is of the bridge type.

➲ See page 70 for tag dimensions.

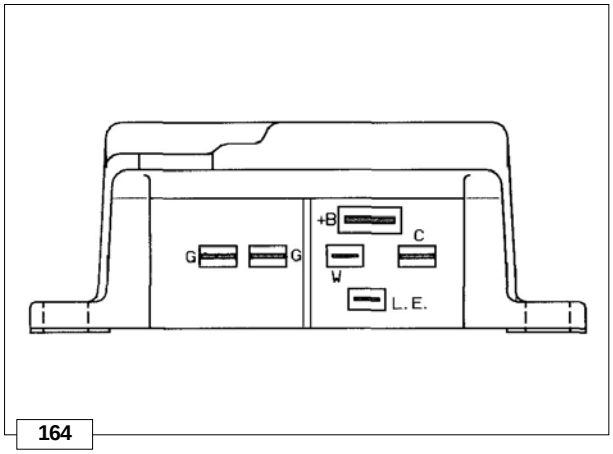

164

Voltage regulator - 12V, 30A, with “W” terminal

“W” pole tab:
Width = 4,75 mm;
Thickness= 0,5 mm.

➲ See page 70 for tag dimensions.

https://truckmanualshub.com/

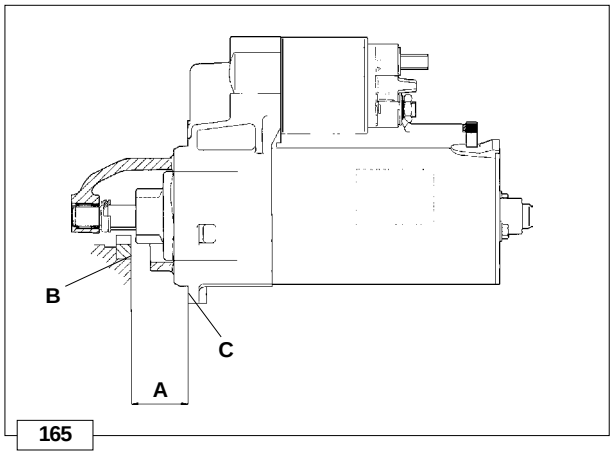

165

STARTING MOTOR

Important
- **Made by MARELLI and BOSCH.**
- **Apply to their distributors for any type of repair.**

Bosch starting motor type GIF - 12 V, 1.7 kW

RH direction of rotation.
A = 29.5÷31.5 mm
B = Ring gear plane
C = Flange plane

Caution – Warning
Flywheel should not project from ring gear plane B.

Characteristic curves for starting motor type Bosch - 12 V, 1.7 kW

Curves are obtained at room temperature of + 20°C with 66 Ah battery.

V = Motor terminal voltage in Volt
P = Power in kW
C = Torque in N/m
N = Motor speed in r.p.m6.
J (A) = Absorbed current in Ampere.

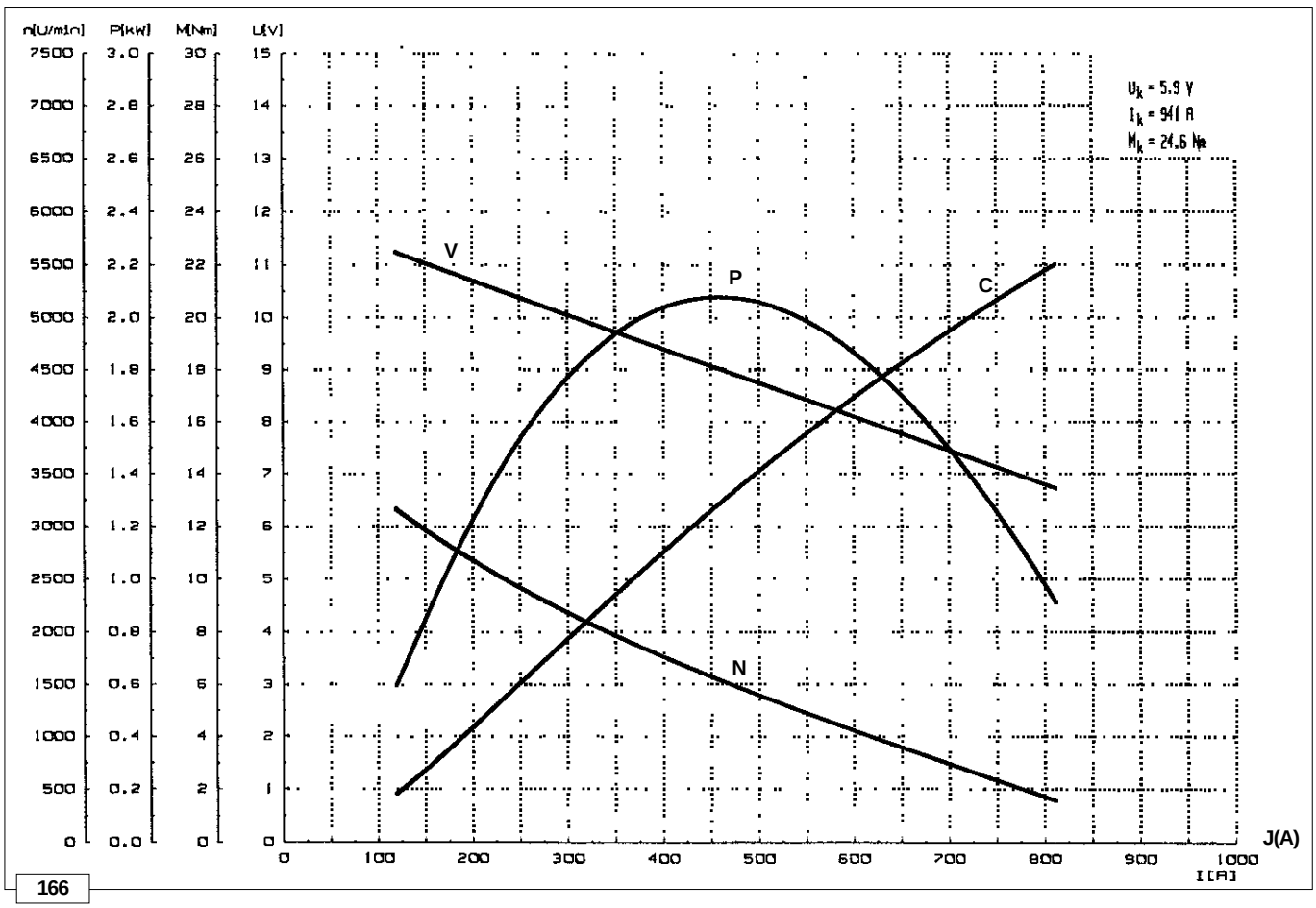

166

https://truckmanualshub.com/

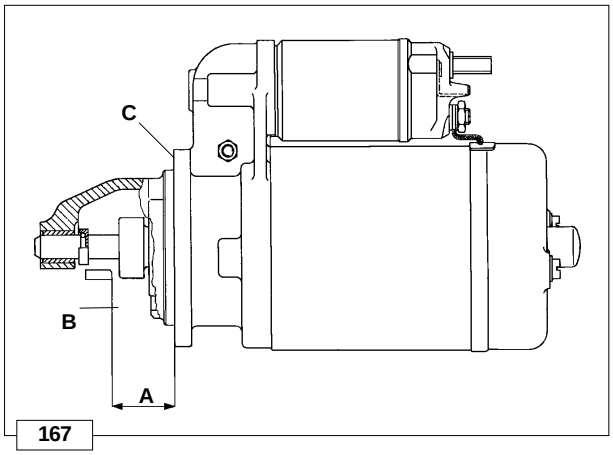

Starting motor type Bosch DW (R) 12 V, 1.7 kW

RH direction of rotation.

A = 29.5÷31.5 mm
B = Ring gear plane
C = Flange plane

Caution – Warning
Flywheel should not project from ring gear plane B.

Characteristic curves of the 24 V 1.6 kW starting motor

The curves have been measured at a 20°C temperature with an 88 Ah battery.

V = Voltage to the motor terminals in Volt
P = Power in kW
C = Torque in N/m
N = Motor speed in rpm
J (A) = Absorbed current in Amperes.

https://truckmanualshub.com/

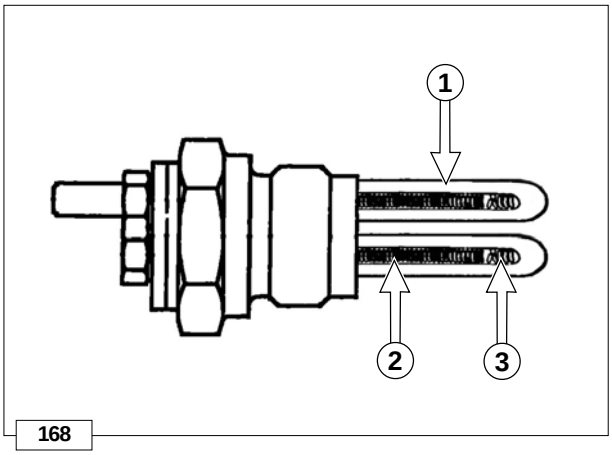

168

Pre-heating glow plug

Components:
1 Sheath
2 Regulation filament
3 Heating filament

❍ When remounting tighten at a torque of 20 Nm.

Glow plug Type	12 V	24 V
Nominal voltage	12 V	28 V
Current	41 A	13 A

Note: The glow plug is not damaged in any way due to the prolonged activation time.

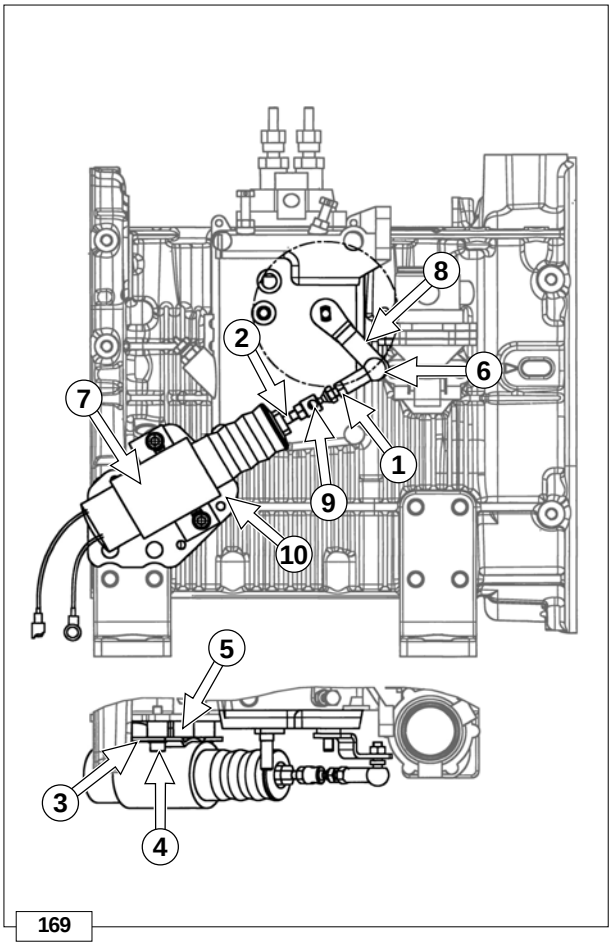

169

DIRECT STOP ELECTROMAGNETS

Reverse electromagnet – FIRE version

Features:

Electromagnet type	12 V	24 V
Operating tension	12 V	24 V
Power coil absorption	40 A	20 A
Hold coil absorption	0.63 A	0.30 A

Components:
1 Nut
2 Stud bolt
3 Flat washer
4 Screw
5 Spacer
6 Spherical joint
7 Electromagnet
8 Stop control lever
9 Axial joint
10 Stop control electromagnet support

Adjustment:
- Carry out the adjustments by screwing and unscrewing the joints.
- Adjust the device so as to make the electromagnet get to the end of the stroke before the STOP lever reaches its limit stop after performing the operation stroke.
- When the electromagnet is excited, put the stop lever at about 1.0 – 1.5 mm from its limit stop.
- Once adjustment phase is completed, tighten nut **1**.

Important
The control cover should not present the return spring of the stop lever.
Remove the stop lever return spring without replacing the control cover if the device is applied to engines that were originally not equipped with it.

https://truckmanualshub.com/

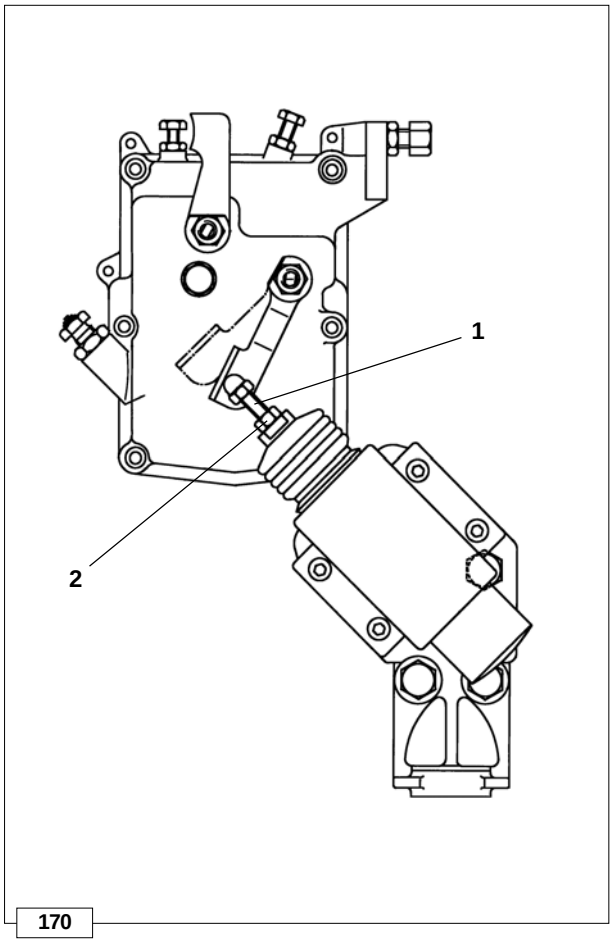

Direct stop electromagnet

Features:
Operating tension ..... 12V.
Power coil absorption ..... 41 A.
Hold coil absorption ..... 0.5 A.

Setting:
- Screw drive rod **1** to the end of the thread on the electromagnet piston.
- Excite the electromagnet and leave the stop lever in normal operation position.
- Bring drive rod 1 in contact with the stop lever and tighten lock nut **2**.

https://truckmanualshub.com/

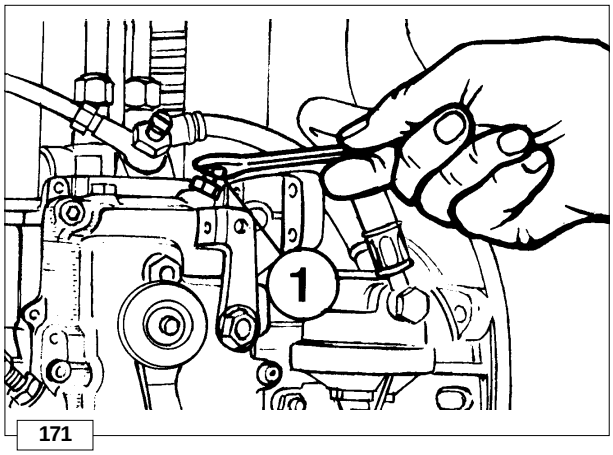

171

SPEED ADJUSTMENTS

WARNING

- **Adjustments should be carried out by Lombardini authorised personnel only.**
- **Any tampering with the adjustment immediately makes the warranty null and void.**

Idling speed setting in no-load conditions

After filling with oil and fuel, start the engine and let it warm up for 10 minutes.
Adjust idling speed at 1000÷1100 r.p.m. by turning setscrew **1**; then tighten lock nut.

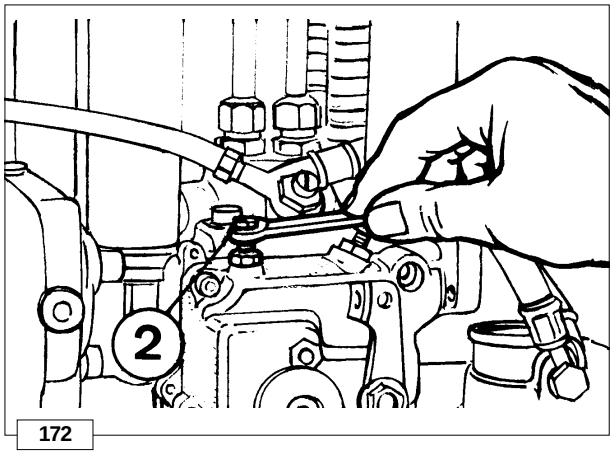

172

Full speed setting in no-load conditions (standard)

After setting idle speed turn screw **2** and set full speed in no-load conditions at 3200 r.p.m.; then tighten lock nut.

Note: When the engine reaches the pre-set power full speed stabilizes at 3000 r. p. m.

Not valid on EPA engines, on which it is not possible to modify the adjustment of the maximum.

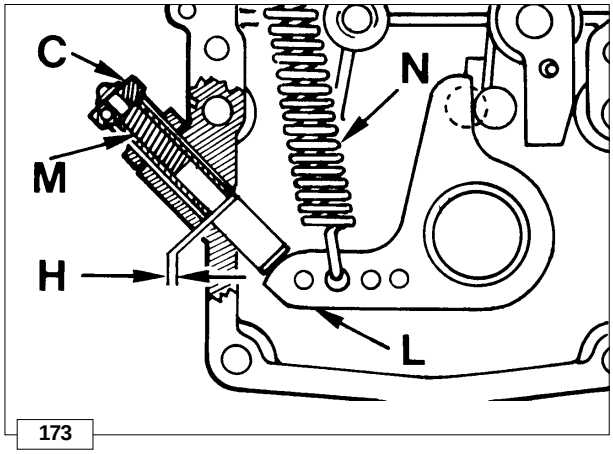

173

INJECTION PUMP DELIVERY SETTING

Important

This adjustment must be performed with the engine connected to the dynamometric brake. Without this the regulation is approximate.

Injection pump delivery limiting and extra fuel device

Limiting device **C** limits the injection pump maximum delivery.
It also acts as a torque setting device since spring **N** opposes the resistence of spring **M** inside the cylinder through lever **L**.
The torque setting device allows lever **L** to move over stroke **H** corresponding to 0.15÷0.25 mm.
This consequently increases injection pump delivery with torque reaching its peak value.

Note: In generator sets and power welders, the torque setting device acts as a delivery limiter only.
It therefore does not feature spring **M** or stroke **H**.

https://truckmanualshub.com/

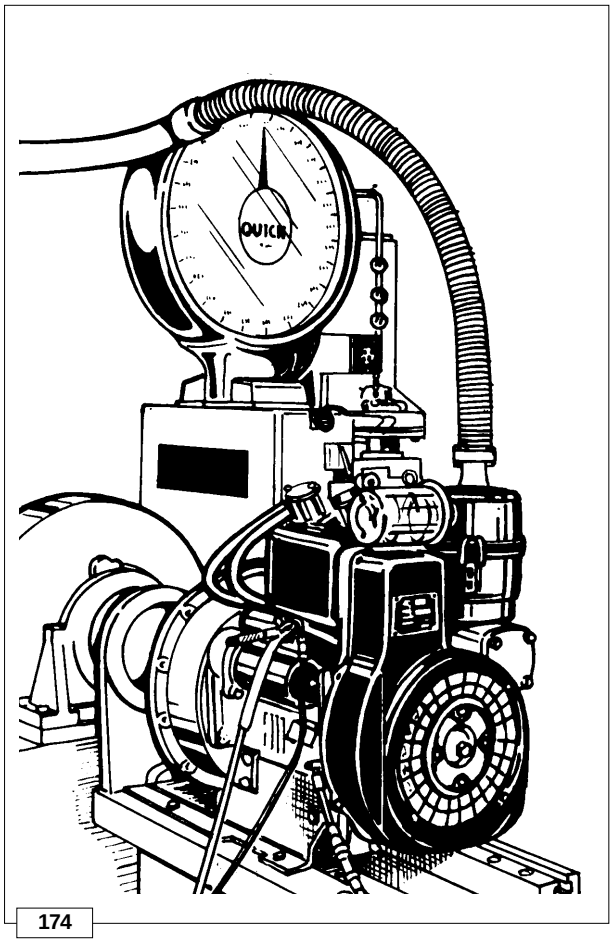

174

Injection pump delivery setting with dynamometric brake

1) Run the engine and bring it to the operating temperature.
2) Release the flow limiter screw **C** completely (see page 175).
3) Bring the engine to maximum rotation speed.
4) Activate the dynamometric brake to bring the engine to the maximum speed.
5) Check that fuel consumption is in line with the values given in the table “Specific fuel consumption”.
If it is not in line with the indicated values, reduce the dynamometric brake load.
6) After a few operation minutes and when the engine has stabilized, slowly fasten screw **C** until the rotation speed starts decreasing.
7) Lock screw **C** using a lock nut.
8) Carry out the fuel consumption check again.
9) Release the dynamometric brake and detect the rotation speed of the “stabilized” engine (maximum idle speed).
10) Bring the engine to minimum idle speed. Carry out engine setting when the engine is "stabilized".
11) Switch off the engine and let it cool down.
12) Check the valve/rocker arm clearance (see "Setting valve/rocker arm clearance").

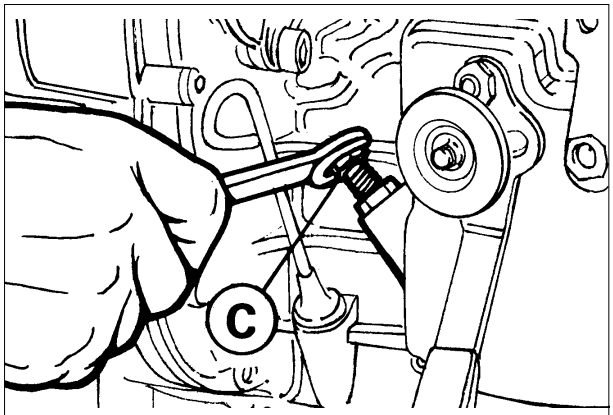

175

Injection pump delivery setting without dynamometric brake

Loosen delivery limiting device **C** by 5 turns.
Bring engine to full speed in no-load conditions i.e. 3200 r.p.m.. Tighten limiting device until the engine shows a drop in r.p.m..
Unscrew limiting device **C** by 1 and ½ turns.
Tighten lock nut.

Note: If the engine, under full load, generates too much smoke tighten **C**; if no smoke is observed at the exhaust and the engine cannot reach its full power unscrew **C**.

https://truckmanualshub.com/

Required settings (as most commonly applies)

Engine	*R.p.m.*	*Power HP (kW)*	*Specific fuel consumption **	
			Time (sec) per 100 cm³	*g/HP h (g/kW h)*
9LD 625-2	3000	NB 25.50 (18,80)	60÷63	190÷200 (258÷272)
9LD 625-2	1800	NB 18.50 (13.6)	90÷95	171÷181 (233÷246)
9LD 625-2	1800	NA 16.50 (12.13)	104÷110	163÷173 (223÷235)
9LD 625-2	1500	NB 14.80 (10.88)	110÷116	175÷185 (239÷252)
9LD 625-2	1500	NA 13.30 (9.78)	125÷132	169÷178 (230÷243)
9LD 625-2 EPA	3000	NB 25.57 (18.80)	60.5÷61.5	190÷194 259÷264
9LD 625-2 CE	3000	NB 25.50 (18.80)	59÷60	190 (258)

The indicated specific fuel consumption refers to the period following approximately 30 working hours.

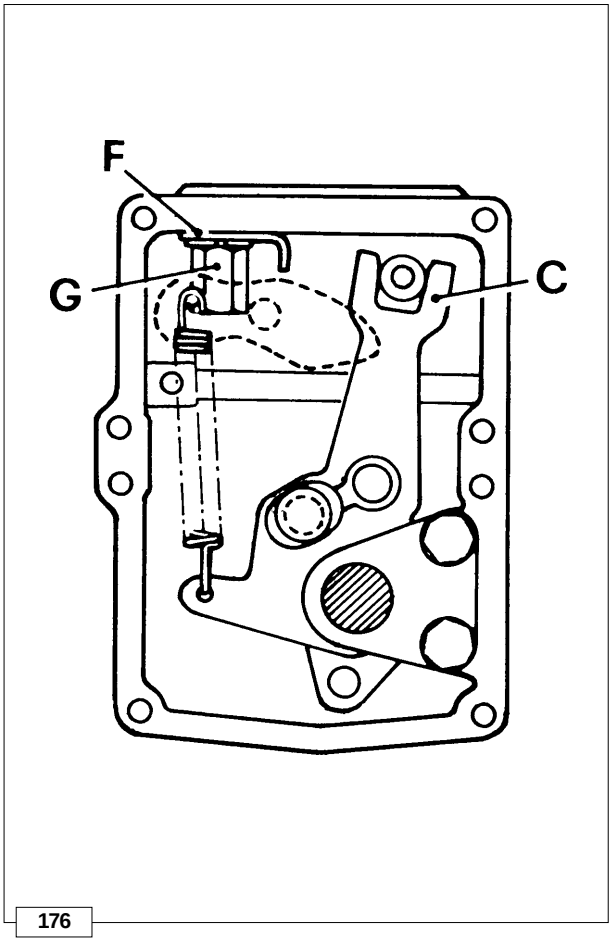

Setting the stop limit stop

1) Remove the throttle lever cover.
1) Completely turn lever **C** counter-clockwise and keep it in this position. Retainer **F** should not be in contact with lever **C**.
2) Unscrew nut **G** and bring retainer **F** in contact with lever **C**
3) Push retainer **F** so that lever **C** is moved backwards clockwise by 1.0 mm.
4) Lock retainer **F** by screwing nut **G**

Note: In this condition, the limit stops of the injection pump adjustment rod will not be damaged by the violent impacts caused by the possible assembly of electrostop.

https://truckmanualshub.com/

https://truckmanualshub.com/

ENGINE STORAGE

- **When the engines are not for more than 6 months, they have to be protected performing the operations described in the following pages.**

- If the engine is not to be used for extensive periods, check the storage area conditions and the type of packaging and make sure that these are suitable for correct storage.
  If necessary, cover the engine with a proper protective sheet.
- Avoid storing the engine in direct contact with the ground, in environments that are humid and exposed to bad weather, near high voltage electric lines, etc.

Important

If, after the first 6 months, the engine is still not used, it is necessary to carry out a further measure to extend the protection period (see “Protective treatment”).

PROTECTIVE TREATMENT

1 - Pour in the engine housing AGIP RUSTIA C protective oil up to the maximum level.
2 - Fill up with fuel containing 10% AGIP RUSTIA NT.
3 - Start the engine and keep it idle at minimum speed for some minutes.
4 - Bring the engine to ¾ of the maximum speed for 5÷10 minutes.
5 - Turn off the engine.
6 - Empty out completely the fuel tank.
7 - Spray SAE 10W on the exhaust and intake manifolds.
8 - Seal the exhaust and intake ducts to prevent foreign bodies from entering.
9 - Thoroughly clean all external parts of the engine using suitable products.
10 - Treat non-painted parts with protective products (AGIP RUSTIA NT).
11 - Loosen the alternator/fan belt (if present).
12 - Cover the engine with a proper protective sheet.

Caution - Warning

In countries in which AGIP products are not available, find an equivalent product (with specifications: MIL-L-21260C).

Important

Maximum every 24 months of inactivity, the engine must be started up by repeating all "Engine Storage" operations.

https://truckmanualshub.com/

PREPARING THE ENGINE FOR OPERATION AFTER PROTECTIVE TREATMENT

After the storage period and before starting up the engine and preparing it for operation, you need to perform certain operations to ensure maximal efficiency conditions.

1 - Remove the protective sheet.
2 - Remove any sealing devices from the exhaust and intake ducts.
3 - Use a cloth soaked in degreasing product to remove the protective treatment from the external parts.
5 - Inject lubricating oil (no more than 2 cm3) into the intake ducts.
6 - Adjust the alternator/fan belt tension (if present).
7 - Turn the engine manually to check the correct movement and smoothness of the mechanical parts.
8 - Refill the tank with fresh fuel.
9 - Make sure that the oil is up to the maximum level.
10 - Start the engine and after some minutes bring it to ¾ of the maximum speed for 5-10 minutes.
11 - Turn off the engine.
12 - Remove the oil drain plug (see “Oil replacement”) and discharge the AGIP RUSTIA NT protective oil while the engine is hot.
13 - Pour new oil (see "Table of lubricants") up to the maximum level.
14 - Replace the filters (air, oil, fuel) with original spare parts.

Caution - Warning

Over time, a number of engine components and lubricants lose their properties, so it is important considering whether they need replacing, also based on age (see Replacement table).

Important

Maximum every 24 months of inactivity, the engine must be started up by repeating all "Engine Storage" operations.

https://truckmanualshub.com/

Table of tightening torques for the main components

POSITION	Diam. and pitch (mm)	Torque (Nm)	Sealant
Vibration-damping tank support	-	-	Loctite 270
Connecting rod	8x1.0	40	
Injection pump delivery valve union	18x1.5	40	
Rocker arm cover	8x1.25	20	
Center main bearing support	8x1.25	25	
Intake manifold	8x1.25	25	
Exhaust manifold	8x1.25	25	
Air shroud	6x1.0	6	
Accelerator cover	6x1.0	10	
Governor control cover	6x1.0	10	
Air conveyor shroud	8x1.25	20	
Alternator cable clamp	6x1.0	10	
High pressure fuel line clamp	5x0.8	5	
Air cleaner	8x1.25	25	
Hydraulic pump flange	8x1.25	25	
Air conveyor shroud gasket	-		Loctite 495
Head injector	6x1.0	10	Loctite 270
Camshaft gear	10x1.5	60	
Oil pump gear	10x1.5	35	Loctite 270
Air conveyor sheet	6x1.0	10	Loctite 242
Internal oil filter pierced plate	6x1.0	10	
Breather sheet	6x1.0	10	
Starting motor	10x1.5	45	
Blower hub	14x1.5	160	
Nippl radiator	14x1.5	40	
Rocker arm shaft	8x1.25	25	
Injection pump control lever pivot	8x1.25	15	
Speed governor external control lever pivot	8x1.25	10	
External stop control lever pivot	8x1.25	10	
Governor spring lower lever pivot	8x1.25	10	
Gear cover plate	8x1.25	25	
Engine mounting foot	10x1.5	40	
Fuel feeding pump	8x1.25	25	
Injection pump	8x1.25	25	
Oil pump	8x1.25	20	
Nozzle holder	6x1.0	10	
Oil pan	8x1.25	30	
Oil pressure switch	12x1.5	25	
Starter motor fixing stud	10x1.5	12	Loctite 270
Fuel lift pump fixing stud	8x1.25	8÷10	Loctite 270
Cylinder head fixing stud	10x1.5	15	Loctite 270
Cooling fan guard	6x1.0	10	
Starting pulley	10x1.5	45	
Fuel filter union	14x1.5	40	
Fuel lift pump union	10x1.0	12	
High pressure fuel line union	12x1.5	25	
Fuel bleeding line union	8x1.0	10	
Voltage regulator	8x1.25	20	
R.p.m. counter driving gear	5x0.8	5	
Main bearing support, gear case side	8x1.25	30	
Main bearing support, flywheel side	8x1.25	30	
Center main bearing support	10x1.5	30	
Air conveyor support	8x1.25	25	
Hydraulic pump gear support	8x1.25	20	
Injection pump control lever support	8x1.25	25	
Governor lever support (camshaft seal)	8x1.25	25	
Governor fork support	8x1.25	25	

https://truckmanualshub.com/

POSITION	Diam. and pitch (mm)	Torque (Nm)	Sealant
Fuel tank bracket	8x1.25	30	
Alternator stator	5x0.8	7	Loctite 242
Crankase lubrification plug	8x1.25	15	
Oil drain plug	14x1.5	40	
Cylinder head	10x1.5	55	
Blower	6x1.0	10	Loctite 270
Cooling fan hub fixing screw	16x1.5	160	Loctite 270
Flywheel	20x1.5	300	

https://truckmanualshub.com/

Table of tightening torques for standard screws (coarse thread)

Resistance class (R)								
Quality/ Dimensions	4.6	4.8	5.6	5.8	6.8	8.8	10.9	12.9
Diameter	R>400N/mm²		R>500N/mm²		R>600N/mm²	R>800N/mm²	R>1000N/mm²	R>1200N/mm²
	Nm	Nm	Nm	Nm	Nm	Nm	Nm	Nm
M3	0,5	0,7	0,6	0,9	1	1,4	1,9	2,3
M4	1,1	1,5	1,4	1,8	2,2	2,9	4,1	4,9
M5	2,3	3	2,8	3,8	4,5	6	8,5	10
M6	3,8	5	4,7	6,3	7,5	10	14	17
M8	9,4	13	12	16	19	25	35	41
M10	18	25	23	31	37	49	69	83
M12	32	43	40	54	65	86	120	145
M14	51	68	63	84	101	135	190	230
M16	79	105	98	131	158	210	295	355
M18	109	145	135	181	218	290	405	485
M20	154	205	193	256	308	410	580	690
M22	206	275	260	344	413	550	780	930
M24	266	355	333	444	533	710	1000	1200
M27	394	525	500	656	788	1050	1500	1800
M30	544	725	680	906	1088	1450	2000	2400

Table of tightening torques for standard screws (fine thread)

Resistance class (R)								
Quality/ Dimensions	4.6	4.8	5.6	5.8	6.8	8.8	10.9	12.9
Diameter	R>400N/mm²		R>500N/mm²		R>600N/mm²	R>800N/mm²	R>1000N/mm²	R>1200N/mm²
	Nm	Nm	Nm	Nm	Nm	Nm	Nm	Nm
M8x1	10	14	13	17	20	27	38	45
M 10x1	21	28	26	35	42	56	79	95
M 10x1,25	20	26	24	33	39	52	73	88
M 12x1,25	36	48	45	59	71	95	135	160
M 12x1,5	38	45	42	56	68	90	125	150
M 14x1,5	56	75	70	94	113	150	210	250
M 16x1,5	84	113	105	141	169	225	315	380
M 18x1,5	122	163	153	203	244	325	460	550
M 18x2	117	157	147	196	235	313	440	530
M 20x1,5	173	230	213	288	345	460	640	770
M 20x2	164	218	204	273	327	436	615	740
M 22x1,5	229	305	287	381	458	610	860	1050
M 24x2	293	390	367	488	585	780	1100	1300
M 27x2	431	575	533	719	863	1150	1600	1950
M 30x2	600	800	750	1000	1200	1600	2250	2700

https://truckmanualshub.com/

Special tools and equipment for maintenance

SPECIAL TOOLS	*DESCIPTION*	*Part N°.*
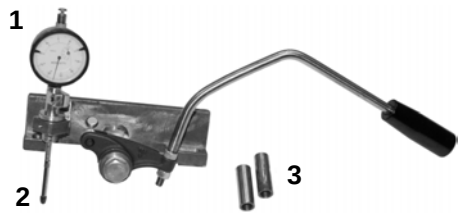	Valve lowering tool for static injection timing check **1** Spacers, h=40mm **2** Dial gauge indicator **3** Dial gauge extension	1460 - 285
	Static timing tool	1460 - 024
	Tool for valve stem O-ring assembly	1460 - 047
	Flywheel puller	1460 - 119
	Timing control gear extractor fork	7560-4000- 052

https://truckmanualshub.com/

https://truckmanualshub.com/

https://truckmanualshub.com/

9 LD Engine Series

cod. 1-5302-286

La Lombardini si riserva il diritto di modificare in qualunque momento i dati contenuti in questa pubblicazione.
Lombardini se rèserve le droit de modifier, à n'importe quel moment, les données reportées dans cette publication.
Data reported in this issue can be modified at any time by Lombardini.
Lombardini behält sich alle Rechte vor, diese Angabe jederzeit zu verändern.
La Lombardini se reserva el derecho de modificar sin previo aviso los datos de esta publicación.

LOMBARDINI® SERVICE
A KOHLER COMPANY

UNI EN ISO 9001 - cert. n° 0446
ISO/TS 16949 - cert. n° 3792

42100 Reggio Emilia – Italia - ITALY
Via Cav. del Lavoro Adelmo Lombardini, 2 - Cas. Post. 1074
Tel. (+39) 0522 3891 - Telex 530003 Motlom I – Telegr.: Lombarmotor
R.E.A. 227083 - Reg. Impr. RE 10875
Cod. fiscale e Partita IVA 01829970357 - CEE Code IT 01829970357

E-MAIL: atlo@lombardini.it
Internet: http://www.lombardini.it