https://truckmanualshub.com/

MECALAC

OPERATING INSTRUCTIONS ARTICULATED LOADER

GB

AX 700 / AX 850 / AX 1000

MECALAC Baumaschinen GmbH Am Friedrichsbrunnen 2 D-24782 Büdelsdorf
Telefon (+49) (0)4331/351-325 Internet: www.mecalac.de
Telefax (+49)(0)4331/351-404 E-Mail: info@mecalac.de

https://truckmanualshub.com/

You will find the

spare parts documentation

online at:

https://www.mecalac.de/abm_doc/

Log in as final customer and specify the **FIN** number (truck identification number) of your MECALAC truck. When you already own an **MECALAC** truck, you can also view the spare parts documentation here. To do so, please specify the **FIN** number of this truck.
If required, you can print the documentation.

https://truckmanualshub.com/

Introduction

Preface

MECALAC's swivel shovel loaders, telescopic loaders, articulated loaders and front loaders are machines included in the vast product range of **MECALAC's** Baumaschinen covering a wide variety of working tasks.

Decades of experience in the construction of earth-moving machines, the wide range of attachments available as well as modern production facilities, careful testing and highest quality demands guarantee the highest degree of reliability of your **MECALAC** machine.

The documentation delivered by the manufacturer includes the following:

- Loader operating instructions
- Engine operating instructions
- Loader spare parts list
- Engine spare parts list
- EC conformity declaration

Operating instructions

The operating instructions contain all the information which the user requires for operation and maintenance.

In the "Maintenance" section, all maintenance work and operation tests are described which can be carried out by trained personnel.

This section does not cover more extensive maintenance work that is reserved to personnel authorized and trained by the manufacturer. In particular, this applies to facilities governed by Motor Vehicle Construction and Use Regulations and the Regulations for the Prevention of Accidents.

Due to the construction modifications reserved by the manufacturer, there may be differences in the figures; however, this has no influence on the technical contents.

How to use this manual

Explanations

- The designations **"left"** and **"right"** are to be seen from the driver's seat in the driving direction.
- Special equipment
  means: not fitted in series.

Information about illustrations

- (3-35)
  means: chapter 3, fig. 35
- (3-35/1)
  means: chapter 3, fig. 35, item 1
- (3-35/arrow)
  means: chapter 3, fig. 35, ←

https://truckmanualshub.com/

Table of Contents

Abbreviations used
UVV = Unfallverhütungsvorschrift (Accident Prevention Regulations)

StVZO = Straßenverkehrzulassungsordnung (German Traffic Regulations)

Edition: 01.2012
Printed: 01.2012

https://truckmanualshub.com/

Table of Contents

1 Fundamental safety instructions

1.1 Warnings and symbols 1-2
1.2 Proper use of the loader 1-2
1.3 Organizational measures 1-2
1.4 Selection of personnel and necessary qualifications; basic responsibilities 1-3
1.5 Safety information for certain operating phases 1-4
1.5.1 Normal operation 1-4
1.5.2 Special work within the exploitation of the machine and elimination of defects during process or work; disposal 1-7
1.6 Notes on special categories of danger 1-9
1.6.1 Electrical energy 1-9
1.6.2 Hydraulics 1-10
1.6.3 Noise 1-10
1.6.4 Oil, grease and other chemical substances 1-11
1.6.5 Gas, dust, steam, smoke 1-11
1.7 Transport and towing; recommissioning 1-11
1.8 Safety information for the contractor or the contractor's authorized personnel 1-12
1.8.1 Organizational measures 1-12
1.8.2 Selection of personnel and necessary qualifications; basic responsibilities 1-12

2 Signs

3 Protection against theft

3.1 Identifying features on the loader 3-2
3.2 Parking the loader 3-2
3.3 Drive-away interlocks 3-3
3.3.1 Drive-away interlock transponder 3-3
3.3.2 Encodable drive-away interlock 3-3

4 Description

4.1 Overview 4-2
4.2 Loader 4-3
4.3 Wheel change 4-6
4.4 Controls 4-7
4.4.1 Multifunction panel 4-8
4.4.2 Emergency seat 4-8
4.4.3 Opening the window 4-9
4.5 Fuses/relays 4-9
4.6 Removing the driver's cab 4-10

5 Operation

5.1 Checks before start-up 5-2
5.2 Start-up 5-2
5.2.1 Starting the diesel engine 5-2
5.2.2 Winter operation 5-3
5.2.2.1 Fuel 5-3
5.2.2.2 Engine oil change 5-3
5.2.2.3 Hydraulic system oil change 5-3
5.2.2.4 Anti-freezing agent, windshield washer 5-4
5.2.3 Driving the loader on public roads 5-4
5.2.4 Working with the loader 5-5

https://truckmanualshub.com/

5.2.5 Heating and ventilation system ... 5-6
5.2.5.1 Setting the air flow ... 5-6
5.2.5.2 Switching on the heater ... 5-6
5.2.5.3 Switching on the air condition (opt.) ... 5-6
5.2.5.4 Setting the temperature ... 5-6
5.2.5.5 De-icing/defogging the windshield ... 5-7
5.3 Decommissioning the loader ... 5-7
5.3.1 Parking the loader ... 5-7
5.3.2 Switch off the diesel engine ... 5-7
5.3.3 Switching off the heater and ventilation system ... 5-7
5.3.4 Leaving the loader ... 5-7
5.4 Adjusting the driver's seat ... 5-8
5.4.1 Euro seat ... 5-8
5.4.2 Grammer seat ... 5-8

6 Attachments

6.1 Mounting and dismounting attachments without hydraulic connections ... 6-2
6.1.1 Standard/lightweight bucket ... 6-2
6.1.2 Fork-lift attachment ... 6-3
6.2 Mounting and dismounting attachments with a hydraulic connection ... 6-3
6.2.1 Multi-purpose bucket ... 6-3
6.3 Use of additional attachments ... 6-5

7 Rescue, towing, lashing, lifting by crane

7.1 Rescue, towing, lashing ... 7-2
7.1.1 Rescue/towing of the articulated loader if the engine or drive has failed ... 7-2
7.1.1.1 Towing the articulated loader when the engine has failed ... 7-2
7.1.1.2 Towing the articulated loader when the traction drive has failed ... 7-5
7.2 Lifting by crane ... 7-6

8 Maintenance

8 Maintenance schedule ... 8-1
8.1 Notes regarding maintenance ... 8-3
8.2 Maintenance work ... 8-4
8.2.1 Oil level check, engine ... 8-4
8.2.2 Oil change, engine ... 8-4
8.2.3 Maintaining/replacing the air filter ... 8-4
8.2.4 Replacing the safety cartridge (option) ... 8-5
8.2.5 Oil level check, front axle ... 8-5
8.2.6 Oil change , front axle ... 8-6
8.2.7 Oil level check , rear axle ... 8-7
8.2.8 Oil change , rear axle ... 8-8
8.2.9 Oil level check , planetary gear ... 8-9
8.2.10 Oil change, planetary gear ... 8-9
8.2.11 Oil change, hydraulic system ... 8-9
8.2.12 Changing the hydraulic oil filter cartridge ... 8-10
8.2.13 Grease points ... 8-11
8.2.13.1 Articulated pendulum joint/steering cylinder ... 8-11
8.2.13.2 Bucket assembly ... 8-12
8.2.13.3 Driver's cab doors ... 8-14
8.2.13.4 Engine hood ... 8-14
8.2.13.5 Multi-purpose bucket ... 8-15
8.2.14 Oil lubrication points ... 8-15
8.2.15 Replacing the starter battery ... 8-15
8.2.16 Maintaining/replacing the fresh air filter ... 8-16
8.2.17 Checking/adjusting the service/parking brake ... 8-16

9 Faults, causes and remedies

https://truckmanualshub.com/

10 Circuit diagrams

10.1 Electric circuit diagram 10-3
10.1.1 Electric circuit diagram (air-conditioning system fan control) 10-7
10.2 Hydraulic circuit diagram 10-9

11 Technical data (loader)

11.1 **AX 700** 11-2
11.1.1 Loader 11-2
11.1.2 Engine 11-2
11.1.3 Starter 11-2
11.1.4 Alternator 11-2
11.1.5 Hydrostatic drive 11-2
11.1.6 Axle loads 11-2
11.1.7 Tyres 11-3
11.1.8 Steering system 11-3
11.1.9 Brake system 11-3
11.1.10 Electric system 11-3
11.1.11 Hydraulic system 11-3
11.1.12 Fuel supply system 11-3
11.1.13 Heating and ventilation system 11-4
11.1.14 Return suction filter 11-4
11.1.15 Combination cooler 11-4
11.1.16 Noise emission 11-4
11.2 **AX 850** 11-5
11.2.1 Loader 11-5
11.2.2 Engine 11-5
11.2.3 Starter 11-5
11.2.4 Alternator 11-5
11.2.5 Hydrostatic drive 11-5
11.2.6 Axle loads 11-5
11.2.7 Tyres 11-6
11.2.8 Steering system 11-6
11.2.9 Brake system 11-6
11.2.10 Electric system 11-6
11.2.11 Hydraulic system 11-6
11.2.12 Fuel supply system 11-6
11.2.13 Heating and ventilation system 11-7
11.2.14 Return suction filter 11-7
11.2.15 Combination cooler 11-7
11.2.16 Noise emission 11-7
11.3 **AX 1000** 11-8
11.3.1 Loader 11-8
11.3.2 Engine 11-8
11.3.3 Starter 11-8
11.3.4 Alternator 11-8
11.3.5 Hydrostatic drive 11-8
11.3.6 Axle loads 11-8
11.3.7 Tyres 11-9
11.3.8 Steering system 11-9
11.3.9 Brake system 11-9
11.3.10 Electric system 11-9
11.3.11 Hydraulic system 11-9
11.3.12 Fuel supply system 11-9
11.3.13 Heating and ventilation system 11-9
11.3.14 Return suction filter 11-10
11.3.15 Combination cooler 11-10
11.3.16 Noise emission 11-10

https://truckmanualshub.com/

12 Technical data (attachments)

12.1 **AX 700** attachments 12-2
12.1.1 Buckets 12-2
12.1.2 Fork-lift attachment 12-4
12.1.3 Lifting hook 12-4
12.2 **AX 850** attachments 12-6
12.2.1 Buckets 12-6
12.2.2 Fork-lift attachment 12-8
12.2.3 Lifting hook 12-8
12.3 **AX 1000** attachments 12-10
12.3.1 Buckets 12-10
12.3.2 Fork-lift attachment 12-12
12.3.3 Lifting hook 12-12

13 Additional options

13.1 Additional options 13-2

https://truckmanualshub.com/

Safety regulations

https://truckmanualshub.com/

1 Fundamental safety instructions

1.1 Warnings and symbols

In this operation manual, the following designations or symbols are used for important information.

NOTE
Extra information about the economical use of the loader.

CAUTION
Special information for regulations and prohibitions for avoiding damage.

DANGER
Information or regulations and prohibitions for prevention of damage to persons or extensive damage to goods.

1.2 Proper use of the loader

1.2.1 This machine was designed according to the state of the art and recognised safety rules. Nevertheless the use of the machine may cause danger for the user or third parties or impairments to the machine or other real values.

1.2.2 The machine and manufacturer-approved attachments may only be used in a technical non-objectionable condition, taking all safety regulations especially with regard to the operating manuals (machine and engine). In particular defects which could have a detrimental effect on the safety of the machine should be eliminated immediately.

1.2.3 The machine is designed exclusively for the purposes described in this operating manual. Any other use beyond these purposes is regarded as being improper use. The manufacturer is not liable for any damage caused in this connection. The risk is solely that of the user.

The authorized use of the machine also requires the operating manual (machine and engine) is heeded and the inspection and maintenance conditions are complied with.

1.3 Organizational measures

1.3.1 The operating manual (machine and engine) must be available at all times and at the site where the machine is in operating condition.

https://truckmanualshub.com/

1.3.2 In addition to the operating manual (machine and engine) the general applicable and other binding regulations for the prevention of accidents (especially the safety regulations of the German Trade Association - VBG 40) as well as the regulations for environment protection must be observed and the personnel must be accordingly.
Also heed all regulations governing public traffic.

1.3.3 The personnel in charge of working with the machine must read the operating manual (machine and engine) before start of work, especially the chapter concerning safety precautions.
This also applies to personnel working occasionally with the machine, e.g. during maintenance work.

1.3.4 The driver must wear a seat belt during operation.

1.3.5 Personnel working with the machine must not wear long flowing hair, loose clothing or jewellery, including rings. Danger of injuries, e.g. by getting caught or being pulled in.

1.3.6 All safety and danger plates on the machine must be observed!

1.3.7 All safety and danger plates must be attached to the machine and must be kept in legible condition.

1.3.8 In case of modifications to the machine, especially in case of damages or changes in the operating behavior of the machine which could influence the safety of the machine, stop the machine immediately and inform the competent person in charge about the incident.

1.3.9 Do not make any modifications or conversions to the machine which could affect safety without the manufacturer's consent. This also applies to the installation and adjustment of safety devices, valves and welding work to supporting parts.

1.3.10 Check the hydraulic system, especially hydraulic pipes, at regular intervals for defects and immediately eliminate any defects found.

1.3.11 The prescribed inspection periods set down in the operating manual (machine and engine) and the maintenance plan must be observed.

1.4 Selection of personnel and necessary qualifications; basic responsibilities

1.4.1 The machine may be driven and maintained only by personnel selected by the employer for this purpose.

https://truckmanualshub.com/

These persons must:
- have attained the age of 18 years,
- be physically and intellectually suitable,
- have been instructed in the operation or maintenance of the machine and must have demonstrated their ability to their employer,
- must be expected to carry out the work conveyed to them in diligent manner.

1.4.2 Electrical work on the machine may be carried out only by a qualified electrician or persons supervised by a qualified electrician according to the electrical regulations.

1.4.3 Only qualified specialists may carry out work on the chassis, the brake and steering system.

1.4.4 Only personnel with special experience and the necessary know-how are permitted to carry out work on the hydraulic system.

1.5 Safety information for certain operating phases

1.5.1 Normal operation

1.5.1.1 A passenger may only be transported in a dedicated passenger seat!

1.5.1.2 Start and drive the machine from the driver's seat only!

1.5.1.3 Observe the control lamps according to the operation manual (machine and engine) during starting and switching-off operation!

1.5.1.4 Before commencing work/driving check brakes, steering, signal lights and lights for their functioning!

1.5.1.5 Before moving the machine always check that the attachments are safely stowed so that no accident may occur!

1.5.1.6 Before commencing work, make yourself familiar with the working environment. This means observing obstacles on the working site, quality and resistance of the soil ground, undertaking the necessary protection precautions between the building site and the public traffic.

1.5.1.7 Before starting the machine make sure that no person is endangered by the moving machine!

1.5.1.8 Take measures so that the machine can be operated **only** in a safe and functional manner. The machine may only be operated when all safety devices, e.g. detachable safety devices and sound absorption, exist and function.

https://truckmanualshub.com/

1.5.1.9 Avoid any action which appears to be dangerous!

1.5.1.10 Persons must not be carried in the working equipment, e.g. in the attachments!

1.5.1.11 The operator may carry out work with the machine only if no persons are in the danger zone.
The danger zone is the area near the machine where persons may be injured
- by work-induced movements of the machine,
- by work attachments and devices,
- by loads swinging out,
- by dropping loads,
- by attachments falling down from the machine.

1.5.1.12 In case of danger to persons the operator must give appropriate warning signs. It may be necessary to stop work.

1.5.1.13 In case of functional defects, stop the machine **immediately** and secure it. Eliminate defects immediately!

1.5.1.14 Check the machine at least once every shift for external visible damage and defects. Report any defects (including changes in the operational behavior) immediately to the person in charge. If necessary stop the machine immediately and safeguard it.

1.5.1.15 The driver may slew the attachments in overhead driving, operating and working areas only if these areas are suitably safeguarded by protective roofing. These protection roofs must offer appropriate safety against loads and falling goods. If you are in doubt, assume **no** protection roofs are present.

1.5.1.16 When driving, the attachment is to be kept as close to the ground as possible.

1.5.1.17 Please observe the applicable traffic regulations when driving on public roads, paths or open spaces. The machine must be brought into road-worthy condition beforehand.

1.5.1.18 Make sure to always switch on lights in poor visibility and during darkness.

1.5.1.19 If the lights of the machine are not adequate for the safe execution of certain work, additional lighting must be provided on the working site, especially at dumping points.

1.5.1.20 Should the driver's sight of his driving and working area be restricted due to work-induced influences, he must be given guidance or he must safeguard the working area by a firm barrier.

https://truckmanualshub.com/

1.5.1.21 Only reliable persons may act as guides. They must be informed of their duties prior to commencing work.

1.5.1.22 The driver and guide must agree on signals for communication. These signals may only be given by the driver and guide.

1.5.1.23 The guide must be easily recognizable – e.g. by wearing warning clothing – and must always be in the driver's field of vision.

1.5.1.24 When passing subways, bridges, tunnels, electrical over-head lines make sure that there is adequate clearance!

1.5.1.25 Maintain adequate clearance when working at the edge of quarries, pits, rubbish dumps and embankments to eliminate any danger of the machine plunging down. The contractor or his deputy must stipulate the distance from the edge taking the soil bearing capacity into consideration.

1.5.1.26 The machine may only be used at stationary dumping areas when firmly integrated installations are provided to prevent the machine from running or sliding down.

1.5.1.27 Avoid such work which could have a detrimental effect on the stability of the machine.

The following may affect the stability:
- overloading,
- ground that is too soft,
- abrupt acceleration or deceleration of driving or working movement,
- reversing out of a high driving speed,
- working on slopes,
- driving too quickly round sharp bends,
- driving the machine on rough terrain.

1.5.1.28 Do not traverse across slopes. Always carry working equipment and loads near the ground, especially when driving down slopes. Sudden cornering is forbidden!

1.5.1.29 On steep inclines and gradients, the load is to be carried on the uphill side.

1.5.1.30 Always adapt the speed of the machine to the environmental conditions when driving down slopes!
Never change into low gear when driving on slopes, but rather before the slope!

1.5.1.31 Reversing over a longer period must be avoided!

1.5.1.32 When leaving the machine always safeguard the machine to prevent it from unintentionally rolling away or prevent non-authorized persons from using it!

1.5.1.33 The driver must not leave the machine if the attachments are not lowered or safeguarded.

https://truckmanualshub.com/

1.5.1.34 During breaks and after work hours, the driver must park the machine on solid and, if possible, level ground and safeguard it against unintentionally rolling away.

1.5.2 Special work within the exploitation of the machine and elimination of defects during process or work; disposal

1.5.2.1 The dates for adjustment work, maintenance work and inspections laid down in the operating manual (machine and engine) must be strictly observed. This also applies to details regarding the replacement of parts/part equipment. This work may only be executed by skilled personnel.

1.5.2.2 For all work concerning the operation, conversion or adjustment of the machine and its safety devices as well as inspection, maintenance and repair work please observe the switch-on and switch-off procedures in accordance with the operating manual (machine and engine) as well as the related instructions for maintenance work.

1.5.2.3 The engine must be switched off before maintenance or repair work is carried out.
1.5.2.4 The stability of the machine or the attachments must be guaranteed at all times during maintenance and repair work.
1.5.2.5 Maintenance and repair work may only be carried out when the attachment is set down on the ground or supported or when equivalent measures against unintentional movement were taken.
During maintenance and repair work under the bucket arm:
- the bucket arm must be mechanically supported: e.g. take the bucket arm support (option) off the left loader front after having unscrewed the fastening screw/nut and insert it in the lifting cylinder (1-1/arrow),
- the pilot valves for working and auxiliary hydraulics (1-2/arrow) must be closed (rear position).

1.5.2.6 Secure the articulated link against buckling when performing maintenance and repair work on it.
Take the bolt out of the rear tow coupling and insert it in the articulation joint (articulation safeguard) (1-3/arrow).

CAUTION
- The steering must be in a straight ahead position when you insert the bolt.
- Do not operate the steering while the articulation safeguard is in place.

1.5.2.7 If necessary, secure the maintenance area on a large scale.
1.5.2.8 The machine must be protected from unintentionally starting after it was switched off for maintenance and repair work:
- remove the ignition key and
- attach at warning sign at the disconnected battery or at the battery main switch.

This applies especially to works to the electrical equipment.

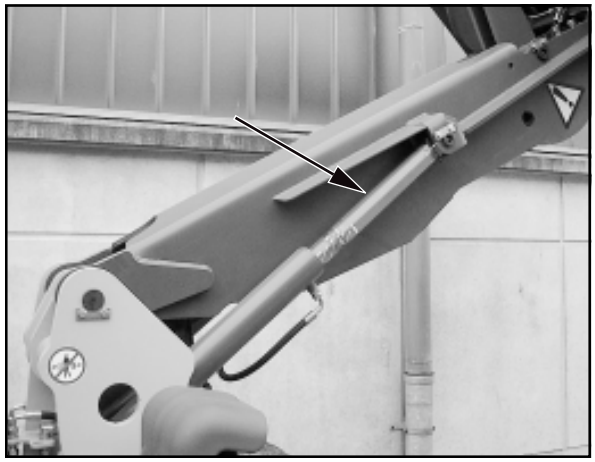

Figure 1-1

Figure 1-2

Figure 1-3

https://truckmanualshub.com/

1.5.2.9 Individual pieces and large assemblies must be carefully secured to hoisting equipment when being replaced to avoid any damage. Only suitable and technically sound hoisting equipment may be used as well as crane equipment with adequate payload. Do not stand or work underneath suspended loads!

1.5.2.10 Only experienced personnel should be entrusted with the securing of loads!
Loads must be secured so that they cannot slip or fall down.

1.5.2.11 Attached loads may only be moved with the machine when the road is graded.

1.5.2.12 When working with hoisting equipment / elevators the slingers may only work with the approval of the driver and from the side of the boom. The driver may only give his consent if the machine is standing still and the working attachment is not being moved.

1.5.2.13 Persons assisting with the guidance of loads and slingers may only stay in visual or communication reach of the driver.

1.5.2.14 The operator must move the load as close to the ground as possible and avoid swivelling the load.

1.5.2.15 The operator may not move the load over the heads of persons.

1.5.2.16 In the case of erection work that must be carried out above normal human height, suitable safety ascent devices and working platforms must be used. Do not use engine parts, in particular attachments such as buckets, as climbing and descending facilities. Use safety harnesses when working at very great heights.

All handles, steps, railings, platforms, scaffolds, and ladders must be kept free from dirt and ice.

1.5.2.17 Clean the machine, especially connections and screw connections, before commencement of maintenance work and make sure that the machine is free from oil, fuel oil or dirt. Do not use aggressive detergents. Use lintless cleaning rags!

1.5.2.18 Before cleaning the machine with water or steam jet (high pressure cleaning unit) or with detergent, protect all areas where water/steam/detergent may penetrate and affect the functions or safety of the machine by a suitable cover or by applying tape. In particular, such parts as engine components, e.g. alternator, generator governor, starter, air filter, cables and hoses are very delicate.

1.5.2.19 After cleaning completely remove all protection covering and tape.

1.5.2.20 After cleaning check all pipelines for fuel, engine oil and hydraulic oil for leakages, loose connections, abrased parts and damages. Eliminate defects immediately!

https://truckmanualshub.com/

1.5.2.21 Always fasten screw connections after completion of maintenance and repair work.

1.5.2.22 Should it be necessary to dismantle safety devices during mounting, maintenance or repair work, these safety devices must be re-installed and checked carefully after completed maintenance and repair work.

1.5.2.23 Make sure that fuel, accessory material and interchanged parts are safely disposed of with no danger to the environment.

1.5.2.24 The machine should be checked by a specialist before commissioning and after essential modifications before it returns to service.

1.5.2.25 The machine must be checked by a specialist once a year. Furthermore, a specialist must check the machine whenever necessary according to operating conditions.

1.5.2.26 The test results must be recorded and kept in the archives at least until the following inspection date.

1.6 Notes on special categories of danger

1.6.1 Electrical energy

1.6.1.1 Only use original fuses with stipulated ratings. Immediately switch off the machine if the electrical supply fails.

1.6.1.2 When working near overhead lines and overhead wires, a safety clearance must be kept between the machine and its working equipment in order to prevent sparking over. The safety clearance depends on the nominal voltage of the overhead/wire line. This also applies to the distance between the lines and to the attachments and slung loads.
The following safety clearance must be observed to meet the above mentioned requirement:

Nominal voltage			Safety clearance
(kilovolts)			(metres)
	up to	1 kV	1.0 m
from 1 kV	to	110 kV	3.0 m
from 110 kV	to	220 kV	4.0 m
over 220 kV	to	380 kV	5.0 m
unknown voltage			5.0 m

When approaching overhead lines, all working movements of the machine must be taken into consideration, e.g. the position of jibs, the swinging of ropes and the dimensions of attached loads.
In addition, attention must be paid to any roughness of soil which could cause an inclined position of the machine, thus getting it closer to the overhead line.
The fact that overhead lines may swing out during windy weather and may reduce the distance must also be taken into consideration.

https://truckmanualshub.com/

1.6.1.3 In the case of sparking over, the driver must bring the machine out of the danger area by lifting or lowering the attachments or by swivelling away or driving the machine out of the danger area. If this is not possible then the following rules must be observed:
- Do not leave the driver's cabin!
- Warn persons standing near the machine not to approach or touch the machine!
- Give immediate instructions to have the power cut off!
- Leave the machine only when it is sure that the electricity in the damaged / contacted power line is switched off so that the line is dead!

1.6.1.4 Work on the electrical system or on the operating system may only be carried out by a skilled electrician or by personnel instructed or supervised by such a trained electrician according to electrotechnical regulations.

1.6.1.5 The electrical installation of a machine must be reviewed/inspected at regular intervals. Any defects, e.g. loose connections or scorched cabling, must be eliminated immediately.

1.6.1.6 The cable must be disconnected from the negative pole of the battery before inspection, maintenance or repair of machine parts and components.

1.6.1.7 Electric welding operations may only be performed if the battery main switch (8-35/3) has been pulled out.

1.6.2 Hydraulics

1.6.2.1 Only experts with special expertise and experience may carry out work on the hydraulic system!

1.6.2.2 All pipelines, hoses and screw connections must be checked regularly for leakages and visible damage! Immediately repair such defects! Spurting hydraulic oil may cause injuries and fire.

1.6.2.3 Those hydraulic system segments which are to be opened must be depressurised before commencement of the repair work according to the assembly group description!

1.6.2.4 The hydraulic pipelines must be correctly laid and connected! Do not mix up the connections. Spare parts must meet the technical requirements of the manufacturer. Original spare parts ensure the fulfilment of these requirements.

1.6.2.5 The factory settings of hydraulic components (e.g. the maximum permissible speed of the axial piston engine) must not be altered. Any adjustment will render the warranty invalid.

1.6.3 Noise

Sound protection equipment must be in protective position during operation of the machine.

https://truckmanualshub.com/

1.6.4 Oil, grease and other chemical substances

1.6.4.1 The relevant safety regulations must be observed when handling oil, grease or other chemical substances.

1.6.4.2 Caution when working with hot fuel and other accessory materials (danger of burning and scalding).

1.6.4.3 Caution when working with brake fluid and battery acid.

TOXIC AND CAUSTIC!

1.6.4.4 Be careful when working with fuel.

FIRE HAZARD!

- Before refuelling, switch off the engine and remove the ignition key.
- Do not refuel in an enclosed area.
- Never refuel near open fire or sparks.
- Do not smoke during refuelling.
- Immediately wipe up spilled fuel.
- Keep the machine free of fuel, oil and grease.

1.6.5 Gas, dust, steam, smoke

1.6.5.1 The machine may be operated in closed rooms only if sufficient ventilation is ensured! Ensure sufficient ventilation prior to starting the machine!
The regulations for the respective working site must be strictly observed.

1.6.5.2 Carry out welding, burning and grinding work on the machine only when this is explicitly approved. Otherwise, there is the danger of fire and explosion!

1.6.5.3 Before carrying out welding, burning and grinding work clean the machine and its vicinity from combustibles and make sure that the room is adequately ventilated.

Explosion hazard!

1.7 Transport and towing; recommissioning

1.7.1 The machine may only be towed if the brakes and steering function.

1.7.2 Towing may be carried out only by means of an adequately dimensioned towing bar in connection with towing devices.

1.7.3 Start towing at a low speed. Persons must not be near the towing bar.

https://truckmanualshub.com/

1.7.4 When the machine is loaded and transported, the necessary auxiliary equipment must be fitted to prevent any unintended movement. The tyres must be kept clean of mud, snow and ice so that the machine can drive on ramps without danger of sliding.

1.7.5 Strictly observe the operating manual during recommissioning.

1.8 Safety information for the contractor or the contractor's authorized personnel

1.8.1 Organizational measures

1.8.1.1 We emphasise that attachments that are not supplied by us are also not tested and approved by us. Use of such products can under certain conditions adversely affect the present constructional qualities of your loader and thus limit the active and passive driving safety. The manufacturer cannot be held responsible for damage that occurs through the use of such products.

Figure 1-4

1.8.1.2 Inform yourself of the location/use of fire extinguishers (1-4/arrow) and first-aid kit!

1.8.1.3 When travelling on public roads, a first-aid kit, a warning triangle and a warning lamp must be available on the vehicle.

1.8.2 Selection of personnel and necessary qualifications; basic responsibilities

1.8.2.1 Only reliable persons are allowed to work on/with the machine. The minimum legal age must be observed.

1.8.2.2 Employ trained or instructed personnel only. Clearly define the competencies of the personnel regarding operation, installation, maintenance and repair work.
Ensure that only authorised personnel may work on/with the machine!

1.8.2.3 Authorize the drive to refuse instructions given by third parties when these instructions are detrimental to the safety of the driver and the machine.

1.8.2.4 Personnel who are to be trained, instructed or working on/ with the machine in the scope of professional training must not work on/ with the machine, unless they are supervised by an experienced person.

https://truckmanualshub.com/

Signs

https://truckmanualshub.com/

2 Signs

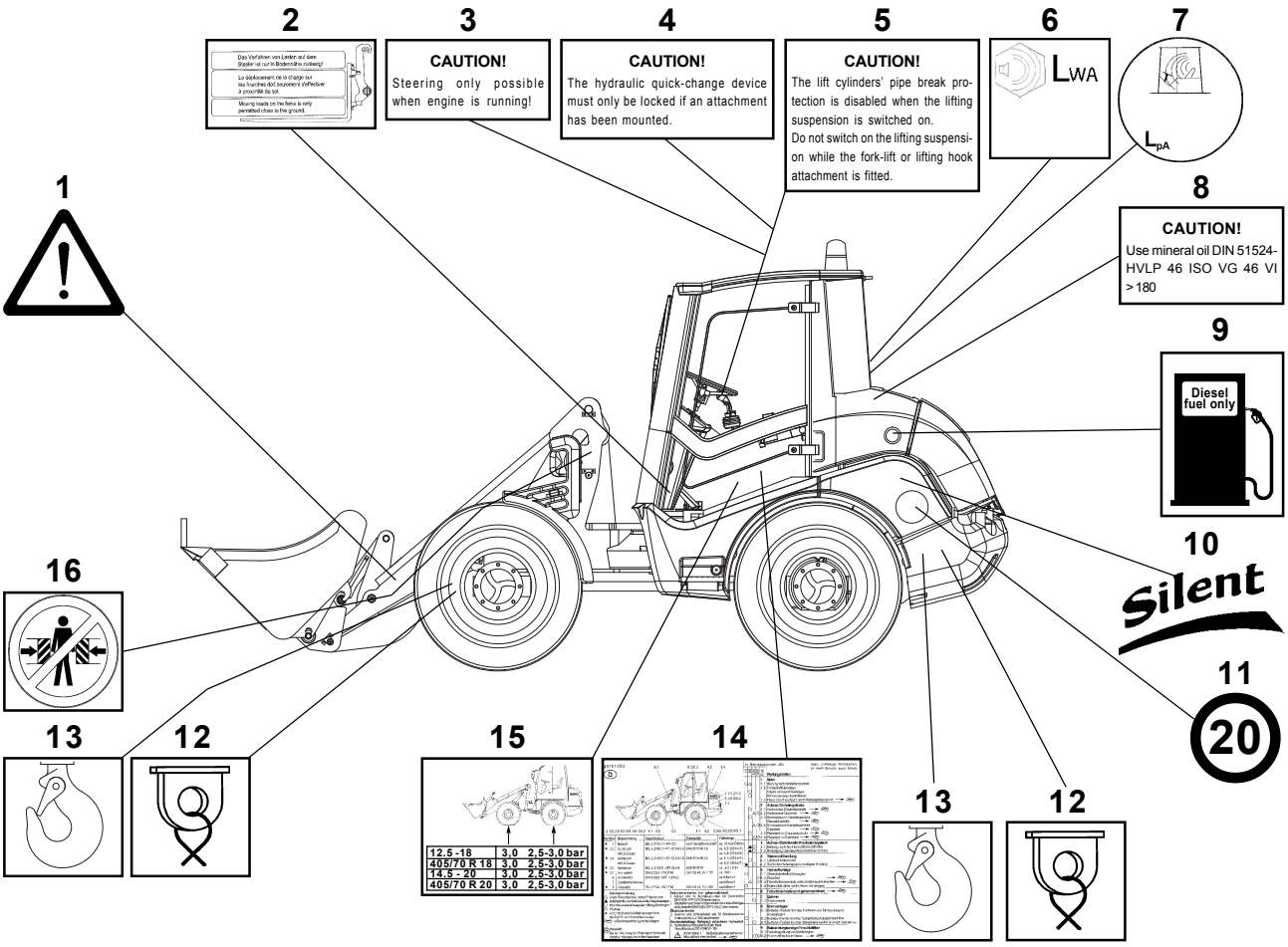

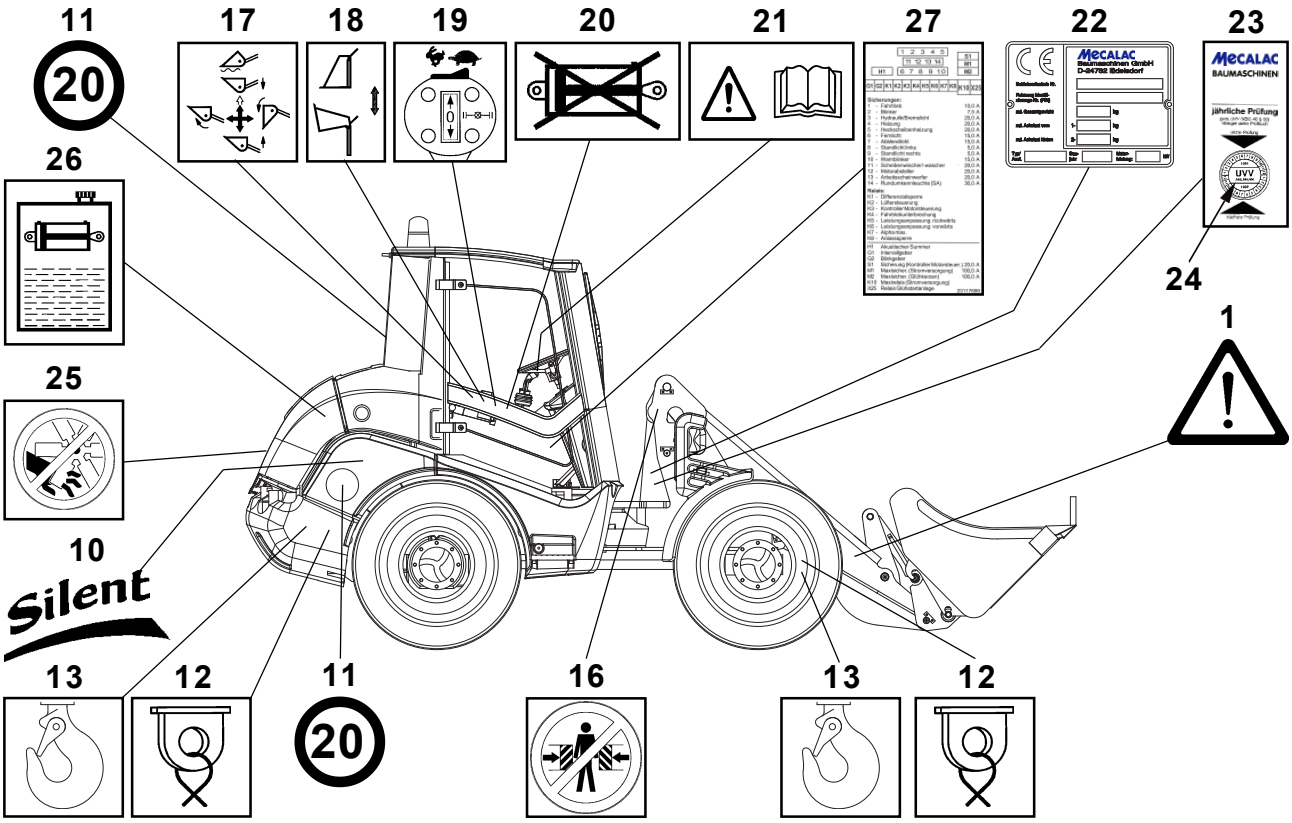

https://truckmanualshub.com/

1	Symbol:	Stay out of the danger zone
2	Sign:	Moving loads on the forks is only permitted close to the ground!
3	Sign:	**CAUTION!** - Steering only possible when engine is running!
4	Sign:	**CAUTION!** The hydraulic quick-change device must only be locked if an attachment has been mounted.
5	Sign:	**» Only for loaders with pipe break protection «** **CAUTION!** The lift cylinders' pipe break protection is disabled when the lifting suspension is switched on. Do not switch on the lifting suspension while the fork-lift or lifting hook attachment is fitted.
6	Sign:	Noise pressure level (chapt. 11.1.16, 11.2.16, 11.3.16)
7	Sign:	Sound power level (chapt. 11.1.16, 11.2.16, 11.3.16)
8	Sign:	Use mineral oil DIN 51524-HVLP 46 ISO VG 46 VI > 180
9	Symbol:	Fuel tank
10	Sign:	Lettering "Low-noise construction machine"
11	Sign:	Maximum speed
12	Symbol:	Lashing eye
13	Symbol:	Lifting hook
14	Sign:	Maintenance schedule
15	Sign:	Tyre pressure
16	Symbol:	Stay out of the unprotected articulation area
17	Symbol:	Pilot valve for working hydraulics (4-8/4) - Hand lever forward - Lower bucket arm - Hand lever forward beyond its pressure point - Floating position - Hand lever to the rear - Lift bucket arm - Hand lever to the left - Tilt up quick-change device/attachment - Hand lever to the right - Tilt down quick-change device/attachment
18	Symbol:	Pilot valve for auxiliary hydraulics (4-8/5)
19	Symbol:	Standard joystick - Drive switch (4-10/11) - Drive direction - forward - 0 - reverse - Pushbutton for differential lock (4-10/10) - Hydraulic drive stages (4-10/9) - Hare symbol - fast - Snail symbol - slow
20	Symbol:	Working and auxiliary hydraulics locked
21	Symbol:	Read and observe the operating instructions before commissioning. Make sure that all other users have read the safety instructions!
22	Machine type label (includes the identification number of the vehicle)	
23	Sign:	Annual inspection as per UVV
24	Sign:	UVV badge
25	Symbol:	Open only when the engine is not running
26	Symbol:	Hydraulic oil tank
27	Sign:	Fuses/relays

https://truckmanualshub.com/

https://truckmanualshub.com/

Protection against theft

https://truckmanualshub.com/

Figure 3-1

Figure 3-2

Figure 3-3

3 Protection against theft

Instances where construction machines were stolen have considerably increased in recent years.

To make it possible for the police, customs and other authorities to find and identify machines much faster, **MECALAC** construction machines are fitted with the following identifying features:

3.1 Identifying features on the loader

(1) Loader type plate (3-1/arrow). Among other details, the loader type plate also gives the 17-digit **FIN** number (truck identification number) (starting with W09.
(2) The **FIN** number is also stamped into the front part (3-2/arrow) of the loader.
(3) ROPS plate (3-3/arrow).
This plate gives the name of the manufacturer as well as details on the ROPS type, the loader type and the permissible overall weight.

3.2 Parking the loader

(1) Turn the steering wheel fully to the left or the right.
(2) Apply the parking brake (4-9/3).
(3) Tip the quick-change device until
- the tines of the bucket,
- the tines of the fork-lift attachment or
- the boom of the lifting hook

is placed on the ground.
(4) Lock (4-8-/6) pilot valves for the working and auxiliary hydraulics (4-8/4 and 4-8/5).
(5) Set the drive switch (4-10/11) to „forward“ or „reverse“.
(6) Set hydraulic drive stage „I“ (4-10/9).
(7) Remove the ignition key.
(8) Remove the main battery switch (8-36/1).
(9) Switch on the working lights (4-10/6). *
(10) Switch on the warning beacon (opt.) (4-10/5). *
(11) Switch on the hazard flasher (4-8/14). *
(12) Push the steering column switch (4-8/1) to the „High beam“ position. *
(13) Lock both doors.
(14) Lock the tank lid.
(15) Lock the engine hood.

* In case of short-circuiting, persons in the vicinity should be made aware of the unusually lit machine.

https://truckmanualshub.com/

3.3 Drive-away interlocks

3.3.1 Drive-away interlock transponder

(option)
The „transponder for drive-away interlock“ is an electronic drive-away interlock that deactivates vital loader functions. If the transponder (e.g. a tag at the ignition key) is taken away from the receiver unit (in the immediate vicinity of the ignition lock), these vital functions are interrupted.

Advantages in case of an insured event:

The transponder for drive-away interlock meets the new, stricter requirements of the insurance companies.
Ask your insurance company for the appropriate details.

3.3.2 Encodable drive-away interlock

(option)
The „encodable drive-away interlock“ is an electronic drive-away interlock that deactivates vital loader functions.
A digital code lock releasing these loader functions is activated when the correct code has been entered.
This code number can be changed as often as desired.

Advantages in case of an insured event:

Ask your insurance company for the appropriate details.

https://truckmanualshub.com/

https://truckmanualshub.com/

Description

https://truckmanualshub.com/

4 Description

4.1 Overview

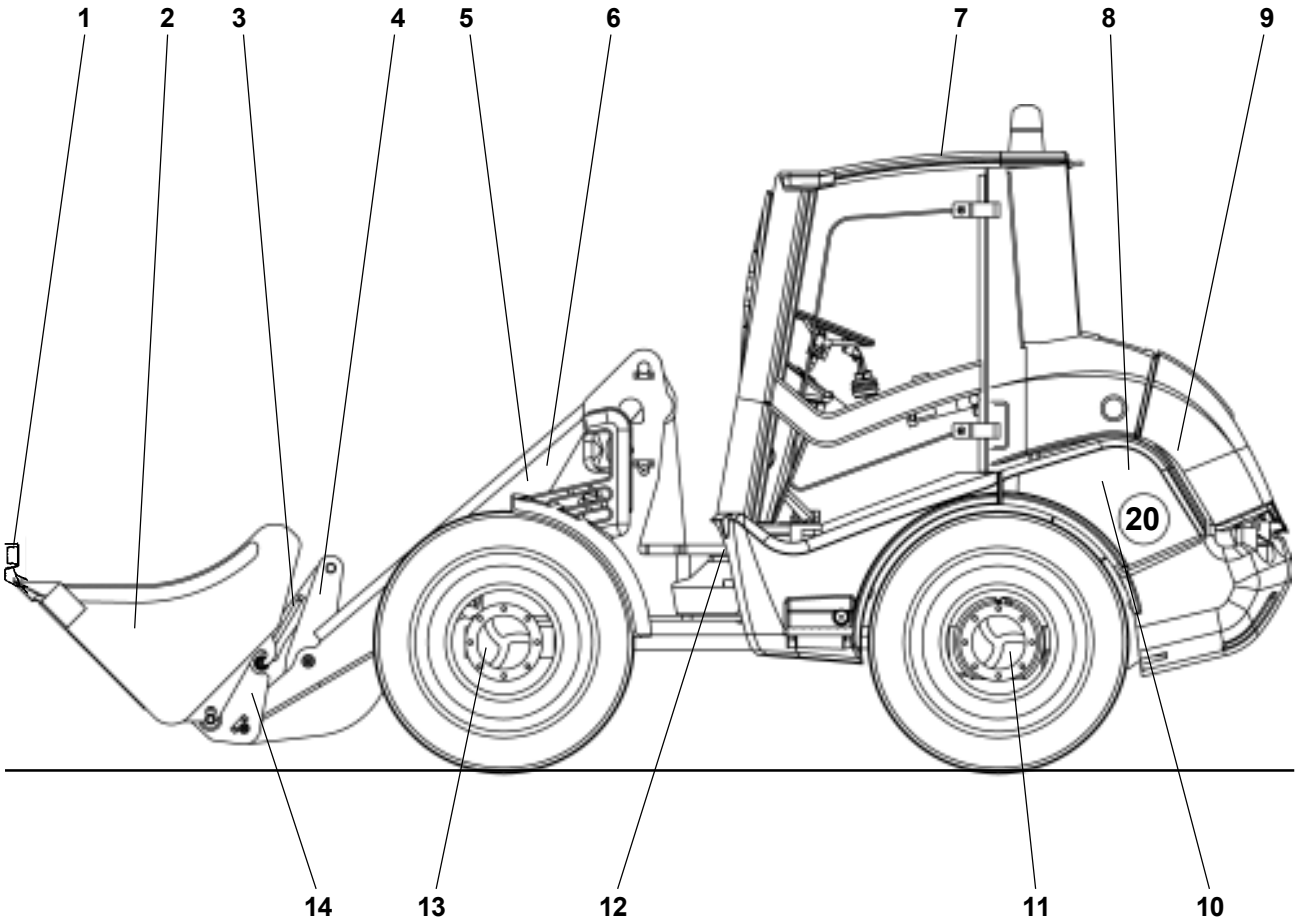

Figure 4-1

1 - Bucket protection
2 - Bucket/attachment
3 - Pivot arm
4 - Deflection lever
5 - Bucket arm
6 - Tip cylinder (in the bucket arm)
7 - Driver's cab
8 - Hydraulic oil tank (right loader side underneath the engine hood)
9 - Drive motor
10 - Fuel tank (left loader side underneath the engine hood)
11 - Rear axle
12 - Articulated pendulum joint
13 - Front axle
14 - Quick-change device

https://truckmanualshub.com/

4.2 Loader

Undercarriage

The axial piston pump for the hydraulic drive is driven by the diesel engine. Pressure hoses for extremely high pressure connect the axial piston pump with the axial piston engine. The axial piston engine is flanged to the distribution/ intermediate gear of the rear axle (with planetary gear). The distribution/intermediate gear transmits the torque of the axial piston engine directly to the rear axle and to the front axle (with planetary gear).

CAUTION
The maximum speed of the axial piston engine is governed by settings made at the factory. Any adjustment will render the warranty invalid.

Tyres

The following tyres are permitted:

12.5/80 R18	15.5/55 R18	365/70 R18
405/70 R18	425/55 R17	

For the running direction, see Fig. 4-2.

NOTE
All four tyres must be identical and have the same PR rating (PR = ply rating: number of textile plies).

Steering system

The power for the hydrostatic steering system is supplied via a priority valve from a gear-type pump. With a minimum of effort on the steering wheel, the oil flow is directed by a steering unit into the steering cylinder.

Emergency steering

The hydrostatic steering system can also be used in a limited way if the diesel engine fails. The loader can be steered using a considerable amount of manual effort.

NOTE
See chapter 7, “Towing the loader”.

Differential lock

To enhance the traction of soft slippery ground, you can enable the differential lock acting on all four wheels by pressing pushbutton (4-10/10) and keeping it pressed.

CAUTION
Enable the differential lock only when the loader is at a standstill.

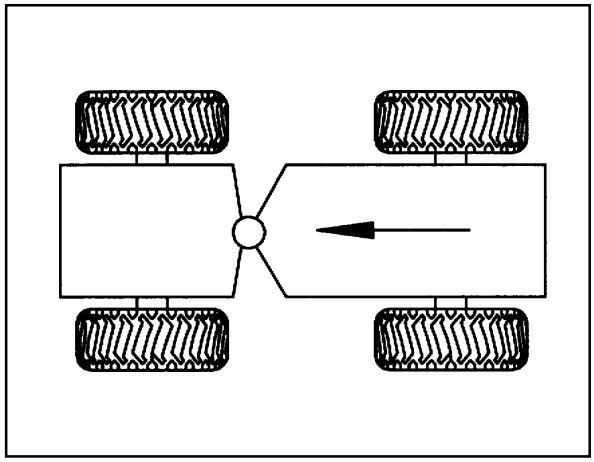

Figure 4-2

https://truckmanualshub.com/

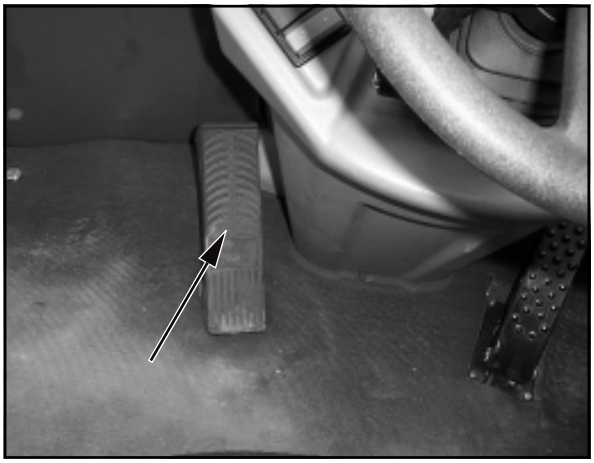

Figure 4-3

Make sure the differential lock engages by releasing the accelerator and steering movements if only one wheel of an axle rotates with the differential lock enabled.
You may disable the differential lock while the loader is moving.

CAUTION
Make sure to disable the differential lock when driving on solid ground, in particular when taking bends.

Service brake/ inching

AX 700/20 km/h and AX 850/20 km/h:
The loaders are equipped with a hydraulic drum brake in the front axle acting on all four wheels.

AX 700/30 km/h, AX 850/30 km/h and AX 1000:
The loaders are equipped with a hydraulic disc brake in the front axle acting on all four wheels.

The service brake is actuated with a pedal (4-3/arrow) located to the left of the steering column. It is supported by the hydrostatic traction drive (inching), i.e. during work, the drive pedal is used for accelerating and braking.

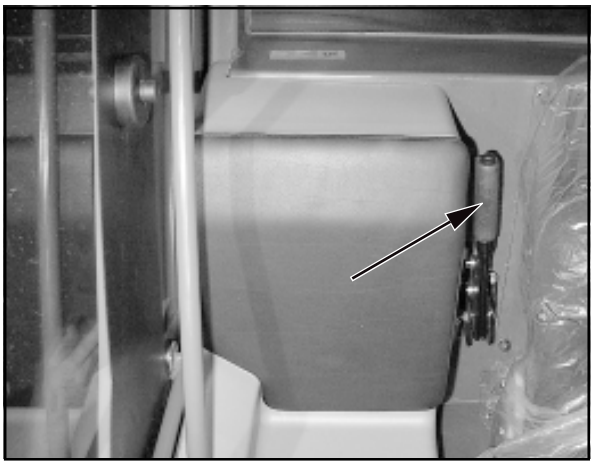

Figure 4-4

Parking brake

The parking brake is actuated with a hand lever (4-4/arrow) located to the left of the driver's seat.
When actuated, the mechanic parking brake acting on all four wheels switches off the traction drive.

Fuel supply system

The fuel tank is located on the left-hand side of the loader rear. An electrical fuel gauge (4-11/23) in the operator's cabin monitors the fuel level in the tank. The filler neck (4-5/arrow) is located beneath the engine hood on the left loader side.

Air filter device

Dry air filter system with safety cartridge (opt.) and umbrella valve.

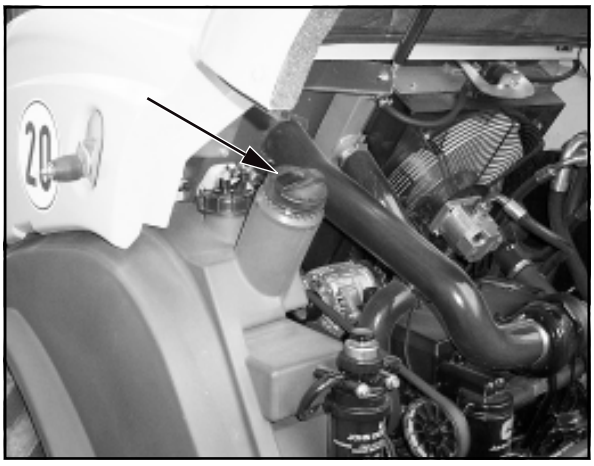

Figure 4-5

Lift and tip devices

Via a servo valve a double-acting gear-type pump drives
- two lifting cylinders
- one tip cylinder

All movements of the bucket arm, the bucket, the attachments and the quick-change device are controlled from the driver's seat by pilot valves.
These pilot valves provide continuous speed control from "slow" to "fast".

https://truckmanualshub.com/

Float position

The loader features a floating position. It is activated by moving the hand lever (4-8/4) beyond its pressure point to the frontmost position. The hand lever remains engaged in this position until it is pulled back.

DANGER
The float position may only be activated when the bucket arm is in the lowermost position.

NOTE
- The float position is disabled if the loader is equipped with a pipe break protection.
- You can disable the pipe break protection (4-10/16) to maintain the function of the float position (option).

Pipe break protection(option)

A pipe break safety valve is installed at the bottom of each tip and lift cylinder. In the event of a pipe or hose break in the lift and/or tip system, the movements of the bucket arm and the tipping rod are blocked until the damage is repaired.
The pipe break protection can be enabled or disabled (4-10/16) (option).

Lifting device suspension (option)

When the loader must be driven over larger distances, especially with a loaded bucket, the lifting device suspension (4-10/15) should be activated to avoid resonant motion. This becomes even more important with increasing unevenness of the terrain and increasing speed of the loader.

CAUTION
The lifting device suspension must only be used for driving over long distances, not for working with the loader.

NOTE
- The lifting device suspension is disabled if the loader is equipped with a pipe break protection.
- You can switch off the pipe break protection (4-10/16) (option) to maintain the function of the lifting device suspension.

Bucket position indicator

The driver can see the position of the bucket by the coloured markings on the pivot arm and the reversing lever. When the coloured marks (4-6/arrow) form a line, the bucket floor is parallel to the ground.

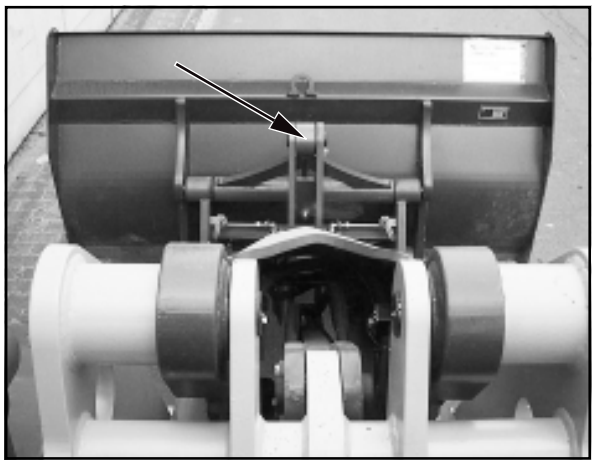

Figure 4-6

https://truckmanualshub.com/

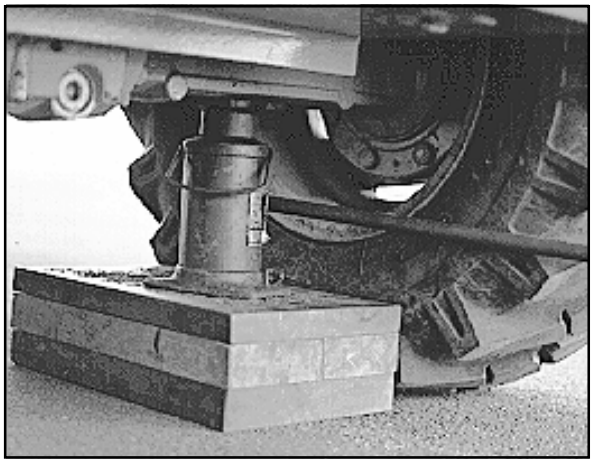

Figure 4-7

4.3 Wheel change

DANGER

Before changing a wheel on public roads, the danger area must be properly marked.

(1) Park the loader on solid ground and not on inclines if possible.

(2) Lower the attachment to the ground.

(3) Set the drive switch (4-10/11) to “0”.

(4) Apply the parking brake (4-9/3).

(5) Turn the ignition key to the left to position “0” (5-1).

(6) Lock (4-8-/6) pilot valves for the working and auxiliary hydraulics (4-8/4 and 4-8/5).

(7) Insert the articulation safeguard into the articulation joint (1-3/arrow).

(8) Secure the machine by placing two wedges under one wheel of the axle where **no** wheel is to be changed.

(9) Loosen the wheel nuts of the wheel to be changed so that they can be turned manually.
(10) Fit a suitable jack (minimum capacity 3.0 tons) from the side under the axle bridge in the vicinity of the axle fixture so that it is centred and cannot slip (4-7). Lift the front/rear axle until the wheel does not have any contact to the ground.

DANGER

- Secure the jack by a suitable support to prevent it from sinking into the ground.
- Make sure that the jack is fitted well.

(11) Loosen the wheel nuts completely and remove them.

(12) Lower the loader slightly with the jack until the wheel bolts are free.

(13) Push off the wheel from the wheel hub by moving it back and forth. Remove the wheel and roll it aside.

(14) Mount the new wheel onto the planetary axle.

(15) Tighten the wheel nuts by hand.

(16) Lower the front/rear axle using the jack.

(17) Tighten the wheel nuts with a torque wrench (440 Nm).

CAUTION

Retighten the wheel nuts after the first 8-10 operating hours.

https://truckmanualshub.com/

4.4 Controls

1 - Steering column switch
- to the front: Turn signal, right
- to the rear: Turn signal, left
- up: Low beam
- down: High beam
- Pushbutton: Signal horn
- Turn, step 1: Interval wiper, front
- Turn, step 2: Windshield wiper, front
- Push upper ring in axial direction: Windshield washer, front

2 - Multifunction panel
3 - Lock lever for steering column adjustment
- to the front/rear
- in axial steering column direction

4 - Pilot valve for working hydraulics
5 - Pilot valve for auxiliary hydraulics
6 - Lock lever pilot valve for working and auxiliary hydraulics
7 - Starter switch
8 - Accelerator
9 - Steering wheel
10 - Foot pedal for service brake/ inching
11 - free
12 - free
13 - Toggle switch for hazard flasher system
14 - Toggle switch for road lights
- Position I: Parking light
- Position II: Road light

15 - Toggle switch for windshield wiper/washer, rear
- Position I: Wiper
- Position II: Wiper/washer (pushbutton function)

16 - Pushbutton for releasing the quick-change device

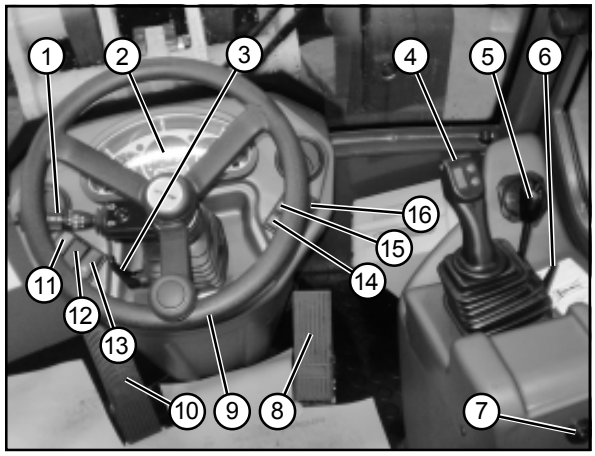

Figure 4-8

To the left of the driver's seat:
1 - Door release
2 - Foldable emergency seat (option) (see chapter 4.4.2)
3 - Hand lever for parking brake

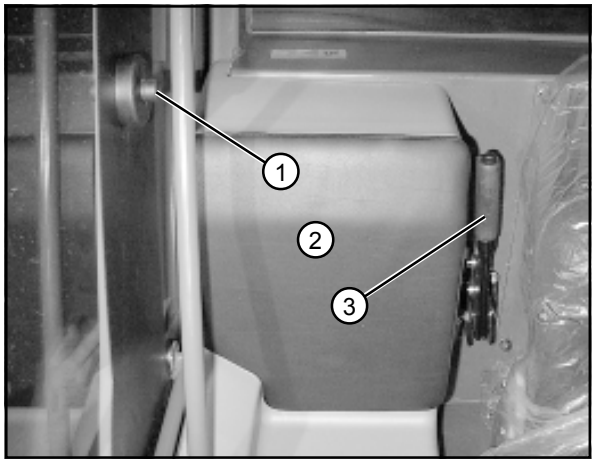

Figure 4-9

To the right of the driver's seat:
1 - Loudspeaker
2 - Radio
3 - Heating/air condition
4 - Toggle switch for rear window heater
5 - Toggle switch for beacon light (opt.)
6 - Toggle switch for working lights
9 - Hydraulic drive levels:
- right - Stage I: slow
- left - Stage II: fast

10 - Two parallel pushbuttons for differential lock
- Pushbuttons pressed: Differential lock enabled
- Pushbuttons not pressed: Differential lock disabled

CAUTION
The differential lock may only be enabled when the loader is not moving.

11 - Drive switch: forward/0/reverse
12 - Ash tray
13 - 2-pole socket
14 - Toggle switch for permanent auxiliary hydraulics (opt.)
15 - Toggle switch for lifting device suspension (opt.)
16 - Toggle switch for pipe break protection (opt.)

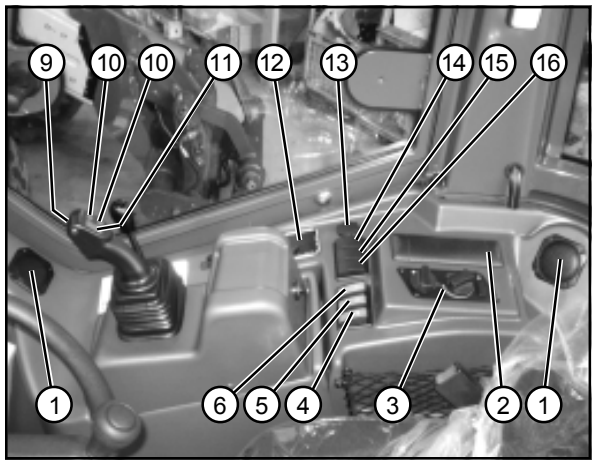

Figure 4-10

https://truckmanualshub.com/

4.4.1 Multifunction panel (4-8/2)

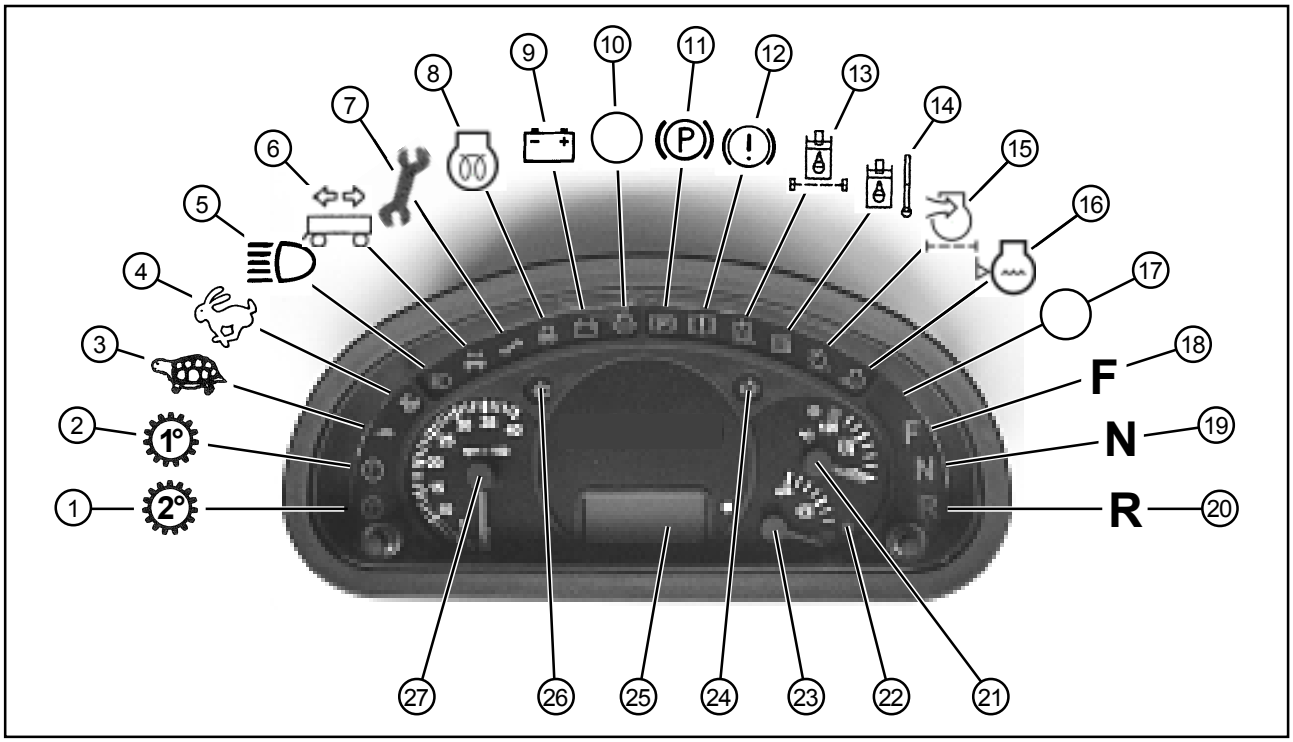

Figure 4-11

1 - free
2 - free
3 - Indicator lamp: Hydraulic drive stage „slow“
4 - Indicator lamp: Hydraulic drive stage „fast“
5 - Indicator lamp: High beam
6 - free
7 - Signal lamp: Engine Stop

CAUTION
The controller detected a severe engine fault.
Shut off the engine immediately!
Have an expert investigate the fault.

8 - Indicator lamp: Preheating
9 - Battery charge indicator
10 - free
11 - Indicator lamp: Parking brake
12 - Indicator lamp: Engine Warning

CAUTION
The controller detected an engine fault.
Have an expert investigate the fault.

13 - Hydraulic oil filter clogging indicator (opt.)
14 - Signal lamp: Hydraulic oil temperature
15 - Air filter clogging indicator (opt.)
16 - Signal lamp: Low cooling water
17 - Indicator lamp: Differential lock
18 - Indicator lamp: Travel direction “forward“
19 - Indicator lamp: Travel direction “0-position“
20 - Indicator lamp: Travel direction “reverse“
21 - Cooling water temperature gauge
22 - Indicator lamp: Fuel on reserve
23 - Fuel gauge
24 - Indicator lamp: Turn signal „right“
25 - Operating hours counter and digital clock
26 - Indicator lamp: Turn signal „left“
27 - Rev meter

4.4.2 Emergency seat (foldable) (4-9/2)

CAUTION
A passenger may only sit down on the widened part of the emergency seat in order to safely reach the grab handle installed on column A.

In this position he will not limit the driver’s free moving space.

https://truckmanualshub.com/

Figure 4-12

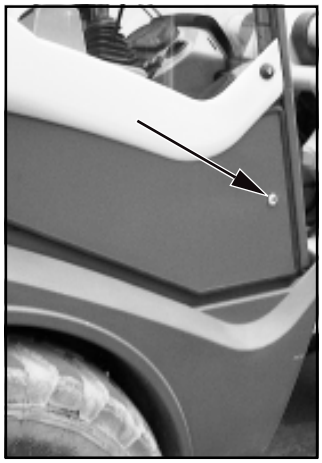

Figure 4-13

4.4.3 Opening the window

1. **Opening the window:**
   First pull the window handle inwards, then push it outwards. Finally lift the window handle out of its holder.
2. **Opening and locking the window :**
   First pull the window handle inwards, then push it outwards. Finally pull the window handle to the rear until it locks.

4.5 Fuses/relays

NOTE

Fuses, relays, turn signal relay, interval relay etc. (4-14) are located behind the maintenance flap on the right side of the loader (4-13/arrow).

G1 - Interval timer
G2 - Turn signal relay

1	- Fuse (controller engine)	20.0	A
2	- Maxi fuse (power supply)	100.0	A
3	- Maxi fuse (glow plugs)	100.0	A
4	- Glow start system relay		
5	- Maxi relay (power supply)		
6	- Controller engine		
7	- Acoustic buzzer, hydraulic oil temperature		

Fuses:

1	- Traction drive	10.0	A
2	- Turn indicator	7.5	A
3	- Hydraulics/brake light	20.0	A
4	- Heater	20.0	A
5	- Rear window heater	20.0	A
6	- High beam	15.0	A
7	- Low beam	15.0	A
8	- Parking light, left	5.0	A
9	- Parking light, right	5.0	A
10	- Hazard flasher	15.0	A
11	- Windshield wiper/washer	20.0	A
12	- Free		
13	- Working lights	20.0	A
14	- Warning beacon (opt.)	30.0	A

Relays:

K1 - Differential lock
K2 - Fan control
XC - Controller engine (ECU)
K4 - Traction drive cut-out
K5 - Power control: reverse
K6 - Power control: forward
K7 - Alpha max.
K8 - Start-up interlock

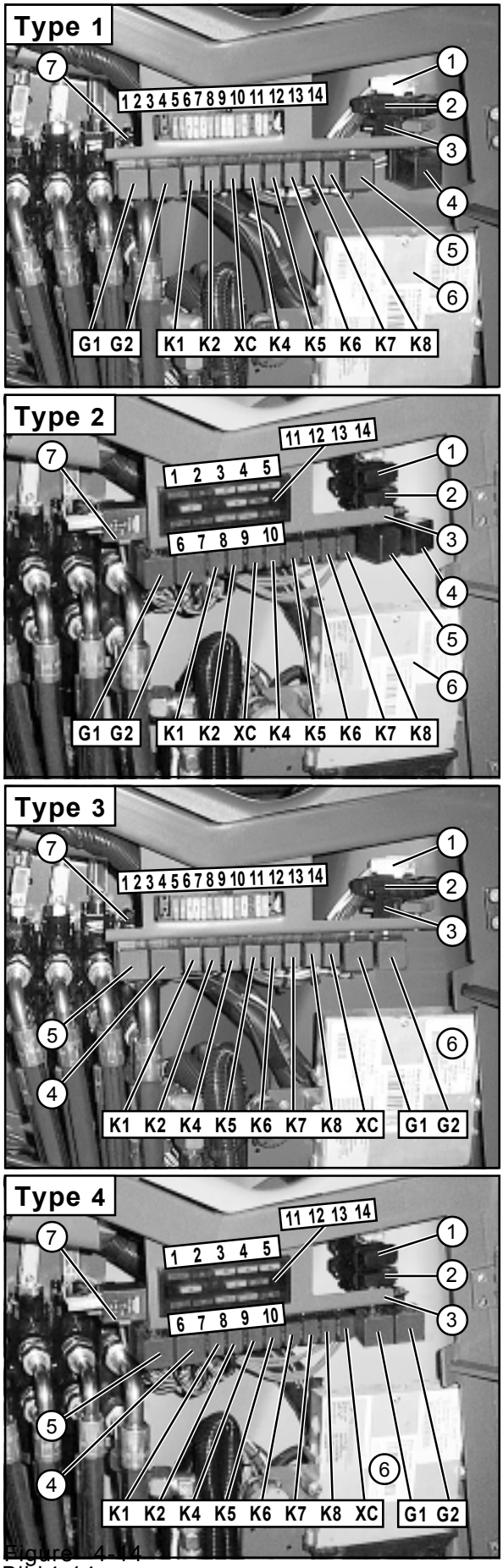

Figure 4-14
Bild 4-14

https://truckmanualshub.com/

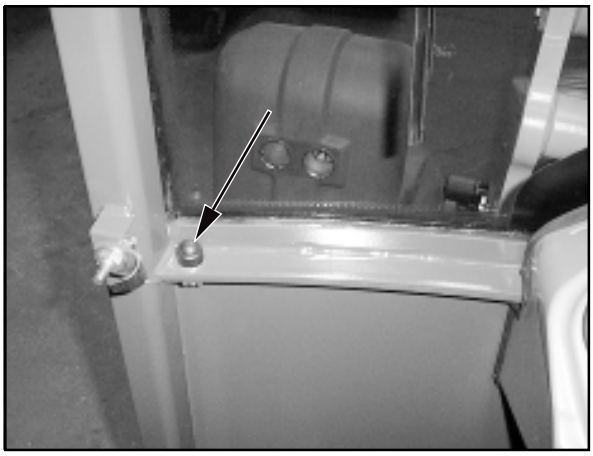

Figure 4-15

4.6 Removing the driver's cab

NOTE

- Park the loader on solid and level ground.
- The engine must be turned off.
- Unlock the battery main switch (opt.) (8-36/1) by giving it 2 counter clockwise turns.
- Immobilise the loader with the parking brake (4-9/3).
- Have 4-strand lifting gear ready.

CAUTION

- Remove the driver's cabin with the loader standing horizontally and the bucket arm in the lowest position.
- Use the intended mounting aids or other secure working platforms when performing work above reaching height. Do not use any loader parts, in particular attachments, as climbing or descending aids. Use safety harnesses when working at very great heights.
- Use a crane capable of precisely lifting the load in vertical direction for the conversion.

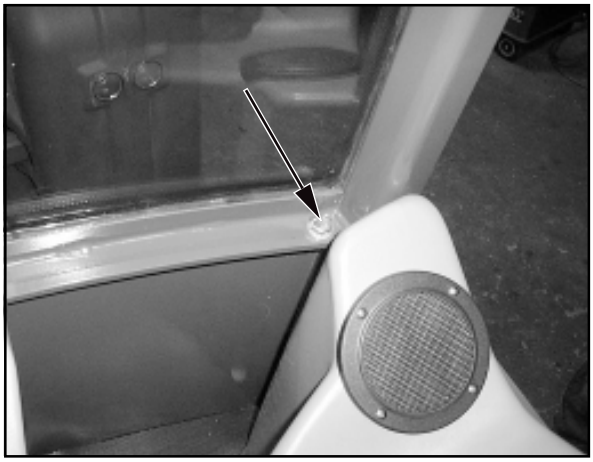

Figure 4-16

(1) Dismount the left driver's cab door.

(2) Dismount the upper window section on the right loader side (see also chapter 4.5. NOTE).

(3) Loosen the connecting screws between driver's cab lower and upper section at the front left (4-15/arrow) and right (4-16/arrow).

Figure 4-17

(4) Loosen the connecting screws between driver's cab lower and upper section at the rear left (4-17/arrow) and right (4-18/arrow).

https://truckmanualshub.com/

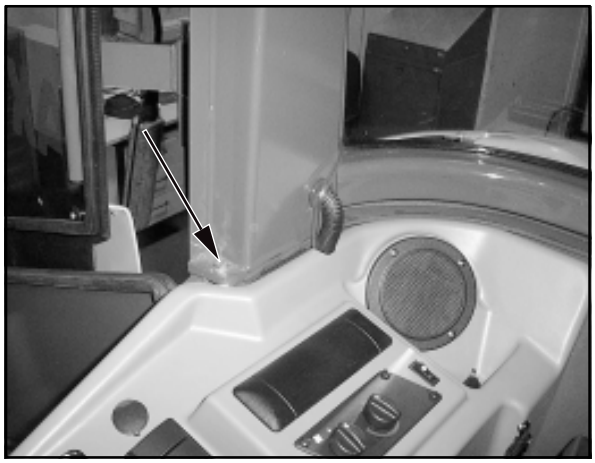

Figure 4-18

(5) Open the right maintenance flap, take out any wedge that may be present and dismount the service plate (4-19/arrow or 4-20/2).

NOTE

Open the engine hood before opening the maintenance flap.

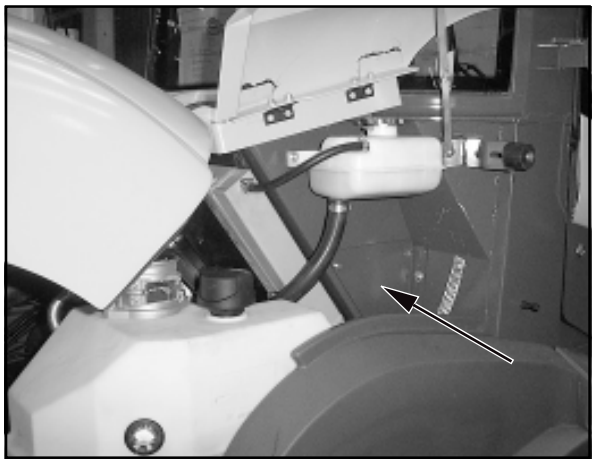

Figure 4-19

(6) Loosen the screw (10 mm Allen key) connecting the driver's cab lower and upper section at the rear in the middle of the cooler intake duct (4-20/1), accessible through the maintenance opening (4-19/arrow or 4-20/2).

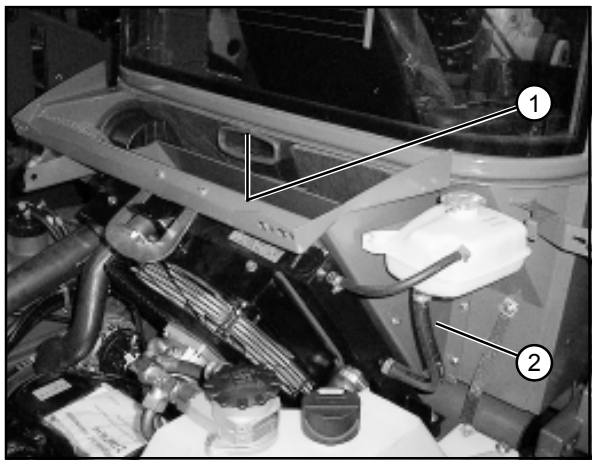

Figure 4-20

https://truckmanualshub.com/

Figure 4-21

(7) Unscrew the front windshield wiper arm (4-21/arrow) and pull it off the wiper motor shafts.

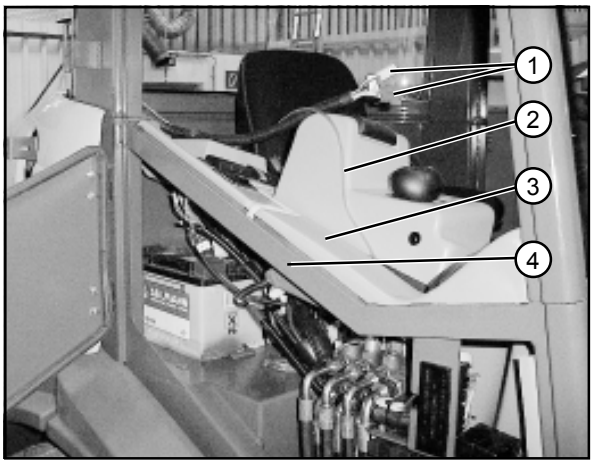

Figure 4-22

(8) Loosen the covering (4-22/3) from the frame of the maintenance flap (4-22/4).
- Break the electrical connection (X11) (4-22/1).
- Unplug the hose leading to the compensation tank for coolant (4-22/2) from the adapter.

Pull electrical connector and hose as shown in Fig. 4-22 upwards into the driver's cab upper section.

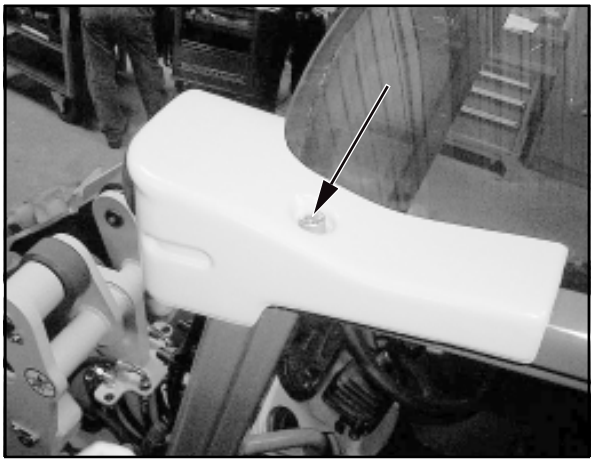

Figure 4-23

(9) Loosen the fastening screw for the working light cover plate (4-23/arrow) on the driver's cab at the front left and right and take off the cover plate.

NOTE

Support the working lights. One screw fastens both the working lights and the cover plates.

(10) Loosen the fastening screws at the rear left and right of the driver's cab each.

https://truckmanualshub.com/

(11) Screw in four lifting eyes (4-24/arrow).

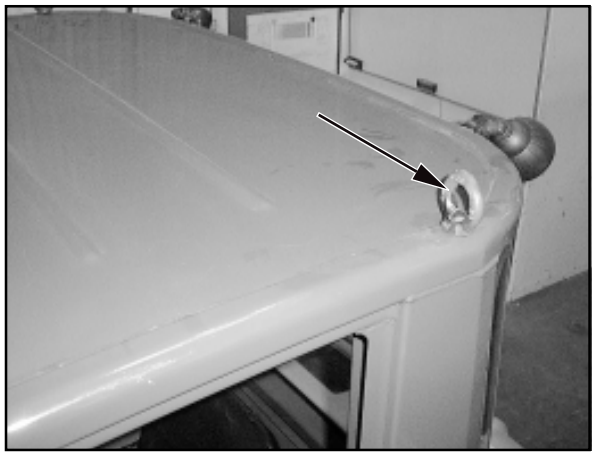

Figure 4-24

(12) Attach 4-strand lifting gear into the crane lifting eyes (4-25).

NOTE

The two rear strands of the lifting gear must be approx. 10 cm shorter than the front strands.

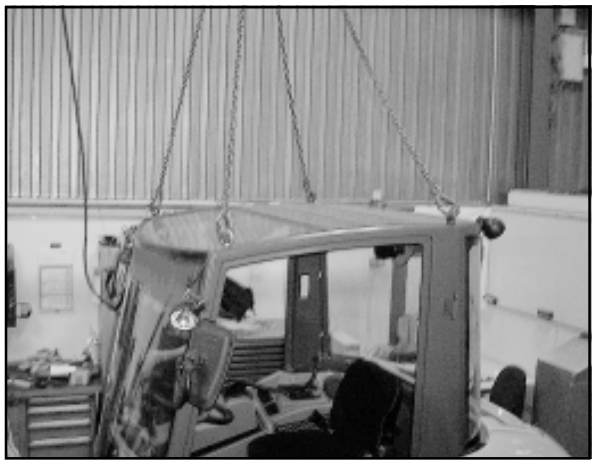

Figure 4-25

(13) Slowly lift the driver's cab until the two rear index pins (4-26/arrow and 4-27/arrow) are free.

NOTE

The driver's cab front must not yet be raised.

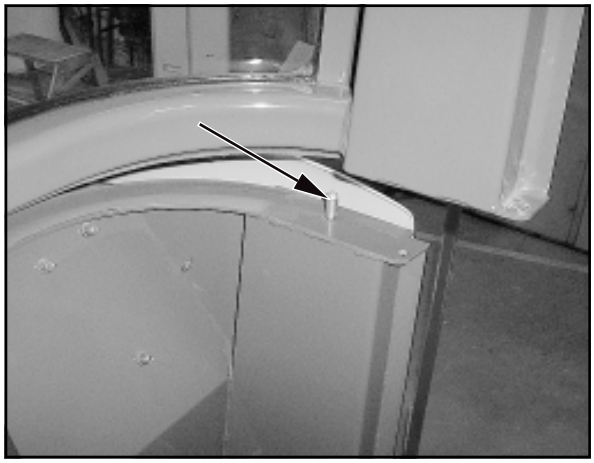

Figure 4-26

https://truckmanualshub.com/

Figure 4-27

Figure 4-28

(14) Pull the driver's cab forward with your hand until it comes free off the recess in the dashboard in the lower windshield area (4-28/arrow).

(15) Lift driver's cab until it can be swivelled over the steering wheel.

DANGER

Never stand or work underneath the suspended load. The lifting device (crane) operator maintains eye contact with the assigned helpers and decides on when and how they take action. The operator (of the crane for example) makes sure no hazardous movements take place when helpers are in the danger area.

Figure 4-29

Figure 4-29 shows the loader with removed driver's cab.

Technical data (exhaust in the counterweight):

- Tyres: 12.5-80, profile AT 603 (3.0 bar)
- Height over driver's seat: 1,825 mm
- Height over steering wheel with knob: 1,870 mm
- Height over steering wheel without knob: 1,810 mm
- Weight of upper cabin section (without door/without right side window): 122 kg

https://truckmanualshub.com/

Operation

https://truckmanualshub.com/

5 Operation

5.1 Checks before start-up

- Engine oil level (see the operating instructions for the engine)
- Brake fluid (brake hydraulic oil)
- Hydraulic oil level
- Fuel level
- Tyre pressure
- Profile depth
- Lighting system
- Seat position
- Remove the lock levers for the auxiliary and working hydraulics pilot valves (4-8/6) if present
  » only if work is to be commenced «
- Bucket arm prop [(e.g. bucket arm support (option) (1-2/arrow)]; remove if necessary
- Articulation safeguard (1-3/arrow); remove if necessary
- General state of the loader, e.g. check for leaks
- The presence of
  - a fist aid kit
  - a warning triangle
  - a signal lamp

  must be verified.

5.2 Start-up

5.2.1 Starting the diesel engine

(1) Apply the parking brake (4-9/3).
(2) Set the drive switch (4-10/11) to “0” (starter interlock!).
(3) Turn the main battery switch (8-36/1) clockwise to the stop.
(4) Insert the ignition key into the starter switch (4-8/7) and turn the key clockwise to position "II“ (5-1).

NOTE
- Indicators for battery charge, parking brake, engine oil pressure and preheating light up. The fuel gauge, the coolant temperature gauge, the operating hour counter and the digital clock function.
- Start the engine in position "0“ of the drive switch (4-10/11).

(5) Turn the ignition key clockwise to position "III“ (5-1) after a few seconds (preheating). As soon as the engine starts, release the ignition key.

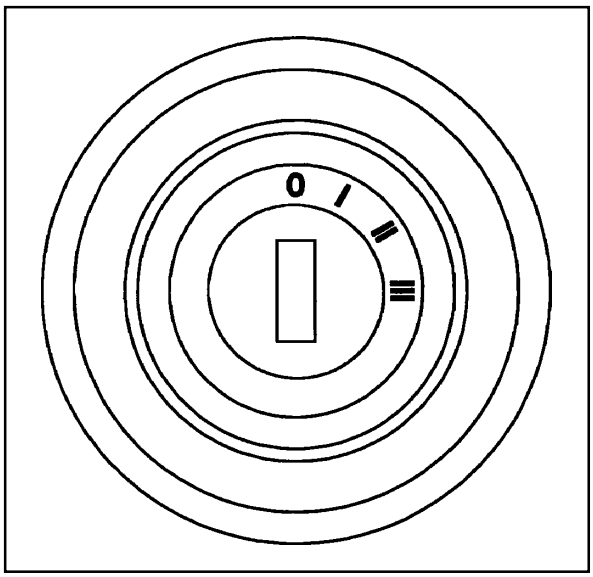

Figure 5-1

NOTE
- If the engine has not started after two attempts, determine the cause using the malfunction table in the operating instructions for the engine.
- For operation at extremely low temperatures, see the operating instructions for the engine.
- Run the engine at a low speed and do not subject it to full load until the hydraulic oil has reached its operating temperature after a cold start.
  When a hydraulic oil filter clogging indicator (4-11/13) (option) is present, it will go out as soon as the hydraulic oil has reached its operating temperature.

https://truckmanualshub.com/

5.2.2 Winter operation

CAUTION
If the outside temperature is below 0 °C, the machine must be properly „warmed up“ to avoid damage to certain assemblies. To do so, actuate all cylinders (lifting and tipping cylinders) for some time (depending on the ambient temperature) with the machine idling.
Proper operation of the machine, even for sub-zero temperatures, can only be guaranteed if the following measures have been taken:

5.2.2.1 Fuel

At low temperatures, paraffin precipitating from the fuel can cause the fuel system to clog up.
For this reason, always use winter diesel fuel (suitable for temperatures down to -15 °C) when the outside temperature is below 0 °C.

NOTE
The fuelling stations normally start offering winter diesel fuel in good time before the cold season starts. Often, they offer diesel fuel that can be used down to temperatures of -20 °C (super-grade diesel fuel).
If the temperature is below -15 °C or -20 °C, paraffin oil must be added to the diesel fuel. For the mixture ratio, refer to the diagram (5-2).

I = Summer diesel fuel
II = Winter diesel fuel
III = Super-grade diesel fuel

CAUTION
Only mix the ingredients in the tank! First, fill in the required amount of paraffin oil, then top up with diesel fuel.

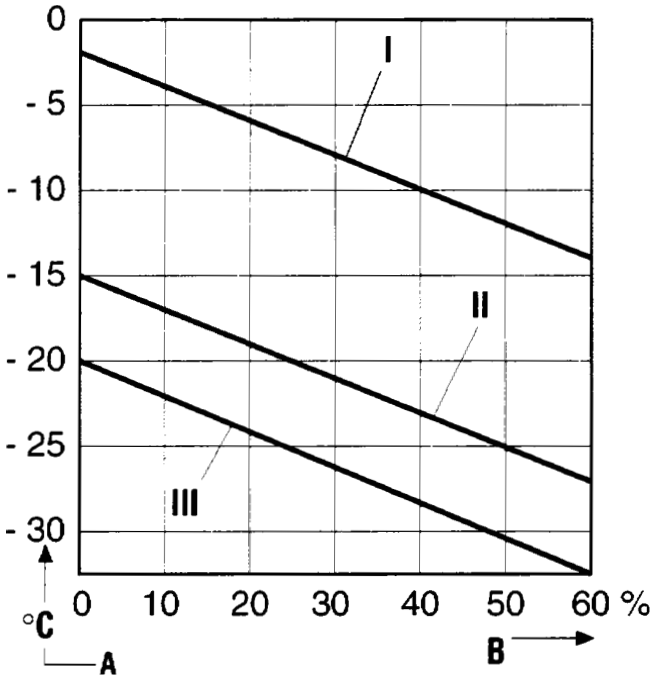

Figure 5-2

5.2.2.2 Engine oil change

See the operating instructions for the engine.

5.2.2.3 Hydraulic system oil change

CAUTION
The viscosity of the hydraulic oil changes according to the temperature; therefore, the ambient temperature in the place where the machine will be used determines what viscosity class (SAE class) must be chosen. If the hydraulic oil used matches the expected ambient temperature, optimum operating conditions can be attained. Therefore, use hydraulic oil of an appropriate grade if required.
See section 8.2.11 for the hydraulic system oil change.

https://truckmanualshub.com/

Figure 5-3

5.2.2.4 Anti-freezing agent, windshield washer

CAUTION

If the temperature is expected to drop below 0 °C, add a sufficient amount of anti-freezing agent to the water in the windshield washer system (5-3/5) to prevent it from icing up.
For the mixture ratio, heed the instructions provided by the manufacturer.

5.2.3 Driving the loader on public roads

CAUTION

- Driving on public roads is **only permitted with an** empty standard, multi-purpose or light-weight material bucket and **only** with bucket protection.
- A warning triangle and a first-aid kit must be provided in the loader.

NOTE

The driver of the loader must possess a valid driver's license equivalent to class **"C1"**.
The driver must carry his driver's license (original) and the operating permit (original) with him.

Figure 5-4

Before driving on public roads, the following safety measures must be taken:

(1) Lower the bucket arm until the lowest point of the bucket arm or the bucket is at least 30 cm above the road (5-4).

(2) Lock (4-8-/6) pilot valves for the working and auxiliary hydraulics (4-8/4 and 4-8/5) by setting them to the rear.

CAUTION

Locking the two pilot valves prevent inadvertent lowering of the bucket arm, inadvertent tilting up or dumping or inadvertent opening of the bucket while travelling.

(3) Cover the bucket cutting edge and teeth with the bucket protector (5-4/arrow).

(4) Insert the plug of the bucket protector into the socket (5-5/arrow, option).

(5) Perform a function check.

(6) Lock both doors.

Figure 5-5

DANGER

- Driving on public roads with the bucket filled is forbidden.
- The differential lock (4-10/10) must not be enabled when driving on public roads.
- The working lights must be switched off (4-10/6).

https://truckmanualshub.com/

(7) Release the parking brake (4-9/3).

(8) Preselect hydraulic drive stage II (4-10/9).

(9) Select the travel direction (4-10/11).

(10) Press the accelerator pedal (4-8/8).

NOTE

- The loader starts. The travel speed is determined by the position of the accelerator pedal.
- The service brake is activated by depressing the brake pedal (4-8/11).

DANGER

Changing the travel direction during driving is **not** allowed to avoid any danger to other road users.

5.2.4 Working with the loader

Generally, all work is carried out in hydraulic stage II (4-10/9).

For special tasks which ask for a more sensitive control of the speed or a higher engine speed at reduced travel speed, hydraulic drive stage *I“ (4-10/9) can be selected. The travel speed can thus be reduced to 7 km/h.
To attain full performance, the combined action of propulsion and of the working hydraulics is necessary. It is up to the operator to control the available power using the accelerator, the inching function and the hand lever for the working hydraulics.

NOTE

The hydraulic drive stage can be switched from I to II or vice versa while driving. However, switching from drive stage II to I is not recommended when driving at high speeds since the loader is then braked very abruptly.

(1) Lock both doors.

(2) Release the parking brake (4-9/3).

(3) Preselect hydraulic drive stage (4-10/9).

(4) Select the travel direction (4-10/11).

(5) Press the accelerator pedal (4-8/8).

NOTE

- The travel speed and the thrust force are altered exclusively by depressing the accelerator pedal.
- When driving up gradients, the travel speed decreases in spite of full throttle in favour of the thrust force.
- The thrust forces and travel speeds are the same in the forward and the reverse direction.

https://truckmanualshub.com/

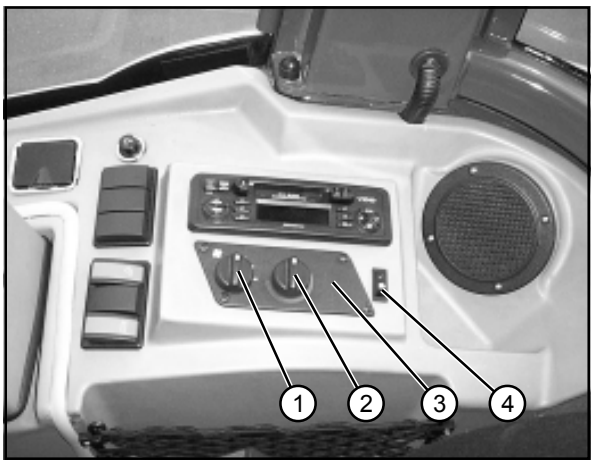

Figure 5-6

CAUTION

- The hydraulic quick-change device must only be locked if an attachment has been mounted.
- If the hydraulic oil temperature indicator lamp (4-11/14) lights up during operation, the loader must be switched off immediately, the cause must be determined by a hydraulics expert and the malfunction must be eliminated.

5.2.5 Heating and ventilation system

5.2.5.1 Setting the air flow

(1) Turn the rotary switch (5-6/1) for the blower to position 0, 1, 2, or 3 depending on the air flow desired.
(2) Set the air flow direction with the air outlet nozzles to the right and left of the steering column/dashboard (5-7/1 and 5-7/2).

NOTE

There are also four invariable air nozzles in the windshield area (5-8/arrows).

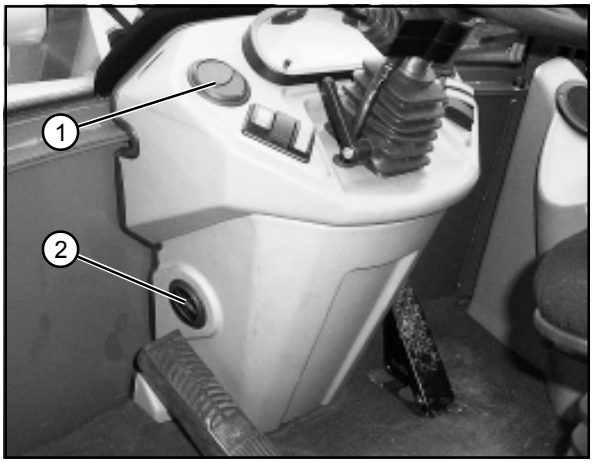

Figure 5-7

5.2.5.2 Switching on the heater

(1) Turn the knob (5-6/2) in the clockwise (cold) or the anti-clockwise direction (warm) to reach the desired temperature.

5.2.5.3 Switching on the air condition (opt.)

(1) Press the „ON/OFF“ switch (5-6/4) to control the air condition as desired.

Switch pressed in the upper half	-	Air condition "OFF“
Switch pressed in the lower half	-	Air condition "ON“

5.2.5.4 Setting the temperature

(1) The rotary switch (5-6/3) lets you control the temperature in the driver’s cabin.

Rotary switch in clockwise direction	-	colder
Rotary switch in counter clockwise direction	-	warmer

NOTE

The air condition is supplied via an air opening behind the driver’s seat.

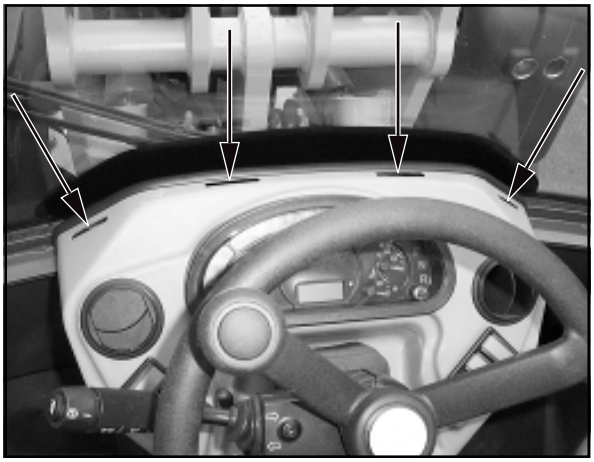

Figure 5-8

CAUTION

For safety instructions and pertaining disposal regulations as well as for maintenance information, refer to the operating instructions that come with the air condition.

https://truckmanualshub.com/

5.2.5.5 Voorruit ontdoen van ijs/aanslag

(1) Bij lopende motor (stationair toerental) aanjager-draaischakelaar (5-6/1) in stand „3“ zetten.
(2) Onderste verstelbare uitstroomopeningen (5-7/2) sluiten.
(3) Bovenste verstelbare uitstroomopeningen (5-7/1) openen en luchtstroom op de voorruit richten.

AANWIJZING

Als de voorruit vrij is van aanslag respectievelijk ijs, aanjagerdraaischakelaar in stand „2“ of „1“ zetten en onderste uitstroomopeningen eventueel openen.

5.3 Decommissioning the loader

5.3.1 Parking the loader

(1) Stop the loader on solid ground; if possible, not on a slope.
(2) Place the bucket or the attachment on the ground.
(3) Set the drive switch (4-10/11) to “0”.
(4) Apply the parking brake (4-9/3).

DANGER

If parking on a gradient cannot be avoided, wheel chocks must be used and placed on the sloping side of the front axle wheels in addition to applying the parking brake, and the articulation safeguard must be inserted. On slopes, the wheel chocks must be placed on the sloping side of the rear axle wheels.

5.3.2 Switch off the diesel engine

CAUTION

If the diesel engine is very hot or has been subjected to heavy loads, let the engine idle for a short time before switching it off.

Turn the ignition key to the left to position "0“ (5-1) and remove the key.

5.3.3 Switching off the heater and ventilation system

(1) Shut off the hot air supply (5-6/2).
(2) Turn the rotary switch (5-6/1) for the blower to position "0“.

5.3.4 Leaving the loader

(1) Lock (4-8-/6) pilot valves for the working and auxiliary hydraulics (4-8/4 and 4-8/5) by setting them to the rear.
(2) Unlock the battery main switch (opt.) (8-36/1) by giving it 2 counter clockwise turns.
(3) Remove the ignition key and lock the doors.

https://truckmanualshub.com/

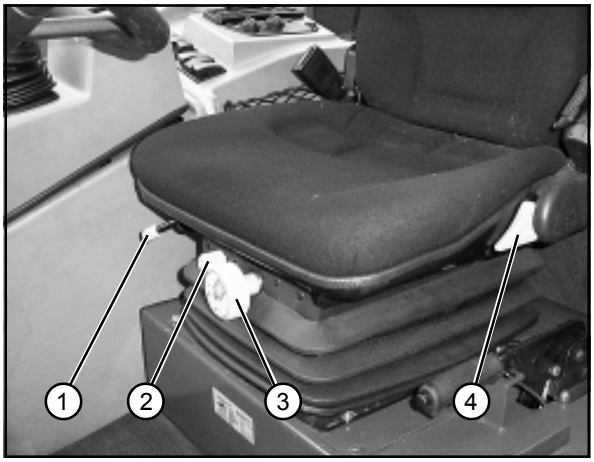

Figure 5-9

5.4 Adjusting the driver's seat

5.4.1 Euro seat

(1) The driver's seat can be adjusted in the horizontal direction to suit the driver's requirements by pulling the handle (5-9/1) upwards and moving the seat forward or backward.

(2) Turn the rotary knob (5-9/2) while exerting a force on the seat to adjust the seat height.

(3) The seat suspension can be adjusted to the driver's weight with the hand wheel (5-9/3).

(4) Adjust or swing forward the backrest by simultaneously pulling up the hand lever (5-9/4).

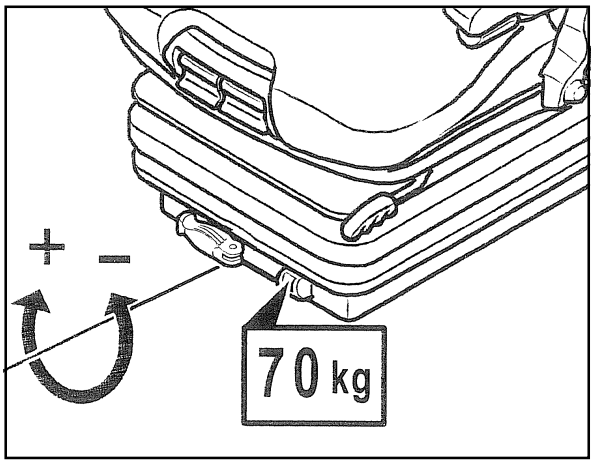

Figure 5-10

5.4.2 Grammer seat

(1) **Weight adjustment:**
Adjust the seat to the driver's weight by actuating the weight adjustment lever. The set driver's weight is visible in the inspection window (5-10).

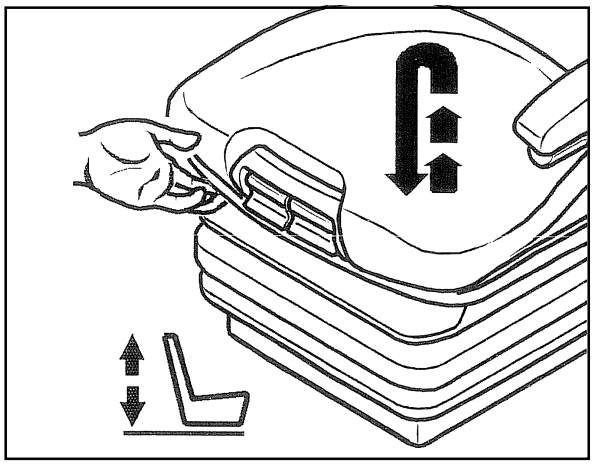

Figure 5-11

(2) **Height adjustment:**
The height can be adjusted in several steps.
Lift the driver's seat to the desired height until it can be heard to engage. The seat returns to the lowest position when it is lifted over the topmost position (stop) (5-11).

https://truckmanualshub.com/

(3) **Armrest inclination:**
Turn the handwheel (5-12/arrow) to adjust the armrest in longitudinal direction.

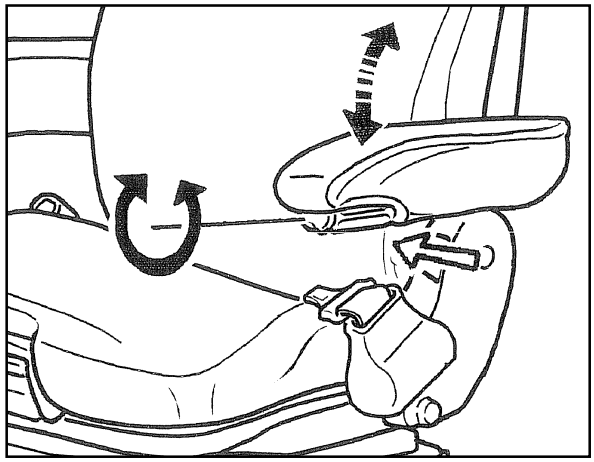

Figure 5-12

(4) **Arm rests:**
If desired, you can swing the armrests to the rear and adjust their height.

To adjust the armrest height, remove the round cap (5-13/arrow) in the covering.

Loosen the hex nut (wrench size 13 mm), set the armrest as desired and tighten the nut again. Push the removed cap onto the nut again.

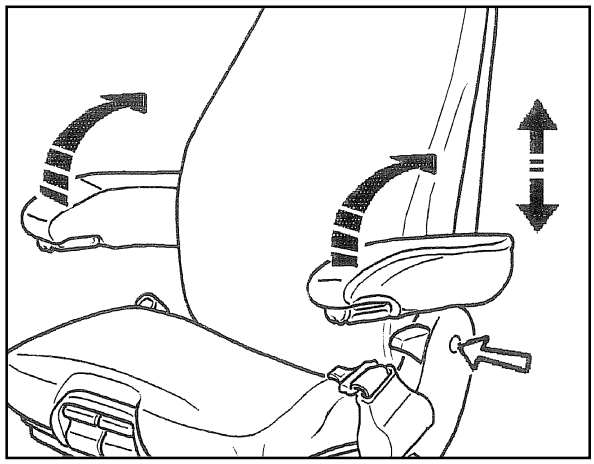

Figure 5-13

(5) **Adjusting the backrest:**
Use the locking lever (5-14/arrow) to adjust the backrest.

NOTE
The locking lever must engage in the desired position. It must be impossible to move the backrest to another position when the lever has engaged.

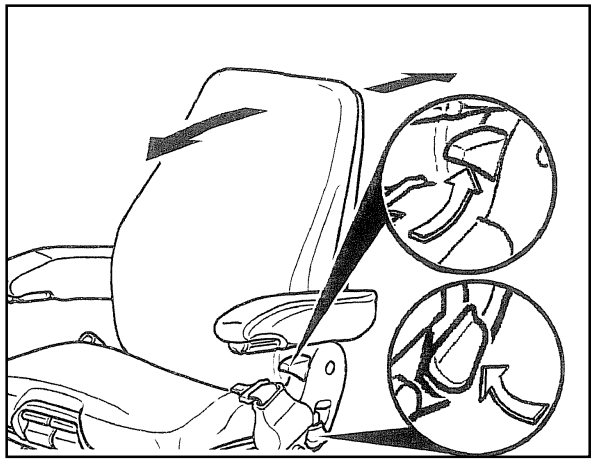

Figure 5-14

https://truckmanualshub.com/

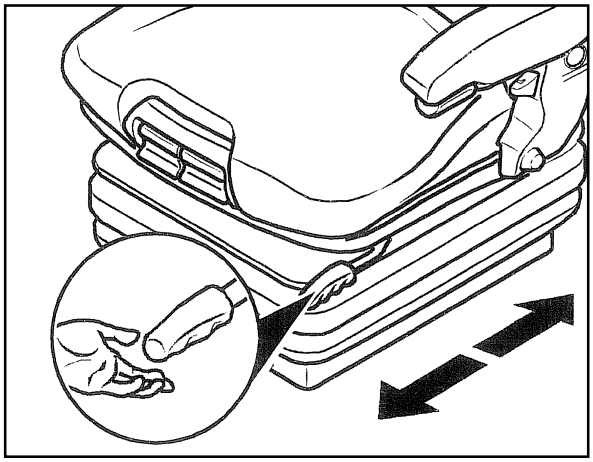

Figure 5-15

(6) **Longitudinal adjustment:**
You can adjust the seat in longitudinal direction when you pull the lever (5-15) upwards.

NOTE
The locking lever must engage in the desired position. It must be impossible to move the driver's seat to another position when the lever has engaged.

https://truckmanualshub.com/

Attachments

https://truckmanualshub.com/

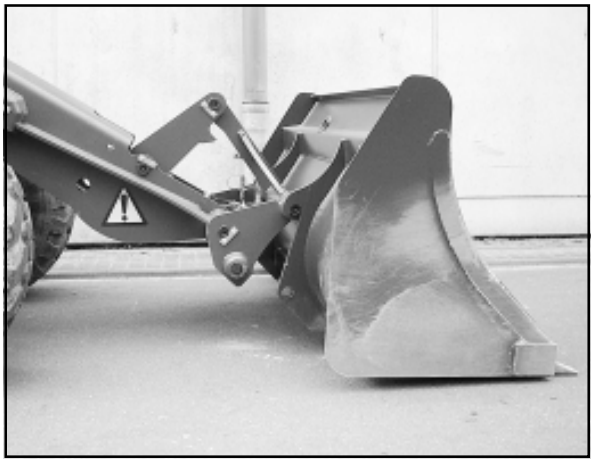

Figure 6-1

Figure 6-2

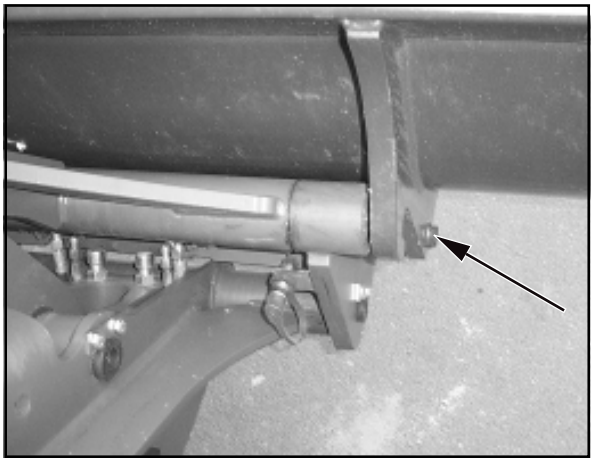

Figure 6-3

6 Attachments

6.1 Mounting and dismounting attachments without hydraulic connections

6.1.1 Standard/lightweight bucket

Mounting

(1) Bring the bucket arm to its lowest position and tip the quick-change device.

(2) Drive the loader up to the bucket (6-1).

(3) Pick up the bucket using the quick-change device and, by simultaneously tilting the quick-change device, raise the bucket until the quick-change device is next to it (6-2).

(4) Lock the bucket with the pilot valve for the auxiliary hydraulics (4-8/5).

(5) Check that the device is mounted and locked correctly on both sides.

DANGER
The two bolts of the quick-change device must be in the bore holes of the bucket suspension and must be clearly visible (6-3/arrow).

Dismounting

(1) Place the bucket firmly on the ground.

(2) Press the release button for the quick-change device (4-8/11) and unlock the bucket with the pilot valves for the auxiliary hydraulics (4-8/5).

(3) Tilt the quick-change device and reverse out.

CAUTION
The hydraulic quick-change device must only be **locked** when an attachment has been mounted.

NOTE
The type plate is on the rear of the bucket, on the right-hand side beneath the cross arm.

https://truckmanualshub.com/

6.1.2 Fork-lift attachment

NOTE
Mounting and dismounting are carried out in the same way as for the standard/lightweight bucket (section 6.1.1).

DANGER
- The two bolts of the quick-change device must be in the bore holes of the fork-lift attachment suspension and must be clearly visible (6-4/ arrow).
- Distribute the load equally on both fork tines and secure it against moving and falling off.
- Let the load rest against the rear of the fork and tilt the fork-lift attachment.
- Position both fork tines at an equal distance from the centre (6-5/arrows) and lock them.
- Moving loads with the fork-lift attachment is only permitted close to the ground!
- Protect the fork-lift attachment against tipping over when it has been dismounted; danger of injuries!

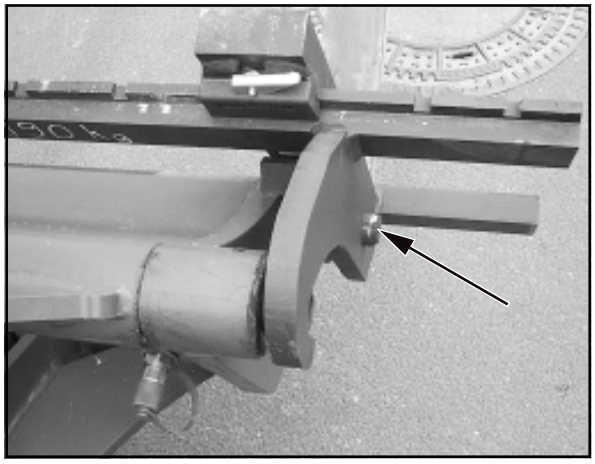

Figure 6-4

CAUTION
- The hydraulic quick-change device must only be **locked** when an attachment has been mounted.
- The fork tines are locked correctly when the two tiltable locking levers fully rest on the fork carrier.

NOTE
The type plate is on the rear of the upper fork carrier, on the right-hand side.

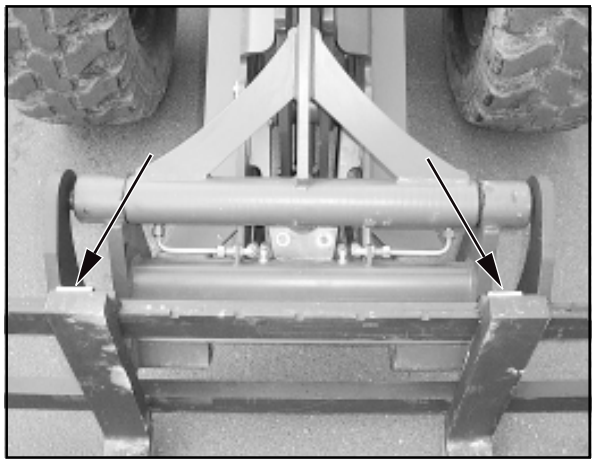

Figure 6-5

6.2 Mounting and dismounting attachments with a hydraulic connection

6.2.1 Multi-purpose bucket

Mounting

(1) Bring the bucket arm to its lowest position and tip the quick-change device.

(2) Drive the loader up to the bucket (6-6).

Figure 6-6

https://truckmanualshub.com/

Figure 6-7

(3) Pick up the bucket using the quick-change device and, by simultaneously tilting the quick-change device, raise the bucket until the quick-change device is next to it (6-7).

(4) Lock the bucket with the pilot valve for the auxiliary hydraulics (4-8/5).

(5) Check that the device is mounted and locked correctly on both sides.

DANGER

The two bolts of the quick-change device must be in the bore holes of the bucket suspension and must be clearly visible (6-8/arrow).

(6) Shut down the engine.

(7) Depressurise the hydraulic lines. For this purpose, move the pilot valve for the auxiliary hydraulics (4-8/5) back and forth several times.

(8) Pull off the protective caps from the hoses of the quick-change device (6-9/1).

(9) Swing up the protective flaps of the quick-change couplings on the multi-purpose bucket (6-9/2) and connect them with the hoses of the quick-change device (6-9) by tightly pushing them in.

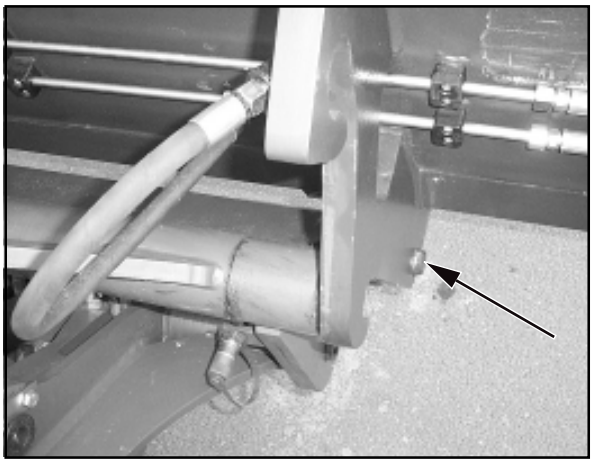

Figure 6-8

CAUTION

When making connections, make sure that the hydraulic ports are clean and completely connected.

Dismounting

(1) Place the multi-purpose bucket firmly on the ground.
(2) Shut down the engine.
(3) Depressurise the hydraulic lines. For this purpose, move the pilot valve for the auxiliary hydraulics (4-8/5) back and forth several times.
(4) Disconnect the quick-change couplings on the multi-purpose bucket from the hoses of the quick-change device by pulling firmly.
(5) Fit the protective caps on the hoses of the quick-change device (6-9/1).
(6) Start the engine and unlock the bucket:
Press the release button for the quick-change device (4-8/11) and unlock the bucket with the pilot valves for the auxiliary hydraulics (4-8/5).
(7) Further dismounting is in the reverse order.

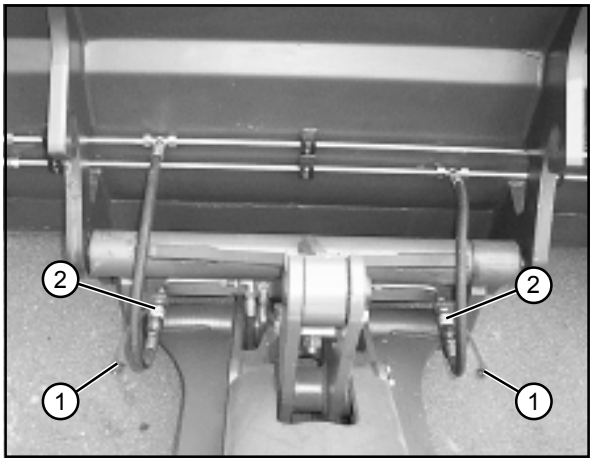

Figure 6-9

CAUTION

The hydraulic quick-change device must only be **locked** when an attachment has been mounted.

NOTE

The type plate is on the rear of the bucket, on the right-hand side beneath the cross arm.

https://truckmanualshub.com/

Notes on application of the multi-purpose bucket

The multi-purpose bucket can be used for:

- peeling (6-10)

Figure 6-10

- scraping (6-11)

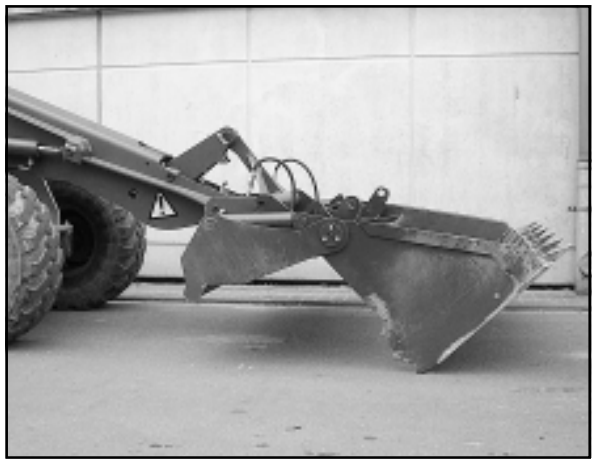

Figure 6-11

- grabbing (6-12) and
- in bucket operation.

6.3 Use of additional attachments

STOP

DANGER

1. Only those attachments described in these operating instructions may be used.

2. We emphasise that attachments that are not supplied by us are also not tested and approved by us. Use of such products can under certain conditions adversely affect the present constructional qualities of your loader and thus limit the active and passive driving safety. The manufacturer cannot be held responsible for damage that occurs through the use of such products.

Figure 6-12

https://truckmanualshub.com/

https://truckmanualshub.com/

Rescue, towing, lashing, lifting by crane

https://truckmanualshub.com/

7 Rescue, towing, lashing, lifting by crane

7.1 Rescue, towing, lashing

7.1.1 Rescue/towing of the articulated loader if the engine or drive has failed

CAUTION

The articulated loader must not be tow-started. Any attempt to tow-start leads to damage.

DANGER

Secure the rescue location if it is on a public road.

NOTE

- Towing is only permitted to clear the site or a street.
- Preparation for towing depends on whether the engine has failed, thus causing a failure of the entire hydraulic system, or if only the drive has failed and the engine can drive the rest of the hydraulic system.

7.1.1.1 Towing the articulated loader when the engine has failed

(1) Actuate the toggle switch for the hazard flasher (4-8/13).

(2) Set the drive switch (4-10/11) to “0”.

(3) Apply the parking brake (4-9/3).

CAUTION

If the rescue location is on an uphill/downhill grade, wheel chocks must be placed on the sloping side of both front axle wheels in addition to applying the parking brake.

NOTE

The preparations described in steps (4) and (5) are only to be carried out if the rescue location is **not** on a public road:

(4) Cover the bucket cutting edge and teeth with the bucket protector (5-4/arrow).

(5) Insert the plug of the bucket protector into the socket (5-5/arrow, option).

(6) Push the valve lever for the working hydraulics (4-8/4) beyond its pressure point into the forward position (float position).

https://truckmanualshub.com/

(7) Using a suitable lifting device, e.g. a second loader with an attached bucket, lift the bucket arm of the loader to be towed until the mechanical bucket arm support can be inserted at the loader to be towed (7-1).

(8) Mechanically prop up bucket arm [e.g. by inserting the bucket arm support (option) (1-2/arrow)] and lower bucket arm until it rests on the bucket arm support.

(9) Disable the float position by pulling the pilot valve for the working hydraulics to the rear beyond its pressure point.

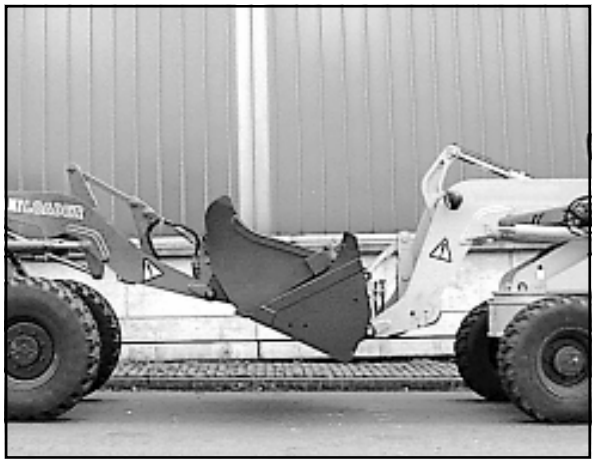

Figure 7-1

(10) Lock the pilot valves for working and auxiliary hydraulics (1-2/arrow) (rear position).

(11) Connect the tow rod to the loader to be towed (7-2/arrow) and to the towing vehicle.

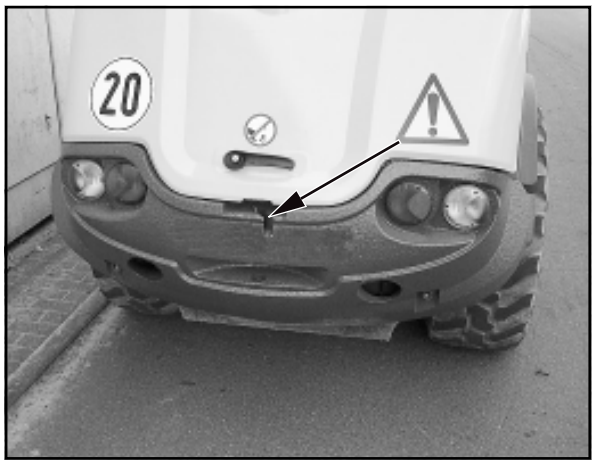

Figure 7-2

(12) Undo the fastening screw on the hydraulic oil tank (7-3/arrow) of the right rear mudguard.

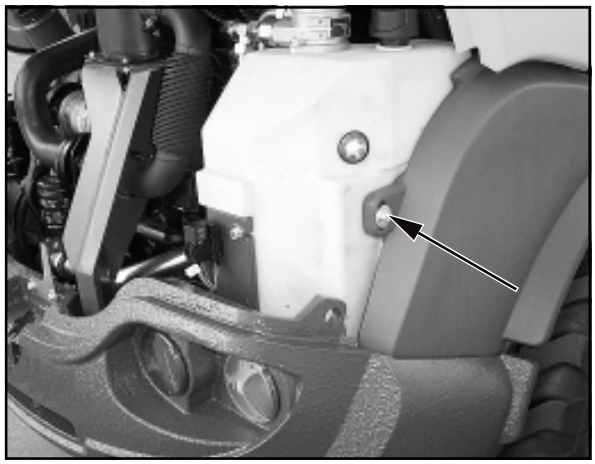

Figure 7-3

https://truckmanualshub.com/

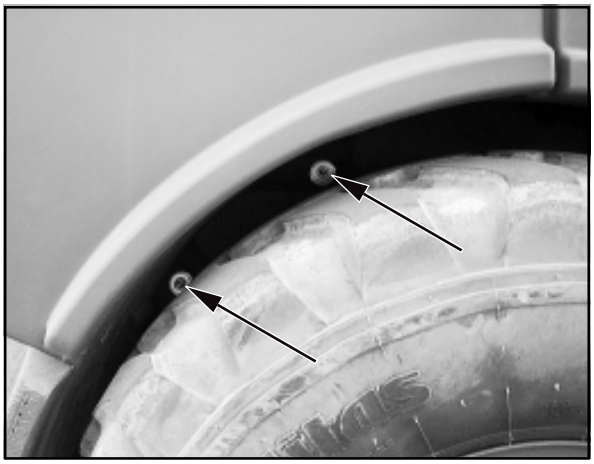

Figure 7-4

(13) Undo fastening screws in the wheel house rear right (7-4/arrows) and pull the mudguard off to the side.

(14) Switch the hydrostatic drive motor to free oil flow before towing. For this purpose, screw in the setscrews at both high pressure relief valves (7-5/arrows) of the drive pump until they are level with the hexagon nuts (size 13) loosened beforehand. Then tighten the hexagon nuts.

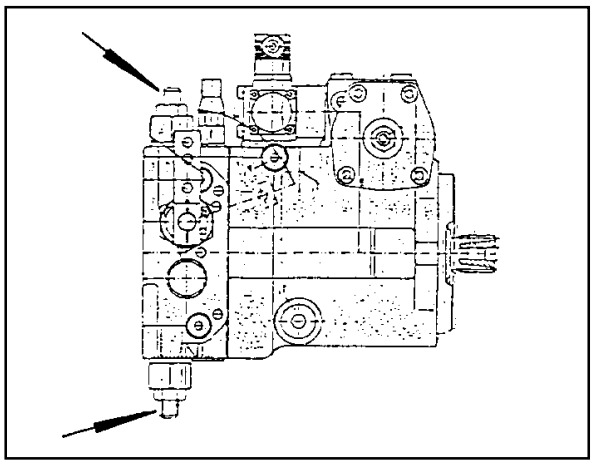

Figure 7-5

NOTE

The operator of the loader is responsible that the (optional) tool required to remove the mudguard (items 12 and 13) and to adjust the drive pump (item 14) is always on board the loader.

NOTE

After towing has been completed, loosen the hexagon nuts again. Screw the setscrews out of both high-pressure relief valves until they stop and tighten the lock nuts.

(15) Remove the chocks (if applicable).

(16) Release the parking brake lever (4-9/3).

Figure 7-6

DANGER

- More power is required to steer if the engine has failed.
- Tow the loader at walking speed (2 km/h).
- The towing distance should not exceed 1 km.
- For a longer distance, the defective loader must be loaded onto a truck (for the lashing points, see 7-2/arrow, 7-7/6/arrows and 7-7/arrows).

https://truckmanualshub.com/

STOP

- The max. permissible load of the shunting and towing coupling (7-2/2) is 4.5 t horizontally in the longitudinal direction.
- The max. permissible load of the lashing/load-bearing points (7-6/arrows, and 7-7/arrows) is 2.0 t.

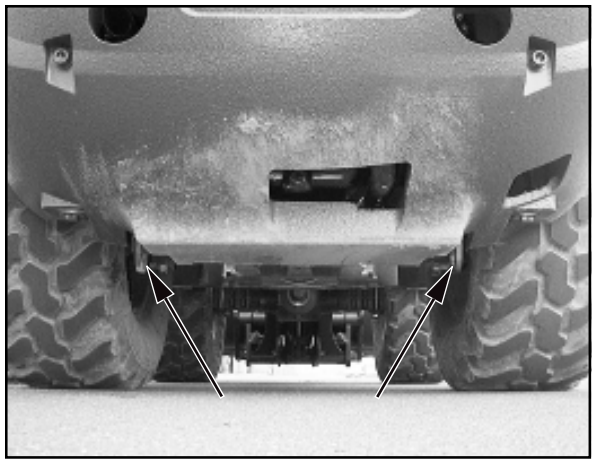

Figure 7-7

7.1.1.2 Towing the articulated loader when the traction drive has failed

(1) Actuate the toggle switch for the hazard flasher (4-8/13).

(2) Set the drive switch (4-10/11) to “0”.

(3) Apply the parking brake (4-9/3).

CAUTION
If the rescue location is on an uphill/downhill grade, wheel chocks must be placed on the sloping side of both front axle wheels in addition to applying the parking brake.

NOTE
The preparations described in steps (4) and (5) are only to be carried out if the rescue location is **not** on a public road:

(4) Cover the bucket cutting edge and teeth with the bucket protector (5-4/arrow).

(5) Insert the plug of the bucket protector into the socket (5-5/arrow, option).
(6) Lift and mechanically prop up bucket arm [e.g. by inserting the bucket arm support (option) (1-2/arrow)] and lower bucket arm until it rests on the bucket arm support by actuating the lever for the working hydraulics (4-8/4).

(7) Lock the pilot valves for working and auxiliary hydraulics (1-2/arrow) (rear position).

(8) Connect the tow rod to the loader to be towed (7-2/arrow) and to the towing vehicle.
(9) Undo the fastening screw on the hydraulic oil tank (7-3/arrow) of the right rear mudguard.
(10) Undo fastening screws in the wheel house rear right (7-4/arrows) and pull the mudguard off to the side.
(11) Switch the hydrostatic drive motor to free oil flow before towing. For this purpose, screw in the setscrews at both high pressure relief valves (7-5/arrows) of the drive pump until they are level with the hexagon nuts (size 13) loosened beforehand. Then tighten the hexagon nuts.

NOTE
The operator of the loader is responsible that the (optional) tool required to remove the mudguard (items 9 and 10) and to adjust the drive pump (item 11) is always on board the loader.

https://truckmanualshub.com/

NOTE

After towing has been completed, loosen the hexagon nuts again. Screw the setscrews out of both high-pressure relief valves until they stop and tighten the lock nuts.

(12) Remove the chocks (if applicable).

(13) Release the parking brake (4-9/3).

DANGER

- With the engine running, tow the loader at walking speed (2 km/h).
- The towing distance should not exceed 1 km.
- For a longer distance, the defective loader must be loaded onto a truck (for the lashing points, see 7-2/arrow, 7-7/6/arrows and 7-7/arrows).
- The max. permissible load of the shunting and towing coupling (7-2/2) is 4.5 t horizontally in the longitudinal direction.
- The max. permissible load of the lashing/load-bearing points (7-6/arrows, and 7-7/arrows) is 2.0 t.

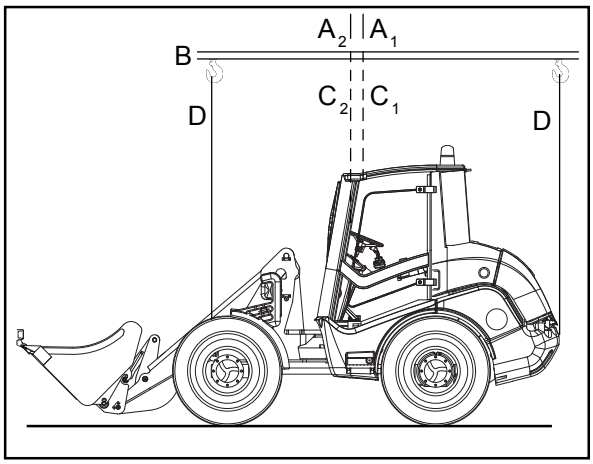

Figure 7-8

7.2 Lifting by crane

The loader to be lifted must be prepared as follows:

(1) Set the drive switch (4-10/11) to “0”.

(2) Set hydraulic drive stage „I“ (4-10/9).

(3) Apply the parking brake (4-9/3).

(4) Lift or lower the bucket arm until the lowest point of the bucket arm or of the bucket is at least 30 cm above the road (5-4).

(5) Close the pilot valve for the working and auxiliary hydraulics (1-2/arrow).

(6) Insert the articulation safeguard into the articulation joint (1-3/arrow).

CAUTION

Do not operate the steering while the articulation safeguard is in place.

(7) Engage the float safeguard. To do so, loosen lock nuts (7-9/1) on the left and right of the loader, screw in securing screws (7-9/2) all the way to the stop and tighten lock nuts again.

(8) Lock both doors.

(9) Fold the outside mirror inwards.

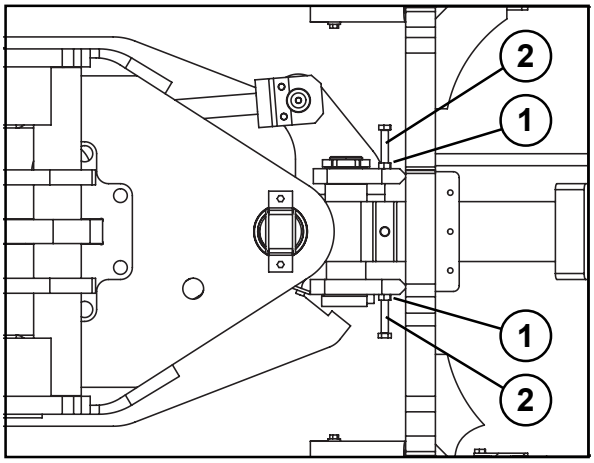

Figure 7-9

https://truckmanualshub.com/

CAUTION

The following items must be observed when lifting the loader by crane (Figure 7-8):

- The lifting point (A_1 - loader without standard bucket or A_2 - loader with standard bucket) of the lifting device (B) must be precisely vertically over the centre of gravity (C_1 or C_2) of the loader so that the lifting device is **horizontally** above the longitudinal centre axis of the loader.
- The lifting gear (D) must lead vertically upwards from the lifting points of the loader (7-6/arrows and 7-7/arrows).

DANGER

The lifting gear must have a lifting capacity of at least 3.0 t.

NOTE

Disengage the float safeguard after successful loading with a crane. To do so, loosen lock nuts (7-9/1) on the left and right of the loader, screw out securing screws (7-9/2) all the way to the stop and tighten lock nuts again.

https://truckmanualshub.com/

https://truckmanualshub.com/

Maintenance

23110576

GB

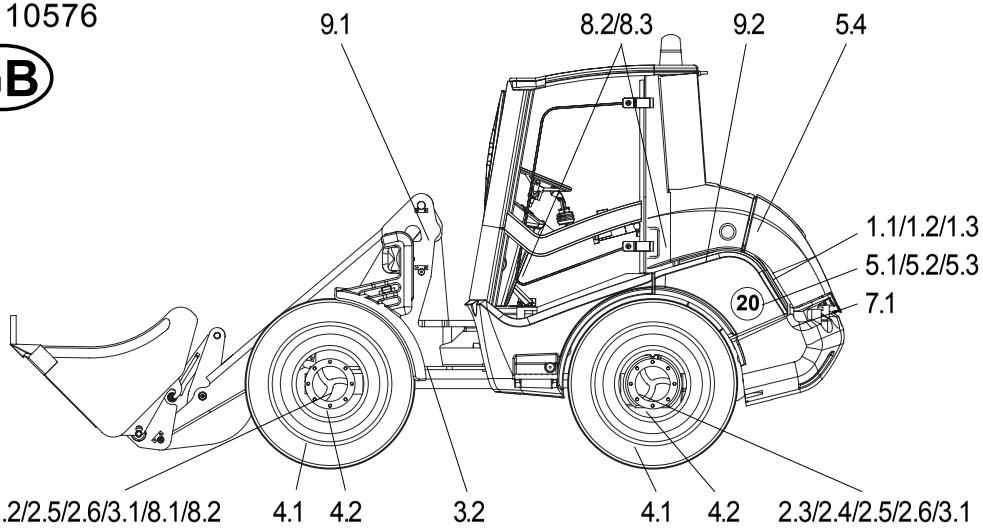

	Item	Designation	Specification	Viscosity	Filling amount
*	1	Motor oil	ACEA E7, E5, E3; API CI-4	acc. to manufacturer	ca. 8.5 l with oil filter
*	2.2	Transmission oil with LS additive	MIL-L-2105 B = API-GL5-6-LS	SAE 85 W 90-LS	approx. 4.2 l
*	2.4	Transmission oil with LS additive	MIL-L-2105 B = API-GL5-6-LS	SAE 85 W 90-LS	approx. 4.85 l
*	2.6	Transmission oil	MIL-L-2105 B = API-GL5-6	SAE 85 W 90	ca. 2 x 0.85 l each
*	5.2	Hydraulic oil	DIN 51524 - HVLP 46	ISO VG 46, VI > 180	approx. 60 l
	6	Grease	DIN 51825 - KPF 1/2 N-20		as required
	7	Distilled water			as required
*	8	Mineral oil	DIN 51524 - HVLP 46	ISO VG 46, VI > 180	as required

Key to symbols

△ First oil change, first filter replacement
▲ First check } Eliminate any faults
○ Check } found
◇ Change
* The markings, filling and inspection plugs are binding
Refer to operating instructions

Caution
When carrying out maintenance work, heed accident prevention regulations!

Grease points (indicated in red)
1. Lubricate bolts every 10 operating hours with grease (DIN 51825 - KPF 1/2 N-20).
2. Lubricate glide points as required and always after cleaning using grease DIN 51825 - KPF 1/2 N-20.

Oil lubrication points
3. Use MIL-L-2104 C engine oil to lubricate the joints and deflection levers every 50 operating hours.

Optional equipment: Biodegradable hydraulic oil
4. Ester-based synthetic hydraulic oil viscosity class ISO VG 46 VI > 180

CAUTION ! Operate the service brake with mineral oil only!

Every x operating hours 10	50	100	200	500	1500	Pos.	Maintenance points	max. permissible intervals or shorter (depending on use)
						1	**Engine**	
○		△		◇		1.1	Maintenance acc. to manufacturer	
						1.2	Dry air filter system	
○							Check filter element	
				◇			Replace filter element	
					◇		Replace safety cartridge (option)	
						2	**Axles / distribution gear**	
		○				2.1	Front axle oil level check	
		△			◇	2.2	Change front axle oil	
		○				2.3	Check oil level in rear axle with distribution gear	
		△			◇	2.4	Change oil in rear axle with distribution gear	
			○			2.5	Planetary gear oil level check	
		△			◇	2.6	Change planetary gear oil	
						3	**Axles / cardan shaft / articulated pendulum joint**	
	▲			○		3.1	Check fastening of axles (710 Nm)	
	▲			○		3.2	Check fastening of cardan shaft (35 Nm)	
						4	**Wheels and tyres**	
	○					4.1	Check air pressure	
▲			○			4.2	Check fastening of wheel nuts (440 Nm)	
						5	**Hydraulic system**	
○						5.1	Oil level check (view glass)	
					◇	5.2	Oil change	
	△			◇		5.3	Replace filter inserts, observe electr. indicator	
○						5.4	Check and clean hydraulic oil cooler	
						6	**Grease points (indicated in red)**	
						7	**Battery**	
				○		7.1	Visual inspection	
						8	**Brake systems**	
						8.1	Service/parking brake: Function and visual check before starting work	
○						8.2	Service/parking brake: Visually check compensation tank	
				○		8.3	Service/parking brake: Check brake lining, adjust if necessary	
						9	**Lighting system / fresh air filter**	
						9.1	Function test before starting work	
				○	◇	9.2	Fresh air filter	

https://truckmanualshub.com/

https://truckmanualshub.com/

8 Maintenance

8.1 Notes regarding maintenance

DANGER

- The engine must be turned off.

- For work to be carried out under the bucket arm:
  - the bucket must be emptied or the attachment must be relieved,
  - the bucket arm must be mechanically propped up [e.g. by inserting the bucket arm support (option) (1-1/arrow)],

  - lock (4-8-/6) pilot valves for the working and auxiliary hydraulics (4-8/4 and 4-8/5).

- For work to be carried out in the area of the articulation joint, the articulation safeguard must be inserted (1-3/arrow).
  - Do not operate the steering while the articulation safeguard is in place.
- The loader must be secured against rolling by applying the parking brake (4-9/3) and by setting the drive direction switch (4-10/11) to position „0“. In addition, wedges (8-1/2) must be placed on both sides of one of the two wheels of the front axle.

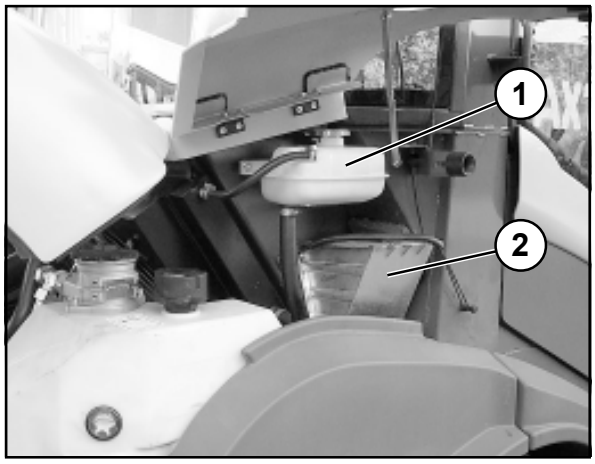

Figure 8-1

CAUTION

- Change the oil when the units are lukewarm.
- Check the oil level when the loader is on level ground and when the bucket arm is in its lowest position.
- Replace damaged filter inserts and gaskets immediately.
- Clean pressure lubrication fittings before lubricating.

NOTE

- For the maintenance work required, refer to the maintenance plan (page 8-1).
- Damage which is traceable to non-observance of the maintenance plan is not covered by the warranty.
- The lubricants listed in the maintenance plan can be used at ambient temperatures ranging from **-15°C to +40°C.**
- The compensation tank for coolant is located beneath the maintenance flap at the right of the loader (8-1/1).

CAUTION

For ambient temperatures below 15° C, refer to the description in chapter 5.2.2 “Winter operation”.

https://truckmanualshub.com/

8.2 Maintenance work

8.2.1 Oil level check, engine

See the operating instructions for the engine.

8.2.2 Oil change, engine

See the operating instructions for the engine.

8.2.3 Maintaining/replacing the air filter

NOTE

- Maintenance (visual inspection) of the filter cartridge must be carried out every **10 operating hours**. According to the operating conditions, shorter intervals may apply.
- Clean the filter cartridge if necessary.
- Replace the filter cartridge every **500 operating hours**.

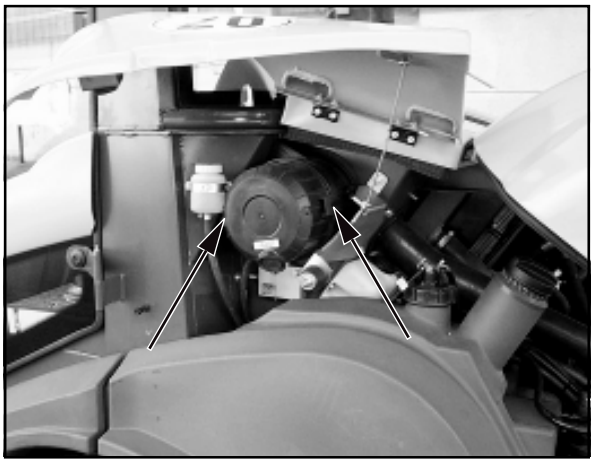

Figure 8-2

(1) Open the engine hood, then the maintenance flap on the loader's left side.

(2) Loosen the three retaining clamps of the air filter lid (8-2/arrows) and remove the air filter lid.

(3) Pull out the filter cartridge (8-3/arrow) by carefully turning it back and forth.

(4) Clean the filter cartridge.

CAUTION

- For cleaning, use a compressed air gun to which a pipe (angled at 90°) has been attached. The pipe must be sufficiently long to reach the bottom of the cartridge. Use dry compressed air of no more than 5 bar to blow out the cartridge by moving the pipe back and forth in the interior of the cartridge. Cleaning can be stopped when dust formation ceases.
- Do not use petrol or hot liquids for cleaning.

Figure 8-3

(5) Use a hand-held lamp to check the cartridge paper and the rubber gasket of the filter cartridge for damage. If the cartridge or the gasket is damaged, replace the cartridge.

(6) Carefully insert the filter cartridge.

(7) Install the air filter lid on the filter housing in such a way that the direction arrow in the marking "**OBEN-TOP**" points upwards. This ensures that the umbrella valve faces downwards.

CAUTION

Check all connection pipes and hoses of the air filter system for damage before starting the engine.

https://truckmanualshub.com/

8.2.4 Replacing the safety cartridge (option)

CAUTION
- The safety cartridge must not be cleaned.
- The safety cartridge must be replaced after the filter cartridge has been maintained/cleaned 3 times, but at the latest after two years.
- Make sure that no dirt or dust can enter the filter housing during replacement of the safety cartridge.

(1) Remove the filter cartridge (section 8.2.3).

(2) Pull out the safety cartridge (8-4/arrow) by carefully turning it back and forth and replace the safety cartridge and the filter cartridge with new cartridges.

(3) The remaining assembly is performed as described in section 8.2.3 (6) and (7).

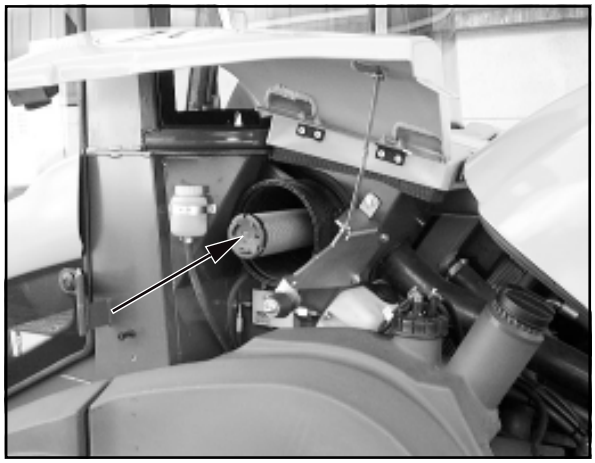

Figure 8-4

8.2.5 Oil level check, front axle

(1) Unscrew the plugs from the axle arch (8-5/arrow or 8-6/arrow).

NOTE
- The oil level must reach the plug bore.
- Collect any oil that escapes.

(2) Screw in the plug again.

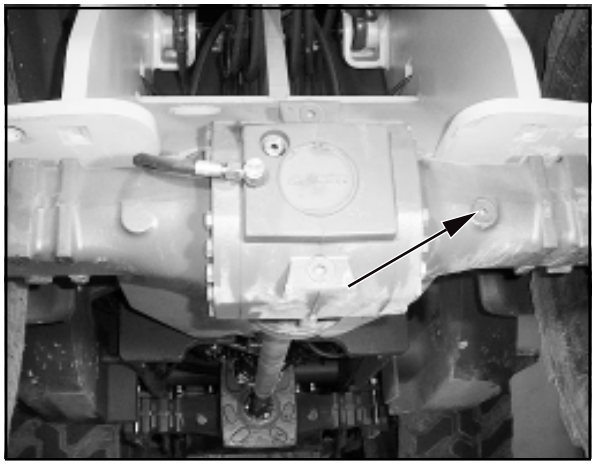

Figure 8-5

AX 700/20 km/h
AX 850/20 km/h

AX 700/30 km/h
AX 850/30 km/h
AX 1000

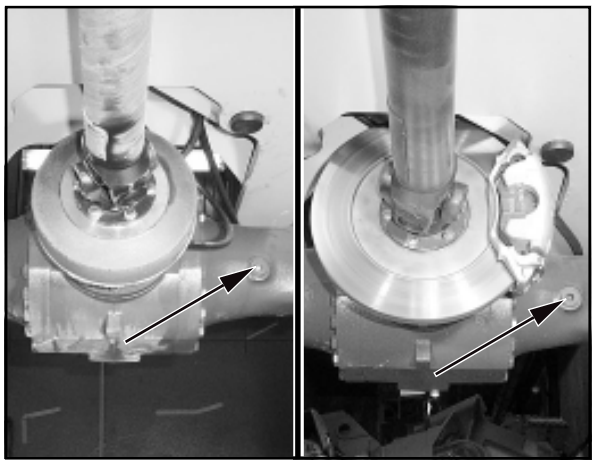

Figure 8-6

https://truckmanualshub.com/

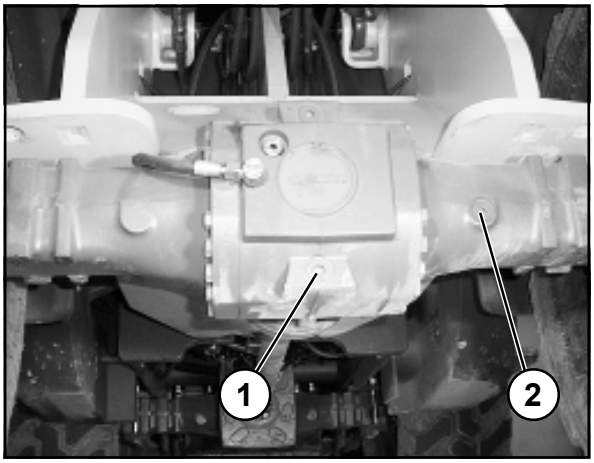

Figure 8-7

AX 700/20 km/h
AX 850/20 km/h

AX 700/30 km/h
AX 850/30 km/h
AX 1000

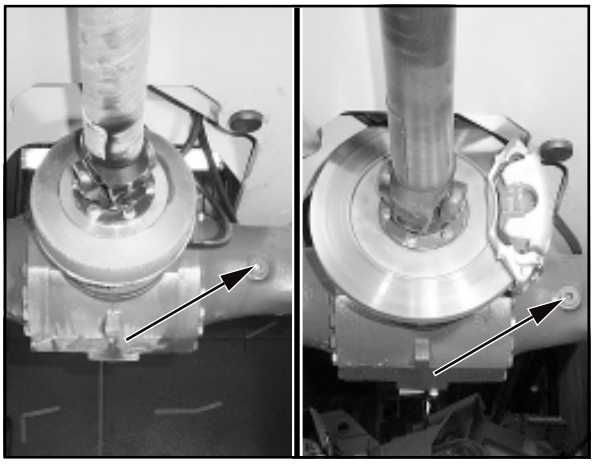

Figure 8-8

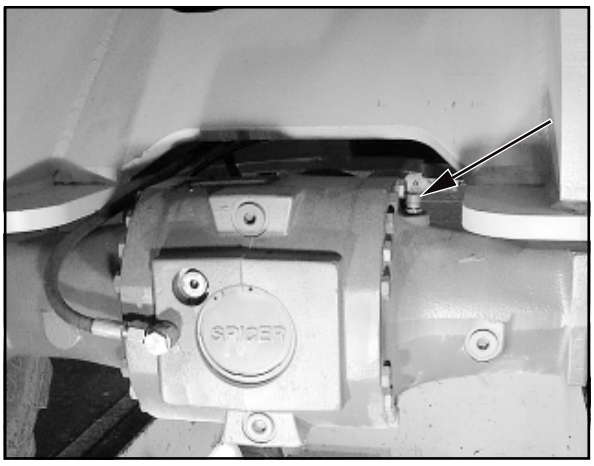

Figure 8-9

8.2.6 Oil change , front axle

(1) Place a sufficiently large oil drain pan underneath.

(2) Unscrew the plugs from the axle arch (8-7/1, 8-7/2 and 8-8/arrow) and drain the oil.

CAUTION
Waste oil must be disposed of in such a way that it will not cause pollution!

(3) Screw in the plug (8-7/1) again.

(4) Fill in oil via the plug bore (8-7/2 or 8-8/arrow) until the oil level reaches the opening.

NOTE
- The vent valve of the axle (8-9/arrow) must be free from dirt.
- Details regarding the amount of oil required are given in the maintenance plan (page 8-1).
- After a few minutes, when the oil level has lowered, top up the oil until the oil reaches the marked level and remains stable.

(5) Screw the plugs (8-7/2 and 8-8/arrow) back in.

https://truckmanualshub.com/

8.2.7 Oil level check , rear axle

(1) Unscrew the plug from the axle arch (8-10/arrow).

NOTE
- The oil level must reach the plug bore.
- Collect any oil that escapes.

(2) Screw in the plug again.

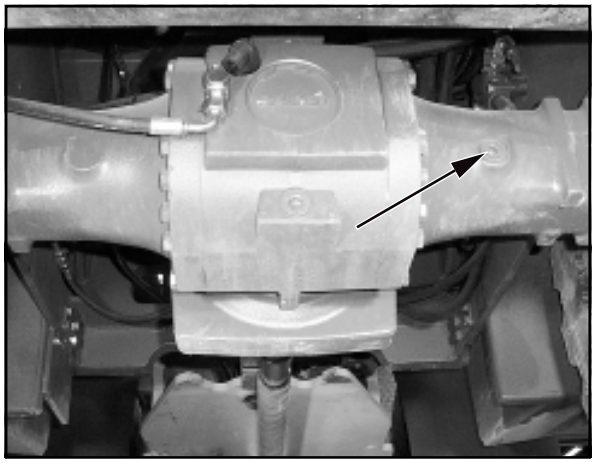

Figure 8-10

(3) Unscrew the plug screw from the ancillary gear [AX 700/20 km/h and AX 850/20 km/h (8-11/arrow)] or distribution gear [AX 700/30 km/h, AX 850/30 km/h and AX 1000 (8-12/arrow)].

NOTE
- The axle arch and the ancillary/distribution gear do not have a common oil filling.
- The oil level must reach the plug bore.
- Collect any oil that escapes.

(4) Screw in the plug again.

AX 700/20 km/h, AX 850/20 km/h

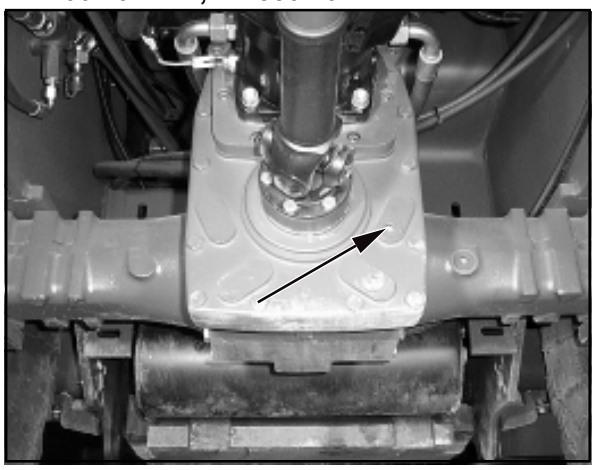

Figure 8-11

AX 700/30 km/h, AX 850/30 km/h, AX 1000

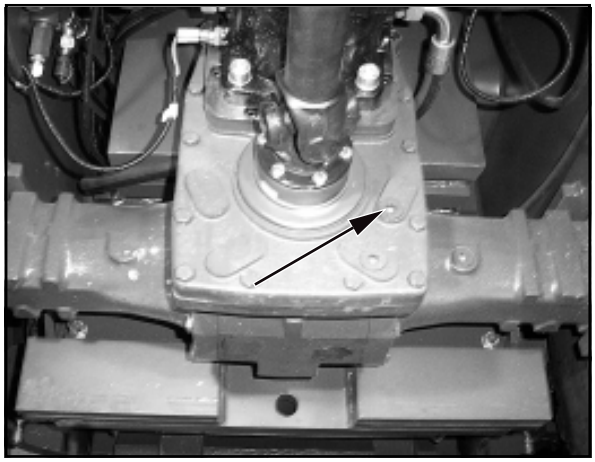

Figure 8-12

https://truckmanualshub.com/

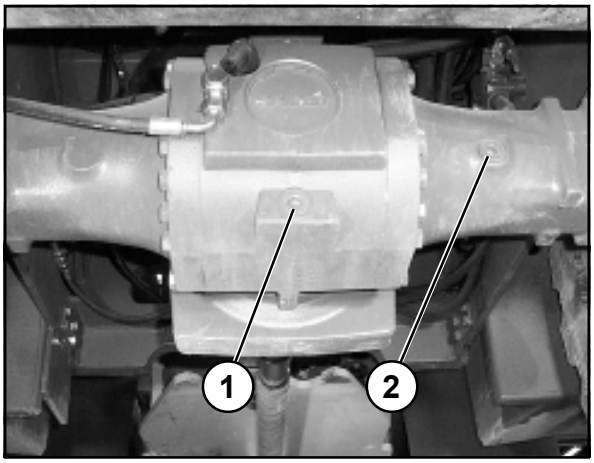

Figure 8-13

AX 700/20 km/h
AX 850/20 km/h

AX 700/30 km/h
AX 850/30 km/h
AX 1000

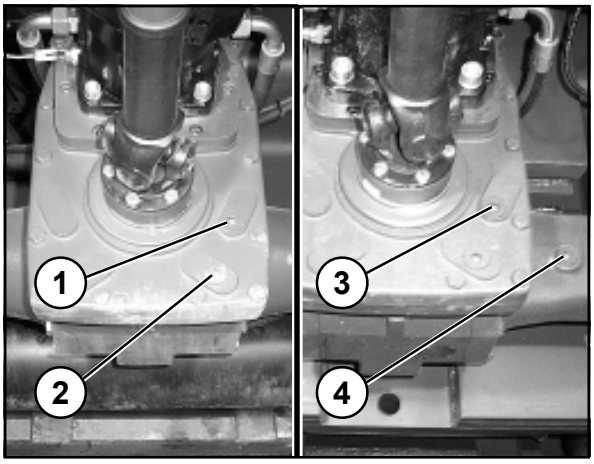

Figure 8-14

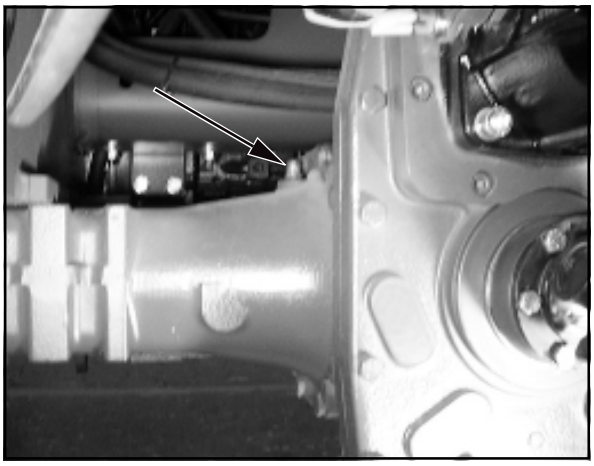

Figure 8-15

8.2.8 Oil change , rear axle

(1) Place a sufficiently large oil drain pan underneath.

(2) Unscrew screw plug from the axle arch (8-13/1 and 8-13/2) and ancillary gear [AX 700/20 km/h and AX 850/20 km/h (8-14/1 and 8-14/2)] or distribution gear [AX 700/30 km/h, AX 850/30 km/h and AX 1000 (8-14/3 and 8-14/4)] and drain the oil.

CAUTION
Waste oil must be disposed of in such a way that it will not cause pollution!

(3) Screw in the plugs for the axle arch (8-14/1) and the ancillary (8-14/2) or distribution gear (8-14/4) again.

(4) Fill oil into the plug bore of the ancillary (8-14/1) or distribution gear (8-14/3) until the oil level reaches the opening.

NOTE
- The axle arch and the ancillary/distribution gear do not have a common oil filling.
- Details regarding the amount of oil required are given in the maintenance plan (page 8-1).
- After a few minutes, when the oil level has lowered, top up the oil until the oil reaches the marked level and remains stable.

(5) Screw in the plug of the ancillary (8-14/1) or distribution gear (8-14/3) again.

(6) Fill oil into the plug bore of the axle arch (8-13/2) until the oil level reaches the opening.

NOTE
- Details regarding the amount of oil required are given in the maintenance plan (page 8-1).
- After a few minutes, when the oil level has lowered, top up the oil until the oil reaches the marked level and remains stable.
- The vent valve of the axle (8-15/arrow) must be free from dirt.

(7) Screw in the plug of the axle arch (8-13/2) again.

https://truckmanualshub.com/

8.2.9 Oil level check , planetary gear

(1) Move the loader until the marking line "OIL LEVEL" is horizontal and the plug is located above the top left of the marking line (8-16/arrow).

(2) Unscrew the plug.

NOTE
- The oil level must reach the plug bore.
- Collect any oil that escapes.

(3) Fit a new gasket and screw the plug back in.

Figure 8-16

8.2.10 Oil change, planetary gear

(1) Move the loader so that the plug (8-17/arrow) is positioned at 6 o'clock.

(2) Place an oil drain vessel with a drain channel underneath the gear.

(3) Unscrew the drain plug and let the oil drain out.

CAUTION
Waste oil must be disposed of in such a way that it will not cause pollution!

(4) Move the loader until the marking line "OIL LEVEL" is horizontal and the plug is located above the top left of the marking line (8-16/arrow).

(5) Fill in oil via the plug bore until the oil level reaches the opening.

(6) Use a new gasket when screwing the plug back in.

Figure 8-17

8.2.11 Oil change, hydraulic system

(1) Open the motor hood.

(2) Place an oil drain vessel (at least 70 l) to the right below the counter weight.

(3) Unscrew the oil drain plug (8-18/arrow).

(4) Drain the oil into the oil vessel.

CAUTION
Waste oil must be disposed of in such a way that it will not cause pollution!

(5) Screw in the oil drain plug again.

(6) Change the hydraulic oil filter cartridge (section 8.2.12).

Figure 8-18

https://truckmanualshub.com/

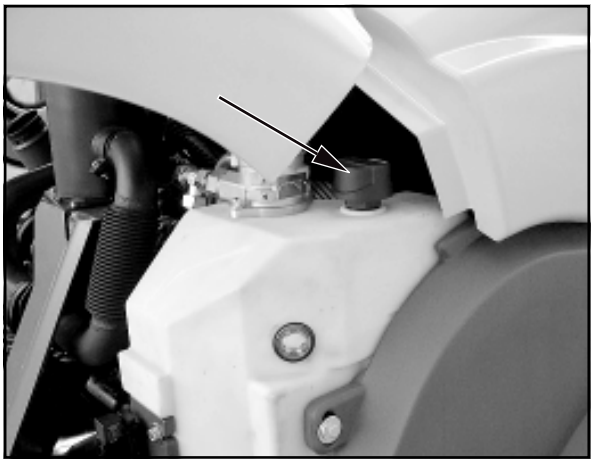

Figure 8-19

(7) Fill oil into the filler neck (8-19/arrow).

CAUTION

For those loaders which are fitted to run with biodegradable hydraulic oil (ester-based synthetic hydraulic oil of viscosity class ISO VG 46 VI > 180) - (designation can be found on the hydraulic oil reservoir and on the dashboard), only this type of oil may be used for oil changes. Mineral and biodegradable hydraulic oils must **never** be mixed!
Biodegradable hydraulic oil must be changed every **1000 operating hours**.
Changing the oil type from mineral oil to biodegradable oil must be performed according to the VDMA 24 569 conversion guidelines.

CAUTION

The service brake must be operated with mineral oil only!

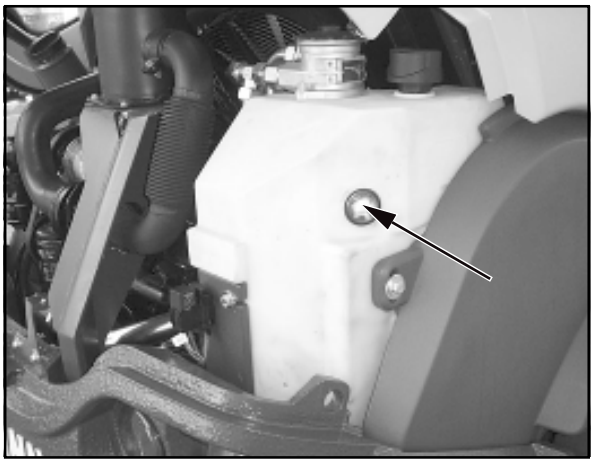

Figure 8-20

(8) Check the oil level at the sight glass (8-20/arrow).

NOTE

The oil level must be visible in the upper quarter of the sight glass (8-7/arrow). If necessary, fill oil into the filler neck (8-19/arrow).

(9) Close the filling nozzle.

8.2.12 Changing the hydraulic oil filter cartridge

CAUTION

Replace the filter cartridge according to the maintenance plan or when the (optional) clogging indicator lamp (4-9/13) lights up.

NOTE

The clogging indicator may light up prematurely after a cold start. It will go out when the hydraulic oil warms up.

Figure 8-21

(1) Open the motor hood.

(2) Unscrew the lid of the hydraulic oil filter (8-21/arrow or 8-22/1).

https://truckmanualshub.com/

(3) Swing up pull tabs on the separator disc (8-22/3) and lift out the separator disc.

(4) Slowly pull out the filter cartridge (8-22/5) and replace it with a new one.

CAUTION
- Collect any hydraulic oil that drains or drips off when you lift out the separator disc and the filter cartridge.
- The used hydraulic oil filter cartridge and the O-rings must be disposed of in an environmentally compatible manner.

(5) Fit the separator disc with a new O-ring (8-22/4).

(6) Screw on the hydraulic filter lid with a new O-ring (8-22/2).

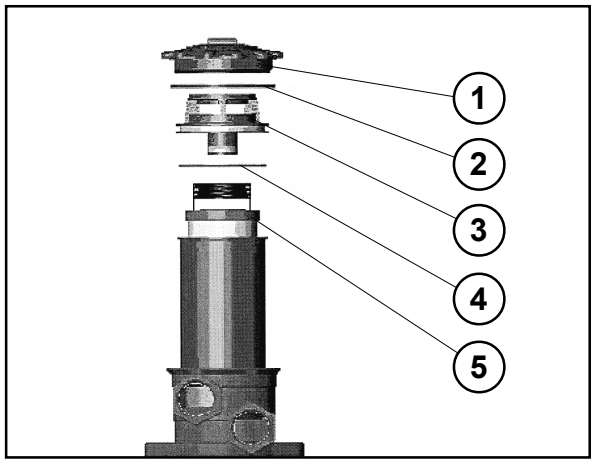

Figure 8-22

8.2.13 Grease points

NOTE
The grease points are marked in red on the loader.

8.2.13.1 Articulated pendulum joint/steering cylinder

CAUTION
Grease the pendulum bolt, the bearings of articulation bolt and steering cylinder **every 50 operating hours**.

Figure 8-23/1 Pendulum bolt

Figure 8-23/2 Steering cylinder, rear

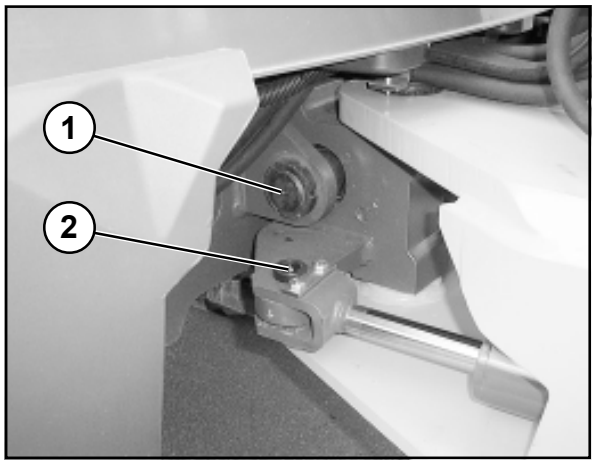

Figure 8-23

Figure 8-24/arrows Articulation bolt

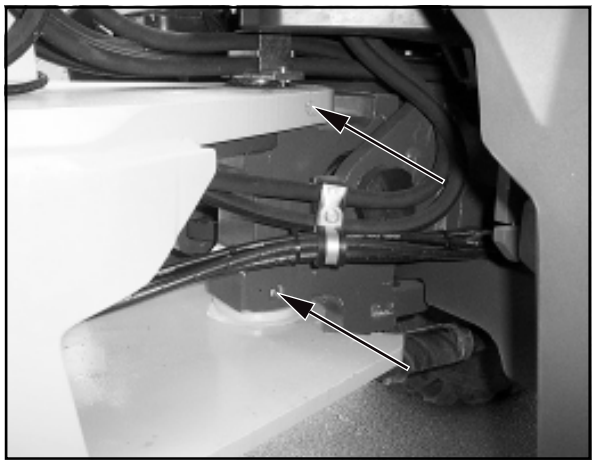
Figure 8-24

https://truckmanualshub.com/

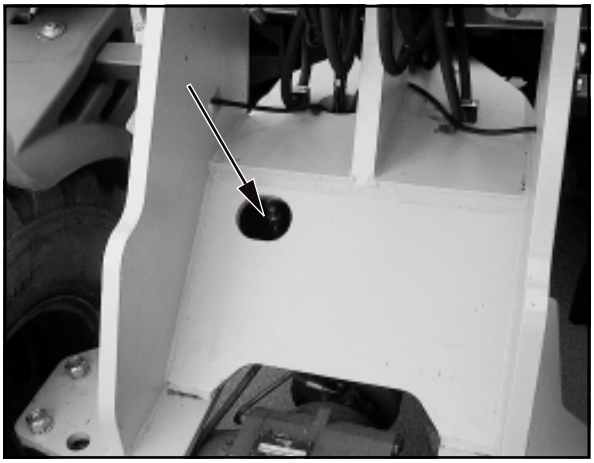

Figure 8-25

Figure 8-25/arrow Steering cylinder, front

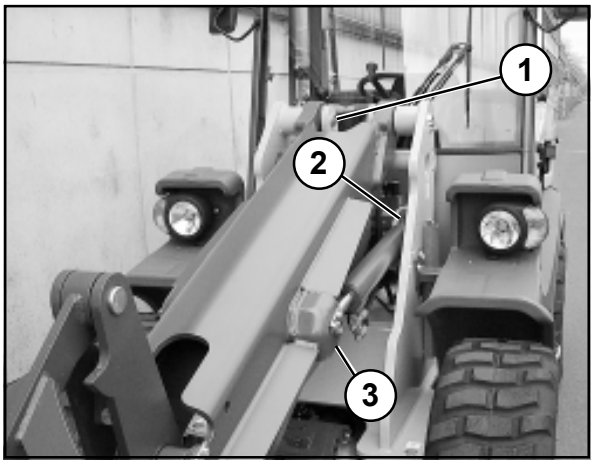

Figure 8-26

8.2.13.2 Bucket assembly

CAUTION

The bearing bolts/grease nipples of the bucket assembly (8-26 through 8-30) must be greased **every 10 operating hours**.

8-26/1 Bucket assembly/front end
8-26/2 Front end/lift cylinder
8-26/3 Bucket assembly/lift cylinder

NOTE

Grease the bearing points on both sides of the loader.

Figure 8-27

8-27/arrow Front end/tip cylinder

https://truckmanualshub.com/

8-28/arrow Tip cylinder/deflection lever

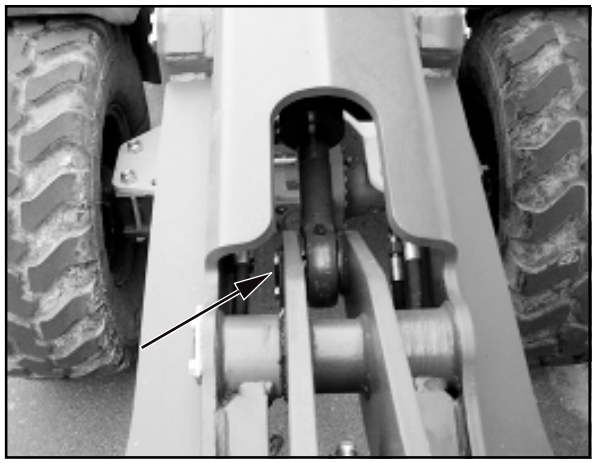

Figure 8-28

8-29/1 Bucket assembly/deflection lever
8-29/2 Quick-change device
8-29/3 Quick-change device/pivot arm
8-29/4 Deflection lever/pivot arm

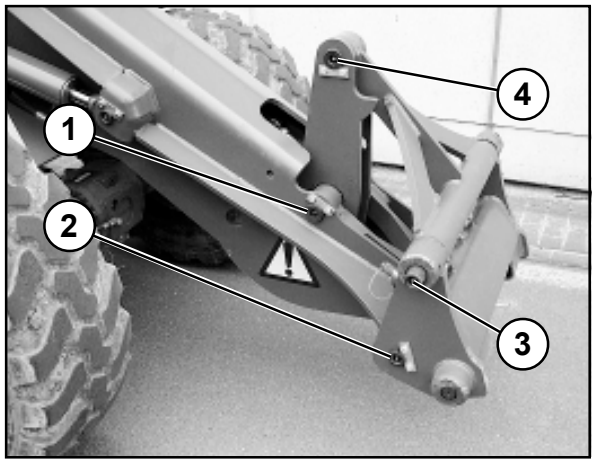

Figure 8-29

8-30/1 Bucket assembly/deflection lever
8-30/2 Quick-change device/pivot arm
8-30/3 Quick-change device

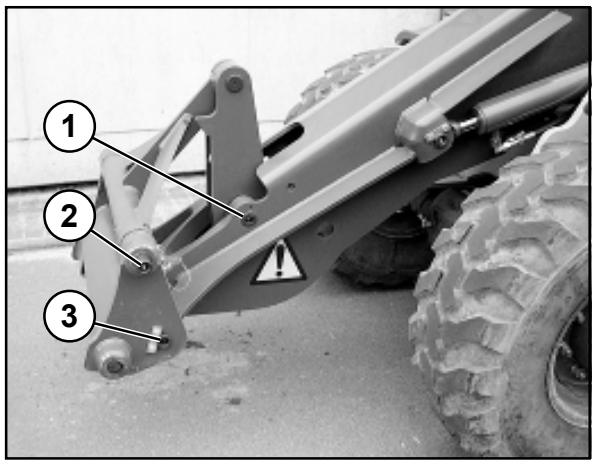

Figure 8-30

https://truckmanualshub.com/

Figure 8-31

8.2.13.3 Driver's cab doors

CAUTION

The hinges of the doors of the driver's cabin (8-31/arrows and 8-32/arrows) must be lubricated **every 50 operating hours**.

Figure 8-32

Figure 8-33

8.2.13.4 Engine hood

CAUTION

The hinges of the engine hood (8-33/arrows) must be lubricated **every 50 operating hours**.

https://truckmanualshub.com/

8.2.13.5 Multi-purpose bucket

CAUTION
The bearing bolts of the multi-purpose bucket (8-35/arrows) must be greased **every 10 operating hours.**

NOTE
The bolts must be greased on both sides of the multi-purpose bucket.

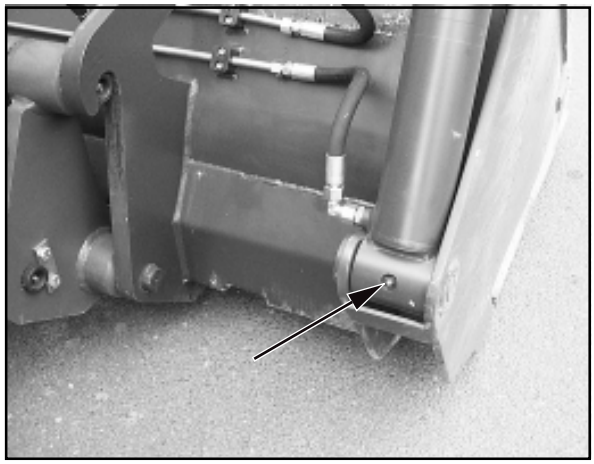

Figure 8-34

8.2.14 Oil lubrication points

Lubricate the following items with oil every 50 operating hours:
- The door locks,
- the Bowden cable and leverage of the accelerator pedal.

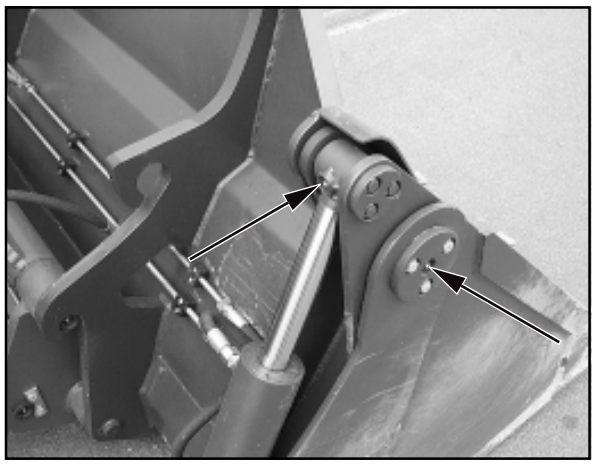

Figure 8-35

8.2.15 Replacing the starter battery

NOTE
The starter battery is a maintenance-free part according to DIN 72311, section 7. It is located behind the maintenance flap at the loader right.

(1) Opening the window: First pull the window handle inwards, then push it outwards. Finally lift the window handle out of its holder.

(2) Open the maintenance flap with a square wrench.

(3) Unlock the battery main switch (opt.) (8-36/1) by giving it 2 counter clockwise turns.

(4) Loosen and remove the fastening screw (8-36/3) (size 17) of the battery holder.

(5) Swing up the cover of the front terminal loosen and disconnect terminals (8-36/2) from the battery (size 13).

DANGER
Always remove the negative terminal first and then the positive terminal. Installation is in reverse order.

(6) Remove the battery and replace it.

(7) Apply grease to the terminals before fastening them.

(8) Installation is in reverse order.

DANGER
Make sure the fastenings are secure.

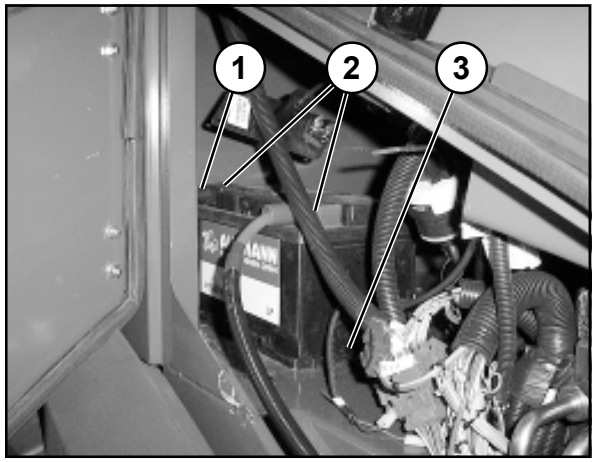

Figure 8-36

https://truckmanualshub.com/

Figure 8-37

Figure 8-38

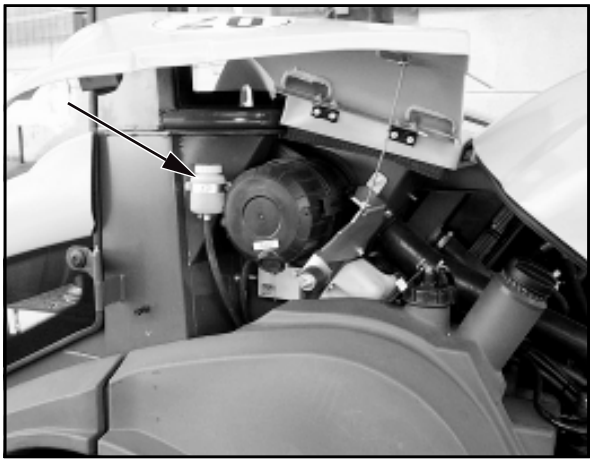

Figure 8-39

8.2.16 Maintaining/replacing the fresh air filter

NOTE

The fresh air filter is located in the driver's cabin underneath the seat plate.

(1) Tilt the backrest of the seat completely forward (5-9/4).

(2) Loosen the four screws (8-37/arrows) holding the seat plate.

(3) Pull or tilt the driver's seat with the seat plate all the way forward.

(4) Remove the filter cartridge (8-38/arrow) and clean it using "mild" compressed air.

CAUTION

Do not use any petrol, hot fluids or industrial compressed air for cleaning.

(5) Check the filter element for damage.

NOTE

The filter element must be replaced when it is damaged (check **every 500 operating hours**), but at least **every 1500 operating hours.**

(6) Insert the filter element, push the seat plate into the assembly position and secure again.

8.2.17 Checking/adjusting the service/ parking brake

DANGER

- Check the combined service/parking brake every **500 operating hours** and adjust it if necessary (see repair instructions).
- All work on the brake system must only be carried out by authorised personnel.
- Oil loss (leaks) in the brake system must be immediately reported to authorised personnel.
- Operation of the loader must be stopped immediately if the pedal can be pressed down too far or the braking effect decreases noticeably.

(1) Check the fluid level on the compensation tank for brake hydraulic oil (8-39/arrow) and top up brake hydraulic oil if necessary.

(2) Check the pedal travel.

(3) Check the entire system for proper functioning and absence of leaks (visual test).

https://truckmanualshub.com/

Faults, causes and remedies

https://truckmanualshub.com/

9 Faults, causes and remedies

NOTE

*) Faults may be eliminated only by authorised personnel

Fault	Probable cause	Remedy
Engine		See the operating instructions for the engine
Engine does not start.	Drive switch (4-10/11) is not in neutral position	Set drive switch to neutral position
Alternator does not charge	Loose connection	Press in and lock connection
	V-belt torn	Replace V-belt
	Alternator speed too low	Check V-belt tension, tighten if necessary
The bucket arm cannot be lifted/ lowered	Pressure-relief valve in servo valve is open	Remove and clean entire pressure-relief valve, readjust*
	Pilot valve for working hydraulics (4-8/4) is locked	Remove the lock lever (4-8/6)
	Pilot pressure too low or does not exist	Open, clean and readjust pressure-relief valve in control line *
	Diesel engine failed	Storage pressure can be used to bring the bucket arm to its lowermost position immediately after an engine failure. » Does not apply when pipe break protection is installed «
Steering is sluggish	Pressure-relief valve in steering unit is open	Remove and clean entire pressure-relief valve, readjust*
	Slide in priority valve stuck	Replace priority valve *
Faults in the driving and working hydraulics	Clogged filter	Replace filter cartridge (chapter 8.2.12)
	Lack of oil in hydraulic oil reservoir	Top up oil
	Electrical connection at axial piston pump are not tight, are not connected or are oxidised	Establish or clean connections according to electric wiring diagram
	High-pressure valves soiled	Clean
Faults in the braking system	Parking brake does not hold the device	Check setting, adjust if necessary*
		Check whether electrical traction drive interruption is connected to brake lever

https://truckmanualshub.com/

Fault	Probable cause	Remedy
Heating/ventilation/air condition failed	Fuse in fuse box blown	Replace fuse
Hose couplings of attachments cannot be connected	Increased pressure due to heating of the attachment	**Carefully** loosen the screwed connection on the end of the hose using the quick-change couplings. Oil squirts out and the increased pressure is eliminated. Tighten the screwed connection. **NOTE** Waste oil must be disposed of in such a way that it will not cause pollution!
	Increased pressure in basic machine	Eliminate pressure from the lines by alternately actuating the pilot valve for the auxiliary hydraulic system (4-8/5) several times.

https://truckmanualshub.com/

https://truckmanualshub.com/

Circuit diagrams

10.1 - 06.2008 Elektrik-Schaltplan/Schéma électrique/Wiring diagramm/Elektrisch schakelschema/El-oversigt/Elektriskdiagram/ Diagrama de conexiones eléctricas/Elektrisk koblingsskjema/El-kopplingsschema/Esquema de circuitos eléctricos/ Sähkökytkentäkaavio

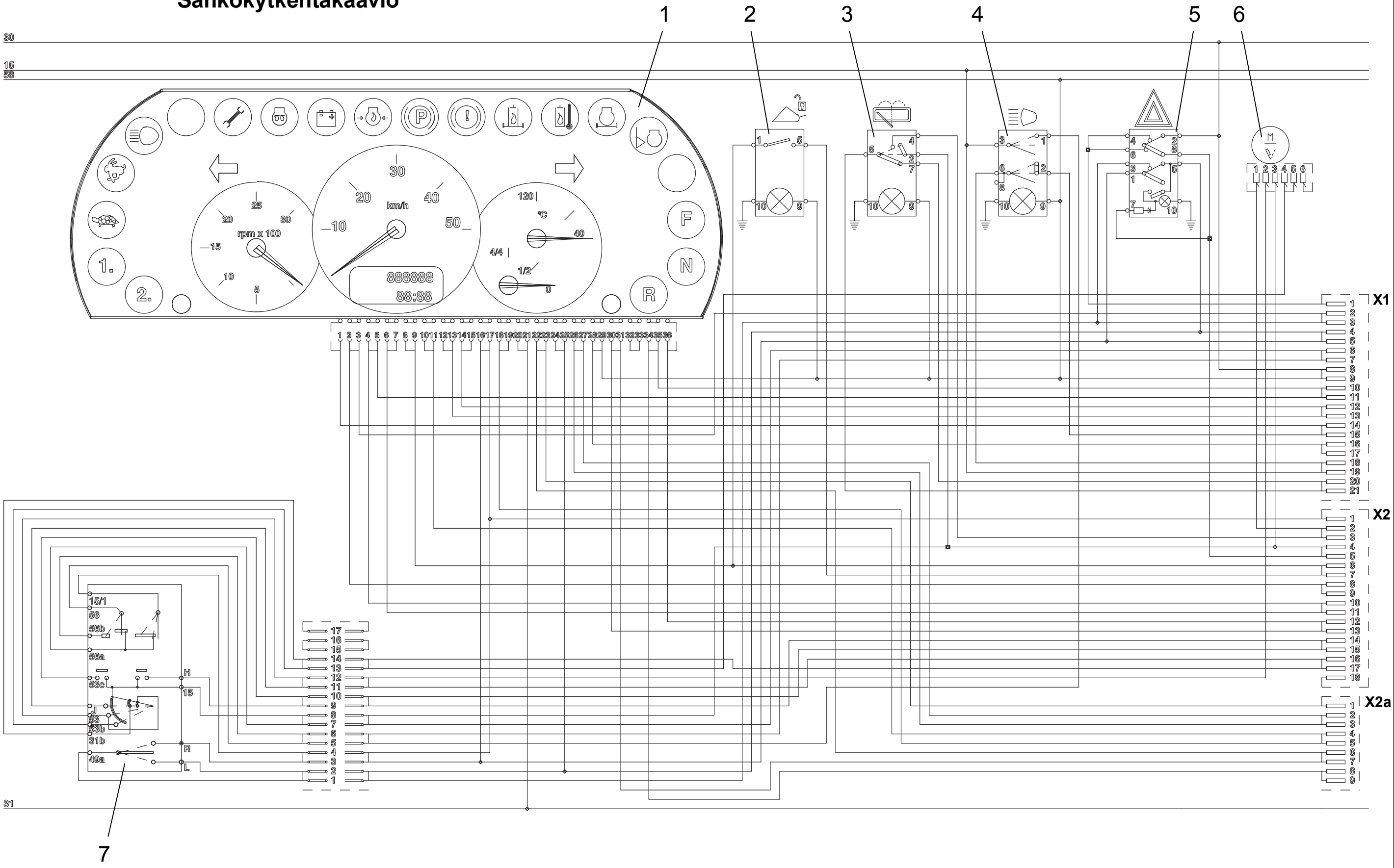

https://truckmanualshub.com/

https://truckmanualshub.com/

10.1 Electric circuit diagram

Sheet/item	Designation
1-4/1	Multifunction panel
1-4/2	Actuator: release of quick-change device
1-4/3	Actuator: rear window wiper/washer
1-4/4	Actuator: road lights
1-4/5	Actuator: Hazard flasher
1-4/6	Windshield wiper motor, front
1-4/7	Steering column switch

https://truckmanualshub.com/

Sheet/item	Designation		
2-4/1	2-pole socket		
2-4/2	Fuse	10,0 A	(traction drive)
2-4/3	Fuse	7,5 A	(turn signal)
2-4/4	Fuse	20,0 A	(hydraulics/brake light)
2-4/5	Fuse	20,0 A	(heater)
2-4/6	Fuse	20,0 A	(rear window heater)
2-4/7	Fuse	15,0 A	(high beam)
2-4/8	Fuse	15,0 A	(low beam)
2-4/9	Fuse	5,0 A	(parking light, tail light left)
2-4/10	Fuse	5,0 A	(parking light, tail light right)
2-4/11	Fuse	15,0 A	(hazard flasher)
2-4/12	Fuse	20,0 A	(windshield wiper/washer)
2-4/13	Free		
2-4/14	Fuse	20,0 A	(working light)
2-4/15	Fuse	30,0 A	(beacon light)
2-4/16	Maxi fuse	100,0 A	
2-4/17	Maxi relay (power supply)		
2-4/18	Start switch		
2-4/19	Turn signal relay		
2-4/20	Interval timer		
2-4/21	Relay for differential lock		
2-4/22	Relay, fan control		
2-4/23	Traction drive cut-out relay		
2-4/24	Relay for power adaptation: reverse		
2-4/25	Relay for power adaptation: forward		
2-4/26	Relay Alpha max.		
2-4/27	Starter interlock relay		
2-4/28	Acoustic buzzer, hydraulic oil temperature		

10.1- 06.2008 Elektrik-Schaltplan/Schéma électrique/Wiring diagramm/Elektrisch schakelschema/El-oversigt/Elektriskdiagram/ Diagrama de conexiones eléctricas/Elektrisk koblingsskjema/El-kopplingsschema/Esquema de circuitos eléctricos/ Sähkökytkentäkaavio

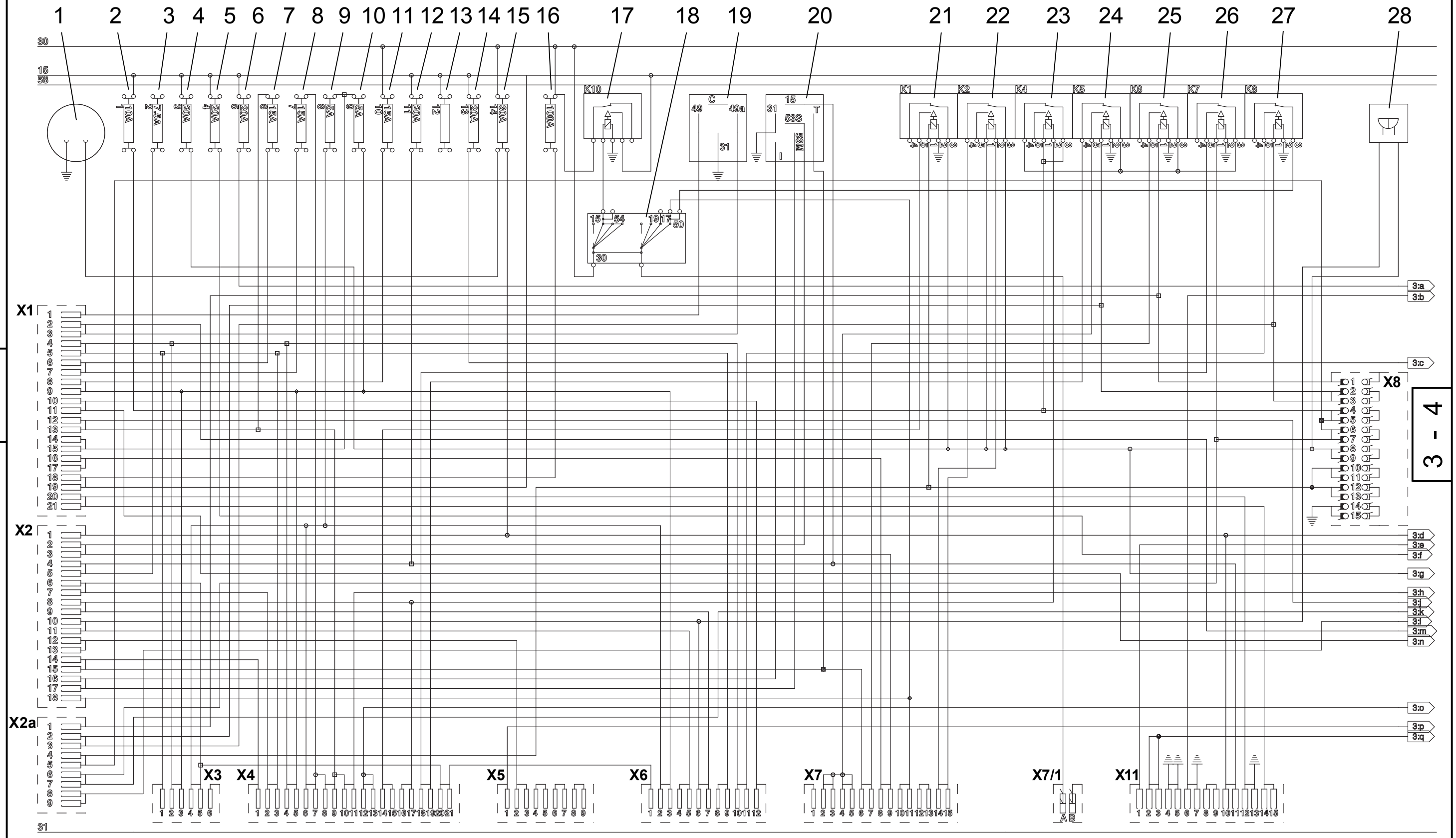

https://truckmanualshub.com/

10.1 - 06.2008 Elektrik-Schaltplan/Schéma électrique/Wiring diagramm/Elektrisch schakelschema/Elektriskdiagram/El-oversigt/Diagrama de conexiones eléctricas/Elektrisk koblingsskjema/El-kopplingsschema/Esquema de circuitos eléctricos/Sähkökytkentäkaavio

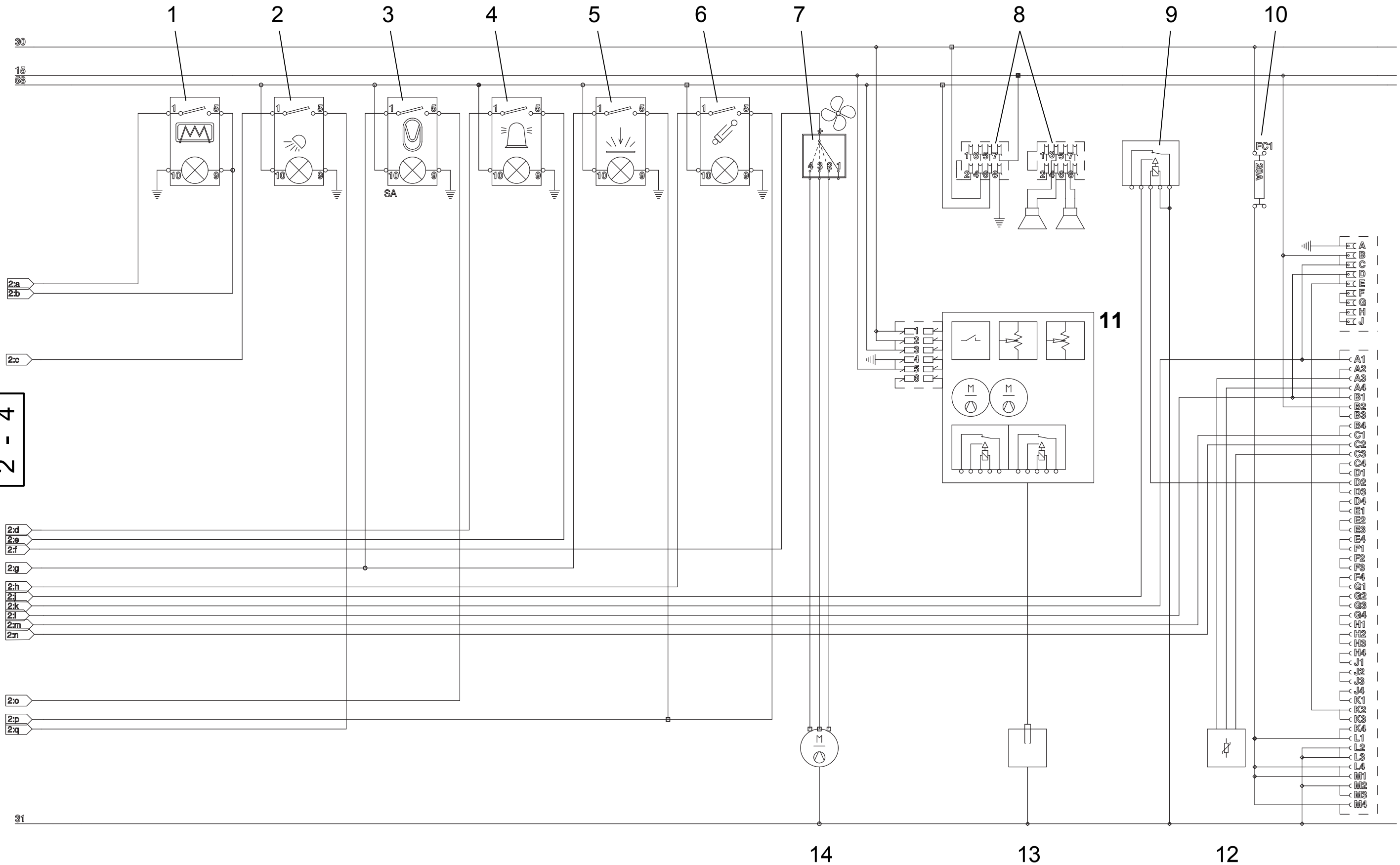

https://truckmanualshub.com/

https://truckmanualshub.com/

Sheet/item	Designation
3-4/1	Actuator: Rear window heater
3-4/2	Actuator: working lights
3-4/3	Actuator: lifting device suspension (option)
3-4/4	Actuator: Warning beacon (opt.)
3-4/5	Actuator: Permanent auxiliary hydraulics (opt.)
3-4/6	Actuator: Pipe break protection (option)
3-4/7	Actuator: fan/blower
3-4/8	Radio (option)
3-4/9	Relay for controller engine
3-4/10	Fuse (20A) controller engine
3-4/11	Air-conditioning system (option)
3-4/12	Accelerator
3-4/13	Coupling, air condition compressor
3-4/14	Heater fan motor

https://truckmanualshub.com/

Sheet/item	Desigation
4-4/1	Wiper motor, rear
4-4/2	Interior lighting
4-4/3	Switch: Interior lighting
4-4/4	Reversing buzzer
4-4/5	Working lights, rear (option)
4-4/6	Working lights, rear (option)
4-4/7	Working lights, front
4-4/8	Working lights, front
4-4/9	Warning beacon (opt.)
4-4/10	Relay, glow plugs
4-4/11	Maxi fuse (glow plugs) 100 A
4-4/12	Glow plugs
4-4/13	Starter
4-4/14	Alternator
4-4/15	Battery main switch (option)
4-4/16	Battery
4-4/17	Valve, fan control
4-4/18	Coolant temperature switch 93° C
4-4/19	Window washer motor, rear
4-4/20	Windshield washer motor, front
4-4/21	Valve, forward drive direction
4-4/22	Reversing buzzer
4-4/23	Valve, reverse drive direction
4-4/24	Reversing light, left
4-4/25	Turn signal, rear left
4-4/26	Reversing light, right
4-4/27	Turn signal, rear right
4-4/28	Tail light, right
4-4/29	Brake light, right
4-4/30	Tail light, left
4-4/31	Brake light, left
4-4/32	Dip pipe sensor
4-4/33	Switch: Hydraulic oil filter (option)
4-4/34	Switch: hydraulic oil temperature
4-4/35	Direction detection valve
4-4/36	Alpha max. valve
4-4/37	Switch: Parking brake
4-4/38	Differential lock valve
4-4/39	Memory valve, lifting device suspension (option)
4-4/40	Reservoir valve, lifting device suspension (option)
4-4/41	Valve, pipe break protection
4-4/42	Valve, pipe break protection
4-4/43	Quick-change device release valve
4-4/44	Driving light, left
4-4/45	Driving light, right
4-4/46	Signal horn
4-4/47	7-pole socket (option)
4-4/48	Lifting device suspension switch (option)
4-4/49	Brake light switch

NOTE

The bold numbers next to the item numbers in the electric circuit diagram are cross-references to the respective part in the hydraulic diagram.

10.1- 06.2008 Elektrik-Schaltplan/Schéma électrique/Wiring diagramm/Elektrisch schakelschema/El-oversigt/Elektriskdiagram/ Diagrama de conexiones eléctricas/Elektrisk koblingsskjema/El-kopplingsschema/Esquema de circuitos eléctricos/ Sähkökytkentäkaavio

https://truckmanualshub.com/

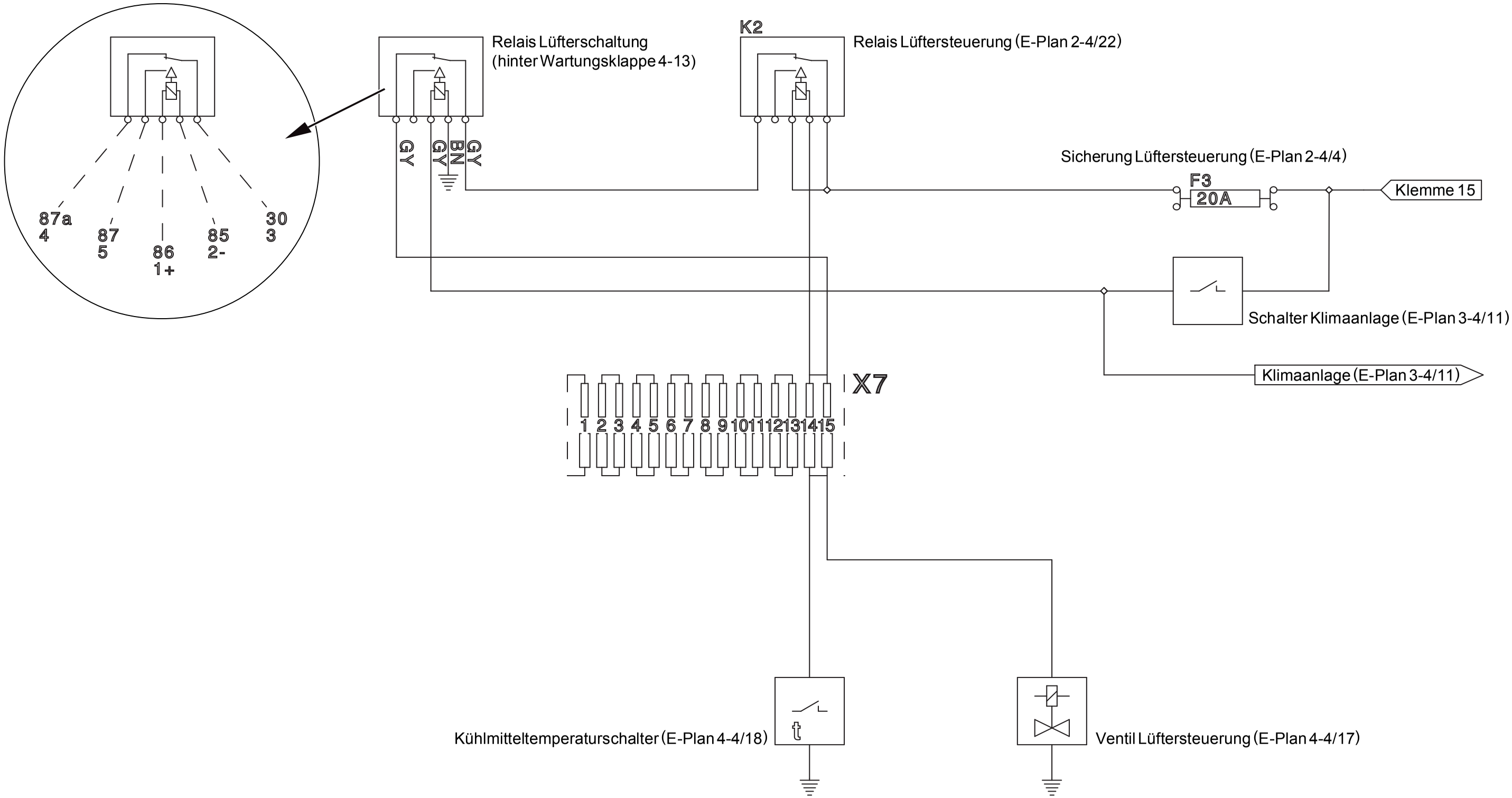

https://truckmanualshub.com/

https://truckmanualshub.com/

Hydraulikschaltplan/Schéma hydraulique/Hydraulisch schakelschema/Hydraulic circuit diagram/Hydraulikoversigt/Plano de conexiones hidráulicas/Hydraulikdiagram Hydraulisk koblingsskjema/Hydraulik kopplingsschema/Plano de circuitos hidráulicos/Hydraulikk-koplingsskjema/Hydrauliikkakytkentäkaavio

AX 700 / AX 850 / AX 1000

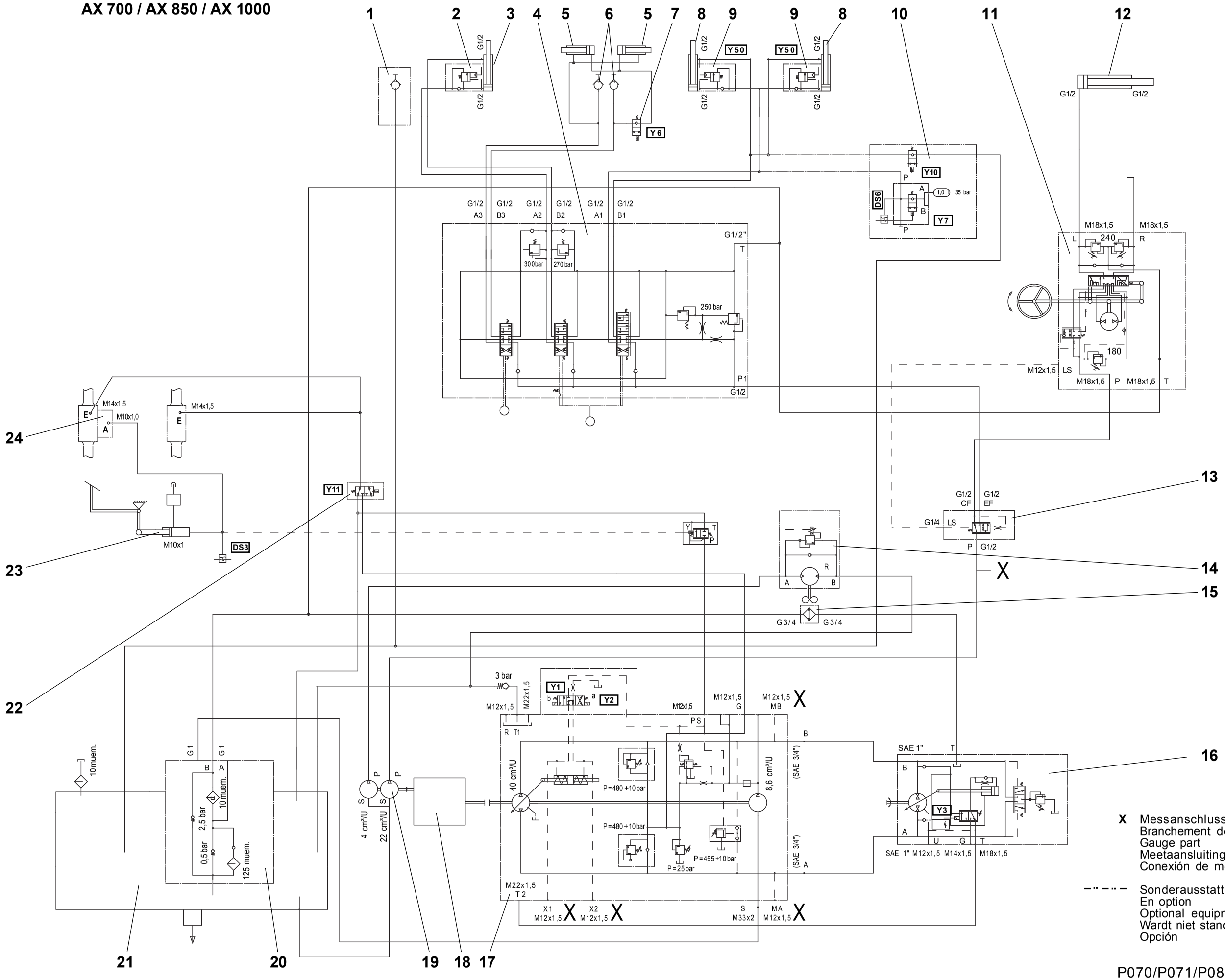

X Messanschluss
Branchement de mesure
Gauge part
Meetaansluiting
Conexión de medición

Sonderausstattung
En option
Optional equipment
Wardt niet standaard geleverd
Opción

https://truckmanualshub.com/

https://truckmanualshub.com/

10.2 Hydraulic circuit diagram

Item Designation

01 Unpressurised return line (option)
02 Pipe break protection, tip cylinder (option)
03 Tip cylinder:

AX 700	-	DW 90/50/424/1480	AX 700 High lift	-	DW 100/50/424/1700
AX 850	-	DW 90/50/424/1480	AX 850 High lift	-	DW 100/50/424/1700
AX 1000	-	DW 100/50/424/1480	AX 1000 High lift	-	DW 100/50/424/1700

04 3-way valve
05 Locking cylinder DW 40/25/50/167
06 Auxiliary hydraulics
07 Valve, quick change device lock
08 Lift cylinder

AX 700	-	DW 70/40/600/876	AX 700 High lift	-	DW 80/40/561/924
AX 850	-	DW 80/40/600/876	AX 850 High lift	-	DW 100/45/600/895
AX 1000	-	DW 90/45/600/876	AX 1000 High lift	-	DW 100/45/600/895

09 Pipe break protection, lift cylinder (option)
10 lifting device suspension (option)
11 Steering unit, 320/160 cm³/rev.
12 Steering cylinder DW 80/35/295/585
13 Priority valve
14 Fan motor
15 Hydraulic oil cooler
16 Drive motor:
AX 700/20 km/h, AX 850/20 km/h - A6VM 80 HA
AX 700/30 km/h, AX 850/30 km/h, AX 1000 - A6VM 107 HA
17 Drive pump A4VG 40 DA
18 Drive engine:
AX 700, AX 850 - John Deere 4024HF295A / 46.0 kW / 2800 rpm
AX 1000 - John Deere 4024HF295B / 49,0 kW / 2800 rpm
19 Tandem gear pump, 32/4 cm³/rev.
20 Combined suction and return flow filter
21 Hydraulic oil tank
22 Differential lock
23 Main brake cylinder
24 Drum brake
- AX 700 - 20 km/h
- AX 850 - 20 km/h

Disc brake
- AX 700 - 30 km/h
- AX 850 - 30 km/h
- AX 1000

option = Special equipment

https://truckmanualshub.com/

https://truckmanualshub.com/

Technical data (loader)

https://truckmanualshub.com/

11 Technical data (loader)

11.1 AX 700

NOTE
The technical data refer to 12.5/80 R18 tyres.

11.1.1 Loader

- Height	2,500 mm
- Width - across über outer tyre edge	1,590 mm
- across bucket	1,625 mm
- Wheelbase	2,030 mm
- Track width	1,250 mm
- Operating weight w/o attachment	4,715 kg
- Ground clearance - Cardan shaft	440 mm
- Differential	350 mm
- Turning radius (across the rear)	3,540 mm
- Articulation angle - left	40°
- right	40°
- Swinging angle	±11°
- Climbing ability with payload	60 %
- Max. lifting capacity	41 kN
- Thrust force	38 kN
- Breakout force	41 kN

11.1.2 Engine

- Watercooled diesel engine	
- Type	4024HF295A
- 4 cylinders, 4-stroke, direct injection	
- Displacement	2,440 cm³
- Power acc. to SAE J 1995	46.0 kW at 2200 rpm
- Emissions class according to RL 97/68 EC step 3 + TIER	
- Cooling system	Water
- Total coolant	approx. 10,50 l
- Anti-freeze	5,25 l

11.1.3 Starter

-	2.0 kW / 12 V

11.1.4 Alternator

-	70 A, 14 V

11.1.5 Hydrostatic drive

Variant "20 km/h"

- Drive stage I	0.....7 km/h
- Drive stage II	0..... 20 km/h

Variant "30 km/h"

- Drive stage I	0..... 7 km/h
- Drive stage II	0..... 30 km/h

11.1.6 Axle loads

- Perm. axle loads acc. to StVZO - front	3,500 kg
- rear	3,500 kg
- Perm. total weight acc. to StVZO	5,100 kg

https://truckmanualshub.com/

11.1.7 Tyres

The following tyres are permitted:

- Size		12.5/80 R18
- Tyre pressure	- front	3.0 bar
	- rear	2.75 – 3.0 bar
- Size		15.5/55 R18
- Tyre pressure	- front	3.25 bar
	- rear	3.0 – 3.25 bar
- Size		365/70 R18
- Tyre pressure	- front	3.0 bar
	- rear	2.75 – 3.0 bar
- Size		400/70 R18
- Tyre pressure	- front	2.8 bar
	- rear	2.8 bar
- Size		405/70 R18
- Tyre pressure	- front	2.5 bar
	- rear	2.5 bar
- Size		425/55 R17
- Tyre pressure	- front	3.0 bar
	- rear	2.5 – 3.0 bar

11.1.8 Steering system

- Hydrostatic via priority valve
- Pressure max. 180 bar

11.1.9 Brake system

Service brakes:

1. Hydraulic drum brake (fast loader: disc brake) in the front axle acting on all 4 wheels.
2. Hydrostatic inching brake, acting on all four wheels.

Parking brake:
Mechanic parking brake, acting on all four wheels.

11.1.10 Electric system

- Battery 66 Ah

11.1.11 Hydraulic system

- Contents	60 l
- Hydraulic oil reservoir	40 l
- Flow rate	60 l/min
- Max. operating pressure	250 bar
- 2 lift cylinders	Ø 70/40 mm
- 1 tip cylinders	Ø 90/50 mm
- 1 steering cylinder	Ø 80/35 mm
- Times acc. to DIN ISO 7131	
- Lift (with payload)	4.6 s
- Lower (without load)	2.8 s
- Dump 90°	2.2 s
- Tilt 45°	1.5 s

11.1.12 Fuel supply system

- Contents
  Fuel tank 70 l

https://truckmanualshub.com/

11.1.13 Heating and ventilation system

11.1.14 Return suction filter

- Filter mesh	10 µm abs.
- Bypass response pressure	p = 2.5 bar

11.1.15 Combination cooler

AX 70/20 km/h

- Performance	max. 31/12 kW
- Flow rate	89/26 l/min

AX 70/30 km/h

- Performance	max. 35/15 kW
- Flow rate	89/26 l/min

11.1.16 Noise emission

Sound power level (LWA) »Noise outside: «	101 dB(A)
Acoustic power level (LpA) » noise in the driver’s cabin: «	80 dB(A)

https://truckmanualshub.com/

11.2 AX 850

NOTE
The technical data refer to 12.5/80 R18 tyres.

11.2.1 Loader

- Height	2,505 mm
- Width - across über outer tyre edge	1,705 mm
- across bucket	1,850 mm
- Wheelbase	2,030 mm
- Track width	1,320 mm
- Operating weight w/o attachment	4,887 kg
- Ground clearance - Cardan shaft	445 mm
- Differential	350 mm
- Turning radius (across the rear)	3,540 mm
- Articulation angle - left	40°
- right	40°
- Swinging angle	±11°
- Climbing ability with payload	60 %
- Max. lifting capacity	43 kN
- Thrust force	38 kN
- Breakout force	41 kN

11.2.2 Engine

- Watercooled diesel engine	
- Type	4024HF295A
- 4 cylinders, 4-stroke, direct injection	
- Displacement	2,440 cm³
- Power acc. to SAE J 1995	46.0 kW at 2200 rpm
- Emissions class according to RL 97/68 EC step 3 + TIER	
- Cooling system	Water
- Total coolant	approx. 10,50 l
- Anti-freeze	5,25 l

11.2.3 Starter

-	2.0 kW / 12 V

11.2.4 Alternator

-	70 A, 14 V

11.2.5 Hydrostatic drive

"20 km/h" variant

- Drive stage I	0.....7 km/h
- Drive stage II	0..... 20 km/h

"30 km/h" variant

- Drive stage I	0.....7 km/h
- Drive stage II	0..... 30 km/h

11.2.6 Axle loads

- Perm. axle loads acc. to StVZO - front	3,500 kg
- rear	3,500 kg
- Perm. total weight acc. to StVZO	5,100 kg

https://truckmanualshub.com/

11.2.7 Tyres

The following tyres are permitted:

- Size		12.5/80 R18
- Tyre pressure	- front	3.0 bar
	- rear	2.75 – 3.0 bar
- Size		15.5/55 R18
- Tyre pressure	- front	3.25 bar
	- rear	3.0 – 3.25 bar
- Size		365/70 R18
- Tyre pressure	- front	3.0 bar
	- rear	2.75 – 3.0 bar
- Size		400/70 R18
- Tyre pressure	- front	2.8 bar
	- rear	2.8 bar
- Size		405/70 R18
- Tyre pressure	- front	2.5 bar
	- rear	2.5 bar
- Size		425/55 R17
- Tyre pressure	- front	3.0 bar
	- rear	2.5 – 3.0 bar

11.2.8 Steering system

- Hydrostatic via priority valve
- Pressure max. 180 bar

11.2.9 Brake system

Service brakes:

1. Hydraulic drum brake (fast loader: disc brake) in the front axle acting on all 4 wheels.
2. Hydrostatic inching brake, acting on all four wheels.

Parking brake:
Mechanic parking brake, acting on all four wheels.

11.2.10 Electric system

- Battery 66 Ah

11.2.11 Hydraulic system

- Contents	60 l
- Hydraulic oil reservoir	40 l
- Flow rate	60 l/min
- Max. operating pressure	250 bar
- 2 lift cylinders	Ø 80/40 mm
- 1 tip cylinders	Ø 90/50 mm
- 1 steering cylinder	Ø 80/35 mm
- Times acc. to DIN ISO 7131	
- Lift (with payload)	4.7 s
- Lower (without load)	2.9 s
- Dump 90°	2.2 s
- Tilt 45°	1.5 s

11.2.12 Fuel supply system

- Contents
  Fuel tank 70 l

https://truckmanualshub.com/

11.2.13 Heating and ventilation system

11.2.14 Return suction filter

- Filter mesh	10 µm abs.
- Bypass response pressure	p = 2.5 bar

11.2.15 Combination cooler

AX 85/20 km/h

- Performance	max. 31/12 kW
- Flow rate	89/26 l/min

AX 85/30 km/h

- Performance	max. 35/15 kW
- Flow rate	89/26 l/min

11.2.16 Noise emission

Sound power level (LWA) »Noise outside: «	101 dB(A)
Acoustic power level (LpA) » noise in the driver's cabin: «	80 dB(A)

https://truckmanualshub.com/

11.3 AX 1000

NOTE
The technical data refer to 365/70 R18 tyres.

11.3.1 Loader

- Height	2,455 mm
- Width - across über outer tyre edge	1,750 mm
- across bucket	1,850 mm
- Wheelbase	2,030 mm
- Track width	1,400 mm
- Operating weight w/o attachment	5,165 kg
- Ground clearance - Cardan shaft	415 mm
- Differential	350 mm
- Turning radius (across the rear) left/right	3,670 mm/3,790 mm
- Articulation angle - left	40°
- right	40°
- Swinging angle	±11°
- Climbing ability with payload	60 %
- Max. lifting capacity	44.5 kN
- Thrust force	38 kN
- Breakout force	43 kN

11.3.2 Engine

- Watercooled diesel engine	
- Type	4024HF295B
- 4 cylinders, 4-stroke, direct injection	
- Displacement	2,440 cm³
- Power acc. to SAE J 1995	49 kW at 2200 rpm
- Emissions class according to RL 97/68 EC step 3 + TIER	
- Cooling system	Water
- Total coolant	approx. 10,50 l
- Anti-freeze	5,25 l

11.3.3 Starter

-	2.0 kW / 12 V

11.3.4 Alternator

-	70 A, 14 V

11.3.5 Hydrostatic drive

"20 km/h" variant

- Drive stage I	0.....7 km/h
- Drive stage II	0..... 20 km/h

"30 km/h" variant

- Drive stage I	0.....7 km/h
- Drive stage II	0..... 30 km/h
-	

11.3.6 Axle loads

- Perm. axle loads acc. to StVZO - front	3,500 kg
- rear	3,500 kg
- Perm. total weight acc. to StVZO	5,500 kg

https://truckmanualshub.com/

11.3.7 Tyres

The following tyres are permitted:

- Size		365/70 R18
- Tyre pressure	- front	3.0 bar
	- rear	2.75 – 3.0 bar
- Size		400/70 R18
- Tyre pressure	- front	2.8 bar
	- rear	2.8 bar
- Size		405/70 R18
- Tyre pressure	- front	2.5 bar
	- rear	2.5 bar
- Size		425/55 R17
- Tyre pressure	- front	3.0 bar
	- rear	2.5 – 3.0 bar

11.3.8 Steering system

- Hydrostatic via priority valve
- Pressure max. 180 bar

11.3.9 Brake system

Service brakes:

1. Hydraulically operated disc brake at the front axle, acting on all 4 wheels
2. Hydrostatic inching brake, acting on all four wheels.

Parking brake:

Mechanic parking brake, acting on all four wheels.

11.3.10 Electric system

- Battery 66 Ah

11.3.11 Hydraulic system

- Contents	60 l
- Hydraulic oil reservoir	40 l
- Flow rate	60 l/min
- Max. operating pressure	250 bar
- 2 lift cylinders	Ø 90/45 mm
- 1 tip cylinders	Ø 100/50 mm
- 1 steering cylinder	Ø 80/35 mm
- Times acc. to DIN ISO 7131	
- Lift (with payload)	4.8 s
- Lower (without load)	2.9 s
- Dump 90°	2.3 s
- Tilt 45°	1.6 s

11.3.12 Fuel supply system

- Contents
  Fuel tank 70 l

11.3.13 Heating and ventilation system

https://truckmanualshub.com/

11.3.14 Return suction filter

- Filter mesh	10 µm abs.
- Bypass response pressure	p = 2.5 bar

11.3.15 Combination cooler

- Performance	max. 35/15 kW
- Flow rate	89/26 l/min

11.3.16 Noise emission

Sound power level (LWA) »Noise outside: «	101 dB(A)
Acoustic power level (LpA) » noise in the driver's cabin: «	80 dB(A)

https://truckmanualshub.com/

Technical data (attachments)

https://truckmanualshub.com/

12.1 AX 700 attachments

NOTE

- The technical data refer to 12.5 - 18 tyres.

12.1.1 Buckets

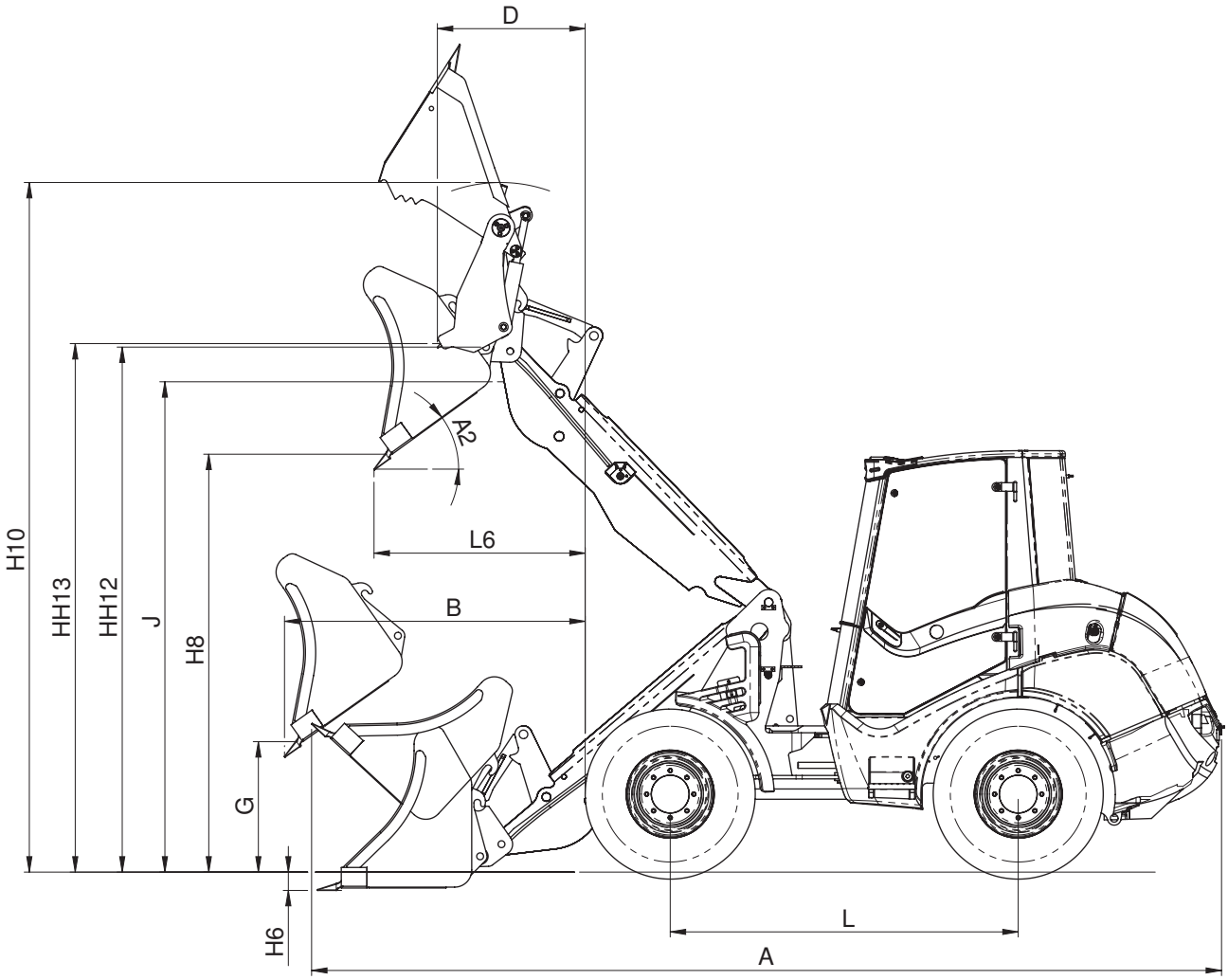

https://truckmanualshub.com/

12.1.1 Buckets

Bucket type			Standard bucket	Multi-purpose bucket
Bucket volume		m³	**0.7**	**0.65**
Bucket width		mm	1600	1625
Dead weight		kg	260	457
Loads acc. to ISO 14397				
Bulk density		t/m³	1.8	1.8
Dump load				
- frontal		kg	3400	
- articulated		kg	3050	
Payload				
- frontal		kg	1700	
- articulated		kg	1525	
Tear-out force acc. to ISO 8313		daN		
A	Total length (bucket in the transport position)	mm	5250	5325
A2	Max. dump angle (top)	°	46	45
	Max. dump angle (bottom)	°	125	125
B	Max. dumping distance at dumping angle 45°	mm	1555	1545
G	Dumping height at max. dumping distance and dumping angle 45°	mm	715	705
H6	Depth of feed-in	mm	110	110
H8	Dumping height at max. lifting height and dumping angle 45°	mm	2535	2460
H10	Max. working height	mm	4040	4245
HH12	Bucket pivot point at max. lifting height	mm	3065	3270
J	Free lift height	mm	2860	2860
L6	Dumping distance at max. lifting height and dumping angle 45°	mm	740	800

Multipurpose bucket opened:

D	Max. dumping distance at max. lifting height and tilted bucket	mm	-	590
HH13	Max. dumping height with tilted bucket	mm	-	3380

https://truckmanualshub.com/

12.1.2 Fork-lift attachment

12.1.3 Lifting hook

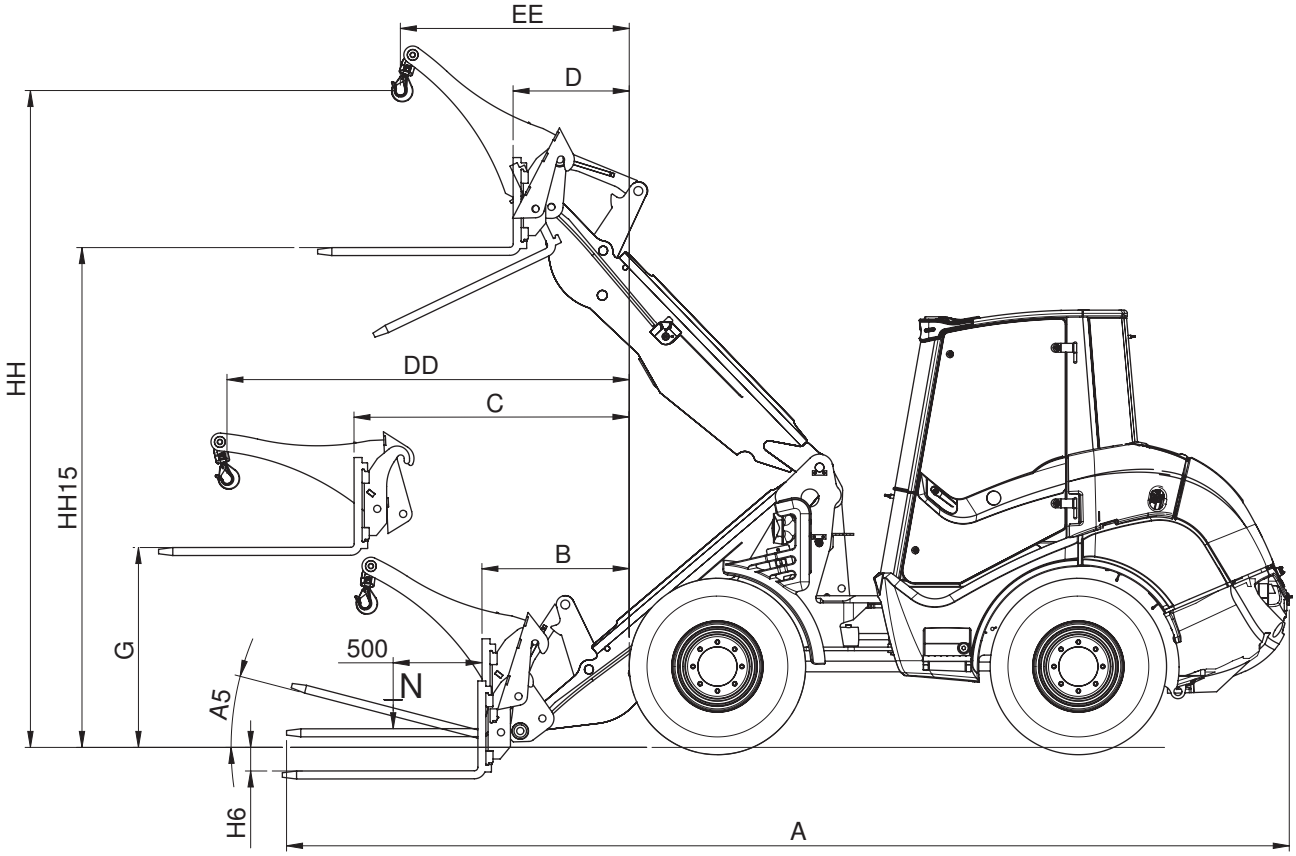

https://truckmanualshub.com/

12.1.2 Fork-lift attachment

Tine length	1,000 mm
Tine height	mm
Tine spacing (centre)	
- min.	mm
- max.	mm
Dead weight	199 kg

Perm. payload N acc. to DIN 14397

frontal	
- level ground (stability factor 1.25)	2,100 kg
- uneven ground (stability factor 1.67)	1,570 kg
articulated	
- level ground (stability factor 1.25)	1,900 kg
- uneven ground (stability factor 1.67)	1,430 kg

Perm. payload N acc. to DIN 8313, **fork-lift attachment 300 mm above ground**

frontal	
- level ground (stability factor 1.25)	2,500 kg
- uneven ground (stability factor 1.67)	kg
articulated	
- level ground (stability factor 1.25)	2,300 kg
- uneven ground (stability factor 1.67)	kg

A	Total length	5,720 mm
A5	Tilt angle	19 °
B	Min. reach	900 mm
C	Max. reach	1,315 mm
GB	Reach at max. lifting height	500 mm
G	Free lift height at max. reach	1,125 mm
H6	Depth of feed-in	110 mm
HH15	Free lift height at max. reach (upper tine edge)	2,825 mm

12.1.3 Lifting hook

Perm. payload acc. to DIN EN 474-3		
- Max. outreach (stability factor 2)	- frontal	825 kg
	- articulated	742 kg
Dead weight		132 kg

A	Total length	5,320 mm
DD	Max. outreach	2,150 mm
EE	Reach with bucket arm in uppermost position	1,325 mm
HH	Max. lifting height	3,700 mm

https://truckmanualshub.com/

12.2 AX 850 attachments

NOTE

- The technical data refer to 405/70 R18 tyres.

12.2.1 Buckets

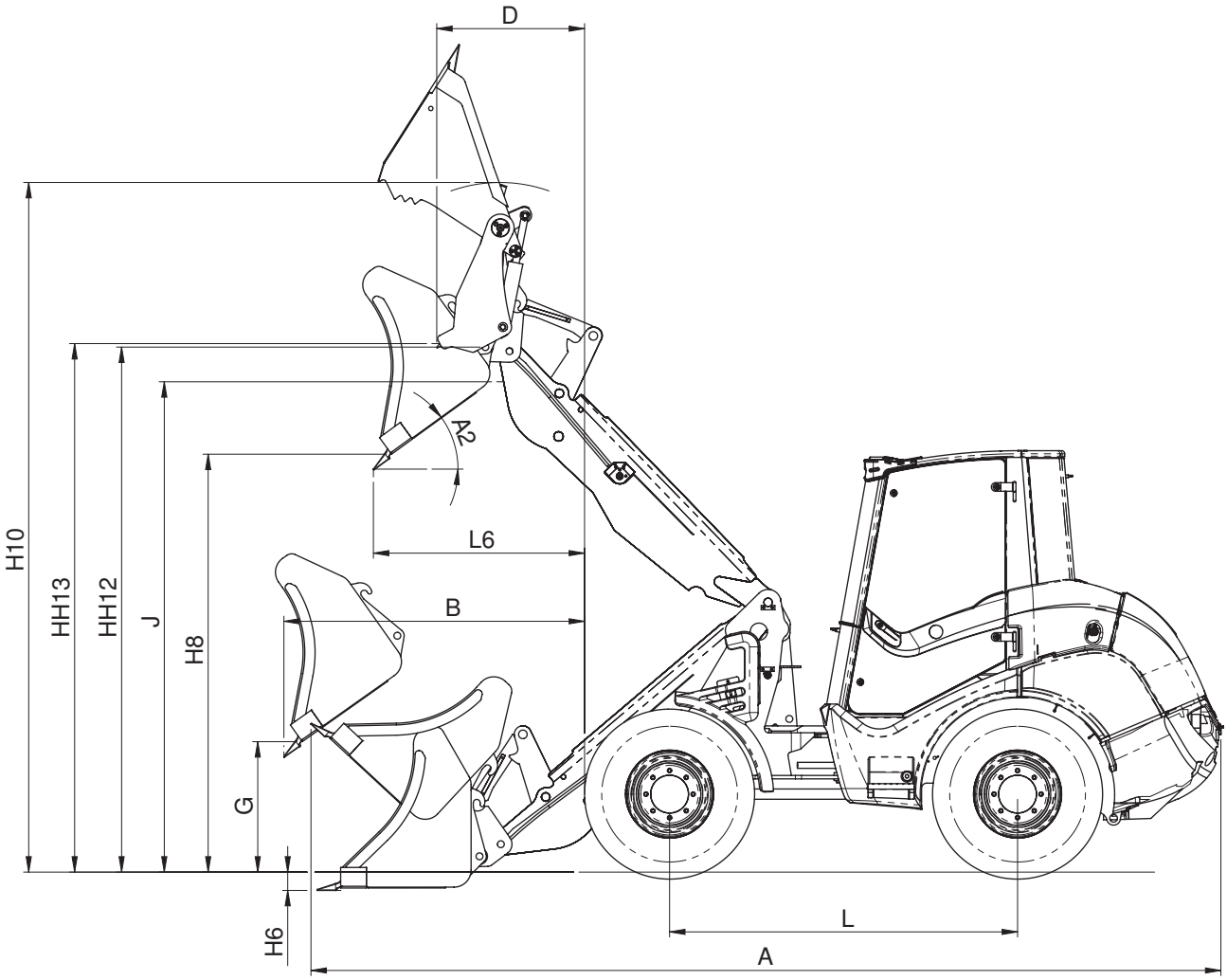

https://truckmanualshub.com/

12.2.1 Buckets

Bucket type			Standard bucket	Multi-purpose bucket
Bucket volume		m³	**0,85**	**0,8**
Bucket width		mm	1850	1850
Dead weight		kg	288	556
Loads acc. to ISO 14397				
Bulk density		t/m³	1,8	1,8
Dump load				
- frontal		kg	3850	
- articulated		kg	3400	
Payload				
- frontal		kg	1925	
- articulated		kg	1700	
Tear-out force acc. to ISO 8313		daN		
A	Total length (bucket in the transport position)	mm	5285	5440
A2	Max. dump angle (top)	°	45	46
	Max. dump angle (bottom)	°	125	125
B	Max. dumping distance at dumping angle 45°	mm	1480	1740
G	Dumping height at max. dumping distance and dumping angle 45°	mm	755	535
H6	Depth of feed-in	mm	80	85
H8	Dumping height at max. lifting height and dumping angle 45°	mm	2485	2350
H10	Max. working height	mm	4095	4025
HH12	Bucket pivot point at max. lifting height	mm	3300	3065
J	Free lift height	mm	2860	2860
L6	Dumping distance at max. lifting height and dumping angle 45°	mm	645	840

Multipurpose bucket opened:

D	Max. dumping distance at max. lifting height and tilted bucket	mm	-	860
HH13	Max. dumping height with tilted bucket	mm	-	3085

https://truckmanualshub.com/

12.2.2 Fork-lift attachment

12.2.3 Lifting hook

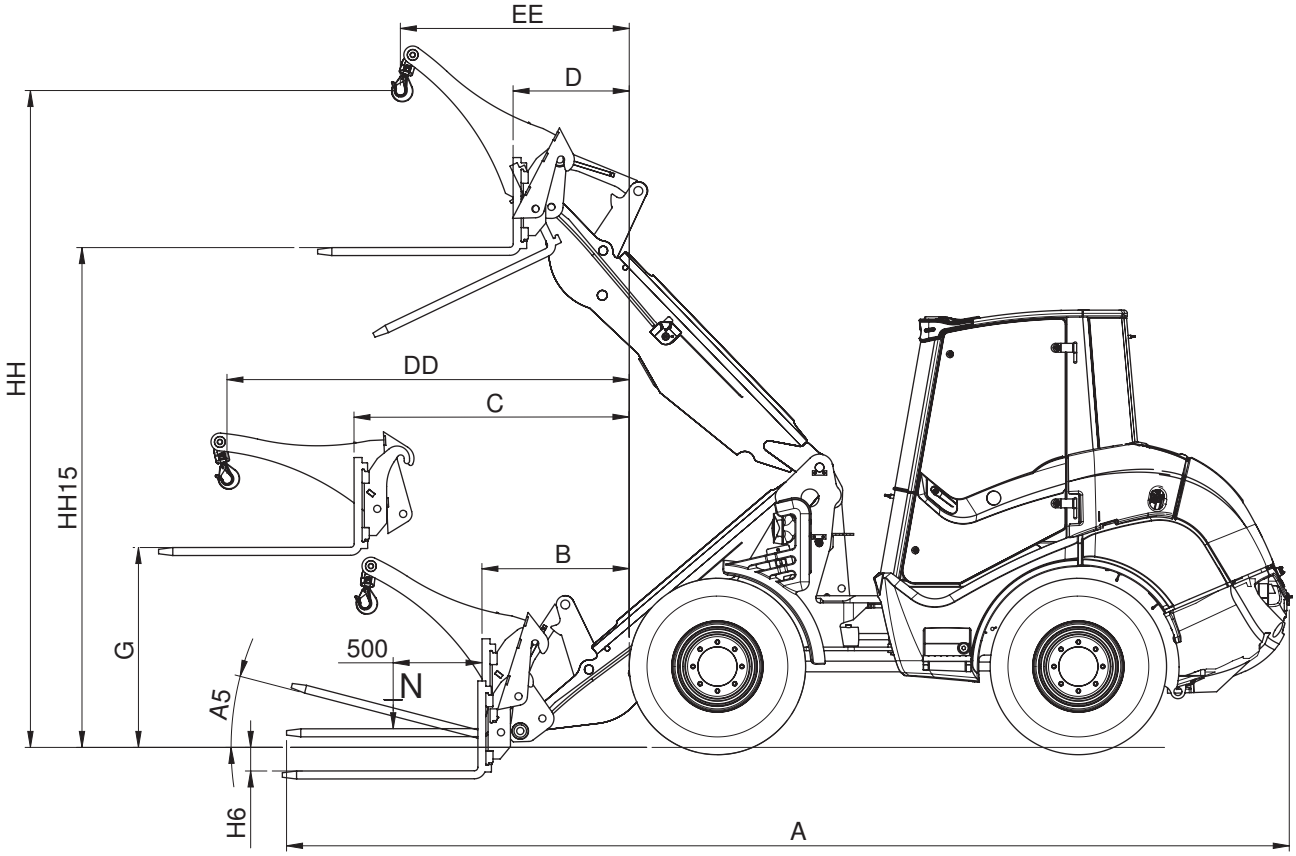

https://truckmanualshub.com/

12.2.2 Fork-lift attachment

Tine length	1,100 mm
Tine height	mm
Tine spacing (centre)	
- min.	mm
- max.	mm
Dead weight	199 kg

Perm. payload N acc. to DIN 14397

frontal	
- level ground (stability factor 1.25)	2,350 kg
- uneven ground (stability factor 1.67)	1,760 kg
articulated	
- level ground (stability factor 1.25)	2,100 kg
- uneven ground (stability factor 1.67)	1,570 kg

Perm. payload N acc. to DIN 8313, **fork-lift attachment 300 mm above ground**

frontal	
- level ground (stability factor 1.25)	2,750 kg *
- uneven ground (stability factor 1.67)	kg
articulated	
- level ground (stability factor 1.25)	2,500 kg
- uneven ground (stability factor 1.67)	kg

A	Total length	5,720 mm
A5	Tilt angle	19 °
B	Min. reach	900 mm
C	Max. reach	1,315 mm
GB	Reach at max. lifting height	500 mm
G	Free lift height at max. reach	1,125 mm
H6	Depth of feed-in	110 mm
HH15	Free lift height at max. reach (upper tine edge)	2,825 mm

*

CAUTION

The fork's maximum permissible capacity limits the loader's permissible capacity to 2,500 kg.

12.2.3 Lifting hook

Perm. payload acc. to DIN EN 474-3	
- Max. outreach (stability factor 2) - frontal	964 kg
- articulated	867 kg
Dead weight	132 kg

A	Total length	5,320 mm
DD	Max. outreach	2,150 mm
EE	Reach with bucket arm in uppermost position	1,325 mm
HH	Max. lifting height	3,700 mm

https://truckmanualshub.com/

12.3 AX 1000 attachments

NOTE

- The technical data refer to 365/70 R18 tyres.

12.3.1 Buckets

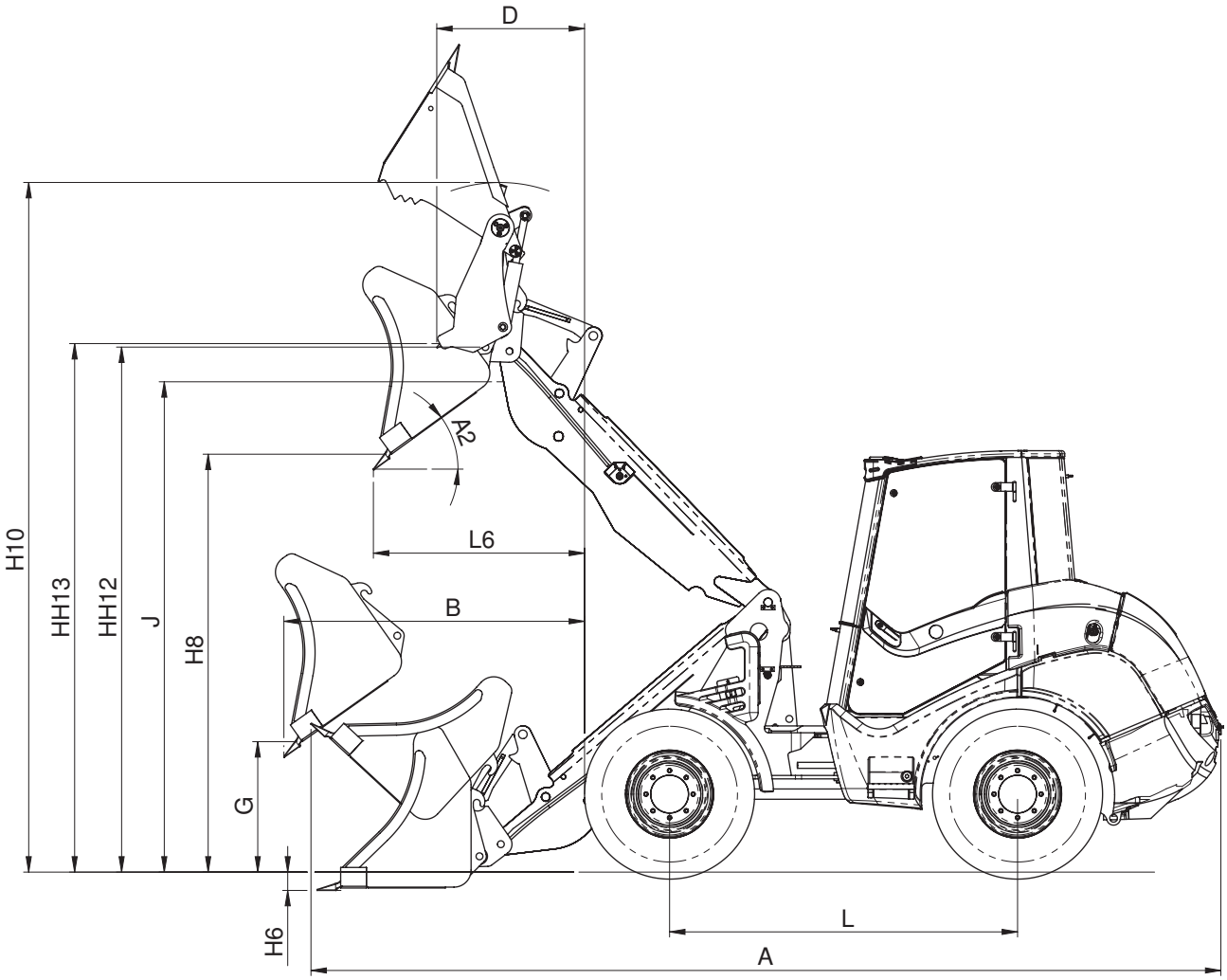

https://truckmanualshub.com/

12.3.1 Buckets

Bucket type			Standard bucket	Multi-purpose bucket
Bucket volume		m³	**1.0**	**0.95**
Bucket width		mm	1850	1850
Dead weight		kg	310	580
Loads acc. to ISO 14397				
Bulk density		t/m³	1.8	1.8
Dump load				
- frontal		kg	4100	
- articulated		kg	3690	
Payload				
- frontal		kg	2050	
- articulated		kg	1845	
Tear-out force acc. to ISO 8313		daN		
A	Total length (bucket in the transport position)	mm	5375	5525
A2	Max. dump angle (top)	°	45	46
	Max. dump angle (bottom)	°	125	125
B	Max. dumping distance at dumping angle 45°	mm	1545	1795
G	Dumping height at max. dumping distance and dumping angle 45°	mm	710	475
H6	Depth of feed-in	mm	105	70
H8	Dumping height at max. lifting height and dumping angle 45°	mm	2440	2295
H10	Max. working height	mm	4135	4050
HH12	Bucket pivot point at max. lifting height	mm	3265	3050
J	Free lift height	mm	2860	2860
L6	Dumping distance at max. lifting height and dumping angle 45°	mm	760	895

Multipurpose bucket opened:

D	Max. dumping distance at max. lifting height and tilted bucket	mm	-	925
HH13	Max. dumping height with tilted bucket	mm	-	3040

https://truckmanualshub.com/

12.3.2 Fork-lift attachment

12.3.3 Lifting hook

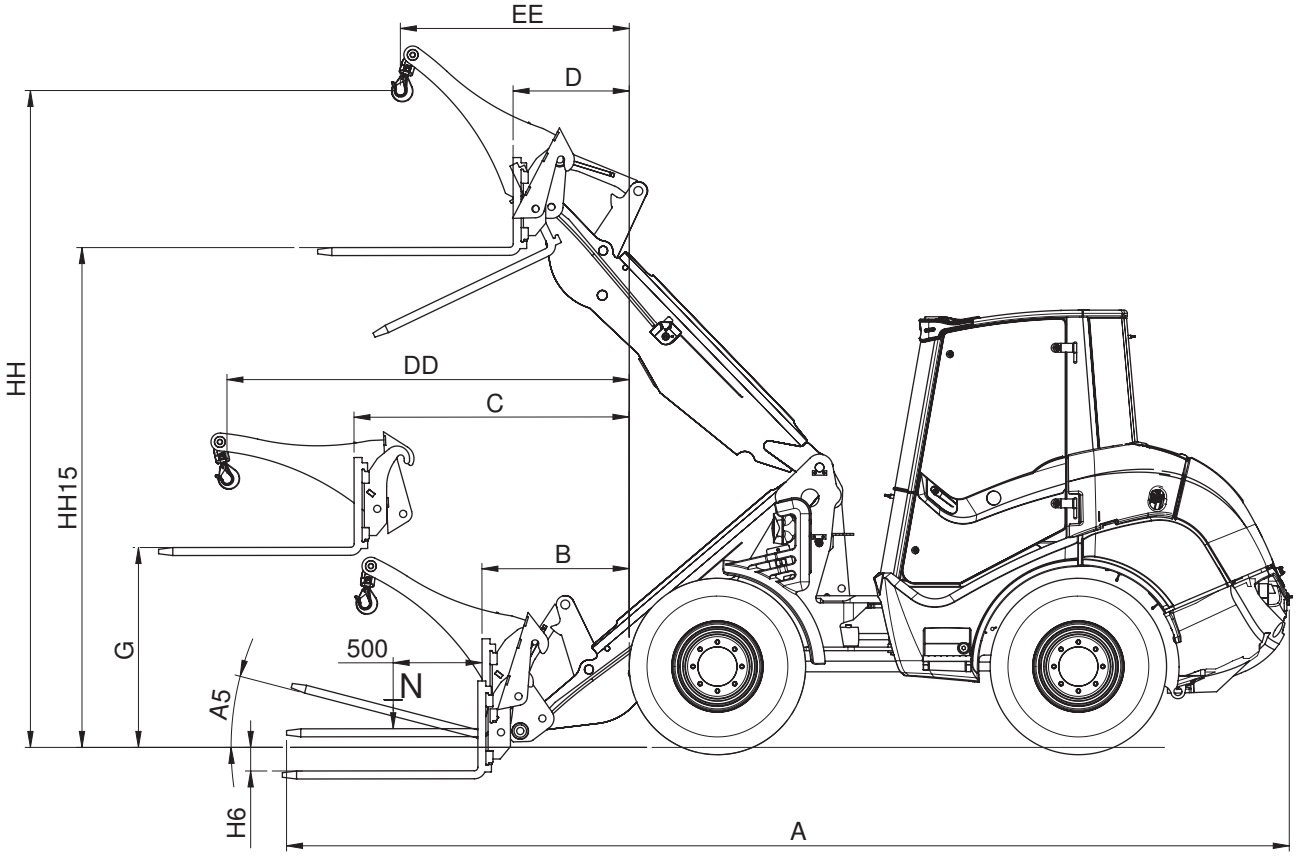

https://truckmanualshub.com/

12.3.2 Fork-lift attachment

Tine length	1,200 mm
Tine height	mm
Tine spacing (centre)	
- min.	mm
- max.	mm
Dead weight	199 kg

Perm. payload N acc. to DIN 14397

frontal	
- level ground (stability factor 1.25)	2,600 kg *
- uneven ground (stability factor 1.67)	1,950 kg
articulated	
- level ground (stability factor 1.25)	2,300 kg
- uneven ground (stability factor 1.67)	1,720 kg

Perm. payload N acc. to DIN 8313, **fork-lift attachment 300 mm above ground**

frontal	
- level ground (stability factor 1.25)	2,950 kg *
- uneven ground (stability factor 1.67)	kg
articulated	
- level ground (stability factor 1.25)	2,700 kg *
- uneven ground (stability factor 1.67)	kg

A	Total length	5,720 mm
A5	Tilt angle	19 °
B	Min. reach	915 mm
C	Max. reach	1,330 mm
GB	Reach at max. lifting height	515 mm
G	Free lift height at max. reach	1,100 mm
H6	Depth of feed-in	125 mm
HH15	Free lift height at max. reach (upper tine edge)	2,810 mm

*

CAUTION

The fork's maximum permissible capacity limits the loader's permissible capacity to 2,500 kg.

12.3.3 Lifting hook

Perm. payload acc. to DIN EN 474-3		
- Max. outreach (stability factor 2)	- frontal	1429 kg
	- articulated	1286 kg
Dead weight		132 kg

A	Total length	5,320 mm
DD	Max. outreach	2,165 mm
EE	Reach with bucket arm in uppermost position	1,340 mm
HH	Max. lifting height	3,685 mm

https://truckmanualshub.com/

https://truckmanualshub.com/

Additional options, modifications, Notes on inspection for loaders

https://truckmanualshub.com/

13 Additional options, modifications, notes on inspection for loaders

13.1 Additional options

none

13.2 Modifications

none

https://truckmanualshub.com/

https://truckmanualshub.com/

https://truckmanualshub.com/

https://truckmanualshub.com/

https://truckmanualshub.com/

https://truckmanualshub.com/

https://truckmanualshub.com/

https://truckmanualshub.com/

https://truckmanualshub.com/

https://truckmanualshub.com/

https://truckmanualshub.com/

https://truckmanualshub.com/

https://truckmanualshub.com/

https://truckmanualshub.com/

https://truckmanualshub.com/

https://truckmanualshub.com/

https://truckmanualshub.com/

https://truckmanualshub.com/