https://truckmanualshub.com/

SISU AXLES

SISU DP-345H
DRIVE GEAR

Maintenance Manual

Sisu Axles, Inc.
Autotehtaantie 1
PO Box 189
Fin-13101 Hameenlinna
Finland
Phone +358 204 55 2999
Fax +358 204 55 2900

DP345HDG.PDF (01/2007)

https://truckmanualshub.com/

List of contents ..... Page

DP345H Drive Gear 5
Removal 5
Differential Lock 6
Dismantling 6
Assembly 6
Lock Adjustment 6
Differential 7
Dismantling 7
Pinion Unit 8
Dismantling 8
Assembly 9
Differential 11
Assembly 11
Drive Gear 12
Assembly 12
Replacement Of Pinion / Crown Wheel Assembly 14
Installation Of The Drive Gear 17
Special Tools 18
Tightening Torques 18
Lubrication 18
Drive Gear - Characteristics And Data 19

NOTE ! This Manual is intended for use by experienced mechanics using safe procedures in properly equipped shops.
Safety precautions should always be followed such as wearing safety glasses, using adequate lifting aids, and using tools and equipment in good condition. Sisu Axles, Inc., its agents, associates or representatives are not responsible for damage or injury occurring while working on their components.

https://truckmanualshub.com/

1 DP345H Drive Gear

1.1 Removal

Drain drive gear oil.

Remove the axle from the vehicle (The drive gear alone can be removed while the axle remains in the vehicle by a special lift).

Place the axle assembly on the repair stand so that the pinion flange is upwards. Unscrew drive gear retaining screws and screw in two of them, which at this stage act as extractors, in threaded holes (these are protected by plastic plugs) in the casing and withdraw drive gear unit by suitable lifting gear and place it on the repair stand crown wheel up.

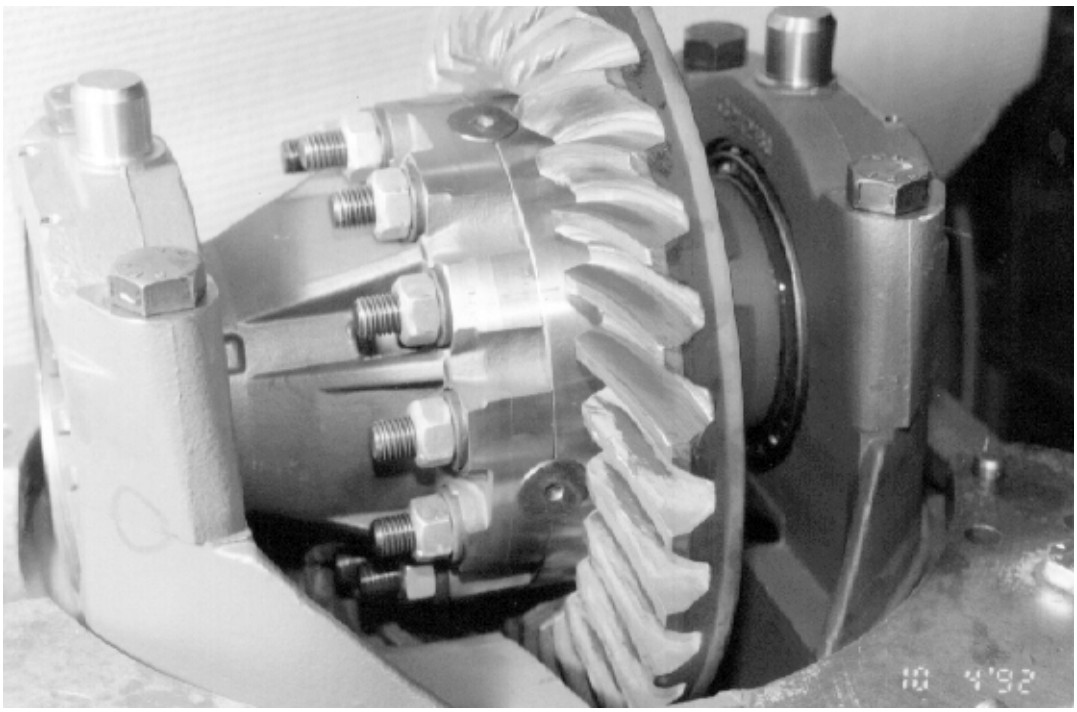

Picture 1 Drive gear unit removed and fixed on repair stand

1.2 DIFFERENTIAL LOCK

(Optional)

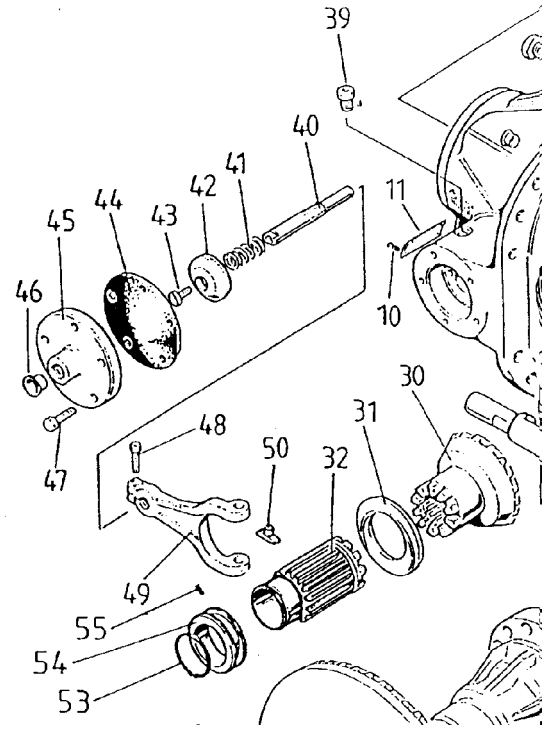

Picture 2 Differential lock in parts

1.2.1 Dismantling

Item nos. in text are found in picture 2.

Remove the lock cylinder cover retaining screws (5 pcs) first and take the cover and the diaphragm (44) under it away. Undo the diaphragm support cup screw (43) and remove the cup (42) and the spring (41). Loosen the fork lock screw (48) approx. 2 turns (for access to the screw remove the plug 39 first from casing) and take the fork shaft (4) out by rotating it anticlockwise by suitable open wrench. When the shaft is removed loosen the slide bush lock screw (55) and remove the snap ring (53). After this you can remove the fork (49) and the slide bush (32) with slide shoes (50).

1.2.2 Assembly

Inspect that all lock components are in good condition and they are not excessively worn. Replace all damaged components. Assemble by carrying out in reverse order the operations described for dismantling.

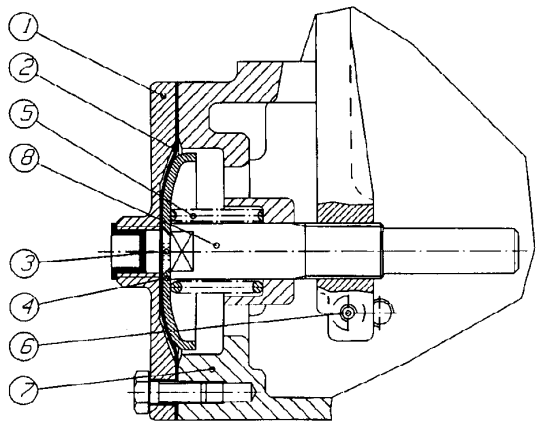

Picture 3 Differential lock in sectional view

1.2.3 Lock adjustment

The operation mechanism of the differential lock have to be adjusted as follows:

While adjustment following parts have to be removed: (see illustration below)

1. Cover
2. Diaphragm
3. Screw
4. Cup
5. Spring

Adjustment:

1. Engage the dog clutch of the differential lock by pushing the fork shaft all the way in.
2. Place the cup (4) on the shaft without retaining screw.
3. Adjust the fork shaft by rotating it so that the cup touches both the shaft end and the bottom of the casing.
4. Check again by rotating pinion and pushing the fork shaft simultaneously if the shaft may go further in.
5. If the shaft and the fork went further in, pls. repeat operations from item 3.

6. When the shaft does not go further in, turn it 1/4 turns clockwise.
7. Tighten the fork lock screw.
8. Install the cup and retaining screw and make sure that the cup rim touches the bottom of the casing.
9. So the adjustment is performed. Remove the cup once more and do assemble the lock. Tighten cup retaining screw to 30 Nm torque. Use sealant in the plug (39 in picture 2) installation.

1.3 DIFFERENTIAL

1.3.1 Dismantling

If the crown wheel and the pinion are in good condition and they will be reused, check and note the gear backslash before dismantling.

NOTE ! If the bearings are damaged this measured clearance cannot be used when assembling.

NOTE ! If the differential if fitted with locking device, it should be removed first. See item “Dismantling differential lock”.

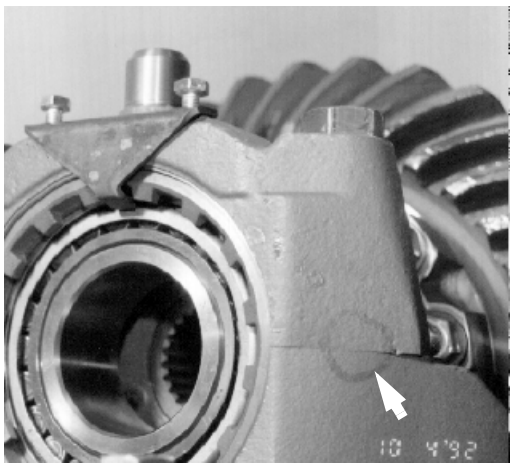

Picture 4 Mark bearing caps by suitable means in spot indicated by an arrow.

Mark side bearing caps with respective places of the casing so that caps cannot be interchanged. Unscrew and remove bearing cap screws and take off bearing caps and withdraw the bearing outer races. Lift differential unit complete with crown wheel off from housing. Fix unit in vise or on special fixture crown wheel down.

NOTE !

If the bearings have to be replaced, remove old ones using a bronze drift at the housing groove. Arrow in picture 5.

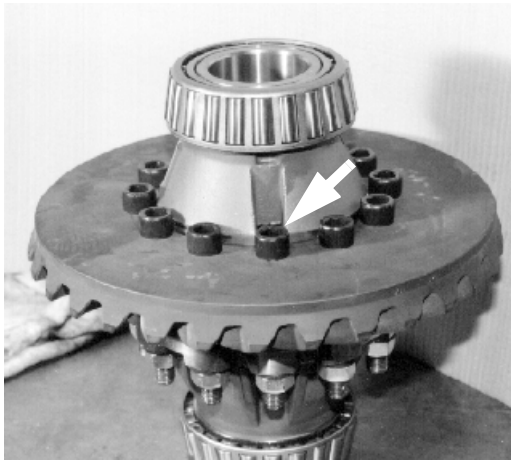

Picture 5 Differential unit with crown wheel

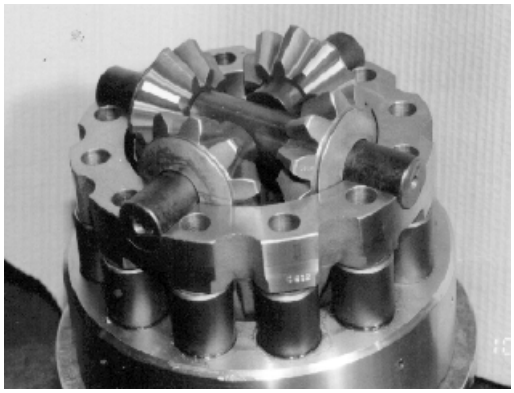

Picture 6 Differential housing upper half removed

Unscrew the nuts of the screws joining the half casing and fixing the crown wheel and lift the upper half of the casing off. If crown wheel/pinion gears have to be replaced lift the lower half of the casing off from the crown whee.

1.4 PINION UNIT

1.4.1 Dismantling

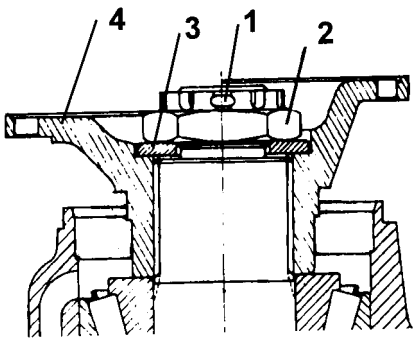

Picture 7 Pinion flange installed

Take off the pinion flange retaining nut, after first loosening it. When loosening the nut use suitable reaction lever to prevent rotation of the flange.

When the nut (2) and the washer (3) are removed position the pinion complete in the press and push the pinion off the housing. With the pinion will follow conical roller bearing (18 in picture 9), spacer (15) and shims (16). In the housing will remain outer bearing complete (8/9), seal (7), shim (17) and outer race of inner bearing (18).

Picture 8 Removal of pinion in workshop press

Take good care of adjustment shims , if the bearings and the gears are not replaced, previous shims are best suitable. Also when components are replaced it is most easy to perform first assembly with previous shims, which are suitable in most of cases. Using suitable means, remove seal from the housing then remove front bearing as well bearing races and the shim (17) under the inner bearing race if required.

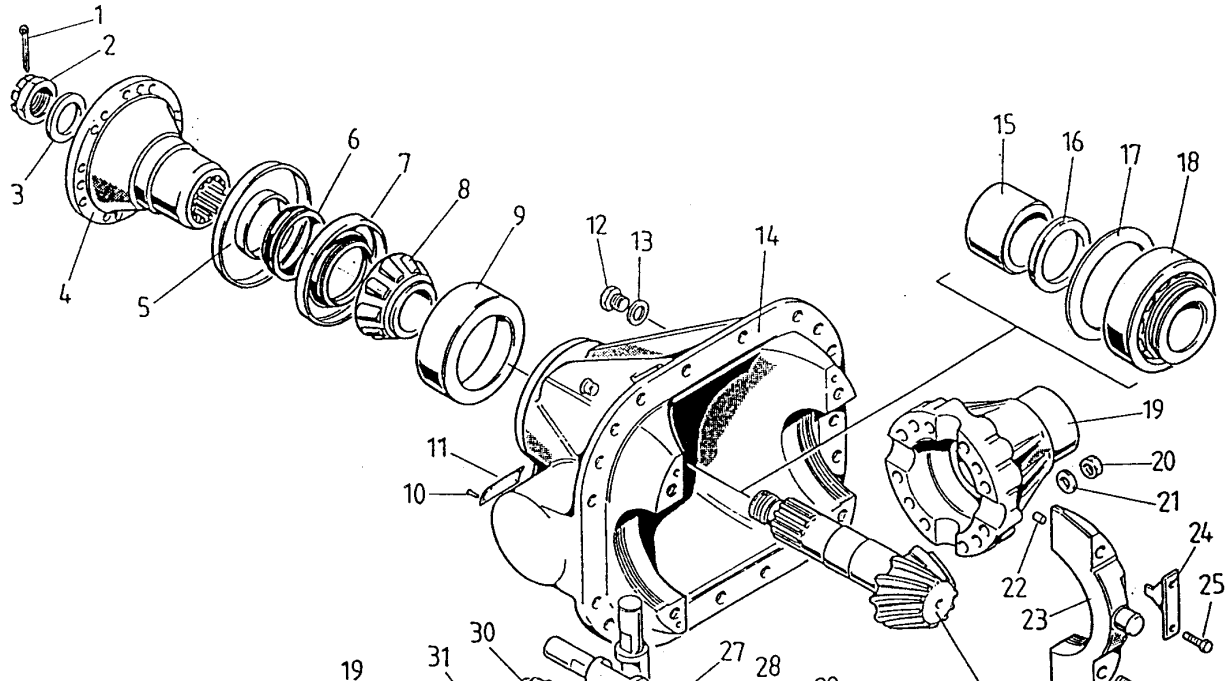

Picture 9 Drive gear housing and pinion in parts

1.4.2 Assembly

Prior the assembly inspect all parts carefully and assure that all to be reused parts are in good condition. Only faultless bearings may be reused. If pinion/crown wheel pair is replaced the bearings have to be replaced too.

Start assembly by pressing inner conical bearing onto the pinion. Place the spacer bush with previous shim(s) on top of the bearing onto the pinion. Press then bearing outer races into the casing and place previous shims (17) between inner race and the casing.

Picture 10 Pinion with installed inner bearing. In the picture can be seen the spacer bush and a shim

Lift the casing onto the pinion and place the outer conical bearing onto the pinion. Use suitable drift and press carefully on the outer bearing inner race in simultaneously rotating the casing. Increase the force to 160 kN (16 ton). If the bearings become completely stiff, press pinion out and replace shim and/or the spacer ring by more suitable and repeat previous step.

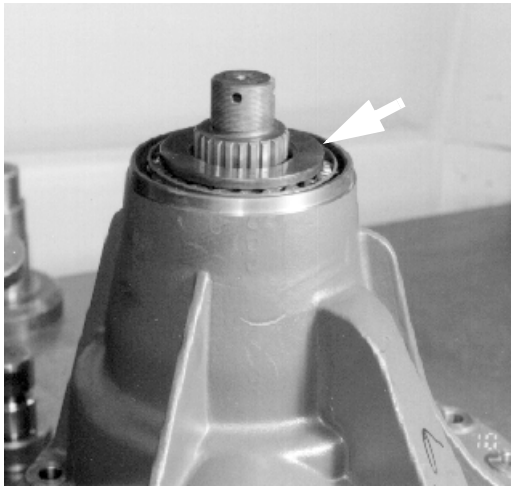

Picture 11 Pinion installed in the housing. Press on the inner race on the spot indicated by an arrow by a suitable drift first until it stops and then for testing of adjustment by a force of 16 ton.

Following spacer bushes and shims are available::

Table 1:

Description	Spare no.	Thickness mm
Spacer	099 557 1026	53,70
Spacer	099 557 1027	53,72
Spacer	099 557 1028	53,74
Spacer	099 557 1029	53,76
Spacer	099 557 1030	53,78
Shim	099 517 1000	0,3
Shim	099 517 1001	0,4
Shim	099 517 1002	0,5

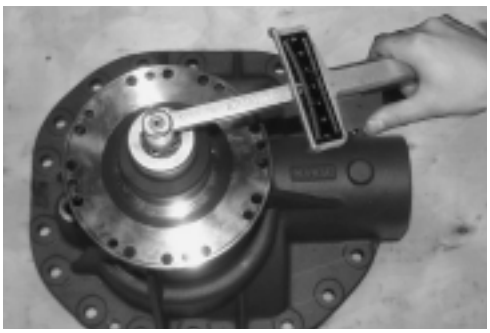

Picture 12 Measurement of the pinion rolling torque.

When bearings rotate inspect the pinion rolling torque with a reliable torque wrench. Measure rolling torque in the movement.

Correct measure value is 7,4 - 12,3 Nm.

Change adjustment shims if so required until correct rolling torque value is reached.

Picture 13 Pinion seal ready for installation.

Then install the seal and fill space under it by grease; install the pinion flange with seal protection ring and V-seal, screw the pinion nut finger tight.

If a workshop press in not available for assembly, adjustment can be performed as follows:

Assembly usually, but instead of pressing use the flange and the nut, tighten the nut to 1300 Nm torque. After this do measure and adjust bearing rolling torque as previously described.

Picture 14 Seal protection plate ready for installation.

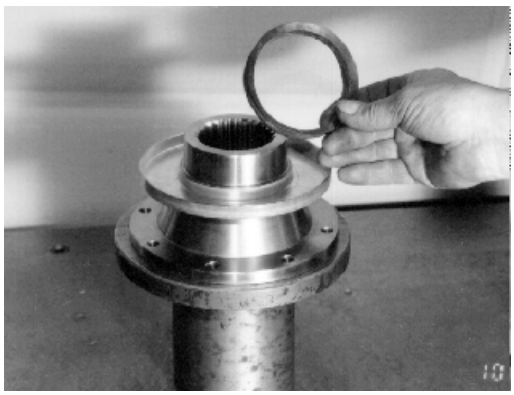

Picture 15 Seal protection plate installed onto the flange. V-seal ready for installation.

Picture 16 Pressing of a conical roller bearing to a differential casing half.

When rolling torque is correctly adjusted, install the pinion flange with seals.

Finally tighten the pinion nut to 1300 Nm torque and secure the nut by a cotter pin.

1.5 DIFFERENTIAL

1.5.1 Assembly

Prior the assembly inspect all parts carefully and assure that all to be reused parts are in good condition.

Start assembly by pressing the conical outer bearings onto housing halves if they are replaced.

Picture 17 Differential components installed in the casing half.

Then place crown wheel side housing half on the crown wheel and place differential side gear with the thrust washer into the housing half. Place then planetary gears with their thrust washers inserted onto spider onto the side gear in the housing half.

If differential if fitted with the lock, side gear with lock splines have to be installed first in the bottom.

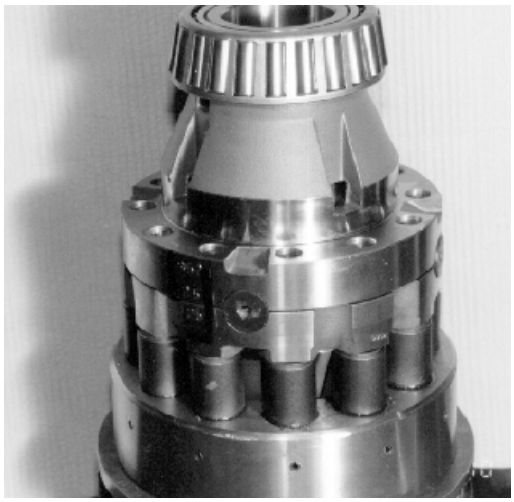

Picture 18 Assembled differential without the crown wheel

Place other side gear with its thrust washer on the top of planetary gears. See picture 18.

Then fit the upper casing half according to markings and insert screws and fit nuts. Use Loctite locking liquid and tighten nuts to 320 Nm torque. (Nuts have to be replaced always when undone).

1.6 DRIVE GEAR

1.6.1 Assembly

The pinion already assembled with previous shims in the drive gear housing:

Place drive gear housing pinion flange down.

Use suitable lifting gear and a lifting hook and position differential assy with crown wheel on the housing and fit bearing races simultaneously.

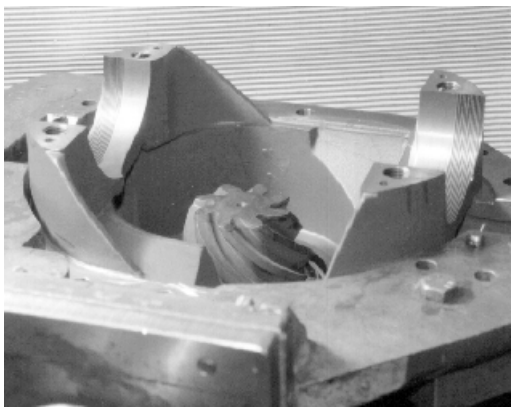

Picture 19 Drive gear housing ready for installation of the differential assembly

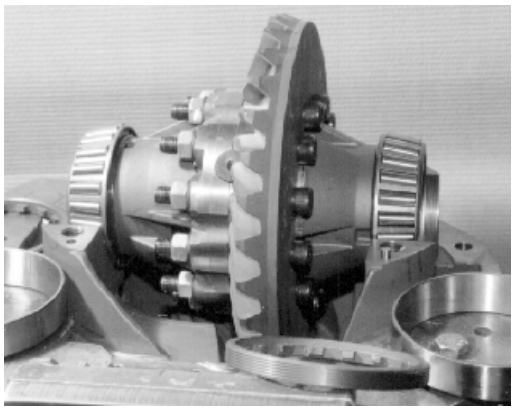

Picture 20 Differential assembly placed onto the drive gear housing

Fit the bearing caps according to markings. Use Locktite in screws and tighten a little. Fit now bearing adjustment nuts and adjust position of the crown wheel as close to correct as possible.

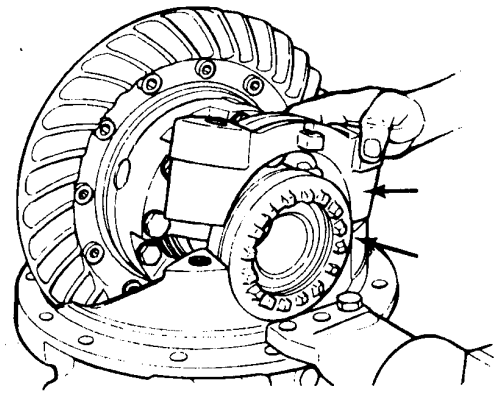

Picture 21 Installation of the bearing cap

Tighten now cap screws to a torque of 480 Nm.

Position a dial gauge with magnetic base as shown in figure 22 and tighten the bearing adjustment nuts until end play is eliminated.

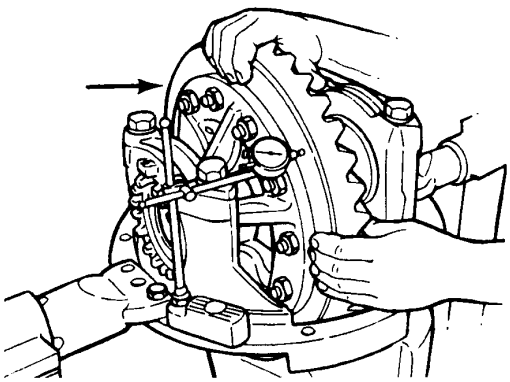

Picture 22 Adjustment of the differential side bearings

When the play is eliminated, tighten crown wheel teeth side adjustment nut 1 - 1,5 slots further by wrench no 7143 024 010.

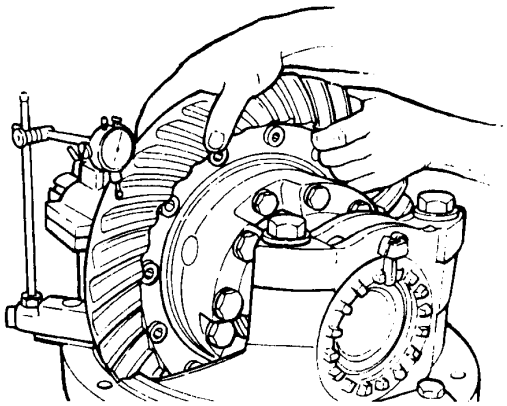

Picture 23 Adjustment of the gear backlash

Measure gear backlash by dial gauge and adjust it by turning both adjustment nut equally,so that bearing preload remains as adjusted previously. Adjust gear backlash to 0,15 - 0,35 mm.

1.7 REPLACEMENT OF PINION / CROWN WHEEL ASSEMBLY

Where a new pinion/crown wheel assembly has to be installed, it is necessary, in order to determine the correct location of the pinion, to know the meaning of the information marked on the pinion and on the crown wheel.

1. Part number

2. Pinion/crown wheel pair number and tooth combination number.

3. Variation value to determine the thickness of shim(s) between the pinion inner bearing race and the drive gear housing. This value is marked on inside surface of the pinion.

Part number, Pair number and tooth combination number are die cut in the outer surface of all pinions. On crown wheels these numbers are marked on outside diameter. Tooth combination number (for example 30/12) indicates that the pinion has 12 teeth and the crown wheel 30, equal to a drive ratio of 2.500 : 1.

Available pinion/crown wheel assemblies and respective drive ratios:

Table 2:

Spare no.	Tooth combination	Drive ratio	Axle total drive ratios
143 240 2911	30/12	2.500 : 1	10.59 : 1
143 240 2921	31/8	3.875 : 1	16.41 : 1
143 240 2931	34/7	4.857 : 1	20.57 : 1
143 240 2941	29/14	2.971 : 1	8.77 : 1
143 240 2951	37/7	5.286 : 1	22.39 : 1
143 240 2961	31/9	3.444 : 1	14.58 : 1
143 240 2981	41/9	4.556 : 1	19.29 : 1
143 240 2991	40/7	5.714 : 1	24.20 : 1

All pinion/crown wheel assemblies are supplied in matched pairs and both parts have same pair number. On pinions this number is die cut in the inner end of the pinion..

Never use a pinion and a crown wheel which do not have a same pair number !

Each crown wheel is marked with a variation number, which indicates the nominal assembly distance. This variation number shall be used in calculating the shims to placed between the pinion inner bearing race and the drive gear housing. Variation number (for example +0.1 or -0.1) is marked on the outside diameter of the crown wheel.

To calculate the thickness of the shims used under the bearing race, perform as follows:

1. Measure the shims used with previous pinion/crown wheel assy.
2. Note the variation number on the new crown wheel. If this number has a plus value (+) subtract it from measurement calculations below. If this number has a minus value (-) add it to measurement calculations below.

Take note of this measurement

.

Calculation examples:

Example 1

- Thickness of original shim(s)	0.75 mm
- Variation no. on crown wheel +0.05	-0.05
- Measurement obtained	mm 0.70
- Variation no on new wheel+0.10	+0.10
- New thickness of shim to be used	0.80 mm

Example 2

- Thickness of original shim(s)	0.65 mm
- Variation no. on crown wheel -0.05	+0.05
- Measurement obtained	mm 0.70
- Variation no on new wheel+0.15	+0.15
- New thickness of shim to be used	0.85 mm

Example 3

- Thickness of original shim(s)	0.70 mm
- Variation no. on crown wheel +0.05	-0.05
- Measurement obtained	mm 0.65
- Variation no on new wheel-0.05	-0.05
- New thickness of shim to be used	0.60 mm

Available shims for determining the location of the pinion

Spare no.	**Thickness**
90731 12010	0,1 mm
90731 12020	0,2 mm
90731 12050	0,5 mm
90732 12010	1,0 mm

Use these shims single or in combinations as required.

https://truckmanualshub.com/

NOTE. Check next the tooth contact and correct it as required. To obtain correct contact pattern may need a move of the pinion, which changes gear backlash and adjustment of it has to be performed simultaneously.

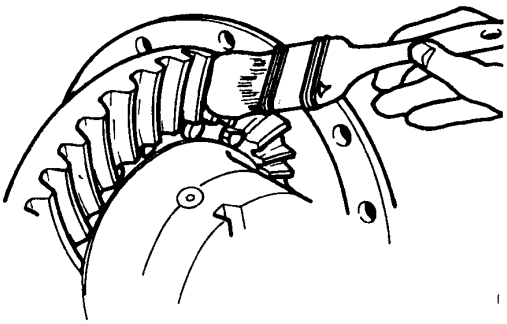

Picture 24 With a brush, apply a thin coat of suitable contact paint.

Correct tooth contact is more important and gear backlash has to be set within 0,15 - 0,35 mm with new pinion/crown wheel assembly.

With old assembly the tooth contact and the gear backlash have to be set as they were prior the dismantling.

Check tooth contact by using lead oxide paint (red lead).

Following pictures illustrates tooth contacts unloaded.

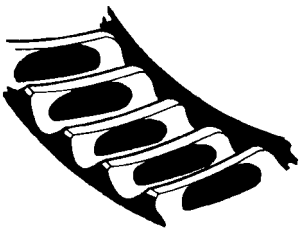

Picture 25 Good contact pattern without load

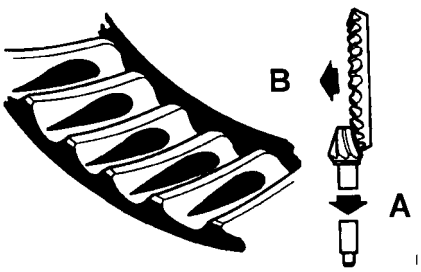

Picture 26 Tooth contact set too deep.

Illustration here indicates that the pinion is set too deep and this causes noisy drive and excessive wear or damages of the gears. To set the correct position of the pinion add shims under the bearing race and move the pinion out (in direction of arrow A in picture) and the crown wheel in (direction of arrow B in picture). The correct backlash is 0,15 - 0,35 mm.

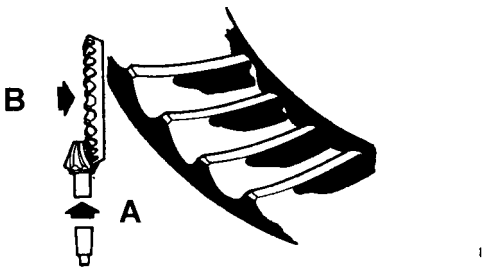

Picture 27 Tooth contact too far out at the point of the teeth.

Illustration here indicates that the pinion is set too far out and this causes noisy drive and excessive wear or damages of the gears. To set the correct position of the pinion remove shims under the bearing race and move the pinion in (direction of arrow A in picture) The correct backlash it is necessary to move the crown wheel out (in direction of arrow B in picture).

When the differential side bearings are finally adjusted lock adjustment nut with their respective lock plates and tighten their retaining screws to torque of 21 Nm. When the screws are tightened hit the lock plate tabs into the groove of the nut by a hammer.

1.8 INSTALLATION OF THE DRIVE GEAR

Before the installation spread the axle side sealing surface by Silmate Silicone Rubber RTV 1473 or similar Room Temperature Vulcanising sealant. Install the drive gear on the axle by a suitable lifting gear if the axle is removed and using a special lift if the axle is in the vehicle. Use Loctite on screws and fit them and tighten them equally that the drive gear enter in evenly. Tighten screws to a torque of 240 Nm.

After this do install the half shafts and wheel hubs. Fill oil to drive gear housing to the level of filling plug opening (Arrow in picture 28).

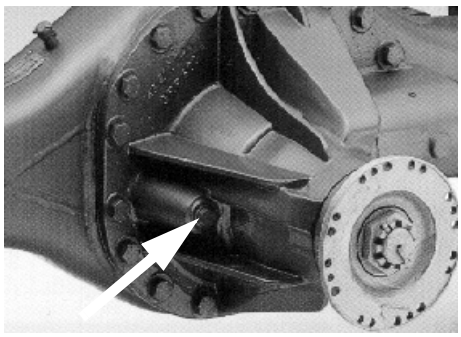

Picture 28 Oil level and filling plug of the drive gear unit

1.9 SPECIAL TOOLS

Adjustment wrench for differential side bearing nut	7143 024 010

1.10 TIGHTENING TORQUES

Description	**Nm**
Pinion flange nut	1300
Differential side bearing cap screw	480
Differential casing half / crown wheel retaining screw nuts	320
Drive gear unit screws to axle housing	240
Differential lock cover screws	21
Differential lock diaphragm cup screws	30
Differential side bearing adjustment nut lock plate screws	21

1.11 LUBRICATION

Oil recommendation

Prevailing ambient temperature

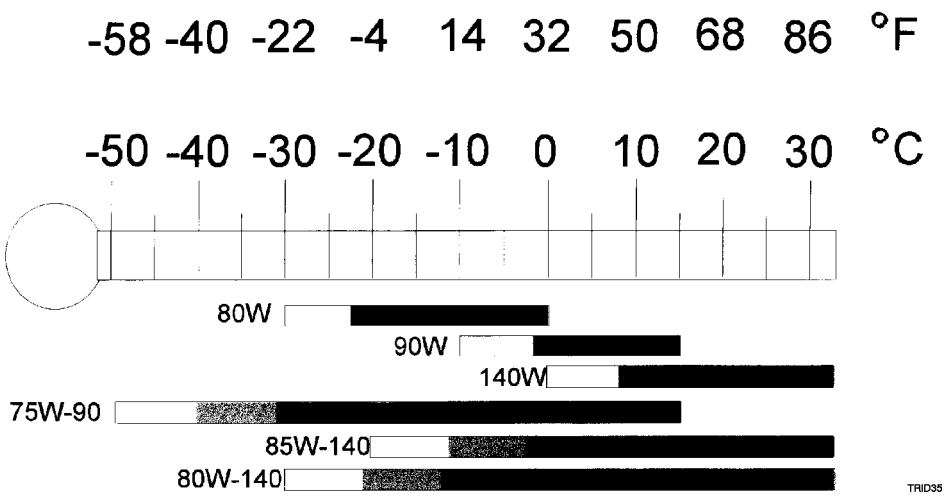

Oil quality API GL 5

Select proper viscosity according to ambient temperature by using adjacent table.

Oil quantity in drive gear	18 l

1.12 DRIVE GEAR - CHARACTERISTICS AND DATA

Type	**Hypoid 345**
Available drive gear drive ratios	2.08 - 4.86 : 1
Torque capacity (Output torque)	40 - 50000 Nm
Pinion/Crown wheel backlash	0,15 - 0,35 mm

Input Flange Cassette Seal

In the later models the input drive flange sealing the shaft seal with one sealing lip is replaced by a new cassette type seal with multiple sealing lips, P/N. 591122-08508.
Simultaneously the v-ring seal (P/N 090-400-9500) between the shaft seal shield plate and the shat seal has been removed.

The new cassette seal is totally interchangeable with the old shaft seal (P/N 91122-08504). When replacing the old shaft seal with the new one, the v-ring seal should be removed because it has no functional purpose in the new construction

Installing the Cassette Seal:
Use installing tool 7543-204-020 when pressing the cassette seal in it's place (1 in picture 1.). Tool can be also made according to the drawing in picture 2. (Dimensions are in mm.)
When installing the input drive flange (2 in picture 1.) the sealing surface has to be wiped with **Fretax AF 281** assembly gel to prevent friction between the input flange and the seal during installation.
Alternatively Klüberplus S 06-100 assembly gel or blend of alcohol and water (1:1) can be used in installing.
Note! If installed dry the seal may damage.

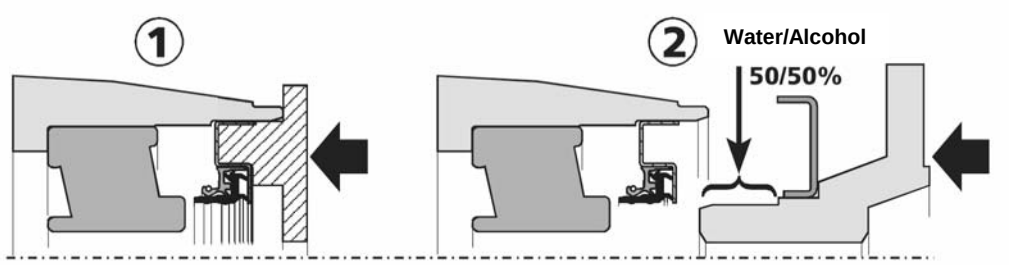

Picture 1.

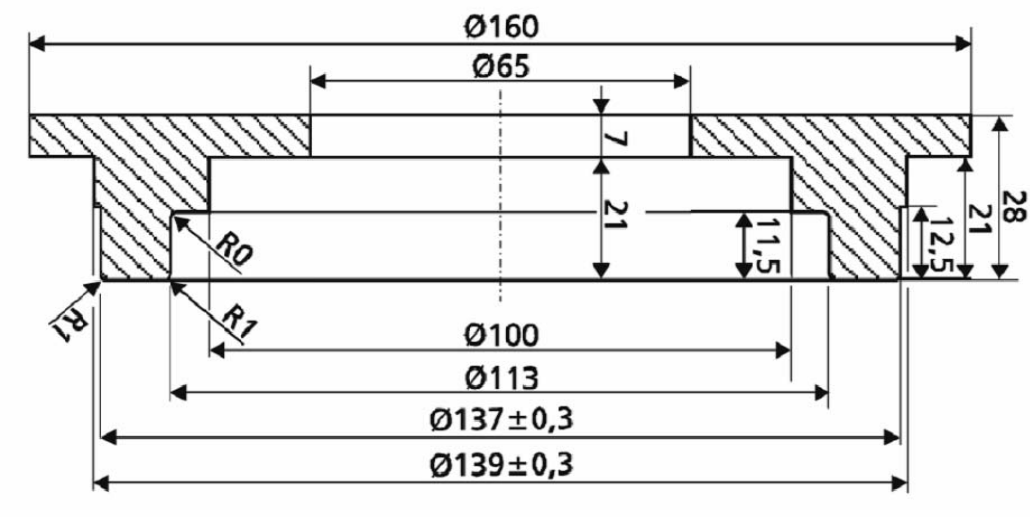

Picture 2. Cassette Seal Installing Tool 7543-204-020