https://truckmanualshub.com/

XCMG 徐工集团

1.5/1.8/2.0/2.5/3.0/3.5

C系列电动叉车

C Series Electric Forklift

徐州徐工特种工程机械有限公司
XCMG SPECIAL CONSTRUCTION MACHINERY CO., LTD.

https://truckmanualshub.com/

两级门架参数表 Specification Of Two-stage Gantry

	起升高度 Lifting height	自由起升高度 Free lifting height	门架最小高度 Minimum mast height	门架最大高度 Maximum mast height	挡货架高度 Blocking Rack Height
1.5/1.8T	3000	145	2020	4010	970
	3500	145	2270	4545	970
	4000	145	2570	5045	970
	4500	145	2820	5545	970
	5000	145	3120	6045	970

	起升高度 Lifting height	自由起升高度 Free lifting height	门架最小高度 Minimum mast height	门架最大高度 Maximum mast height	挡货架高度 Blocking Rack Height
2/2.5T	3000	145	2090	4055	975
	3500	145	2370	4555	975
	4000	145	2670	5055	975
	4500	145	2920	5555	975
	5000	145	3220	6055	975
	5500	145	3520	6555	975

	起升高度 Lifting height	自由起升高度 Free lifting height	门架最小高度 Minimum mast height	门架最大高度 Maximum mast height	挡货架高度 Blocking Rack Height
3T	3000	145	2090	4085	1030
	3500	145	2370	4598	1030
	4000	145	2670	5098	1030
	4500	145	2920	5598	1030
	5000	145	3220	6098	1030
	5500	145	3520	6598	1030
	6000	145	3820	7098	1030

	起升高度 Lifting height	自由起升高度 Free lifting height	门架最小高度 Minimum mast height	门架最大高度 Maximum mast height	挡货架高度 Blocking Rack Height
3.5T	3000	150	2090	4085	1030
	3500	150	2370	4598	1030
	4000	150	2670	5098	1030
	4500	150	2920	5598	1030
	5000	150	3220	6098	1030
	5500	150	3520	6598	1030
	6000	150	3820	7098	1030

两级全自由门架参数表 Specification Of Two-stage Complete Free Gantry

	起升高度 Lifting height	自由起升高度 Free lifting height	门架最小高度 Minimum mast height	门架最大高度 Maximum mast height	挡货架高度 Blocking Rack Height
2/2.5T	3000	1585	2120	4065	975
	3500	1835	2370	4565	975
	4000	2085	2670	5065	975

	起升高度起升高度 Lifting height	自由起升高度 Free lifting height	门架最小高度 Minimum mast height	门架最大高度 Maximum mast height	挡货架高度 Blocking Rack Height
3T	3000	1590	2120	4098	1030
	3500	1840	2370	4598	1030
	4000	2090	2670	5098	1030

	起升高度起升高度 Lifting height	自由起升高度 Free lifting height	门架最小高度 Minimum mast height	门架最大高度 Maximum mast height	挡货架高度 Blocking Rack Height
3.5T	3000	1595	2120	4107	1030
	3500	1845	2370	4607	1030
	4000	2095	2670	5107	1030

https://truckmanualshub.com/

电动平衡重产品特点
Features of Electric Counterweighted Products

1、外观突破 Exterior breakthrough

依托徐工自有的国家级工业设计中心，首次突破行业内叉车工业造型的设计局限性，将护顶架与车体进行结构造型的整体衔接式设计，融入徐工 C 元素，打造出了徐工独有的结构雕塑全新外观，将硬朗与流畅在叉车产品上完美的融合为一体。

Relying on the XCMG’s own national industrial design center and breaking through the design limitation of industrial modeling in the forklift industry for the first time, the overall articulated design adopts the structural modeling of overhead guard and machine body and is integrated with XCMG C-elements to forge XCMG’s all-new proprietary structural appearance and perfectly merge the toughness and smoothness on the forklift products.

2、超强性能 Ultra Performance

•多种速度模式选择，安全模式、经济模式、动力模式和强劲模式，根据不同工况，随意切换。

Multiple speed modes, namely safe mode, economy mode, power mode, and performance mode, those modes all switch-free under various work conditions.

•两种油缸举升速度，安全模式可应对殊货物的缓速起升要求时，大幅简化了操作难度，提升了作业的精准性和安全性；

Two cylinder lifting speeds are provided. The safety mode can deal with the slow lifting need of special cargos to remarkably simplify the operation difficulties and improve the operation accuracy and safety.

•通过对产品起步扭矩和功率效用的精准调校，结合徐工三级减速的整体式驱动桥，实现了爬坡度 17%、爬坡速度 5km/h 的强大爬坡能力。

The accurate tuning of product startup torque and power efficiency combines with XCMG’s integral three-stage reduction drive axle to realize powerful climbing performance, with gradeability at 17% and climbing speed at 5km/h.

3、安全可靠 High safety and reliability

•基于徐工专有的 XEC 电控技术，对产品的起步、加速、制动的平顺性进行了高标准优化，在提升操纵舒适感的同时，加强了对货物及人员的保护；

Based on the XCMG’s proprietary XEC electronic control technology, the product startup, acceleration, and braking smoothness is high-standard optimized to improve the operating comfort and enhance the protection of cargos and personnel.

•12°门架后倾角度，使运输时货物更靠近车体，从而保持整车稳定的重心位置，并能够更加有效的防止货物在运输过程中的意外跌落；

The 12 ° backward tilting capability of masts keeps the cargos closer to the machine body during transport to thus maintain stable gravity center of the machine and effectively prevent the accidental falloff of cargos during transport.

•优化后的前后桥载荷比例分配，使整车高负载作业时，后轮仍有足够的抓地力，行驶转向时不打滑、不失稳；

The optimized load distribution proportion between front and rear axles maintains sill sufficient ground adhesion for the rear wheels to eliminate slip and instability during the driving and steering under high-load operation condition of the machine.

•徐工电动叉车的液压系统标配采用锥面密封和O形圈密封并存的双密封形式，大幅减少液压系统的渗漏可能性；

The hydraulic system for XCMG electric forklift adopts standard double sealing mode of conical seal and O-ring to remarkably reduce the leakage possibility of the hydraulic system.

•集成的带载作业缓冲功能，在货物落到地面前进行不降速的缓冲，避免了货物、货叉下落时对地面的冲击，并且保障了作业效率。

The loaded operation damping function is integrated to damp the cargos without speed reduction before the cargos are lowered onto the ground, in order to prevent the ground impact of the lowering cargos and forks and guarantee the operating efficiency.

4、操纵舒适 High operation comfort

•配置了具有徐工自主知识产权的双自由度转向操纵机构，使方向盘能够前后调节和上下调节，结合标配的半包围豪华座椅，为不同身高的驾驶员提供了更舒适的操纵体验；

The double freedom degree steering control mechanism of XCMG proprietary intellectual property rights is installed to allow the longitudinal and vertical adjustments of steering wheel and is combined with standard semi-wraparound luxury seat to provide more comfortable operation experiences for the drivers of different body heights.

•基于人机工程学，对手柄的操纵力、上车踏板及拉手的高度、电子油门及制动踏板的位置、仪表台的可视化角度、后视镜的位置、后立柱的视线遮挡、高位作业时的顶部视野等均进行了三维空间设计优化，大大提升驾驶员的操纵舒适性。

The three-dimensional spatial design is optimized in accordance with ergonomics for the operating force of handle, height of boarding footplates and handrails, positions of electronic accelerator and brake pedals, visual angles of dashboard, position of rearview mirrors, visual obstruction of the rear pillars, and top vision during aerial operations to remarkably improve the driver’s operating comfort.

5、维保便捷 High maintenance convenience

•对叉车的侧罩、电机罩、底板等均采用了免工具的拆解方式，降低了维保作业的工具依赖性；

The tool-free disassembling mode is applied for the side shields, motor hood, and baseplate of the forklift to reduce the tool reliance during maintenances.

•开启角度达到 95°的电池罩，为电池的维护保养和起吊更换工作提供了更大的安全空间；

The battery hood with up to 95° opening angle provides a larger safe space for the maintenances and lifting and replacement operations of the battery.

•独立的大面积液压动力源维保窗口，为液压油箱、齿轮泵、泵电机的维修保养工作提供了更大的可操作空间；

The independent large-area hydraulic power source maintenance window provides a larger operation space for the repairs and maintenances of hydraulic oil tank, gear pump, and pump motor.

•对保险等电器件进行了集中布置，以及对齿轮泵和泵电机的安装位置进行了适当的提升，为整车的维修保养提供了更触手可及的维保位置。

The electric parts (Including fuses) are centrally arranged and the installation locations of the gear pump and pump motor are appropriately lifted to provide easily accessible locations for the repairs and maintenances of the machine.

https://truckmanualshub.com/

技术参数 Technical Specification

特性 Characteristic										
1.1	制造商 Manufacturer			XCMG						
1.2	型号 Model			XCB-P15/L15	XCB-P18/L18	XCB-P20/L20	XCB-P25/L25	XCB-P30/L30	XCB-P35/L35	XCB-P35/L35 (加强型Enhanced version)
1.3	驱动方式 Drive mode			铅酸电池/磷酸铁锂电池 Lead-acid battery/Lithium iron phosphate battery						
1.4	额定起重量 Rated lifting capacity	Q	kg	1500	1800	2000	2500	3000	3500	3500
1.5	载荷中心距 Load Center Distance	C	mm	500	500	500	500	500	500	500
1.6	驾驶方式 Driving type			座驾式 Sit-on type	座驾式 Sit-on type	座驾式 Sit-on type	座驾式 Sit-on type	座驾式 Sit-on type	座驾式 Sit-on type	座驾式 Sit-on type
1.7	轴距 Wheelbase	L1	mm	1390	1390	1550	1550	1680	1680	1680
车轮 Wheels										
2.1	轮胎类型(前 / 后) Tire type (Front/rear)			充气胎 / 充气胎 Inflated tires/inflated tires						
2.2	车轮数量(前 / 后) Number of wheels (Front/rear)			2/2	2/2	2/2	2/2	2/2	2/2	2/2
2.3	前轮距 Front wheel tread	W3		929	929	970	970	1060	1060	1097
2.4	后轮距 Rear wheel tread	W4		958	958	971	971	971	971	995
2.5	轮胎尺寸(前) Tire size (Front)			21×8-9-14PR	21×8-9-14PR	23×9-10-18PR	23×9-10-18PR	23×9-10	23×9-10	23×10-12
2.6	轮胎尺寸(后) Tire size (Rear)			5.00-8-10PR	5.00-8-10PR	18×7-8-14PR	18×7-8-14PR	18×7-8	18×7-8	200/50-10
尺寸 Dimensions										
3.1	前悬距 Front Overhanging Distance	L2	mm	395	395	470	470	470	470	480
3.2	门架倾角(前 / 后) Mast tilting angle (Front/rear)	α/β	°	5.5/11	5.5/11	6/12	6/12	6/12	6/12	6/12
3.3	标准起升高度 Standard lifting height	H	mm	3000	3000	3000	3000	3000	3000	3000
3.4	门架回缩时高度 Height with masts retracted	H1	mm	2020	2020	2090	2090	2090	2090	2115
3.5	护顶架高度 Roof Protection Frame Height	H4	mm	2130	2130	2185	2185	2200	2200	2200
3.6	最大起升时的全高 Overall height at maximum lifting height	H2	mm	4010	4010	4055	4055	4085	4085	4095
3.7	自由起升高度 Free lifting height	H3	mm	145	145	145	145	145	150	150
3.8	全长(有货叉) Overall length (With forks)	L	mm	3195	3195	3505	3505	3775	3775	3845
3.9	全长(无货叉) Overall length (Without forks)	L'	mm	2125	2125	2435	2435	2555	2555	2625
3.10	全宽 Overall width	W2	mm	1140	1140	1205	1205	1280	1280	1340
3.11	最小离地间隙,门架底端(空 / 满) Minimum ground clearance, at bottom of masts (Empty-Load/full-load)	H5	mm	110	110	125	125	125	125	115
3.12	最小离地间隙,车架底部(空 / 满) Minimum ground clearance, at bottom of frame (Empty-Load/full-load)	H6	mm	110	110	120	120	135	135	125
3.13	最小转弯半径 Minimum turning radius	r	mm	1880	1880	2150	2150	2270	2270	2270
3.14	最小直角通道宽度(托盘1000×1000,间隙200mm) Minimum right-angle aisle width (Pallet 1,000×1,000 and 200mm clearance)	Ast	mm	3475	3475	3820	3820	3940	3940	3950
3.15	最小直角通道宽度(托盘1200×1200,间隙200mm) Minimum right-angle aisle width (Pallet 1,200×1,200 and 200mm clearance)	Ast	mm	3675	3675	4020	4020	4140	4140	4150
性能 Performances										
4.1	行驶速度(满载 / 空载) Traveling speed (Full-load/no-load)		km/h	13/14	13/14	14/15	14/15	16/17	15.5/17	15.5/17
4.2	起升速度(满载 / 空载) Lifting speed (Full-load/no-load)		mm/s	330/450	310/450	330/450	310/450	330/450	310/450	330/450
4.3	最大爬坡度(满载 / 空载) Maximum gradeability (Full-load/no-load)		%	15/17	15/17	15/17	15/17	15/17	15/17	15/17
重量 Weights										
5.1	总重(含电池)* Gross weight (Including battery) *		kg	3040	3200	3930	4040	5100	5300	5900
5.2	桥负载：空载(前桥 / 后桥) Axle load: No-load (Front/rear axle)		kg	1460/1580	1480/1720	1790/2140	1875/2165	2230/2870	2180/3120	2380/3520
5.3	桥负载：满载(前桥 / 后桥) Axle load: Full-load (Front/rear axle)		kg	3960/580	4400/600	5045/885	5930/610	6985/1115	7700/1100	7920/1480
电池 Battery										
6.1	电池电压 Battery voltage		V	48	48	48	48	80	80	80
6.2	电池容量(铅酸 / 锂电)* Battery capacity (Lead-acid/lithium battery) *		Ah	400/300	400/300	500/300	500/300	500/405	500/405	500/405
电机与控制器 Motor and controller										
7.1	电控系统 Electronic control system			AC	AC	AC	AC	AC	AC	AC
7.2	驱动电机功率 Drive motor power		kW	8	8	11	11	16.6	16.6	16.6
7.3	泵电机功率 Pump motor power		kW	10	10	12	12	16	16	21
其它 Other										
8.1	系统压力 System pressure		Mpa	14.5	16	16	18	18	20	16
8.2	行车制动形式 Service brake type			液压 Hydraulic	液压 Hydraulic	液压 Hydraulic	液压 Hydraulic	液压 Hydraulic	液压 Hydraulic	液压 Hydraulic
8.3	停车制动形式 Parking brake type			机械 Mechanical	机械 Mechanical	机械 Mechanical	机械 Mechanical	机械 Mechanical	机械 Mechanical	机械 Mechanical

注：选配不同规格的电池容量，整机重量有所不同。 Note: The machine weight varies depending on the specific capacity of the optional battery installed. *注：根据需求，可更换不同电池容量 * Note: The batteries of different capacities can be installed depending on own needs.

随技术进步，产品结构、参数等将不断改进，恕不另行通知。样本信息与实物略有不符的，以实物为准。

The continuous improvements of product structure and parameters along with the technologic progress will be made without further notice. In event of any discrepancy between brochure information and real product, the real product shall prevail.

https://truckmanualshub.com/

电动平衡重结构图 Structural diagram of electric counterweighted product

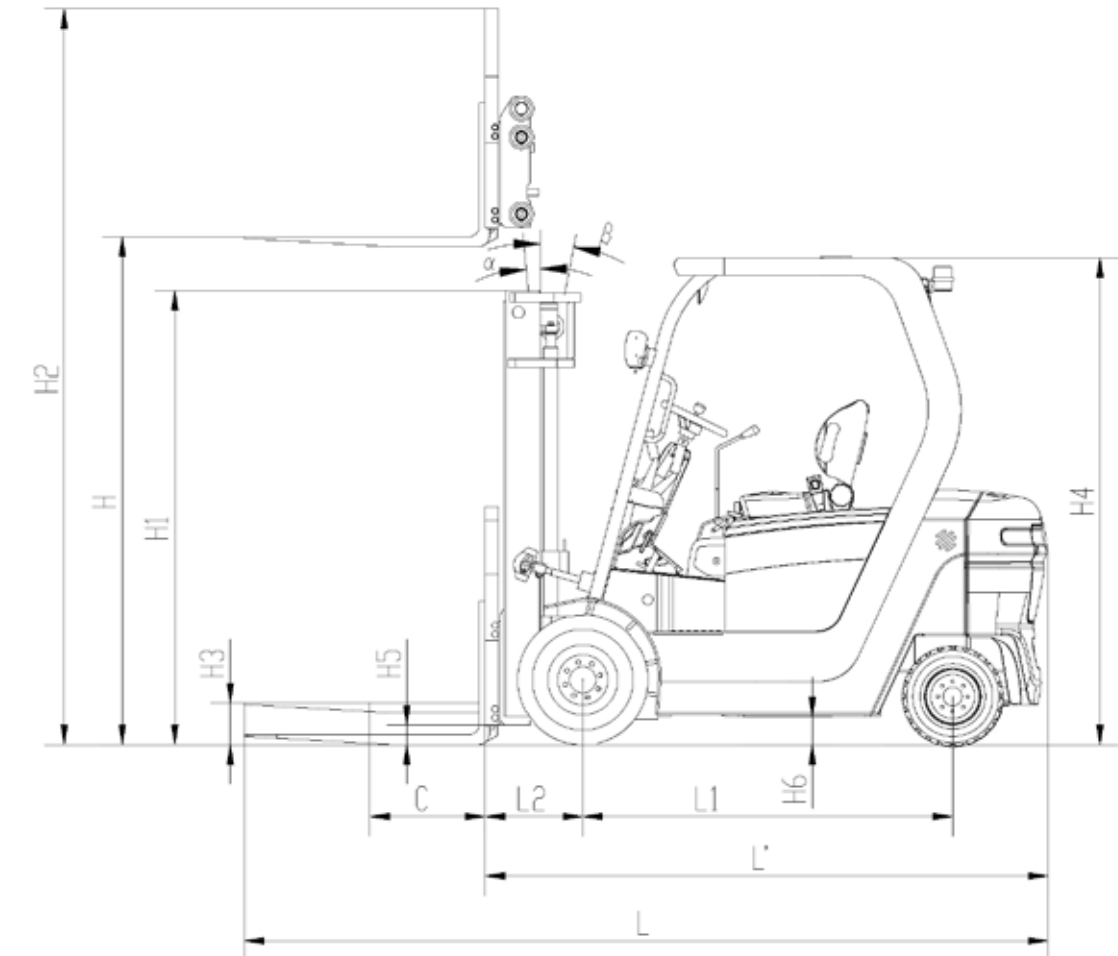

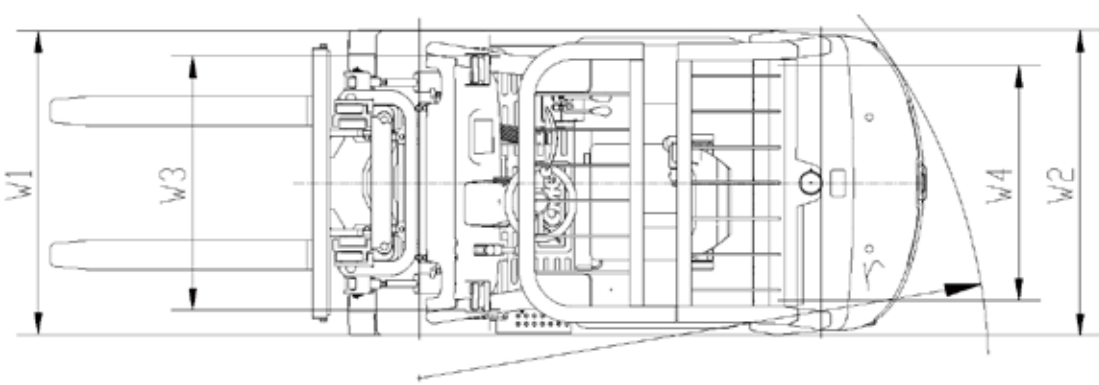

https://truckmanualshub.com/

载荷曲线图 Load Curve Diagram

XCB-P30/XCB-L30 载荷曲线 Load curve of XCB-P30/L30

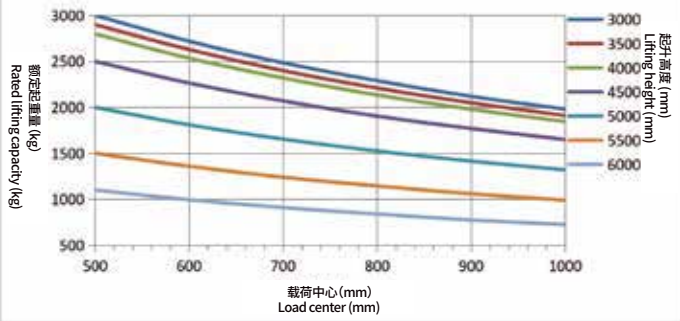

XCB-P35/XCB-L35 载荷曲线 Load curve of XCB-P35/L35

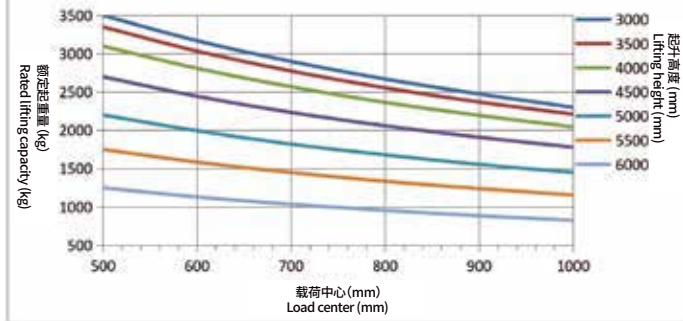

XCB-P20/XCB-L20 载荷曲线 Load curve of XCB-P20/L20

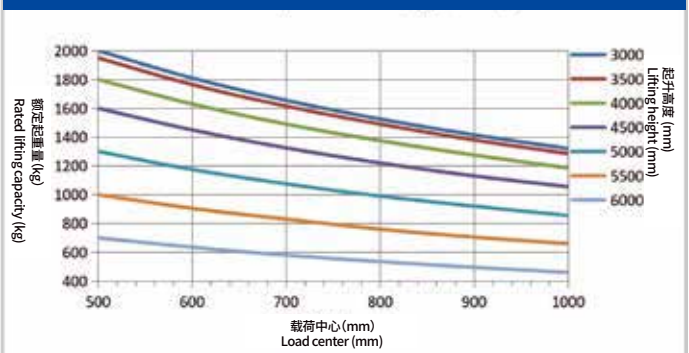

XCB-P25/XCB-L25 载荷曲线 Load curve of XCB-P25/L25

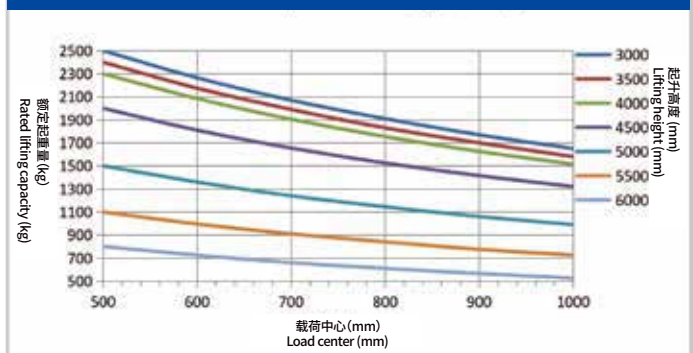

XCB-P15/XCB-L15 载荷曲线 Load curve of XCB-P15/L15

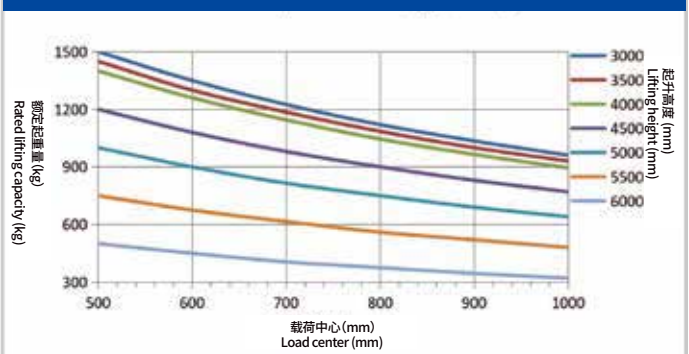

XCB-P18/XCB-L18 载荷曲线 Load curve of XCB-P18/L18

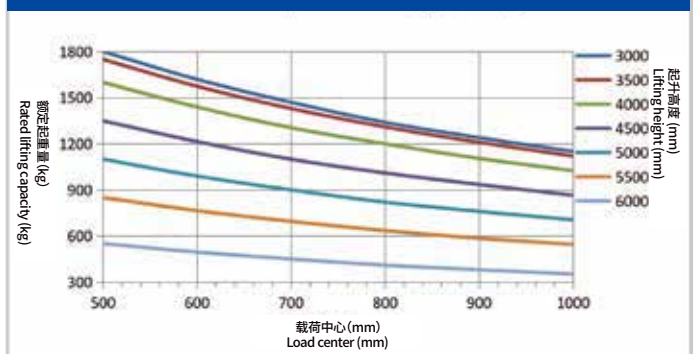

注:基于标准容量电池。
Note: Based on standard capacity battery.

电控系统特点 Characteristics of electronic control system

- **坡道缓降功能** Hill Descent Control
- **能量再生功能** Energy regeneration function
- **铅酸锂电双系统集成** Lead-acid/lithium battery dual system integration
- **高负荷徐工控制器** High-load XCMG controller
- **大屏幕多功能显示器** Large multifunctional display

https://truckmanualshub.com/

三级全自由门架参数表 Specification of three-stage full-free masts

	起升高度 Lifting height	自由起升高度 Free lifting height	门架最小高度 Minimum mast height	门架最大高度 Maximum mast height	挡货架高度 Blocking Rack Height
1.5/1.8T	4500	1575	2140	5590	970
	5000	1745	2310	6090	970
	5500	1915	2530	6600	970
	6000	2075	2700	7090	970

	起升高度 Lifting height	自由起升高度 Free lifting height	门架最小高度 Minimum mast height	门架最大高度 Maximum mast height	挡货架高度 Blocking Rack Height
2/2.5T	4500	1585	2250	5600	975
	5000	1755	2420	6110	975
	5500	1925	2635	6610	975
	6000	2085	2800	7100	975

	起升高度 Lifting height	自由起升高度 Free lifting height	门架最小高度 Minimum mast height	门架最大高度 Maximum mast height	挡货架高度 Blocking Rack Height
3T	4500	1590	2250	5645	1030
	5000	1760	2420	6155	1030
	5500	1930	2635	6655	1030
	6000	2090	2800	7145	1030

	起升高度 Lifting height	自由起升高度 Free lifting height	门架最小高度 Minimum mast height	门架最大高度 Maximum mast height	挡货架高度 Blocking Rack Height
3.5T	4500	1595	2250	5645	1030
	5000	1765	2420	6155	1030
	5500	1935	2635	6655	1030
	6000	2095	2800	7145	1030

承载重托，稳准之选 Choice of high loading capacity, stability, and accuracy

https://truckmanualshub.com/

徐工徐工 助您成功

XCMG FOR YOUR SUCCESS

XCMG | Machmall.com

Web: machmall.com
Tel: +86-516 8773 9797
E: machmall@xcmg.com