https://truckmanualshub.com/

EN

MECALAC

AS 700/900

AS 700/900

MECALAC

https://truckmanualshub.com/

EXPERIENCE OF YOUR WORKSITE

AS700 / AS900

https://truckmanualshub.com/

For decades, Mecalac has been developing and producing high-quality and innovative wheel loaders at the Büdelsdorf site in Northern Germany.

With our articulated loaders, four-wheel steered front, telescopic and swing loaders, we are the only manufacturer to offer all concepts for compact loaders. At Mecalac you can choose the best suitable solution for your application.

Mecalac swing loaders are among the most technologically advanced wheel loaders worldwide. At the same time, they are also the safest wheel loaders: Whatever they can load frontally, can also be transported and 90° swiveled without loss of stability, even with the steering at maximum angle.

https://truckmanualshub.com/

HANDLE YOUR DAILY WORKSITE PROCESS FAST AND EFFICIENTLY - THAT'S WHAT MECALAC SWING LOADERS STAND FOR

Mecalac swing loaders are compact, versatile, comfortable, safe and extremely powerful. They are characterised by the highest stability paired with maximum agility and efficiency for every worksite. They allow work tasks to be completed faster and therefore more productively. The key to productivity is that you can simultaneously drive, steer and swing while performing your daily loading work.

SUMMARY

6
LET'S HAVE A LOOK AT YOUR ADVANTAGES

8
MECALAC MONOBOOM

https://truckmanualshub.com/

10
MECALAC
FOUR WHEEL STEERING

12
MECALAC
PANORAMA CAB

14
ATTACHMENTS

15
TECHNICAL
DATA

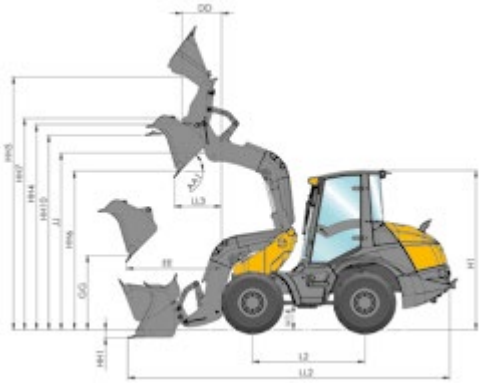

https://truckmanualshub.com/

LET'S HAVE A LOOK AT YOUR + ADVANTAGES

- PANORAMA CAB WITH 2 DOORS ON BOTH SIDES FOR EASY ACCESS
- RIGID CHASSIS
- FOUR-WHEEL STEERING FOR MAXIMUM STABILITY AND EXCELLENT MANOEUVRABILITY
- LOAD-DEPENDENT AXLE SUPPORT
- CHAIN OPERATED SWING SYSTEM WITH CONSTANT AND PRECISE SWING SPEED
- MONOBOOM ALLOWS A WORKING AREA OF 100° BETWEEN THE WHEELS
- ELECTRO-HYDRAULIC QUICK-COUPLER
- OPTIMAL ACCESS TO ALL SERVICE POINTS
- WIDE RANGE OF ATTACHMENTS

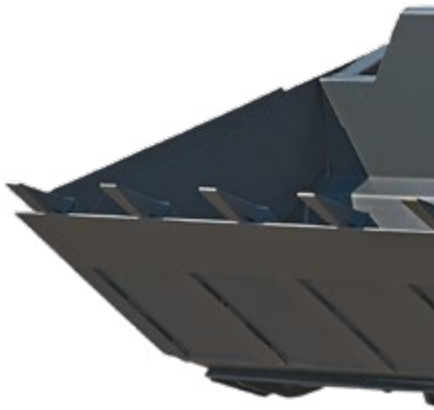

FIRM GRIP ON YOUR WORKSITE WITH FOUR-WHEEL STEERED SWING LOADERS

Mecalac swing loaders are compact, versatile, comfortable, safe, and extremely powerful. Their profitability and their innovative swing system have been the key for long-term market leadership in the swing loader sector which they continue to expand.

The AS700/900 models are versatile wheel loaders with a significant Monoboom.

https://truckmanualshub.com/

https://truckmanualshub.com/

POWERFUL !
MECALAC MONOBOOM

https://truckmanualshub.com/

BOOSTER INSIDE

The Monoboom for swing loaders designed by Mecalac was engineered to be rigid and to offer optimum visibility. It's sleek design extends the working angle between steered wheels to a maximum of 100°. The Mecalac Slide Roof Construction protects internal cylinders, cables and hydraulic hoses against atmospheric conditions or dropping material and increases the components' service life. An unique feature is the hydraulically controlled Z-Kinematics inside the Monoboom. In addition to high tear-out forces and precise parallel motion for fork-lift applications, the Boost function increases the lifting force by up to 30% without raising the fuel consumption.

The zero-play chain swing system provides constant working speed ensuring easy, efficient and precise work cycles for high productivity.

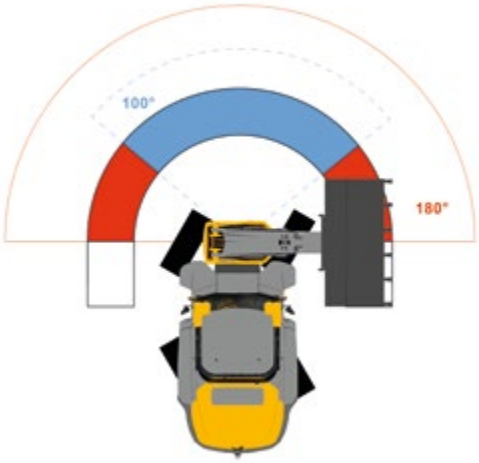

Working area of 100° between the wheels
Swing range of 180°

MONO BOOM

POWERFUL SAFE PERFORMANCE

https://truckmanualshub.com/

VERSATILE
PERFECT DURING OPERATION

https://truckmanualshub.com/

COMPACT AND AGILE

The extremely robust rigid chassis with four-wheel steering is the basis for maximum stability at maximum performance because the footprint remains unchanged at all times. In other words, there is no tipping load loss when the loader is in a steered position. A turning radius of only 3.45 m (11'3") across the rear guarantees the highest possible mobility, even on very confined worksites.

The Monoboom featuring a swing range of 180° adds to the famed agility and flexibility of the loader that lets you quickly and efficiently complete any task. It is the interplay of our Mecalac technologies that distinguishes our loaders and has made them so successful until today.
Flexibility. Performance. Safety.

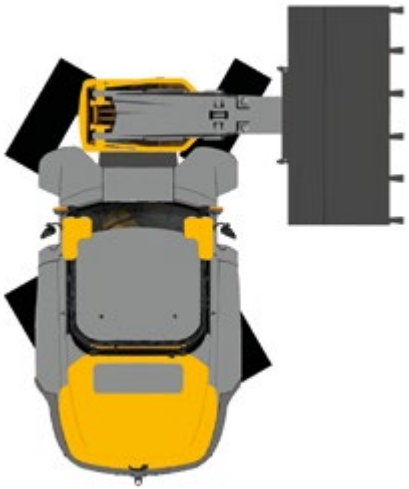

MECALAC FOUR WHEEL STEERING

https://truckmanualshub.com/

SPACIOUS OVERVIEW & COMFORT

MECALAC PANORAMA CAB 360°

The spacious cabin and the ergonomically laid out controls offer a convenient workplace for long-term work. Large tinted glass panes ensure an excellent all-round vision. The panorama roof provides an exact overhead view, e.g. for truck loading.

https://truckmanualshub.com/

100% FUNCTIONAL COMFORTABLE ERGONOMIC

YOUR WORKPLACE

A multi-position comfort seat (AS900), convenient oddment trays, ample storage space and a powerful 3-stage ventilation and heating system make daily work a pleasure. Due to a great number of equipment options, individual demands on the interior features can be fulfilled.

https://truckmanualshub.com/

180° PROFITABLE

Swivelling is more efficient than steering – this multiplies with each additional attachment. No matter whether standard attachments such as bucket, forks and loading hook or individual attachments like concrete mixing buckets and earth auger.

In addition to the hydraulic series quick-coupler, the electro-hydraulic quick-coupler with two-hand control has been a standard for more than 10 years. Maximum operational safety and maximum comfort are absolutely imperative for Mecalac.

Boom suspension, a second auxiliary hydraulic circuit, permanent function on auxiliary hydraulic circuit etc. can be implemented upon customer's request. An optional 120 litres high-performance hydraulics is available, e.g. for flail mowers and asphalt milling attachments.

https://truckmanualshub.com/

TECHNICAL DATA

DATA	AS700	AS900
Operating weight	5980 kg (13183 lb)	6640 kg (14638 lb)
Engine power	55.4 kW / 75 hp (74.3 imperial hp)	55.4 kW / 75 hp (74.3 imperial hp)
Bucket capacity	0.70 – 1.20 m³ (0.92 - 1.6 yd³)	0.90 – 1.5 m³ (1.2 - 2 yd³)

- Zero-play, chain operated 180° swing system
- Comfortable panoramic driver's cabin with ROPS safety system
- Servo-assisted joystick controls
- High-performance, power-controlled, hydrostatic four-wheel drive
- Four-wheel steering system with automatic alignment
- Planetary axles with self-locking differential on front axle
- Low-maintenance wet lamella brake
- Monoboom with Z-Kinematics
- Increase of lifting power by Booster-Kinematics
- Hydraulically controlled quick-coupler with electric safety feature
- Wide range of attachments

ENGINE	AS700 / AS900	
Low-noise, water-cooled Deutz TCD 2.9 L4 turbo diesel engine with intercooler. Common Rail injection system, cooled external exhaust gas recirculation, diesel oxidation catalyst (DOC).	Tier IV Final* Stage 5* - Diesel Particulate Filter (DPF)	
Net power at acc. to ISO 14396	2300 rpm 55.4 kW / 75 hp (74.3 imperial hp)	2300 rpm 55.4 kW / 75 hp (74.3 imperial hp)
Max. torque at acc. to ISO 14396	1600 rpm 300 Nm	1600 rpm 300 Nm
Air intake filter: 2-level dry-air filter with safety cartridge	•	•
Electrical system: - Operating voltage - Battery capacity - Alternator rating	 12 Volt 95 Ah 120 A	 12 Volt 95 Ah 120 A

*According to National regulation

https://truckmanualshub.com/

TECHNICAL DATA

DRIVE	AS700	AS900
Hydrostatic drive with automotive control, stages for maximum propulsive force, shiftable under load, multifunctional lever (joystick) for drive and working hydraulics control	•	•
Axles: planetary axles with four-wheel steering for maximum manoeuvrability, oscillating rear axle with suspension	•	•
Differential lock: self-locking differential in front axle	•	•
Wheels: - Tyre size - Optional	14.5-20 365/80 R20	14.5-20 405/70 R20
Speeds: - Road gear - Field gear	0-20 km/h (0-12 mph) 0-5 km/h (0-3.10 mph)	0-20 km/h (0-12 mph) 0-5 km/h (0-3.10 mph)
Oscillation: max. oscillation angle	+/-10°	+/-10°

BRAKES	AS700	AS900
Working brakes: 1. Hydrostatic inching brake, acting on all 4 wheels 2. Hydraulically operated, servo-assisted wet lamella brake on front axle, acting on all 4 wheels	• •	• •
Parking brake: hydraulically operated spring loaded brake, acting on all 4 wheels	•	•

STEERING	AS700	AS900
Hydrostatic four-wheel steering with 3 steering modes with automatic alignment (four-wheel, front-wheel and crab steer)	•	•
Max. steering angle	+/-35°	+/-35°
Turning radius, measured over: rear	3450 mm (11'3")	3450 mm (11'3")

HYDRAULIC SYSTEM	AS700	AS900
Dual–circuit system with gear pumps 1. Working hydraulics circuit (lift/lower, tilt, accessories), and steering (via priority valve); three-way control valve with primary and secondary safeguards	•	•
Max. operating pressure at 2300 rpm	84 l/min (22.2 gal/min) and 240 bar (3480 psi)	84 l/min (22.2 gal/min) and 240 bar (3480 psi)
2. Circuit (swivelling) single control valve with primary and secondary protection	•	•
Max. operating pressure at 2300 rpm	35 l/min (9.2 gal/min) and 220 bar (3190 psi)	35 l/min (9.2 gal/min) and 220 bar (3190 psi)
Float position for lifting cylinders		
Cylinder: 2 lifting cylinders 1 tilting cylinder 2 swing cylinders	• • •	• • •

PERFORMANCE DATA	AS700	AS900
Bucket position: - Crowd angle - Dump angle top	45° 45°	45° 45°
Lifting force	4600 daN (10,341 lbf)	5800 daN (13,038 lbf)
Lifting force with boost	6000 daN (13,488 lbf)	7500 daN (16,860 lbf)
Breakout force	4400 daN (9,891 lbf)	5400 daN (12,139 lbf)
Thrust force	4500 daN (10,116 lbf)	4500 daN (10,116 lbf)
Tipping load: - Standard bucket, max. steered, straight - Standard bucket, max. steered, 90°-swivelled	3250 kg (7,165 lb) 3300 kg (7,275 lb)	3700 kg (8,157 lb) 3900 kg (8,598 lb)
Payload on forks: - Max. steered, frontal, even terrain - Max. steered, max. swivelled, even terrain	1950 kg (4,299 lb) 1950 kg (4,299 lb)	2300 kg (5,070 lb) 2300 kg (5,070 lb)
Tipping load	according to ISO 14397	according to ISO 14397
Payload	according to EN 474-3	according to EN 474-3

FILLING CAPACITIES	AS700	AS900
Engine with filter	approx. 8 l (2.1 gal)	approx. 8 l (2.1 gal)
Fuel tank	approx. 130 l (34.3 gal)	approx. 130 l (34.3 gal)
Front axle total	approx. 11 l (2.9 gal)	approx. 11 l (2.9 gal)
Rear axle with gearbox	approx. 12 l (3.2 gal)	approx. 12 l (3.2 gal)
Hydraulic system with tank	approx. 134 l (35.4 gal)	approx. 134 l (35.4 gal)

CHASSIS	AS700	AS900
Rigid, single-frame chassis with rear axle support for maximum stability, especially when working in swivelled position	•	•
Sealed articulated/oscillated pivot with play-free, chain operated swinging system with constant turning speed and power	•	•
Innovative, slender booster boom with protected, internal kinematics as well as collision save internal lines, hoses and electrics	•	•
Standard electro-hydraulic quick-coupler with exact parallel guidance feature	•	•
The slender monoboom allows maximum utilization of the swing area and excellent visibility on working attachments	•	•
Operator's cab with flexible four-point mountings for maximum driver comfort and minimum noise levels	•	•
The servo-assisted joystick controls are smooth, accurate and long lasting	•	•

NOTE: METRIC MEASUREMENTS ARE THE CRITICAL VALUES
- 1 Litre = 0.26417 US Liquid Gallons
- 1 Litre = 0.21997 Imperial Liquid Gallons

https://truckmanualshub.com/

TECHNICAL DATA

STANDARD FEATURES	AS700	AS900
Amply dimensioned ROPS panoramic comfort cabin with removable cabin top. The driver's door, which opens through 180°, and the large wide-opening side window can be locked within the machine contour	•	-
Amply dimensioned ROPS panoramic comfort cabin with 2 lockable doors. Doors can be locked in 2 positions within the contour of the loader	-	•
Single piece floor mat for easy cleaning	•	•
Tinted windows	•	•
Parallel guided windscreen wiper	•	•
Rear wiper	•	•
Front and rear screen washing device	•	•
Heated rear window	•	-
Heated rear window on full surface	-	•
2 large fold away outside mirrors	-	•
Tinted roof window	•	•
Steering column is adjustable in inclination	•	
Steering column is adjustable in height and inclination	-	•
Ergonomically adjustable joystick	-	•
Multiply adjustable driver's seat	•	•
Safety belt	•	•
Sun visor	•	•
Heating and ventilation system with fresh air filter	•	•
Heating and ventilation system with recirculation air function	-	•
Main battery switch	•	•
Interior light	•	•
12 V socket	•	•
Coat hook	-	•
Storage pockets in the cabin	•	•
Storage box with lid	-	•
Lockable storage compartment at the chassis	•	•
Intuitive modular control panel with onboard computer for machine monitoring	•	•
2 driving lights on cabin roof	•	•
2 working lights at monoboom	•	•
Single key system	•	•
Hydraulic quick coupler with electric safety device	•	•
Towing coupling	•	•
Fastening and lifting points	•	•
Proportional 1st auxiliary hydraulics circuit is integrated in the joystick	•	•
Color scheme: yellow	•	•
Operator's cabin, axles and wheels: grey	•	•

Standard and optional equipment may vary. Consult your Mecalac dealer for details.

OPTIONAL EQUIPMENT	AS700	AS900
30 or 40 km/h version	•	•
Wide tires	•	•
Rotating beacon	•	•
Interior mirror	•	•
Acoustic back up alarm	•	•
FOPS grid for cabin roof	•	•
2nd auxiliary hydraulics	-	•
Permanent function for auxiliary hydraulics	•	•
High performance hydraulic	•	•
Safety valves	•	•
Boom suspension	•	•
Bio-degradable oil fill for hydraulic system	•	•
Pressureless return line	•	•
Inching speed	•	•
Lockable differential on rear axle	•	•
Sliding windows right and left	-	•
Air-conditioning system	•	•
Air suspended driver's seat	•	•
Radio	•	•
Heated outside mirrors	-	•
Immobilizer	•	•
2 working lights rear	•	•
LED working lights front and rear	•	•
Trailer coupling	•	•
Special corrosion protection for salt applications	•	•
Attachments as per separate list as pallet fork, load hook, salt- and sandspreader, etc.	•	•

EMISSIONS	AS700 / AS900	
Engine: Emissions according to EU-RL 97/68	Tier IV Final* Stage 5* - Diesel Particulate Filter (DPF)	
Noise emission: - Sound power level LWA[1] - Acoustic power level LpA[2]	 100 dB(A) 75 dB(A)	 100 dB(A) 75 dB(A)
Vibrations: - Vibration total value[3] - Effective vibration level[4]	 < 2.5 m (8'2")/s² < 0.5 m (1'7")/s²	 < 2.5 m (8'2")/s² < 0.5 m (1'7")/s²

*According to National regulation

[1] According to 2000/14/EG
[2] According to ISO 6396
[3] According to ISO/TR 25398
[4] According to ISO/TR 25398

https://truckmanualshub.com/

TECHNICAL DATA

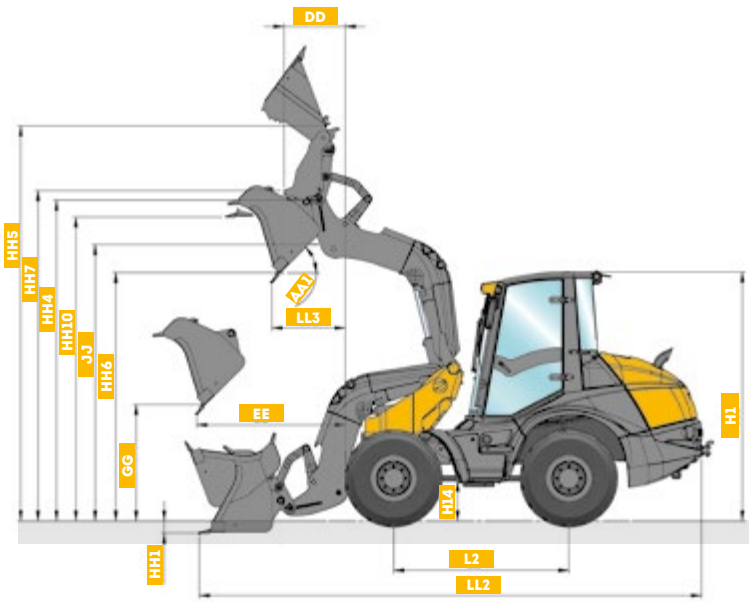

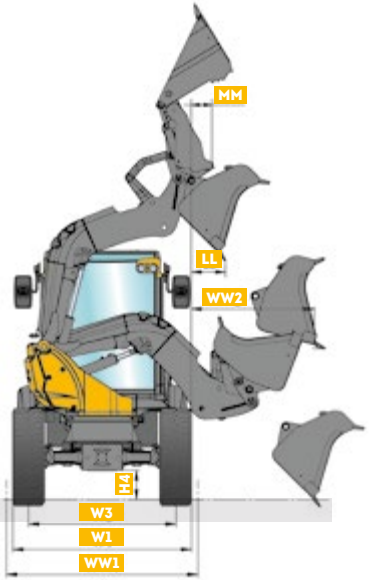

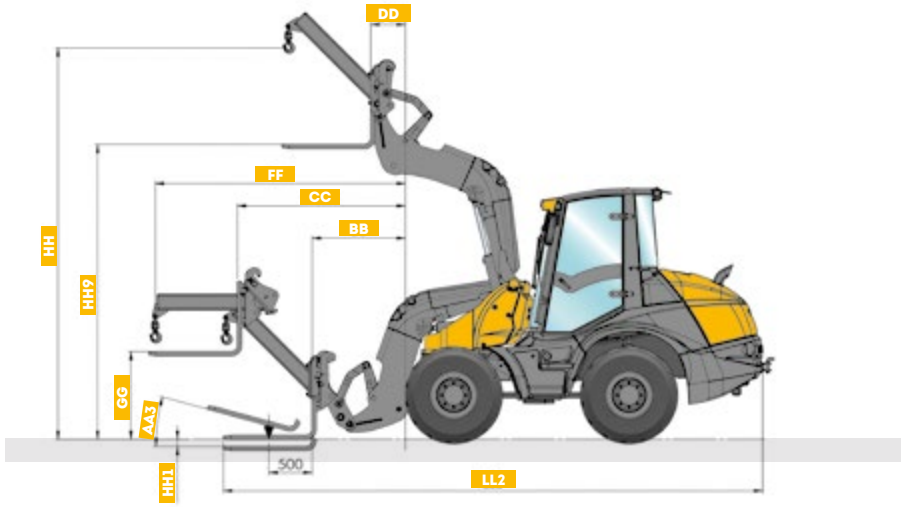

MACHINE DIMENSIONS	AS700		AS900	
BUCKET	STD. 0.70 m³ (0.92 yd³)	4x1 - 0.65 m³ (0.85 yd³)	STD. 0.90 m³ (1.2 yd³)	4x1 - 0.85 m³ (1.1 yd³)
AA1	49°	46°	49°	46°
DD	-	920 mm (3')	-	920 mm (3')
EE	1630 mm (5'4")	1750 mm (5'8")	1660 mm (5'5")	1750 mm (5'8")
GG	1020 mm (3'4")	1070 mm (3'6")	940 mm (3'1")	1000 mm (3'3")
H1	2760 mm (9')	2760 mm (9')	2830 mm (9'3")	2830 mm (9'3")
H4	390 mm (1'3")	390 mm (1'3")	390 mm (1'3")	390 mm (1'3")
H14	440 mm (1'5")	440 mm (1'5")	440 mm (1'5")	440 mm (1'5")
HH1	130 mm (0.5")	85 mm (0'3")	150 mm (0'5")	110 mm (0'4")
HH4	3500 mm (11'5")	3500 mm (11'5")	3500 mm (11'5")	3500 mm (11'5")
HH5	4520 mm (14'9")	4500 mm (14'9")	4490 mm (14'8")	4470 mm (14'7")
HH6	2720 mm (8'11")	2700 mm (8'10")	2650 mm (8'8")	2600 mm (8'6")
HH7	3280 mm (10'9")	3270 mm (10'8")	3280 mm (10'9")	3270 mm (10'8")
HH10	3230 mm (10'7")	3210 mm (10'6")	3230 mm (10'7")	3210 mm (10'6")
JJ	3130 mm (10'3")	3120 mm (10'2")	3130 mm (10'3")	3120 mm (10'2")
L2	1980 mm (6'5")	1980 mm (6'5")	1980 mm (6'5")	1980 mm (6'5")
LL	730 mm (2'4")	730 mm (2'4")	740 mm (2'5")	740 mm (2'5")
LL2	5550 mm (18'2")	5520 mm (10'1")	5590 mm (10'4")	5560 mm (18'2")
LL3	910 mm (2'11")	910 mm (2'11")	940 mm (3'1")	1010 mm (3'3")
MM	-	720 mm (2'4")	-	650 mm (2'1")
W1	1950 mm (6'4")	1950 mm (6'4")	1990 mm (6'6")	1990 mm (6'6")
W3	1590 mm (5'2")	1590 mm (5'2")	1660 mm (5'5")	1660 mm (5'5")
WW1	1950 mm (6'4")	1950 mm (6'4")	2100 mm (6'10")	2100 mm (6'10")
WW2	1460 mm (4'9")	1380 mm (4'6")	1470 mm (4'9")	1390 mm (4'6")

MACHINE DIMENSIONS	AS700	
	FORK	LOAD HOOK
AA3	19°	-
BB	1030 mm (3'4")	-
CC	1460 mm (4'9")	-
DD	740 mm (2'5")	-
FF	-	3010 mm (9'10")
GG	1460 mm (4'9")	-
HH	-	4520 mm (14'9")
HH1	150 mm (0'5")	-
HH9	3190 mm (10'5")	-
KK	1090 mm (3'6")	-
LL	1510 mm (4'11")	-
LL2	6160 mm (20'2")	-
MM	380 mm (1'2")	-
PP	880 mm (2'10")	-
RR	-	2630 mm (8'7")

https://truckmanualshub.com/

TECHNICAL DATA

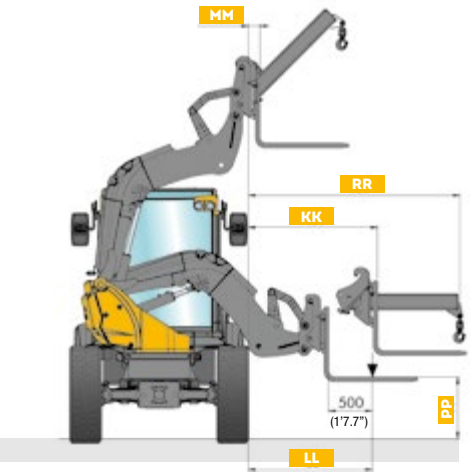

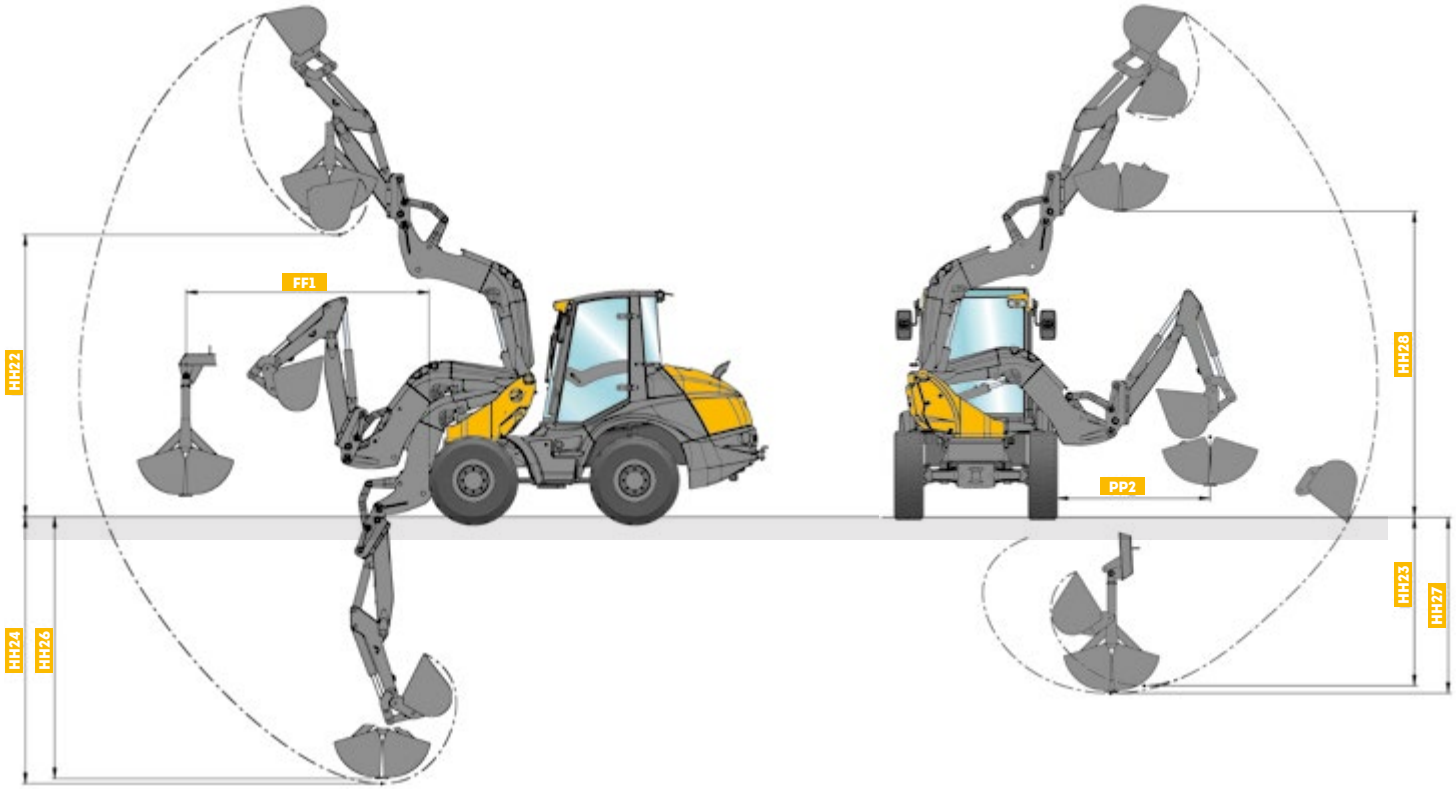

AS900	
FORK	LOAD HOOK
19°	-
1050 mm (3'5")	-
1480 mm (4'10")	-
760 mm (2'6")	-
-	3030 mm (9'11")
1440 mm (4'8")	-
-	4500 mm (14'9")
170 mm (0'6")	-
3170 mm (10'4")	-
1010 mm (3'3")	-
1430 mm (4'8")	-
6160 mm (20'2")	-
300 mm (0'11")	-
810 mm (2'7")	-
-	2560 mm (8'4")

MACHINE DIMENSIONS	AS900	
	EXCAVATOR	GRAB
FF1	-	2930 mm (9'7")
HH22	3330 mm (10'11")	-
HH23	2020 mm (6'7")	-
HH24	2660 mm (8'8")	-
HH26	-	2680 mm (8'9")
HH27	-	1980 mm (6'5")
HH28	-	3140 mm (10'3")
PP2	-	2130 mm (6'11")

All data based on standard tires.
All data are non-binding.
Changes are reserved without notice.
The order confirmation is exclusively decisive.

https://truckmanualshub.com/

Materials and specifications are subject to change without notice. Actual products may differ from photos. Featured machines in photos may include additional equipment.
See your Mecalac dealer for available options.
2019 Mecalac ® All rights reserved.
MK354/EN-10/19 AS700/900 **Design** Les Alchimistes **Layout** Service communication Mecalac **Photo credits** Münchow Industriefotos - Fotolia **Printed by** Kalistene **Non-binding document**

MECALAC FRANCE S.A.S.
2, avenue du Pré de Challes
Parc des Glaisins – CS 40230
Annecy-le-Vieux
FR - 74942 Annecy Cedex
Tel. +33 (0)4 50 64 01 63

MECALAC BAUMASCHINEN GMBH
Am Friedrichsbrunnen
D-24782 Büdelsdorf
Tel. +49 (0)43 31/3 51-319

MECALAC CONSTRUCTION EQUIPMENT UK LTD
Central Boulevard,
ProLogis Park
Coventry, CV6 4BX, UK
Tél. +44 (0)24 7633 9539

MECALAC İŞ MAKINELERI SAN VE TIC. LTD. ŞTI.
Ege Serbest Bölgesi Nilüfer 1 Sok. No: 34
35410, Gaziemir
İzmir - Türkiye
Tel. +90 232 220 11 15

WWW.MECALAC.COM