https://truckmanualshub.com/

Genie®
A TEREX BRAND

Operator's Manual

Serial number range

GTH-1256 *(Deutz Tier 4 Final)*

From GTH12M-401

Original Instructions
First Edition
Second Printing
April 2019
Part No. 57.0009.0737

https://truckmanualshub.com/

Contents

Introduction 1
Symbol and Hazard Pictorials Definitions 5
General Safety 6
Work Area Safety 8
Legend 17
Controls 18
Inspections 23
Operating Instructions 33
Transport and Lifting Instructions 45
Maintenance 48
Attachments 52
Specifications 63
Load Charts 65

Copyright © 2017 by Terex Corporation

First Edition: Second Printing, April 2019

Genie is a registered trademark of Terex South Dakota, Inc. in the U.S.A. and many other countries. “GTH” is a trademark of Terex SouthDakota, Inc.

Complies with ANSI/ITSDF B56.6, CSA B335

https://truckmanualshub.com/

Introduction

About This Manual

Genie appreciates your choice of our machine for your application. Our number one priority is user safety, which is best achieved by our joint efforts. This book is an operation and daily maintenance manual for the user or operator of a Genie machine.

This manual,along with the AEM Rough Terrain Forklift Safety Manual and the CCTV operator's manual (if equipped), should be considered a permanent part of your machine and should remain with the machine at all times. If you have any questions, contact Genie.

Product Identification

The machine serial number is located on the serial label.

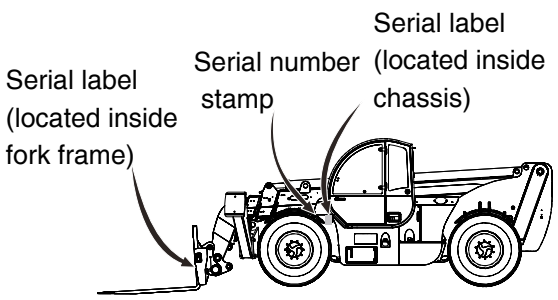

Intended Use

A variable reach rough terrain forklift truck is defined as a wheeled type truck with a pivoting boom, which may be equipped with various attachments for picking, transporting and placing loads with the established load range charts.

Use of this product in any other way is prohibited and contrary to its intended use.

Bulletin Distribution and Compliance

Safety of product users is of paramount importance to Genie. Various bulletins are used by Genie to communicate important safety and product information to dealers and machine owners.

The information contained in the bulletins is tied to specific machines using the machine model and serial number.

Distribution of bulletins is based on the most current owner on record along with their associated dealer, so it is important to register your machine and keep your contact information up to date.

To ensure safety of personnel and the reliable continued operation of your machine, be sure to comply with the action indicated in a respective bulletin.

https://truckmanualshub.com/

Introduction

Contacting the Manufacturer

At times it may be necessary to contact Genie.

When you do, be ready to supply the model number and serial number of your machine, along with your name and contact information. At minimum, Genie should be contacted for:

- Accident reporting
- Questions regarding product applications and safety
- Standards and regulatory compliance information
- Questions regarding Product Modifications
- Current owner updates, such as changes in machine ownership or changes in your contact information. See Transfer of Ownership, below.

Transfer of Machine Ownership

Taking a few minutes to update owner information will ensure that you receive important safety, maintenance and operating information that applies to your machine.

Please register your machine by visiting us on the web at www.genielift.com or by calling us toll free at 1-800-536-1800.

https://truckmanualshub.com/

Introduction

Danger

Failure to obey the instructions and safety rules in this manual will result in death or serious injury.

Do Not Operate Unless:

☑ You learn and practice the principles of safe machine operation contained in this operator's manual.

1. **Avoid hazardous situations.**
   Know and understand the safety rules before going on to the next section.
2. Always perform a pre-operation inspection.
3. Always perform function tests prior to use.
4. Inspect the workplace.
5. Only use the machine as it was intended.

☑ You read, understand and obey the manufacturer's instructions and the safety rules, the safety and operator's manuals, and the decals applied on the machine.

☑ You read, understand and obey the employer's safety rules and worksite regulations.

☑ You read, understand and obey all applicable governmental regulations.

☑ You are properly trained to safely operate the machine.

https://truckmanualshub.com/

Introduction

Hazard Classification

Safety alert symbol - used to alert you to potential personal injury hazards. Obey all safety messages that follow this symbol to avoid possible injury or death

DANGER Indicates a hazardous situation which, if not avoided, will result in death or serious injury.

WARNING Indicates a hazardous situation which, if not avoided, could result in death or serious injury.

CAUTION Indicates a hazardous situation which, if not avoided, could result in minor or moderate injury.

NOTICE Indicates a property damage message.

Standards

Many aspects of rough terrain forklift operation and testing are discussed in standards published by the American National Standards Institute and the Industrial Truck Standards Development Foundation. These standards are updated on a regular basis with addenda. It is recommended that you purchase and refer to the following standards.

ANSI/ITSDF B56.6 - Rough Terrain Forklift Trucks

The ANSI standard can be downloaded from www.ITSDF.org

CSA B335 - Safety Standard for Lift Trucks

The CSA standard can be downloaded from www.csa.ca

Safety Sign Maintenance

Replace any missing or damaged safety signs. Keep operator safety in mind at all times. Use mild soap and water to clean safety signs. Do not use solvent-based cleaners because they may damage the safety sign material.

https://truckmanualshub.com/

Symbol and Hazard Pictorials Definitions

Electrocution hazard	Maintain required clearance	Crush hazard	No people under load	Read the operator's manual	Injection hazard
Use a piece of cardboard or paper to search for leaks	Maintain required clearance	Crush hazard	Always wear seat belt	Tip-over hazard	Tip-over hazard
Crush hazard	Keep away from moving parts	Crush Hazard	Keep clear of moving parts	Burn hazard	Do not loosen cap until cool
Explosion/burn hazard	No smoking No open flame	Burn Hazard	Allow surfaces to cool	Crush hazard	Keep away from moving parts
Crush hazard	Explosion/burn hazard	No smoking. No open flame	Fall hazard	Only use an approved work platform	Refer to load charts and manual
Do not level the machine with an elevated boom	Keep load low during travel	Do not operate machine unless area around machine is clear of people and obstructions	Access by trained and authorized personnel only	Use nitrogen. Not use oxygen	Keep away from stabilizers
Explosion hazard					

https://truckmanualshub.com/

General Safety

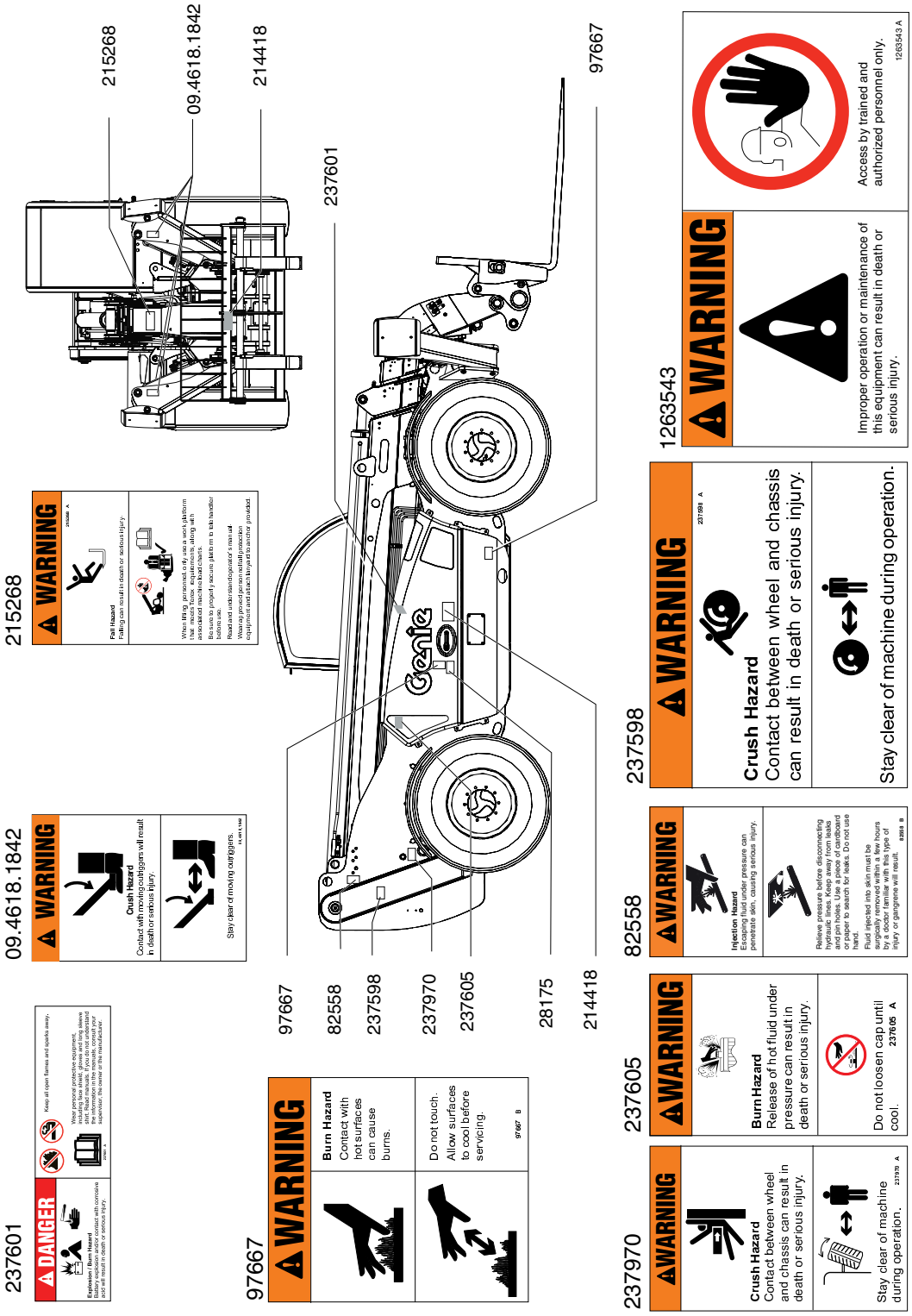

https://truckmanualshub.com/

General Safety

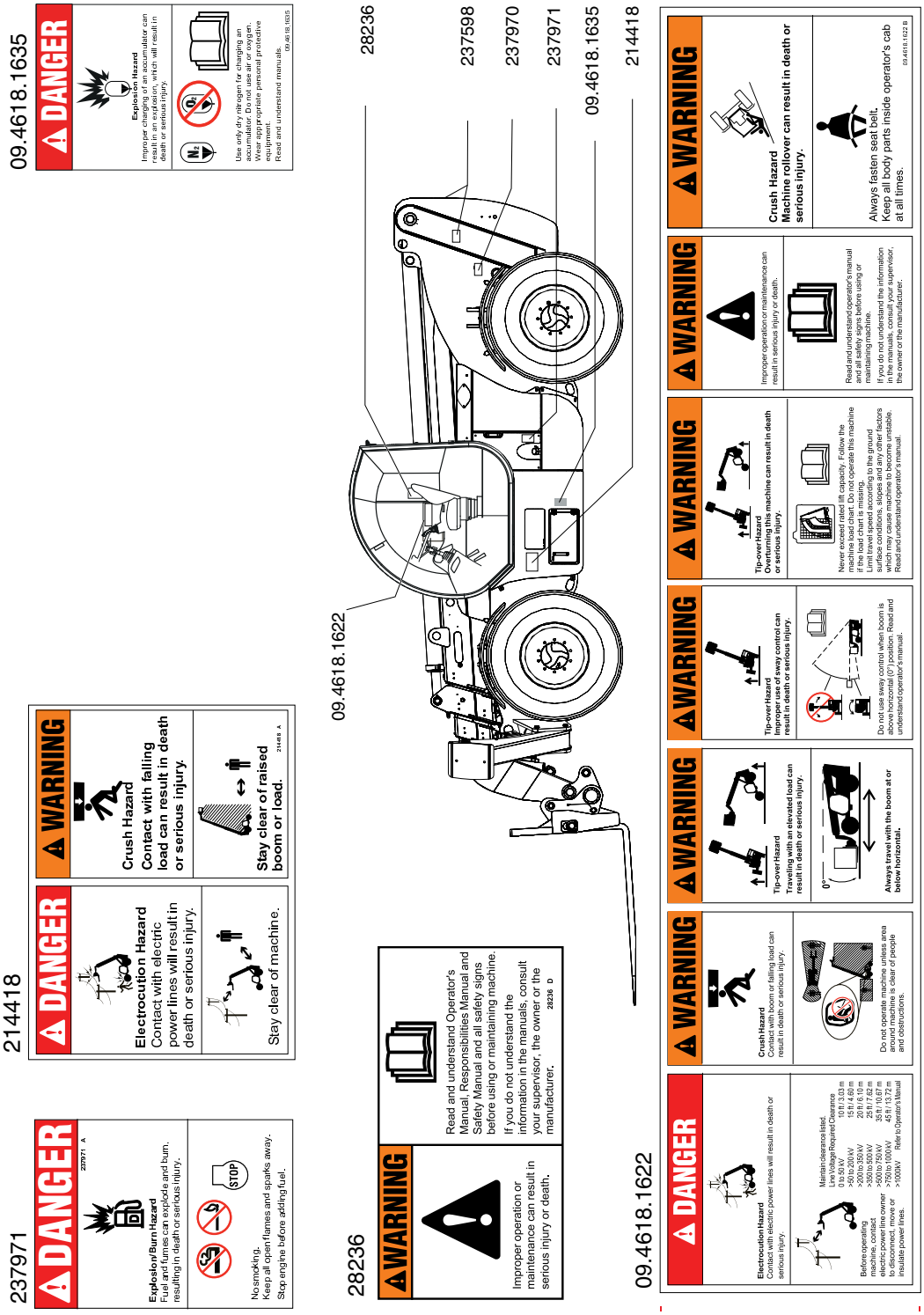

https://truckmanualshub.com/

Work Area Safety

⚠ Tip-over Hazards

Using the appropriate load chart for the machine configuration, confirm that the load is within the rated capacity of the machine.
Do not exceed the rated load.

The load center of the fork (if equipped) must be equal to or less than the load center indicated on the load chart. If the load center is further from the fork face than shown on the load chart, refer to the Load Chart section on this manual.

All loads shown on the load chart are based on the machine being on firm level ground, the frame being level, the forks being positioned evenly on the carriage, the load being centered on the forks, the tires being properly sized and properly inflated, and the telehandler being in good operating condition.

If using accessories, read, understand and obey the decals, instructions and manuals with the accessory.

Do not raise the load unless the ground can support all forces imposed by the machine.

Do not lower a load without retracting the boom first.

Do not use attachments wich are not approved by Genie.

Do not operate the machine if the load chart is missing.

Do not exceed the rated capacity for each configuration.

Do not attemp to jump free of the machine during a tip-over. The ROPS (Roll Over Protective Structure) is designed to protect you.

If the telehandler starts to tip over:
- do not jump
- Brace yourself and stay in the seat
- Keep your seatbelt fastened
- Hold on firmly
- Lean away from the point of impact
- Keep head, arms, hands, legs and all other body parts inside the operator's cab at all times.

Do not raise the boom unless the machine is level. The machine level indicator should be at zero degrees.

Do not level the machine using the frame sway control unless the boom angle indicator is at zero degrees or less.

Do not use the sway control to position an elevated load.

Do not raise a load and then drive to position it.

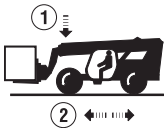

When driving, keep the boom at or below horizontal and keep the load close to the ground.

Operate the machine at speeds that will keep the load under control. Start and stop movements smoothly.

https://truckmanualshub.com/

Work Area Safety

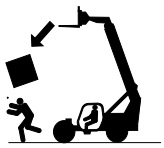

Do not raise a load unless the load is properly positioned or secured on the forks or approved attachment.

Do not operate the machine in strong or gusty winds. Do not increase the surface area of the carriage or load. Increasing the area exposed to the wind will decrease machine stability.

Use extreme care and slow speeds while driving the machine in the travel position across uneven terrain, steep grades, debris, unstable or slippery surfaces and near holes and drop-offs.

Do not alter or disable machine components that in any way affect safety and stability.

Do not replace items critical to machine stability with items of different weight or specification.

Do not replace factory-installed tires with tires of different specification or ply rating, unless approved by the factory.

If using accessories, read, understand and obey the decals, instructions and manuals with the accessory.

Lateral inclination allowed during working phase ± 0,5°

Only use the machine on firm ground capable of supporting the maximum combined load of the machine and payload. If the subsoil collapses, the machine could tip over. To avoid any risk of overturning, the following precautions should be taken:

- Ask your employer (site manager or manager assistant) if there may be buried pipes, pits, old tanks, cellar floor, dung yards, etc. under the ground onto which the stabilizers shall be lowered.
- Site ground consistency can be roughly estimated using the tables and picture in this page.
- The resistance of the subsoil is in relation to the ground type and soil characteristics.

Table 1 indicates the superficial pressure which may be allowed under the stabilizers of the machine.

Type of ground, soil characteristics		**Allowable superficial pressure kPa / psi**
loose, non-compact soil		generally speaking, not solid; special precautions needed
loamy, peaty,pasty soil		
rippable, soft ground		
non-cohesive, well compact soil, sand, gravel		**200 / 29**
rippable soil	solid	**100 / 14.5**
	semi-solid	**200 / 29**
	hard	**400 / 58**
Rocks, concrete, heavy traffic paved roads		**above 1000 / 145**

Table 1

https://truckmanualshub.com/

Work Area Safety

Make sure the machine (wheels and stabilizers) rests on a firm ground to prevent hazardous unstable conditions. If the ground is not firm enough, position some support planks, capable of withstanding the expected loads, under the stabilizers or the wheels. When working near trenches, lower the stabilizers at a safe distance from the trench edge.

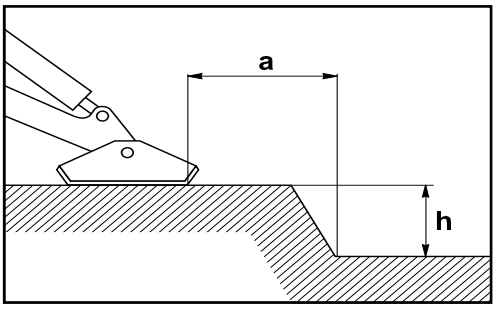

a & h = *minimum distances*

The distance (a) from the foot of the overhang shall be adequate to height (h) of the same overhang.

If the ground fulfils the required conditions:

a : h = 1 : 1

(values with a grey background in table 1)

In the case of doubts:

a : h = 2 : 1

⚠ Traveling on Slopes Hazards

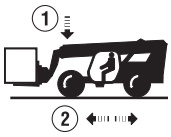

When driving, keep the boom at or below horizontal and keep the load close to the ground.

When the machine is loaded, always travel with the load uphill. When the machine is unloaded, travel with the forks or attachment downhill.

On steep terrain, drive only up and down a hill, and always keep the machine in gear. Do not turn across the slope when the machine is traveling up or down a slope.

Limit travel path and speed according to the condition of the ground surface, traction, slope, location of personnel and any other factors which may create a hazard. Never drive the machine unless the mast and equipment are in their proper travel position.

Whether a machine will tip over during dynamic machine operation involves many factors that need to be considered. Among these are pavement/ground conditions, stability and slope, as well as machine equipment, operator skill, load position, tire inflation, machine speed, etc.

Additionally, tip-over of a machine is dependent in large part upon operator inputs such as the speed and smoothness of the operation, as well as the position of the attachment and its load.

Construction sites and roads will frequently change slope from place to place, can be hard and soft, and change due to construction activities and weather.

Operators should be properly trained and use their best judgment and experience to take the necessary precautions to prevent a tip-over.

Operators must assess the job site variables and avoid exceeding the machine's (or operator's) capabilities for terrain and conditions.

https://truckmanualshub.com/

Work Area Safety

⚠ Fall Hazards

Always wear a seat belt when operating the machine.

Always remain completely inside the cab when operating the machine.

When getting in and out of the cab, face the machine, use the steps and handrails provided and always maintain three-point contact.

Do not use the steering wheel or any other controls as handrails.

Do not allow riders on the machine or forks.

Do not lift personnel with this machine unless it is equipped with an approved work platform. See Work Platform section.

⚠ Collision Hazards

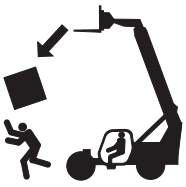

Keep people, equipment and material out of the work area. Do not operate the machine while people are under or near an elevated boom, whether it is loaded or unloaded.

Do not put the transmission into gear unless the brake is applied and personnel and bystanders are clear of the machine and load.

Do not drive the machine if visibility is obstructed. Use a signal person when visibility is obstructed, and keep the signal person in view at all times.
Use prearranged hand signals to communicate.

Do not raise the boom unless the brake is applied.

Do not operate, without fenders, in conditions where loose debris could hit the operator or accumulate on the cab windows.

Do not operate the machine with a faulty back-up alarm. The back-up alarm should sound when the machine is in reverse.

Do not operate the machine in low light conditions. An optional work and road light package is available.

Operators must comply with employer, job site and governmental rules regarding use of personal protective equipment.

Do not drive the machine directly up to anyone.

Do not drive the machine unless the stabilizers are fully retracted.

Always make sure that mirrors and cab glass are clean and do not obstruct the operators view of the travel path or load.

Scan the area prior to operating the machine. Look in the direction of travel. Use mirrors to assist in checking all around the machine.

Keep windows and mirrors clean, adjusted and in good repair.

Be aware of the machine load swing area.

Do not rely on the rear proximity alarm system to determine if personnel or objects are behind the machine. The system has limitations due to maintenance practices, the size or shape of the object, composition, environmental conditions and operating range. This system is set up for detection at a reverse speed of a maximum of 3 feet per second / 0.9 meters per second (walking pace). Refer to the detection zone chart in the back of this manual.

https://truckmanualshub.com/

Work Area Safety

⚠ Falling Object Hazards

Operate the machine at speeds that will keep the load under control. Start and stop movements smoothly.

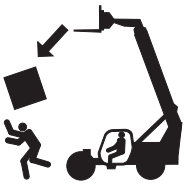

Keep people, equipment and material out of the work area. Do not operate the machine while people are under or near an elevated boom, whether it is loaded or unloaded.

Be sure the load is secure before lifting it. Always make sure the quick attach pin is inserted and secured.

⚠ Bodily Injury Hazards

Always adjust the seat and fasten the seat belt before starting the engine.

Do not operate the machine with a hydraulic oil or air leak.
An air leak or hydraulic leak can penetrate and/or burn skin.

Relieve pressure before disconnecting hydraulic lines. Keep away from leaks and pin holes. Use a piece of cardboard or paper to search for leaks. Do not use your hand.

Fluid injected into skin must be surgically removed within a few hours by a doctor familiar with this type of injury or gangrene will result.

Stay clear of belts and fans when the engine is running.

Always operate the machine in a well-ventilated area to avoid carbon monoxide poisoning.

Improper contact with components under any cover will cause serious injury. Only trained maintenance personnel should access compartments. Access by the operator is only advised when performing a pre-operation inspection. All compartments must remain closed and secured during operation.

Keep body parts, such as hand, fingers annd arms, away from moving components.

Always use provided latches and handles for opening and closing doors and covers.

https://truckmanualshub.com/

Work Area Safety

⚠ Damaged Machine Hazards

Do not use a damaged or malfunctioning machine.

Conduct a thorough pre-operation inspection of the machine and test all functions before each work shift. Immediately tag and remove from service a damaged or malfunctioning machine.

Be sure all maintenance has been performed as specified in this manual and the appropriate Genie service manual.

Be sure all decals are in place and legible.

Be sure the operator's and safety manuals are complete, legible and in the storage container located in the cab.

Do not attempt to start the machine by towing or pushing.

Do not attempt to use the forks or attachments for prying wedged or frozen loads free.

Do not push or pull objects or loads with the forks, attachment or boom.

Do not exceed 20 mph travelling speed when driving downhill.

If engine display lights or engine condition indicator lights are on, see the operating Instructions section. Continued use when engine lights are on could result in reduced torque and engine speed.

⚠ Component Damage Hazards

Do not use any battery or charger greater than 12V to jump-start the engine.

Do not use the machine as a ground for welding.

Do not drive the machine unless the stabilizers are fully retracted.

Do not operate the machine when the SCR (selective catalytic reduction) regeneration operation is running. See Operating Instructions section.

Diesel exhaust fluid (DEF) is corrosive to metal and paint. If DEF is spilled, it should be cleaned up immediately with warm water.

Do not use high pressure water on the air filter grid.

https://truckmanualshub.com/

Work Area Safety

⚠ Crush Hazards

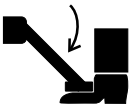

Keep clear of moving stabilizers

Keep clear of moving parts during machine operation and make sure personnel and bystanders are kept clear of moving parts during operation.

Set the parking brake, put the transmission in neutral and lower the carriage or the attachment to the ground before leaving the machine.

Keep clear of elevated components.

Support components before performing service.

⚠ Burn Hazards

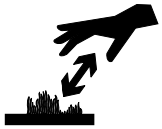

Allow hot surfaces to cool before touching or servicing

⚠ Explosion and Fire Hazards

Do not start the engine if you smell or detect liquid petroleum gas (LPG), gasoline, diesel fuel or other explosive substances.

Do not refuel the machine with the engine running.

Refuel the machine and charge the battery only in an open, well-ventilated area away from sparks, flames and lighted tobacco.

Do not operate the machine in hazardous locations or locations where potentially flammable or explosive gases or particles may be present.

Do not spray ether into engines equipped with glow plugs or air intake grid heaters.

Do not use air or oxygen for charging the accumulators.

https://truckmanualshub.com/

Work Area Safety

⚠ Electrocution Hazards

This machine is not electrically insulated and will not provide protection from contact with or proximity to electrical current.

Obey all local and governmental regulations regarding required clearance from electrical power lines. At a minimum, the required clearance contained in the chart below must be followed.

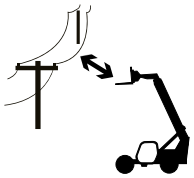

Line Voltage	Required	Clearance
0 to 50kV	10 ft	3.05 m
>50 to 200kV	15 ft	4.60 m
>200 to 350kV	20 ft	6.10 m
>350 to 500kV	25 ft	7.62 m
>500 to 750kV	35 ft	10.67 m
>750 to 1000kV	45 ft	13.72 m
over 1000kV		see below

For power lines over 1000kV, the minimum clearance distance must be established by the utility owner or operator or by a registered professional engineer who is a qualified person with respect to electrical power transmission and distribution.

Do not use the machine as a ground for welding.

Always contact the electrical power line owner. The electrical power shall be disconnected or the power lines moved or insulated before machine operations begin.

Allow for boom and attachment movement, electrical line sway or sag, and beware of strong or gusty winds.

Keep away from the machine if it contacts energized power lines. Personnel on the ground or in the platform must not touch or operate the machine until energized power lines are shut off.

Do not operate the machine during lightning or storms.

https://truckmanualshub.com/

Work Area Safety

⚠ Battery Safety

Burn Hazards

Batteries contain acid. Always wear protective clothing and eye wear when working with batteries.

Avoid spilling or contacting battery acid. Neutralize battery acid spills with baking soda and water.

Explosion Hazards

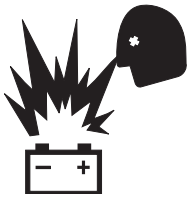

Keep sparks, flames and lighted tobacco away from batteries. Batteries emit explosive gas.

Electrocution Hazard

Avoid contact with electrical terminal.

During maintenance or repair works, and while welding, disconnect the battery turning the cut-out switch (see Inspection for Decals section).

After turning off the engine, wait for 120 seconds before activate the cut-out switch.

⚠ Employer's Responsibilities

Employers are responsible for providing a safe work environment and for complying with local and national governmental regulations.

⚠ Personal Safety

Be sure that everyone working on or near this machine is familiar with the applicable safety precautions.

https://truckmanualshub.com/

Legend

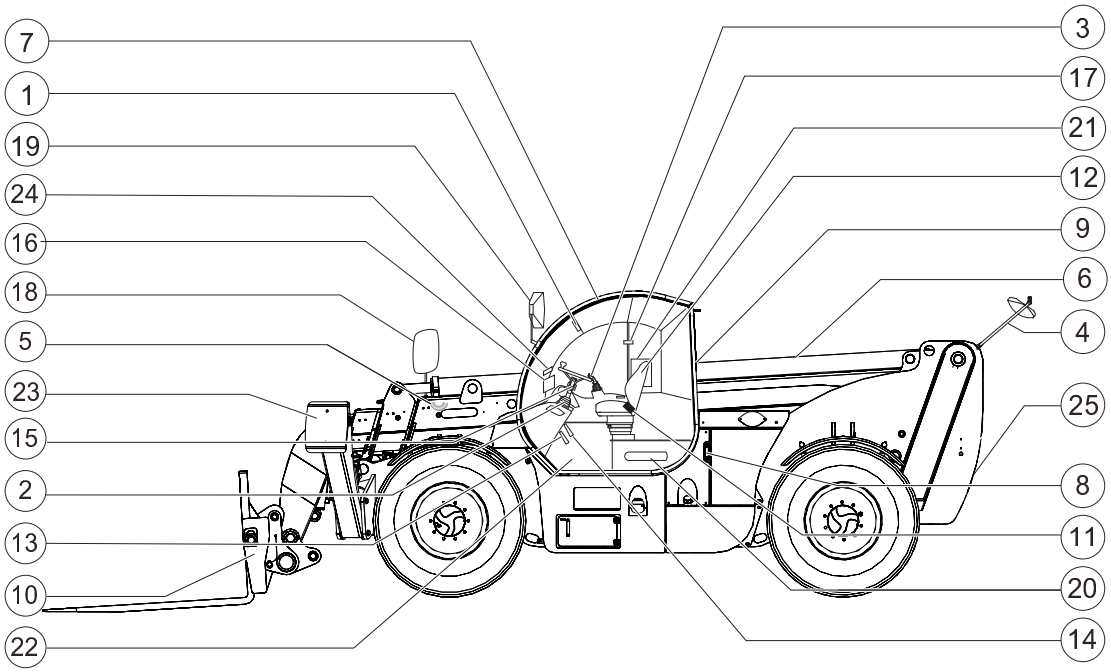

1. Left/right level indicator
2. Steering wheel
3. Control handle
4. Rear convex mirror
5. Boom angle indicator
6. Boom
7. Cab
8. Hydraulic oil level gauge
9. Engine (on opposite side of machine)
10. Forks
11. Seat belt
12. Seat
13. Brake pedal
14. Accelerator pedal
15. Transmission control lever
16. Load charts
17. Front/rear level indicator
18. Right rear view mirror
19. Left rear view mirror
20. Fire extinguisher (if equipped)
21. Operator's manual location (canopy version)
22. Operator's manual location (closed cab version)
23. Stabilizer
24. Rear proximity display and alarm (if equipped)
25. Rear proximity alarm sensor (if equipped)

https://truckmanualshub.com/

Controls

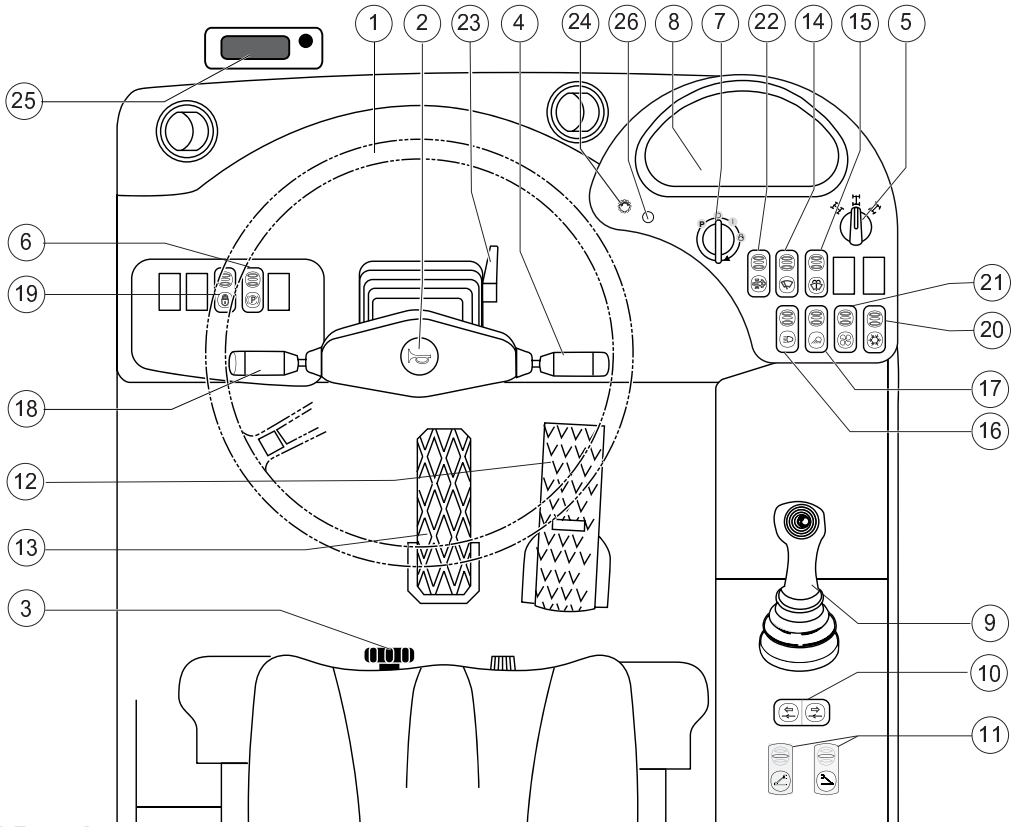

Control Panel

1. Steering wheel
2. Horn button
3. Heater and Air conditioning controls (if equipped)
4. Turn signal lever/Hazard warning lights (if equipped)
5. Steer select switch
6. Parking brake switch
7. Ignition switch
8. Instrument panel
9. Control handle
10. Auxiliary hydraulics switch
11. Stabilizers switches
12. Accelerator pedal
13. Brake pedal
14. Windshield wiper switch (if equipped)
15. Windshield washer switch (if equipped)
16. Road lights switch (if equipped)
17. Work light switch (if equipped)
18. Transmission control lever/Transmission mode
19. Lock/unlock enabling switch (if equipped)
20. A/C switch (if equipped)
21. Cab heater fan switch (if equipped)
22. SCR switch
23. Steering column tilt adjustment lock
24. Not active
25. Rear Object Detection System (if equipped)
26. Diagnostic button

https://truckmanualshub.com/

Controls

1 Steering wheel

Turn the steering wheel to the right to turn the front wheels to the right. Turn the steering wheel to the left to turn the front wheels to the left.

2 Horn button

Press this button and the horn will sound. Release the button and the horn will stop.

3 Heater and air conditioning controls (if equipped)

4 Turn signal lever/Hazard warning lights (if equipped)

Move the lever forward to activate the left turn signal. Move the lever backward to activate the right turn signal.

Rotate the end of the lever backward to activate the hazard warning lights. Rotate the end of the lever forward to deactivate the hazard warning lights.

5 Steering mode selector

Rotate the steer selector to the right side to select four-wheel steer. Rotate the steer selector to the middle position to select two-wheel steer. Rotate the steer selector to the left to select crab steer.

6 Parking brake switch

Push the bottom of the rocker switch to turn the parking brake on. Push the top of the switch to turn the parking brake off.

7 Ignition switch

Turn the key until the engine starts; when released, key springs back to pos. **I** automatically. Position **P** is not active.

8 Instrument panel

9 Control handle

Pull the Control handle back and the boom will raise. Push the Control handle forward and the boom will lower. Push the Control handle to the right and the boom will extend. Pull the Control handle to the left and the boom will retract. Hold down the grey thumb switch and pull the Control handle back and the forks will tilt up. Hold down the grey thumb switch and push the Control handle forward and the forks will tilt down. Hold the grey finger switch and push the Control handle to the right and the machine will sway to the right. Hold the grey finger switch and pull the Control handle to the left and the machine sway to the left.

10 Auxiliary hydraulics switch

Push the left side of the auxiliary hydraulics button and the carriage will swing or rotate to the left. Push the right side of the auxiliary hydraulics button and the carriage will swing or rotate to the right.

Push and Hold the Lock/unlock enabling switch 19 and push the left side of the auxiliary hydraulics button to lock the attachment; Push and Hold the Lock/unlock enabling switch 19 and push the right side of the auxiliary hydraulics button to unlock the attachment.

11 Stabilizers switches

Push the top of the switches to extend and lower the stabilizers. Push the bottom of the switches to raise and retract the stabilizers.

12 Accelerator pedal

13 Brake pedal

14 Windshield wiper switch (if equipped)

Push the switch to turn the wiper on: first position for low speed and second position for high speed. Push the top of the switch to turn the wiper off.

15 Windshield washer switch (if equipped)

Push and hold the switch to turn the washer on. Release the switch to turn the washer off.

16 Road lights switch (if equipped)

Push the bottom of the switch to turn the road lights on. Push the top of the switch to turn it off.

17 Work light switch (if equipped)

Push the bottom of the switch to turn the boom working light on. Push the top of the switch to turn it off.

https://truckmanualshub.com/

Controls

18 Transmission control lever/Transmission mode

Move the transmission control lever forward for forward gear. Move the lever toward you for reverse gear. Move the lever to the center position for neutral.

Rotate the end of the lever to pos 1 to turn the transmission on first gear fixed; rotate the end of the lever to pos A to turn the transmission control on automatic mode (2 gears).

19 Lock/unlock enabling switch (if equipped)

Push and hold the switch to enable the coupling or the release of the attachment, managed by the ***Auxiliary hydraulics switch 10***.

20 A/C switch (if equipped)

Push the bottom of the switch to turn the A/C on. Push the top of the switch to turn the A/C off.

21 Cab heater fan switch (if equipped)

Push the switch to turn the cab heater fan on: first position for low speed and second position for high speed. Push the top of the switch to turn the cab heater fan off.

22 SCR switch

Push the bottom of the switch to enable the SCR regeneration.

23. Steering column tilt adjustment lock.

Unlock the lever on the bottom right side and pull or push the steering wheel to the required position, then re-lock it.

25 Rear Object Detection System (RODS) (if equipped)

26 Diagnostic button

Push the button to scroll the LCD screen menu.

https://truckmanualshub.com/

Controls

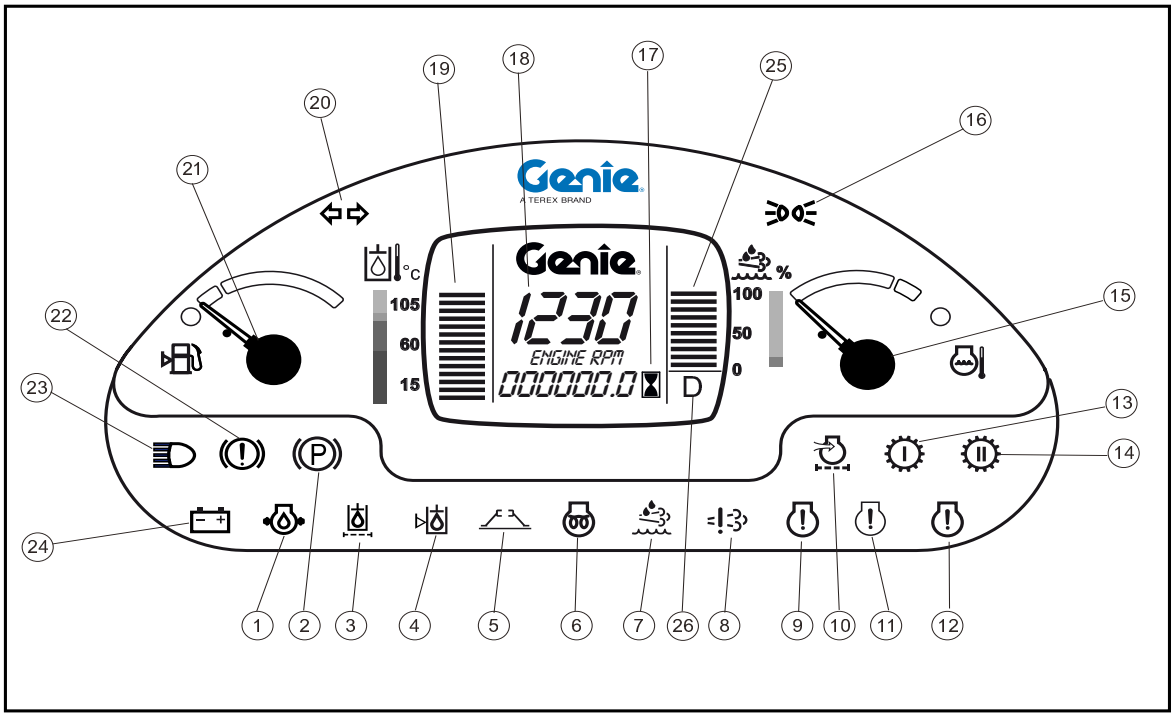

Instrument Panel

1. Low engine oil pressure indicator light
2. Parking brake engaged indicator light
3. Hydraulic oil filter clogged indicator light
4. Low hydraulic oil level indicator light
5. Not active
6. Glow plugs preheating indicator light
7. DEF/SCR Warning light
8. Not active
9. Not active
10. Engine air filter restricted indicator light
11. Engine Warning light
12. Engine Critical Fault indicator light
13. 1st gear engaged indicator light
14. 2nd gear engaged indicator light
15. High engine coolant temperature gauge
16. Position light indicator light
17. Hour meter
18. Tachometer
19. High hydraulic oil temperature indicator light
20. Turn signal indicator light
21. Fuel level gauge with low fuel indicator light
22. Brake pressure low indicator light
23. High beam indicator light
24. Battery voltage low indicator light
25. DEF Level gauge
26. Engine version indicator

https://truckmanualshub.com/

Controls

1 Low engine oil pressure indicator light

When illuminated this light indicates that the engine oil pressure is too low which can lead to machine damage. Discontinue use of the machine and service.

3 Hydraulic oil filter clogged indicator light

When illuminated this light indicates that the hydraulic oil filter is clogged which can lead to machine damage. Discontinue use of the machine and service.

4 Low hydraulic oil level indicator light

When illuminated this light indicates that the hydraulic oil level is too low which can lead to machine damage. Replenish and eliminate the oil leak.

7 SCR System Warning Lamp

Level, Quality, System tampering or System malfunction are indicated by the light. Only the DEF level is identified by different frequency of blinking light, in other cases the light is ON in solid mode.

10 Engine air filter restricted indicator light

When this lamp comes on, the engine air filter is clogged proceed with cleaning or changing the air filter cartridge.

11 Engine Warning Light

This light flashes to warn engine problem. To identify the problem, see the two sections “Engine Lamp Logic”.

12 Engine Critical Fault indicator light

This light comes on to warn of a problem of the engine. To identify the problem, see the two sections “Engine Lamp Logic”.

15 High engine coolant temperature gauge

When gauge reaches red, the engine coolant is too hot which can lead to engine damage. Discontinue use and service the engine.

17 Hour meter

The hour meter displays the engine operating hours. When the machine speed exceeds 2 mph the hour meter displays the mph.

19 High hydraulic oil temperature indicator light

This indicates the temperature of the hydraulic oil in the tank which can lead to machine damage. Discontinue use of the machine and service.

22 Brake pressure low indicator light

It lights when the pressure of the braking circuit is too low for a correct functioning which can lead to machine damage. Discontinue use of the machine and service.

25 DEF Level gauge

The gauge shows the DEF tank level.

26 Engine Version Indicator

This indicator shows the engine version equipped on the GTH, D for Deutz engine.

https://truckmanualshub.com/

Inspections

Do Not Operate Unless:

☑ You learn and practice the principles of safe machine operation contained in this operator's manual.

1. Avoid hazardous situations.
2. **Always perform a pre-operation inspection.**

   Know and understand the pre-operation inspection before going on to the next section.
3. Always perform function tests prior to use.
4. Inspect the workplace.
5. Only use the machine as it was intended.

Pre-operation Inspection Fundamentals

It is the responsibility of the operator to perform a pre-operation inspection and routine maintenance.

The pre-operation inspection is a visual inspection performed by the operator prior to each work shift. The inspection is designed to discover if anything is apparently wrong with a machine before the operator performs the function tests.

The pre-operation inspection also serves to determine if routine maintenance procedures are required. Only routine maintenance items specified in this manual may be performed by the operator.

Refer to the list on the next page and check each of the items.

If damage or any unauthorized variation from factory delivered condition is discovered, the machine must be tagged and removed from service.

Repairs to the machine may only be made by a qualified service technician, according to the manufacturer's specifications. After repairs are completed, the operator must perform a pre-operation inspection again before going on to the function tests.

Scheduled maintenance inspections shall be performed by qualified service technicians, according to the manufacturer's specifications and the requirements listed in the responsibilities manual.

https://truckmanualshub.com/

Inspections

Pre-operation Inspection

- ❑ Be sure that the operator's and safety manuals are complete, legible and in the storage container located in the cab.
- ❑ Be sure that all load charts are in place and legible.
- ❑ Be sure that all decals are legible and in place. See Inspections section.
- ❑ Check for hydraulic oil leaks and proper oil level. Add oil if needed. See Maintenance section.
- ❑ Check for battery fluid leaks and proper fluid level. Add distilled water if needed. See Maintenance section.
- ❑ Check the transmission oil level. Add oil if needed. See Maintenance section.
- ❑ Check DEF level. See Maintenance section
- ❑ Drain the fuel/water separator. See Maintenance section.
- ❑ Check for engine oil leaks and proper oil level. Add oil if needed. See Maintenance section.
- ❑ Air-filled tires models: Check for proper tire pressure. Add air if needed. See Maintenance section.

Check the following components or areas for damage, improperly installed or missing parts and unauthorized modifications:

- ❑ Electrical components, wiring and electrical cables
- ❑ Hydraulic hoses, fittings, cylinders and manifolds
- ❑ Fuel and hydraulic tanks
- ❑ DEF tank
- ❑ Drive motors and drive hubs
- ❑ Load charts and angle indicators
- ❑ Boom wear pads
- ❑ Tires and wheels
- ❑ Mirrors and rear object detection system (if equipped)
- ❑ Engine and related components
- ❑ Limit switches
- ❑ Lights, alarms and beacons (if equipped)
- ❑ Pins, nuts, bolts and other fasteners
- ❑ Rear view mirrors and seat belts
- ❑ Any attachments being used

Check entire machine for:

- ❑ Cracks in welds or structural components
- ❑ Dents or damage to machine
- ❑ Excessive rust, corrosion or oxidation
- ❑ Be sure that all structural and other critical components are present and all associated fasteners and pins are in place and properly tightened.
- ❑ Be sure the windshield and windows (if equipped) are clean and free of obstructions that might limit visibility.
- ❑ Be sure that the rear proximity alarm, display and sensor (if equipped) are present, in place and clear of any dirt, mud, snow or debris.
- ❑ After you complete your inspection, be sure that all guards, screens and compartment covers are in place and secured.

https://truckmanualshub.com/

Inspections

Do Not Operate Unless:

☑ You learn and practice the principles of safe machine operation contained in this operator's manual.

1. Avoid hazardous situations.
2. Always perform a pre-operation inspection.
3. **Always perform function tests prior to use.**

   Know and understand the function tests before going on to the next section.
4. Inspect the workplace.
5. Only use the machine as it was intended.

Function Test Fundamentals

The function tests are designed to discover any malfunctions before the machine is put into service. The operator must follow the step-by-step instructions to test all machine functions.

A malfunctioning machine must never be used. If malfunctions are discovered, the machine must be tagged and removed from service. Repairs to the machine may only be made by a qualified service technician, according to the manufacturer's specifications.

After repairs are completed, the operator must perform a pre-operation inspection and function tests again before putting the machine into service.

https://truckmanualshub.com/

Inspections

Function Tests

1 Select a test area that is firm, level and free of obstruction. Be sure there is no load on the forks or attachment.

2 Enter the cab and sit on the seat.

3 Adjust the seat and steering column, if needed.

4 Fasten and secure the seat belt around your waist.

5 Adjust the cab mounted mirror, the rear fish-eye mirror and the exterior right hand mirror, if required.

6 Be sure the parking brake is on and the transmission control is in neutral.

7 Start the engine. See Starting the Engine in the Operating Instructions section.

8 Rear object detection system (if equipped), when power is turned on, the display of the video camera on machine back (CCTV) runs a self-test.

Test the Ignition System

9 Set the transmision control lever in neutral position.

10 Step on the brake pedal. Push the top of the parking brake switch to turn it off

11 Insert the key in the ignition switch.

12 Turn the key to start the engine.

⊙ Result: The engine should not start.

13 Set the transmision control lever in gear.

14 Push the bottom of the parking brake switch to turn it on.

15 Insert the key in the ignition switch.

16 Turn the key to start the engine.

⊙ Result: The engine should not start.

Test the Control handle

17 Start the machine with the parking brake on and the transmission control lever set to neutral position.

18 Using the Control handle, momentarily raise the boom, extend the boom, retract the boom and lower the boom.

⊙ Result: All functions should operate smoothly.

19 Using the Control handle and the grey thumb switch, momentarily tilt the forks up and tilt the forks down.

⊙ Result: All functions should operate smoothly.

20 Using the Control handle and the grey finger switch, momentarily sway the machine to the right and to the left.

⊙ Result: The frame level function should operate smoothly.

https://truckmanualshub.com/

Inspections

Test the Steering

21 Rotate the steering mode selector to the right side to select four-wheel steer.

22 Check the steering operation by turning the steering wheel approximately ¼ turn in each direction.

⊙ Result: The front wheels should turn in the same direction as the steering wheel. The rear wheels should turn in the opposite direction.

23 Straighten the wheels.

24 Rotate the steering mode selector to the middle position to select two-wheel steer.

25 Check the steering operation by turning the steering wheel approximately ¼ turn in each direction.

⊙ Result: The front wheels should turn in the same direction as the steering wheel. The rear wheels should not turn.

26 Straighten the wheels.

27 Rotate the steering mode selector to the left to select crab steer.

28 Check the steering operation by turning the steering wheel approximately ¼ turn in each direction.

⊙ Result: The front wheels and the rear wheels should turn in the same direction as the steering wheel.

Test the Transmission and Brakes

29 Be sure the boom is fully lowered and retracted.

30 Step on the brake pedal. Push the top of the parking brake switch to turn it off.

31 Move the transmission control lever to forward. Slowly let up on the brake pedal. As soon as the machine starts to move, push the brake pedal.

⊙ Result: The machine should move forward, and then come to an abrupt stop.

32 Move the transmission control lever to reverse. Slowly let up on the brake pedal. As soon as the machine starts to move, push the brake pedal.

⊙ Result: The machine should move in reverse, and then come to an abrupt stop. The back-up alarm should sound when the transmission control lever is in reverse.

33 Move the transmission control lever to neutral.

34 Push the bottom of the parking brake switch.

⊙ Result: The red parking brake indicator light should come on, indicating the parking brake is on.

35 Move the transmission control lever forward, and then in reverse.

⊙ Result: The machine should not move.

https://truckmanualshub.com/

Inspections

Test the Transmission mode

36 Be sure the boom is retracted and in the transport position.

37 Be sure that the parking brake is on and the transmission control lever is in neutral position .

38 Rotate the end of the transmission control lever to position 1.

39 Step on the brake pedal. Push the top of the parking brake switch to turn it off and then let up on the brake pedal.

⊙ Result: The machine should move in first gear.

40 Turn the parking brake on and put the transmission control lever to neutral position.

41 Rotate the end of the transmission control lever to position A.

42 Step on the brake pedal. Push the top of the parking brake switch to turn it off and then let up on the brake pedal.

⊙ Result: The machine should move in automatic transmission.

Test the Drive and Sway Cutout

43 Raise the boom to 50°. Do not extend the boom.

44 Step on the brake pedal.

45 Push the top of the parking brake switch. The parking brake is off when the indicator light is off.

46 Put the transmission control lever in forward.

⚠ Slowly let up on the brake pedal.

⊙ Result: The drive function should not operate.

47 Put the transmission control lever in neutral.

48 Set parking brake.

⚠ Slowly sway the machine to the left and to the right.

⊙ Result: The sway function should not operate.

Test the Stabilizers

49 Push the top of each stabilizers switch and fully extend and lower the stabilizers. Push the bottom of each stabilizer switch to fully raise and retract the stabilizers.

⊙ Result: The stabilizers should operate smoothly and in the expected direction.

Test the Lights (if equipped)

50 Verify that all lights are functional.

Test Auxiliary Hydraulics (if equipped)

51 Push the left side of the auxiliary hydraulics button

⊙ Result: The function should operate smoothly and in the expected direction.

52 Push the right side of the auxiliary hydraulics button.

⊙ Result: The function should operate smoothly and in the expected direction.

https://truckmanualshub.com/

Test the Rear Proximity Alarm System (if equipped)

The system provides a visible and audible indication of objects behind the machine, when they are within the detection range of the sensor and while in reverse gear.

Be sure that there are no personnel and obstacles behind the machine which the sensor may detect on startup.

53 Locate a sizable item, like a safety cone or pallet of bricks, that the sensor will detect and position the rear of the telehandler about 15 feet / 4.5 meters in front of it. Do not perform the function test if there are people behind the machine.

54 Set the parking brake, place the transmission into neutral and start the engine. Press and hold the brake pedal and place the transmission in reverse.

⊙ Result: The green power light on the rear proximity display should be on. If the green power light is not on, the system needs to be repaired.

55 Release the parking brake and slowly let up on the brake pedal and slowly approach the object. Stop the machine before it reaches the object.

⊙ Result: The rear proximity display should show an orange light on. The alarm should sound with increased frequency as the machine approaches the object.

56 Place the transmission in forward and slowly drive away from the object.

⊙ The rear proximity display should show an orange light on, and the alarm should sound with decreased frequency as the machine moves away the object.

⊙ As the machine moves away from the object, the display should show the green light on,and no alarm should be sounding.

57 Stop the machine, place the transmission in neutral and turn off the engine.

https://truckmanualshub.com/

Inspections

Do Not Operate Unless:

☑ You learn and practice the principles of safe machine operation contained in this operator's manual.

1. Avoid hazardous situations.
2. Always perform a pre-operation inspection.
3. Always perform function tests prior to use.
4. **Inspect the workplace.**

   Know and understand the workplace inspection before going on to the next section.
5. Only use the machine as it was intended.

Workplace Inspection Fundamentals

The workplace inspection helps the operator determine if the workplace is suitable for safe machine operation. It should be performed by the operator prior to moving the machine to the workplace.

It is the operator's responsibility to read and remember the workplace hazards, then watch for and avoid them while moving, setting up and operating the machine.

Workplace Inspection Checklist

Be aware of and avoid the following hazardous situations:

- ❑ drop-offs or holes
- ❑ bumps, floor obstructions or debris
- ❑ sloped surfaces
- ❑ unstable or slippery surfaces
- ❑ overhead obstructions and high voltage conductors
- ❑ hazardous locations
- ❑ inadequate surface support to withstand all load forces imposed by the machine
- ❑ wind and weather conditions
- ❑ the presence of unauthorized personnel
- ❑ other possible unsafe conditions

https://truckmanualshub.com/

Inspections

Inspection for Decals with Words

Use the pictures on the next page to verify that all decals are legible and in place.

Below is a numerical list with quantities and descriptions.

Part No.	Decal Description	Qty
28159	Label – Diesel	1
1263543	Warning – Compartment Access	1
28236	Warning – Read Operator's Manual	1
82366	Label – Chevron Rando HD	1
82558	Warning – Skin Injection Hazard	1
97667	Warning – Burn Hazard	2
214418	Danger/Warning – 2 Decal Combination	3
215267	Label – Product Registration	1
215268	Warning – Fall Hazard, Work Platform	1
237598	Warning – Crush Hazard, Moving Machine	3
237605	Warning – Burn Hazard, Hot Parts	1
237606	Label – Single Controller	1
237970	Warning – Crush Hazard, Tires	2
237971	Danger – Explosion/Burn Hazard, Fueling	1
826345	Label – Ultra Low Sulfur Fuel Only	1
09.4618.1399	Label - Upper Door Unlock System	1
09.4618.1418	Label - Emergency Exit	1
09.4618.1766	Cosmetic - GTH-1256	1
09.4618.2035	Notice - Driving Downhill	1
09.4618.1621	Cosmetic - Genie	1
09.4618.1622	Danger/Warning – 7 Decal Combination	1
09.4618.1625	Cosmetic - Genie	1
09.4618.1767	Cosmetic - GTH-1256	2
09.4618.1765	Cosmetic - GTH-1256	1
09.4618.1768	Cosmetic - GTH-1256	1
09.4618.1635	Danger – Explosion/Burn Hazard	1
09.4618.1638	Label - Test Ports DEUTZ Configuration	1
09.4618.1828	Label – Transport and Lifting	1
09.4618.1646	Label - Inching Valve	1
09.4618.1655	Notice - Cut-out Switch	1

Part No.	Decal Description	Qty
09.4618.1842	Warning - Crush Hazard, Stabilizers	4
09.4618.1834	Cosmetic - Genie low relief	1
1268754	Label - DEF Fill	1
09.4618.1919	Label - Cut out battery timer	1
237601	Label - Explosion, Burn Hazard	1
1272242	Label - Machine Registration Owner/ Transfer	1
09.4618.2039	Label - Transmission Error Reset Instruction	1
1280819	Decal - Warning Cancer and Reproductive Harm, Prop 65	1
1280820	Decal - Fuel, Diesel Exhaust, Prop 65	1
09.4618.2050	Decal - Air Filter Grid	1
09.4618.1823	Label - Load Chart, Standard Carriage on wheels	1
09.4618.1824	Label - Load chart, Standard Carriage on stab	1
09.4618.1825	Label - Load Chart, Rotate Carriage on wheels	1
09.4618.1826	Label - Load Chart, Rotate Carriage on stab	1
09.4618.1830	Label - Load Chart, Rubbish Bucket on wheels	1
09.4618.1831	Label - Load Chart, Rubbish Bucket on stab	1
09.4618.1833	Label - Load Chart, 7 ft Truss Boom on wheels	1
09.4618.1832	Label - Load Chart, 7 ft Truss Boom on stab	
09.4618.1843	Label - Load Chart, Shackle on wheels	1
09.4618.1844	Label - Load Chart, Shackle on stab	1

https://truckmanualshub.com/

Inspections

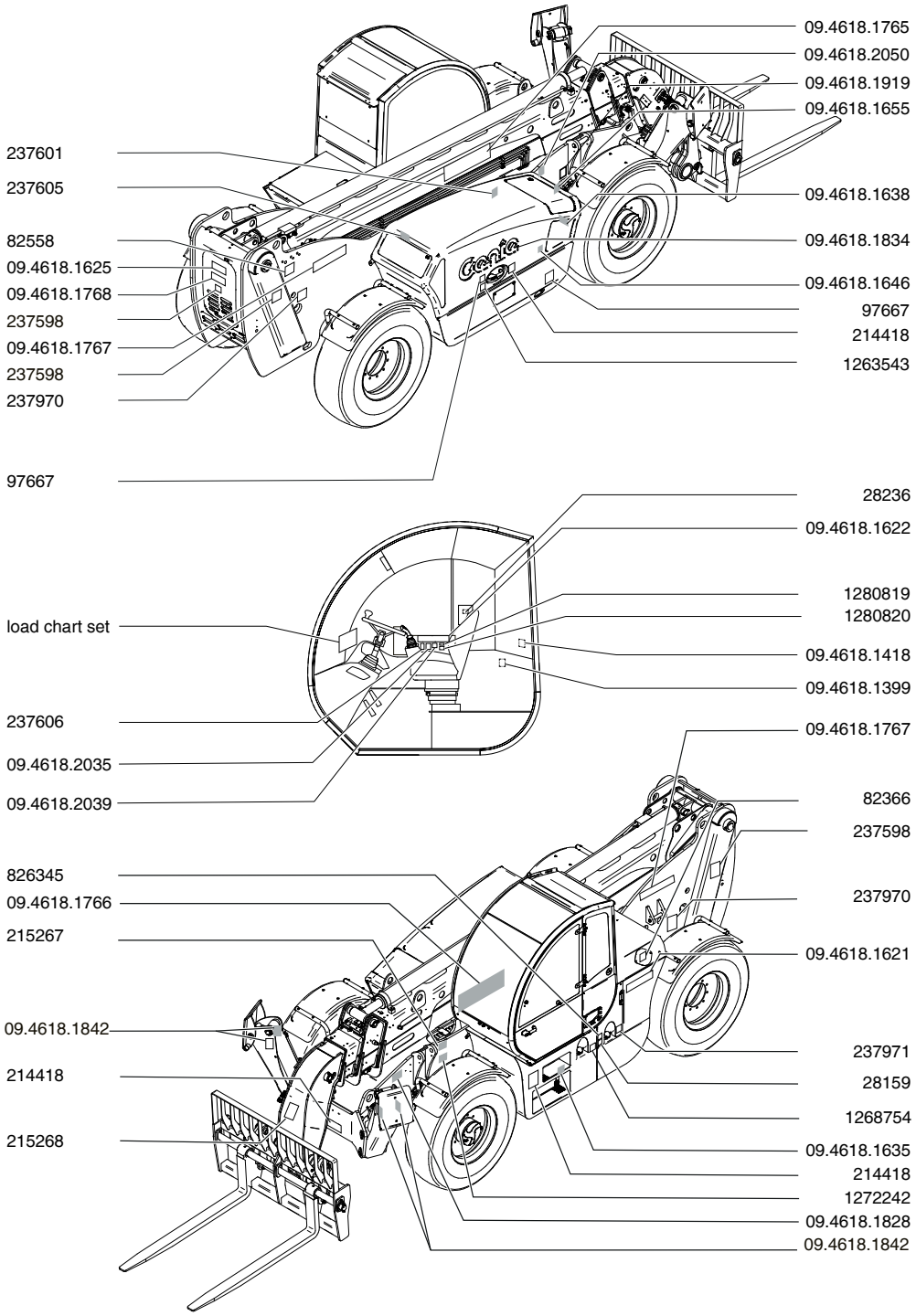

Shading indicates decal is hidden from view, i.e. under covers

https://truckmanualshub.com/

Operating Instructions

Do Not Operate Unless:

☑ You learn and practice the principles of safe machine operation contained in this operator's manual.

1 Avoid hazardous situations.

2 Always perform a pre-operation inspection.

3 Always perform function tests prior to use.

4 Inspect the workplace.

5 Only use the machine as it was intended.

Fundamentals

The Operating Instructions section provides instructions for each aspect of machine operation. It is the operator's responsibility to follow all the safety rules and instructions in the operator's, safety and responsibilities manuals.

A variable reach rough terrain forklift truck is defined as a wheeled type truck designated primarily as a fork truck with a pivoted boom, which may be equipped with attachments for lifting material. Using it for any other use is unsafe and dangerous.

Only trained and authorized personnel should be permitted to operate a machine. If more than one operator is expected to use a machine at different times in the same work shift, they must all be qualified operators and are all expected to follow all safety rules and instructions in the operator's, safety and responsibilities manuals. That means every new operator should perform a pre-operation inspection, function tests, and a workplace inspection before using the machine.

Additionally, everyone working on or near the product also needs to be familiar with the applicable safety precautions.

https://truckmanualshub.com/

Operating Instructions

Parking Brake

Always use the parking brake switch to apply the parking brake before raising the boom.

Always engage the parking brake before leaving the driver's seat.

Push the bottom of the switch to turn the parking brake on.

Push the top of the switch to turn the parking brake off.

Brake Pedal

Use the brake pedal to control the machine speed and to stop the machine motion.

Push and hold the brake pedal to stop the machine.

Starting the Engine

1 Be sure the parking brake is set and the transmission control lever is in the neutral position.

2 Insert the key in the ignition switch.

3 Turn the key until the engine starts.

If the engine fails to start after 30 seconds of cranking, determine the cause and repair any malfunction. Wait 120 seconds before trying to start again.

Starting in Cold Condition

In cold conditions, 20°F / -6°C and below, warm the engine for 5 minutes before operating to prevent hydraulic system damage.

In extreme cold conditions, 0°F / -18°C and below, machines should be equipped with optional cold start kits. Attempting to start the engine when temperatures are below 0°F / -18°C may require the use of a booster battery.

Raising and Lowering the Stabilizers

Push the top of the switch to extend/lower the stabilizers. Push the bottom of the switch to raise/retract the stabilizers.

Lower each stabilizer until the footpad is in firm contact with the ground. The tires do not need to be off the ground.

Steer Select

Always position all wheels in line with the machine before switching the steering mode.

Do not realign the wheels while driving.

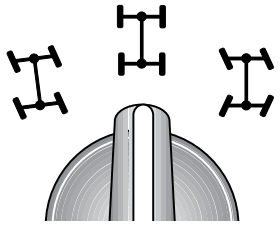

Emergency Exit (if equipped)

Pull the retaining pins and push out the window.

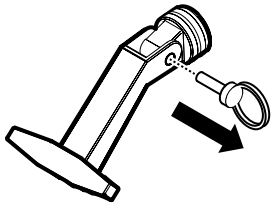

https://truckmanualshub.com/

Operating Instructions

Rear Object Detection System (if equipped)

The RODS system is intended to only augment, not replace, the operator's direct vision or indirect vision using the mirrors and to provide an additional means of hazard detection.

Follow the operating instructions in this operators manual.

Fire Extinguisher (if equipped)

To operate an extinguisher:

1 Pull the pin

2 Aim nozzle at base of fire

3 Squeeze the handle

4 Sweep nozzle side to side

Exterior Emergency Exit (Safe T Punch) (if equipped)

Only install this device on tempered glass 0.15-0.24 in / 4-6 mm thick.

1. Twist off the plastic security strip.
2. Hit the center of the punch with force. Repeat hitting punch until glass breaks.

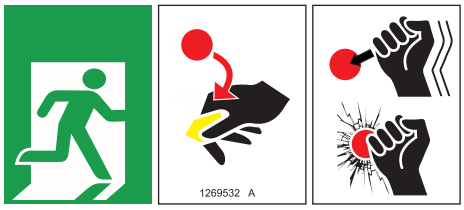

3. Clear away window debris.

Transmission Control

Use the transmission control lever to control the direction of machine travel.

Step on the service brake pedal before putting the transmission into gear.

To drive forward, move the transmission control lever towards the front of the machine.

To drive in reverse, move the transmission control lever towards the back of the machine.

To return to neutral, move the transmission control lever to the center position.

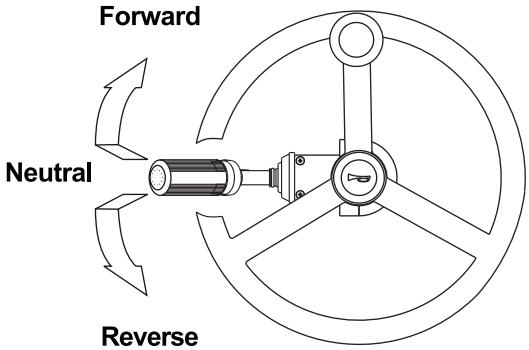

https://truckmanualshub.com/

Operating Instructions

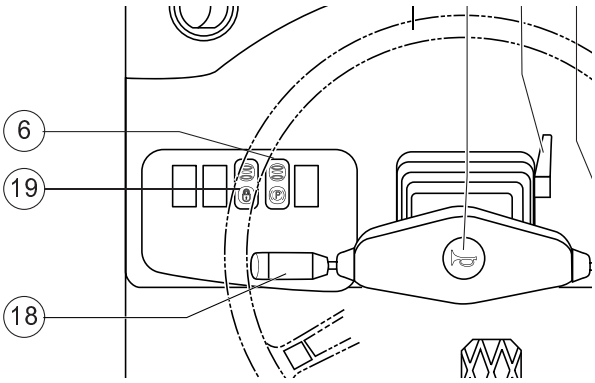

With the parking brake engaged and the transmission control lever in neutral position rotate the end of the transmission control lever (18) to position 1 and the machine will be placed into first gear. With the parking brake engaged and the transmission control lever in neutral position rotate the end of the transmission control lever (18) to position A and the machine will be placed into automatic transmission mode (i.e.two gears). The light of first or second gear is on to show which gear is in use.

Stop the machine and place the Transmission mode switch into first gear only (i.e. not automatic mode) before ascending steep slopes.

The speed engagement is signalled by the dedicated indicator lights, according to the engaged speed.

Resetting Error Messages

When the transmission control unit detects an error, the instrument panel will display either an **RST 1** or **RST 2** reset code. The operator has to reset the system according to the instructions below:

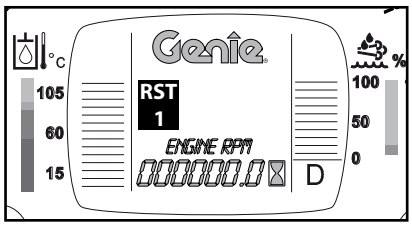

When the instrument panel shows the reset code **RST 1**:

1 turn the ignition switch off

2 turn the ignition swich on

When the instrument panel shows the reset code **RST 2**:

1 bring the machine to a stop on a firm level surface and set the brake

2 set the transmission control lever to the neutral position

If the message does not disappear after the resetting process, contact service personnel.

Frame Sway Control

Before raising the boom, the machine must be level.

1 Check the left to right level indicator. The left to right level indicator should be 0 degrees before raising the boom.

2 If the machine is not level, use the frame sway control function to level the machine.

⚠ Only use the frame sway control function if the boom angle indicator is at 0 degrees or less.

See Controller Movements section.

https://truckmanualshub.com/

SCR Regeneration

Based on the blinking combination of the "Regen. Required." label, proceed as below:

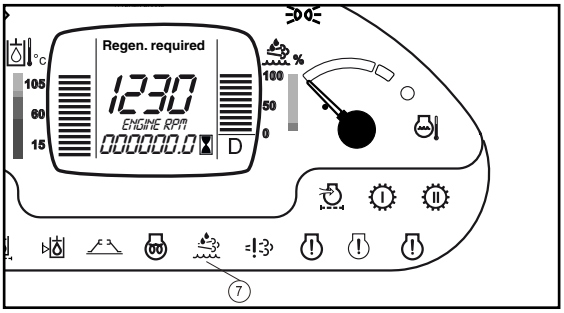

1. When on the display it appears the message "Regen. required" , the operator has to start the SCR regeneration following these instructions:

   i Select a safe outdoor parking location:
   - firm level surface
   - clear of obstruction and traffic
   - clear of fiammable material
   - clear of explosive atmospheres

   ii Set the parking brake.

   iii Move the transmission control lever to neutral.

   iv Warm up the engine; the coolant temperature must reach at least 75°C.

   v Keep the engine on.

   vi Activate the SCR regeneration pushing on the SCR switch: the engine automatically increases the speed level.

   vii During the SCR regeneration on the display it appears the message "Regen. Active".

   viii Using the machine during the standstill regeneration is prohibited.

   ix Keep clear of the exaust muffler area.

   x Don’t leave the machine unattended.

   xi Signpost the area.

   xii The regeneration lasts 35 or 40 minutes on average.

   xiii In case of need, regeneration can be stopped by pushing the SCR switch and then restarted.

   xiv Using the machine during standstill regeneration also leads to it being interrupted.

   xv Once the regeneration has been completed the engine will run at idle.

⚠ During SCR regeneration:
- steer clear of explosive atmospheres
- steer clear of fiammable material
- don’t operate the machine;

If the standstill regeneration request is not observed and the SCR is overloaded to an impermissible level, then the filter can only be regenerated via the DEUTZ service.

2. When on the display it appears the message "Regen. required (tool required)", the operator has to contact a qualified service technician.

https://truckmanualshub.com/

Operating Instructions

Transporting a Load

Always center the load on the forks. Position the load so that it is completely against the back of the fork frame. Fork length should always be at least 2/3 the load length.

The load should be kept as low to the ground as possible while traveling. Always move a loaded machine with the boom angle indicator at 0 degrees or less.

Tilt the forks back slightly to help keep the load secure.

Always bring the machine to a complete stop before applying the parking brake.

Raising and Placing a Load

Always center the load on the forks. Position the load so that it is completely against the back of the fork frame. Fork length should always be at least 2/3 the load length.

The load chart in the cab shows the operating limits of a properly maintained and operated machine. To use the load chart, the operator must know the weight of the load, its load center and how far out and up it is to be placed.

Refer to the Load Chart section of this manual for horizontal load centers exceeding 24 in / 61 cm from the front of the fork face.

This machine has more than one load chart. Be sure you are using the load chart that corresponds to the attachment on the machine and to the configuration of the stabilizers.

If you determine that the weight of the load cannot be placed at the height and angle you want, these options can be used:

1 If you have not lowered the stabilizers, lower the stabilizers and use the load chart for stabilizers down.

If the stabilizers are down:

2 Move the machine closer to the loading or pick point so that the weight of the load will meet the load chart specifications.

3 Divide the load into smaller pieces so that each piece meets the load chart specifications.

4 Obtain a larger machine capable of handling the load within specifications.

https://truckmanualshub.com/

Operating Instructions

Placing the load

1 Travel to the desired work site and carefully stop the machine.

2 Put the transmission in neutral.

3 Apply the parking brake.

4 Lower the stabilizers, if your configuration requires it.

5 Level the frame, if the left to right level indicator or the front to back level indicator is not at 0 degrees.

6 Gradually move the controller to raise and extend the boom to the required height.

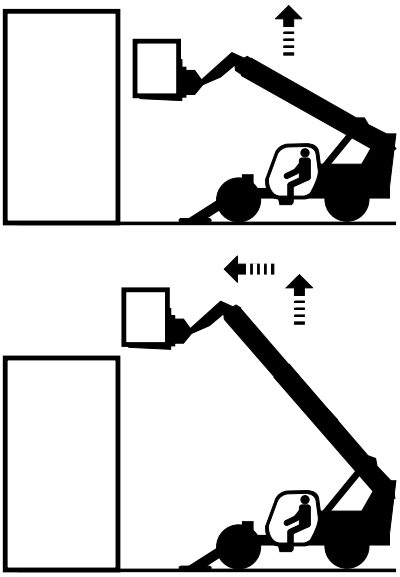

7 Gradually move the controller to lower and extend the boom into final position. Lower the load until the weight is completely off the forks. Do not apply a downward force with the forks.

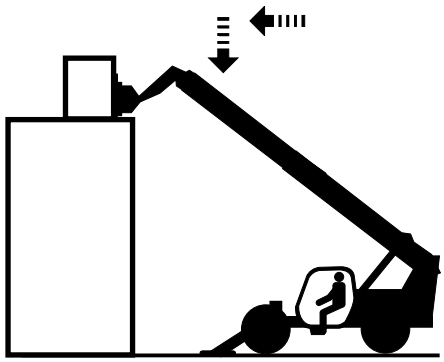

8 Gradually move the controller to raise and retract the boom. This will bring the forks out of the load.

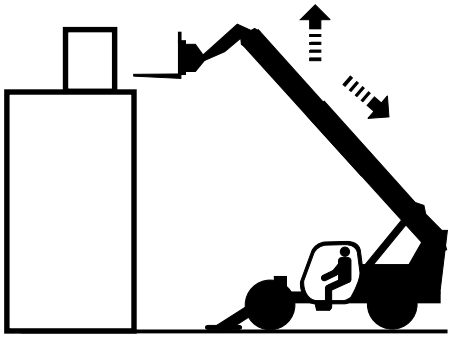

9 When the forks are clear of the load and the structure, the boom can be lowered and retracted.

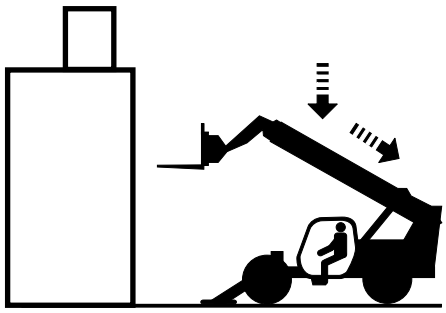

https://truckmanualshub.com/

Operating Instructions

Control handle

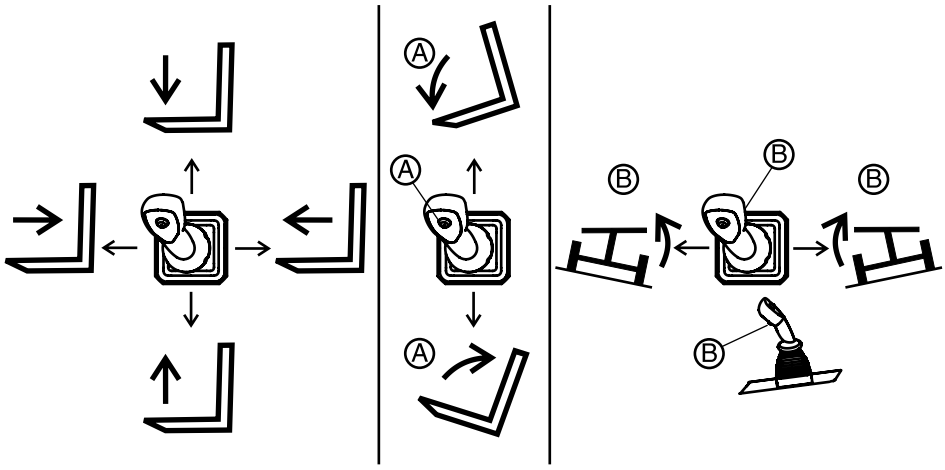

Control handle only | **Control handle only with grey thumb switch (A)** | **Control handle only with grey finger switch (B)**

https://truckmanualshub.com/

Operating Instructions

Rear Axle Lock

If the boom is raised above 50°, the transmission will shift to neutral and the frame sway function will not operate.

Boom and fork functions continue to operate.

To unlock the rear axle and to operate the frame sway function, lower the boom. When the boom is at or below 0°, the frame sway function will operate.

Quick Attach Instructions

Version with mechanical locking

1 Drive to the place where you will release the mounted attachment (when possible, a solid and sheltered site).
2 Disconnect the quick connectors of the attachment (if any).
3 Pull out the mechanical pin locking the attachment after removing the safety split-pin at its end.
4 Rest the attachment flat on the ground.
5 TIlt the attachment holding frame forward and lower the boom to release the attachment upper lock.
6 Move back with the machine and drive to the new attachment to be coupled.
7 Hold the frame tilted forward and hook the upper lock of the new attachment.
8 Retract and raise the attachment a small distance. It will centre automatically on the quick coupling frame.
9 Refit mechanical locking pin fixing it with its safety split-pin.
10 Re-couple the connectors of the attachment (if any).

Version with hydraulic locking *(optional)*

1. Drive to the place where you will release the mounted attachment (when possible, a solid and sheltered site).
2. Disconnect the quick connectors of the attachment (if any).
3. Rest the attachment flat on the ground.
4. Press the Lock/Unlock Enabling Switch and keep it pressed up to the end of the operation.
5. Free the attachment pressing the Auxiliary Line Switch towards right.
6. Tilt the attachment holding frame forward and lower the boom to release the attachment upper lock.
7. Move back with the machine and drive to the new attachment to be coupled.
8. Hold the frame tilted forward and hook the upper lock of the new attachment.
9. Retract and raise the attachment a small distance. It will centre automatically on the quick coupling frame.
10. Coupling the attachment pressing the Auxiliary Line Switch towards left together with the dashboard Lock/Unlock Enabling Switch.
11. Re-couple the connectors of the attachment (if any).

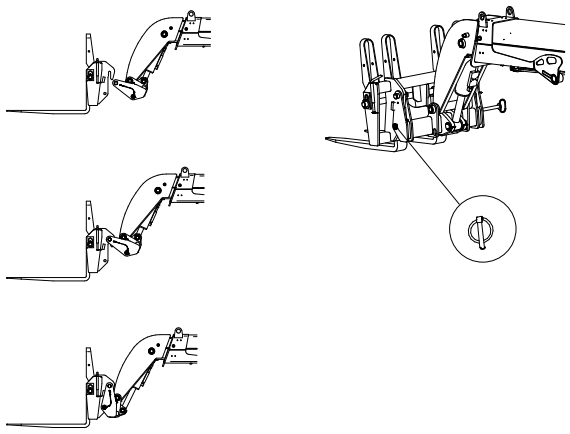

https://truckmanualshub.com/

Operating Instructions

Engine Condition Indicator

If the SCR warning light and/or the Engine Critical Fault indicator light switch on, contact service personnel.

After Each Use

1 Select a safe parking location—firm level surface, clear of obstruction and traffic.

2 Retract the stabilizers.

3 Retract and lower the boom to the stowed position. Lay forks flat on the ground to minimize potential for tripping.

4 Move the transmission control lever to neutral.

5 Set the parking brake.

6 Turn the key switch to the off position and remove the key to secure from unauthorized use.

7 Chock the wheels.

Jump Starting the Machine

Jump starting at the battery or battery replacement is required when the battery is discharged to the point where the battery will not crank the starter.

Never jump start the machine directly to the starter or the starter solenoid. Serious injury or death could result from the machine moving forward or backward.

To avoid personal injury when jump starting with another machine, be certain that the machines are not touching.

Never jump start a frozen battery as it will explode.

Keep sparks and flames away from the battery. Lead acid batteries generate explosive gases when charging. Wear safety glasses when working near batteries.

The booster battery must be 12V. The machine used for jump starting must have a negative ground electrical system.

To jump start the machine

1 Connect the positive (+) jumper cable to the positive (+) post of the discharged battery.

2 Connect the other end of the same jumper cable to the positive (+) post of the booster battery.

3 Connect one end of the second jumper cable to the negative (-) post of the booster battery.

4 Make the final cable connection to the engine block or the furthest ground point away from the battery.

5 Start the engine.

https://truckmanualshub.com/

Operating Instructions

⚠ Driving on a slope

When the machine is loaded, always travel with the load uphill. When the machine is unloaded, travel with the forks or attachment downhill.

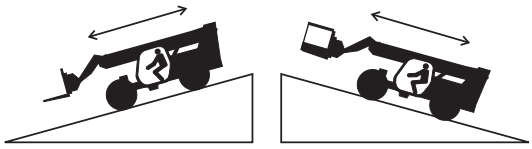

On steep terrain, drive only up and down hill, and always keep the machine in gear. Do not turn across slope when machine is traveling up or down a slope. To avoid overspeeding the engine and transmission when driving down slopes, downshift to a lower gear and use the service brake as necessary to maintain a slow speed.

Limit travel path and speed according to the condition of the ground surface, traction, slope, location of personnel and any other factors which may create a hazard. Never drive the machine unless the boom and equipment are in their proper travel position.

Whether a machine will tip over during dynamic machine operation involves many variables that need to be considered. Among these are pavement/ground conditions, stability and slope, as well as machine equipment, operator skill, load position, tire inflation, machine speed, etc.

Additionally, tip over of a machine is dependent in large part upon operator inputs such as the speed and smoothness of the operation as well as the position of the attachment and its load.

Construction sites and roads will frequently change slope from place to place, can be hard and soft, and change due to the construction activities and weather.

Operators should be properly trained and use their best judgment and experience to take the necessary precautions to prevent tip over. Operators must assess the jobsite variables and avoid exceeding the machine's (or operator's) capabilities for terrain and conditions.

⚠ Rear Proximity Alarm

The system is designed to supplement other safety practices and systems such as signal person and mirrors, and is not intended to be used as the sole method of collision avoidance. It should be used in conjunction with established safety programs and procedures to augment the safe operation of the telehandler. The operator is always the first line of defense when safely operating the telehandler and should always use direct line of sight and indirect visual methods, like mirrors, to identify and avoid obstacles and collision hazards.

The system detects both moving and stationary objects in a pre-defined coverage area (see the specifications and chart in the back of this manual) and reports the distance of the closest object via visual range indicators and an audible signal to the operator.

The system can detect most objects within the detection zone. However, there are some instances where objects can go undetected. Obstacle size, shape, relative location, and composition are all factors determining if, when and where an object is detected. The system operates by transmitting a pulse of very low power electromagnetic energy. Any energy that strikes an object reflects a certain amount of this energy back to the sensor. If the returned energy is of sufficient magnitude, it is used to indicate object presence and determine the object's distance. While the system can resolve multiple objects, only the object closest to the vehicle is reported to the display since it represents the nearest collision hazard.

Always look in the direction of travel. When the rear proximity alarm sounds, bring the machine to a controlled stop and verify the location of the obstacle. Only proceed when the obstacle is clear of the travel path.

Display range indications illuminate to give a relative distance measurement to the closest detected object. LEDs operate from left to right, with a closer object resulting in more LEDs illuminated.

https://truckmanualshub.com/

Operating Instructions

Inactivity at Low Temperature

In case of inactivity of the machine at low temperature, make sure to store it with the boom fully retracted in order to avoid any ice accretion on its upper surface.

In case of ice accretion on the upper surface of the boom, make sure to remove it with an ice scraper before using the machine.

https://truckmanualshub.com/

Transport and Lifting Instructions

Observe and Obey:

- ☑ Genie provides this securement information as a recommendation. Drivers are solely responsible for making sure machines are properly secured and the correct trailer is selected pursuant to US Department of Transportation regulations, other localized regulations, and their company policy.
- ☑ Genie customers needing to containerize any lift or Genie product should source a qualified freight forwarder with expertise in preparing, loading and securing construction and lifting equipment for international shipment.
- ☑ Only qualified operators should move the machine on or off the truck.
- ☑ The transport vehicle must be parked on a level surface.
- ☑ The transport vehicle must be secured to prevent rolling while the machine is being loaded.
- ☑ Before loading for transport, make sure the deck, ramps and machine tires are free of mud, snow and ice. Failure to do so could cause the machine to slide.
- ☑ Be sure the vehicle capacity, loading surfaces and chains or straps are sufficient to withstand the machine weight. Genie telehandlers are very heavy relative to their size. See the serial label for the machine weight. See the Inspections section for the serial label location.

https://truckmanualshub.com/

Transport and Lifting Instructions

Securing to Truck or Trailer for Transit

Turn the key switch to the off position and remove the key before transporting.

Inspect the entire machine for loose or unsecured items.

Be sure the door and the door windows are latched and secured (if equipped).

Prior to loading, level the telehandler and retract the boom.

Retract the stabilizers.

Use a spotter to load and unload the telehandler. Keep the boom as low as possible when loading and unloading.

Set the parking brake.

Securing the Chassis

Use chains of ample load capacity.

Use a minimum of 6 chains. There are 8 tie down points on the chassis, two in the front and three on each side of the machine.

Fully lower the forks or attachment onto the truck bed. Secure the forks or attachment with a suitable strap or chain to prevent movement.

Adjust the rigging to prevent damage to the chains.

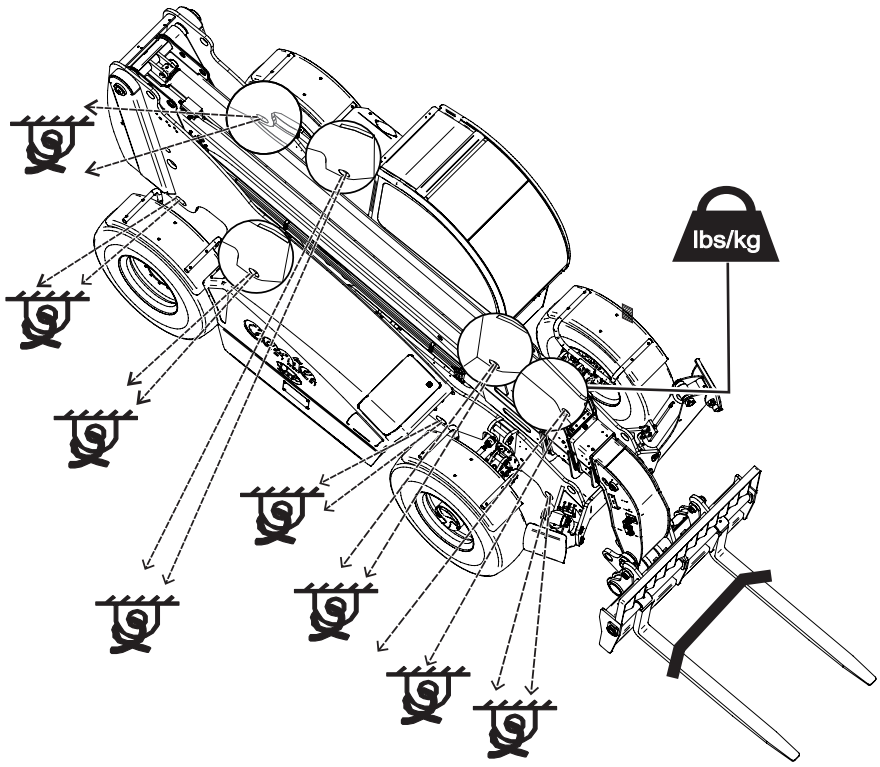

https://truckmanualshub.com/

Transport and Lifting Instructions

Observe and Obey:

☑ Only qualified riggers should rig the machine.

☑ Only certified crane operators should lift the machine and only in accordance with the applicable crane regulations.

☑ Be sure the crane capacity, loading surfaces and straps or lines are sufficient to withstand the machine weight. See the serial label for the machine weight.

Lifting Instructions

Fully lower and retract the boom.

Retract the stabilizers.

Determine the center of gravity of your machine using the picture on this page.

Remove all loose items on the machine.

Attach the rigging only to the designated lifting points on the machine.

Adjust the rigging to prevent damage to the machine and to keep the machine level.

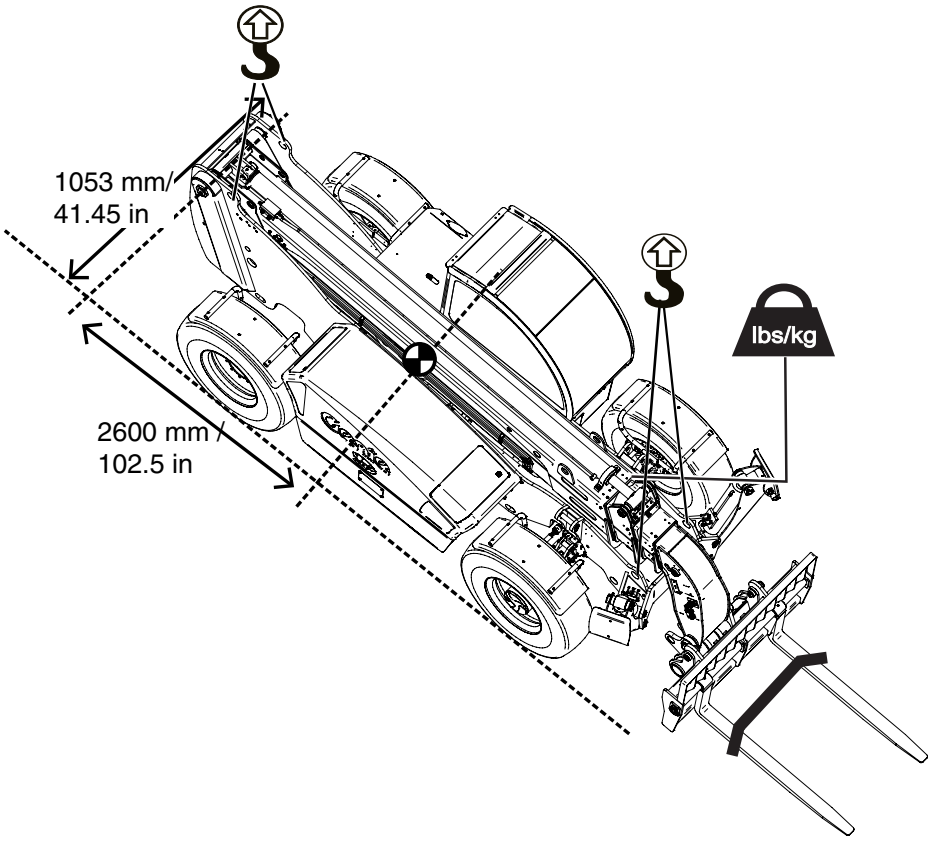

https://truckmanualshub.com/

Maintenance

Observe and Obey:

☑ Only routine maintenance items specified in this manual shall be performed by the operator.

☑ Scheduled maintenance inspections shall be completed by qualified service technicians, according to the manufacturer's specifications and the requirements specified in the responsibilities manual.

Maintenance Symbols Legend

The following symbols have been used in this manual to help communicate the intent of the instructions. When one or more of the symbols appear at the beginning of a maintenance procedure, it conveys the meaning below.

Indicates that tools will be required to perform this procedure.

Indicates that new parts will be required to perform this procedure.

Indicates that a cold engine will be required to perform this procedure.

Diesel Fuel Requirements

Satisfactory engine performance is dependent on the use of a good quality fuel. The use of a good quality fuel will give the following result: long engine life and acceptable exhaust emissions levels.

The diesel engine must be operated using only Ultra Low Sulfur Fuel. The sulphur content of this fuel must be lower than 15 PPM.

Deutz 3.6 TCD L4 Tier 4f

Fuel		
Type	Ultra Low Sulfur Fuel (ULSD)	
Tank	47.6 gal	180 L

https://truckmanualshub.com/

Maintenance

Check the Engine Oil Level

Maintaining the proper engine oil level is essential to good engine performance and service life. Operating the machine with an improper oil level can damage engine components.

Note: Check the oil level with the engine off.

1 Check the oil level dipstick. Add oil as needed.

Deutz 3.6 TCD L4 tier 4f	
Oil type	SHELL RIMULA R4 L 15W-40

Check DEF Level

Maintaining DEF (diesel exhaust fluid) at the proper level is essential to machine operation. Operators should monitor the indicator light during use to identify changes in DEF level that might indicate the presence of system problems. Add DEF each time fuel is added or add DEF when the indicator light is on.

Always use DEF fluid from a fresh, sealed container. DEF fluid can degrade if left in a unsealed container or if it is not used by the expiration date.

1 Be sure thet the engine is off, the frame is level and the boom is in the stowed position.

2 Turn the key switch to the on position.

3 Visually inspect the DEF indicator light on the dashboard.

⊙ Result: Light flashing indicates DEF level is low.

4 Add DEF as needed. Do not overfill.

DEF specifications	
DEF type	ISO 22241-1

Check the Hydraulic Oil Level

Maintaining the hydraulic oil at the proper level is essential to machine operation. Improper hydraulic oil levels can damage hydraulic components. Daily checks allow the inspector to identify changes in oil level that might indicate the presence of hydraulic system problems.

1 Be sure that the engine is off, the frame is level and the boom is in the stowed position.

2 Visually inspect the sight gauge located on the left side of the hydraulic oil tank.

⊙ Result: The hydraulic oil level should be halfway in the sight gauge.

3 Add oil as needed. Do not overfill.

Hydraulic oil specifications	
Hydraulic Oil type	GAZPROMNEFT HYDRAULIC HDZ 46

https://truckmanualshub.com/

Maintenance

Check the Engine Coolant Level - Liquid Cooled Models

Maintaining the engine coolant at the proper level is essential to engine service life. Improper coolant level will affect the engine's cooling capability and damage engine components. Daily checks will allow the inspector to identify changes in coolant level that might indicate cooling system problems.

1 Visually inspect the sight gauge located on the top side of the radiator.

⊙ Result: The fluid level should be halfway in the sight gauge.

⚠ Bodily Injury Hazard. Fluids in the radiator are under pressure and extremely hot. Use caution when removing cap and adding fluids.

Check the Tire Pressure

⚠ Tip-over hazard. An over-inflated tire can explode which may compromise machine stability and cause the machine to tip over.

⚠ Tip-over hazard. The use of temporary flat tire repair products may lead to tire failure which could compromise machine stability and cause the machine to tip over.

⚠ Bodily injury hazard. An over-inflated tire can explode and may cause death or serious injury.

Note: This procedure does not need to be performed on machines equipped with foam-filled tires.

1 Check each tire with an air pressure gauge. Add air as needed.

Tire pressure	87 psi	6 bar

https://truckmanualshub.com/

Maintenance

Check the Battery

Proper battery condition is essential to good machine performance and operational safety. Improper fluid levels or damaged cables and connections can result in component damage and hazardous conditions.

⚠ Electrocution hazard. Contact with hot or live circuits may result in death or serious injury. Remove all rings, watches and other jewelry.

⚠ Bodily injury hazard. Batteries contain acid. Avoid spilling or contacting battery acid. Neutralize battery acid spills with baking soda and water.

1 Put on protective clothing and eye wear.

2 Be sure that the battery cable connections are tight and free of corrosion.

3 Be sure that the battery hold-down brackets are in place and secure.

Note: Adding terminal protectors and a corrosion preventative sealant will help eliminate the corrosion on the battery terminals and cables.

Check Mirrors and RODS System

Maintaining the indirect visual aids is essential to workplace visibility.

1. Visually inspect all mirrors, the camera lens and monitor screen of the RODS system (if equipped) to ensure they are working properly and clean and free from debris.

Drain the Fuel/Water Separator

Proper maintenance of the fuel filter/water separator is essential for good engine performance. Failure to perform this procedure can lead to poor engine performance and/or hard starting, and continued use may result in component damage. Extremely dirty conditions may require this procedure to be performed more often.

Explosion and fire hazard. Engine fuels are combustible. Perform this procedure in an open, well-ventilated area away from heaters, sparks, flames and lighted tobacco. Always have an approved fire extinguisher within easy reach.

Note: Perform this procedure with engine off.

1 Locate the fuel filter/water separator and loosen the vent plug located on the fuel filter/water separator head.

2 Loosen the drain plug located at the bottom of the bowl. Allow the water to drain into a suitable container until fuel starts to come out. Immediately tighten the drain plug.

3 Tighten the vent plug and clean up any spills or wet surfaces.

4 Tighten the drain plug. Torque the plug to 14.2 in-lbs / 1.6Nm.

Scheduled Maintenance

Maintenance performed quarterly, annually and every two years must be completed by a person trained and qualified to perform maintenance on this machine according to the procedures found in the service manual for this machine.

Machines that have been out of service for more than three months must receive the quarterly inspection before they are put back into service.

https://truckmanualshub.com/

Attachments

⚠ Work Platform Hazards

Work Area Safety

The telehandler shall not be used to lift people unless there is no other practical option. If a telehandler must be used to lift people, the following precautions for the protection of occupants shall be taken.

Use only a Genie approved personnel work platform which complies with the design requirements of ANSI/ITSDF B56.6.

Do not lift personnel with a telehandler unless it is equipped with an approved work platform.

The user or employer and the operator shall further investigate, and comply with, all applicable jobsite, local, state, provincial, or federal rules, regulations, and standards related to the use of the telehandler with a work platform.

Read, understand and obey all warnings and instructions provided with the attachment that is approved for elevating personnel.

The operator and the platform occupants must be instructed regarding the specific hazards associated with using the telehandler with the work platform, and utilize all means, including those provided by the user or employer, to avoid them.

Always perform a pre-operation inspection of the platform, per the manufacturer's instructions, prior to use.

If damage or any unauthorized variation from factory delivered condition is discovered, the platform must be tagged and removed from service.

Do not modify the platform without written approval by Genie and the platform manufacturer.

Do not use the telehandler with a work platform attached for any purpose other than positioning personnel with their tools, materials and equipment.

Provide overhead protection as required by the operating conditions.

Platform Occupant Fall Protection

Personal fall protection equipment (PFPE) is required for all occupants of the work platform.

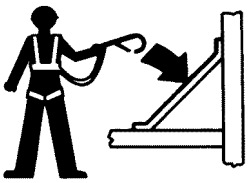

Occupants must wear a safety belt or harness in accordance with governmental regulations. Attach the lanyard to the anchor provided in the platform.

All PFPE must comply with applicable governmental regulations, and must be inspected and used in accordance with the PFPE manufacturer's instructions.

https://truckmanualshub.com/

Attachments

Occupying the Platform

Do not carry materials directly on platform railing unless approved by Genie.

Be certain that materials and tools are protected from falling out of the platform.

Be aware of crushing hazards when grasping the platform guard rail. During movement of the platform, occupants must keep all body parts inside the platform railing.

Do not sit, stand or climb on the platform guard rails. Maintain a firm footing on the platform floor at all times.

Do not enter or exit the platform unless the machine is in the stowed position and the platform is at ground level.

Occupants shall not climb on any part of the telehandler in attempting to enter and exit the platform.

Do not climb down from the platform when raised.

Do not place or attach overhanging loads to any part of this machine or platform.

Do not place ladders or scaffolds in the platform or against any part of this machine.

Do not tie the boom or platform to adjacent structures.

Do not place loads outside the platform perimeter.

Do not transport tools and materials unless they are evenly distributed and can be safely handled by person(s) in the platform.

Keep the platform floor clear of debris.

Never use ladders, boxes, steps, planks or similar items on the platform to provide additional reach.

Be certain that required personnel fall protection devices, such as guard rails and full body harness with lanyard, are in place and properly used.

Use the hand rails to maintain balance while the platform is in motion.

Do not increase the surface area of the platform or the load. Increasing the area exposed to the wind will decrease machine stability.

https://truckmanualshub.com/

Attachments

Telehandler Operation

Be certain that the platform is securely attached to the telehandler, lifting carriage and forks.

Be certain that the lifting carriage and forks are secured to prevent them from pivoting freely.

Do not drive the telehandler when occupants are in the platform.

Always fully lower the platform and have occupants leave the platform before driving the telehandler.

Before elevating personnel, the area shall be marked to warn of work by elevated personnel.

Prior to lifting personnel, platform occupants and telehandler operator must establish a means of communication for positioning of the platform.

Be sure that operators of other overhead and floor level machines are aware of the machine's presence.

Do not adjust the stabilizers while the platform is occupied.

Lifting Personnel

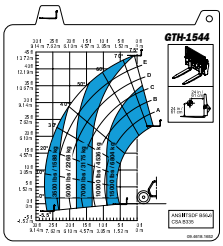

Occupants, equipment and materials shall not exceed the maximum platform capacity. Distribute loads evenly on the platform floor.

The combined weight of the platform, load, and personnel shall not exceed one-third of the capacity at the related load center position (24 inches / 60 cm) as indicated on the load charts of the telehandler on which the platform is used.

Be certain that the path of platform travel is clear of hazards such as storage racks, scaffolds, overhead obstructions, and electrical wires.

Do not level the machine with the frame sway function when the platform is occupied.

Be certain that the platform is horizontal before lifting, and do not tilt the platform forward or backward when the occupied platform is elevated.

Always lower the stabilizers prior to raising personnel.

https://truckmanualshub.com/

Attachments

Keep bystanders away while operating.

Do not place boom or platform against any structure to steady the platform or to support the structure.

Do not use the controls to free a platform that is caught, snagged or otherwise prevented from normal motion by an adjacent structure. All personnel must be removed from the platform before attempting to free the platform using the controls.

Check the work area for overhead obstructions or other possible hazards.

Be certain that the path of platform travel is clear of hazards, such as storage racks, scaffolds, overhead obstructions, and electrical wires.

Do not allow personnel or bystanders to tamper with or operate the machine from the cab when occupants are in the platform except in an emergency or when directed by the occupants.

Always lift and lower personnel smoothly and with caution, and only at their request.

Operating Instructions

Preparation and Setup

Read, understand and obey all jobsite, local, state, federal and provincial rules, standards and regulations as they pertain to the use of a telehandler mounted personnel work platform (In the USA and Canada, reference ANSI/ITSDF B56.6 and CSA B335).

If the personnel work platform is equipped with safety instructions, make sure a copy is placed in the cab as well as in the work platform, if it is equipped with a manual holder.

Cordon off the area to warn of work by elevated personnel. Keep the area under the platform free of personnel.

Be sure the telehandler is on a firm level surface capable of supporting all forces imposed by the machine.

Without personnel in the platform, perform a simulated lift with the designated signal person on the ground as a spotter, to assure adequate telehandler range and attachment clearances and that the telehandler lifting mechanism is operating smoothly.

https://truckmanualshub.com/

Attachments

Installing and securing the platform

Center the platform on the telehandler.

Properly secure the platform to the telehandler according to the manufacturer's instructions.

Be sure that the forks supporting the platform are secured to prevent them from pivoting forward.

If mounted to a rotating attachment, center the rotation of the attachment and then deactivate its rotation capability.

Level the platform, both side to side (frame sway function) and front to rear (attachment tilt function).

Entering, occupying and exiting the platform

Use three-point contact when entering or exiting a work platform.

Only enter and exit the platform when it is at ground level.

Only enter and exit the platform at the designated entry and exit locations.

Close and secure the entry point gate or railing before signaling to be lifted.

Attach PFPE to the designated lanyard anchor.

Occupants should use the guardrail to help stabilize themselves during movement. Be aware of crushing hazards when grasping the platform guardrail.

Lifting and lowering the platform

Set the parking brake and place the transmission into neutral.

Lower the stabilizers.

Only allow personnel to enter and exit the platform when it is at ground level.

Establish and maintain a means of communication with the occupants.

Only move the platform at the request of a single designated occupant. Never tilt the platform forward or backward, or attempt to level the machine when the platform is occupied.

Sound the horn to alert occupants prior to lifting or lowering the platform.

Move the platform slowly, smoothly and with caution.

Keep hands and feet clear of all controls other than those in use.

When the platform is occupied, the telehandler operator must remain seated in the cab with the occupants in direct line of sight.

https://truckmanualshub.com/

Attachments

⚠ Suspended Load Hazards

Work Area Safety

General Safety

Do not lift a suspended load without first understanding the local, state, federal, or provincial rules, standards and regulations related to the activity. In the USA requirements are set forth in ANSI/ITSDF B56.6 and OSHA 29 CFR 1926.1400-1442. Additional rules, standard and regulations may apply. Additional training may be required.

If a telehandler must be used to transport a load, the following precautions for the protection of the operator shall be taken.

Read, understand and obey all warnings and instructions provided with the attachment that is approved for suspending loads.

Only a properly designed, tested and approved attachment, designated lifting points, and lifting accessories should be used to support a suspended load.

The telehandler load charts are designed for loads where the load center is stationary. As a suspended load moves, the load center can change. As a result, extreme caution in transporting and lifting, or placing, the load must be observed to minimize the potential for the load to move.

A single shackle lifting point is rated for the maximum lifting capacity referenced on the load chart. it can be used as a single lift point, or both lifting points can be used to suspend a load. Never exceed the maximum capacity referenced in the load chart when using one or both lifting points.

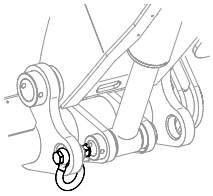

Overturning Hazards

Do not lift a suspended load without the proper and legible load capacity chart for the attachment/ telehandler combination you are using.

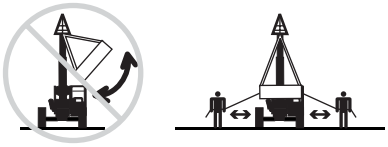

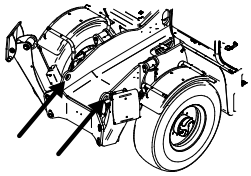

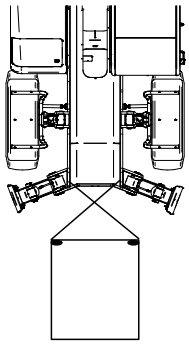

Do not permit the load to swing freely. Always properly tether loads to restrict movement. In addition to ground personnel, the two chassis lifting points in the front of the machine can be used to help externally stabilize the load. Always cross the tethers to opposite sides of the load to minimize load movement. Driving across grades, sudden starts, stops, and turns can cause the load to swing and create a hazard if not externally stabilized.

Only use proper rigging, capable of withstanding the expected loads, to tether the load. Do not use tethers that are damaged. Always remove any tethers before placing a suspended load.

Always protect tethers from abrasion and damage.

Keep the boom retracted as much as practical.

Do not lift suspended loads when wind speeds can cause an unsafe situation.

https://truckmanualshub.com/

Attachments

All movements of the load must be accomplished gradually and at the slowest practical speed to prevent the load from swinging.

Keep the heavy part of the load closest to the attachment.

Never drag or pull a load sideways.

Only lift a load vertically; do not pull a load horizontally as it could cause excessive swinging of the load.

The weight of all rigging (slings, shackles etc.) must be included as part of the load.

Identify the proper lifting points of the load, taking into consideration the center of gravity and load stability.

Do not attempt to use the telehandler frame-leveling to compensate for a swinging load or to adjust the load after it has been raised.

Do not try to move fixed or obstructed loads.

Do not leave the telehandler unattended with a suspended load.

Keep the boom and load as low as practical while maintaining visibility in the direction of travel.

Do not exceed walking speed (2 mph / 3.2 km/h) with a suspended load.

Start, travel, turn and stop slowly to prevent the load from becoming unstable or swinging.

Do not use any controls to re-position the load when traveling. Come to a gradual and complete stop before attempting to re-position the load.

Do not attempt to cross inclines as the load center will move towards the tipping line, thereby reducing stability.

Only climb or descend inclines with extreme care as the load center will move towards the tipping line, thereby reducing stability

Do not park on a slope.

Fall Hazards

Do not lift or suspend personnel.

Collision Hazards

Be sure that the load is clear of any adjacent obstacles before lifting.

When visibility is or could be obstructed, near or at the load placement, the operator shall use alternative or additional means to safely lift the load, such as a qualified signal person.

Signal persons must remain in constant communication (verbal or hand) and be in visual contact with the operator at all times.

Crush Hazards

Never allow the signal person to come between the suspended load and another object (such as the telehandler itself).

Falling Object Hazards

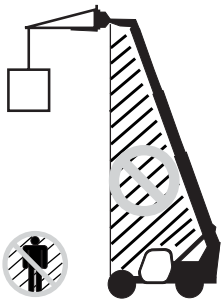

Do not raise the load into the fall zone shown.

Do not operate the machine while people are under the load or in the fall zone. Always watch for personnel who may walk under the load and warn them before they walk under the load.

Do not suspend loads using slings or chains from the forks or fork carriage.

Avoid lifting double tiered loads.

https://truckmanualshub.com/

Attachments

Lifting a Suspended Load

Verify that landing point is level and can safely support the load.

Properly secure the attachment to the telehandler.

Level the frame on the telehandler.

Rig the load as outlined in OSHA 29 CFR 1926.1401, 1926.1404, and 1926.1425, keeping the heaviest part of the load as close to the attachment as practical.

Tether the load to restrict movement.

Ask a signal person to assist with lifting the load if visibility will be obstructed at the point of operation.

Make sure that the signal person remains in constant communication and is in visual contact at all times.

With the boom retracted as far as practical, slowly and gradually raise the boom and load, making sure to keep the load and boom as low to the ground as practical.

Be sure that all boom and attachment movements are performed as slow as practical to avoid swinging of the load.

Travelling

Be sure that the path of travel is level and capable of supporting the telehandler with its load.

Keep the boom, and load, as low as practical while maintaining visibility in the direction of travel.

Ask a signal person to assist with your travel if visibility will be obstructed in the direction of travel.

Crush or Collision Hazard. Make sure that the signal person remains in constant communication and be in visual contact at all times.

Only make adjustments to the load after bringing the telehandler to a complete stop.

Start, stop, travel and turn slowly to prevent the load from becoming unstable or swinging.

Do not travel faster than walking speed (<2 mph / 3.2 km/h).

https://truckmanualshub.com/

Attachments

Placing the Load

Ask a signal person to assist with placing the load if visibility will be obstructed at the point of operation.

Make sure that the signal person remains in constant communication and be in visual contact at all times.

Come to a complete stop near the landing point.

Lower the stabilizers.

Set the parking brake and place the transmission into neutral.

Slowly, and gradually, place the load over the landing point and lower the load until it is safely supported.

Once the load has been landed, continue to lower the boom until the rigging and tethers can be removed.

Signal Person (from 1926.1419)

Per OSHA CFR 1926.1419, a signal person is required when:

The point of operation, meaning the load travel or the area near or at load placement, is not in full view of the operator.

When the equipment is traveling, the view in the direction of travel is obstructed.

Due to site specific safety concerns, either the operator or the person handling the load determines that it is necessary.

Signal persons must remain in constant communication (verbal or hand) and be in visual contact with the operator at all times.

When using hand signals, follow the requirements set forth in OSHA CFR 1926.1419-1926.1422.

The hand signal chart below may be used in place of the Standard Method in Appendix A of Subpart CC of Part OSHA CFR 1926.

https://truckmanualshub.com/

Attachments

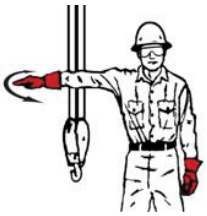 STOP. With arm extended horizontally to the side, palm down, arm is swung back and forth.	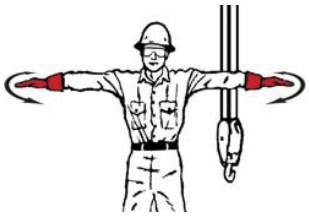 EMERGENCY STOP. With both arms extended horizontally to the side, palms down, arms are swung back and forth.		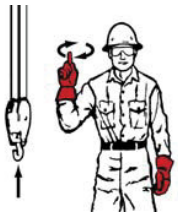 HOIST. With upper arm extended to the side, forearm and index finger pointing straight up, hand and finger make small circles.	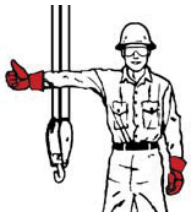 RAISE BOOM. With arm extended horizontally to the side, thumb points up with other fingers closed.
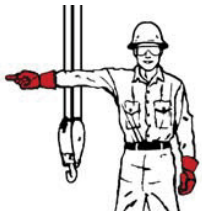 SWING. With arm extended horizontally, index finger points in direction that boom is to swing.	RETRACT TELESCOPING BOOM. With hands to the front at waist level, thumbs point at each other with other fingers closed.	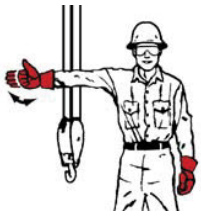 RAISE THE BOOM AND LOWER THE LOAD. With arm extended horizontally to the side and thumb pointing up, fingers open and close while load movement is desired.	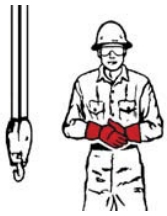 DOG EVERYTHING. Hands held together at waist level.	LOWER. With arm and index finger pointing down, hand and finger make small circles.
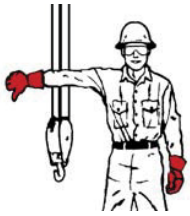 LOWER BOOM. With arm extended horizontally to the side, thumb points down with other fingers closed.	EXTENDED TELESCOPING BOOM. With hands to the front at waist level, thumbs point outward with other fingers closed.	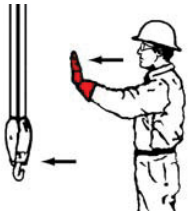 TRAVEL/TOWER TRAVEL. With all fingers pointing up, arm is extended horizontally out and back to make a pushing motion in the direction of travel.	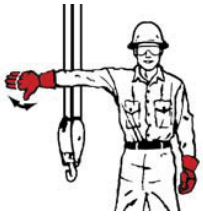 LOWER THE BOOM AND RAISE THE LOAD. With arm extended horizontally to the side and thumb pointing down, fingers open and close while load movement is desired.	MOVE SLOWLY. A hand is placed in front of the hand that is giving the action signal.

https://truckmanualshub.com/

Attachments

⚠ Suspended Load Hazards

Rigger Requirements (from OSHA CFR 1926.404)

When employees are engaged in hooking, unhooking, or guiding the load, or in the initial connection of a load to a component or structure and are within the fall zone, all of the following criteria must be met:

The materials being hoisted must be rigged to prevent unintentional displacement. Only approved lifting accessories should be used.

Hooks with self-closing latches or their equivalent must be used. Exception: “J” hooks are permitted to be used for setting wooden trusses.

The materials must be rigged by a qualified rigger.

https://truckmanualshub.com/

Specifications

GTH-1256		
Height, stowed	8 ft 9 in	2.67 m
Length, stowed, without forks	21 ft	6.40 m
Width, standard tires	7 ft 11 in	2.41 m
Wheelbase	11 ft 6 in	3.51 m
Ground clearance, center	1 ft 3 in	0.38 m
Ground clearance, axle	1 ft 3 in	0.38 m
Weight	36,81 lbs	16,697 kg
Working fork height, maximum	56 ft 0 in	17.07 m
Horizontal reach maximum	42 ft 0 in	12.80 m
Reach at maximum height	9 ft 4 in	2.84 m
Lift capacity, maximum height with 24 in / 61 cm load center stabilizers up stabilizers down	 5,000 lbs 7,000 lbs	 2,268 kg 3,175 kg
Lift capacity, maximum reach with 24 in / 61 cm load center stabilizers up stabilizers down	 500 lbs 3,500 lbs	 227 kg 1,588 kg
Max Lift Capacity stabilizers up stabilizers down	 12,000 lbs 12,000 lbs	 5,443 kg 5,443 kg
Drive speed, maximum, Deutz engines	18 mph	29 km/h
Frame sway		+/- 7°
Tire size	17.5 x 25 in, 22 ply	
Turning radius, outside, 2 wheel steer	30 ft 10 in	9.4 m
Turning radius, outside, 4 wheel steer	14 ft 7 in	4.45 m
Fuel tank capacity	47.6 gal	180 L
Maximum grade		45 %
Horn sound level, manufacturer's rating		110 dB
Backup alarm sound level, manufacturer's rating		97 dB

Rear Object Detection System	Refer to supplemental manuals	
Floor loading information		
Tire load, maximum	19,841 lbs	9,000 kg
Occupied floor pressure	182 psf	8.7 kPa

https://truckmanualshub.com/

Specifications

Rear proximity Sensor Range

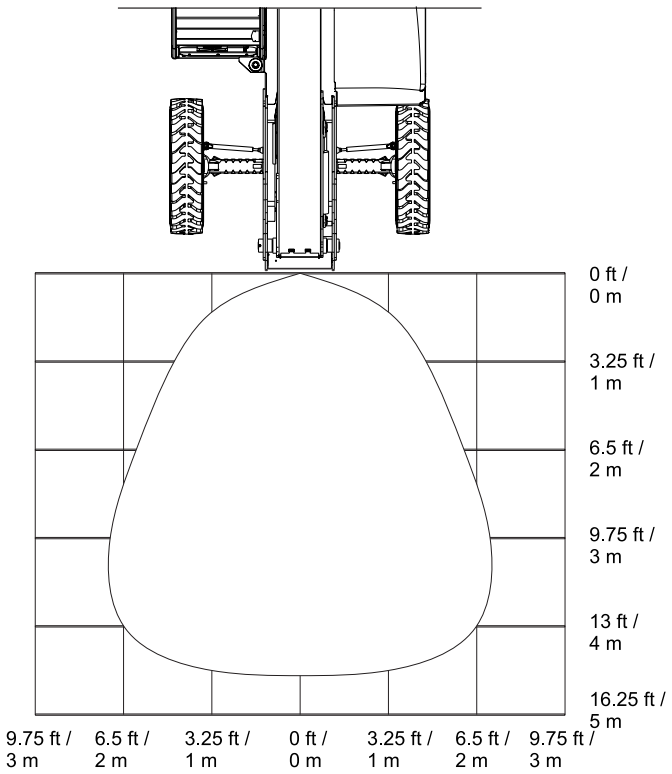

Approximate detection range. Minimum rear proximity sensor detection height is 2 ft / 0.6 m.

https://truckmanualshub.com/

Load Charts

Load Capacity Field Calculations

Always center the load on the forks. Position the load so that it is completely against the back of the fork frame. Fork length should always be at least 2/3 the load length.

All Genie telehandler fork carriage load charts are based on a horizontal load center that is 24 in / 61 cm from the front vertical surface of the fork arm. For loads with a load center exceeding this value, refer to the table and instructions below to determine the reduced load capacity for a specific load zone. Note that this does not account for a load center that is not centered between the forks or a vertical load center exceeding 24 in / 61 cm from the top face of the fork tine. Keep the load centered on the fork carriage.

To calculate the new reduced load capacity at a load center greater than the standard 24 in / 61 cm load center, multiply the zone capacity from the load chart by the appropriate reduction factor listed in the table below. Refer to the example.

New Horizontal Load Center, measured from front vertical surface of fork arm

	24 in / 61 cm or less	28 in / 71 cm or less	32 in / 81 cm or less	36 in / 91 cm or less	40 in / 102 cm or less	44 in / 112 cm or less	48 in / 122 cm or less	54 in / 137 cm or less
Capacity Reduction Factor	1.00	0.86	0.75	0.67	0.60	0.55	0.50	0.44

24 in / 61 cm Load Center or less	Load Center greater than 24 in / 61 cm
Use Load Chart	Use Capacity Reduction Factor x Rated Load

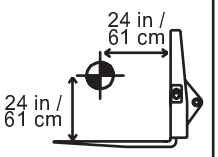

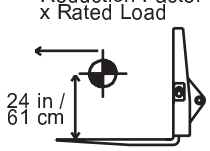

EXAMPLE

Determine Load Center	Rated load	x	Capacity Reduction Factor	=	Reduced Rated Load
48 in / 122 cm Load Center	1000 lbs / 454 kg	X	48 in / 122 cm or less: 0.50	=	1000 lbs / 454 kg x 0.50 = 500 lbs / 227 kg

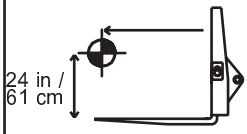

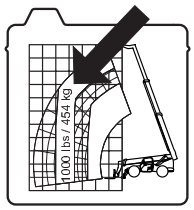

https://truckmanualshub.com/

Load Charts

GTH-1256, Standard Carriage stabilizers up

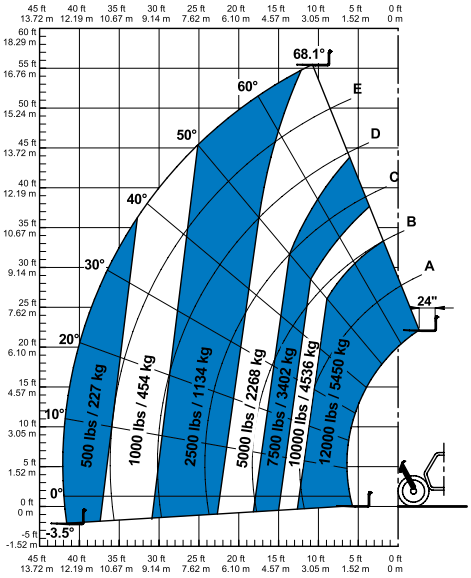

GTH-1256, Rotating Carriage stabilizers up

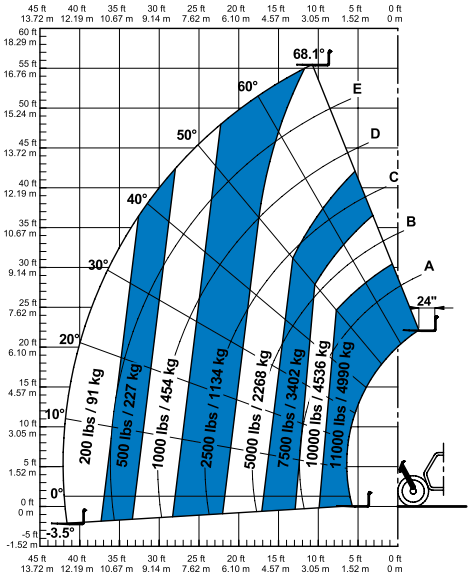

GTH-1256, Standard Carriage stabilizers down

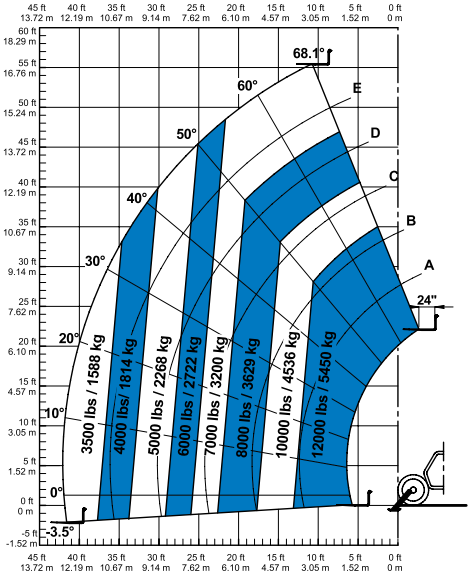

GTH-1256, Rotating Carriage stabilizers down

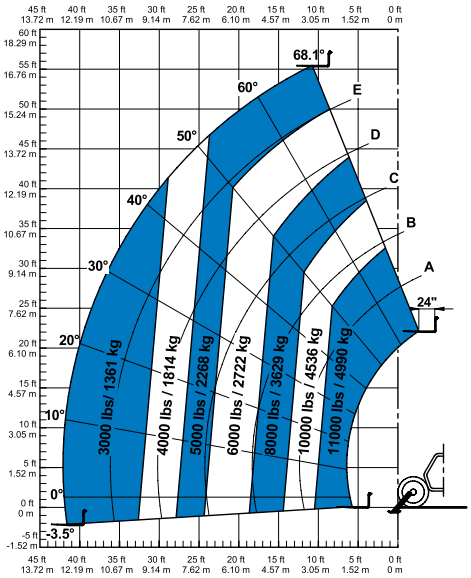

https://truckmanualshub.com/

Load Charts

GTH-1256, 7 ft Truss Boom stabilizers up

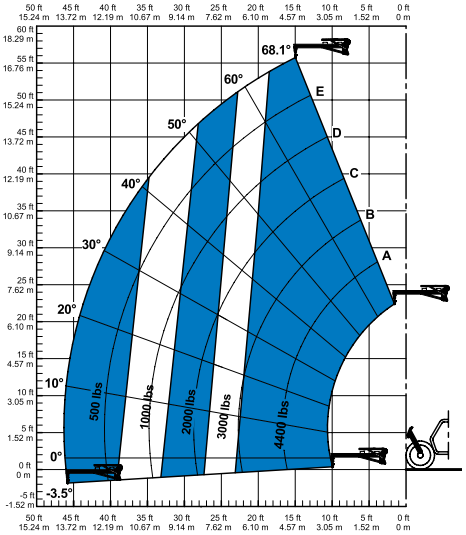

GTH-1256, Rubbish Bucket stabilizers up

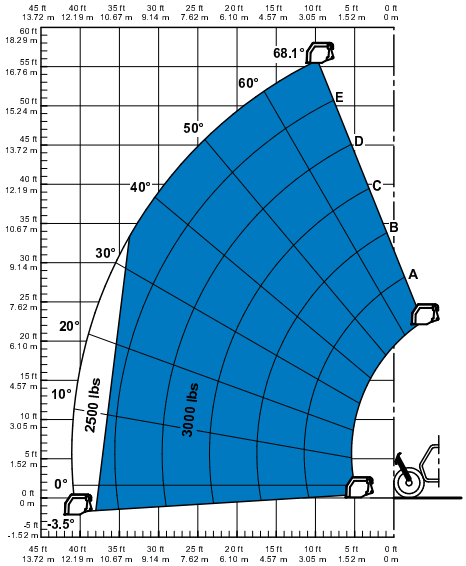

GTH-1256, 7 ft Truss Boom stabilizers down

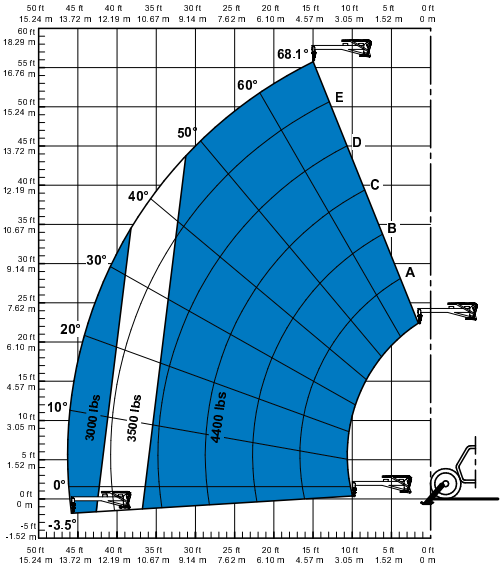

GTH-1256, Rubbish Bucket stabilizers down

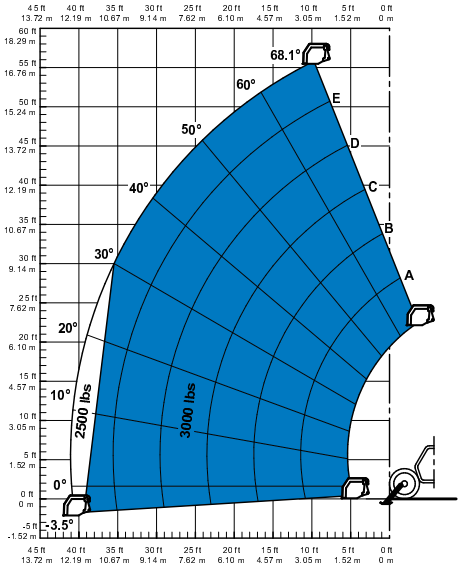

https://truckmanualshub.com/

Load Charts

GTH-1256, Shackle stabilizers up

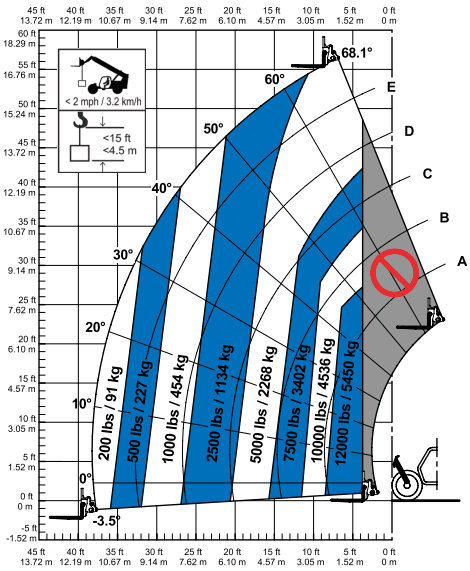

GTH-1256, Shackle stabilizers down

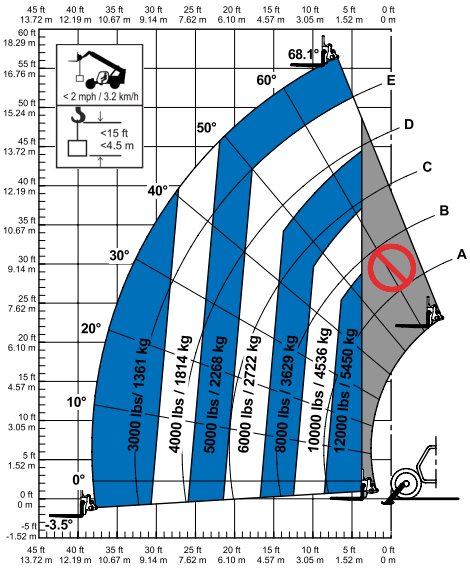

https://truckmanualshub.com/

California Proposition 65

WARNING

Operating, servicing and maintaining this equipment, passenger vehicle or off-highway motor vehicle can expose you to chemicals including engine exhaust, carbon monoxide, phthalates, and lead, which are known to the State of California to cause cancer and birth defects or other reproductive harm. These chemicals can be emitted from or contained in other various parts and systems, fluids and some component wear by-products. To minimize exposure, avoid breathing exhaust, do not idle the engine except as necessary, service your equipment and vehicle in a well-ventilated area and wear gloves or wash your hands frequently when servicing your equipment or vehicle and after operation. For more information go to www.P65Warnings.ca.gov/passenger-vehicle.

Breathing diesel engine exhaust exposes you to chemicals known to the State of California to cause cancer and birth defects or other reproductive harm.

- Always start and operate the engine in a well-ventilated area.
- If in an enclosed area, vent the exhaust to the outside.
- Do not modify or tamper with the exhaust system.
- Do not idle the engine except as necessary.

For more information go to www.P65warnings.ca.gov/diesel.

www.genielift.com

Distributed By: