https://truckmanualshub.com/

SR130 SR200
SR150 SR220
SR175 SR250
SV185 SV250
SV300

Alpha Series Skid Steer Loader

TR270
TR320
TV380

Alpha Series Compact Track Loader

SERVICE MANUAL

Part number 84423866
1st edition English
July 2011

CASE CONSTRUCTION

https://truckmanualshub.com/

Contents

INTRODUCTION

HYDRAULIC, PNEUMATIC, ELECTRICAL, ELECTRONIC SYSTEMS A

PRIMARY HYDRAULIC POWER SYSTEM A.10.A

SECONDARY HYDRAULIC POWER SYSTEM A.12.A

HYDRAULIC COMMAND SYSTEM A.14.A

HIGH-FLOW HYDRAULIC POWER SYSTEM A.16.A

ELECTRICAL POWER SYSTEM A.30.A

LIGHTING SYSTEM A.40.A

ELECTRONIC SYSTEM A.50.A

FAULT CODES A.50.A

ENGINE AND PTO IN ..... B

ENGINE B.10.A

FUEL AND INJECTION SYSTEM B.20.A

AIR INTAKE SYSTEM B.30.A

ENGINE COOLANT SYSTEM B.50.A

STARTING SYSTEM B.80.A

TRANSMISSION, DRIVE AND PTO OUT C

TRANSMISSION Hydrostatic C.20.F

AXLES, BRAKES AND STEERING ..... D

Final drive D.15.A

Final drive Hydraulic drive D.15.C

STEERING Mechanical D.20.B

PARKING BRAKE Hydraulic D.32.C

WHEELS AND TRACKS Tracks D.50.B

WHEELS AND TRACKS Wheels D.50.C

FRAME AND CAB ..... E

FRAME Primary frame E.10.B

SHIELD E.20.A

Find manuals at http://best-manuals.com/

https://truckmanualshub.com/

USER CONTROLS AND SEAT E.32.A
USER CONTROLS AND SEAT Operator seat E.32.C
USER PLATFORM E.34.A
ENVIRONMENT CONTROL Heating system E.40.B
ENVIRONMENT CONTROL Air-conditioning system E.40.C
SAFETY SECURITY ACCESSORIES Safety E.50.B

FRAME POSITIONING ..... F
STABILISING Ballasting F.20.B

TOOL POSITIONING ..... G
LIFTING G.10.A
TILTING G.20.A
LEVELLING G.30.A
SECONDARY FUNCTIONS Hydraulic G.90.C

HITCH AND WORKING TOOL ..... H
BOOM Lift H.20.B
ARM TOOL ATTACHMENT Tilt H.30.C
SINGLE ARM Lift H.40.B
SINGLE ARM TOOL ATTACHMENT Tilt H.50.C

EXCAVATING AND LANDSCAPING ..... J
DIGGING Non-articulated digging tools J.20.B
CARRYING Unarticulated tools J.50.B
COUPLING Mechanical coupling J.80.B
COUPLING Hydraulic coupling J.80.C

Find manuals at http://best-manuals.com/

https://truckmanualshub.com/

Find manuals at http://best-manuals.com/

https://truckmanualshub.com/

INTRODUCTION

Find manuals at http://best-manuals.com/

https://truckmanualshub.com/

Contents

INTRODUCTION

Foreword - Ecology and the environment 3
Safety rules 4
S-Series, T-Series
Safety rules - Personal safety 5
Safety rules 6
Basic instructions - How To Use and Navigate Through This Manual 7
Basic instructions - Important notice regarding equipment servicing 12
Basic instructions - Shop and Assembly 13
Torque - Minimum tightening torques for normal assembly 15
S-Series, T-Series
Torque - Standard torque data for hydraulics 20
General specification - Biodiesel Fuels 22
General specification - General Welding 23

Find manuals at http://best-manuals.com/

Foreword - Ecology and the environment

Soil, air, and water are vital factors of agriculture and life in general. When legislation does not yet rule the treatment of some of the substances which are required by advanced technology, sound judgement should govern the use and disposal of products of a chemical and petrochemical nature.

NOTICE: *The following are recommendations which may be of assistance:*

- Become acquainted with and ensure that you understand the relative legislation applicable to your country.
- Where no legislation exists, obtain information from suppliers of oils, filters, batteries, fuels, antifreeze, cleaning agents, etc., with regard to their effect on man and nature and how to safely store, use and dispose of these substances.
- Agricultural consultants will, in many cases, be able to help you as well.

HELPFUL HINTS

- Avoid filling tanks using cans or inappropriate pressurized fuel delivery systems which may cause considerable spillage.
- In general, avoid skin contact with all fuels, oils, acids, solvents, etc. Most of them contain substances which may be harmful to your health.
- Modern oils contain additives. Do not burn contaminated fuels and or waste oils in ordinary heating systems.
- Avoid spillage when draining off used engine coolant mixtures, engine, gearbox and hydraulic oils, brake fluids, etc. Do not mix drained brake fluids or fuels with lubricants. Store them safely until they can be disposed of in a proper way to comply with local legislation and available resources.
- Modern coolant mixtures, i.e. antifreeze and other additives, should be replaced every two years. They should not be allowed to get into the soil but should be collected and disposed of properly.
- Do not open the air-conditioning system yourself. It contains gases which should not be released into the atmosphere. Your CASE CONSTRUCTION dealer or air conditioning specialist has a special extractor for this purpose and will have to recharge the system properly.
- Repair any leaks or defects in the engine cooling or hydraulic system immediately.
- Do not increase the pressure in a pressurized circuit as this may lead to a component failure.
- Protect hoses during welding as penetrating weld splatter may burn a hole or weaken them, allowing the loss of oils, coolant, etc.

Find manuals at http://best-manuals.com/

Safety rules

S-Series, T-Series

Personal safety

This is the safety alert symbol. It is used to alert you to potential personal injury hazards. Obey all safety messages that follow this symbol to avoid possible death or injury.

Throughout this manual and on machine decals, you will find the signal words DANGER, WARNING, and CAUTION followed by special instructions. These precautions are intended for the personal safety of you and those working with you.

Read and understand all the safety messages in this manual before you operate or service the machine.

DANGER indicates a hazardous situation which, if not avoided, will result in death or serious injury. The color associated with DANGER is RED.

WARNING indicates a hazardous situation which, if not avoided, could result in death or serious injury. The color associated with WARNING is ORANGE.

CAUTION, used with the safety alert symbol, indicates a hazardous situation which, if not avoided, could result in minor or moderate injury. The color associated with CAUTION is YELLOW.

FAILURE TO FOLLOW DANGER, WARNING, AND CAUTION MESSAGES COULD RESULT IN DEATH OR SERIOUS INJURY.

Machine safety

NOTICE: *Notice indicates a situation which, if not avoided, could result in machine or property damage. The color associated with Notice is BLUE.*

Throughout this manual you will find the signal word Notice followed by special instructions to prevent machine or property damage. The word Notice is used to address practices not related to personal safety.

Information

NOTE: *Note indicates additional information which clarifies steps, procedures, or other information in this manual.*

Throughout this manual you will find the word Note followed by additional information about a step, procedure, or other information in the manual. The word Note is not intended to address personal safety or property damage.

Find manuals at http://best-manuals.com/

Safety rules - Personal safety

Carefully study these precautions, and those included in the external attachment operators manual, and insist that they be followed by those working with and for you.

1. Thoroughly read and understand this manual and the attachment Operator's Manual before operating this or any other equipment.
2. Be sure all people and pets are clear of the machine before starting. Sound the horn, if equipped, three times before starting engine.
3. Only the operator should be on the machine when in operation. Never allow anyone to climb on to the machine while it is in motion. If the machine is equipped with an Instructors Seat, this must only be used for training purposes. Passengers must not be allowed to use the Instructors Seat.
4. Keep all shields in place. Never work around the machine or any of the attachments while wearing loose clothing that might catch on moving parts.
5. Observe the following precautions whenever lubricating the machine or making adjustments.

    - Disengage all clutching levers or switches.
    - Lower the attachment, if equipped, to the ground or raise the attachment completely and engage the cylinder safety locks. Completing these actions will prevent the attachment from lowering unexpectedly.
    - Engage the parking brake.
    - Shut off the engine and remove the key.
    - Wait for all machine movement to stop before leaving the operators platform.

6. Always keep the machine in gear while travelling downhill.
7. The machine should always be equipped with sufficient front or rear axle weight for safe operation.
8. Under some field conditions, more weight may be required at the front or rear axle for adequate stability. This is especially important when operating in hilly conditions or/when using heavy attachments.
9. Always lower the attachment, shut off the engine, set the parking brake, engage the transmission gears, remove the key and wait for all machine movement to stop before leaving the operators platform.
10. If the attachment or machine should become obstructed or plugged; set the parking brake, shut off the engine and remove the key, engage the transmission gears, wait for all machine or attachment motion to come to a stop, before leaving the operators platform to removing the obstruction or plug.
11. Never disconnect or make any adjustments to the hydraulic system unless the machine and/or the attachment is lowered to the ground or the safety lock(s) is in the engaged position.
12. Use of the flashing lights is highly recommended when operating on a public road.
13. When transporting on a road or highway, use accessory lights and devices for adequate warning to the operators of other vehicles. In this regard, check local government regulations. Various safety lights and devices are available from your CASE CONSTRUCTION dealer.
14. Practice safety 365 days a year.
15. Keep all your equipment in safe operating condition.
16. Keep all guards and safety devices in place.
17. Always set the parking brake, shut off the engine and remove the key, engage the transmission gears, wait for all machine or attachment motion to come to a stop, before leaving the operators platform to service the machine and attachment.
18. Remember: A careful operator is the best insurance against an accident.
19. Extreme care should be taken in keeping hands and clothing away from moving parts.

Find manuals at http://best-manuals.com/

Safety rules

CALIFORNIA
PROPOSITION 65 WARNING

Diesel engine exhaust and some of its constituents are known to the State of California to cause cancer, birth defects, and other reproductive harm.

Battery post, terminals and related accessories contain lead and lead compounds.

Wash hands after handling

BT09A213 1

Find manuals at http://best-manuals.com/

Basic instructions - How To Use and Navigate Through This Manual

Technical Information

This manual has been produced by a new technical information system. This new system is designed to deliver technical information electronically through Web delivery, DVD and in paper manuals. A coding system called SAP has been developed to link the technical information to other Product Support functions, e.g., Warranty.

Technical information is written to support the maintenance and service of the functions or systems on a customer's machine. When a customer has a concern on his machine it is usually because a function or system on his machine is not working at all, is not working efficiently, or is not responding correctly to his commands. When you refer to the technical information in this manual to resolve that customer's concern, you will find all the information classified using the SAP coding, according to the functions or systems on that machine. Once you have located the technical information for that function or system then you will find all the mechanical, electrical or hydraulic devices, components, assemblies and sub assemblies for that function or system. You will also find all the types of information that have been written for that function or system, the technical data (specifications), the functional data (how it works), the diagnostic data (fault codes and troubleshooting) and the service data (remove, install adjust, etc.).

By integrating SAP coding into technical information , you will be able to search and retrieve just the right piece of technical information you need to resolve that customer's concern on his machine. This is made possible by attaching 3 categories to each piece of technical information during the authoring process.

The first category is the Location, the second category is the Information Type and the third category is the Product:

- LOCATION - is the component or function on the machine, that the piece of technical information is going to describe e.g. Fuel tank.
- INFORMATION TYPE - is the piece of technical information that has been written for a particular component or function on the machine e.g. Capacity would be a type of Technical Data that would describe the amount of fuel held by the Fuel tank.
- PRODUCT - is the model for which the piece of technical information is written.

Every piece of technical information will have those 3 categories attached to it. You will be able to use any combination of those categories to find the right piece of technical information you need to resolve that customer's concern on his machine.

That information could be:

- the description of how to remove the cylinder head
- a table of specifications for a hydraulic pump
- a fault code
- a troubleshooting table
- a special tool

How to Use this Manual

This manual is divided into Sections. Each Section is then divided into Chapters. Contents pages are included at the beginning of the manual, then inside every Section and inside every Chapter. An alphabetical Index is included at the end of a Chapter. Page number references are included for every piece of technical information listed in the Chapter Contents or Chapter Index.

Each Chapter is divided into four Information types:

- Technical Data (specifications) for all the mechanical, electrical or hydraulic devices, components and, assemblies.
- Functional Data (how it works) for all the mechanical, electrical or hydraulic devices, components and assemblies.
- Diagnostic Data (fault codes, electrical and hydraulic troubleshooting) for all the mechanical, electrical or hydraulic devices, components and assemblies.
- Service Data (remove disassembly, assemble, install) for all the mechanical, electrical or hydraulic devices, components and assemblies.

Sections

Sections are grouped according to the main functions or a systems on the machine. Each Section is identified by a letter A, B, C etc. The amount of Sections included in the manual will depend on the type and function of the machine that the manual is written for. Each Section has a Contents page listed in alphabetic/numeric order. This table illustrates which Sections could be included in a manual for a particular product.

	SECTION										
	A - Hydraulic – Pneumatic – Electrical – Electronic Systems										
		B - Engine and PTO In									
			C - Transmission, Drive and PTO Out								
				D - Axles, Brakes and Steering							
					E - Frame and Cab						
						F - Frame Positioning					
							G - Tool Positioning				
								H - Hitch and Working Tool			
									J - Excavating and Landscaping		
										K - Crop Processing	
											L - Field Processing
PRODUCT											
Tractors	X	X	X	X	X	X		X	X		
Vehicles with working arms: backhoes, excavators, skid steers, ...	X	X	X	X	X	X	X	X	X		
Combines, forage harvesters, balers, ...	X	X	X	X	X	X	X	X	X	X	
Seeding, planting, floating, spraying equipment, ...	X	X	X	X	X	X	X		X		X
Mounted equipment and tools, ...					X	X	X		X		

Section Contents

SECTION	LETTER	DESCRIPTION
HYDRAULIC – PNEUMATIC – ELECTRICAL – ELECTRONIC SYSTEMS	A	This Section covers the main systems that interact with most of the functions of the product. It includes the central parts of the hydraulic, electrical, electronic, pneumatic, lighting and grease lubrication systems. The components that are dedicated to a specific function are listed in the Chapter where all the technical information for that function is included.
ENGINE AND PTO IN	B	This Section covers all the functions related to the production of power to move the machine and to drive various devices. In the case of a pulled-type machine, this Section covers the power take-off function where power is provided from the towing machine.
TRANSMISSION, DRIVE AND PTO OUT	C	This Section covers all the functions related to the transmission of power from the engine to the axles and to internal or external devices. This Section also covers the power take-off function where power is provided to the pull-type machine and additional Process Drive functions.
AXLES, BRAKES AND STEERING	D	This Section covers all the functions related to moving the machine, including tracks, wheels, steering and braking. It covers all the axles; both driven axles and non-driven axles, including any axle suspension.
FRAME AND CAB	E	This Section covers all the main functions and systems related to the structure and the body of the machine, including the frame, the shields, the operators cab and the platform. The functions related to the positioning of the machine frame are included in Section F, Frame Positioning.
FRAME POSITIONING	F	This Section covers all the main functions and systems related to positioning of the machine frame or to positioning the attachment on the supporting machine frame.
TOOL POSITIONING	G	This Section covers all the functions related to the final and/or automatic positioning of the tool once the tool is positioned using the Working Arm or the machine frame.
HITCH AND WORKING TOOL	H	This Section covers all the functions related to the articulated or single arms mounted on the front or rear of the machine. A working arm can have various tools and quick couplers mounted on to it. The tools and quick couplers are included in Section J, Excavating and Landscaping.
EXCAVATING AND LANSCAPING	J	This Section covers all the functions related to the specific tools that mount on the front, rear or beside the machine. The tools described here can be mounted with the positioning systems (lifting, side shift, swing) listed in Section G Tool Positioning. This Section covers all the quick coupling systems, located between the tool and the positioning system. The tools used for field preparation, soil preparation and treatment, planting and seeding are included.
CROP PROCESSING	K	This Section covers all the functions related to crop processing. Examples of crop processing include threshing, baling, windrowing, cutting and conditioning.
FIELD PROCESSING	L	This Section covers all the field processing functions of the machine. Examples of field process include seeding, fertilizer application, seedbed preparation and chemical application.

This manual contains these Sections:

Contents

INTRODUCTION
HYDRAULIC – PNEUMATIC – ELECTRICAL – ELECTRONIC SYSTEMS A
ENGINE AND PTO IN B
FRAME POSITIONING F
CROP PROCESSING K

Chapters

Each Chapter is identified by a letter and number combination e.g. Engine B.10.A The first letter is identical to the Section letter i.e. Chapter B.10 is inside Section B, Engine and PTO In.
CONTENTS
The Chapter Contents lists all the technical data (specifications), functional data (how it works), service data (remove, install adjust, etc..) and diagnostic data (fault codes and troubleshooting) that have been written in that Chapter for that function or system on the machine.

Contents

ENGINE AND PTO IN
ENGINE _ 10.A

TECHNICAL DATA
ENGINE - General specification (B.10.A)

FUNCTIONAL DATA

ENGINE - Dynamic description (B.10.A)

SERVICE
ENGINE - Remove (B.10.A)

DIAGNOSTIC
ENGINE - Troubleshooting (B.10.A)

INDEX
The Chapter Index lists in alphabetical order all the types of information (called Information Units) that have been written in that Chapter for that function or system on the machine.

Index

ENGINE AND PTO IN - B
ENGINE

ENGINE - Dynamic description (B.10.A)

ENGINE - General specification (B.10.A)

ENGINE - Remove (B.10.A)

ENGINE - Troubleshooting (B.10.A)

Information Units and Information Search

Each chapter is composed of information units. Each information unit has the SAP code shown in parentheses which indicates the function and the type of information written in that information unit. Each information unit has a page reference within that Chapter. The information units provide a quick and easy way to find just the right piece of technical information you are looking for.

Example information unit	Stack valve - Sectional View (A.10.A.18)		
Information Unit SAP code	A	10.A	18
SAP code classification	Hydraulic – Pneumatic – Electrical – Electronic Systems	Primary hydraulic power	Stack valve

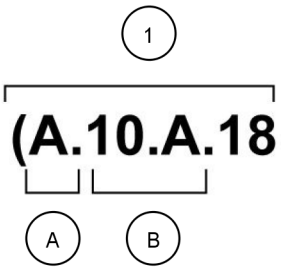

CRIL03J033E01A 1

Navigate to the correct information unit you are searching for by identifying the function and information type from the SAP code.

- **(1)** Function and **(2)** Information type.
- **(A)** corresponds to the sections of the repair manual.
  (B) corresponds to the chapters of the repair manual.
  (C) corresponds to the type of information listed in the chapter contents, Technical Data, Functional Data, Diagnostic or Service.
  (A) and **(B)** are also shown in the page numbering on the page footer.
  THE REST OF THE CODING IS NOT LISTED IN ALPHANUMERIC ORDER IN THIS MANUAL.
- You will find a table of contents at the beginning and end of each section and chapter.
  You will find an alphabetical index at the end of each chapter.
- By referring to **(A)**, **(B)** and **(C)** of the coding, you can follow the contents or index (page numbers) and quickly find the information you are looking for.

Page Header and Footer

The page header will contain the following references:

- Section and Chapter description

The page footer will contain the following references:

- Publication number for that Manual, Section or Chapter.
- Version reference for that publication.
- Publication date
- Section, chapter and page reference e.g. A.10.A / 9

Basic instructions - Important notice regarding equipment servicing

All repair and maintenance work listed in this manual must be carried out only by qualified dealership personnel, strictly complying with the instructions given, and using, whenever possible, the special tools.

Anyone who performs repair and maintenance operations without complying with the procedures provided herein shall be responsible for any subsequent damages.

The manufacturer and all the organizations of its distribution chain, including - without limitation - national, regional, or local dealers, reject any responsibility for damages caused by parts and/or components not approved by the manufacturer, including those used for the servicing or repair of the product manufactured or marketed by the manufacturer. In any case, no warranty is given or attributed on the product manufactured or marketed by the manufacturer in case of damages caused by parts and/or components not approved by the manufacturer.

The information in this manual is up-to-date at the date of the publication. It is the policy of the manufacturer for continuous improvement. Some information could not be updated due to modifications of a technical or commercial type, or changes to the laws and regulations of different countries.

In case of questions, refer to your CASE CONSTRUCTION Sales and Service Networks.

Basic instructions - Shop and Assembly

SHIMMING

For each adjustment operation, select adjusting shims and measure individually using a micrometer, then add up the recorded values. Do not rely on measuring the entire shimming set, which may be incorrect, or the rated value indicated on each shim.

ROTATING SHAFT SEALS

For correct rotating shaft seal installation, proceed as follows:

- before assembly, allow the seal to soak in the oil it will be sealing for at least thirty minutes.
- thoroughly clean the shaft and check that the working surface on the shaft is not damaged.
- position the sealing lip facing the fluid; with hydrodynamic lips, take into consideration the shaft rotation direction and position the grooves so that they will deviate the fluid towards the inner side of the seal.
- coat the sealing lip with a thin layer of lubricant (use oil rather than grease) and fill the gap between the sealing lip and the dust lip on double lip seals with grease.
- insert the seal in its seat and press down using a flat punch or seal installation tool. Do not tap the seal with a hammer or mallet.
- whilst inserting the seal, check that it is perpendicular to the seat; once settled, make sure that it makes contact with the thrust element, if required.
- to prevent damaging the seal lip on the shaft, position a protective guard during installation operations.

O-RING SEALS

Lubricate the O-RING seals before inserting them in the seats, this will prevent them from overturning and twisting, which would jeopardise sealing efficiency.

SEALING COMPOUNDS

Apply one of the following sealing compounds on the mating surfaces when specified: SILMATE® RTV1473, or **LOCTITE® RTV 598** or **LOCTITE® INSTANT GASKET 587 BLUE**. Before applying the sealing compound, prepare the surfaces as directed on product container or as follows:

- remove any incrustations using a metal brush.
- thoroughly de-grease the surfaces using a locally approved cleaning agent such as safety solvent or brake parts cleaner.

SPARE PARTS

Only use "CNH Original Parts" or " CASE CONSTRUCTION Parts".

Only genuine spare parts guarantee the same quality, duration and safety as original parts, as they are the same parts that are assembled during standard production. Only "CNH Original Parts" or " CASE CONSTRUCTION Parts" can offer this guarantee.
When ordering spare parts, always provide the following information:

- machine model (commercial name) and serial number
- part number of the ordered part, which can be found in the "Microfiches" or the "Service Parts Catalogue", used for order processing

PROTECTING THE ELECTRONIC/ ELECTRICAL SYSTEMS DURING CHARGING OR WELDING

To avoid damage to the electronic/electrical systems, always observe the following:

1. Never make or break any of the charging circuit connections, including the battery connections, when the engine is running.
2. Never short any of the charging components to ground.
3. Always disconnect the ground cable from the battery before arc welding on the combine or on any header attached to the combine.
   - position the welder ground clamp as close to the welding area as possible
   - if welding in close proximity to a computer module, then the module should be removed from the combine
   - never allow welding cables to lay on, near or across any electrical wiring or electronic component while welding is in progress
4. Always disconnect the negative cable from the battery when charging the battery in the combine with a battery charger.

NOTICE: *If welding must be performed on the unit, either the combine or the header (if it is attached), the battery ground cable must be disconnected from the combine battery. The electronic monitoring system and charging system will be damaged if this is not done.*

Remove the battery ground cable. Reconnect the cable when welding is completed.

⚠ WARNING ⚠

Battery acid causes severe burns. Batteries contain sulfuric acid. Avoid contact with skin, eyes or clothing. Antidote - EXTERNAL: flush with water. INTERNAL: drink large quantities of water or milk. Follow with milk of magnesia, beaten egg or vegetables oil. Call physician immediately. EYES: flush with water for 15 minutes and get prompt medical attention.

84-110

TOOLS

The tools that CASE CONSTRUCTION suggests and illustrate in this manual have been:

- specifically researched and designed for use with CASE CONSTRUCTION machines
- essential for reliable repair operations
- accurately built and rigorously tested so as to offer efficient and long-lasting operation

By using these tools, repair personnel will benefit from:

- operating in optimal technical conditions
- obtaining the best results
- saving time and effort
- working in safe conditions

NOTE: *The terms "front", "rear", "right-hand" and "left-hand" (when referred to different parts) are determined from the rear, facing in the direction of travel of the machine during operation.*

Torque - Minimum tightening torques for normal assembly

S-Series, T-Series

METRIC NON-FLANGED HARDWARE

NOM. SIZE	CLASS 8.8 BOLT and CLASS 8 NUT		CLASS 10.9 BOLT and CLASS 10 NUT		LOCKNUT CL.8 W/CL8.8 BOLT	LOCKNUT CL.10 W/CL10.9 BOLT
	UNPLATED	PLATED W/ZnCr	UNPLATED	PLATED W/ZnCr		
M4	2.2 N·m (19 lb in)	2.9 N·m (26 lb in)	3.2 N·m (28 lb in)	4.2 N·m (37 lb in)	2 N·m (18 lb in)	2.9 N·m (26 lb in)
M5	4.5 N·m (40 lb in)	5.9 N·m (52 lb in)	6.4 N·m (57 lb in)	8.5 N·m (75 lb in)	4 N·m (36 lb in)	5.8 N·m (51 lb in)
M6	7.5 N·m (66 lb in)	10 N·m (89 lb in)	11 N·m (96 lb in)	15 N·m (128 lb in)	6.8 N·m (60 lb in)	10 N·m (89 lb in)
M8	18 N·m (163 lb in)	25 N·m (217 lb in)	26 N·m (234 lb in)	35 N·m (311 lb in)	17 N·m (151 lb in)	24 N·m (212 lb in)
M10	37 N·m (27 lb ft)	49 N·m (36 lb ft)	52 N·m (38 lb ft)	70 N·m (51 lb ft)	33 N·m (25 lb ft)	48 N·m (35 lb ft)
M12	64 N·m (47 lb ft)	85 N·m (63 lb ft)	91 N·m (67 lb ft)	121 N·m (90 lb ft)	58 N·m (43 lb ft)	83 N·m (61 lb ft)
M16	158 N·m (116 lb ft)	210 N·m (155 lb ft)	225 N·m (166 lb ft)	301 N·m (222 lb ft)	143 N·m (106 lb ft)	205 N·m (151 lb ft)
M20	319 N·m (235 lb ft)	425 N·m (313 lb ft)	440 N·m (325 lb ft)	587 N·m (433 lb ft)	290 N·m (214 lb ft)	400 N·m (295 lb ft)
M24	551 N·m (410 lb ft)	735 N·m (500 lb ft)	762 N·m (560 lb ft)	1016 N·m (750 lb ft)	501 N·m (370 lb ft)	693 N·m (510 lb ft)

NOTE: *M4 through M8 hardware torque specifications are shown in pound-inches. M10 through M24 hardware torque specifications are shown in pound-feet.*

METRIC FLANGED HARDWARE

NOM. SIZE	CLASS 8.8 BOLT and CLASS 8 NUT		CLASS 10.9 BOLT and CLASS 10 NUT		LOCKNUT CL.8 W/CL8.8 BOLT	LOCKNUT CL.10 W/CL10.9 BOLT
	UNPLATED	PLATED W/ZnCr	UNPLATED	PLATED W/ZnCr		
M4	2.4 N·m (21 lb in)	3.2 N·m (28 lb in)	3.5 N·m (31 lb in)	4.6 N·m (41 lb in)	2.2 N·m (19 lb in)	3.1 N·m (27 lb in)
M5	4.9 N·m (43 lb in)	6.5 N·m (58 lb in)	7.0 N·m (62 lb in)	9.4 N·m (83 lb in)	4.4 N·m (39 lb in)	6.4 N·m (57 lb in)
M6	8.3 N·m (73 lb in)	11 N·m (96 lb in)	12 N·m (105 lb in)	16 N·m (141 lb in)	7.5 N·m (66 lb in)	11 N·m (96 lb in)
M8	20 N·m (179 lb in)	27 N·m (240 lb in)	29 N·m (257 lb in)	39 N·m (343 lb in)	18 N·m (163 lb in)	27 N·m (240 lb in)
M10	40 N·m (30 lb ft)	54 N·m (40 lb ft)	57 N·m (42 lb ft)	77 N·m (56 lb ft)	37 N·m (27 lb ft)	53 N·m (39 lb ft)
M12	70 N·m (52 lb ft)	93 N·m (69 lb ft)	100 N·m (74 lb ft)	134 N·m (98 lb ft)	63 N·m (47 lb ft)	91 N·m (67 lb ft)
M16	174 N·m (128 lb ft)	231 N·m (171 lb ft)	248 N·m (183 lb ft)	331 N·m (244 lb ft)	158 N·m (116 lb ft)	226 N·m (167 lb ft)
M20	350 N·m (259 lb ft)	467 N·m (345 lb ft)	484 N·m (357 lb ft)	645 N·m (476 lb ft)	318 N·m (235 lb ft)	440 N·m (325 lb ft)
M24	607 N·m (447 lb ft)	809 N·m (597 lb ft)	838 N·m (618 lb ft)	1118 N·m (824 lb ft)	552 N·m (407 lb ft)	

IDENTIFICATION

Metric Hex head and carriage bolts, classes 5.6 and up

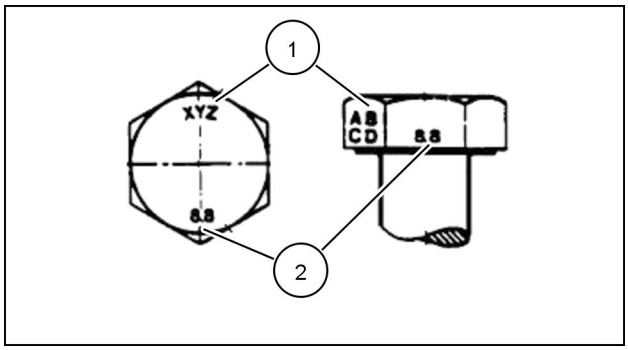

20083680 1

1. Manufacturer's Identification
2. Property Class

Metric Hex nuts and locknuts, classes 05 and up

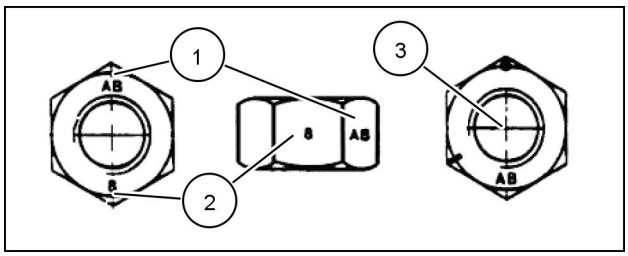

20083681 2

1. Manufacturer's Identification
2. Property Class
3. Clock Marking of Property Class and Manufacturer's Identification (Optional), i.e. marks **60 °** apart indicate Class 10 properties, and marks **120 °** apart indicate Class 8.

INCH NON-FLANGED HARDWARE

NOMINAL SIZE	SAE GRADE 5 BOLT and NUT		SAE GRADE 8 BOLT and NUT		LOCKNUT GrB W/ Gr5 BOLT	LOCKNUT GrC W/ Gr8 BOLT
	UN-PLATED or PLATED SILVER	PLATED W/ZnCr GOLD	UN-PLATED or PLATED SILVER	PLATED W/ZnCr GOLD		
1/4	**8 N·m (71 lb in)**	**11 N·m (97 lb in)**	**12 N·m (106 lb in)**	**16 N·m (142 lb in)**	**8.5 N·m (75 lb in)**	**12.2 N·m (109 lb in)**
5/16	**17 N·m (150 lb in)**	**23 N·m (204 lb in)**	**24 N·m (212 lb in)**	**32 N·m (283 lb in)**	**17.5 N·m (155 lb in)**	**25 N·m (220 lb in)**
3/8	**30 N·m (22 lb ft)**	**40 N·m (30 lb ft)**	**43 N·m (31 lb ft)**	**57 N·m (42 lb ft)**	**31 N·m (23 lb ft)**	**44 N·m (33 lb ft)**
7/16	**48 N·m (36 lb ft)**	**65 N·m (48 lb ft)**	**68 N·m (50 lb ft)**	**91 N·m (67 lb ft)**	**50 N·m (37 lb ft)**	**71 N·m (53 lb ft)**
1/2	**74 N·m (54 lb ft)**	**98 N·m (73 lb ft)**	**104 N·m (77 lb ft)**	**139 N·m (103 lb ft)**	**76 N·m (56 lb ft)**	**108 N·m (80 lb ft)**
9/16	**107 N·m (79 lb ft)**	**142 N·m (105 lb ft)**	**150 N·m (111 lb ft)**	**201 N·m (148 lb ft)**	**111 N·m (82 lb ft)**	**156 N·m (115 lb ft)**
5/8	**147 N·m (108 lb ft)**	**196 N·m (145 lb ft)**	**208 N·m (153 lb ft)**	**277 N·m (204 lb ft)**	**153 N·m (113 lb ft)**	**215 N·m (159 lb ft)**
3/4	**261 N·m (193 lb ft)**	**348 N·m (257 lb ft)**	**369 N·m (272 lb ft)**	**491 N·m (362 lb ft)**	**271 N·m (200 lb ft)**	**383 N·m (282 lb ft)**
7/8	**420 N·m (310 lb ft)**	**561 N·m (413 lb ft)**	**594 N·m (438 lb ft)**	**791 N·m (584 lb ft)**	**437 N·m (323 lb ft)**	**617 N·m (455 lb ft)**
1	**630 N·m (465 lb ft)**	**841 N·m (620 lb ft)**	**890 N·m (656 lb ft)**	**1187 N·m (875 lb ft)**	**654 N·m (483 lb ft)**	**924 N·m (681 lb ft)**

NOTE: *For Imperial Units,* ***1/4 in*** *and* ***5/16 in*** *hardware torque specifications are shown in pound-inches.* ***3/8 in*** *through* ***1 in*** *hardware torque specifications are shown in pound-feet.*

INCH FLANGED HARDWARE

NOM-INAL SIZE	SAE GRADE 5 BOLT and NUT		SAE GRADE 8 BOLT and NUT		LOCKNUT GrF W/ Gr5 BOLT	LOCKNUT GrG W/ Gr8 BOLT
	UNPLATED or PLATED SILVER	PLATED W/ZnCr GOLD	UNPLATED or PLATED SILVER	PLATED W/ZnCr GOLD		
1/4	9 N·m (80 lb in)	12 N·m (106 lb in)	13 N·m (115 lb in)	17 N·m (150 lb in)	8 N·m (71 lb in)	12 N·m (106 lb in)
5/16	19 N·m (168 lb in)	25 N·m (221 lb in)	26 N·m (230 lb in)	35 N·m (310 lb in)	17 N·m (150 lb in)	24 N·m (212 lb in)
3/8	33 N·m (25 lb ft)	44 N·m (33 lb ft)	47 N·m (35 lb ft)	63 N·m (46 lb ft)	30 N·m (22 lb ft)	43 N·m (32 lb ft)
7/16	53 N·m (39 lb ft)	71 N·m (52 lb ft)	75 N·m (55 lb ft)	100 N·m (74 lb ft)	48 N·m (35 lb ft)	68 N·m (50 lb ft)
1/2	81 N·m (60 lb ft)	108 N·m (80 lb ft)	115 N·m (85 lb ft)	153 N·m (113 lb ft)	74 N·m (55 lb ft)	104 N·m (77 lb ft)
9/16	117 N·m (86 lb ft)	156 N·m (115 lb ft)	165 N·m (122 lb ft)	221 N·m (163 lb ft)	106 N·m (78 lb ft)	157 N·m (116 lb ft)
5/8	162 N·m (119 lb ft)	216 N·m (159 lb ft)	228 N·m (168 lb ft)	304 N·m (225 lb ft)	147 N·m (108 lb ft)	207 N·m (153 lb ft)
3/4	287 N·m (212 lb ft)	383 N·m (282 lb ft)	405 N·m (299 lb ft)	541 N·m (399 lb ft)	261 N·m (193 lb ft)	369 N·m (272 lb ft)
7/8	462 N·m (341 lb ft)	617 N·m (455 lb ft)	653 N·m (482 lb ft)	871 N·m (642 lb ft)	421 N·m (311 lb ft)	594 N·m (438 lb ft)
1	693 N·m (512 lb ft)	925 N·m (682 lb ft)	979 N·m (722 lb ft)	1305 N·m (963 lb ft)	631 N·m (465 lb ft)	890 N·m (656 lb ft)

IDENTIFICATION

Inch Bolts and free-spinning nuts

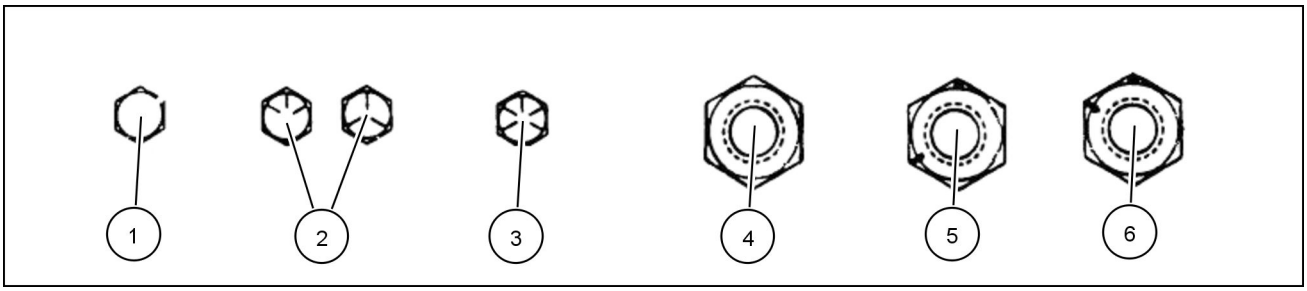

20083682 3

Grade Marking Examples

SAE Grade Identification			
1	Grade 2 - No Marks	4	Grade 2 Nut - No Marks
2	Grade 5 - Three Marks	5	Grade 5 Nut - Marks **120 °** Apart
3	Grade 8 - Five Marks	6	Grade 8 Nut - Marks **60 °** Apart

Inch Lock Nuts, All Metal (Three optional methods)

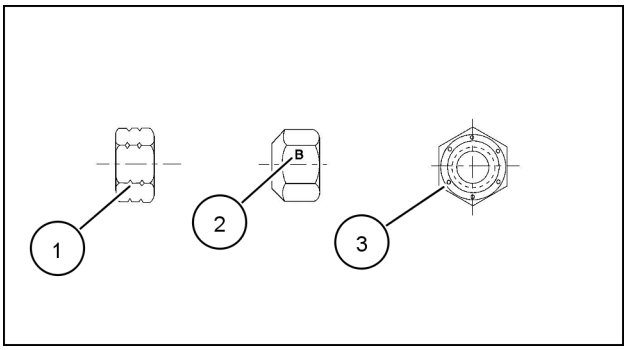

20090268 4

Grade Identification

Grade	Corner Marking Method (1)	Flats Marking Method (2)	Clock Marking Method (3)
Grade A	No Notches	No Mark	No Marks
Grade B	One Circumferential Notch	Letter B	Three Marks
Grade C	Two Circumferential Notches	Letter C	Six Marks

Torque - Standard torque data for hydraulics

INSTALLATION OF ADJUSTABLE FITTINGS IN STRAIGHT THREAD O RING BOSSES

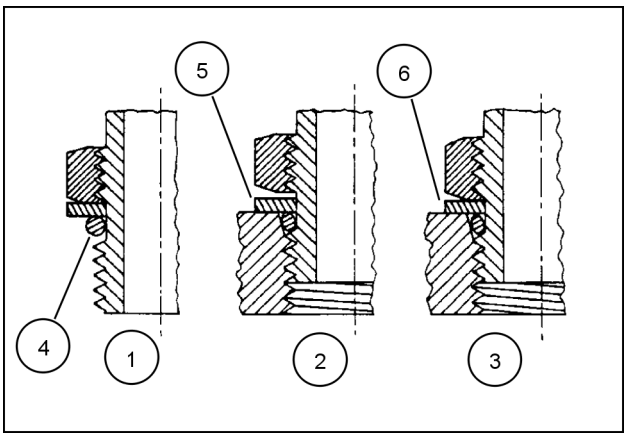

23085659 1

1. Lubricate the O-ring by coating it with a light oil or petroleum. Install the O-ring in the groove adjacent to the metal backup washer which is assembled at the extreme end of the groove **(4)**.
2. Install the fitting into the SAE straight thread boss until the metal backup washer contacts the face of the boss **(5)**.

   NOTE: *Do not over tighten and distort the metal backup washer.*
3. Position the fitting by turning out (counterclockwise) up to a maximum of one turn. Holding the pad of the fitting with a wrench, tighten the locknut and washer against the face of the boss **(6)**.

STANDARD TORQUE DATA FOR HYDRAULIC TUBES AND FITTINGS

TUBE NUTS FOR 37° FLARED FITTINGS				O-RING BOSS PLUGS ADJUSTABLE FITTING LOCKNUTS, SWIVEL JIC- 37° SEATS
SIZE	**TUBING OD**	**THREAD SIZE**	**TORQUE**	**TORQUE**
4	**6.4 mm (1/4 in)**	7/16-20	**12 - 16 N·m (9 - 12 lb ft)**	**8 - 14 N·m (6 - 10 lb ft)**
5	**7.9 mm (5/16 in)**	1/2-20	**16 - 20 N·m (12 - 15 lb ft)**	**14 - 20 N·m (10 - 15 lb ft)**
6	**9.5 mm (3/8 in)**	9/16-18	**29 - 33 N·m (21 - 24 lb ft)**	**20 - 27 N·m (15 - 20 lb ft)**
8	**12.7 mm (1/2 in)**	3/4-16	**47 - 54 N·m (35 - 40 lb ft)**	**34 - 41 N·m (25 - 30 lb ft)**
10	**15.9 mm (5/8 in)**	7/8-14	**72 - 79 N·m (53 - 58 lb ft)**	**47 - 54 N·m (35 - 40 lb ft)**
12	**19.1 mm (3/4 in)**	1-1/16-12	**104 - 111 N·m (77 - 82 lb ft)**	**81 - 95 N·m (60 - 70 lb ft)**
14	**22.2 mm (7/8 in)**	1-3/16-12	**122 - 136 N·m (90 - 100 lb ft)**	**95 - 109 N·m (70 - 80 lb ft)**
16	**25.4 mm (1 in)**	1-5/16-12	**149 - 163 N·m (110 - 120 lb ft)**	**108 - 122 N·m (80 - 90 lb ft)**
20	**31.8 mm (1-1/4 in)**	1-5/8-12	**190 - 204 N·m (140 - 150 lb ft)**	**129 - 158 N·m (95 - 115 lb ft)**
24	**38.1 mm (1-1/2 in)**	1-7/8-12	**217 - 237 N·m (160 - 175 lb ft)**	**163 - 190 N·m (120 - 140 lb ft)**
32	**50.8 mm (2 in)**	2-1/2-12	**305 - 325 N·m (225 - 240 lb ft)**	**339 - 407 N·m (250 - 300 lb ft)**

These torques are not recommended for tubes of **12.7 mm** (**1/2 in**) OD and larger with wall thickness of **0.889 mm** (**0.035 in**) or less. The torque is specified for **0.889 mm** (**0.035 in**) wall tubes on each application individually.

Before installing and torquing **37 °** flared fittings, clean the face of the flare and threads with a clean solvent or Loctite cleaner and apply hydraulic sealant **LOCTITE® 569** to the **37 °** flare and the threads.

Install fitting and torque to specified torque, loosen fitting and retorque to specifications.

PIPE THREAD FITTING TORQUE

Before installing and tightening pipe fittings, clean the threads with a clean solvent or Loctite cleaner and apply sealant **LOCTITE® 567 PST PIPE SEALANT** for all fittings including stainless steel or **LOCTITE® 565 PST** for most metal fittings. For high filtration/zero contamination systems use **LOCTITE® 545**.

PIPE THREAD FITTING	
Thread Size	**Torque (Maximum)**
1/8-27	**13 N·m** (**10 lb ft**)
1/4-18	**16 N·m** (**12 lb ft**)
3/8-18	**22 N·m** (**16 lb ft**)
1/2-14	**41 N·m** (**30 lb ft**)
3/4-14	**54 N·m** (**40 lb ft**)

INSTALLATION OF ORFS (O-RING FLAT FACED) FITTINGS

When installing ORFS fittings thoroughly clean both flat surfaces of the fittings **(1)** and lubricate the O-ring **(2)** with light oil. Make sure both surfaces are aligned properly. Torque the fitting to specified torque listed throughout the repair manual.

NOTICE: *If the fitting surfaces are not properly cleaned, the O-ring will not seal properly. If the fitting surfaces are not properly aligned, the fittings may be damaged and will not seal properly.*

NOTICE: *Always use genuine factory replacement oils and filters to ensure proper lubrication and filtration of engine and hydraulic system oils.*

The use of proper oils, grease, and keeping the hydraulic system clean will extend machine and component life.

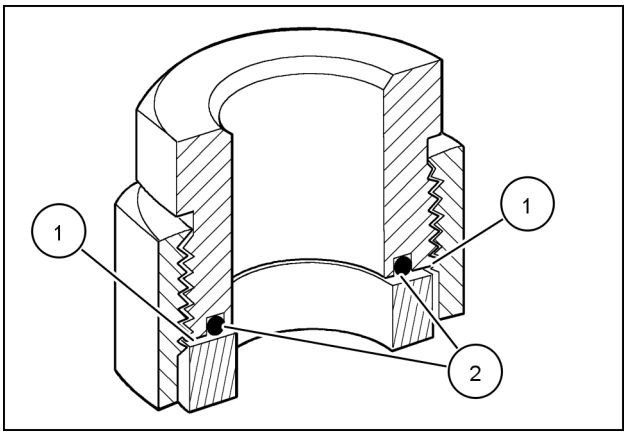

50011183 2

General specification - Biodiesel Fuels

Fatty Acid Methyl Ester Biodiesel (Biodiesel Fuel) consists of a family of fuels derived from vegetable oils treated with methyl esters.

NOTICE: *Biodiesel Fuel blends are approved for your engine only if they comply with* ***EN14214*** *Specification Standards or* ***ASTM D6751****.*

NOTICE: *It is imperative that you check which blend is approved for your engine with your CASE CONSTRUCTION dealer. Be aware that the use of Biodiesel Fuel that does not comply with the Standards mentioned above could lead to severe damage to the engine and fuel system of your machine. The use of fuels that are not approved may void CASE CONSTRUCTION Warranty coverage.*

Biodiesel Fuel Usage Conditions

NOTICE: *The Biodiesel Fuel must meet the fuel Specification mentioned above.*

Biodiesel Fuel must be purchased from a trusted supplier that understands the product and maintains good fuel quality. Biodiesel Fuel must be pre-blended by the supplier. Mixing Biodiesel Fuels on-site can result incorrect mixture that can lead to problems with both engine and fuel system.

Engine performance is affected by the use of Biodiesel Fuel. There may be up to **12 %** reduction in power or torque depending on the blend used.

NOTICE: *DO NOT modify the engine and/or injection pump settings to recover the reduced performance.*

The reduced power must be accepted if using any Biodiesel Fuel blend.

Some modification may be required to allow your engine to run Biodiesel Fuel. Consult you dealer for complete information on these modifications.

Biodiesel Fuel has a higher cloud point than Diesel Fuel.

NOTICE: *The use of high Biodiesel Fuel blends are not recommended in cold weather conditions.*

With Biodiesel Fuels, it may be necessary to change the engine oil, engine oil filter and fuel filter elements more frequently than with Diesel Fuels. Biodiesel Fuel can remove rust and particles from the inside of on-site fuel storage tanks that would normally adhere to the sides of the tank. Like particle deposits that commonly occur with Diesel Fuel, these particles can become trapped by the machine fuel filters, causing blockage and shortening filter life. In cold weather, this is more likely to happen. Consult your CASE CONSTRUCTION dealer for information on cold weather operation and proper maintenance intervals when using any Biodiesel Fuel blend.

When handling Biodiesel Fuel, care must be taken not to allow water into the fuel supply. Biodiesel Fuel will actually attract moisture from the atmosphere.

Fuel tanks must be kept as full as possible to limit the amount of air and water vapors in them. It may be necessary to drain the fuel filter water tap more frequently.

Potential oxidation and stability could be a problem with the fuel stored in the machine.

NOTICE: *Machines must not be stored for more than three months with Biodiesel Fuel blends in the fuel system.*

If long storage periods are necessary, the engine must run on Diesel Fuel for 20 hours to flush the Biodiesel Fuel out of the engine fuel system prior to storage.

NOTICE: *Biodiesel Fuel must not be stored in on-site storage tanks for more than three months.*

Any spillage of Biodiesel Fuel must be cleaned up immediately before it can cause damage to the environment and the paint finish of the machine.

Before using Biodiesel Fuel blends you should consult with your dealer to receive full information about the approved blend for your machine and any detailed conditions of its usage.

NOTICE: *Be aware that not fulfilling the requirements and conditions of Biodiesel Fuel usage will void your machine's CASE CONSTRUCTION Warranty coverage.*

General specification - General Welding

⚠ WARNING

Explosion hazard!
Batteries emit explosive gases. Always ventilate when using in an enclosed area or when charging.
Keep the battery away from sparks, open flames, and other ignition sources.
Failure to comply could result in death or serious injury.

W0369A

Use a 7013 or 7011 welding rod or wire that meets the following American Welding Society (AWS) specifications: ER80S-D2, ER70S-6 or E70C-M6-H4.

NOTICE: *ALWAYS disconnect the battery (both terminals) before welding on any part of the machine. Failure to do so may cause damage to sensitive electrical components.*

NOTICE: *Locate the welding ground as close as possible to the area to be welded. Do not allow the ground current to pass through any roller type bearing. Arcing inside the roller bearing can result in severe machine damage.*

https://truckmanualshub.com/

CONSUMABLES INDEX

Consumable	IU	PAGE
Loctite® RTV 598	Basic instructions - Shop and Assembly	13
Loctite® Instant Gasket 587 Blue	Basic instructions - Shop and Assembly	13
Loctite® 569	Torque - Standard torque data for hydraulics	20
Loctite® 567 PST Pipe Sealant	Torque - Standard torque data for hydraulics	21
Loctite® 565 PST	Torque - Standard torque data for hydraulics	21
Loctite® 545	Torque - Standard torque data for hydraulics	21

https://truckmanualshub.com/

CASE CONSTRUCTION

SERVICE MANUAL

HYDRAULIC, PNEUMATIC, ELECTRICAL, ELECTRONIC SYSTEMS

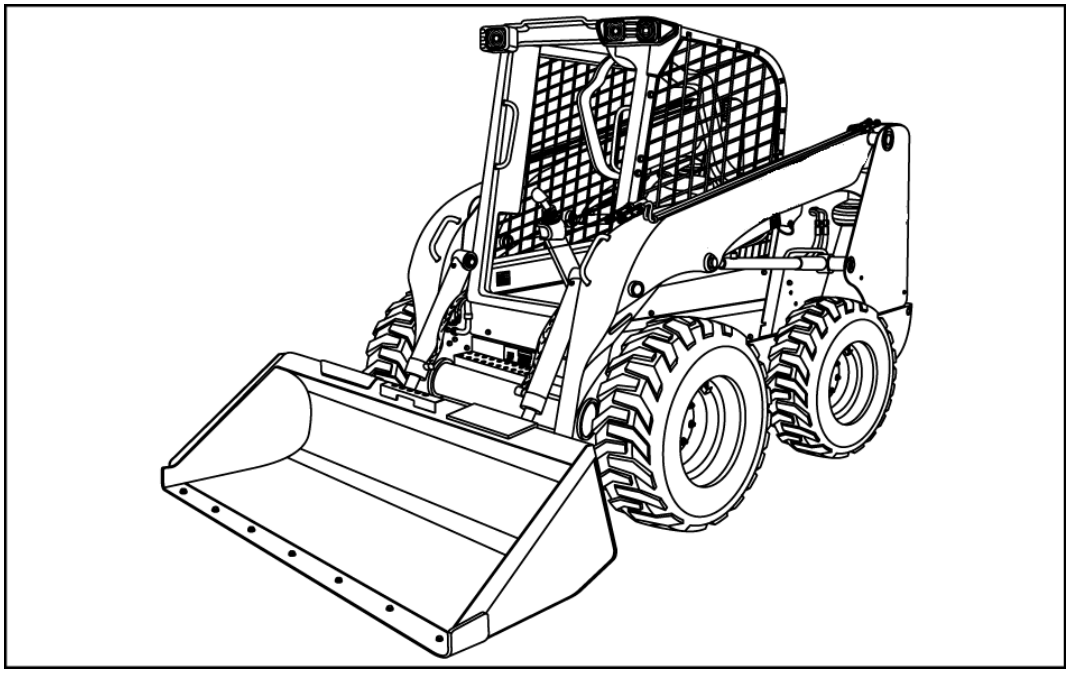

SR130 , SR150 , SR175 , SR200 , SR220 , SR250 , SV185 , SV250 , SV300 , TR270 , TR320 , TV380

84423866 25/07/2011
A

https://truckmanualshub.com/

Contents

HYDRAULIC, PNEUMATIC, ELECTRICAL, ELECTRONIC SYSTEMS - A

PRIMARY HYDRAULIC POWER SYSTEM A.10.A
SR130 , SR150 , SR175 , SR200 , SR220 , SR250 , SV185 , SV250 , SV300 , TR270 , TR320 , TV380

SECONDARY HYDRAULIC POWER SYSTEM A.12.A
SR130 , SR150 , SR175 , SR200 , SR220 , SR250 , SV185 , SV250 , SV300 , TR270 , TR320 , TV380

HYDRAULIC COMMAND SYSTEM A.14.A
SR130 , SR150 , SR175 , SR200 , SR220 , SR250 , SV185 , SV250 , SV300 , TR270 , TR320 , TV380

HIGH-FLOW HYDRAULIC POWER SYSTEM A.16.A
SR130 , SR150 , SR175 , SR200 , SR220 , SR250 , SV185 , SV250 , SV300 , TR270 , TR320 , TV380

ELECTRICAL POWER SYSTEM A.30.A
SR130 , SR150 , SR175 , SR200 , SR220 , SR250 , SV185 , SV250 , SV300 , TR270 , TR320 , TV380

LIGHTING SYSTEM A.40.A
SR130 , SR150 , SR175 , SR200 , SR220 , SR250 , SV185 , SV250 , SV300 , TR270 , TR320 , TV380

ELECTRONIC SYSTEM A.50.A
SR130 , SR150 , SR175 , SR200 , SR220 , SR250 , SV185 , SV250 , SV300 , TR270 , TR320 , TV380

FAULT CODES A.50.A
SR130 , SR150 , SR175 , SR200 , SR220 , SR250 , SV185 , SV250 , SV300 , TR270 , TR320 , TV380

https://truckmanualshub.com/

CONSUMABLES INDEX

Consumable	IU	PAGE
CNH MAT3509	Control valve - General specification of Secondary Auxiliary Valve	A.10.A / 20
CNH MAT3509	Reservoir - Filling	A.10.A / 138

https://truckmanualshub.com/

https://truckmanualshub.com/

HYDRAULIC, PNEUMATIC, ELECTRICAL, ELECTRONIC SYSTEMS - A

PRIMARY HYDRAULIC POWER SYSTEM - 10.A

SR130 , SR150 , SR175 , SR200 , SR220 , SR250 , SV185 , SV250 , SV300 , TR270 , TR320 , TV380

https://truckmanualshub.com/

Contents

HYDRAULIC, PNEUMATIC, ELECTRICAL, ELECTRONIC SYSTEMS - A

PRIMARY HYDRAULIC POWER SYSTEM - 10.A

TECHNICAL DATA

PRIMARY HYDRAULIC POWER SYSTEM

General specification for the 24.9cc Gear Pump 7
SR175, SV185

General specification of the 24.9cc Gear pump with high flow 12.5cc pump 8
SR175, SV185

General specification of the 34.1cc gear pump 9
SR200, SR220, SR250, SV250, SV300, TR270, TR320, TV380

General specification of the 20.4cc gear pump 10
SR130, SR150

General specification for 34.1cc Front pump with rear pump 23.0cc 11
SR250, SV300, TV380

General specification for the 34.1cc Gear pump with high flow 12.5cc. 12
SR200, TR270

General specification for the 34.1cc Gear pump with high flow 18.3cc. 13
SR220, SR250, SV250, SV300, TR320, TV380

Filter

General specification Hydraulic oil return filter 14

General specification Hydraulic oil supply strainer 15

Control valve

General specification of the Ride / Glide Control Valve 16

General specification of the EH Control Loader Valve for all models 17

General specification Mechanical Hand Control Loader valve on all models 18
SR130, SR150, SR175, SV185, SR200

General specification of the EH and Mechanical boom override valve on all models 19

General specification of Secondary Auxiliary Valve 20

General specification High Flow Valve 20

FUNCTIONAL DATA

PRIMARY HYDRAULIC POWER SYSTEM

Overview of Contaminates 21

Overview EH Drive Pattern Selector Switch 22
SR130 Electro hydraulic controls, SR150 Electro hydraulic controls, SR175 Electro hydraulic controls, SV185 Electro hydraulic controls, SR200 Electro hydraulic controls, SR220 Electro hydraulic controls, SR250 Electro hydraulic controls, SV250 Electro hydraulic controls, SV300 Electro hydraulic controls, TR270 Electro hydraulic controls, TR320 Electro hydraulic controls, TV380 Electro hydraulic controls

Component identification of hydraulic valves 23
SR220, SR250, SV250, SV300, TR320, TV380

https://truckmanualshub.com/

Component identification of hydraulic valves on medium frame models 31
SR175, SV185, SR200, TR270

Component identification of hydraulic valves 41
SR130, SR150

Component identification of pumps on large frame models 44
SR220, SR250, SV250, SV300, TR320, TV380

Component identification of pumps on medium frame models 48
SR175, SV185, SR200, TR270

Component identification of pumps on small frame models 52
SR130, SR150

Component identification of cylinders on small frame models 53
SR130, SR150

Component identification of cylinders on medium frames 54
SR175, SV185, SR200, TR270

Component identification of cylinders on large frame models 59
SR220, SR250, SV250, SV300, TR320, TV380

Component identification of hydraulic motors 62
SR220, SR250, SV250, SV300, TR320, TV380

Component identification of hydraulic motors 64
SR175, SV185, SR200, TR270

Component identification of hydraulic motors on small frame models 66
SR130, SR150

Hydraulic schematic frame 01 Two speed drive assembly 68
SV185 Electro hydraulic controls, SR220 Electro hydraulic controls, SR250 Electro hydraulic controls, SV250 Electro hydraulic controls, SV300 Electro hydraulic controls

Hydraulic schematic frame 02 Single speed drive assembly 70
SR220 Mechanical hydraulic controls, SR250 Mechanical hydraulic controls, SV250 Mechanical hydraulic controls, SV300 Mechanical hydraulic controls, TR320 Mechanical hydraulic controls, TV380 Mechanical hydraulic controls

Hydraulic schematic frame 03 Valve assembly 72
SR220 Mechanical hydraulic controls, SR250 Mechanical hydraulic controls, SV250 Mechanical hydraulic controls, SV300 Mechanical hydraulic controls, TR320 Mechanical hydraulic controls, TV380 Mechanical hydraulic controls

Hydraulic schematic frame 04 Enhanced high flow option 74
SR220 Electro hydraulic controls, SR250 Electro hydraulic controls, SV250 Electro hydraulic controls, SV300 Electro hydraulic controls, TR320 Electro hydraulic controls, TV380 Electro hydraulic controls

Hydraulic schematic frame 01 Two speed drive assembly 76
SR175 Mechanical hydraulic controls, SV185 Mechanical hydraulic controls, SR200 Mechanical hydraulic controls

Hydraulic schematic frame 02 Single speed drive assembly 78
SR130 Mechanical hydraulic controls, SR150 Mechanical hydraulic controls, SR175 Mechanical hydraulic controls, SV185 Mechanical hydraulic controls, SR200 Mechanical hydraulic controls

Hydraulic schematic frame 03 Valve assembly 80
SR130 Mechanical hydraulic controls, SR150 Mechanical hydraulic controls, SR175 Mechanical hydraulic controls, SV185 Mechanical hydraulic controls, SR200 Mechanical hydraulic controls

Hydraulic schematic frame 01 Two speed track drive assembly 82
TR270 Electro hydraulic controls, TR320 Electro hydraulic controls, TV380 Electro hydraulic controls

Hydraulic schematic frame 02 Valve assembly 84
SR220 Electro hydraulic controls, SR250 Electro hydraulic controls, SV250 Electro hydraulic controls, SV300 Electro hydraulic controls, TR270 Electro hydraulic controls, TR320 Electro hydraulic controls, TV380 Electro hydraulic controls

Hydraulic schematic frame 03 Enhanced high flow option 86
SV185 Electro hydraulic controls, SR220 Electro hydraulic controls, SR250 Electro hydraulic controls, SV250 Electro hydraulic controls, SV300 Electro hydraulic controls, TR270 Electro hydraulic controls, TR320 Electro hydraulic controls, TV380 Electro hydraulic controls

Hydraulic schematic frame 01 Two speed drive assembly 88
SR220, SR250, SV250, SV300

Hydraulic schematic frame 02 Valve assembly 90
SR220 Electro hydraulic controls, SR250 Electro hydraulic controls, SV250 Electro hydraulic controls, SV300 Electro hydraulic controls, TR270 Electro hydraulic controls, TR320 Electro hydraulic controls, TV380 Electro hydraulic controls

https://truckmanualshub.com/

Hydraulic schematic frame 03 Enhanced high flow option 92
SV185 Electro hydraulic controls, SR220 Electro hydraulic controls, SR250 Electro hydraulic controls, SV250 Electro hydraulic controls, SV300 Electro hydraulic controls, TR270 Electro hydraulic controls, TR320 Electro hydraulic controls, TV380 Electro hydraulic controls

Hydraulic schematic frame 01 Two speed drive assembly 94
SR175 Electro hydraulic controls, SV185 Electro hydraulic controls, SR200 Electro hydraulic controls

Hydraulic schematic frame 02 Single speed drive assembly 96
SR175 Mechanical hydraulic controls, SV185 Mechanical hydraulic controls, SR200 Mechanical hydraulic controls

Hydraulic schematic frame 03 Valve assembly 98
SR175 Electro hydraulic controls, SV185 Electro hydraulic controls, SR200 Electro hydraulic controls

Hydraulic schematic frame 01 Single speed drive assembly 100
SR130 Mechanical hydraulic controls, SR150 Mechanical hydraulic controls

Hydraulic schematic frame 02 Valve assembly 102
SR130 Mechanical hydraulic controls, SR150 Mechanical hydraulic controls

Hydraulic schematic frame 01 Single speed drive assembly 104
SR130 Electro hydraulic controls, SR150 Electro hydraulic controls

Hydraulic schematic frame 02 Valve assembly 106
SR130 Electro hydraulic controls, SR150 Electro hydraulic controls

Hydraulic schematic frame 01 Mechanical two speed track drive assembly 108
TR270 Mechanical hydraulic controls, TR320 Mechanical hydraulic controls, TV380 Mechanical hydraulic controls

Hydraulic schematic frame 02 Valve assembly 110
TR270 Mechanical hydraulic controls, TR320 Mechanical hydraulic controls, TV380 Mechanical hydraulic controls

Control valve
Overview Loader Lift Control - Overview 113
Overview Loader bucket control 114
Overview Loader arm float 115

SERVICE

PRIMARY HYDRAULIC POWER SYSTEM
Cleaning 116
Decontaminating 119
Depressurising 121

Relief valve
Flow test Loader main relief valve 122
Pressure test Loader valve main relief 124

Hydraulic pump
Flow test Loader hydraulic pump 125
Install 127

Charge pump
Pressure test 131
Pressure test (Machines Equipped with EH Controls) 134

Reservoir
Apply vacuum 137
Filling 138
Visual inspection 139

Filter
Remove 140
Install 141

Oil cooler

https://truckmanualshub.com/

Remove for models equipped with ISM engine 142
SR130, SR150, SR175, SV185

Install for machines equipped with ISM engine 145
SR130, SR150, SR175, SV185

Remove - for machines equipped with F5C engine 148
SR200, SR220, SR250, SV250, SV300

Install - for machines equipped with F5C engine 151
SR200, SR220, SR250, SV250, SV300, TR270, TR320, TV380

https://truckmanualshub.com/

CONSUMABLES INDEX

Consumable	IU	PAGE
CNH MAT3509	Control valve - General specification of Secondary Auxiliary Valve	A.10.A / 20
CNH MAT3509	Reservoir - Filling	A.10.A / 138

PRIMARY HYDRAULIC POWER SYSTEM - General specification for the 24.9cc Gear Pump

SR175, SV185

Auxiliary pump

Manufacturer	Shimadzu
Type	Gear pump
Direction of Rotation	Clockwise - viewed looking into input shaft.
Test Speed	**1800 RPM**
Test Pressure	**172.0 bar** (**2494.6 psi**)
Test Flow	**42.5 l/min** (**11.2 US gpm**)
Displacement	**24.9 cm³** (**1.5 in³**)
Input shaft	13 tooth spline
Speed	**400 - 3500 RPM**
Drive	Direct

PRIMARY HYDRAULIC POWER SYSTEM - General specification of the 24.9cc Gear pump with high flow 12.5cc pump

SR175, SV185

Auxiliary pump with high flow pump

Manufacturer	Shimadzu
Type	Gear pump
Direction of Rotation	Clockwise - viewed looking into input shaft.
Displacement - load/aux section	**24.9 cm³** (**1.5 in³**)
High flow section displacement	**12.5 cm³** (**0.8 in³**)
Test Speed	**1800 RPM**
Test Pressure	**172.0 bar** (**2494.6 psi**)
Test Flow 1	**42.5 l/min** (**11.2 US gpm**)
Test Flow 2	**20.4 l/min** (**5.4 US gpm**)
Input shaft	13 tooth spline
Speed	**500 - 3500 RPM**
Drive	Direct
Relief valve setting	**210 bar** (**3045 psi**)

PRIMARY HYDRAULIC POWER SYSTEM - General specification of the 34.1cc gear pump

SR200, SR220, SR250, SV250, SV300, TR270, TR320, TV380

Auxiliary pump

Manufacturer	Shimadzu
Type	Gear pump
Direction of Rotation	Clockwise - viewed looking into input shaft.
Displacement, loader/aux section	**34.1 cm³** (**2.1 in³**)
Speed	**400 - 3000 RPM**
Test Speed	**1800 RPM**
Test Pressure	**172.0 bar** (**2494.6 psi**)
Test Flow	**57 l/min** (**15.1 US gpm**)
Drive	Direct
Input shaft	13 tooth spline
Relief valve setting	**210 bar** (**3045 psi**)

PRIMARY HYDRAULIC POWER SYSTEM - General specification of the 20.4cc gear pump

SR130, SR150

Loader pump

Manufacturer	Shimadzu
Type	Gear pump
Direction of Rotation	Clockwise - viewed looking into input shaft.
Test Speed	**1800 RPM**
Test Pressure	**172.0 bar** (**2494.6 psi**)
Test Flow	**40.1 l/min** (**10.6 US gpm**)
Displacement	**20.4 cm²** (**3.2 in²**)
Input shaft	13 tooth spline
Speed	**900 - 3500 RPM**
Drive	Direct

https://truckmanualshub.com/

PRIMARY HYDRAULIC POWER SYSTEM - General specification for 34.1cc Front pump with rear pump 23.0cc

SR250, SV300, TV380

Manufacturer	Shimadzu
Type	Gear pump
Direction of Rotation	Clockwise - viewed looking into input shaft.
Displacement	**34.1 cm³** (**2.1 in³**)
Front pump rated pressure	**210 bar** (**3045.0 psi**)
Input shaft	13 tooth spline
Speed	**400 - 3000 RPM**
Rear pump rated pressure	**28 bar** (**406 psi**)
Drive	Direct
Normal pressure	**193 bar** (**2799 psi**)
Surge pressure	**262 bar** (**3799 psi**)
Relief valve setting	**210 bar** (**3045 psi**)

PRIMARY HYDRAULIC POWER SYSTEM - General specification for the 34.1cc Gear pump with high flow 12.5cc.

SR200, TR270

Manufacturer	Shimadzu
Type	Gear pump
Direction of Rotation	Clockwise - viewed looking into input shaft.
Displacement, loader/aux section	**34.1 cm³** (**2.1 in³**)
Test Speed	**1800 RPM**
Test Pressure	**172.0 bar** (**2494.6 psi**)
Test Flow (loader / aux)	**57.0 l/min** (**15.1 US gpm**)
Test Flow (high flow sect.)	**20.4 l/min** (**5.4 US gpm**)
High flow section displacement	**12.5 cm³** (**0.8 in³**)
Input shaft	13 tooth spline
Speed	**500 - 3000 RPM**
Drive	Direct

PRIMARY HYDRAULIC POWER SYSTEM - General specification for the 34.1cc Gear pump with high flow 18.3cc.

SR220, SR250, SV250, SV300, TR320, TV380

Manufacturer	Shimadzu
Type	Gear pump
Direction of Rotation	Clockwise - viewed looking into input shaft.
Displacement	**34.1 cm³** (**2.1 in³**)
High flow pump displacement	**18.3 cm³** (**1.1 in³**)
Test Speed	**1800 RPM**
Test Pressure	**172.0 bar** (**2494.6 psi**)
Test Flow 1	**57.0 l/min** (**15.1 US gpm**)
Test Flow 2	**31.1 l/min** (**8.2 US gpm**)
Input shaft	13 tooth spline
Speed	**500 - 2700 RPM**
Drive	Direct

Filter - General specification Hydraulic oil return filter

Filter type	Spin-on
Filter media	Synthetic
Filter efficiency	**98.7 %** at 6 micron
Flow rating	**132 l/min** (**35 US gpm**)
System operating pressure	**14 bar** (**200 psi**) +/- **3 bar** (**50 psi**)
Minimum static burst pressure	**69 bar** (**1000 psi**)
Operating temperature range	**-30 - 107 °C** (**-22 - 225 °F**)

https://truckmanualshub.com/

Filter - General specification Hydraulic oil supply strainer

Filter type	60 mesh wire strainer
Filter efficiency	approximately 250 micron
Flow rating	**113 l/min** (**30 US gpm**)
Operating temperature range	up to **110 °C** (**230 °F**)
Internal thread	-24 SAE straight thread o-ring boss 1 7/8-12 thread
External thread	-48 SAE straight thread o-ring boss 3 3/8-12 thread

Control valve - General specification of the Ride / Glide Control Valve

Valve Configuration:	Solenoid operated, 4 way, 2 position, direct acting, spool type hydraulic cartridge valve.
Hydraulic Requirements:	Flow = **22.7 l/min** (**6 US gpm**).
	System Pressure = **210 bar** (**3045 psi**).
Electrical Requirements:	Operating Voltage = **14 V**
	Maximum Power = **22 W**
	Polarity = Power: Pin 1 or A, Ground: Pin 2 or B
	Solenoid connection type = Duetsch DT series.
Operating Temperature Range:	**-30 - 107 °C** (**-22 - 225 °F**)
Port Identification Chart:	**(1)** Tank Return
	(2) Lift Cylinder Rod Port
	(3) Accumulator
	(4) Lift Cylinder Base Port

Control valve - General specification of the EH Control Loader Valve for all models

Main Relief Setting:	**3000 psi** (+145/-0) at **23 US gpm**
Circuit Relief Setting:	**(A1) 3263 psi** (+145/-73)
	(A2) 3481 psi (+145/-73)
	(B2) 3336 psi (+145/-73)
Spool Position Sensor Output:	Initial valve flow in negative direction must occur when sensor output is **1.9 - 2.3 V**
	Initial valve flow in positive direction must occur when sensor output is **2.7 - 3.1 V**
Electrical Requirements:	Operating Voltage = **14 V**
	Maximum Power = **22 W**
	Polarity = Power: Pin 1 or A, Ground: Pin 2 or B
Electrical Connector Types:	Work port lockout solenoid: Deutsche DT series.
	EH Auxiliary PRV: Deutsche DT series.
	Spool position sensor: Deutsche DT series
Operating Temperature Range:	**-30 - 107 °C** (**-22 - 225 °F**)
Port Identification Chart:	**(P)** Supply Inlet
	(T) Tank Return
	(A1) Lift Cylinder Base End
	(B1) Lift Cylinder Rod End
	(A2) Tilt Cylinder Rod End
	(B2) Tilt Cylinder Base End
	(A3) Auxiliary Male Coupler
	(B3) Auxiliary Female Coupler
	(PLV) Work port Lockout Pilot Supply
	(PLV) (Drain) Work port Lockout Tank Return
	(P2) High Flow Inlet
	(V) EH PRV Supply
	(L) EH PRV Tank Return

Control valve - General specification Mechanical Hand Control Loader valve on all models

SR130, SR150, SR175, SV185, SR200

Main Relief Setting:	**3000 psi** (+145/-0) at **23 US gpm**
Circuit Relief Setting:	**(A1) 3263 psi** (+145/-73)
	(B2) 3336 psi (+145/-73)
	(A2) 3481 psi (+145/-73)
Maximum Spool Force with Blocked Ports at Full Flow:	Loader Spool: **28 lb**
	Loader Spool Detent Position: **65 lb** IN; **58 lb** OUT
	Bucket Spool: **29 lb**
	Minimum reserve force on all spools to be greater than **5 lb**
Electrical Requirements:	Operating Voltage = **14 V**
	Maximum Power = **22 W**
	Polarity = Power: Pin 1 or A, Ground: Pin 2 or B
Electrical Connector Types:	Work port lockout solenoid: Deutsche DT series
	EH Auxiliary PRV: Deutsche DT series.
	Spool position sensor: Deutsche DT series
Operating Temperature Range:	**-30 - 107 °C** (**-22 - 225 °F**)
Port Identification Chart:	**(P)** Supply Inlet
	(T) Tank Return
	(A1) Lift Cylinder Base End
	(B1) Lift Cylinder Rod End
	(A2) Tilt Cylinder Rod End
	(B2) Tilt Cylinder Base End
	(A3) Auxiliary Male Coupler
	(B3) Auxiliary Female Coupler
	(PLV) Work port Lockout Pilot Supply
	(PLV) (Drain) Work port Lockout Tank Return
	(P2) High Flow Inlet
	(V) EH PRV Supply
	(L) EH PRV Tank Return

https://truckmanualshub.com/

This as a preview PDF file from **best-manuals.com**

Best Manuals

Download full PDF manual at **best-manuals.com**