https://truckmanualshub.com/

MINI EXCAVATORS

Concrete solutions. Always.

ES 85 ZT	Operating weight 9.000 - 9.320 kg Engine Power 46,5 kW - 62,9 HP
ES 95 TR	Operating weight 9.900 - 10.220 kg Engine Power 46,5 kW - 62,9 HP
ES 85 SB	Operating weight 8.300 - 8.620 kg Engine Power 46,5 kW - 62,9 HP
ES 90 UR	Operating weight 9.100 - 9.420 kg Engine Power 46,5 kW - 62,9 HP

EUROCOMACH®

https://truckmanualshub.com/

All models are equipped with a side heat engine: this allows the size of the cab to be increased. The blower fan improves engine cooling, making the cabin cooler and quieter for greater operator comfort.

https://truckmanualshub.com/

LIKE THE GREATEST, JUST SMALLER.

DIMENSIONS

With zero tail swing, you get optimal performance in confined spaces working in complete safety, focusing solely on the excavation operation, even with the cab door open, as it remains within the profile of the tracks.

With four types of arms, the 9 to 10 ton excavator range is suitable for any work site.
Limitless power and versatility

ZERO TAIL

https://truckmanualshub.com/

The ergonomic driver seat includes servo assisted controls, cushioned seat with arm rests and motion levers with closing pedals.

The foot rest pedals give the operator greater stability during the different work stages, especially when working on slopes.

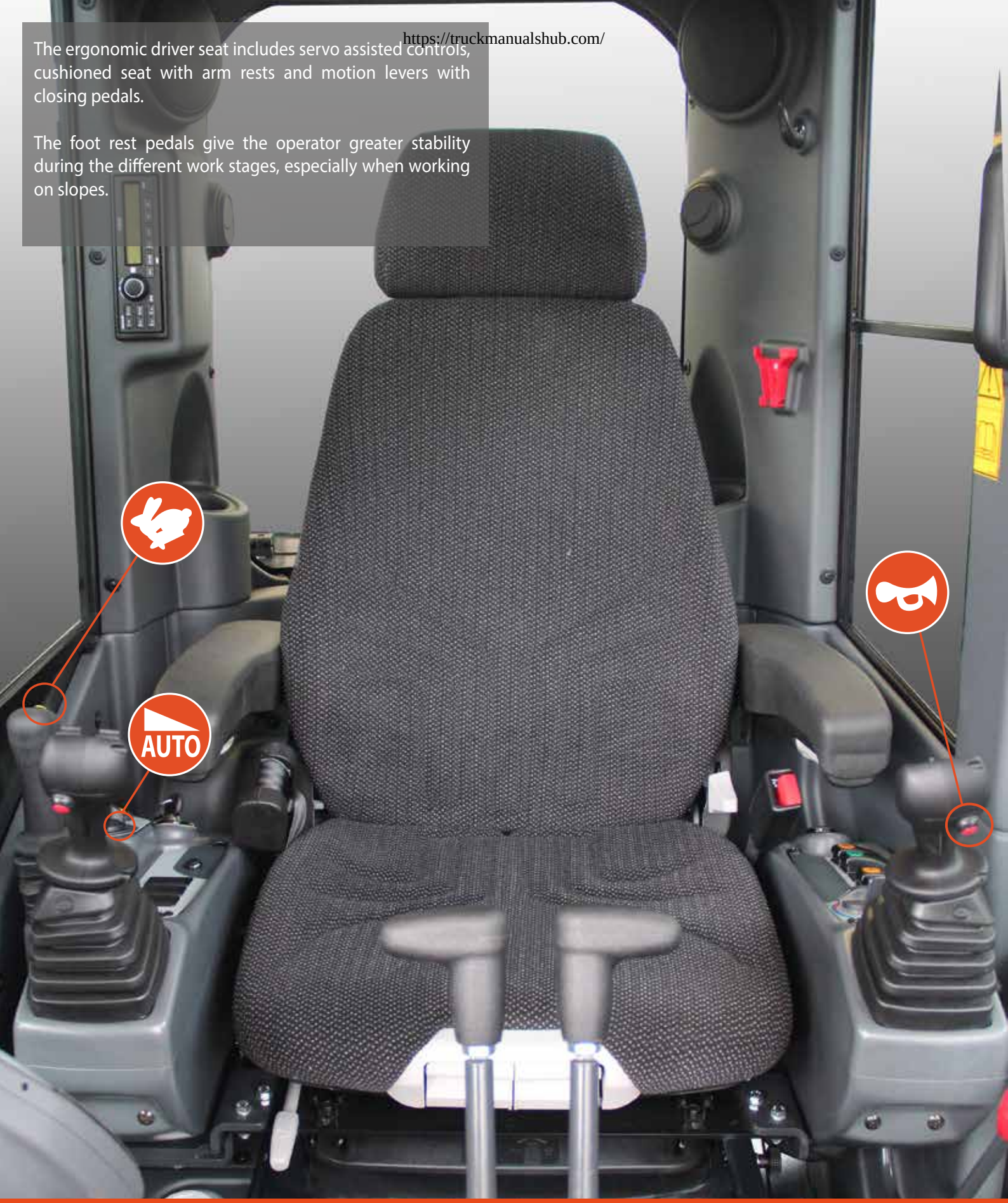

USB RADIO

The radio is equipped with a handy USB port.

https://truckmanualshub.com/

COMFORT, SAFETY AND FUNCTIONALITY. FINALLY TOGETHER

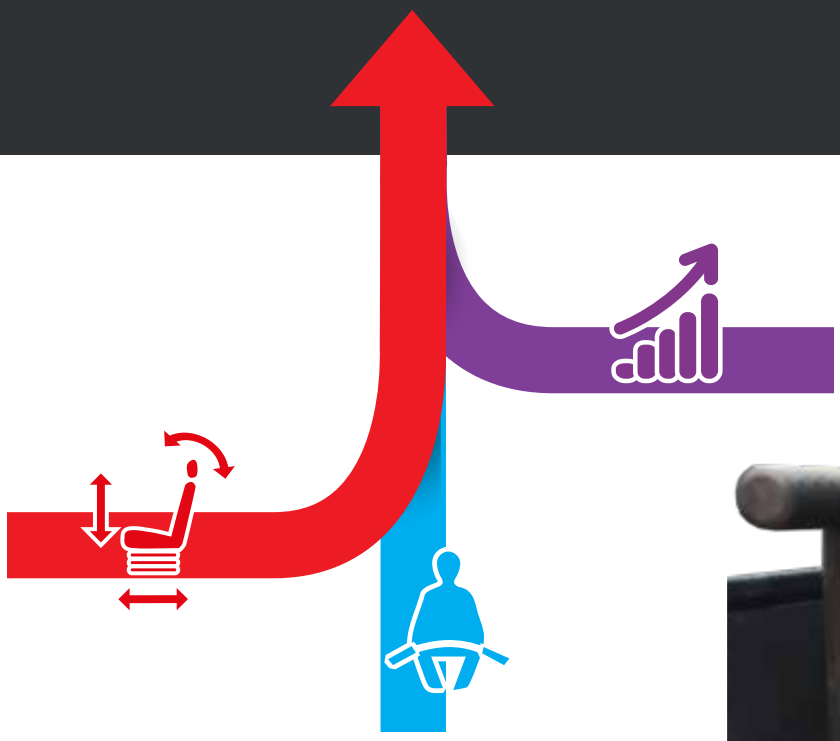

COMMANDS AND CONTROLS

All models have two motion modes: first gear with reduced speed and high thrust force and second speed with greater transfer speed. Everything is controlled by a practical button above the backfill blade lever.
Motion can be controlled using the advancement lever and integrated folding pedals that, once closed, increase the space available to the operator and prevent accidental use.

The foot board flush with the door makes for stepless exit from the cab and facilitates floor cleaning operations. It was designed to be able to be removed easily in order to perform extraordinary maintenance.

STRAIGHT TRAVEL

In case of simultaneous control of the services and motion, the hydraulic system with variable displacement pumps simultaneously ensures the fluidity of movements and straight driving of the machine.

AUTO TWO SPEED

When the excavator needs more thrust force, the automatic speed transmission intervenes, reducing the motion ratio.

https://truckmanualshub.com/

The cabin, with its generous interior dimensions, offers some of the best interior space in its class. The large width of the access door makes it easy to climb in and out.
The front windshield with assisted lift promotes maximum visibility due to its considerable width.

The adjustable suspension seat combined with the floating cabin, adequately dampens vibrations and bumps, maximizing operator comfort.
The cab is equipped with a radio, glove compartment, USB port, courtesy light, sliding sunblind, battery charger and other practical accessories.

The multifunction display allows the operator to view the machine status and choose the various use configurations using simple and intuitive commands. The lighted and analogue indicators along with audible alarms ensure immediate control of the primary functions.

The tilting controls, triple arm (ES 95 TR), offset arm (ES 90 UR) and auxiliary hydraulic systems are controlled through convenient and precise proportional electro-hydraulic rollers located on the joysticks.

https://truckmanualshub.com/

The special design of the body and protective structures give the operator a wide field of vision, allowing easy control of the front tracked part.

The large windshield along with the upper rear window lets the operator keep an eye on the entire work area while remaining comfortably seated.

WORK LIGHTS

Powerful lights optimize visibility even with low lighting: they are located in the lower compartments and built into or installed in the work arm.

https://truckmanualshub.com/

LOAD SENSING HYDRAULIC SYSTEM

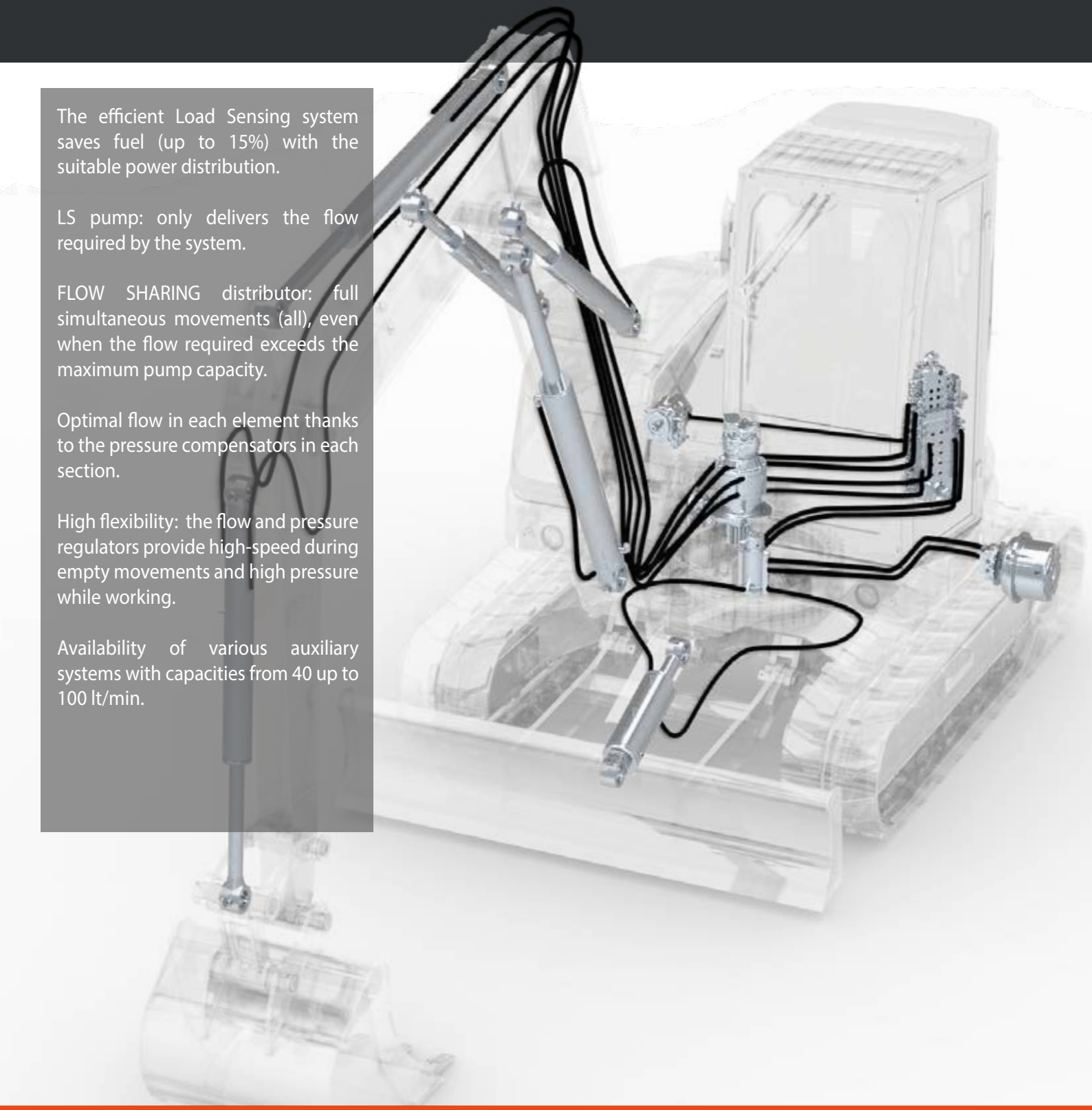

The efficient Load Sensing system saves fuel (up to 15%) with the suitable power distribution.

LS pump: only delivers the flow required by the system.

FLOW SHARING distributor: full simultaneous movements (all), even when the flow required exceeds the maximum pump capacity.

Optimal flow in each element thanks to the pressure compensators in each section.

High flexibility: the flow and pressure regulators provide high-speed during empty movements and high pressure while working.

Availability of various auxiliary systems with capacities from 40 up to 100 lt/min.

https://truckmanualshub.com/

FLEXIBILITY, COMPACTNESS, ERGONOMICS.

The practical additional internal and external ballast (optional) can, when needed, further increase the excellent operating stability without compromising the overall size of the machine.

EFFICIENCY AND CONSUMPTION

The heart of the excavators is the efficient and silent YANMAR 4TNV98 engine, designed and built to optimize performance and reduce fuel consumption.

The long intervals between programmed maintenance contribute to economic efficiency, reducing costs and machine downtime.
The Auto-Idle automatic controls reduce the engine rpm when the hydraulic system is not in use, controlling fuel consumption.

SAFETY

Sensors monitoring the manipulator position prevent accidental control of the machine.
Safety belts, the cabin structure and rollbar with ROPS FOPS level I and TOPS certificate provide all of the safety needed in the cab in the event of an accident.

OPTIONAL COUNTERWEIGHT

https://truckmanualshub.com/

The ES 85 SB with fixed arm on the cab side was built following the design for large-sized excavators: this gives it great sturdiness and reliability.

https://truckmanualshub.com/

TRANSPORT WITHOUT LIMITS

Careful and scrupulous design means all of the models in the category have optimal dimensions for loading in 40' High Cube containers.

https://truckmanualshub.com/

Easy routine maintenance simplifies service operations.
The side compartment allows quick access to the electronic pump to refill the fuel and to the hydraulic distributor.

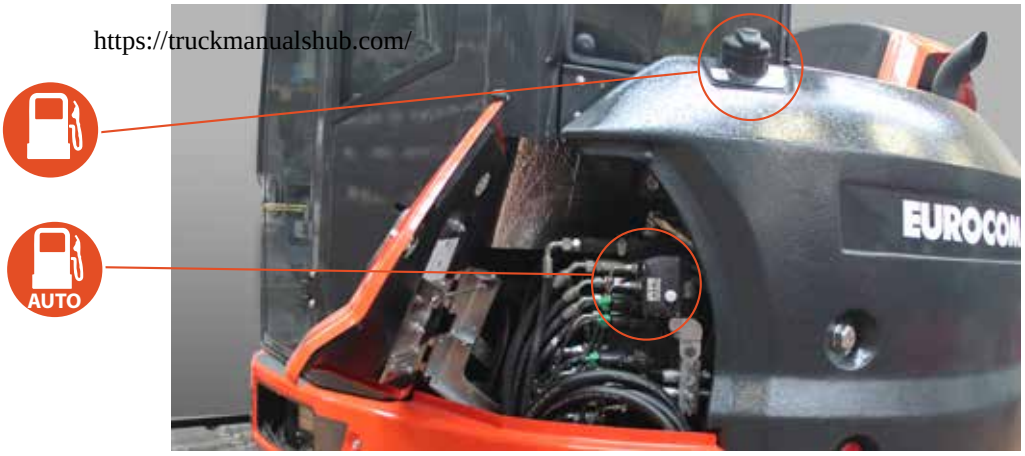

Services related to the heat engine are easily reached through a wide opening and the side compartment.
All the filters (fuel, oil and air) in addition to checking and topping up the engine oil, are easily identified on the side.
It is simple and easy to clean all of the radiators thanks to the front compartment opening.

There is a large, locking tool compartment available to the operator.

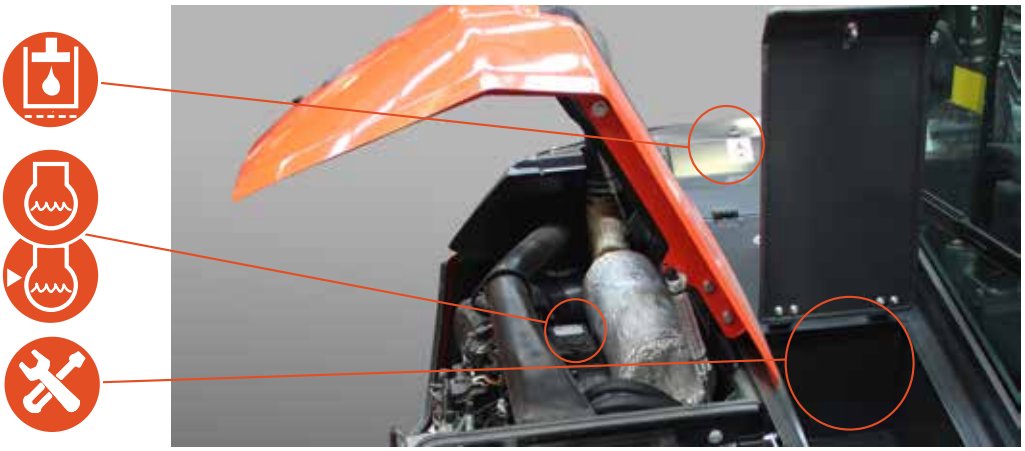

All access points for daily checks and for routine maintenance are concentrated in defined areas, optimizing machine downtime.

ACCESSIBILITY

Common or dedicated access areas make every maintenance operation quick and easy.

https://truckmanualshub.com/

SPACE FOR SERVICES

https://truckmanualshub.com/

THE IMPORTANCE OF BEING RELIABLE.

RELIABILITY

Designed and tested for high performance with continuous reliability.
The definition of the materials, the selection of components and design of the structures were created to exceed the most stressful and harsh work tests.
Standing out among these are the rotation column in fusion, the protections on the lifting cylinder and the steel blade and bonnets that increase efficiency and life of the product.

PERFORMANCE

https://truckmanualshub.com/

ECS: ONE CONCEPT, NUMEROUS POSSIBILITIES.

UTILITIES AND SERVICES

We listen to all your needs so we can propose the best possible machine solution.

We consider our products to be not only simple machines but the best opportunity for our clients.

Among the services provided, the following are available:

Customized paint
Various types of tracks
Auxiliary line hookups customized by type and quantity
Additional equipment

The many configurations available allow you to make the best choice in relation to the work to be performed.

https://truckmanualshub.com/

THE NEW ENGINE TIER 4

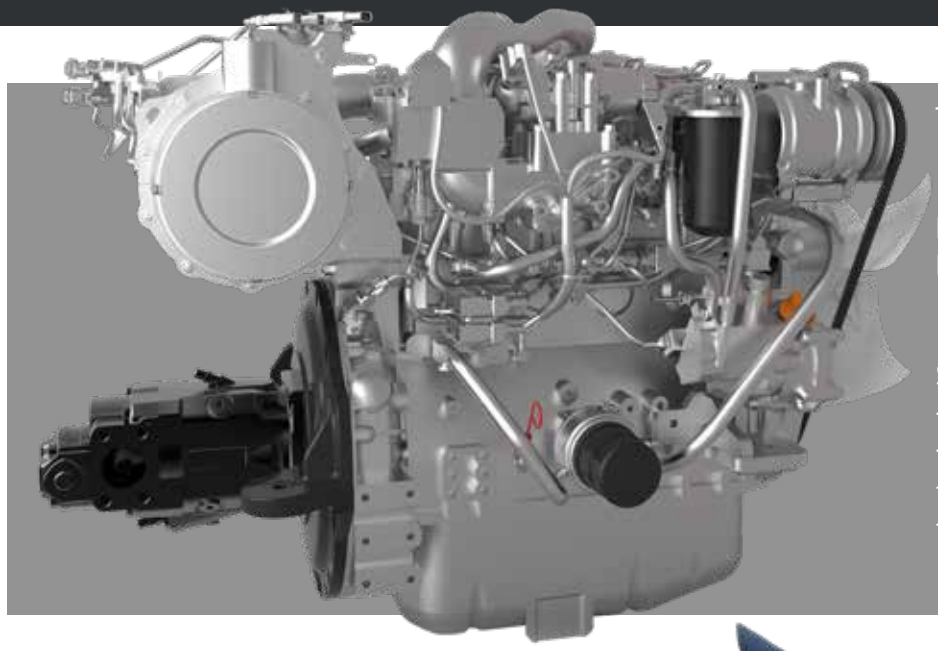

TURBO engine: YANMAR 4TNV98CT-VPR
EU STAGE IIIB (EPA TIER 4) with
EGR, Common Rail and filter DPF
Power: 53.7 kw / 73 HP @ 2200 rpm
Displacement: 3.319 cc no. cylinders: 4

Side heat engine:
-heating reduction (suction fan)
-noise reduction in cab
-heat reduction in cab
-cab size increased

In compliance with the current standards for reduction of exhaust emissions, the heat engine is equipped with two exhaust post-treatment systems: DPF particulate filter and DOC oxidation catalyst.
The regeneration system that cleans the DPF starts working automatically but may be disabled during use in areas with a risk of fire.

https://truckmanualshub.com/

The tilting controls, triple arm (ES 95 TR4), offset arm (ES 90 UR4) and auxiliary hydraulic systems are controlled through convenient and precise proportional electro-hydraulic rollers located on the joysticks.

Control and comfort at the top of its class.

The intuitive digital air conditioning instruments allows work in the most comfortable conditions with automatic setting of the internal temperature. Air distribution is guaranteed by the powerful conditioner combined with 6 nozzles located in various spots in the cab.

All switches are built into the ergonomic keypad located on the right of the console.
The operator can easily interact with the TFT monitor using two simple buttons and the convenient navigation selector.

https://truckmanualshub.com/

NEW CONTROL, SAME COMFORT

7" TFT ACTIVE MATRIX DISPLAY

The multifunction display allows the operator to view the machine status and choose the various use configurations using intuitive commands.
- Hours and maintenance control
- Engine RPM
- Operating pressure (service)
- Anomalies
- Ability to navigate through the various pages to set the capacity of the auxiliary hydraulic systems

MANAGEMENT MODE

Electronic control of the LS and torque based on the work mode selected (Economy, Standard, Power).

ECONOMY

Engine Speed: fixed at 2000 rpm
Torque and Pressure: Low
Fuel consumption: low
Use: Precision and not overly heavy work

STANDARD

Engine: variable speed
LS torque and pressure differential: standard
Fuel consumption: standard
Normal use of the machine

POWER

Engine: variable speed
LS torque and pressure differential: high
Fuel consumption: high
Excellent performance and high productivity

https://truckmanualshub.com/

TIER 4

https://truckmanualshub.com/

TIER 4

The ES 95 TR is equipped with a triple arm that offers a longer extension and greater return: this facilitates excavation operations near the machine and makes loading operations easier.

https://truckmanualshub.com/

SATELLITE MONITORING SYSTEM

EUROCOMACH GEOSERVICE

– Precise location of the machine on the Internet

– Antitheft device with alarm and notification via SMS/email

– High water temperature or low engine oil pressure alarm with notification via SMS/email

– Use time monitoring with alarm for service due

https://truckmanualshub.com/

OPTIONALS.

The wide range of equipment especially designed for Eurocomach mini excavators ensures the most appropriate use of the machine, maximizing performance.

A complete offer of optional fittings ensures the best performance.

Certified and tested lifting hook with blocking valves with CE certification for material handling equipment

Proportional electronic roller for auxiliary hydraulic system on left Joystick (Tier3 models)

Additional front and rear protective grills with FOPS level II certification

Customized paint

https://truckmanualshub.com/

TIER 4

https://truckmanualshub.com/

	ES 90 UR	ES 85 SB	ES 95 TR	ES 85 ZT
ENGINE				
Diesel engine EU Stage IIIA - EPA Tier 3, 4 cylinders, displacement 3319 cc, watercooled	●	●	●	●
Electronic throttle with automatic idle speed system (Auto Idle)	●	●	●	●
Electric preheater	●	●	●	●
Dry air filter with discharge valve and filter clogged indicator	●	●	●	●
Double cartridge air filter	●	●	●	●
Cartridge engine oil filter	●	●	●	●
Cartridge fuel filter	●	●	●	●
Latest generation compact air filter with inbuilt cyclonic pre-filtration fitted with high performance filter media	●	●	●	●
Fuel tank discharge	●	●	●	●
Auxiliary liquid refrigerant expansion tank	●	●	●	●
CAB				
Cab ROPS - TOPS - FOPS (Level I)	●	●	●	●
Adjustable mechanical suspension seat	●	●	●	●
Adjustable pneumatic suspension seat	○	○	○	○
Longitudinal adjustment of the driver's spot (seat/console)	○	○	○	○
Safety Belt	●	●	●	●
Elbow support arm rests	●	●	●	●
Foot supports	●	●	●	●
Closable motion petals	●	●	●	●
Comfort rubber foot rest	●	●	●	●
Drivers seat platform assembled on 4 vibration damping elastic supports	○	●	●	●
Air-conditioning with automatic adjustment	●	●	●	●
Sliding right side window	●	●	●	●
Sliding left side window	●	●	●	●
Windshield with assisted opening system (gas springs)	●	●	●	●
Rolling sun blind	●	●	●	●
Courtesy light	●	●	●	●
On board computer with multifunction	●	●	●	●
Indicator light for intake hydraulic filter and engine air filter clog	●	●	●	●
Water temperature and fuel level indicators	●	●	●	●
Counter	●	●	●	●
High water temperature alarm	●	●	●	●
Warning buzzer	●	●	●	●
AM/FM USM Radio, BLUETOOTH, MEMORY CARD READER	○	○	○	○
Single pole 12 volt power supply outlet	●	●	●	●
Front windshield wipers with sprayer	●	●	●	●
Glove compartment	●	●	●	●
Bottle holder	●	●	●	●

	ES 90 UR	ES 85 SB	ES 95 TR	ES 85 ZT
SAFETY				
Machine blocking device during exit/access to the driver's seat	●	●	●	●
Engine ignition device only with the left console lowered	●	●	●	●
Anti-slip climbing plate	●	●	●	●
Climbing and descending handles	●	●	●	●
Emergency bar	●	●	●	●
Rearview mirror kit	●	●	●	●
Rearview camera kit with dedicated colour monitor	○	○	○	○
Upper FOPS (level II) protective grille	○	○	○	○
Front cab protective grille	○	○	○	○
Anti-drift safety valve on the first arm, second arm and backfill blade	○	○	○	○
Pressure accumulator that allows the arm to be lowered in the event of an engine failure	●	●	●	●
ELECTRIC SYSTEM				
Work lights on the lifting arm	●	●	●	●
Supplementary work lights on the lifting arm	○	○	○	○
Supplementary front canopy/cap lights	○	○	○	○
Supplementary rear canopy/cap lights	○	○	○	○
Rotating light	○	○	○	○
Battery disconnect switch	●	●	●	●
Watertight connectors (IP67)	●	●	●	●
HYDRAULIC SYSTEM				
LS Flow-Sharing 10-elements distributor (of which 3 are electro-proportional)	●	●	●	●
Gear pump for servo-assisted system	●	●	●	●
ISO hydraulic servo-control	●	●	●	●
Hydraulic oil intake filter	●	●	●	●
Rotation parking brake	●	●	●	●
Motion parking brake	●	●	●	●
Two speed motion system	●	●	●	●
Automatic movement speed change (Shift-down)	●	●	●	●
Single/double-acting hydraulic system (e.g. hammer or drill) with electrical latch and electrical diverter	●	●	●	●
Single/double-acting hydraulic system (e.g. hammer or drill) with electrical latch and electrical diverter	○	○	○	○
AUX 2: System setup for calliper rotor with proportional electro-hydraulic control on the Right joystick	●	●	●	●
AUX 3: Double effect low capacity hydraulic set up with potentiometer control on the left joystick (excludes tilt operation)	●	●	●	●
Hydraulic drainage line directly to the tank	●	●	●	●

https://truckmanualshub.com/

	ES 90 UR	ES 85 SB	ES 95 TR	ES 85 ZT
UNDERCARRIAGE				
Backfill blade	●	●	●	●
Adjustable backfilll blade	○	○	○	○
Dozer blade cylinder protective casing	●	●	●	●
Motion engines casing	●	●	●	●
Rotating joint protective casing	●	●	●	●
Rubber tracks	●	●	●	●
"Roadliner track" rubberized pad	○	○	○	○
Iron tracks	○	○	○	○
Rubber road pad for iron tracks	○	○	○	○
4 anchoring points for transport	●	●	●	●
Full length belt guides	●	●	●	●
UTILITY				
Antitheft system	○	○	○	○
Geo-service system for locating and remote diagnostics	●	●	●	●
Second excavating arm 1,760 mm	●	●	●	●
Second excavating arm 2,110 mm	○	○	○	○
Additional internal counterweight	○	●	○	○
Additional external counterweight	○	○	○	○
Colour customizations (RAL specific)	○	○	○	○
4 anchoring points for lifting	●	●	●	●
On-board visual fuel level indicator	●	●	●	●
Fuel refill pump with automatic shutdown	●	●	●	●
Tool compartment	●	●	●	●
Lifting cylinder protective casing	●	●	●	●

STANDARD EQUIPMENT	●
OPTIONAL EQUIPMENT	○
NOT AVAILABLE	/

https://truckmanualshub.com/

	ES 90 UR4	ES 85 SB4	ES 95 TR4	ES 85 ZT4
ENGINE				
Diesel engine EU Stage IIIB - EPA Tier 4, 4 cylinders, displacement 3319 cc, watercooled	●	●	●	●
Electronic throttle with automatic idle speed system (Auto Idle)	●	●	●	●
Electric preheater	●	●	●	●
Latest generation compact air filter with inbuilt cyclonic pre-filtration fitted with high performance filter media	●	●	●	●
Double cartridge air filter	●	●	●	●
Cartridge engine oil filter	●	●	●	●
Cartridge fuel filter	●	●	●	●
Fuel filter with electric water separator	●	●	●	●
Fuel tank discharge	●	●	●	●
Auxiliary liquid refrigerant expansion tank	●	●	●	●
CAB				
Cab ROPS - TOPS - FOPS (Level I)	●	●	●	●
Adjustable mechanical suspension seat	●	●	●	●
Adjustable pneumatic suspension seat	○	○	○	○
Longitudinal adjustment of the driver's spot (seat/console)	○	○	○	○
Safety Belt	●	●	●	●
Elbow support arm rests	●	●	●	●
Foot supports	●	●	●	●
Closable motion petals	●	●	●	●
Comfort rubber foot rest	●	●	●	●
Drivers seat platform assembled on 4 vibration damping elastic supports	○	●	●	●
Air-conditioning with automatic adjustment	●	●	●	●
Sliding right side window	●	●	●	●
Sliding left side window	●	●	●	●
Windshield with assisted opening system (gas springs)	●	●	●	●
Rolling sun blind	●	●	●	●
Courtesy light	●	●	●	●
On board computer with TFT active matrix display	●	●	●	●
Indicator light for intake hydraulic filter and engine air filter clog	●	●	●	●
Water temperature and fuel level indicators	●	●	●	●
Counter	●	●	●	●
High water temperature alarm	●	●	●	●
Warning buzzer	●	●	●	●
Radio AM/FM USB	○	○	○	○
Single pole 12 volt power supply outlet	●	●	●	●
Front windshield wipers with sprayer	●	●	●	●
Glove compartment	●	●	●	●
Bottle holder	●	●	●	●

	ES 90 UR4	ES 85 SB4	ES 95 TR4	ES 85 ZT4
SAFETY				
Machine blocking device during exit/access to the driver's seat	●	●	●	●
Engine ignition device only with the left console lowered	●	●	●	●
Anti-slip climbing plate	●	●	●	●
Climbing and descending handles	●	●	●	●
Emergency bar	●	●	●	●
Rearview mirror kit	●	●	●	●
Rearview camera kit with dedicated colour monitor	○	○	○	○
Upper FOPS (level II) protective grille	○	○	○	○
Front cab protective grille	○	○	○	○
Anti-drift safety valve on the first arm, second arm and backfill blade	○	○	○	○
Pressure accumulator that allows the arm to be lowered in the event of an engine failure	●	●	●	●
ELECTRIC SYSTEM				
Work lights on the lifting arm	●	●	●	●
Supplementary work lights on the lifting arm	○	○	○	○
Supplementary front canopy/cap lights	○	○	○	○
Supplementary rear canopy/cap lights	○	○	○	○
Rotating light	○	○	○	○
Battery disconnect switch	●	●	●	●
Watertight connectors (IP67)	●	●	●	●
HYDRAULIC SYSTEM				
LS Flow-Sharing 10-elements distributor (of which 3 are electro-proportional)	/	/	●	/
LS Flow-Sharing 11-elements distributor (of which 4 are electro-proportional)	●	●	/	●
LS electronically controlled variable cylinder piston pump	●	●	●	●
ISO hydraulic servo-control	●	●	●	●
Hydraulic oil intake filter	●	●	●	●
Rotation parking brake	●	●	●	●
Motion parking brake	●	●	●	●
Two speed motion system	●	●	●	●
Automatic movement speed change (Shift-down)	●	●	●	●
Single/double-acting hydraulic system (e.g. hammer or drill) with electrical latch and mechanical diverter	●	●	●	●
Single/double-acting hydraulic system (e.g. hammer or drill) with electrical latch and electrical diverter	○	○	○	○
AUX 2: System setup for calliper rotor with proportional electro-hydraulic control on the Right joystick	●	●	●	●
AUX 3: Double effect low capacity hydraulic set up with potentiometer control on the left joystick	●	●	●	●
Hydraulic drainage line directly to the tank	●	●	●	●

https://truckmanualshub.com/

	ES 90 UR4	ES 85 SB4	ES 95 TR4	ES 85 ZT4
UNDERCARRIAGE				
Backfill blade	●	●	●	●
Adjustable backfilll blade	○	○	○	○
Dozer blade cylinder protective casing	●	●	●	●
Motion engines casing	●	●	●	●
Rotating joint protective casing	●	●	●	●
Rubber tracks	●	●	●	●
"Roadliner track" rubberized pad	○	○	○	○
Iron tracks	○	○	○	○
Rubber road pad for iron tracks	○	○	○	○
4 anchoring points for transport	●	●	●	●
Full length belt guides	●	●	●	●
UTILITY				
Antitheft system	○	○	○	○
Geo-service system for locating and remote diagnostics	●	●	●	●
Second excavating arm 1,760 mm	●	●	●	●
Second excavating arm 2,110 mm	○	○	○	○
Additional internal counterweight	○	●	○	○
Additional external counterweight	○	○	○	○
Colour customizations (RAL specific)	○	○	○	○
4 anchoring points for lifting	●	●	●	●
On-board visual fuel level indicator	●	●	●	●
Fuel refill pump with automatic shutdown	●	●	●	●
Tool compartment	●	●	●	●
Lifting cylinder protective casing	●	●	●	●

STANDARD EQUIPMENT	●
OPTIONAL EQUIPMENT	○
NOT AVAILABLE	/

TECHNICALS SPECIFICATIONS

https://truckmanualshub.com/

Operating weight (with rubber tracks)	kg	9.000
Operating weight (with steel tracks)	kg	9.320
Travelling speed (AUTO TWO SPEED)	km/h	1ª: 0 ÷ 2,6 / 2ª: 0 ÷ 5,2
Slew speed	rpm	10
ENGINE		
Type		YANMAR 4TNV98
Max Power (2.200 rpm)	kW - HP	46,3 - 62,9
Displacement	cc	3.319
Number of cylinders	n°	4
Cooling		water
Consumption	lt/h	8,7
Alternator	V (A)	12 (55)
Battery	V (Ah)	12 (100)
HYDRAULIC SYSTEM		
Circuit Type		Load Sensing closed center system with "Flow Sharing" control valve
Pump type		1 LS variable pump + 1 gear pump
Pump displacement	cc	84 + 9
Pump capacity	lt/min	185 + 20
Max. circuit calibration pressure	bar	290 - 200 - 35
Auxiliary Flow (max pressure):	lt/min (bar)	
AUX 1 main high flow simple or double effect		100 / 100 (200)
AUX 2 double effect		90 / 80 (290)
PERFORMANCES		
Max digging depth standard arm (optional arm)	mm	4.270 (4.620)
Max dumping height with cab standard arm (optional arm)	mm	4.660 (4.870)
Bucket breaking force (standard arm) ISO 6015	daN	5.850
Arm breaking force (standard arm) ISO 6015	daN	4.350
Traction force	daN	7.960
Ground bearing pressure with rubber tracks and canopy	kg/cm²	0,43
Max slope		60% - 30°
DIMENSIONS		
Maximum width	mm	2.320
Total height	mm	2.560
Rear rotation radius	mm	1.155
Digging arm length std (optional)	mm	1.760 (2.110)
Tracks width	mm	450
Rollers number (for each side)	n°	5/1(rubber track) 6/1 (steel track)
FILLINGS		
Fuel tank	lt	105
Hydraulic oil tank	lt	90
Hydraulic circuit capacity	lt	120
Cooling system capacity	lt	25
Engine oil	lt	10
CONTROLS		
Boom, dipper stick, bucket and turret swing		2 pilot joysticks
Track movements (included counter rotation)		2 pilot levers
Dozer blade		pilot lever
Auxiliary circuit main high flow with latch AUX 1 (simple or double effect)		electroproportional switch on right joystick
Auxiliary circuit AUX 2 (double effect)		electroproportional switch on right joystick
Boom swing		electroproportional switch on left joystick

TECHNICALS SPECIFICATIONS

https://truckmanualshub.com/

Operating weight (with rubber tracks)	kg	9.900
Operating weight (with steel tracks)	kg	10.220
Travelling speed (AUTO TWO SPEED)	km/h	1ª: 0 ÷ 2,6 / 2ª: 0 ÷ 5,2
Slew speed	rpm	10
ENGINE		
Type		YANMAR 4TNV98
Max Power (2.200 rpm)	kW - HP	46,3 - 62,9
Displacement	cc	3.319
Number of cylinders	n°	4
Cooling		water
Consumption	lt/h	8,7
Alternator	V (A)	12 (55)
Battery	V (Ah)	12 (100)
HYDRAULIC SYSTEM		
Circuit Type		Load Sensing closed center system with "Flow Sharing" control valve
Pump type		1 LS variable pump + 1 gear pump
Pump displacement	cc	84 + 9
Pump capacity	lt/min	185 + 20
Max. circuit calibration pressure	bar	290 - 200 - 35
Auxiliary Flow (max pressure):	lt/min (bar)	
AUX 1 main high flow simple or double effect		100 / 100 (200)
AUX 2 double effect		90 / 80 (290)
PERFORMANCES		
Max digging depth standard arm (optional arm)	mm	4.570 (4.920)
Max dumping height with cab standard arm (optional arm)	mm	6.070 (6.370)
Bucket breaking force (standard arm) ISO 6015	daN	5.850
Arm breaking force (standard arm) ISO 6015	daN	4.350
Traction force	daN	7.960
Ground bearing pressure with rubber tracks and canopy	kg/cm²	0,46
Max slope		60% - 30°
DIMENSIONS		
Maximum width	mm	2.320
Total height	mm	2.560
Rear rotation radius	mm	1.155
Digging arm length std (optional)	mm	1.760 (2.110)
Tracks width	mm	450
Rollers number (for each side)	n°	5/1(rubber track) 6/1 (steel track)
FILLINGS		
Fuel tank	lt	105
Hydraulic oil tank	lt	90
Hydraulic circuit capacity	lt	120
Cooling system capacity	lt	25
Engine oil	lt	10
CONTROLS		
Boom, dipper stick, bucket and turret swing		2 pilot joysticks
Track movements (included counter rotation)		2 pilot levers
Dozer blade		pilot lever
Auxiliary circuit main high flow with latch AUX 1 (simple or double effect)		electroproportional switch on right joystick
Auxiliary circuit AUX 2 (double effect)		electroproportional switch on right joystick
Boom swing		electroproportional switch on left joystick

TECHNICALS SPECIFICATIONS

https://truckmanualshub.com/

Operating weight (with rubber tracks)	kg	8.300
Operating weight (with steel tracks)	kg	8.620
Travelling speed (AUTO TWO SPEED)	km/h	1ª: 0 ÷ 2,6 / 2ª: 0 ÷ 5,2
Slew speed	rpm	10
ENGINE		
Type		YANMAR 4TNV98
Max Power (2.200 rpm)	kW - HP	46,3 - 62,9
Displacement	cc	3.319
Number of cylinders	n°	4
Cooling		water
Consumption	lt/h	8,7
Alternator	V (A)	12 (55)
Battery	V (Ah)	12 (100)
HYDRAULIC SYSTEM		
Circuit Type		Load Sensing closed center system with "Flow Sharing" control valve
Pump type		1 LS variable pump + 1 gear pump
Pump displacement	cc	84 + 9
Pump capacity	lt/min	185 + 20
Max. circuit calibration pressure	bar	290 - 200 - 35
AUX 1 main high flow simple or double effect	lt/min (bar)	
AUX 2 double effect		100 / 100 (200)
AUX 2 High Flow		90 / 80 (290)
PERFORMANCES		
Max digging depth standard arm (optional arm)	mm	3.800 (4.150)
Max dumping height with cab standard arm (optional arm)	mm	5.220 (5.470)
Bucket breaking force (standard arm) ISO 6015	daN	5.850
Arm breaking force (standard arm) ISO 6015	daN	4.350
Traction force	daN	7.960
Ground bearing pressure with rubber tracks and canopy	kg/cm²	0,41
Max slope		60% - 30°
DIMENSIONS		
Maximum width	mm	2.320
Total height	mm	2.560
Rear rotation radius	mm	1.155
Digging arm length std (optional)	mm	1.760 (2.110)
Tracks width	mm	450
Rollers number (for each side)	n°	5/1(rubber track) 6/1 (steel track)
FILLINGS		
Fuel tank	lt	105
Hydraulic oil tank	lt	90
Hydraulic circuit capacity	lt	120
Cooling system capacity	lt	25
Engine oil	lt	10
CONTROLS		
Boom, dipper stick, bucket and turret swing		2 pilot joysticks
Track movements (included counter rotation)		2 pilot levers
Dozer blade		pilot lever
Auxiliary circuit main high flow with latch AUX 1 (simple or double effect)		electroproportional switch on right joystick
Auxiliary circuit AUX 2 (double effect)		electroproportional switch on right joystick
Boom swing		electroproportional switch on left joystick

TECHNICALS SPECIFICATIONS

https://truckmanualshub.com/

Operating weight (with rubber tracks)	kg	9.100
Operating weight (with steel tracks)	kg	9.420
Travelling speed (AUTO TWO SPEED)	km/h	1ª: 0 ÷ 2,6 / 2ª: 0 ÷ 5,2
Slew speed	rpm	10
ENGINE		
Type		YANMAR 4TNV98
Max Power (2.200 rpm)	kW - HP	46,3 - 62,9
Displacement	cc	3.319
Number of cylinders	n°	4
Cooling		water
Consumption	lt/h	8,7
Alternator	V (A)	12 (40)
Battery	V (Ah)	12 (100)
HYDRAULIC SYSTEM		
Circuit Type		Load Sensing closed center system with "Flow Sharing" control valve
Pump type		1 LS variable pump + 1 gear pump
Pump displacement	cc	84 + 9
Pump capacity	lt/min	185 + 20
Max. circuit calibration pressure	bar	290 - 200 - 35
AUX 1 main high flow simple or double effect	lt/min (bar)	
AUX 2 double effect		100 / 100 (200)
AUX 2 High Flow		90 / 80 (290)
PERFORMANCES		
Max digging depth standard arm (optional arm)	mm	4.220 (4.570)
Max dumping height with cab standard arm (optional arm)	mm	5.450 (5.670)
Bucket breaking force (standard arm) ISO 6015	daN	5.850
Arm breaking force (standard arm) ISO 6015	daN	4.350
Traction force	daN	7.960
Ground bearing pressure with rubber tracks and canopy	kg/cm²	0,45
Max slope		60% - 30°
DIMENSIONS		
Maximum width	mm	2.320
Total height	mm	2.560
Rear rotation radius	mm	1.155
Digging arm length std (optional)	mm	1.760 (2.110)
Tracks width	mm	450
Rollers number (for each side)	n°	5/1(rubber track) 6/1 (steel track)
FILLINGS		
Fuel tank	lt	105
Hydraulic oil tank	lt	90
Hydraulic circuit capacity	lt	120
Cooling system capacity	lt	25
Engine oil	lt	10
CONTROLS		
Boom, dipper stick, bucket and turret swing		2 pilot joysticks
Track movements (included counter rotation)		2 pilot levers
Dozer blade		pilot lever
Auxiliary circuit main high flow with latch AUX 1 (simple or double effect)		electroproportional switch on right joystick
Auxiliary circuit AUX 2 (double effect)		electroproportional switch on right joystick
Offset		electroproportional switch on left joystick

TECHNICALS SPECIFICATIONS

https://truckmanualshub.com/

Operating weight (with rubber tracks)	kg	9.000
Operating weight (with steel tracks)	kg	9.320
Travelling speed (AUTO TWO SPEED)	km/h	1ª: 0 ÷ 2,6 / 2ª: 0 ÷ 5,2
Slew speed	rpm	10
ENGINE		
Type	YANMAR 4TNV98CT EU Stage IIIB - EPA Tier 4	
Max Power (2.100 rpm)	kW - HP	53,7 - 73,0
Displacement	cc	3.319
Number of cylinders	n°	4
Cooling	water	
Consumption	lt/h	10,5
Alternator	V (A)	12 (80)
Battery	V (Ah)	12 (100/900)
HYDRAULIC SYSTEM		
Circuit Type	Load Sensing system with "Flow Sharing" control valve with 11 elements	
Pump type	1 LS hydraulic variable pump with electronic control + 1 gear pump	
Pump displacement	cc	84 + 9
Pump capacity	lt/min	185 + 20
Max. circuit calibration pressure	bar	290 - 200 - 35
Auxiliary Flow (max pressure):	lt/min (bar)	
AUX 1 main high flow simple or double effect		100 / 100 (200)
AUX 2 double effect		90 / 80 (290)
AUX 3 double effect		50 / 50 (290)
PERFORMANCES		
Max digging depth standard arm (optional arm)	mm	4.270 (4.620)
Max dumping height with cab standard arm (optional arm)	mm	4.660 (4.870)
Bucket breaking force (standard arm) ISO 6015	daN	5.850
Arm breaking force (standard arm) ISO 6015	daN	4.350
Traction force	daN	7.960
Ground bearing pressure with rubber tracks and canopy	kg/cm²	0,43
Max slope	60% - 30°	
DIMENSIONS		
Maximum width	mm	2.320
Total height	mm	2.560
Rear rotation radius	mm	1.155
Digging arm length std (optional)	mm	1.760 (2.110)
Tracks width	mm	450
Rollers number (for each side)	n°	5/1(rubber track) 6/1 (steel track)
FILLINGS		
Fuel tank	lt	105
Hydraulic oil tank	lt	90
Hydraulic circuit capacity	lt	120
Cooling system capacity	lt	25
Engine oil	lt	10
CONTROLS		
Boom, dipper stick, bucket and turret swing	2 pilot joysticks	
Track movements (included counter rotation)	2 pilot levers	
Dozer blade	pilot lever	
Auxiliary circuit main high flow with latch AUX 1 (simple or double effect)	electroproportional switch on right joystick	
Auxiliary circuit AUX 2 (double effect)	electroproportional switch on right joystick	
Auxiliary circuit low flow AUX 3 (double effect)	electroproportional switch on left joystick	
Boom swing	electroproportional switch on left joystick	

TECHNICALS SPECIFICATIONS

https://truckmanualshub.com/

Operating weight (with rubber tracks)	kg	9.900
Operating weight (with steel tracks)	kg	10.220
Travelling speed (AUTO TWO SPEED)	km/h	1ª: 0 ÷ 2,6 / 2ª: 0 ÷ 5,2
Slew speed	rpm	10
ENGINE		
Type	YANMAR 4TNV98CT EU Stage IIIB - EPA Tier 4	
Max Power (2.100 rpm)	kW - HP	53,7 - 73,0
Displacement	cc	3.319
Number of cylinders	n°	4
Cooling	water	
Consumption	lt/h	8,7
Alternator	V (A)	12 (55)
Battery	V (Ah)	12 (100)
HYDRAULIC SYSTEM		
Circuit Type	Load Sensing system with "Flow Sharing" control valve with 11 elements	
Pump type	1 LS hydraulic variable pump with electronic control + 1 gear pump	
Pump displacement	cc	84 + 9
Pump capacity	lt/min	185 + 20
Max. circuit calibration pressure	bar	290 - 200 - 35
Auxiliary Flow (max pressure):	lt/min (bar)	
AUX 1 main high flow simple or double effect		100 / 100 (200)
AUX 2 double effect		90 / 80 (290)
AUX 3 double effect		50 / 50 (290)
PERFORMANCES		
Max digging depth standard arm (optional arm)	mm	4.570 (4.920)
Max dumping height with cab standard arm (optional arm)	mm	6.070 (6.370)
Bucket breaking force (standard arm) ISO 6015	daN	5.850
Arm breaking force (standard arm) ISO 6015	daN	4.350
Traction force	daN	7.960
Ground bearing pressure with rubber tracks and canopy	kg/cm²	0,46
Max slope	60% - 30°	
DIMENSIONS		
Maximum width	mm	2.320
Total height	mm	2.560
Rear rotation radius	mm	1.155
Digging arm length std (optional)	mm	1.760 (2.110)
Tracks width	mm	450
Rollers number (for each side)	n°	5/1(rubber track) 6/1 (steel track)
FILLINGS		
Fuel tank	lt	105
Hydraulic oil tank	lt	90
Hydraulic circuit capacity	lt	120
Cooling system capacity	lt	25
Engine oil	lt	10
CONTROLS		
Boom, dipper stick, bucket and turret swing	2 pilot joysticks	
Track movements (included counter rotation)	2 pilot levers	
Dozer blade	pilot lever	
Auxiliary circuit main high flow with latch AUX 1 (simple or double effect)	electroproportional switch on right joystick	
Auxiliary circuit AUX 2 (double effect)	electroproportional switch on right joystick	
Auxiliary circuit low flow AUX 3 (double effect)	electroproportional switch on left joystick	
Boom swing	electroproportional switch on left joystick	

TECHNICALS SPECIFICATIONS

https://truckmanualshub.com/

Operating weight (with rubber tracks)	kg	8.300
Operating weight (with steel tracks)	kg	8.620
Travelling speed (AUTO TWO SPEED)	km/h	1ª: 0 ÷ 2,6 / 2ª: 0 ÷ 5,2
Slew speed	rpm	10
ENGINE		
Type	YANMAR 4TNV98CT EU Stage IIIB - EPA Tier 4	
Max Power (2.100 rpm)	kW - HP	53,7 - 73,0
Displacement	cc	3.319
Number of cylinders	n°	4
Cooling	water	
Consumption	lt/h	10,5
Alternator	V (A)	12 (80)
Battery	V (Ah)	12 (100/900)
HYDRAULIC SYSTEM		
Circuit Type	Load Sensing system with "Flow Sharing" control valve with 10 elements	
Pump type	1 LS hydraulic variable pump with electronic control + 1 gear pump	
Pump displacement	cc	84 + 9
Pump capacity	lt/min	185 + 20
Max. circuit calibration pressure	bar	290 - 200 - 35
Auxiliary Flow (max pressure):	lt/min (bar)	
AUX 1 main high flow simple or double effect		100 / 100 (200)
AUX 2 double effect		90 / 80 (290)
AUX 3 double effect		60 / 40 (290)
PERFORMANCES		
Max digging depth standard arm (optional arm)	mm	3.800 (4.150)
Max dumping height with cab standard arm (optional arm)	mm	5.220 (5.470)
Bucket breaking force (standard arm) ISO 6015	daN	5.850
Arm breaking force (standard arm) ISO 6015	daN	4.350
Traction force	daN	7.960
Ground bearing pressure with rubber tracks and canopy	kg/cm²	0,41
Max slope	60% - 30°	
DIMENSIONS		
Maximum width	mm	2.320
Total height	mm	2.560
Rear rotation radius	mm	1.155
Digging arm length std (optional)	mm	1.760 (2.110)
Tracks width	mm	450
Rollers number (for each side)	n°	5/1(rubber track) 6/1 (steel track)
FILLINGS		
Fuel tank	lt	105
Hydraulic oil tank	lt	90
Hydraulic circuit capacity	lt	120
Cooling system capacity	lt	25
Engine oil	lt	10
CONTROLS		
Boom, dipper stick, bucket and turret swing	2 pilot joysticks	
Track movements (included counter rotation)	2 pilot levers	
Dozer blade	pilot lever	
Auxiliary circuit main high flow with latch AUX 1 (simple or double effect)	electroproportional switch on right joystick	
Auxiliary circuit AUX 2 (double effect)	electroproportional switch on right joystick	
Auxiliary circuit low flow AUX 3 (double effect)	electroproportional switch on left joystick	

TECHNICALS SPECIFICATIONS

https://truckmanualshub.com/

Operating weight (with rubber tracks)	kg	9.100
Operating weight (with steel tracks)	kg	9.420
Travelling speed (AUTO TWO SPEED)	km/h	1ª: 0 ÷ 2,6 / 2ª: 0 ÷ 5,2
Slew speed	rpm	10
ENGINE		
Type	YANMAR 4TNV98CT EU Stage IIIB - EPA Tier 4	
Max Power (2.100 rpm)	kW - HP	53,7 - 73,0
Displacement	cc	3.319
Number of cylinders	n°	4
Cooling	water	
Consumption	lt/h	10,5
Alternator	V (A)	12 (80)
Battery	V (Ah)	12 (100/900)
HYDRAULIC SYSTEM		
Circuit Type	Load Sensing system with "Flow Sharing" control valve with 11 elements	
Pump type	1 LS hydraulic variable pump with electronic control + 1 gear pump	
Pump displacement	cc	84 + 9
Pump capacity	lt/min	185 + 20
Max. circuit calibration pressure	bar	290 - 200 - 35
Auxiliary Flow (max pressure):	lt/min (bar)	
AUX 1 main high flow simple or double effect		100 / 100 (200)
AUX 2 double effect		90 / 80 (290)
AUX 3 double effect		50 / 50 (290)
PERFORMANCES		
Max digging depth standard arm (optional arm)	mm	4.220 (4.570)
Max dumping height with cab standard arm (optional arm)	mm	5.450 (5.670)
Bucket breaking force (standard arm) ISO 6015	daN	5.850
Arm breaking force (standard arm) ISO 6015	daN	4.350
Traction force	daN	7.960
Ground bearing pressure with rubber tracks and canopy	kg/cm²	0,45
Max slope	60% - 30°	
DIMENSIONS		
Maximum width	mm	2.320
Total height	mm	2.560
Rear rotation radius	mm	1.155
Digging arm length std (optional)	mm	1.760 (2.110)
Tracks width	mm	450
Rollers number (for each side)	n°	5/1(rubber track) 6/1 (steel track)
FILLINGS		
Fuel tank	lt	105
Hydraulic oil tank	lt	90
Hydraulic circuit capacity	lt	120
Cooling system capacity	lt	25
Engine oil	lt	10
CONTROLS		
Boom, dipper stick, bucket and turret swing	2 pilot joysticks	
Track movements (included counter rotation)	2 pilot levers	
Dozer blade	pilot lever	
Auxiliary circuit main high flow with latch AUX 1 (simple or double effect)	electroproportional switch on right joystick	
Auxiliary circuit AUX 2 (double effect)	electroproportional switch on right joystick	
Auxiliary circuit low flow AUX 3 (double effect)	electroproportional switch on left joystick	
Offset	electroproportional switch on left joystick	

https://truckmanualshub.com/

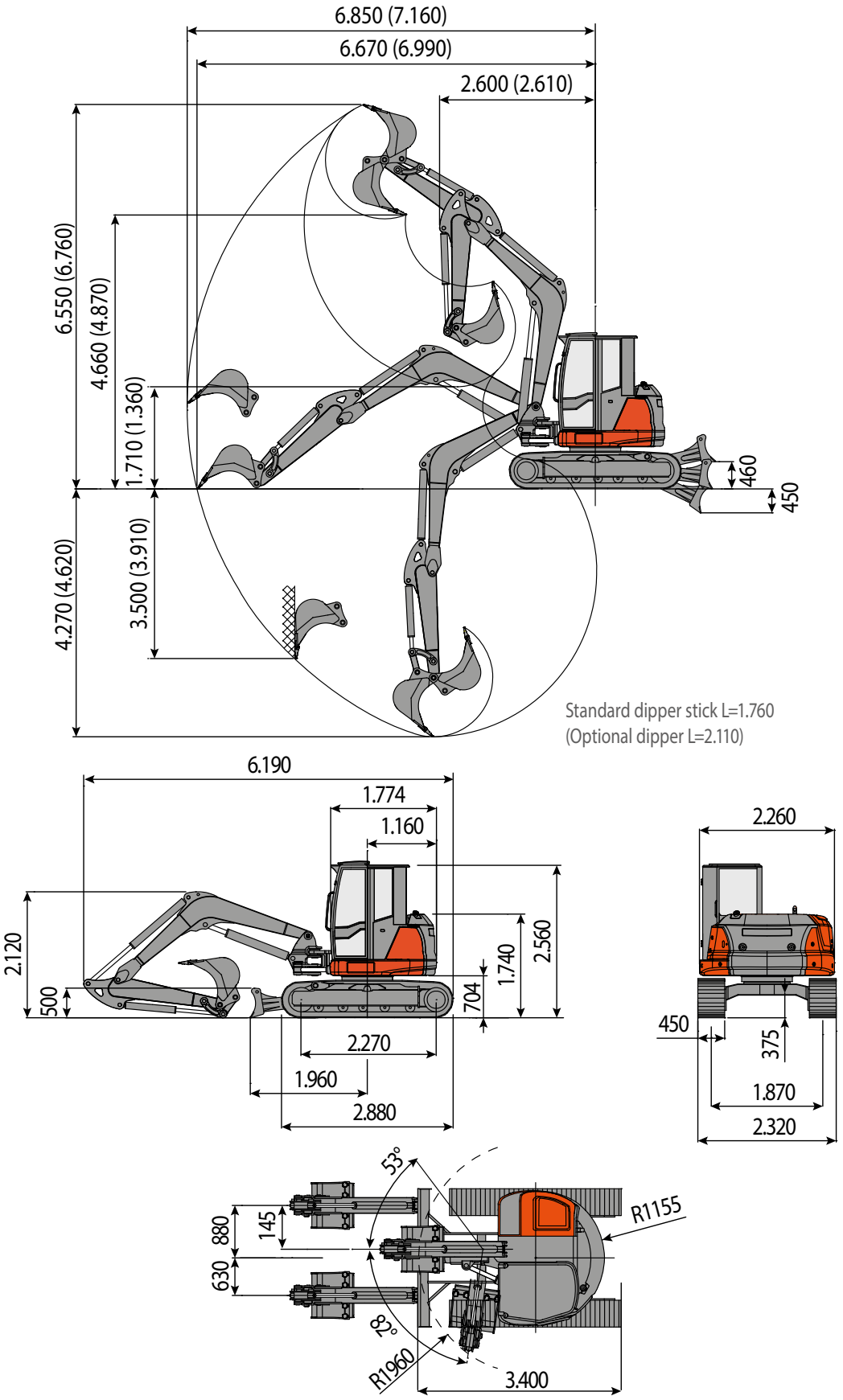

https://truckmanualshub.com/

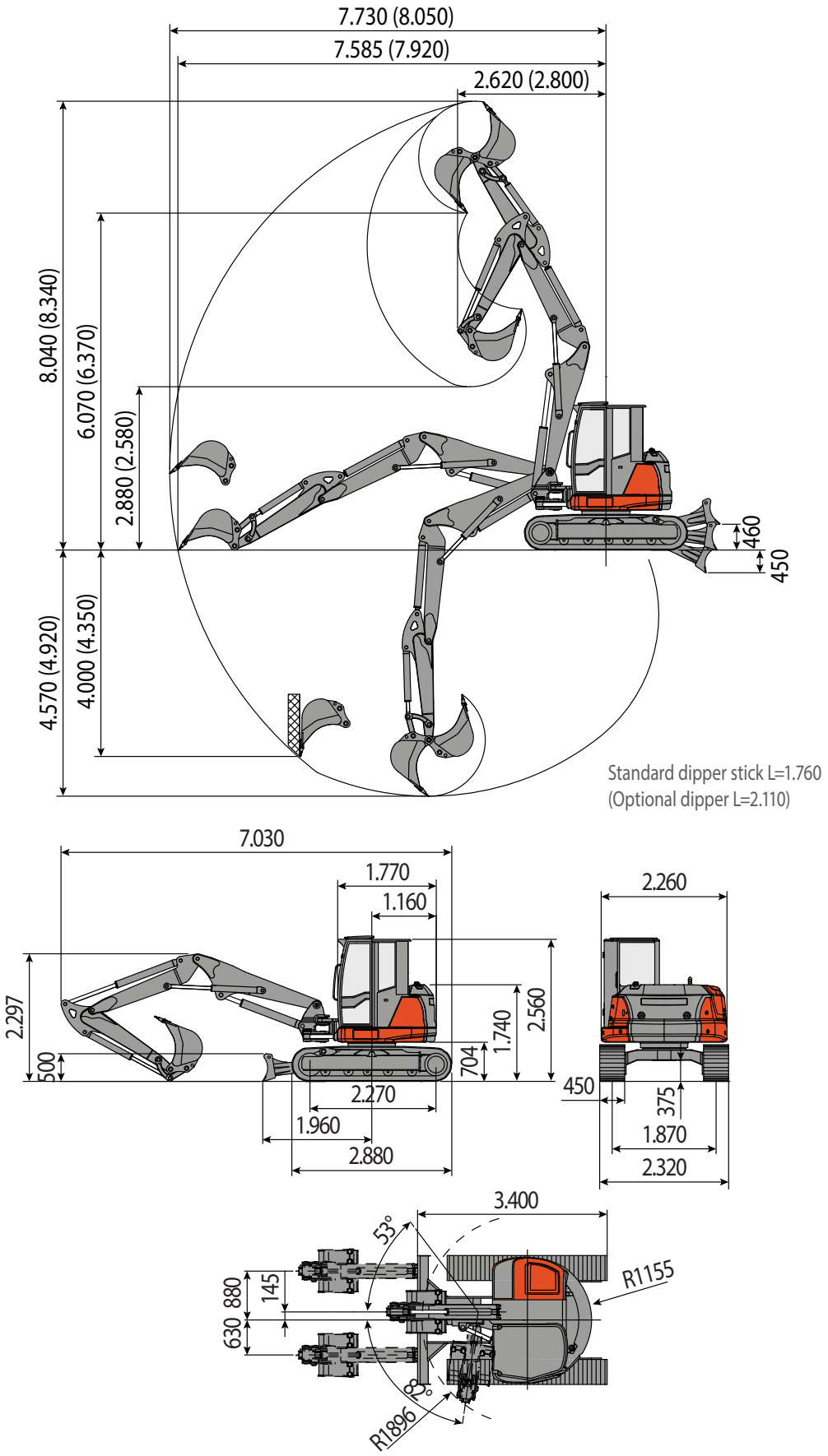

https://truckmanualshub.com/

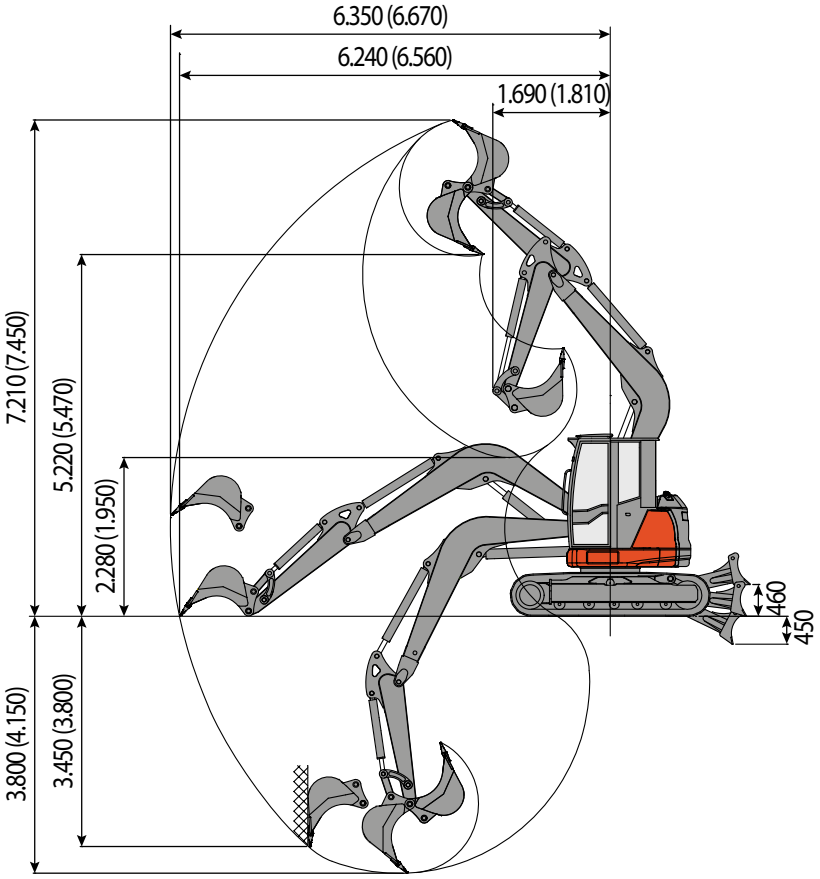

Standard dipper stick L=1.760
(Optional dipper L=2.110)

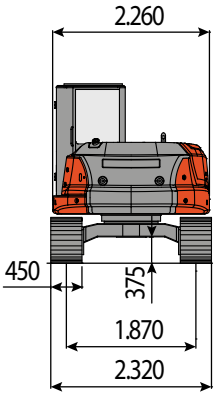

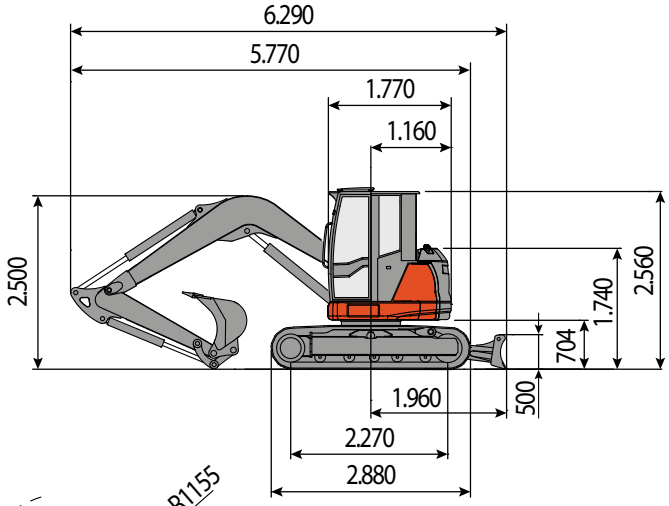

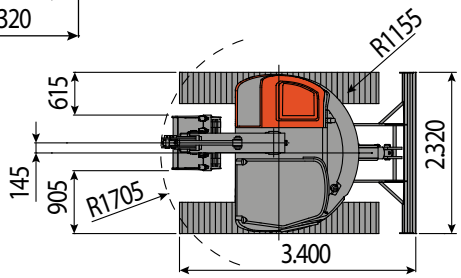

https://truckmanualshub.com/

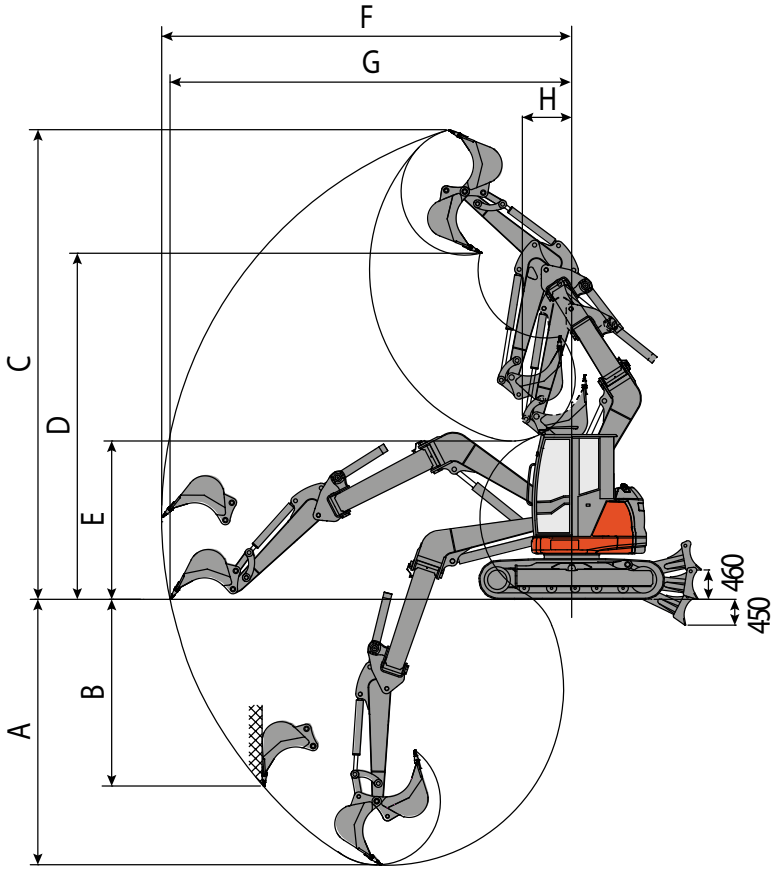

Standard arm (1.760 mm)			
	left	center	right
A	3.840	4.220	3.530
B	2.860	3.200	2.575
C	7.050	7.380	6.780
D	5.130	5.450	4.860
E	2.120	2.460	1.860
F	6.070	6.450	5.770
G	5.030	6.320	5.610
H (R min)	1.465	1.180	2.080

Long arm (2.110 mm)			
	left	center	right
A	4.190	4.570	3.880
B	3.230	3.590	2.950
C	7.280	7.600	7.010
D	5.340	5.670	5.070
E	1.795	2.120	1.540
F	6.380	6.760	6.075
G	6.240	6.630	5.920
H (R min)	1.540	1.260	2.090

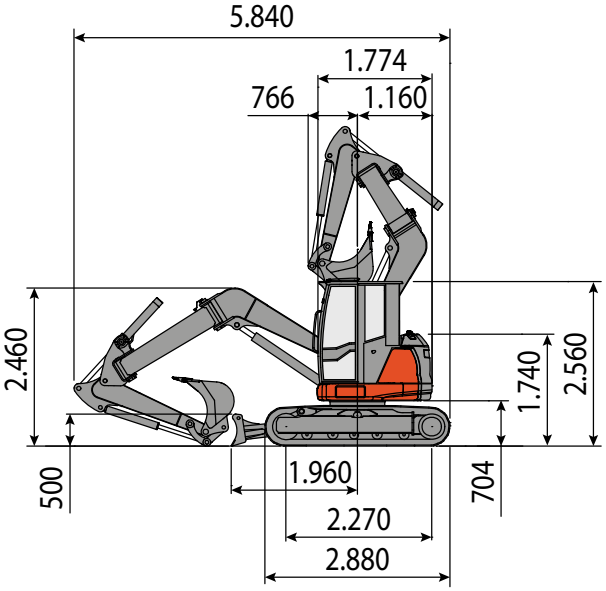

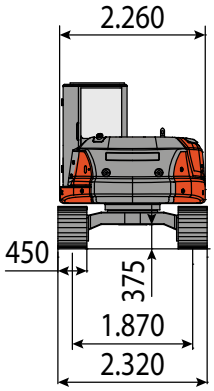

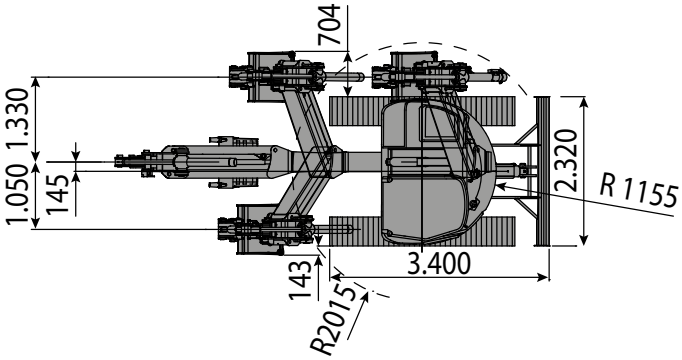

LIFTING CAPACITY

https://truckmanualshub.com/

The lifting capacity is based on ISO 10567 and does not exceed 75% of the static tipping load or 87% of the hydraulic lifting capacity of the machine.

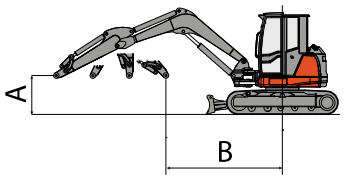

The straddle refers to the centre of rotation.
* Indicates the hydraulic load limit.
0 m refers to ground level.
The machine is understood to be equipped with a cab, rubber tracks, without a bucket and without a quick coupling.

Front Side Unit: ton

Raised Blade, Standard Arm (1760 mm)
( ) the values in parenthesis are with additional ballast: 0.8 ton

A (m)	B (m)										
	2.0		3.0		4.0		5.0		MAX		
5.0					1,8 (*2,65)	1,78 (*2,63)			1,38 (1,84)	1,36 (1,82)	4,21 m
4.0					1,85 (*2,71)	1,81 (*2,66)	1,61 (*2,28)	1,56 (1,92)	1,35 (1,71)	1,34 (1,7)	5,07 m
3.0					1,96 (*2,84)	1,91 (*2,78)	1,53 (*2,19)	1,5 (1,85)	1,35 (1,66)	1,33 (1,65)	5,56 m
2.0			3,21 (*4,59)	*3,15 (*3,15)	2,01 (*2,89)	1,97 (*2,85)	1,48 (*2,13)	1,46 (1,82)	1,32 (1,62)	1,31 (1,61)	5,80 m
1.0			3,3 (*4,69)	3,16 (3,91)	2,06 (*2,95)	2,02 (2,5)	1,44 (1,79)	1,41 (1,76)	1,29 (1,59)	1,29 (1,58)	5,82 m
0			*3,75 (*3,75)	3,12 (3,87)	2,02 (*2,91)	1,98 (2,47)	1,4 (1,76)	1,35 (1,71)	1,31 (1,62)	1,3 (1,61)	5,64 m
-1.0	*4,6 (*4,6)	*4,57 (*4,57)	3,18 (*4,55)	3,06 (3,8)	1,95 (*2,83)	1,9 (2,38)	1,33 (1,69)	1,27 (1,63)	1,34 (1,68)	1,33 (1,67)	5,22 m
-2.0	*4,49 (*4,49)	*4,5 (*4,5)	3,24 (*4,62)	3,09 (3,83)	1,95 (*2,82)	1,87 (2,35)			1,36 (1,78)	1,34 (1,76)	4,47 m
-3.0	*4,26 (*4,26)	*4,25 (*4,25)	3,16 (*4,53)	2,97 (3,71)					1,35 (2,07)	1,34 (2,06)	3,08 m

Lowered Blade, Standard Arm (1760 mm)
( ) the values in parenthesis are with additional ballast: 0.8 ton

A (m)	B (m)										
	2.0		3.0		4.0		5.0		MAX		
5.0					*2,5 (*2,5)	1,78 (*2,63)			*2,07 (*2,07)	1,32 (1,77)	4,21 m
4.0					*2,67 (*2,67)	1,81 (*2,66)	*1,78 (*1,78)	1,56 (1,92)	*2 (*2)	1,29 (1,65)	5,07 m
3.0					*2,85 (*2,85)	1,91 (*2,78)	*1,87 (*1,87)	1,5 (1,85)	*1,91 (*1,91)	1,29 (1,6)	5,56 m
2.0			*4,19 (*4,19)	*3,15 (*3,15)	*2,96 (*2,96)	1,97 (*2,85)	*2,16 (*2,16)	1,46 (1,82)	*1,82 (*1,82)	1,27 (1,57)	5,80 m
1.0			*4,48 (*4,48)	3,16 (3,15)	*3,21 (*3,21)	2,02 (2,5)	*2,45 (*2,45)	1,41 (1,76)	*2,08 (*2,08)	1,24 (1,54)	5,82 m
0			*4,52 (*4,52)	3,12 (3,91)	*3,28 (*3,28)	1,98 (2,47)	*2,51 (*2,51)	1,35 (1,71)	*2,12 (*2,12)	1,27 (1,58)	5,64 m
-1.0	*4,6 (*4,6)	*4,57 (*4,57)	*4,43 (*4,43)	3,06 (3,87)	*3,22 (*3,22)	1,9 (2,38)	*2,54 (*2,54)	1,27 (1,63)	*2,17 (*2,17)	1,29 (1,63)	5,22 m
-2.0	*4,49 (*4,49)	*4,5 (*4,5)	*4,18 (*4,18)	3,09 (3,8)	*3,14 (*3,14)	1,87 (2,35)			*2,21 (*2,21)	1,31 (1,73)	4,47 m
-3.0	*4,26 (*4,26)	*4,25 (*4,25)	*4,18 (*4,18)	2,97 (3,83)					*2,26 (*2,26)	1,34 (2,06)	3,08m

https://truckmanualshub.com/

Front Side Unit: ton

Raised Blade, Optional Arm (2110 mm)
( ) the values in parenthesis are with additional ballast: 0.8 ton

A (m)	B (m)										
	2.0		3.0		4.0		5.0		MAX		
5.0					1,75 (*2,6)	1,74 (*2,59)			1,26 (1,72)	1,24 (1,7)	4,68 m
4.0					1,81 (*2,66)	1,77 (*2,62)	1,57 (*2,24)	1,52 (1,88)	1,16 (1,52)	1,15 (1,5)	5,45 m
3.0					1,92 (*2,79)	1,87 (*2,73)	1,49 (*2,15)	1,45 (1,81)	1,15 (1,47)	1,14 (1,45)	5,90 m
2.0			3,16 (*4,54)	*3,11 (*3,11)	1,96 (*2,85)	1,93 (*2,8)	1,44 (*2,09)	1,42 (1,77)	1,12 (1,42)	1,12 (1,42)	6,13 m
1.0			3,25 (*4,65)	3,12 (3,87)	2,02 (*2,91)	1,98 (2,46)	1,39 (1,75)	1,36 (1,72)	1,1 (1,4)	1,09 (1,39)	6,15 m
0			3,71 (*3,71)	3,08 (3,83)	1,98 (*2,86)	1,94 (2,43)	1,36 (1,71)	1,31 (1,67)	1,12 (1,43)	1,11 (1,42)	5,98 m
-1.0	*4,56 (*4,56)	*4,53 (*4,53)	3,13 (*4,51)	3,01 (3,76)	1,91 (*2,79)	1,86 (2,34)	1,29 (1,65)	1,23 (1,59)	1,15 (1,49)	1,14 (1,48)	5,59 m
-2.0	*4,45 (*4,45)	*4,46 (*4,46)	3,19 (*4,58)	3,04 (3,79)	1,9 (*2,78)	1,83 (2,31)			1,16 (1,58)	1,15 (1,57)	4,91 m
-3.0	*4,22 (*4,22)	*4,21 (*4,21)	3,12 (*4,49)	2,92 (3,67)					1,15 (1,88)	1,15 (1,87)	3,75 m

Lowered Blade, Optional Arm (2110 mm)
( ) the values in parenthesis are with additional ballast: 0.8 ton

A (m)	B (m)										
	2.0		3.0		4.0		5.0		MAX		
5.0					*2,46 (*2,46)	*1,74 (*2,59)			*1,94 (*1,94)	1,19 (1,65)	4,68 m
4.0					*2,63 (*2,63)	*1,77 (*2,62)	*1,74 (*1,74)	1,52 (1,88)	*1,8 (*1,8)	1,1 (1,46)	5,45 m
3.0					*2,81 (*2,81)	*1,87 (*2,73)	*1,82 (*1,82)	1,45 (1,81)	*1,72 (*1,72)	1,09 (1,41)	5,90 m
2.0			*4,15 (*4,15)	*3,11 (*3,11)	*2,92 (*2,92)	*1,93 (*2,8)	*2,12 (*2,12)	1,42 (1,77)	*1,63 (*1,63)	1,08 (1,38)	6,13 m
1.0			*4,44 (*4,44)	3,12 (3,11)	*3,17 (*3,17)	1,98 (2,46)	*2,41 (*2,41)	1,36 (1,72)	*1,89 (*1,89)	1,05 (1,35)	6,15 m
0			*4,48 (*4,48)	3,08 (3,87)	*3,24 (*3,24)	1,94 (2,43)	*2,47 (*2,47)	1,31 (1,67)	*1,93 (*1,93)	1,08 (1,39)	5,98 m
-1.0	*4,56 (*4,56)	*4,53 (*4,53)	*4,39 (*4,39)	3,01 (3,83)	*3,18 (*3,18)	1,86 (2,34)	*2,49 (*2,49)	1,23 (1,59)	*1,98 (*1,98)	1,1 (1,44)	5,59 m
-2.0	*4,45 (*4,45)	*4,46 (*4,46)	*4,14 (*4,14)	3,04 (3,76)	*3,1 (*3,1)	1,83 (2,31)			*2,02 (*2,02)	1,12 (1,54)	4,91 m
-3.0	*4,22 (*4,22)	*4,21 (*4,21)	*4,14 (*4,14)	2,92 (3,79)					*2,07 (*2,07)	1,15 (1,87)	3,75 m

LIFTING CAPACITY

https://truckmanualshub.com/

The lifting capacity is based on ISO 10567 and does not exceed 75% of the static tipping load or 87% of the hydraulic lifting capacity of the machine.

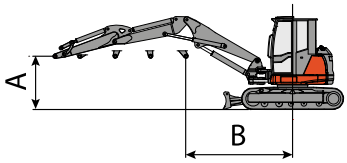

The straddle refers to the centre of rotation.
* Indicates the hydraulic load limit.
0 m refers to ground level.
The machine is understood to be equipped with a cab, rubber tracks, without a bucket and without a quick coupling.

Front Side Unit: ton

Raised Blade, Standard Arm (1760 mm)
( ) the values in parenthesis are with additional ballast: 0.8 ton

A (m)	B (m)												
	2.0		3.0		4.0		5.0		6.0		MAX		
5.0					1,87 (*2,73)	*2,17 (*2,17)	1,71 (*2,39)	1,67 (2,03)			1,38 (1,71)	1,38 (1,71)	5,40 m
4.0			*2,95 (*2,95)	*2,33 (*2,33)	1,99 (*2,87)	*2,15 (*2,15)	*1,72 (*1,72)	1,53 (1,89)	*1,48 (*1,48)	1,43 (1,71)	1,14 (1,43)	1,25 (1,53)	6,06 m
3.0			3,07 (*3,65)	*3,04 (*3,04)	2,17 (*2,92)	*2,1 (*2,1)	*1,78 (*1,78)	1,46 (1,82)	*1,42 (*1,42)	1,38 (1,66)	1,1 (1,36)	1,01 (1,27)	6,46 m
2.0			3,18 (*3,76)	*3,13 (*3,13)	2,17 (*3,08)	*2,08 (*2,08)	*1,72 (*1,72)	1,35 (1,7)	1,19 (1,47)	1,02 (1,3)	0,96 (1,21)	0,84 (1,1)	6,67 m
1.0			3,28 (*3,96)	3,15 (3,89)	2,17 (*3,08)	1,87 (2,35)	1,42 (*2,06)	1,3 (1,66)	1,12 (1,4)	0,93 (1,22)	*1 (*1)	0,84 (1,09)	6,69 m
0			3,74 (*4,09)	3,11 (*3,74)	2,11 (*3,01)	1,83 (2,32)	1,38 (1,74)	1,27 (1,63)	1,08 (1,37)	1,03 (1,31)	0,88 (1,14)	0,87 (1,12)	6,55 m
-1.0	*4,17 (*4,17)	*4,17 (*4,17)	3,15 (*4)	3,03 (*3,8)	2,04 (*2,92)	1,8 (2,28)	1,31 (*1,93)	1,21 (1,57)	0,96 (*1,44)	0,93 (1,22)	0,9 (1,18)	0,89 (1,16)	6,18 m
-2.0	*4,26 (*4,26)	*4,26 (*4,26)	3,22 (*3,83)	3,07 (*3,92)	2,1 (*2,99)	1,8 (2,29)	1,23 (1,59)	1,17 (1,52)			0,96 (1,27)	0,93 (1,25)	5,59 m
-3.0	*3,91 (*3,91)	*4,4 (*4,4)	3,15 (*3,92)	2,92 (*3,98)	1,95 (*2,82)	1,72 (2,2)					0,9 (1,29)	0,88 (1,28)	4,66 m

Lowered Blade, Standard Arm (1760 mm)
( ) the values in parenthesis are with additional ballast: 0.8 ton

A (m)	B (m)												
	2.0		3.0		4.0		5.0		6.0		MAX		
5.0					*2,21 (*2,21)	*2,17 (*2,17)	*2,06 (*2,06)	1,67 (2,03)			*2 (*2)	1,38 (1,71)	5,40 m
4.0			*2,95 (*2,95)	*2,91 (*0)	*2,39 (*2,39)	*2,14 (*2,14)	*1,72 (*1,72)	1,53 (1,89)	*1,48 (*1,48)	1,43 (1,71)	*1,87 (*1,87)	1,25 (1,53)	6,06 m
3.0			*3,65 (*3,65)	*3,04 (*2,91)	*2,69 (*2,69)	*2,1 (*2,1)	*1,78 (*1,78)	1,46 (1,82)	*1,42 (*1,42)	1,38 (1,66)	*1,7 (*1,7)	1,01 (1,27)	6,46 m
2.0			*3,75 (*3,75)	*3,13 (*3,04)	*2,91 (*2,91)	*2,08 (*2,08)	*2,1 (*2,1)	1,35 (1,7)	*1,82 (*1,82)	1,02 (1,3)	*1,73 (*1,73)	0,84 (1,1)	6,67 m
1.0			*3,95 (*3,95)	3,15 (*3,13)	*3,15 (*3,15)	1,87 (2,35)	*2,42 (*2,42)	1,3 (1,66)	*1,96 (*1,96)	0,93 (1,22)	*1,72 (*1,72)	0,84 (1,09)	6,69 m
0			*4,08 (*4,08)	3,11 (*3,74)	*3,25 (*3,25)	1,83 (2,32)	*2,48 (*2,48)	1,27 (1,63)	*1,94 (*1,94)	1,03 (1,31)	*1,74 (*1,74)	0,87 (1,12)	6,55 m
-1.0	*4,17 (*4,17)	*4,17 (*4,17)	*4 (*4)	3,03 (*3,8)	*3,2 (*3,2)	1,8 (2,28)	*2,51 (*2,51)	1,21 (1,57)	*2,03 (*2,03)	0,93 (1,22)	*1,95 (*1,95)	0,89 (1,16)	6,18 m
-2.0	*4,26 (*4,26)	*4,26 (*4,26)	*3,82 (*3,82)	3,07 (*3,92)	*3,12 (*3,12)	1,8 (2,29)	*2,57 (*2,57)	1,17 (1,52)			*2,04 (*2,04)	0,93 (1,25)	5,59 m
-3.0	*3,91 (*3,91)	*4,4 (*4,4)	*3,82 (*3,82)	2,92 (*3,98)	*2,95 (*2,95)	1,72 (2,2)	*2,45 (*2,45)	1,11 (1,46)			*1,91 (*1,91)	0,88 (1,28)	4,66 m

https://truckmanualshub.com/

Front Side Unit: ton

Raised Blade, Optional Arm (2110 mm)

( ) the values in parenthesis are with additional ballast: 0.8 ton

A (m)	B (m)												
	2.0		3.0		4.0		5.0		6.0		MAX		
5.0					1,83 (*2,69)	*2,13 (*2,13)	1,66 (*2,35)	1,63 (1,98)			1,19 (1,52)	1,19 (1,52)	5,83 m
4.0			*2,91 (*2,91)	*2,28 (*2,28)	1,95 (*2,83)	*2,11 (*2,11)	*1,68 (*1,68)	1,49 (1,85)	*1,44 (*1,44)	1,39 (1,67)	0,95 (1,23)	1,06 (1,34)	6,43 m
3.0			3,03 (*3,6)	*3 (*3)	2,13 (*2,87)	*2,06 (*2,06)	*1,74 (*1,74)	1,42 (1,77)	*1,38 (*1,38)	1,33 (1,62)	0,91 (1,17)	0,82 (1,08)	6,81 m
2.0			3,13 (*3,71)	*3,09 (*3,09)	2,13 (*3,04)	*2,04 (*2,04)	*1,68 (*1,68)	1,3 (1,66)	1,15 (1,43)	0,97 (1,26)	0,76 (1,02)	0,65 (0,9)	6,98 m
1.0			3,24 (*3,91)	3,1 (3,85)	2,13 (*3,04)	1,83 (2,31)	1,38 (*2,02)	1,26 (1,62)	1,08 (1,36)	0,89 (1,17)	*0,81 (*0,81)	0,65 (0,9)	7,02 m
0			3,69 (*4,04)	3,07 (*3,69)	2,07 (*2,97)	1,79 (2,28)	1,34 (1,7)	1,23 (1,59)	1,04 (1,32)	0,99 (1,27)	0,69 (0,95)	0,67 (0,93)	6,88 m
-1.0	*4,13 (*4,13)	*4,13 (*4,13)	3,11 (*3,95)	2,99 (*3,75)	1,99 (*2,88)	1,75 (2,24)	1,27 (*1,89)	1,17 (1,53)	0,91 (*1,4)	0,89 (1,17)	0,71 (0,99)	0,7 (0,97)	6,55 m
-2.0	*4,22 (*4,22)	*4,21 (*4,21)	3,18 (*3,78)	3,03 (*3,87)	2,05 (*2,95)	1,76 (2,25)	1,19 (1,55)	1,12 (1,48)			0,76 (1,08)	0,74 (1,05)	6,00 m
-3.0	*3,87 (*3,87)	*4,35 (*4,35)	3,1 (*3,87)	2,88 (*3,93)	1,9 (*2,78)	1,68 (2,16)					0,7 (1,1)	0,69 (1,09)	5,16 m

Lowered Blade, Optional Arm (2110 mm)

( ) the values in parenthesis are with additional ballast: 0.8 ton

A (m)	B (m)												
	2.0		3.0		4.0		5.0		6.0		MAX		
5.0					*2,17 (*2,17)	*2,13 (*2,13)	*2,01 (*2,01)	1,63 (1,98)			*1,8 (*1,8)	1,19 (1,52)	5,83 m
4.0			*2,91 (*2,91)	*2,87 (*-0,04)	*2,35 (*2,35)	*2,09 (*2,09)	*1,68 (*1,68)	1,49 (1,85)	*1,44 (*1,44)	1,39 (1,67)	*1,68 (*1,68)	1,06 (1,34)	6,43 m
3.0			*3,61 (*3,61)	*3 (*2,87)	*2,65 (*2,65)	*2,06 (*2,06)	*1,74 (*1,74)	1,42 (1,77)	*1,38 (*1,38)	1,33 (1,62)	*1,5 (*1,5)	0,82 (1,08)	6,81 m
2.0			*3,71 (*3,71)	*3,09 (*3)	*2,87 (*2,87)	*2,04 (*2,04)	*2,06 (*2,06)	1,3 (1,66)	*1,78 (*1,78)	0,97 (1,26)	*1,53 (*1,53)	0,65 (0,9)	6,98 m
1.0			*3,91 (*3,91)	3,1 (*3,09)	*3,11 (*3,11)	1,83 (2,31)	*2,38 (*2,38)	1,26 (1,62)	*1,92 (*1,92)	0,89 (1,17)	*1,53 (*1,53)	0,65 (0,9)	7,02 m
0			*4,04 (*4,04)	3,07 (*3,69)	*3,21 (*3,21)	1,79 (2,28)	*2,44 (*2,44)	1,23 (1,59)	*1,89 (*1,89)	0,99 (1,27)	*1,54 (*1,54)	0,67 (0,93)	6,88 m
-1.0	*4,13 (*4,13)	*4,13 (*4,13)	*3,96 (*3,96)	2,99 (*3,75)	*3,15 (*3,15)	1,75 (2,24)	*2,47 (*2,47)	1,17 (1,53)	*1,99 (*1,99)	0,89 (1,17)	*1,76 (*1,76)	0,7 (0,97)	6,55 m
-2.0	*4,22 (*4,22)	*4,21 (*4,21)	*3,78 (*3,78)	3,03 (*3,87)	*3,08 (*3,08)	1,76 (2,25)	*2,53 (*2,53)	1,12 (1,48)			*1,85 (*1,85)	0,74 (1,05)	6,00 m
-3.0	*3,87 (*3,87)	*4,35 (*4,35)	*3,78 (*3,78)	2,88 (*3,93)	*2,91 (*2,91)	1,68 (2,16)	2,41 (2,41)	1,06 (1,42)			*1,72 (*1,72)	0,69 (1,09)	5,16 m

LIFTING CAPACITY

https://truckmanualshub.com/

The lifting capacity is based on ISO 10567 and does not exceed 75% of the static tipping load or 87% of the hydraulic lifting capacity of the machine.

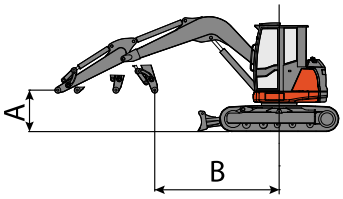

The straddle refers to the centre of rotation.
* Indicates the hydraulic load limit.
0 m refers to ground level.
The machine is understood to be equipped with a cab, rubber tracks, without a bucket and without a quick coupling.

Front Side Unit: ton

Raised Blade, Standard Arm (1760 mm)
( ) the values in parenthesis are with additional ballast: 0.8 ton

A (m)	B (m)										
	2.0		3.0		4.0		5.0		MAX		
5.0					1,89 (*2,75)	1,63 (*2,45)			1,41 (1,94)	1,22 (1,74)	3,80 m
4.0					1,9 (*2,77)	1,68 (*2,51)	1,65 (*2,32)	1,45 (1,81)	1,39 (1,8)	1,2 (1,6)	4,58 m
3.0					2,02 (*2,92)	1,77 (*2,61)	1,57 (*2,24)	1,38 (1,73)	1,38 (1,73)	1,18 (1,54)	5,05 m
2.0			2,82 (*3,76)	*3,08 (*3,08)	2,04 (*2,92)	1,8 (*2,65)	1,87 (*2,59)	1,34 (1,7)	1,35 (1,69)	1,16 (1,49)	5,30 m
1.0			3,26 (*3,96)	2,85 (3,59)	2,07 (*2,96)	1,83 (2,31)	1,48 (1,84)	1,29 (1,64)	1,33 (1,67)	1,14 (1,48)	5,34m
0			3,74 (*4,09)	2,88 (3,74)	2,08 (*2,98)	1,86 (2,34)	1,44 (1,79)	1,26 (1,61)	1,35 (1,69)	1,15 (1,5)	5,19 m
-1.0	*4,61 (*4,61)	*4,58 (*4,58)	3,24 (*4)	2,92 (3,8)	2,03 (*2,91)	1,8 (2,29)	1,35 (1,71)	1,3 (1,66)	1,38 (1,76)	1,18 (1,56)	4,83 m
-2.0	*4,5 (*4,5)	*4,26 (*4,26)	3,3 (*3,83)	3 (3,92)	1,98 (*2,85)	1,75 (2,23)			1,38 (1,84)	1,19 (1,65)	4,20 m

Lowered Blade, Standard Arm (1760 mm)
( ) the values in parenthesis are with additional ballast: 0.8 ton

A (m)	B (m)										
	2.0		3.0		4.0		5.0		MAX		
5.0					*2,42 (*2,42)	1,63 (*2,45)			*1,74 (*1,74)	1,22 (1,74)	3,80 m
4.0					*2,6 (*2,6)	1,68 (*2,51)	*1,87 (*1,87)	1,45 (1,81)	*1,75 (*1,75)	1,2 (1,6)	4,58 m
3.0					*2,84 (*2,84)	1,77 (*2,61)	*1,95 (*1,95)	1,38 (1,73)	*1,7 (*1,7)	1,18 (1,54)	5,05 m
2.0			*4,05 (*4,05)	*3,08 (*3,08)	*2,88 (*2,88)	1,8 (*2,65)	*2,25 (*2,25)	1,34 (1,7)	*2,13 (*2,13)	1,16 (1,49)	5,30 m
1.0			*4,21 (*4,21)	2,85 (3,08)	*3,13 (*3,13)	1,83 (2,31)	*2,54 (*2,54)	1,29 (1,64)	*2,36 (*2,36)	1,14 (1,48)	5,34 m
0			*4,35 (*4,35)	2,88 (3,74)	*3,19 (*3,19)	1,86 (2,34)	*2,41 (*2,41)	1,26 (1,61)	*2,26 (*2,26)	1,15 (1,5)	5,19 m
-1.0	*4,61 (*4,61)	*4,58 (*4,58)	*4,27 (*4,27)	2,92 (3,8)	*3,13 (*3,13)	1,8 (2,29)	*2,43 (*2,43)	1,3 (1,66)	*2,27 (*2,27)	1,18 (1,56)	4,83 m
-2.0	*4,5 (*4,5)	*4,26 (*4,26)	*4,01 (*4,01)	3 (3,92)	*3,05 (*3,05)	1,75 (2,23)			*2,43 (*2,43)	1,19 (1,65)	4,20 m

https://truckmanualshub.com/

Front Side Unit: ton

Raised Blade, Optional Arm (2110 mm)
( ) the values in parenthesis are with additional ballast: 0.8 ton

A (m)	B (m)										
	2.0		3.0		4.0		5.0		MAX		
											MAX
5.0					1,84 (*2,71)	1,59 (*2,41)			1,29 (1,82)	1,1 (1,62)	4,28 m
4.0					1,86 (*2,72)	1,63 (*2,46)	1,6 (*2,28)	1,41 (1,77)	1,27 (1,67)	1,07 (1,48)	4,99 m
3.0					1,98 (*2,87)	1,72 (*2,57)	1,53 (*2,2)	1,33 (1,69)	1,25 (1,61)	1,06 (1,42)	5,42 m
2.0			2,77 (*3,71)	*3,04 (*3,04)	1,99 (*2,88)	1,75 (*2,6)	1,83 (*2,54)	1,3 (1,65)	1,23 (1,57)	1,04 (1,37)	5,65 m
1.0			3,22 (*3,91)	2,8 (3,55)	2,02 (*2,92)	1,78 (2,27)	1,44 (1,8)	1,24 (1,6)	1,21 (1,54)	1,02 (1,35)	5,69 m
0			3,69 (*4,04)	2,84 (3,69)	2,04 (*2,93)	1,81 (2,3)	1,39 (1,75)	1,21 (1,57)	1,22 (1,57)	1,03 (1,37)	5,55 m
-1.0	*4,57 (*4,57)	*4,54 (*4,54)	3,19 (*3,95)	2,88 (3,75)	1,99 (*2,87)	1,76 (2,25)	1,31 (1,67)	1,26 (1,62)	1,26 (1,64)	1,06 (1,44)	5,22 m
-2.0	*4,46 (*4,46)	*4,21 (*4,21)	3,26 (*3,78)	2,95 (3,87)	1,93 (*2,81)	1,71 (2,19)			1,26 (1,72)	1,07 (1,52)	4,65 m

Lowered Blade, Optional Arm (2110 mm)
( ) the values in parenthesis are with additional ballast: 0.8 ton

A (m)	B (m)										
	2.0		3.0		4.0		5.0		MAX		
											MAX
5.0					*2,38 (*2,38)	*1,59 (*2,41)			*1,61 (*1,61)	1,1 (1,62)	4,28 m
4.0					*2,55 (*2,55)	*1,63 (*2,46)	*1,82 (*1,82)	1,41 (1,77)	*1,63 (*1,63)	1,07 (1,48)	4,99 m
3.0					*2,8 (*2,8)	*1,72 (*2,57)	*1,91 (*1,91)	1,33 (1,69)	*1,57 (*1,57)	1,06 (1,42)	5,42 m
2.0			*4,01 (*4,01)	*3,04 (*3,04)	*2,84 (*2,84)	*1,75 (*2,6)	*2,21 (*2,21)	1,3 (1,65)	*2 (*2)	1,04 (1,37)	5,65 m
1.0			*4,17 (*4,17)	2,8 (3,04)	*3,09 (*3,09)	1,78 (2,27)	*2,49 (*2,49)	1,24 (1,6)	*2,24 (*2,24)	1,02 (1,35)	5,69 m
0			*4,3 (*4,3)	2,84 (3,69)	*3,15 (*3,15)	1,81 (2,3)	*2,37 (*2,37)	1,21 (1,57)	*2,14 (*2,14)	1,03 (1,37)	5,55 m
-1.0	*4,57 (*4,57)	*4,54 (*4,54)	*4,22 (*4,22)	2,88 (3,75)	*3,09 (*3,09)	1,76 (2,25)	*2,39 (*2,39)	1,26 (1,62)	*2,15 (*2,15)	1,06 (1,44)	5,22 m
-2.0	*4,46 (*4,46)	*4,21 (*4,21)	*3,97 (*3,97)	2,95 (3,87)	*3,01 (*3,01)	1,71 (2,19)			*2,31 (*2,31)	1,07 (1,52)	4,65 m

LIFTING CAPACITY

https://truckmanualshub.com/

The lifting capacity is based on ISO 10567 and does not exceed 75% of the static tipping load or 87% of the hydraulic lifting capacity of the machine.

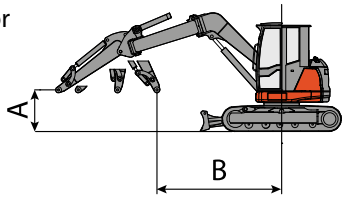

The straddle refers to the centre of rotation.
* Indicates the hydraulic load limit.
0 m refers to ground level.
The machine is understood to be equipped with a cab, rubber tracks, without a bucket and without a quick coupling.

Front Side Unit: ton

Raised Blade, Standard Arm (1760 mm)
( ) the values in parenthesis are with additional ballast: 0.8 ton

A (m)	B (m)										
	2.0		3.0		4.0		5.0		MAX		
5.0									1,18 (1,7)	0,99 (1,51)	3,84 m
4.0					1,59 (2,07)	1,54 (*2,35)	1,47 (1,82)	1,38 (1,73)	1,16 (1,56)	0,97 (1,37)	4,62 m
3.0					1,68 (2,16)	1,63 (*2,45)	1,38 (1,73)	1,3 (1,66)	1,22 (1,57)	1,03 (1,38)	5,09 m
2.0			2,36 (3,11)	2,4 (3,15)	1,71 (2,19)	1,66 (*2,49)	1,34 (1,7)	1,26 (1,62)	1,2 (1,53)	1,01 (1,34)	5,32 m
1.0			2,43 (3,18)	2,59 (3,34)	1,74 (2,22)	1,69 (2,17)	1,29 (1,64)	1,21 (1,57)	1,18 (1,51)	0,99 (1,32)	5,37 m
0			2,53 (3,28)	2,63 (3,38)	1,77 (2,25)	1,72 (2,2)	1,27 (1,63)	1,18 (1,54)	1,19 (1,53)	1 (1,34)	5,22 m
-1.0	*4,1 (*4,1)	*4,1 (*4,1)	2,55 (3,3)	2,67 (3,41)	1,72 (2,2)	1,67 (2,15)			1,14 (1,52)	0,96 (1,33)	4,86 m
-2.0	*4,01 (*4,01)	*4,01 (*4,01)	2,58 (3,33)	2,74 (3,49)	1,66 (2,14)	1,62 (2,1)			1,15 (1,6)	0,96 (1,41)	4,25 m

Lowered Blade, Standard Arm (1760 mm)
( ) the values in parenthesis are with additional ballast: 0.8 ton

A (m)	B (m)										
	2.0		3.0		4.0		5.0		MAX		
5.0									*1,42 (*1,42)	0,99 (1,51)	3,84 m
4.0					*2,29 (*2,29)	1,54 (*2,35)	*1,62 (*1,62)	1,38 (1,73)	*1,44 (*1,44)	0,97 (1,37)	4,62 m
3.0					*2,51 (*2,51)	1,63 (*2,45)	*1,71 (*1,71)	1,3 (1,66)	*1,59 (*1,59)	1,03 (1,38)	5,09 m
2.0			*3,61 (*3,61)	2,4 (3,38)	*2,55 (*2,55)	1,66 (*2,49)	*2 ,00 (*2,00)	1,26 (1,62)	*1,81 (*1,81)	1,01 (1,34)	5,32 m
1.0			*3,74 (*3,74)	2,59 (3,66)	*2,8 (*2,8)	1,69 (*2,52)	*2,27 (*2,27)	1,21 (1,57)	*2,05 (*2,05)	0,99 (1,32)	5,37 m
0			*3,91 (*3,91)	2,63 (3,34)	*2,86 (*2,86)	1,72 (*2,56)	*2,17 (*2,17)	1,18 (1,54)	*1,94 (*1,94)	1,00 (1,34)	5,22 m
-1.0	*4,1 (*4,1)	*4,1 (*4,1)	*3,83 (*3,83)	2,67 (3,38)	*2,8 (*2,8)	1,67 (*2,5)			*1,96 (*1,96)	0,96 (1,33)	4,86 m
-2.0	*4,01 (*4,01)	*4,01 (*4,01)	*3,58 (*3,58)	2,74 (3,41)	*2,72 (*2,72)	1,62 (*2,44)			*2,12 (*2,12)	0,96 (1,41)	4,25 m

https://truckmanualshub.com/

Front Side Unit: ton

Raised Blade, Optional Arm (2110 mm)
( ) the values in parenthesis are with additional ballast: 0.8 ton

A (m)	B (m)										
	2.0		3.0		4.0		5.0		MAX		
	Front	Side	Front	Side	Front	Side	Front	Side	Front	Side	MAX
5.0									0,99 (1,51)	0,8 (1,32)	4,26 m
4.0					1,54 (2,03)	1,5 (*2,31)	1,42 (1,78)	1,33 (1,69)	0,97 (1,37)	0,78 (1,18)	4,97 m
3.0					1,63 (2,12)	1,59 (*2,41)	1,33 (1,69)	1,26 (1,62)	1,03 (1,38)	0,84 (1,19)	5,41 m
2.0			2,32 (3,06)	2,36 (3,11)	1,66 (2,15)	1,62 (*2,45)	1,3 (1,65)	1,22 (1,58)	1 (1,34)	0,82 (1,15)	5,63 m
1.0			2,39 (3,14)	2,55 (3,3)	1,69 (2,18)	1,65 (2,13)	1,24 (1,6)	1,17 (1,53)	0,99 (1,32)	0,8 (1,13)	5,67 m
0			2,49 (3,24)	2,59 (3,33)	1,72 (2,21)	1,68 (2,16)	1,23 (1,59)	1,14 (1,5)	1 (1,34)	0,81 (1,15)	5,53 m
-1.0	*4,06 (*4,06)	*4,06 (*4,06)	2,51 (3,26)	2,62 (3,37)	1,68 (2,16)	1,63 (2,11)			0,95 (1,33)	0,76 (1,14)	5,20 m
-2.0	*3,96 (*3,96)	*3,96 (*3,96)	2,54 (3,29)	2,7 (3,45)	1,62 (2,1)	1,57 (2,06)			0,96 (1,41)	0,77 (1,22)	4,63 m

Lowered Blade, Optional Arm (2110 mm)
( ) the values in parenthesis are with additional ballast: 0.8 ton

A (m)	B (m)										
	2.0		3.0		4.0		5.0		MAX		
	Front	Side	Front	Side	Front	Side	Front	Side	Front	Side	MAX
5.0									*1,23 (*1,23)	0,8 (1,32)	4,26 m
4.0					*2,25 (*2,25)	*1,5 (*2,31)	*1,58 (*1,58)	1,33 (1,69)	*1,25 (*1,25)	0,78 (1,18)	4,97 m
3.0					*2,47 (*2,47)	*1,59 (*2,41)	*1,67 (*1,67)	1,26 (1,62)	*1,4 (*1,4)	0,84 (1,19)	5,41 m
2.0			*3,57 (*3,57)	2,36 (*3,33)	*2,51 (*2,51)	*1,62 (*2,45)	*1,96 (*1,96)	1,22 (1,58)	*1,62 (*1,62)	0,82 (1,15)	5,63 m
1.0			*3,7 (*3,7)	2,55 (3,61)	*2,75 (*2,75)	1,65 (*2,48)	*2,22 (*2,22)	1,17 (1,53)	*1,86 (*1,86)	0,8 (1,13)	5,67 m
0			*3,87 (*3,87)	2,59 (3,3)	*2,82 (*2,82)	1,68 (*2,52)	*2,13 (*2,13)	1,14 (1,5)	*1,75 (*1,75)	0,81 (1,15)	5,53 m
-1.0	*4,06 (*4,06)	*4,06 (*4,06)	*3,79 (*3,79)	2,62 (3,33)	*2,75 (*2,75)	1,63 (*2,46)			*1,77 (*1,77)	0,76 (1,14)	5,20 m
-2.0	*3,96 (*3,96)	*3,96 (*3,96)	*3,54 (*3,54)	2,7 (3,37)	*2,68 (*2,68)	1,57 (*2,39)			*1,93 (*1,93)	0,77 (1,22)	4,63 m

https://truckmanualshub.com/

EUROCOMACH®

Sampierana S.p.A.
Via Leonardo da Vinci, 40 47021
S. Piero in Bagno (FC) - ITALY
Tel +39 0543.904211

www.eurocomach.com

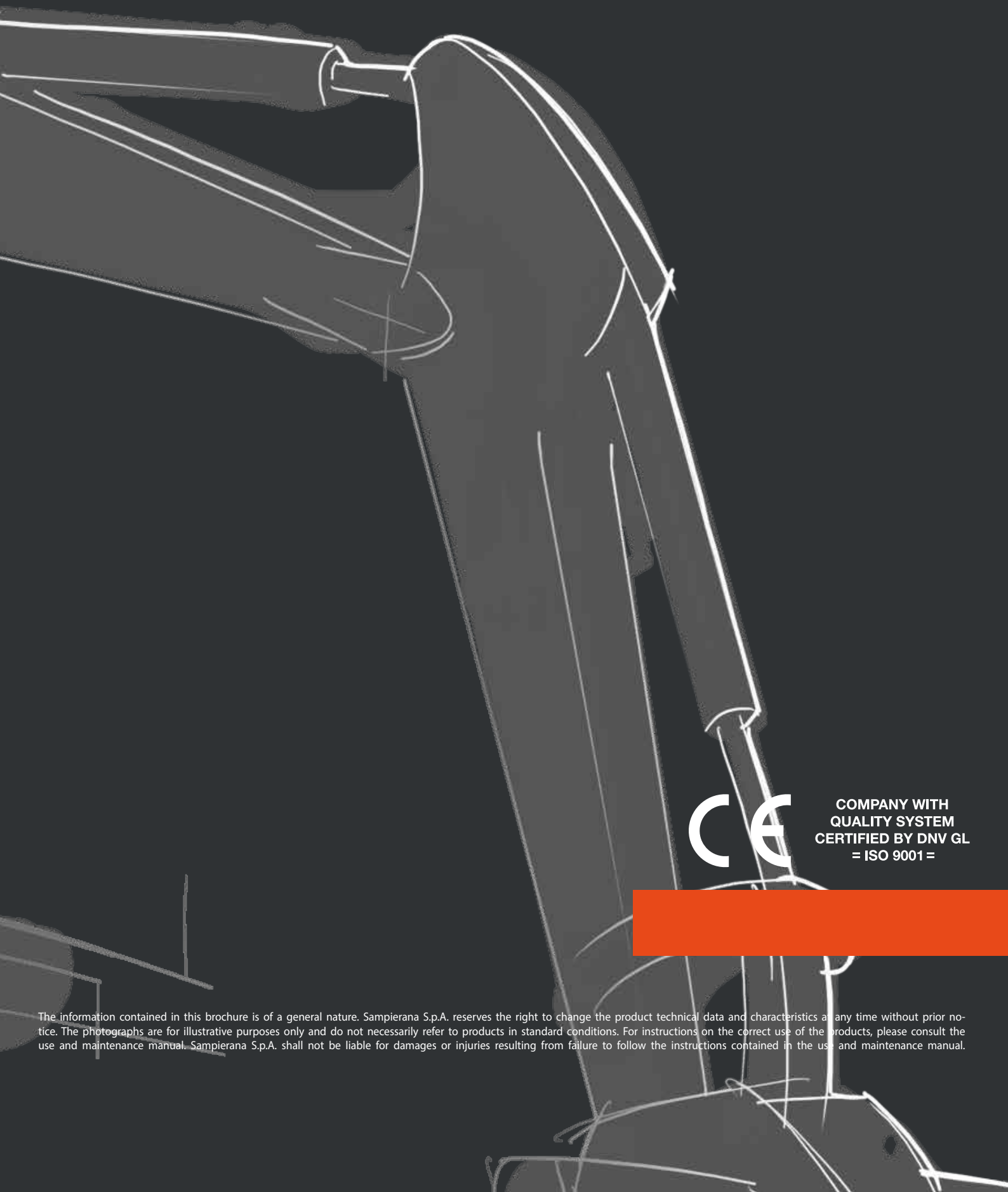

COMPANY WITH
QUALITY SYSTEM
CERTIFIED BY DNV GL
= ISO 9001 =

The information contained in this brochure is of a general nature. Sampierana S.p.A. reserves the right to change the product technical data and characteristics at any time without prior notice. The photographs are for illustrative purposes only and do not necessarily refer to products in standard conditions. For instructions on the correct use of the products, please consult the use and maintenance manual. Sampierana S.p.A. shall not be liable for damages or injuries resulting from failure to follow the instructions contained in the use and maintenance manual.