https://truckmanualshub.com/

42ZT

Concrete solutions. Always.

Engine D1803-CR-T

Engine power 32,3 kW - 43,9 HP

Transport weight 4.050 - 4.200 kg

EUROCOMACH®

https://truckmanualshub.com/

42ZT

Transport weight with canopy (without bucket and operator)	kg	4.050
Transport weight with cabin (without bucket and operator)	kg	4.200
Operating weight ISO 6016 with canopy (with bucket 75 kg and operator 75 kg)	kg	4.200
Operating weight ISO 6016 with cabin (with bucket 75 kg and operator 75 kg)	kg	4.350
Travelling speed (AUTO TWO SPEED)	km/h	1a : 0 ÷ 2,6 / 2a : 0 ÷ 4,5
Slew speed	rpm	10,5
ENGINE		
Type	KUBOTA D1803-CR-T - STAGE 5	
Max. Power (2.300 rpm)	kW - HP	32,3 - 43,9
Displacement	cc	1.826
Number of cylinders	n°	3
Cooling	Liquid	
Consumption	lt/h	5,4
Alternator	V (A)	12 (70)
Battery	V (Ah)	12 (75)
HYDRAULIC SYSTEM		
Circuit Type	Load Sensing closed center system with "Flow Sharing" control valve	
Pump type	1 LS hydraulic variable pump with electronic control + 1 gear pump	
Pump displacement	cc	53,7 + 11,2
Pump capacity	lt/min	107 + 22,3
Max. circuit calibration pressure	bar	280
Auxiliary systems (max pressure): AUX 1 single or double effect with priority AUX 2 double effect (optional)	lt/min (bar)	60 (200) 60/43 (280)
PERFORMANCES		
Max. digging depth with standard arm (optional arm)	mm	3.085 (3.335)
Max. dumping height with standard arm (optional arm)	mm	3.660 (3.820)
Bucket breaking force (standard arm) ISO 6015	daN	4.300
Arm breaking force (standard arm) ISO 6015	daN	2.200
Traction force	daN	4.260
Specific ground pressure	kg/cm²	0,31
Max. slope	60% - 30°	
DIMENSIONS		
Maximum width	mm	1.750
Total height	mm	2.510
Rear rotation radius	mm	875
Digging arm length std (optional)	mm	1.400 (1.650)
Tracks width	mm	350
Rollers number (for each side)	n°	5/1
FILLINGS		
Fuel tank	lt	60
Hydraulic oil tank	lt	50
Hydraulic circuit capacity	lt	65
Cooling system capacity	lt	9
Engine oil	lt	7
CONTROLS		
Boom, dipper stick, bucket and turret swing	2 pilot joysticks	
Tracks mouvement (included counter rotation)	2 pilot levers	
Dozer blade	pilot lever	
Priority auxiliary system with holding function AUX 1 (single or double effect)	electroproportional switch on right joystick	
Auxiliary system AUX 2 (double effect)	electroproportional switch on right joystick	
Boom swing	electroproportional switch on left joystick	

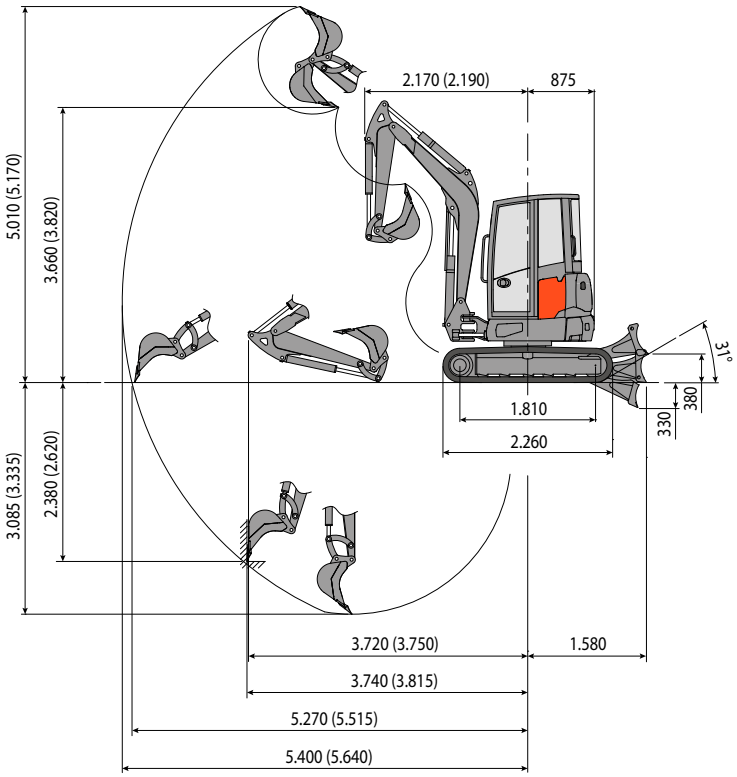

Standard dipper stick L=1.400
(Optional dipper stick L=1.650)

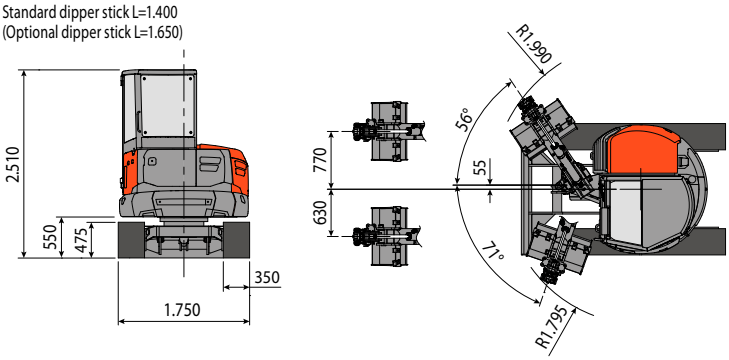

LIFTING CAPACITY
Opening arm from the rotation's center (m)
Lifting capacity (kg) at 1.0 m height

	3	4	MAX
Frontal and lowered dozer blade	*1.620	*1.150	*1.030
Frontal and lifted dozer blade	1.010	660	530
Lateral	720	480	390

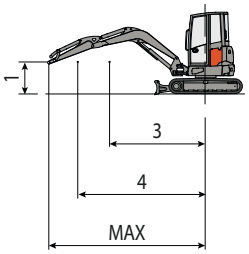

* Indicates the hydraulic load limit.

The lifting capacity is based on the ISO 10567 and it does not exceed more than the 75% of static tipping load or more than the 87% of the hydraulic lifting capacity of the machine.

EUROCOMACH®

These pictures may include optional rather than standard settings. Technical features are not binding and may be modified without notice in any moment.