https://truckmanualshub.com/

103ME-OM1903-00

Operation Manual

MC305C-3

Mini-Crawler Crane

Serial No. D3001 and up

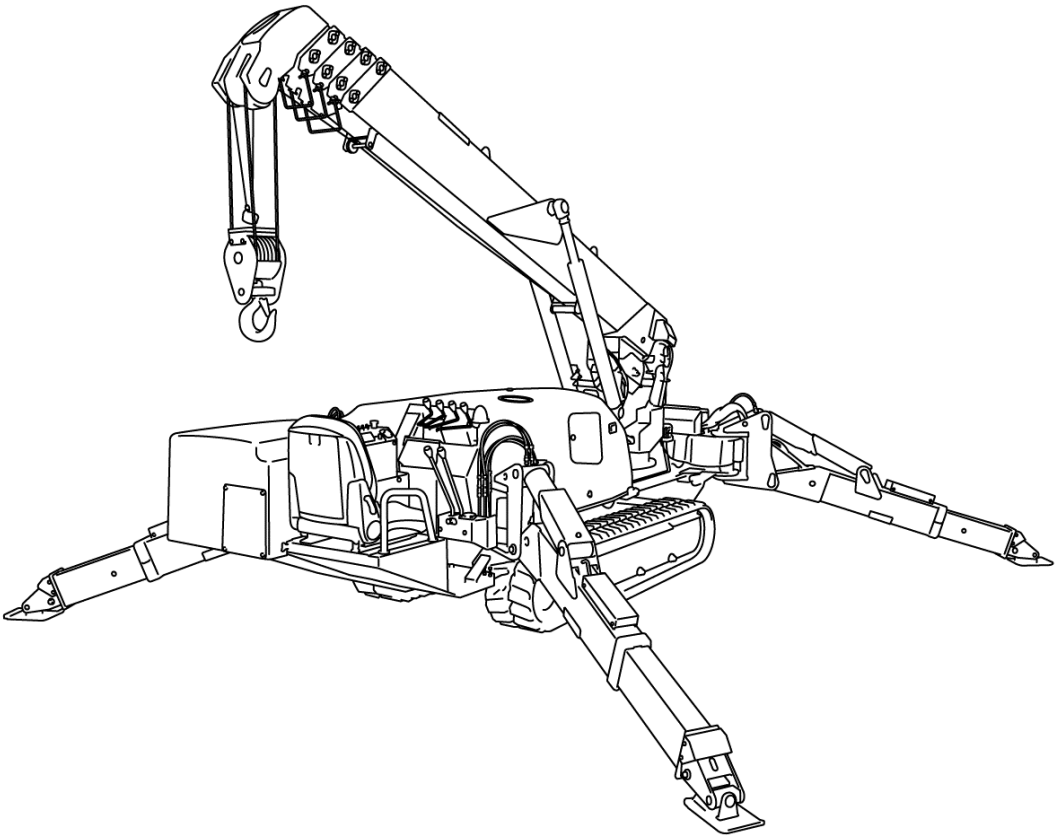

https://truckmanualshub.com/

⚠ WARNING

Improper use of this machine can lead to serious injury.
The operators and maintenance personnel must carefully read this manual and sufficiently understand its contents before operation / inspecting / maintaining the machine.
Keep this manual at hand to read it over anytime.

https://truckmanualshub.com/

Table of Contents

Section 1 INTRODUCTION

INTRODUCTION....1-2

Section 2 SAFETY

SAFETY DEFINITIONS....2-2

SAFETY PRECAUTIONS....2-2

SAFETY LABEL LOCATIONS....2-9

- Machine Body....2-9
- Remote Control System....2-20
- Electric Motor (Option)....2-22
- 850kg Searcher Hook (Option)....2-24

Section 3 SPECIFICATIONS, TERMINOLOGY AND CAPACITY CHARTS

MACHINE FEATURES....3-2

- Main Features....3-2
  - Travelling Dolly....3-2
  - Crane....3-2
  - Safety Devices....3-2

CRANE TERMINOLOGY....3-3

- Terms and Definitions....3-3

PRINCIPLE SPECIFICATIONS LIST....3-4

- Standard and Electric Motor Option Specifications....3-4
- Remote Control System Specifications....3-6
- 850 kg Searcher Hook Specifications....3-7

DIMENSIONAL DRAWINGS....3-8

- Machine Dimensional Drawing....3-8
- 850kg Searcher Hook Dimensional Drawing....3-9
- Outrigger Width Dimensional Drawing....3-10

RATED TOTAL LOAD CHARTS....3-11

- Programmable Moment Limiter....3-11
  - Reading the Angle Indicator....3-11
- Boom Length....3-12
- Rated Total Load Chart for Standard Specification....3-14
- Rated Total Load Chart–4 Falls....3-15
- Rated Total Load Chart-2 Falls....3-16
- Rated Total Load Chart-Single Fall....3-17

Rated Total Load Chart for 850 kg Searcher Hook 3-18
WORKING RADIUS/LIFTING HEIGHT 3-20
Standard 3-20
Working Radius/Lifting Height for Searcher Hook 3-22

Section 4 OPERATION

MACHINE COMPONENTS 4-2
TRAVEL AND CRANE CONTROLS 4-4
Control Location 4-4
INSTRUMENT PANEL SECTIONS 4-7
Switches 4-8
Monitors 4-10
OPERATION SEAT 4-12
Seat Forward/Backward Slide Adjustment 4-13
Reclining Adjustment 4-13
COLD WEATHER OPERATION 4-13
Cautions When Snow Covered or Frozen 4-13
Cautions under Cold Weather 4-14
STARTING ENGINE 4-15
Checking before Operation 4-15
Visible Checks 4-15
Checking before Starting Engine 4-15
Checking after Starting Engine 4-15
Normal Engine Start 4-15
Starting Engine in Cold Weather 4-16
Correction When Working at High Altitude 4-17
OPERATIONS AND CHECKS AFTER STARTING ENGINE 4-18
STOPPING ENGINE 4-20
INSPECTION AFTER STOPPING ENGINE 4-20
TRAVELLING POSITION 4-21
TRAVELLING CONTROLS AND OPERATION 4-21
Cautions When Travelling 4-21
Allowable Water Depth 4-22
Cautions on Upward/Downward Slope 4-22
STARTING TRAVELLING MACHINE 4-23
Preparation before Starting Travelling 4-23
Travelling Forward 4-23
Travelling Backward 4-23
CHANGING MACHINE TRAVELLING MODE 4-24
DIRECTIONAL CONTROLS 4-24
Changing the Machine Direction While Being Stopped 4-24
Spin Turns 4-25

https://truckmanualshub.com/

Changing Path While Travelling Forward/Backward 4-25
STOPPING/PARKING MACHINE 4-26
DESCRIPTION ON OUTRIGGER AND CRANE SAFETY DEVICES 4-27
Outrigger Safety Devices.....4-27
Functions of Outrigger Safety Device 4-27
OUTRIGGER COMPONENTS.....4-31
OUTRIGGER DISPLAY 4-32
OUTRIGGER UN-SET WARNING LAMP (RED) 4-33
OUTRIGGER OPERATION PANEL.....4-34
OUTRIGGER SETTING.....4-36
Outrigger Setting Precautions 4-36
Cautions When Placing Outrigger 4-37
Tasks to Be Performed upon Engine Stop 4-39
Tasks to Be Performed after Starting Engine 4-41
Outrigger Extension Modes 4-43
Outrigger Maximum Extension 4-43
Outrigger Midium Extension 4-43
Outrigger Minimum Extension 4-44
OUTRIGGER STOWING 4-45
Tasks to Be Performed after Starting Engine 4-46
Tasks to Be Performed upon Engine Stop 4-48
WORKING WITH CRANE.....4-49
CRANE OPERATION 4-50
Dos and Don’ts During Crane Operations 4-50
Before Crane Operations.....4-52
Crane Operation Posture.....4-54
Hook Raising/Lowering Operation.....4-54
Boom Derricking Operation 4-55
Boom Telescoping Operation 4-55
Slewing Operation 4-56
Acceleration Operation 4-56
Crane Stowing Operation 4-57
MOMENT LIMITER (OVERLOAD DETECTOR) 4-59
Moment Limiter Features.....4-59
Function of Moment Limiter 4-60
Mechanism of Moment Limiter.....4-60
Display of Moment Limiter Error Messages 4-61
Moment Limiter Operations 4-61
Prohibited Actions after Auto Stop.....4-61
Recovery Operation after Auto Stop.....4-61
Moment Limiter Display 4-64
Descriptions of Switches on Moment Limiter Display 4-65
Fall Mode Selector Switch and Fall Mode Display LED (Blue) 4-65
Boom Angle Upper Limit Switch and LED (Orange) 4-65
Boom Angle Lower Limit Switch and LED (Orange) 4-66

Working Radius Upper Limit Switch and LED (Orange) 4-66
Lifting Height Upper Limit Switch and LED (Orange)....4-67
Cancel Switch....4-67
Check Switch....4-67
Descriptions of Moment Limiter Display 4-68
Actual Load Display Section....4-68
Rated Total Load Display Section 4-68
Working Radius Display Section....4-69
Boom Length Display Section....4-69
Lifting Height Display Section 4-69
Boom Angle Display Section 4-69
Over Winding LED (Red)....4-69
Outrigger Extension LED (Blue) 4-69
Load Factor LED (Changes to Green/ Yellow/Red)....4-70
Load Factor Display (Yellow)....4-70
Moment Limiter Functions 4-70
Overload Warning....4-70
Working Envelope Restriction Warning 4-71
Over Winding Detector 4-71
Number of Wires Selector Switch 4-72
Boom Upper Limit Detection....4-72
Boom Lower Limit Detection....4-72
Outrigger Extension Detection....4-72
Moment Limiter Starting Status 4-72
Moment Limiter Working Envelope Setting....4-72
Setting Working Envelope 4-73
Cancelling Working Envelope Setting....4-73
Moment Limiter Override Switch 4-74
REMOTE CONTROL SYSTEM INTRODUCTION 4-75
General....4-75
No Modification....4-75
No Water Washing 4-75
No Shock to the Transmitter....4-76
Precaution for Operations in Cold Seasons....4-76
Precautions for Handling of Connection Cable 4-76
Precautions for Crane Operation - before Starting Engine 4-77
Inspection Prior to Starting Engine 4-77
Safety Measures for Starting Engine 4-77
Inspection Prior to Turn on the Transmitter 4-77
Inspection after Turning on the Transmitter....4-77
Inspection Prior to Turn on the Receiver 4-77
Precautions for Crane Operation - after Starting Engine 4-77
Function Check of Outrigger Mode by the Transmitter, and Notices for Operation 4-77
Function Check of Crane Mode by the Transmitter and Notices for Operation....4-77
Precautions for Crane Operation - Terminating the Operation 4-78
Precautions for Terminating the Operation by the Transmitter 4-78
REMOTE CONTROL SYSTEM FEATURES 4-78
Transmitter 4-79

Receiver 4-79
Functions of Remote Control System 4-79
REMOTE CONTROL SYSTEM COMPONENTS 4-80
Transmitter 4-80
LCD Screen 4-81
Start/Reset Button 4-81
Stop/EMO Button 4-81
Speed/Mode Button 4-81
Hook Stow/Setting Button 4-81
Horn Button 4-81
Power Switch 4-82
Slewing/No.1 Outrigger Operation Lever 4-82
Boom Telescoping/No.2 Outrigger Operation Lever 4-82
Hook Raising and Lowering/No.3 Outrigger Operation Lever 4-83
Boom Lift/No.4 Outrigger Operation Lever 4-83
Accelerator Lever 4-84
Grip 4-84
Connection Cable 4-84
Storage Case 4-85
Hook Belt 4-85
Receiver Components 4-86
Control Box 4-87
Main Switch 4-87
Monitor Display 4-87
Receptacle 4-87
Fuse in the Receiver 4-88
Removal of the Fuse 4-88
Insertion of a Fuse 4-89
MODE SETTING OF THE TRANSMITTER 4-89
A Mode 4-89
Opening A Mode Screen 4-89
Messages in the A Mode Screen 4-90
An Example for Setting in the A Mode 4-93
Procedure in the Operation Mode 4-94
Call Out Crane Mode 4-94
Call Out Outrigger Mode 4-94
REMOTE CONTROL SYSTEM VERIFICATIONS 4-96
Checking Before Starting Engine 4-96
Checking before Turning ON the Transmitter 4-96
Checking after Turning on the Transmitter 4-96
Checking Receiver 4-99
Checking after Starting Engine 4-100
Verification for the Engine Start and Stop 4-100
Checking "Outrigger Mode" Operation 4-101
Checking "Crane Mode" Operation 4-103
REMOTE CONTROL OPERATION 4-106
Cautions Before Operation 4-106

https://truckmanualshub.com/

Operation in Outrigger Mode 4-107
Outrigger Setting 4-108
Outrigger Stowage 4-109
Operation in Crane Mode 4-110
Slewing Operation 4-111
Boom Telescoping Operation 4-111
Hook Raising and Lowering Operation 4-112
Boom Derricking Operation 4-112
Automatic Hook Stow Function 4-113
Set-Up/Cancel Micro Speed and Enhanced Speed Mode 4-113
Engine Stop and Emergency Stop Procedure 4-115
Engine Start and Reset Procedure 4-116
Checking after Crane Operation 4-116
ELECTRIC MOTOR (OPTION) 4-117
Instrument Panel Sections 4-118
Power Unit 4-119
Power Supply Box 4-119
Inverter Unit 4-120
ELECTRIC MOTOR OPERATION 4-122
Pre-start Inspection 4-122
Pre-start Visible Checks 4-122
Checking Before Starting Electric Motor 4-122
Checking After Starting Electric Motor 4-122
Connecting Power Supply Cable 4-122
Operation and Checking After Power Connection 4-124
Machine Operation 4-126
Machine Stop and Checks after Stopping Machine 4-126
Disconnecting Power Supply Cable 4-126
SEARCHER HOOK SAFETY PRECAUTIONS 4-127
Handling Precautions 4-127
Moment Limiter Settings Check 4-127
Precautions When Attaching/Removing Main Unit or Altering Position 4-127
Operating Precautions 4-127
Precautions Using Boom Raising 4-127
850 kg SEARCHER HOOK COMPONENTS (OPTION) 4-128
850 kg SEARCHER HOOK MOMENT LIMITER DISPLAY 4-129
SEARCHER HOOK OPERATION 4-132
TRANSPORTATION 4-135
Transport Precautions 4-135
Cautions When Loading or Unloading 4-135
Cautions During Transport 4-136
Cautions When Loading/Unloading with Crane 4-136
Loading/Unloading 4-137
Hoisting Machine 4-138
Cautions on Loading Machine 4-140
Cautions During Transportation 4-140

https://truckmanualshub.com/

Section 5 MAINTENANCE AND INSPECTION

GENERAL MAINTENANCE INFORMATION AND PRECAUTIONS.....5-2
- Precautions Before Maintenance 5-2
- Precautions During Maintenance 5-4
- Check the Service Meters 5-8
- Use Genuine Parts for Replacement.....5-8
- Use Pure Grease.....5-8
- Use Clean Oil and Grease.....5-8
- Keep the Machine Clean 5-8
- Handle Water and Oil at Adequate Temperature 5-8
- Check Drain Oil and Oil Filter 5-8
- Cautions for Lubrication.....5-8
- Protect Oil from Impurities 5-8
- Attach a Warning Tag.....5-8
- Follow Safety Precautions 5-8
- Cautions for Weld Repair 5-8
- Keep from Flame.....5-8
- Keep the Attachment Surface Clean 5-8
- Empty Your Pockets.....5-8
- Assure Safe Rubber Track 5-9
- Cautions for Machine Wash 5-9
- Pre- and Post-Work Inspection.....5-9
- Cautions for Working in a Dusty Site.....5-9
- Do Not Mix Oil 5-9

BASIC MAINTENANCE 5-9
- Oil Handling.....5-9
- Fuel Handling 5-10
- Stocking and Storage of Oil and Fuel.....5-10
- Grease Handling 5-10
- Filter Handling 5-10
- Coolant Handling.....5-10
- Electrical Part Handling 5-11
- Hydraulic Equipment Handling 5-11

BREAKING-IN MACHINE 5-12

LEGAL INSPECTION.....5-12

CONSUMABLES.....5-13

LUBRICATING OIL 5-14

SPECIAL TOOLS AND STANDARD TIGHTENING TORQUE 5-15
- Accessory Tools 5-15
- Standard Tightening Torque List 5-15
  - Bolt and Nut Tightening Torque.....5-15
  - Hose Connector Tightening Torque.....5-17

MACHINERY COVER.....5-18
- Removing Machinery Cover 5-18
- Installing Machinery Cover 5-18

REAR COVER 5-19
Removing Rear Cover 5-19
Installing Rear Cover 5-19
FUSES 5-20
INSPECTION 5-21
Pre-Start and Post-Start Inspection Items 5-21
Pre-Start Visible Checks.....5-22
Crane.....5-23
Wire Ropes.....5-23
Hook Block 5-23
Outriggers.....5-24
Undercarriage Parts.....5-24
Travelling Dolly 5-24
Engine 5-24
Travel and Crane Operation Section 5-24
Pre-Start Inspection - Before Starting Engine.....5-25
Check / Refill Engine Coolant 5-25
Check / Add Engine Oil.....5-26
Check / Add Fuel 5-27
Check / Clean Water Separator.....5-28
Check / Clean Fuel Filter Pot.....5-29
Check / Add Hydraulic Oil.....5-30
Check / Refill Oil Level in Slewing Reduction Gear Case 5-31
Check / Refill Oil Level in Travelling Motor Reduction Gear Case.....5-31
Check / Clean Radiator and Oil Cooler Fins 5-32
Check Battery Charge Level.....5-32
Post-Start Inspection - After Starting Engine 5-33
Check Horn.....5-33
Check Working Lights.....5-33
Check Fuse Box for Damage.....5-33
Check Outrigger Display.....5-34
Check Over Winding Detector Operation.....5-35
Check Moment Limiter Operation 5-35
PERIODIC MAINTENANCE.....5-36
Periodic Maintenance Schedule 5-36
Periodic Maintenance Procedure 5-37
Drain Contaminant Water/Deposits in Water Separator 5-38
Grease Machine Units 5-39
Replace Engine Oil and Oil Filter.....5-41
Check / Adjust Belt Tension.....5-42
Check / Refill Oil in Travelling Motor Reduction Gear Case 5-43
Inspect / Clean / Replace Air Cleaner.....5-44
Drain Contaminant Water/Deposits in Fuel Tank.....5-45
Replace Fuel Filter Cartridge.....5-46
Replace Hydraulic Oil Return Filter 5-46
Replace Hydraulic Oil Suction Filter 5-47
Replace Air Cleaner Element 5-48
Coolant Replacement and Internal Cleaning 5-49

Replace Oil in Hydraulic Oil Tank 5-51
Replace Oil in Slewing Reduction Gear Case 5-52
Replace Oil in Winch Reduction Gear Case 5-53
Replace Oil in Travelling Motor Reduction Gearcase 5-54
Inlet/Exhaust Valve Head Clearance Inspection/Adjustment 5-55
Inspect / Clean / Test Fuel Injector 5-55
Check Crankcase Breather.....5-55
GENERAL MACHINE MAINTENANSE.....5-55
Batteries 5-55
Battery Precautions 5-55
Cautions In Handling Battery.....5-56
Cautions When Starting Up Using Booster Cable 5-57
Cautions on Charging Battery.....5-57
Remove / Install Battery.....5-58
Removal 5-58
Installation 5-58
Starting Engine with Booster Cable 5-58
Rubber Tracks.....5-60
General Information and Precautions 5-60
Inspection of Rubber Tracks.....5-62
Replace Rubber Track.....5-63
Checking After Starting Engine.....5-64
Check / Adjust Rubber Track Tension 5-64
Wire Rope 5-66
General Information and Precautions 5-66
Inspecting Wire Rope 5-66
Winch Wire Rope - Correcting Twisted Rope 5-67
Winch Wire Rope - Removal 5-68
Winch Wire Rope - Installation 5-69
Check / Adjust Boom Telescoping Wire Rope 5-71
LONG-TERM STORAGE 5-74
Before Storing Machine 5-74
During Storage 5-74
After Storage 5-74
For Electric Motor 5-74
COLD TEMPERATURE PREPARATION 5-75
Cautions after Completing the Operation.....5-76
After the Cold Weather Is Gone.....5-76
850 kg SEARCHER HOOK INSPECTION AND MAINTENANCE.....5-76
Legal Inspection 5-76
Consumables 5-77
Inspection and Maintenance List 5-78
Visible Checks 5-79
Pre-Start – Before Starting Engine 5-79
E-Boom, Frame and Hook 5-79
Greasing 5-79
Searcher Hook Fix Bolts 5-79

https://truckmanualshub.com/

Position Pin and Lynch Pin 5-79
Post-Start – After Starting Engine.....5-80
Moment Limiter for Operation (850 kg Searcher Hook Mode) 5-80
TROUBLESHOOTING 5-81
General.....5-81
Machine Body.....5-81
Engine 5-82
Electrical Components.....5-83
Remote Control 5-84
Moment Limiter Error Causes and Actions to Be Taken.....5-87
Electric Motor 5-88

https://truckmanualshub.com/

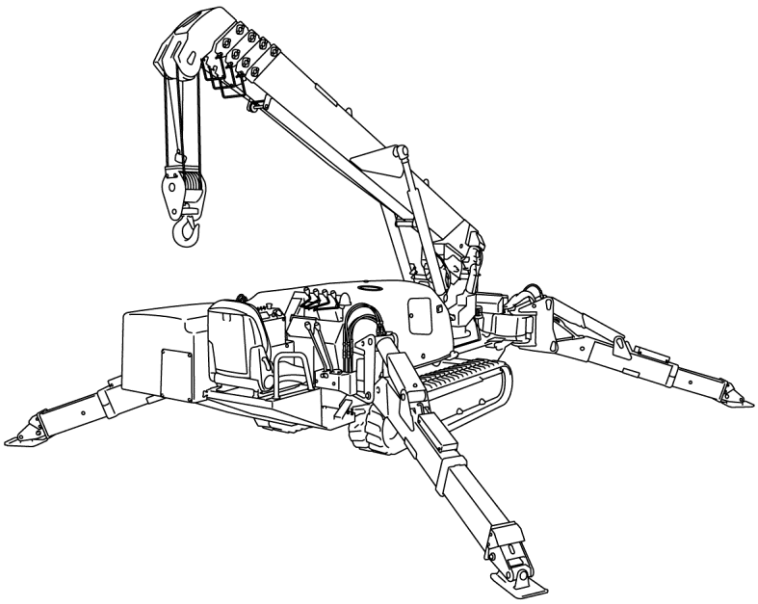

Section 1

INTRODUCTION

https://truckmanualshub.com/

INTRODUCTION

Thank you for purchasing the Maeda Mini Crawler Crane model MC305C-3.
This manual is intended as a guide for the safe and effective use of this machine. This manual describes the procedures for proper operation and maintenance of the machine.
This manual is available in other languages. If a different language manual is necessary, contact your local Maeda distributor for availability.
Save this manual in a designated safe place for future reference. Should this manual be lost or damaged, contact Maeda or a Maeda sales service agency immediately to order a new manual. This manual should remain with this machine upon transfer of the machine to a new owner.
This manual contains information that was available at the time of print.
The contents of this manual, including maintenance specifications, tightening torques, pressure, measuring methods, adjustment values and illustrations, are subject to change upon refinement of the machine, without notice.
Machine maintenance procedures may be updated by Maeda at any time. Always obtain the latest information from Maeda or a Maeda sales service agency before performing maintenance on this machine.
Installation and operation of this machine must comply with all laws and regulations where operated.
Only personnel who have obtained a licence stipulated by the laws and regulations from the place of use are qualified to operate this machine, establish the power connection of the power supply equipment, and inspect and repair the electric system.

Disclaimers:

All information, illustrations and specifications in this manual are based on the latest information available at the time of publishing. The illustrations used in this manual are intended as representative reference views only. Moreover, because of our continuous product improvement policy, we may modify information, illustrations and/or specifications to explain and/or exemplify a product, service or maintenance improvement. We reserve the right to make any change at any time without notice.
Maeda is a registered trademark of Maeda Seisakusho Co., Ltd. in Japan, the United States and/or other countries.

All Rights Reserved:

No part of this publication may be reproduced or used in any form by any means - graphic, electronic or mechanical, including photocopying, recording, taping, or information storage and retrieval systems - without the written permission of Maeda Seisakusho Co., Ltd.
© 2019 Maeda Seisakusho Co., Ltd.
3/2019

https://truckmanualshub.com/

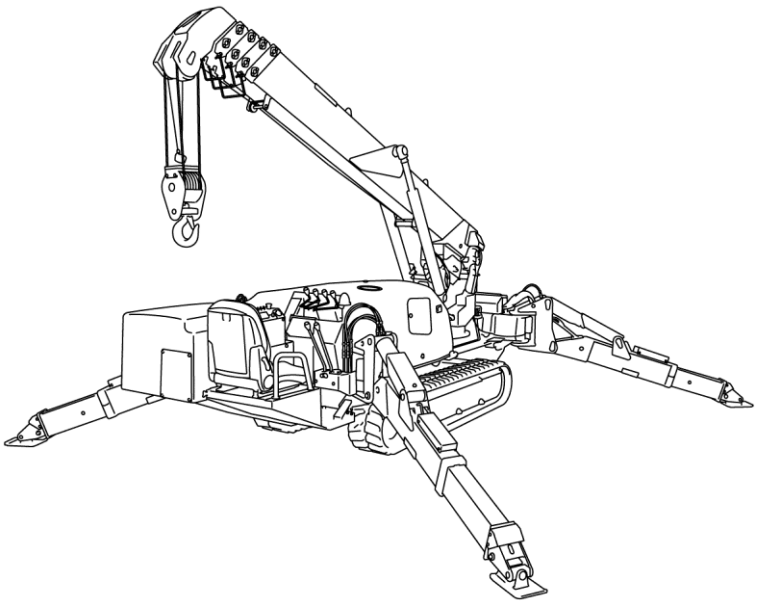

Section 2

SAFETY

https://truckmanualshub.com/

SAFETY DEFINITIONS

Maeda is concerned for your safety and the condition of your mini-crawler crane. Safety statements are one of the primary ways to call your attention to the potential hazards associated with Maeda mini-crawler cranes. Follow the precautions listed throughout the manual before operation, during operation and during periodic maintenance procedures for your safety, the safety of others and to protect the performance of your mini-crawler crane. Keep the labels from becoming dirty or torn and replace them if they are lost or damaged. Also, if a part needs to be replaced that has a label attached to it, make sure to order the new part and label at the same time.

This safety alert symbol appears with most safety statements. It means attention, become alert, your safety is involved! Please read and abide by the message that follows the safety alert symbol.

DANGER

Indicates a hazardous situation which, if not avoided, will result in death or serious injury.

WARNING

Indicates a hazardous situation which, if not avoided, could result in death or serious injury.

CAUTION

Indicates a hazardous situation which, if not avoided, could result in minor or moderate injury.

NOTICE

Indicates a situation which can cause damage to the mini-crawler crane, personal property and/or the environment, or cause the equipment to operate improperly.

SAFETY PRECAUTIONS

There is no substitute for common sense and careful practices. Improper practices or carelessness can cause burns, cuts, mutilation, asphyxiation, other bodily injury or death. This information contains general safety precautions and guidelines that must be followed to reduce risk to personal safety. Special safety precautions are listed in specific procedures. Read and understand all of the safety precautions before operating or performing repairs or maintenance. This safety section cannot cover every situation that may occur that is incidental to the use of the machine. Use common sense if you encounter a situation that is not covered to help avoid a hazardous situation.

CAUTION

The safety messages that follow have CAUTION level hazards.

Pre-Operation Hazard

- Never permit anyone to install or operate the machine without proper training.

- Read and understand this *Operation Manual* before operating or servicing the crane to ensure that safe operating practices and maintenance procedures are followed.
- Safety signs and labels are additional reminders for safe operating and maintenance techniques.
- Contact Maeda or a Maeda sales service agency for additional training.
- Make sure you are aware of licences, laws and regulations that may be required or in effect where the machine is operated.

https://truckmanualshub.com/

⚠ DANGER

The safety messages that follow have DANGER level hazards.

Electrocution Hazard

Contact with, or proximity to, an electrically charged power line will result in death or serious injury:

- This unit will not provide protection from contact with, or proximity to, an electrically charged power line when the components at the boom tip are in contact with, or in proximity to, another power line, ground or pole.
- All metal and fiberglass components at the boom tip may become energised.
- Operators must follow safe electrical work practices in accordance with their employers' work rules and applicable government regulations including:
  - Maintain minimum approach distances from electrical power lines.
  - Allow for boom, electric line and load sway.
- If any part of the unit is elevated within the minimum approach distance of an energised conductor, all unauthorised personnel must KEEP CLEAR.

⚠ WARNING

The safety messages that follow have WARNING level hazards.

Tip / Boom Failure Hazard

Overloading the crane may cause it to tip over or the boom to fail:

- Before you try to hoist a load, it is essential that you know:
  - Boom angle (use boom angle indicator)
  - Working radius (use operating range chart)
  - Boom length (use rated total load chart)
  - Rated total load (use rated total load chart)
- Never try to hoist a load that exceeds the rated total load. Rated total load is the mass of the load plus weight of the winch lines and the weight of the hook block.
- Always calculate the total load using the rated total load chart before you attempt to hoist the load. Never rely on the moment limiter as the primary means to determine whether a load is safe to lift.
- All the values provided on the rated total load chart assume that the machine is located on a level and firm surface. Always use outrigger pads when you deploy the outriggers on soft or unpaved surfaces.
- The values shown in the operating range chart do not account for boom deflection when the load is raised. Boom deflection will widen the working radius. Use the next largest radius on the operating range chart to account for this.
- Always extend outriggers before lifting load. If the terrain is not completely level and you must adjust the outrigger position to compensate, you must derate the rated total load by the amount stated in the "Crane Operation with Minimum/Medium Outrigger Extension" section of the *"RATED TOTAL LOAD CHARTS" on page 3-11.* All outrigger monitor lights, other than the boom stowing lamp, must be on.
- Always look at the level gauge when setting the outriggers. Look at the level gauge when making adjustments during operation. Always keep the machine body level when operating.
- Sudden or jerky movement of the travel, crane or outrigger controls can cause the machine to tip over. Always operate these controls smoothly.

https://truckmanualshub.com/

⚠ WARNING

The safety messages that follow have WARNING level hazards.

Crush Hazard

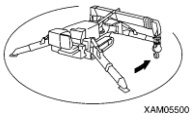

- Keep bystanders away from work area before and during operation.

- Keep all bystanders away from the area where outriggers are being deployed or adjusted.

- Keep all body parts clear of machine components during operation, especially between the boom/post and the boom cylinder, the winch drum and the winch line, the sheaves and the winch line, and between the tracks and the ground.
- Never commence work unless you have clear view of the jobsite or you have a helper to guide you.
- Always lower the load fully to the ground before you leave the operator's position.

Rigging Hazard

- Pay attention to the distance between the hook block and the boom when you raise the hook block or when you extend the boom (as the boom extends, the hook block automatically raises). If the hook block strikes the boom, it could cause the load to fall.
- Never overload the winch line.
- When you are lowering the hook block, make sure there are more than three turns of winch line left on the winch drum when the hook block reaches the final working height.
- Before you hoist the load, make sure the hook block is securely attached to the winch line.
- Make sure the winch line is perpendicular to the ground as you hoist a load to avoid tipping the machine over.
- When you are hoisting a load off the ground, stop hoisting the load momentarily as the load clears the ground to make sure the load is stable.
- Never hoist more than one load at a time.
- When you hoist a long load, such as pipes, clamp the load vertically or secure it at both ends.

Slewing Hazard

- Never slew a load over anyone.
- Always slew the load as smoothly and slowly as possible. Any sudden movement could cause the load to sway and the machine to tip over.
- Keep away from other cranes working in the area to avoid accidental contact.
- Never slew the load over the operator.
- If you need to slew the boom counterclockwise (left), make sure it is raised sufficiently to clear the operator's seat and operator.

Wind Speed Hazard

- If the maximum instantaneous wind speed is 19 to 24 mph (8.5 to 10.7 m/s) or greater, abort the job you are performing and immediately lower the load and secure the boom. This wind speed is called a "fresh wind" on the Beaufort Scale. At that speed, small trees in leaf sway slightly and wavelets form on ponds and lakes.
- Even if the maximum instantaneous wind speed is below 19 to 24 mph (8.5 to 10.7 m/s), be aware that loads with more mass, loads that are hoisted high off the ground and booms that are extended all magnify the effect of the wind on the machine. Stay aware of changing weather conditions.
- If a load is hoisted that has a large surface area, such as a metal plate, the wind can cause the load to sway and subsequently cause the machine to tip over.

High Hydraulic Oil temperature

If hydraulic oil temperature exceeds 80°C draulic hoses and seals can be damaged and leak. The leaking hydraulic oil can cause burns.
Continuous hook raising and lowering at high speeds and high lifting heights can cause the hydraulic oil to heat up faster.
If hydraulic oil temperature exceeds 80°C stop crane operation and allow the hydraulic oil to cool.

https://truckmanualshub.com/

⚠ WARNING

The safety messages that follow have WARNING level hazards.

Communications Hazard

- Always work with a partner that is on the ground. The partner must keep aware of any hazards in the work area and communicate them to the machine operator.
- Both the machine operator and the partner must decide before work begins on the hand signals that they will use during the job.
- If hand signals are not used, proper radio communications must be set up and tested before the job begins.
-

Fall Hazard

- Never carry riders on the machine.
- Always use the hand grabs and slip-resistant surfaces when entering or exiting the machine.
- Always maintain three-point contact when entering or exiting the machine.
- Never jump off the machine.

Modification Hazard

Never modify the machine without written consent of the manufacturer. Any modification can affect the safe operation of the machine.

Exposure Hazard

Always wear personal protective equipment, including appropriate clothing, gloves, work shoes, and eye and hearing protection, as required by the task at hand.

Explosion Hazard

- While the engine is running or the battery is charging, hydrogen gas is being produced and can be easily ignited. Keep the area around the battery well-ventilated and keep sparks, open flame and any other form of ignition out of the area.

- Always disconnect the negative (-) battery cable before servicing the equipment.
- Do not start the engine by shorting the starter circuit or any other starting method not stated in this manual. Only use the starting procedure as described in this manual to start the engine.
- Never charge a frozen battery. Always slowly warm the battery to room temperature before charging.

Fire and Explosion Hazard

- Diesel fuel is flammable and explosive under certain conditions.
- Never use a shop rag to catch the fuel.
- Wipe up all spills immediately.
- Never refuel with the engine running.
- Store any containers containing fuel in a well-ventilated area, away from any combustibles or sources of ignition.

Fire Hazard

- Have appropriate safety equipment available. Have all fire extinguishers checked periodically for proper operation and/or readiness.
- Always read and follow safety-related precautions found on containers of hazardous substances like parts cleaners, primers, sealants and sealant removers.
- Undersized wiring systems can cause an electrical fire.

https://truckmanualshub.com/

⚠ WARNING

The safety messages that follow have WARNING level hazards.

Exhaust Hazard

All internal combustion engines create carbon monoxide gas during operation and special precautions are required to avoid carbon monoxide poisoning:

- Never block windows, vents or other means of ventilation if the crane is operating in an enclosed area.
- Always ensure that all connections are tightened to specifications after repair is made to the exhaust system.

Asbestos Dust Hazard

- Inhalation of air containing asbestos dust may result in lung cancer.
- Make sure you use the appropriate personal protection equipment if you suspect that the worksite may contain asbestos.
- Properly prepare the worksite to prevent asbestos dust from being released into the surrounding environment.

Entanglement / Sever Hazard

- Verify there are no people, obstacles or other equipment near the machine before starting the engine. Sound the horn as a warning before starting the engine.

- Always stop the engine before beginning service.
- If the engine must be serviced while it is operating, remove all jewelry, tie back long hair and keep hands, other body parts and clothing away from moving/rotating parts.
- Verify that all machine guards and covers are attached properly to the machine before starting the engine. Do not start the engine if any guards or covers are not properly installed on the machine.
- Always turn the Starter Switch to the OFF position after operation is complete and remove the key from the switch. Keep the key in your possession when the machine is not operating.
- Attach a "Do Not Operate" tag near the Key Switch while performing maintenance on the equipment.
- Never operate the engine while wearing a headset to listen to music or radio because it will be difficult to hear the warning signals.
- Always start the engine or operate the controls while you are seated in the operator's seat.

Alcohol and Drug Hazard

Never operate the engine while under the influence of alcohol or drugs, or when ill.

Piercing Hazard

- Avoid skin contact with high-pressure hydraulic fluid or diesel fuel spray caused by a hydraulic or fuel system leak such as a broken hydraulic hose or fuel injection line. High-pressure hydraulic fluid or fuel can penetrate your skin and result in serious injury. If you are exposed to high-pressure hydraulic fluid or fuel spray, obtain prompt medical treatment.
- Never check for a hydraulic fluid or fuel leak with your hands. Always use a piece of wood or cardboard. Have your authorised Maeda dealer or distributor repair the damage.

Flying Object Hazard

Always wear eye protection when cleaning the machine with compressed air or high-pressure water. Dust, flying debris, compressed air, pressurised water or steam may injure your eyes.

https://truckmanualshub.com/

⚠ WARNING

The safety messages that follow have WARNING level hazards.

Coolant Hazard

Wear eye protection and rubber gloves when handling engine coolant. If contact with the eyes or skin should occur, flush eyes and wash immediately with clean water.

Burn Hazard

- Some of the engine surfaces become very hot during operation and shortly after shutdown.

- Keep hands and other body parts away from hot engine surfaces.
- Handle hot components with heat-resistant gloves.
-

Working Under Machine Hazard

- Park the machine on a flat, firm and level surface.
- Fully retract and lower the boom.
- Extend all outriggers to the maximum position so the tracks clear the ground.

- Place jack stands of sufficient strength in strategic locations under the machine to help support it during maintenance.

Working Above Machine Hazard

- Always maintain three-point contact as you climb on or off an elevated work surface.
- Do not jump from the elevated work surface.

- Do not climb on the boom, outrigger or other machine surface.

⚠ CAUTION

The safety messages that follow have CAUTION level hazards.

Poor Lighting Hazard

Ensure that the work area is adequately illuminated. Always install wire cages on portable safety lights.

Tool Hazard

Always use tools appropriate for the task at hand and use the correct size tool for loosening or tightening machine parts.

Slip Hazard

- Immediately clean up any spilled liquid on the shop floor.
- Clean up accumulated dirt and debris on the shop floor at the end of each shift.

Communications Hazard

- Follow the policies and instructions established by your employer and authorities having jurisdiction. The policies have been developed to protect you and your co-workers from needless personal injury.
- Post signs to alert people that are not authorised to be in the shop that they must stay out of the work area.
- If you must run the engine during maintenance procedures, make sure you have a helper to keep bystanders clear of the machine and make observations of moving parts as requested by the operator.

https://truckmanualshub.com/

NOTICE

The safety messages that follow have NOTICE level hazards.

Any part which is found defective as a result of inspection or any part whose measured value does not satisfy the standard or limit must be replaced.

Always tighten components to the specified torque. Loose parts can cause equipment damage or cause it to operate improperly.

Only use replacement parts specified. Other replacement parts may affect warranty coverage.

Follow the guidelines of the EPA or other governmental agencies for the proper disposal of hazardous materials such as engine oil, diesel fuel and engine coolant. Consult the local authorities or reclamation facility.

Clean all accumulated dirt and debris away from the body of the machine and its components before you inspect the machine or perform preventive maintenance procedures or repairs. Operating a machine with accumulated dirt and debris will cause premature wear of machine components. Accumulated dirt and debris also hinders effective machine inspection.

Retrieve any tools or parts that may have dropped inside of the machine to avoid improper machine operation.

Never dispose of hazardous materials by dumping them into a sewer, on the ground, or into groundwater or waterways.

If any alert indicator illuminates during machine operation, stop the engine immediately. Determine the cause and repair the problem before continuing to operate the machine. Check the following specifications and items before using this machine:

- Maintenance inspection records for completion of periodic inspections and service
- Crane capacity
- Crane maintenance condition
- Problems or failures unique to the crane
- Operating condition of the brakes, clutch and other operating controls
- Condition and operation of lighting, including rotating lights
- Condition and operation of hook, winches, boom, outriggers and related components

https://truckmanualshub.com/

SAFETY LABEL LOCATIONS

Machine Body

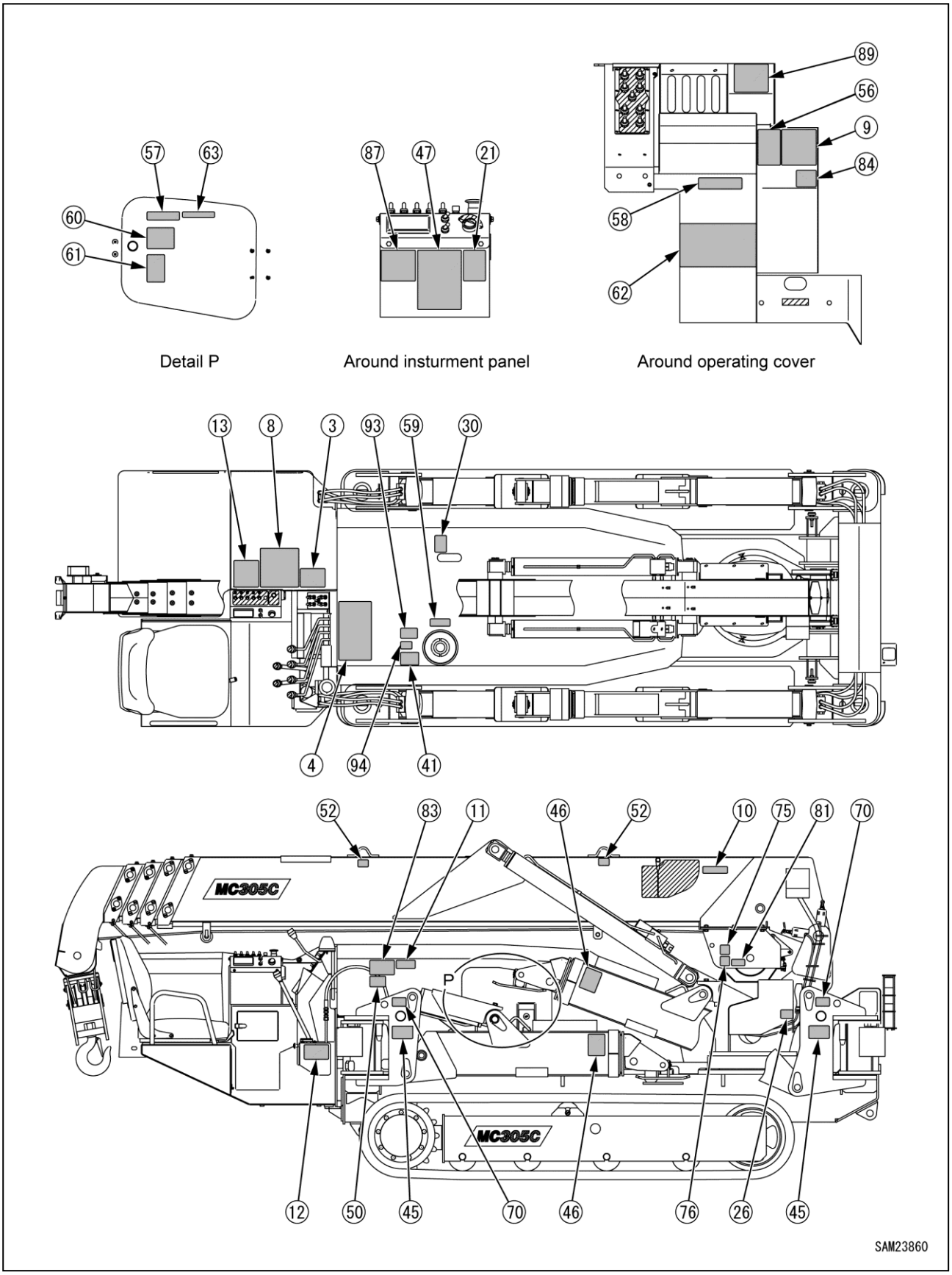

Fig. 2-1

https://truckmanualshub.com/

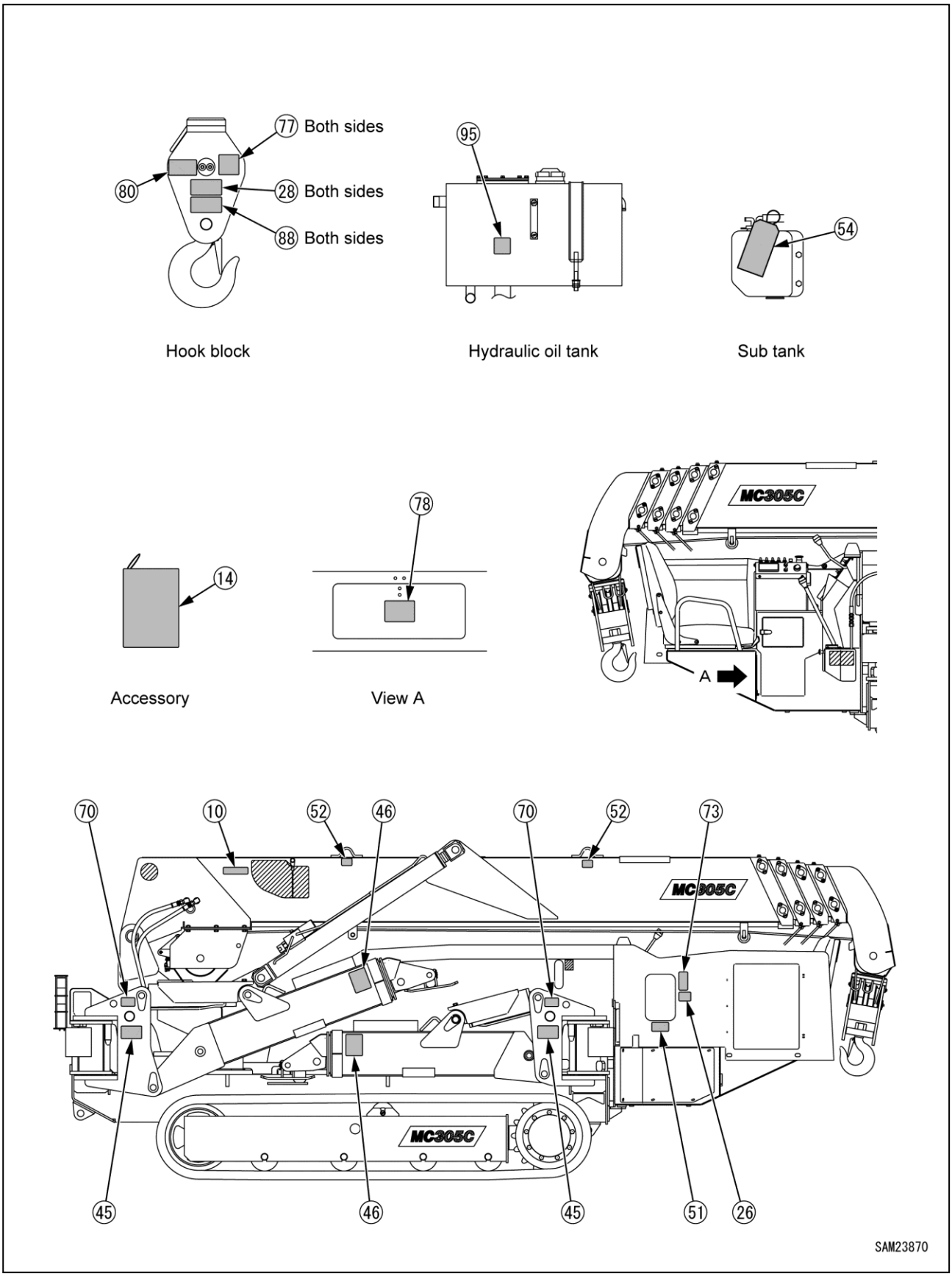

Fig. 2-2

https://truckmanualshub.com/

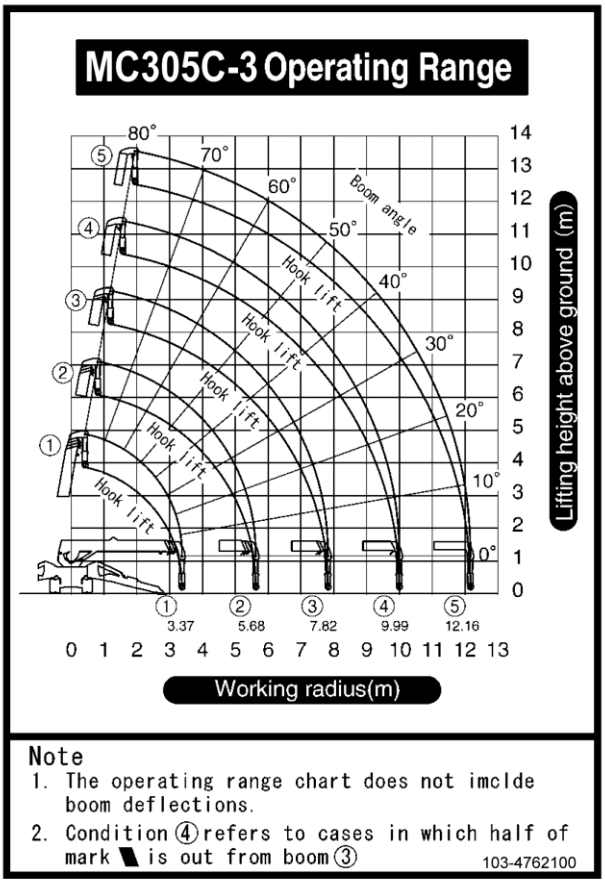

[3] 103-4762100

MC305C-3 Rated Total Load Chart

With outrigger extended to maximum

Crane work with outrigger extended to maximum

Boom 1 and Boom 1+2							
Working radius(m)	Less than 2.5	3.0	3.5	4.0	4.5	5.0	5.62
Rated total load(kg)	2980	2390	1990	1710	1490	1340	1160

Boom 1+2+3	When boom 3 is extended to any extent whatsoever, crane work should be carried out with the performance of boom configuration of 1+2+3										
Working radius(m)	Less than 2.7	3.0	3.5	4.0	4.5	5.0	5.5	6.0	7.0	7.82
Rated total load(kg)	2270	2120	1680	1440	1260	1110	990	880	730	630

Boom 1+2+3+4	When boom 4 is extended to any extent whatsoever, crane work should be carried out with the performance of boom configuration of 1+2+3+4								
Working radius(m)	Less than 4.0	4.5	5.0	6.0	7.0	8.0	9.0	9.99
Rated total load(kg)	1080	985	880	770	670	570	500	435

Boom 1+2+3+4+5	When more than one harf of mark ing is exposed from boom 4, crane work should be carried out with the performance for boom configuration of 1+2+3+4+5.								
Working radius(m)	Less than 4.5	5.0	6.0	7.0	8.0	9.0	10.0	11.0	12.16
Rated total load(kg)	790	660	520	430	380	340	310	280	260

With outrigger extended to medium

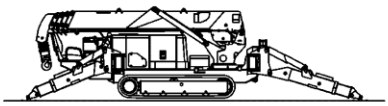

Crane work with outrigger extended to medium

Boom 1 and Boom 1+2							
Working radius(m)	Less than 2.5	3.0	3.5	4.0	4.5	5.0	5.62
Rated total load(kg)	2980	2360	1960	1680	1380	1140	950

Boom 1+2+3	When boom 3 is extended to any extent whatsoever, crane work should be carried out with the performance of boom configuration of 1+2+3										
Working radius(m)	Less than 2.7	3.0	3.5	4.0	4.5	5.0	5.5	6.0	7.0	7.82
Rated total load(kg)	2270	2090	1680	1420	1240	1070	950	800	610	520

Boom 1+2+3+4	When boom 4 is extended to any extent whatsoever, crane work should be carried out with the performance of boom configuration of 1+2+3+4								
Working radius(m)	Less than 4.0	4.5	5.0	6.0	7.0	8.0	9.0	9.99
Rated total load(kg)	1060	950	860	750	630	490	410	350

Boom 1+2+3+4+5	When more than one harf of mark ing is exposed from boom 4, crane work should be carried out with the performance for boom configuration of 1+2+3+4+5.								
Working radius(m)	Less than 4.5	5.0	6.0	7.0	8.0	9.0	10.0	11.0	12.16
Rated total load(kg)	780	650	500	410	360	320	290	260	250

With outrigger extended to minimum

Crane work with outrigger extended to minimum

Boom 1 and Boom 1+2							
Working radius(m)	Less than 2.5	3.0	3.5	4.0	4.5	5.0	5.62
Rated total load(kg)	2980	2350	1800	1430	1140	950	790

Boom 1+2+3	When boom 3 is extended to any extent whatsoever, crane work should be carried out with the performance of boom configuration of 1+2+3										
Working radius(m)	Less than 2.7	3.0	3.5	4.0	4.5	5.0	5.5	6.0	7.0	7.82
Rated total load(kg)	2270	2090	1680	1370	1120	910	790	670	510	430

Boom 1+2+3+4	When boom 4 is extended to any extent whatsoever, crane work should be carried out with the performance of boom configuration of 1+2+3+4								
Working radius(m)	Less than 4.0	4.5	5.0	6.0	7.0	8.0	9.0	9.99
Rated total load(kg)	1060	950	860	680	530	420	340	300

Boom 1+2+3+4+5	When more than one harf of mark ing is exposed from boom 4, crane work should be carried out with the performance for boom configuration of 1+2+3+4+5.								
Working radius(m)	Less than 4.5	5.0	6.0	7.0	8.0	9.0	10.0	11.0	12.16
Rated total load(kg)	780	650	500	410	360	320	290	240	210

Note:
1. Above Rated Total Load Chart is based on level,hard ground. Be careful as your crane may tip over depending on the surface conditions where outrigger is placed.
2. The Rated Total Load Chart is based on practical working radius which includes a bend due to loading. Reckless crane work is dangerous even if the load may be within the range shown in this Chart, Always work safely.
3. Depending on outrigger extension or grounding, tipping over may occur even by lifting arated load.
4. The rated load includes the weight of hook block(30kg).

103-3439200

[4] 103-3439200

https://truckmanualshub.com/

CHARACTERISTICS OF PERFORMANCE

(1) Even with same working radius, lifting capability varies depending on the stage of boom in use. Further, slight change in working radius causes great change in the load that can be lifted.
(2) Lifting capacity of crane reduces as its working radius increases.
(3) Lifting capability varies according to the extension of outrigger (maximum, medium or minimum).
(4) Stability changes depending on the direction of boom (forward, lateral or backward).

GENERAL RULES FOR USING CRANE

(1) Before work
1. Read the instruction manual carefully before starting to use your crane.
2. Always perform the prior-to-work inspection.
3. For crane work, be sure to ground the outriggers so that the machine is in level. Make sure all the four outriggers are grounded.
4. Outriggers should be set up to maximum extension in principle.
5. With the outriggers grounded properly, rubber tracks should be lifted off the ground by 50mm.
6. For setting up the outriggers, insert the rotary position pins securely. Use care not to catch your finger in the hole.
7. Check to see the over-hoist alarm system works properly (that buzzer sounds and hoist motion stops).

(2) During work
1. Stable lifting load varies according to outrigger setting and ground condition. Crane work with the outrigger footings lifted off the ground is dangerous and should not to be performed. Be sure to observe the Rated Total Load Chart.
2. Do not perform overloaded operation which may invite tipping over of or other damage to the crane.
3. Crane work with engine running at high speed is dangerous.
4. Use care not to allow the load to sway during crane work.
5. Dragging load laterally, longitudinally or lifting it at angle may damage the crane and should be avoided.
6. Do not leave your crane with load lifted.
7. Do not allow anyone to enter under the boom during crane operation.
8. While crane acceleration button is depressed, crane motion will be faster than normal and particular care should be used.

(3) During travel
1. During travel, boom and hook should be stowed away respectively.
2. Be sure to slow down for making turn or traveling over bad road.
3. For parking on slope, be sure to apply chocks.
4. For traveling on slope or ramp boards, be sure to position your carrier so that its operator seat comes to higher end.

(4) After work
Upon completion of work, be sure to turn OFF the main switch (key switch).

(5) Inspection and service
1. Prior-to-work inspection and monthly as well as annual periodical inspection should be carried out voluntarily.
2. Any defect should be corrected whenever it is found through inspection.
3. Replacement of consumables and lubrication, its replenishment or replacement should be carried out in accordance with the standards as provided in instruction manual or the like.

349-3195100

[8] 349-3195100

DANGER

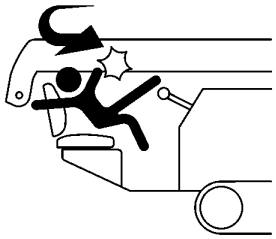

Counterclockwise swing prohibited with boom fully lowered.
Whenever operator seat is manned, raise the boom to safe angle before making counterclockwise swing.

349-4420700

[9] 349-4420700

MC305C-3

Overrall load at maximum working radius with outriggers extended maximum.
12.16 m × 260 kg

103-4762300

[10] 103-4762300 (2 places)

MC305C-3 MACHINE WEIGHT

Component	Weight
Main Unit	3900 kg
Electric Unit	+140 kg
850kg Searcher Hook	+30 kg

103-4762500

[11] 103-4762500

Fixing position during transportation

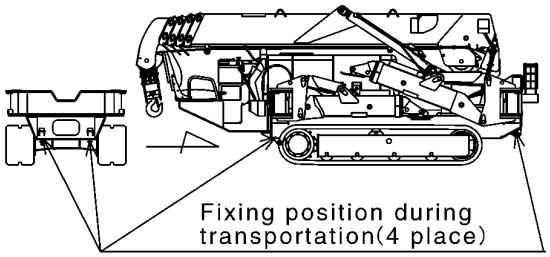

103-4551300

[12] 103-4551300

WARNING

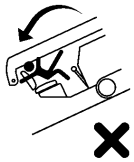

For traveling on slope or ramp boards, be sure to position your carrier so that its operator seat comes to higher end. Otherwise, shoud the carrier slips down, injury to the operator may result.

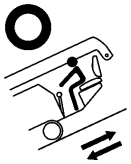

Caution for traveling:
1. When traveling, be sure to stow away outriggers as well as hook.
2. Be sure to slow down for making turn or traveling over bad road.
3. For standing or parking your carrier on slope, be sure to engage chocks.

CAUTION

Do not traverse or make turn on slope as it can result in tipping over, Make a detout to go around the slope for safety.

349-4421100

[13] 349-4421100

Front

MINI-CRAWLER CRANE MC305C-3

MC305C-3 Rated Total Load Chart

With outrigger extended to maximum

Boom 1 and Boom 1+2								
Working radius (m)	2.5	3.0	3.5	4.0	4.5	5.0	5.6	
Rated total load (kg)	2980	2390	1990	1710	1490	1340	1160	

Crane work with outrigger extended to maximum

Boom 1+2+3	When boom 3 is extended to any extent whatsoever, crane work should be carried out with the performance of boom configuration of 1+2+3							
Working radius (m)	2.7	3.0	3.5	4.0	4.5	5.0	5.6	6.0	7.0	8.2
Rated total load (kg)	2270	2120	1860	1440	1260	1110	990	880	730	630

Boom 1+2+3+4	When boom 4 is extended to any extent whatsoever, crane work should be carried out with the performance for boom configuration of 1+2+3+4									
Working radius (m)	4.0	4.5	5.0	6.0	7.0	8.0	9.0	9.9		
Rated total load (kg)	1080	985	880	770	670	570	500	435		

Boom 1+2+3+4+5	When more than one half (1/2) marking is exposed from boom 5, crane work should be carried out with the performance for boom configuration of 1+2+3+4+5									
Working radius (m)	4.5	5.0	6.0	7.0	8.0	9.0	10.0	11.0	12.1	16
Rated total load (kg)	790	660	520	430	380	340	310	280	260	

With outrigger extended to medium

Boom 1 and Boom 1+2								
Working radius (m)	2.5	3.0	3.5	4.0	4.5	5.0	5.6	6.2
Rated total load (kg)	2980	2360	1960	1680	1380	1140	950	

Crane work with outrigger extended to medium

Boom 1+2+3	When boom 3 is extended to any extent whatsoever, crane work should be carried out with the performance of boom configuration of 1+2+3									
Working radius (m)	2.7	3.0	3.5	4.0	4.5	5.0	5.6	6.0	7.0	8.2
Rated total load (kg)	2270	2090	1680	1420	1240	1070	950	800	610	520

Boom 1+2+3+4	When boom 4 is extended to any extent whatsoever, crane work should be carried out with the performance for boom configuration of 1+2+3+4									
Working radius (m)	4.0	4.5	5.0	6.0	7.0	8.0	9.0	9.9		
Rated total load (kg)	1060	950	860	750	630	490	410	350		

Boom 1+2+3+4+5	When more than one half (1/2) marking is exposed from boom 5, crane work should be carried out with the performance for boom configuration of 1+2+3+4+5									
Working radius (m)	4.5	5.0	6.0	7.0	8.0	9.0	10.0	11.0	12.1	16
Rated total load (kg)	780	650	500	410	360	320	290	260	250	

With outrigger extended to minimum

Boom 1 and Boom 1+2								
Working radius (m)	2.5	3.0	3.5	4.0	4.5	5.0	5.6	
Rated total load (kg)	2980	2350	1800	1430	1140	950	790	

Crane work with outrigger extended to minimum

Boom 1+2+3	When boom 3 is extended to any extent whatsoever, crane work should be carried out with the performance of boom configuration of 1+2+3									
Working radius (m)	2.7	3.0	3.5	4.0	4.5	5.0	5.6	6.0	7.0	8.2
Rated total load (kg)	2270	2090	1680	1370	1120	910	790	670	510	430

Boom 1+2+3+4	When boom 4 is extended to any extent whatsoever, crane work should be carried out with the performance for boom configuration of 1+2+3+4									
Working radius (m)	4.0	4.5	5.0	6.0	7.0	8.0	9.0	9.9		
Rated total load (kg)	1060	950	860	680	530	420	340	300		

Boom 1+2+3+4+5	When more than one half (1/2) marking is exposed from boom 5, crane work should be carried out with the performance for boom configuration of 1+2+3+4+5									
Working radius (m)	4.5	5.0	6.0	7.0	8.0	9.0	10.0	11.0	12.1	16
Rated total load (kg)	780	650	500	410	360	320	290	240	210	

Note:

1. Above Rated Total Load Chart is based on level, hard ground. Be careful as your crane may tip over depending on the surface conditions where outrigger is placed.
2. The Rated Total Load Chart is based on practical working radius which includes a bend due to loading. Recklessness crane work is dangerous even if the load may be within the range shown in this Chart. Always work safely.
3. Depending on outrigger extension or grounding, tipping over may occur even by lifting a rated load.
4. The rated load includes the weight of hook block (30kg).

Operating Range

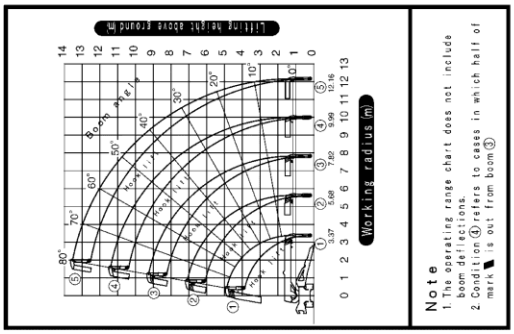

Note

1. The operating range chart does not include boom deflections.
2. Condition ④ refers to cases in which half of mark is out from boom ③.

103-2214000

Rear

CHARACTERISTICS OF PERFORMANCE

(1) Even with same working radius, lifting capability varies depending on the stage of boom in use. Further, slight change in working radius causes great change in the load that can be lifted.
(2) Lifting capacity of crane reduces as its working radius increases.
(3) Lifting capability varies according to the extension of outrigger (maximum, medium or minimum).
(4) Stability changes depending on the direction of boom (forward, lateral or backward).

GENERAL RULES FOR USING CRANE

(1) Before work

1. Read the instruction manual carefully before starting to use your crane.
2. Always perform the prior-to-work inspection.
3. For crane work, be sure to ground the outriggers so that the machine is in level. Make sure all the four outriggers are grounded.
4. Outriggers should be set up to maximum extension in principle.
5. With the outriggers grounded properly, rubber tracks should be lifted off the ground by 50mm.
6. For setting up the outriggers, insert the rotary position pins securely. Use care not to catch your finger in the hole.
7. Check to see the over-hoist alarm system works properly (that buzzer sounds and hoist motion stops).

(2) During work

1. Stable lifting load varies according to outrigger setting and ground condition. Crane work with the outrigger footings lifted off the ground is dangerous and should not to be performed. Be sure to observe the Rated Total Load Chart.
2. Do not perform overloaded operation which may invite tipping over or other damage to the crane.
3. Crane work with engine running at high speed is dangerous.
4. Use care not to allow the load to sway during crane work.
5. Dragging load laterally, longitudinally or lifting it at angle may damage the crane and should be avoided.
6. Do not leave your crane with load lifted.
7. Do not allow anyone to enter under the boom during crane operation.
8. While crane acceleration button is depressed, crane motion will be faster than normal and particular care should be used.

(3) During travel

1. During travel, boom and hook should be stowed away respectively.
2. Be sure to slow down for making turn or traveling over bad road.
3. For parking on slope, be sure to apply chocks.
4. For traveling on slope or ramp boards, be sure to position your carrier so that its operator seat comes to higher end.

(4) After work

Upon completion of work, be sure to turn OFF the main switch (key switch).

(5) Inspection and service

1. Prior-to-work inspection and monthly as well as annual periodical inspection should be carried out voluntarily.
2. Any defect should be corrected whenever it is found through inspection.
3. Replacement of consumables and lubrication, its replenishment or replacement should be carried out in accordance with the standards as provided in instruction manual or the like.

Miscellaneous

(1) Improper usage of crane may cause serious accident including death or severe injury.
(2) Before operating the crane, be sure to read instruction manual and learn its safe operating procedure.

[14] 103-2214000

https://truckmanualshub.com/

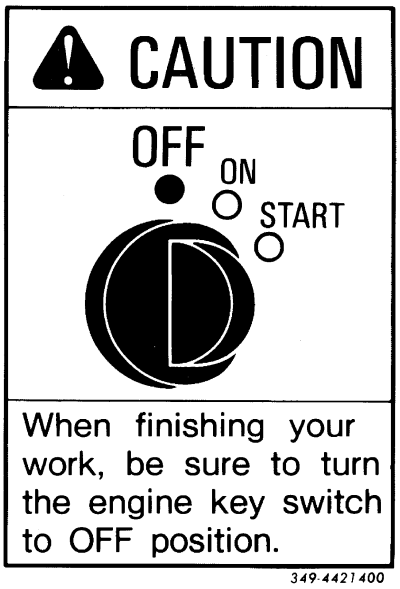

[21] 349-4421400

[30] 104-4550800

[26] 350-4539700 (2 places)

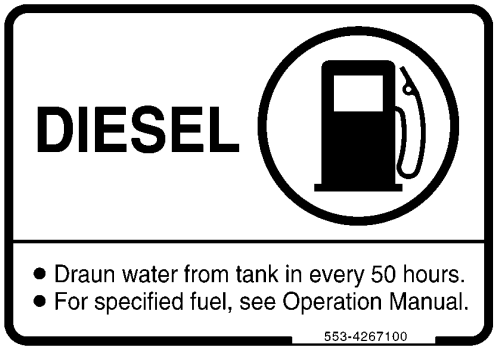

[41] 553-4267100

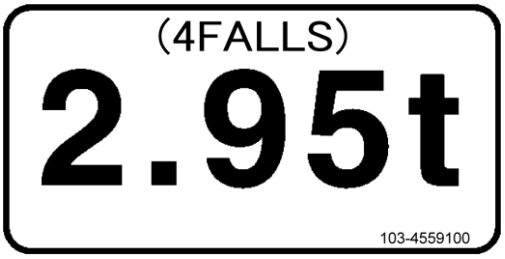

[28] 103-4559100 (2 places)

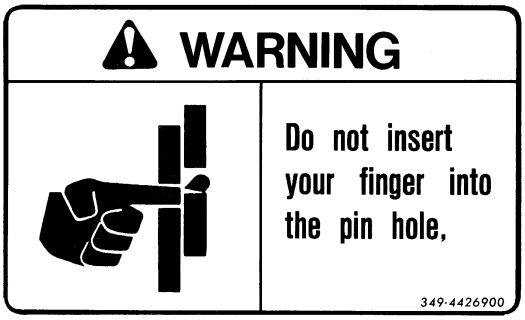

[45] 349-4426900 (4 places)

https://truckmanualshub.com/

[46] 349-4427000 (4 places)

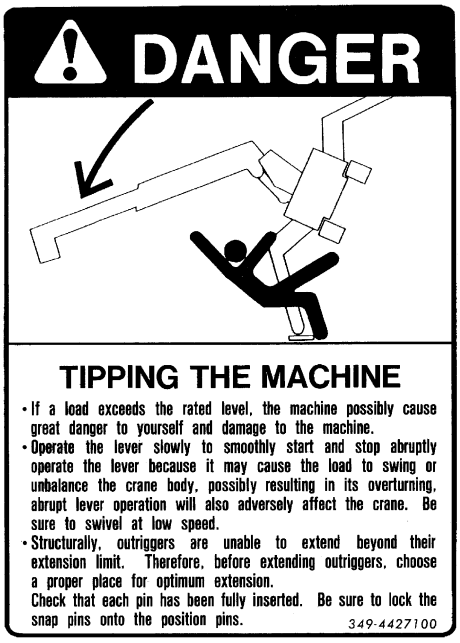

[47] 349-4427100

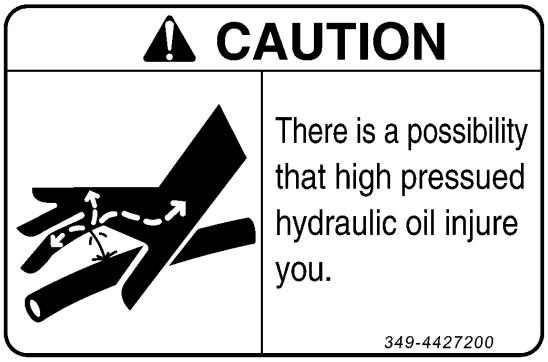

[50] 349-4427200

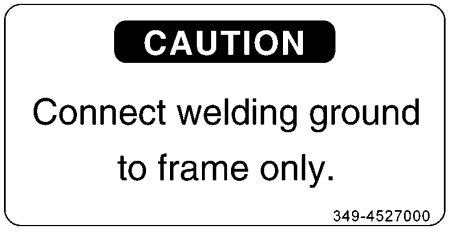

[51] 349-4527000

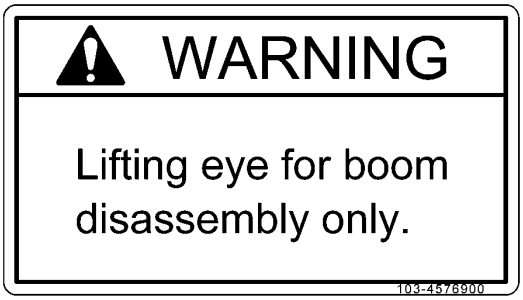

[52] 103-4576900 (4 places)

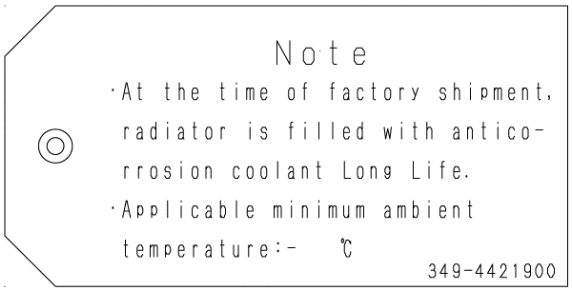

[54] 349-4421900

https://truckmanualshub.com/

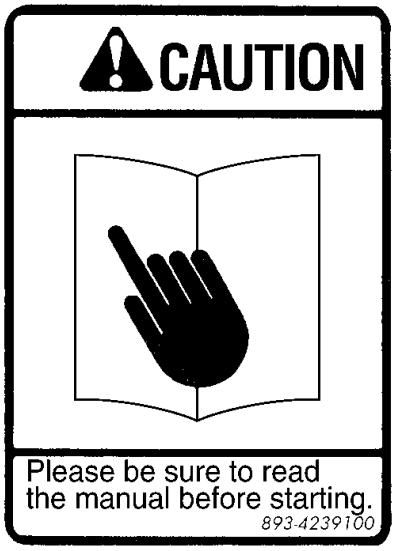

[56] 893-4239100

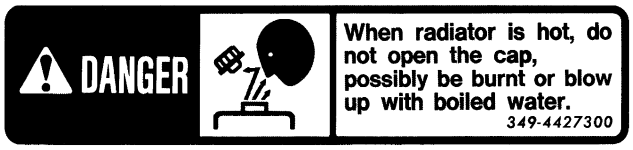

[57] 349-4427300

[58] 349-4427400

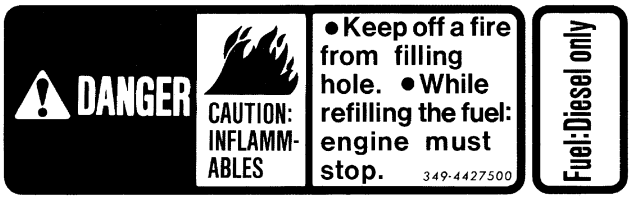

[59] 349-4427500

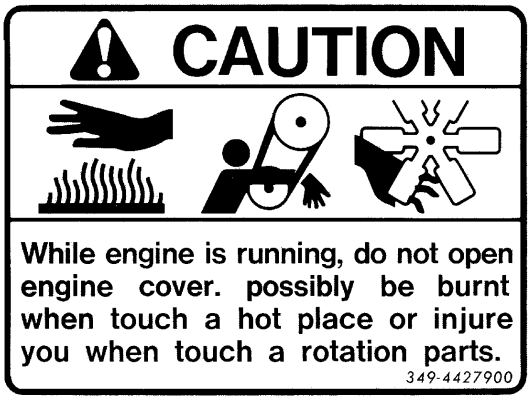

[60] 349-4427900

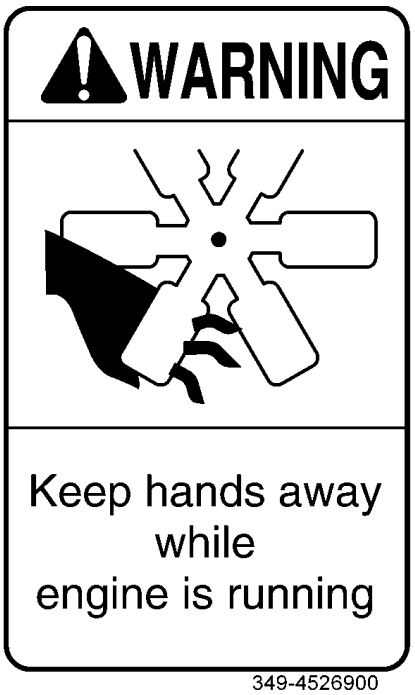

[61] 349-4526900

https://truckmanualshub.com/

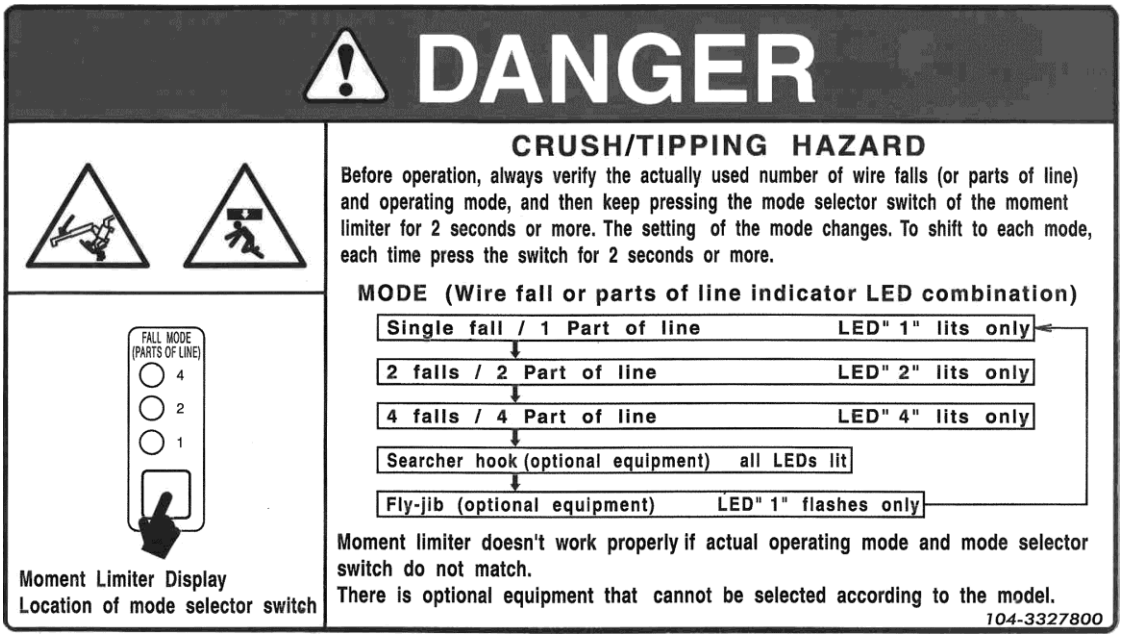

[62] 104-3327800

[63] 349-4427800

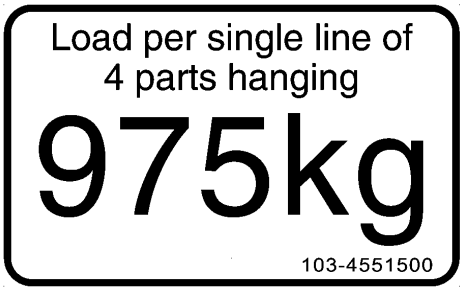

[70] 103-4551500 (4 places)

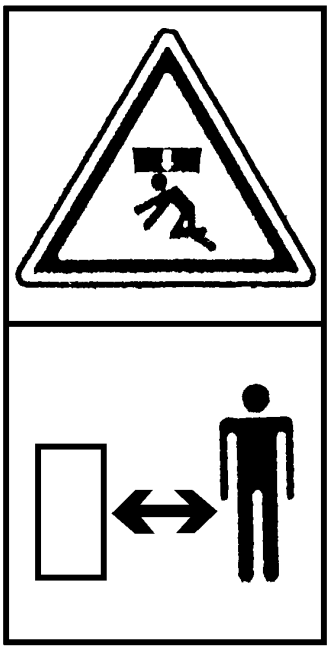

[73] 349-4422000

https://truckmanualshub.com/

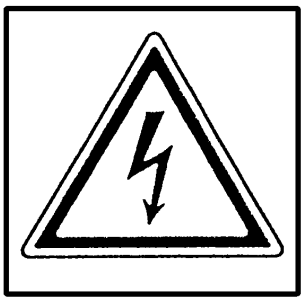

553-4267300

[75] 553-4268000 (2 places)

553-4267500

[76] 553-4267500 (2 places)

553-4267400

[77] 553-4267400 (2 places)

DANGER

This override switch, for the moment limiter, may only be activated by authorized personnel in the event of an emergency or component failure/error.
Turning this switch clockwise allows operation for maximum 3 minutes, with NO automatic stop, overload or safely features of the moment limiter system.

585-4739200

[78] 585-4739200

MATERIAL	SCM435	
MANUFACTURER	Maeda Seisakusho Co.,Ltd.	
MAX. LOAD	2.95	t
SERIAL NO.		
MASS	30	kg

103-3392900

[80] 103-3392900

MATERIAL	SWRH 62A	
MANUFACTURER	TESAC CORPORATION	
MAX. TENSION	7308	N

103-3289000

[81] 103-3289000

Positions to hang whole unit with four wire ropes.

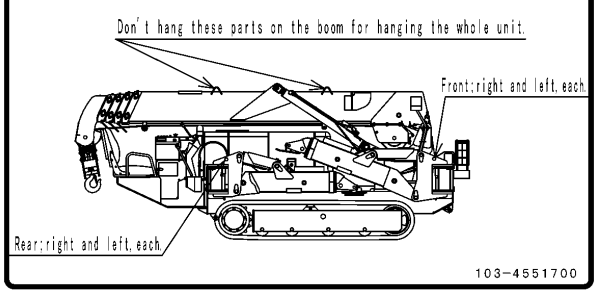

[83] 103-4551700

https://truckmanualshub.com/

[84] 349-4536600

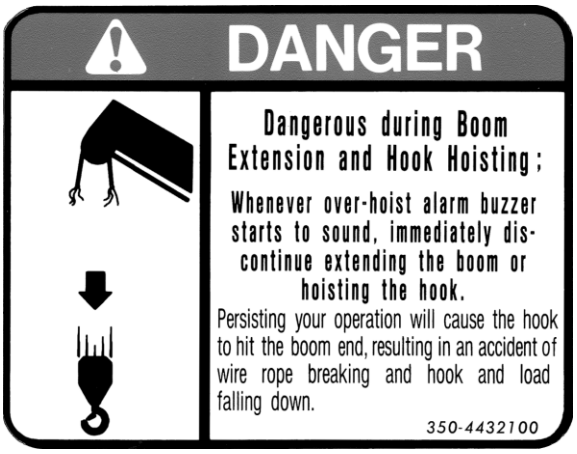

[89] 350-4432100

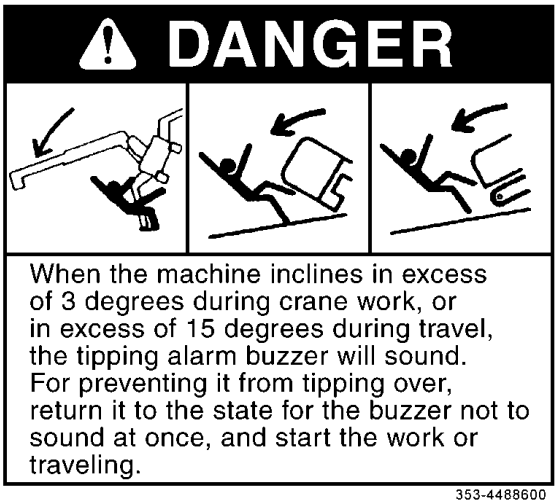

[87] 353-4488600

[93] 103-4604800

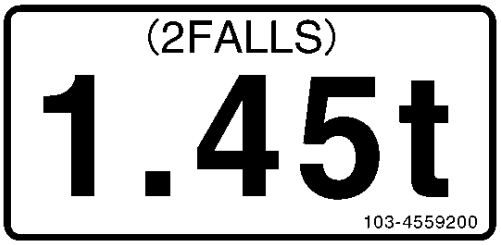

[88] 103-4559200 (2 places)

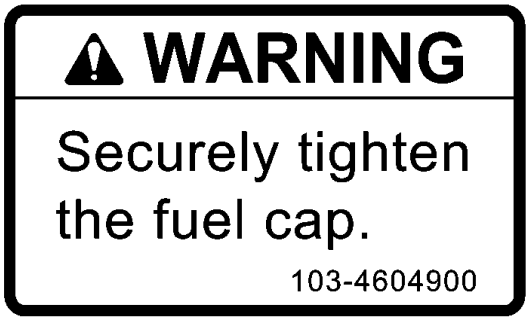

[94] 103-4604900

[95] 553-4267700

https://truckmanualshub.com/

Remote Control System

Transmitter

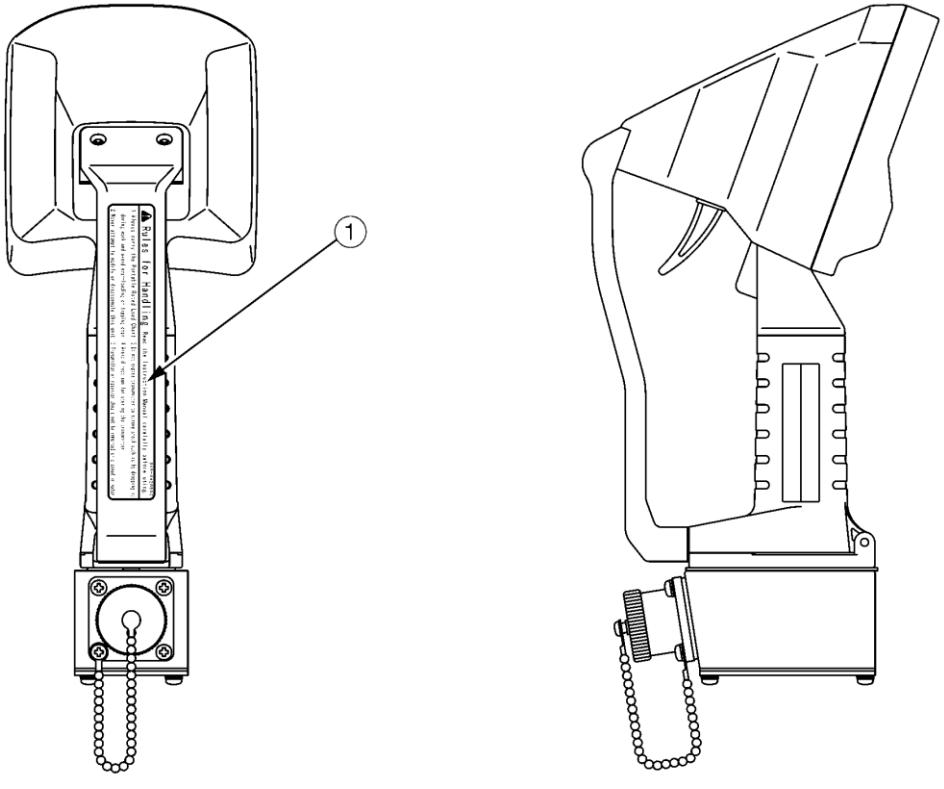

Receiver

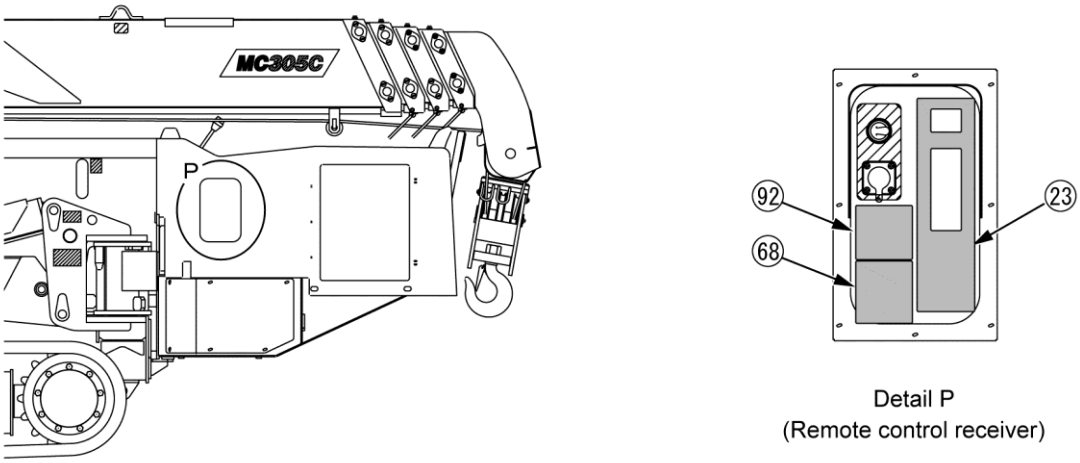

Fig. 2-3

https://truckmanualshub.com/

349–4428500

Rules for Handling Read the Instruction Manual carefully before using.

1. Always carry the Portable Rated Load Chart during work and avoid over-loading or tipping over.
2. Never attempt to modify or disassemble this unit.
3. Do not expose transmitter to strong shock such as by dropping it.
4. Avoid direct sun for storing the transmitter.
5. Transmitter or receiver should not be immersed or cleaned in water.

[1] 349-4428500

CAUTION

1. **To insert plug, hold it in line with receptacle guide, push it in, and tighten screw.**
2. **To pull plug out, do not pull cord, but pull the plug itself. After removing plug, be sure to cover receptacle with water cap.**

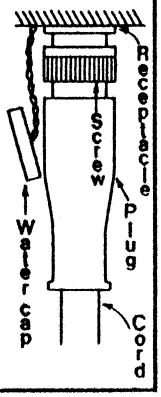

[68] 300-4214000

M A E D A model MCT300

MONITOR DISPLAY

ERROR CODES

If a problem is detected one of the following codes will be shown.

Error Code	Trouble
E1	Emergency stop activated.
E2	Receiver or Transmitter unit fault.
E3	Transmitter internal cable broken.
E4	For starting, transmitter volume position incorrect.
E5	For resetting, transmitter volume position incorrect.
E6	Problem with receiver EEPROM.
E7	Problem with receiver CPU.
E9	For starting, transmitter switch position incorrect.
E0	Transmission error.

104–4559300

[23] 104-4559300

CAUTION

- Be sure to read the instruction manual.
- Modification or diasembly strictly prohibited.
- Have the power supply turned off whenever radio control or remote control is not in use.
- Direct washing prohibited.
- Cover the receptacle with watertight cap provided whenever remote control is not in use.

104-4559400

[92] 104-4559400

https://truckmanualshub.com/

Electric Motor (Option)

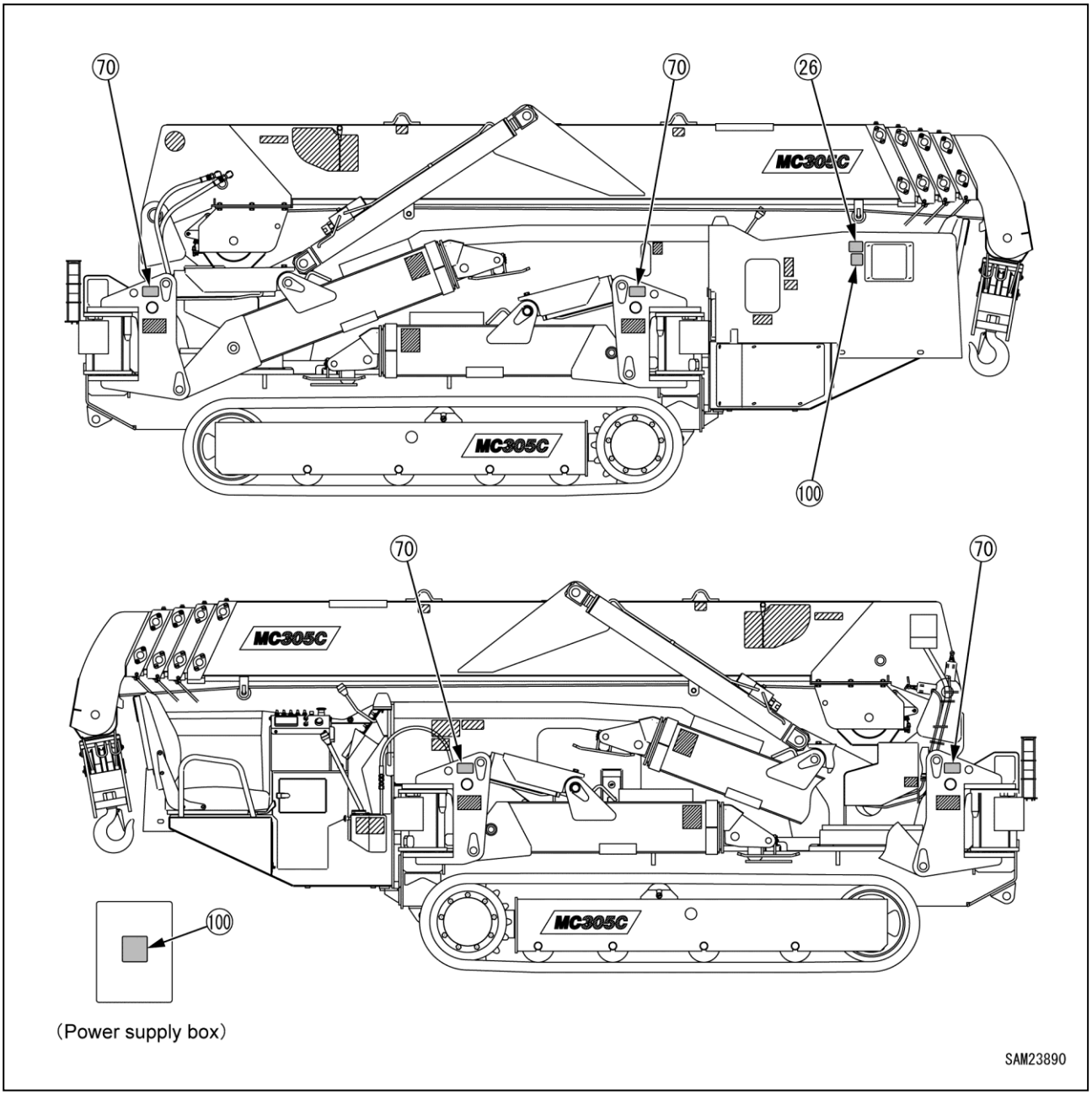

Fig. 2-4

https://truckmanualshub.com/

[26] 350-4539700

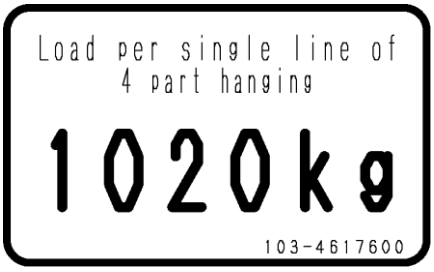

[70] 103-4552100 (4 places)

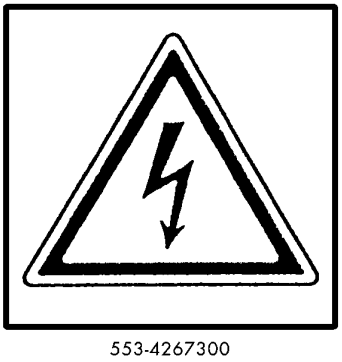

[100] 553-4267300 (2 places)

https://truckmanualshub.com/

850kg Searcher Hook (Option)

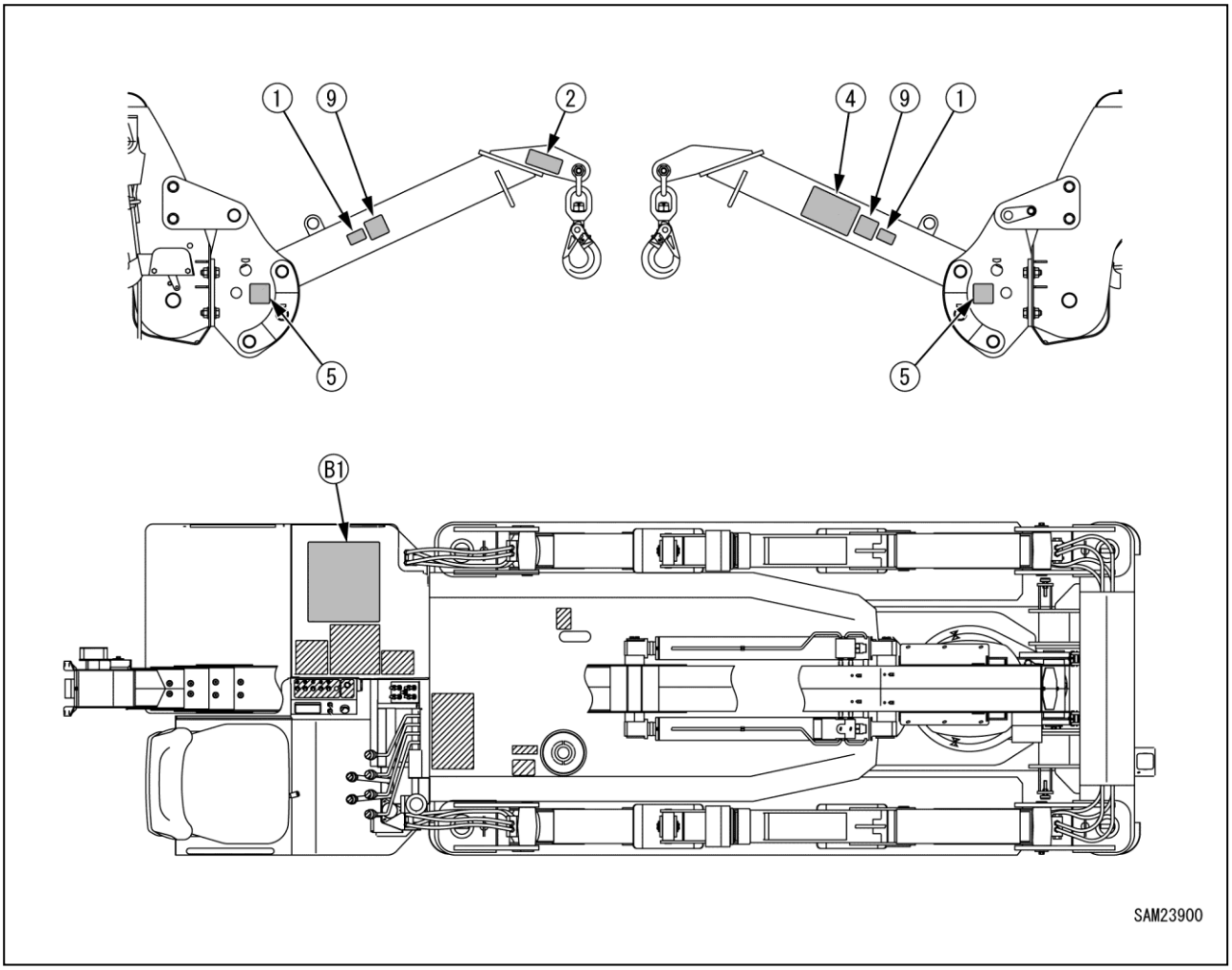

Fig. 2-5

https://truckmanualshub.com/

[1] 102-4621200 (2 places)

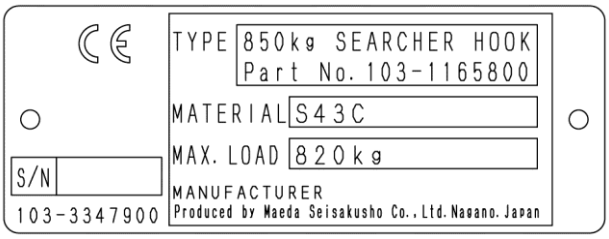

[2] 103-3347900

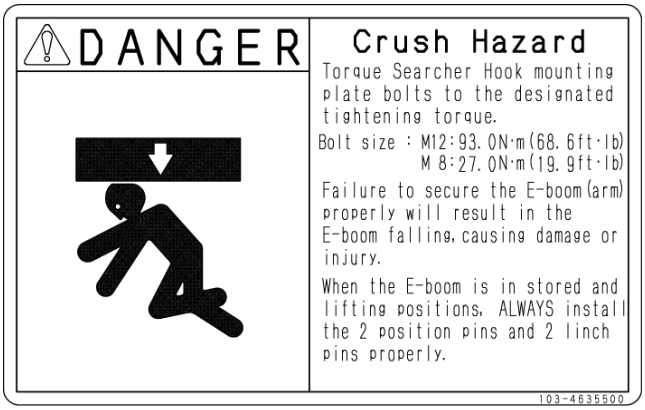

[4] 103-4635500

[9] 103-4636300 (2 places)

[5] 102-4608500 (2 places)

https://truckmanualshub.com/

MC305C-3 OPERATING RANGE for 850kg SEARCHER HOOK

OFFSET POSITION SH1

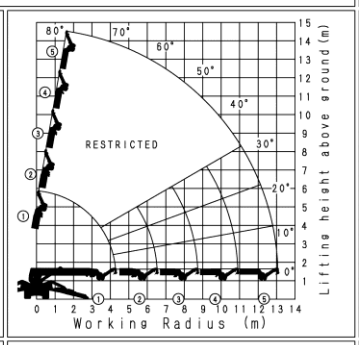

OFFSET POSITION SH2

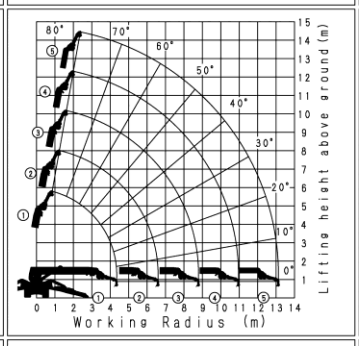

OFFSET POSITION SH3

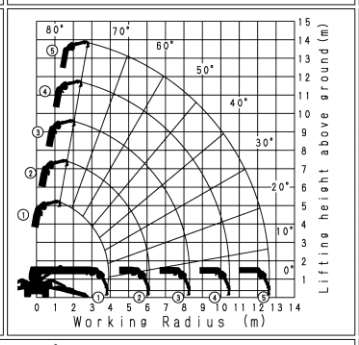

RATED TOTAL LOAD CHART for 850kg SEARCHER HOOK — The unit of loads:kg

Working Radius (m)	① 3.695m BOOM — BOOM FULLY RETRACTED				② 5.945m BOOM — WHEN BOOM 2 IS EXTENDED TO ANY EXTENT, USE RATINGS FOR 3.696m-5.945mBOOM				③ 8.145m BOOM — WHEN BOOM 3 IS EXTENDED TO ANY EXTENT, USE RATINGS FOR 5.946m-8.145mBOOM				④ 10.315m BOOM — WHEN BOOM 4 IS EXTENDED TO ANY EXTENT, USE RATINGS FOR 8.146m-10.315mBOOM				⑤ 12.485m BOOM — WHEN THE MARK ▼ ON BOOM 4 IS EXPOSED, USE RATINGS FOR 10.316m-12.485mBOOM				Working Radius (m)
	LOADED BOOM ANGLE (deg)	OUTRIGGER POSITION MAX	MID	MIN	LOADED BOOM ANGLE (deg)	MAX	MID	MIN	LOADED BOOM ANGLE (deg)	MAX	MID	MIN	LOADED BOOM ANGLE (deg)	MAX	MID	MIN	LOADED BOOM ANGLE (deg)	MAX	MID	MIN	
	RESTRICTED				30.0 OR MORE	RESTRICTED			30.0 OR MORE	RESTRICTED			30.0 OR MORE	RESTRICTED			30.0 OR MORE	RESTRICTED			
3.5	29.5	850	850	850																	3.5
4.3	0.0	850	850	850																	4.3
5.5					29.0	850	850	850													5.5
6.5					3.0	850	740	610													6.5
7.4									29.5	660	560	460									7.4
8.0									21.0	590	470	380									8.0
8.7									3.0	530	430	350									8.7
9.3													29.0	450	370	310					9.3
10.5													13.5	390	310	260					10.5
10.9													0.0	370	290	240					10.9
11.2																	29.5	240	220	210	11.2
12.0																	21.5	220	200	180	12.0
13.06																	0.0	210	200	160	13.06

Working Radius (m)	① 3.695m BOOM — BOOM FULLY RETRACTED				② 5.945m BOOM — WHEN BOOM 2 IS EXTENDED TO ANY EXTENT, USE RATINGS FOR 3.696m-5.945mBOOM				③ 8.145m BOOM — WHEN BOOM 3 IS EXTENDED TO ANY EXTENT, USE RATINGS FOR 5.946m-8.145mBOOM				④ 10.315m BOOM — WHEN BOOM 4 IS EXTENDED TO ANY EXTENT, USE RATINGS FOR 8.146m-10.315mBOOM				⑤ 12.485m BOOM — WHEN THE MARK ▼ ON BOOM 4 IS EXPOSED, USE RATINGS FOR 10.316m-12.485mBOOM				Working Radius (m)
	LOADED BOOM ANGLE (deg)	OUTRIGGER POSITION MAX	MID	MIN	LOADED BOOM ANGLE (deg)	MAX	MID	MIN	LOADED BOOM ANGLE (deg)	MAX	MID	MIN	LOADED BOOM ANGLE (deg)	MAX	MID	MIN	LOADED BOOM ANGLE (deg)	MAX	MID	MIN	
2.7	54.5	850	850	850	67.5	850	850	850	73.0	850	850	850									2.7
4.0	27.0	850	850	850	54.5	850	850	850	64.0	850	850	850	76.5	850	850	850					4.0
4.3	13.0	850	850	850	51.5	850	850	850	63.0	850	850	850	68.0	850	850	850					4.3
4.5					49.0	850	850	850	60.5	850	850	850	66.5	850	850	850	70.5	750	740	740	4.5
5.0					43.0	850	850	850	56.5	850	850	850	64.0	850	830	830	68.5	620	610	610	5.0
6.0					27.0	850	850	740	48.5	850	820	680	58.0	710	700	660	63.5	490	470	470	6.0
6.6					3.0	850	710	580	43.0	770	680	570	54.0	660	650	570	61.0	430	410	410	6.6
7.0									39.0	720	620	520	51.5	630	600	520	59.0	400	380	380	7.0
8.0									26.5	590	470	380	44.5	550	490	410	53.5	350	330	330	8.0
8.8									3.0	520	420	340	38.0	480	410	340	49.0	310	290	290	8.8
10.0													26.0	410	330	270	41.5	270	260	260	10.0
11.0													8.0	360	280	240	34.5	250	230	220	11.0
12.0																	25.5	220	200	180	12.0
13.13																	1.5	210	200	160	13.13

Working Radius (m)	① 3.695m BOOM — BOOM FULLY RETRACTED				② 5.945m BOOM — WHEN BOOM 2 IS EXTENDED TO ANY EXTENT, USE RATINGS FOR 3.696m-5.945mBOOM				③ 8.145m BOOM — WHEN BOOM 3 IS EXTENDED TO ANY EXTENT, USE RATINGS FOR 5.946m-8.145mBOOM				④ 10.315m BOOM — WHEN BOOM 4 IS EXTENDED TO ANY EXTENT, USE RATINGS FOR 8.146m-10.315mBOOM				⑤ 12.485m BOOM — WHEN THE MARK ▼ ON BOOM 4 IS EXPOSED, USE RATINGS FOR 10.316m-12.485mBOOM				Working Radius (m)
	LOADED BOOM ANGLE (deg)	OUTRIGGER POSITION MAX	MID	MIN	LOADED BOOM ANGLE (deg)	MAX	MID	MIN	LOADED BOOM ANGLE (deg)	MAX	MID	MIN	LOADED BOOM ANGLE (deg)	MAX	MID	MIN	LOADED BOOM ANGLE (deg)	MAX	MID	MIN	
2.5	60.0	850	850	850	72.0	850	850	850													2.5
2.7	56.5	850	850	850	70.0	850	850	850	75.5	850	850	850									2.7
3.0	50.5	850	850	850	67.0	850	850	850	73.5	850	850	850									3.0
3.8	25.0	850	850	850	58.0	850	850	850	67.5	850	850	850									3.8
4.0					56.0	850	850	850	66.0	850	850	850	71.0	850	850	850					4.0
4.5					49.5	850	850	850	62.0	850	850	850	68.5	850	850	850	72.0	750	740	740	4.5
5.0					42.5	850	850	850	58.0	850	850	850	65.5	850	830	830	70.0	620	610	610	5.0
6.1					13.0	850	830	710	48.0	840	800	660	58.5	700	690	640	64.5	480	460	460	6.1
7.0									38.0	720	620	520	52.0	630	600	520	59.5	400	380	380	7.0
8.3									9.0	560	450	370	42.0	520	460	380	52.5	340	320	320	8.3
9.0													35.0	470	390	330	48.0	310	290	290	9.0
10.4													11.5	390	310	260	38.0	260	240	240	10.4
11.0																	33.0	250	230	220	11.0
12.63																	4.0	220	200	170	12.63

⚠ DANGER

TIPPING HAZARD

- When using searcher hook, Moment limiter "number of fall" must be set to 850kg searcher hook mode, and select searcher hook offset position.
- Before start working, always make sure moment limiter is correctly set to the actual working condition.
- Do not use searcher hook and main hoist hook block/ball simultaneously to hoist load.

Notes:

1. This Rated Total Load Chart shows maximum allowable capacities. These rated total loads are based on the machine standing level on a firm ground supporting surface, under ideal job conditions and a freely suspended load.
2. Sufficient design tolerance must be used to ensure adequate ground support surface design. The rated total loads are for static conditions only, and do not include dynamic effects of slewing, extending, retracting, lowering, raising, wind or adverse conditions. Crane users must reduce rated total loads ratings to take all conditions into account.
3. The working radius shown in the Rated Total Load Chart is based on practical working radius including boom deflection due to loading. The crane user must calculate and compensate for boom deflection as the load is lifted.
4. Deductions from Searcher Hook Rated Total Load must be made for the weight of the searcher hook, block/ball and all rigging.
5. All capacities above the bold line are based on structural strength and other limitations. All other rated total loads are based on stability, not exceeding 75% of tipping loads.
6. Crane users must consult the Operators Manual for complete details about assembly, operation, maintenance, configuration, and its limitations. Modifications to the crane, other than what is specified or supplied by the original equipment manufacture, can result in a reduction of rated total load ratings.
7. This operating range chart does not include boom deflections.
8. At certain working conditions, moment limiter may display bigger load value than actual load.
9. RESTRICTED AREA : At high boom angles, E-Boom (arm) and the hook will interfere with each other. To avoid this interference : In SH1 position, do not operate above 30 degree boom angle.

MAEDA SEISAKUSHO CO., LTD. EU● 103-1213400

[B1] 103-1213400

https://truckmanualshub.com/

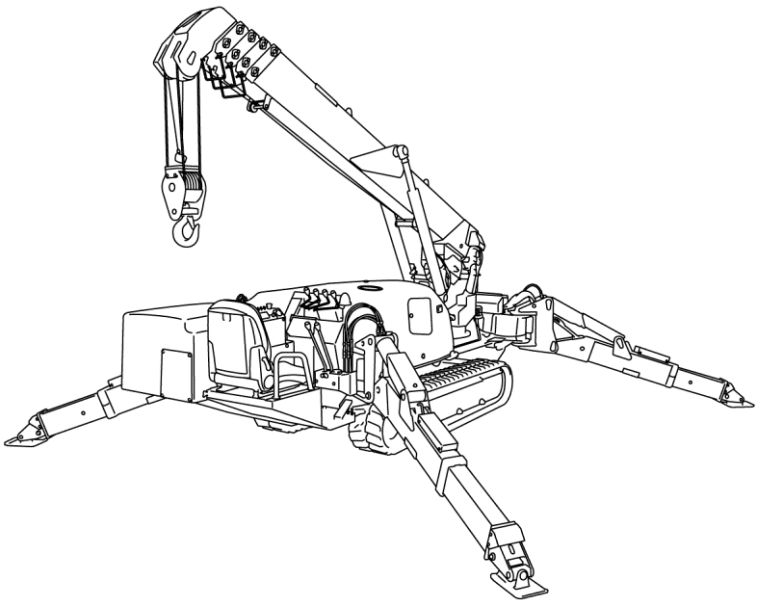

Section 3

SPECIFICATIONS, TERMINOLOGY AND CAPACITY CHARTS

https://truckmanualshub.com/

MACHINE FEATURES

This machine is only to be used for crane operation.
This machine is a mobile crane with a rubber track travelling dolly (carrier) mounted with a boom crane.
This self-propelled crane is capable of moving (travelling) on a worksite and craning an object weighing within the rated total load capacity. This crane can be operated from the operation seat or with a remote control system.

Main Features

Viewed from the operation seat, the front, back, left, and right of the machine are determined in this manual, viewing in the travelling direction (front) of the machine.
Boom slewing motion is determined with the machine viewed from immediately above; slew clockwise (right) denotes right-handed motion and slew counterclockwise (left) denotes left-handed motion.
This machine is composed of the units listed below.

Travelling Dolly

This is a compact machine designed to keep the overall width between the crane and outrigger minimised with them housed (in travelling position).
This compact design is ideal for work in confined areas.
Two-travelling lever operation enables not only direction changes among forward, backward, and right/left but pivot turn and spin turn.

Crane

An automatic slide outrigger is embedded in the crane to permit outrigger extension and grounding from the operation seat.
Through the combined use of telescoping, boom lift, and slewing besides winch system operation, the crane is capable of raising or lowering the hook block and moving an object weighing within the rated total load to a designated position within the confines of the working envelope.
Radio- and remote-control system allow remote outrigger setting and remote crane operation.

Safety Devices

This is composed of the following parts and devices:

- Over winding detector
- Rope over unwinding detector
- Automatic stop device (moment limiter)
- Angle indicator
- Hydraulic safety valve
- Hydraulic automatic locking device
- Latch
- Alarm buzzer
- Audio alarm
- Level gauge
- Crane tip-over alarm (an alarm issued in the event of the crane operation at 3-degree inclination and travelling at 15-degree inclination)
- Travelling lever lock
- Travelling/crane/outrigger selector switch (designed to prevent the machine from craning at travelling)
- Outrigger safety device (outrigger interlock and crane interlock)
- Working envelope limited
- Working status lamp
- Outrigger un-set warning lamp

https://truckmanualshub.com/

CRANE TERMINOLOGY

Terms and Definitions

Rated Total Load

The maximum load that can be applied according to the boom length and angle. The load includes the mass (weight) of hoisting accessories (hooks) and slinging ropes. For additional information, see "RATED TOTAL LOAD CHARTS" on page 3-11.

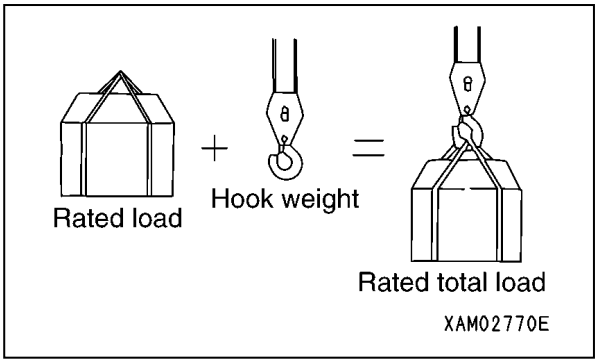

Fig. 3-1

Rated Load

A load derived by subtracting the mass (weight) of hoisting accessories (hooks) and slinging ropes from the rated total load.

Working Radius

A horizontal distance between the axis of slewing and the hook centre.

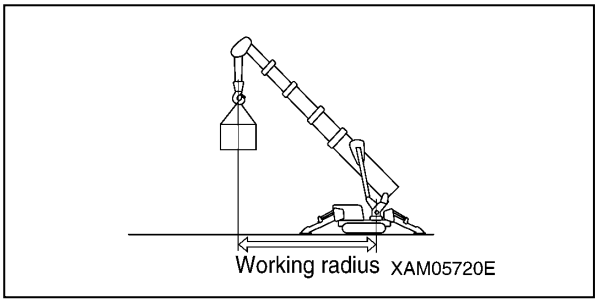

Fig. 3-2

Boom Length

A distance between the boom primary pin and the sheave pin of the end boom.

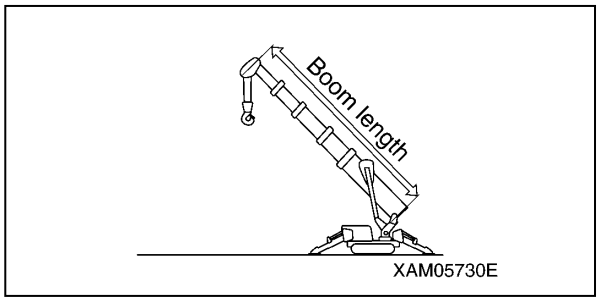

Fig. 3-3

Boom Angle

An angle which the boom forms with the horizon.

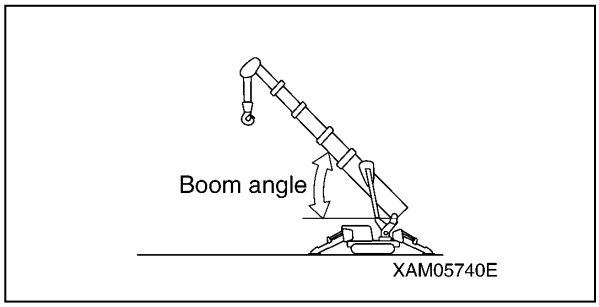

Fig. 3-4

Lifting Height above Ground

This is a vertical distance between the hook bottom and the ground with the hook raised to the upper limit.

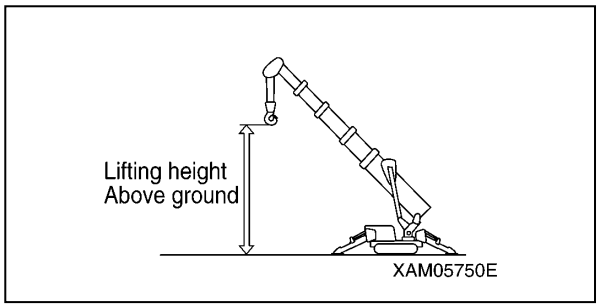

Fig. 3-5

https://truckmanualshub.com/

PRINCIPLE SPECIFICATIONS LIST

Standard and Electric Motor Option Specifications

System / Item		MC305C-3 Standard	MC305C-3 Electric motor option
Mass and dimensions	Machine mass	3900 kg	4040 kg
	Overall length × width × height	4195mm x 1280mm x 1695mm	
	Distance between idler and sprocket	1750mm	
	Track gauge	980mm	
	Track width	300mm	
Capacity	Max. rated total load × working radius	2.98t x 2.5m	
	Max. working radius	12.16m x 0.26t	
	Max. lifting height (on the ground)	12.52m	
	Max. lifting height (underground)	-16.09m (4 falls)	
Winch system	Method	Swash plate axial piston motor, planetary gear deceleration, friction plate brake	
	Winding speed (4 layers, 4 falls)	13.5 m/min	9.125 m/min
	Hoisting cable	IWRC 6 x WS (26) 8mm x 73m	
Boom telescoping system	Method	Sequentially telescoping hydraulic cylinder (3 pieces) + Sheave-embedded wire cable expansion device (1 piece), (With a hydraulic automatic locking device)	
	Boom type	Pentagonal section, hydraulic automatic extension, 5-stage boom (Stage 2/3: Sequentially telescoping, Stage 4/5: Simultaneous telescoping)	
	Boom length	3.695m – 5.945m – 8.145m – 10.315m – 12.485m	
	Boom telescoping stroke/time	8.79m/26sec	8.79 m/39.6 sec
Derrick system	Method	Direct push-type hydraulic double-acting cylinder (2 pieces), (With a hydraulic automatic locking device)	
	Boom angle/ time	0 to 80 deg./14.5sec	0 to 80 deg./19.9 sec
Slewing system	Method	Slew bearing, hydraulic motor drive, Reduction gear: Worm + Reduction spur gear, Brake: Worm-selflock	
	Slewing angle/ speed	360 deg. (continuous)/ 25sec (2.4min^{-1})	360 deg. (continuous)/ 36.7 sec (1.6 min^{-1})
Outrigger system	Method	Extension/ground: Direct push-type hydraulic cylinder (With a hydraulic automatic locking device)	
	Overall width of extended outriggers	(Lateral) 5171mm x (Front) 4809mm x (Rear) 4706mm	
Travelling system	Method	Hydraulic two-speed motor drive, Variable speed, Built-in brake	
	Travel speed	Forward/backward: 0 – 2.8km/h	
	Gradeability	23 deg.	
	Ground pressure	37.3kPa {0.38kgf/cm^2}	38.6 kPa {0.39 kgf/cm^2}
Hydraulic system	Hydraulic pump	Double-throw variable piston pump (13cc/rev x 2)	Double-throw variable piston pump (8.6 cc/rev x 2)
	Rated pressure	Travelling: 20.6MPa {210kgf/cm^2} Crane high-pressure relief: 20.1MPa {205kgf/cm^2} Crane low-pressure relief: 4.41 to 6.37MPa {45 to 65kgf/cm^2}	
	Hydraulic oil tank capacity	56L	
Engine	Model	Yanmar 3TNV80F	
	Type	Vertical in-line 3-cylinder, Water cooled, 4-cycle (special vortex)	
	Displacement	1.226L (1226cc)	
	Rated output (continuous)	20.38hp SAE/2500min^{-1} (15.2kW/2500min^{-1} {20.7PS/2500rpm^{-1}})	
	Fuel tank capacity	Diesel/ 40L	

https://truckmanualshub.com/

System / Item		MC305C-3 Standard	MC305C-3 Electric motor option
Electric motor	Motor specifications		Three-phase induction motor: 5.5kW 4P 380V 50Hz
	Starting method		Inverter-controlled (30 to 60Hz), energy-saving mode available (Crane mode: 10Hz operation after 5 minute consecutive no operation, automatic power off in 30 minutes)
Battery	Model	60B24R (DC12V x 1 piece)	
Safety device	Over winding detector / automatic stop device, three-winding stop alarm / automatic stop device, angle indicator, hydraulic safety valve, hydraulic automatic locking device, slinging rope detachment protector, alarm buzzer, audio alarm, level, crane tip-over alarm (an alarm issued in the event of the crane operation at 3-degree inclination and travelling at 15-degree inclination), travelling lever lock, travelling/crane/outrigger selector switch (designed to prevent the machine from craning at travelling), outrigger safety device (outrigger interlock and crane interlock), moment limiter (working envelope limited), working status lamp, outrigger non-installation warning lamp		
Classification	Mobile crane ISO4301/2 Group A1		

https://truckmanualshub.com/

Remote Control System Specifications

System / Item		MCT310	
Waterproof protection		IP65	
System configuration		Manual and Remote control, both-way	
Operation monitor		LCD monitor panel • Operation status monitor • Battery monitor • Message • Error code	
Safety devices		Emergency stop equipment	
		Abnormal signal detector unit at the engine start	
		Automatic power cut unit (Automatic Power-OFF)	
		Voltage drop limiter	
		Warning switch	
Control unit voltage		Power for the Crane (DC 12V)	
Control unit power consumption		Approximately 70 watts (maximum, per single function)	
Operating ambient temperature		-10°C to +55°C	
Storage ambient temperature		-20°C to +70°C	
Transmitter weight		540g	
Transmitter functions	Lever switches	Boom raise/lower	Raising and lowering
		Hook raise/lower	Raising and lowering
		Boom telescoping	Extending and retracting
		Slewing	Counterclockwise (left)/clockwise (right)
	Push button switches	Power	ON/OFF
		Horn	Warning signal
		Hook stow/Setting	Hook stowing/Mode setting
		Speed/Mode	Speed control/Mode selection
		Start/Reset	Engine start/Reset
		Stop/EMO	Engine stop/Emergency stop
	Trigger type accelerator	Hydraulic control + Engine control	

https://truckmanualshub.com/

850 kg Searcher Hook Specifications

System / Item		MC305C-3 Standard	MC305C-3 Electric motor option
Mass and dimensions	Machine mass	3930 kg	4070 kg
	Stowed length × width × height	4435 × 1280 × 1880 mm	
Performance	Crane capacity	850 kg	
	Maximum working radius	13.1 m	

https://truckmanualshub.com/

DIMENSIONAL DRAWINGS

Machine Dimensional Drawing

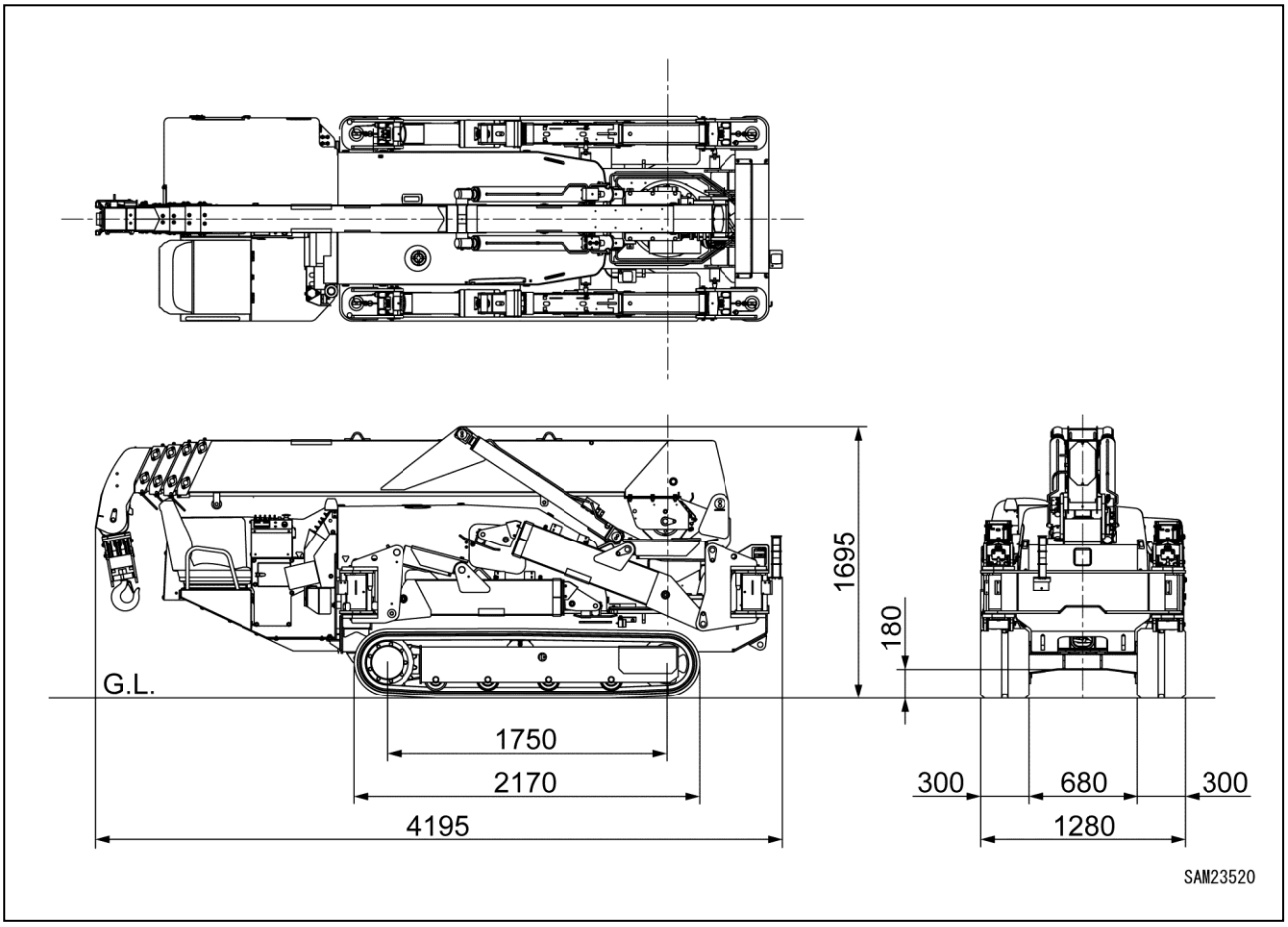

Fig. 3-6

https://truckmanualshub.com/

850kg Searcher Hook Dimensional Drawing

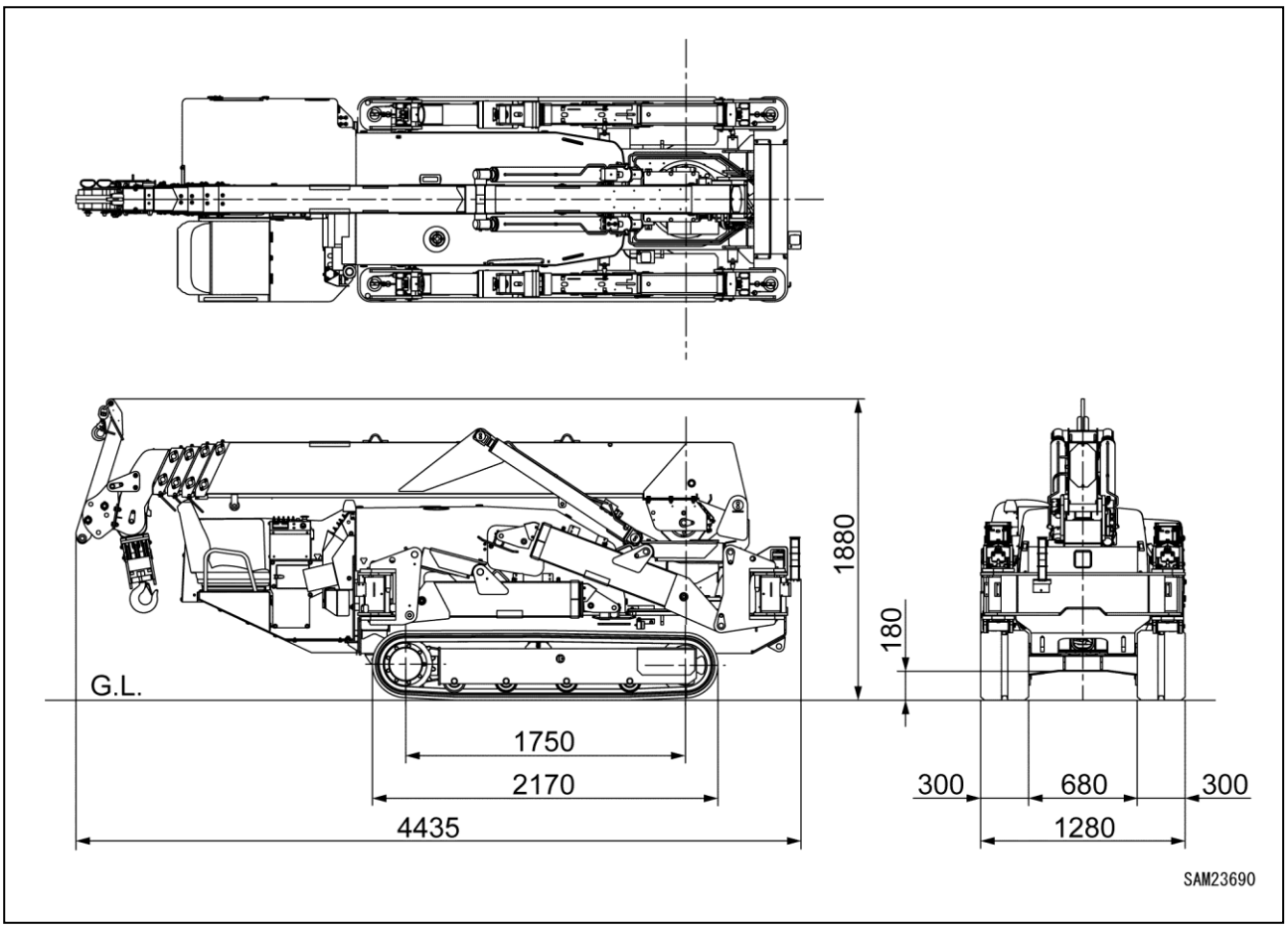

Fig. 3-7

https://truckmanualshub.com/

Outrigger Width Dimensional Drawing

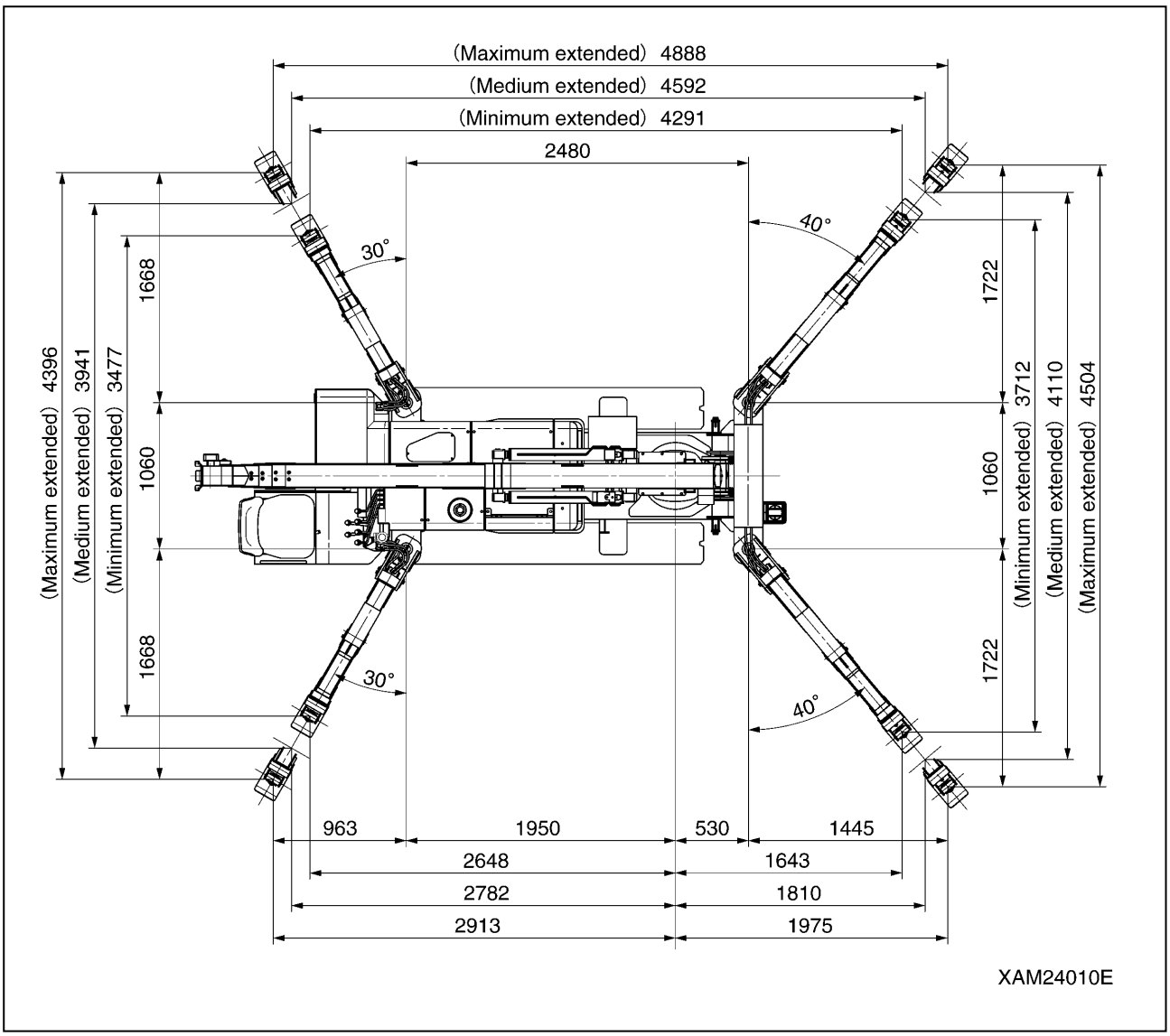

Fig. 3-8

https://truckmanualshub.com/

RATED TOTAL LOAD CHARTS

CAUTION:

- **All the values provided in the rated total load chart are based on the assumption that the machine is placed on a level and firm surface.**
  The machine may topple over if proper outrigger setting or ground condition fails to be assured. Exercise due caution when performing crane operation.
- **The values in the rated total load chart are determined based on the working radius allowing for deflection that is developed when load is applied to the boom.**
- **When extending boom (3) even if only slightly, crane operation should proceed to the extent of performance of "Boom (1) + (2) + (3)".**
- **When extending boom (4) even if only slightly, crane operation should proceed to the extent of performance of "Boom (1) + (2) + (3) + (4)".**
- **When half of the " ◣ mark" passes boom (3), crane operation should proceed to the extent of performance of "Boom (1) + (2) + (3) + (4) + (5)".**
- **If the working radius exceeds that stated in the table even if only slightly, crane operation should proceed with respect to the rated total load corresponding to the working radius in the following table.**
- **The rated total load is a load including the mass of a hoisting accessory [hook: 30kg].**
- **Operate using the value on the load chart corresponding to the "MAX", "MID" or "MIN" outrigger extension.**
- **The rated lifting capacities with bold numbers are based on crane strength and others, on its stabilities (not exceeded 85% of tipping).**

Programmable Moment Limiter

WARNING! Tip Hazard. The following precautions should always be observed when reading the "rated total load" provided by the programmable moment limiter.

- **The outriggers should be placed on a level and firm surface.**
- **The outriggers should be at maximum extension as much as possible.**
- **The weight of an object, including that of a hoisting accessory and slinging rope, must remain below the rated total load for hoisting objects. With the boom length (number of stages) and angle specified, make a comparison between the rated total load provided by the programmable moment limiter and the weight of the object.**

The programmable moment limiter provides readouts on the rated total load under the following conditions:

- The outriggers are placed on a level and firm surface.
- No deflection is developed in the boom.

Reading the Angle Indicator

The intersection point of the pointer that is attached to the, and the label on the boom, is the current boom angle. The boom angle shown in the figure below is 35˚ .

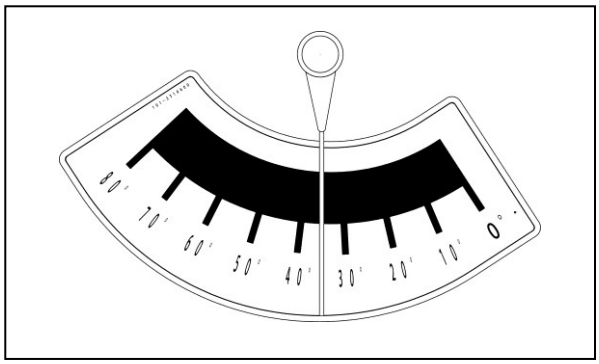

Fig. 3-9

https://truckmanualshub.com/

Boom Length

The following figures illustrate the condition of the booms, "Boom (1)", "Boom (1) + (2)", "Boom (1) + (2) + (3)", "Boom (1) + (2) + (3) + (4)", and "Boom (1) + (2) + (3) + (4) +(5)" in the preceding boxes in the rated total load chart.

1. "Boom (1)": All the booms are retracted.

Fig. 3-10

2. "Boom (1) + (2)": With booms (3), (4), and (5) retracted, boom (2) is fully extended.
   "Boom (1) + (2)" is to apply to crane operation with boom (2) extended even if only slightly.

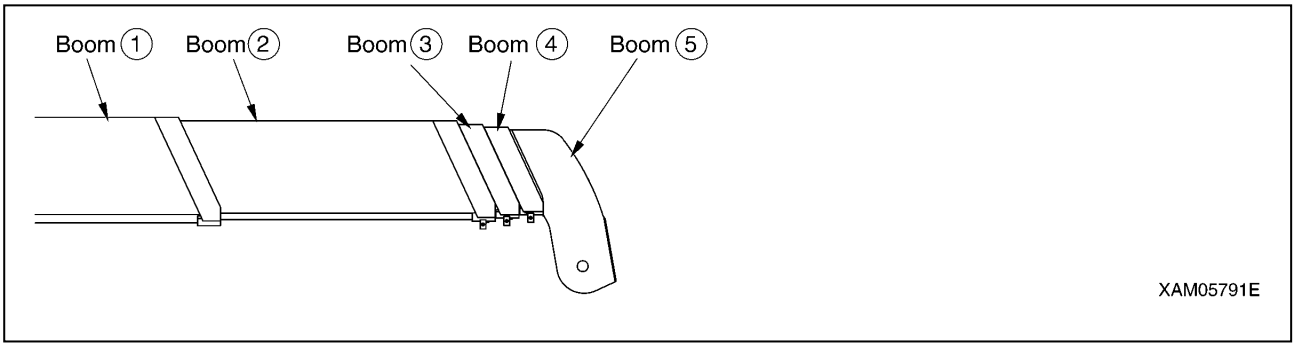

Fig. 3-11

3. "Boom (1) + (2) + (3)": With booms (4) and (5) retracted, booms (2) and (3) are fully extended.
   "Boom (1) + (2) + (3)" is to apply to crane operation with boom (3) extended even if only slightly.

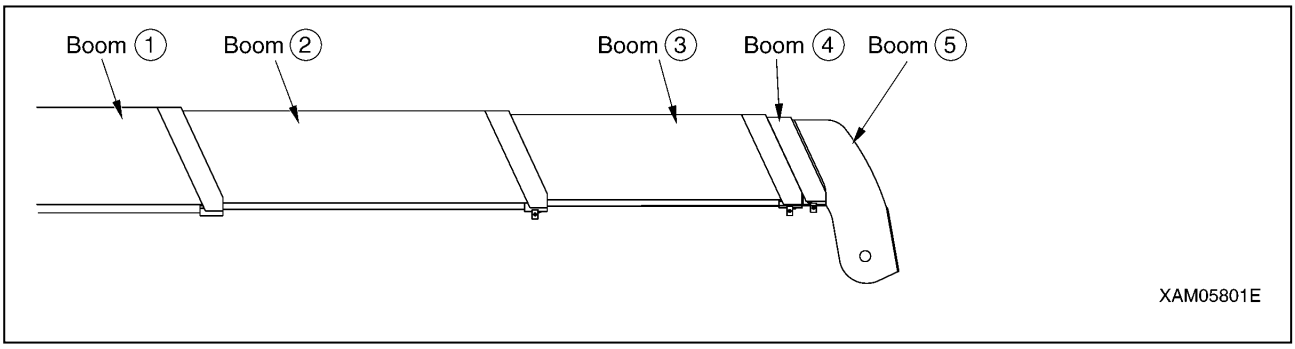

Fig. 3-12

https://truckmanualshub.com/

4. "Boom (1) + (2) + (3) + (4)": With booms (2) and (3) fully extended, booms (4) and (5) are extended at the medium (half of the " ▙ mark" passes boom (3)).
   "Boom (1) + (2) + (3) + (4)" is to apply to crane operation with booms (4) and (5) extended even if only slightly.

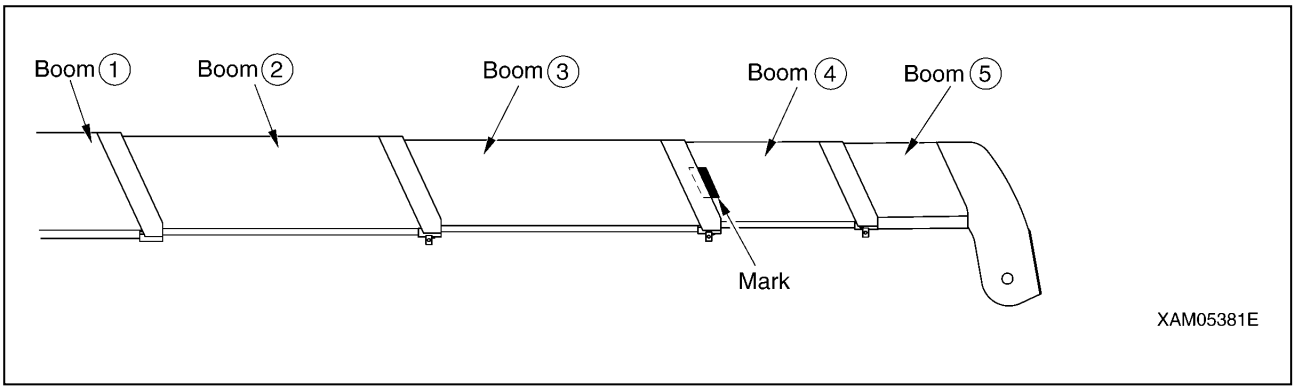

Fig. 3-13

5. "Boom (1) + (2) + (3) + (4) + (5)": All the booms are fully extended.
   "Boom (1) + (2) + (3) + (4) + (5)" is to apply to crane operation with half of the " ▙ mark" on boom (4) passes boom (3).

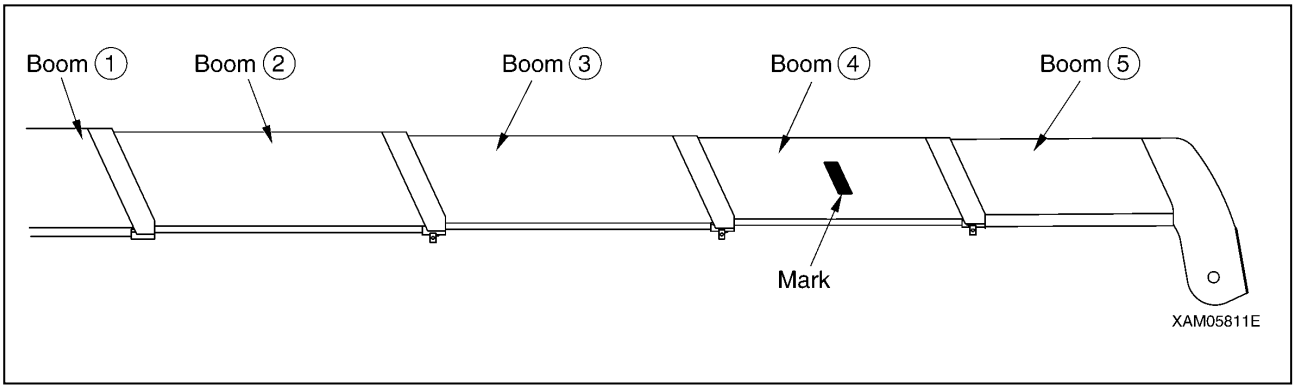

Fig. 3-14

https://truckmanualshub.com/

Rated Total Load Chart for Standard Specification

1. All rated total loads are indicated in kilograms.
2. This load radius shown in this chart is based on practical working including boom deflection due to loading. The crane user must calculate and compensate for boom deflection as the load is lifted.
3. Deductions from rated total loads must be made for the weight of hook block, ball/hook, slings, rigging or other suspended gear.
4. The slewing range will be restricted if the outrigger angle is not at the standard extension.
5. The Rated Total Load Chart capacities are based on using the factory supplied Standard Wire Rope. If you replace the wire rope, use the correct specification, that meets or exceeds the standard wire rope strength and specification.
6. Standard wire rope specification: 6xWs (26) IWRC, 8 mm diameter, 73 m
   Specified breaking load: 42.4 kN

https://truckmanualshub.com/

Rated Total Load Chart–4 Falls

MAX. Outrigger Position							
Boom (1)/Boom (1) + (2)		Boom (1) + (2) + (3)		Boom (1) + (2) + (3) + (4)		Boom (1) + (2) + (3) + (4) + (5)	
Working radius (m)	Rated total load (kg)	Working radius (m)	Rated total load (kg)	Working radius (m)	Rated total load (kg)	Working radius (m)	Rated total load (kg)
2.50	2980	2.70	2270	4.00	1080	4.50	790
3.00	2390	3.00	2120	4.50	985	5.00	660
3.50	1990	3.50	1680	5.00	880	6.00	520
4.00	1710	4.00	1440	6.00	770	7.00	430
4.50	1490	4.50	1260	7.00	670	8.00	380
5.00	1340	5.00	1110	8.00	570	9.00	340
5.62	1160	5.50	990	9.00	500	10.00	310
--	--	6.00	880	9.99	435	11.00	280
--	--	7.00	730	--	--	12.16	260
--	--	7.82	630	--	--	--	--

MID. Outrigger Position							
Boom (1)/Boom (1) + (2)		Boom (1) + (2) + (3)		Boom (1) + (2) + (3) + (4)		Boom (1) + (2) + (3) + (4) + (5)	
Working radius (m)	Rated total load (kg)	Working radius (m)	Rated total load (kg)	Working radius (m)	Rated total load (kg)	Working radius (m)	Rated total load (kg)
2.50	2980	2.70	2270	4.00	1060	4.50	780
3.00	2360	3.00	2090	4.50	950	5.00	650
3.50	1960	3.50	1680	5.00	860	6.00	500
4.00	1680	4.00	1420	6.00	750	7.00	410
4.50	1380	4.50	1240	7.00	630	8.00	360
5.00	1140	5.00	1070	8.00	490	9.00	320
5.62	950	5.50	950	9.00	410	10.00	290
--	--	6.00	800	9.99	350	11.00	260
--	--	7.00	610	--	--	12.16	250
--	--	7.82	520	--	--	--	--

MIN. Outrigger Position							
Boom (1)/Boom (1) + (2)		Boom (1) + (2) + (3)		Boom (1) + (2) + (3) + (4)		Boom (1) + (2) +(3) + (4) + (5)	
Working radius (m)	Rated total load (kg)	Working radius (m)	Rated total load (kg)	Working radius (m)	Rated total load (kg)	Working radius (m)	Rated total load (kg)
2.50	2980	2.70	2270	4.00	1060	4.50	780
3.00	2350	3.00	2090	4.50	950	5.00	650
3.50	1800	3.50	1680	5.00	860	6.00	500
4.00	1430	4.00	1370	6.00	680	7.00	410
4.50	1140	4.50	1120	7.00	530	8.00	360
5.00	950	5.00	910	8.00	420	9.00	320
5.62	790	5.50	790	9.00	340	10.00	290
--	--	6.00	670	9.99	300	11.00	240
--	--	7.00	510	--	--	12.16	210
--	--	7.82	430	--	--	--	--

https://truckmanualshub.com/

Rated Total Load Chart-2 Falls

MAX. Outrigger Position							
Boom (1)/Boom (1) + (2)		Boom (1) + (2) + (3)		Boom (1) + (2) + (3) + (4)		Boom (1) + (2) + (3) + (4) + (5)	
Working radius (m)	Rated total load (kg)	Working radius (m)	Rated total load (kg)	Working radius (m)	Rated total load (kg)	Working radius (m)	Rated total load (kg)
2.50	1480	2.70	1480	4.00	1080	4.50	790
3.00	1480	3.00	1480	4.50	985	5.00	660
3.50	1480	3.50	1480	5.00	880	6.00	520
4.00	1480	4.00	1440	6.00	770	7.00	430
4.50	1480	4.50	1260	7.00	670	8.00	380
5.00	1340	5.00	1110	8.00	570	9.00	340
5.62	1160	5.50	990	9.00	500	10.00	310
--	--	6.00	880	9.99	435	11.00	280
--	--	7.00	730	--	--	12.16	260
--	--	7.82	630	--	--	--	--

MID. Outrigger Position							
Boom (1)/Boom (1) + (2)		Boom (1) + (2) + (3)		Boom (1) + (2) + (3) + (4)		Boom (1) + (2) + (3) + (4) + (5)	
Working radius (m)	Rated total load (kg)	Working radius (m)	Rated total load (kg)	Working radius (m)	Rated total load (kg)	Working radius (m)	Rated total load (kg)
2.50	1480	2.70	1480	4.00	1060	4.50	780
3.00	1480	3.00	1480	4.50	950	5.00	650
3.50	1480	3.50	1480	5.00	860	6.00	500
4.00	1480	4.00	1420	6.00	750	7.00	410
4.50	1380	4.50	1240	7.00	630	8.00	360
5.00	1140	5.00	1070	8.00	490	9.00	320
5.62	950	5.50	950	9.00	410	10.00	290
--	--	6.00	800	9.99	350	11.00	260
--	--	7.00	610	--	--	12.16	250
--	--	7.82	520	--	--	--	--

MIN. Outrigger Position							
Boom (1)/Boom (1) + (2)		Boom (1) + (2) + (3)		Boom (1) + (2) + (3) + (4)		Boom (1) + (2) + (3) + (4) + (5)	
Working radius (m)	Rated total load (kg)	Working radius (m)	Rated total load (kg)	Working radius (m)	Rated total load (kg)	Working radius (m)	Rated total load (kg)
2.50	1480	2.70	1480	4.00	1060	4.50	780
3.00	1480	3.00	1480	4.50	950	5.00	650
3.50	1480	3.50	1480	5.00	860	6.00	500
4.00	1430	4.00	1370	6.00	680	7.00	410
4.50	1140	4.50	1120	7.00	530	8.00	360
5.00	950	5.00	910	8.00	420	9.00	320
5.62	790	5.50	790	9.00	340	10.00	290
--	--	6.00	670	9.99	300	11.00	240
--	--	7.00	510	--	--	12.16	210
--	--	7.82	430	--	--	--	--

Rated Total Load Chart-Single Fall

MAX. Outrigger Position							
Boom (1)/Boom (1) + (2)		Boom (1) + (2) + (3)		Boom (1) + (2) + (3) + (4)		Boom (1) + (2) + (3) + (4) + (5)	
Working radius (m)	Rated total load (kg)	Working radius (m)	Rated total load (kg)	Working radius (m)	Rated total load (kg)	Working radius (m)	Rated total load (kg)
2.50	750	2.70	750	4.00	750	4.50	750
3.00	750	3.00	750	4.50	750	5.00	660
3.50	750	3.50	750	5.00	750	6.00	520
4.00	750	4.00	750	6.00	750	7.00	430
4.50	750	4.50	750	7.00	670	8.00	380
5.00	750	5.00	750	8.00	570	9.00	340
5.62	750	5.50	750	9.00	500	10.00	310
--	--	6.00	750	9.99	435	11.00	280
--	--	7.00	730	--	--	12.16	260
--	--	7.82	630	--	--	--	--

MID. Outrigger Position							
Boom (1)/Boom (1) + (2)		Boom (1) + (2) + (3)		Boom (1) + (2) + (3) + (4)		Boom (1) + (2) + (3) + (4) + (5)	
Working radius (m)	Rated total load (kg)	Working radius (m)	Rated total load (kg)	Working radius (m)	Rated total load (kg)	Working radius (m)	Rated total load (kg)
2.50	750	2.70	750	4.00	750	4.50	750
3.00	750	3.00	750	4.50	750	5.00	650
3.50	750	3.50	750	5.00	750	6.00	500
4.00	750	4.00	750	6.00	750	7.00	410
4.50	750	4.50	750	7.00	630	8.00	360
5.00	750	5.00	750	8.00	490	9.00	320
5.62	750	5.50	750	9.00	410	10.00	290
--	--	6.00	750	9.99	350	11.00	260
--	--	7.00	610	--	--	12.16	250
--	--	7.82	520	--	--	--	--

MIN. Outrigger Position							
Boom (1)/Boom (1) + (2)		Boom (1) + (2) + (3)		Boom (1) + (2) + (3) + (4)		Boom (1) + (2) + (3) + (4) + (5)	
Working radius (m)	Rated total load (kg)	Working radius (m)	Rated total load (kg)	Working radius (m)	Rated total load (kg)	Working radius (m)	Rated total load (kg)
2.50	750	2.70	750	4.00	750	4.50	750
3.00	750	3.00	750	4.50	750	5.00	650
3.50	750	3.50	750	5.00	750	6.00	500
4.00	750	4.00	750	6.00	680	7.00	410
4.50	750	4.50	750	7.00	530	8.00	360
5.00	750	5.00	750	8.00	420	9.00	320
5.62	750	5.50	750	9.00	340	10.00	290
--	--	6.00	670	9.99	300	11.00	240
--	--	7.00	510	--	--	12.16	210
--	--	7.82	430	--	--	--	--

https://truckmanualshub.com/

Rated Total Load Chart for 850 kg Searcher Hook

1. This Rated Total Load Chart shows the maximum allowable capacities. These rated total loads are based on the machine standing level on a firm ground supporting surface, under ideal job conditions and a freely lifted load.
2. Sufficient design tolerance must be used to ensure adequate ground support surface design. The rated total loads are for static conditions only, and do not include dynamic effects of slewing, extending, retracting, lowering, raising, wind or adverse conditions. Crane users must reduce rated total loads ratings to take all conditions into account.
3. The Working radius shown in the Rated Total Load Chart is based on practical working radius including boom deflection due to loading. The crane user must calculate and compensate for boom deflection as the load is lifted.
4. Deductions from Searcher Hook Rated Total Load must be made for the weight of the 850 kg searcher hook 30 kg, block/ball and all rigging.
5. The capacity when using the searcher hook refers to the capacity with the crane hook detached.
6. If boom (3) is extended to any extent, work should be performed within the capacity for "26.7 ft Boom".
7. If boom (4) is extended to any extent, work should be performed within the capacity for "33.8 ft Boom".
8. When more than one half of the third ▮ mark is exposed from the boom (3), work should be carried out within the performance for the "41.0 ft Boom".
   All capacities above the bold line are based on structural strength and other limitations. All other rated total loads are based on stability not exceeding 75% of tipping loads.
9. Crane users must consult the Operators Manual for complete details about assembly, operation, maintenance, configuration, and its limitations. Modifications to the crane, other than what is specified or supplied by the original equipment manufacturer, can result in a reduction of rated total load ratings.
10. This operating range chart does not include boom deflections.
11. At certain working conditions, moment limiter may display bigger load value the actual load.
12. RESTRICTED AREA: At high boom angles, E-Boom (arm) and the hook will interfere with each other.
    To avoid this interference: In SH1 position, do not operate above 30 degree boom angle.

https://truckmanualshub.com/

OFFSET POSITION SH1

Working Radius (m)	① 3.695m BOOM				② 5.945m BOOM				③ 8.145m BOOM				④ 10.315m BOOM				⑤ 12.485m BOOM				Working Radius (m)
	BOOM FULLY RETRACTED				WHEN BOOM 2 IS EXTENDED TO ANY EXTENT. USE RATINGS FOR 3.696m-5.945mBOOM				WHEN BOOM 3 IS EXTENDED TO ANY EXTENT. USE RATINGS FOR 5.946m-8.145mBOOM				WHEN BOOM 4 IS EXTENDED TO ANY EXTENT. USE RATINGS FOR 8.146m-10.315mBOOM				WHEN THE MARK ▙ ON BOOM 4 IS EXPOSED. USE RATINGS FOR 10.316m-12.485mBOOM				
	LOADED BOOM ANGLE (deg)	OUTRIGGER POSITION			LOADED BOOM ANGLE (deg)	OUTRIGGER POSITION			LOADED BOOM ANGLE (deg)	OUTRIGGER POSITION			LOADED BOOM ANGLE (deg)	OUTRIGGER POSITION			LOADED BOOM ANGLE (deg)	OUTRIGGER POSITION			
		MAX	MID	MIN		MAX	MID	MIN		MAX	MID	MIN		MAX	MID	MIN		MAX	MID	MIN	
	30.0 OR MORE	RESTRICTED			30.0 OR MORE	RESTRICTED			30.0 OR MORE	RESTRICTED			30.0 OR MORE	RESTRICTED			30.0 OR MORE	RESTRICTED			
3.5	29.5	850	850	850																	3.5
4.3	0.0	850	850	850																	4.3
5.5					29.0	850	850	850													5.5
6.5					3.0	850	740	610													6.5
7.4									29.5	660	560	460									7.4
8.0									21.0	590	470	380									8.0
8.7									3.0	530	430	350									8.7
9.3													29.0	450	370	310					9.3
10.5													13.5	390	310	260					10.5
10.9													0.0	370	290	240					10.9
11.2																	29.5	240	220	210	11.2
12.0																	21.5	220	200	180	12.0
13.1																	0.0	210	200	160	13.1

OFFSET POSITION SH2

Working Radius (m)	① 3.695m BOOM				② 5.945m BOOM				③ 8.145m BOOM				④ 10.315m BOOM				⑤ 12.485m BOOM				Working Radius (m)
	BOOM FULLY RETRACTED				WHEN BOOM 2 IS EXTENDED TO ANY EXTENT. USE RATINGS FOR 3.696m-5.945mBOOM				WHEN BOOM 3 IS EXTENDED TO ANY EXTENT. USE RATINGS FOR 5.946m-8.145mBOOM				WHEN BOOM 4 IS EXTENDED TO ANY EXTENT. USE RATINGS FOR 8.146m-10.315mBOOM				WHEN THE MARK ▙ ON BOOM 4 IS EXPOSED. USE RATINGS FOR 10.316m-12.485mBOOM				
	LOADED BOOM ANGLE (deg)	OUTRIGGER POSITION			LOADED BOOM ANGLE (deg)	OUTRIGGER POSITION			LOADED BOOM ANGLE (deg)	OUTRIGGER POSITION			LOADED BOOM ANGLE (deg)	OUTRIGGER POSITION			LOADED BOOM ANGLE (deg)	OUTRIGGER POSITION			
		MAX	MID	MIN		MAX	MID	MIN		MAX	MID	MIN		MAX	MID	MIN		MAX	MID	MIN	
2.7	54.5	850	850	850	67.5	850	850	850	73.0	850	850	850									2.7
4.0	27.0	850	850	850	54.5	850	850	850	64.0	850	850	850	76.5	850	850	850					4.0
4.3	13.0	850	850	850	51.5	850	850	850	63.0	850	850	850	68.0	850	850	850					4.3
4.5					49.0	850	850	850	60.5	850	850	850	66.5	850	850	850	70.5	750	740	740	4.5
5.0					43.0	850	850	850	56.5	850	850	850	64.0	850	830	830	68.5	620	610	610	5.0
6.0					27.0	850	850	740	48.5	850	820	680	58.0	710	700	660	63.5	490	470	470	6.0
6.6					0.0	850	710	580	43.0	770	680	570	54.0	660	650	570	61.0	430	410	410	6.6
7.0									39.0	720	620	520	51.5	630	600	520	59.0	400	380	380	7.0
8.0									26.5	590	470	380	44.5	550	490	410	53.5	350	330	330	8.0
8.8									0.0	520	420	340	38.0	480	410	340	49.0	310	290	290	8.8
10.0													26.0	410	330	270	41.5	270	260	260	10.0
11.0													8.0	360	280	240	34.5	250	230	220	11.0
12.0																	25.5	220	200	180	12.0
13.1																	5.5	210	200	160	13.1

OFFSET POSITION SH3

Working Radius (m)	① 3.695m BOOM				② 5.945m BOOM				③ 8.145m BOOM				④ 10.315m BOOM				⑤ 12.485m BOOM				Working Radius (m)
	BOOM FULLY RETRACTED				WHEN BOOM 2 IS EXTENDED TO ANY EXTENT. USE RATINGS FOR 3.696m-5.945mBOOM				WHEN BOOM 3 IS EXTENDED TO ANY EXTENT. USE RATINGS FOR 5.946m-8.145mBOOM				WHEN BOOM 4 IS EXTENDED TO ANY EXTENT. USE RATINGS FOR 8.146m-10.315mBOOM				WHEN THE MARK ▙ ON BOOM 4 IS EXPOSED. USE RATINGS FOR 10.316m-12.485mBOOM				
	LOADED BOOM ANGLE (deg)	OUTRIGGER POSITION			LOADED BOOM ANGLE (deg)	OUTRIGGER POSITION			LOADED BOOM ANGLE (deg)	OUTRIGGER POSITION			LOADED BOOM ANGLE (deg)	OUTRIGGER POSITION			LOADED BOOM ANGLE (deg)	OUTRIGGER POSITION			
		MAX	MID	MIN		MAX	MID	MIN		MAX	MID	MIN		MAX	MID	MIN		MAX	MID	MIN	
2.5	60.0	850	850	850	72.0	850	850	850													2.5
2.7	56.5	850	850	850	70.0	850	850	850	75.5	850	850	850									2.7
3.0	50.5	850	850	850	67.0	850	850	850	73.5	850	850	850									3.0
3.8	25.0	850	850	850	58.0	850	850	850	67.5	850	850	850									3.8
4.0					56.0	850	850	850	66.0	850	850	850	71.0	850	850	850					4.0
4.5					49.5	850	850	850	62.0	850	850	850	68.5	850	850	850	72.0	750	740	740	4.5
5.0					42.5	850	850	850	58.0	850	850	850	65.5	850	830	830	70.0	620	610	610	5.0
6.1					13.0	850	830	710	48.0	840	800	660	58.5	700	690	640	64.5	480	460	460	6.1
7.0									38.0	720	620	520	52.0	630	600	520	59.5	400	380	380	7.0
8.3									9.0	560	450	370	42.0	520	460	380	52.5	340	320	320	8.3
9.0													35.0	470	390	330	48.0	310	290	290	9.0
10.4													11.5	390	310	260	38.0	260	240	240	10.4
11.0																	33.0	250	230	220	11.0
12.6																	8.5	220	200	170	12.6

https://truckmanualshub.com/

WORKING RADIUS/LIFTING HEIGHT

Standard

WARNING!

- **The diagram of working radius and lifting height shows the relationships the working radius of this machine, boom angle, and lifting height above the ground with no object hoisted. The diagram has been made allowing for no deflection in the boom.**
- **The boom (4) in the diagram of working radius and lifting height represents a state that half of the " ◣ mark" passes boom (3).**

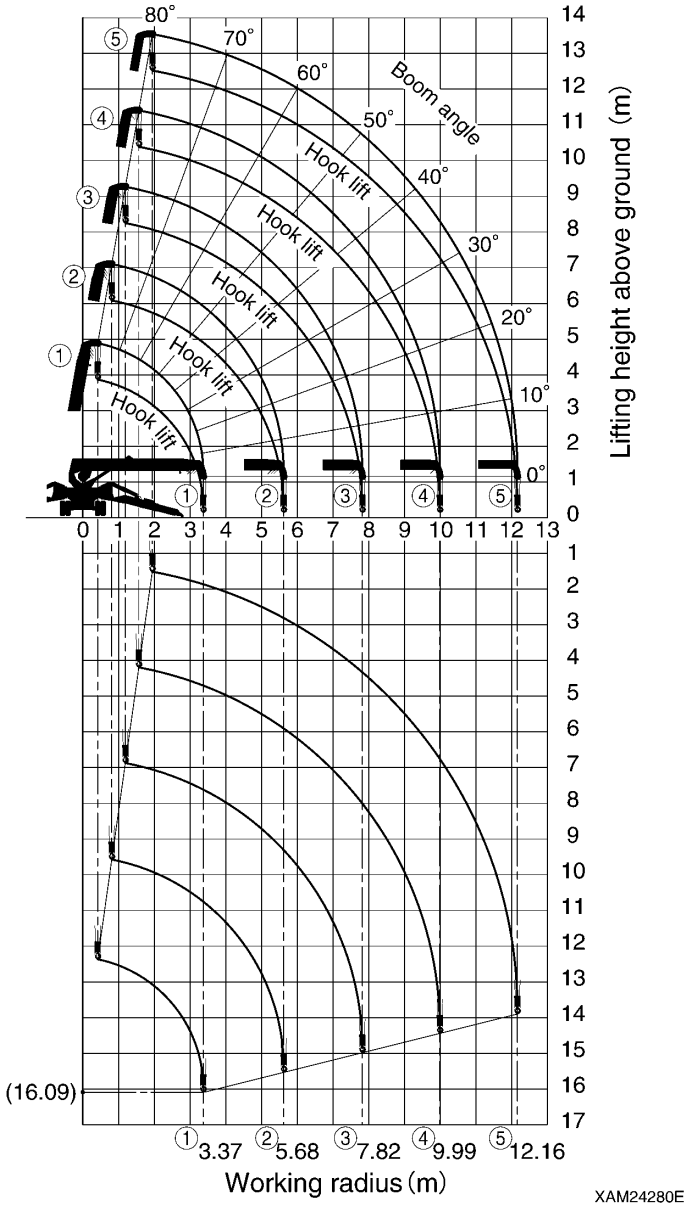

Fig. 3-15

https://truckmanualshub.com/

1. Point A denotes a boom angle and point B denotes a lifting height above ground in the figure at below.
   The same working radius is applied to points A and B.

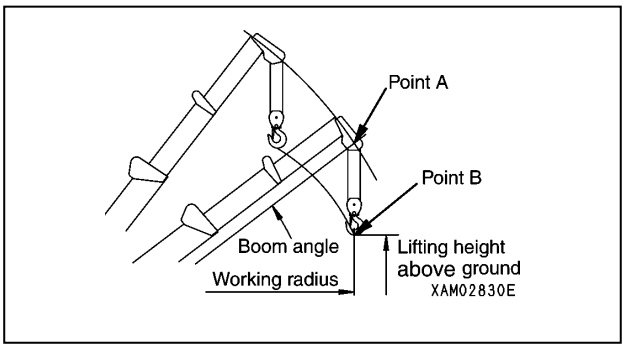

Fig. 3-16

2. The "diagram of working radius and lifting height" shows the relationships the working radius, boom angle, and lifting height at no load, allowing for no deflection in the boom. A deflection occurs in the boom when an object is hoisted, which causes the working radius to widen slightly. This is load radius. The rated total load decreases with increase in the working radius. Actual crane operation requires the planning of work, allowing for sufficient clearance more than that provided in the diagram.

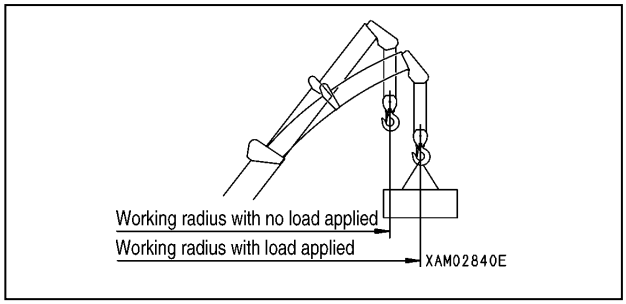

Fig. 3-17

https://truckmanualshub.com/

Working Radius/Lifting Height for Searcher Hook

DANGER!

- **When using the searcher hook, be sure to set searcher hook mode for moment limiter.**
- **Fall mode and searcher hook offset position must be set as "850 kg searcher hook mode" when 850 kg searcher hook is used. Searcher hook offset position must be displayed on moment limiter boom length window.**
- **Never use the searcher hook and the crane hook simultaneously.**

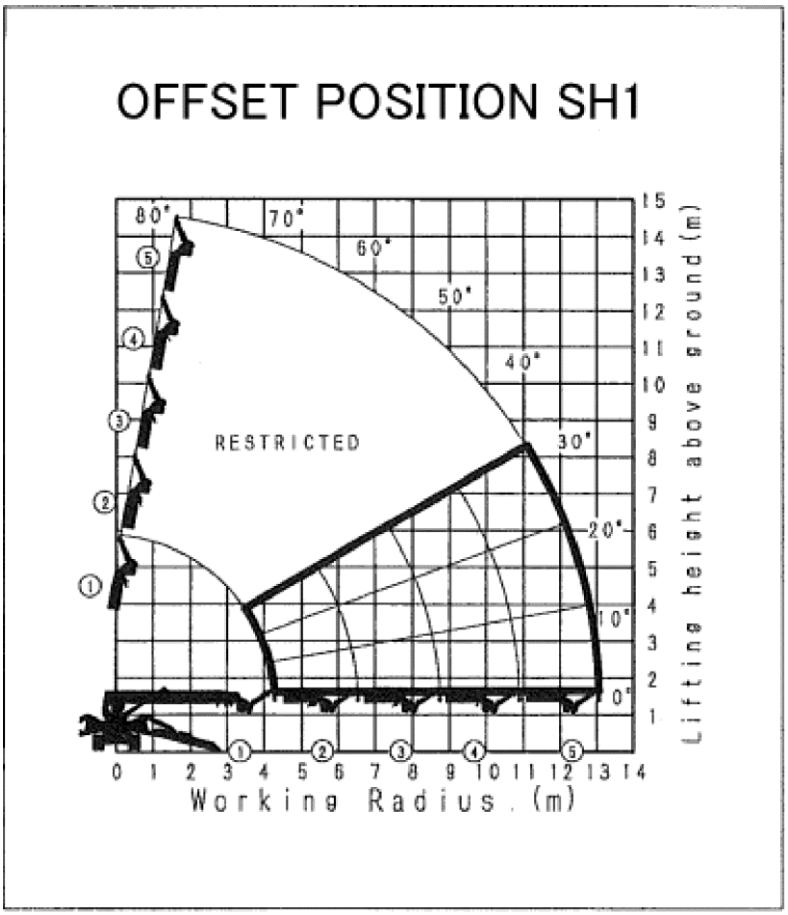

Fig. 3-18

https://truckmanualshub.com/

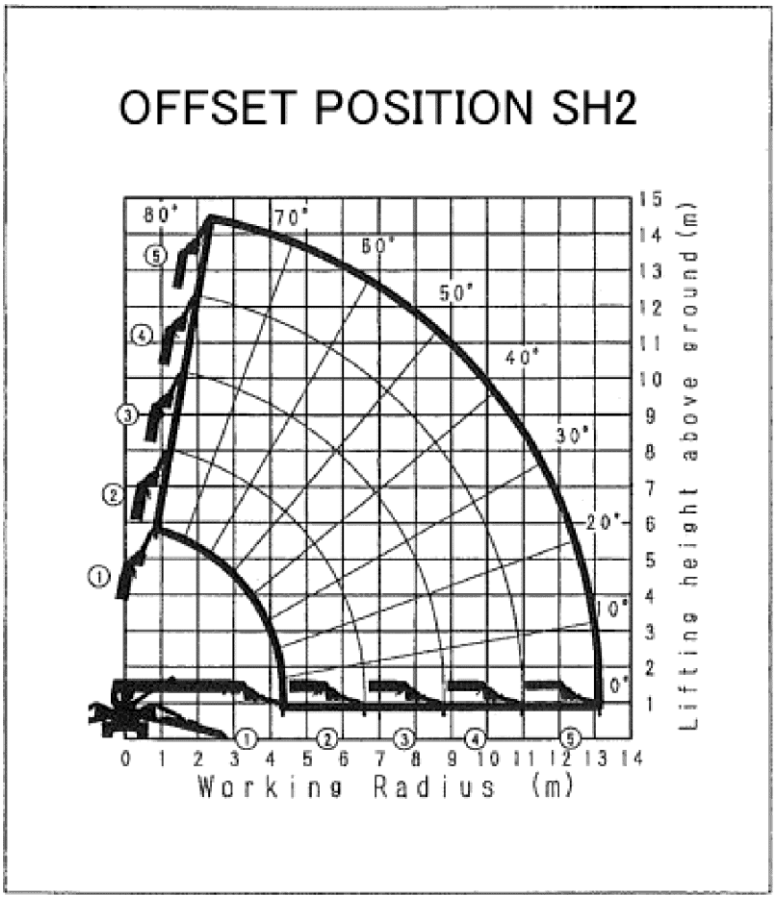

Fig. 3-19

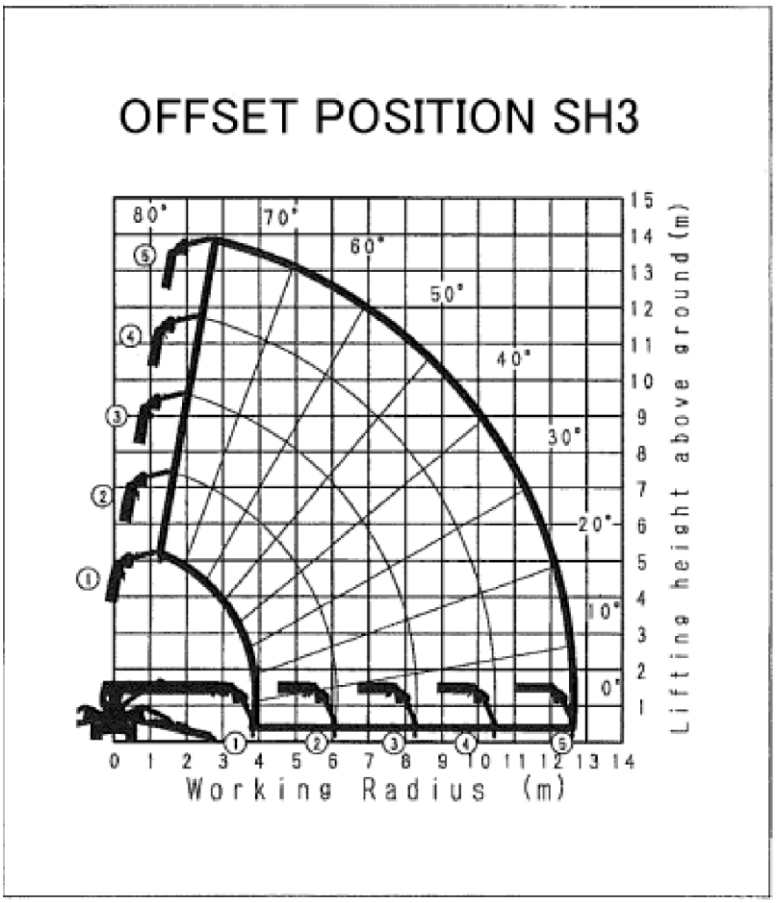

Fig. 3-20

https://truckmanualshub.com/

This Page Intentionally Left Blank

https://truckmanualshub.com/

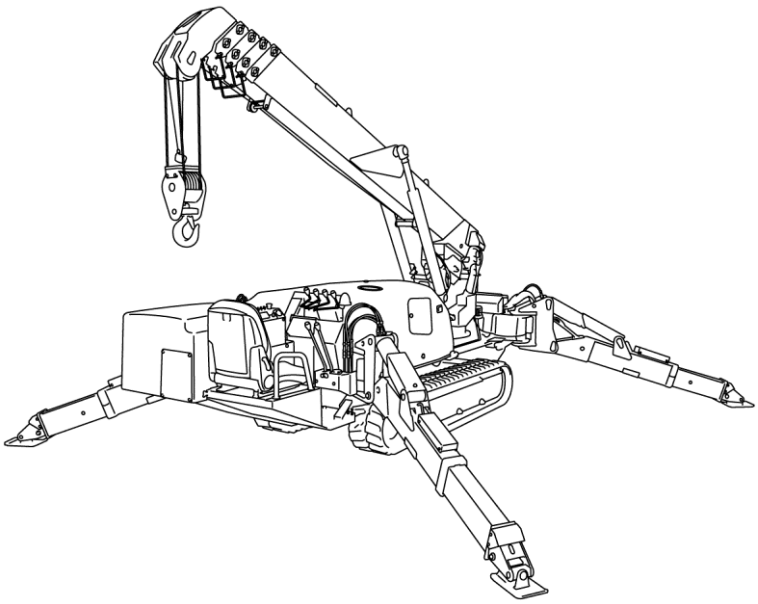

Section 4

OPERATION

https://truckmanualshub.com/

MACHINE COMPONENTS

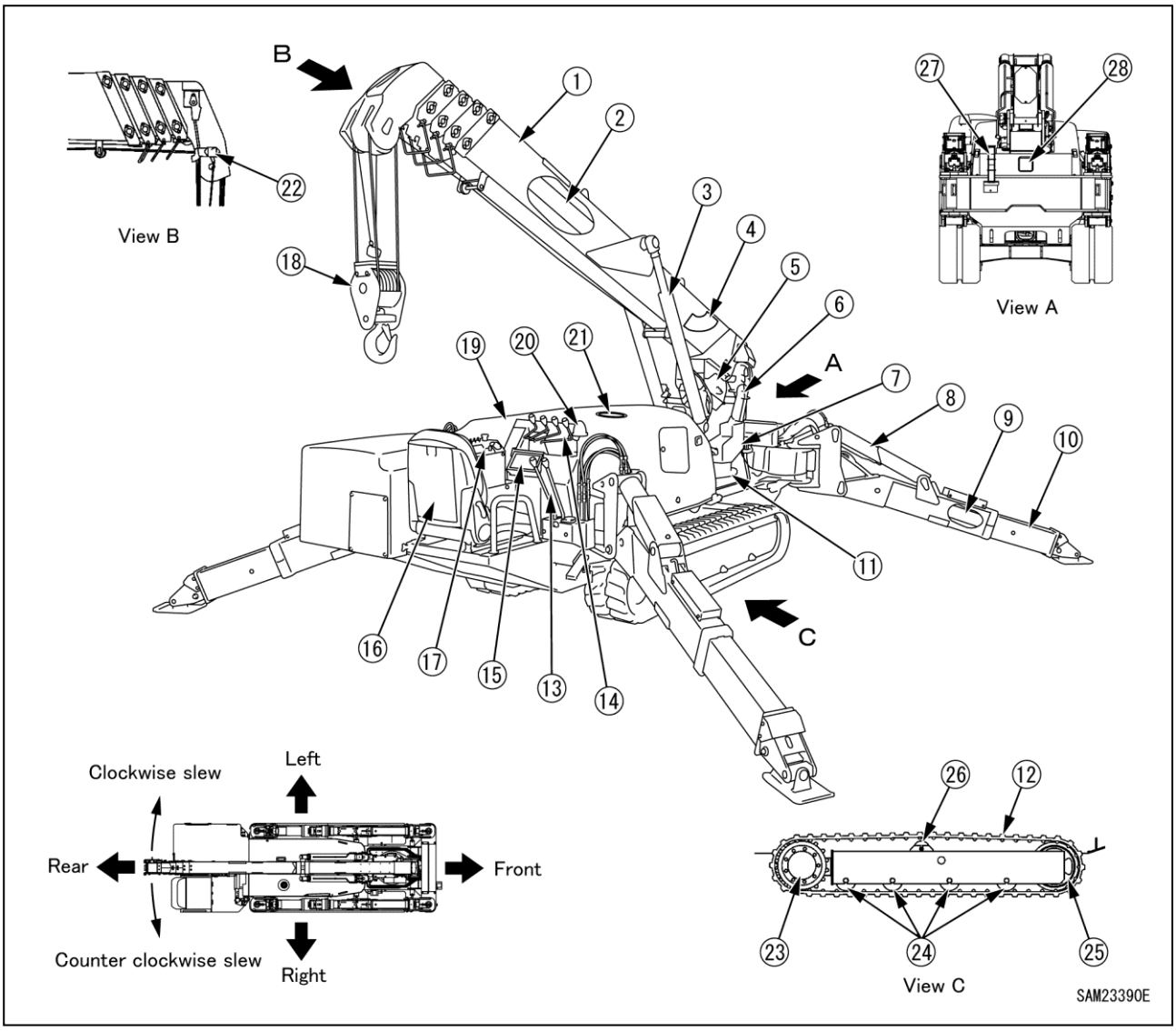

Fig. 4-1

1 - Boom
2 - Boom telescoping cylinder (Inside the boom)
3 - Boom lift cylinder
4 - Angle indicator
5 - Winch
6 - Post
7 - Moment limiter converter
8 - Outrigger setting cylinder
9 - Outrigger extension cylinder (Built in the box)
10 - Outrigger
11 - Slewing device
12 - Rubber track
13 - Travel control
14 - Crane control
15 - Moment limiter display unit
16 - Operation seat
17 - Instrument panel
18 - Hook block
19 - Hydraulic oil tank (Inside machinery cover)
20 - Outrigger un-set warning lamp
21 - Fuel tank (Inside machinery cover)
22 - Over winding detector
23 - Travelling motor and sprocket
24 - Track roller
25 - Idler
26 - Carrier roller
27 - Working status lamp
28 - Working light

https://truckmanualshub.com/

Boom
A boom with a 5-stage telescoping mechanism.

Boom Telescoping Cylinder
A telescoping cylinder built into the boom.

Boom Derrick Cylinder
A cylinder for lifting the main boom.

Angle Indicator
An angle meter for reading the boom angle by eye, located on either side of the boom.

See "Reading the Angle Indicator" on page 3-11 on how to read the angle indicator.

Winch
A device for winding and unwinding winch wire, composed of a motor and drum.

For operational methods for the winch, see "Hook Raising/Lowering Operation" on page 4-54.

Post
A frame of the slewing part on which the working machine is mounted.

Moment Limiter Converter, Moment Limiter Display
A safety device to detect the machine's status from various sensors and prevent it from being overloaded.

Outrigger Setting Cylinder, Outrigger Extension Cylinder, Outrigger
Four devices to maintain the vehicle body level and stabilise.

For more information on how to set the outriggers in place, see "OUTRIGGER SETTING" on page 4-36. For information on how to stow the outriggers, see "OUTRIGGER STOWING" on page 4-45.

Slewing device
A device to slew the crane.

Rubber Tracks, Travel Motor and Sprocket, Track Roller, Idler, Carrier Roller
Travel device for travelling.

Travel Control
A part for travel control of the machine.

For operation method of travelling, see "TRAVELLING CONTROLS AND OPERATION" on page 4-21.

Crane Control
A part for controlling the crane.

Operation Seat
The spot where the operator sits.

For more information, see "OPERATION SEAT" on page 4-12.

Instrument Panel
Features various operation switches and monitors.

For more information, see "INSTRUMENT PANEL SECTIONS" on page 4-7.

Hook Block
A hook block to hoist the load.

Hydraulic Oil Tank
A tank for putting hydraulic oil in to operate the hydraulic oil equipment.

Outrigger un-set warning lamp
A lamp that flashes to alert the operator if the outriggers are not properly set in place.

For more information, see "OUTRIGGER UN-SET WARNING LAMP (RED)" on page 4-33.

Fuel Tank
A tank for putting fuel in to operate the engine.

Over Winding Detector
A safety device to prevent the over-winding of the winch wire.

For more information on the device, see "Over Winding Detector" on page 4-71.

Working Status Lamp
Red, yellow and green lamps light up according to the operational status of the machine.

Working Light
A working light to illuminate the front.

https://truckmanualshub.com/

TRAVEL AND CRANE CONTROLS

Control Location

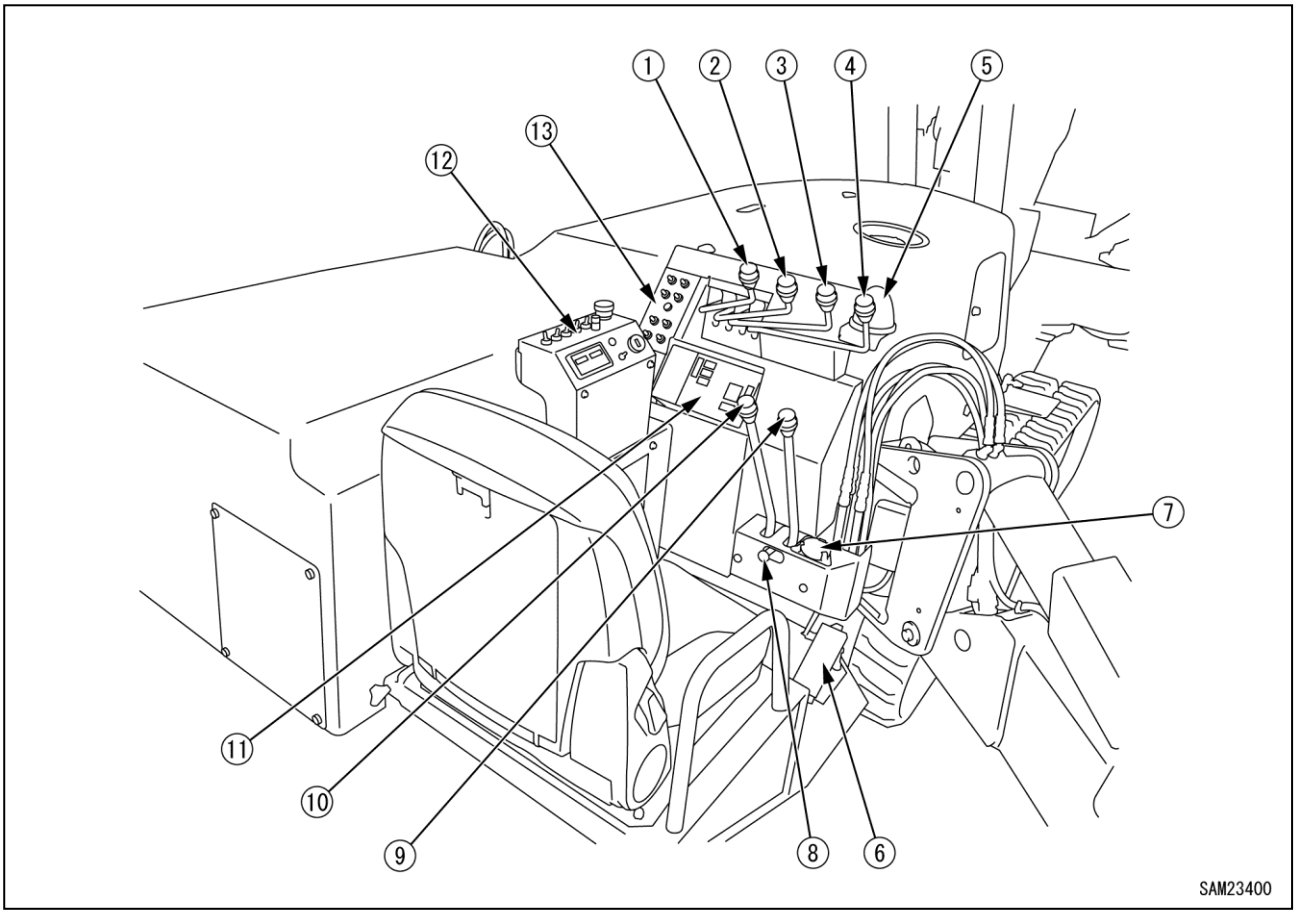

Fig. 4-2

1 - Slewing lever
2 - Boom telescoping lever
3 - Winch lever
4 - Boom lift lever
5 - Outrigger un-set warning lamp
6 - Acceleration pedal
7 - Level gauge
8 - Travelling lock lever
9 - Right travelling lever
10 - Left travelling lever
11 - Moment limiter display panel
12 - Instrument panel
13 - Outrigger operation panel

https://truckmanualshub.com/

Acceleration Pedal

Use the pedal to adjust the engine speed or output.

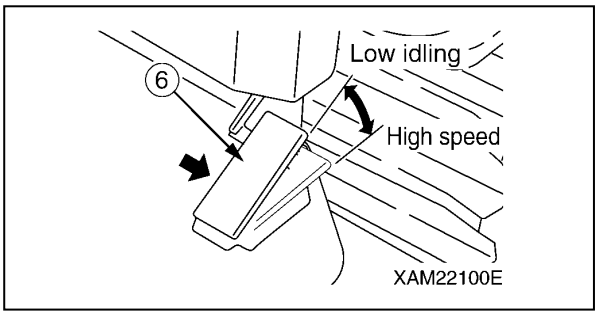

Fig. 4-3

- Low idling: Release your foot from the pedal.
- Full speed: Press down fully on the acceleration pedal.

NOTICE: Press down on the acceleration pedal to the position necessary for the work.

Slewing Lever

Use the lever to slew the crane boom and post.

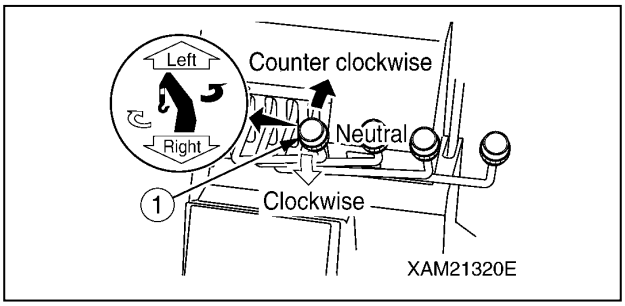

Fig. 4-4

- Slew counterclockwise (left): Press the lever forward (Left).
- Neutral: Release your hand from the lever. The lever returns to the "Neutral" position and the slewing stops.
- Slew clockwise (right): Pull the lever toward you (Right).

Boom Telescoping Lever

Use this lever for telescoping the crane boom.

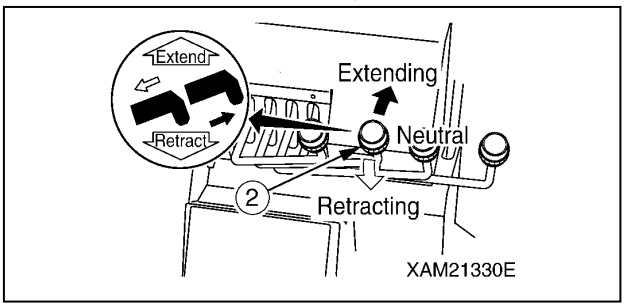

Fig. 4-5

- Extend: Push the lever forward (Extend).
- Neutral: Release your hand from the lever. The lever returns to the "Neutral" position and the boom telescoping stops.
- Retract: Pull the lever toward you (Retract).

Winch Lever

Use this lever to raise/lower the hook block of the crane.

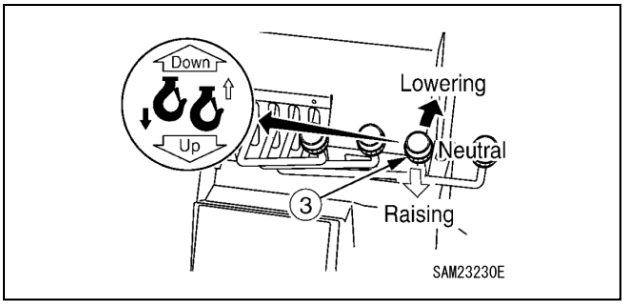

Fig. 4-6

- Lower: Push the lever forward (Down).
- Neutral: Release your hand from the lever. The lever returns to the "Neutral" position and the machine automatically brakes. The lowering/raising of the hook block stops.
- Raise: Pull the lever toward you (Up).

https://truckmanualshub.com/

Boom Derricking Lever

Use this lever to raise/lower the hook block of the crane.

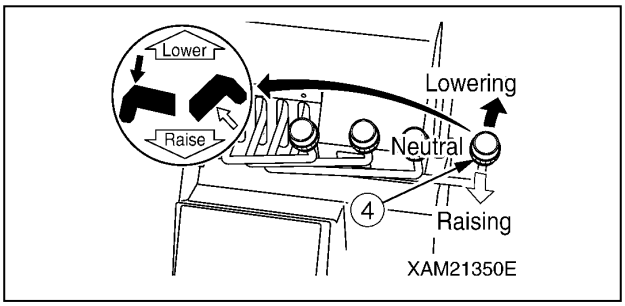

Fig. 4-7

- Lower: Push the lever forward (Lower).
- Neutral: Release your hand from the lever. The lever returns to the "Neutral" position and the boom lift stops.
- Raise: Pull the lever toward you (Raise).

Travelling Lock Lever

WARNING! When parking or crane operation, the lock lever must be placed to "LOCK" position.

Use this lever to "LOCK" the travelling levers.

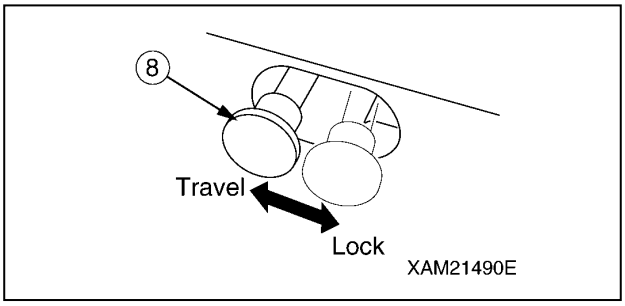

Fig. 4-8

- Lock: Push the lever to the right.
- Travel: Push the lever to the left.

NOTICE: Operate the travelling lock lever while the left and right travelling levers are at the "Neutral" position.

Left/Right Travelling Lever

Use these levers to move the machine forward/backward, stop, slew, and to adjust the travelling speed.

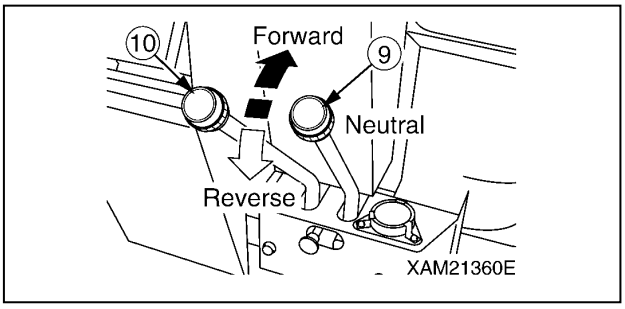

Fig. 4-9

- Forward: Push the left and right levers forward at the same time.
- Neutral: Release your hands from left and right levers at the same time. The levers return to the "Neutral" position and the machine automatically brakes and stops at that position.
- Backward: Pull the left and right levers toward you at the same time.
- Left turn: Release your hand from the left lever and operate the right lever forward or backward.
- Right turn: Release your hand from the right lever and operate the left lever forward or backward.
- Spin turn: Operate the left and right levers to the opposite direction. The left and right crawlers turn to the opposite direction, allowing you to make the spin turn.

https://truckmanualshub.com/

INSTRUMENT PANEL SECTIONS

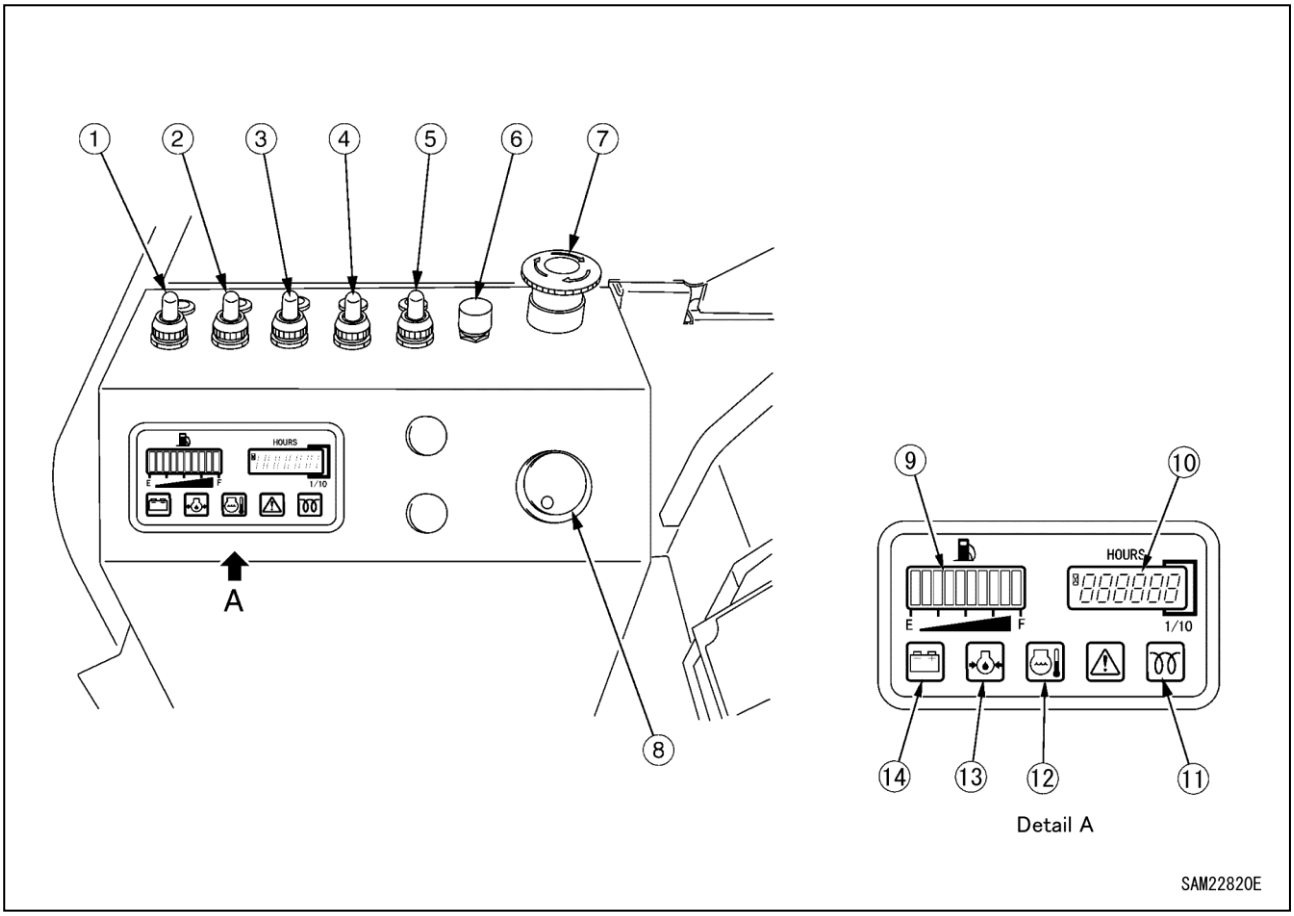

Fig. 4-10

1 – Working light switch
2 - Crane high-speed switch
3 - Hook stowing switch
4 - Travelling high-speed switch
5 - Boom stowing switch
6 - Horn switch
7 - Engine emergency stop switch (EMO)
8 - Starter switch
9 - Fuel gauge
10 - Hour meter
11 - Pre-heat monitor
12 - Engine water temperature monitor
13 - Engine oil pressure monitor
14 - Battery charge monitor

https://truckmanualshub.com/

Switches

Working Lights Switch

Use this switch to turn on the working lights on front of the machine. The pilot lamp at the switch section lights up when the switch is set to the "ON" position and extinguishes at the "OFF" position.

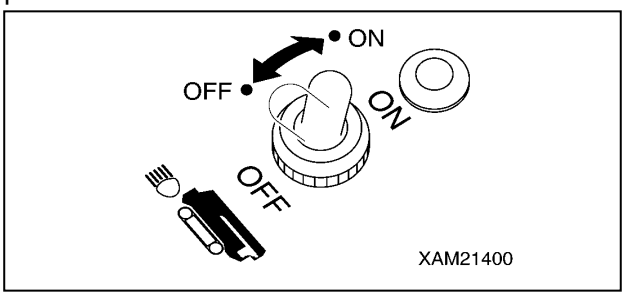

Fig. 4-11

- ON: Push the switch forward. The working lights turn on.
- OFF: Push the switch toward you. The working lights turn off.

NOTICE: The working lights do not light up even if the working lights switch is operated when the starter switch is at the "OFF" position.

Crane High-Speed Switch

Use this switch to change the operating speed of the crane during the crane operation.

The pilot lamp at the switch section lights up when the switch is operated to the "ON" position and extinguishes at the "OFF" position.

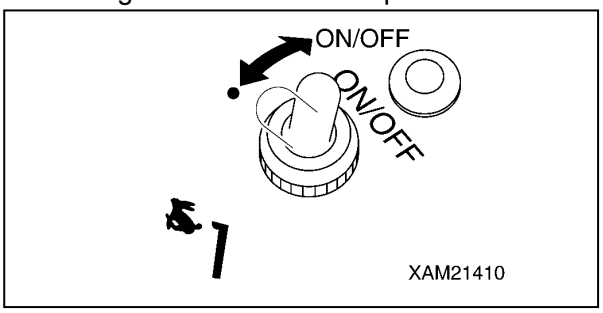

Fig. 4-12

- ON: Push the switch forward, and when the pilot lamp lights up the switch turns "ON" and the crane operating speed increases.
- OFF: Push the switch forward again, and when the pilot lamp goes off the switch turns "OFF" and the crane operating speed returns to normal.

NOTICE: Always set the work selector switch on the outrigger operation panel to the "Crane" position. If the work selector switch is at other position than "Crane", the crane high-speed switch does not work.

Hook Stowing Switch

WARNING!

- **The hook stowing switch cancels the auto-stop function of the over winding detector.**
  Operate the winch lever carefully when stowing the hook block. Pay sufficient attention not to let the hook block collide with the boom.
- **Use this switch only when stowing the hook block.**

Use this switch to stow the hook block at the tip of the boom. The pilot lamp at the switch section lights up when the switch is operated to the "ON" position and extinguishes at the "OFF" position.

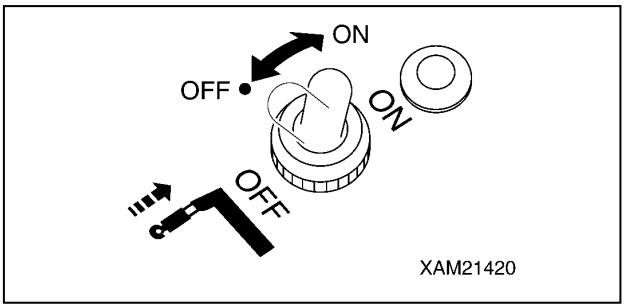

Fig. 4-13

- ON: Keep pushing the switch forward and operate the winch lever to "RAISE" side. The hook block is raised and can be stowed in the tip of the boom.
- OFF: Release your finger from the switch. The switch returns to the original position and the auto-stop function of the over winding detector will be activated.

https://truckmanualshub.com/

Travelling High-Speed Switch

NOTICE: It may be difficult to change the direction in the high-speed travelling mode. In that case, switch to the low-speed travelling mode.

Use this switch to change the mode of the machine travelling speed.

The pilot lamp at the switch section lights up when the switch is operated to the "ON" position and extinguishes at the "OFF" position.

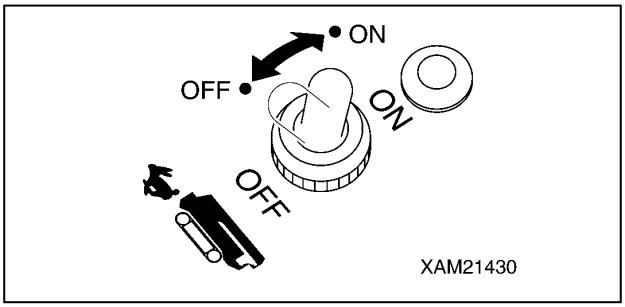

Fig. 4-14

- ON: Push the switch forward. The travelling speed mode changes to high-speed travelling mode.
- OFF: Push down the switch toward you. The travelling speed mode changes to low-speed travelling mode.

Boom Stowing Switch

WARNING!

- **The boom stowing switch cancels the auto-stop function of the lower-limit detecting interlock device during the boom "lowering" operation.**
  Operate the boom derricking lever carefully when stowing the boom. Pay sufficient attention not to let the boom collide with the machine body.
- **Use the boom stowing switch only when stowing the boom.**

Use this switch to stow the boom.

The pilot lamp at the switch section lights up when the switch is set to the "ON" position and extinguishes at the "OFF" position.

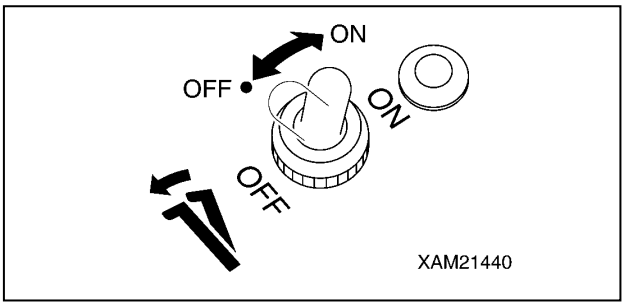

Fig. 4-15

- ON: Keep pushing the switch forward and operate the boom derricking lever to "LOWER" side. The boom lowers and can be stowed.
- OFF: Release your finger from the switch. The switch returns to the original position and the auto-stop function of the lower-limit detecting interlock device will be activated.

Horn Switch

Use this switch to honk the horn.

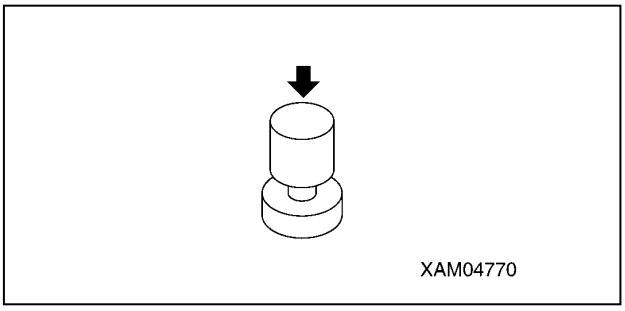

Fig. 4-16

- Honking the horn: Press the switch.

NOTES: The horn will stop when you release your finger from the switch.

Engine Emergency Stop Switch (EMO)

Use this switch in case of an error in the machine to stop the machine for emergency.

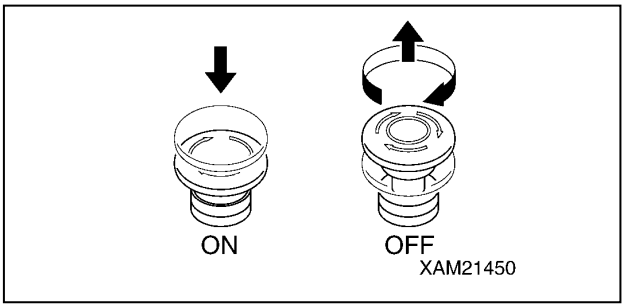

Fig. 4-17

- ON: Press the switch. The engine stops.
- OFF: Turn the switch clockwise (direction of the arrow in the figure). The switch returns to the original position.

https://truckmanualshub.com/

NOTES: When restarting the engine after overriding, be sure to turn the engine emergency stop switch (EMO) to the "OFF" position before starting the engine.

Starter Switch

CAUTION: Always turn the starter switch to the "OFF" position after completing the work.

NOTICE: When inserting the key for the starter switch, slide the cover to the left so that you can see the keyhole of the switch, and then insert the key.

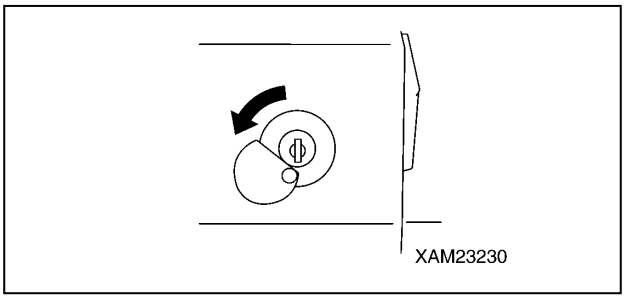

Fig. 4-18

Use this switch to start and stop the engine.

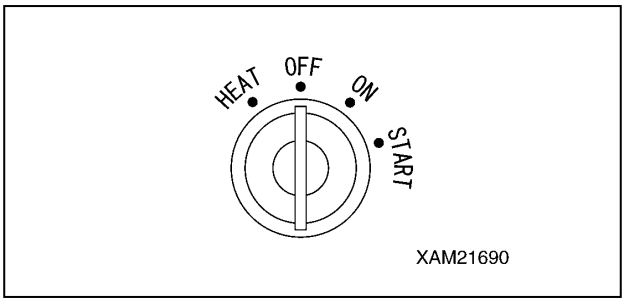

Fig. 4-19

- HEAT: Turn the key to this position when starting the engine in the cold weather.
- OFF: You can insert/remove the key at this position. All the switches in the electrical system are turned off and the engine stops.
- ON: Electricity runs into all the circuits.
- START: When the engine has started, release your hand from the key. The key automatically returns to the "ON" position.

Emergency Stop Cancel Switch

WARNING!

- **Do NOT set the emergency stop cancel switch to ON position during crane work. Such attempt prevents automatic stop from occurring even under overwound condition during crane work, thus may not only cause the hoisted load to collide and damage crane parts but may cause the load to drop and cause a serious accident or cause the machine to trip.**
  Keep the switch key extracted during normal crane works.

Monitors

CAUTION: If the monitor flashes during the work, stop the operation immediately and check, adjust, or repair the relevant section.

Fuel Gauge

This gauge indicates the remaining amount of the fuel in the fuel tank.

Turn the starter switch to the "ON" position and the gauge indicates the remaining amount of the fuel with the "bar".

When only one "bar" lights up on the "E" side, there is not much fuel left.

Stop the operation immediately and refuel.

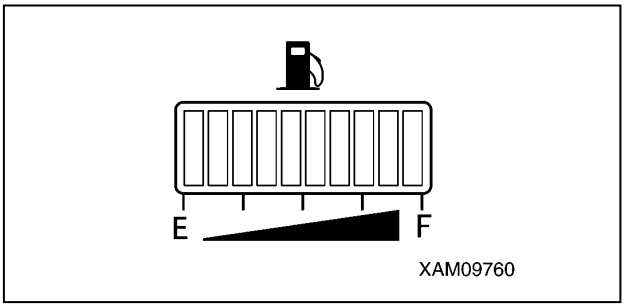

Fig. 4-20

NOTICE:

- *At the end of a day, fuel to full (until all the bars (10 bars) light up.)*
- *The remaining amount indicated may not be correct for a while after the starter switch is turned to the "ON" position. This is normal.*

https://truckmanualshub.com/

Hour Meter

This meter shows the total running hours of the machine.

Use this value as the reference for periodical check interval.

If the engine is in operation, the meter indication advances even if the machine is not moving.

The meter indication advances for "1" when the machine has been running for 1 hour regardless of the engine rotation speed.

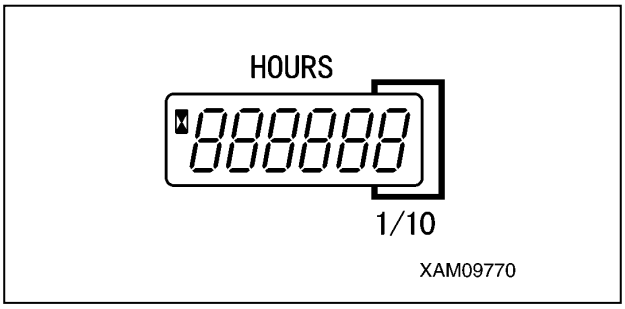

Fig. 4-21

NOTICE: The hour meter value will continue to increment whether the electric motor or engine is selected to power the machine.

Preheat Monitor

The monitor lights up during the preheating operation when starting the engine.

It lights up when the starter switch is operated to the "HEAT" (preheat) position and goes off in several seconds to indicate the completion of preheating.

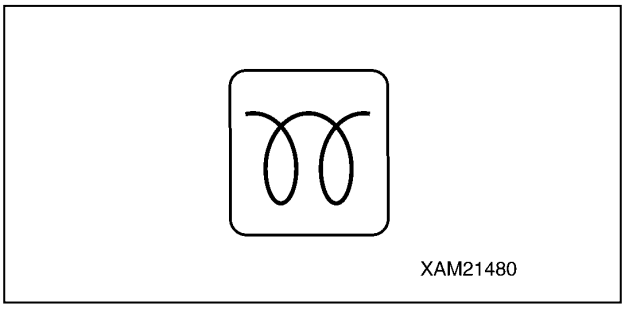

Fig. 4-22

Engine Water Temperature Monitor

This monitor indicates errors with the engine coolant temperature.

The temperature is normal if this monitor is OFF during the operation.

If it lights up during the operation, it means that the engine coolant temperature exceeded the normal temperature.

Promptly switch the engine rotation to low idling and wait until the monitor goes off (engine coolant temperature goes down).

Then, stop the operation and check the water leakage from the radiator, clogging in the radiator core, and damage and tension of the alternator belt.

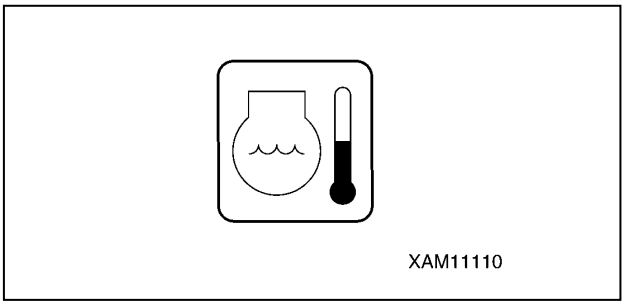

Fig. 4-23

Engine Oil Pressure Monitor

This monitor indicates the drop in the engine oil pressure.

If it lights up when the starter switch is turned to the "ON" position and goes off as the engine rotation increases after the engine is started, the engine oil pressure is normal.

If it lights up during the operation, the engine oil pressure has dropped.

Immediately stop the machine and check the clogging of the engine oil filter and engine lubricant level.

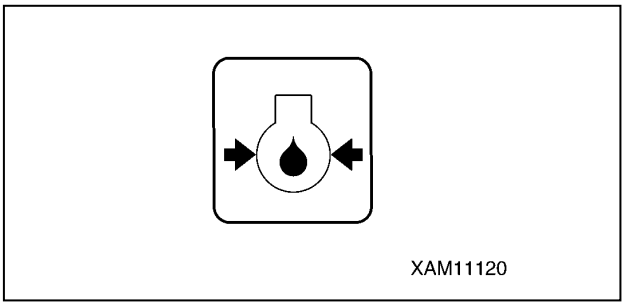

Fig. 4-24

https://truckmanualshub.com/

Battery Charge Monitor

This monitor indicates errors in the battery charge system.

If it lights up when the starter switch is turned to the "ON" position and goes off as the engine rotation increases after the engine is started, the battery charge system is normal.

If it lights up during the operation, there is an error in the battery charge system.

Immediately stop the machine and check the tension of the alternator belt.

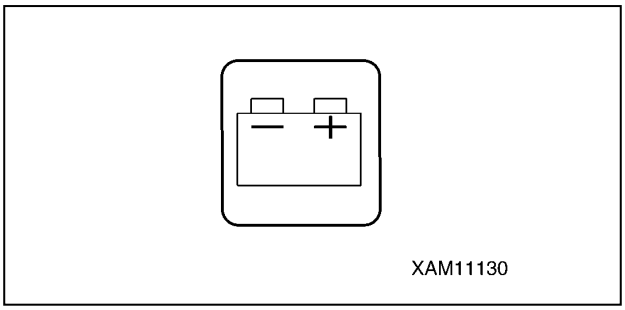

Fig. 4-25

OPERATION SEAT

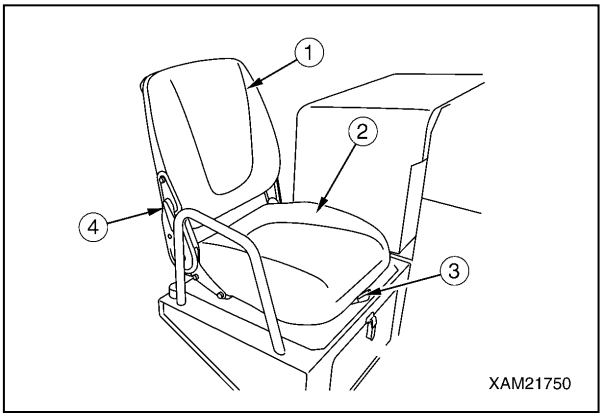

Fig. 4-26

1 - Back seat
2 - Seat
3 - Slide adjusting lever
4 - Reclining adjusting lever

WARNING!

- **Adjust the operation seat before driving. Be sure to make adjustment especially after someone else has used it.**
- **Press your back against the back seat of the operation seat and adjust the operation seat so that you can operate the acceleration pedal, control levers and travelling lever without any difficulty.**
- **Never adjust the operation seat while driving the machine.**

https://truckmanualshub.com/

Seat Forward/Backward Slide Adjustment

Use the slide adjusting lever (3) to make adjustment.

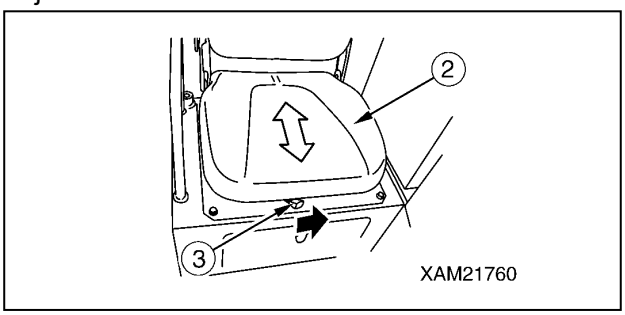

Fig. 4-27

1. While pushing the slide adjusting lever (3) leftward, move the seat (2) forward/ backward.
2. After adjusting the seat (2), release your hand from the slide adjusting lever (3). The seat (2) is fixed to the position.

NOTICE: The forward/backward slide adjustment distance is 120 mm in 6 steps.

Reclining Adjustment

Use the reclining adjusting lever (4) to make adjustment.

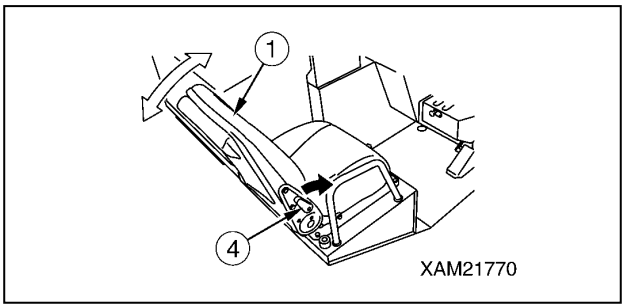

Fig. 4-28

1. While pushing the reclining adjusting lever (4) forward, move the backseat (1) forward/ backward.
2. After adjusting the back seat (1), release your hand from the reclining adjusting lever (4).
   The back seat (1) is fixed to the position.

NOTICE: The reclining adjustment angle is 75 degrees in 7 steps forward and 23 steps in backward.

COLD WEATHER OPERATION

Cautions When Snow Covered or Frozen

WARNING! ALWAYS observe followings to prevent serious injuries and death accidents when travelling over a snow covered ground or frozen road for unavoidable reason.

- **The snow covered grounds and frozen roads cause slips even when the inclination is small, so decrease the speed when travelling and avoid starting sudden, stopping sudden stop and slewing sudden. Uphill and downhill are especially likely to cause slips and thus dangerous.**
- **Ground of the frozen road becomes soft when the air temperature rises and causes the Machine travels and other operations to be unstable. Be very careful.**
- **Under cold weather, check that the load to be hoisted is not frozen stuck to the ground or other substance. Attempt to hoist without knowing the load is frozen stuck to the ground or other substance is dangerous.**
- **Do NOT directly contact metal surface with your body part such as a finger or hand under cold weather.**
- **Attempt to contact the metal surface of the Machine under harsh cold weather may cause the skin to stuck frozen to the metal surface.**
- **Remove snow and/or ice laid on the Machine that causes the safety nameplates to be hard to read. Be especially careful to securely remove those that are on the boom and thus may fall.**

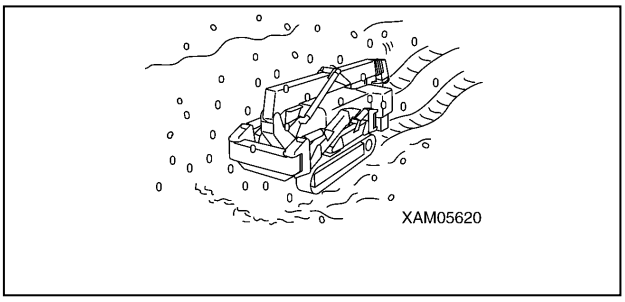

Fig. 4-29

https://truckmanualshub.com/

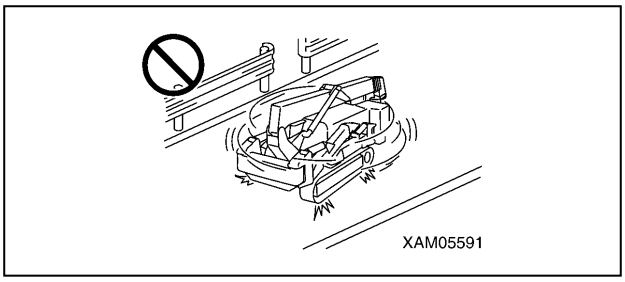

Fig. 4-30

Cautions under Cold Weather

WARNING!

- **Remove snow from and defreeze the slew gear, boom and winch related parts, and check the movements before work.**
- **Warm up enough.**
- **Attempt to operate the operation levers and switches without enough warm-up causes the Machine to react dull, and may result in unexpected accidents.**
- **Avoid acutely accelerating the engine during short time after starting the engine.**
- **Increase the oil temperature of the hydraulic circuit by relieving the oil pressure (let the pneumatic oil to escape to the hydraulic oil tank by raising to above the hydraulic circuit set pressure) by using operation lever. Doing so improves the Machine reactions and prevents improper operations.**
- **If the battery fluid is frozen, do NOT charge battery or start the engine using other power source.**
- **Such act may cause the battery to catch fire.**
- **Before charging or starting up using other power source, defreeze the battery fluid and check that failures such as battery fluid leak do not exist.**
- **After end of the work, wipe off and apply wraps if substances such as condensation, snow or mud are stuck to the wire harness, connector (1), switches, sensors or similar part.**

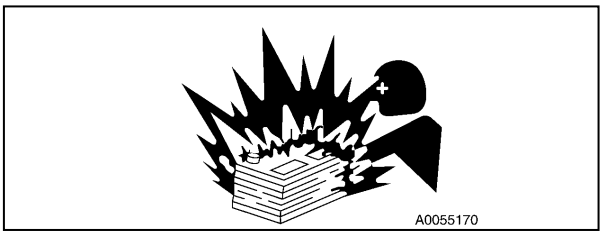

Fig. 4-31

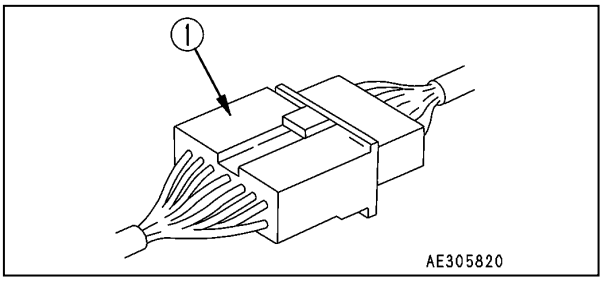

Fig. 4-32

https://truckmanualshub.com/

STARTING ENGINE

Checking before Operation

Perform the steps described in this section before starting work each day.

Visible Checks

For more information on inspection, see "Pre-Start Visible Checks" on page 5-22.

Checking before Starting Engine

For more information on inspection, see "Pre-Start Inspection - Before Starting Engine" on page 5-25.

Checking after Starting Engine

For more information on inspection, see "Post-Start Inspection - After Starting Engine" on page 5-33.

WARNING! Verify that there is no one and obstacle around when starting the engine. Honk a horn and start the engine.

Normal Engine Start

CAUTION:

- **If it is hard to start the engine due to low ambient temperature, see "Starting Engine in Cold Weather" on page 4-16 for the engine starting operation.**
- **Do not keep the starter turned for more than 5 seconds. Doing so will accelerate the battery discharge.**
- **Wait for about 1 minute before attempting to start the engine again if it did not start.**
- **Verify that the fuel lever of the water separator pot is at the vertical position (open) before starting the engine.**
- **Verify that the switch on the control box for the radio controller is at the "OFF" position.**

1. Lightly step on the acceleration pedal (6) to operate the engine at low speed.

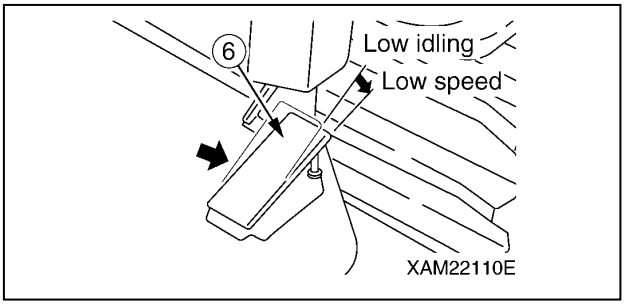

Fig. 4-33

2. Insert the key into the starter switch and turn the key to the "START" position.

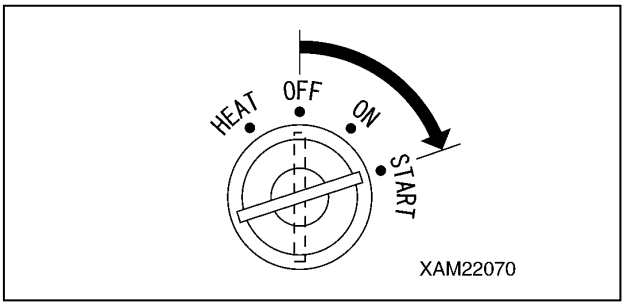

Fig. 4-34

3. Release your hand from the key once the engine has started.
   The key will automatically return to the "ON" position.

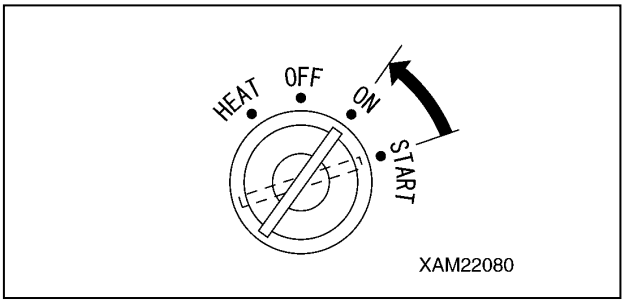

Fig. 4-35

https://truckmanualshub.com/

Starting Engine in Cold Weather

CAUTION:

- **Do not keep the starter turned for more than 5 seconds. Doing so will accelerate the battery discharge.**
- **Wait for about 1 minute before attempting to start the engine again if it did not start.**
- **Verify that the fuel lever of the water separator pot is at the vertical position (open) before starting the engine.**
- **Verify that the main switch on the control box for the radio controller is at the "OFF" position.**

Start the engine as follows when it is cold.

1. Insert the key into the starter switch and turn the key to "HEAT" (preheat) position. Keep the position until the "preheat monitor" goes off.
   Release your hand, and the key will automatically return to the "ON" position.

NOTICE: When the starter switch is operated to the "HEAT" (preheat) position, the "preheat monitor" lights up, indicating that the engine is preheated.
When the engine preheating has completed, the "preheat monitor" goes off.

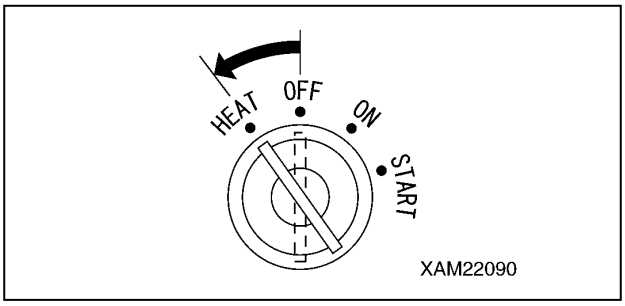

Fig. 4-36

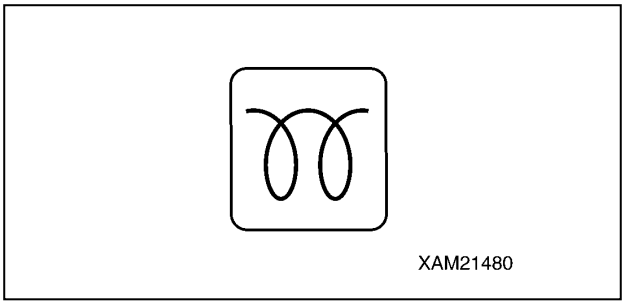

Fig. 4-37

2. Step on the acceleration pedal (6) to the half of the full stroke and operate the engine at medium speed.

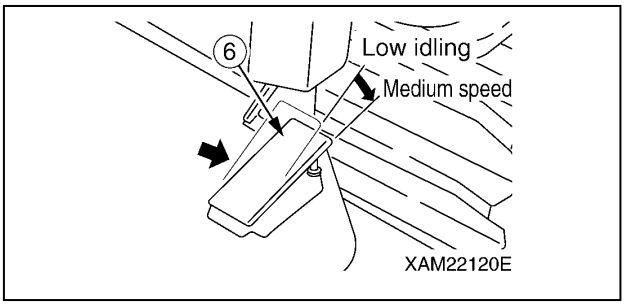

Fig. 4-38

3. When the "preheat monitor" goes off, turn the key to the "START" position.

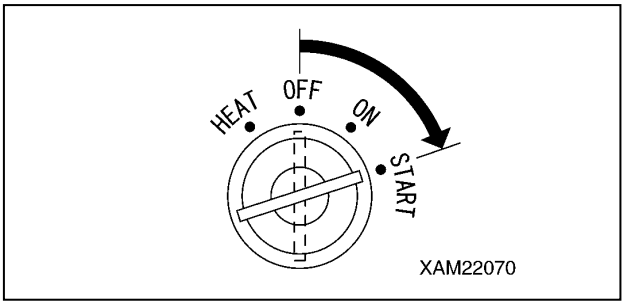

Fig. 4-39

4. Release your hand from the key once the engine has started.
   The key will automatically return to the "ON" position.

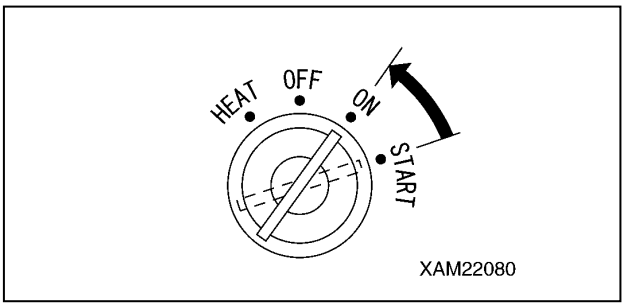

Fig. 4-40

https://truckmanualshub.com/

Correction When Working at High Altitude

In general, when the altitude increases, engine output decreases and exhaust smoke concentration increases.

The high altitude correction control is applied to secure engine performance and durability at high altitude.

While an increase in exhaust smoke concentration is suppressed by the high altitude correction control, output decreases due to a decrease in air density.

Reduced engine performance at higher altitude does not mean there is overall reduced performance with regards to the cranes lifting capacities. There is a number of variables that effect lifting performance, not just the engine.

1. OUTPUT CORRECTION

The relationship between an increase in altitude and a decrease in output is shown as below.

Altitude (m)	0	1000	2000	3000
Decrease in rated output (%)	0	10	20	30

2. TORQUE CORRECTION

A decrease in output due to an increase in altitude affects the maximum torque.

A decrease in the maximum torque is shown as below.

Altitude (m)	0	1000	2000	3000
Decrease in maximum torque (%)	0	20	30	35

3. MISFIRE AT HIGH ALTITUDE

When operation is performed at high engine speed immediately after engine start at high altitude, misfires are likely to occur because of delayed ignition timing resulting from a decrease in air density and outside temperature.

The following measures are necessary to reduce misfires.

- Use fuel with a high cetane number (52 or more).
- Fully warm up the engine at mid to low engine speed (5 minutes or longer).

4. SOLENOID DRIVER HANDLING

A driver that detects atmospheric pressure is installed on the side of the reserve tank in the engine compartment. Please pay attention to the following when handling.

- Do not touch by hand or disassemble the terminal.
- Be careful of an electric shock because there is a circuit inside that generates high voltage.
- Although it is a waterproof structure, avoid submersion in water and high-pressure cleaning.
- Do not block the vent hole for the atmospheric pressure sensor.

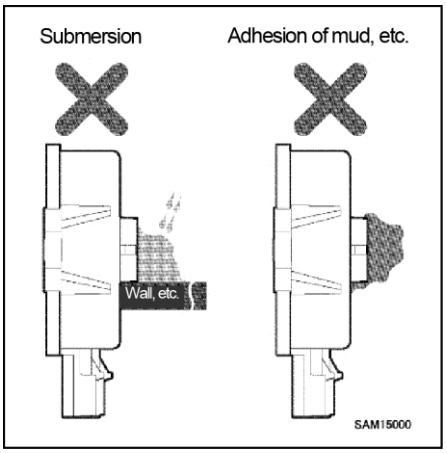

Fig. 4-41

https://truckmanualshub.com/

OPERATIONS AND CHECKS AFTER STARTING ENGINE

DANGER! Never refuel (diesel oil) while the engine is in operation.
Always stop the engine when refuelling.

WARNING!
- **If any abnormal condition takes place during the warm-up operation, immediately press the engine emergency stop switch (EMO) to stop the engine for emergency. Then, turn the starter switch to the "OFF" position. The power to the electrical system will be shut off.**
- **Always perform the warm-up operation. The sufficient warm-up operation is necessary particularly when it is cold.**
- **Insufficient warm-up operation will slow down the movement response of the travelling system or crane system to the operation levers, resulting in serious accidents.**
- **Always check the operation of the crane after warm-up operation.**
- **Be careful not to let the hook block interfere or collide with the boom.**
- **Be careful not to let the boom hit the operator or this machine when slewing the boom.**
- **If you find any abnormality during the crane operation check, stop the machine immediately for emergency and repair.**
- **Using the system in abnormal condition can result in serious accidents.**

CAUTION:
- **The appropriate temperature of the hydraulic oil is 50 to 80 °C.**
- **Even when operating at low temperature by necessity, increase the temperature of the hydraulic oil to about 20 °C.**
- **Do not idle away suddenly until the warm-up operation is done.**
- **When the engine has started, check if the "battery charge monitor" and "engine oil pressure monitor" went off.**
- **If there is any abnormality, repair.**
- **Do not leave the engine in low idling or high idling for more than 20 minutes.**

Perform the warm-up operation as follows once the engine has started.

1. Leave your foot away from the acceleration pedal (6). Keep the engine idling and continue the operation with no load for about 5 minutes.

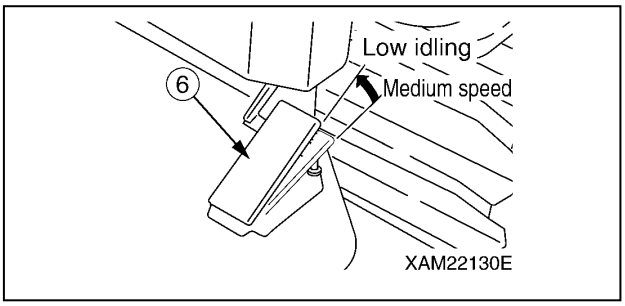

Fig. 4-42

2. Check if there is any abnormality with the engine exhaust gas colour, noise, and vibration.
   If there is any abnormality, repair.
3. Operate the work selector switch to the "Outrigger" position.

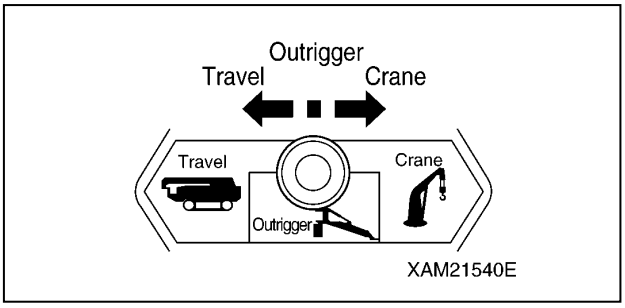

Fig. 4-43

4. See "OUTRIGGER SETTING" on page 4-36 and set the outriggers.
5. See "Before Crane Operations" on page 4-52 to loosen the hook block from the stowing position.

https://truckmanualshub.com/

6. Step on the acceleration pedal (6) to the half of the full stroke and operate the engine at medium speed.

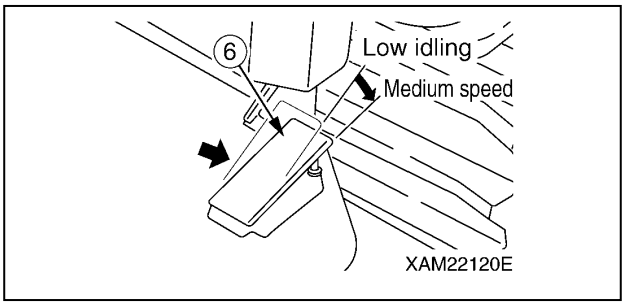

Fig. 4-44

7. Operate the boom derricking lever (4) slowly forward/backward and move the boom lift cylinder up/down until it reaches the stroke end. Check if there is any abnormality with the operation.
   If there is any abnormality, repair.

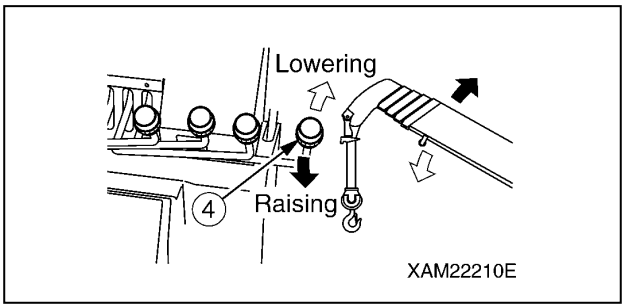

Fig. 4-45

8. Operate the boom telescoping lever (2) slowly forward/backward to extend/retract the boom until it reaches the stroke end. Check if there is any abnormality with the operation.
   If there is any abnormality, repair.

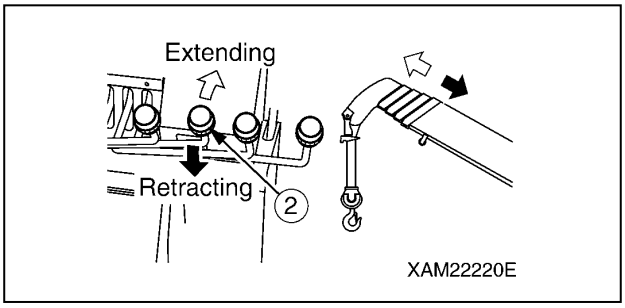

Fig. 4-46

9. Operate the winch lever (3) slowly forward/backward to check if the hook block is smoothly raised/lowered. Also check if the hook block immediately stops and the winch drum does not wind in mess when the winch lever returns to the "Neutral" position.
   If there is any abnormality, repair.

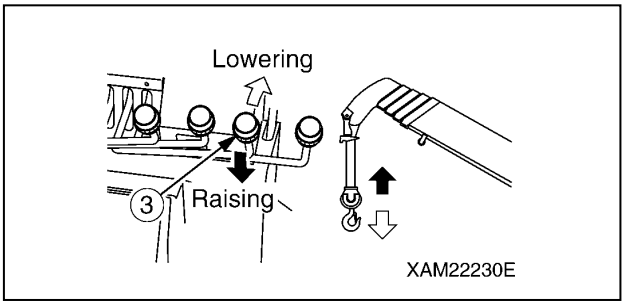

Fig. 4-47

10. Operate the slewing lever (1) slowly forward/backward to check if the crane smoothly slews clockwise (right) and counterclockwise (left) for 360 degrees or more. Also check if the crane stops immediately when the slewing lever returns to the "Neutral" position.
    If there is any abnormality, repair.

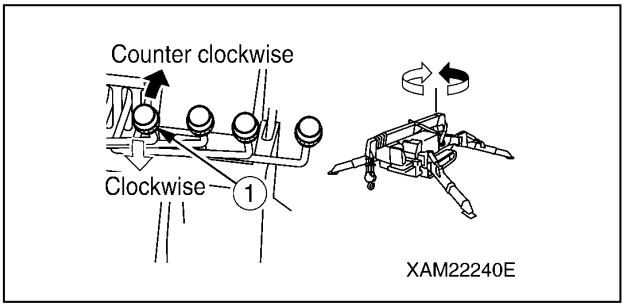

Fig. 4-48

https://truckmanualshub.com/

STOPPING ENGINE

CAUTION:

- **Stopping the engine before it sufficiently cools down may shorten the life of engine units. Do not stop the engine suddenly except for emergency.**
- **When the engine is overheated, do not stop the engine suddenly.**
- **Change the engine speed to low speed, and gradually cool down the engine before stopping the engine.**
- **Verify that the main switch at the radio controller control box unit is at the "OFF" position.**

1. Release your foot from the acceleration pedal (6) and change the engine speed to idling. Continue the no-load operation for about 5 minutes.

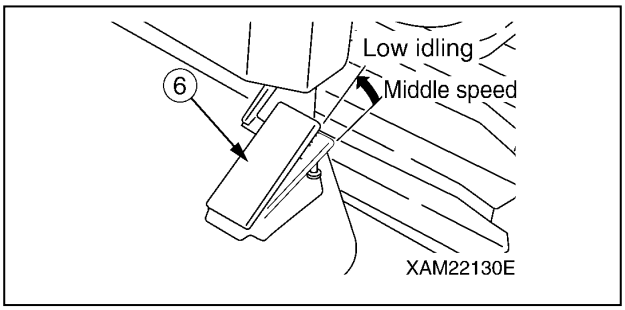

Fig. 4-49

2. Turn the starter switch to the "OFF" position. The engine will stop.

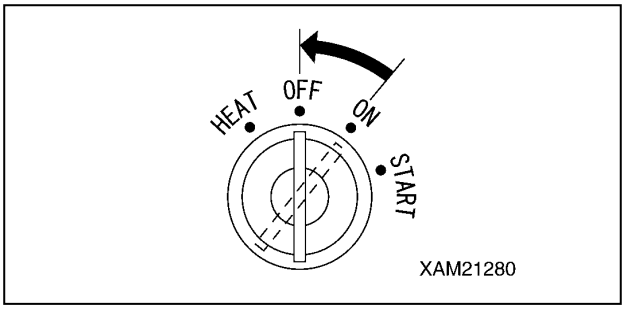

Fig. 4-50

3. Remove the starter switch key.

INSPECTION AFTER STOPPING ENGINE

1. Visibly check for oil leakage, fuel leakage, and water leakage, and check around the crawlers, crane, and exterior of the machine. If you find any leakage or abnormality, fix the problem.
2. Top off the fuel tank.
3. Dead leaves and papers around the engine will cause fire. Remove the dead leaves and papers.
4. Clean off mud on the crawlers and outriggers.

https://truckmanualshub.com/

TRAVELLING POSITION

WARNING!

- **When moving this machine self-propelled, take the "travelling posture" with which the boom, hook block, and outriggers are stowed.**
- **Travelling or travelling hoist with the boom extended is essentially prohibited. This will overturn the machine, causing serious injury accidents.**
- **Do not use this machine for other purpose than the major purpose such as using it for carrying the load on the machine.**
- **Follow the local laws and regulations if driving the machine on public roads.**

Take the travelling posture shown on the below when moving the machine.

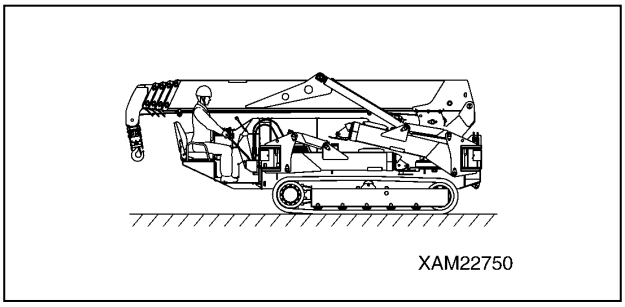

Fig. 4-51

1. See "Crane Stowing Operation" on page 4-57 to stow the crane. Stow the hook block in the specified position.

2. See "OUTRIGGER STOWING" on page 4-45 to stow the outriggers.

TRAVELLING CONTROLS AND OPERATION

WARNING! Not observing these cautions in travelling will result in serious accidents.

Cautions When Travelling

- **When travelling, stow hook and outrigger, and make sure the surrounding safety.**
- **When stowing outriggers, insert each position pins completely to lock.**
- **Be seated to operate travelling.**
- **Travelling over the boulder stones or a stump not only causes the overturning of the machine, but also gives an impact to the machine (especially around crawlers), causing breakage.**
- **Avoid or remove the obstacles not to travel over it whenever possible.**
- **If you have to travel over the obstacles by necessity, be sure to take the "travelling posture" to lower the centre of gravity, and reduce the travelling speed as much as possible so that the machine will go over the obstacles at the centre of the crawlers.**

NOTICE: See "TRAVELLING POSITION" on page 4-21 for the travelling posture of the machine.

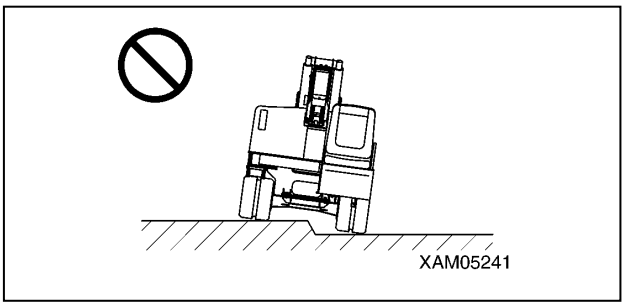

Fig. 4-52

https://truckmanualshub.com/

Allowable Water Depth

Use this machine in the water of the depth of under the centre of the idler (1) where the muffler beneath the machine body doesn't go under water.

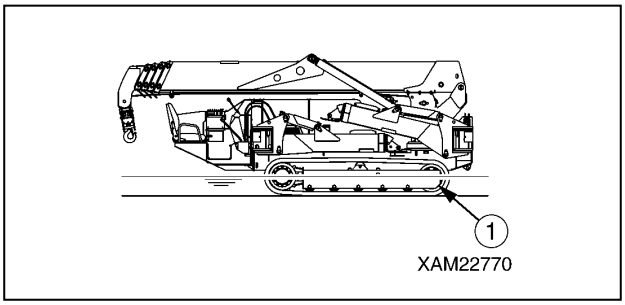

Fig. 4-53

Cautions on Upward/Downward Slope

WARNING!

- **If the machine tilts for "15 degrees" or more forward, backward, leftward, or rightward while travelling, the machine may overturn. Do not travel on the slope of more inclination.**
- **Be sure to switch the travelling high-speed switch to the "OFF" (low speed) position when travelling on the slope.**
- **Travelling on the slope in the high-speed travelling mode may result in overrun on the downward slope.**
- The slopes inclined for 15 degrees or more presents overturning hazard. Do not travel on these slopes.
- Be sure to switch the travelling high-speed switch to the "OFF" (low speed) position when travelling on the slope. The machine may overrun.
- Never change the direction on the slope or cut the slope horizontally.

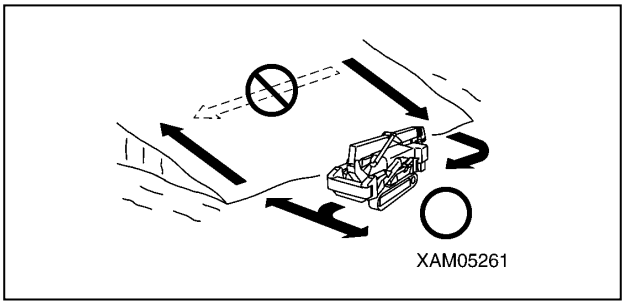

Fig. 4-54

- Travel safely such as by going down to the level ground and taking a detour.
- Operate the acceleration pedal and travelling levers to decrease the travelling speed as much as possible when going down the slope.
- Operating the travelling lever to the "Neutral" position automatically brakes the machine, but may overrun when going down the slope at high speed.
- Direct the machine perpendicular to the slope and the operation seat must be the side of the uphill when travelling on the slope.

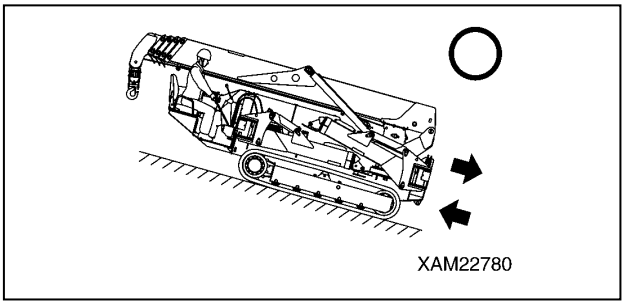

Fig. 4-55

- If the engine stops on the slope, return the travelling levers to the "Neutral" position and start the engine.

https://truckmanualshub.com/

STARTING TRAVELLING MACHINE

WARNING!

- **Do not allow anyone to come around the machine.**
- **Put away all the obstacles on the travelling path.**
- **Check for projections and grooves on the travelling path especially when going backward. Fix the travelling path.**
- **Check the safety around the machine and honk a horn before starting travelling the machine.**
- **Adjust the engine speed to low and operate the left and right travelling levers slowly at the same time. Check the travelling speed of the machine.**
- **Do not make sudden start especially when you are going backward. You can cause serious accidents.**
- **The front of the machine will be the blind corner. Be extremely careful when travelling forward.**
- **If you cannot verify the safety because the travelling direction is the blind corner, stop travelling and check the safety in the travelling direction. Staff a guide person if necessary depending on the work site situation.**
- **Operate the work selector switch to the "Travel" position and the travelling lock lever to the "Travel" position.**

Preparation before Starting Travelling

1. Operate the work selector switch on the outrigger operation panel to the "Travel" position.

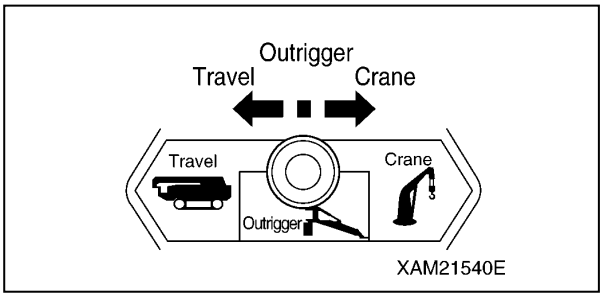

Fig. 4-56

2. Push down the travelling lock levers (8) to the "Travel" position.

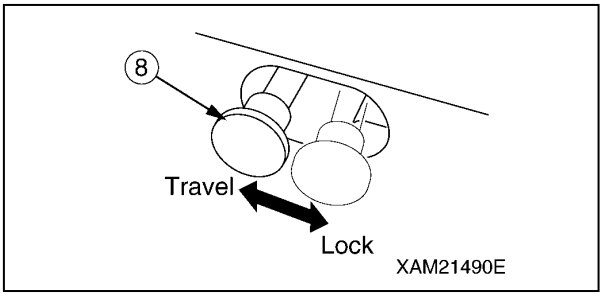

Fig. 4-57

Travelling Forward

Operate the left and right travelling levers at the same time.

- Push the left and right travelling levers slowly forward to travel forward.

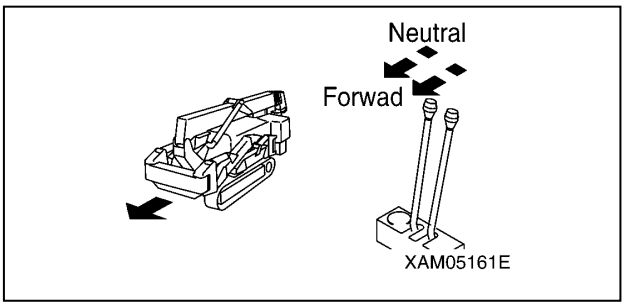

Fig. 4-58

Travelling Backward

Operate the left and right travelling levers at the same time.

- Pull the left and right travelling levers slowly toward you to travel backward.

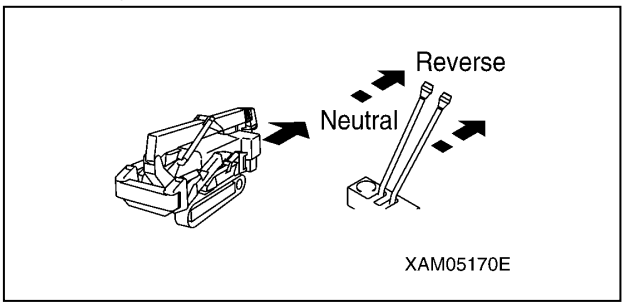

Fig. 4-59

https://truckmanualshub.com/

CHANGING MACHINE TRAVELLING MODE

WARNING!
- **Choose the appropriate travelling speed to the ground and road surface conditions while driving the machine.**
- **You can operate the travelling levers or choose "high-speed travelling mode" or "low-speed travelling mode" with the operation position of the travelling high-speed switch to change the travelling speed.**
- **Always set the travelling high-speed switch to the "OFF" (low speed) when driving on the slope. Travelling on the slope in the high-speed travelling mode may cause overrun on the downward slope.**
- **Be sure to stop the machine before changing the travelling speed mode.**

Changing Travelling Speed Mode

Operate the travelling high-speed switch on the instrument panel.
- Push down the travelling high-speed switch to the back.
- The pilot lamp of the switch section lights up and the machine will be in the "high-speed travelling mode".
- Push down the travelling high-speed switch toward you.
- The pilot lamp of the switch section goes off and the machine will be in the "low-speed travelling mode".

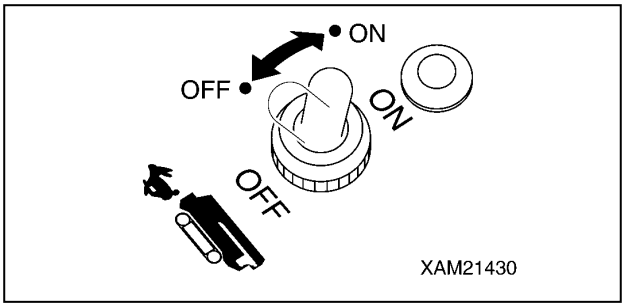

Fig. 4-60

DIRECTIONAL CONTROLS

WARNING!
- **Sudden steering or unnecessary spin turns at high speed not only damages the rubber track and hydraulic devices, but also may result in collision with other objects.**
- **Stop the machine, then adjust the engine speed to low speed before performing the spin turns.**
- **Do not change the path on the slope. The machine may slip to the side. Be especially careful on the soft ground and clay soil.**

Changing the Machine Direction While Being Stopped

Left Turn

Operate the right travelling lever.

Tilt the travelling lever forward to turn to the left in the forward direction.

Tilt the travelling lever toward you to turn to the left in the backward direction.

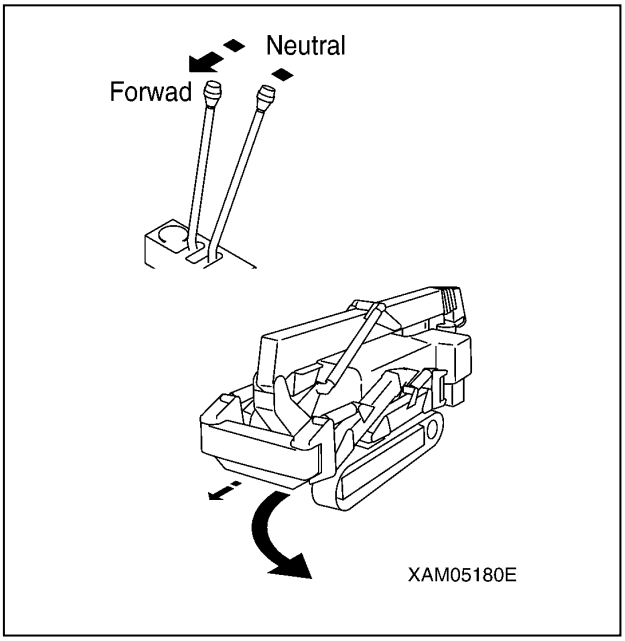

Fig. 4-61

Right Turn

Operate the left travelling lever.

Tilt the left travelling lever forward to turn to the right in the forward direction.

Tilt the left travelling lever toward you to turn to the right in the backward direction.

https://truckmanualshub.com/

Spin Turns

Left Spin Turn
Tilt the right travelling lever forward while tilting the left travelling lever toward you to rotate the left and right rubber tracks in the opposite direction for left spin turn.

Right Spin Turn
Tilt the left travelling lever forward while tilting the right travelling lever toward you to rotate the left and right rubber tracks in the opposite direction for right spin turn.

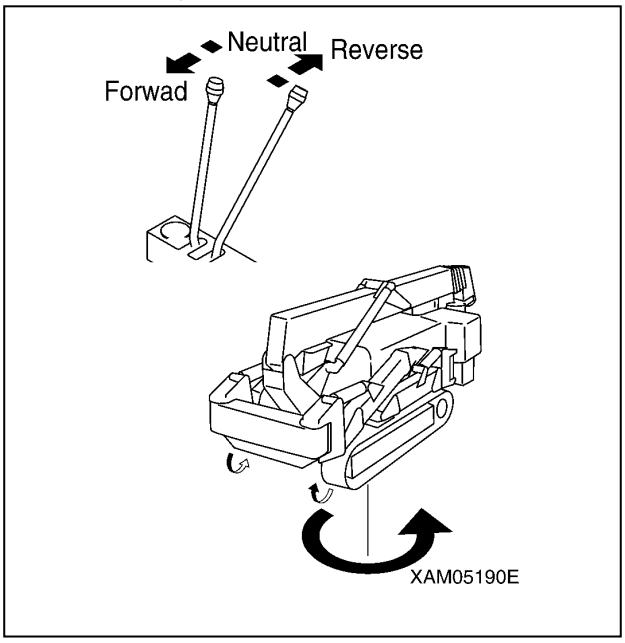

Fig. 4-62

Changing Path While Travelling Forward/Backward

Left Turn While Travelling Forward
While tilting the right travelling lever forward, return only the left travelling lever to the "Neutral" position.

Left Turn While Travelling Backward
While tilting the right travelling lever toward you, return only the left travelling lever to the "Neutral" position.

Right Turn While Travelling Forward
While tilting the left travelling lever forward, return only the right travelling lever to the "Neutral" position.

Right Turn While Travelling Backward
While tilting the left travelling lever toward you, return only the right travelling lever to the "Neutral" position.

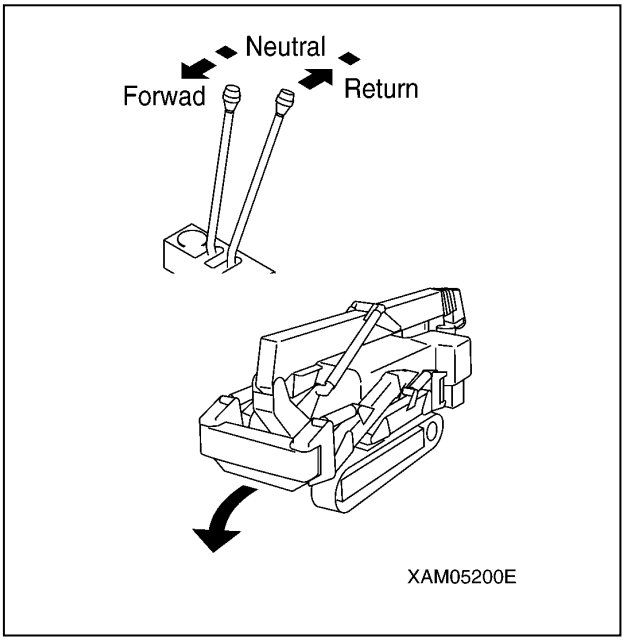

Fig. 4-63

https://truckmanualshub.com/

STOPPING/PARKING MACHINE

WARNING!

- **Avoid sudden stop and try to stop with margin whenever possible.**
- **Choose levelled and solid location for parking the machine.**
- **If you park on the slope by necessity, provide some break so that the machine will not move.**

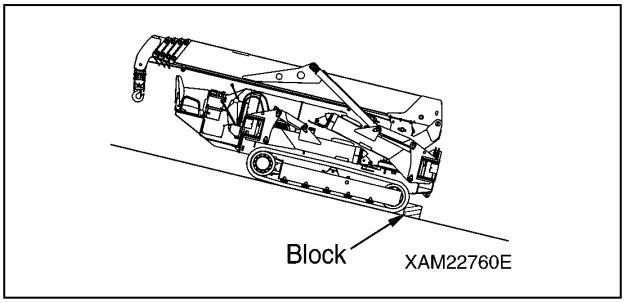

Fig. 4-64

- **Careless contact with the travelling lever(s) during the engine operation may result in sudden movement of the machine, leading to serious accidents.**
- **Always set the travelling lock lever to the "LOCK" position when parking the machine.**
- **Stop the engine and always remove the key for the starter switch. Bring the key with you when you leave the machine.**

1. Operate the left and right travelling levers to the "Neutral" position at the same time. This automatically brakes the machine and the machine stops.

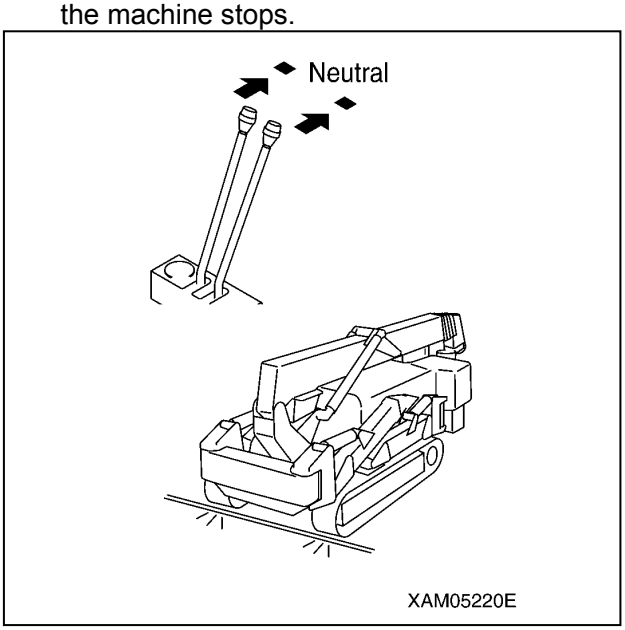

Fig. 4-65

2. Knock down the travelling lock lever ⑧ to the "LOCK" position.

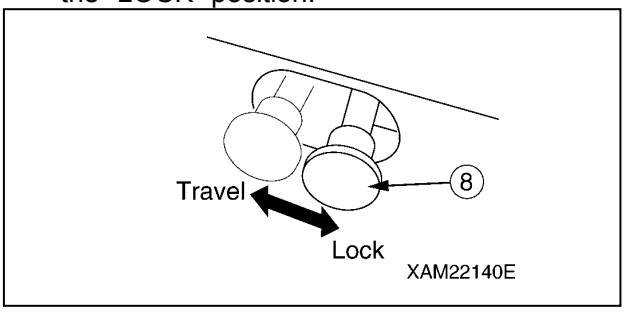

Fig. 4-66

https://truckmanualshub.com/

DESCRIPTION ON OUTRIGGER AND CRANE SAFETY DEVICES

Outrigger Safety Devices

Functions of Outrigger Safety Device

The outrigger safety devices have the interlock functions shown in the table below.

	Interlock Function	Description of Interlock Function
1	Outrigger Interlock	The outrigger is not enabled if the position pin is not inserted properly by rotating the outrigger rotary to extension side (outward) with the boom being stowed (boom lowered to maximum, slewed and stored). • Whether the boom is lowered to the maximum is verified by the detection switch located to the post. • Install a protrusion on the post at the boom slew and stow position and a detector switch on the travelling dolly in order to detect whether the boom has stopped at the slew and stow position.
2	Crane Interlock	The crane operation (telescoping, raising/lowering hook, boom lift, and slewing) is enabled only when all the four outriggers are extended and set (overhung and grounded). The outrigger extension status is detected as follows. • Install a detection switch at the position pin section of the outrigger rotary to detect the insertion of the position pin into the extension position. • Install a detection switch inside the outrigger inner box to detect if the tray is seated properly through the detection pin installed between the tip of the inner box and the tray.

CAUTION:

- **Set the outriggers in the extension status and operate the work selector switch in the outrigger operation panel to the "Crane" position to enable the crane operation.**
  When the detection condition for setting one of the four outriggers (see the item 2 in the table above) is no more fulfilled, the working status lamp (red) rotates and lights up, and outrigger un-set warning lamp (red) flashes.
  If this state remains for 3 seconds or more, the crane interlock function is activated and the crane operation will be disabled.
- **Stow the crane and operate the work selector switch on the outrigger operation panel to the "Outrigger" position to enable the outrigger setting and extension operations.**
- **If the crane operation is not enabled after operating the work selector switch on the outrigger operation panel to the "Crane" position even after the outrigger is being extended and set, there may be faulty adjustment or failure in the outrigger safety device.**
  Contact us or our sales service agency.
- **If outrigger setting or stowage operation is not enabled after operating the work selector switch on the outrigger operation panel to the “Outrigger” position even after the outrigger is being extended and set, there may be faulty adjustment or failure in the outrigger safety device.**
  Contact us or our sales service agency.

https://truckmanualshub.com/

WARNING! Understand well the operation sequence below, warning display from the safety devices under the corresponding machine conditions, and the details of operation stop. Keep these in mind for safe operations.

The table below shows what kind of "display and warning" will be issued and the resulting action of the safety devices when this machine is used in the standard condition.

The standard operation sequence shown here is as follows.

[1] Check before setting outriggers ⇒ [2] Outrigger setting operation ⇒ [3] Crane operation ⇒ [4] Crane stowing operation ⇒ [5] Outrigger stowing operation ⇒ [6] Machine travelling operation

The columns of the table below are described below.

Standard Operation Sequence, Machine Status	Display and Warning	Activation of Safety Devices
This field shows the standard operation sequence and the operation position of operation levers and switches, and machine status.	This field shows the "display" and "warning" issued as a result of the operation.	This field shows the name of the safety device that prevents the resulted error and its action.

Check before Setting Outriggers

Standard Operation Sequence, Machine Status	Display and Warning	Activation of Safety Devices
• Start the engine • Travelling lock lever at • "LOCK" position		
Check if the machine is in the posture of stowing the boom • Fully retract the boom • Boom horizontal stowing position • Boom slewing stowing position	• Boom stowing lamp on display panel ON [Outrigger un-set warning lamp flashes] [Working status lamp (red) ON]	Outrigger interlock device • All the outrigger operations stop if the boom stowing lamp does not light up.

Outrigger Setting Operation

Standard Operation Sequence, Machine Status	Display and Warning	Activation of Safety Devices
Set the outriggers. 1. Extend the outriggers. • Rotate the outrigger rotary and secure them at the specified position with the position pin • Work selector switch "Outrigger" • Outrigger extension switches "OUT"	• Extension lamps on display panel ON [Outrigger un-set warning lamp flashes] [Working status lamp (red) ON]	Outrigger interlock device • All the outrigger operations stop if one of the four extension lamps does not light up.
2. Set the outriggers. • Outrigger grounding switch "OUT" • Check the level with the level.	• Setting lamps on display panel ON [Outrigger un-set warning lamp OFF] [Working status lamp (red) OFF]	
When the machine tilts for 3 degrees or more during outrigger setting operation	• Warning buzzer sounds continuously	Crane inclination alarm device is activated

Crane Operation

Standard Operation Sequence, Machine Status	Display and Warning	Activation of Safety Devices

https://truckmanualshub.com/

Perform crane operations. • Work selector switch "Crane" • Crane operation with levers	• Boom stowing lamp on display panel OFF • Actual work and the rated total load are compared, and the working status lamp up according to the load factor. • Load factor for illuminating working status lamp • Load factor less than 90 %: Working status lamp (green) ON • Load factor 90 to less than 100 %: Working status lamp (yellow) ON, alarm sounds intermittently. • Load factor 100 % or more: Working status lamp (red) ON, alarm sounds continuously.	Moment limiter • When the load factor reaches 100 % or more (overloaded), hook raising, boom extending, and boom lowering operation stop.
When one of the outriggers go up in the air during crane operation	• Setting lamps (red) on display panel flash	Crane interlock device • If any of the extension lamps and setting lamps (total of eight) goes off, hook raising, boom extending, and boom lowering operation stop.
When the hook was raised excessively	• Alarm buzzer sounds continuously	Over winding detector is activated. Hook raising operation stops.
When the hook was lowered Excessively	• Alarm buzzer sounds continuously	Over winding detector is activated. Hook raising operation stops. Cable warning is activated. Hook lowering operation stops.
When the machine tilts for 3 degrees or more during crane operation	• Alarm buzzer sounds continuously	Crane inclination alarm device is activated

Crane Stowing Operation

Standard Operation Sequence, Machine Status	Display and Warning	Activation of Safety Devices
Operate the machine to take the boom stowing posture. • Fully retract the boom • Boom horizontal stowing position • Boom slew and stow position	• Boom stowing lamp on display panel ON	Outrigger interlock device • If the boom stowing lamp (green) does not light up, all the outrigger operations stop.

https://truckmanualshub.com/

Outrigger Stowing Operation

Standard Operation Sequence, Machine Status	Display and Warning	Activation of Safety Devices
Stow the outriggers. 1. Set and stow the outriggers. • Work selector switch "Outrigger" • Outrigger grounding switch "ON"	• Setting lamps (red) on display panel flash [Outrigger un-set warning lamp flashes] [Working status lamp (red) ON]	Crane interlock device • If any of the extension lamps and setting lamps (total of eight) goes off, all the crane operations stop.
2. Extend and stow the outriggers. • Outrigger extension switch "ON" • Rotate (Stow) the outrigger rotary and secure at the specified position with position pin. • Stop the engine.	• Extension lamps (red) on display panel flash [Outrigger un-set warning lamp flashes] [Working status lamp (red) ON]	
When the machine tilts for 3 degrees or more during outrigger stowing operation	• Warning buzzer sounds continuously	Crane inclination alarm device is activated

Machine Travelling Operation

Standard Operation Sequence, Machine Status	Display and Warning	Activation of Safety Devices
Travel the machine. • Travelling lock lever at "Travel" position • Start the engine. • Operate the travelling levers.		
When the machine tilts for 15 degrees or more during travelling operation	• Warning buzzer sounds continuously	Crane inclination alarm device is activated

https://truckmanualshub.com/

OUTRIGGER COMPONENTS

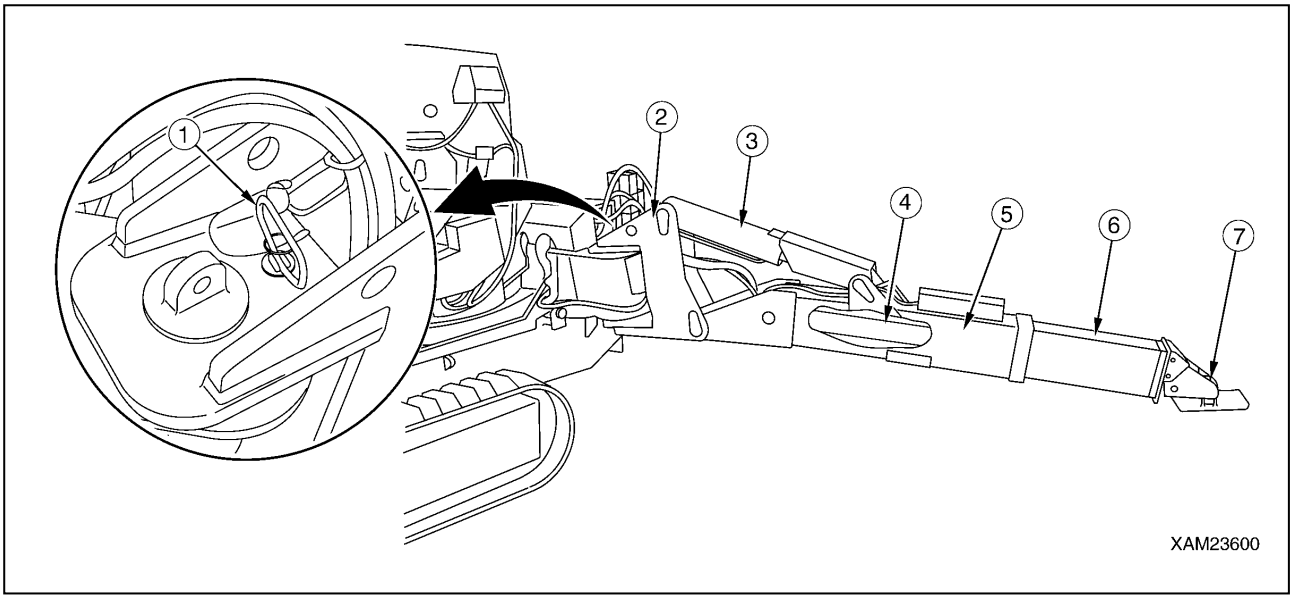

Fig. 4-67

1 - Position pin
2 - Rotary
3 - Outrigger setting cylinder
4 - Outrigger extension cylinder
5 - Outer box
6 - Inner box
7 - Rigor adapter (Tray)

https://truckmanualshub.com/

OUTRIGGER DISPLAY

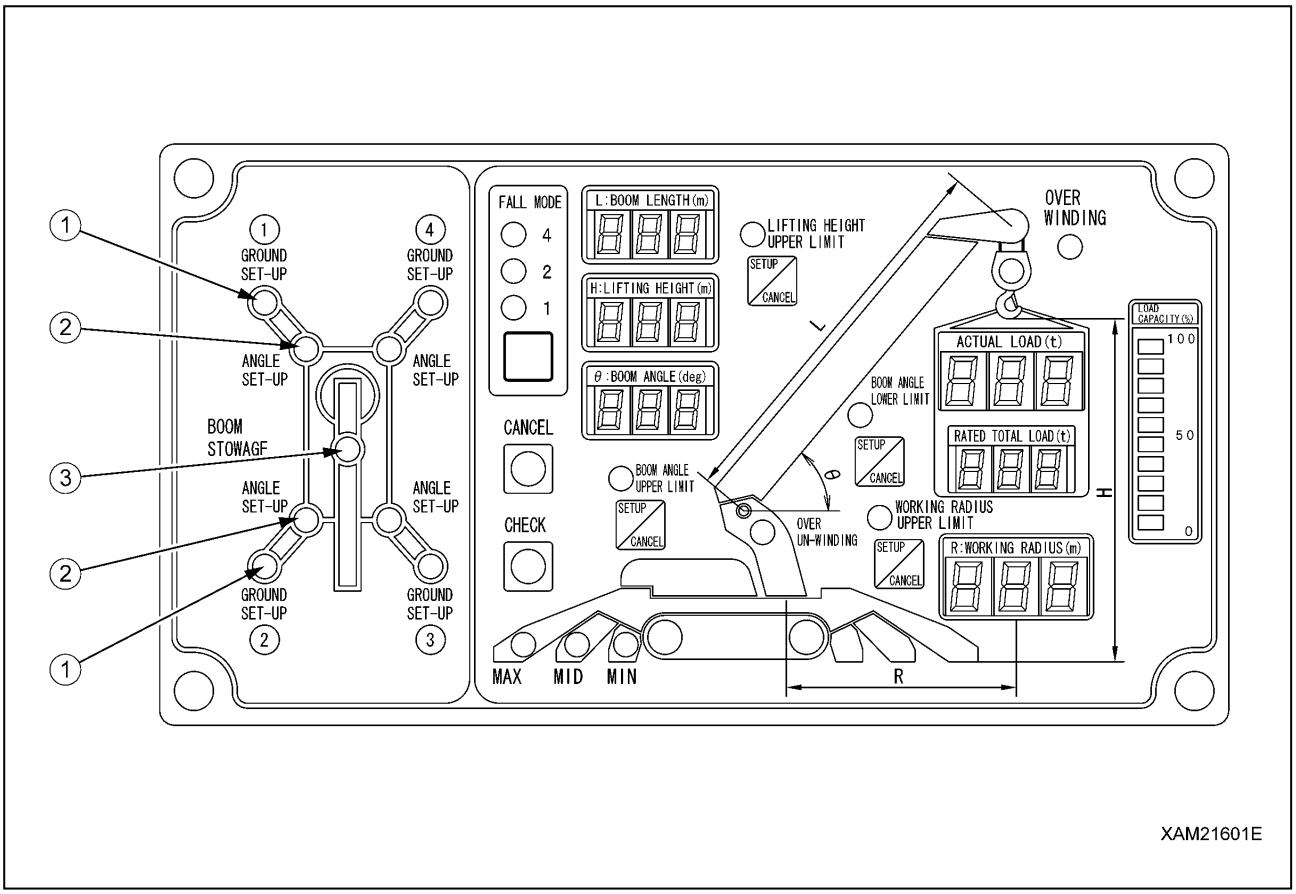

Fig. 4-68

1 - Outrigger grounding lamp
2 - Outrigger extension lamp
3 - Boom stowing lamp

Outrigger Grounding Lamps

The lamp turns on to indicate that the outrigger is set.
Turns on when the outrigger tray (3) is set, and turns off when the tray (3) floats (stow).
The conditions of the outrigger tray (3) are detected by the detection pin (1) at the tip of the inner box (2) and by the detection switch inside the inner box.

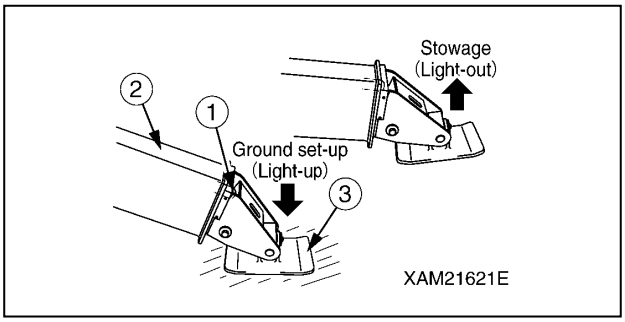

Fig. 4-69

Outrigger Extension Lamps

The lamp turns on to indicate that the outrigger is extended.
Turns on when the position pin (2) is inserted (extension), and turns off when extracted (stow).
The extraction/insertion of the position pin (2) is detected by the detection switch (1) of the outrigger rotary.

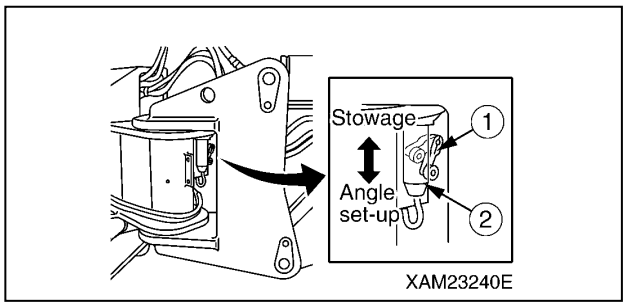

Fig. 4-70

https://truckmanualshub.com/

Boom Stowing Lamps

This lamp turns on and indicates that the boom is stowed.

The boom stowing lamp turns on and off in accordance to the following two types of detection switches. (When both of the detection switches detect.)

Boom Stowing Detection in Slewing Direction

The lamp turns on when the boom stops at the slew and stow position, and turns off when the boom leaves the slew and stop position.

Boom movements are detected by the projection (2) (slew) on the post and the detection switch (1) (fix) on the travelling dolly.

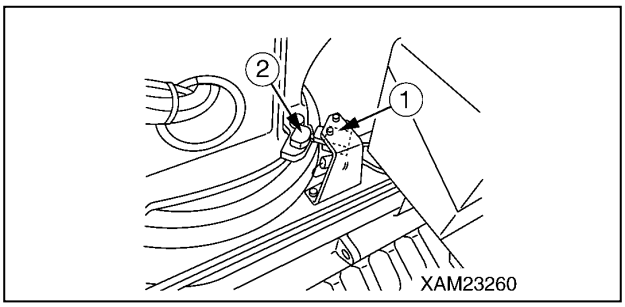

Fig. 4-71

Boom Stowing Detection in Horizontal Direction

The lamp turns on when the boom stops at the horizontal stowing position, and turns off when the boom leaves the horizontal stowing position.

Boom movements are detected by the projection (4) (movable) at the side of the boom rear edge and the detection switch (3) (fixed) at the boom connection.

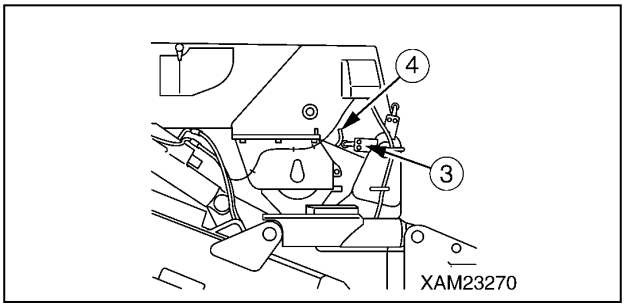

Fig. 4-72

OUTRIGGER UN-SET WARNING LAMP (RED)

This lamp flashes to indicate that one or more of the four outriggers are not properly set.

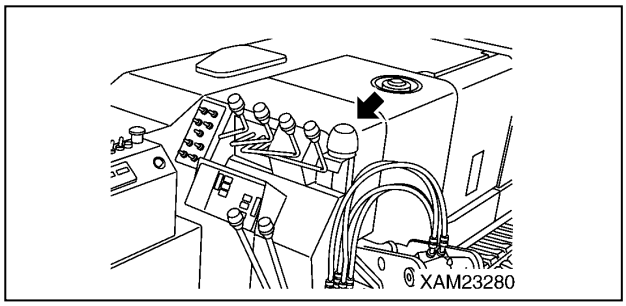

Fig. 4-73

NOTICE:

- *The outrigger un-set warning lamp flashes if extension or setting of any of the four outriggers cannot be detected.*
- *The outrigger un-set warning lamp is interlocked with the working status lamp (red) for moment limiter. As soon as the outrigger un-set warning lamp flashes, the working status lamp (red) also rotates and lights up.*

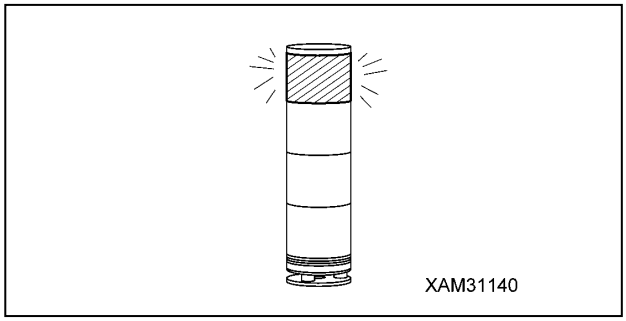

Fig. 4-74

https://truckmanualshub.com/

OUTRIGGER OPERATION PANEL

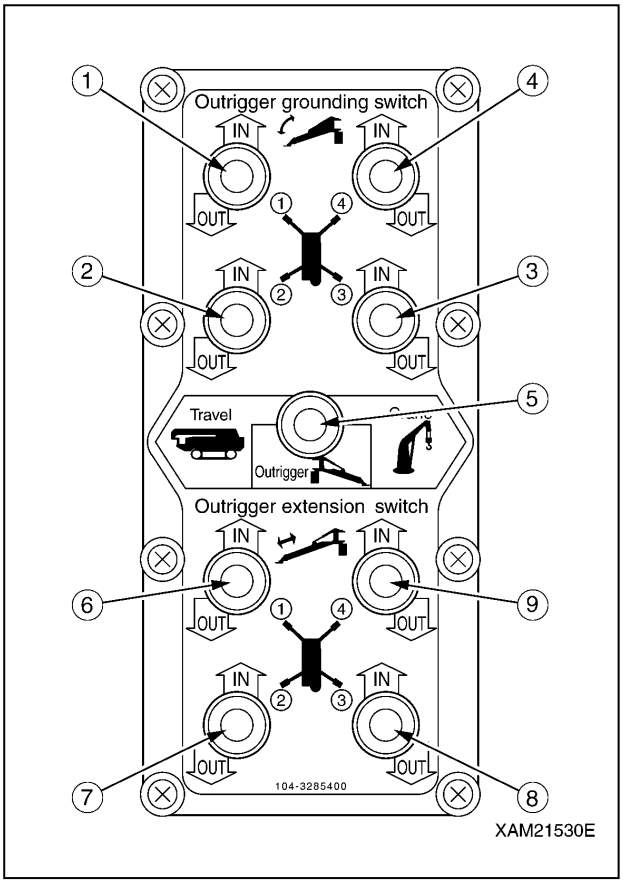

Fig. 4-75

1 - Outrigger 1 - grounding switch
2 - Outrigger 2 - grounding switch
3 - Outrigger 3 - grounding switch
4 - Outrigger 4 - grounding switch
5 - Work selector switch
(Travel, Outrigger, Crane)
6 - Outrigger 1 - extension switch
7 - Outrigger 2 - extension switch
8 - Outrigger 3 - extension switch
9 - Outrigger 4 - extension switch

Work Selector Switch (Travel, Outrigger, Crane)

WARNING!

- **When operating the work selector switch to the "Travel" position, be sure to stow the crane and put the machine in the "travelling posture". Driving the machine not in the "travelling posture" can overturn the machine, resulting in serious accidents.**
- **Be sure to operate the travelling lock lever to the "LOCK" position before outrigger or crane operation.**
- **Note that if the travelling lock lever is not at the "LOCK" position, you can still travel the machine even if the work selector switch is operated to the "Outrigger" or "Crane" position. The machine may move, causing serious accidents.**
- **Be sure to set all the outriggers when turning the work selector switch to the "Crane" position to perform the crane operation. Inappropriate setting of outriggers will prevent the crane operation because of the outrigger safety device function.**
- **Always stow the boom when performing the outrigger operation with the work selector switch set to the "Outrigger" position. If the boom is not stowed properly, the outrigger safety device function prevents the outrigger operation from being performed.**

Use this switch to switch the work state of the machine (Travel, Outrigger, Crane).

- Travel: Push down the switch to the left. Now you can travel the machine.
- Outrigger: Push down the switch to the centre position. Now you can perform the outrigger operation.
- Crane: Push down the switch to the right. Now you can perform the crane operation.

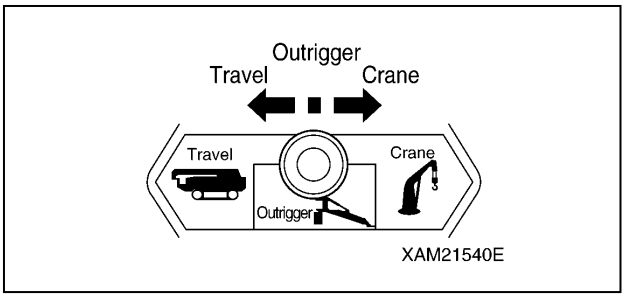

Fig. 4-76

https://truckmanualshub.com/

NOTICE: The table below shows the relation between the operation position of the work selector switch and permitted operations.

- *Only the travelling operation is active when the work selector switch is at the "Travel" position.*
- *When the work selector switch is at the "Outrigger" position, all the devices in the table below are active.*
- *Be sure to set the travelling lock lever to the "LOCK" position and stow the crane when operating the outriggers. Be careful not to touch the operation levers of the crane.*
- *When the work selector switch is at the "Crane" position, all the devices except for outrigger operation in the table below are active.*
- *Be sure to set the travelling lock lever to the "LOCK" position and set all the outriggers when operating the crane.*

Work Selector Switch Operation Position	Crane System (A: Active N: Not active)					
	Travelling Operation	Outrigger Operation	Crane Operation	Remote Control System		Moment Limiters
				Crane	Outrigger	
Travel	A	N	N	N	N	N
Outrigger	N (Note 1)	A	N	N	A	A
Crane	N (Note 1)	N	A	A	A (Note 2)	A

Note 1: Operating the travelling lock lever to the "LOCK" side restricts the travelling operation.
If the lever is not operated to the "LOCK" side, the machine travels when a travelling lever is operated.

Note 2: The outrigger operation is enabled only when the transmitter of the Remote Control System is in the "OUTRIGGER mode".

Outrigger Grounding Switches

Use these switches to set or stow the outriggers.

There are four outriggers ((1) to (4)). Each outrigger can be operated independently or all together.

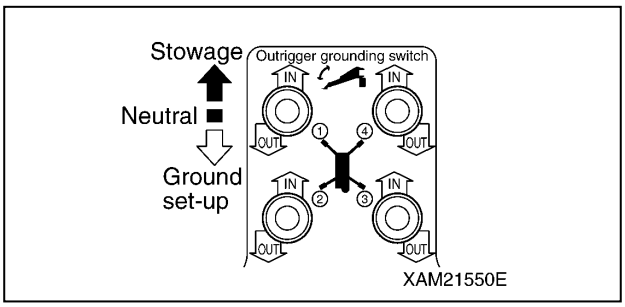

Fig. 4-77

- IN: Push down the switch upward. The outrigger setting cylinder retracts and you can stow the outrigger.
- Neutral: Release your finger from the switch. The switch returns to the "Neutral" position and the outrigger setting cylinder stops telescoping.
- OUT: Push down the switch downward. The outrigger setting cylinder extends and you can set the outrigger.

Outrigger Extension Switch

Use these switches to extend or stow the outriggers.

There are four outriggers ((1) to (4)). Each outrigger can be operated independently or all together.

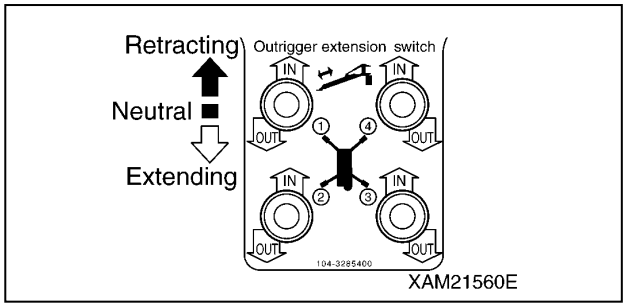

Fig. 4-78

- IN: Push down the switch upward. The outrigger extension cylinder retracts and you can stow the outrigger inner box.
- Neutral: Release your finger from the switch. The switch returns to the "Neutral" position and the outrigger extension cylinder stops telescoping.
- OUT: Push down the switch downward. The outrigger extension cylinder extends and you can extend the outrigger.

https://truckmanualshub.com/

OUTRIGGER SETTING

Outrigger Setting Precautions

Selecting Location to Set Outriggers

- When setting the outriggers on the structural objects such as construction site or concrete floor, verify in advance that the surface where the outriggers will be set has sufficient strength. Insufficient strength in the setting surface will result in overturning or fall of machine due to collapse of the setting surface.
- Setting the outriggers on the soft ground as given below will cause the tray of the outriggers to sink in the ground, leading to the overturning of the machine.
  - Road surface with low-cost pavement (low-cost asphalt or thin concrete)
  - Surface with paving stones.
  - Area reclaimed after excavation work
  - Landfill
  - Road shoulders or area close to hole such as excavation work
  - Deteriorated pavement surface
  - Areas where under the pavement surface is hollow due to water erosion and the top soil appears to be hard but soft in the ground.

Protecting Ground

- Place a sole plate of sufficient size with sufficient strength under the tray of all the outriggers on the soft ground to protect the ground.
- If you have to set the outriggers near the road shoulder by necessity, take secure action to prevent the collapse of the road shoulder.
- When working on the slope, level the tray of all the outriggers and the ground under the rubber tracks before setting the outriggers.
  Setting the outriggers with the tilted ground surface without levelling the ground surface will cause the outriggers to slip or overturn, causing serious accidents.
- If the ground is not protected or if the outriggers may sink even after protecting the ground, do not perform the crane operations.

Use of stable sole plate

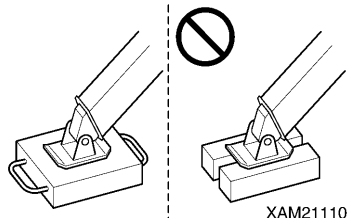

Fig. 4-79

Surface with low-cost pavement

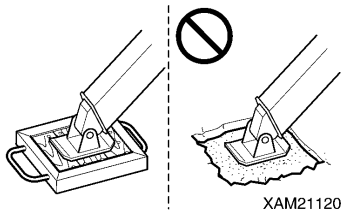

Fig. 4-80

Surface with paving stones

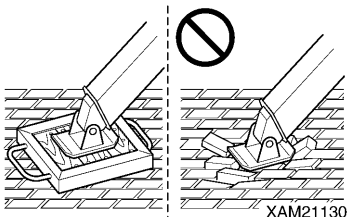

Fig. 4-81

Landfill, etc.

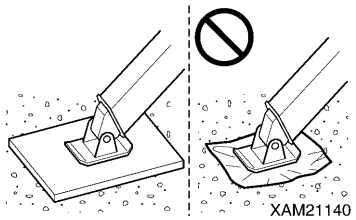

Fig. 4-82

Levelling ground of slope

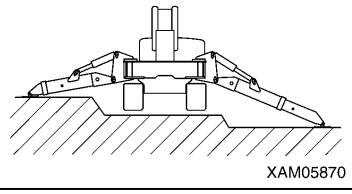

Fig. 4-83

https://truckmanualshub.com/

Cautions When Placing Outrigger

Always observe followings to prevent serious injuries and death accidents when placing the outriggers.

- When placing the outriggers, ALWAYS keep the Machine sternly level while looking at the level gauge. Occasionally view the level gauge and make sure to keep the Machine level during the crane works as well. Performing the crane operation with the body tilted will cause overturning.
  This device indicates how much the machine body is tilted.
  The bubble position shows how much the machine is tilted in which direction.
  Use this device to verify that the machine is levelled when setting the outriggers.

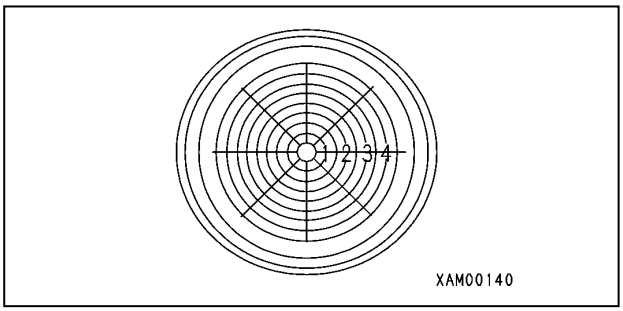

Fig. 4-84

- Place the outriggers at a maximum extension condition as the basic rule.
  In case of placing in a non-maximum extension condition for unavoidable reason, ALWAYS find the values outrigger middle extension or outrigger minimum extension values in the rated total load chart before work.

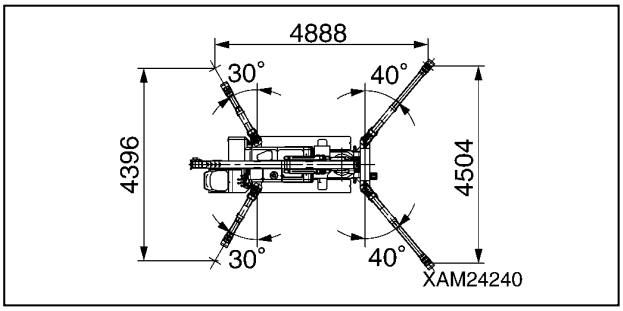

Fig. 4-85

- Place the outriggers in a style that the rubber tracks are approximately 50 mm above the ground.

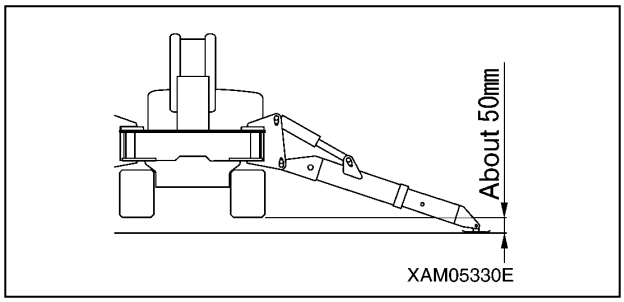

Fig. 4-86

- Make sure all of the outrigger position pins are securely fixed.
- Do NOT let people approach nearby when placing the outriggers.
  Otherwise, serious accidents for instance the outrigger support catching a foot may occur.
- Verify that the Moment Limiter Override Switch is at the "OFF" position.
- Do NOT attempt any outrigger operation with the moment limiter override switch ON.
- The moment limiter override switch should be set to "ON" only when the moment limiter is faulty or for crane inspection and maintenance work.
  If the Moment Limiter Override Switch is "ON", an alarm buzzer will sound intermittently.

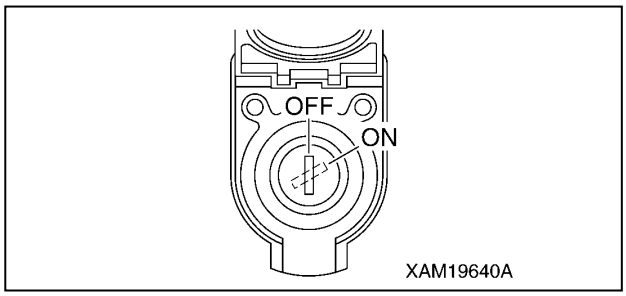

Fig. 4-87

Ground for Setting Outriggers

Always set the outriggers to the level, safe and solid ground.

Performing the crane operation without setting the outriggers can contribute to the overturning of the machine.

Outrigger Safety Device

Always set the moment limiter override switch to the "OFF" position when operating the outriggers.

Do not operate the outriggers with the moment limiter override switch at the "ON" position.

Set the moment limiter override switch to the "ON" position only when performing the inspection and maintenance.

https://truckmanualshub.com/

Extending and Grounding the Outriggers

- Keep people away from the machine when setting the outriggers.
  Staying around the machine may cause serious accidents such as getting caught between an outrigger and the machine main unit.
- Always monitor the level to level the machine when setting the outriggers.
  When the machine tilts for "3 degrees" or more, the overturning alarm buzzer sounds.
- Set the outriggers so that the rubber tracks are about 50 mm above the ground.
  After setting the outriggers, verify that all the four outriggers are securely set.
- The outriggers of this machine can be set flexibly according to the terrain. However, if the outriggers cannot be set in the "outrigger maximum extension" state, perform the crane operation with the values given in the "Rated total load chart with outrigger medium extension" and "Rated total load chart with outrigger minimum extension" in the rated total load chart.
- When extending and grounding the outriggers, always maintain the outrigger rotary at the extension position, and insert the position pin to the end. Do not set the outriggers with the outrigger rotary stowed.
- There are four outriggers. Be careful not to mistake 8 outrigger switches for the others. Check the numbers shown on the "operation plate" at the switch section and the location of the "number plate" affixed to the outriggers. Wrong operation can lead to serious accidents.
- When operating two outrigger grounding switches at the same time, choose two front switches (outrigger (1) and (4)) or two rear switches (outrigger (2) and (3)). Operating two left or right switches at the same time will suddenly raise two outriggers on one side, causing overturning of the machine.
- When raising the machine, operate the four outrigger switches to raise them gradually and uniformly. Suddenly raising two outriggers on one side will overturn the machine.
- Reduce the engine speed to low speed when operating the outrigger switches.
- At the high engine speed, the outriggers operate suddenly, leading to serious accidents such as overturning of the machine.
- Do not extend the outriggers with the outriggers set. Doing so applies unreasonable force on the outriggers, resulting in the outrigger breakage.
- Always set the travelling lock lever to the "LOCK" position when operating the outriggers.

CAUTION:

- **Always keep the boom at the "fully retracted, lowest position and slew and store position" when operating the outriggers. The outriggers cannot be operated if the boom is not stowed completely. (Verify that the boom stowing lamp (green) on the outrigger display is ON.)**
- **After extending the outriggers, verify that the outriggers are securely set.**
- **If all the outriggers are not securely set, the crane operations will not be enabled. (Verify that all of the extension lamps and setting lamps (green) of the outrigger display are lit.)**

WARNING!

- **Make sure all the outriggers are placed properly before performing crane operation.**
- **This machine features a safety-interlock system that prevents crane operation unless all the lamps, other than the boom stowing lamp on the outrigger monitor, are on.**
- **Always place the machine in a horizontal position with the use of the level when extending the outriggers. A warning buzzer sounds when the machine is inclined 3° or more and stops when the machine is placed in a horizontal position.**
- **When the crane is used with the outriggers extended other than at the maximum, crane operation should proceed with respect to the values specified in the rated total load chart corresponding to "MIN./MID. OUTRIGGER POSITION".**
- **Failure to perform crane operation with proper values may cause the machine to topple over. Exercise caution when performing operation.**
- **Despite the maximum extension of all the outriggers, the width of extended outriggers decreases due to an ungraded ground even when clearance "a" in the figure is 50 mm.**

https://truckmanualshub.com/

- **Crane operation should proceed with respect to the values specified in "MID. OUTRIGGER POSITION" in the rated total load chart.**

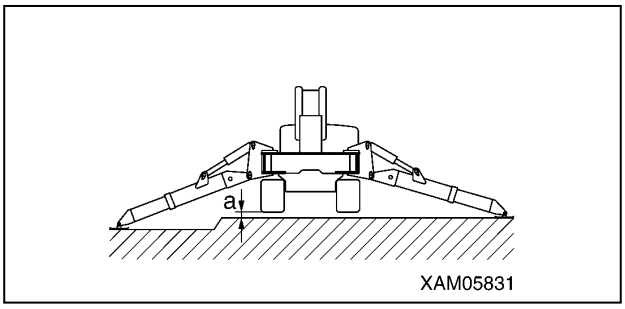

Fig. 4-88

- **Despite the medium extension of all the outriggers, the width of extended outriggers decreases due to an ungraded ground even when clearance "a" in the figure is 50 mm. Crane operation should proceed with respect to the values specified in "MIN. OUTRIGGER POSITION" in the rated total load chart.**

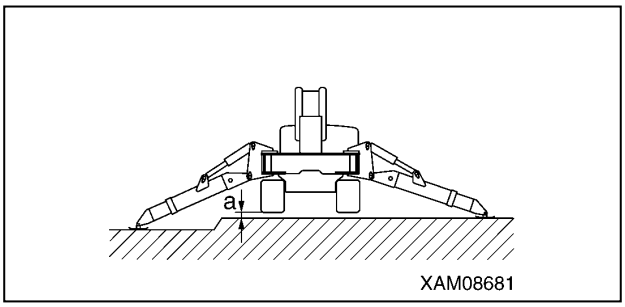

Fig. 4-89

- **Crane operation with the outriggers extended at the minimum is permitted only if the outriggers are placed on a level surface. 50 mm of dimension between the outrigger bottom and crawler bottom should be obtained.**
- **On ungraded ground or similar, the width of extended outriggers decreases even when clearance "a" in the figure is 50 mm. Do not perform crane operation under such extension condition. Potential overturning of the machine may occur that leads to serious personal injury if disregarded.**

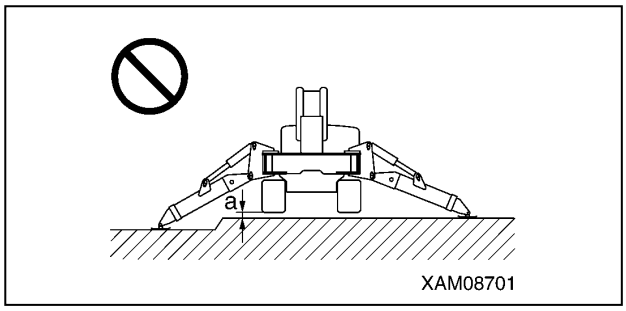

Fig. 4-90

- **The machine becomes unsteady at some point if it undergoes a 360-degree slewing with an object hoisted. Irrespective of the rated total load, ensure operation in a short working radius and at low speed.**

Tasks to Be Performed upon Engine Stop

There are four outriggers installed to the machine. Although the setting method is described for just one outrigger (outrigger (4)), set the other three outriggers in the same way.

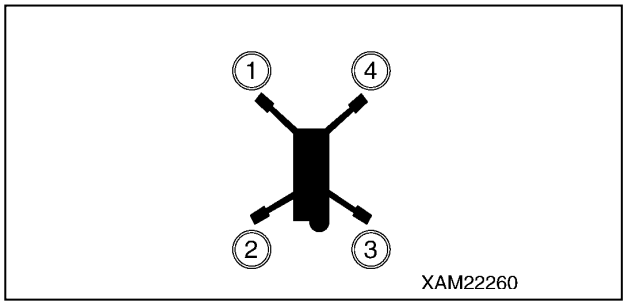

Fig. 4-91

1. Operate the travelling lock lever (8) to the "LOCK" position.

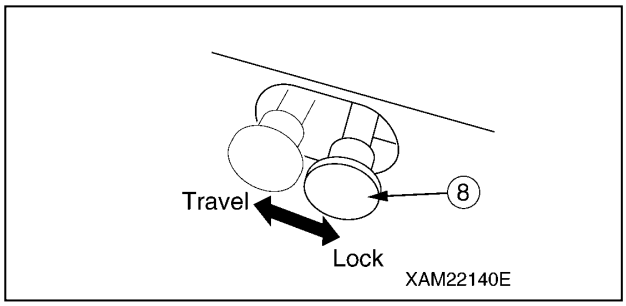

Fig. 4-92

https://truckmanualshub.com/

2. Turn the starter switch to the "ON" position.

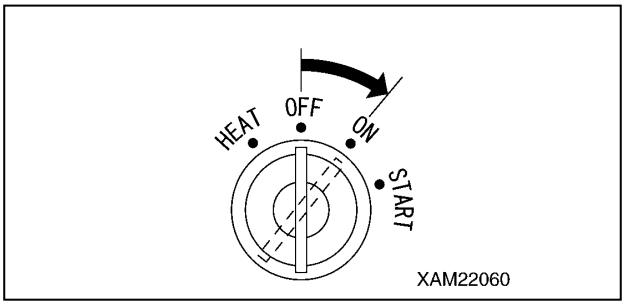

Fig. 4-93

3. Operate the work selector switch on the outrigger operation panel to the "Outrigger" position.

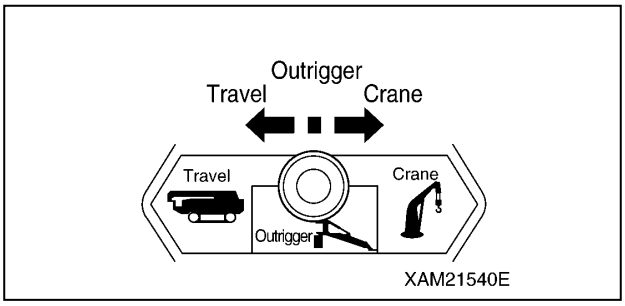

Fig. 4-94

4. Verify that the boom stowing lamp (1) (green) on the outrigger display is ON.

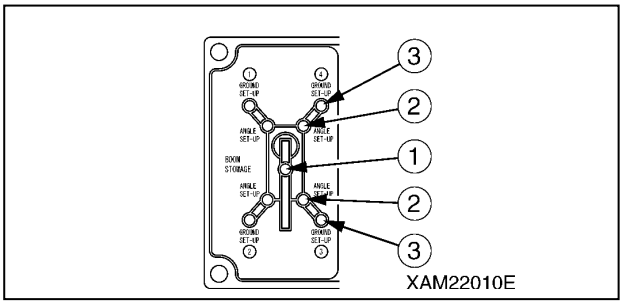

Fig. 4-95

5. Pull the position pin (1) out of the rotary (2) and rotate the rotary outward.

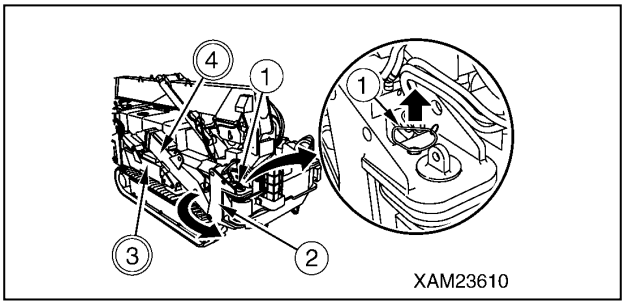

Fig. 4-96

6. Insert the position pin (1) to the end at the position where the pin holes are aligned after rotating the rotary (2) outward.

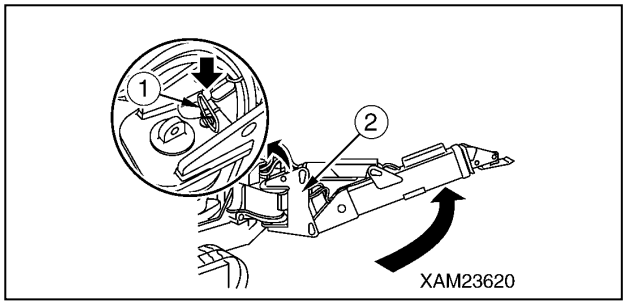

Fig. 4-97

NOTICE: The position pin (1) has a wire to prevent the loss of the pin.

7. Perform the same preparatory task to the other three outriggers.

NOTICE: After completing the preparatory task, verify that the position pin (1) is securely inserted.

8. Verify that the four outrigger extension lamps (2) (green) on the outrigger display are ON.

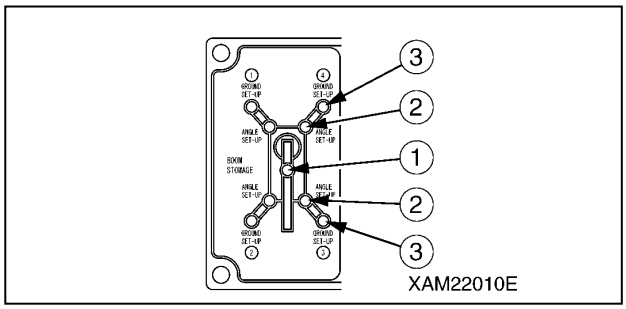

Fig. 4-98

NOTICE: The boom stowing lamp (1) and four outrigger extension lamps (2) on the outrigger display are ON.

https://truckmanualshub.com/

Tasks to Be Performed after Starting Engine

WARNING! The overturning alarm buzzer sounds if the machine tilts for "3 degrees" or more when setting the outriggers. Operate the outrigger switches and adjust the machine to be levelled in which state the alarm buzzer will not sound.

1. See "STARTING ENGINE" on page 4-15 and start the engine.
2. Release your foot from the acceleration pedal (6) and change the engine speed to idling.

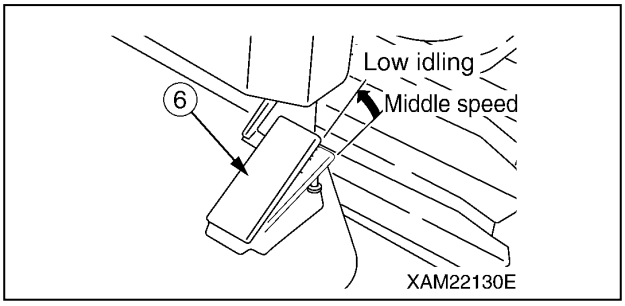

Fig. 4-99

3. Check the number on the operation plate at the switches on the outrigger operation panel to determine which outrigger to be operated.

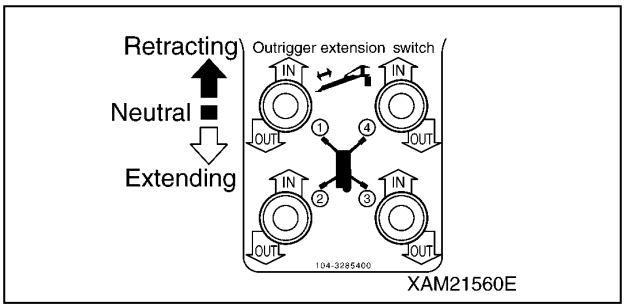

Fig. 4-100

4. Push down an outrigger extension switch or two of them at the same time to the "OUT" side.
   When the outrigger extension cylinder extends and the inner box extends to the desired position, set the switch to the "Neutral" position.
   Operate the remaining switches in the same way and extend the inner box of the four outriggers to the desired position. Set the switch to the "Neutral" position.

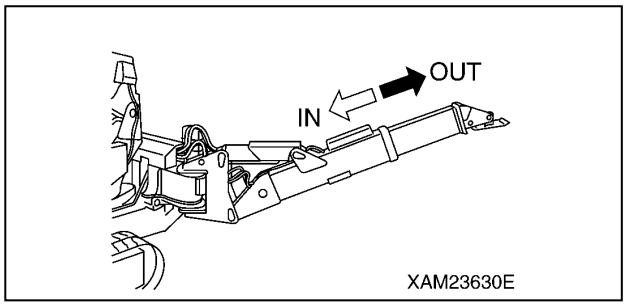

Fig. 4-101

5. Push down an outrigger grounding switch or two of them at the same time to the "OUT" (downward) side.
   When the setting cylinder extends and the tray is set, set the switch to the "Neutral" position.
   Operate the remaining switches in the same way and set the tray of all the four outriggers. Set the switch to the "Neutral" position.

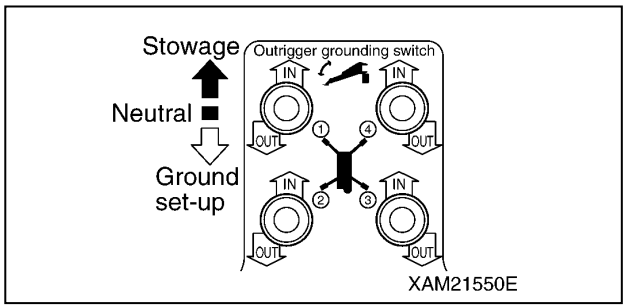

Fig. 4-102

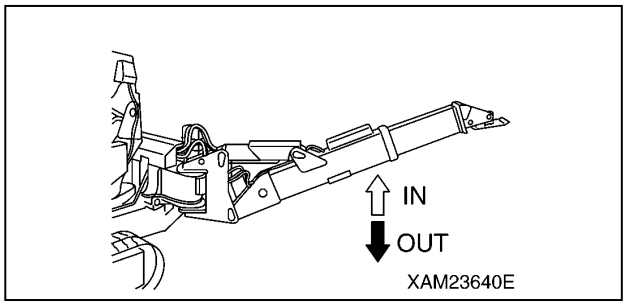

Fig. 4-103

WARNING! When operating two outrigger grounding switches at the same time, choose two front switches (outrigger (1) and (4)) or two rear switches (outrigger (2) and (3)). Operating two left or right switches at the same time will suddenly raise two outriggers on one side, causing overturning of the machine.

https://truckmanualshub.com/

6. After all the trays were set, push down an outrigger grounding switch or two of them at the same time to the "OUT" (downward) position.

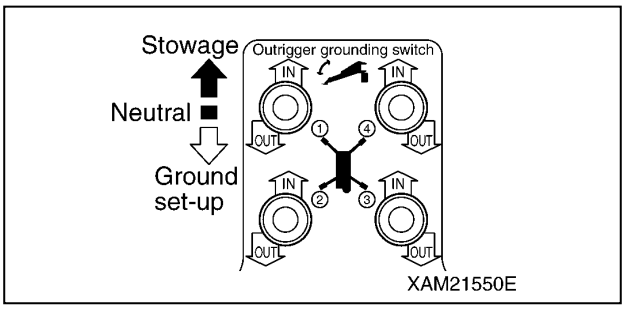

Fig. 4-104

When the setting cylinder extends and the machine is slightly raised, set the switch to the "Neutral" position.
Operate the remaining switches in the same way so that the four outriggers are raised to the same height. Set the switch to the "Neutral" position.
Repeat this operation to gradually raise the machine until the rubber tracks will be at the height of about 50 mm above the ground.

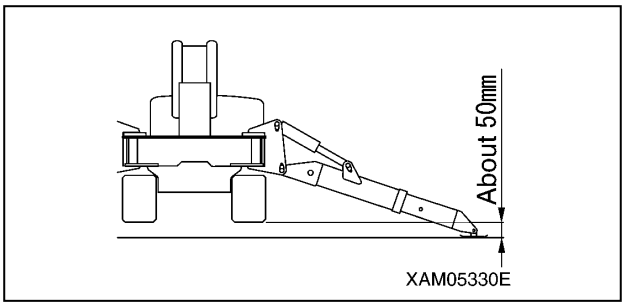

Fig. 4-105

7. When the machine was raised to about 50 mm above the ground, operate the outrigger operation switches while checking the position of the bubble in the level to adjust the machine to be levelled.

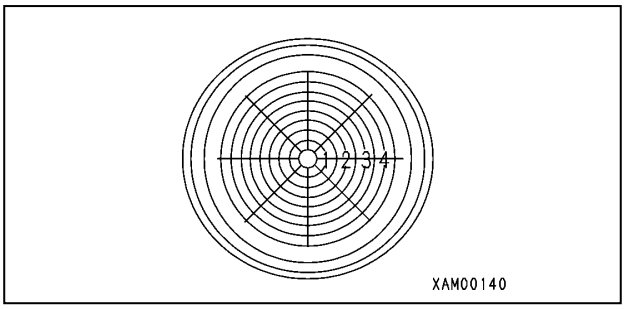

Fig. 4-106

8. After setting the outriggers, operate all the outrigger operation switches to the "Neutral" position.
9. Verify that the four outrigger grounding lamps (3) (green) on the outrigger display are ON.

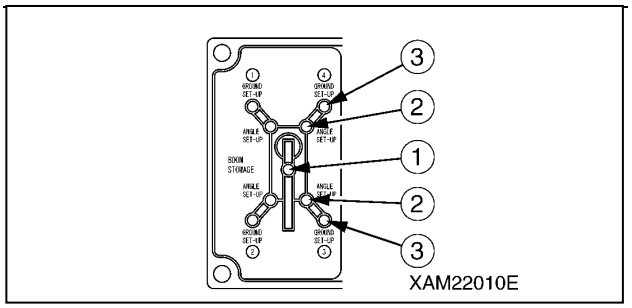

Fig. 4-107

NOTICE: On the outrigger display, all the boom stowing lamp (1), four outrigger extension lamps (2), and four outrigger grounding lamps (3) are illuminated in green.

CAUTION: If any of the grounding lamps (3) is flashing in red, remove the cover (7) of the outrigger tray (6) and check if there is any foreign object pinched in the bending section.

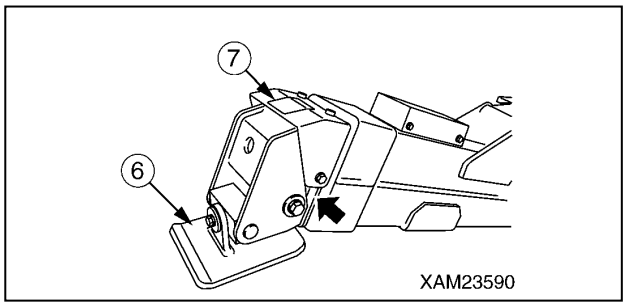

Fig. 4-108

https://truckmanualshub.com/

Outrigger Extension Modes

Outrigger Maximum Extension

The figure shown at below represents the condition "When the crane is used with the outriggers extended at the maximum" in the rated total load chart.

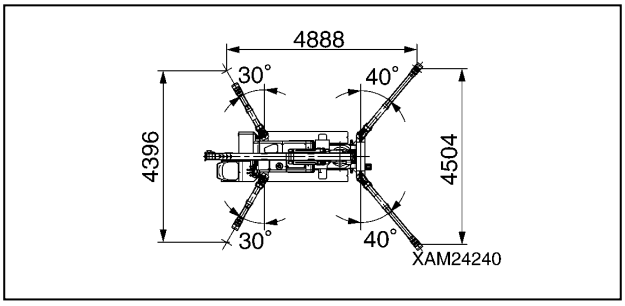

Fig. 4-109

Ensure that all the lamps, other than the boom stowing lamp on the outrigger monitor, are on. If the inner box is retracted even if only slightly, crane operation should proceed with respect to the values specified in the rated total load chart corresponding to "When the crane is used with the outriggers extended at the minimum/medium". See "OUTRIGGER SETTING" on page 4-36 for proper setting of the outriggers.

NOTICE: Outrigger maximum extension is defined as that:

1. *The outrigger is set at the positioning pin position (40° front, 30° back).*
2. *The inner box of all the outriggers is extended fully.*
3. *All the outriggers are placed on a level surface.*
4. *Approx. 50mm is assured for clearance "a" (between the outrigger bottom and crawler bottom) in the figure at below.*

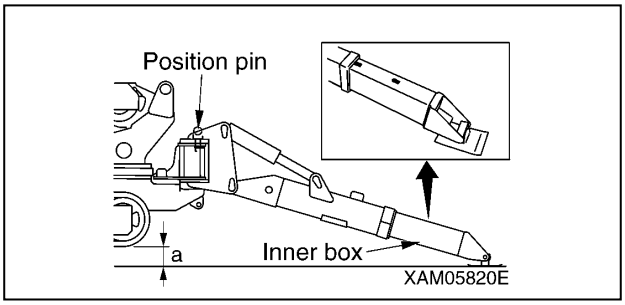

Fig. 4-110

Outrigger Midium Extension

The figure shown at below represents the condition "When the crane is used with the outriggers extended at the medium" in the rated total load chart.

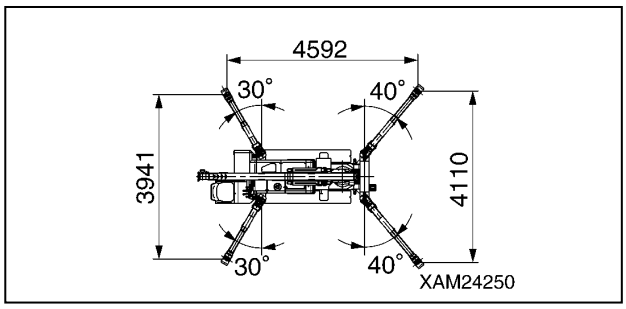

Fig. 4-111

NOTICE: Outrigger medium extension is defined as that:

1. *The outrigger is set at the positioning pin position (40° front, 30° back).*
2. *The inner box of all the outriggers is extended at the medium.*
3. *All the outriggers are placed on a level surface.*
4. *Approx. 50mm is assured for clearance "a" (between the outrigger bottom and crawler bottom) in the figure at below.*

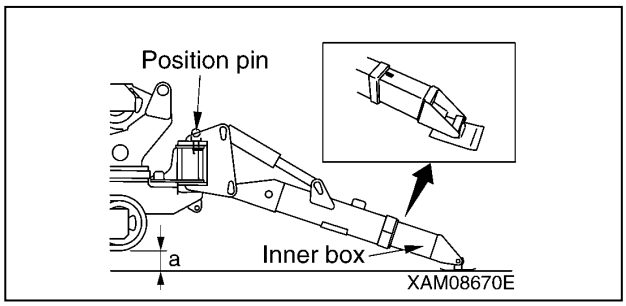

Fig. 4-112

NOTICE: If even a group of outriggers is retracted to a medium point, all the outriggers are deemed to be extended at the medium.

https://truckmanualshub.com/

Outrigger Minimum Extension

The figure shown at below represents the condition "When the crane is used with the outriggers extended at the minimum" in the rated total load chart.

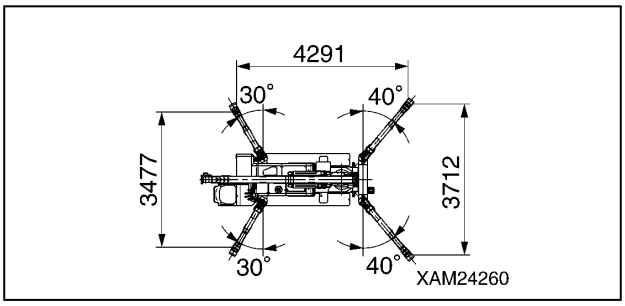

Fig. 4-113

NOTICE: Outrigger minimum extension is defined as that:

1. *The outrigger is set at the positioning pin position (40° front, 30° back).*
2. *The inner box of all the outriggers is minimised.*
3. *All the outriggers are placed on a level surface.*
4. *Approx. 50mm is assured for clearance "a" (between the outrigger bottom and crawler bottom) in the figure at below.*

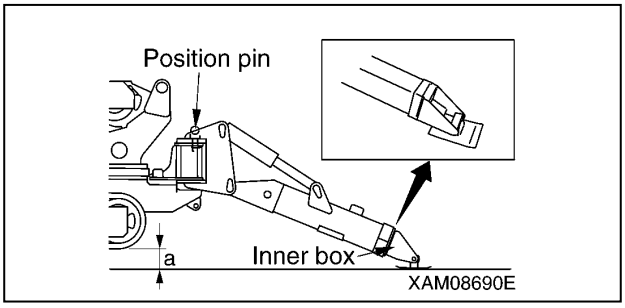

Fig. 4-114

NOTICE: If even a group of outriggers is retracted to the minimum point, all the outriggers are deemed to be extended at the minimum.

https://truckmanualshub.com/

OUTRIGGER STOWING

WARNING!

- **Do not let people approach toward the machine when stowing the outriggers.**
- **Staying around the machine may result in serious accidents such as getting caught between an outrigger and the main unit of the machine.**
- **Verify that there is nothing under the rubber tracks when stowing the outriggers.**
- **If there is any object under the rubber tracks, the machine may overturn and serious accidents may occur when stowing the outriggers.**
- **Stop the engine for operation except for extending/setting the outrigger cylinders.**
- **The third person touching an outrigger may result in sudden movement of the outrigger cylinder, which may lead to serious accidents.**
- **When the position pin is removed, the outrigger loses the support and rotates. Always hold the outrigger with one hand when removing the position pin.**
- **Do not put your hands or fingers around the gaps of movable areas when stowing the outriggers.**
  Your hands or fingers may get caught, and it may lead to serious accidents.
- **Insert the position pin to the end when stowing the outriggers.**
- **When lowering the raised machine, operate the eight outrigger switches so that the four outriggers are lowered little by little. Suddenly retracting two outriggers just on the right side or left side will cause instability in the machine and it can overturn the machine.**
- **Do not perform the outrigger extending operation after they are set on the ground. Doing so applies unreasonable force on the outriggers, resulting in the outrigger breakage.**
- **Always set the travelling lock lever to the "LOCK" position when operating the outriggers.**

CAUTION:

- **Always keep the boom at the "lowest position and slew and stow position" when operating the outriggers. The outriggers cannot be operated if the boom is not stowed completely. (Verify that the boom stowing lamp (green) on the outrigger display is ON.)**
- **Operate the work selector switch on the outrigger operation panel to the "Outrigger" position.**

https://truckmanualshub.com/

Tasks to Be Performed after Starting Engine

Although the stowing method is described for just one outrigger (outrigger (4)), stow the other three outriggers in the same way.

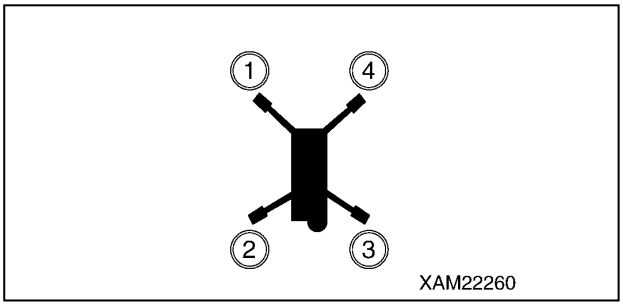

Fig. 4-115

1. Operate the travelling lock lever (8) to the "LOCK" position.

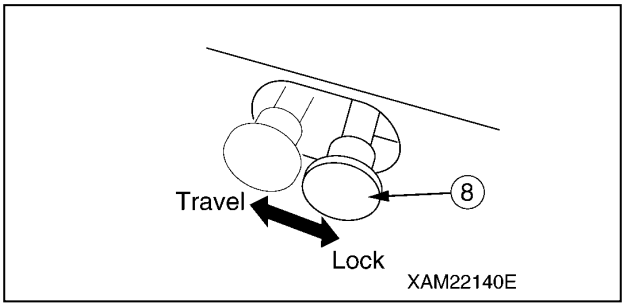

Fig. 4-116

2. See "STARTING ENGINE" on page 4-15 and start the engine.
3. Release your foot from the acceleration pedal (6) and change the engine speed to idling.

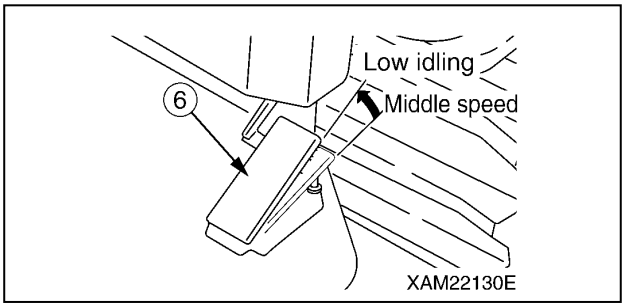

Fig. 4-117

4. Operate the work selector switch on the outrigger operation panel to the "Outrigger" position.

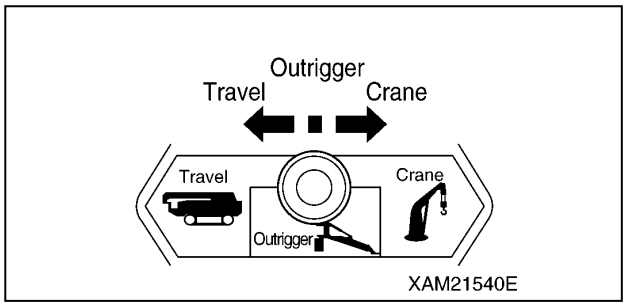

Fig. 4-118

5. Verify that the boom stowing lamp (1) (green) on the outrigger display is illuminated.

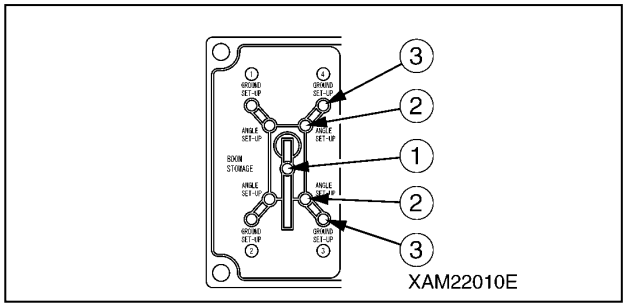

Fig. 4-119

WARNING! When operating two outrigger grounding switches at the same time, choose two front switches (outrigger (1) and (4)) or two rear switches (outrigger (2) and (3)). Operating two left or right switches at the same time will suddenly raise two outriggers on one side, causing overturning of the machine.

6. Check the number on the operation plate at the switch section on the outrigger operation panel to determine which outrigger to be operated.
7. Push down an outrigger grounding switch or two of them at the same time to the "ON" (upward) side.
   When the outrigger setting cylinder retracts and the machine starts to go down, return the switch to the "Neutral" position.
   Operate the remaining switches in the same way and lower all the four outriggers to the same height. Return the switch to the "Neutral" position.
   Repeat this operation to gradually lower the machine until the rubber tracks go down completely on the ground.

https://truckmanualshub.com/

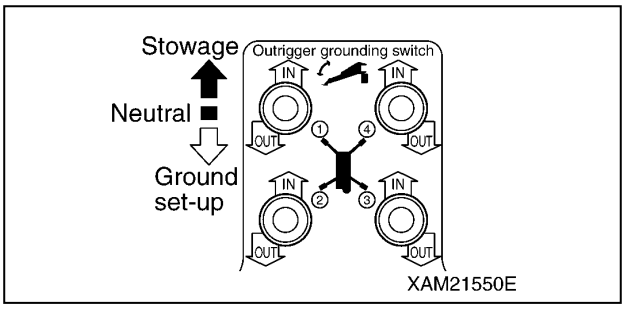

Fig. 4-120

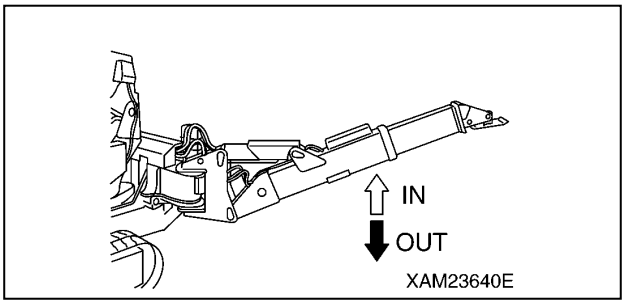

Fig. 4-121

8. When the left and right rubber tracks are completely set on the ground, push down again an outrigger grounding switch or two of them at the same time to the "IN" (upward) side.
   When the setting cylinder completely retracts and the top box goes up to the upper limit, release your finger from the outrigger grounding switch.
9. Verify that the four outrigger grounding lamps (3) on the outrigger display are flashing in red.

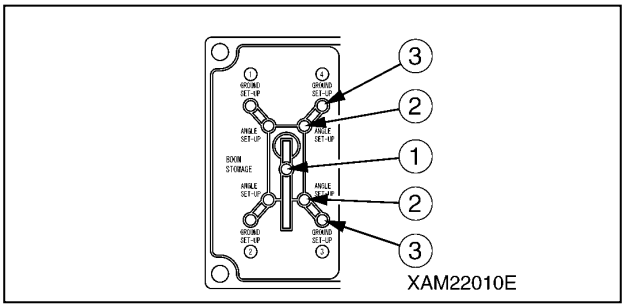

Fig. 4-122

NOTICE: On the outrigger display, the boom stowing lamp (1) (green) is illuminated and four outrigger extension lamps (2) and four outrigger grounding lamps (3) are flashing in red.

10. Push down an outrigger extension switch or two of them at the same time to the "IN" (upward) side.
    When the extension cylinder fully retracts and the inner box is at its shortest, return the switch to the "Neutral" position.
    Operate the remaining switches in the same way and make the inner box of the four outriggers to their shortest. Return the switch to the "Neutral" position.

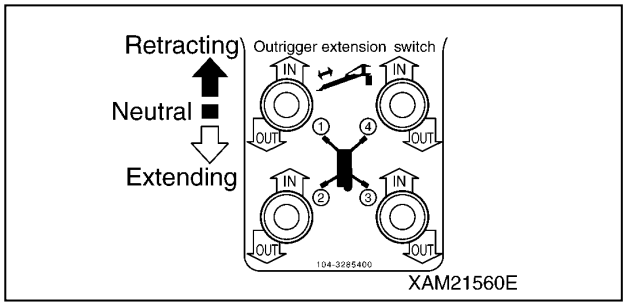

Fig. 4-123

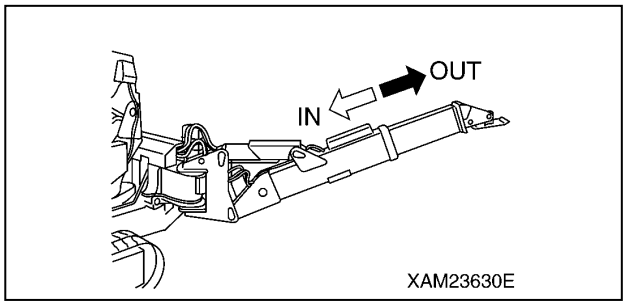

Fig. 4-124

11. Turn the starter switch to the "OFF" position.

The engine stops.

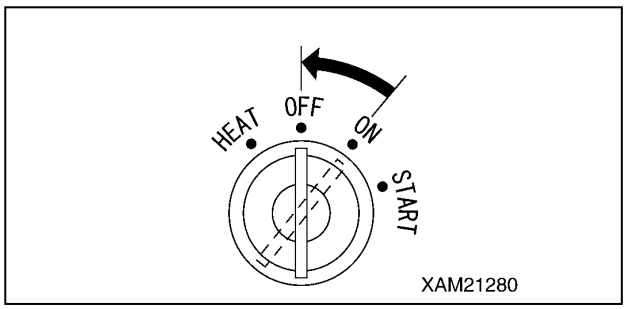

Fig. 4-125

https://truckmanualshub.com/

Tasks to Be Performed upon Engine Stop

1. Pull the position pin (1) out of the rotary (2) and rotate the rotary inward.

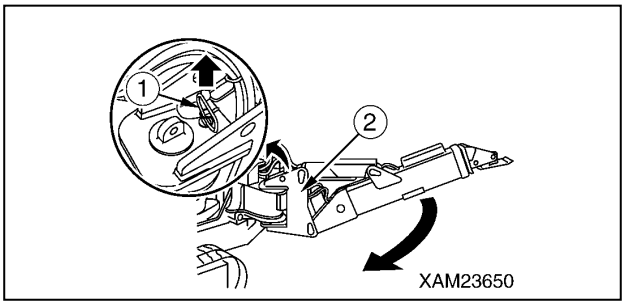

Fig. 4-126

2. Insert the position pin (1) to the end at the position where the pin holes are aligned after rotating the rotary (2) inward.

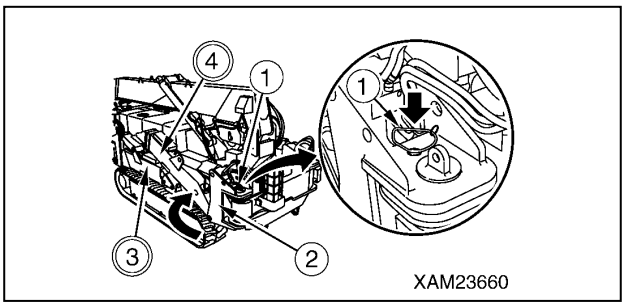

Fig. 4-127

NOTICE: The position pin (1) has a wire to prevent the loss of the pin.

3. Stow the other three outriggers in the same way.

NOTICE: After stowing the outriggers, verify that the position pin (1) is securely inserted.

4. Verify that the four outrigger extension lamps (2) on the outrigger display went off.

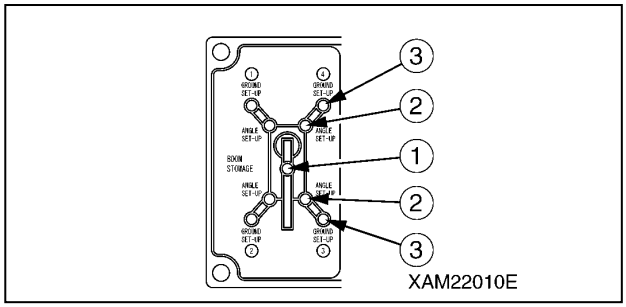

Fig. 4-128

NOTICE: On the outrigger display, the boom stowing lamp (1) (green) is illuminated and four outrigger extension lamps (2) and four outrigger grounding lamps (3) are flashing in red.

https://truckmanualshub.com/

WORKING WITH CRANE

Inspection before Starting Work

WARNING! Check that the safety devices and crane operate properly.

- **Operate each of the operation levers and switches under no load, and check that operations take place without abnormality.**
- **Repair immediately if any abnormality exists.**
- **Check that the safety devices such as the moment limiter, outrigger safety device, and over winding detector / automatic stop device activate properly.**

Cautions When Handling Moment Limiter

WARNING!

- **Use/store the moment limiter under the following ranges of ambient temperature. ★Temperature of use: 10 to 50 °C Storage temperature: -20 to 60 °C**
- **Avoid direct sunlight so that the temperature of the moment limiter body does not exceed the above range.**
- **Avoid locations with strong acid or alkaline atmosphere as much as possible. Otherwise, unexpected failures may occur.**
- **Do NOT apply impact to the moment limiter body for instance by colliding with an object.**
- **Such attempt may damage the case and may result in failures and improper operations.**
- **Do NOT push the panel sheet of the moment limiter body by a force more than necessary or push with sharp object such as a tip of a screwdriver. Such act may damage the panel sheet and may result in failures and improper operations.**
- **Do NOT remove the case cover or panel sheet from, or disassemble the moment limiter body. Such act may damage case and/or panel sheet and may result in failures and improper operations.**

Cautions When Setting Up Moment Limiter

WARNING!

- **The moment limiter calculates the moments assuming the Machine is level.**
- **If you work with the crane when the Machine is not level, warnings and alarms are not issued even when the rated total load is near.**
- **ALWAYS set the outrigger horizontally to the ground while looking at the level gauge.**
- **Before using the moment limiter, check that the boom angle display, boom length display and real load display are displayed correctly following the crane movements. Attempt to use without correct display results in failure to obtain correct measurement result and may result in serious bodily accidents caused by reasons such as an improper operation and/or breakage of nearby equipment.**
- **ALWAYS make sure the wire strand setting of the moment limiter matches with the wire strand of the crane. If the wire strands do not match, ALWAYS let the wire strands match by changing the wire strand setting of the moment limiter or by changing the wire strand of the crane. Attempt to use with unmatched wire strands results in failure to obtain correct measurement result and may result in serious bodily accidents caused by reasons such as an improper operation and/or breakage of nearby equipment.**
- **Do NOT carelessly change the setting when measuring with the moment limiter. Such attempt results in failure to obtain correct measurement result and may result in serious bodily accidents caused by reasons such as an improper operation and/or breakage of nearby equipment.**

https://truckmanualshub.com/

Place Crane on Level and Hard Soil

WARNING!
- **ALWAYS place the outriggers on a level, stable and solid ground.**
- **Attempt to work with crane without outriggers firmly contacting the ground may cause the Machine to trip.**
- **ALWAYS place all outriggers before working with crane.**
- **Do NOT set any outrigger near the location that may collapse, for instance a soft ground, roadside or drilled hole.**
- **In case the outriggers need to be placed on a soft ground for unavoidable reason, ALWAYS reinforce the ground by laying a sufficiently large and strong base plate below each of all outrigger supports.**

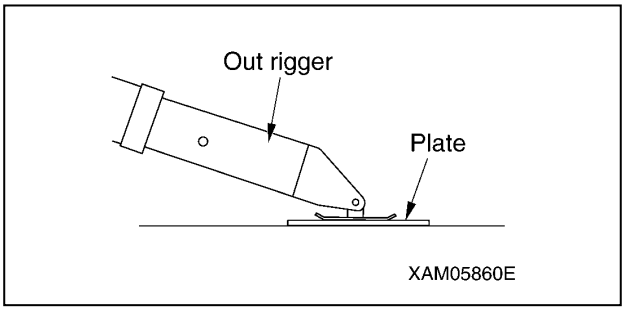

Fig. 4-129

CRANE OPERATION

Dos and Don’ts During Crane Operations

WARNING!
- **Always set the outriggers on the levelled solid ground when performing the crane operations.**
- **Never perform travelling hoist or the crane operations without setting the outriggers.**
- **The machine will be unstable and overturn, leading to serious accidents.**
- **See the cautions given in the Safety besides the dos and don’ts in this section.**

Do Not Operate with Slewing Force

Drawing in or lifting the load with slewing operation is prohibited.

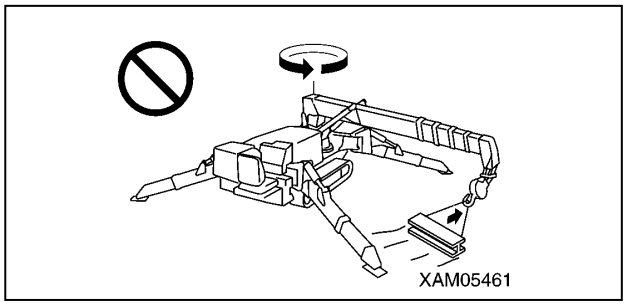

Fig. 4-130

Do Not Operate with Derricking Force

Drawing in or lifting the load with boom lift operation is prohibited.

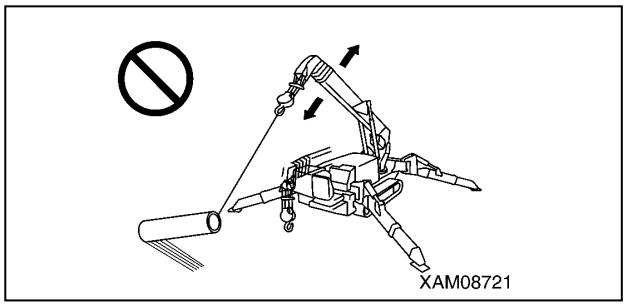

Fig. 4-131

https://truckmanualshub.com/

Do Not Pull Sideward, Draw in, and Hoist Diagonally

Pulling sideward, drawing in, or hoisting diagonally applies unreasonable force on the machine. It not only damages the machine body, but also is dangerous. Never operate in these ways.

The hook must come right above the centre of gravity of the load hoisted.

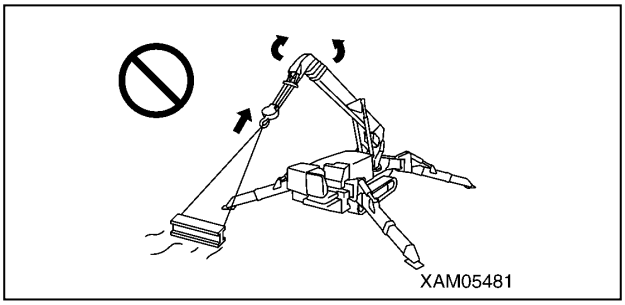

Fig. 4-132

Do Not Operate Violently

Do not operate the lever suddenly.

Especially, the "slewing", "boom lowering", and "hook lowering" must be operated at low speed.

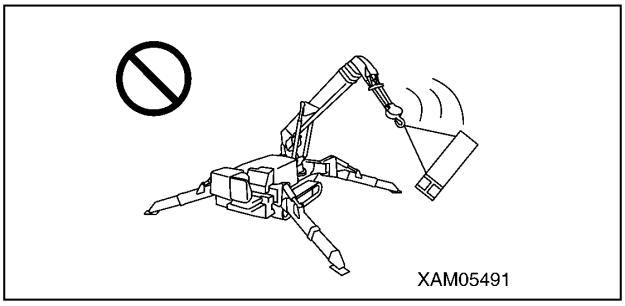

Fig. 4-133

Do Not Access into Working Radius

Do not let people access into the working radius such as permitting an operator to go under the hoisted load.

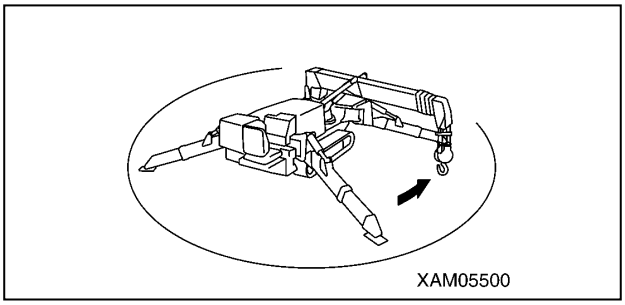

Fig. 4-134

Do Not Use for Other than Main Applications

Do not move people up/down with the crane.

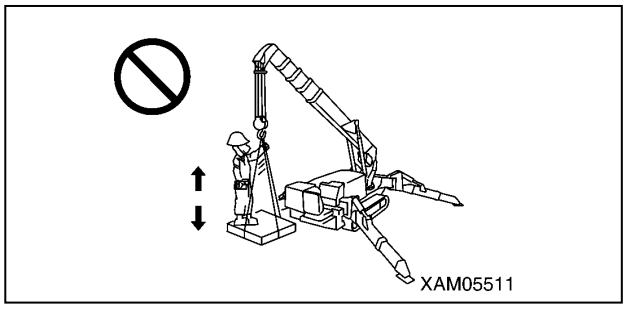

Fig. 4-135

Do Not Perform Unreasonable Operations

Operations requiring more than the machine performance can cause accidents.

Particularly, the crane operations must be carried out according to the rated total load chart.

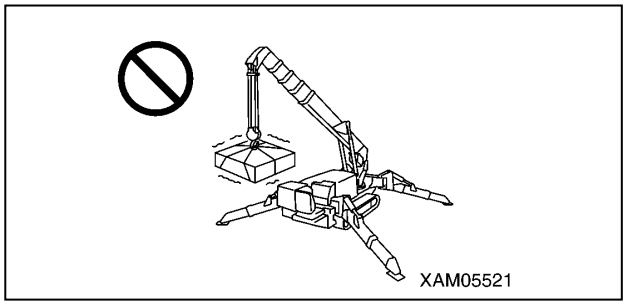

Fig. 4-136

https://truckmanualshub.com/

Do Not Wind by Force

Be careful not to hook the wire cable over a tree or steel beam while working.

If it gets stuck with something, do not force to wind the wire. Untangle and then wind the wire.

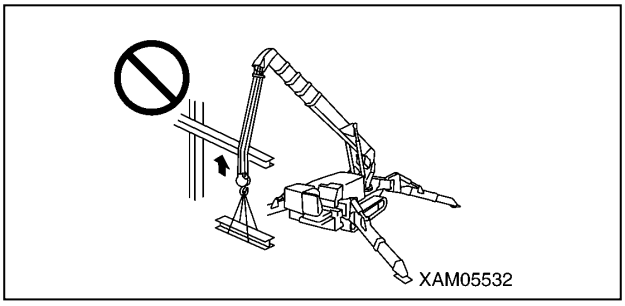

Fig. 4-137

Do Not Operate During Travelling Hoist

The load may slew or the machine may overturn during the travelling hoist.

Do not perform slewing operation or crane operations.

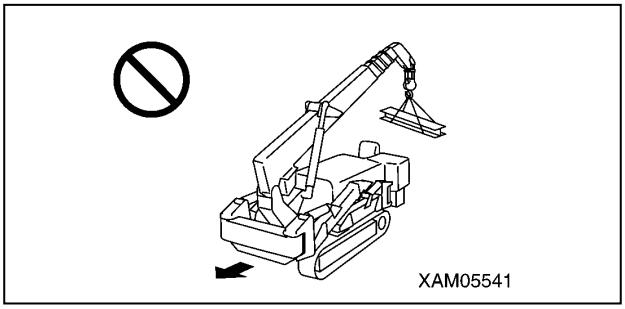

Fig. 4-138

Before Crane Operations

CAUTION:

- **Verify that all the lamps on the outrigger display are illuminated in green before performing the crane operation. The crane cannot be operated if any of the four outrigger extension lamps and four outrigger grounding lamps is flashing in red.**
- **Set the travelling lock lever to the "LOCK" position when operating the operation levers of the crane system and outrigger switches.**
- **When loosening the stowing of the hook block, be careful not to topple the entire hook block sideways on the ground by loosening the wire cable too much. This will cause irregular winding on the winch drum.**
- **When loosening the stowing of the hook block, the hook block may slew and interfere with the peripheral devices, resulting breakage of the devices. Pay sufficient attention around the hook block.**

Perform the following operations before crane operation.

1. Operate the travelling lock lever (8) to the "LOCK" position.

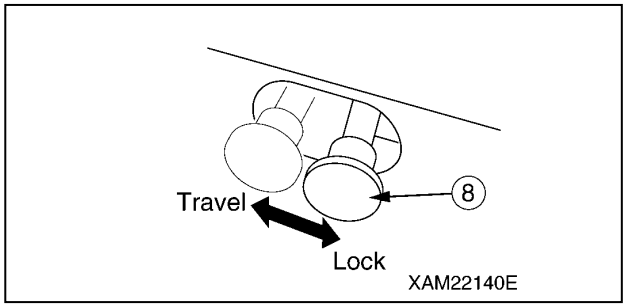

Fig. 4-139

2. Operate the work selector switch on the outrigger operation panel to the "Crane" position.

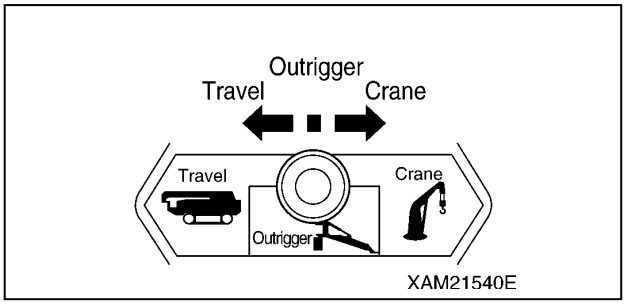

Fig. 4-140

https://truckmanualshub.com/

3. Operate the winch lever (3) to the "DOWN" (push forward) side to loosen the hook block from the stowing position.

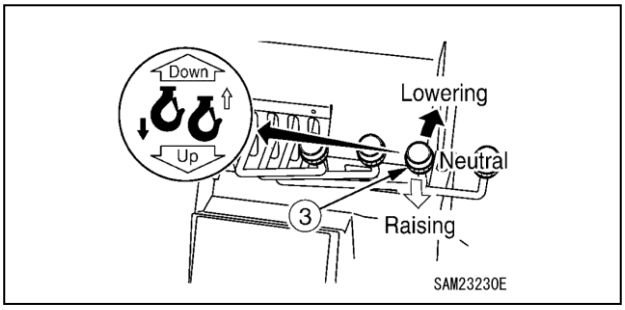

Fig. 4-141

- Verify that the moment limiter override switch, boom stowing switch, and hook stowing switch are OFF.
  If these switches are at "ON" position, the operations will not stop.

NOTICE: If the Moment Limiter Override Switch is "ON", an alarm buzzer will sound intermittently.

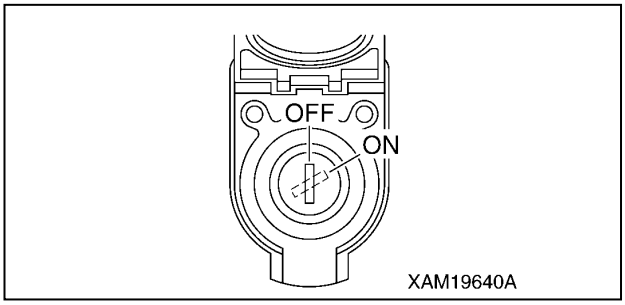

Fig. 4-142

- Over hoisting the hook block will activate the alarm buzzer of the over winding detector and the operation stops.
  When the alarm buzzer sounds, release your hand immediately from the winch lever (3) to the "Neutral" position to stop raising the hook.
  Then, operate the winch lever (3) to "DOWN" (push forward) side to lower the hook block.

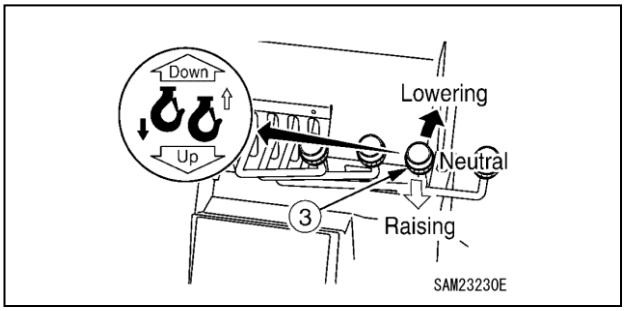

Fig. 4-143

- Extending the boom will hoist the hook block, activating the alarm buzzer of the over winding detector and the operation stops.
  When the alarm buzzer sounds, release your hand immediately from the boom telescoping lever (2) to the "Neutral" position to stop extending the boom.
  Then, operate the boom telescoping lever (2) to "RETRACT" (pull toward you) side to retract the boom.

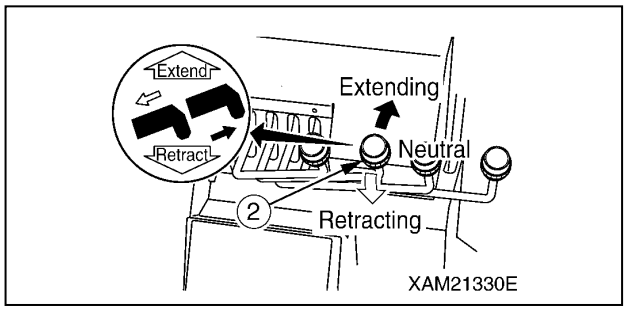

Fig. 4-144

- Use the horn switch to honk the horn to notify the people around of the danger during the crane operation.

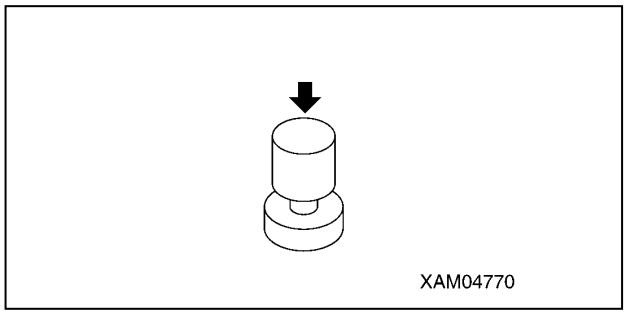

Fig. 4-145

- Verify that all the outriggers are extended and set.
- If any of the four outrigger extension lamps (2) or four outrigger setting lamps (3) is flashing in red, the crane cannot be operated.

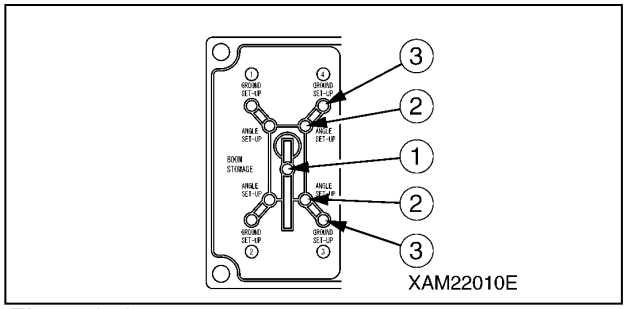

Fig. 4-146

https://truckmanualshub.com/

Crane Operation Posture

Take the crane operation posture by following the procedure below when switching to the operation from the state described in "Before Crane Operations" on page 4-52.

1. Operate the winch lever (3) to the "DOWN" (push forward) side and lower the hook but not to let the hook block touch the ground.

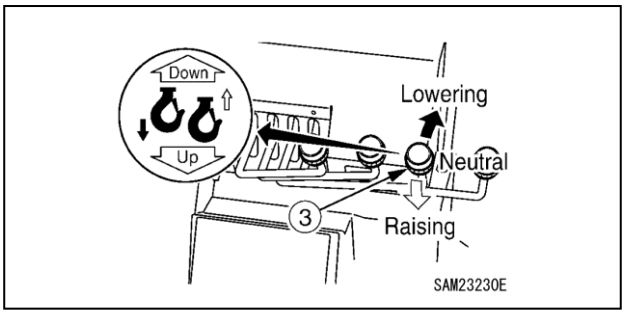

Fig. 4-147

2. Operate the boom derricking lever (4) to the "RAISE" (pull toward you) side and raise the boom to the angle where the hook block is not over hoisted and not touching the ground.

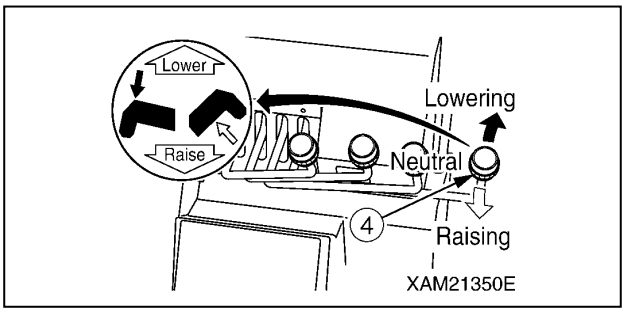

Fig. 4-148

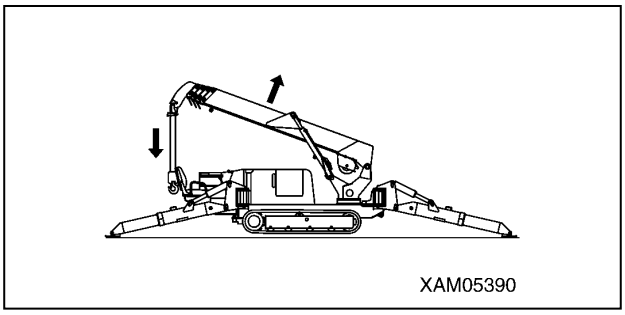

Fig. 4-149

Hook Raising/Lowering Operation

WARNING!

- **With the boom deflection, the hoisted load slightly shifts forward. Notify the workers around such as slinging operators.**
- **If the hook block was hoisted too much, the over hoisting will be detected. The alarm buzzer sounds and the audible message saying "Hook over hoisted" will be heard. When the alarm buzzer and audible voice were heard, operate the winch lever immediately to the "Neutral" position and stop raising the hook.**
- **When lowering the hook for long distance for underground works, be sure to leave more than three turns of the wire cable on the winch drum.**

CAUTION: Do not let the hook block touch the ground.
The winch drum will wind irregularly, damaging the wire cable.
Operate the winch lever (3) as follows;

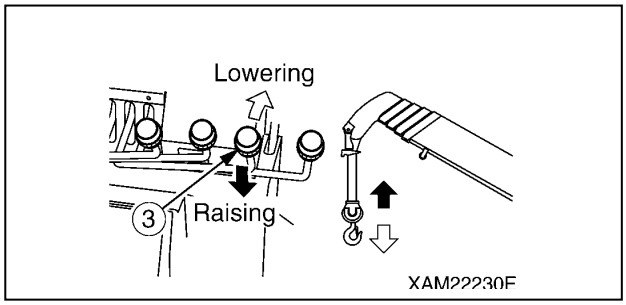

Fig. 4-150

- Lower: Push the lever forward "DOWN".
- Neutral: Release your hand from the lever. The lever will return to the "Neutral" position and the raising/lowering of the hook block stops.
- Raise: Pull the lever to the "UP" side toward you.

NOTICE: Adjust the winch raising/lowering speed with the winch lever and stroke of the acceleration pedal.

https://truckmanualshub.com/

Boom Derricking Operation

WARNING!

- **Operate the boom derricking lever as slowly as possible.**
  Sudden lever operation especially while hoisting a load will cause the load to slew, giving a great impact to the machine, and thus may break the crane or overturn the machine.
- **Lowering the boom increases the working radius and the rated total load that can be hoisted decreases. Be extremely careful so that the load weight will not be overloaded with the boom most lowered when working by boom lift the boom.**

Operate the boom derricking lever (4) as follows.

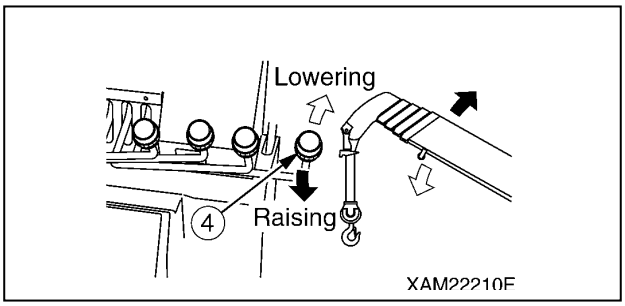

Fig. 4-151

- Lower: Push the lever forward to the "LOWER" side.
- Neutral: Release your hand from the lever. The lever goes back to the "Neutral" position and the boom lift stops.
- Raise: Pull the lever toward you to the "RAISE" side.

NOTICE: Adjust the boom lift speed with the boom derricking lever and the stroke of the acceleration pedal.

Boom Telescoping Operation

WARNING!

- **Operate the boom telescoping lever as slowly as possible.**
  Sudden lever operation especially while hoisting a load will cause the load to slew, giving a great impact to the machine, and thus may break the crane or overturn the machine.
- **Do not pull the load horizontally or pull in the load by telescoping the boom.**
- **Extending the boom increases the working radius and the rated total load that can be hoisted decreases. Be extremely careful so that the load weight will not be overloaded with the boom most extended when working by telescoping the boom.**
- **When the boom is extended, the hook block is raised.**
  If the alarm buzzer of the over winding detector and the audible message of "Hook Over Hoisted" are heard during the boom extending operation, return the boom telescoping lever immediately to the "Neutral" position and stop the boom extending operation.

CAUTION:

- **The hook block is raised or lowered while telescoping the boom. Perform the winch operation at the same time to adjust the hook block height.**
- **The hook block is raised or lowered while telescoping the boom. Perform the winch operation at the same time to adjust the hook block height.**
- **When the boom is maintained extended for a long time, the boom slightly retracts due to the temperature change in the hydraulic oil. In this case, extend the boom as needed.**

Perform the boom telescoping lever (2) as follows.

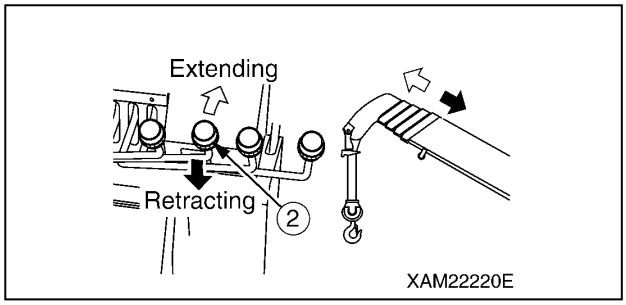

Fig. 4-152

- Extend: Push the lever forward to the "EXTEND" side.
- Neutral: Release your hand from the lever. The lever returns to the "Neutral" position and the boom telescoping stops.
- Retract: Pull the lever toward you to the "RETRACT" side.

NOTICE: Adjust the boom telescoping speed with the boom telescoping lever and the stroke of the acceleration pedal.

https://truckmanualshub.com/

Slewing Operation

WARNING!

- **Check the safety around and honk the horn before slewing.**
- **Operate the slewing lever as slowly as possible.**
  Start smoothly, slew at low speed, and stop gently.
  Sudden lever operation especially while hoisting a load will cause the load to slew, causing the loss of stability in the machine, and thus may break the crane or overturn the machine.
- **Even if the outriggers are set normally, some directions have lower stability when swang for 360 degrees. Be extremely careful when slewing while hoisting a load.**
- **Depending on how outriggers are extended, the hoisted load may hit an outrigger during the slewing operation, breaking the crane or overturning the machine. Be careful not to let the hoisted load hit an outrigger.**

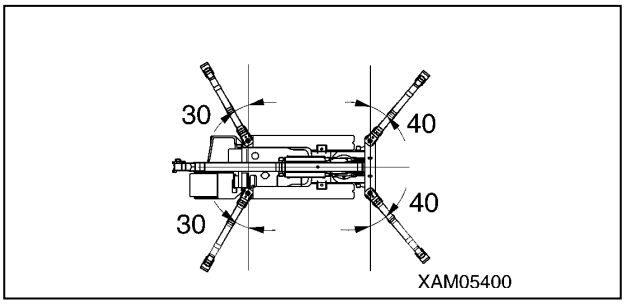

Fig. 4-153

Operate the slewing lever (1) as follows.

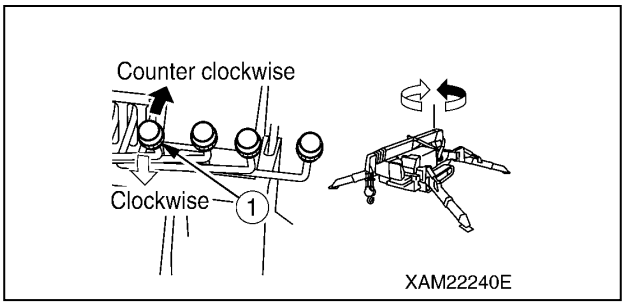

Fig. 4-154

- Slew counterclockwise (left): Push the lever forward to the "LEFT" side.
- Neutral: Release your hand from the lever.
  The lever returns to the "Neutral" position and the slewing stops.
- Slew clockwise (right): Pull the lever toward you to the "RIGHT" side.

NOTICE: Adjust the crane slewing speed with the slewing lever and the stroke of the acceleration pedal.

Acceleration Operation

WARNING! Accelerating the operation speed of the crane

CAUTION: Decrease the speed in the beginning or near the end of an operation. Change the speed to low speed or high speed according to the load.

Operate the acceleration pedal (6) as follows.

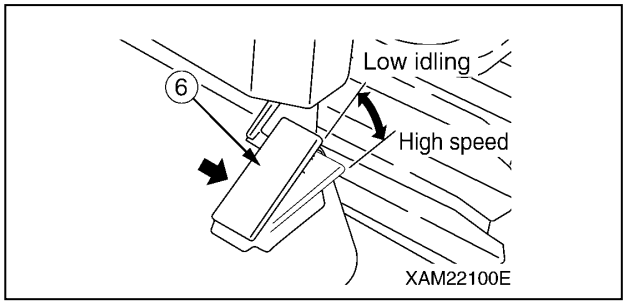

Fig. 4-155

- Low idling: Release your foot from the pedal.
  The engine speed decreases and the operation speed of the crane units slows down.
- Full speed: Fully step on the pedal.
  The engine speed increases, and the operation speed of the crane units accelerates.

NOTICE: Step on the pedal to the position of the engine speed necessary for the task.

https://truckmanualshub.com/

Crane Stowing Operation

CAUTION: The hook stowing switch cancels the auto stop function of the over winding detector.

Operate the winch lever carefully not to let the hook block hit the boom when stowing the hook block.

CAUTION:
- **Stop the slew of the hook block before stowing the hook block.**
- **When stowing the hook block, do not topple the entire hook block sideways on the ground by loosening the wire cable too much. This will cause the irregular winding on the winch drum.**
- **The boom "retracting" operation will lower the hook block. The hook block also lowers with the boom "lowering" operation. Raise the hook at the same time so that the hook block will not touch the ground or interfere with the machine.**
- **Stow the boom securely into the stowing position. After stowing the boom, verify that the boom stowing lamp on the outrigger display lights up in green. If the boom stowing lamp does not light up, the outriggers cannot be stowed. If the boom stowing lamp does not light up, lower the boom to the maximum or slew the boom to verify that the boom stowing lamp lights up.**

1. Operate the boom telescoping lever (2) to the "RETRACT" (pull toward you) side to fully retract the boom.

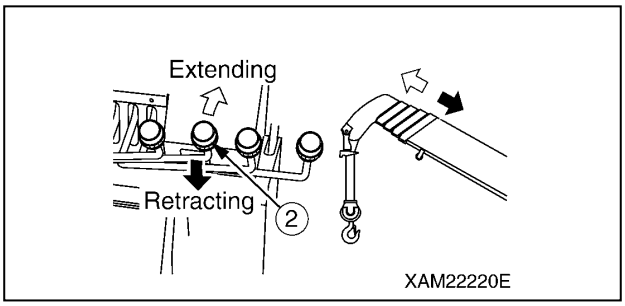

Fig. 4-156

2. Operate the slewing lever (1) to the "LEFT" side, and slowly slew the boom counterclockwise (left) to the operation of 7 degrees left from the centre of the machine. When the boom comes to the stowing position, slew stops automatically.

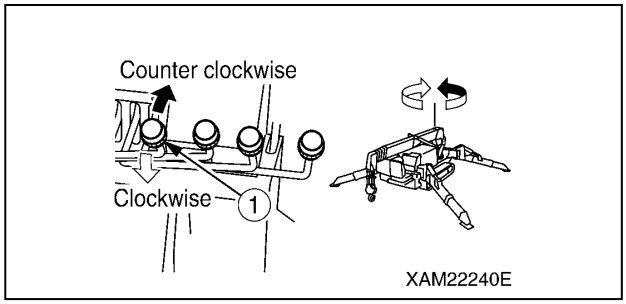

Fig. 4-157

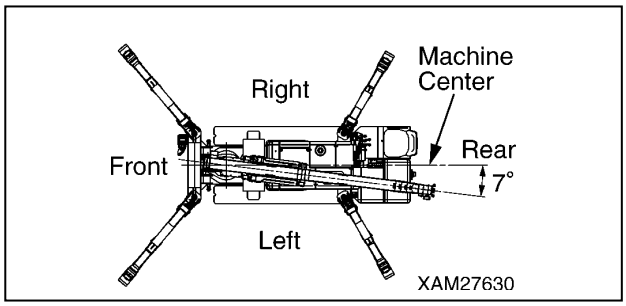

Fig. 4-158

NOTICE: Operate with the slew lever and do not use the remote control.

3. Operate the boom derricking lever (4) to the "LOWER" (push forward) side and lower the boom until it automatically stops.

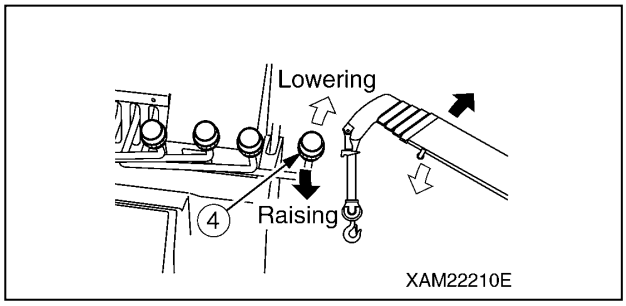

Fig. 4-159

https://truckmanualshub.com/

4. With the boom stowing switch knocked to the "ON" position, operate the boom derricking lever (4) again to the "LOWER" (push forward) side to stow the boom.

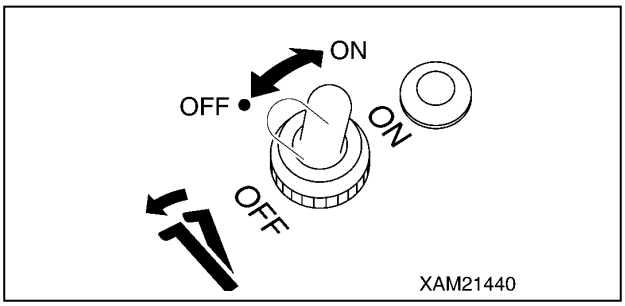

Fig. 4-160

NOTICE: When the boom stowing switch is at the "ON" position, the pilot lamp at the switch section lights up.

5. Operate the winch lever (3) to the "UP" (pull toward you) side and winch until the hook block automatically stops (over hoist).

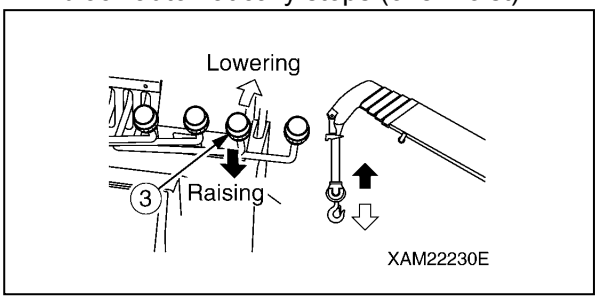

Fig. 4-161

NOTICE: Hoisting the hook block too much will result in the detection of over hoist. Then the alarm buzzer and audible message of "Hook Over Hoist" are heard and the hook raising operation automatically stops.

6. With the hook stowing switch at the "ON" position, operate the winch lever (3) to the "UP" (pull toward you) side again and slowly raise the hook block (4) to stow the block at the bottom of the boom end.

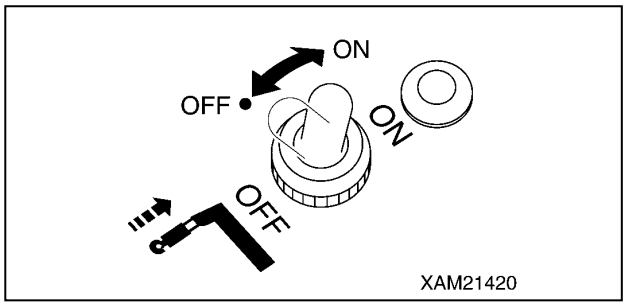

Fig. 4-162

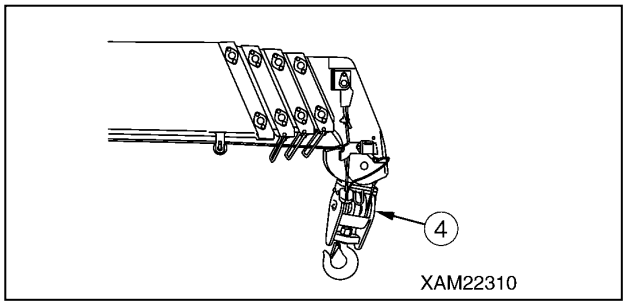

Fig. 4-163

NOTICE: Operating the hook stowing switch to the "ON" position turns on the pilot lamp at the switch section.

7. Verify that the boom stowing lamp (1) (green) on the outrigger display lights up.

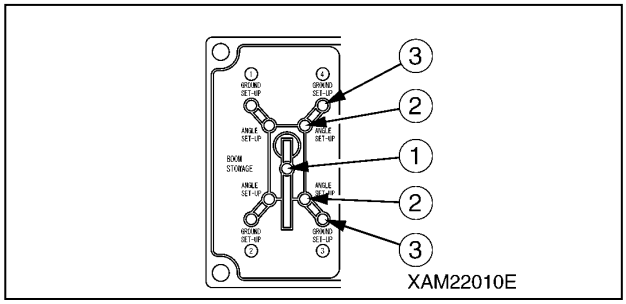

Fig. 4-164

NOTICE: If the boom stowing lamp (1) (green) on the outrigger display does not light up, repeat the boom lowering operation to the lowest position and slewing operation.

https://truckmanualshub.com/

MOMENT LIMITER (OVERLOAD DETECTOR)

Moment Limiter Features

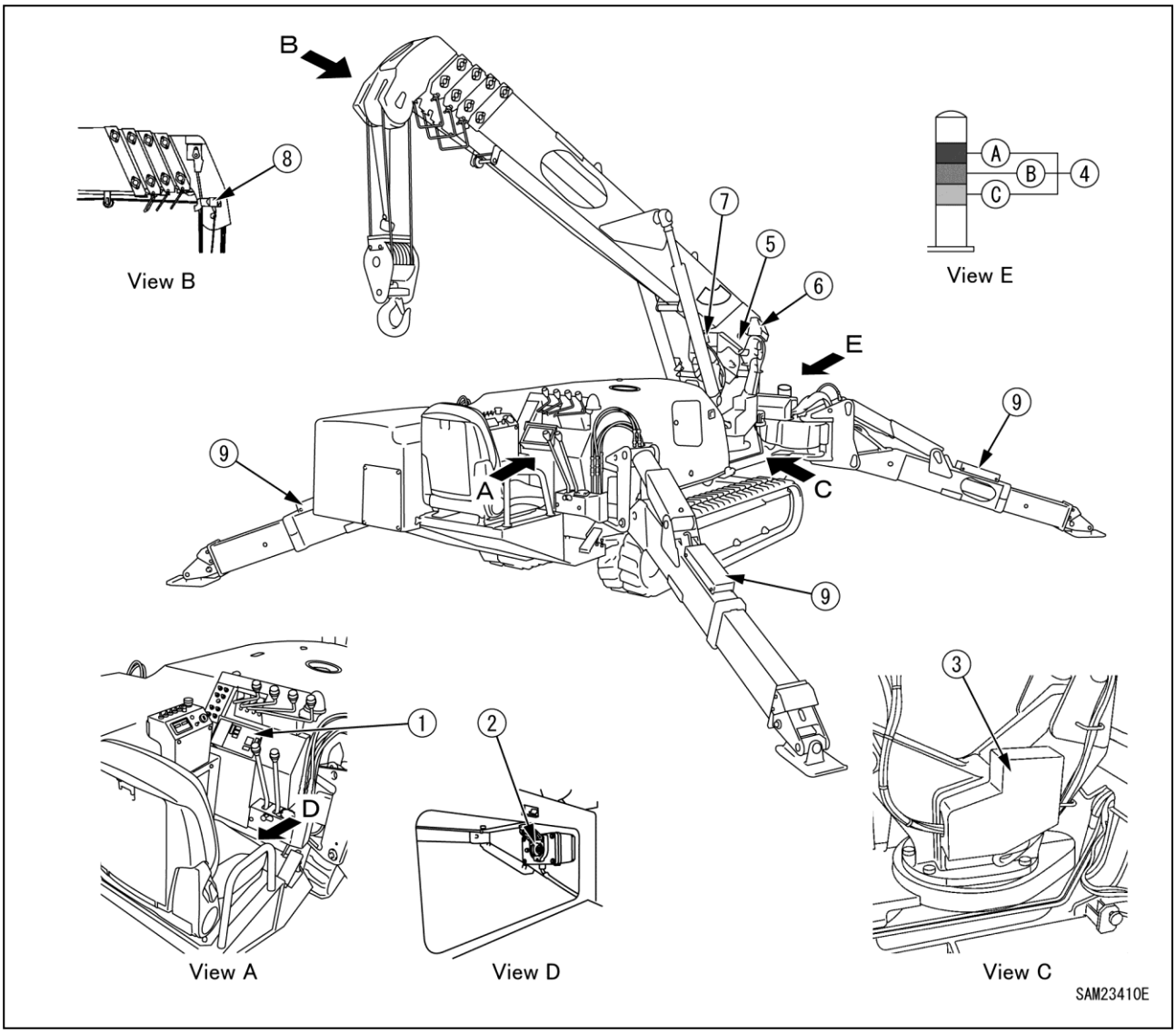

Fig. 4-165

1 - Moment limiter display unit
2 - Moment limiter override switch
3 - Moment limiter converter
4 - Working status lamp
  (A) Red working status lamp (Warning light for load factor of 100 % or more)
  (B) Yellow working status lamp (Pre-warning light for load factor of 90 to 100 %)
  (C) Green working status lamp (Working light for load factor of less than 90 %)
5 - Boom length gauge (inside boom)
6 - Boom angle gauge (side of boom rear edge)
7 - Pressure sensor (derrick cylinder) (two)
8 - Overwind alarm detector (side of boom tip)
9 - Outrigger position detection switch

https://truckmanualshub.com/

Function of Moment Limiter

WARNING!

- **Do not remove, disassemble, or repair detectors. Do not move the detectors to another location from original position.**
- **Should an object hit a detector or you find any damage on a detector, be sure to verify the actuation status of the auto stop.**
  If you find any abnormality with the actuation of the auto stop, do not fail to fix it.
- **Do not turn ON the moment limiter override switch unless you find an error or check/perform maintenance on detectors.**
- **Overloading can cause the hoisted load to fall, boom breakage, or overturning of this machine that can lead to serious accidents resulting in death or serious injury.**
- **The machine will not stop automatically even if the crane is overloaded during the crane slewing operation.**
  Do not slew the crane when being overloaded.
- **When the boom approaches the stop position during the operation, be sure to change the operation speed of the boom to low speed.**
  With high-speed boom operation, the boom may overrun the specified stop position, causing serious accidents such as overturning of the machine resulting in death or serious injury.
  If the Moment Limiter Override Switch is "ON" (Override), the Working Status Lamp will flash in red, and an alarm buzzer will sound intermittently.

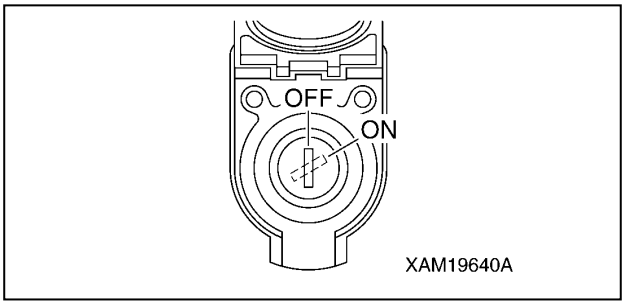

Fig. 4-166

The moment limiter is a device installed to prevent the hoisted load from falling, the boom from breaking, or the machine from overturning due to overloading.

Always check the operation of the moment limiter before crane operation to verify no abnormality.

Mechanism of Moment Limiter

The moment limiter calculates current "rated total load" by knowing the current boom posture by the boom angle gauge and the boom length gauge, by knowing the outrigger extension condition by the outrigger position switch, and by knowing the number of wire falls (entered by the operator).

Then by actually hoisting a load, the "read load" (hoist load) is sent from the pressure sensor of the derrick cylinder to the moment limiter.

The moment limiter comparatively calculates between the "rated total load" computed out of the current posture and the "real load" (hoisted load), and issues an alarm if the result indicates the rated total load/real load=90 to 100%.

If the calculation result indicates the rated total load/real load=above 100%, an alarm is issued and the causes the boom operation to automatically stop.

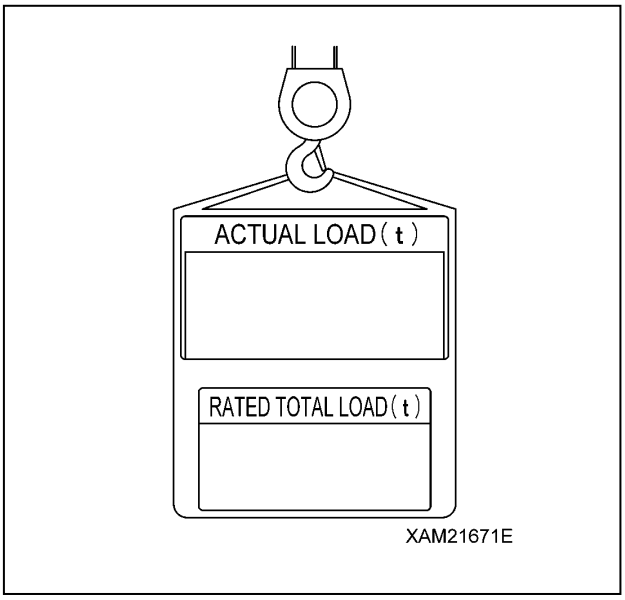

Fig. 4-167

https://truckmanualshub.com/

Display of Moment Limiter Error Messages

The moment limiter performs self-diagnosis on the moment limiter display unit when an error is issued by the boom angle gauge, boom length gauge, pressure sensor, or when a circuit is opened or a connector is disconnected.

The result is displayed on the "rated total load display" of the moment limiter display unit by an error code to notify the operator of the error.

Immediately stop the use of the crane when an error code is displayed.

See "Moment Limiter Error Causes and Actions to Be Taken" on page 5-88.

Moment Limiter Operations

The moment limiter is a device for unexpected events. Operations relying on the device will rather incur danger.

Pay sufficient attention during the operation not to cause auto-stop of the crane.

Prohibited Actions after Auto Stop

DANGER! The following crane operations are prohibited after the crane has stopped automatically due to overloading. These operations may cause overturning of the machine or breakage of the boom and are very dangerous.

- **Boom lowering operation**
- **Boom extending operation**
- **Hook raising operation**
- **Crane slewing operation**
- **Boom raising operation**

Recovery Operation after Auto Stop

DANGER! Be sure to switch the engine speed to low speed and perform crane operation carefully if the moment limiter load factor is 90 % or higher.
Performing crane operation at high engine speed will slew the hoisted load and is very dangerous, causing overloading and it may break the boom.

1. With load factor of "less than 90 %"
When the hoisting load is less than 90 % of the rated total load, the working status lamp in green, indicating normal operation status.

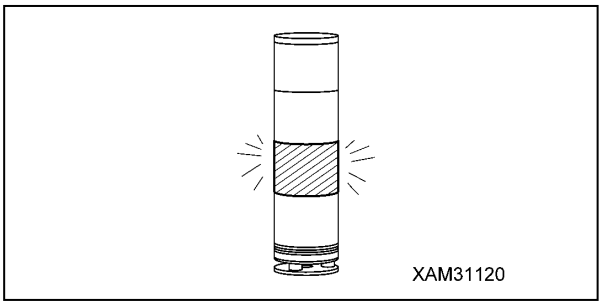

Fig. 4-168

2. With load factor of "90 to less than 100 %"
When the hoisting load reaches 90 % of the rated total load (pre-warning), the working status lamp changes from green to yellow and the alarm sounds intermittently, notifying the operator and those around that the hoisting load is close to the rated total load.

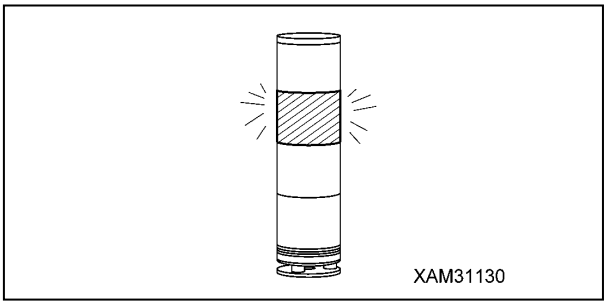

Fig. 4-169

3. With load factor of "100 % or higher"
When the hoisting load reaches 100 % of the rated total load by continuing the crane operation after exceeding 90 % of the rated total load (pre-warning), the working status lamp changes from yellow to red and the alarm now sounds continuously. The following crane operations will stop automatically.

- Hook raising operation
- Boom extending operation
- Boom lowering operation
- Boom raising operation

https://truckmanualshub.com/

The audible message of "Peep, overloading" will be issued. Furthermore, the LED of "100 %" on the moment limiter load factor display lights up.

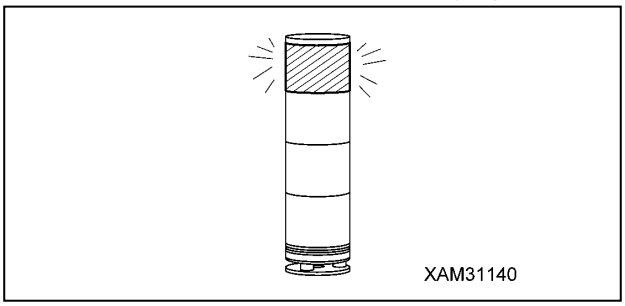

Fig. 4-170

https://truckmanualshub.com/

4. Recovery Operation from Auto Stop

The recovery operation from overloading should be the reverse operation of the crane operation that caused the auto stop. Perform one of the followings.

(1) Lower the hook and put down the hoisted load on the ground.

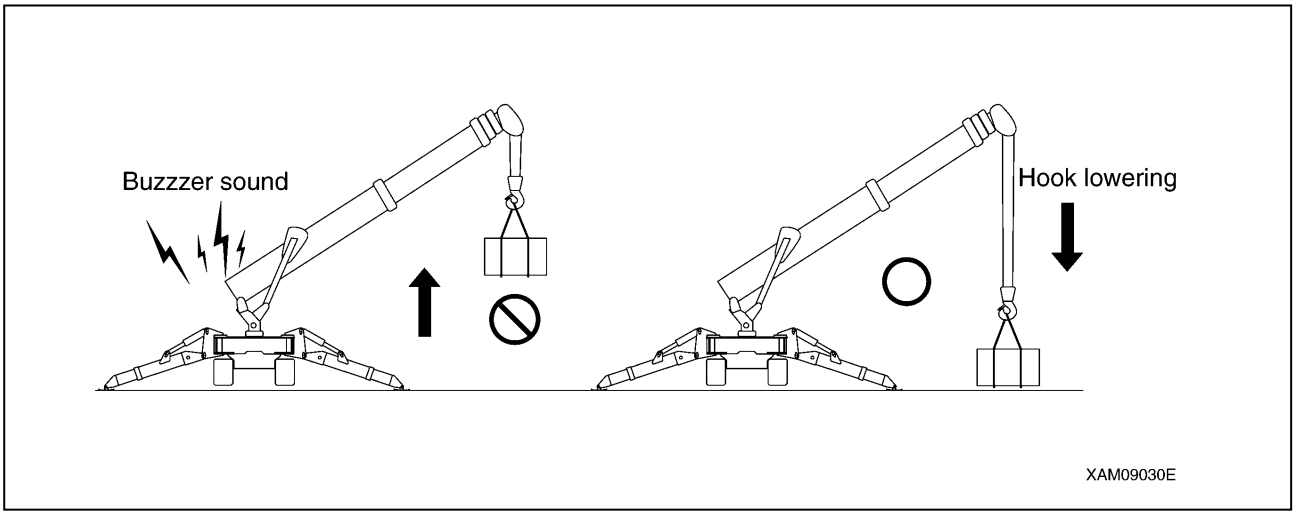

Fig. 4-171

(2) Retract the boom.

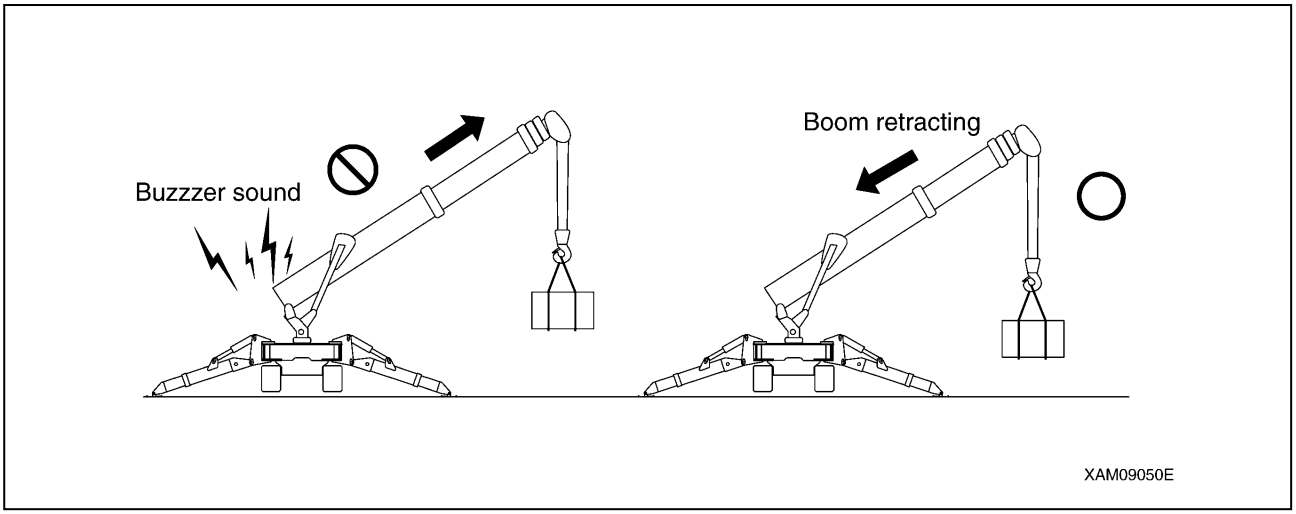

Fig. 4-172

5. When recovering by boom raising operation

In the case of an automatic stop, when raising of the boom is unavoidable, the boom raising operation is possible only while keeping the boom lift bypass switch in the "ON" position.

To return to the "OFF" position, also return the boom raising lever.

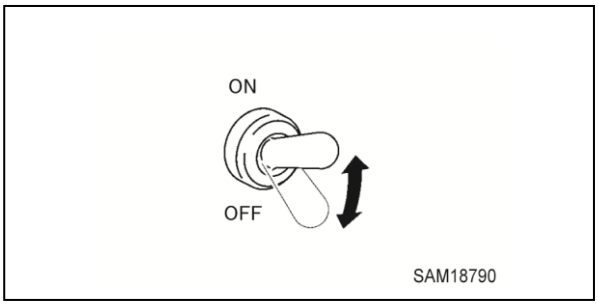

Fig. 4-173

DANGER! Only use this switch when an automatic stop has occurred through entry into the overload region while lowering or extending the boom.
Do not use under normal conditions or when lifting clear from the ground.
If you use this switch when lifting from the ground, there is a risk of serious accidents such as the machine being damaged or overturning.

https://truckmanualshub.com/

Moment Limiter Display

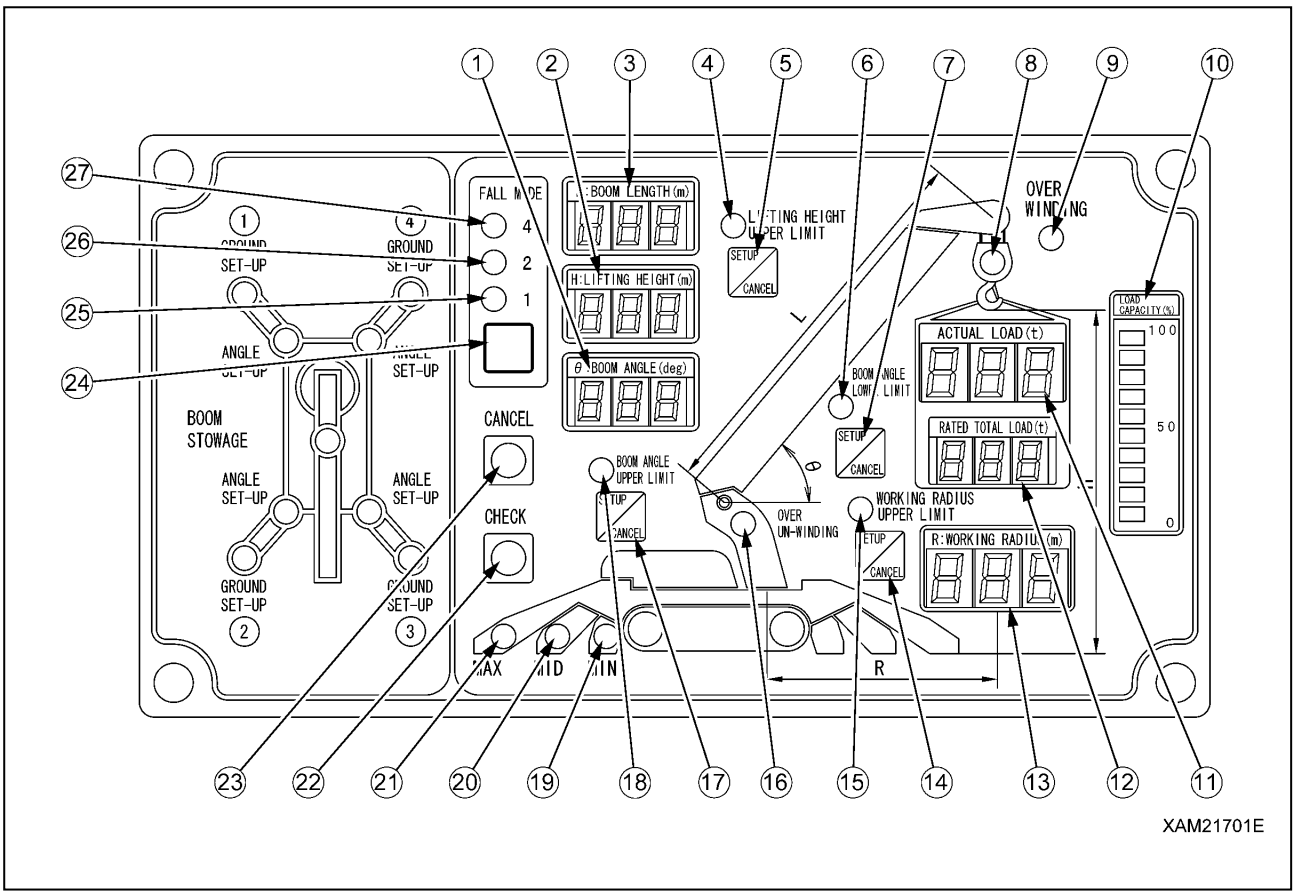

Fig. 4-174

1 - Boom angle display
2 - Lifting height display
3 - Boom length display
4 - Hook height upper limit LED (Orange)
5 - Hook height upper limit switch
6 - Boom angle lower limit LED (Orange)
7 - Boom angle lower limit switch
8 - Load factor LED
(Changes to green, yellow, and red)
9 - Over winding LED (Red)
10 - Load capacity display (Yellow)
11 - Actual load display
12 - Rated total load display
13 - Working radius display
14 - Working radius upper limit switch
15 - Working radius upper limit LED (Orange)
16 - Cable warning LED (Orange)
17 - Boom angle upper limit switch
18 - Boom angle upper limit LED (Orange)
19 - Outrigger MIN. extension LED (Blue)
20 - Outrigger MID. extension LED (Blue)
21 - Outrigger MAX. extension LED (Blue)
22 - Check switch
23 - Cancel switch
24 - Fall mode selector switch
25 - Single-fall LED (Blue)
26 - 2-falls LED (Blue)
27 - 4-falls LED (Blue)

https://truckmanualshub.com/

Descriptions of Switches on Moment Limiter Display

Fall Mode Selector Switch and Fall Mode Display LED (Blue)

DANGER! When entering the number of falls, verify the actually used number of falls and make sure to set up correctly.

Entering incorrect number of falls may prevent issuance of the pre-warnings and boom auto-stop even when the overload is near happening, and thus may result in crane damage or machine trip that may result in serious accidents.

Use this switch to change the number of wire falls.

- Keep pressing the switch for 2 seconds or more. The setting changes from "4-falls" to "1-fall". At the same time, the fall mode display LED changes from "4-falls" to "1-fall", indicating that the setting has changed.
- Then each time you press the switch for 2 seconds or more, the setting of the number of wire falls changes from "1-fall" to "2-falls", and then from "2-falls" to "4-falls".

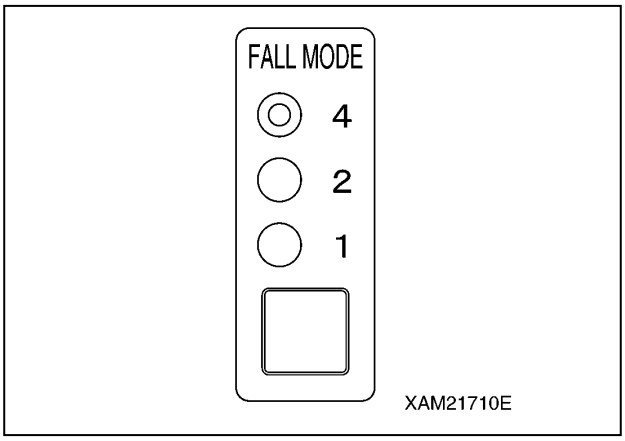

Fig. 4-175

NOTICE: When changing the setting right after doing so, release your hand from the switch, and then press the switch again.

Boom Angle Upper Limit Switch and LED (Orange)

Use this switch to set or cancel the boom angle upper limit.

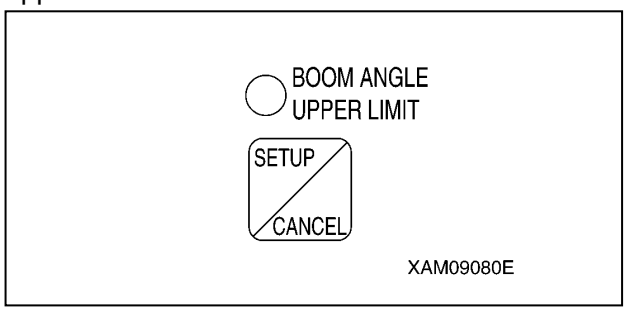

Fig. 4-176

Setup

With no upper limit value being set, set the boom to the angle you would like, and press the switch for 2 seconds.

The boom angle at this point is set as the upper limit.

At the same time, the LED lights up indicating that the upper limit value was set.

To enable this setting, turn the key switch to the "ON" position again after turning it to the "OFF" position, or lower the boom by "10 degrees" or more from the set boom angle to get out of the pre-warning zone while the engine is being started.

NOTICE: Be sure to verify that the boom automatically stops at the set angle before performing the actual operation. If the boom does not stop automatically, re-set the boom angle using the procedure above.

When the boom reaches the pre-warning zone or stops at the upper limit with the boom angle upper limit set, the boom angle upper limit LED flashes.

Cancel

With the upper limit value being set (LED ON), press the switch for 5 seconds.

The current upper limit value setting will be cleared. At the same time, the LED goes off indicating that the upper limit value setting is cleared.

NOTICE: The setting and cancelling will not repeat even if you keep the switch pressed for more than 2 seconds. Let your hand go off the switch and press the switch again.

https://truckmanualshub.com/

Boom Angle Lower Limit Switch and LED (Orange)

Use this switch to set or cancel the boom angle lower limit.

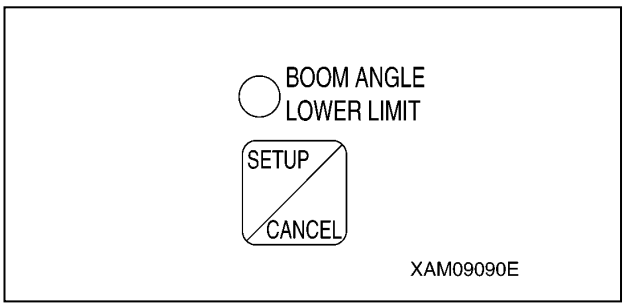

Fig. 4-177

Setup

With no lower limit value being set, set the boom to the angle you would like, and press the switch for 2 seconds.

The boom angle at this point is set as the lower limit.

At the same time, the LED lights up indicating that the lower limit value was set.

To enable this setting, turn the key switch to the "ON" position again after turning it to the "OFF" position, or raise the boom by "7 degrees" or more from the set boom angle to get out of the pre-warning zone while the engine is being started.

NOTICE: Be sure to verify that the boom automatically stops at the set angle before performing the actual operation. If the boom does not stop automatically, re-set the boom angle using the procedure above.

When the boom reaches the pre-warning zone or stops at the lower limit with the boom angle lower limit set, the boom angle lower limit LED flashes.

Cancel

With the lower limit value being set (LED ON), press the switch for 5 seconds.

The current lower limit value setting will be cleared. At the same time, the LED goes off indicating that the lower limit value setting is cleared.

NOTICE: The setting and cancelling will not repeat even if you keep the switch pressed for more than 2 seconds. Let your hand go off the switch and press the switch again.

Working Radius Upper Limit Switch and LED (Orange)

Use this switch to set or cancel the working radius upper limit.

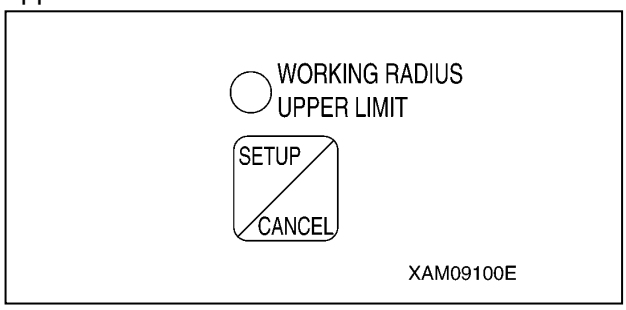

Fig. 4-178

Setup

With no upper limit value being set, set the boom to the working radius you would like, and press the switch for 2 seconds.

The working radius at this point is set as the upper limit.

At the same time, the LED lights up indicating that the upper limit value was set.

To enable this setting, turn the key switch to the "ON" position again after turning it to the "OFF" position, or reduce the working radius by "1.3 m" or more from the set working radius to get out of the pre-warning zone while the engine is being started.

NOTICE: Be sure to verify that the boom automatically stops at the set working radius before performing the actual operation. If the boom does not stop automatically, re-set the working radius using the procedure above.

When the boom reaches the pre-warning zone or stops at the upper limit with the working radius upper limit set, the working radius upper limit LED flashes.

Cancel

With the upper limit value being set (LED ON), press the switch for 5 seconds.

The current upper limit value setting will be cleared. At the same time, the LED goes off indicating that the upper limit value setting is cleared.

NOTICE: The setting and cancelling will not repeat even if you keep the switch pressed for more than 2 seconds. Let your hand go off the switch and press the switch again.

https://truckmanualshub.com/

Lifting Height Upper Limit Switch and LED (Orange)

Use this switch to set or cancel the hook height upper limit.

While the hook height is restricted by detecting the height of the tip of the boom, the hook height on the display panel shows the hook height when the hook was raised to the over hoist detection status.

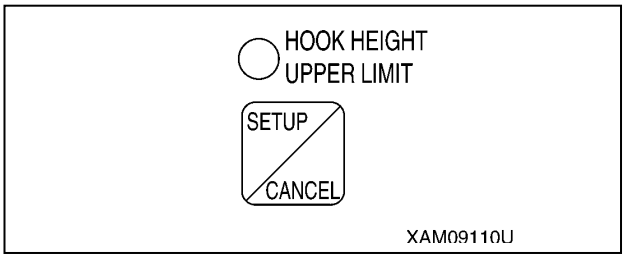

Fig. 4-179

Setup

With no upper limit value being set, set the boom to the hook height you would like, and press the switch for 2 seconds.

The hook height at this point is set as the upper limit.

At the same time, the LED lights up indicating that the upper limit value was set.

To enable this setting, turn the key switch to the "ON" position again after turning it to the "OFF" position, or reduce the hook height by "1.3 m" or more from the set hook height to get out of the pre-warning zone while the engine is being started.

NOTICE: Be sure to verify that the boom automatically stops at the set hook height before performing the actual operation. If the boom does not stop automatically, re-set the hook height using the procedure above.

When the boom reaches the pre-warning zone or stops at the upper limit with the hook height upper limit set, the hook height upper limit LED flashes.

Cancel

With the upper limit value being set (LED ON), press the switch for 5 seconds.

The current upper limit value setting will be cleared. At the same time, the LED goes off indicating that the upper limit value setting is cleared.

NOTICE: The setting and cancelling will not repeat even if you keep the switch pressed for more than 2 seconds. Let your hand go off the switch and press the switch again.

Cancel Switch

Use this switch to cancel the all setting sets in the section 2 to 5 above.

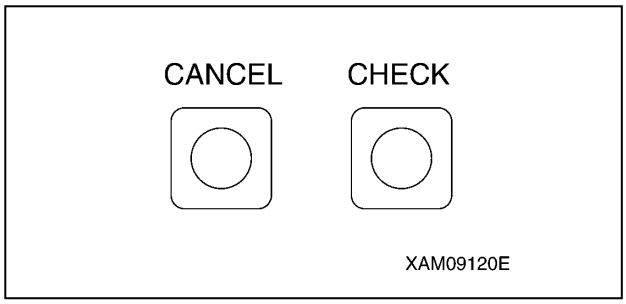

Fig. 4-180

- Press this switch and "CHECK" switch at the same time for 5 seconds or more.
  The all value sets in the section 2 to 5 above will be cancelled.

Check Switch

Use this switch to verify the values set in the section 2 to 5 above.

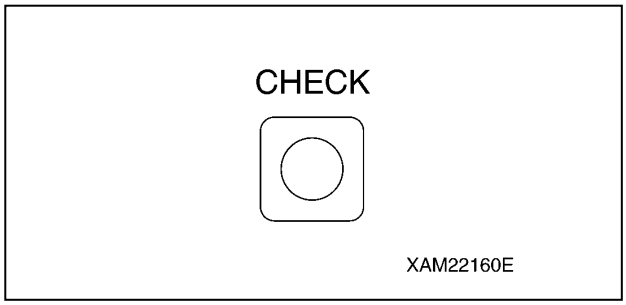

Fig. 4-181

- Press this switch. Every time the switch is pressed, the set value will be displayed in the following order.

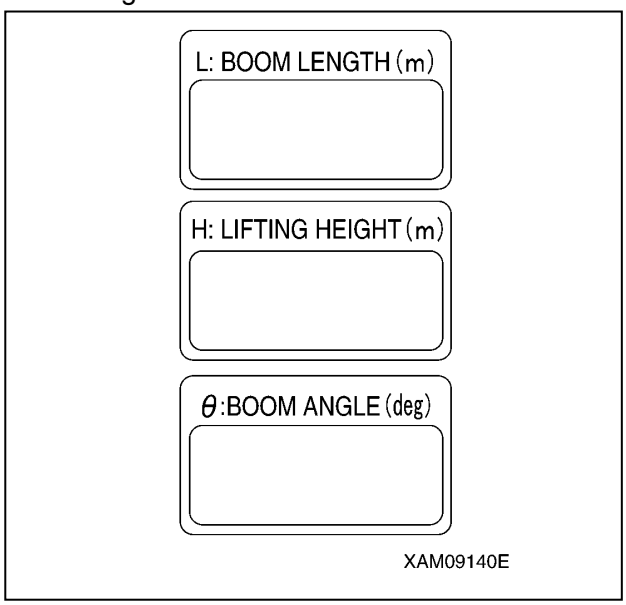

Fig. 4-182

https://truckmanualshub.com/

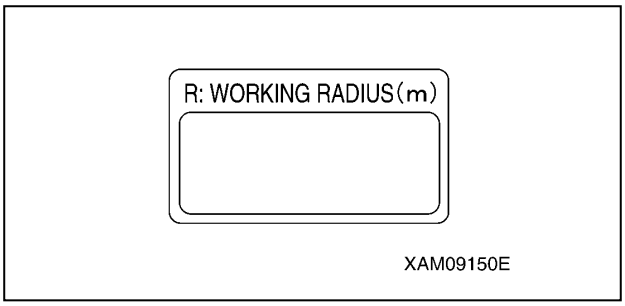

Fig. 4-183

(1) "Boom angle upper limit value" is displayed at the boom angle display section.

(2) "Boom angle lower limit value" is displayed at the boom angle display section.

(3) "Working radius upper limit value" is displayed at the working radius display section.

(4) "Hook height upper limit value" is displayed at the lifting height display section.

(5) Returns to the original display.

NOTICE:

- *When a set value is displayed, the LED for its setting switch section flashes at the same time.*
- *If no switch was pressed for 5 seconds or another switch was pressed with a set value being displayed, the display goes back to the original display.*
- *The display will be a blank for the item to which no value is set.*
- *The display sections other than for the corresponding items will be blank.*

Descriptions of Moment Limiter Display

For LEDs not described in this section, see "Moment Limiter Display" on page 4-64.

Actual Load Display Section

This section constantly displays the actual load of the hoisted load during the crane operation.

The actual load indicates the total weight of the hoisted load and lifting ring excluding the hook weight.

If "0.0" to "0.1" is displayed when nothing is being hoisted, the system is normal.

If the value displayed is out of this range, contact us or our sales service agency.

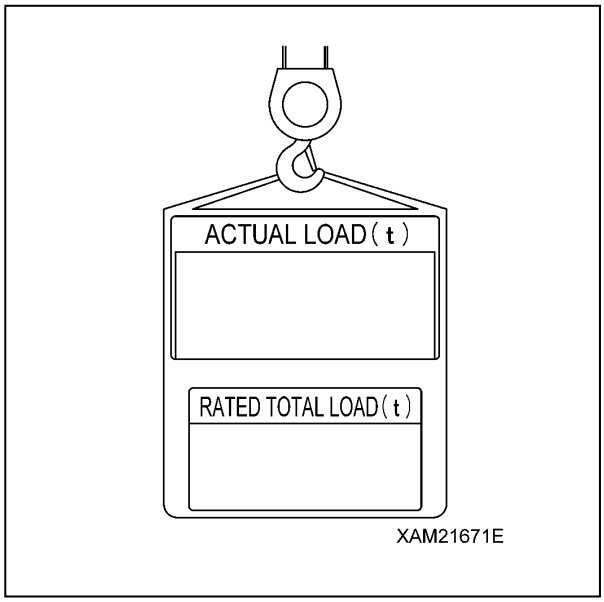

Fig. 4-184

Rated Total Load Display Section

This section displays the number of wire falls on the hook, working radius, currently hoistable rated total load (hook weight + lifting ring weight + load to be hoisted) computed out of the conditions such as the degree of outrigger extension.

https://truckmanualshub.com/

Working Radius Display Section

This section constantly displays the current working radius during the crane operation.
The working radius is the horizontal distance from the crane slewing centre to the centre of the hook.

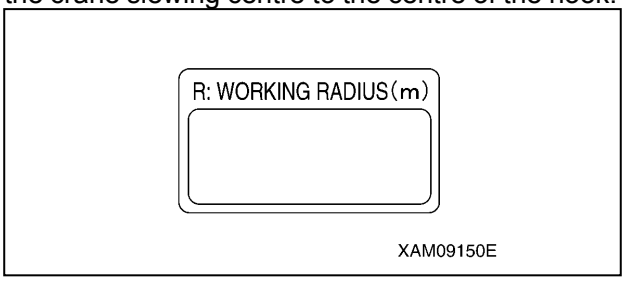

Fig. 4-185

Boom Length Display Section

This section constantly displays the current boom length during the crane operation.

The boom length is the distance from the boom root pin to the sieve pin at the end of the boom.

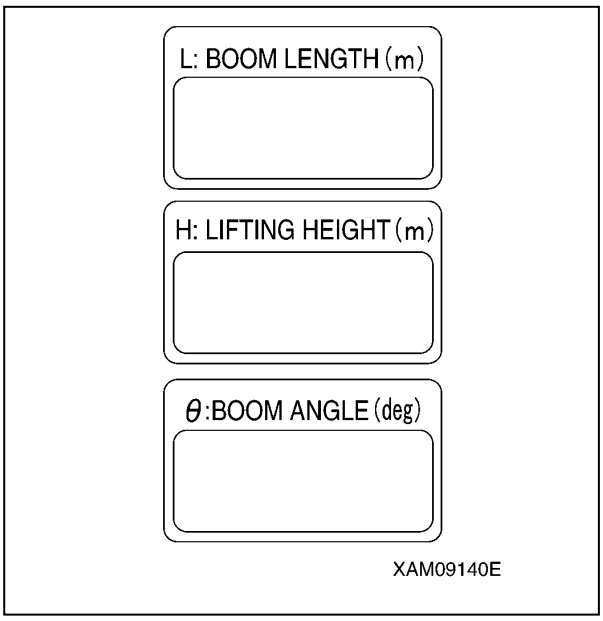

Fig. 4-186

Lifting Height Display Section

This section constantly displays the current lifting height during the crane operation.

The lifting height is the vertical distance from the ground to the bottom of the hook.

Boom Angle Display Section

This section constantly displays the current boom angle during the crane operation.

The boom angle is the angle the boom and the horizontal line form.

Over Winding LED (Red)

This LED flashes up when the hook is overwound, and issues over winding warning and causes an automatic stop.

This LED also flashes when the hook is stowed during the hook stowing operation. This is normal.

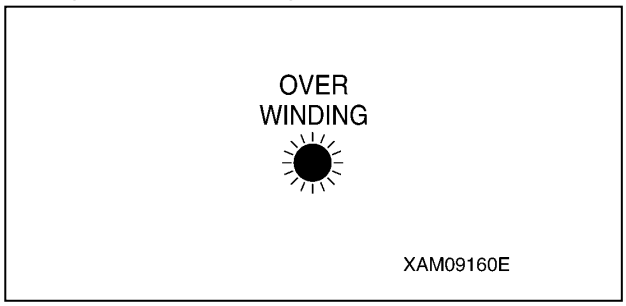

Fig. 4-187

Outrigger Extension LED (Blue)

The LED lights up to indicate the outrigger extension status.

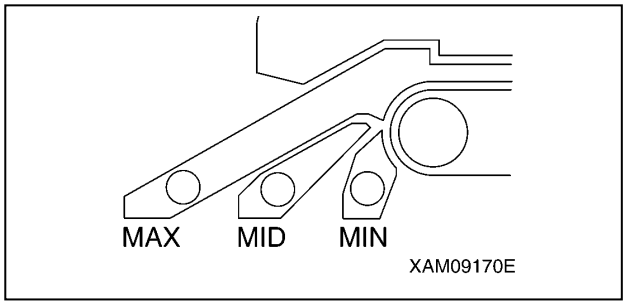

Fig. 4-188

- If any of the four outriggers has not properly reached the middle extension position, the "MIN" LED lights up.
- If all the four outriggers properly reach the middle extension position, the "MID" LED lights up.
- If all the four outriggers reach the maximum extension position, the "MAX" LED lights up. Even if you thought you had set the outriggers at the maximum extension position, the "MID" LED lights up if any of the outriggers did not properly reach the maximum extension position.

https://truckmanualshub.com/

Load Factor LED (Changes to Green/ Yellow/Red)

This LED indicates the status of the moment limiter load factor by its illumination.

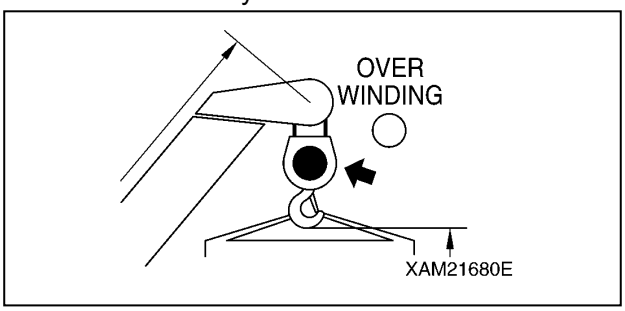

Fig. 4-189

- The LED lights up in green if the load factor is less than 90 %.
- The LED lights up in yellow if the load factor is 90 to less than 100 %.
- The LED lights up in red if the load factor is 100 % or higher.

Load Factor Display (Yellow)

This display indicates the status of the moment limiter load factor by its illumination.

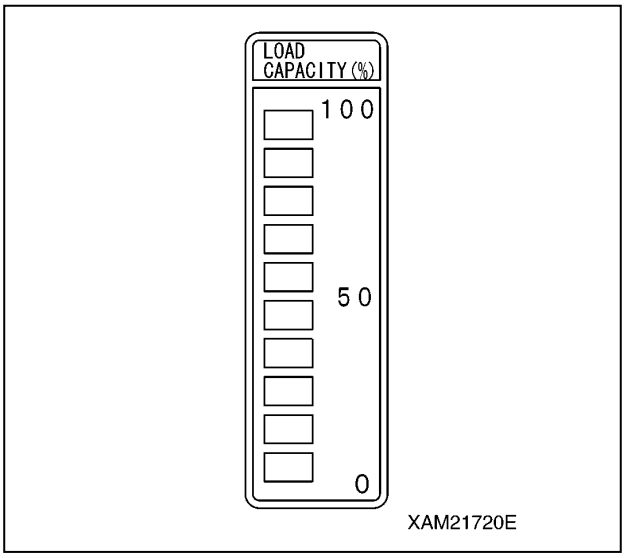

Fig. 4-190

- The load factor is indicated by ON/OFF of the "bar" according to the changes of the load factor.
- All the "bars" will be ON when the load factor reaches 100 % or higher.

NOTICE: When the load factor is about 50 %, all the "bars" around the number "50" on the right and below are ON.
All the "bars" around the number "50" and above are OFF.

Moment Limiter Functions

Overload Warning

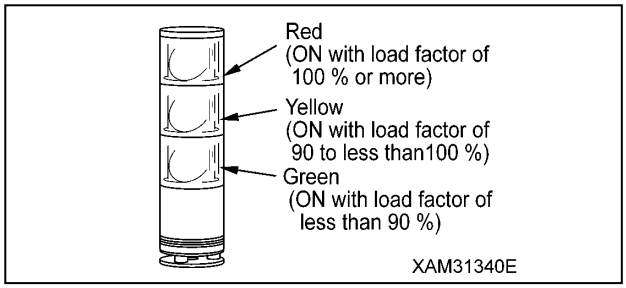

Fig. 4-191

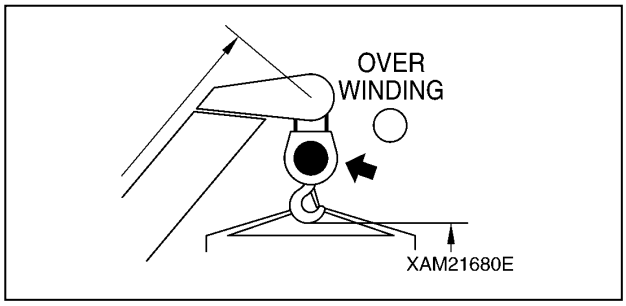

Fig. 4-192

1. **Safety Zone** ("Actual load" is less than 90 % of the "rated total load")
   - Green of the working status lamp lights up.
   - The LED lights up in green if the load factor is less than 90 %.
2. **Pre-Warning** ("Actual load" is 90 to less than 100 % of the "rated total load")
   - Yellow of the working status lamp lights up.
   - The LED lights up in yellow if the load factor is 90 to less than 100 %.
   - The alarm bleeps intermittently.
3. **Limit Warning** ("Actual load" is 100 % or higher than the "rated total load")
   - Red of the working status lamp lights up.
   - The LED lights up in red if the load factor is 100 % or higher.
   - The alarm bleeps continuously.
   - The hazardous operation of the boom stops automatically.
   - Voice message of "Overloading" is heard.
   - "Load factor 100 % or more" LED (yellow) lights up.
4. **Clearing Limit Warning Auto Stop**

   If the system stops automatically, promptly perform the recovery operation caused by overloading.
   See "Recovery Operation after Auto Stop" on page 4-61 for recovery operations.

https://truckmanualshub.com/

Working Envelope Restriction Warning

When the working envelope gets close to the set restriction value, a warning is issued to notify the operator and people around of the situation.

The last status of the set value for the working envelope restriction is memorised even if the starter switch is turned to the OFF position.

NOTICE: See "Descriptions of Switches on Moment Limiter Display" on page 4-65 for how to set the value for working envelope restriction.

When the working envelope has been set, the restriction will be as follows.

1. **Safety Zone**
   - The appropriate working envelope restriction LED (orange) lights up.
   - Green of the working status lamp lights up.
2. **Pre-Warning**
   - The appropriate working envelope restriction LED (orange) lights up.
   - The alarm bleeps intermittently.
   - Yellow of the working status lamp lights up.
3. **Limit Warning**
   - The appropriate working envelope restriction LED (orange) lights up.
   - Red of the working status lamp lights up.
   - The alarm bleeps continuously.
   - The hazardous operation of the boom stops automatically.

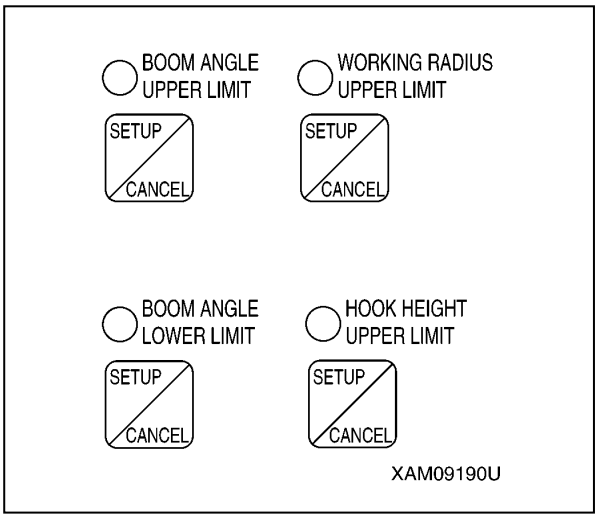

Fig. 4-193

Over Winding Detector

CAUTION: Pay attention to the distance between the hook and boom when raising the hook. Extending the boom also raises the hook. Always check the hook height when extending the boom.

When you overwind the hook when raising the hook or extending the boom,

- The "OVER WINDING" LED (red) flashes.
- The alarm bleeps continuously.
- The hook raising and boom extending operation stop automatically.
- The voice saying "hook is overwinded" is heard. In case of auto stop, immediately perform the recovery operation.

Perform hook lowering and boom retracting operations as recovery operations.

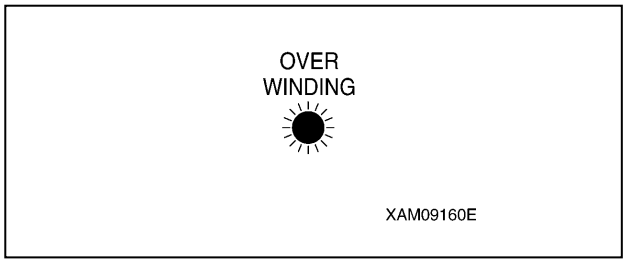

Fig. 4-194

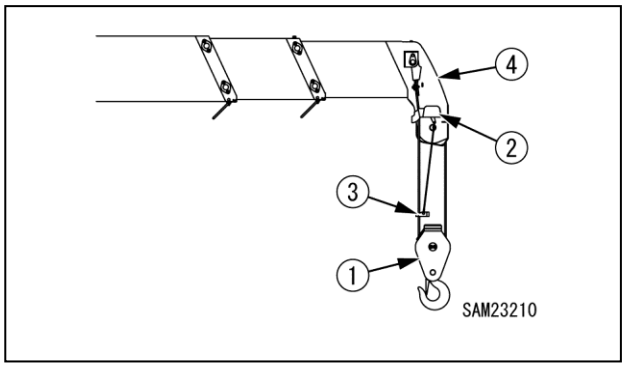

Fig. 4-195

1 - Hook block
2 - Over winding detector
3 - Weight
4 - Boom

When the hook block (1) was raised or the boom (4) was extended, the over winding detector intermittently activates the buzzer to warn the operator of over winding if the hook block (1) approached the end of the boom (4) and pushed up the weight (3).
At the same time, the raising of the hook block (1) and the extension of the boom (4) stop automatically.
When a warning buzzer sounds, operate the winch lever immediately to the "LOWER" side or operate the boom telescoping buzzer to the "RETRACT" side to lower the hook block (1).

https://truckmanualshub.com/

Number of Wires Selector Switch

WARNING!
- **Stop the crane operation when changing the number of wires hooked using the number of wires selector switch.**
- **Changing the number of wires during the crane operation can cause unexpected accidents.**
- **Perform the crane operation always after matching the number of wires display on the moment limiter and the actual number of wires. Mistaking the number of wires cause serious accidents.**

The wire cable has the safe load per cable determined.

Determine the number of wires according to the maximum load to be hoisted.

The actual number of wires hooked and the number of wires display on the moment limiter must match.

With this machine, the hook for four/two wire cables is referred to as the standard specifications.

The last status of the set number of wires is memorised even if the starter switch is turned to the OFF position.

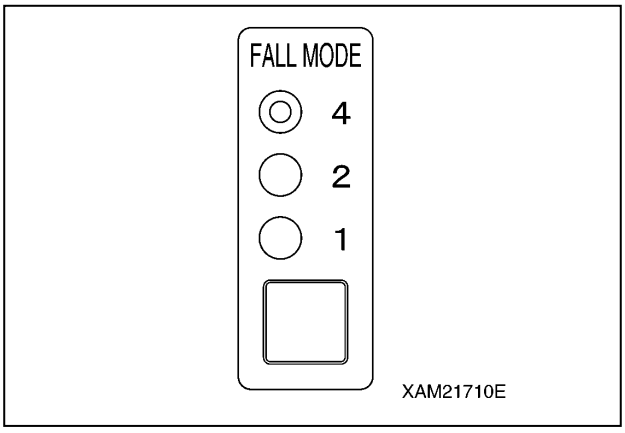

Fig. 4-196

Boom Upper Limit Detection

When the boom is raised and the boom angle reaches "about 77 degrees", the boom raising operation stops automatically.

Boom Lower Limit Detection

When the boom is lowered and the boom angle reaches "about 3 degrees", the boom lowering operation stops automatically.

Outrigger Extension Detection

The outrigger extension status is detected with the limit switch mounted to each of four outriggers, lighting the appropriate LED (blue) of the "MIN", "MID", or "MAX" and changing the rated total load.

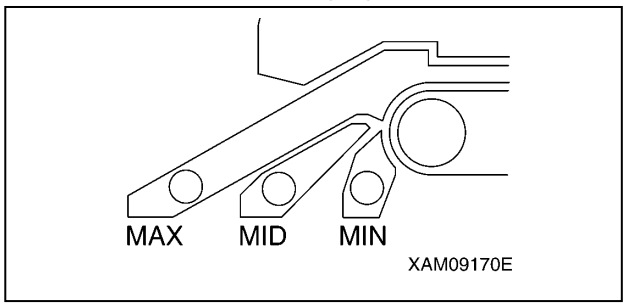

Fig. 4-197

Moment Limiter Starting Status

The moment limiter checks its function for 2 seconds when the starter switch is turned to the ON position.
Meanwhile,
- The red of the working status lamp lights up.
- All the LEDs light up.
- The horn sounds momentarily.

Then, if the moment limiter and the sensors are normal upon the completion of the functional check of the moment limiter, the red of the working status lamp goes off and green of the working status lamp up indicating that the machine is ready for use.

CAUTION: If the red of the working status lamp does not go off after completing the functional check of the moment limiter, be sure to contact us or our sales service agency.

Moment Limiter Working Envelope Setting

WARNING!
- The boom may go beyond the set value when operated at high speed even if the working envelope was restricted by the moment limiter. Be sure to set the working envelope with safe distance from obstacles.
  Operate the crane at low speed.
- Be sure to verify that the boom stops at the set position after setting the boom working envelope.

If the boom working envelope is limited due to working space issue, you can set the boom working envelope to the desired value.

https://truckmanualshub.com/

Setting Working Envelope

Operate the boom to the limit of the working envelope you would like to restrict, and press the appropriate SETUP/CANCEL switch for 2 seconds.

You can set that limit value.

At the same time, the LED above the appropriate switch lights up.

Then, return the boom to the following setting to enable the restriction control.

"Set value – 10 degrees or more" for boom upper limit.
"Set value + 7 degrees or more" for boom lower limit.
"Set value – 1.3 m or less" for working radius upper limit
"Set value – 1.3 m or less" for hook height (With [Lower] or [Retract] operation of the boom)

Or, turn the starter switch to the "OFF" position and then turn again to the "ON" position to enable the restriction.

NOTICE: The last status of the set value has been held in memory even if the starter switch is turned to the "OFF" position.

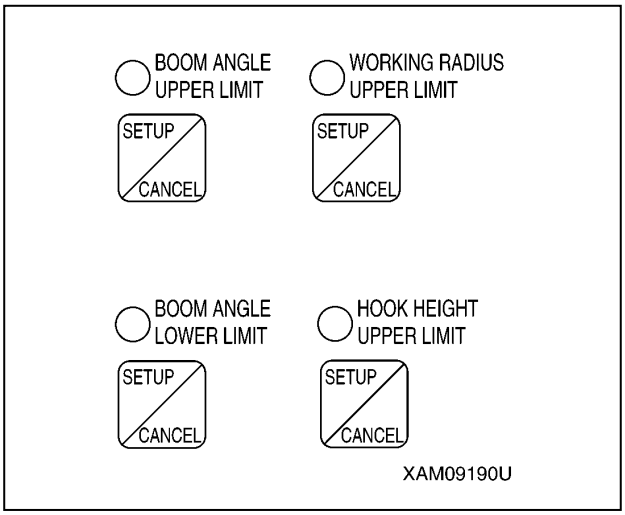

Fig. 4-198

Cancelling Working Envelope Setting

- Press and hold the CANCEL switch and CHECK switch at the same time for 5 seconds or more.
  All the set working envelope restrictions are cancelled.
  At the same time, the LED above all the working envelope limit switches go off to complete the cancellation of the settings.
- Press the SETUP/CANCEL switch of the item which restriction you would like to cancel for 5 seconds.
  The set value of only the item can be cancelled.
  At the same time, the LED above the switch goes off to complete the cancellation of the setting.

NOTICE: See "Descriptions of Switches on Moment Limiter Display" on page 4-65 for how to set limit on the working envelope.

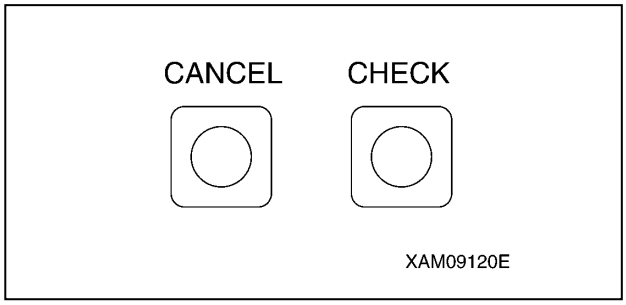

Fig. 4-199

https://truckmanualshub.com/

Moment Limiter Override Switch

DANGER!:
The moment limiter override switch disables ALL safety features, ALL limits and ALL automatic stops of the Moment Limiter Digital Load Safety System.

When this switch is turned to the "ON" position (OVERRIDE), all the Moment Limiter's interlocked automatic safety/ stop /limit features become INACTIVE & DISABLED. All crane operations in this situation are unprotected by the Moment Limiter system.

The risk of a crane accident increases greatly without the use of the Moment Limiter system. The Moment Limiter system is a safety aid to the operator, not a tool or excuse for poor and dangerous crane operation.

With or without the protection of the Moment limiter system, crane operation outside of the parameters of the Rated Total Load Chart(s), unsafe operations beyond accepted safe crane practices and proper crane operation technics may result in dropping of a hoisted load, breakage of crane components or the machine tipping over. A serious accident resulting in death or serious injury may occur.

Use this switch only in the case of an emergency due to failure of the Moment Limiter system, and or machine maintenance / service when any crane travel, lifting operations are not being performed.

Do not store the override key permanently in the moment limiter override switch box.

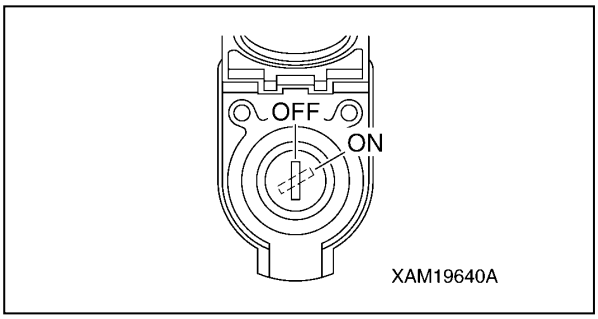

Fig. 4-200

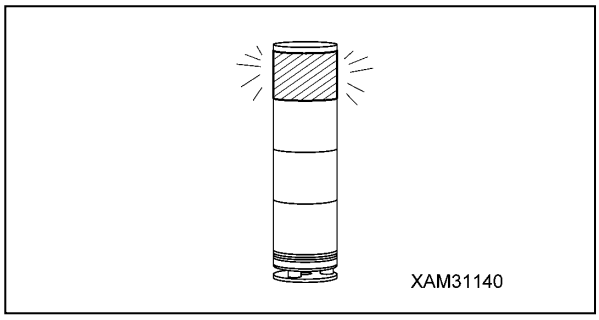

Fig. 4-201

To Override the Moment Limiter System:

- The moment limiter override switch box is located inside the door under the operation seat.
- KEY TO "ON" POSITION = OVERRIDE Insert the OVERRIDE KEY into the moment limiter override switch box. Turn the key clockwise (right) to "ON" position. (The spring-loaded switch automatically returns to the "OFF" position when you release the key). Now the system is in OVERRIDE. ALL safety features, ALL limits and ALL automatic stops of the Moment Limiter system are INACTIVE & DISABLED for a total of 3 minutes.
- The moment limiter override switch box LED light will illuminate solid for 2-1/2 minutes, then it will flash for the last 30 seconds of OVERRIDE.
- The Working status light will flash RED during OVERRIDE.
- The Moment Limiter warning buzzer /alarm will sound continuously for 3 minutes.
- Crane functions boom extend, and boom lowering will be limited in speed to 20% of normal speed during OVERRIDE.
- To discontinue OVERRIDE, at any time under 3 minutes, turn the engine starter ignition key to OFF shutting down the machine. Restart the machine as normal, and the Moment Limiter system will commence with normal start up sequence.

https://truckmanualshub.com/

REMOTE CONTROL SYSTEM INTRODUCTION

This section describes the remote control operating procedures. Before you perform any remote control operating procedures, read "Section 2 SAFETY".

General

No Modification

WARNING! Do not attempt to modify or disassemble the Transmitter and Receiver, or the accessories, which may cause an electrical shock or a fire.

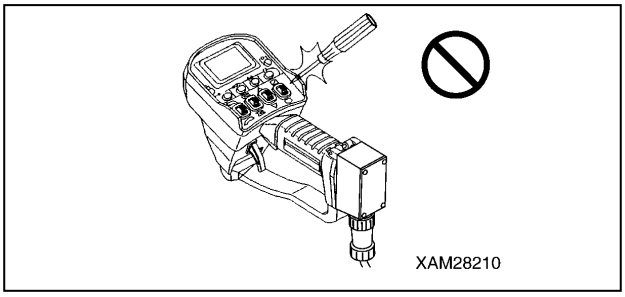

Fig. 4-202

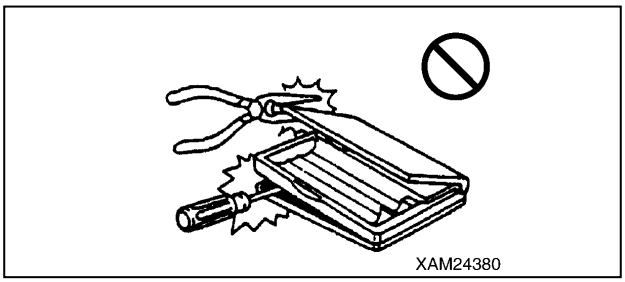

Fig. 4-203

Holding the Transmitter

WARNING!

- **The Transmitter is designed for one hand controls in general.**
  Refer to the figure for basic usage of the Transmitter.
  Levers and buttons can be manipulated by the thumb, while the Accelerator lever can be triggered by the forefinger.
  Other fingers should grab the grip to hold the Transmitter.
- **Always manipulate levers and switches by fingers.**
  Do not attempt to pick them by a sharp edge or such for manipulation.
  It may make an opening in the Transmitter which allows water to enter inside and brings its troubles or failures and cause a serious hazard.

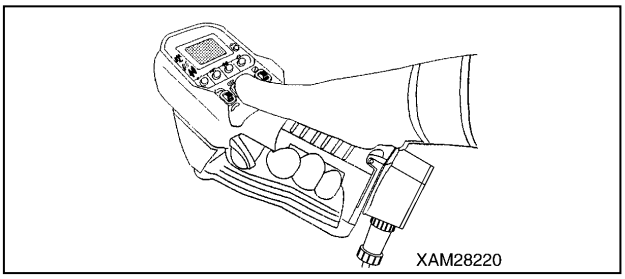

Fig. 4-204

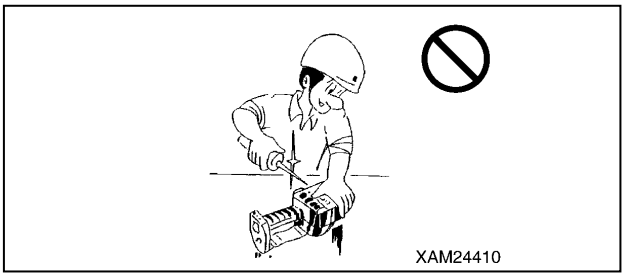

Fig. 4-205

No Water Washing

WARNING!

- **Always keep the Transmitter unsoiled, and clean it when necessary. Oil or mud on surface may cause mis-operation by slipping hands, which may result a serious hazard.**
- **Do not attempt water-wash the Transmitter, in any event.**
  It allows water to enter inside and brings its troubles or failures and cause a serious hazard.
- **Scrub the Transmitter and Receiver with a wet cloth from water or diluted detergent to remove the dart.**
  Avoid alkaline or alcoholic cleaners or sprayer cleaners which deteriorate plastics and produce cracks.

https://truckmanualshub.com/

No Shock to the Transmitter

WARNING!

- **During the Transmitter operations, always use a hook belt ① to prevent the unexpected drop of it.**

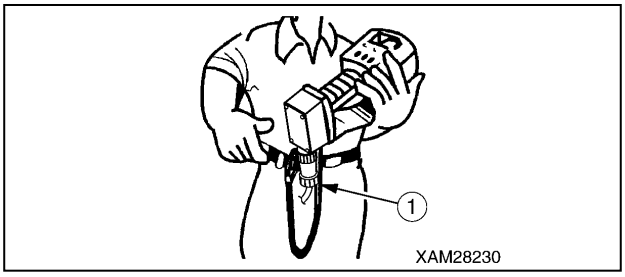

Fig. 4-206

- **Always avoid an impact on the Transmitter, such as hitting it to any object.**
  It may result a damage to the enclosure or internal components which may cause a failure or malfunction and brings electrical shock or other serious hazard.
- **In the event of such damages, remove all the batteries from the Transmitter and send us or to our sales service agency.**
  Use of such a damaged Transmitter will result in mis-operation and extend to electrical shock or other serious hazard.

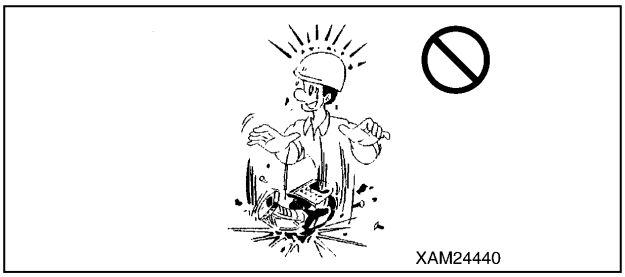

Fig. 4-207

Precaution for Operations in Cold Seasons

WARNING!

- **Avoid the use of the Transmitter in a condition where the ambient temperature makes sudden change or becomes extremely low (14°F or below) or cold air directly blows**
  Sudden change in temperature may cause dew formation inside the Transmitter and which causes failure or malfunction and leads to a serious hazard.
- **In the winter times, allow sufficient idling prior to starting crane operations. In the winter, due to the low temperature, hydraulic fluid has higher viscosity. Such condition may result in a delay of functions in crane operations.**

Fig. 4-208

- **Keep the Transmitter away from conditions as below for its storage, where the Transmitter enclosure may deform or discolour, or internal components may be damaged to bring malfunctions and a serious hazard:**
- **Extremely low temperature (-4°F or below) or direct cold air blow.**
- **Direct sun ray.**

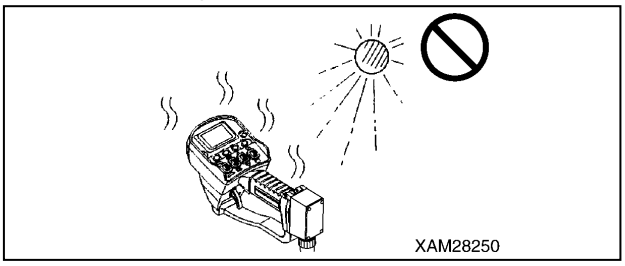

Fig. 4-209

- **Adjacent to warm air outlets of vehicles.**
- **Adjacent to housing heating system.**
- **High humidity.**

Precautions for Handling of Connection Cable

WARNING! Do not attempt to hang the Transmitter by the connection cable and fling it around, or bend the cable or thread on it. Such poor handling will damage the internal wires or produce other failures.

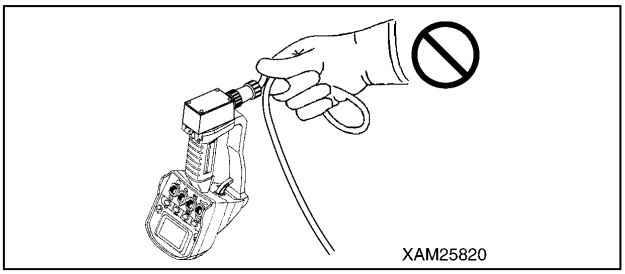

Fig. 4-210

https://truckmanualshub.com/

Precautions for Crane Operation - before Starting Engine

Inspection Prior to Starting Engine

WARNING! At the beginning of the day's operation, perform the opening inspection as specified for this machine, prior to starting the engine.
Serious injury or death may arise when these inspections are neglected.
Any failure detected at the inspection must be properly corrected.

Safety Measures for Starting Engine

WARNING!
- **Ensure that nobody is around the Crane, or no obstacles, at starting the engine.**
- **Toot the horn for notice just before turning the ignition key.**
- **Never attempt to short the starter circuit for the purpose of the engine start, which may cause fire.**

Inspection Prior to Turn on the Transmitter

WARNING!
- **Check for any dirt, damage or cracks in the enclosure, control levers, operation buttons, or LCD screen.**
- **Ensure that the Transmitter's control levers, operation buttons and the Accelerator lever move smoothly and properly.**
- **Check the connection cable for damage or crack when the Transmitter is in use.**

Inspection after Turning on the Transmitter

WARNING! Ensure that LCD screen of the Transmitter provides correct indications.
- **Switch to each operation mode, i.e. CRANE MODE and OUTRIGGER MODE, then check that LCD screen displays proper indications when each lever and button is manipulated. Further, verify the each applicable value of load in the Transmitter is identical to that of the Moment limiter display.**

Inspection Prior to Turn on the Receiver

WARNING!
- **Check for any dirt, damage or cracks in the Receiver's Control box, Main switch, Monitor display, Antenna and such.**
- **Ensure that the Receiver's Main switch moves smoothly and properly.**

Precautions for Crane Operation - after Starting Engine

Function Check of Outrigger Mode by the Transmitter, and Notices for Operation

WARNING!
- **Switch the operation mode to the "OUTRIGGER MODE" and confirm that the mode is switched correctly.**
- **Activate "Start/Reset button" to assure that the engine correctly starts.**
- **Activate "Stop/EMO button to assure the engine correctly stops.**
- **Operate the outrigger control switches to assure that the corresponding outrigger works correctly.**
- **Check that the position pins for outriggers and retainers are securely fixed.**

Function Check of Crane Mode by the Transmitter and Notices for Operation

WARNING!
- **Before switching the operation mode to "CRANE MODE" always make all the outriggers extended and securely contacted on the ground.**
- **Switch the operation mode to the "CRANE MODE" and confirm that the mode is switched correctly.**
- **Activate levers for crane operations and assure that the Crane functions correctly.**
- **Always refer to the portable rated total load chart and avoid over-loaded operations.**
- **Activate the control levers and Accelerator lever of the Transmitter slowly in any time.**

https://truckmanualshub.com/

Precautions for Crane Operation - Terminating the Operation

Precautions for Terminating the Operation by the Transmitter

WARNING!

- **Before stowing the boom, switch the operation mode to "CRANE MODE" and confirm that the mode is switched correctly.**
- **Before stowing the outriggers, ensure that the boom and the hook is stowed in the correct positions.**
- **Before stowing the outriggers, switch the operation mode to "OUTRIGGER MODE" and confirm that the mode is switched correctly.**
- **When all the operation by the Transmitter is complete, always turn OFF the power of both the Transmitter and Receiver.**
- **On no condition, Transmitter will be ON unless the Crane is in operation, otherwise, unexpected touch or contact of operation levers or buttons of the Transmitter to any other object may cause un-desired motion of the Crane and a serious accident such as tipping or collision may occur.**
- **Where it is required to turn ON the Transmitter for the purpose of inspecting it or such, always keep the Receiver OFF and stop the engine, as well.**

REMOTE CONTROL SYSTEM FEATURES

This system is designed principally for the following purposes:

This Interactive Remote Control System includes both Transmitter and Receiver which facilitate remote control of the Crane which is purchased with this device.

This Interactive Remote Control System provides an operation of the Crane at the most convenient place away from it within a range of the length of the connection cable. In addition, its LCD screen indicates "rated total load", "Actual Load" and "Load factor (by a bar chart)", which ensures proper operation based on these information.

CAUTION: The remote control system provides the following safety functions:

- **Abnormal Signal Detector Circuit**
  When the Main switch of the Receiver is turned ON this circuit checks the dispatch of Crane operation signals for 3 to 4 seconds. Thus, the Crane will not be immediately ready for operations.
  When dispatch of any crane operation signals are noticed, power will be automatically OFF and the Crane stops.
  For resume, push the Reset button of the Transmitter.
- **Automatic Power OFF Circuit**
  Power of the Transmitter will be automatically OFF when the remote control of crane operations is discontinued for the specific time.
  For resume, push the Power switch of the Transmitter to turn ON.
- **Voltage Drop Limiter (for the Receiver)**
  The Receiver will be automatically shut down in the event where the voltage of the battery drops below DC 7 volts.
  This prevents malfunctions of the Crane due to voltage drop and the operation will resume automatically when the voltage is restored to DC 7 volts or higher.

https://truckmanualshub.com/

Transmitter

The Transmitter is equipped with LCD screen (1), Six control buttons (2), Four operation levers (3), Accelerator lever (4), Grip (5) and Connection cable (6).

The Transmitter sends signals for crane operations to the Receiver through the connection cable so that remote operation of the Crane can be carried out. In addition, the Transmitter collects the load data from the Moment limiter of the Crane through the cable, which are displayed in the LCD screen as "rated total load", "Actual load" and "Load factor (by a bar chart)".

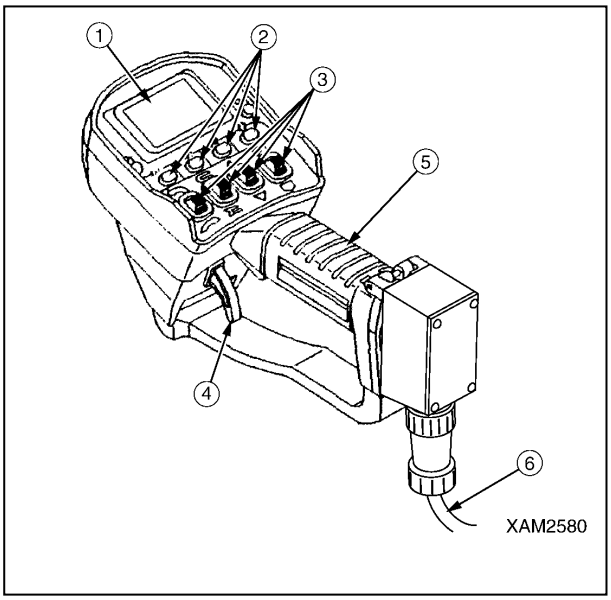

Fig. 4-211

Receiver

The Receiver which is installed in the Crane equips with Control box (1), Main switch (2), Monitor display (3), and Receptacle (4), etc.

The Receiver receives operation signals from the Transmitter through the connection cable which control the Crane.

Further, the load data from the Moment limiter of the Crane are delivered to the Transmitter through the cable.

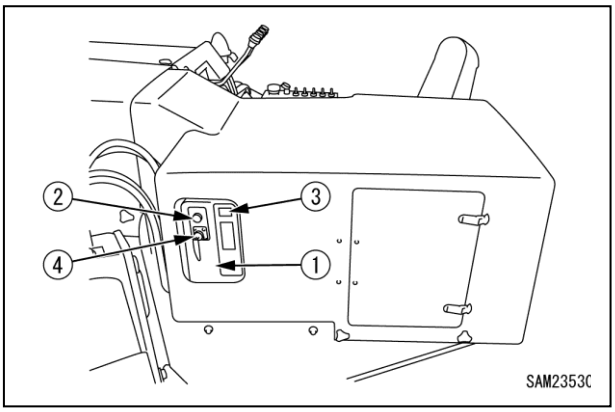

Fig. 4-212

Functions of Remote Control System

- The Transmitter allows one hand operation, which enables craning works, such as holding the load by the other hand or slinging, by one person.
- The Accelerator lever facilitates the control of the Crane operation speed from stand-by condition to the maximum speed.
- The LCD screen of the Transmitter indicates operation status, such as "rated total load", "Actual load", "Load factor (by a bar chart)", "Speed control", "Outrigger setting" and so on, to provide easy confirmation.
  In addition, the LCD screen of the Transmitter shows error messages in the event where the Transmitter has a failure, so that the detection and correction of the failure is promptly accomplished.
  Still more, the voice massages will notify the Transmitter conditions or warning alerts.
- Depend on the operation requirement, manual operation on the console of the Crane is also available, in addition to handling by the Transmitter.
- The connection by the cable between the Transmitter and Receiver allows secure communication between both.

https://truckmanualshub.com/

REMOTE CONTROL SYSTEM COMPONENTS

Transmitter

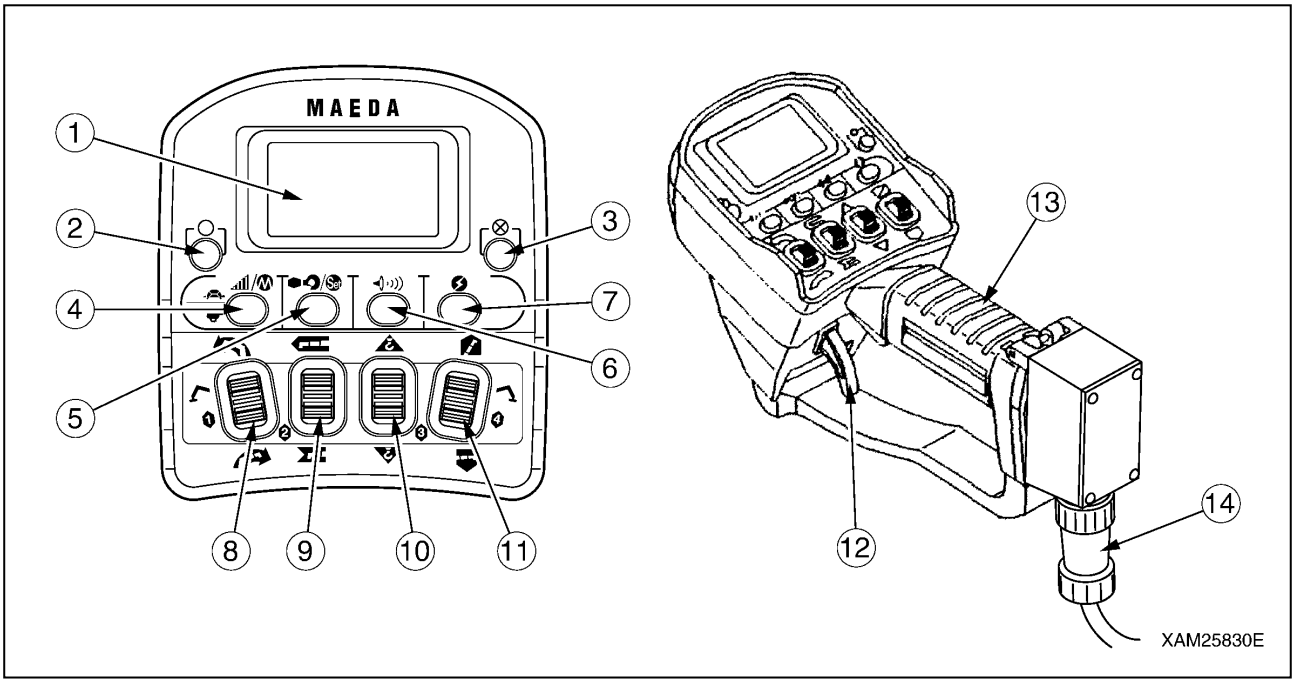

Fig. 4-213

1 - LCD Screen
2 - Start/Reset Button
3 - Stop/EMO Button
4 - Speed/Mode Button
5 - Hook Stow/Setting Button
6 - Horn Button
7 - Power Switch
8 - Slewing/No.1 Outrigger Operation Lever
9 - Boom Telescoping/No.2 Outrigger Operation Lever
10 - Hook Raising and Lowering/No.3 Outrigger Operation Lever
11 - Boom lift/No.4 Outrigger Operation Lever
12 - Accelerator Lever
13 - Grip
14 - Connection Cable

https://truckmanualshub.com/

LCD Screen

The LCD screen displays the status of the Transmitter in operation, the established values for each mode, or error messages by symbols, comments or signs.

Start/Reset Button

This button has two usages as below:

- To push this button starts the engine.
- This button resets the "Emergency Stop" and "Abnormal Signal Detect" conditions.

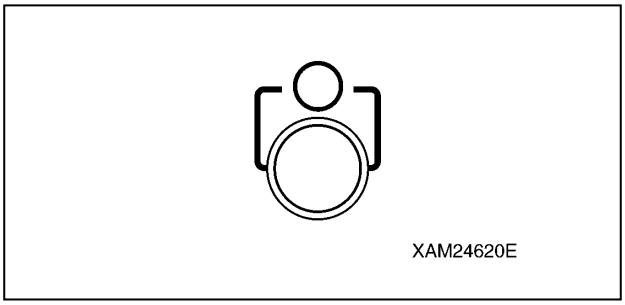

Fig. 4-214

Stop/EMO Button

This button also has two usages as below:

- To push this button stops the engine.
- In an emergency event where the Crane does not stop by normal operations, or such, this button provides the forced stop function.

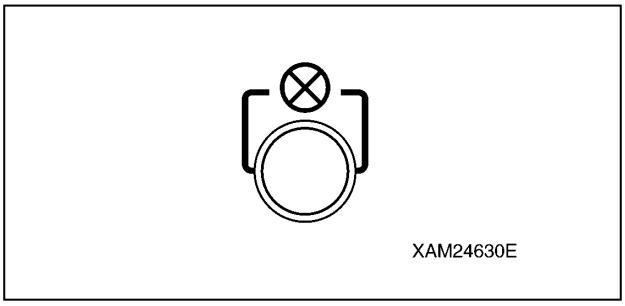

Fig. 4-215

Speed/Mode Button

This button also provides two usages as below:

- During crane operations, to push this button decelerates the operation speed.
- During the crane operation is in a pause, this button provides the selection of the Transmitter operation modes.
  The current active mode will be displayed in the LCD screen.

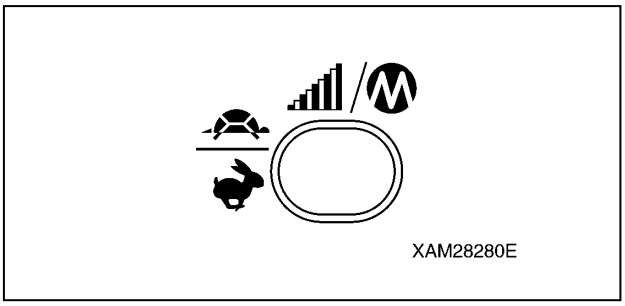

Fig. 4-216

Hook Stow/Setting Button

This button also serves two usages as below:

- To push this button automatically stows the hook.
- For each of the setting of the modes, use this button to fix to one of the choice from the menu in the LCD screen.

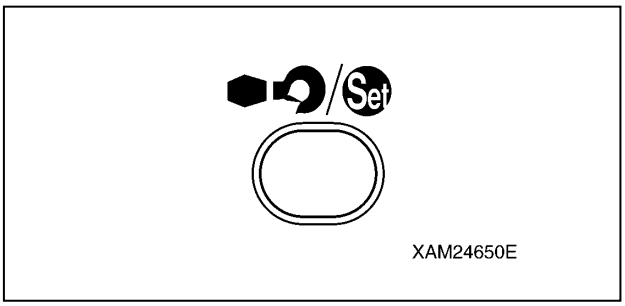

Fig. 4-217

Horn Button

Push this button to toot the horn.

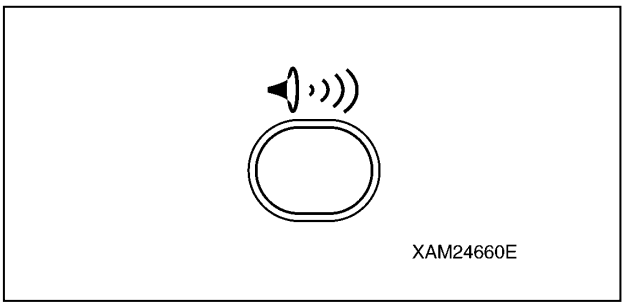

Fig. 4-218

https://truckmanualshub.com/

Power Switch

To push this button switches ON and OFF the power of the Transmitter. Each push will turn ON or OFF alternately.

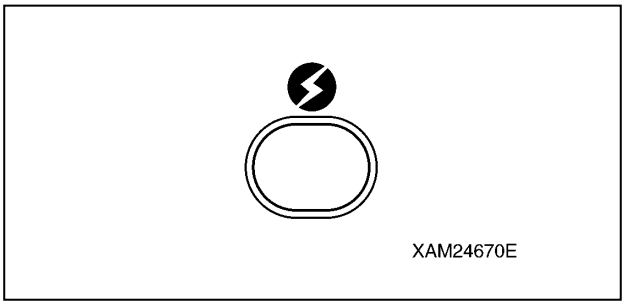

Fig. 4-219

Slewing/No.1 Outrigger Operation Lever

This operation lever functions in two ways as below:

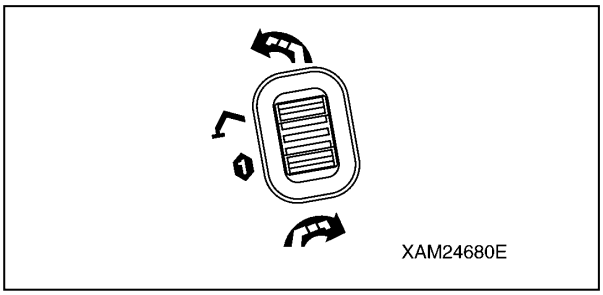

Fig. 4-220

1. In the CRANE MODE, this lever controls slew of the Crane structure:
   - Counterclockwise (left): Push the upper end of the lever.
   - Neutral: Release your finger from the lever.
   - Clockwise (right): Push the lower end of the lever.
2. In the OUTRIGGER MODE, this lever controls extension (installation) and retraction (stowing) of either only No.1 or all of the outriggers at once:
   - Retraction (stowing): Push the upper end of the lever.
   - Neutral: Release your finger from the lever.
   - Extension (installation): Push the lower end of the lever.

Boom Telescoping/No.2 Outrigger Operation Lever

This operation lever functions in two ways as below:

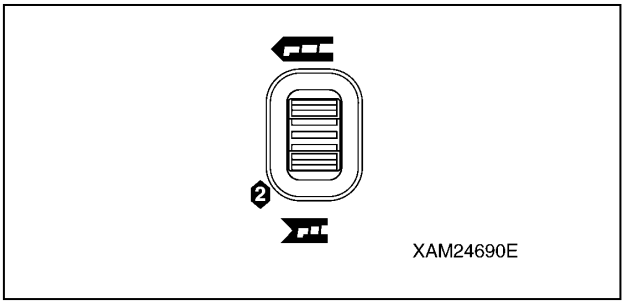

Fig. 4-221

1. In the CRANE MODE, this lever controls the telescopic boom length:
   - Boom extension: Push the upper end of the lever.
   - Neutral: Release your finger from the lever.
   - Boom retraction: Push the lower end of the lever.
2. In the OUTRIGGER MODE, this lever controls extension (installation) and retraction (stowing) of either only No.2 or all of the outriggers at once:
   - Retraction (stowing): Push the upper end of the lever.
   - Neutral: Release your finger from the lever.
   - Extension (installation): Push the lower end of the lever.

https://truckmanualshub.com/

Hook Raising and Lowering/No.3 Outrigger Operation Lever

This operation lever functions in three ways as below:

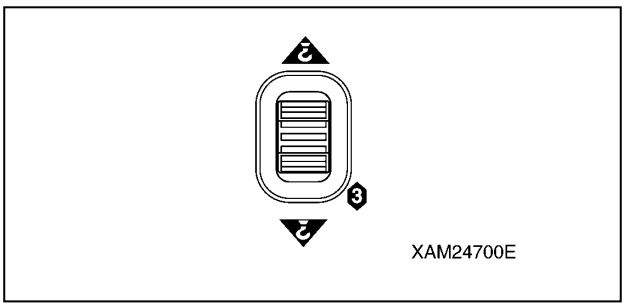

Fig. 4-222

1. In the CRANE MODE, this lever controls raising and lowering the hook:
   - Hook raising: Push the lower end of the lever.
   - Neutral: Release your finger from the lever.
   - Hook Lowering: Push the upper end of the lever.
2. In the OUTRIGGER MODE, this lever controls extension (installation) and retraction (stowing) of either only No.3 or all of the outriggers at once:
   - Retraction (Stowing): Push the upper end of the lever.
   - Neutral: Release your finger from the lever.
   - Extension (installation): Push the lower end of the lever.
3. In the A MODE, this lever is used as a cursor key by "▲ and ▼".

Boom Lift/No.4 Outrigger Operation Lever

This operation lever functions in two ways as below:

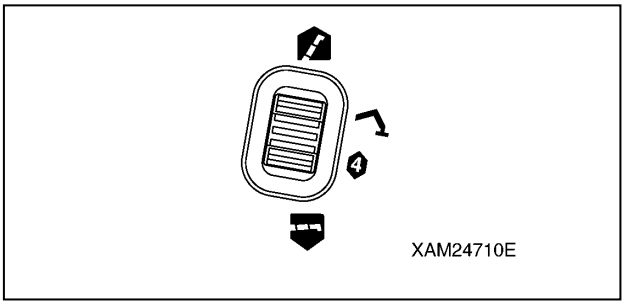

Fig. 4-223

1. In the CRANE MODE, this lever controls the boom lift angle:
   - Boom raising: Push the lower end of the lever.
   - Neutral: Release your finger from the lever.
   - Boom lowering: Push the upper end of the lever.
2. In the OUTRIGGER MODE, this lever controls extension (installation) and retraction (stowing) of either only No.4 or all of the outriggers at once:
   - Retraction (stowing): Push the upper end of the lever.
   - Neutral: Release your finger from the lever.
   - Extension (installation): Push the lower end of the lever.

https://truckmanualshub.com/

Accelerator Lever

The Accelerator lever controls the flow rate of the control valves and the engine speed or output.

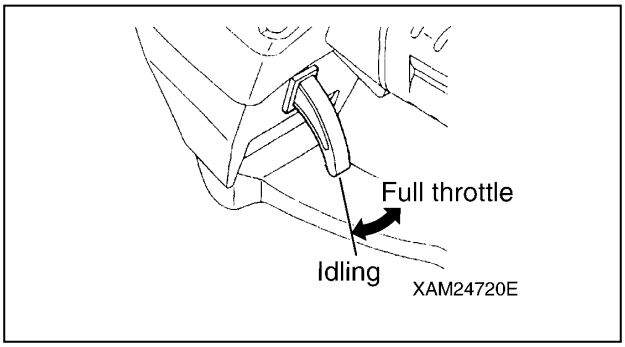

Fig. 4-224

- Low idling: Release your finger from the Accelerator lever.
- Full throttle: Squeeze the accelerator lever to the full.

NOTICE:

- *The Accelerator lever itself cannot control either flow rate of the control valves or the engine speed when it is manipulated alone. In the condition that any of the other operation levers are also used, the Accelerator lever launches specified operation of the Crane in the idling state of the engine, when it is manipulated, then, the engine speeds up by further manipulation of it; the crane operation turns to be faster, accordingly.*
- *The Accelerator lever does not control outriggers.*
- *The acceleration rate is always indicated in the right part of the LCD screen during crane operations. (See the figure.)*

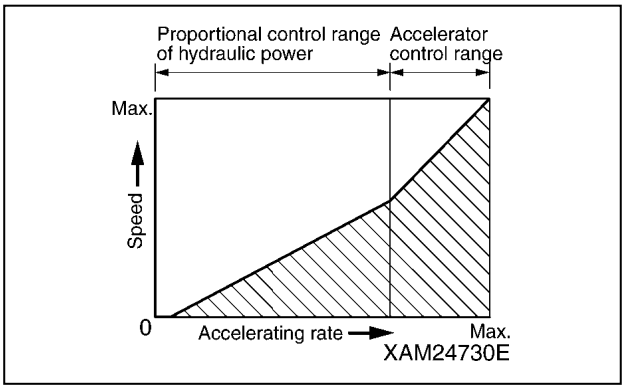

Fig. 4-225

Grip

The Transmitter is designed for one hand controls in general. Levers and buttons can be manipulated by your thumb, while the accelerator lever can be triggered by your forefinger. Other fingers should grab the grip to hold the Transmitter.

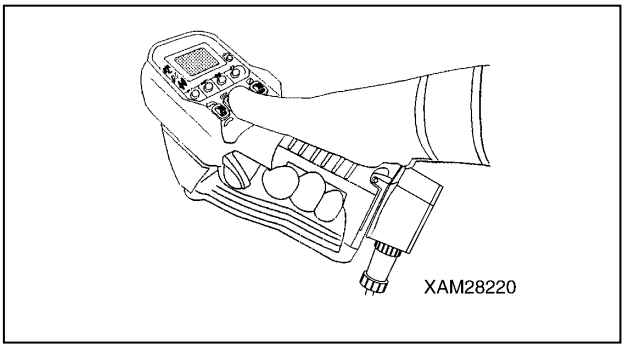

Fig. 4-226

Connection Cable

The connection cable is a cable between the Transmitter and Receiver.

Before and after the operation, always check this connection cable for any crack or damage, or bent. In addition, check the receptacle for any damage.

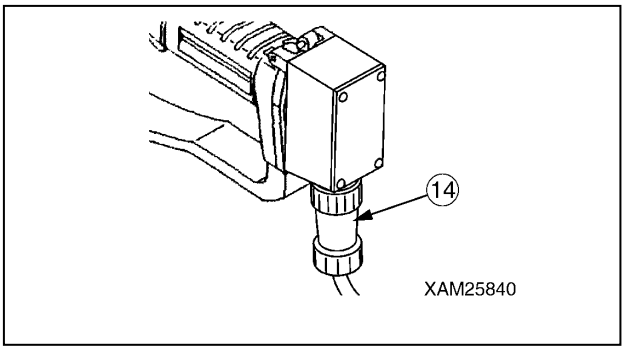

Fig. 4-227

https://truckmanualshub.com/

Storage Case

The Storage case is a compact bag for protection of the Transmitter.

Before putting it into this case, ensure that the power of the Transmitter is OFF.

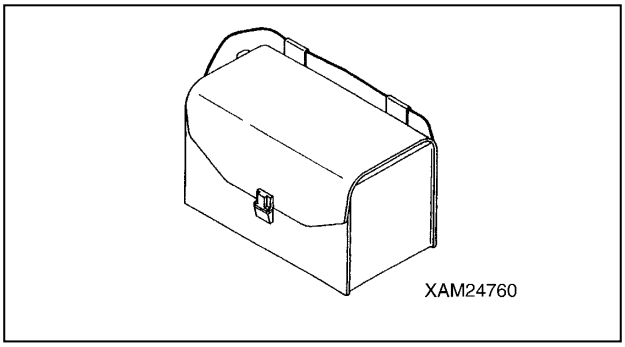

Fig. 4-228

Hook Belt

During the operation, this belt prevents the Transmitter from falling down to the ground, when the operator drops it by mistake.

Hook one end of the hook belt (16) to the Transmitter and attach another end to the operator's waist belt, or such.

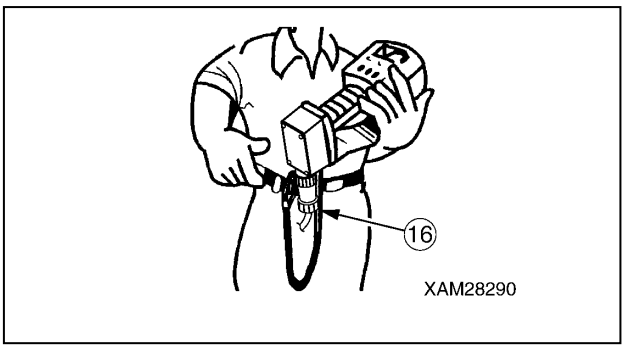

Fig. 4-229

https://truckmanualshub.com/

Receiver Components

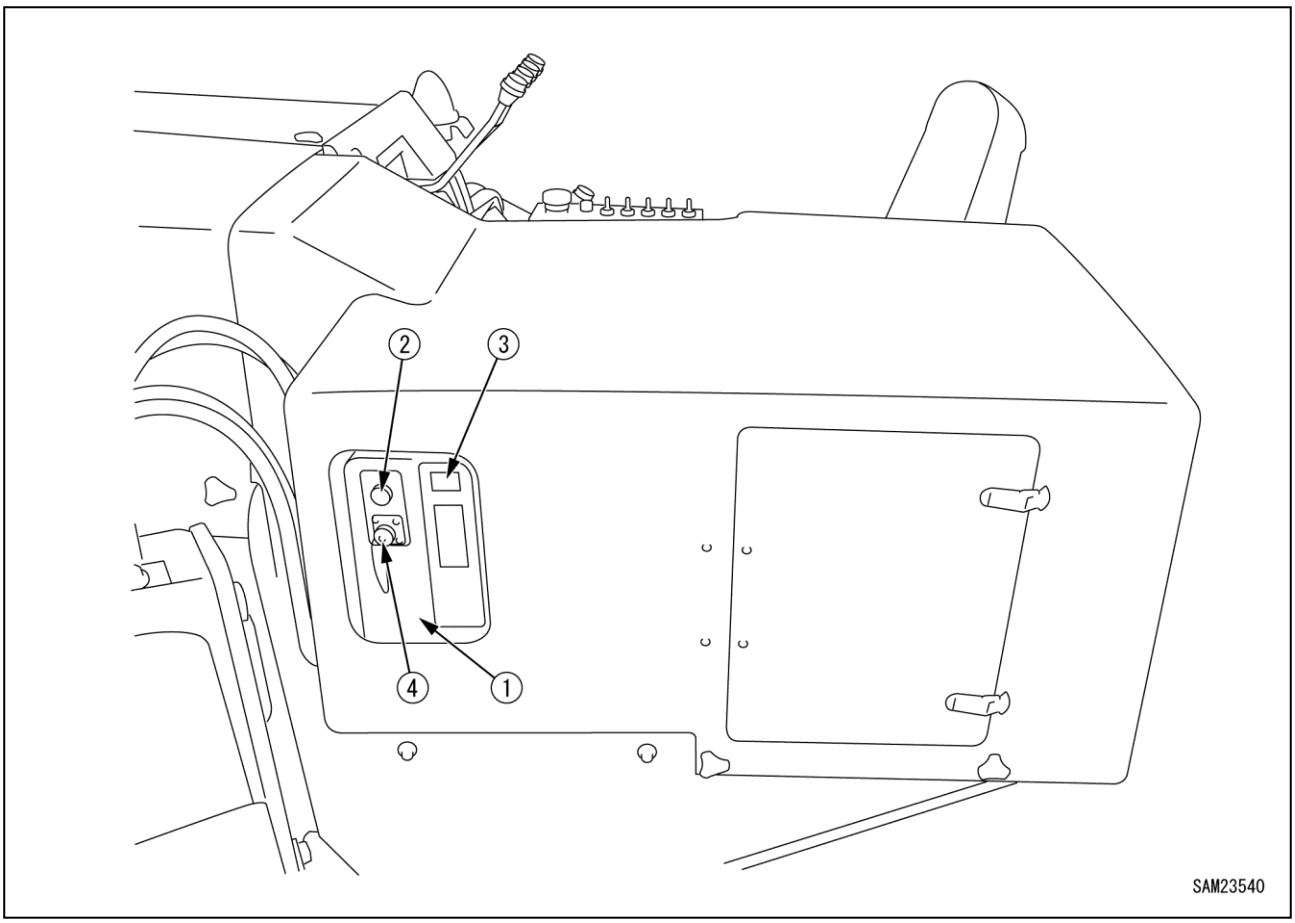

Fig. 4-230

1 - Control Box
2 - Main Switch
3 - Monitor Display
4 - Receptacle

https://truckmanualshub.com/

Control Box

The Control box contains the receiver devices and control devices.

Never attempt to dismantle this Control box.

Main Switch

The Main switch is a toggle switch to power ON or OFF the Receiver

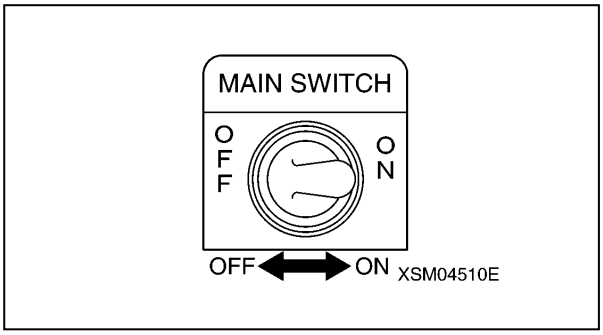

Fig. 4-231

- ON: Turn the toggle to ON to start the Receiver.
- OFF: Turn the toggle to OFF to terminate the Receiver.

CAUTION:
- **Before starting the engine, always turn this Main switch of the Receiver to OFF.**
- **Where the remote control is not in use, always turn the main switch of the Receiver to OFF.**

Monitor Display

In the event that the abnormal signal detector of the controller serves, the Monitor display indicates error codes.

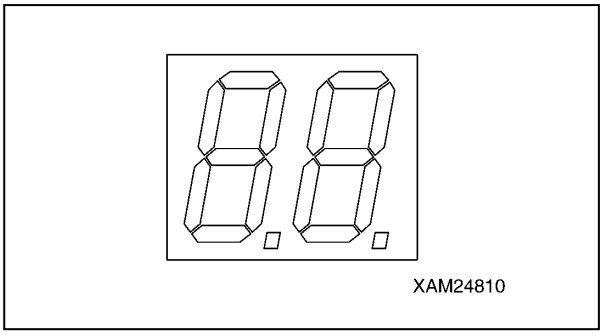

Fig. 4-232

CAUTION: In the event that the monitor display (3) indicates an error code, settle the error as follows:

1. Push the Reset button of the Transmitter.
2. When the practice as above 1. results another error code, once turn the Receiver OFF, then start it again.
3. When the practice as above 2. results further error code, it is suspected that the Transmitter or Receiver has faults; contact us or our sales service agency.

For more information on error codes, see "TROUBLESHOOTING" on page 5-82.

Receptacle

Connect the connection cable from the Transmitter, here.

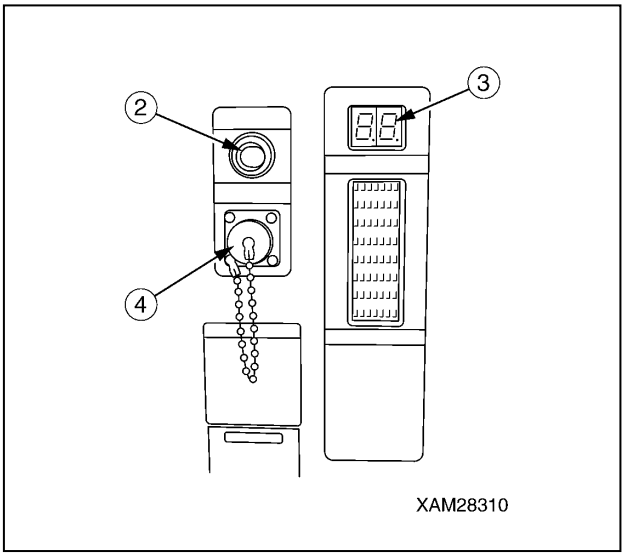

Fig. 4-233

CAUTION:
- **Before attaching the connection cable to the receptacle (4), always confirm that the Main switch is in the OFF position.**
  After the insertion, secure the plug by the screw.
- **Always apply the water proof cap while the remote control is not in use.**
- **In the condition where the remote control is not provided, this receptacle (4) is incompetent. Always keep the water proof cap attached.**

https://truckmanualshub.com/

Fuse in the Receiver

CAUTION:
- **For any tests or replacement of a fuse, always turn OFF the Starter switch of the Control box, before removing it.**
- **The fuse must be replaced with the same type of grass tube fuses, and of the same rating.**

CAUTION: A fuse is inserted in the (+) line of the main power supply of the Receiver as a protective circuit of internal devices and prevents circuits from burnt.
- **A grass tube fuse is employed. In the event where the fuse is corroded and shows white rust, or when a loose condition is recognised, always replace it with a new one.**
- **When the fuse is blown, never fail to examine the circuit for the cause and repair it before replace the fuse.**
- **The fuse must be replaced with the same type of grass tube fuses, and of the same rating.**

The fuse is placed inside the Receiver.
Test and replacement of the fuse shall be practiced as follows:
- Use the following hand tools:
- A screw driver (Philips)
- Jewelers screw driver set (Slotted)

Removal of the Fuse

1. See "Removing Rear Cover" on page 5-19 and remove the rear cover.
2. Unfasten eight of screws (4) and take away the cover of the Receiver (3).

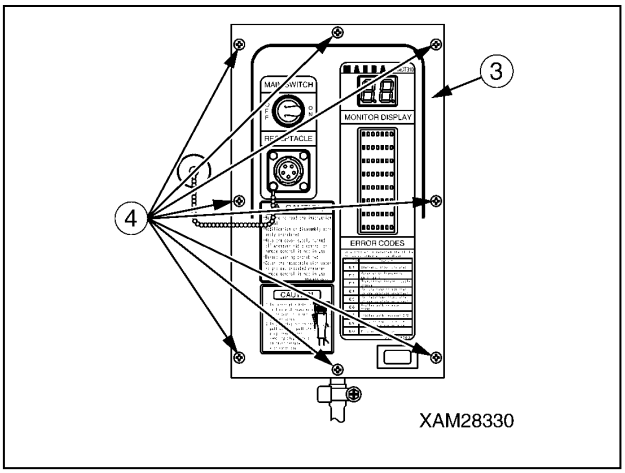

Fig. 4-234

3. Extract three of connectors (6) in the first PCB (5).
4. Unfasten six of screws (7) and remove the first PCB (5).

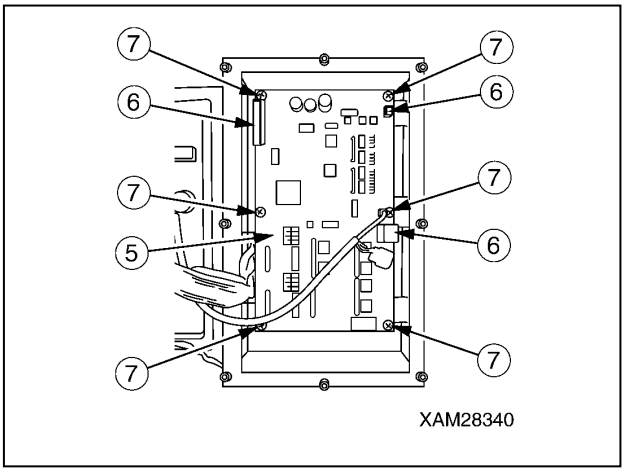

Fig. 4-235

https://truckmanualshub.com/

5. With a jeweler's driver (A) to pull out the fuse (8) from its clips, then examine it.

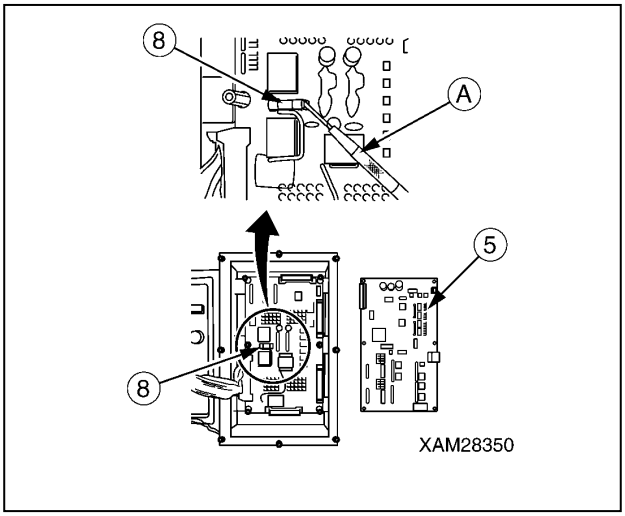

Fig. 4-236

6. Insert a new fuse or the examined fuse to where the one was.
7. See "Installing Rear Cover" on page 5-19 and install the rear cover.

Insertion of a Fuse

After the fuse is examined or replaced, restore the Receiver in the reverse practice of the removal.

CAUTION:
- **When the three connectors (6) of the first PCB (5) is inserted again, secure them and avoid any loose conditions.**
- **Care should be exercised so that the cover (3) of the Receiver will not catch wires when it is attached back.**

[Fuse class]
Type: Grass tube fuse
Rating: 15A

MODE SETTING OF THE TRANSMITTER

This device provides the "A MODE" in which the initial values of the Transmitter are established, the "OUTRIGGER MODE" in which the outriggers are set or stowed, and the "CRANE MODE" where the Crane is operated. This device is designed to switch to the applicable mode for the operation by the Transmitter.

A Mode

WARNING!
- **Before entering into A MODE, always turn the main switch of the Receiver to the OFF position.**
- **Before the setting of values for A MODE, ensure that "A MODE" is correctly indicated in the LCD screen. Otherwise, un-expected motion of the Crane may result a serious accident, due to entry of values in the other mode, by mistake.**

Opening A Mode Screen

Push the Speed/Mode button and Power switch jointly for 2 seconds. A message as "A MODE" appears in the LCD screen for 2 seconds.

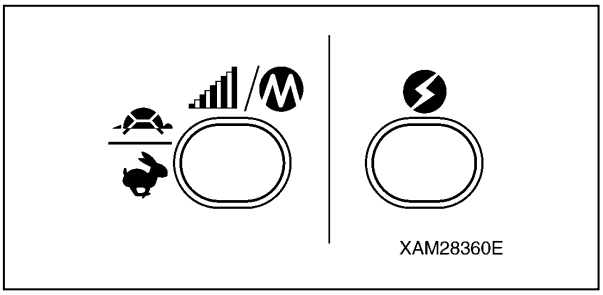

Fig. 4-237

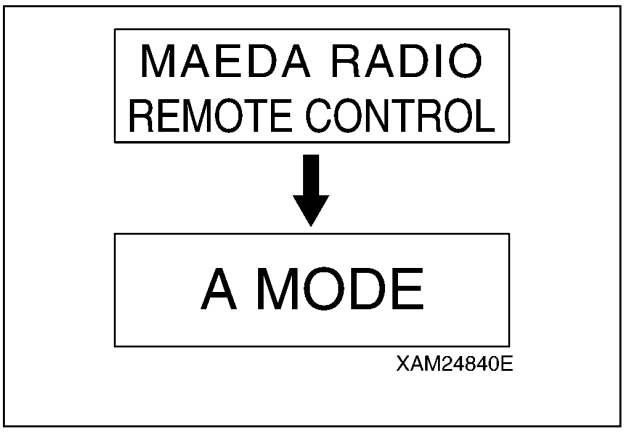

Fig. 4-238

https://truckmanualshub.com/

Messages in the A Mode Screen

Refer to the figure for the A MODE screen:

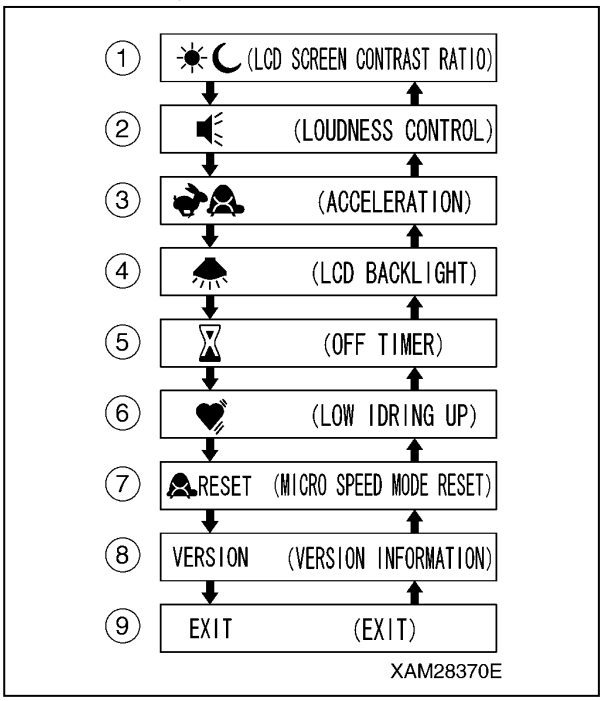

Fig. 4-239

It contains eight function items ((1) to (8)) and the Exit command (9).

NOTICE: In the A MODE, following applicable items are adjustable, as required:

(1) "Contrast ratio" of LCD screen

(2) "Loudness control"

(3) The "Engine speed limit", controllable by the Accelerator lever.

(4) LCD backlight, "Time for lighting, until the auto-cut".

(5) "Auto Shut-OFF time" of the Transmitter power.

(6) "Low idling rate" of the engine.

(Idling only while the crane operation levers are manipulated.)

(7) Reset of "user values" by the speed set-up mode.

(8) Version information of the Transmitter firmware.

To switch the function item to another, or to change the setting value of the function, use, the Hook raising and lowering lever.

Then, to fix the value in the function, push the hook Stow/Setting button.

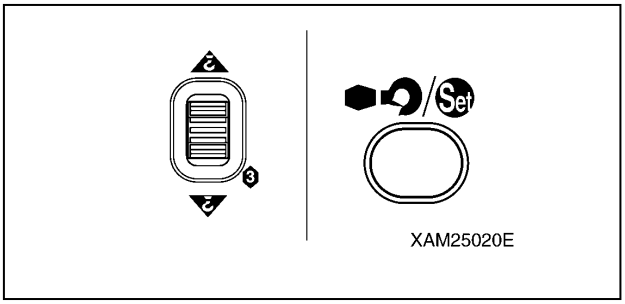

Fig. 4-240

LCD Screen Contrast Ratio

CAUTION: The LCD screen may be illegible when it is set too light or too dark, which may prevent correct operations. Adjust its contrast adequately for comfortable read.

Adjust the contrast ratio of the LCD screen:

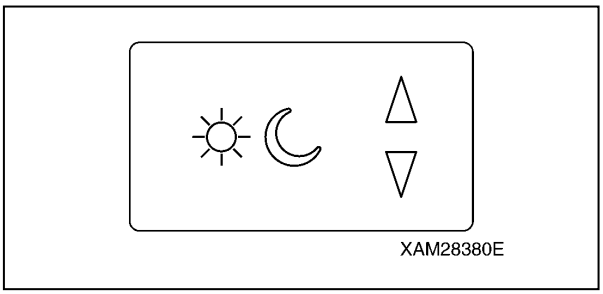

Fig. 4-241

1. Shift the cursor (▲ or ▼) using the Hook raising and lowering lever.
   - To darken: Push the upper end of the Hook raising and lowering lever.
   - To lighten: Push the lower end of the Hook raising and lowering lever.
2. When the desired contract is obtained, push the Hook stow/Setting button. The condition obtained in above 1. will be fixed and the display returns to the A MODE screen.

https://truckmanualshub.com/

Loudness Control (Available Only for Units with Optional Voice Message)

Adjust the volume of voice messages:

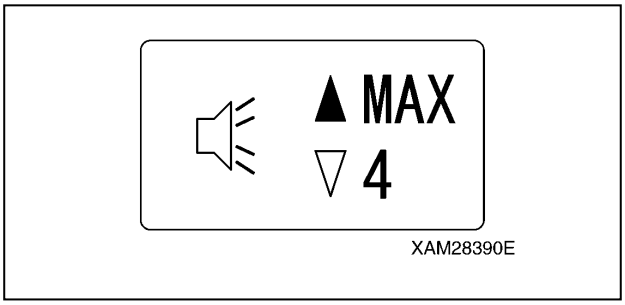

Fig. 4-242

1. Shift the cursor (▲ or ▼) using the Hook raising and lowering lever and select the appropriate rate.
   The volume adjust is by 6 steps, OFF, 1, 2, 3, 4, or ON.
   The factory setting for this function is "MAX".
2. When the desired volume is obtained, push the Hook stow/Setting button. The condition obtained in above 1. will be fixed and the display returns to the A MODE screen.

Acceleration

Adjust the engine speed limit, controllable by the Accelerator lever:

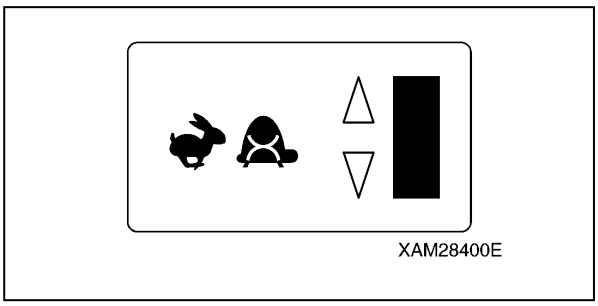

Fig. 4-243

1. Shift the cursor (▲ or ▼) using the Hook raising and lowering lever. When all the bars lights, the speed limit is in maximum, otherwise, when the all are OFF, it is in minimum.
2. When the suitable rev limit is obtained, push the Hook stow/Setting button. The value obtained in above 1. will be fixed and the display returns to the A MODE screen.

LCD Backlight

Adjust the time to the auto-cut of the LCD backlight, after your finger is released from each of the lever.

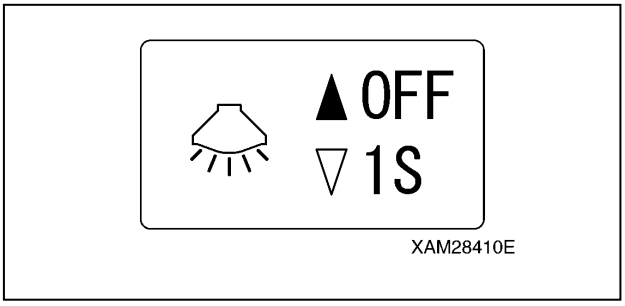

Fig. 4-244

1. Shift the cursor (▲ or ▼) using the Hook raising and lowering lever and select the preferred time.
   The elapse time adjust is by 4 steps, OFF, 1 sec., 3 sec., or 4 sec.
   The factory setting for this function is "1 second".
2. When the desired time is obtained, push the Hook stow/Setting button. The elapse time in above 1. will be fixed and the display returns to the A MODE screen.

Off Timer

Adjust the Auto shut-OFF time of the Transmitter power.

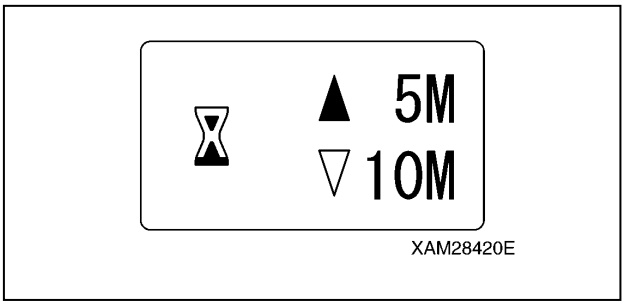

Fig. 4-245

1. Shift the cursor (▲ or ▼) using the Hook raising and lowering lever and select the preferred time.
   The Auto shut-OFF adjust is by 3 steps, 5 min., 10 min., or 15min.
   The factory setting for this function is "5 minutes".
2. When the desired time is obtained, push the Hook stow/Setting button. The time in above 1. will be fixed and the display returns to the A MODE screen.

https://truckmanualshub.com/

Low Idling Up

CAUTION: The low idling rate regulated by this idling-up function is valid only during crane operation levers are manipulated. Once the lever is released, the low idling rate is reset to the normal rate.

Adjust the engine‘s low idling rate to higher than the normal rate, during the crane operation levers are manipulated.

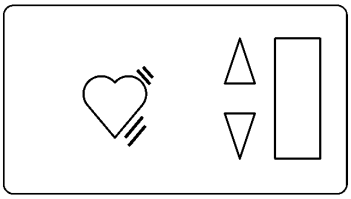

Fig. 4-246

1. Shift the cursor (▲ or ▼) using the Hook raising and lowering lever. When all the bars light, the idling up is in the maximum, otherwise, when the all are OFF, the idling up is cancelled.
2. When the suitable idling up rate is obtained, push the Hook stow/Setting button. The value obtained in above 1. will be fixed and the display returns to the A MODE screen.

Micro Speed Mode Reset

Select either to reset or preserve the value at the micro speed mode.

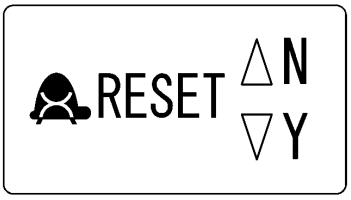

Fig. 4-247

1. Shift the cursor (▲ or ▼) using the Hook raising and lowering lever and select "N" or "Y".
   To reset, select "Y", otherwise, select N" to preserve.
2. Whether reset or not is fixed, push the Hook stow/Setting button. The status in above 1. will be fixed and the display returns to the A MODE screen.

Version Information

Push the Hook stow/Setting button, so that version information of the Transmitter firmware is displayed. Another push of the same button makes the display returns to the A MODE screen.

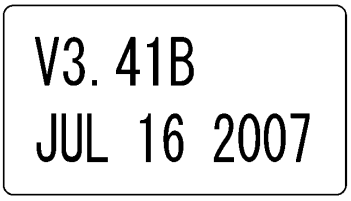

Fig. 4-248

Exit

CAUTION: Once setting-up the desired function items of all is completed, do not forget to practice the termination procedure, below. Otherwise, when this process is not correctly terminated, the latest setting will not become valid.

Fig. 4-249

1. Once setting-up the desired function items of all is completed, ensure that the display has returned to the A MODE screen.
2. Shift the cursor (▲ or ▼) using the Hook raising and lowering lever and select "EXIT".
3. Push the Hook stow/Setting button, which will terminate the "A MODE" and turn the mode to the "CRANE MODE".

https://truckmanualshub.com/

An Example for Setting in the A Mode

Hereunder is a procedure to change the time of the "OFF timer", from "5 minutes" of the factory setting, to 10 minutes:

1. Use the Hook raising and lowering lever and shift the cursor (▲ or ▼) to the side of the function item to change.
2. When the cursor comes to the side of the "OFF timer", push the Hook stow/Setting button.
   Now, the "OFF timer" is selected and the cursor（▲）appears next to "5 minutes", as the current value.
3. Use the Hook raising and lowering lever so that the cursor (▼) comes to the side of "10 minutes", then push the Hook stow/Setting button.
   Now, the "OFF timer" setting is 10 minutes.

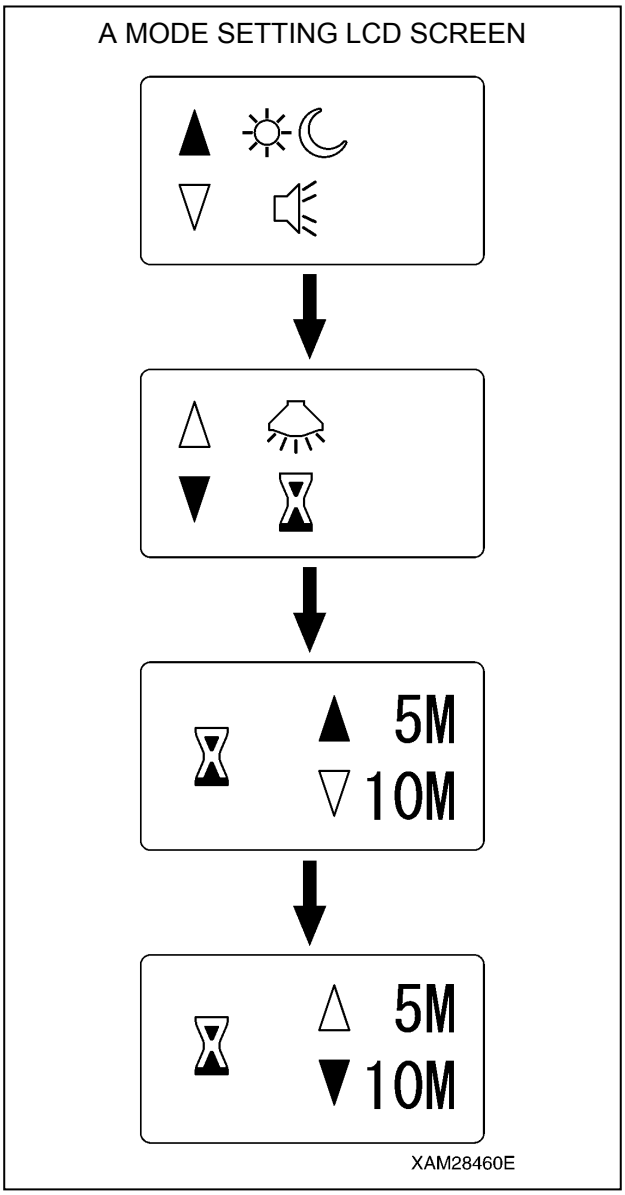

Fig. 4-250

4. Shift the cursor (▲ or ▼) using the Hook raising and lowering lever and select "EXIT", then push the Hook stow/Setting button.
   Now the mode exits from the "A MODE" and is turned to the "CRANE MODE".

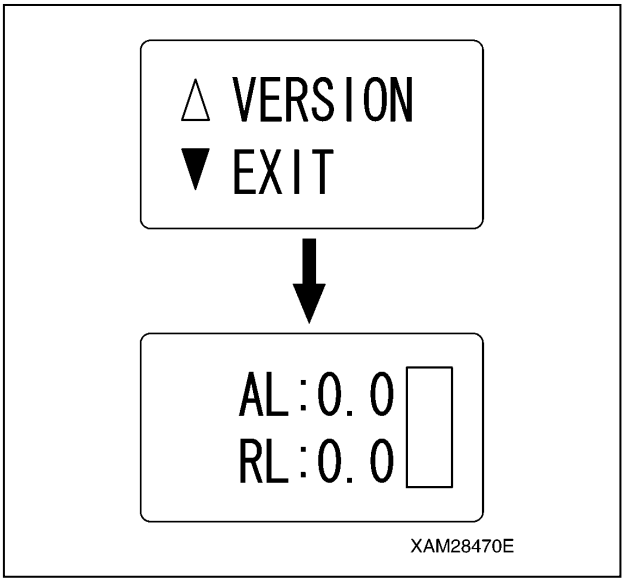

Fig. 4-251

CAUTION:

- **Once setting-up the desired function item is completed, do not forget to practice the termination procedure, above. Otherwise, when this process is not correctly terminated, the latest setting will not be valid.**
- **Change of the other function item setting is available by the same procedure. In such event, correctly exit from the A MODE, without fail.**

https://truckmanualshub.com/

Procedure in the Operation Mode

CAUTION: When the Main switch of the Receiver is turned ON, its abnormal signal detector automatically starts, first. Please allow it for 3 to 4 seconds, without using any levers, buttons and the Accelerator lever.

NOTICE:

- *For changes between the modes, always turn OFF the power, once, then push the Power button again to power ON.*
- *While using a mode other than the "CRANE MODE", when you turn OFF the power by the Power switch and turn it ON, again (i.e., you keep waiting for 2 seconds or more), the mode is automatically set to "CRANE MODE". When you want to continue the operation in the previous mode, call the appropriate mode, again.*

Call Out Crane Mode

1. Push the Power button to turn ON the Transmitter.
   The "Crane mark" is displayed in the LCD screen for 2 seconds or around.

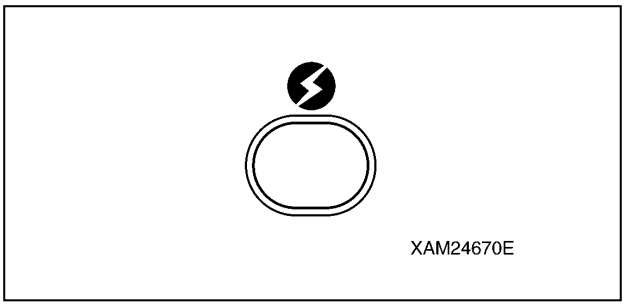

Fig. 4-252

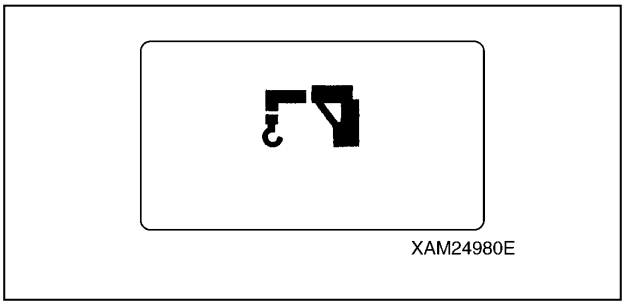

Fig. 4-253

NOTICE: In case that the power is already ON, once turn OFF, and then push the Power button again for power ON.

2. When the "Crane mark" in the LCD screen disappears in 2 seconds, the "CRANE MODE" is automatically called out.

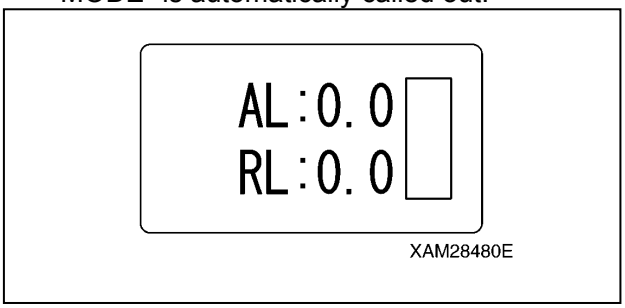

Fig. 4-254

Call Out Outrigger Mode

NOTICE: The OUTRIGGER MODE consists of "Extension mode "and "Ground setting mode". Use respective modes as shown below:

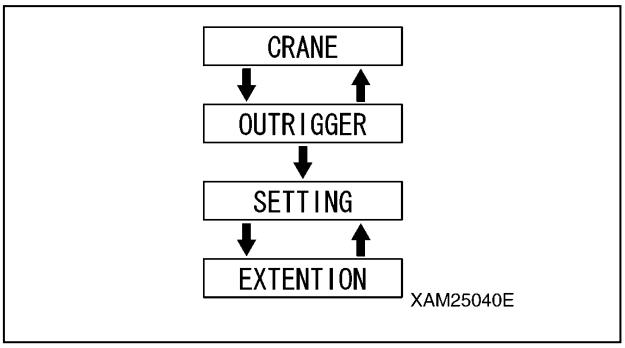

Fig. 4-255

1. Push the Power button to turn ON the Transmitter.
   The "Crane mark" is displayed in the LCD screen for 2 seconds around.

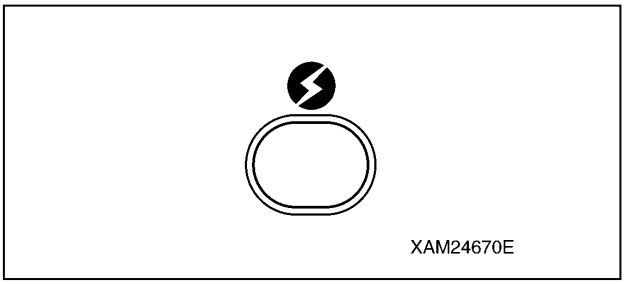

Fig. 4-256

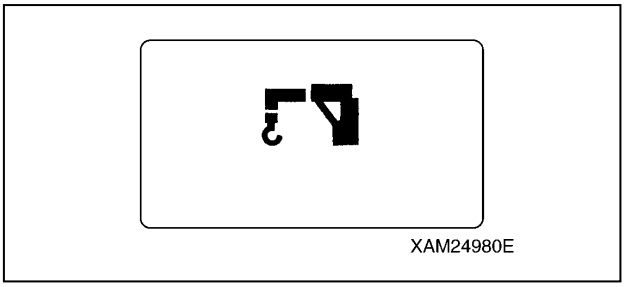

Fig. 4-257

NOTICE: In case that the power is already ON, once turn OFF, and then push the Power button again for power ON.

https://truckmanualshub.com/

2. While the "Crane mark" is shown in the LCD screen (for approx. 2 seconds), push the Speed/Mode button for 2 seconds.
   The LCD provides the screen for selecting "CRANE MODE" or "OUTRIGGER MODE".

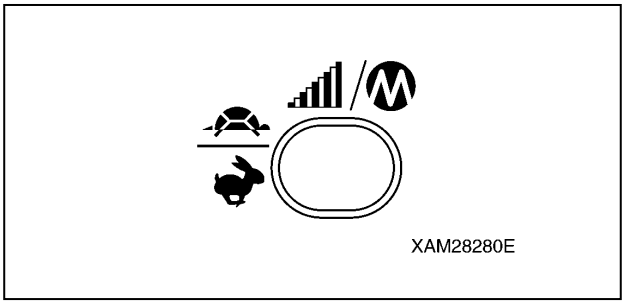

Fig. 4-258

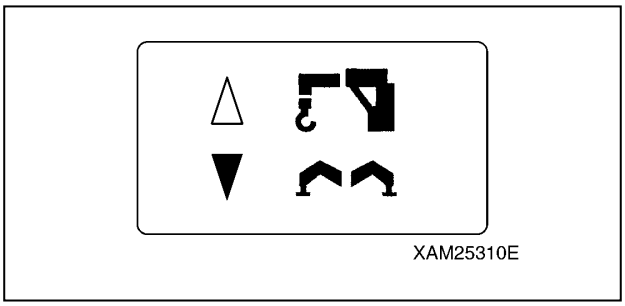

Fig. 4-259

3. Use the Hook raising and lowering Lever and shift the cursor (▲ or ▼), and push the Hook stow/Setting button when the cursor points out the "OUTRIGGER".

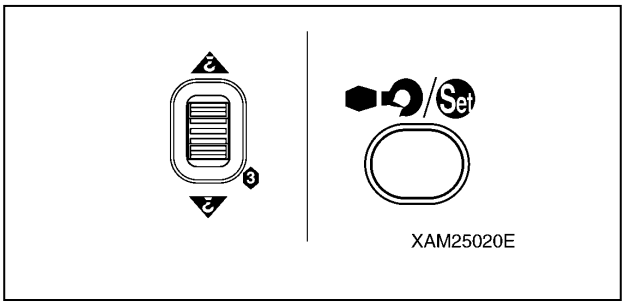

Fig. 4-260

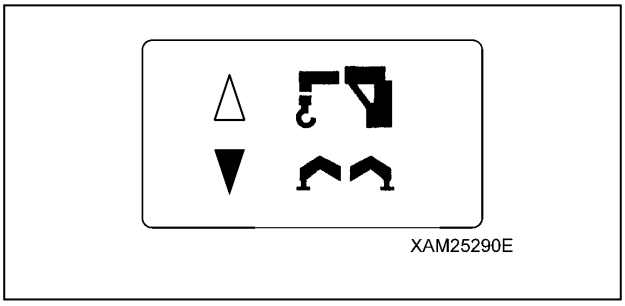

Fig. 4-261

4. The operation mode is already switched to the "OUTRIGGER MODE", thus the "Outrigger mark" is exhibited.
   Soon after, it enters into "Ground setting mode", then the mark turns to "Ground setting (⬆ ⬇)".

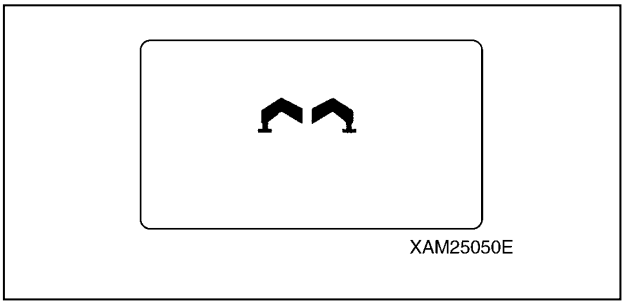

Fig. 4-262

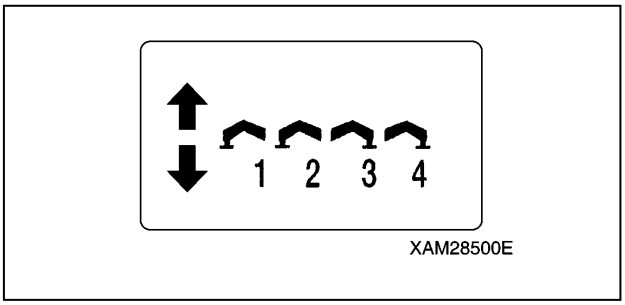

Fig. 4-263

5. To shift to "Extension mode", push the Speed/Mode button, while the LCD screen shows the "Ground setting mode". Then the mode is switched to "n"; the mark turns to "Extension (⬅ ➡)".

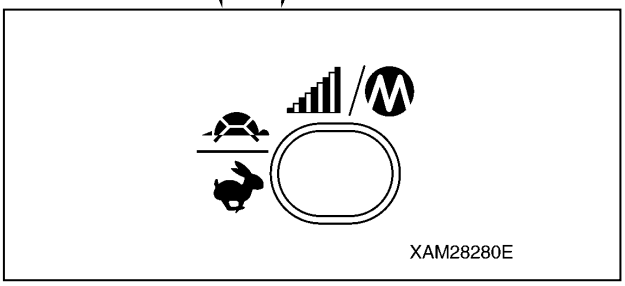

Fig. 4-264

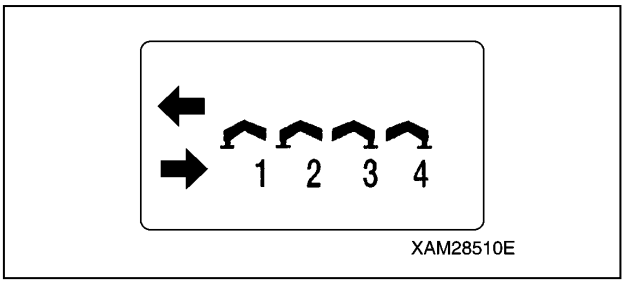

Fig. 4-265

NOTICE: Switching between "Outrigger Extension mode" and "Outrigger Ground setting mode" is alternately by each push of the Speed/Mode button.

https://truckmanualshub.com/

REMOTE CONTROL SYSTEM VERIFICATIONS

Checking Before Starting Engine

WARNING! Precautions shown in this section must be practiced prior to the day's work, without fail.
Serious injury or death may arise when these checking are neglected.
Further, see "Pre-Start Visible Checks" on page 5-22 for the checking of the crane structure.
In the event where any failure is revealed in such checking, repair it, or contact us or our sales service agency.

Checking before Turning ON the Transmitter

WARNING! For the Checking before Turning ON the Transmitter, ensure that the engine starter switch is in the OFF position, as well as the Receiver main switch is OFF. Otherwise, the engine may un-expectedly starts and cause serious injury or death, while checking the Transmitter.

Perform the following inspections white the Transmitter power is OFF:

- Check the control levers, operation buttons, LCD screen, Accelerator lever and Grip for oily dirt or other soil.
  Scrub away the dirt with a clean cloth or such, when any.
- Check for foreign bodies such as particles of small stone or sand, caught into small openings in the vicinity of the control levers and/or Accelerator lever.
  Remove such particles completely, when any.
  In the event where such particles are caught in the small openings in the vicinity of the control levers and/or acceleration lever, they may disturb correct operations and cause un-expected motion of the Crane which results a serious accident.
- Check for any cracks and/or damage to the Transmitter enclosure, or impairment to the rubber cover of the operation levers and control buttons.
  Repair such cracks or damage immediately, when any.
  Such cracks or damage may allow water to enter inside and brings troubles or failures to the Transmitter and cause a serious hazard.
- Check the smooth and correct actions of each of the operation lever and control button, and the Accelerator lever, as well as they smoothly return to the each neutral position when the finger is released.
  Repair the operation levers, Accelerator lever and/or control button without delay, when any of them show an incorrect action.
  Any failure to the operation levers, Accelerator lever and/or control button brings troubles or failures and cause a serious hazard.
- Check the connection cable for any cracks, damages and/or bents, or loose connection or damage in the connector section.
  Repair or replace to a new cable, where such cracks, damages, or loose connection is present.

Checking after Turning on the Transmitter

At the moment when the Transmitter is powered ON, make checks on following items:

Verification of the LCD Screen Sign at Power-On

Push the Power switch to turn ON the Transmitter.
At this moment, confirm the mark as shown below, in the LCD screen.

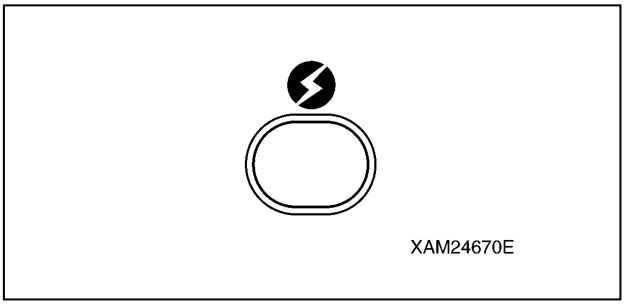

Fig. 4-266

NOTICE: In two seconds of this condition, it automatically enters into the "CRANE MODE".

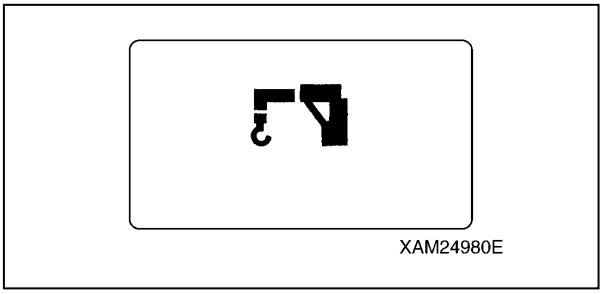

Fig. 4-267

https://truckmanualshub.com/

Verification of the LCD Screen Sign at the "Crane Mode"

1. Compare the corresponding values in the Transmitter and Moment limiter, i.e. "AL" to "Actual Load", "RL" to "Rated Load", and the "bar chart (in the right)" to "Load Factor", to verify each is identical.

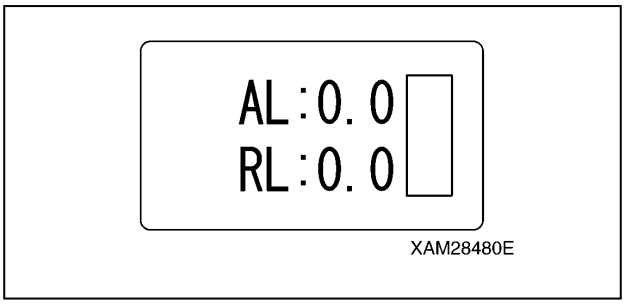

Fig. 4-268

2. Manipulate each control button and verify that each indication in the LCD screen is correct.
3. Verify that "START" is correctly displayed in the LCD screen when the Start/Reset button is pushed.

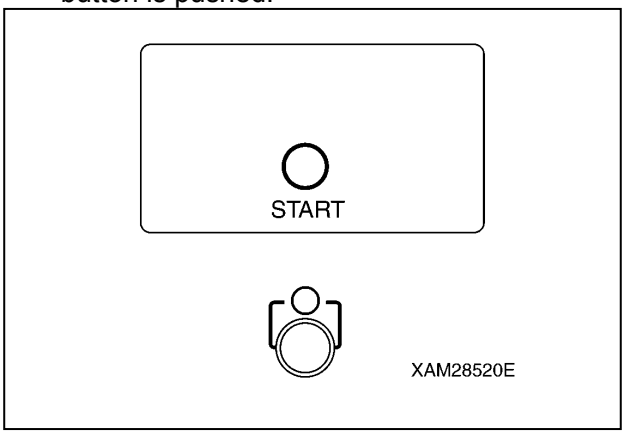

Fig. 4-269

4. Also, verify that "STOP" is correctly displayed in the LCD screen when the Stop/EMO button is pushed.

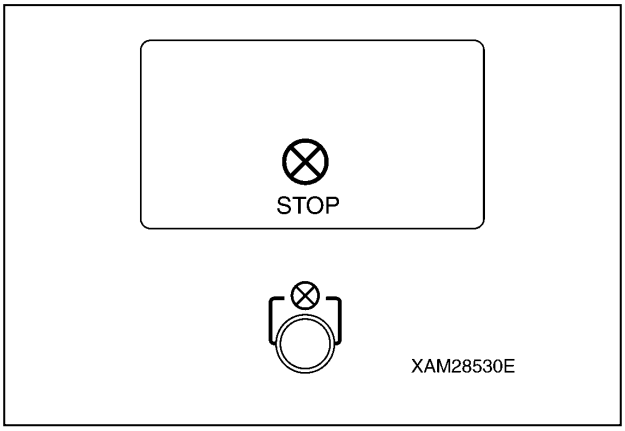

Fig. 4-270

Verification of the LCD Screen Sign at the "Outrigger Mode"

1. Push the Power switch to once turn OFF the Transmitter.

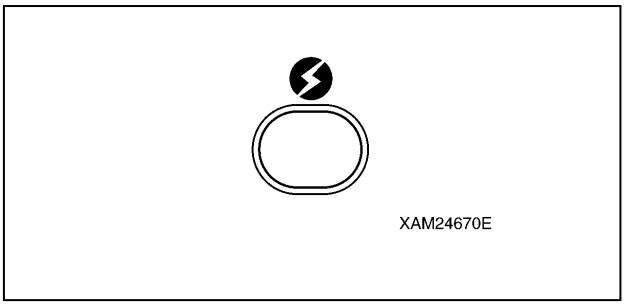

Fig. 4-271

2. Push the Power switch again to turn ON the Transmitter.

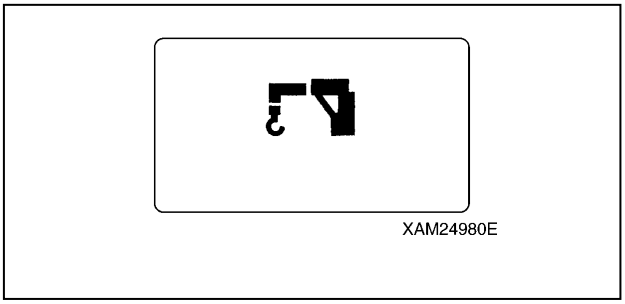

Fig. 4-272

3. While the "Crane mark" is shown in the LCD screen (for approx. 2 seconds), push the Speed/Mode button for 2 seconds.

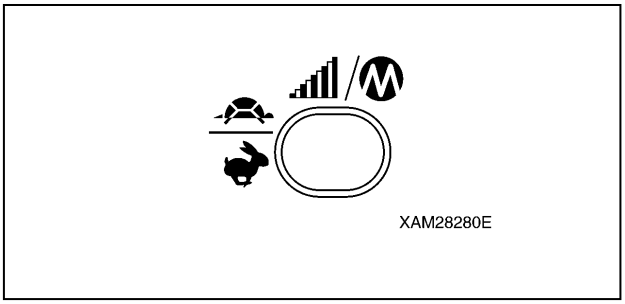

Fig. 4-273

https://truckmanualshub.com/

4. When the LCD provides the screen for selecting "CRANE MODE" or "OUTRIGGER MODE, use the Hook raising and lowering lever to set the cursor (▼) to the side of "Outrigger" then push the Hook stow/Setting button.

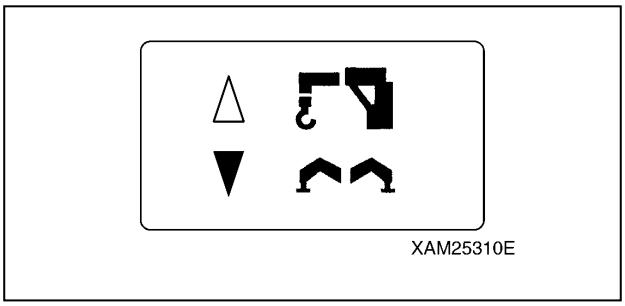

Fig. 4-274

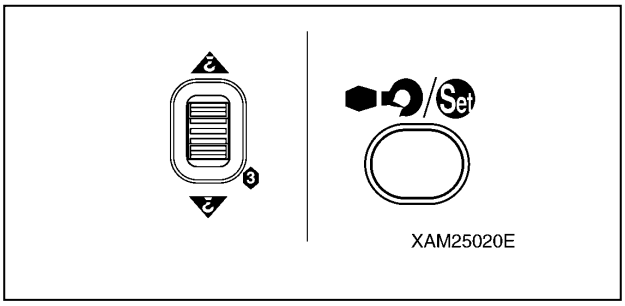

Fig. 4-275

Here, confirm that the "Outrigger mark" is exhibited, then it enters into the "Ground setting mode", soon after.

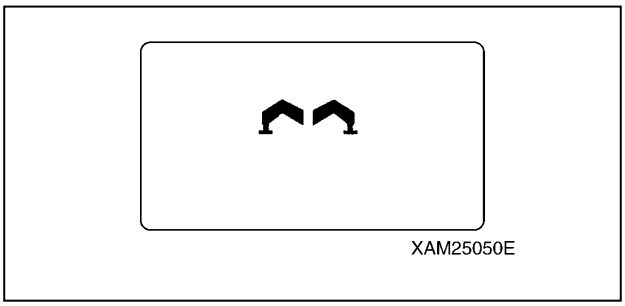

Fig. 4-276

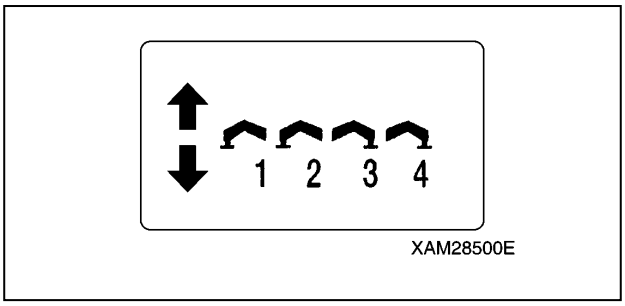

Fig. 4-277

5. To shift to "Extension mode", push the Speed/Mode button, while the LCD screen shows the "Ground setting mode".
   Here, confirm that the "Outrigger Extension mode" is exhibited.

NOTICE: Switching between "Outrigger Extension mode" and "Outrigger Ground setting mode" is alternately by each push of the Speed/Mode button.

Fig. 4-278

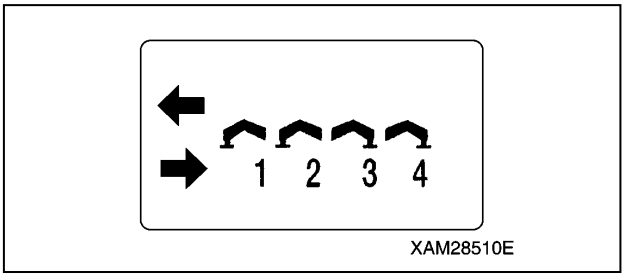

Fig. 4-279

6. Manipulate each operation lever and verify that each indication in the LCD screen is correct.

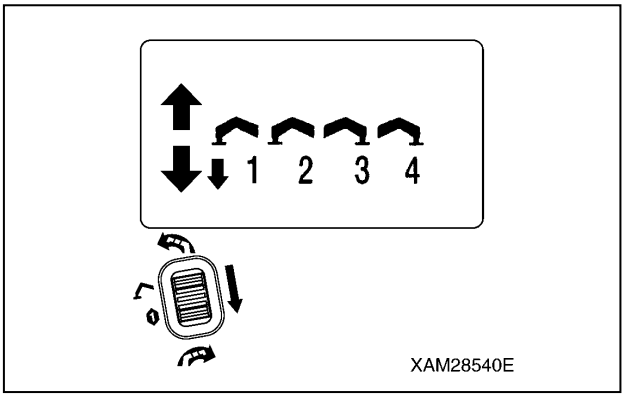

Fig. 4-280

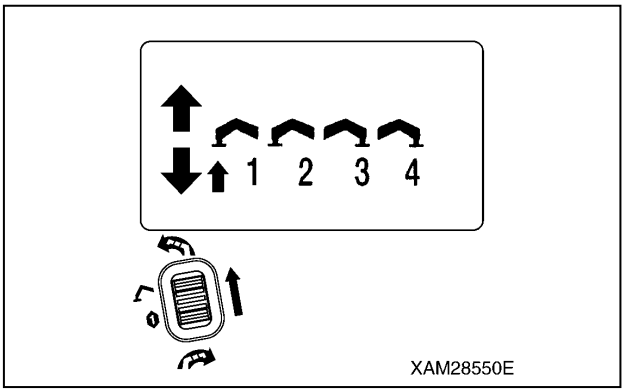

Fig. 4-281

https://truckmanualshub.com/

Checking Receiver

Perform the following inspections:

- Check the Control Box (1), Main Switch (2), Monitor display (3), and Receptacle (4) for oily dirt or other soil.
  Scrub away the dirt with a clean cloth or such, when any.

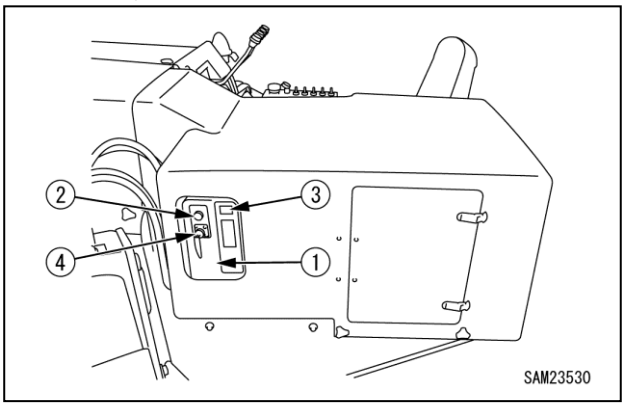

Fig. 4-282

- Check for any cracks and/or damages to the Control Box (1) or Monitor display (3).
  Repair such cracks or damage immediately, when any.
  Such cracks or damages may allow water to enter inside and brings troubles or failures to the Receiver, then cause a serious hazard.

- Check the Main switch (2) and Receptacle (4) for the loose conditions or damages.
  Repair immediately when such loose conditions or damages are found.
  Such loose conditions or damages may cause errors or faults of the Receiver, which results a serious hazard.

- Toggle the Main switch (2) to ON and OFF alternately to verify that power is correctly turned ON or OFF.

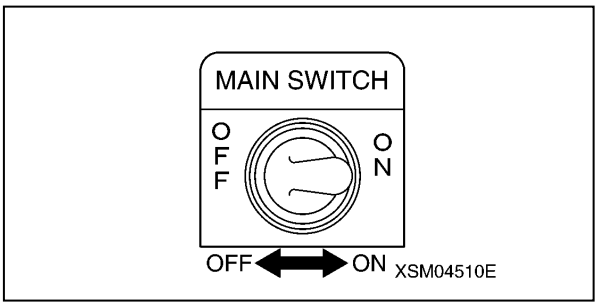

Fig. 4-283

- Turn ON the Transmitter, then toggle the Main switch (2) to ON, in addition, and confirm next that the two dots in the Monitor display as shown in the figure in the light blink.

NOTICE: In the condition that the Transmitter is not powered ON, or reception has an error, the Monitor display shows the error code, "E2", when the Receiver is turned ON.

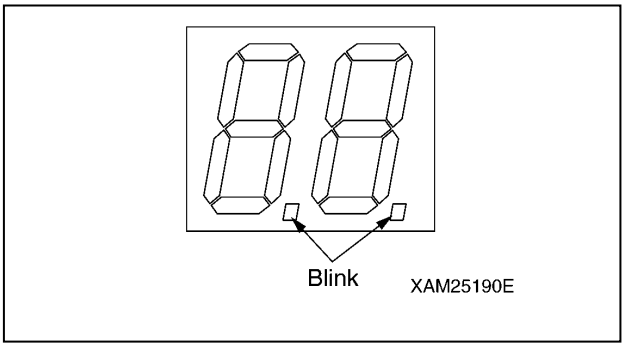

Fig. 4-284

https://truckmanualshub.com/

Checking after Starting Engine

WARNING! Precautions shown in this section must be practiced prior to the day's work, without fail.
Serious injury or death may arise when these inspections are neglected.
Further, see "Pre-Start Visible Checks" on page 5-22 for the checking of the crane structure.
Whenever any failures are revealed in such inspections, repair them, or contact us or our sales service agency.

Verification for the Engine Start and Stop

WARNING!

- **Ensure that the boom and outriggers are in the stow position, entirely.**
  In case where they are not in those positions, manipulate applicable levers of the Crane to make them stowed.
  Otherwise, the Transmitter operation may cause damages to the Crane or tipping that results serious injury or death.
- **The Crane is inoperable in such event where the LCD screen in the Transmitter shows an error message or the Monitor display in the Receiver shows an error code.**
  Without fail, examine the cause of the error and perform appropriate service when any fault is identified, or contact us or our sales service agency.

Checking Engine Start Operation

1. Position the Starter Switch of the Crane to ON.
2. Next, push the Power switch of the Transmitter, to power ON.
3. Then turn ON the Main switch of the Receiver.
4. Here, push the Horn button and confirm that the horn toots.

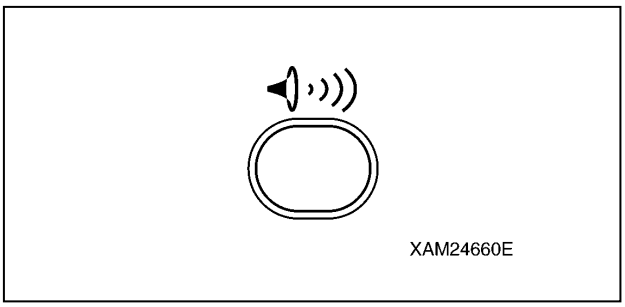

Fig. 4-285

5. Use the Start/Reset button to check that the engine starts properly.
6. Check whether the indication as "START" appears in the LCD screen, at that time.

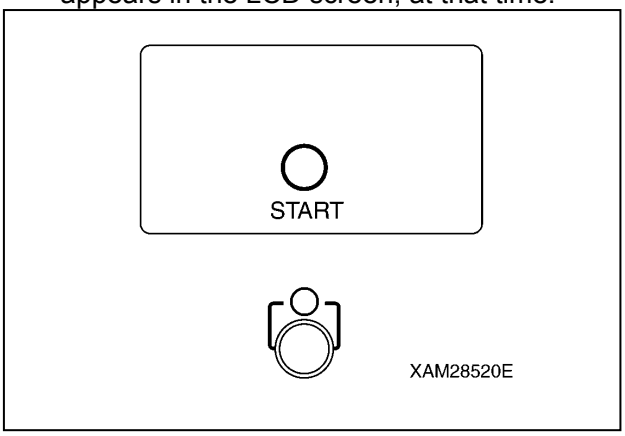

Fig. 4-286

CAUTION: Prior to start the engine, perform following practices in the Crane.

1. **Set the Acceleration Lever to the medium speed (nearly middle in its stroke).**
2. **Pull out the choke knob, unless otherwise the sufficient idling has been completed.**
3. **Return the chock knob to its initial position, when the engine starts.**

https://truckmanualshub.com/

Checking Engine Emergency Stop Operation

1. When the engine is started as in the above [1], try the Stop/EMO button to confirm that the engine absolutely stops.
2. Here, check whether the indication as "STOP" appears in the LCD screen.
   Further, confirm that the Monitor display in the Receiver shows the error code, "E1", at that time.

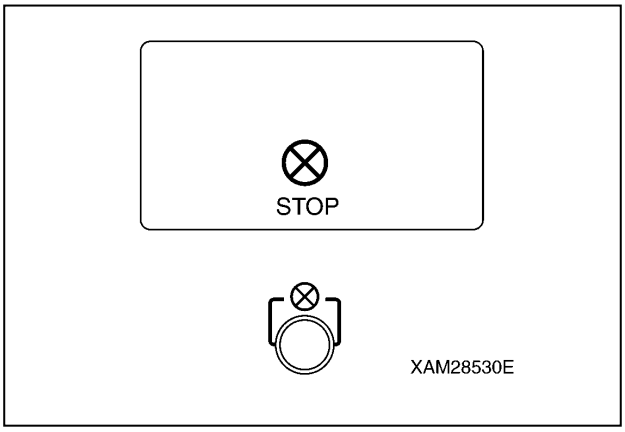

Fig. 4-287

Checking "Outrigger Mode" Operation

WARNING!

- **Ensure that the boom and outriggers are in the stow position, entirely.**
  In case where they are not in that position, manipulate applicable levers of the Crane to make them stowed.
  Otherwise, the Transmitter operation may cause damages to the boom or outriggers or tipping the Crane that results serious injury or death.
- **The Crane is inoperable in such event where the LCD screen in the Transmitter shows an error message or the Monitor display in the Receiver shows an error code.**
  Without fail, examine the cause of the error and perform appropriate service when any fault is identified, or contact us or our sales service agency.

1. Position the Starter switch of the Crane to ON.
2. Push the Power switch of the Transmitter to power ON.
3. Turn ON the Main switch of the Receiver.
4. Switch the operation mode to the "OUTRIGGER MODE" and confirm that "Ground setting mode" is indicated in the LCD screen.

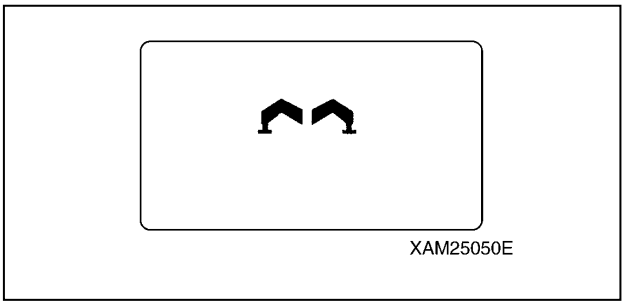

Fig. 4-288

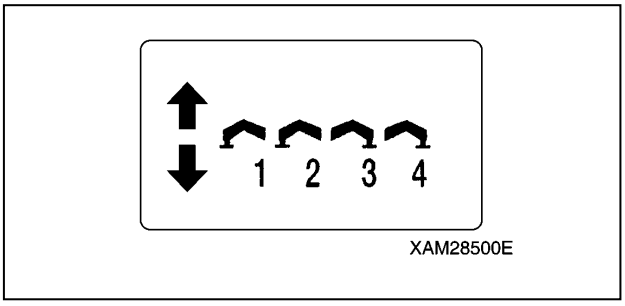

Fig. 4-289

5. Push the Speed/Mode button.
   Here, confirm that the "Outrigger Extension mode" is exhibited.

https://truckmanualshub.com/

Switching between "Outrigger Extension mode" and "Outrigger Ground setting mode" is alternately by each push of the Speed/Mode button.

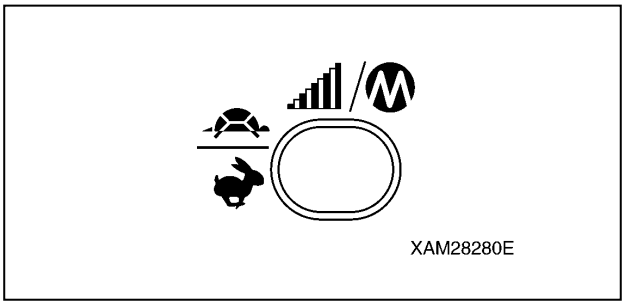

Fig. 4-290

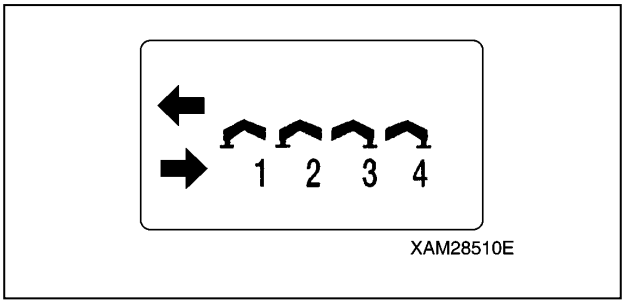

Fig. 4-291

6. Push the Start/Reset button and start the engine.
7. Use the Slewing/No.1 Outrigger operation lever, to the both "Extend (lower)" and "Retract (upper)" area, and check that the No. 1 outrigger follows the lever operation.

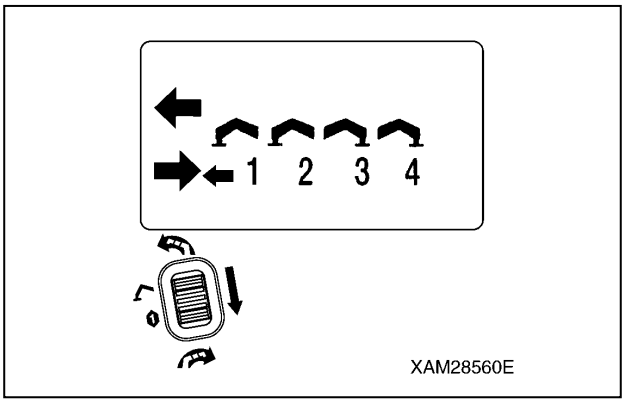

Fig. 4-292

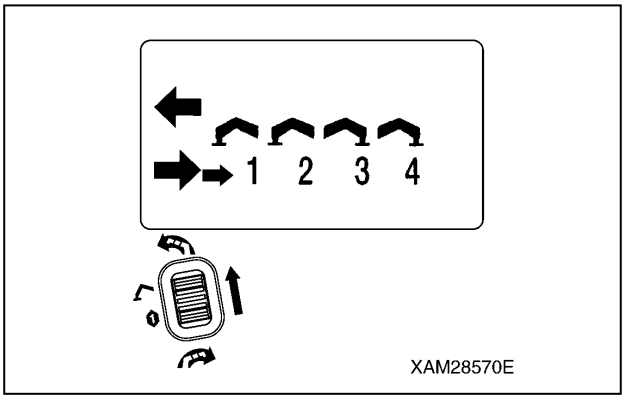

Fig. 4-293

8. During the control lever manipulation, slowly pull and release the Accelerator lever and confirm that the speed of outrigger action follows the acceleration ratio.

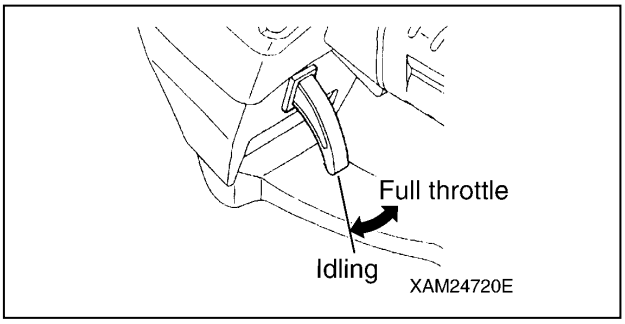

Fig. 4-294

9. Try other outriggers, No. 2 to 4 by the same manipulation and confirm that the outriggers correctly respond to the lever control.
   Lastly, manipulate all the outrigger operation levers to "Extend (lower)".
10. Use the Speed/Mode button to switch to the "Ground setting mode".

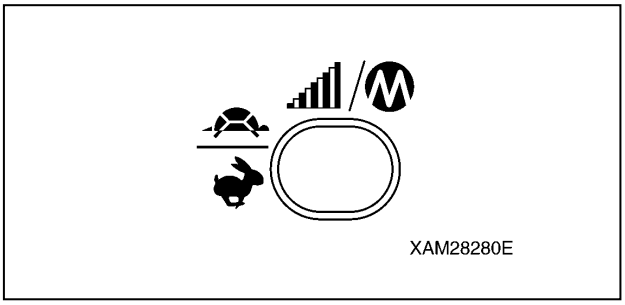

Fig. 4-295

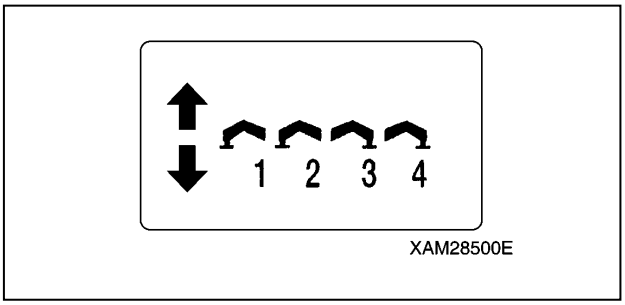

Fig. 4-296

https://truckmanualshub.com/

11. Use the Slewing/No.1 Outrigger operation lever, to the both "Extend (lower)" and "Retract (upper)" area, and check that the No. 1 outrigger follows the lever operation.

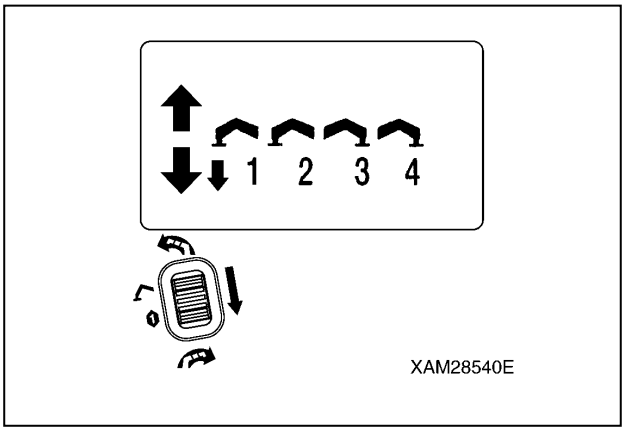

Fig. 4-297

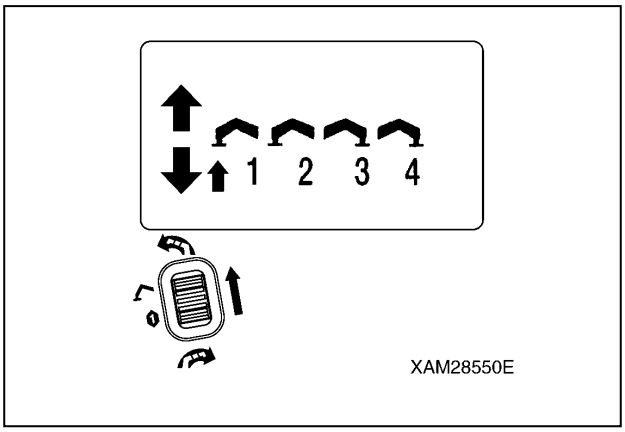

Fig. 4-298

12. During the control lever manipulation, slowly pull and release the Accelerator lever and confirm that the speed of outrigger action follows the acceleration ratio.

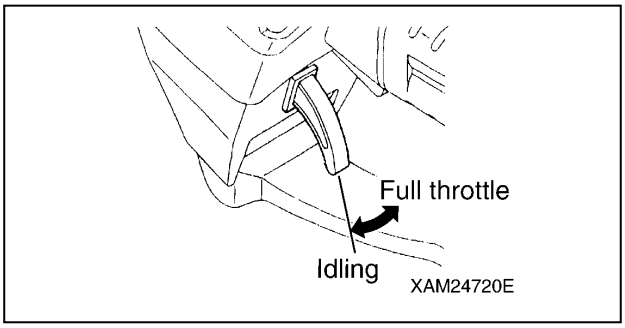

Fig. 4-299

13. Try other outriggers, No. 2 to 4 by the same manipulation and confirm that the outriggers correctly respond to the lever control.

Checking "Crane Mode" Operation

WARNING!

- **Ensure that all the outriggers are securely settled, before starting crane operations. Any crane operations where outriggers are improperly used cause the tip of the Crane or other serious accidents.**
- **The Crane is inoperable in such event where the LCD screen in the Transmitter shows an error message or the Monitor display in the Receiver shows an error code.**
  Without fail, examine the cause of the error and perform appropriate service when any fault is identified, or contact us or our sales service agency.

1. Start the engine by the Starter switch of the Crane.
2. See "Before Crane Operations" on page 4-52 and "Crane Operation Posture" on page 4-54 to and configure the Crane as shown in the figure.

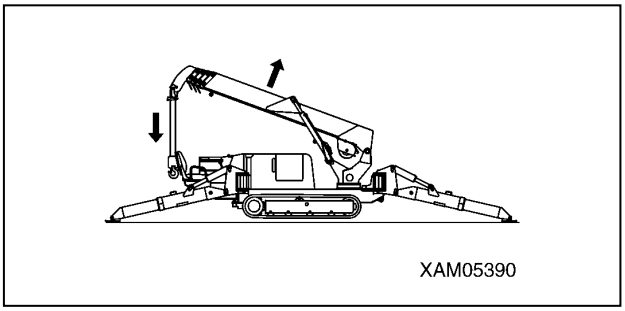

Fig. 4-300

3. Push the Power switch of the Transmitter to power ON.
4. Then turn ON the Main switch of the Receiver.

https://truckmanualshub.com/

5. Enter into "CRANE MODE"; confirm that the indication as "CRANE MODE" is displayed in the LCD screen.

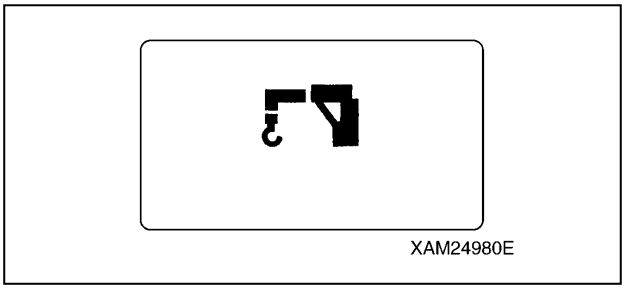

Fig. 4-301

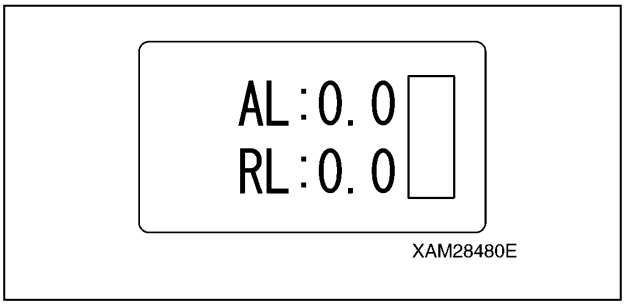

Fig. 4-302

6. Use the Boom telescoping lever to the both "Raise (upper)" and "Lower (lower)" area, pull the Accelerator lever and check that the boom follows the lever operation.

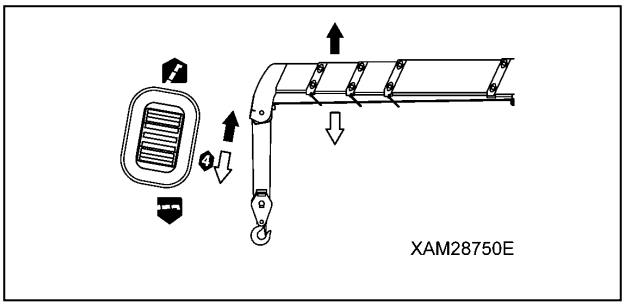

Fig. 4-303

7. Raise the boom to the sufficient angle (approximately 60 degree) by the Boom lift lever, pushing to the "Raise (upper)" area.

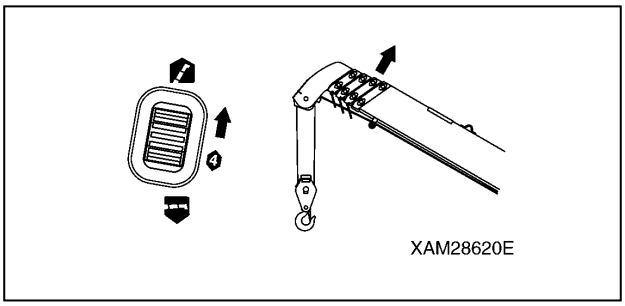

Fig. 4-304

8. During the Hook raising and lowering lever manipulation, to the "Raise (upper)" and "Lower (lower)" area respectively, pull the Accelerator lever and check that the hook follows the lever operation.

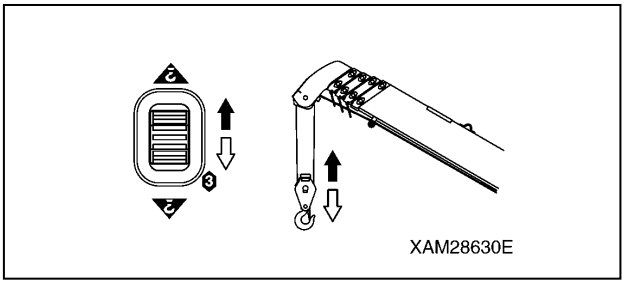

Fig. 4-305

9. Using the Hook raising and lowering lever to the "Lower (upper)" area, lower the hook as much as possible.

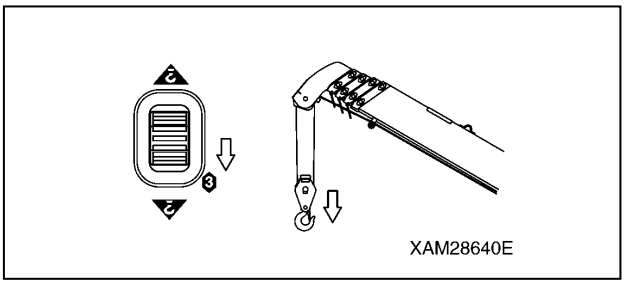

Fig. 4-306

10. During the Boom telescoping lever manipulation, to the "Extend (upper)" and "Retract (lower)" area respectively, pull the Accelerator lever and check that the boom follows the lever operation.

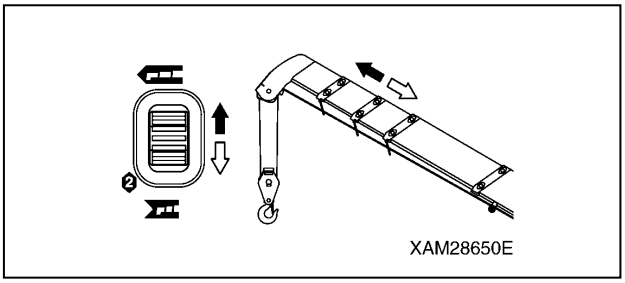

Fig. 4-307

11. Using the Hook raising and lowering lever to the "Raise (upper)" area, hoist the hook.

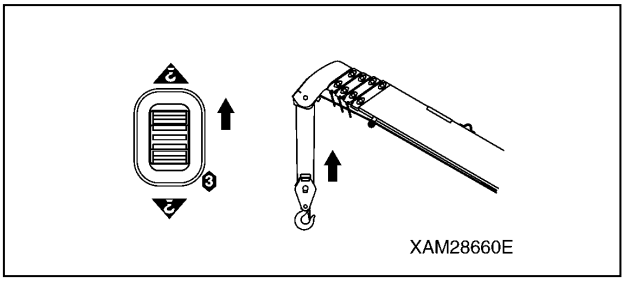

Fig. 4-308

https://truckmanualshub.com/

12. During the Slewing lever manipulation, to the "Counterclockwise (upper)" and "Clockwise (lower)" area respectively, pull the Accelerator lever and check that the Crane follows the lever operation.
    In addition, practice a slew around 360 degrees or more to check any abnormal conditions.

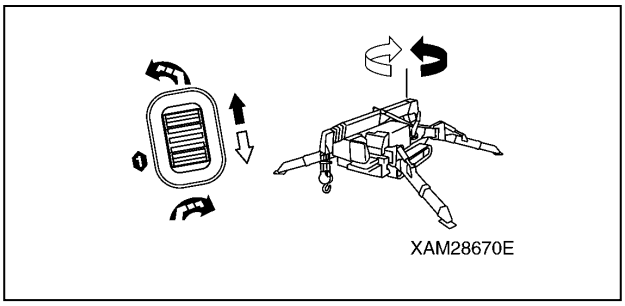

Fig. 4-309

13. During each control lever manipulation of 6. through 12., above, slowly pull and release the Accelerator lever and confirm that the speed of each action follows the acceleration ratio.

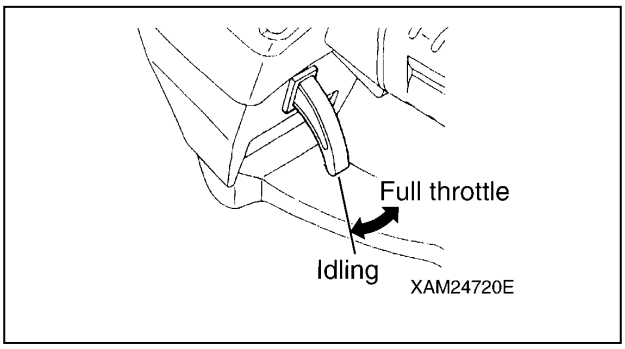

Fig. 4-310

14. During each control lever manipulation of 6. through 12., above, push the Speed/Mode button, then try both "Micro speed command" and "Enhanced speed command" and confirm the speed of each operation corresponds to respective controls of "Micro speed command" and "Enhanced speed command".

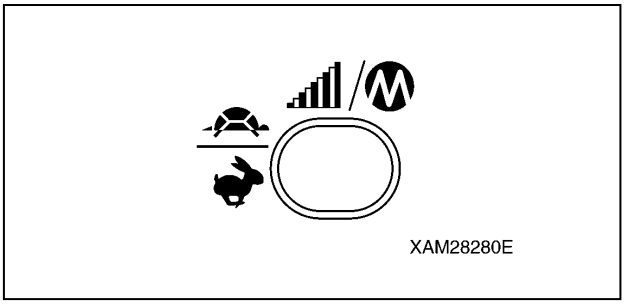

Fig. 4-311

15. Keep pushing the Hook Stow/Setting button and pull the Accelerator lever to verify the hook is stowed properly.

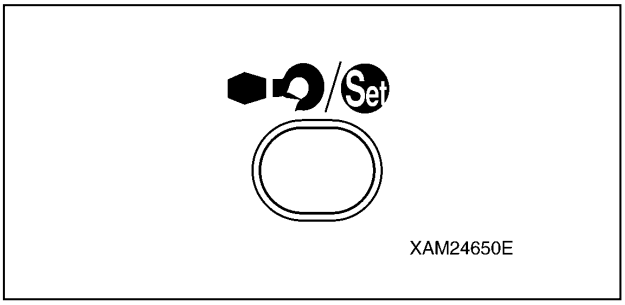

Fig. 4-312

https://truckmanualshub.com/

REMOTE CONTROL OPERATION

WARNING!

- **In no event, attempt to disassemble or modify the Transmitter or Receiver, which may cause an electrical shock or a fire.**
- **Avoid to make an impact to the Transmitter by dropping or hitting. A damaged part of the enclosure allows water to enter inside that brings its troubles or failures and cause a serious hazard, such as malfunction or electrical shock.**
  In such event of dropping and damage, contact us or our sales service agency.
- **In no event, water-wash the Transmitter or Receiver; that allows water to enter inside and brings its troubles or failures and cause a serious hazard, such as malfunction or electrical shock.**
- **Both remote control operation and manual operation at a time are not allowed.**
  That may cause the un-expected behaviour of the Crane and results a serious hazard.
  The Crane must be operated by only in either method. (Manual operation is not available, when the remote control is active.)
- **Prior to start the remote control operations, always conduct inspections of both the Transmitter and Receiver, in accordance with "REMOTE CONTROL SYSTEM VERIFICATIONS" on page 4-96.**

Cautions Before Operation

1. So that dropping the Transmitter is prevented, hook one end of the hook belt (16) to the Transmitter and attach another end to the operator's waist belt, or such.

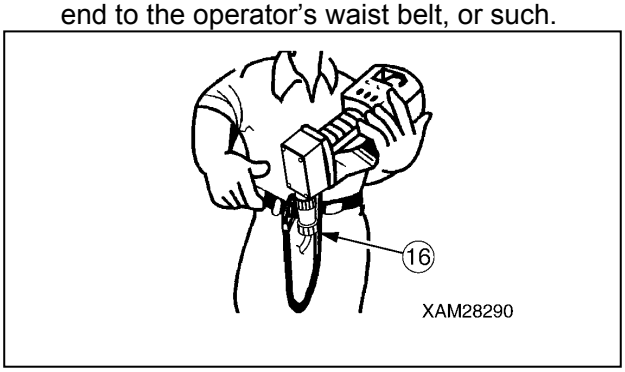

Fig. 4-313

2. Always conduct inspections of both the Transmitter and Receiver, in accordance with "REMOTE CONTROL SYSTEM VERIFICATIONS" on page 4-96.
3. Make sure that the receptacles (14) in the both ends of the connection cable are secured to both the Transmitter and Receiver, respectively.

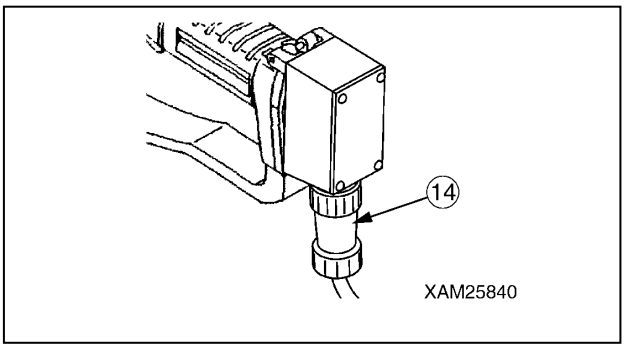

Fig. 4-314

NOTICE:

- *When it is required to change the initial values of settings such as the contrast of the Transmitter LCD screen, the light, or the OFF timer, once switch to "A MODE" for adjustment.*
- *In the event that the remote control operation is discontinued for the length of the "Auto shut -OFF time" or more, during the crane operation, the Transmitter power will be automatically cut. To resume the remote control operation, turn ON the Transmitter and set each items for the operation mode, again.*

https://truckmanualshub.com/

Operation in Outrigger Mode

WARNING!

- **Check smooth and correct actions of each operation lever of the Transmitter, and they smoothly return to each neutral position when the finger is released.**
- **Each operation lever of the Transmitter will be blocked by its stopper when it is moved full. When it is blocked, do not attempt to push more, otherwise it may damage the Transmitter to cause its fault and results a serious accident.**
- **To toggle each operation lever to the opposite side, or to use another lever, always release the Accelerator lever, each time. Also, to operate the outrigger, manipulate the operation lever first, then pull the Accelerator lever. To stop the actuation of outriggers, release your finger from the Accelerator lever, first, then discharge the operation lever.**
- **For the outrigger operations, always keep the engine speed in the low or middle range. Such operation in the high speed range makes outriggers actuate too quickly, which may tip the Crane and result in a serious hazard.**
- **For the outrigger operations, always configure the Crane to the stow position. In the condition that the boom is raised or any load is craned, it may cause a serious accident, such as tipping of the Crane.**
- **For the outrigger operations, always ensure that the position pin of each outrigger is securely inserted. In the event where the pins are missing, the Crane may be tipped and it results in a serious hazard.**
- **For the installation of outriggers, always extend them first in the "Extension mode", then switch the mode to "Ground setting mode". Lift each outrigger equally and gradually, until the Crane is properly elevated. For the stowing of Outriggers, lower each outrigger equally and gradually, until the Crane is grounded in the "Ground setting mode", then switch to the "Extension mode" to retract them. Unless otherwise this order is followed, that may cause to tip the Crane and bring a serious accident.**

1. Ensure that the Main switch of the Receiver is in the OFF position.
2. Start the engine by the Starter switch of the Crane.
3. Push the Power switch of the Transmitter to power ON.
   Confirm that the LCD screen shows the mark as the figure and the "CRANE MODE" is automatically provided.

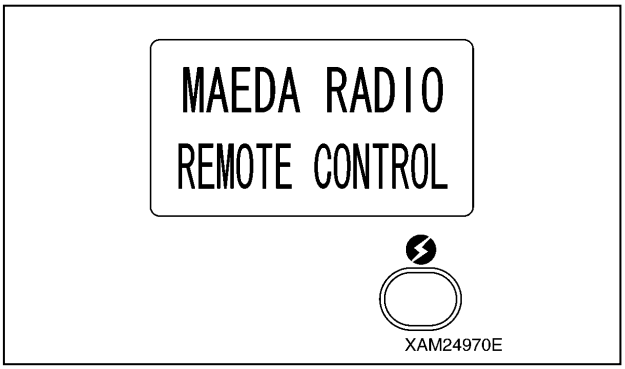

Fig. 4-315

4. Then turn ON the Main switch of the Receiver.

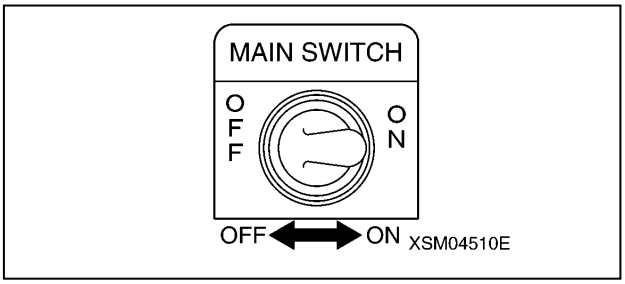

Fig. 4-316

NOTICE: When the Main switch of the Receiver is turned ON, the abnormal signal detector circuit works for 3 to 4 seconds. During this moment, the Crane is not ready for operations.

NOTICE: This Crane equips four sets of outriggers and number labels (1) to (4) are appended on each. These labels correspond to the number of each operation lever in the Transmitter. (See the figure.)

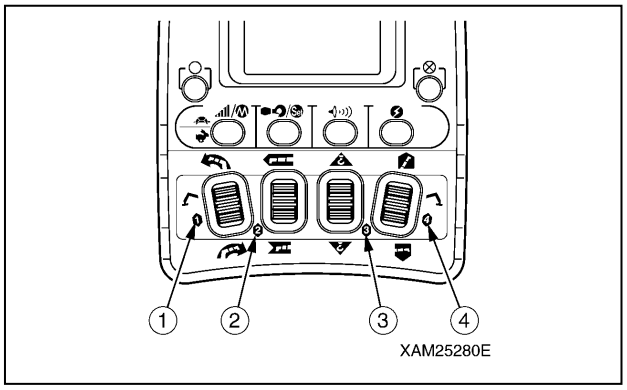

Fig. 4-317

https://truckmanualshub.com/

Outrigger Setting

1. In accordance with "Procedure in the Operation Mode" on page 4-94, enter into the "OUTRIGGER MODE".

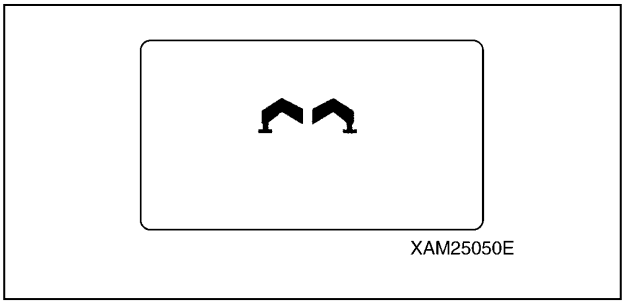

Fig. 4-318

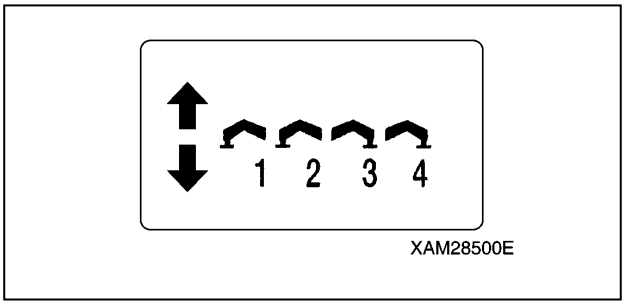

Fig. 4-319

2. Push Speed/Mode button in the mode condition of above 1.
   The operation mode is switched to "Outrigger Extension mode".

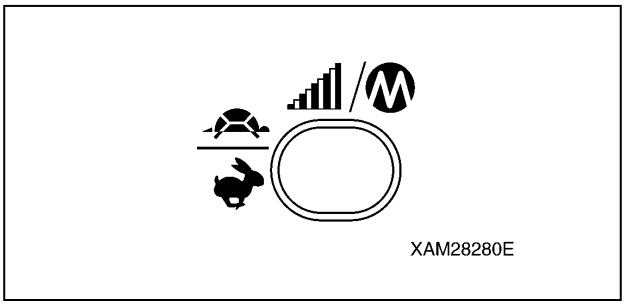

Fig. 4-320

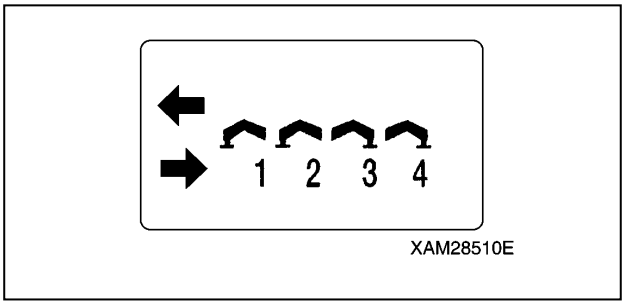

Fig. 4-321

3. Turn one of the outrigger operation levers to "Extend (lower)" and pull the Accelerator lever slowly.

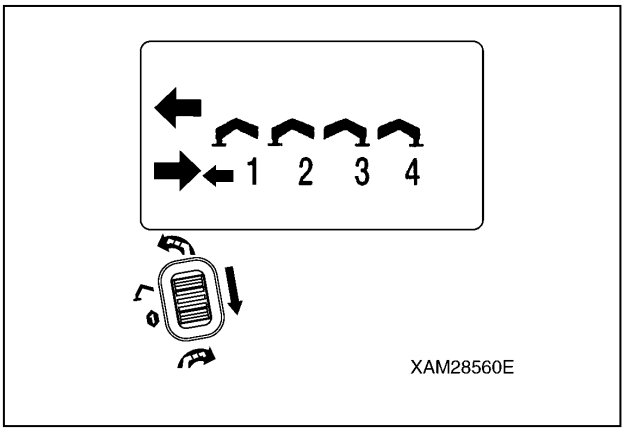

Fig. 4-322

4. When the outrigger is extended to the proper position, slowly release the accelerator lever, then release the outrigger operation lever to return to its neutral position.

NOTICE: Repeat the same process to the other three outriggers, so that all of the four outriggers are extended to the proper position.

5. Push Speed/Mode button in the mode condition of above 4.
   The operation mode is switched to "Ground setting mode".

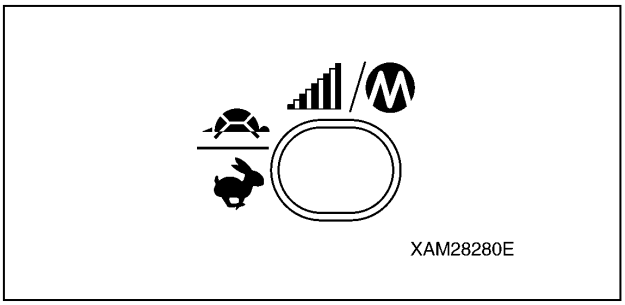

Fig. 4-323

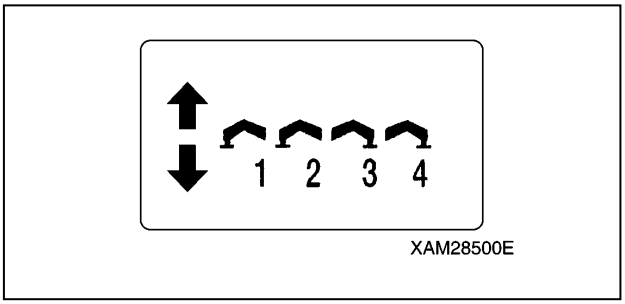

Fig. 4-324

https://truckmanualshub.com/

6. Turn one of the outrigger operation levers to "Extend (lower)" and pull the Accelerator lever slowly.

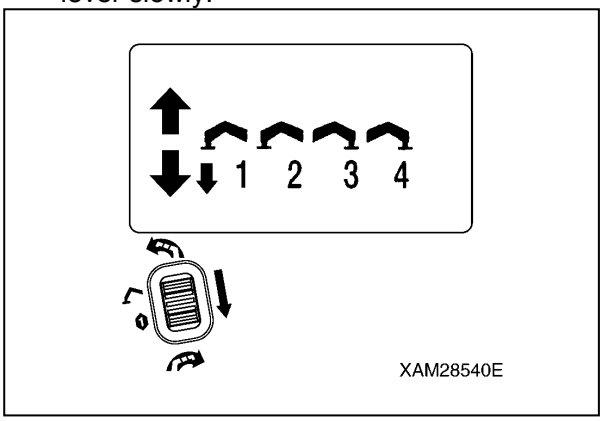

Fig. 4-325

NOTICE: Repeat the same process to the other three outriggers and lift all the four outriggers equally and gradually, so that the Crane is properly elevated.

7. When the Crane is elevated "approximately 50mm", slowly release the Accelerator lever, then release the outrigger operation lever to return to the neutral position.

Outrigger Stowage

1. In accordance with "Procedure in the Operation Mode" on page 4-94, enter into the "OUTRIGGER MODE".

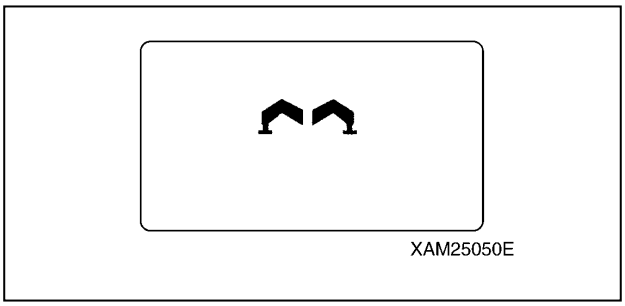

Fig. 4-326

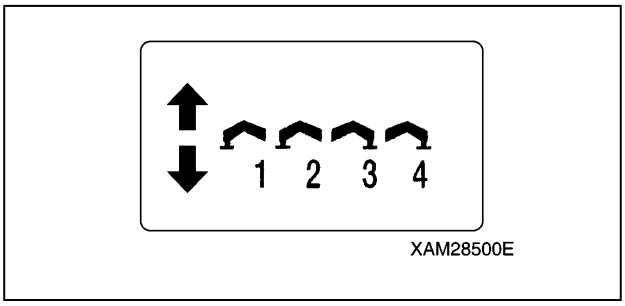

Fig. 4-327

2. Turn one of the outrigger operation levers to "Retract (upper)" and pull the Accelerator lever slowly.

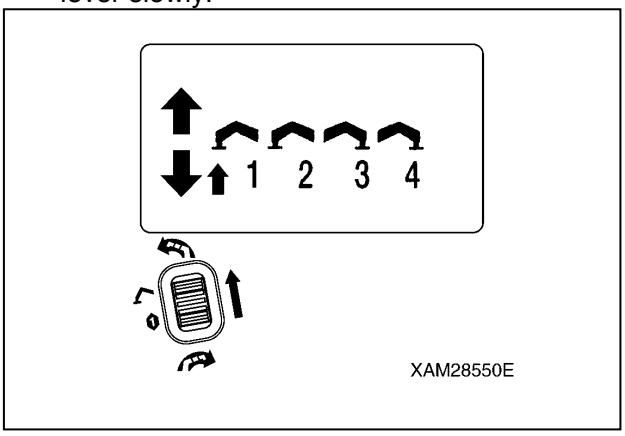

Fig. 4-328

3. When the Crane touches the ground, slowly release the acceleration lever, then release the outrigger operation lever to return to its neutral position.

NOTICE:

- *Repeat the same process to the other three outriggers and lower all the four outriggers equally and gradually, so that the Crane is grounded.*
- *After the Crane is grounded, lower all the four outriggers completely.*

4. Push Speed/Mode button in the mode condition of above 3.
   The operation mode is switched to "Outrigger Extension mode".

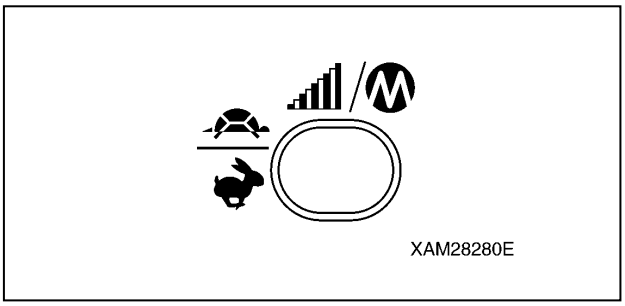

Fig. 4-329

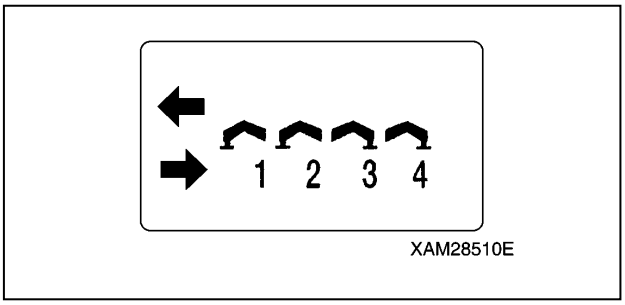

Fig. 4-330

https://truckmanualshub.com/

5. Turn one of the outrigger operation levers to "Retract (upper)" and pull the Accelerator lever slowly.

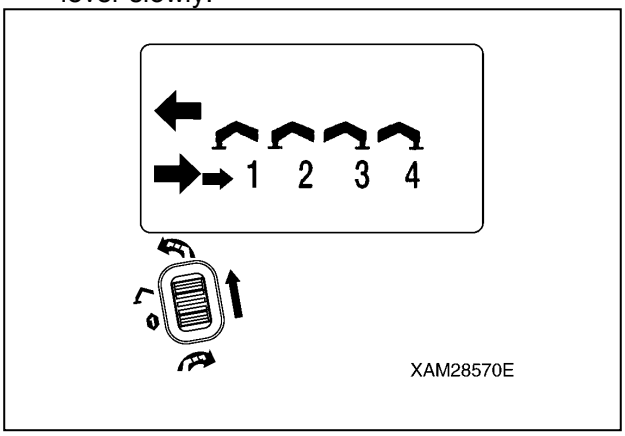

Fig. 4-331

6. When the outrigger is completely retracted, slowly release the Accelerator lever, then release the outrigger operation lever to return to its neutral position.

NOTICE: Repeat the same process to the other three outriggers to retract all the four outriggers completely and stow them to the proper position.

Operation in Crane Mode

WARNING!

- **Ensure that all the outriggers are properly installed.**
  Where outriggers are improperly installed, it may result a serious hazard, such as a Crane tipping.
- **During crane operations, always refer to the portable rated total load chart and avoid over-loaded operations. Operations in over-loaded conditions may damage or tip the Crane, which results a serious hazard.**
- **Check the smooth and correct actions of each operation lever of the Transmitter, and that they smoothly return to the each neutral position when the finger is released.**
- **Each operation lever of the Transmitter will be blocked by its stopper when it is moved full. When it is blocked, do not attempt to push more, otherwise it may damage the Transmitter and cause its fault; it may result a serious accident.**
- **To toggle each operation lever to the opposite side, or to use another lever, always release the Accelerator lever, each time. Also, to operate the Crane, manipulate the operation lever first, then pull the Acceleration lever, next. To stop the operation of the Crane, release your finger from the Accelerator lever, first, and next discharge the operation lever.**
- **Always actuate the Accelerator lever with caution to the acceleration rate.**
  It must be properly controlled to keep the appropriate crane operation speed and avoid any abrupt motion. Such abrupt acceleration or deceleration especially while a load is hung will make a large impact to the Crane and may result a serious hazard such as Crane tipping or damage.
- **During a load is hung, do not attempt to perform multiple operation at a time, the hook raising and the boom lift, for instance. That may cause abrupt change of the load condition and cause a serious hazard such as the Crane tipping or damage.**

1. Ensure that the main switch of the Receiver is in the OFF position.
2. Start the engine by the Starter switch of the Crane.
3. Push the Power switch of the Transmitter to power ON.
   Confirm that the LCD screen shows the mark as the figure in the below and the "CRANE MODE" is automatically provided.

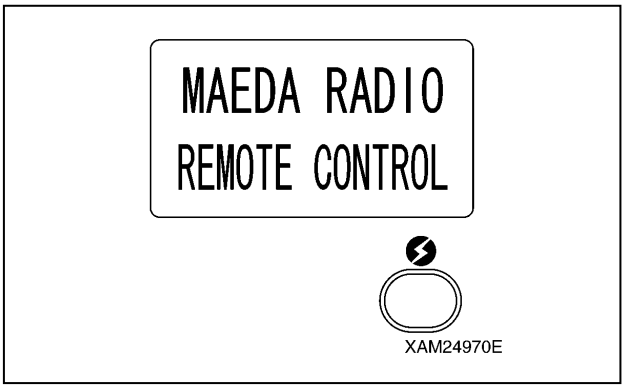

Fig. 4-332

https://truckmanualshub.com/

4. Then turn ON the Main switch of the Receiver.

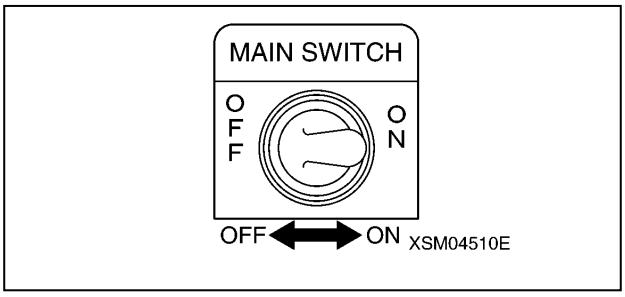

Fig. 4-333

NOTICE: When the main switch of the Receiver is turned ON, the abnormal signal detector circuit works for 3 to 4 seconds. During this moment, the Crane is not ready for operations.

NOTICE: Four of the Crane operation levers are provided. Each controls the following operation, respectively. (See the figure.)

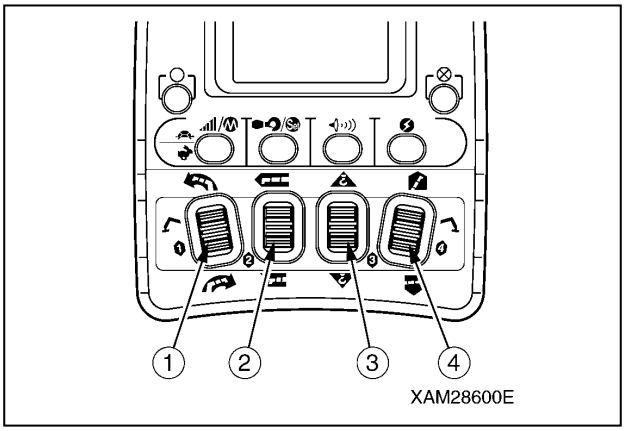

Fig. 4-334

(1): Slewing (upper: counterclockwise (left), lower: clockwise (right))
(2): Boom telescoping (upper: extend, lower: retract)
(3): Hook raising and lowering (upper: raising, lower: lowering)
(4): Boom lift (upper: raising, lower: lowering)

Slewing Operation

WARNING! At the slewing operation, actuate the Accelerator lever carefully and always keep in low speed.

Also, actuate the Accelerator lever slowly and delicately to avoide abrupt slewing.

Such abrupt acceleration or deceleration especially while a load is hung will make a large impact to the Crane and may result a serious hazard such as Crane tipping or damage.

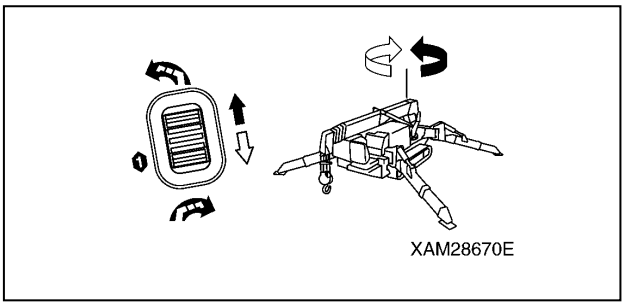

Fig. 4-335

Slew Clockwise (Right)
Push the Slewing/No.1 outrigger operation lever to "Clockwise (lower)", then pull the Accelerator lever slowly.
The boom slews clockwise (right), provided that you look down the Crane from the sky.

Slew Counterclockwise (Left)
Push the Slewing/No.1 outrigger operation lever to "Counterclockwise (upper)", then pull the Accelerator lever slowly.
The boom slews counterclockwise (left), provided that you look down the Crane from the sky.

Stop Slewing
Release the Accelerator lever slowly, then release the Slewing/No.1 outrigger operation lever to return it to its neutral position.
The boom stops slewing.

Boom Telescoping Operation

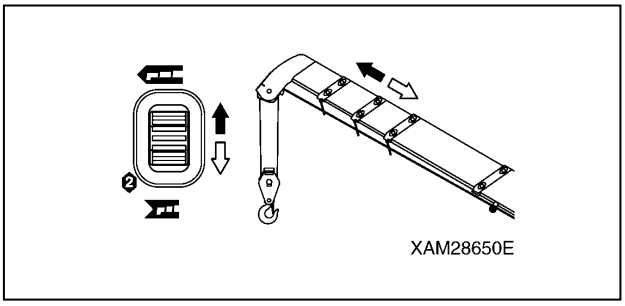

Fig. 4-336

Boom "Extending"
Push the Boom telescoping/No.2 outrigger operation lever to "Extend (upper)", then pull the Accelerator lever slowly.
The boom extends.

Boom "Retracting"
Push the Boom telescoping/No.2 outrigger operation lever to "Retract (lower)", then pull the Accelerator lever slowly.
The boom retracts.

https://truckmanualshub.com/

Stop Telescoping
Release the Accelerator lever slowly, then next release the Boom telescoping/No.2 outrigger operation lever to return it to the neutral position.
The boom stops telescoping.

Hook Raising and Lowering Operation

WARNING!
- **In the event of "Over-hoist alarming" or "Automatic cut out" during the hook raising operation, immediately suspend winding. Otherwise, it may cause a damage to the Crane, or the wire-cable is broken which result dropping off the hook or load; a serious accident may happen.**
- **Continuing the hook lowering in the condition that the load already reached the ground, the random wind of the wire-cable will happen. This may damage the wire cable or shorten its life badly. Further, there is some risk that the wire-cable may bite itself which prevents any more winching. During the hook lowering, always take good care not to cause such random wind.**
- **The hook is raised or lowered by the boom telescoping or boom lift, as well.**
  The same attention must be paid as the hook raising and lowering by the winch operation.

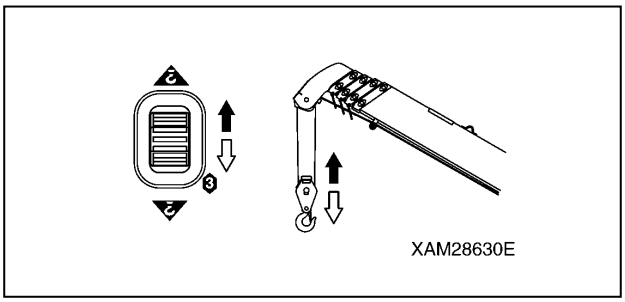

Fig. 4-337

Hook Raising
Push the Hook raising and lowering/No.2 outrigger operation lever to "Raise (lower)", then pull the Accelerator lever slowly.
The hook starts to be raised.

Hook Lowering
Push the Hook raising and lowering/No.2 outrigger operation lever to "Lower (lower)", then pull the Accelerator lever slowly.
The hook starts to be lowered.

Stop Raising or Lowering
Release the Accelerator lever slowly, then release Hook raising and lowering/No.2 outrigger operation lever to return it to the neutral position.
The hook stops raising or lowering.

Boom Derricking Operation

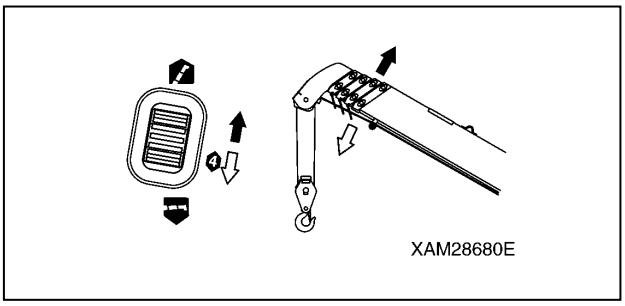

Fig. 4-338

Boom Raising
Push the Boom lift/No.4 outrigger operation lever to "Raise (lower)", then pull the Accelerator lever slowly.
The boom is raised.

Boom Lowering
Push the Boom lift/No.4 outrigger operation lever to "Lower (upper)", then pull the Accelerator lever slowly.
The boom is lowered.

Stop Boom Derricking
Release the Accelerator lever slowly, then release the Boom lift/No.4 outrigger operation lever to return it to the neutral position.
The boom stops derricking.

https://truckmanualshub.com/

Automatic Hook Stow Function

CAUTION: This automatic hook stow function is not available in the "Micro Speed mode" or "Enhanced Speed mode".

To stow the hook, always cancel either the "Micro Speed mode" or "Enhanced Speed mode".

Refer to "OPERATION Set-up and Cancel Micro Speed and Enhanced Speed Mode" for details.

1. Configure the boom to the travelling condition and push the Hook raising and lowering/No.2 outrigger operation lever to "Raise (upper)", then pull the Accelerator lever.
   Keep raising the hook until it touches to the over winding detector weight and automatically stops.

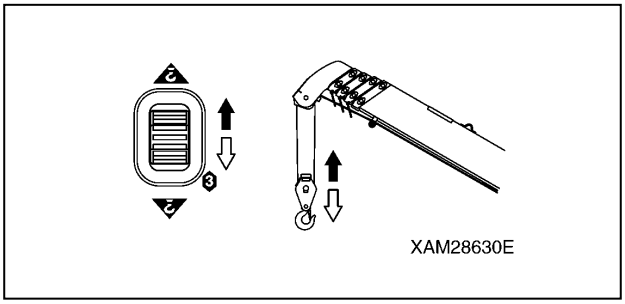

Fig. 4-339

2. When the hook automatically stops, push the Hook stow/Setting button.
   LCD screen in the Transmitter displays "HOOK 1".

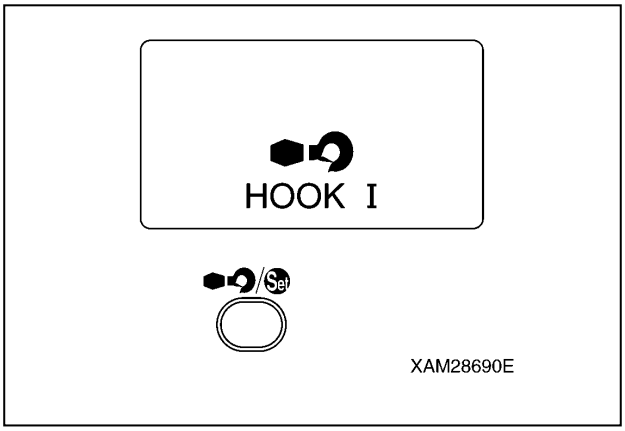

Fig. 4-340

3. Keep pushing the Hook stow/Setting button, pull the Accelerator lever slowly.
   The hook (4) will be raised to the proper stow position.

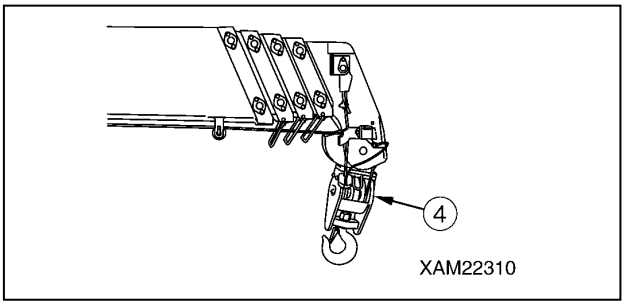

Fig. 4-341

NOTICE: This hook stowage operation is performed under the engine idling condition, regardless of the Accelerator lever rate.

4. When the hook (4) is settled to its position, release the Accelerator lever, then release your finger from the Hook stow/Setting button.

Set-Up/Cancel Micro Speed and Enhanced Speed Mode

When it is required to operate the Crane in low speed, use the Micro speed mode, which limits the maximum speed of the Crane and facilitates the smoother control in the low speed range. "Micro speed mode" is available by users' setting.
Contrary, when it is required to enhance the maximum speed of the Crane operation, the "Enhanced speed mode is also available.

NOTICE: "Micro speed mode" is valid only in the "CRANE MODE".

Setting the Micro or Enhanced Speed Mode
Push the Speed/Mode button.

Each push will forward the LCD screen indication as shown in the diagram, below:
When the indicated mode fits your requirement, carry on the Crane operation in that condition.

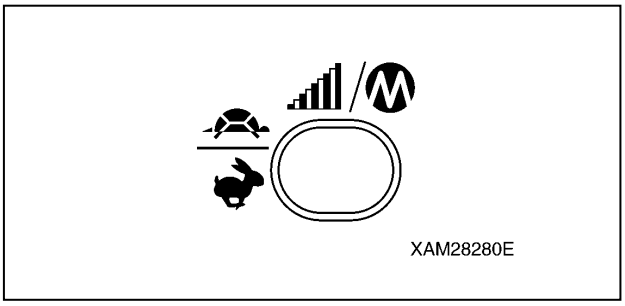

Fig. 4-342

https://truckmanualshub.com/

Cancel the Micro or Enhanced Speed Mode

Push the Speed/Mode button several times, until LCD screen indication attains the "Normal".

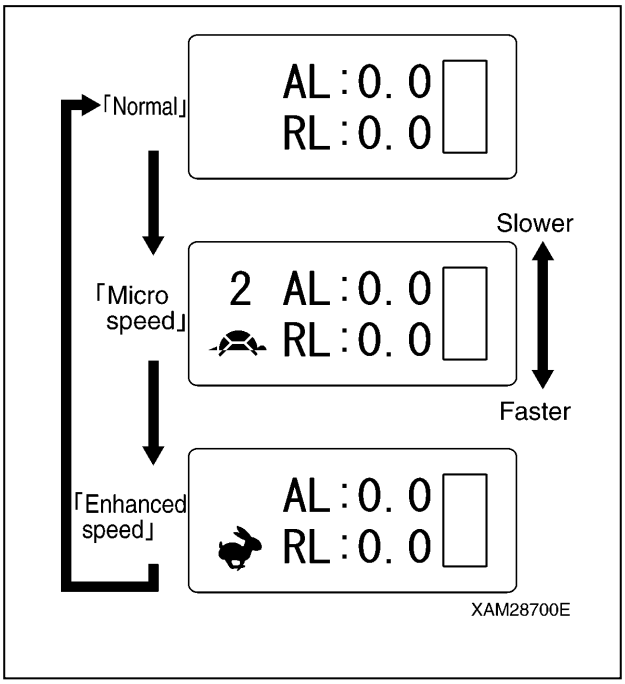

Fig. 4-343

Setting to the Micro Speed Mode

WARNING! Setting to the Micro speed mode requires actual crane operations with the engine running. Before starting the Micro speed mode setting, always ensure that nobody except on business is within the working area.

1. Push the Speed/Mode button several times so that the LCD screen indicates the "Micro speed mode".

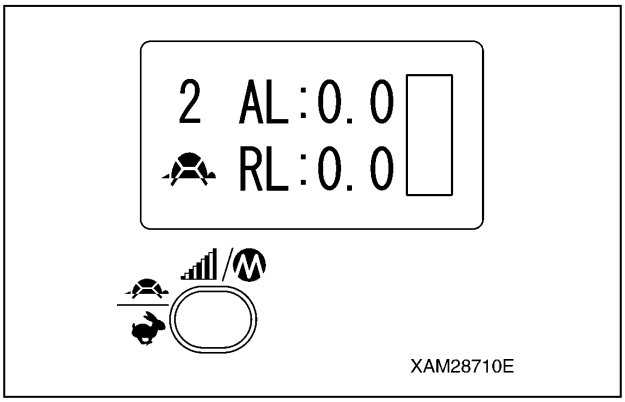

Fig. 4-344

2. Push the Hook stow/Setting button for at least 2 seconds.
   Indication of "2" in the LCD screen is high-lighted and it enters into the "Micro speed mode" setting screen.

NOTICE: The "Micro speed mode" setting is available while the "2" in the LCD screen is high-lighted.

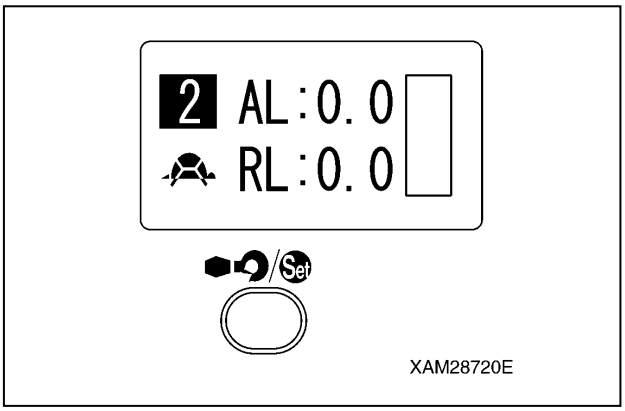

Fig. 4-345

3. Push the operation lever to be adjusted and pull the Accelerator lever slowly.
   When the operation speed reaches the desired maximum speed push the Hook stow/Setting button.

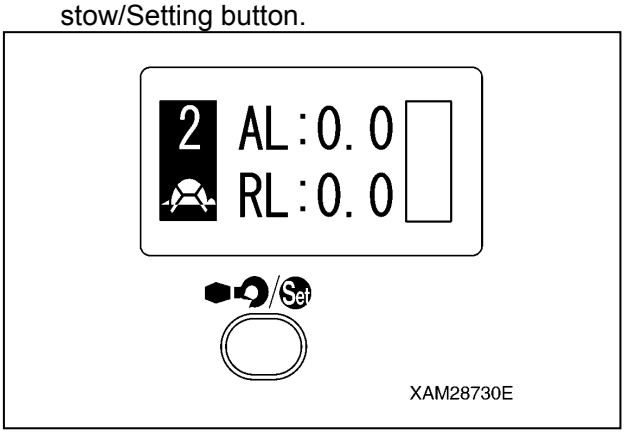

Fig. 4-346

NOTICE:

- *Perform the same process to other operation levers, respectively.*
- In case that you operate two or more levers at the same time for this setting, note that the Micro speed rate is established to the ratio of the fastest operation of all.
  It is recommended that the Micro speed shall be set one by one of each operation lever
- *No operation lever provides the Micro speed unless otherwise set to the Micro speed mode, beforehand*

https://truckmanualshub.com/

4. When the settings for all the required operation levers are complete push the Speed/Mode button. Now the setting is established and the Micro speed mode is available.

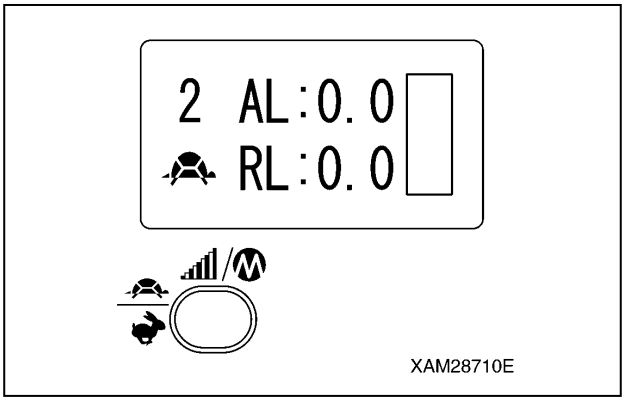

Fig. 4-347

Engine Stop and Emergency Stop Procedure

WARNING!

- **For any abnormalities in crane operations, push immediately the Stop/EMO button to stop the engine. Such cases include that the crane operation does not stop though you release your fingers from any of the operation levers or Accelerator lever, or the Crane starts the operation despite that no operation lever is manipulated.**
- **In such event of the emergency stop of the engine, turn OFF the power of the Transmitter and check the cause of the emergency, after the engine stops, and repair the failure.**
- **The Stop/EMO button is also available to stop the engine in the normal conditions.**

Push the Stop/EMO button to stop the engine from the Transmitter or in case of emergency. The engine stops.

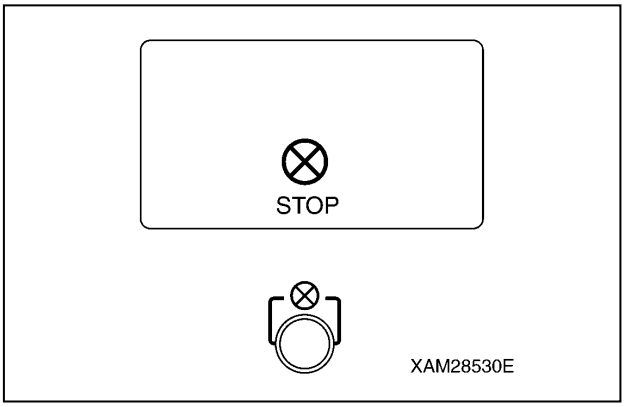

Fig. 4-348

https://truckmanualshub.com/

Engine Start and Reset Procedure

Engine Start Procedure

CAUTION: For the practice of the engine start from the Transmitter Start/Reset button, the Starter switch of the Crane must be in the ON position.
Otherwise, where the Starter switch is in OFF position, the engine will not start by that Start/Reset button.

When it is required to start the engine from the Transmitter, push the Start/Reset button.

The engine starts.

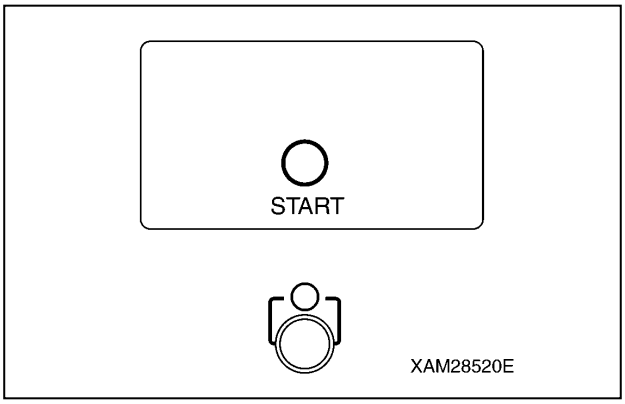

Fig. 4-349

Reset Procedure

To release the emergency stop equipment or abnormal signal detector, push the Start/Reset button.
Power of the Receiver will be reset.

NOTICE:

- *While the engine runs, the engine starter will not work even though the Start/Reset button is used.*
- *When the Start/Reset button is used, push the Power switch of the Transmitter to turn ON it, beforehand.*
- *When the Start/Reset button is pushed, the abnormal signal detector circuit starts working. Wait for 3 to 4 seconds until it completes.*

Checking after Crane Operation

WARNING!

- **When the operation of the Crane is finished, always turn OFF the Transmitter and Receiver power.**
- **In no occasions except the Crane operations, power of the Transmitter shall not be turned ON.**
  That may cause an un-expected motion of the Crane and result a serious hazard, such that the Crane hit the other person or any object, or the Crane tips.
- **When it is required to turn ON the Transmitter for the purpose of inspection or such, ensure first that the engine is standstill, then shut down the Receiver by turning OFF its main switch.**

1. Enter into the "CRANE MODE" of the Transmitter operation mode.
2. Use the operation levers and retract the boom to its shortest condition and lower it to the base position, then stow the hook.
3. Enter into the "OUTRIGGER MODE" of the Transmitter operation mode.
4. Use the operation levers and stow all the outriggers so that the Crane is configured to the travelling mode.
5. Stop the engine and turn OFF the Transmitter power.
6. Shut down the power of the Receiver by turning its Main switch to the OFF position.
7. Maintain the Transmitter and Receiver as follows:
   (1) Check operation levers and the Accelerator lever for any faults.
   (2) Remove oil or other soil by a clean cloth, if any.
   (3) Repair all the cracks or damages without fail, if any.
8. Put the transmitter into the accessory storage case and keep it in the dry and cool place where the wind and rain or direct sun ray is sheltered.

https://truckmanualshub.com/

ELECTRIC MOTOR (OPTION)

WARNING! The following precautions should always be observed when using the machine abiding by engine and electric motor specifications. Potential serious accident may occur if disregarded.

- **Only personnel qualified according to laws and regulations of your country are allowed to establish power connection of power supply equipment, inspect and repair the electric system.**
- **Operation and storage of this machine must satisfy the requirements listed below:**
- **Operating temperature: -10 to 40°C (no frost)**
- **Storage temperature: -20 to 60°C**
- **Operating humidity: Max. 90%RH (no condensation)**
- **Atmosphere: Outdoor environment free from explosive, flammable, and corrosive gases, moisture, and excessive dust particles**
- **Altitude: Max. 1000m**
- **Vibration: Max. 0.5G**
- **Turn OFF the power supply equipment breaker promptly in the event of an abnormal event in this machine during operation. Potential fire or electric shock may occur if disregarded.**
- **Turn OFF the power supply equipment breaker promptly in the event of a power failure during operation. This machine may go into action upon energization.**
- **Always turn OFF the power supply equipment breaker before performing inspection and maintenance of the electric system. Potential electric shock may occur during work if disregarded.**
  Before inspection and maintenance, inform all personnel to alert them of your action. Be sure to attach a warning tag, "Do Not Touch", to the power supply equipment breaker for the prevention of accidental breaker operation conducted by other personnel.
- **Always turn OFF the power supply equipment breaker and wait for 10 minutes or longer before performing inspection and maintenance of the electric system.**
  Ensure that no voltage is applied to the power supply box with a tester.
- **All the parts will be at elevated temperatures immediately after machine operation.**
  Perform inspection and maintenance of the electric system according to the procedure provided in this manual only after the parts drop in temperature for safety. Potential burn may occur if disregarded.
- **Keep the power supply box and inverter board away from water.**
  The machine goes out of order that causes Exercise due caution to handle the electric system.
- **Contact us or our sales service agency to request repair of the inside of the inverter board, when necessary.**

CAUTION: See "Section 2. Safety" for safety precautions that are not provided in this section.
The weight (mass) of a machine varies with machine types between a standard specification machine and a machine abiding by engine and electric motor specifications.

https://truckmanualshub.com/

Instrument Panel Sections

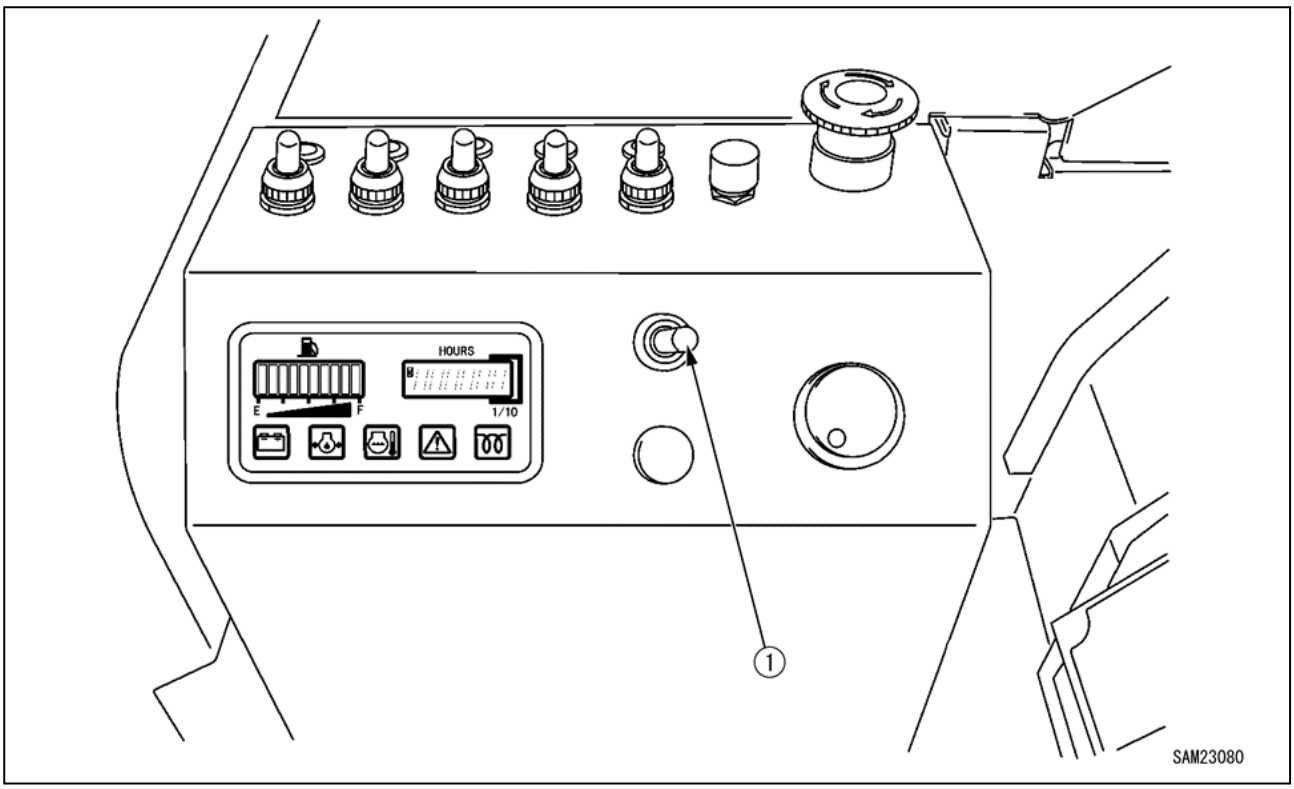

Fig. 4-350

1 - Engine and electric motor switch

CAUTION: This section describes only the switches and monitors that become available when the machine is powered by electric motor.

- **This section describes the engine and electric motor switch and monitors. See "INSTRUMENT PANEL SECTIONS" on page 4-7 for other switches and monitors.**
- **Following monitors (five) are not active when the electrical motor is the output source.**
  Fuel gauge, pre-heat monitor, engine water temperature monitor, engine oil pressure monitor, battery charge monitor.

Engine and Electric Motor Switch

CAUTION: Ensure that the Inverter unit power lamp is ON when switching the engine and electric motor switch to "Electric Motor". Electric operation is permitted only when the power lamp is ON.

Use this switch to switch the power output source of the machine.

- Engine: Push down the switch to the left.
  The engine is designated as a power output source.
- Electric motor: Push down the switch to the right.
  The electric motor is designated as a power output source.

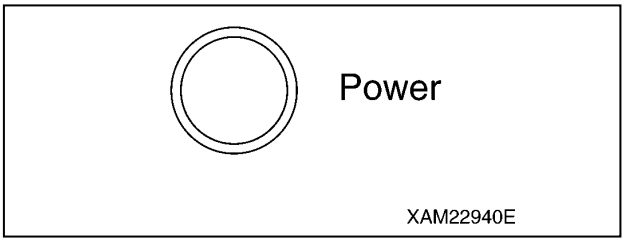

Fig. 4-351

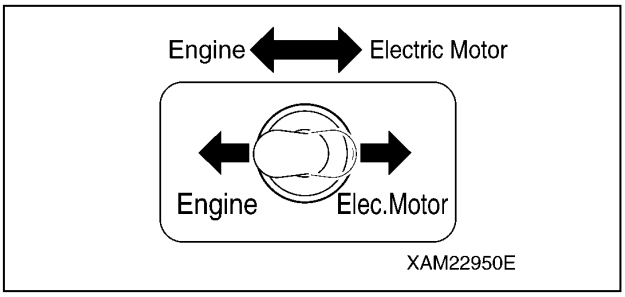

Fig. 4-352

https://truckmanualshub.com/

Power Unit

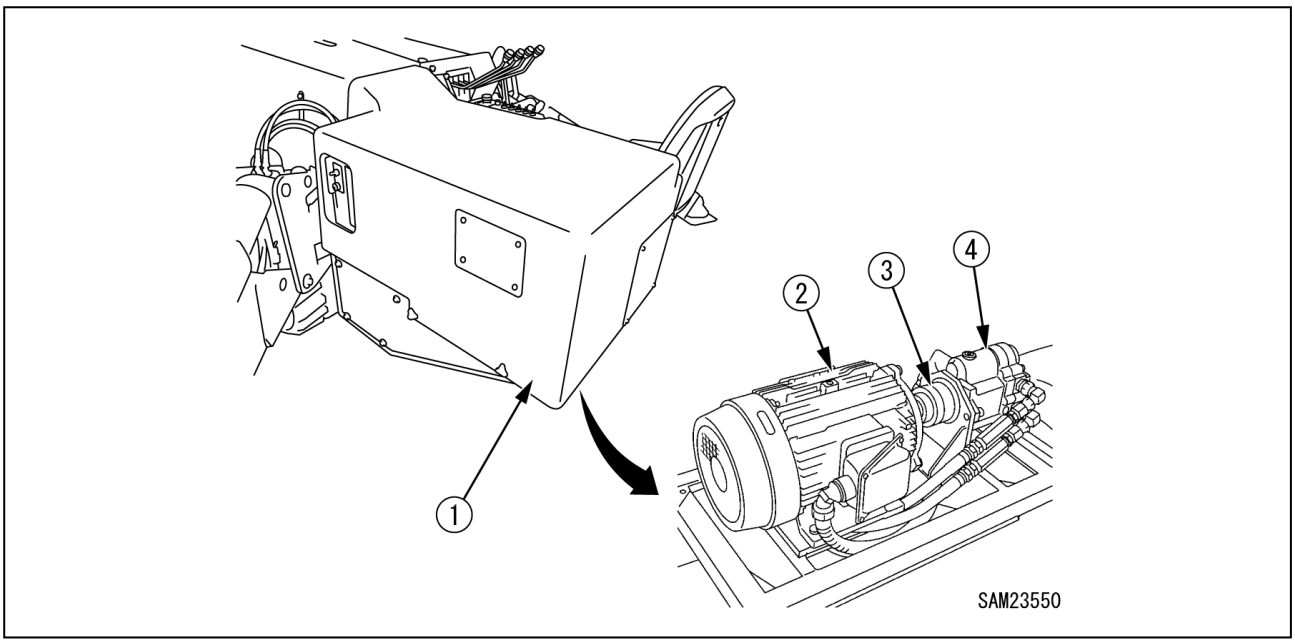

Fig. 4-353

1 - Power unit cover
2 - Electric motor
3 - Coupling
4 - Hydraulic pump

Power Supply Box

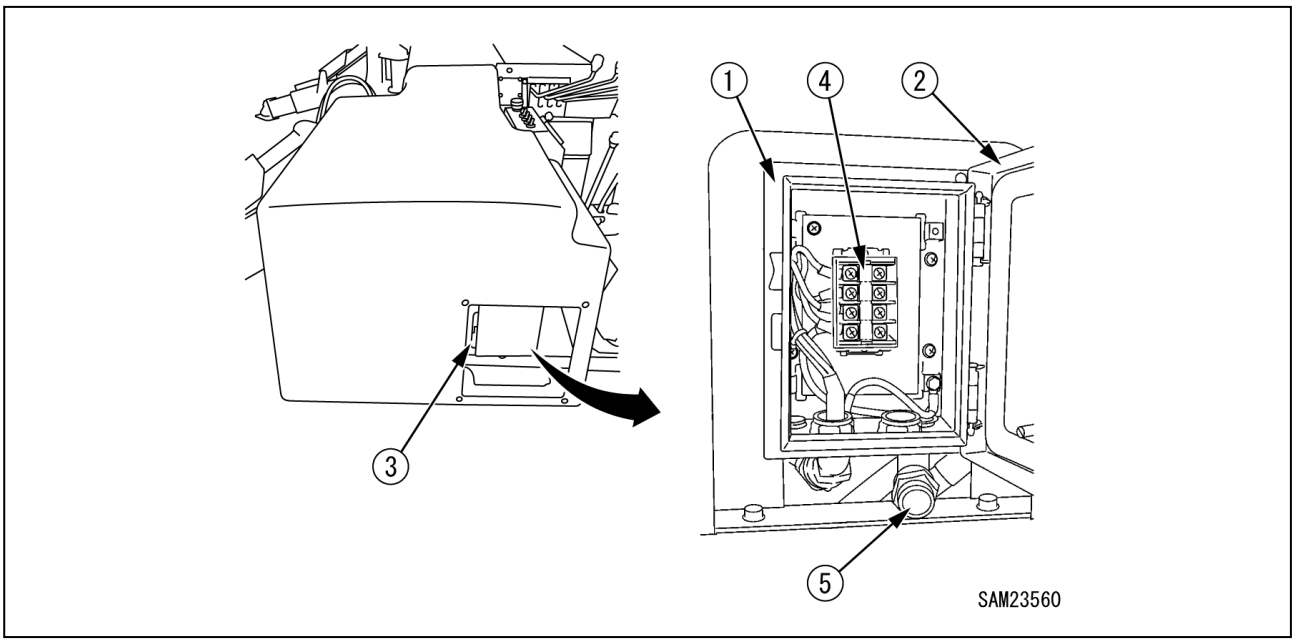

Fig. 4-354

1 - Power supply box
2 - Power supply box door
3 - Door handle
4 - Terminal block
5 - Cable inserting hole

https://truckmanualshub.com/

Inverter Unit

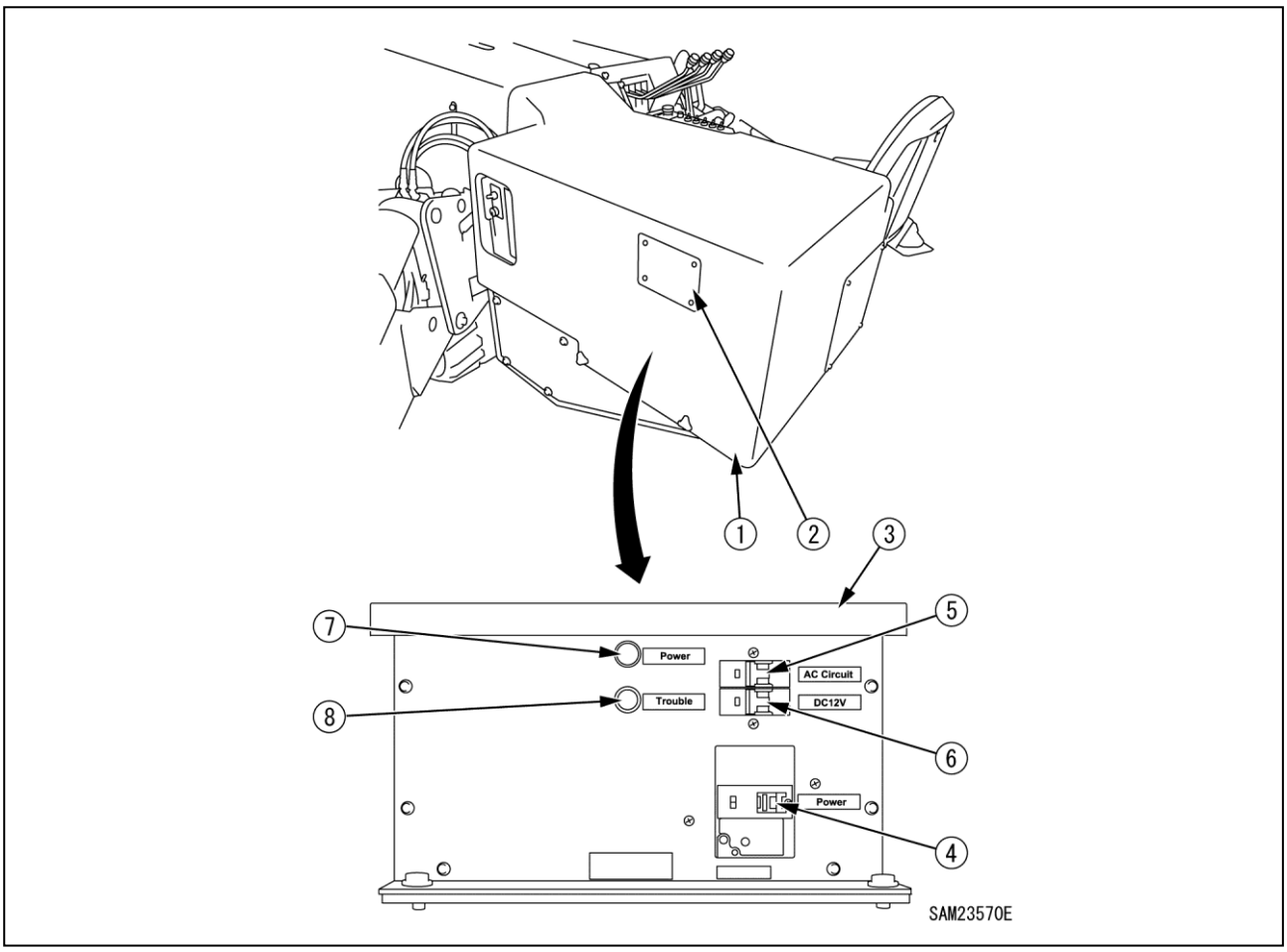

Fig. 4-355

1 - Rear cover
2 - Protective cover
3 - Inverter unit
4 - DC12V power switch
5 - AC circuit power switch
6 - Power light (white)
7 - Trouble light (red)

https://truckmanualshub.com/

DC12V Power Switch

The DC12V power switch is used to switch the DC power output source for the crane operation system.

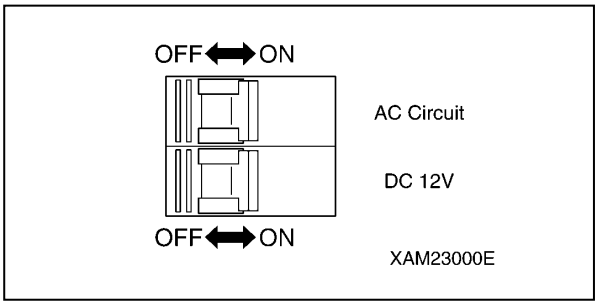

Fig. 4-356

- ON: Power is supplied to the crane operation system.
- OFF: No power is supplied to the crane operation system.

AC Circuit Power Switch

The AC circuit power switch is used to witch the AC power output source for the Inverter unit and inverter cooling fan.

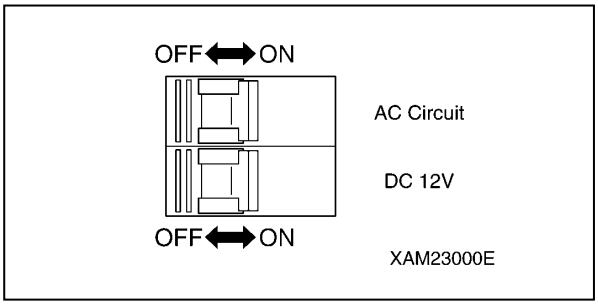

Fig. 4-357

- ON: Power is supplied to the Inverter unit and inverter cooling fan.
- OFF: No power is supplied to the Inverter unit and inverter cooling fan.

NOTICE:

- *No safety hazard is posed even if the DC12V power switch and AC circuit power switch remain on.*
- *The AC circuit power switch is illustrated in the upper figure, and the DC12V power switch is illustrated in the lower figure.*

Power Light (White)

The power light is designed to indicate the presence of energization to this machine from power supply equipment.

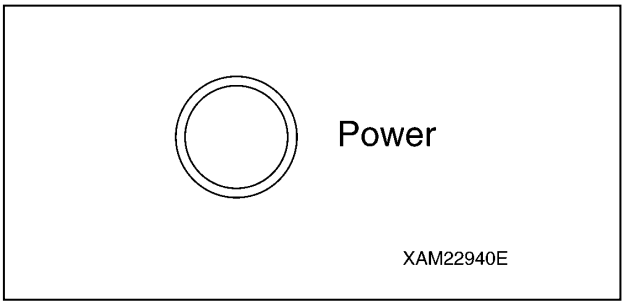

Fig. 4-358

- ON: This machine is deriving power from power supply equipment.
- OFF: This machine is deriving no power from power supply equipment.

NOTICE: If the power lamp remains off despite the power supply equipment breaker being turned ON with power supply assured between power supply equipment and this machine, check the power supply on power supply equipment.

Trouble Light (Red)

WARNING! An error occurs in the Inverter unit, which causes the trouble light to come ON.
Contact us or our sales service agency to request inspection and repair in the above event.

The trouble light is designed to indicate the presence of an error in the Inverter unit.

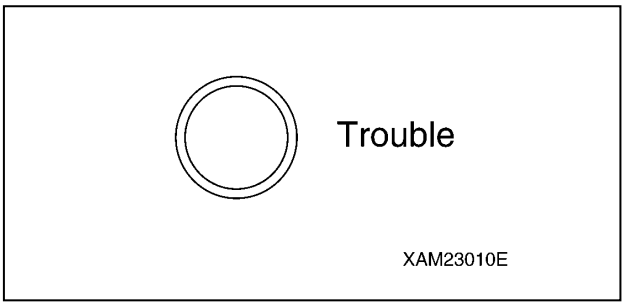

Fig. 4-359

- ON: An error is detected in the Inverter unit.
- OFF: The Inverter unit is in normal operation.

https://truckmanualshub.com/

ELECTRIC MOTOR OPERATION

Pre-start Inspection

Pre-start Visible Checks

WARNING! For details in checking before starting engine (visible checks), see "Pre-Start Visible Checks" on page 5-22.
As to the machine abiding by engine and electric motor specifications, potential fire in the machine may occur if a heap of flammable materials and oil leak are present around the hot sections such as the Inverter unit, power supply box, and power unit. Carefully check around these areas. Should you find any abnormality, be sure to fix it or contact us or our sales service agency.

Checking Before Starting Electric Motor

For more information on inspections before starting the electric motor, see "Pre-Start Inspection - Before Starting Engine" on page 5-25. Perform the tasks other than those related to the engine.

Checking After Starting Electric Motor

For more information on checking after starting electric motor, see "Post-Start Inspection - After Starting Engine" on page 5-33.

Connecting Power Supply Cable

WARNING! The following precautions should always be observed. Potential serious accident may occur if disregarded.

- **Only personnel qualified according to laws and regulations of your country are allowed to establish power connection between power supply equipment and this machine.**
- **Be sure to supply the machine specifications-compliant power (AC 380, 400V) to this machine.**

Power supply voltage	Power current	Power supply frequency
380, 400 V	11.5 A	50 Hz

- **A cabtyre cable must adhere to the specifications of this machine (AC 380, 400V).**

Motor voltage	Cable spec.	Cable length
380, 400 V	3.5sq	20m
	5.5sq	40m

- **Always use a dry cabtyre cable.**
  Potential electric shock may occur if the cabtyre cable terminal is wet or power connection is performed with moisten hands.
- **Always turn OFF the main breakers of power connecting the cabtyre cable to this machine.**
- **Keep the cabtyre cable free of flaws and bend.**
  Be sure to replace a damaged cabtyre cable with a new one.
- **Ensure that no sharp protrusion is present at an area where the cabtyre cable is routed.**
  Failure to follow the above precaution may cause the cable to get snagged on the protrusion and damaged or broken.
- **To connect the cabtyre cable to the terminal block in the power supply box, torque the screw to the specified value.**
  Potential fire or electric shock may occur if the screw comes loose that could develop a short circuit.
- **To connect the cabtyre cable to the terminal block in the power supply box, tighten the cable ground screw properly for the prevention of water entry and cable protection.**
- **The ground wire of the cabtyre cable must be properly connected to the "Ground terminal" in the power supply box.**
- **Always close the power supply box door completely after work, and attach the Inverter unit cover properly.**

https://truckmanualshub.com/

Use the following procedure for establishing power connection between power supply equipment and this machine.

1. Make sure the breakers of power supply equipment and Inverter unit are OFF.

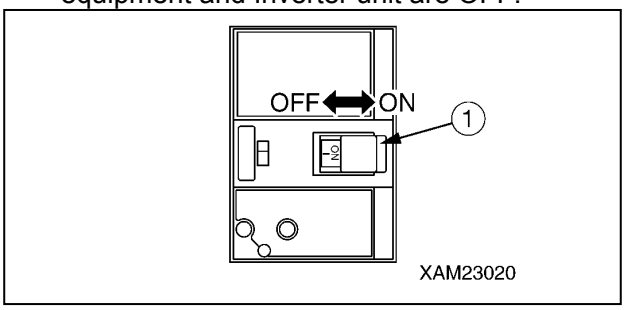

Fig. 4-360

2. Pull the handle (4) toward you to unlock, and open the door (3) of the power supply box (2).

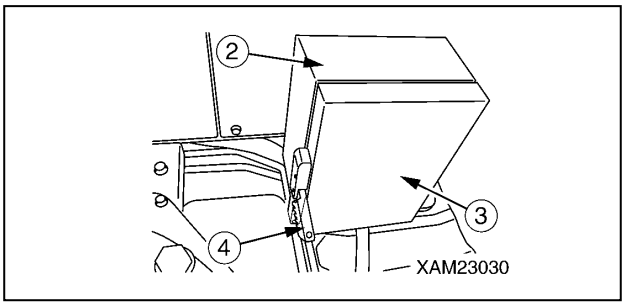

Fig. 4-361

3. Remove the cover (6) of the terminal block (5) in the power supply box, holding the left and right of the cover (6) with fingers and pulling it toward you.

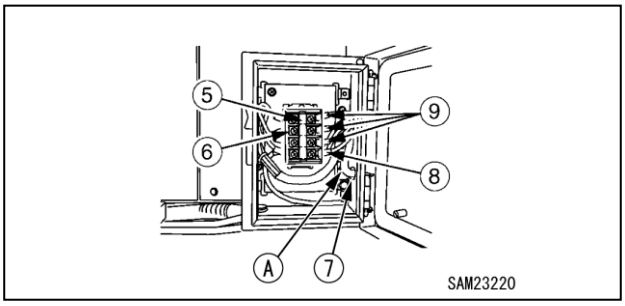

Fig. 4-362

4. Draw the machine specifications-compliant cabtyre cable (A) through a hole of the cable ground (7) at the bottom of the power supply box to connect it to the terminal block (5).

CAUTION:
The ground cable (8) of the cabtyre cable must be properly connected to the ground terminal (15) in the power supply box. Inverter-driven three cables (9) other than the ground cable are capable of being connected to any of terminal block (5) terminals.

5. Upon completion of connection of the power supply box cabtyre cable (A), replace the cover (6) of the terminal block (7).
6. Move and connect the cable terminal block to the power supply equipment breaker without undue strain on the cabtyre cable (A).
7. Turn ON the power supply equipment breaker.
8. Remove the four mounting screws (11) and remove the protective cover (10).

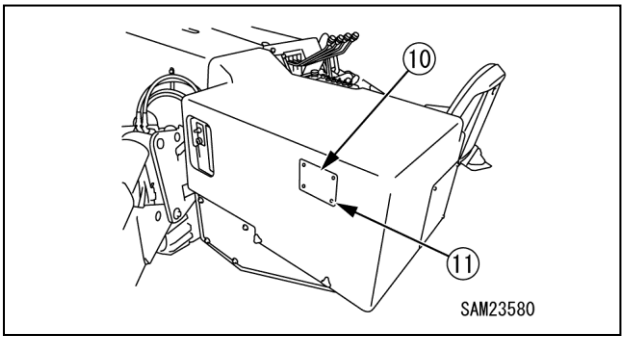

Fig. 4-363

9. Turn the breaker (1) to the "ON" position.

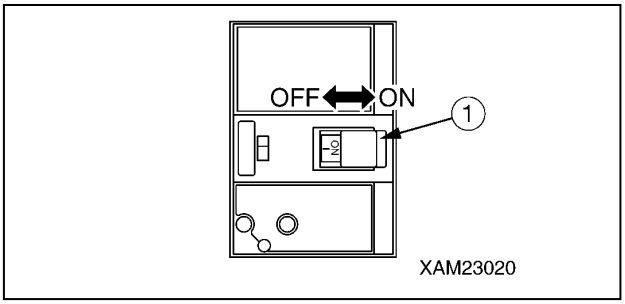

Fig. 4-364

10. Replace the protective cover (10) to the original position and securely tighten four mounting screws (11).

https://truckmanualshub.com/

Operation and Checking After Power Connection

WARNING!

- **Before starting the electric motor, make sure of no presence of personnel around and impediments, and sound a horn.**
- **Warm-up is required. The motor needs adequate warm-up especially in cold climates.**
  Failure to warm the motor may result in serious accident on account of low reactivity of the travelling gear and crane to the operating lever.
- **Ensure that no abnormal noise, odour, or vibration is present in and around the Inverter unit and power unit during warm-up. If abnormal conditions are encountered, immediately turn the starter switch to the OFF position to bring the machine to a halt. Turn OFF the power supply equipment breaker accordingly to shut off the supply source.**
  Check the Inverter unit and electric motor, the peripheries, and electric wiring for burnt smell and parts. Promptly contact us or our sales service agency to request inspection and repair.
- **Crane operational check is necessary after motor warm-up.**
  Keep the hook block away from the boom to avoid interference and collision.
- **Exercise caution to keep the boom from contact with an operator and this machine when slewing it.**
- **If crane operational check detects an abnormal event, make an emergency stop promptly and repair a relevant part.**
  Potential serious accident may occur if disregarded.
- **Exercise caution not to drive on or entangle the cabtyre cable during crane travelling.**
  Staff guide personnel as necessary, and follow the lead of them.
- **Keep the Inverter unit cover away from flammable materials.**
  The inside of the Inverter unit will rise in temperature that may lead to fire, if disregarded.

CAUTION:

- **Proper temperature of hydraulic oil: 50 to 80°C**
  The hydraulic oil should be at around 20°C regardless of operational environment such as low-temperature operation.
- **Ensure that the main switch of the radio control box is turned OFF.**

1. Set the engine and electric motor switch to the "Elec. Motor" position.

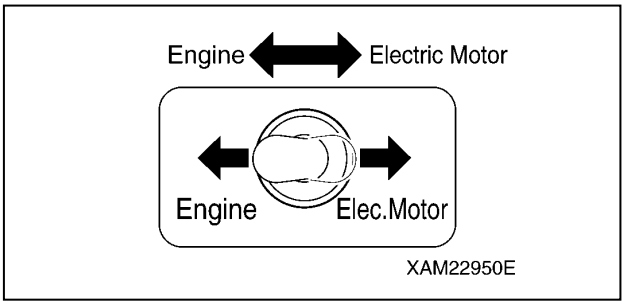

Fig. 4-365

2. Insert the key into the starter switch and turn the key to the "START" position.

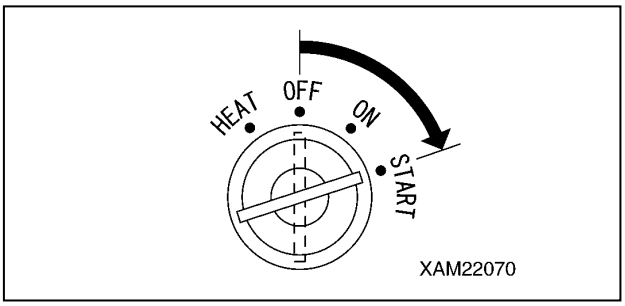

Fig. 4-366

3. Release your hand from the key once the electric motor has started.
   The key will automatically return to the "ON" position.

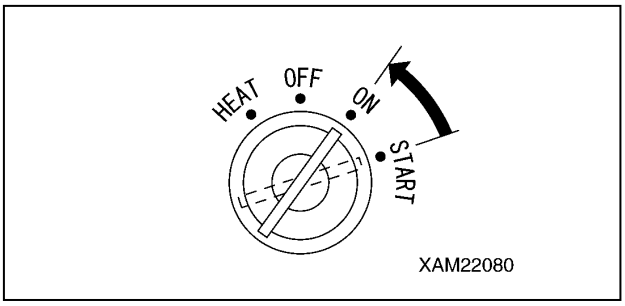

Fig. 4-367

https://truckmanualshub.com/

4. Conduct 5-minute warm-up after the electric motor is started.

NOTICE: This machine is structured to switch to the energy-saving mode if no lever operation is attempted within 5 minutes after the electric motor is started.
Once the energy-saving mode has been entered, the electric motor undergoes an extreme reduction in rotational speed.
Operate any lever for recovery from the energy-saving mode.
The electric motor comes to a stop if no lever operation is attempted within further 30 minutes after being started.
Turn the starter switch to the "START" position again for recovery.

5. Visually check through the access protective cover of the Inverter unit that the trouble lamp remains OFF.

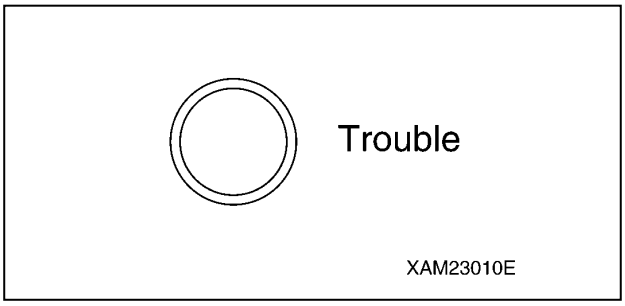

Fig. 4-368

CAUTION: An error occurs in the Inverter unit, which causes the trouble lamp to come ON in red.
Contact us or our sales service agency.

6. Use the following procedure for checking the power unit if an abnormal noise, odour, or vibration is present in and around the power unit.
   (1) Turn the starter switch to the "OFF" position.
   The electric motor comes to a stop.
   (2) See "Removing Rear Cover" on page 5-19 and remove the rear cover.
   (3) Check the mounting bolts securing the electric motor (5) and hydraulic pump (6) for looseness and falling off, and check the coupling (7) for looseness.

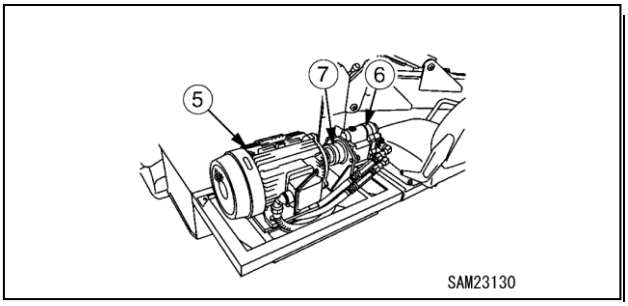

Fig. 4-369

   (4) Keep the periphery of the power unit free of dead leaves, paper waste, and dust.
   Eliminate dead leaves, paper waste, and dust if heaped or adhered.
   (5) See "Installing Rear Cover" on page 5-19 and install the rear cover.

https://truckmanualshub.com/

Machine Operation

CAUTION: For more information on individual crane operations, see the sections from "TRAVELLING POSITION" on page 4-21 to "Dos and Don’ts During Crane Operations" on page 4-50.

Machine Stop and Checks after Stopping Machine

1. Turn the starter switch to the "OFF" position. The electric motor comes to a stop.

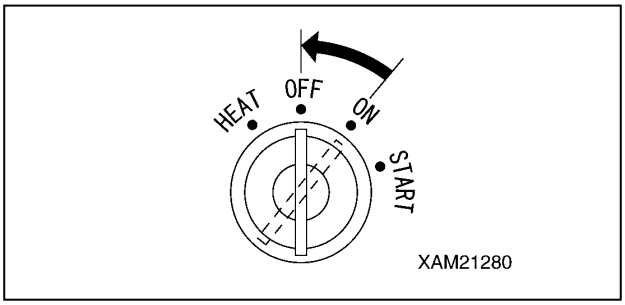

Fig. 4-370

2. Remove the starter switch key.
3. Visibly check for oil leakage, and check around the crawlers, crane, and exterior of the machine. If you find any leakage or abnormality, fix the problem.
4. Clean off the crawlers and outriggers, removing mud.
5. Keep the periphery of the inverter unit free of dead leaves and paper waste. Potential fire may occur if disregarded.

Disconnecting Power Supply Cable

1. Turn OFF the power supply equipment breaker.
2. See "OUTRIGGER SETTING" on page 4-36 and rotate the outriggers outward.
3. See "Removing Machinery Cover" on page 5-18 and remove the machinery cover.
4. Turn the main breaker (1) to the "OFF" position.

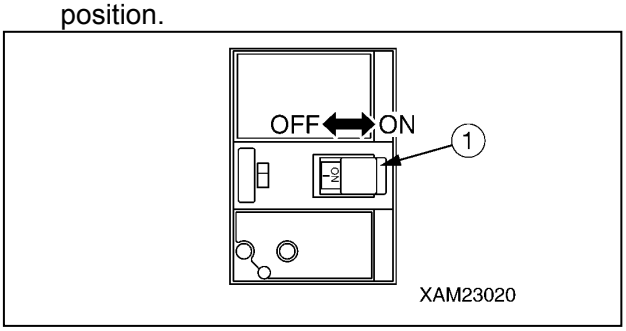

Fig. 4-371

5. Unlock the door (3) of the power supply box (2) by pulling the handle (4) toward you to open it.

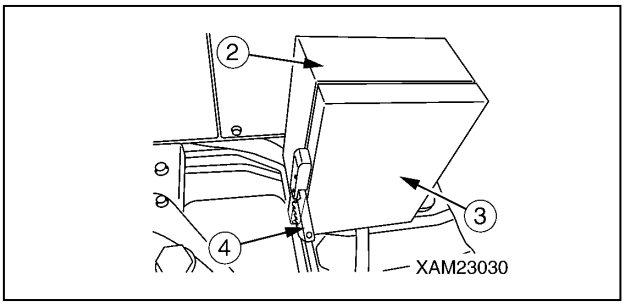

Fig. 4-372

6. Remove the cover (6) of the terminal block (5) in the power supply box, holding the left and right of the cover (6) with fingers and pulling it toward you.

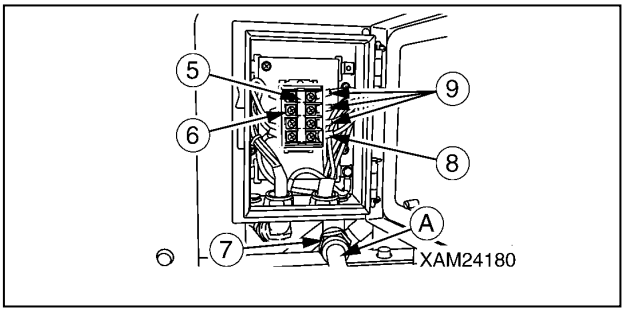

Fig. 4-373

https://truckmanualshub.com/

7. Disconnect the cable (8) and three cables (9) of the cabtyre cable (A) from the terminal block (5).

CAUTION:
- **Clean off the cabtyre cable and check it for damage or bend.**
  If check finds damage, replace the cable with a new one.
- **Always return the cabtyre cable to a designated place after performing inspection and cleaning.**

8. Replace the terminal block (7) cover (8) to its original position, then close the door (5) of the power supply box (4).
9. See "Installing Machinery Cover" on page 5-19 and install the machinery cover.
10. See "OUTRIGGER STOWING" on page 4-45 and rotate the outriggers inward to stow them.

SEARCHER HOOK SAFETY PRECAUTIONS

NOTICE: For more information on precautions not described here, see "Section 2 SAFETY."

Handling Precautions

Moment Limiter Settings Check

When using 850 kg searcher hook, confirm that the moment limiter is set to the following wire falls/option mode and searcher hook position: "850 kg searcher hook mode."

If the crane is operated in a mode other than 850 kg searcher hook mode, the moment limiter will not operate correctly, posing risk of machine damage, toppling, or other serious accidents.

Precautions When Attaching/Removing Main Unit or Altering Position

- Be sure to tighten the searcher hook mounting bolts using the specified torque to keep the searcher hook from falling when it is being attached.
- Keep fingers out of the pin holes at all times.
- The position pins must always be secured using lynch pins. Serious accidents may result if the position pins become detached during operations.

Operating Precautions

Precautions Using Boom Raising Enable Switch

Use the boom raising enable switch only in 850 kg searcher hook mode.

In contrast to regular crane operations, if the crane is overloaded in 850 kg searcher hook mode, the operation will stop automatically. Use the boom raising enable switch only when the boom has stopped automatically after entering the overload area while being lowered or extended. Do not use this switch in normal situations to lift loads off the ground.

Serious accidents such as machine damage or toppling may occur if you use the boom raising enable switch to lift loads off the ground.

https://truckmanualshub.com/

850 kg SEARCHER HOOK COMPONENTS (OPTION)

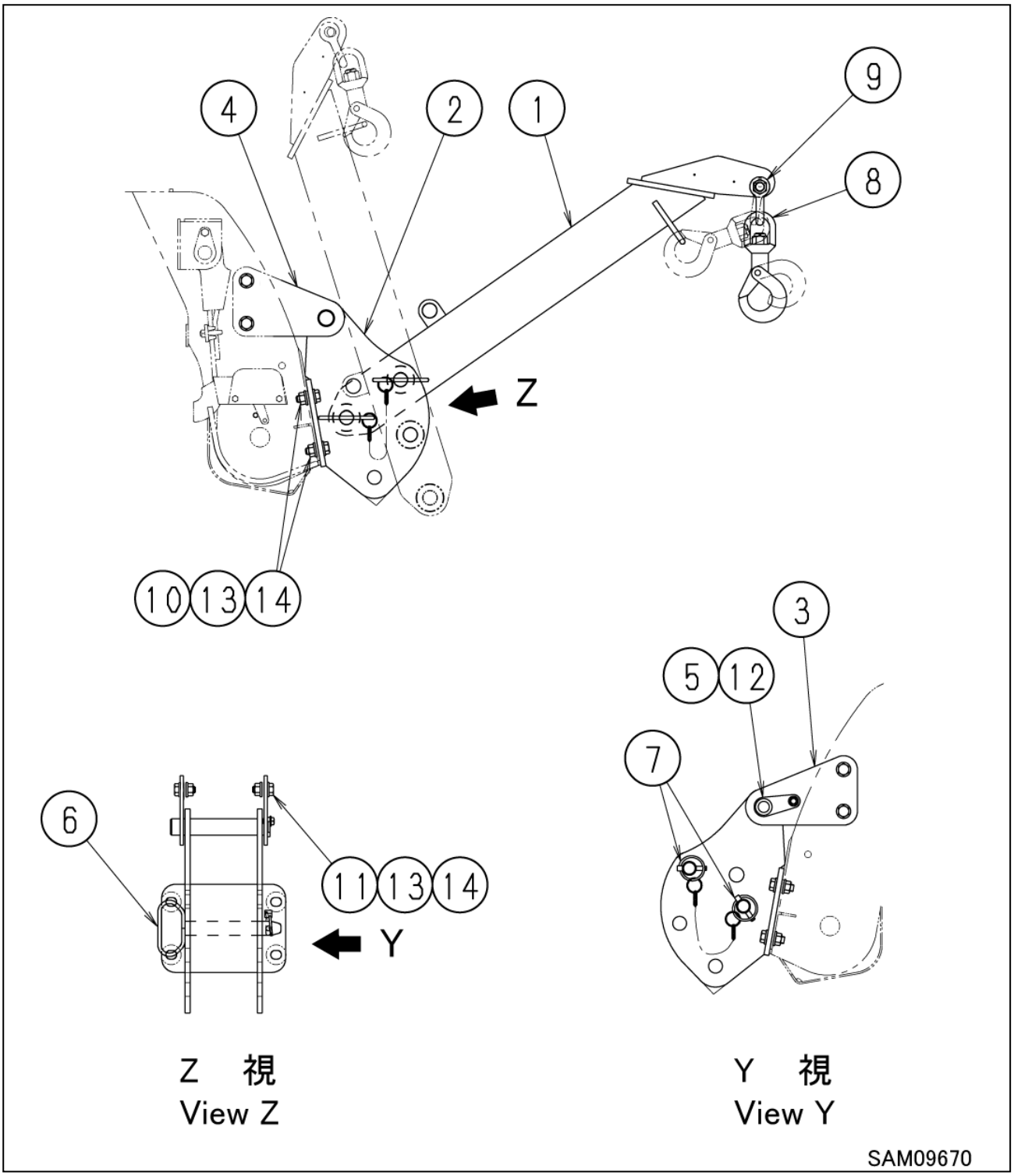

Fig. 4-374

1 E-Boom
2 Bracket
3 Bracket 1
4 Bracket 2
5 Pin
6 Position pin
7 Lynch pin
8 Hook
9 Shackle
10 Hexagonal bolt with washer (strength 10.9)
11 Hexagonal bolt with washer (strength 10.9)
12 Hexagonal bolt with washer (strength 10.9)
13 Nut (strength 10)
14 High tension washer

850 kg SEARCHER HOOK MOMENT LIMITER DISPLAY

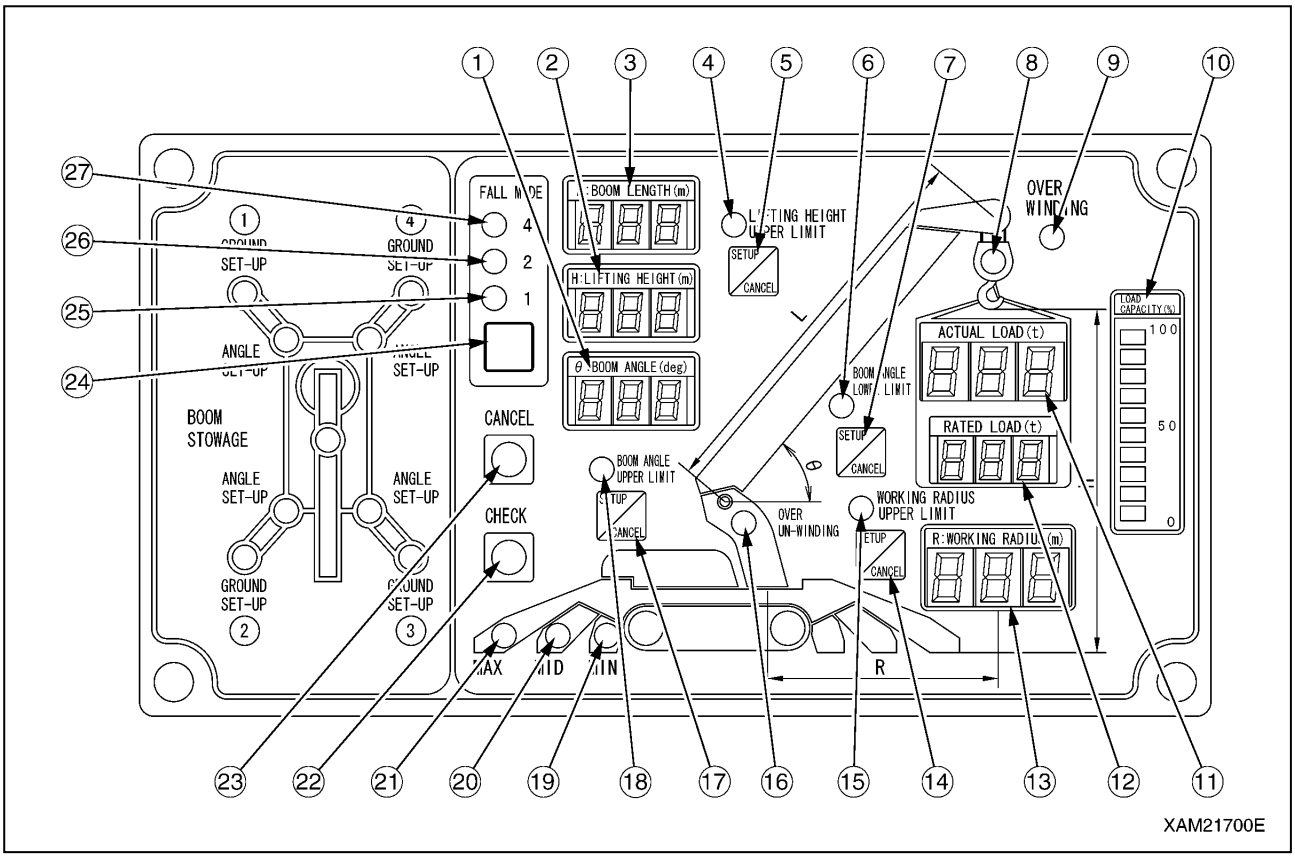

Fig. 4-375

1 - Boom angle display
2 - Lifting height display
3 - Boom length display
4 - Boom lifting height upper limit LED (Orange)
5 - Boom lifting height upper limit switch (Setup / cancel)
6 - Boom angle lower limit LED (Orange)
7 - Boom angle lower limit switch (setup / cancel)
8 - Load factor LED (Changes to green, yellow, and red)
9 - Over Winding LED (Red)
10 - Load capacity display (Yellow)
11 - Actual load display
12 - Rated total load display
13 - Working radius display
14 - Working radius upper limit switch (Setup / cancel)
15 - Working radius upper limit LED (Orange)
16 - Over un-winding LED (Orange)
17 - Boom angle upper limit switch (setup / cancel)
18 - Boom angle upper limit LED (Orange)
19 - Outrigger MIN. extension LED (Blue)
20 - Outrigger MID. extension LED (Blue)
21 - Outrigger MAX. extension LED (Blue)
22 - Check switch
23 - Cancel switch
24 - Fall mode / Option selector switch
25 - 1-fall LED (Blue)
26 - 2-fall LED (Blue)
27 - 4-fall LED (Blue)

NOTICE: For information on the moment limiter not provided here, see "MOMENT LIMITER (OVERLOAD DETECTOR)" on page 4-59.

https://truckmanualshub.com/

Fall Mode Selector Switch and Fall Mode Display LED (Blue)

DANGER! When using an 850 kg searcher hook, the number of wire falls, the option mode, and the searcher hook position must be set as "850 kg searcher hook mode". Do not use the 850 kg searcher hook except when it is in 850 kg searcher hook mode. Serious accidents such as machine damage may result because the moment limiter will not operate correctly.

Alter the number of wire falls and the option mode using the number of wire falls/option selector switch.

- Set the number of wire falls and the option mode for the moment limiter to 850 kg searcher hook mode (**all blinking**) using the number of wire falls/option selector switch (24) on the display panel.
  Holding down the switch for at least 2 seconds switches the number of wire falls and the option mode. And subsequently holding down the switch for at least 2 seconds cycles through the LED display for the number of wire falls in the sequence "×4 → 300 kg searcher hook mode (all lit) → 850 kg searcher hook mode (**all blinking**) → ×1 → ×2 → ×4…".

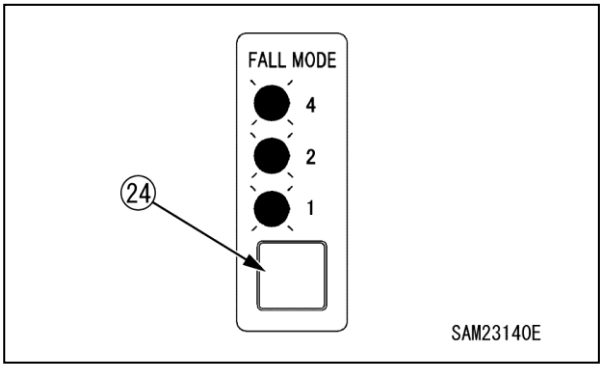

Fig. 4-376

NOTICE: When changing the setting, right after doing so, release your hand from the switch, and then press the switch again.

Cancel Switch

DANGER! Do not use 850 kg searcher hook if actual searcher hook position and display of boom length window do not match. Without setting moment limiter to the actual searcher hook offset position, moment limiter may not work properly and thus may result in crane damage and machine trip that may result in serious accidents.

Use this switch and the fall mode selector switch to set searcher hook offset position shown in the boom length window.

Use the setting cancel switch and the number of wire falls/option selector switch to alter the mode display in the boom length display.

- In 850 kg searcher hook mode, hold down both the number of wire falls/option selector switch (24) on the display panel and the setting cancel switch (23) together for at least 2 seconds to alter the mode display in the boom length display to match the searcher hook position.
  For details about the searcher hook position and the mode display in the boom length display, see "Searcher Hook offset position and mode display in boom length display" on page 4-131.
  Holding down both the number of wire falls/option selector switch (24) and setting cancel switch (23) together for at least 2 seconds switches the mode display in the boom length display in the sequence "SH1 → SH2 → SH3 → SH1…".

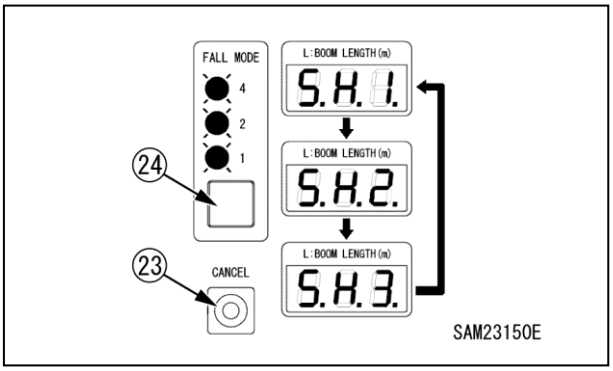

Fig. 4-377

NOTICE: When changing the setting, right after doing so, release your hand from the switch, and then press the switch again.

When in 850 kg searcher hook mode, searcher hook position mode display and actual boom length value are shown alternately.

https://truckmanualshub.com/

Searcher Hook offset position and mode display in boom length display

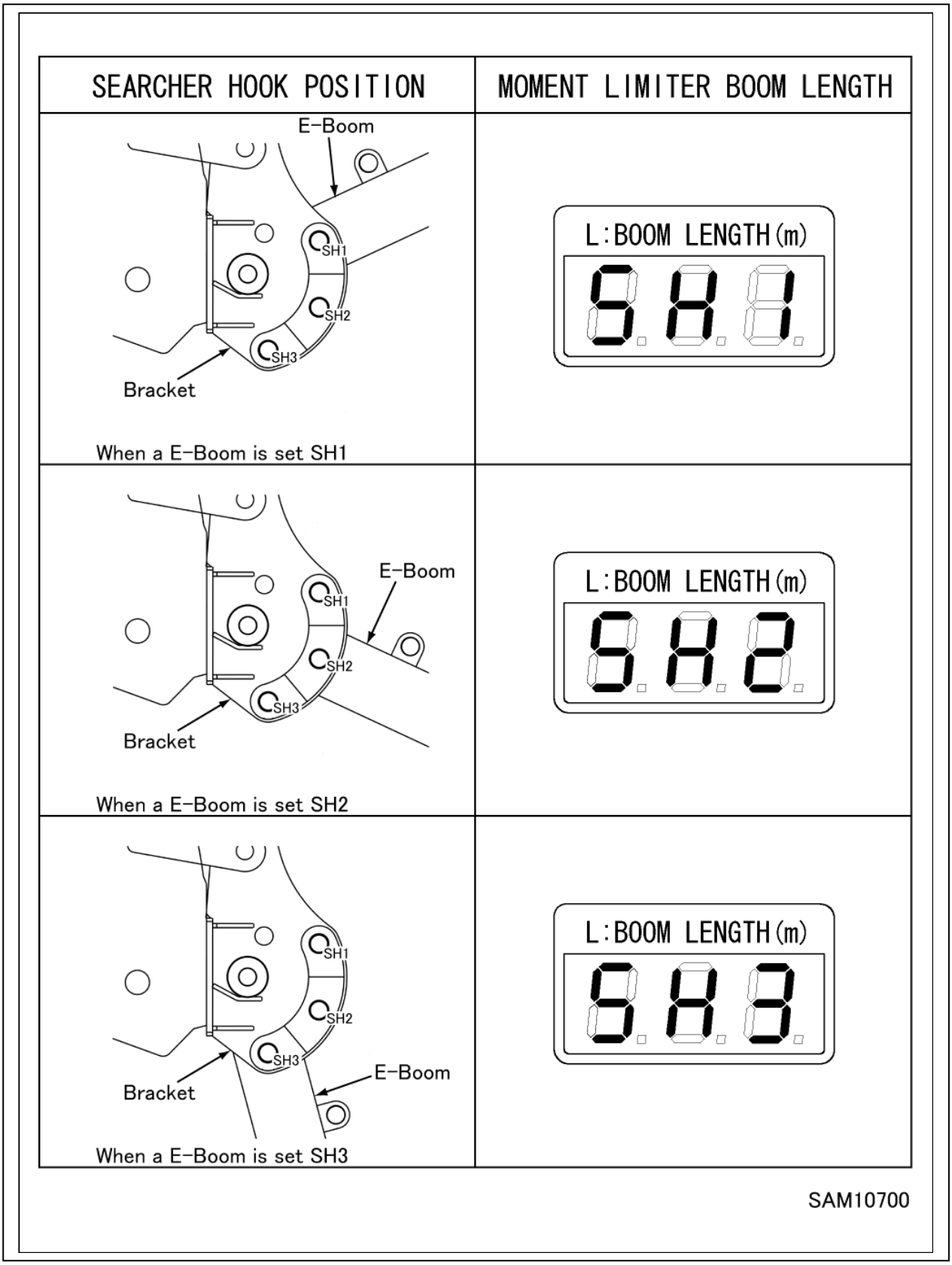

Fig. 4-378

https://truckmanualshub.com/

SEARCHER HOOK OPERATION

1. See "Moment Limiter Settings" on page 4-36 and set the outrigger

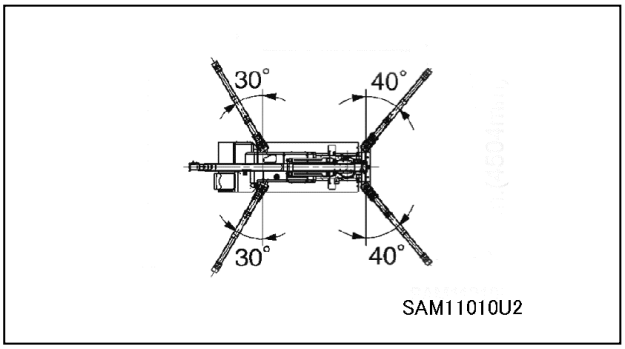

Fig. 4-379

2. Install bracket (1), (2), and (3) using M12 bolts with washers (strength 10.9), nuts, and washers to main boom. Using torque wrench, tighten bolts at 93N・m (±14N・m). Then insert pin (4) into holes of bracket (1), (2), and (3) as shown in the drawing, and tighten M8 bolts with washers (strength 10.9) at torque 27N・m (±8N・m).

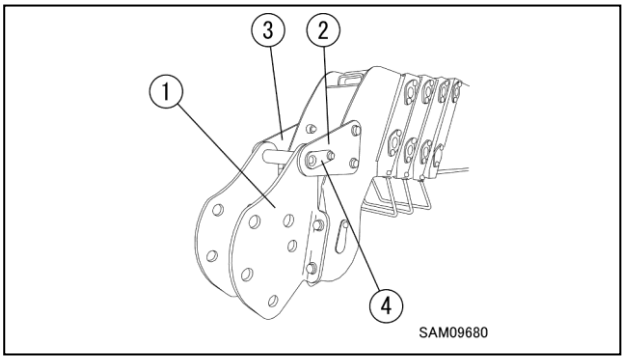

Fig. 4-380

DANGER! Crash Hazard. Make sure to torque searcher hook mounting plate bolts to the designated tightening torque.
To install searcher hook, always use new genuine Maeda bolts, nuts, and washers.

3. Using the fall mode selector switch (23), set moment limiter to 850 kg searcher hook mode (**all LED flashes**).
   Also make sure the boom length display changes to either SH1, SH2, or SH3.

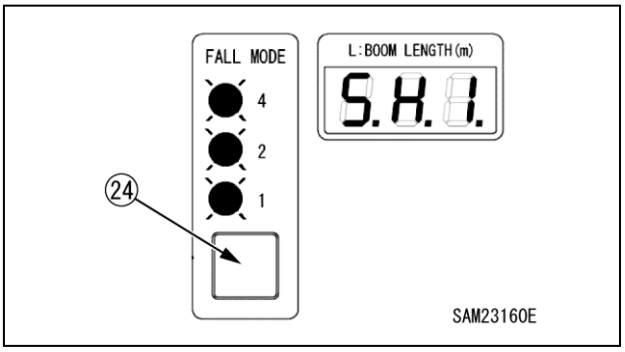

Fig. 4-381

DANGER! Do not operate 850 kg searcher hook without setting moment limiter as "850 kg searcher hook mode". Without setting in correct mode, moment limiter will not work properly, and thus may result in crane damage or serious accident.

CAUTION: The last status of the fall mode is memorised even after starter switch is turned to the OFF position.

4. Remove the Lynch pin (6) from the end of position pin (5), and remove the position pin (5).

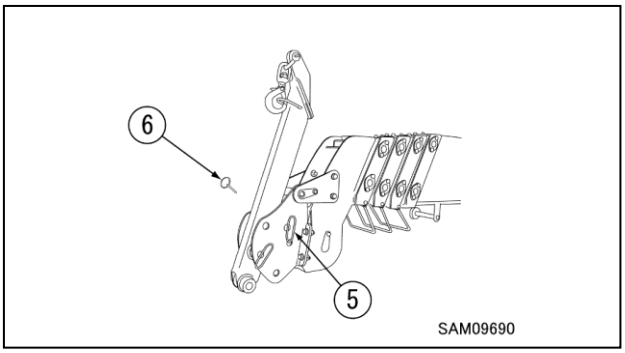

Fig. 4-382

5. Line up the hole (8) in E-boom (7) tip and hole (9) in bracket.

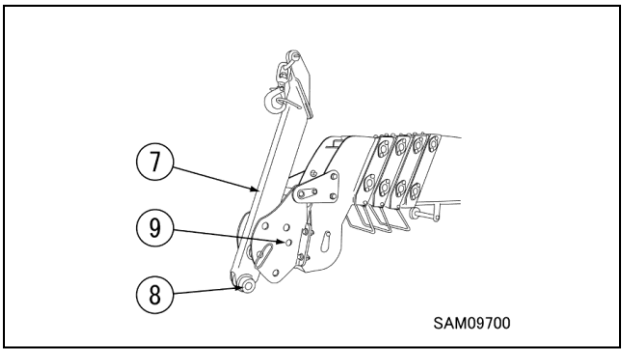

Fig. 4-383

https://truckmanualshub.com/

6. Insert the removed position pin (5) (in procedure 4.) through the hole of bracket (9), and secure with lynch pin (6) to the tip of position pin (5).

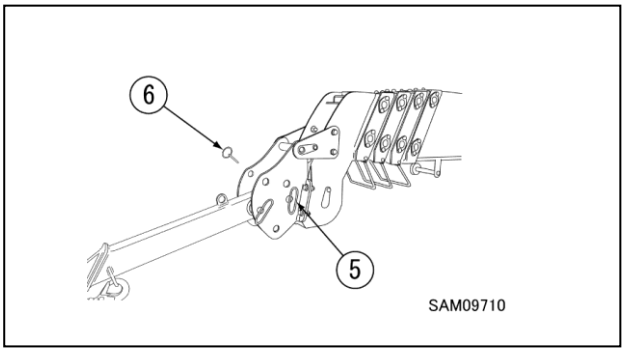

Fig. 4-384

DANGER! Always secure the position pin (5) with the lynch pin (6). If the position pin falls out during operations, serious injury or damage to the machine may result.

7. Remove lynch pin (11) from the tip of position pin (10), and remove the position pin (10).

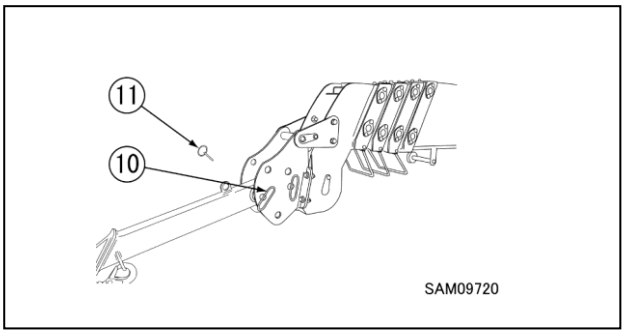

Fig. 4-385

8. Move E-boom (7) to the required angle for the work, and line the holes (1) in the E-boom (7).

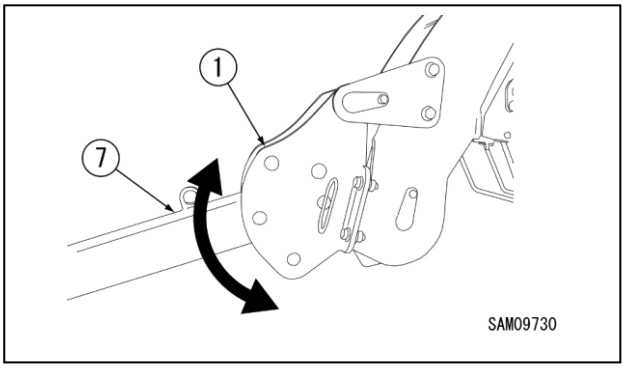

Fig. 4-386

DANGER! E-boom and hook may interfere with each other in RESTRICTED AREA on Rated Total Load chart, and it may cause a serious accident. Always adjust boom angle to proper position for the work.

9. Insert the position pin (10) through the hole of bracket, and secure with lynch pin (11) to the tip of position pin (10).

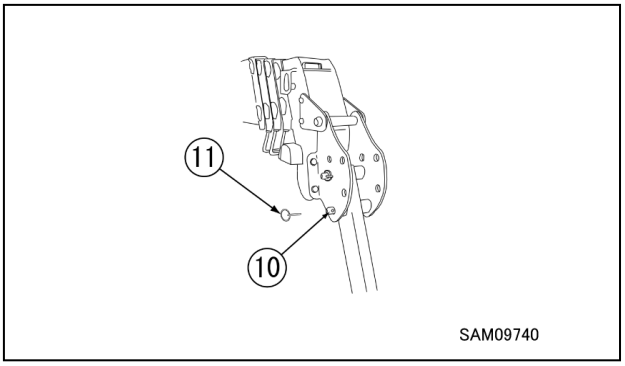

Fig. 4-387

DANGER! Always secure the position pin (10) with the lynch pin (11). If the position pin falls out during operations, serious injury or damage to the machine may result.

10. With the fall mode set as 850 kg searcher hook mode, press the fall mode selector switch (23) and cancel switch (22) at the same time for 2 seconds or more and shift to set actual searcher hook offset position. See "Moment Limiter Settings" on page 4-36 for correct setting.
    Pressing the fall mode selector switch (23) and cancel switch (22) at the same time for 2 seconds or more shifts boom length display in order of "SH1 ➔ SH2 ➔ SH3 ➔ SH1 ･･･"

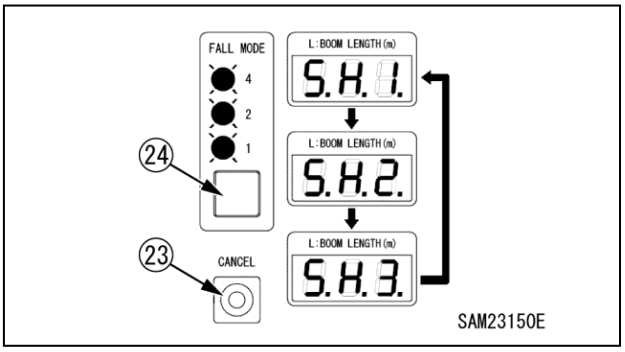

Fig. 4-388

https://truckmanualshub.com/

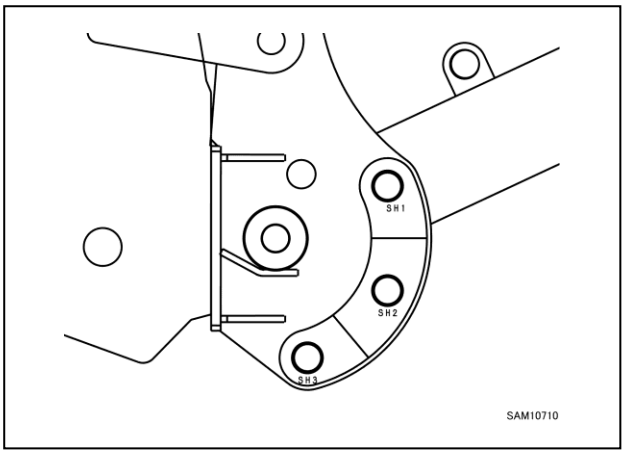

Fig. 4-389

DANGER! Do not use 850 kg searcher hook if actual searcher hook offset position and display of boom length window do not match. Without setting moment limiter to the actual searcher hook offset position, moment limiter may not work properly and thus may result in crane damage and machine trip that may result in serious accidents.

11. Attach the load securely to the hook (12) and start operations.

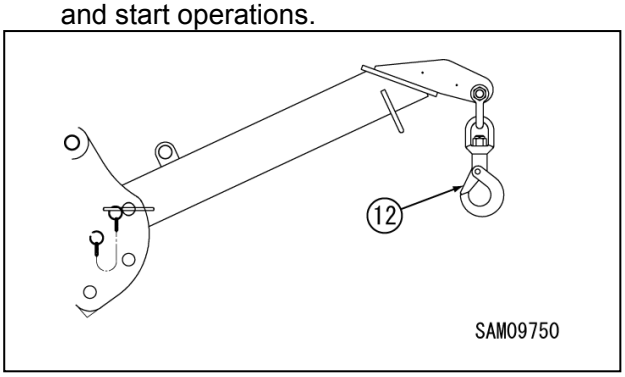

Fig. 4-390

DANGER! When hoisting a load in 850 kg searcher hook mode, raise boom to hoist the load off the ground, and stop for a while to check if the load is safe to hoist.

NOTICE: Characteristic of moment limiter display

- *At certain working conditions, moment limiter may display bigger load value than actual load.*
- Sudden lever operation increases error in reading load. When operating boom *derricking* lever, move the lever slowly.

12. When operation is auto-stopped by reaching overload during boom lowering or extending operation, first retract boom to recover into safe load range, and then lower boom to ground load.
    If boom lift must be operated in a situation, use boom lift bypass switch (13) to enable the boom lift function.
    To operate boom lifting using this boom lift bypass switch (13), keep pressing the switch to upper side and operate boom lift at the same time.
    After the work, release the switch and it automatically turns off.

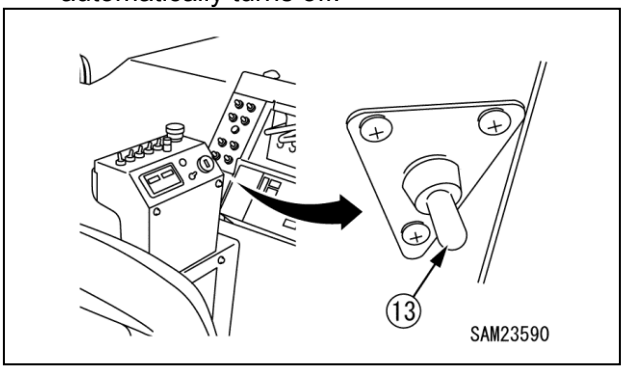

Fig. 4-391

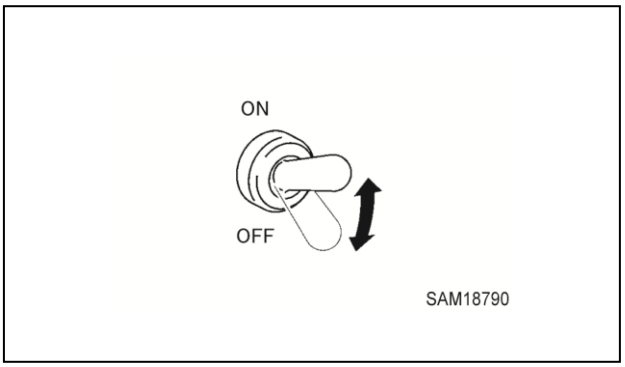

Fig. 4-392

DANGER! The boom lift bypass switch is to be used only when in searcher hook mode. The boom lift function is stopped automatically when overloaded.
Never use this for normal lifting of loads clear of ground. Hoisting a load off ground by using this switch may cause damage to the machine and serious accident.

https://truckmanualshub.com/

NOTICE: In case machine is automatically stopped by entering overload area by boom lowering or boom extending operation, recover from the overload area by retracting boom, or lifting boom by keeping the boom lift bypass switch to ON side.

NOTICE: When working envelope is set, and operation automatically stops at the boom upper angle limit or hook height upper limit, boom can be lifted beyond the limit by using this boom lift bypass switch. The boom lift bypass switch is to be used only when in searcher hook mode.

CAUTION:

E-boom and hook may interfere with each other in RESTRICTED AREA on Rated Total Load chart.
Do not exceed 30 degrees of boom angle when E-boom offset position is in SH1.

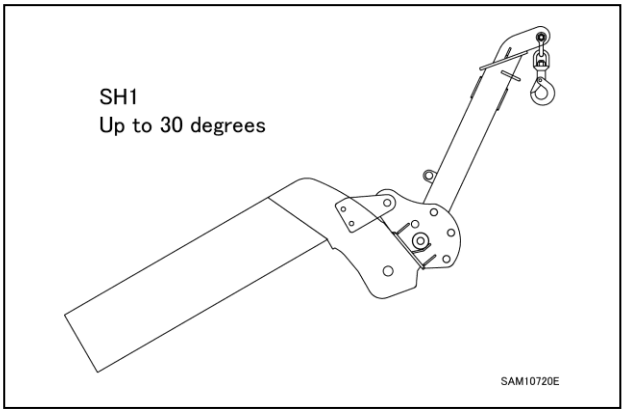

Fig. 4-393

TRANSPORTATION

Observe the related laws and regulations and transport the machine safely.

Transport Precautions

Cautions When Loading or Unloading

- Be especially careful when loading or unloading the Machine because the risks intervene.
- Select a location that is level and has firm road surface when loading or unloading the Machine. In addition, keep enough distance from the roadside.
- Use the gangplanks under 15 degrees or smaller angle. In addition, decide the clearance between gangplanks to meet the centre of the rubber tracks.

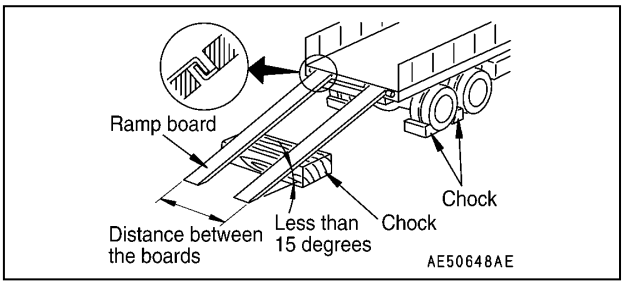

Fig. 4-394

- ALWAYS set the Machine in the "travelling posture" and securely insert the position pins (4 pieces) to the outrigger rotary parts before loading or unloading the Machine.

For more information, see "TRAVELLING POSITION" on page 4-21.

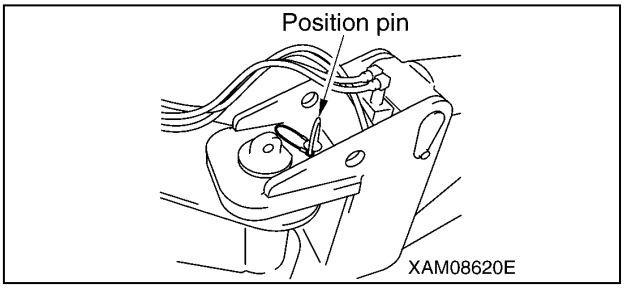

Fig. 4-395

https://truckmanualshub.com/

- ALWAYS move backward when loading the Machine. Moving forward may cause a trip.

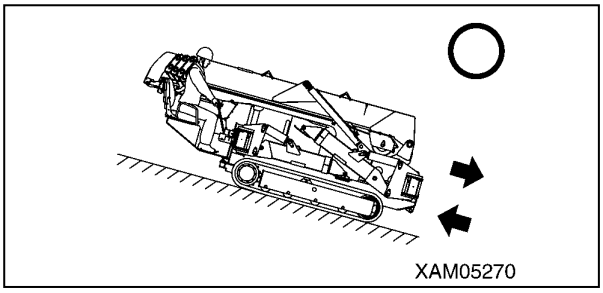

Fig. 4-396

- When loading or unloading, set the engine rotation to low idling (low speed rotation) and operate slowly by low speed travels.
- Use the gangplanks that have fully strong width, length and thickness, and that enable safe loading/unloading.
- Reinforce with blocks or other substances if the gangplanks deflect much.
- Remove the mud and other substances from the footing to prevent the Machine from skidding over the gangplanks. Remove the substances stuck the gangplanks such as grease, oil or ice, and keep clean.
  Be especially careful in the rainy days where slips easily occur.
- Do NOT change direction over a gangplank. Temporarily leave the gangplank before correcting the direction.
- Be slow when operating to change the direction on the truck platform where the footing is unstable.
- After loading the Machine, apply the wood blocks so that the Machine does not move, and securely fix with wire cables or other means.

For more information, see "Loading/Unloading" on page 4-137, and "Cautions on Loading Machine" on page 4-140.

Cautions During Transport

Observe the related regulations and exercise safety during transport.

Cautions When Loading/Unloading with Crane

Be careful of the followings when loading or unloading the Machine by hoisting with a crane.

- Do not use those brackets on the boom to hang the whole unit.
- Before hoisting the Machine, attach the hoisting brackets (1) (for instance shackles) to the outrigger rotary holes (four), and hang the wire cables (2) (four) on the hook (3).

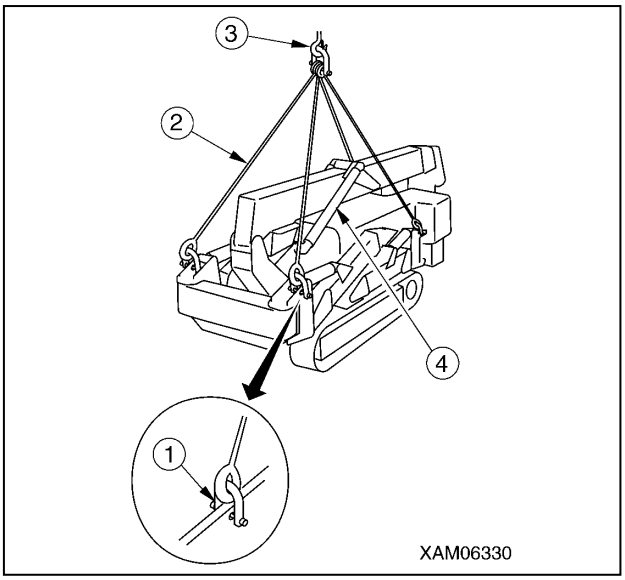

Fig. 4-397

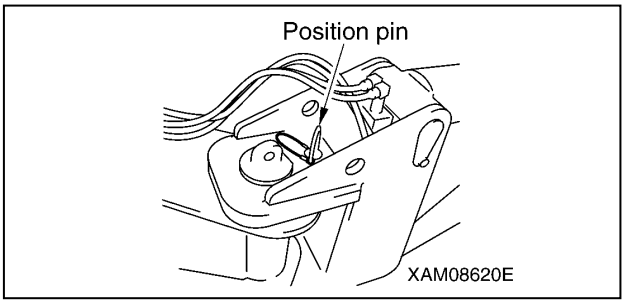

Fig. 4-398

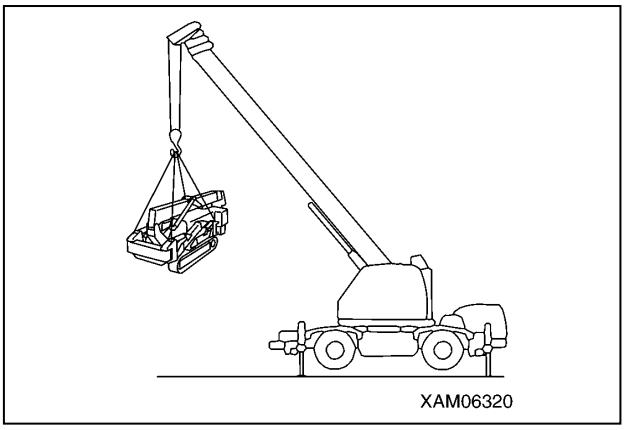

Fig. 4-399

https://truckmanualshub.com/

- To hoist, use the crane, wire cables (2) and hoisting bracket (1) (for instance shackles) having enough strength against the Machine mass (weight).
  Following is the load force that applies to each of the wire cables when the Machine main body is hoisted by four wire cables.
- ALWAYS set the Machine in the "travelling posture" and securely insert the position pins (4 pieces) to the outrigger rotary parts before hoisting the Machine.
  The centre of gravity position of the Machine has been decided under the condition where the Machine posture was "travelling posture".

For more information, see "TRAVELLING POSITION" on page 4-21.

- Use the carrying instruments shown the left figure and work safely when carrying the Machine using a crane.

Recommended hoisting equipment
- Wire cables (two in front):
  12.5 diameter x length of 2150 mm
  (breaking force of 7.5 t or more)
- Wire cables (two in back):
  12.5 diameter x length of 1650 mm
  (breaking force of 7.5 t or more)
- Shackle: BC or SC, nominal 14

Loading/Unloading

WARNING!
- **For more information on the dimensions and mass of the machine, see "PRINCIPLE SPECIFICATIONS LIST" on page 3-4.**
- **Select and use the ramp boards that satisfy the following conditions.**
- **Has the length that when placed, the angle from the track is 15 degrees or less.**
- **Has the width no narrower than the rubber tracks.**
- **Has the thickness and strength that can fully withstand the mass of the machine.**
- **Be sure to place the ramp boards perpendicular to the truck box.**
  Also, match the centre of the each of the rubber tracks with the centre of corresponding ramp board.
  Misguided ramp boards and unmatched rubber crawlers may cause the machine to slip out of the ramp boards and cause serious accidents.
- **Use ramp boards with slope of 15 degrees or less. The space between boards shall be set to be appropriate to the centre of the rubber tracks.**
- **Always put the machine in the "travelling posture" when loading/unloading the machine. For more information, see "TRAVELLING POSITION" on page 4-21.**

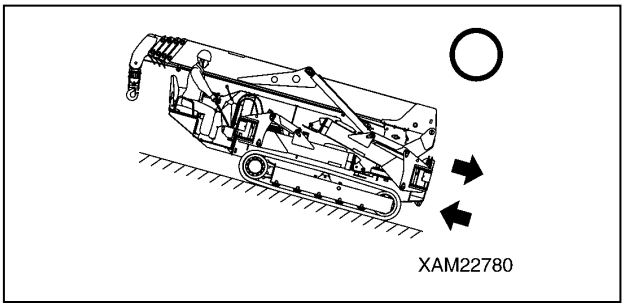

Fig. 4-400

- **Always load the machine by moving backward. Moving forward involves overturning hazard. The operator must be on the back side of the truck.**
- **Always unload the machine by moving forward. Moving backward involves overturning hazard. The operator must be on the back side of the truck.**
- **Loading/Unloading the machine involves danger. Be extremely careful.**

https://truckmanualshub.com/

- **Select flat and solid ground for loading/unloading the machine. Keep sufficient distance from the shoulders.**
- **Remove dirt around the crawlers to prevent side slip of the machine on the ramp boards. Remove any materials on the loading ramps such as ice, grease, and oil.**
- **Never change direction on the ramp boards. Go down from the ramp board, and then change the direction.**

Always put the machine in the "travelling posture" when loading/unloading the machine. Always use ramp boards or forwarding blocks when loading/unloading the machine and use the following procedure.

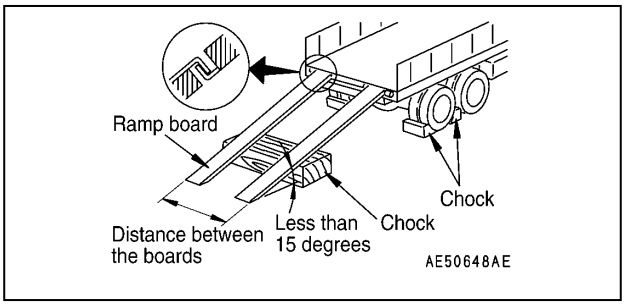

Fig. 4-401

1. The trailer securely. Place wheel blocks to Brake the wheels of the trailer to secure the trailer.
2. Secure the ramp boards in a way that the centre of the trailer and the machine agree.

NOTICE: Verify that the two lamp boards are at the same height.

3. Operate the acceleration pedal and keep the engine at low speed.
4. TRAVEL slowly toward the ramp boards, and load/unload the machine in a way that the boom does not hit the trailer. Move backward to load the machine, and forward to unload the machine.
5. Do not operate any other lever than travelling levers on the ramp boards.
6. Load the machine properly to the desired position on the trailer.

Hoisting Machine

WARNING!

- **The hoisting attachments such as wire cable and shackle used in hoisting shall be sufficiently strong for the weight of this machine.**
- **When hoisting the machine, always put the machine in the "travelling posture" and securely insert the four position pins into the rotary of the outriggers.**
  As for the centre of gravity of the machine, the machine posture is determined to be "travelling posture".
  For more information, see "TRAVELLING POSITION" on page 4-21.
- **Hoisting the machine for long time will cause the boom lift cylinder to extend, shifting the centre of gravity and thus, the machine losing the balance.**
- **When transporting the machine by using the crane, use the transportation equipment shown in the figure and transport safely.**

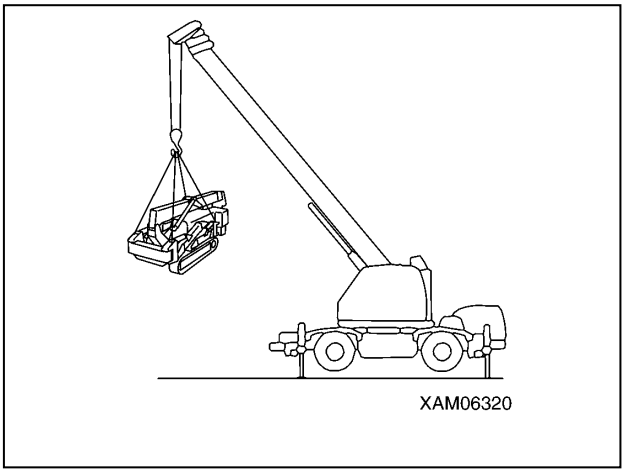

Fig. 4-402

- **Do not hoist the machine in the posture other than those described in the following procedure. The machine may lose its balance.**

https://truckmanualshub.com/

CAUTION:

- **When the local laws and regulations are applicable, the person who uses the crane to perform hoisting operation must be qualified to do it. If not, the operator must be well trained and skilled.**
- **See the Dimension. The dimensions are for standard specifications. The hoisting method varies depending on the attachments and options mounted. In that case, contact us or our sales service agency.**

Hoist the machine on the solid and flat ground using the following procedure.

1. See "TRAVELLING POSITION" on page 4-21 and put the machine in the "travelling posture".
2. Verify that the position pins (four) are securely inserted in the rotary joint of the outrigger.
3. Install a shackle (1) to the holes (4 locations) on the outrigger rotaries and hang the hoisting attachments (2) over the hook (3).

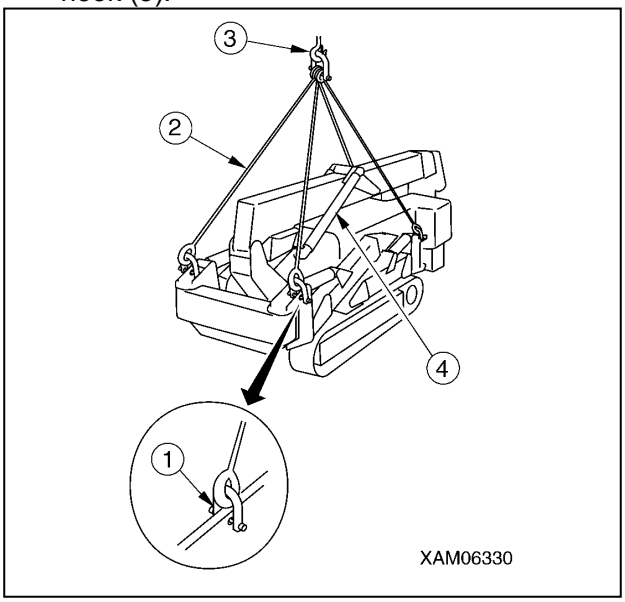

Fig. 4-403

4. As soon as the machine leaves the ground, stop and wait until the machine is stabilised. Then slowly hoist the machine.
5. Check the changes in the posture due to the leakage from the hydraulic circuit on the head side of the boom lift cylinder (4) when the machine is hoisted.

NOTICE:

Recommended hoisting attachments

- *12.5 diameter x length of 2150 mm (breaking force of 7.5 t or more)*
- *12.5 diameter x length of 1650 mm (breaking force of 7.5 t or more)*
- *Shackle: BC or SC, nominal 14*

https://truckmanualshub.com/

Cautions on Loading Machine

WARNING! Select flat and solid ground for loading/unloading the machine. Keep sufficient distance from the shoulders.
Load the machine to the specified position on the trailer and secure the machine with the following procedure.

1. Stop the engine and remove the key of the starter switch.
2. Provide a square timber in front and back of the rubber tracks to prevent the machine from moving during transportation. Secure the machine with chain or wire cable.
   Secure it surely, especially not to let it slip to the side.

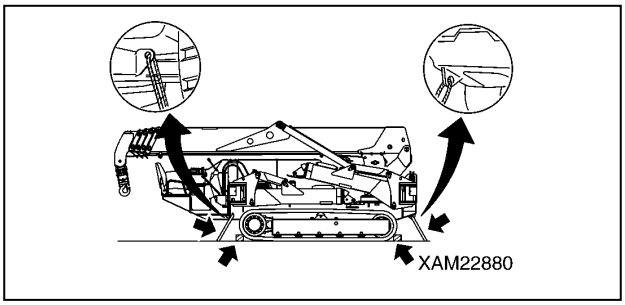

Fig. 4-404

Cautions During Transportation

WARNING! Take road width, height, and weight into consideration in determining the transportation route.
If there are applicable local laws and regulations, observe these laws and regulations for safe transportation.

If not, contact us or our sales service agency.

https://truckmanualshub.com/

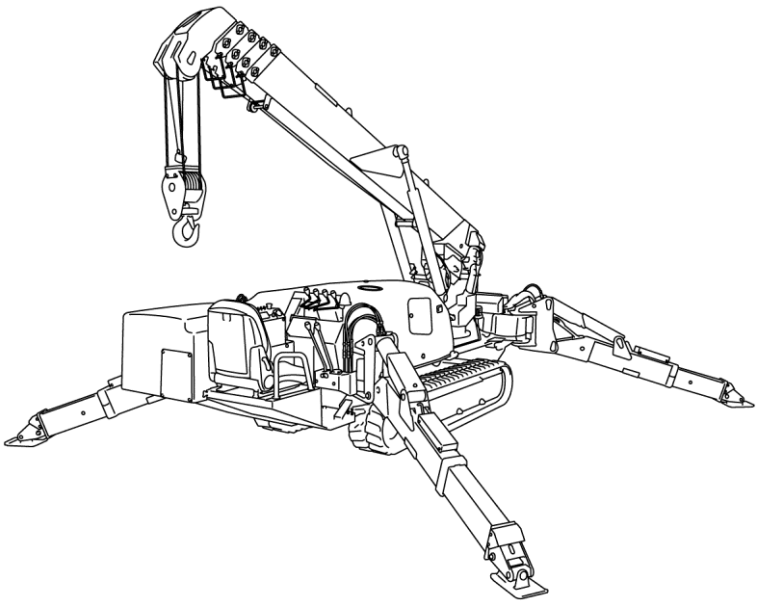

Section 5

MAINTENANCE AND INSPECTION

https://truckmanualshub.com/

GENERAL MAINTENANCE INFORMATION AND PRECAUTIONS

Thorough understanding of the inspection and maintenance items is required to perform efficient inspection and maintenance that contributes to safe use of this machine.

WARNING!

- **Do not perform any inspection or maintenance that is not described in this manual.**
  Potential serious accident or machine failure may occur if it is performed at the discretion of the individual.
  In the event that a judgment on the severity of a failure or malfunction is unable to be made, contact us or our sales service agency.
- **In the event that a failure or malfunction is encountered in machine operation or found in inspection, report it to your employer or supervisor immediately. Contact us or our sales service agency.**
- **Inspection and maintenance should be performed with the machine placed on a level and strong footing.**

Precautions Before Maintenance

Failure Report

Execution of a maintenance not described in our manual may cause unexpected failures.

Contact us or our sales service agency.

Clean Before Inspection or Maintain

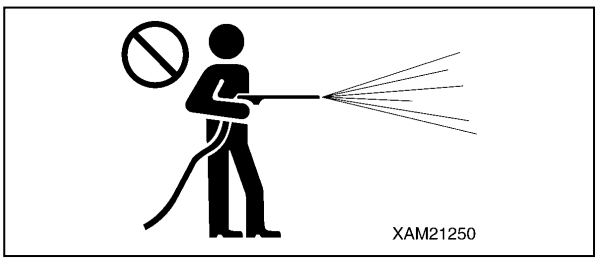

Fig. 5-1

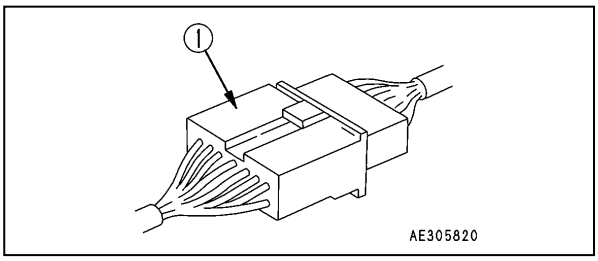

Fig. 5-2

- Before starting an inspection or maintenance, clean the machine and prevent rubbish from entering the machine and make sure the safety will be ensured during maintenance.
- Attempt to inspect or maintain with the maintenance machine still dirty not only lessens chance of locating faulty part, but may cause rubbish or mud entering your eye, or slipping and tripping that results in injury.
- Always observe followings when washing the vehicle.
- Use antislip shoes to prevent slips and trips caused by wet foothold.
- Put on protective equipment when using a high pressure steam car wash. Avoid the accidents that the contact with high pressure water causes the skin laceration or mud or other substance flying into eye.
- Do not directly spray water onto electrical system (sensors, connector (1), receiving box and related).
  Entrance of water into the electrical system causes faulty operations and may trigger improper operations, thus is dangerous.

Tidy Up Workplace

In the workplace, put away the tools, hammers and other things that obstruct the works, wipe of slippery items such as greases and oils, and exercise tidy up and cleaning for safe work.

Untidy workplace may cause stumbles and slips that result in injury caused by tipping.

Follow Supervisor Instruction During Teamwork

Appoint a person who supervises the work and follow his/her instructions in case of machine repair or installing/uninstalling a work device.

Unexpected accidents due to misunderstood communication between workers may occur during teamwork.

Use Appropriate Tools

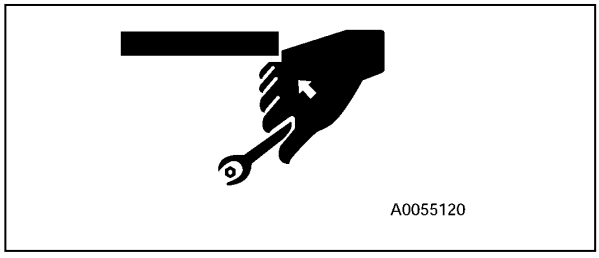

Fig. 5-3

https://truckmanualshub.com/

Do not use damaged or deteriorated tool, or use a tool for a purpose that is not a proper purpose of use. Use tools suitable for the maintenance work.

Entrance of a broken piece of a tool such as a boss with crashed head or a hammer may destroy eyesight.

Handling Illumination Devices

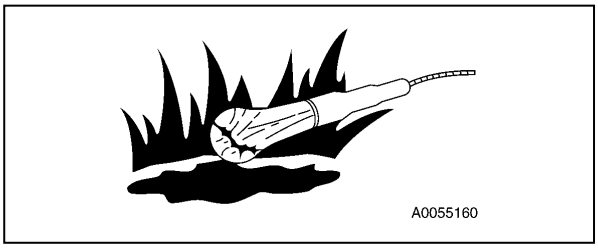

Fig. 5-4

- Use explosion proof illumination device when inspecting with fuel, oil, or similar substance. Failure to use explosion proof illumination device may cause leap fire and explosion.
- Attempt to work without using illumination device in a dark place may cause injury or other issue. Always use illumination device.
  Do not use a lighter or other burning object even if dark. Such use may cause fire, and furthermore the battery gas may catch fire and explode.

Stop Engine Before Inspection or Maintenance

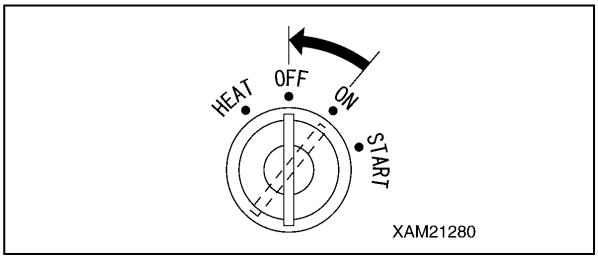

Fig. 5-5

- Before inspection or maintenance, always park the machine at a location where the ground is level, rock-falls and landslides do not occur, is a lowland and flood does not occur, and fully retract and lower the boom, and stop the engine.
- Operate each of the crane operation levers forward backward several times to relief the pressure remaining in the hydraulic circuits.
- Apply pawls to so that the prevent rubber tracks do not move.
- Persons in charge of the maintenance should pay attention to prevent physical body and clothes from contacting the moving parts.

Fire Risk Prevention

Fig. 5-6

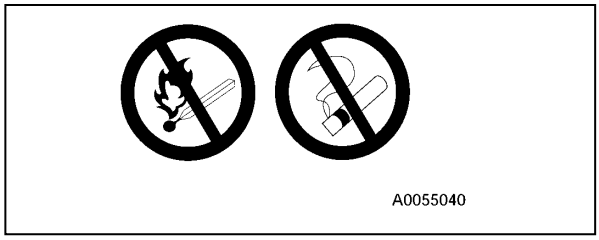

Fig. 5-7

Always observe the followings during maintenance where the fuel, oil, battery or other substance that may catch fire is handled.

- Keep the fuel, oil and any other easily combustible oil and fats away from fire during storage.
- Do not leave the site when replenishing the fuel or oil.
- Use incombustible cleaning oil for the objects such as the components, and do not use light petroleum, gasoline or anything else that may catch fire.
- Do not smoke when inspecting or maintaining. Smoke at a location designated to do so.
- When inspecting fuel, oil, or similar, use explosion proof illumination devices but do not use fires such as a lighter or a match for illumination.
- Loosened and damaged electrical connections may cause short circuit that may result in a fire. Inspect accordingly during the inspections before starting work.
- Make sure a fire extinguisher is place near the inspection / maintenance site.

https://truckmanualshub.com/

Precautions During Maintenance

No Unauthorised People

Do not admit anyone other than necessary workers during maintenance. And post a guard as necessary.

Be especially careful in case of a polishing, welding work, or digging work.

Measures upon Finding Abnormality During Inspection

- Always repair whenever an abnormality is found during inspection.
  Attempt to use without repairing the defect may cause bodily accidents.
- Contact us or our sales service agency.

Do Not Drop Tool or Part Inside Machine

- Do not drop any bolt, nut or tool inside the machine when inspecting while opening the inspection port or tank replenishment port. Dropped object may damage the machine or cause the machine to operate improperly and thus may cause accidents. If dropped, always retrieve.
- Do not keep anything unnecessary for the inspection in your pocket.

Noise Caution

Large noise in the surroundings may cause hearing difficulty or deafness.

Put on ear covers or earplugs before long time noise exposure for instance an engine maintenance.

Work by at Least Two Persons during Maintenance with Engine Running

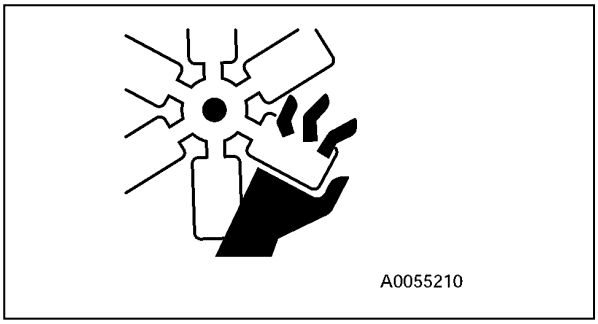

Fig. 5-8

To prevent accidents, do not attempt maintenance when the engine is running.

Always observe the followings in case of maintaining with the engine running for unavoidable reason.

- One should seat in the operation seat, and keep checking each other while ensuring that the engine can be stopped any time.
- Be especially careful when working near a rotating part which may entangle.
- Do not touch operation levers. Before handling an operation lever for unavoidable need, always give a sign to other person and let him/her evacuate to a safe place.
- Do not contact with the alternator belt or other part that severs upon contact with human body or tool.

Cautions When Working Below Machine

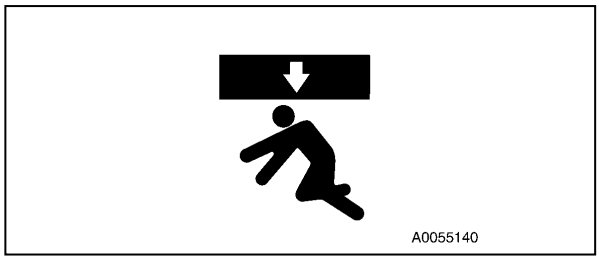

Fig. 5-9

- Park the car over a level and firm location, and fully retract and lower the boom.
- Before the maintenance below the machine, extend the outriggers maximum so the machine lifts. When doing so, insert support platforms (height increasers) below front and rear of the machine to stabilise the machine.

Cautions When Working Above Machine

Fig. 5-10

- Tidy the footing to avoid falling and always observe following precautions during maintenance above the machine.
  - Do not spill oil or grease.
  - Do not sprawl the tools.
  - Beware of the footing when walking.

https://truckmanualshub.com/

- Do not jump from the machine under any circumstance.
  Use a platform, and secure your body with three locations of the limbs (both feet and one hand, or both hands and one foot) when climbing up or down the machine.
- Use protective equipment that suit the work.
- Do not step on the boom, outrigger or machinery cover to prevent bodily accidents such as falling or tripping due to slippage.

Cautions When Replenishing Fuel or Oil

Fig. 5-11

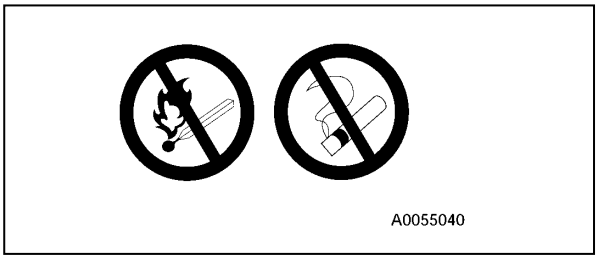

Fig. 5-12

The fuel, oils and similar substance may catch fire if a fire comes near.

Light petroleum is used as the fuel and thus requires extra effort to observe the followings.

- Keep the engine stopped when supplying.
- Do not smoke when supplying.
- Immediately wipe away dripped fuel or oil.
- Securely tighten the fuel and oil caps.
- Supply fuel/oil at a location with good ventilation.
- Do not leave the site when replenishing the fuel or oil.

Beware of Chips When Working with Hammer

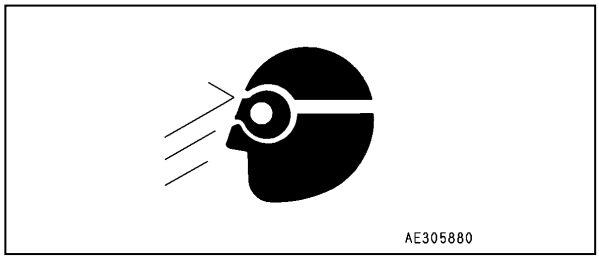

Fig. 5-13

During the hammering works, keep protective equipment such as protective glasses and a helmet on, and insert a copper bar or similar object between the hammer and the target when hitting.

Giving impact to a hard metal part such as a pin or a bearing may cause the broken chip to enter eye and inflict injury.

Cautions During Welding Repair

Weld in a location with good facility, and, only authorised personnel are permitted to weld.

Unauthorised personnel are strictly prohibited since risks such as gas generation, fire and electrical shock are present when welding.

The personnel authorised to weld are requested to always observe the followings.

- Disconnect the battery terminals to prevent battery explosions.
- Peel off the paint from the welding section to prevent gas generation.
- Attempt to heat up a hydraulic machinery, piping or a section near such part may cause combustible vapour or mist to be generated and catch fire. Avoid heating such section.
- Directly heating a pressurised piping or rubber hose may cause a sudden snip. Apply a fire protection cover.
- Disconnect the wiring connectors of the radio control and remote control system, moment limiter display and converter.
- Put on protective equipment.
- Keep the ventilation well.
- Put away the combustibles and prepare a fire extinguisher.
- Do not ground to a location near electrical part. Such may cause the electrical part to malfunction.

https://truckmanualshub.com/

Disconnect Battery Terminal

Fig. 5-14

Disconnect (-) terminal of the battery and stop the electrical flow before repairing the electrical system or starting an electrical weld.

For details, see "Battery Precautions" on page 5-55.

Cautions When Adjusting Rubber Track Tension

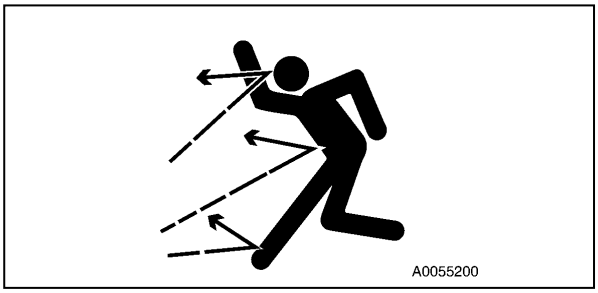

Fig. 5-15

- Grease is sealed inside the rubber track tension adjuster. The grease is at a high pressure because of the tension of the rubber track. Attempt to release the grease without observing the following precautions may cause the grease valve to pop out and result in serious accident.
- Do not loosen the tension adjustment grease valve one full turn or above. Doing so may cause the grease valve may pop out.
- To avoid the risk during tension adjustment, do not place your body in right front of the grease valve.
  For more information, see "Checking/Adjusting Rubber Track Tension" on page 5-64.

High Pressure Hose Handling Cautions

Oil leaking from high pressure hose may cause fire or bodily accident due to faulty operation.

Whenever a damaged hose or loosened bolt is found, abort working and ask us or our sales service agency for a repair.

- Replacement of high pressure hose requires experienced skill. In addition, the tightening torques are decided by the horse types and size. Customers are prohibited to repair.
- Replace the applicable part if any of the following conditions is found.
- Hose sleeve damage or leak.
- Scratch or truncation of the coat, or exposure of reinforcing layer of a wire
- Coat is partially swollen.
- Indication of twist or collapse is at a movable part of hose.
- Alien object buried in coating.
- Hose sleeve deformation.

High Pressure Oil Cautions

Fig. 5-16

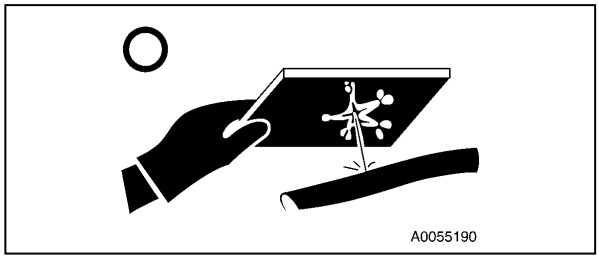

Fig. 5-17

Failure to make sure the pneumatic circuit pressure is relieved before inspection or replacement of a high pressure piping or hose may result in bodily accidents.

Always observe the followings.

- Do not start any inspection or replacement before the pressure dissipates.
- Put on protective glasses and leather gloves.
- When a piping or hose leak exists, the piping/horse itself or vicinity or the ground is wet. If such is seen, a piping crack, hose crack or inflation is considerable, so always ask us or our sales service agency for a repair.
- High pressure oil leaking through a small hole may puncture the skin or destroy eyesight upon contacting with skin or eye.

If the high pressure oil gave serious injury to skin or eye, wash away with flowing water and see the doctor as soon as possible.

https://truckmanualshub.com/

Cautions When Temperature Is High

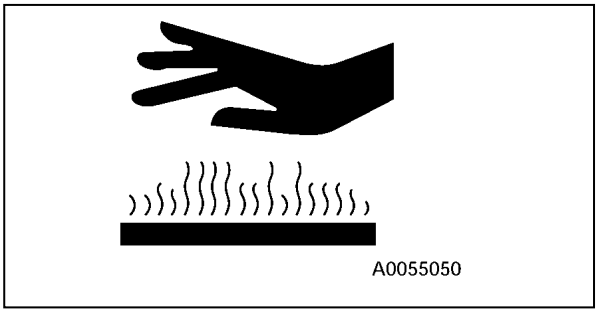

Fig. 5-18

Parts such as the engine, all oils, exhaust system manifold and muffler are at high temperature during short time after stopping the engine.

Attempt to remove the cap or execute a maintenance such as oil draining, water draining or filter replacement may result in suffering burns.

Wait until the temperature lowers, then execute the inspection/maintenance following the procedure written in this manual.

"Pre-Start Inspection - Before Starting Engine" on page 5-25: checking coolant level, checking oil level in engine oil pan, checking oil level in hydraulic oil tank

"Maintenance Every 500 Hours" on page 5-46: Replacement engine oil and oil filter, replacement hydraulic oil return filter, replacement hydraulic oil suction filter

"Maintenance Every 1000 Hours" on page 5-49: Replacement oil inside hydraulic oil tank

Checks After Inspection/Maintenance

Failure to execute an inspection/maintenance item or failure to check the function and operation of the maintained part may cause an unexpected fault which may result in bodily accidents.

Always observe the followings.

- Checks with engine stopped
  - Check for unexecuted inspection/maintenance.
  - Check that inspection/maintenance was done without errors.
  - Check for any dropped tool or part. Ones caught by the interior or lever related link mechanism poses extra danger.
  - Check for any fuel leak, water leak, oil leak, bolt loose and similar issues.
- Check with engine running
  Be fully careful with safety when checking with the engine running while referring to "Work by at least two persons during maintenance with engine running" section.
  - Check that the inspected/maintained part operates normally.
  - Check that issues such as an oil leak do not occur when load is applied to the oil pressure by increasing the engine rotation.

Cautions When Treating Waste

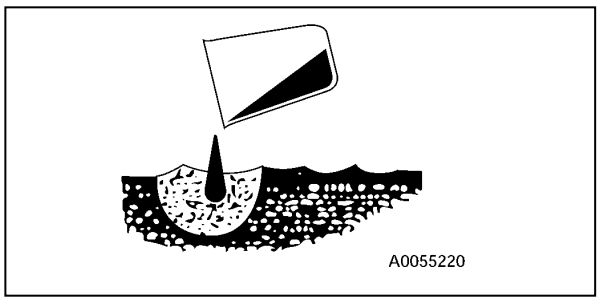

Fig. 5-19

Always observe the following to prevent pollution environment of the district inhabited with human or animal.

- Do not dispose the waste oil down a water system such as sewage or river.
- Always drain into a container when draining the oil from the Machine.
  Do not directly drain to the ground.
- Observe the applicable legal regulations and rules when disposing harmful substance such as the oil, fuel, solvent, filter or battery.

https://truckmanualshub.com/

Check the Service Meters

Read the service meters daily to check for any maintenance item that reached the obligatory maintenance period.

Use Genuine Parts for Replacement

Always use Maeda genuine parts as specified in the parts catalogue for part replacement.

Use Pure Grease

Always use Maeda pure grease. The viscosity of grease must conform to specifications according to ambient temperature.

Use Clean Oil and Grease

Always use clean oil, grease, and container to keep impurities out of them.

Keep the Machine Clean

Keep the machine clean to facilitate the detection of a malfunction. Especially keep the grease nipple, breather, and oil level gauge (oil access door) clean to prevent impurities from finding their way into the machine.

Handle Water and Oil at Adequate Temperature

Drainage, drain oil, and exhaust filter will be at elevated temperatures immediately after the machine comes to a stop. Replace drainage, drain oil, and filter only after they drop in temperature for safety.

If the oil is cold, raise the temperature of the oil to approx. 20 to 40°C.

Check Drain Oil and Oil Filter

For replacement of oil and filter, check the drain oil and exhaust filter to make sure no a considerable amount of metal powder or foreign objects is present.

Cautions for Lubrication

Do not remove the strainer to lubricate if it is attached to the lubrication opening.

Protect Oil from Impurities

Avoid dust when inspecting and replacing the oil to keep impurities out of the oil.

Attach a Warning Tag

When draining coolant and oil, always attach a warning tag to the travel control for the prevention of accidental engine starting.

Follow Safety Precautions

Safety precautions provided on the machine should always be followed when using the machine.

Cautions for Weld Repair

- Power off the machine. (Turn OFF the start switch)
- Do not continuously apply 200V or greater.
- Ground the machine within 1 metre from the welding point.
- Be sure to disconnect the connectors of the radio or remote control system, moment limiting indicator, and moment limiting converter.
- Remove the negative terminal (-) of the battery.
- Make sure no sealing or bearing is present between the welding point and the grounding point.
  Potential damage to sealing may occur due to sparks if disregarded.
- Do not ground around the boom pin or the hydraulic cylinder.
  Potential damage to a plated section may occur due to sparks if disregarded.

Keep from Flame

Always clean the parts with noncombustible cleaning agent or light oil.

Keep the machine from flame when using light oil.

Keep the Attachment Surface Clean

Be sure to clean the attachment surface after removing a part to which the O-ring and gasket sealing are attached.

Replace the part with a new one with the O-ring and gasket reattached.

Empty Your Pockets

Always empty your pockets before performing inspection and maintenance of the machine in a downward direction with the cover opened.

https://truckmanualshub.com/

Assure Safe Rubber Track

When performing crane operation in a rocky location, make sure of no damage to the rubber track and no looseness, cracks, abrasion of bolts and nuts. Loosen the tension of the crawler tread more than usual.

Cautions for Machine Wash

- Do not direct a jet of steam to the electrical parts and connector.
- Keep the operation panel dry.
- Wash the machine with clean cloth, rinsing off dirt and dust.

Pre- and Post-Work Inspection

Before performing crane operation in the muddy water, rain, snow and on the seashore, always check plugs and valves for looseness. Post-work inspection requires check all the units for cracks and damages and check bolts and nuts for looseness and coming off, with the machine washed.

Carry out early greasing. Grease the operating pin that enters the muddy water on a daily basis.

Cautions for Working in a Dusty Site

The following precautions should be observed when working in a dusty site.

- Occasionally check the air cleaner for clogging.
- Clean and replace the fuel filter in a timely manner.
- Be sure to clean the electrical parts, especially the starter and alternator, to protect them from dust.

Do Not Mix Oil

Never use together with different types of oil under any circumstance.

Replace the oil entirely when replenishing a different type of oil.

Always use Maeda genuine parts for part replacement.

BASIC MAINTENANCE

Oil Handling

- Oil is used under extremely harsh conditions (high temperature, high pressure) in the engine and working device, which causes the oil to undergo deterioration with operating time.
  Always use oil that meets requirements such as grade and operating temperature defined in the operation manual. Be sure to perform periodic replacement of oil irrespective of contamination in the oil.
- Oil is equivalent to human blood. Exercise due caution to handle oil, keeping impurities (such as water, metal powder or dust) out of oil. Most of mechanical failures are attributed to intrusion of impurities.
  Extra caution is required to prevent impurities from finding their way during machine storage and lubrication.
- Do not mix oil with other oil of different grade or brand.
- Oil lubrication must conform to the designated quantity of oil.
  Failure to lubricate at adequate quantity can lead to a machine failure.
- In the event that oil used in the working device turns cloudy, potential intrusion of moisture or air into the oil may be considered. Contact us or our sales service agency.
- When replacing oil, always replace the relevant filter as well.
- "ISO VG32" is adopted for a hydraulic oil system as factory default.
  Do not use any other hydraulic oil that is not recommended by us. Failure to follow the instruction may cause the filters to get clogged.
  A minute amount of oil remaining in piping and cylinders does not cause problems even if mixed with other oil.

https://truckmanualshub.com/

Fuel Handling

- The fuel pump is precision equipment that becomes inoperative if fuel containing moisture or impurities is used.
  Extra caution is required to prevent impurities from finding their way during machine storage and lubrication.
- Do not remove the strainer when replenishing fuel.
- Always use fuel that meets requirements such as grade and operating temperature defined in the operation manual.
- Ensure that the fuel tank is filled up after finishing daily work to prevent condensation of the humid air inside the fuel tank that will result in intrusion of moisture.
- Drain deposits and water out of the fuel tank before starting the engine or approximately 10 minutes after fuel replenishment.
- The air should be released from the circuit when the machine runs out of fuel or fuel filter replacement is performed.
- Clean the tank and fuel system if any foreign objects enter the fuel tank.

Stocking and Storage of Oil and Fuel

- Stock and store oil and fuel indoors to keep impurities such as moisture or dust out of them.
- When storing oil and fuel in drums for a long time, line the drums horizontally aligning the drum bungs sideways (to store them away from moisture). Be sure to cover the drums with a waterproof sheet if storing them outside.
- To prevent deterioration of oil and fuel resulted from long-term storage, employ the first-in first-out for using oil and fuel.

Grease Handling

- Grease is designed to prevent the joint from rattling and making noise.
- A nipple that is not described in the Periodic Maintenance chapter is used for overhauls, which requires no grease replenishment.
  Grease the nipple if a long-term use hinders its smoothness.
- Wipe off old grease squeezed out after greasing.
  Extra care is required to wipe a part that the adhesion of sands and dust accelerates the wearing away of the rotating part.

Filter Handling

- A filter is an extremely important part that keeps major equipment free from impurities in oil, fuel, and the air circuit, which prevents an associated failure. Periodic replacement of the filter is required in accordance with the Operation Manual. The replacement period should be shortened in responses to harsh operating environments or the oil used.
- Do not reuse any washed filters (cartridge type one) under any circumstances.
- After replacing an oil filter, check the used filter for any metal powder.
  If check finds metal powder on the used filter, contact us or our sales service agency.
- As to a replacement filter, always unpack it immediately prior to its use.
- Always use Maeda genuine filters.

Coolant Handling

- The river water contains a large amount of calcium and impurities. Use of the river water results in accumulation of water stain in the engine and radiator, which causes heat exchange error leading to overheat.
  Do not use any non-potable water.
- Always use antifreeze following precautions stated in the Operation Manual.
- Keep antifreeze from flame. Antifreeze is a flammable solution.
- The mixing proportion of antifreeze varies with outside air temperature. For more information on mixing proportions, see "Coolant Replacement and Internal Cleaning" on page 5-49.
- In the event of overheating, replenish coolant with the engine cold.
- The machine low in coolant may cause overheating and corrosion attributed to aeration.

https://truckmanualshub.com/

Electrical Part Handling

- The electrical parts are susceptible to water damage and damaged coating. A current leakage is developed if the electrical parts are wetted or have damaged coating, which causes the machine to go out of order and malfunction. Exercise due caution to handle the electrical parts.
- Inspection and maintenance include the checking of belt tension, belt damage, and battery charge level.
- Never remove and disassemble equipment (electrical parts) from the machine.
- Only optional electrical parts that accompany the machine can be installed.
- Keep the electrical parts away from water when the machine is washed and used in the rain.
- When using the machine at the seashore, keep the electrical parts free of water and impurities to prevent corrosion.

Hydraulic Equipment Handling

- Hydraulic equipment will be at elevated temperatures during and immediately after operation. Hydraulic equipment operates under high pressure. The following precautions should be observed when performing inspection and maintenance of hydraulic equipment.
- Place the machine in travel position on a level surface to inhibit the application of pressure to the cylinder circuit.
- Be sure to stop the engine.
- Hydraulic oil and lubricating oil will be at elevated temperatures and high pressure immediately after equipment comes to a stop. Perform inspection and maintenance only after the oil drop in temperature for safety. An internal pressure may be exerted despite temperature drop. When removing the plugs, screws and hose joints, stand aside and provide gradual loosening to decompress.
- Be sure to remove the pressure releasing air from the hydraulic oil tank before performing inspection and maintenance of the hydraulic circuit.
- Inspection and maintenance include hydraulic oil level check and replacement of the filters and hydraulic oil.
- Check the O-ring for scratches when removing the high-pressure hose. If check finds scratches, replace the O-ring.
- Air bleed of the hydraulic circuit is required after the following tasks are performed: replacement and cleaning of the hydraulic oil filter element and strainer, repair and replacement of hydraulic equipment, and hydraulic piping replacement.

https://truckmanualshub.com/

BREAKING-IN MACHINE

CAUTION: Perform breaking-in for the period of about the first 250 hours (hours displayed on the service meter).
The life of the machine shortens if overloaded operation or task is performed before the various sections of the machine are used to the operation.

While this machine is shipped after thorough adjustment and inspection, forcing the machine from the beginning will quickly degrade the functions of engine and crane, shortening their life.

Perform the breaking-in for the first "250 hours" (time displayed on the service meter).

Pay attentions particularly to the followings during the breaking-in period.

- Be sure to perform the warm-up operation and avoid idling away after the engine has started. See "OPERATIONS AND CHECKS AFTER STARTING ENGINE" on page 4-18.
- Avoid overloaded operation or tasks with high-speed operation.
- Avoid sudden starting, sudden acceleration, unnecessary sudden stop or sudden steering
- When the breaking-in period reaches "50 hours", do not fail to change the engine oil. See "Replace Engine Oil and Oil Filter" on page 5-41.
- The metal powder produced inside the engine through breaking-in increases in the engine oil and it deteriorates the oil, shortening the engine life.

LEGAL INSPECTION

If periodic inspection for machine safety assurance is stipulated by laws and regulations of your country, perform inspection complying with the inspection items listed below.

1. Make sure no abnormal event is present in the safety devices.
2. Check the hoisting accessories including a hook block for any abnormalities.
3. Check the winch wire rope end and wire clip for breakage.
4. Replace the wire rope promptly if it is damaged.
5. Check the hydraulic hose for oil leaks and friction flaws on the surface. Replace the hose if a surface flaw is detected.
6. Check the structural part including a boom for cracks and deformations.
7. Check the mounting bolts and joints for looseness and falling off.
8. Check if the booms perform proper operation and stop in extending, retracting, raising, lowering, and slewing.

If check finds a malfunction, contact us or our sales service agency.

https://truckmanualshub.com/

CONSUMABLES

Consumables such as a filter element and wire rope are to be replaced upon periodic maintenance or prior to the wear limit. Proper replacement of consumables delivers increased economy in machine use.

Always use Maeda genuine parts for part replacement.

See the parts catalogue for part numbers when ordering parts.

List of Consumables	
Item	**Replacement cycle**
Engine oil filter	Every 250 hrs (initial 50 hrs)
Hydraulic oil return filter	Every 500 hrs
Hydraulic oil suction filter	Every 500 hrs (initial 50 hrs)
Fuel filter	Every 500 hrs
Air cleaner	Every 1,000 hrs
Cylinder gasket	* 3 yrs
Boom slide plate	Every 3 yrs
Winch wire rope	* Every 3 yrs
Boom extending wire rope	* Every 3 yrs
Boom retracting wire rope	* Every 3 yrs

The cycles marked with an "*" in Replacement cycle include a halt period.

Contact us or our sales service agency for part replacement.

https://truckmanualshub.com/

LUBRICATING OIL

Use of lubricating oil should vary with changes in temperature.

Lubricating place	Type of oil	Use by temperature (-22 -4 14 32 50 68 86 104 122 °F)	Specified capacity (L)	Volume to replace (L)
Engine oil pan	Engine oil	SAE 10W–30 SAE 5W–30 SAE 15W–40 SAE 20 SAE 30	3.1	3.1
Hydraulic oil tank	Wear resistant hydraulic oil	ISO VG32 ISO VG46	60	44
Slewing reducer	Gear oil	ISO VG320	0.6	0.6
Winch reducer			0.75	0.75
Travel motor reducer			0.7	0.7
Fuel tank	Diesel fuel		40	-
Cooling system	Water	Nonfreezing fluid addition	3.5	-

Fig. 5-20

- A specified oil quantity is defined as a total quantity of oil including that for unit piping, and a replacement oil quantity is defined as a quantity of oil to be replaced at inspection and maintenance.
- Be sure to use our recommended abrasion-resistant hydraulic oil for the hydraulic oil system; ISO VG46 and VG32.
  "Nippon Oil Super Highland 32" is adopted for a hydraulic oil system as factory default.
- For adjustment of antifreeze concentrations in coolant with temperature at -10°C or below, see "Coolant Replacement and Internal Cleaning" on page 5-49.

CAUTION :

- **Molybdenum disulfide filled grease is to be applied to the boom slide plate (top), both sides and bottom of the boom.**
- **Do not apply molybdenum disulfide filled grease to the slewing bearing.**

https://truckmanualshub.com/

SPECIAL TOOLS AND STANDARD TIGHTENING TORQUE

Accessory Tools

Contact us or our sales service agency to request special tools for inspection and maintenance, when necessary.

Standard Tightening Torque List

Bolt and Nut Tightening Torque

Torque metric bolts and nuts with no specific indication to the values shown in this table.

Adequate tightening torque is determined with respect to the width across the flat (b) of the bolt or nut.

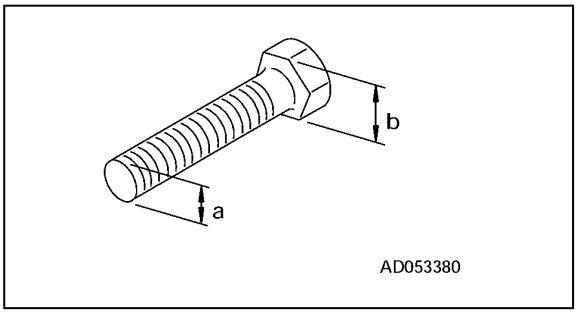

Fig. 5-21

Bolts Marked with 8.8 (Strength Classification) on Head

Nominal Size (Mark "a")	Width Across Flat (Mark "b")	Target Value		Tolerance	
mm	mm	N·m	kgf·m	N·m	kgf·m
6	10	7.8	0.80	6.8-9.0	0.70-0.92
8	13	19.0	1.95	16.5-21.9	1.70-2.24
10	17	37.5	3.85	32.6-43.1	3.35-4.43
12	19	65.5	6.70	57.0-75.3	5.85-7.70
14	22	104	10.6	90.4-120	9.2-12.2
16	24	163	16.6	142-187	14.4-19.1
18	27	224	22.8	195-258	19.8-26.2
20	30	318	32.4	277-366	28.2-37.3
22	32	432	44.0	376-497	38.3-50.6
24	36	549	56.0	477-631	48.7-64.4
27	41	804	81.9	699-925	71.2-94.2
30	46	1090	111	948-1250	96.5-128
33	50	1485	151	1290-1710	131-174
36	55	1910	194	1660-2200	167-223

https://truckmanualshub.com/

Bolts Marked with 10.9 (Strength Classification) on Head

Nominal Size (Mark "a")	Width Across Flat (Mark "b")	Target Value		Tolerance	
mm	mm	N·m	kgf·m	N·m	kgf·m
6	10	11.0	1.1	9.4-12.7	0.93-1.26
8	13	27.0	2.7	23.0-31.1	2.3-3.10
10	17	53.0	5.4	45.0-61.0	4.6-6.21
12	19	93.0	9.5	79.0-107	8.10-10.9
14	22	148	15.1	126-170	12.8-17.4
16	24	231	23.5	196-266	20.0-27.0
18	27	317	32.3	269-365	27.5-37.1
20	30	450	45.9	383-518	39.0-52.8
22	32	612	62.4	520-704	53.0-71.8
24	36	778	79.3	661-895	67.4-91.2
27	41	1130	116	961-1300	98.6-133
30	46	1540	158	1310-1770	134-182
33	50	2100	214	1790-2410	182-246
36	55	2700	275	2300-3100	234-316

Bolts Marked with 12.9 (Strength Classification) on Head

Nominal Size (Mark "a")	Width Across Flat (Mark "b")	Target Value		Tolerance	
mm	mm	N·m	kgf·m	N·m	kgf·m
6	10	13.0	1.30	11.1-15.0	1.11-1.50
8	13	31.5	3.20	26.8-36.2	2.72-3.70
10	17	62.5	6.40	53.1-71.9	5.44-7.35
12	19	109	11.1	92.7-125	9.44-12.8
14	22	174	17.7	148-200	15.0-20.4
16	24	271	27.7	230-312	23.5-31.9
18	27	373	38.1	317-429	32.4-43.8
20	30	529	54.0	450-608	45.9-62.1
22	32	720	73.4	612-828	62.4-84.4
24	36	915	93.3	778-1050	79.3-107
27	41	1340	136	1140-1540	116-156
30	46	1820	185	1550-2090	157-213
33	50	2470	252	2100-2840	214-290
36	55	3180	324	2700-3660	275-373

https://truckmanualshub.com/

Other Bolts

Nominal Size (Mark "a")	Width Across Flat (Mark "b")	Target value		Tolerance	
mm	mm	N·m	kgf·m	N·m	kgf·m
6	10	3.0	0.30	2.6-3.5	0.26-0.35
8	13	7.5	0.75	6.5-8.6	0.65-0.85
10	17	14.5	1.45	12.6-16.7	1.25-1.65
12	19	25.0	2.55	21.7-28.8	2.20-2.95
14	22	40.0	4.10	34.8-46.0	3.55-4.70
16	24	62.5	6.40	54.3-71.9	5.55-7.35
18	27	86.0	8.75	74.8-98.9	7.60-10.0
20	30	122	12.4	106-140	10.8-14.3
22	32	166	16.9	144-191	14.7-19.4
24	36	211	21.5	183-243	18.7-24.7
27	41	309	31.4	269-355	27.3-36.1
30	46	419	42.6	364-482	37.0-49.0
33	50	570	58.0	495-656	50.4-66.7
36	55	732	74.5	636-842	64.8-85.7

Hose Connector Tightening Torque

Unless otherwise indicated, tighten hose connectors using the torque values shown in the following table:

Determine the appropriate tightening torque based on the hose connector width across flats (a).

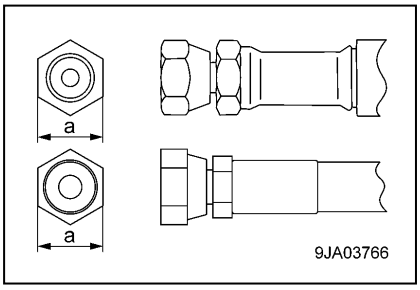

Fig. 5-22

Hose No.	Width Across Flat (Mark "a")	Target value		Tolerance	
-	mm	N▪m	kgf▪m	N▪m	kgf▪m
02	19	44	4.5	35-54	3.5-5.5
03	22	74	7.5	54-93	5.5-9.5
	24	78	8.0	59-98	6.0-10.0
04	27	103	10.5	84-132	8.5-13.5
05	32	157	16.0	128-186	13.0-19.0
06	36	216	22.0	177-245	18.0-25.0

https://truckmanualshub.com/

MACHINERY COVER

WARNING!

- **Be sure to stop the engine and remove the starter switch key before removing the machinery cover.**
- **Do not remove the machinery cover immediately after the operation while the engine is still hot.**

Removing Machinery Cover

Remove the machinery cover with the following procedure when performing inspection/ maintenance inside the machinery cover.

1. Open all of the outriggers to an angle to allow removal of the machinery covers.
2. Remove the 10 retaining bolts (3) from the left-hand machinery cover (1) and right-hand machinery cover (2).

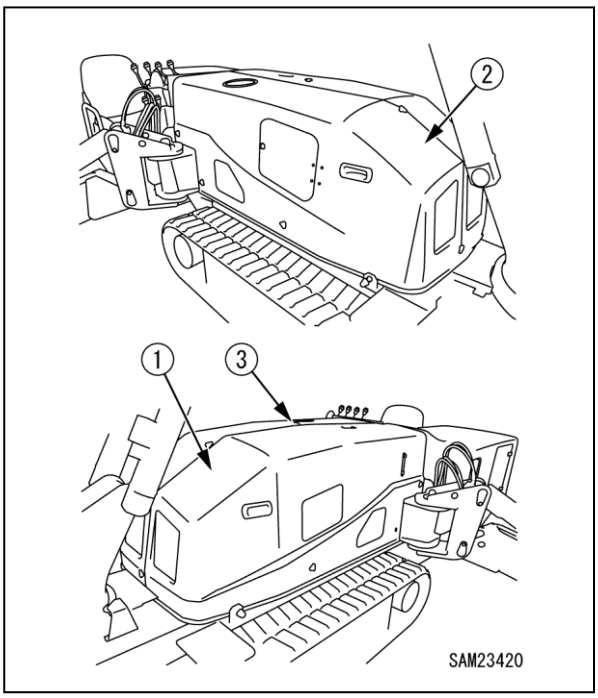

Fig. 5-23

Four retaining bolts at the top and six at the sides (three each on the left and right) are used to tighten with the machinery cover.

3. Pull the left-hand machinery cover (1) to the side to remove.
4. Pull the right-hand machinery cover (2) to the side to remove.

Installing Machinery Cover

When you finished inspection/maintenance in the machinery cover, install the machinery cover using the following procedure.

1. Reattach the right-hand machinery cover (2) in its original position.
2. Reattach the left-hand machinery cover (1) in its original position.
3. Securely tighten the 10 retaining bolts on the left-hand machinery cover (1) and right-hand machinery cover (2).
4. Rotate all outriggers back inward to stow.

https://truckmanualshub.com/

REAR COVER

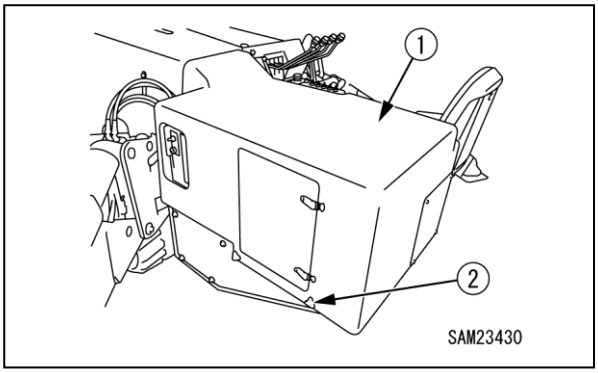

Fig. 5-24

Removing Rear Cover

Remove the rear cover as follows when performing inspection or maintenance inside the rear cover.

1. Remove the eight retaining bolts (2) from the rear cover (1).
2. Remove the rear cover (1).

Installing Rear Cover

Once inspection and maintenance inside the rear cover is complete, reattach the rear cover as follows:

1. Reattach the rear cover (1) at its original position.
2. Securely tighten the eight retaining bolts (2) on the rear cover (1).

https://truckmanualshub.com/

FUSES

CAUTION: Be sure to turn the starter switch to the "OFF" position when checking or replacing a fuse.
CAUTION: Fuses protect electrical components and wires from being burnt out.

- **Fuses are blade fuses. If a fuse was corroded and shows white powder, be sure to change the fuse.**
- **If a fuse has melt down, always check the cause in the circuit and repair the problem before changing the fuse.**
- **Always use a glass fuse of the same capacity when replacing one.**

The fuse box is provided at the lower section of the instrument panel.

Check and replace a fuse using the procedure below.

1. Remove the buckle (2) of the cover (1) at the bottom of the instrument panel to open the cover (1).

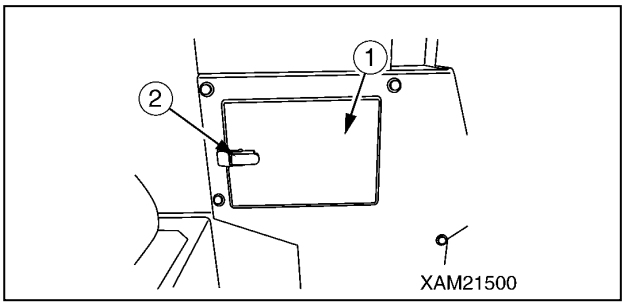

Fig. 5-25

2. Remove the cover (3) of the fuse box.

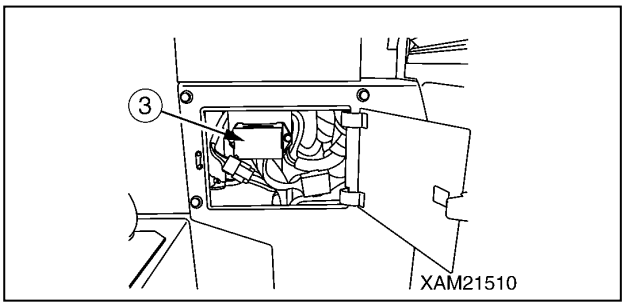

Fig. 5-26

3. Remove the fuse from the fuse box and check/replace the fuse.

4. Insert a new or checked fuse to the original position in the fuse box.

[FUSE CAPACITY AND CIRCUIT NAMES]

The table below shows the fuse system and its capacity.

Index	Capacity	Circuit Name
A	10 A	Main P.S.
B	10 A	PCB
C	10 A	Engine control
D	10 A	Solenoid valve
E	10 A	Horn, light
F	20 A	Moment limiter, remote control system
G	20 A	Spare
H	10 A	Spare
I	10 A	Spare

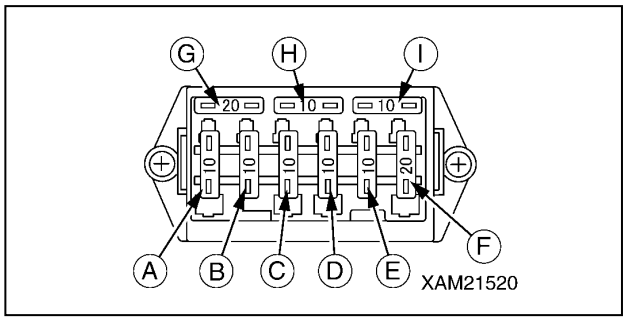

Fig. 5-27

https://truckmanualshub.com/

INSPECTION

Pre-Start and Post-Start Inspection Items

Inspection Item	Reference
Pre-Start - Visible Checks Before Starting Engine	
Check Around Crane	See "Check Around Crane" on page 5-23.
Check Wire Ropes	See "Check Wire Ropes" on page 5-23.
Check Hook Block	See "Check Hook Block" on page 5-23.
Check Around Outriggers	See "Check Around Outriggers" on page 5-24.
Check Undercarriage Parts	See "Check Undercarriage Parts" on page 5-24.
Check Around Travelling Dolly	See "Check Around Travelling Dolly" on page 5-24.
Check Around Engine	See "Check Around Engine" on page 5-24.
Check Around Travel and Crane Operation Section	See "Check Around Travel and Crane Operation Section" on page 5-24.
Pre-Start - Before Starting Engine	
Check / Refill Engine Coolant	See "Check / Refill Engine Coolant" on page 5-25.
Check / Add Engine Oil	See "Check / Add Engine Oil" on page 5-26.
Check / Add Fuel	See "Check / Add Fuel" on page 5-27.
Check / Clean Water Separator	See "Check / Clean Water Separator" on page 5-28.
Check / Clean Fuel Filter Pot	See "Check / Clean Fuel Filter Pot" on page 5-29.
Check / Add Hydraulic Oil	See "Check / Add Hydraulic Oil" on page 5-30.
Check / Refill Oil Level in Slewing Reduction Gear Case	See "Check / Refill Oil Level in Slewing Reduction Gear Case" on page 5-31.
Check / Refill Oil Level in Travelling Motor Reduction Gear Case	See "Check / Refill Oil Level in Travelling Motor Reduction Gear Case" on page 5-31.
Check / Clean Radiator and Oil Cooler Fins	See "Check / Clean Radiator and Oil Cooler Fins" on page 5-32.
Check Battery Charge Level	See "Check Battery Charge Level" on page 5-32
Post-Start - After Starting Engine	
Check Horn	See "Check Horn" on page 5-33.
Check Headlights	See "Check Headlights" on page 5-33.
Check Fuse Box for Damage	See "Check Fuse Box for Damage" on page 5-33.
Check Outrigger Display	See "Check Outrigger Display" on page 5-34.
Adjust Operation Seat	See "Adjust Operation Seat" on page 5-34.
As Required	
Replace Rubber Tracks	See "Rubber Tracks" on page 5-60.
Replace Winch Wire Rope	See "Winch Wire Rope - Removal" on page 5-66.
Check Wire Rope - Boom Telescope Extension	See "Wire Rope - Boom Telescope Extension" on page 5-72.

https://truckmanualshub.com/

Pre-Start Visible Checks

WARNING!

- **This machine has a diesel engine.**
  If it smells fuel around the engine, the fuel may be leaking. Carefully check the cracks on the fuel hose or fuel hose connections.
- **Buildup of combustibles and oil leakage around the hot engine section such as engine and muffler and around the battery can cause fire in the machine.**
  Carefully check around these areas. Should you find any abnormality, be sure to fix it or contact us or our sales service agency.

Check the items shown in this section as routine surveillance before starting the first work of every day.

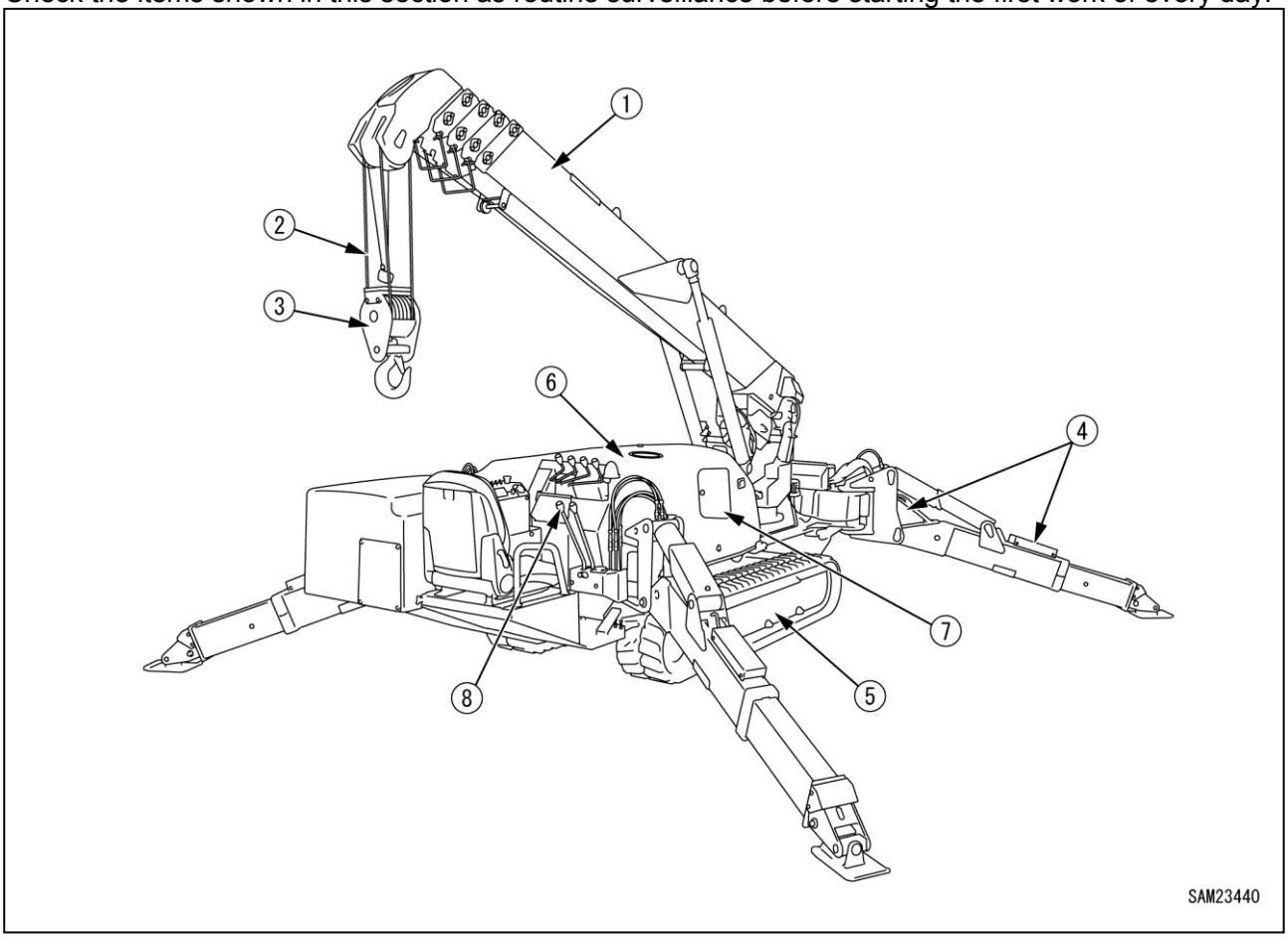

Fig. 5-28

https://truckmanualshub.com/

Crane

- Look around and below the boom and post and look for any oil leak or similar. Be especially careful to check up the derrick cylinder and lower part of the winch motor near the post. If you find any abnormality, repair.
- Check each part of the post for cracks, excessive deformation, contamination and others. In addition, check bolts, nuts, pins and piping joints for any looseness, drop, damage and other matters. Be especially careful to check for looseness of decelerator mounting bolt of the post, slewing ring or slewing device. If you find any abnormality, repair.
- Check each part of the boom for cracks, excessive deformation, contamination and others. In addition, check bolts, nuts, pins and piping joints for any looseness, drop, damage and other matters. Be especially careful to check for excessive abrasion and damage of the boom support pin or derrick support pin. If you find any abnormality, repair.
- Check for excessive damage and deformity of the over hoist weight wire rope of the over winding detector at the tip of the boom. If there is any abnormality, repair.
- Check for sagged electrical wire, loosened connection and trace of burns. If you find any abnormality, repair.
- Check if the boom angle limit switch works properly or not. If any abnormality is found, repair.

Wire Ropes

For more information on wire ropes, see "Wire Rope" on page 5-66.

- Check the wire ropes for damage, deformation, wear, twists, kinks, corrosion, etc. If you find any abnormality, replace
- Check the bound condition of the wire rope ends. If you find any loosened wire rope end, replace.
- Check for irregular winding of the wire ropes (wind drum). If you find any irregular winding, rewind.
- Check each section of wedge socket for cracks, bent, damage, and wear on support pins. If you find any abnormality, repair.
- Check each section of wedge socket for loose bolts and the support pin retaining plate, loose rope cloip, and loose rope wedge. If they are loose, retighten them.

Hook Block

- Verify that the wire rope latch (1) functions normally. If there is any abnormality, repair.

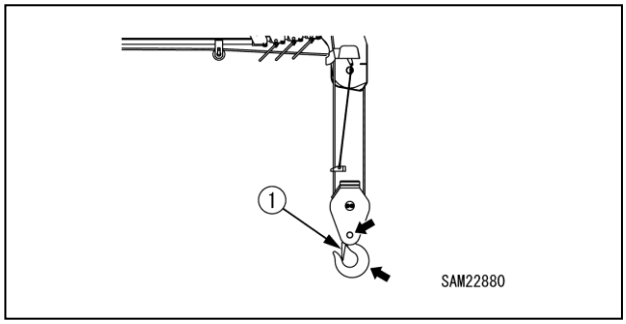

Fig. 5-29

- Rotate the hook and verify that the hook rotates smoothly and that trunnion does not emit any abnormal sound.
  If there is any abnormality, repair.
- Check the hook for any crack or excessive deformation.
  If there is any abnormality, repair.
- If dimension a between the punch marks punched on the hook became "105 mm or more" or the hook lower part dimension b became "49.5 mm or less", replace the hook.

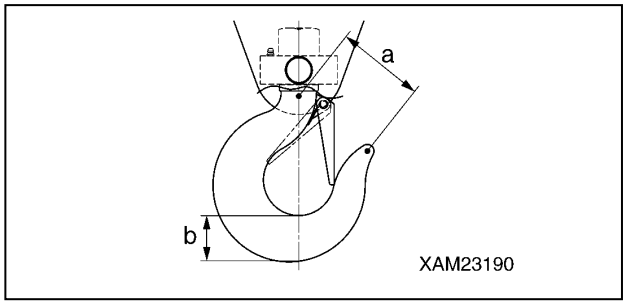

Fig. 5-30

https://truckmanualshub.com/

Outriggers

- Look below each of the outriggers and check for any oil leak or similar. Be especially careful to check below the outrigger cylinders. If you find any abnormality, repair.
- Check each of the rotaries, outriggers, holders and outrigger cylinders for cracks, excessive deformation, contamination and others. In addition, check bolts, nuts, pins and piping joints for any looseness, drop, damage and other matters. If you find any abnormality, repair.
- Check for sagged electrical wire, loosened connection and trace of burns. If you find any abnormality, repair.
- Pull out the position pin of each of the outriggers, rotate the relevant rotary and verify that the operation is smooth.
  If you find any abnormality, repair.

Undercarriage Parts

Check each of the frames, rubber tracks, rollers, idlers and sprockets for cracks, excessive deformation, contamination and others. In addition, check bolts, nuts and pins for any looseness, drop, damage and other matters. If you find any abnormality, repair.

Travelling Dolly

- Look around and below the machine and check bolts, nuts, pins and piping joints for any looseness, drop, damage and other matters. If you find any abnormality, repair.
- Look around and below the machine and look for any oil leak or similar. Be especially careful to check below the operation oil tank, travel/crane operation section and each travelling motor. If you find any abnormality, repair.
- Look around and below the Machine and check for breakage, excessive deformation, contamination and similar of lights such as the outrigger unset lamps and working status lamp. If you find any abnormality, repair.
- Look around and below the machine and check for sagged electrical wire, loosened connection and trace of burns. If you find any abnormality, repair.
- Check each of the frames, machinery covers, rear cover and other parts for cracks, excessive deformation, contamination and others. If you find any abnormality, repair.

Engine

- Check for fuel, oil or water leaking from the engine. If you find any abnormality, repair.
- Check the hot engine sections such as the engine muffler and around the battery for the buildup and deposit of combustibles such as dead leaves, paper wastes, dust, oil, and grease. If there is any, remove them.
- Check the starter, alternator, around battery and similar parts for sagged electrical cables, piping joints, and the trace of burn. If you find any abnormality, repair.

Travel and Crane Operation Section

- Verify that all of the operation levers, travelling levers, travelling lock lever and acceleration pedal operate smoothly.
  If you find any abnormality, repair.
- Check the moment limiter display and the monitor panel on the instrument panel for damages and dirtiness. If you find any abnormality, repair. If dirty, clean.
- Verify that all of the switches on the outrigger operation panel and instrument panel operate smoothly.
  If you find any abnormality, repair.
- Check for sagged electrical wire, loosened connection and trace of burns. If you find any abnormality, repair.

https://truckmanualshub.com/

Pre-Start Inspection - Before Starting Engine

Check the followings in this section without starting the engine and before starting the first work every day.

Check / Refill Engine Coolant

WARNING! Do not check or refill the coolant with the radiator cap removed. Always check and refill in the reserve tank. Heated coolant may spout, causing burns.

1. Stop the machine at levelled location.
2. See "OUTRIGGER SETTING" on page 4-36 and rotate the "Outrigger (1)" and "Outrigger (2)" outrigger rotaries outward.
3. Open the access hatch in the right-hand machinery cover.
4. Check the coolant level in the reserve tank (1) to be between "FULL" and "LOW".

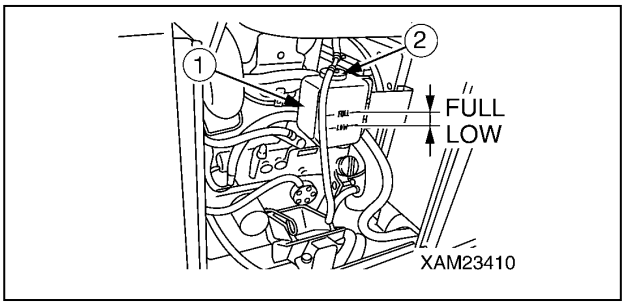

Fig. 5-31

5. If the coolant level is lower than the "LOW" level, use the following procedure to refill with tap water.
   (1) Remove the cap (2) of the reserve tank (1) and fill water from the filler opening to the level "FULL".
   (2) After refilling with coolant, securely install the cap (2) of the reserve tank (1).
6. If the reserve tank was empty, follow the steps below.
   (1) See "Removing Machinery Cover" on page 5-18 and remove the machinery cover.
   (2) Remove the radiator cap (5) and check the coolant level in the radiator.
   (3) If the coolant level in the radiator was low, check the radiator, radiator hose, and engine for water leakage.
   (4) Fill water from the radiator filler opening and securely install the radiator cap (5).
   (5) Remove the cap (2) of the reserve tank (1) and fill water from the filler opening to the level "FULL".
   (6) After refilling with the coolant, securely install the cap (2) of the reserve tank (1).
   (7) See "Installing Machinery Cover" on page 5-18 and install the machinery cover.

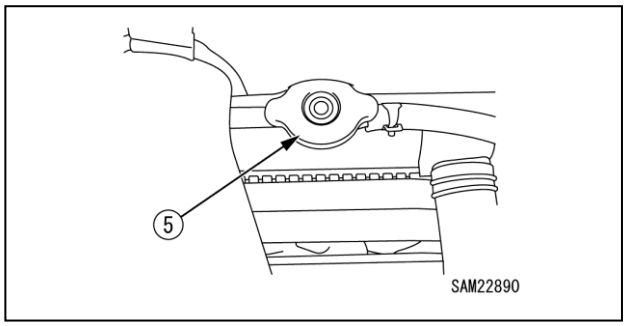

Fig. 5-32

7. Close the access hatch.
8. See "OUTRIGGER STOWING" on page 4-45 and stow the "Outrigger (1)" and "Outrigger (2)" outrigger rotaries.

https://truckmanualshub.com/

Check / Add Engine Oil

CAUTION: Securely install the oil level gauge and filler cap after checking the oil level and refilling with the oil. If the oil level gauge falls during the operation, the hot oil spouts out of the pan, causing burns.

CAUTION:
- **See "LUBRICATING OIL" on page 5-14 for which oil to be used. Using other oil than those specified may shorten the life of the engine. Be sure to refill with the specified oil.**
- **Keep the engine oil at the appropriate level.**
- **The oil level being too high will result in too much oil consumption and this tends to increase the oil temperature, deteriorating the oil faster. The oil level being too low may burn out the engine.**
- **Be careful not to let any foreign substance go into the filler opening when refilling with the oil.**

1. Stop the machine at levelled location.
2. See "OUTRIGGER SETTING" on page 4-36 and rotate the "Outrigger (1)" and "Outrigger (2)" outrigger rotaries outward.
3. Open the access hatch in the right-hand machinery cover.

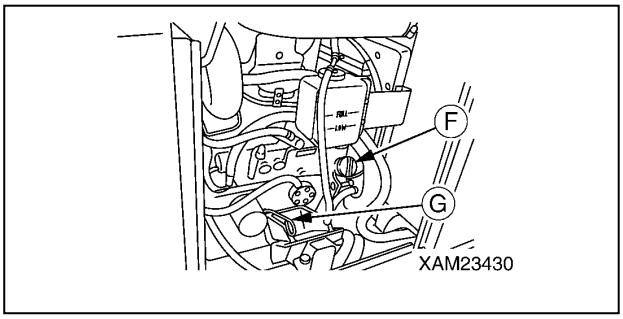

Fig. 5-33

4. Pull the oil level gauge (G) out and wipe the oil with a disposable cloth.
5. Insert the oil level gauge (G) into the gauge guide and pull it out.
6. If the oil level is between the "H" mark and "L" mark on the oil level gauge (G), the oil level is normal.

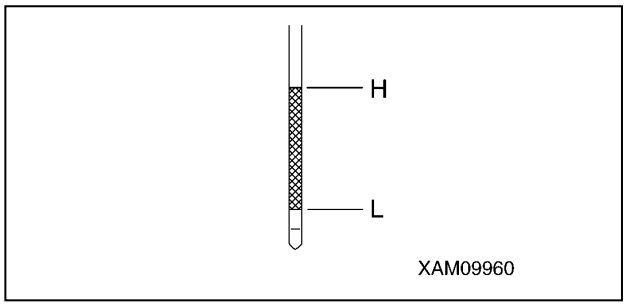

Fig. 5-34

7. If the oil level is lower than the "L" mark, remove the filler cap (F) and refill with the engine oil from the filler opening.

NOTICE: Refill with the engine oil so that the oil level will be in the middle of the "H" and "L" marks on the oil level gauge (G).

8. After refilling with the oil, securely install the oil level gauge (G) and the filler cap (F).
9. Close the access hatch.
10. See "OUTRIGGER STOWING" on page 4-45 and stow the "Outrigger (1)" and "Outrigger (2)" outrigger rotaries.
11. See "Operation Engine Hood" and close the engine hood.

https://truckmanualshub.com/

Check / Add Fuel

DANGER!

- **For more information on the which oil to be used, see "LUBRICATING OIL" on page 5-14.**
- **Be extremely careful with fire such as cigarette.**
- **Be sure to stop the engine when refuelling. If refuelling was done with the engine in operation, the fuel spilled on the section where it gets hot such as muffler can catch fire.**
- **Over-refilling may cause fuel spill. Refuel to the level slightly lower than the specified upper limit level.**
  If the fuel spills, be sure to thoroughly wipe it off.
- **Be careful not to let any foreign substance go into the filler opening when refuelling.**
- **Be sure to close the tank cap after refuelling.**

1. Turn the Starter Switch to the ON position.

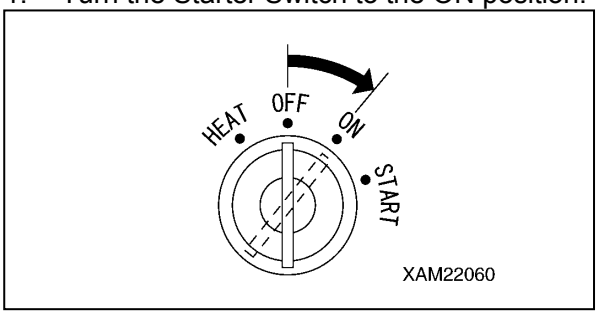

Fig. 5-35

2. Looking at the fuel gauge on the monitor panel, check if the fuel is filled to almost full (around "F").

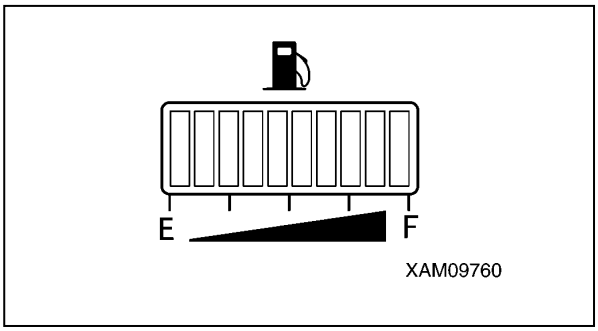

Fig. 5-36

3. If the fuel level is low, remove the tank cap (F) on the top of the fuel tank and refuel from the filler opening while watching the fuel gauge.

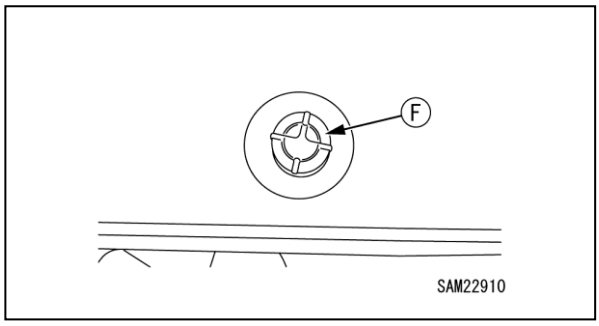

Fig. 5-37

4. After refuelling, turn the tank cap (F) to securely close it.

NOTICE: Fill the fuel tank to full after finishing the work for the day.

https://truckmanualshub.com/

Check / Clean Water Separator

WARNING!

- **The water separator pot has fuel (diesel oil) inside. Be extremely careful of fire such as cigarette when cleaning the water separator pot.**
- **If the fuel spills when the water separator pot is removed, thoroughly wipe it off.**

CAUTION:

- **Water or dust accumulated inside the water separator pot will cause engine failure. Check inside the pot and remove any water or dust accumulated inside.**
- **If water remains in the water separator pot, it is assumed that much water is also mixed in the fuel tank. See "Drain Contaminant Water/Deposits in Fuel Tank" on page 5-38 and eliminate water and dust mixed into the fuel tank.**

1. Stop the machine at levelled location.
2. See "OUTRIGGER SETTING" on page 4-36 and rotate the "Outrigger (1)" and "Outrigger (2)" outrigger rotaries outward.
3. Open the access hatch in the right-hand machinery cover.
4. Check the water separator pot (1) for any water or dust in the pot and verify if the red float (2) in the pot has not come up from the bottom.
   The red float (2) in the pot (1) coming up indicates that the water has mixed in.

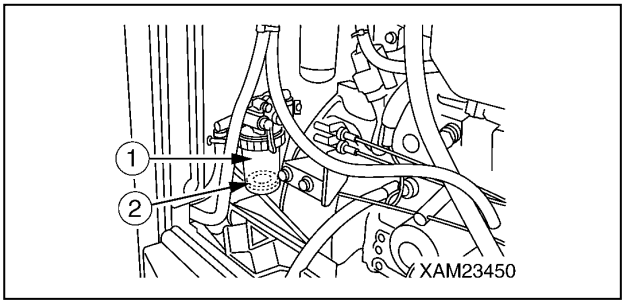

Fig. 5-38

5. If there is water accumulated in the pot (1), clean the inside of the pot using the following procedure.
   (1) Raise the fuel lever (3) of the head (5) section to horizontal position (close) to shut off the fuel.
   (2) Turn the retainer ring (4) of the head (5) section counterclockwise (left) to loosen, then remove the pot (1) from the head (5) section.
   (3) Drain the fuel and water out of the pot (1).
   (4) Clean the pot (1) with diesel, and spray the compressed air (0.20 to 0.29 MPa {2 to 3 kg/cm^2}) inside to scrape off the dusts from the surface.
   (5) Set the pot (1) to the head (5) section, then turn the retainer ring (4) clockwise (right) to tighten.
   (6) Lower the fuel lever (3) of the head (5) section down to the vertical position (open) to open the fuel circuit.

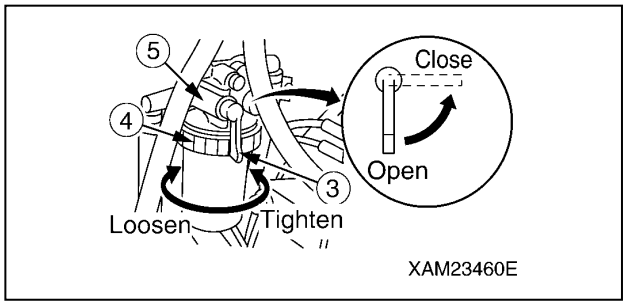

Fig. 5-39

6. Close the access hatch.
7. See "OUTRIGGER STOWING" on page 4-45 and stow the "Outrigger (1)" and "Outrigger (2)" outrigger rotaries.

https://truckmanualshub.com/

Check / Clean Fuel Filter Pot

WARNING!

- **The fuel filter pot has fuel (diesel oil) inside. Be extremely careful of fire such as cigarette when cleaning the water separator pot.**
- **If the fuel spills when the fuel filter pot is removed, thoroughly wipe it off.**

CAUTION:

- **Water or dust accumulated inside the fuel filter pot will cause engine failure. Check inside the pot and remove any water or dust accumulated inside.**
- **If water remains in the fuel filter pot, it is assumed that much water is also mixed in the fuel tank. See "Drain Contaminant Water/Deposits in Fuel Tank" on page 5-38 and eliminate water and dust mixed into the fuel tank.**

1. Stop the machine at levelled location.
2. See "OUTRIGGER SETTING" on page 4-36 and rotate the "Outrigger (1)" and "Outrigger (2)" outrigger rotaries outward.
3. Open the access hatch in the right-hand machinery cover.
4. Inspect the fuel filter pot (1) and check for water or dust accumulated inside the pot, and also for the dust or similar object blocking the element.

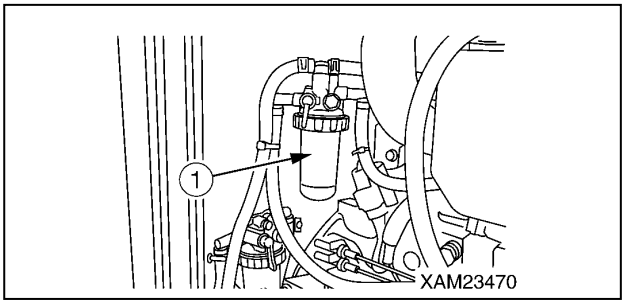

Fig. 5-40

5. If water, dust or similar object is accumulated inside the pot (1), clean the inside of the pot using the following procedure.
   (1) Raise the lever (2) of the head (4) section to horizontal position (close) to shut off the fuel.
   (2) Turn the retainer ring (3) of the head (4) section counterclockwise (left) to loosen, then remove the pot (1) from the head (4) section.
   (3) Drain the fuel and water out of the pot (1).
   (4) Clean the pot (1) and element with diesel, and spray the compressed air (0.20 to 0.29 MPa {2 to 3 kg/cm^2}) inside to scrape off the dusts from the surface.
   (5) Set the pot (1) to the head (4) section, then turn the retainer ring (3) clockwise (right) to tighten.
   (6) Lower the fuel lever (2) of the head (4) section down to the vertical position (open) to open the fuel circuit.

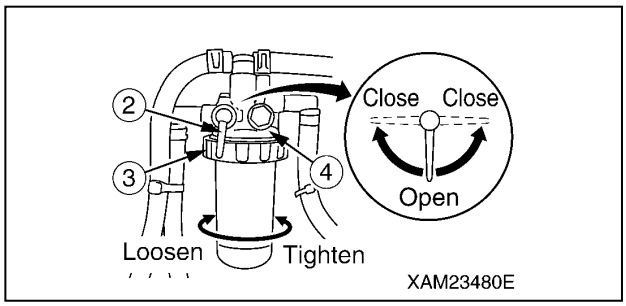

Fig. 5-41

6. Close the access hatch.
7. See "OUTRIGGER STOWING" on page 4-45 and stow the "Outrigger (1)" and "Outrigger (2)" outrigger rotaries.

https://truckmanualshub.com/

Check / Add Hydraulic Oil

WARNING!

- **The oil may spout out when the cap of the hydraulic oil tank is removed.**
  Turn the cap slowly to let the inner pressure escape before removing.
- **Do not refill with the oil to the level higher than the "H" (upper limit) of the level gauge. Too much oil may cause the oil to spout out of the air breather during travelling or crane operation, causing burns.**
- **Be careful not to let dust go in from the filler opening when refilling with oil.**
- **Securely close the tank cap after refilling with the oil.**
  The tank cap may fall, and the hot oil may spout out, causing burns.

CAUTION:

- **For more information on the which oil to be used, see "LUBRICATING OIL" on page 5-14.**
- **Be sure to put the machine in the travelling posture when checking the oil level.**
  Checking the oil level in the working posture will cause overfilling since the oil in the cylinders has not returned to the tank.
- **Be careful not to let dust go in from the filler opening when refilling with oil.**

1. Stop the machine at levelled location.
2. Observe the oil level gauge (G) in the left-hand machinery cover to check that the oil level is between the "H" and "L" levels.

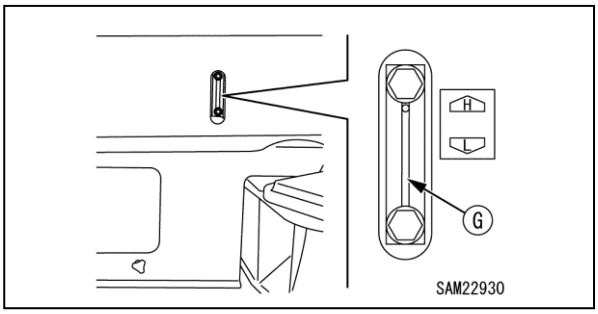

Fig. 5-42

3. If there is not sufficient oil, refill with the hydraulic oil using the following procedure.
   (1) See "OUTRIGGER SETTING" on page 4-36 and rotate the outriggers outward.
   (2) See "Removing Machinery Cover" on page 5-18 and remove the machinery cover. (3) Drain the fuel and water out of the pot (1).
   (3) Remove the filler cap (F) on the top of the hydraulic oil tank.

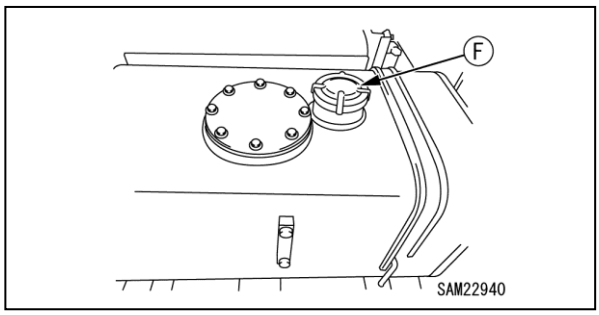

Fig. 5-43

   (4) Refill with the hydraulic oil from the filler opening (F) while looking at the oil level gauge (G).
   (5) Securely close the filler cap (F) after refilling with oil.
   (6) See "Installing Machinery Cover" on page 5-18 and install the machinery cover.
   (7) See "OUTRIGGER STOWING" on page 4-45 and rotate the outriggers inward to stow them.

https://truckmanualshub.com/

Check / Refill Oil Level in Slewing Reduction Gear Case

CAUTION:

- **For more information on the which oil to be used, see "LUBRICATING OIL" on page 5-14.**
- **Use seal tape, etc. at the thread of the filler plug to stop the oil leak and securely tighten the plug after refilling with the oil.**

1. Stop the machine at levelled location.
2. Go under the machine and check the site gauge (G) for checking oil level in the slewing reduction gear case. Verify that the oil is filled up to the centre of the site gauge (G).

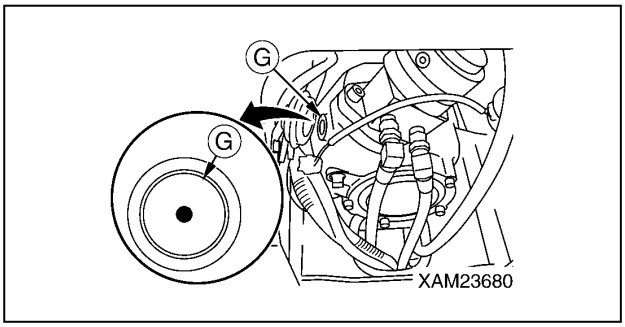

Fig. 5-44

3. If there is not sufficient oil, refill with the gear oil using the following procedure.
   (1) See "OUTRIGGER SETTING" on page 4-36 to rotate the rotary of the "outrigger (2)" outward.
   (2) Remove the filler opening plug (F) at the back of the post and pour in oil from the filler opening.

NOTICE: Pour in the oil to the centre of the site gauge (G) from the filler opening.

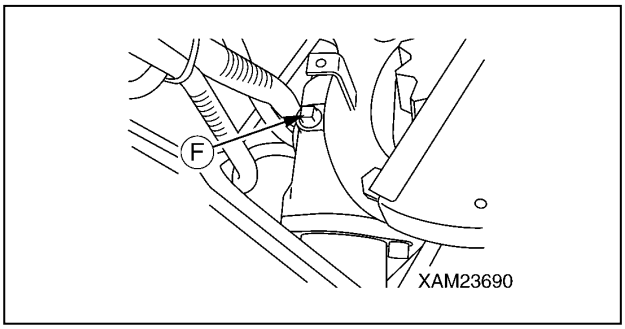

Fig. 5-45

   (3) After refilling with the oil, install the filler plug (F) and securely tighten the plug.
   (4) See "OUTRIGGER STOWING" on page 4-45 and rotate the rotary of the "outrigger (2)" inward and stow.

Check / Refill Oil Level in Travelling Motor Reduction Gear Case

CAUTION:

- **For more information on the which oil to be used, see "LUBRICATING OIL" on page 5-14.**
- **Use seal tape, etc. at the thread of the oil level check plug to stop the oil leak and securely tighten the plug after refilling with the oil.**

1. Move the machine forward and backward so that one of the two drain plugs (P) of the travelling motor reduction gear case will come right under.
2. Remove the oil level check plug (G) of the travelling motor reduction gear case to check if the oil will come out of the plug hole.
3. If there is no sufficient oil, remove the top drain plug (P) and pour in gear oil from the plug hole.

NOTICE: Pour in the gear oil until the oil comes out of the oil level check plug (G).

4. Install the oil level check plug (G) and upper drain plug (P) and securely tighten them after checking and refilling with the oil.

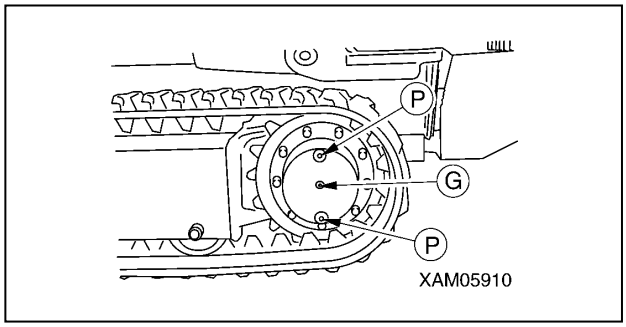

Fig. 5-46

https://truckmanualshub.com/

Check / Clean Radiator and Oil Cooler Fins

WARNING! The dusts fly in all directions when the compressed air is used. Always wear goggles and mask.

CAUTION:

- **To prevent damage on the fins during the use of the compressed air, keep the pressure of the compressed air to 0.20 -0.29 MPa (2 – 3 kg/cm^2) and apply it away from the fins.**
  Damage on the fins will cause water leakage or overheating.
- **At the dusty site, check the fins every day and clean as needed.**

1. Stop the machine at levelled location.
2. See "OUTRIGGER SETTING" on page 4-36 and rotate the outriggers outward.
3. See "Removing Machinery Cover" on page 5-18 and remove the machinery cover.
4. Apply the compressed air (0.20 to 0.29 MPa {2 to 3 kg/cm^2}) to the oil cooler (3) and radiator (4) to remove the mud and dusts clogged in the fins.

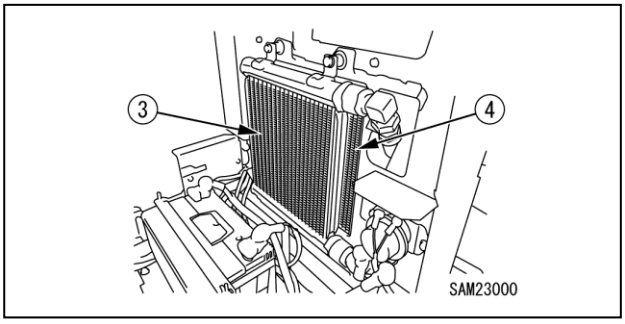

Fig. 5-47

5. See "Installing Machinery Cover" on page 5-18 and install the machinery cover.
6. See "OUTRIGGER STOWING" on page 4-45 and rotate the outriggers inward to stow them.

Check Battery Charge Level

WARNING!

- **The electrolyte generates combustible gas and presents explosion hazard. Do not bring any fire close to the electrolyte.**
- **The electrolyte is a hazardous substance. Avoid contact with eyes or skin. Should it come into the contact with eyes or skin, wash the affected area with plenty of water and consult a physician.**

Check the status by the colour displayed on the meter on the top of the battery.

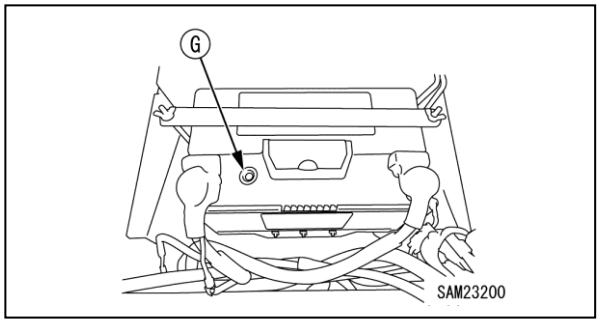

Fig. 5-48

The meter indications are as follows:

Green: Normal, with no problems.
Black: Charge is low. Recharge the battery.
White: Inspect the exterior.

NOTICE:
If the meter indication remains black even after the battery has been recharged, the battery may be at the end of its life cycle and therefore should be replaced.
If the meter indication is white, check that the casing is not damaged and there is no fluid leakage. Replace if it is damaged.
Even if no exterior damage is visible, it may be damaged internally or it may be at the end of its life cycle and therefore should be replaced.

https://truckmanualshub.com/

Post-Start Inspection - After Starting Engine

Check Horn

1. Turn the starter switch to the "ON" position and check the followings.

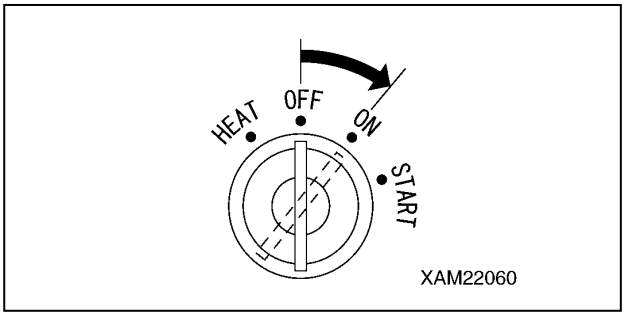

Fig. 5-49

2. Press the horn switch to verify that the horn sounds.

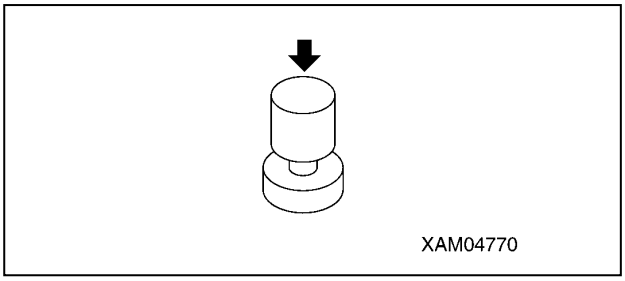

Fig. 5-50

Check Working Lights

1. Turn the starter switch to the "ON" position and check the followings.

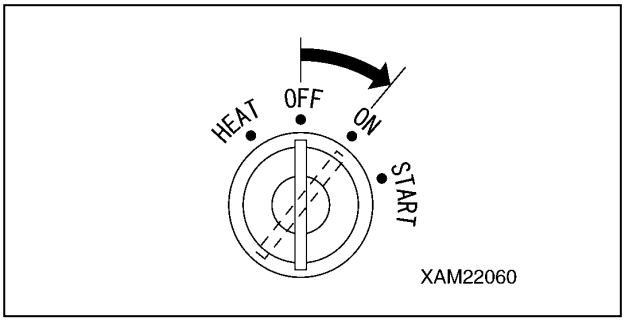

Fig. 5-51

2. Push the working light switch in the back and verify that the pilot lamp of the switch section and the working light on front of the machine lights up.

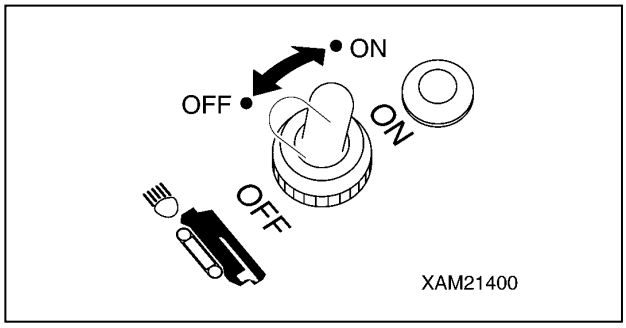

Fig. 5-52

Check Fuse Box for Damage

WARNING! If fuses are brown frequently or if you find the trace of a short circuit created in the electrical wiring, be sure to find the cause and fix the problem.

Check the fuse at the lower section of the instrument panel for damage and meltdown and if the fuse of specified capacity is being used.

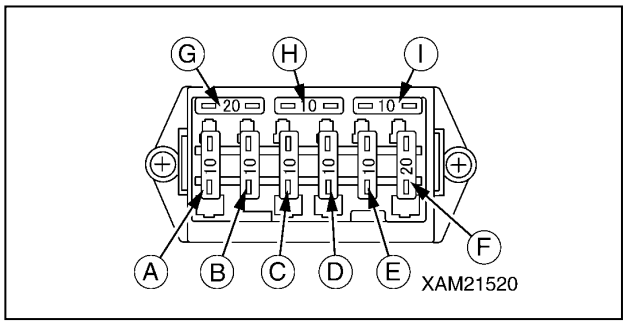

Fig. 5-53

https://truckmanualshub.com/

Check Outrigger Display

1. Turn the starter switch to the "ON" position.

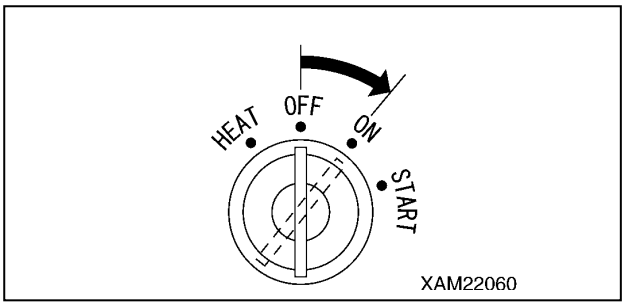

Fig. 5-54

2. Operate the work selector switch on the outrigger operation panel to the "Outrigger" position.

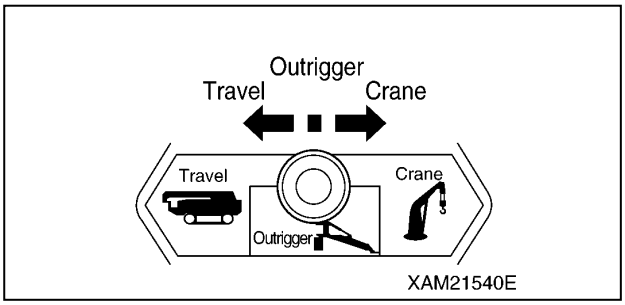

Fig. 5-55

3. Verify that the lamps on the outrigger display light up and go off in the order shown below.
   (1) All of the boom stowing lamp (1), extension lamps (2), and setting lamps (3) light up in green for 2 seconds, and go off.
   (2) The boom stowing lamp (1) (green) lights up, and at the same time, all the extension lamps (2) and setting lamps (3) flash in red.

NOTICE: If a lamp on the outrigger display does not light up for 2 seconds in green, the outrigger display may be faulty.
Contact us or our sales service agency.

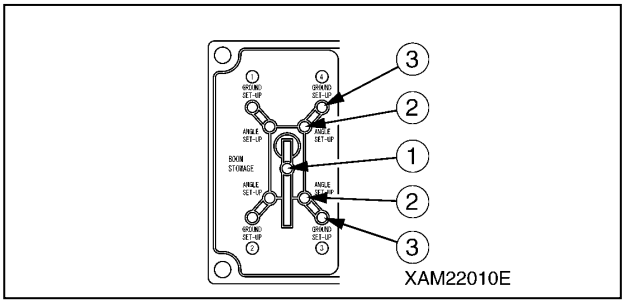

Fig. 5-56

4. Verify that the outrigger un-set warning lamp flashes and the red of the working status lamp lights up.

Adjust Operation Seat

WARNING!

- **Adjust the operation seat before operation or when the operator changes.**
- **Press your back against the back of the operation seat and adjust the seat so that you can fully step on the acceleration pedal.**

Forward/Backward Adjustment of the Seat

1. While pushing the slide adjusting lever (1) to the left, set the seat to the desired position.
2. Release your hand from the slide adjusting lever (1).

NOTICE: The forward/backward slide adjustment distance is 120 mm in 6 steps.

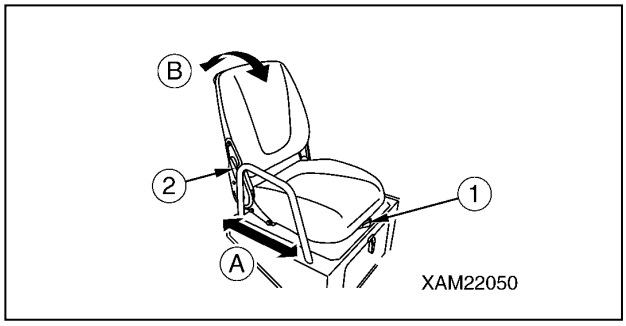

Fig. 5-57

Reclining Adjustment

CAUTION: Watch the space in the back while adjusting the angle when reclining the backseat backward.

1. While pushing the reclining adjusting lever (2) forward, set the backseat to the desired angle.
2. Release your hand from the reclining adjusting lever (2).

NOTICE: The reclining adjustment angle is 75 degrees in 7 steps forward and 23 steps in backward.

https://truckmanualshub.com/

Check Over Winding Detector Operation

Over wind the hook block (1), and raise the hook with winch and extend the boom, and verify that the buzzer sounds and an audible message saying "Over hoisted" is spoken, the hook raising operation and boom extending operation stop.

If these events do not happen, the over winding detector may be faulty.

If the alarm does not stop, the over winding detector may be faulty or the circuit may be open.

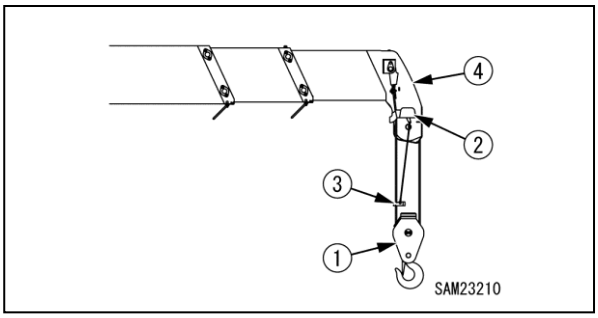

Fig. 5-58

NOTICE: If you do not hear the message from the speaker, check the volume of the remote control system.

Check Moment Limiter Operation

WARNING! If you find any abnormality with the moment limiter, immediately contact us or our sales service agency.

1. Turn the starter switch to the "ON" position.
2. Check with the working status lamp. The red of the lamp lights up for 2 seconds and then the green lights up.
3. Check the moment limiter display unit. Verify that no error code is displayed at the "RATED TOTAL LOAD" display on the display panel.
4. Start the engine and operate the crane as follows to verify if the moment limiter properly displays the value.

Crane Operation and Displayed Parameter	Value Displayed on Moment Limiter
Displayed "boom length" with the boom length at minimum	3.7 m
Displayed "boom length" with the boom length at maximum	12.5 m
Displayed "working radius" with the boom length of "5.9 m" (2-row booms) and boom angle of "57°"	3.0 ± 0.1 m
Displayed "ACTUAL LOAD" when the weight of the known weight was hoisted • Must be equal to the total weight of weight + rigging • Note that it may show some errors depending on the boom conditions.	Actual load

5. Operate the crane until the moment limiter display values indicate the boom length is "5.9 m" (booms (1) + (2)) and boom angle is "57 degrees", then measure the "boom angle" and "working radius.
   If the measured value(s) differ from the moment limiter display value, contact us or our sales agency.

https://truckmanualshub.com/

PERIODIC MAINTENANCE

Periodic Maintenance Schedule

System	Operation	Initial			Periodic				
		10	50	250	50	250	500	1000	1500
Machine	Grease machine units	X			X				
Engine Oil	Replace engine oil		X			X			
Alternator Belt	Check/Adjust Belt tension		X			X			
Filter	Replace engine oil filter cartridge					X			
Hydraulic	Replace hydraulic oil return filter		X				X		
	Replace hydraulic oil suction filter		X				X		
	Replace oil in hydraulic oil tank		X					X	
Slewing Gearcase	Replace oil in slewing reduction gearcase			X				X	
Winch Gearcase	Replace oil in winch reduction gearcase			X				X	
Travel Gearcase	Replace oil in travelling motor reduction gearcase			X		X		X	
	Check/Refill oil in travelling motor reduction gearcase					X			
Fuel	Drain contaminant water/deposits in fuel tank					X			
	Replace fuel filter						X		
	Check/Clean/Test fuel injector								X
Engine Air Cleaner	Check/Clean air cleaner element					X			
	Replace air cleaner element						X		
Inlet Valve and Exhaust Valve	Inspect/Adjust inlet valve and exhaust valve clearance							X	
Engine Coolant	Coolant Replacement and Internal Cleaning							X	
Crankcase Breather	Check crankcase breather								X
Water Separator	Drain Contaminant Water/Deposits in Water Separator				X				

Refer to the engine operation manual for details on engine.

https://truckmanualshub.com/

Periodic Maintenance Procedure

Initial 10 Hour Maintenance

The following maintenance should be performed after 10-hour operation, limited to the first maintenance of a new machine.

- **Greasing Machine Units**

See "Grease Machine Units" on page 5-39.

Initial 50 Hour Maintenance

The following maintenance should be performed after 50-hour operation, limited to the first maintenance of a new machine.

- **Replacement Engine Oil and Oil Filter**

See "Replace Engine Oil and Oil Filter" on page 5-41.

- **Oil Replacement in Hydraulic Oil Tank**

See "Replace Oil in Hydraulic Oil Tank" on page 5-51.

- **Replacement Hydraulic Oil Return Filter**

See "Replace Hydraulic Oil Return Filter" on page 5-46.

- **Replacement Hydraulic Oil Suction Filter**

See "Replace Hydraulic Oil Suction Filter" on page 5-47.

- **Checking / Adjustment Alternator Belt Tension**

See "Check / Adjust Belt Tension" on page 5-42.

Initial 250 Hour Maintenance

The following maintenance should be performed after 250-hour operation, limited to the first maintenance of a new machine.

- **Oil Replacement Slewing Reduction Gear Case**

See "Replace Oil in Slewing Reduction Gear Case" on page 5-52.

- **Oil Replacement Winch Motor Reduction Gear Case**

See "Replace Oil in Winch Reduction Gear Case" on page 5-53.

- **Oil Replacement Travelling Motor Reduction Gear Case**

See "Replace Oil in Travelling Motor Reduction Gearcase" on page 5-54.

https://truckmanualshub.com/

Maintenance Every 50 Hours

Drain Contaminant Water/Deposits in Water Separator

WARNING!

- **The water separator pot has fuel (diesel oil) inside. Be extremely careful of fire such as cigarette when cleaning the water separator pot.**
- **If the fuel spills when the water separator pot is removed, thoroughly wipe it off.**

CAUTION: Water or dust accumulated inside the water separator pot will cause engine failure. Check inside the pot and remove any water or dust accumulated inside.

If water remains in the water separator pot, too much water may be mixed in the fuel tank. See "Maintenance Every 250 Hours" and eliminate water and dust mixed into the fuel tank.

1. Place the machine on a level surface.
2. See "OUTRIGGER SETTING" on page 4-36 and rotate the outriggers outward.
3. See "Removing Machinery Cover" on page 5-18 and remove the machinery cover.
4. Set the fuel lever (3) on the water separator pot (1) to a horizontal position (Close position) to stop fuel supply.
5. Turn the retaining ring (4) counterclockwise (left) to loosen it, and remove the water separator pot (1).
6. Clean the inside of the pot (1) and element with light oil. Blow dry compressed air on the inside of the pot at 0.20 to 0.29MPa (2 to 3kg/cm^2) to remove impurities from the internal surface.
7. Put the pot (1) in place, and turn the retaining ring (4) clockwise (right) to tighten it.
8. Set the fuel lever (3) to a vertical position (Open position).

NOTICE: Wipe off fuel completely if spilled.

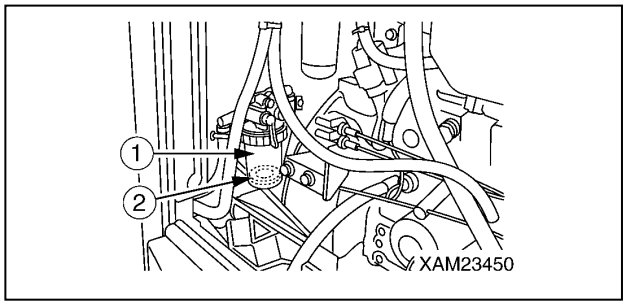

Fig. 5-59

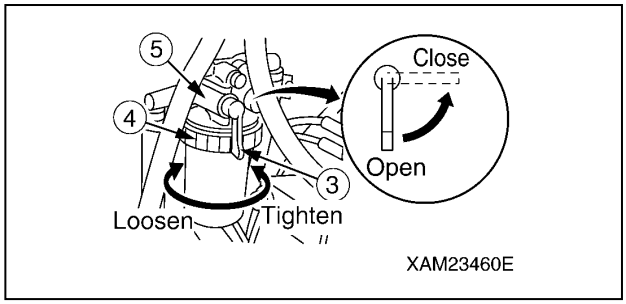

Fig. 5-60

9. Use the following procedure for air bleed of the fuel system.

(1) Turn ON the starter switch to supply fuel, and wait until the pot (1) is filled up.

(2) Upon fill-up of the pot (1), turn OFF the starter switch.

NOTICE: Ensure that a red float (2) in the pot remains on the bottom. If the red float (2) is raised, water is present in fuel.

10. See "Installing Machinery Cover" on page 5-18 and install the machinery cover.
11. See "OUTRIGGER STOWING" on page 4-45 and rotate the outriggers inward to stow them.

https://truckmanualshub.com/

Grease Machine Units

CAUTION:

- **Grease type varies with greasing points. Failure to grease properly may cause the machine to shorten its useful life. See the following table for grease types.**
- **Greasing a new machine is required once every 10 hours until the machine attains the first 100 hours of operation that initial fit emerges.**

- Use proper grease specified below according to the greasing points.

№	Greasing point		Grease type
1	Greasing of the boom mounting pin	1 place	Lithium grease
2	Greasing of the boom lift cylinder bottom mounting pin	1 place	
3	Greasing of the boom lift cylinder rod mounting pin	1 place	
4	Greasing of the outrigger rotary shaft	4 places	
5	Greasing of the mounting pin of the outrigger grounding cylinder bottom	4 places	
6	Greasing of the mounting pin of the outrigger grounding cylinder rod	4 places	
7	Greasing of the slewing gear	1 place	
8	Greasing of the hook block	1 place	
9	Greasing of the boom slide plate	8 places	Neo grease (grease for boom)
10	Greasing of both sides and bottom of a boom	Each boom	
11	Greasing of the boom telescoping wire rope	2 pieces	Rope oil
12	Greasing of the winch wire rope	1 piece	

1. With the use of the grease gun, grease the greasing points (No.1 to 9) specified in the above table through corresponding grease plugs. (See the following page)
2. Wipe off old grease squeezed out after greasing.
3. Place the outriggers when greasing the outrigger cylinders.

4. lace the boom derricking lever in the "Raise" position (pull it toward you) to raise the boom slightly for greasing the boom lift cylinder mounting pin and slide plate that is located on top of the boom.
5. Place the boom telescoping lever in the "Extend" position (push it toward the front) to extend the boom for greasing both sides and bottom of the boom and wire rope.
6. Apply red rope grease to prevent wire rope abrasion and rust formation.
   With the rope surface cleaned, grease the rope with a brush.

https://truckmanualshub.com/

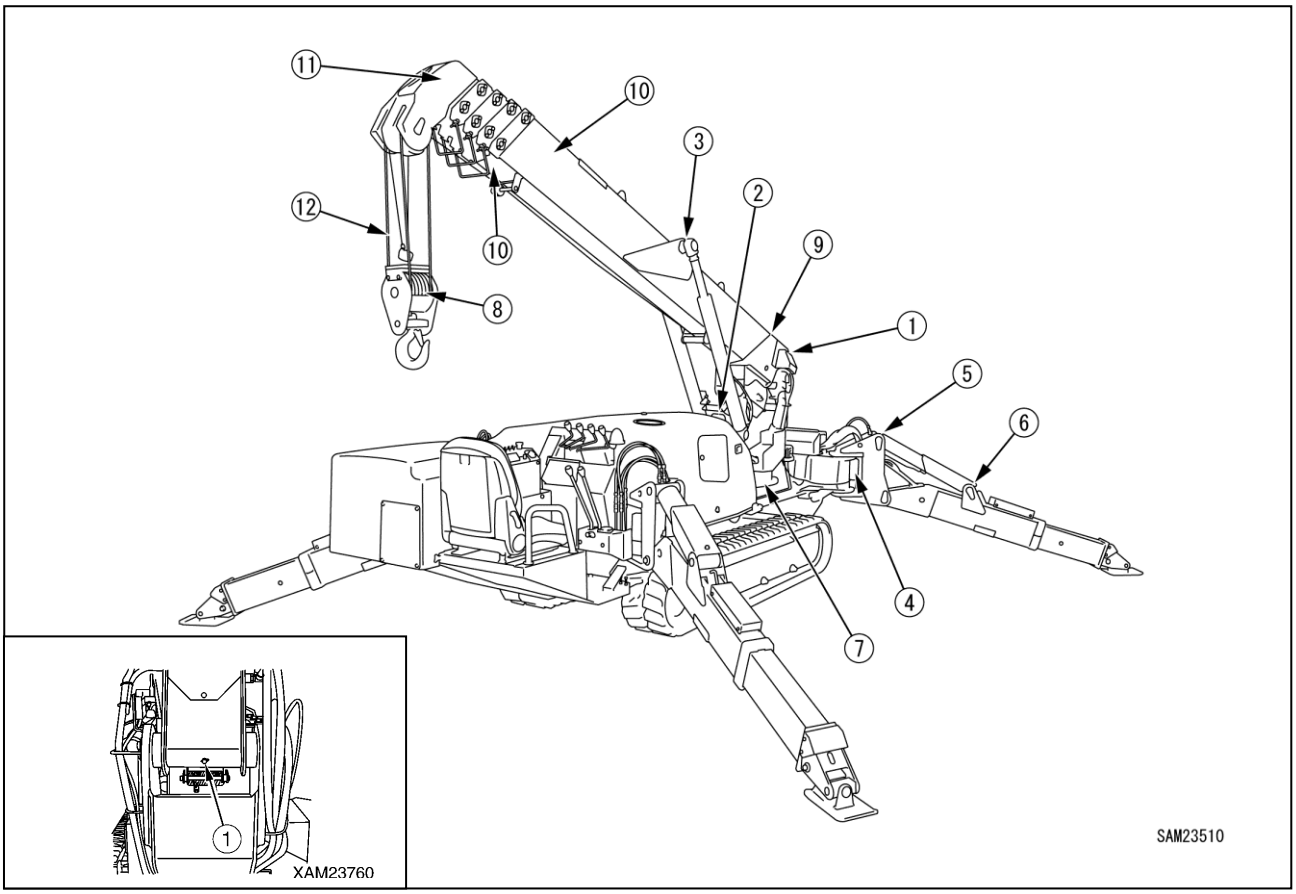

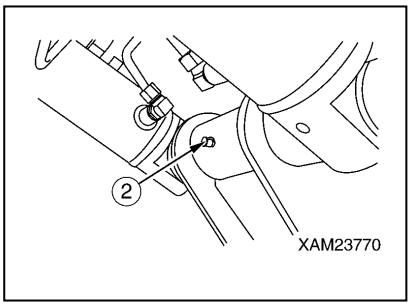

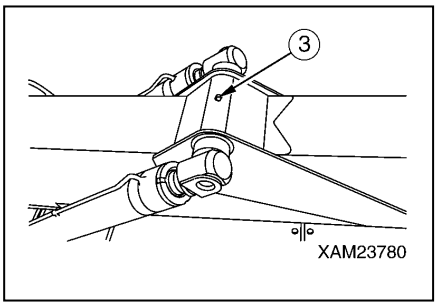

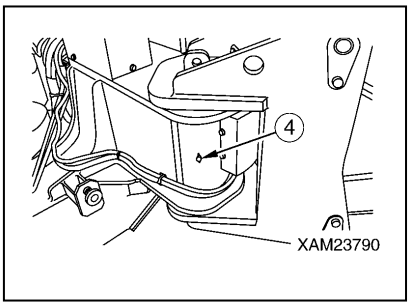

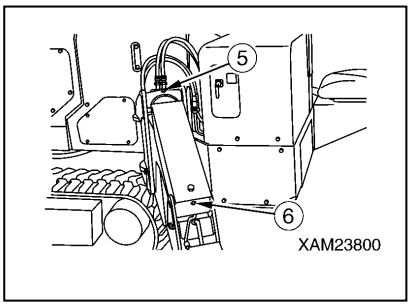

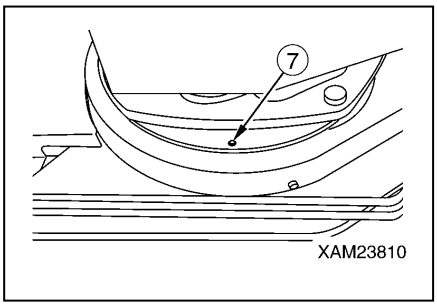

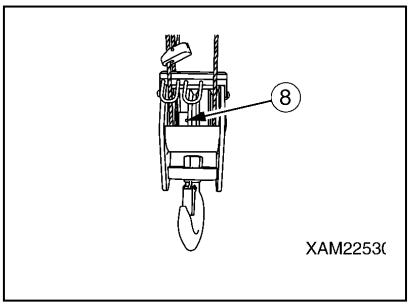

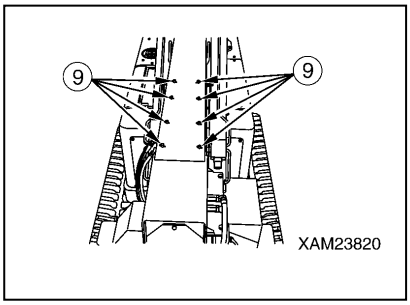

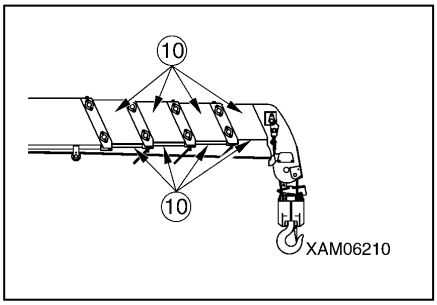

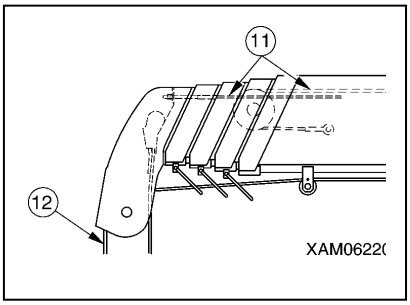

Fig. 5-61

https://truckmanualshub.com/

Maintenance Every 250 Hours

Perform this maintenance in tandem with maintenance every 50 hours.

Replace Engine Oil and Oil Filter

WARNING!

- **•he drain plug of the engine oil pan is located directly underneath the machine. Place the outriggers and raise the machine 50 mm from the ground for draining engine oil.**
  Insert square timbers between both rubber track and the ground to gain stability for safety assurance.
- **Make sure the oil level gauge is secured properly after inspection and replenishment of the oil. Potential fall of the oil level gauge during operation may occur if disregarded, which could cause boiling oil to gush that results in burns.**
- **All the parts will be at elevated temperatures immediately after engine operation, which urges you not to replace oil and the filter cartridge.**
  Always perform replacement with the engine cold to touch.

CAUTION:

- **Ensure that no old gasket adheres to the filter stand. Potential oil leak may occur if old gasket remains on the stand.**
- **Be sure to use oil specified in section "Use of Lubricating Oil according to Temperatures" in Inspection and Maintenance. Failure to use proper oil may cause the engine to shorten its useful life. Always use the specified oil for replenishment.**
- **The engine oil must be maintained at a proper amount.**
- **The complete draining of oil is disabled if the engine becomes cold completely. Oil draining is allowed when the engine is cold to touch.**
- **Keep impurities out of the filler cap when replenishing oil.**

- Oil drain pan: An 8-L container
- Quantity of oil for replacement: 3.1L

1. Place the machine on a level surface.
2. See "OUTRIGGER SETTING" on page 4-36 to set the outriggers and raise the rubber track for about 50 mm from the ground.

WARNING! Check the following before crawling under the machine:

- **Ensure that the outriggers are extended at the maximum.**
- **Visually check the level to make sure the machine in a horizontal position.**
- **Insert solid blocks between the crawler and the ground to keep the machine raised.**

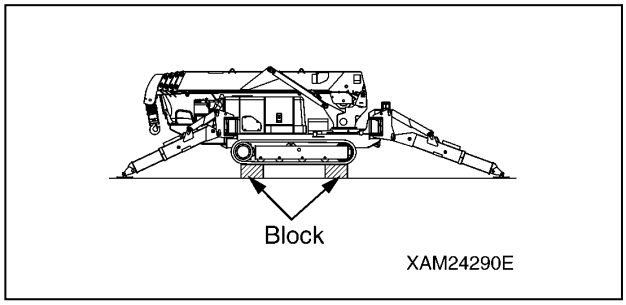

Fig. 5-62

3. Crawl under the machine and place a drain pan directly underneath the drain plug (P) at the bottom of the engine oil pan to receive drained oil.

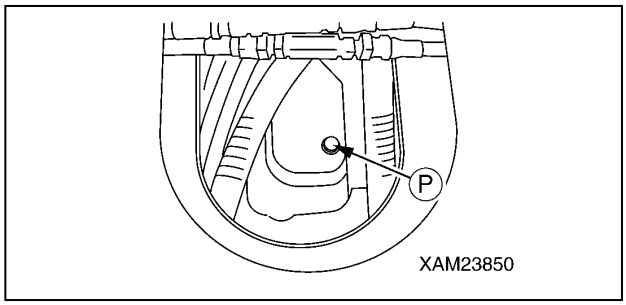

Fig. 5-63

4. See "Removing Machinery Cover" on page 5-18 and remove the machinery cover.
5. Remove the drain plug (P) slowly to drain the oil, keeping from contact with draining oil.
6. Check the drained oil. If check finds a considerable amount of metal powder and foreign objects, contact our sales service agency.
7. Put in the drain plug (P) and secure it.

https://truckmanualshub.com/

8. Turn the filter cartridge (3) counterclockwise (left) with the use of the filter wrench to remove it.

NOTICE: The oil is to be drained in large quantity immediately after the engine is stopped. Wait for 10 minutes before removing the filter cartridge (3).

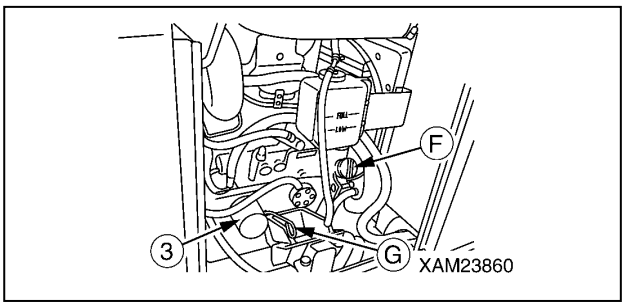

Fig. 5-64

9. Clean the filter stand. Apply clean engine oil (or a light coating of grease) to a new filter cartridge gasket and thread part, and install the filter cartridge.

NOTICE: With the gasket surface maintained contact with the sealing surface of the filter stand, rotate the filter cartridge one-half to three-quarters of a turn to secure it.
Always give manual tightening to the filter cartridge.

10. Check around the filter cartridge (3) for oil leaks. Be sure to wipe off oil completely if spilled.
11. After replacing the filter cartridge (3), supply the engine oil at a specified amount from the filler cap (F).
12. With the oil level gauge (G) pulled out, wipe off the oil with a waste cloth.
13. With the oil level gauge (G) inserted in the gauge guide, pull the oil level gauge out.
14. Make sure the oil level is in the range "H" to "L" marked on the oil level gauge (G).

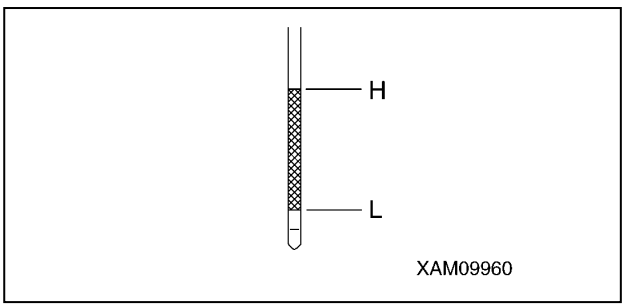

Fig. 5-65

15. Attach the oil level gauge (G) and filler cap (F) properly upon completion of oil replacement.
16. Start the engine, and idle it for 5 minutes. Stop the engine.
17. Make sure again the oil level is in the range "H" to "L" marked on the oil level gauge (G).
18. See "Installing Machinery Cover" on page 5-18 and install the machinery cover.
19. See "OUTRIGGER STOWING" on page 4-45 and stow the outriggers.

Check / Adjust Belt Tension

Tension Check

1. See "OUTRIGGER SETTING" on page 4-36 and rotate the outriggers outward.
2. See "Removing Machinery Cover" on page 5-18 and remove the machinery cover.
3. With the fingers, push (by approximately 98 N (10 kgf) the midpoint between the fan pulley (2) and alternator pulley (1) of the belt (3), and if the strain is between 10 and 12mm it is within standard.
4. If the inspection result indicated that the strain of the belt (3) is out of the standard value range, see the Tension check section and adjust the tension of the belt (3).

NOTICE: Inspect the followings as well when you inspect the tension of the alternator belt.

- *Check the pulleys for breakage, the V groove and belt for wear. Ensure that the belt is not in contact with the bottom of the V groove.*
- *Prompt belt replacement is required if belt adjustment is no longer enabled due to a stretched belt or if the belt is scratched or cracked.*
- *At least 5 minute long test run is required after belt replacement. Re-adjust the belt tension upon completion of test run.*

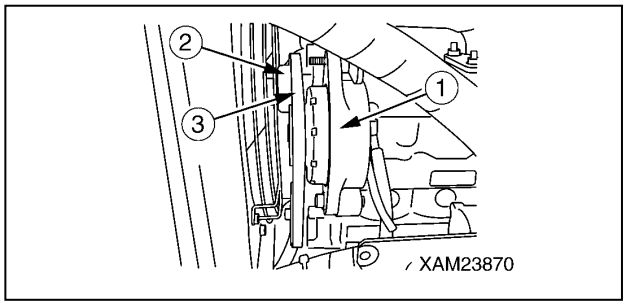

Fig. 5-66

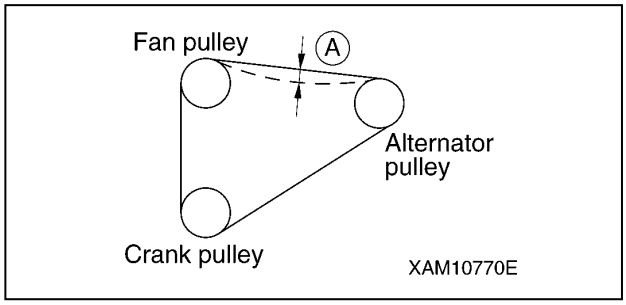

Fig. 5-67

https://truckmanualshub.com/

Tension Adjustment

- Have a wooden bar available.

1. Insert the bar between the alternator (1) and cylinder block.
2. Loosen the lower bolt (5) and adjusting bolt (4).
3. Move the alternator (1) until strain of the belt (3) falls within the standard value range, pulling the bar toward you.
4. Tighten the alternator lower bolt (5) and then the adjusting bolt (4) to secure the alternator (1).
5. See "Installing Machinery Cover" on page 5-18 and install the machinery cover.
6. See "OUTRIGGER STOWING" on page 4-45 and stow the outriggers.

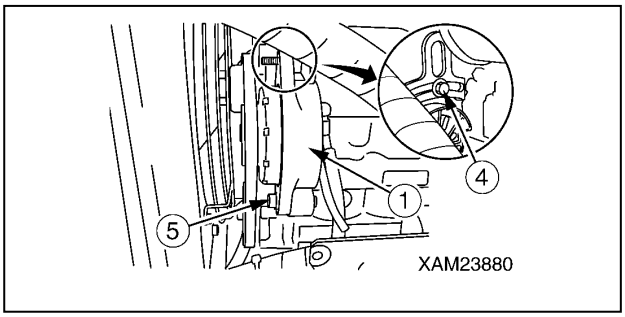

Fig. 5-68

Check / Refill Oil in Travelling Motor Reduction Gear Case

CAUTION:

- **See "LUBRICATING OIL" on page 5-14 for which oil to be used.**
- **Use seal tape, etc. at the thread of the filler plug to stop the oil leak and securely tighten the plug after refilling with the oil.**

1. Move the machine forward and backward to position it immediately above the drain plug (P) of the travelling motor reduction gear case.

NOTICE: This machine is equipped with two drain plugs (P). Either drain plug must be positioned directly underneath the machine.

2. Remove the oil inspection plug (G) of the travelling motor reduction gear case, and make sure oil is drained from the plug hole.
3. In the case of insufficient oil in the casing, remove the top drain plug (P) and replenish gear oil through the plug hole.

NOTICE:

- *Replenish the gear oil until it exudes from the oil inspection plug.*
- *Wipe off the oil completely if spilled.*

4. Put in the top drain plug (P) and oil inspection plug (G), and secure the plugs upon completion of oil inspection and replenishment.

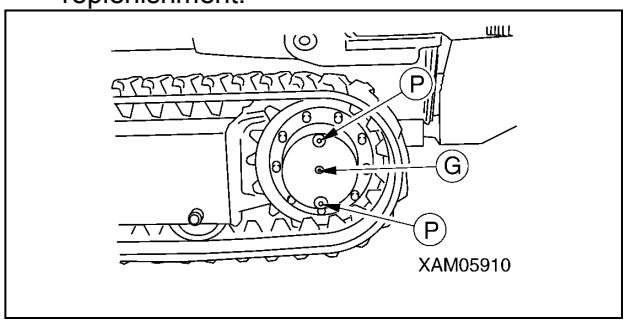

Fig. 5-69

https://truckmanualshub.com/

Inspect / Clean / Replace Air Cleaner

WARNING!

- **DO NOT clean and replace the air cleaner when the engine is in rotation.**
  Potential damage to the engine may occur if disregarded.
- **Use of compressed air when cleaning the element causes particles to be airborne. Always wear protective goggles to prevent injury from flying particles.**

CAUTION:

- **Assure pre- or post-work cleaning when using the machine in a dusty site.**
- **DO NOT tap and bump the element against anywhere when cleaning it.**
- **Avoid the use of an element if its groove, gasket, or sealing is damaged.**
- **Always use Maeda genuine elements.**

1. See "OUTRIGGER SETTING" on page 4-36 and rotate the outriggers outward.
2. See "Removing Machinery Cover" on page 5-18 and remove the machinery cover.
3. Disengage the two clamps (1) and remove the dust pan (2).

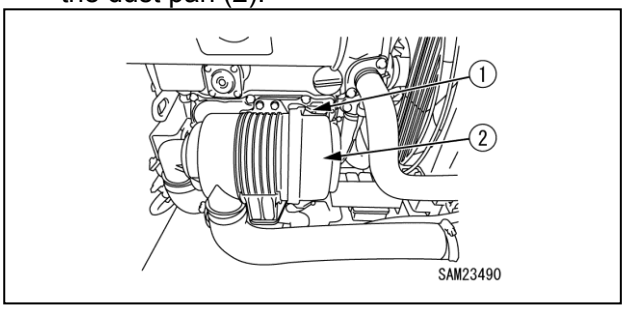

Fig. 5-70

4. Pull out the element (3).
5. Cover the duct entrance located at the back of the air cleaner body (4) with a clean cloth or tape, to keep impurities out of the duct entrance.
6. Clean the inside of the air cleaner body (4).

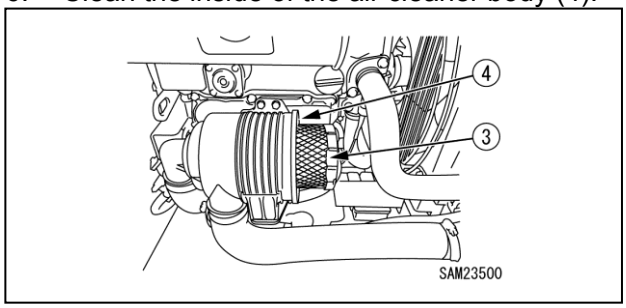

Fig. 5-71

7. Blow dry compressed air on the inside of the element along the grooves at max. 0.69MPa (7kg/cm^2).
   Blow compressed air on the outside of the element along the grooves, and re-blow the air on the inside.

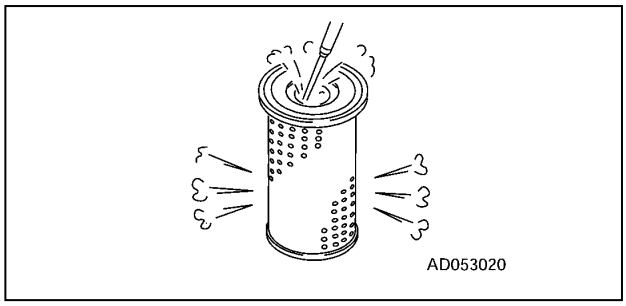

Fig. 5-72

8. Shine a light bulb into the element after cleaning for check. If check finds a pore or thinned part, replace the element.

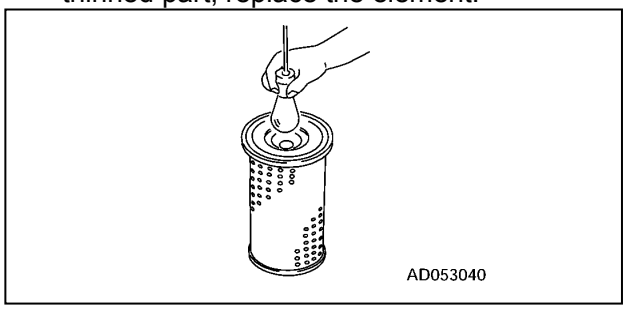

Fig. 5-73

9. Clean the inside of the dust pan (2) and rubber cup (5).

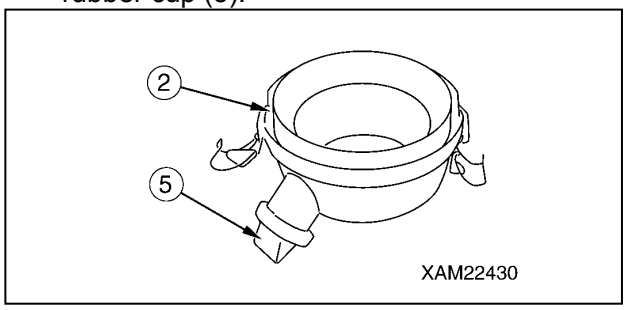

Fig. 5-74

10. Remove the cloth or tape from the air connector at the back of the air cleaner body (4).

https://truckmanualshub.com/

11. Insert the cleaned element (3) into the air cleaner body (4).
12. Install the dust pan (2) to the air cleaner body (4) with a "TOP" mark faced upward, and secure it with the two clamps (1).
13. See "Installing Machinery Cover" on page 5-18 and install the machinery cover.
14. See "OUTRIGGER STOWING" on page 4-45 and stow the outriggers.

Drain Contaminant Water/Deposits in Fuel Tank

WARNING!

- **Keep from heat and flame, including cigarettes.**
- **Be sure to stop the engine before draining fuel.**
  Potential ignition may occur through spilled fuel if disregarded.
- **Always put in the fuel tank drain plug and secure it after draining fuel.**

- Fuel drain pan: A 1-L container

1. Place the machine on a level surface.
2. See "OUTRIGGER SETTING" on page 4-36 and rotate the outriggers outward.
3. See "Removing Machinery Cover" on page 5-18 and remove the machinery cover.
4. Place a drain pan directly under the fuel tank drain plug (P) to receive drained fuel.

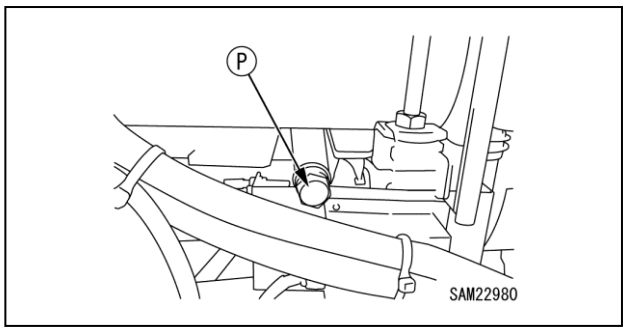

Fig. 5-75

5. Remove the drain plug (P) slowly to drain fuel, keeping from contact with draining fuel.

NOTICE: Remove the fuel tank cap (F) if normal or smooth fuel draining fails.

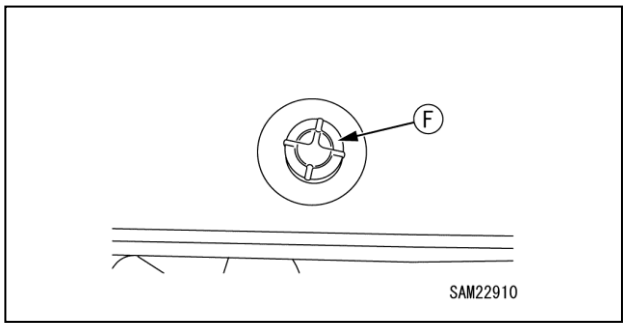

Fig. 5-76

6. Put in the drain plug (P) and secure it upon completion of draining fuel.

NOTICE: Wipe off fuel completely if spilled.

7. See "Installing Machinery Cover" on page 5-18 and install the machinery cover.
8. See "OUTRIGGER STOWING" on page 4-45 and stow the outriggers.

https://truckmanualshub.com/

Maintenance Every 500 Hours

Perform this maintenance in tandem with maintenance every 50/250 hours.

Replace Fuel Filter Cartridge

WARNING!

- **Keep from heat and flame, including cigarettes, when replacing the fuel filter element.**
- **All the parts will be at elevated temperatures immediately after engine operation, which urges you not to replace the fuel filter element. Always perform replacement with the engine cold to touch.**

1. Place the machine on a level surface.
2. Open the access hatch in the right-hand machinery cover.
3. Raise the lever (2) of the head (4) section to horizontal position (close) to shut off the fuel.

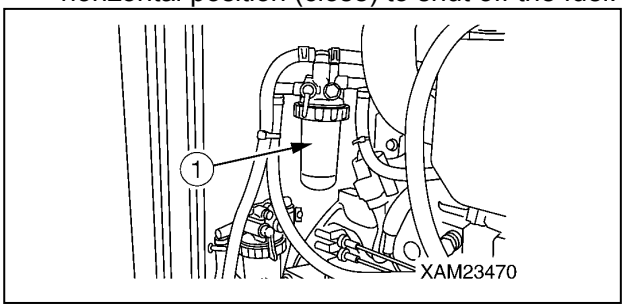

Fig. 5-77

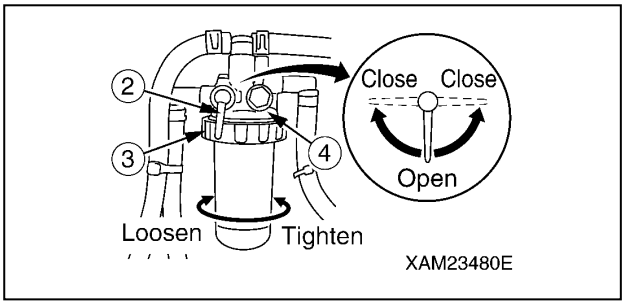

Fig. 5-78

4. Turn the retainer ring (3) of the head (4) section counterclockwise (left) to loosen, then remove the pot (1) from the head (4) section.
5. Drain the fuel and water out of the pot (1).
6. Clean the pot (1) and element with diesel, and spray the compressed air (0.20 to 0.29 MPa {2 to 3 kg/cm^2}) inside to scrape off the dusts from the surface.
7. Set the pot (1) to the head (4) section, then turn the retainer ring (3) clockwise (right) to tighten.
8. Lower the fuel lever (2) of the head (4) section down to the vertical position (open) to open the fuel circuit.
9. Close the access hatch.

Replace Hydraulic Oil Return Filter

WARNING!

- **All the parts will be at elevated temperatures immediately after engine operation, which urges you not to replace the filter. Always perform replacement with the engine cold.**
- **Potential gush of oil may occur upon removing the filler cap of the hydraulic oil tank.**
  Be sure to relieve internal pressure by slowly rotating the filler cap before cap removal.
- **Make sure the filler cap is closed properly after replenishment of the oil.**
  Potential fall of the filler cap during operation may occur if disregarded, which could cause boiling oil to gush that results in burns.

CAUTION:

- **See "LUBRICATING OIL" on page 5-14 for which oil to be used.**
- **Place the machine in travel position for oil quantity inspection.**
  Oil quantity inspection with the machine in working position may deceive your eyes to deem the quantity of oil low. Owing to improper judgment, the oil may be supplied at an excessive amount.
- **The engine must be at halt until piping and hydraulic equipment is filled with oil after replacement of the hydraulic oil filter.**
- **Oil replenished should remain below "H" (upper limit) on the level gauge. Excessive oil replenishment may cause the oil to gush from the air breather during machine travelling and crane operation, which could result in burns.**
- **Keep impurities out of the filler cap when replenishing oil.**

1. Place the machine on a level surface.
2. See "OUTRIGGER SETTING" on page 4-36 and rotate the outriggers outward.
3. See "Removing Machinery Cover" on page 5-18 and remove the machinery cover.

https://truckmanualshub.com/

4. Turn the filter cartridge (3) counterclockwise (left) with the use of the filter wrench to remove it.

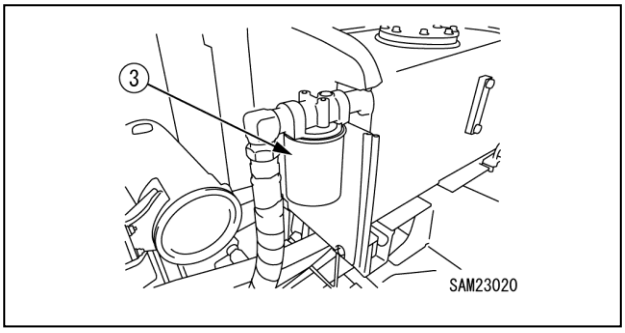

Fig. 5-79

5. Clean the filter stand. Apply clean engine oil (or a light coating of grease) to the gasket and thread part of a new filter cartridge (3), and attach the filter cartridge.

NOTICE: With the gasket surface maintained contact with the sealing surface of the filter stand, rotate the filter cartridge one-half to three-quarters of a turn to secure it.
Always give manual tightening to the filter cartridge.

6. Check around the filter cartridge (3) for oil leaks. Be sure to wipe off oil completely if spilled.
7. See "Check / Add Hydraulic Oil" on page 5-30 to check the oil level in the hydraulic oil tank. Prompt oil refilling is required if check finds insufficient oil.
8. See "Installing Machinery Cover" on page 5-18 and install the machinery cover.
9. See "OUTRIGGER STOWING" on page 4-45 and rotate the outriggers inward to stow them.

Replace Hydraulic Oil Suction Filter

WARNING!

- **All the parts will be at elevated temperatures immediately after engine operation, which urges you not to replace the filter. Always perform replacement with the engine cold.**
- **Potential gush of oil may occur upon removing the filler cap of the hydraulic oil tank.**
  Be sure to relieve internal pressure by slowly rotating the filler cap before cap removal.
- **Make sure the filler cap is closed properly after replenishment of the oil.**
  Potential fall of the filler cap during operation may occur if disregarded, which could cause boiling oil to gush that results in burns.

CAUTION:

- **See "LUBRICATING OIL" on page 5-14 for which oil to be used.**
- **Place the machine in travel position for oil quantity inspection.**
  Oil quantity inspection with the machine in working position may deceive your eyes to deem the quantity of oil low. Owing to improper judgment, the oil may be supplied at an excessive amount.
- **The engine must be at halt until piping and hydraulic equipment is filled with oil after replacement of the hydraulic oil filter.**
- **Oil replenished should remain below "H" (upper limit) on the level gauge. Excessive oil replenishment may cause the oil to gush from the air breather during machine travelling and crane operation, which could result in burns.**
- **Keep impurities out of the filler cap when replenishing oil.**

1. Place the machine on a level surface.
2. See "OUTRIGGER SETTING" on page 4-36 and rotate the outriggers outward.
3. See "Removing Machinery Cover" on page 5-18 and remove the machinery cover.

https://truckmanualshub.com/

4. Remove the eight mounting bolts (4) and remove the flange (3) on top of the hydraulic oil tank.

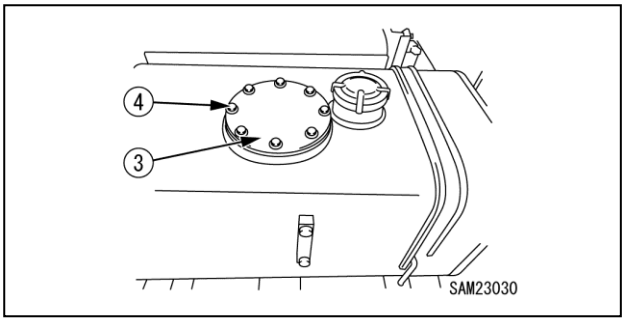

Fig. 5-80

5. Remove the flange (3) and pull out the suction filter (5) from inside the hydraulic oil tank.

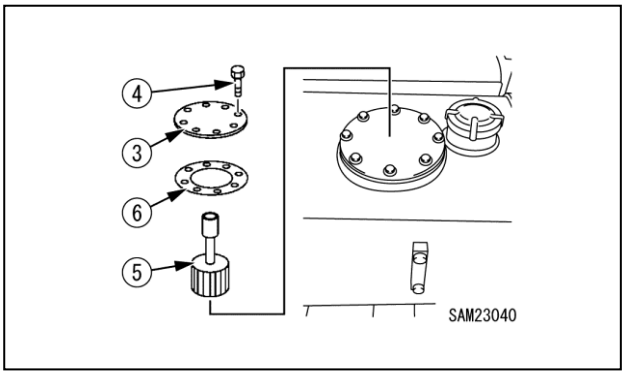

Fig. 5-81

6. Insert the new suction filter (5) to the inside of the hydraulic oil tank.
7. Put the flange (3) in place with liquid packing applied to the rubber plate (6). Secure the flange (3) with the eight mounting bolts (4).

NOTICE: Wipe off the oil completely if spilled.

8. See "Check / Add Hydraulic Oil" on page 5-30 to check the oil level in the hydraulic oil tank. Prompt oil refilling is required if check finds insufficient oil.
9. See "Installing Machinery Cover" on page 5-19 and install the machinery cover.
10. Use the following procedure for air bleed.
    (1) Start the engine with piping and hydraulic equipment filled with oil.
    Make sure the engine runs at low idle for 10 minutes.
    (2) Move the cylinders and winch motor slowly with a crane control lever at low idle speed.
    Always stop the boom lift cylinder and telescoping cylinder approx. 100mm back from the stroke end when operating the cylinders.
    Repeat this task 4 to 5 times.
    (3) Allow all the outriggers to be extended, referring to "OUTRIGGER SETTING" on page 4-36. Extend and retract the outrigger cylinder, keeping the machine down on the ground.
    Always stop the outrigger cylinder approx. 100mm back from the stroke end when operating the cylinder.
    Repeat this task 4 to 5 times.
11. See "OUTRIGGER STOWING" on page 4-45 to stow the outriggers.

Replace Air Cleaner Element

WARNING! DO NOT clean and replace the air cleaner when the engine is in rotation.

Potential damage to the engine may occur if disregarded.

CAUTION:
- **Avoid the use of an element if its groove, gasket, or sealing is damaged.**
- **Always use Maeda genuine elements.**

1. See "OUTRIGGER SETTING" on page 4-36 and rotate the outriggers outward.
2. See "Removing Machinery Cover" on page 5-18 and remove the machinery cover.

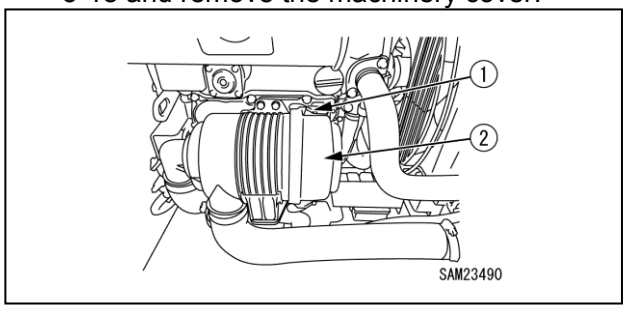

Fig. 5-82

3. Disengage the two clamps (1) and remove the dust pan (2).

https://truckmanualshub.com/

4. Pull out the element (3).

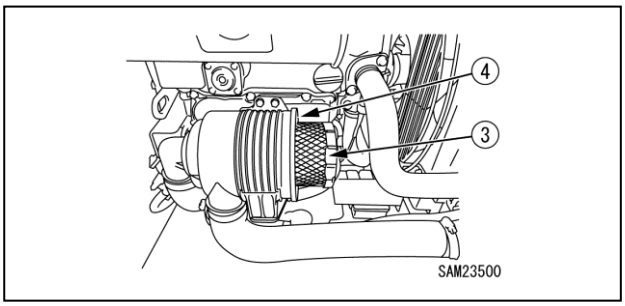

Fig. 5-83

5. Cover the duct entrance located at the back of the air cleaner body (4) with a clean cloth or tape, to keep impurities out of the duct entrance.
6. Clean the inside of the air cleaner body (4).
7. Clean the inside of the dust pan (2) and rubber cup (5).

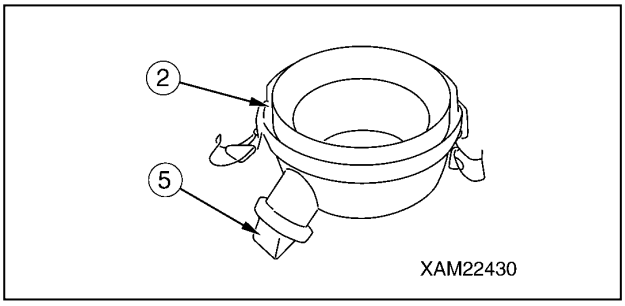

Fig. 5-84

8. Remove the cloth or tape from the air connector at the back of the air cleaner body (4).
9. Insert a new element (3) into the air cleaner body (4).
10. Install the dust pan (2) to the air cleaner body (4) with a "TOP" mark faced upward, and secure it with the two clamps (1).
11. See "Installing Machinery Cover" on page 5-19 and install the machinery cover.
12. See "OUTRIGGER STOWING" on page 4-45 and rotate the outriggers inward to stow them.

Maintenance Every 1000 Hours

Coolant Replacement and Internal Cleaning

WARNING!

- **Coolant will be at elevated temperatures immediately after engine operation, which urges you not to drain coolant. Always perform coolant draining with the engine cold.**
- **DO NOT remove the radiator cap if radiator coolant is hot. Potential gush of boiling water may occur if disregarded. Cap removal is allowed when the water drops in temperature. Be sure to relieve internal pressure by slowly rotating the filler cap before cap removal.**
- **DO NOT stand in front of and behind the machine when starting the engine for cooling system cleaning. Failure to stand aside of the machine may pose a danger in the event of a sudden movement of the machine.**
- **Keep antifreeze from flame. Antifreeze is a flammable solution.**
  DO NOT smoke when handling antifreeze.

CAUTION:

- **Always use tap water for coolant. Contact Us or our sales service agency if river water, well water, or water through the small water-supply system is necessarily substituted for tap water.**
- **A mixing ratio of antifreeze is to be controlled by the concentration meter.**

Cooling system cleaning and antifreeze replacement should conform to the cycles specified in the following table.

Antifreeze type	Cooling system cleaning and antifreeze replacement
Anti-corrosive all-season type	Annually or every 1000 hours

Perform cooling system cleaning and antifreeze replacement with the machine in a horizontal position.

A mixing ratio of antifreeze varies with temperature. Antifreeze as a volume ratio is min. 30% to yield anticorrosive effect.

https://truckmanualshub.com/

The mixing ratio between water and antifreeze is to be determined with respect to past minimum temperatures, in accordance with "Mixing ratio between water and antifreeze" shown below.

For actual mixing, set temperature 10 °C lower than minimum temperature.

Mixing Ratio between Water and Antifreeze

Min. temperature / Mixed quantity		Min. –15	-20	-25
Antifreeze	L	1.4	1.5	2.0
Water	L	3.1	3.0	2.5

- Antifreeze-mixed water drain pan: A 6-L container
- Have a water filling hose available.

1. Place the machine on a level surface.
2. See "OUTRIGGER SETTING" on page 4-36 and rotate the outriggers outward.
3. See "Removing Machinery Cover" on page 5-18 and remove the machinery cover.
4. Turn the radiator cap (5) slowly until it comes into contact with the stopper to relieve internal pressure from the radiator.

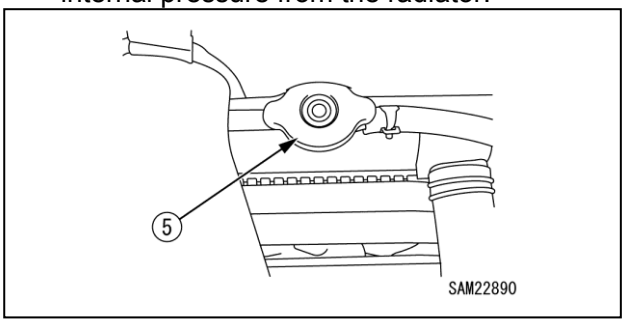

Fig. 5-85

5. With no pressure in the radiator, give further turning of the radiator cap (5) until it reaches the stopper while holding it down. Remove the radiator cap (5).
6. Place a drain pan under the drain valve (8) lying below the radiator to receive coolant (antifreeze-mixed water).

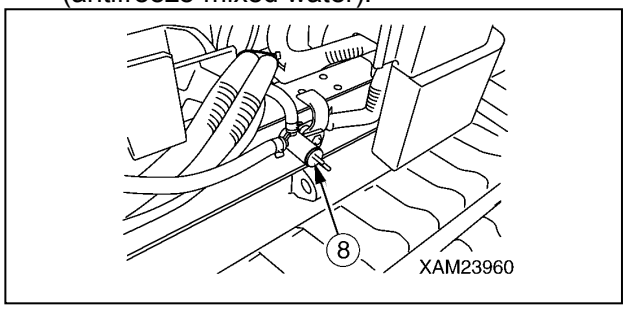

Fig. 5-86

7. Open the drain valve (8) to drain coolant. Close the drain valve (8) upon completion of draining.
8. Supply tap water to the radiator through the radiator supply port. The radiator needs to be filled up to the supply port.
9. Start the engine with the drain valve (8) open, and ensure the engine runs at low idle. Conduct a 10-minute cleaning with running water.

CAUTION:

- **The radiator is to retain a high water level during cleaning with running water. Adjust the quantities of water supplied and drained as necessary.**
- **Ensure that the water filling hose stays connected to the radiator supply port properly during cleaning with running water.**

10. After cleaning, stop the engine and water supply and drain tap water. Close the drain valve (8) upon completion of draining.

NOTICE: Cleaning with the cleaning agent must conform to instructions provided on the cleaning agent.

11. Open the drain valve (8) to drain the cleaning agent after cleaning with the agent. Close the drain valve (8) upon completion of draining.
12. Supply tap water to the radiator through the radiator supply port. The radiator needs to be filled up to the supply port.
13. Start the engine with the drain valve (8) open, and ensure the engine runs at low idle. Conduct a cleaning with running water until clean water flows out of the radiator.

https://truckmanualshub.com/

CAUTION:
- **The radiator is to retain a high water level during cleaning with running water. Adjust the quantities of water supplied and drained as necessary.**
- **Ensure that the water filling hose stays connected to the radiator supply port properly during cleaning with running water.**

14. Once clean water has out flowed, stop the engine and water supply and drain tap water. Close the drain valve (8) upon completion of draining.
15. Supply coolant mixed of antifreeze and tap water to the radiator through the radiator supply port. The radiator needs to be filled up to the supply port.

NOTICE: See the above-mentioned table, "Mixing ratio between water and antifreeze", for the mixing ratio of antifreeze and tap water.

16. Start the engine with the radiator cap (5) removed, and ensure the engine runs at low idle for 5 minutes. Release air from the cooling system with the engine at high idle for 5 minutes.

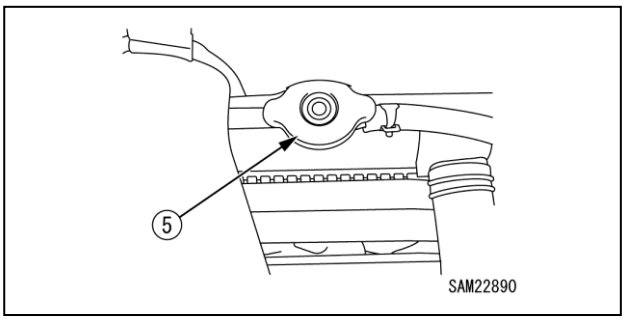

Fig. 5-87

17. Wait for 3 minutes after stopping the engine. Supply tap water to the radiator through the radiator supply port, up to the supply port. Close the radiator cap (5).
18. Remove the reserve tank (1). Clean the inside of the reserve tank with coolant drained from the tank.

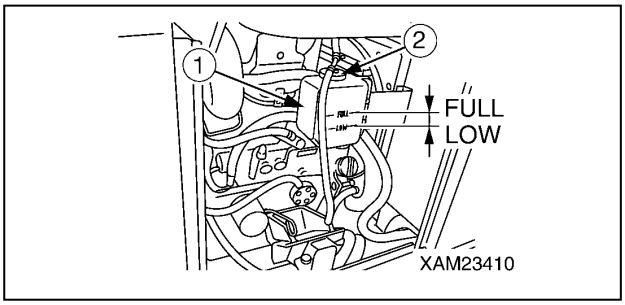

Fig. 5-88

19. Put the reserve tank (1) in place, supply tap water through the supply port to "FULL". Install the cap (2) properly.
20. See "Installing Machinery Cover" on page 5-18 and install the machinery cover.
21. See "OUTRIGGER STOWING" on page 4-45 and rotate the outriggers inward to stow them.

Replace Oil in Hydraulic Oil Tank

WARNING!
- **All the parts will be at elevated temperatures immediately after engine operation, which urges you not to replace oil. Always perform replacement with the oil cold.**
- **Potential gush of oil may occur upon removing the filler cap of the hydraulic oil tank.**
  Be sure to relieve internal pressure by slowly rotating the filler cap before cap removal.
- **Make sure the filler cap is closed properly after replenishment of the oil.**
  Potential fall of the filler cap during operation may occur if disregarded, which could cause boiling oil to gush that results in burns.

CAUTION:
- **See "LUBRICATING OIL" on page 5-14 for which oil to be used.**
- **Place the machine in travel position for oil quantity inspection.**
- **Oil quantity inspection with the machine in working position may deceive your eyes to deem the quantity of oil low. Owing to improper judgment, the oil may be supplied at excessive amount.**
- **The engine must be at halt until piping and hydraulic equipment is filled with oil after replacement of the hydraulic oil filter.**
- **Oil replenished should remain below "H" (upper limit) on the level gauge. Excessive oil replenishment may cause the oil to gush from the air breather during machine travelling and crane operation, which could result in burns.**
- **Keep impurities out of the filler cap when replenishing oil.**

https://truckmanualshub.com/

- Oil drain pan: An 70 L container
- Quantity of oil for replacement: 55 L

1. Place the machine on a level surface.
2. See "OUTRIGGER SETTING" on page 4-36 and rotate the outriggers outward.
3. See "Removing Machinery Cover" on page 5-18 and remove the machinery cover.
4. Remove the filler cap (F) located on top of the hydraulic oil tank.

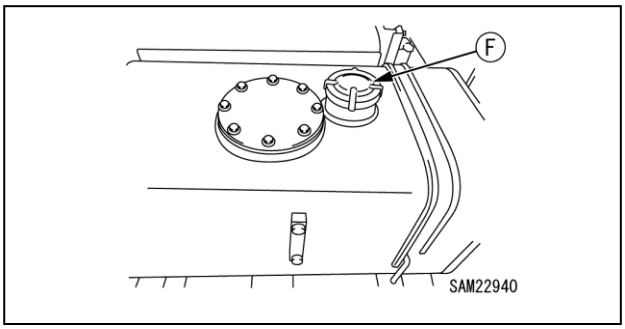

Fig. 5-89

5. Place a drain pan directly underneath the drain plug (P) to receive drained oil.

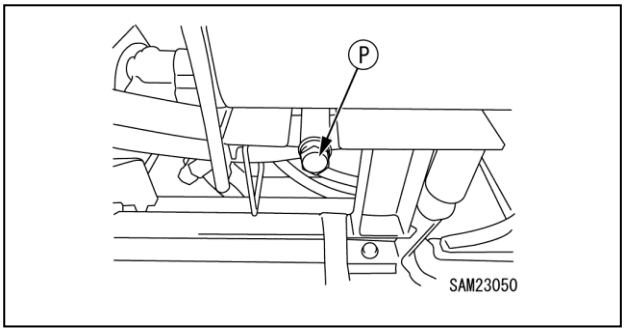

Fig. 5-90

6. Remove the drain plug (P) slowly to drain the oil, keeping from contact with draining oil.
7. Check the drained oil. If check finds a considerable amount of metal powder and foreign objects, contact our sales service agency
8. Put in the drain plug (P) and secure it.
9. Supply the hydraulic oil to a specified level point from the filler cap (F), visually checking the oil level gauge (G).

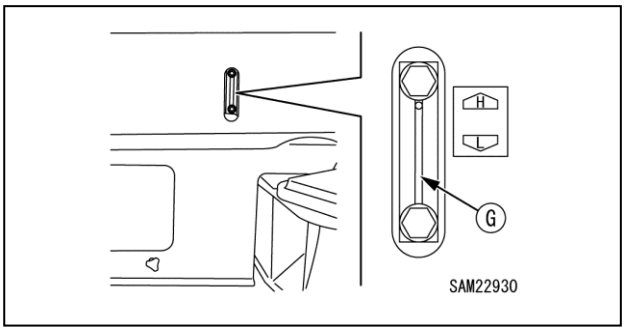

Fig. 5-91

10. Close the filler cap (F) after replenishment of the oil.

NOTICE: Wipe off the oil completely if spilled.

11. See "Installing Machinery Cover" on page 5-18 and install the machinery cover.
12. Use the following procedure for air bleed.
    (1) Start the engine with piping and hydraulic equipment filled with oil.
    Make sure the engine runs at low idle for 10 minutes.
    (2) Move the cylinders and winch motor slowly with a crane control lever at low idle speed.
    Always stop the boom lift cylinder and telescoping cylinder approx. 100mm back from the stroke end when operating the cylinders.
    Repeat this task 4 to 5 times.
    (3) Allow all the outriggers to be extended, referring to "OUTRIGGER SETTING" on page 4-36. Extend and retract the outrigger cylinder, keeping the machine down on the ground.
    Always stop the outrigger cylinder approx. 100mm back from the stroke end when operating the cylinder.
    Repeat this task 4 to 5 times.
13. See "OUTRIGGER STOWING" on page 4-45 to stow the outriggers.

Replace Oil in Slewing Reduction Gear Case

WARNING! The drain plug of the slewing reduction gear case is located directly underneath the machine.

Place the outriggers and raise the machine 50 mm from the ground to allow a drain pan to be placed under the machine for draining oil. If the machine becomes unstable and wobbles, insert supports under the front and back of the machine to gain stability.

CAUTION:

- **See "LUBRICATING OIL" on page 5-14 for which oil to be used.**
- **Use seal tape, etc. at the thread of the filler plug to stop the oil leak and securely tighten the plug after refilling with the oil.**

https://truckmanualshub.com/

- Oil drain pan: A 1-L container
- Quantity of oil for replacement: 0.6L

1. Place the machine on a level surface.
2. See "OUTRIGGER SETTING" on page 4-36 to rotate the rotary of the all outriggers outward.

WARNING! Check the following before crawling under the machine:
- **Ensure that the outriggers are extended at the maximum.**
- **Visually check the level to make sure the machine in a horizontal position.**
- **Insert solid blocks between the crawler and the ground to keep the machine raised.**

WARNING! Check the following before crawling under the machine:
- **Ensure that the outriggers are extended at the maximum.**
- **Visually check the level to make sure the machine in a horizontal position.**

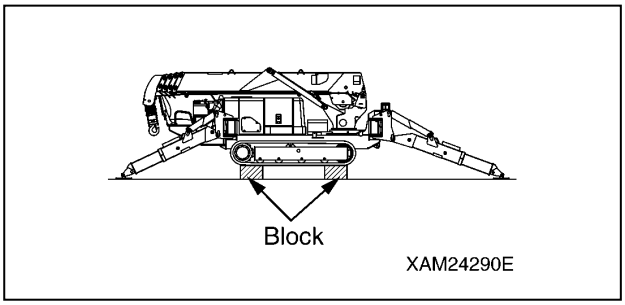

Fig. 5-92

3. Remove the filler plug (F) from the slewing reduction gear case.

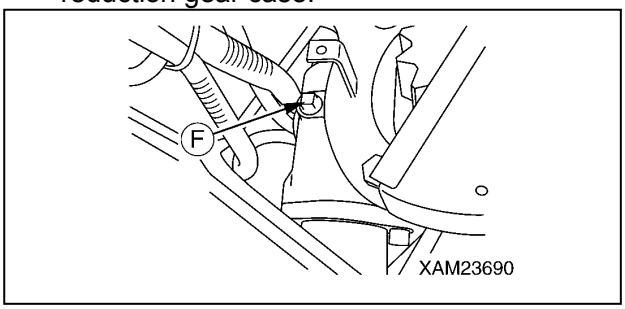

Fig. 5-93

4. Crawl under the machine and place a drain pan directly underneath the drain plug (P) of the slewing reduction gear case to receive drained oil.

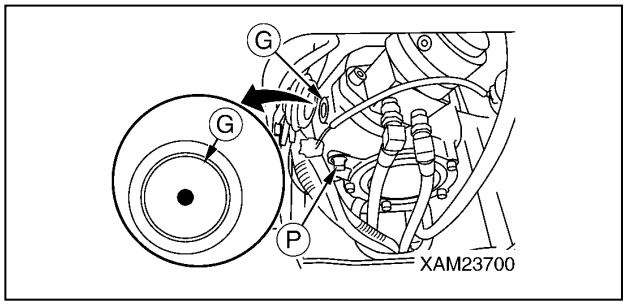

Fig. 5-94

5. Remove the drain plug (P) slowly to drain the oil, keeping from contact with draining oil.
6. Check the drained oil. If check finds a considerable amount of metal powder and foreign objects, contact our sales service agency.
7. Put in the drain plug (P) and secure it.
8. Supply the gear oil to the slewing reduction gear case through the filler plug (F).

NOTICE:
- *The gear oil must be filled from the filler cap, up to the midpoint of the site gauge (G).*
- *Wipe off the oil completely if spilled.*

9. Put in the filler plug (F) and secure it after oil replacement.
10. See "OUTRIGGER STOWING" on page 4-45 to stow the outriggers.

Replace Oil in Winch Reduction Gear Case

WARNING! Oil will be at elevated temperatures immediately after engine operation, which urges you not to unplug the inspection port and drain port. Unplug the port with the oil cold.

CAUTION:
- **See "LUBRICATING OIL" on page 5-14 for which oil to be used.**
- **Use seal tape, etc. at the thread of the plug to stop the oil leak and securely tighten the plug after refilling with the oil.**

- Oil drain pan: A 1-L container
- Hexagonal wrench for plug removal: 8mm
- Quantity of oil for replacement: 0.75L

1. Place the machine on a level surface.

https://truckmanualshub.com/

2. See "OUTRIGGER SETTING" on page 4-36 to rotate the rotary of the "outrigger (1)" outward.
3. Slowly rotate the winch until the plug (P) is visible, and once the plug (P) is visible, set the plug (P) to the lowest position.

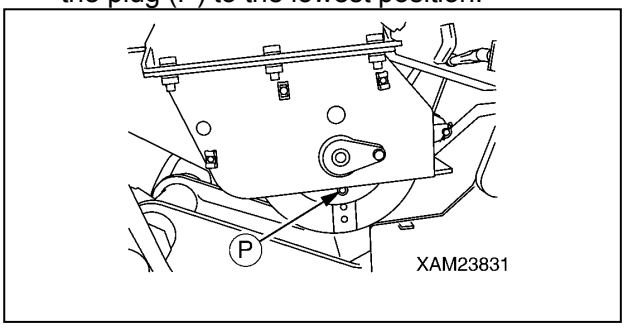

Fig. 5-95

4. Place a drain pan directly under the plug (P) to receive drained oil.
5. Use the hexagonal wrench to remove the plug (P). The gear oil is drained from the winch reduction gear case upon plug removal.
6. Once the gear oil is fully drained out of the winch reduction gear case, rotate the winch slowly until the plug (P) hole is visible through the hole above the pin.

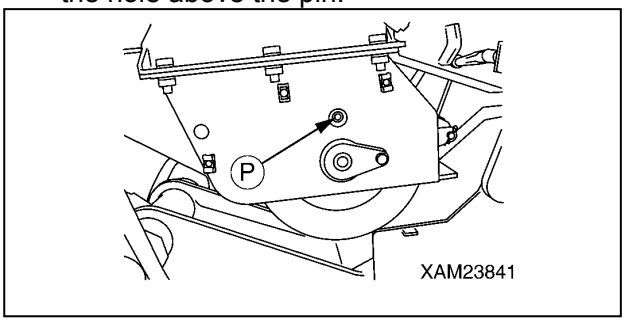

Fig. 5-96

7. Replenish the standard amount (0.75 L) of gear oil using an oil pump or similar tool through the plug (P) hole.

NOTICE: Wipe off the oil completely if spilled.

8. Put in the plug (P) and secure it upon completion of oil replenishment.
9. See "OUTRIGGER STOWING" on page 4-45 to stow the "outrigger (1)".

Replace Oil in Travelling Motor Reduction Gearcase

CAUTION:

- **See "LUBRICATING OIL" on page 5-14 for which oil to be used.**
- **Use seal tape, etc. at the thread of the filler plug to stop the oil leak and securely tighten the plug after refilling with the oil.**

- Oil drain pan: A 1-L container
- Quantity of oil for replacement: 1.0L

1. Place the machine on a level surface.

2. Move the machine forward and backward to position it immediately above the drain plug (P) of the travelling motor reduction gear case.

NOTICE: This machine is equipped with two drain plugs (P). Either drain plug must be positioned directly underneath the machine.

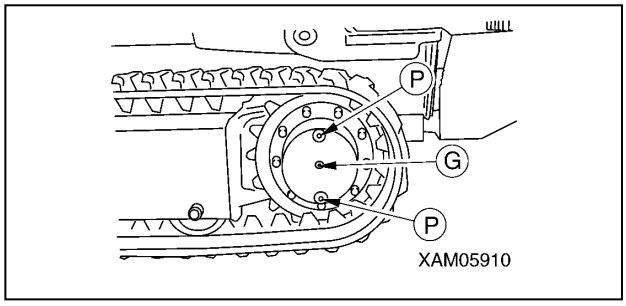

Fig. 5-97

3. Place a drain pan directly under the lower drain plug (P) to receive drained oil.
4. Remove the upper drain plug (P) and oil inspection plug (G).
5. Remove the lower drain plug (P) slowly to drain the oil, keeping from contact with draining oil.
6. Check the drained oil. If check finds a considerable amount of metal powder and foreign objects, contact our sales service agency.
7. Put in the lower drain plug (P) and secure it.
8. Supply the gear oil to the travelling motor reduction gear case through the upper drain plug hole (P).

NOTICE: Pour in the gear oil until the oil comes out of the oil level check plug (G).

https://truckmanualshub.com/

9. Put in the upper drain plug (P) and oil inspection plug (G), and secure them after oil replenishment.

NOTICE: Wipe off the oil completely if spilled.

Inlet/Exhaust Valve Head Clearance Inspection/Adjustment

Inspection and adjustment of the inlet and exhaust valve head clearance requires special tools.

Contact us or our sales service agency.

MAINTENANCE EVERY 1500 HOURS

Perform this maintenance in tandem with maintenance every 50/250/500/1000 hours.

Inspect / Clean / Test Fuel Injector

Inspection, cleaning, and test of the fuel injector require special tools.

Contact us or our sales service agency.

Check Crankcase Breather

Crankcase breather inspection requires special tools.
Contact us or our sales service agency.

GENERAL MACHINE MAINTENANSE

Batteries

Battery Precautions

Observe the followings when handling the battery.

WARNING!

- **Stop the engine and turn the main starter switch to the "OFF" position when checking/handling the battery.**
- **Wipe off the dust accumulated on the top of the battery with moistened cloth.**
- **The battery produces hydrogen gas, involving the explosion hazard. Do not put fire such as cigarettes close to the battery or take any actions that can cause sparks.**
- **The battery fluid is diluted sulfuric acid, which corrodes clothes and skin. Should the battery fluid come into contact with your clothes or skin, wash the affected area immediately with plenty of water.**
  Should it go into your eye, wash your eye immediately with clean water and consult a physician.
- **Wear goggles and rubber gloves when handling the battery.**
- **Disconnect the ground side (normally (-) terminal) first to remove the battery, and conversely, connect the (+) terminal first to install the battery.**
  Objects such as tools coming between (+) terminal and the machine body will cause sparks.

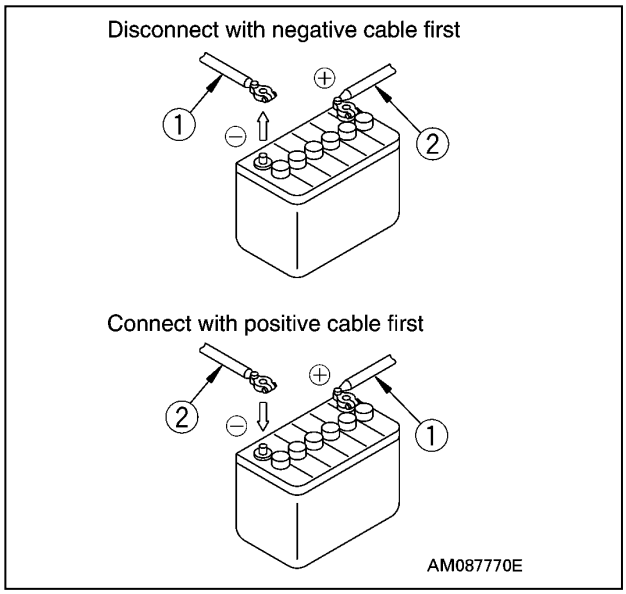

Fig. 5-98

https://truckmanualshub.com/

- **Slackened battery terminals can cause sparks with poor contact, involving explosion hazard.Tighten securely when installing the terminals.**
- **Secure the battery when changing the battery to prevent the battery from being displaced. If it is not secured, the terminals will slacken, causing sparks.**
- **Verify the (+) terminal and (-) terminal when removing and installing the battery.**

Cautions In Handling Battery

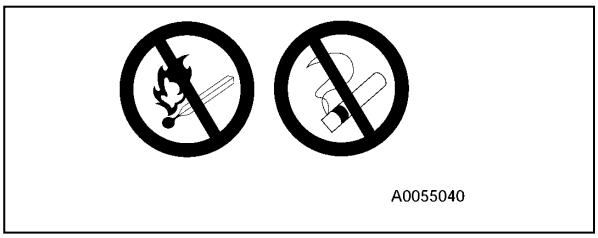

Fig. 5-99

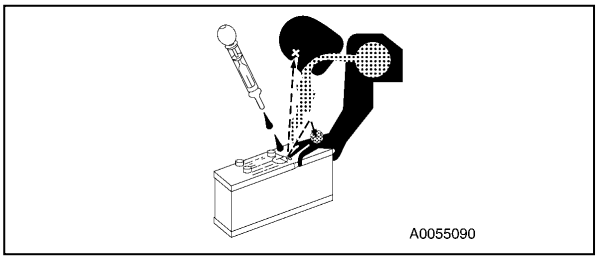

Fig. 5-100

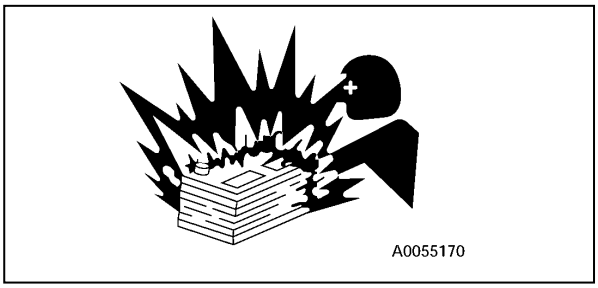

Fig. 5-101

The battery fluid includes diluted sulfuric acid, and generates hydrogen gas, and causes bodily accidents and fires if handle improperly, so always observe the followings.

- Do not let a cigarette or any fire source approach the battery.
- Always put on protective glasses and rubber gloves before handling the battery.
- If the battery fluid contacted clothing or skin, immediately wash away by huge quantity of water.
- If the battery fluid entered an eye, wash immediately with water and see the doctor as soon as possible.
- If you have swallowed the battery fluid by mishap, immediately drink huge quantity of water, milk, raw egg or vegetable oil, and see the doctor as soon as possible.
- Wipe with a wet clean cloth when cleaning the battery upper surface or related part. Do not use organic solvent or detergent for instance gasoline or paint thinner.
- If the battery fluid is frozen, do not charge battery or start the engine using other power source. Such act may cause the battery to catch fire.
- Before charging or starting up using other power source, defreeze the battery fluid and check that failures such as battery fluid leak do not exist.
- Always detach the battery from the machine frame before charging the battery.
- The battery mounted on the machine is a maintenance-free battery. Because it is a sealed-type battery, the fluid does not need to be checked or replenished.
- Always try to keep the battery charged.
  The battery should not be charged in rush after being discharged. Charge the battery as needed.
  Keeping the battery in the best condition lengthens the life of the battery.
- The battery ability remarkably drops during the cold season. Keep the charging rate as close to as 100 % and try to keep it warm for starting the operation next morning.

https://truckmanualshub.com/

Cautions When Starting Up Using Booster Cable

WARNING! Wrong booster cable connection method may result in fire, so ALWAYS observe the followings.

- **Start the engine by two persons, with one standing on the driving operation position in the travel operation panel side.**
- **When starting using other Machine, be careful to prevent contact between the normal Machine and broken Machine.**
- **Keep the starter switch of both the normal Machine and the broken Machine in OFF position when the booster cable is connected.**
- **Do NOT connect to wrong side [connecting (+) to (-), (-) to (+)] when connecting the booster cable.**
- **Start connecting from (+) terminal first, but start disconnecting from (-) terminal (ground) first.**
- **Connect the ground to the (-) terminal of the battery of the broken Machine when connecting the ground as the last procedure. See "Operation Starting Engine with Booster Cable" on page 5-58 for details.**
- **Avoid the contact between clips of the booster cable, and contact between a clip and the Machine when disconnecting the booster cable.**

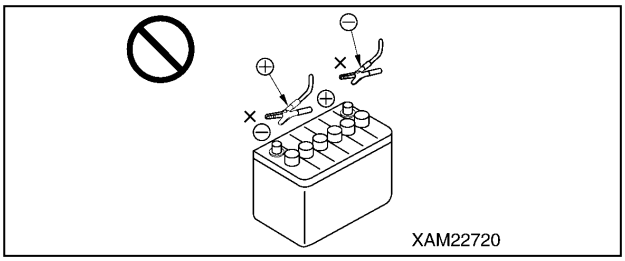

Fig. 5-102

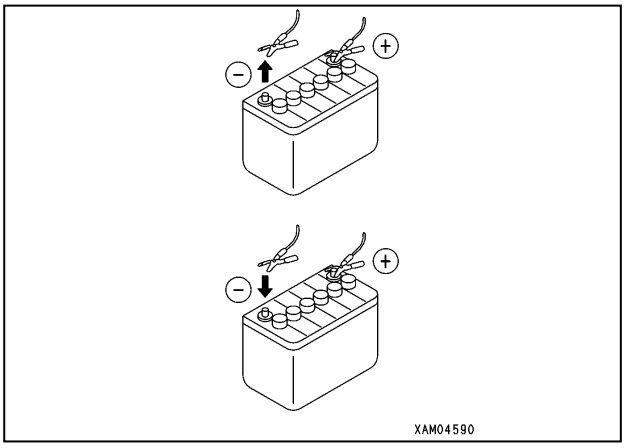

Fig. 5-103

Cautions on Charging Battery

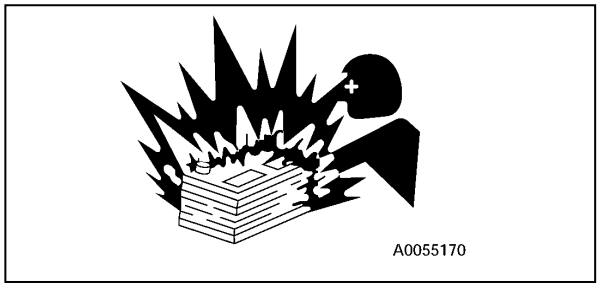

Fig. 5-104

Improper handling when charging the battery may cause the battery to explode. Follow the manuals attached to the machine and the charger, and always observe the followings.

- Adjust the charger voltage to suit the voltage of the battery to charge. Mistake in adjusting the voltage may cause explosions due to overheat and ignition of the charger.
- Securely fix the (+) charge clip of the charger to the (+) terminal of the battery, then securely fix the (-) charge clip to (-) terminal of the battery.
- Set the charge current to no more than 1/10 of the rated capacity of the battery.
- Do not use quick charging.
- Excessive charge current may cause leap fire and explosion caused by fluid leak or fluid deficiency.

When charging the battery mounted to the machine:

- Abnormal voltage may be applied to the alternator, resulting in the breakage. Disconnect the battery terminal wires before charging the battery.
- Stop charging when the battery was overheated (fluid temperature exceeded 45 °C).
- Stop charging promptly once the charging is completed.
  Charging even after the charging is completed will;
  (1) overheat the battery
  (2) reduce the electrolyte level
  (3) cause failures in battery
- Never inverse the connection of [(+) terminal and (-) terminal]. Doing so can cause damage on alternator.
- Remove the battery cable when handling the battery other than for battery electrolyte level check and specific gravity measurement.

https://truckmanualshub.com/

Remove / Install Battery

CAUTION: Verify that the battery does not move after securing the battery. If it moves, secure it again.

Removal

1. Remove the machinery cover as described in "MACHINERY COVER" on page 5-18.
2. Disconnect the (-) terminal (5) on the ground side first and then the (+) terminal (6) to disconnect the battery cable.
3. Remove the wing nut (8), battery fixing brackets (7), and then remove the battery (9).

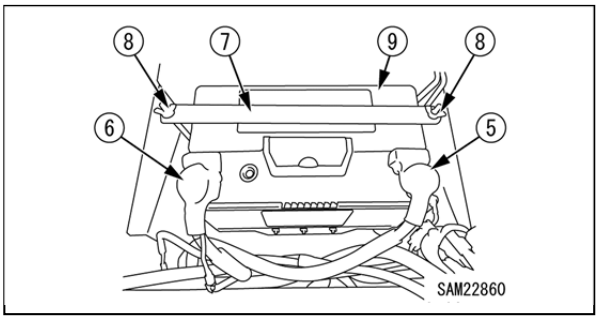

Fig. 5-105

Reattach the machinery cover as described in "MACHINERY COVER" on page 5-18.

Installation

- Reverse the removal procedure to install the battery.

NOTICE: Connect the (-) terminal (5) on the ground side last when connecting the battery.

Starting Engine with Booster Cable

Start the engine with booster cable as described below.

Cautions on Connecting/Disconnecting Booster Cable

WARNING!

- **Never let the (+) terminal and (-) terminal come into contact with the other when connecting the cable.**

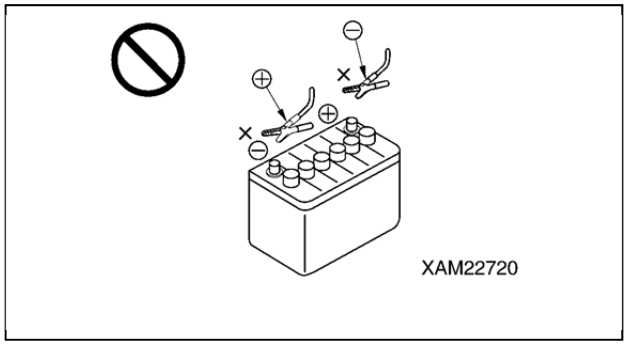

Fig. 5-106

- **Wear goggles and rubber gloves when starting the engine with the booster cable.**
- **Do not let the normal machine and machine in failure come into contact with the other. Because the battery produces hydrogen gas, sparks around the battery can cause explosion.**
- **Do not make mistakes in connecting the booster cable. Note that there will be some sparks when making the last connection. Make this connection at the location as far as possible from the battery.**
- **Do not let the booster cable clips contact the other or machine when disconnecting the booster cable.**

CAUTION:

- **Use booster cable and clips of appropriate size for the battery size.**
- **The battery in the normal machine and machine in failure should be of the same capacity.**
- **Check that the cable and clips have no breakage and corrosion.**
- **Connect the clips securely.**
- **Verify that the operation levers are at the "Neutral" position.**

https://truckmanualshub.com/

Connecting Booster Cable

Connect the booster cable in the numerical order shown in the figure on the below.

1. Turn the starter switch of both of the normal machine and machine in failure to the "OFF" position.
2. Connect a clip of the booster cable (A) to the (+) terminal of the machine in failure.
3. Connect the other clip of the booster cable (A) to the (+) terminal of the normal machine.
4. Connect a clip of the booster cable (B) to the (-) terminal of the normal machine.
5. Connect the other clip of the booster cable (B) to the engine block of the machine in failure.

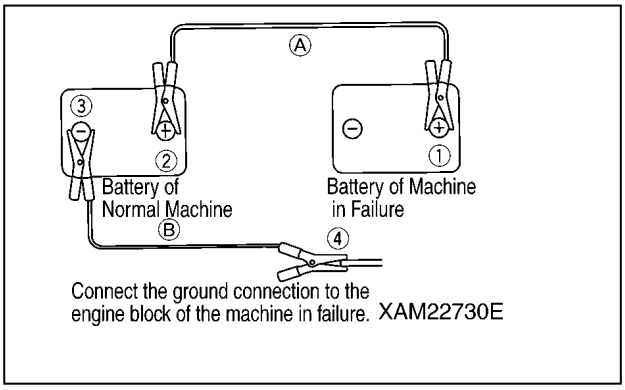

Fig. 5-107

Starting Engine

CAUTION: Verify that the operation levers are at the "Neutral" position. If the safety lock lever is equipped, also verify that the safety lock lever is at the lock position.

1. Verify that the clips are securely connected to the battery terminals.
2. Start the engine of the normal machine and increase the engine speed to full speed (highest speed).
3. Turn the starter switch of the machine in failure to the "START" position to start the engine.
   If the engine does not start, wait for more than 2 minutes before re-starting.

NOTICE: For more information on how to start the engine, see "STARTING ENGINE" on page 4-15.

Disconnecting Booster Cable

When the engine started, disconnect the booster cable in the reverse order of connecting the booster cable.

1. Disconnect the clip of the booster cable (B) connected to the engine block of the machine in failure.
2. Disconnect the clip of the booster cable (B) connected to the (-) terminal of the normal machine.
3. Disconnect the clip of the booster cable (A) connected to the (+) terminal of the normal machine.
4. Disconnect the clip of the booster cable (A) connected to the (+) terminal of the machine in failure.

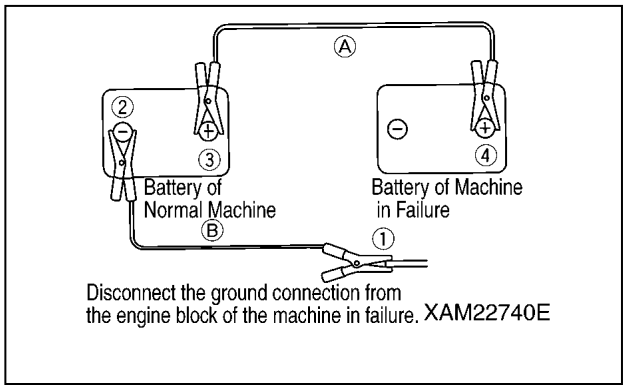

Fig. 5-108

https://truckmanualshub.com/

Rubber Tracks

General Information and Precautions

Good Use

While the rubber tracks demonstrate many advantages thanks to its performance characteristic to the material, it has a weak point in strength.

Therefore, we would like you to sufficiently understand the characteristics of the rubber tracks and to respect don’ts operations and observe the cautions on handling so that the life of the rubber tracks can be extended and its advantages exercised.

Be sure to read "Dos and Don’ts" on page 5-60 and "Cautions in Using Rubber Tracks" on page 5-61 before using the machine.

Warranty

Verification of proper tension of the rubber tracks, maintenance of rubber tracks, and damage caused by the fault of customers such as not respecting don’ts operation or not observing cautions in working, for example, "worked at the site where there were objects that may tear the rubber blocks, such as steel plates, U-shaped gutters, corners of bricks, corners of sheer broken stones and rocks, reinforcing steels, and iron scraps", are not covered by warranty.

Dos and Don’ts

The following operations are prohibited.

- Working and slewing on the ground with broken stones, hard rock ground with great irregularity, reinforcing steels, iron scraps, and near the edge of the steel plates will damage the rubber tracks.

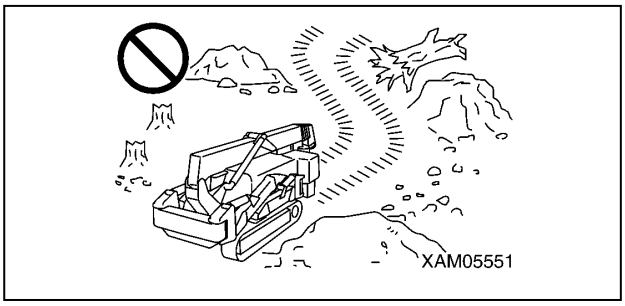

Fig. 5-109

- At the location where there are great amount of large and small boulder stones such as river beds, the stones will go under the machine, tending to damage the rubber tracks or the rubber tracks tend to come off.

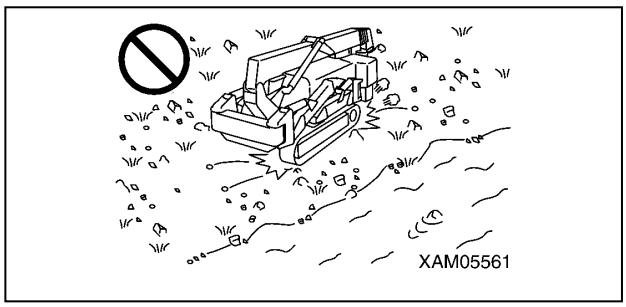

Fig. 5-110

- Keep the oil and chemical solvents away from the rubber tracks.
  If these materials come in contact with the rubber tracks, wipe it off immediately.
  Do not TRAVEL over the road surface where the oil has built up.

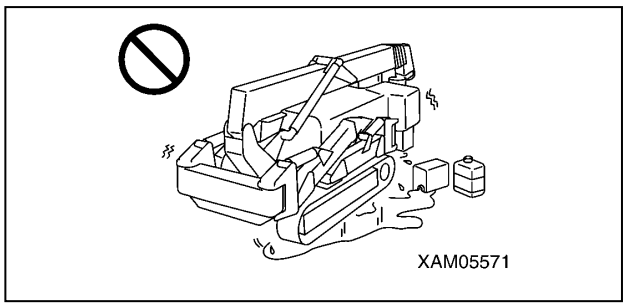

Fig. 5-111

- Do not go in the area where it is hot such as with open fire, the steel plate left under the burning sun, or newly poured asphalt.

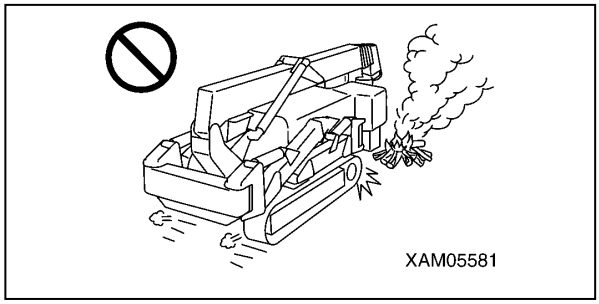

Fig. 5-112

- Keep the rubber tracks indoor where there is no direct sunlight or rain when storing them for long time (three months or more).

https://truckmanualshub.com/

Cautions in Using Rubber Tracks

WARNING! Not observing these cautions in using rubber tracks will cause serious accidents or damage on rubber tracks.

Keep the followings in mind during the operation.

- Avoid making spin turns on the concrete surface. Sudden steering cause early wear or defect on the rubber tracks. Avoid making sudden steering whenever possible.

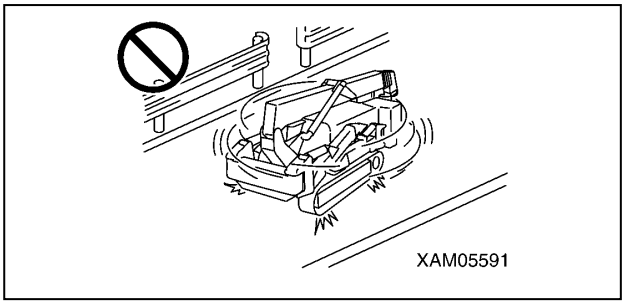

Fig. 5-113

- Do not operate the machine in a way that the edge of the rubber tracks is pressed against the concrete and walls.

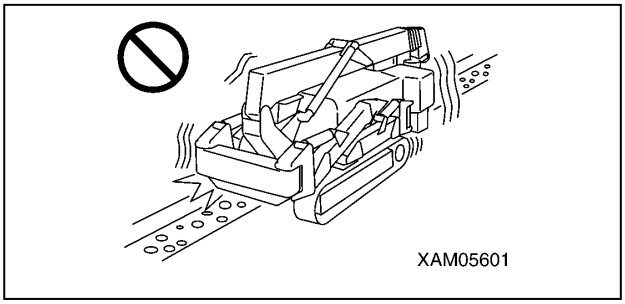

Fig. 5-114

- Avoid steering at the location with a great step. Make the machine perpendicular to the step when going over it.
  Going over the step diagonally may result in the rubber tracks coming off.

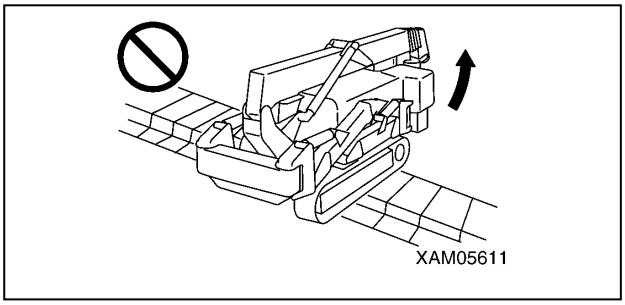

Fig. 5-115

- The rubber tracks slip very easily on a wet steep plate or snowed and frozen surface. Be especially careful not to slip when operating on the slope.

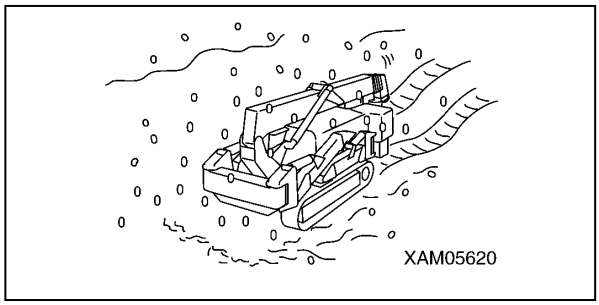

Fig. 5-116

- Avoid using the rubber tracks whenever possible depending on the material to be worked on.
  If you used the rubber tracks on these materials by necessity, wash thoroughly with water after the use.
- Avoid the operation on the material crushed and yielding oil (such as soy beans, corns, rape cake, etc.)
- Handling salt, ammonium sulfate, potassium chloride, or concentrated superphosphate corrodes the bonding at the cored bar section.

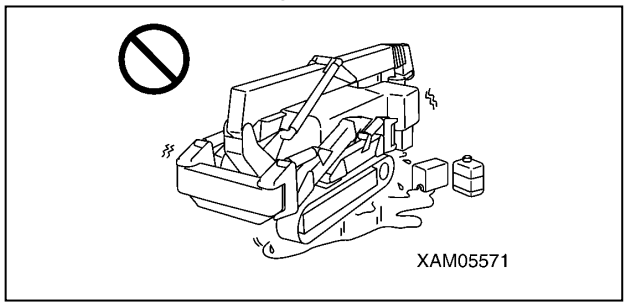

Fig. 5-117

- Salt corrodes the bonding at the cored bar section. Avoid using the machine on the beach whenever possible.

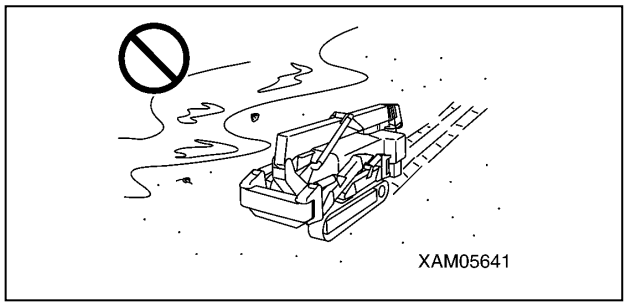

Fig. 5-118

- The operation in the very cold land changes the material of the rubber tracks, shortening its life.
  Use the rubber tracks in the range of -25°C to + 55°C, due to the physical property of the rubber.

https://truckmanualshub.com/

- When handling food such as salt, sugar, wheat, and soybeans, some pieces of wire or rubber may be mixed in the food if there is any deep scratch on the rubber tracks.
  Use the rubber tracks after repairing the cracked rubber.

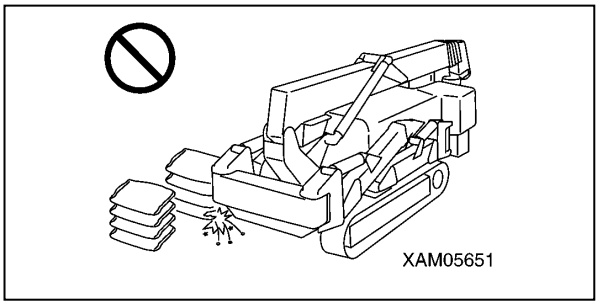

Fig. 5-119

- Always use the rubber tracks at appropriate tension to prevent the rubber track from coming off.
  Loose tension will allow the rubber tracks to come off.

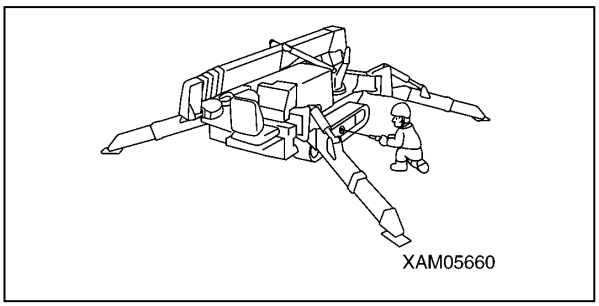

Fig. 5-120

Inspection of Rubber Tracks

CAUTION: Contact us or our sales service agency for determining whether to replace, repair, or keep the rubber track.

The following condition requires the repair or replacement of the rubber track. Contact us or our sales service agency for repair/replacement.

Lug Height

- When the lug height "a" decreases with wear, the traction force drops.
  Replace the rubber track when the lug height decreases to 5 mm or lower with a new rubber track.

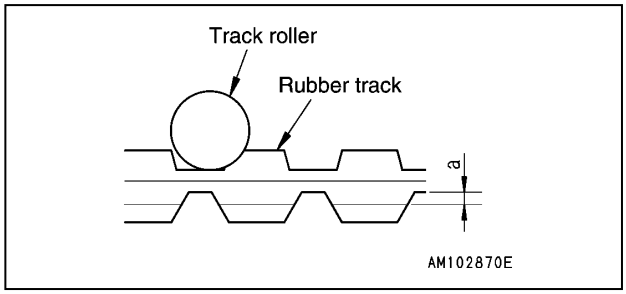

Fig. 5-121

- When the lug is worn out and the steel cord inside the rubber track is exposed for more than 2 links, replace the rubber track with a new one.

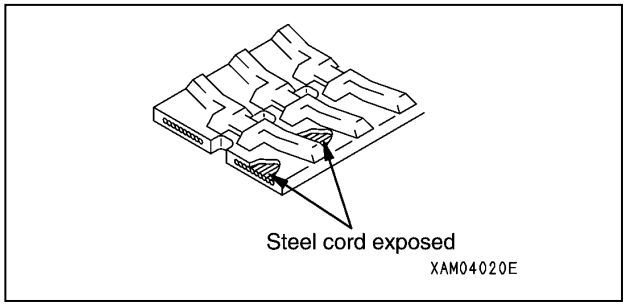

Fig. 5-122

Broken Steel Cord

If more than half of the steel cord layer is broken on one side, replace the rubber track with a new one.

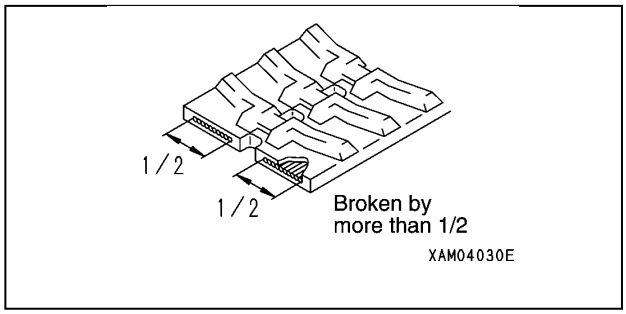

Fig. 5-123

https://truckmanualshub.com/

Fallen Core Metal

If the core metal of the rubber track is fallen out at more than 1 location, change the rubber track with a new one.

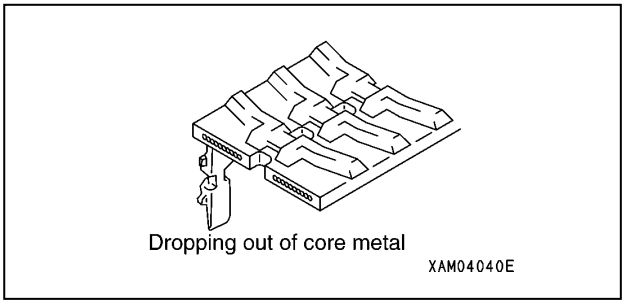

Fig. 5-124

Cracks

If there is a crack between rubber track lugs, change the rubber track with a new one.

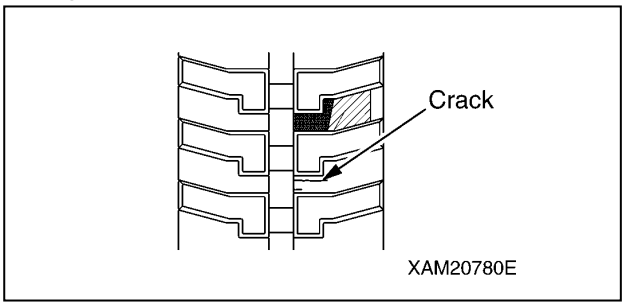

Fig. 5-125

Replace Rubber Track

WARNING!

- **The inside of the tension adjusting device of the rubber track is greased. Grease is under high pressure associated with the tension of the rubber track. Failure to follow precautions stated below when removing grease may lead to a serious accident due to the grease valve being popping out.**
- **Only one full turn of the tension adjusting grease valve is allowed to loosen. The grease valve may pop out if disregarded.**
- **Always stand aside when conducting tension adjustment of the grease valve to circumvent potential dangers.**
- **Ensure that grease is completely removed from the inside of the rubber track before rotating the sprocket to remove the rubber track.**

Removal Rubber Track

Have a steel pipe available.

1. See "OUTRIGGER SETTING" on page 4-36 to set the outriggers and raise the rubber track for about 50 mm from the ground.
2. Loosen the grease valve (1) gradually and remove grease.
3. Provide only one full turn of the grease valve (1).

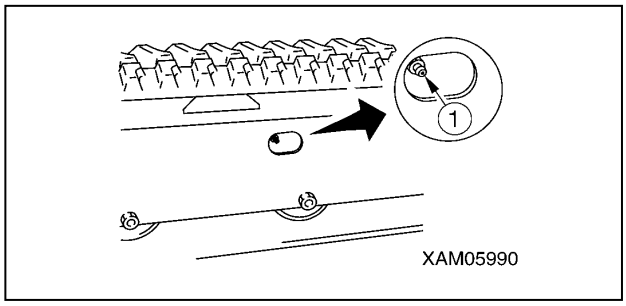

Fig. 5-126

4. Insert the steel pipe between the idler and rubber track, as shown in the figure. Rotate the sprocket backward.
5. When the inserted steel pipe detaches the rubber track from the idler, slide the crawler in a lateral direction to remove it.

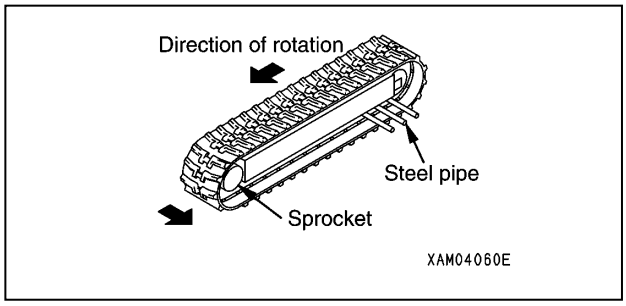

Fig. 5-127

Installation Rubber Track

- Have a grease gun available.
- Have a steel pipe available.

1. See "OUTRIGGER SETTING" on page 4-36 to set the outriggers and raise the rubber track again for about 50 mm from the ground.
2. With the rubber track engaged with the sprocket, put the crawler on the idler.

https://truckmanualshub.com/

3. With the sprocket rotating backward, push the rubber track in to stop rotation.

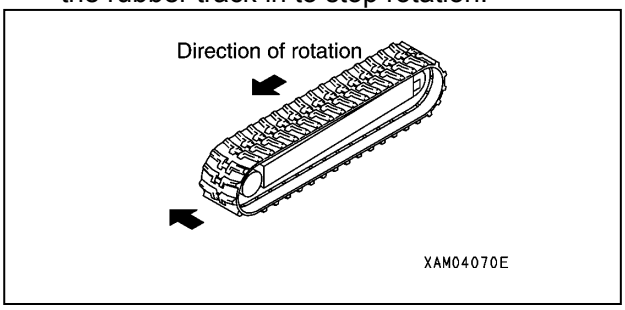

Fig. 5-128

4. Insert the steel pipe between the idler and rubber track again, and re-rotate the sprocket to put the crawler on the idler properly.

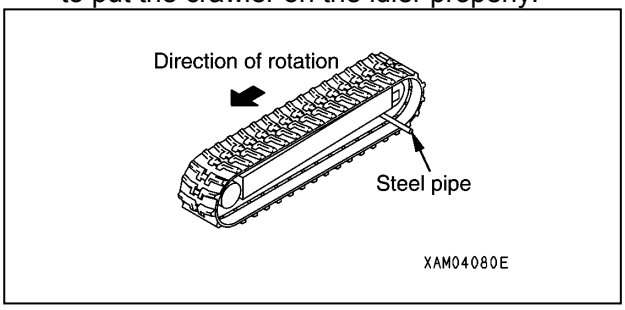

Fig. 5-129

5. Stop rotation, and ensure that the rubber track is on the sprocket and idler properly.

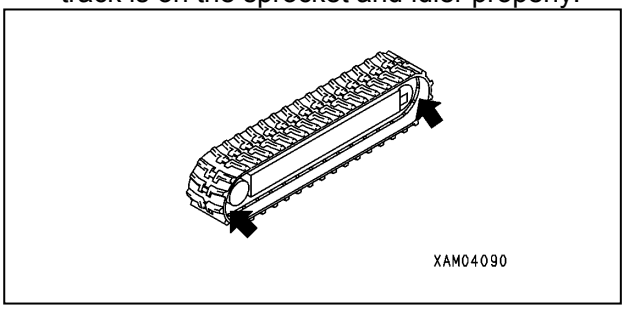

Fig. 5-130

6. Make a tension adjustment to the rubber track according to "Check /Adjust Rubber Track Tension" on page 5-64.
7. Ensure that adequate engagement and tension of the rubber track, sprocket, and idler are obtained.
8. See "OUTRIGGER STOWING" on page 4-45 to stow the outriggers and lower the machine on the ground.

Checking After Starting Engine

Check the followings in this section after starting the engine and before starting the first work every day.

CAUTION : The checkups described in this section should be carried out after starting the machine.
See "STARTING ENGINE" on page 4-15 and later to execute the engine startup, travelling operations, outrigger operations and crane operations.

Check / Adjust Rubber Track Tension

CAUTION:

- **Set the outriggers and raise the rubber track for about 50 mm from the ground when checking/adjusting the tension of the rubber tracks.**
- **The standard tension of the rubber track is that the clearance between the wheel tread of the track roller at centre and the shoulder of the rubber track is 5 to 10 mm.**
- **If the tension is not sufficient even after injecting the grease, the rubber track or the sealing of the tension adjustment cylinder needs to be changed.**
  Contact us or our sales service agency for the judgement of whether to replace, repair, or keep the rubber track.

The rubber tracks are worn out differently depending on the working conditions and soil quality. Regularly check the wear and tension of the rubber tracks.

Especially, with the new machine or when a new part was installed, "initial slack" appears with 5 to 30 hours of driving after adjusting the tension to the specified value.

Adjust the tension frequently until the period of "initial slack" passes. This will prevent "rubber track from coming off due to insufficient tension on the rubber track".

https://truckmanualshub.com/

Tension Check

1. Move the left and right crawlers so that the junction of the rubber track (indicated by M) comes to the top centre between the axles.

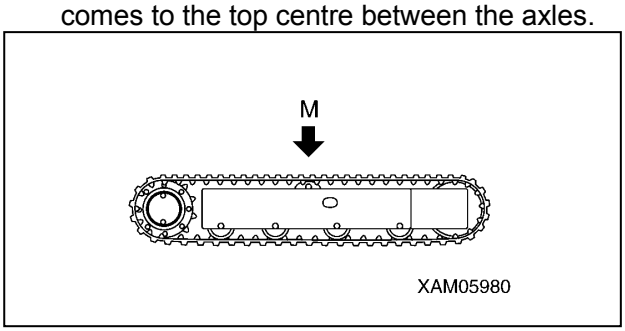

Fig. 5-131

2. See "OUTRIGGER SETTING" on page 4-36 to set the outriggers and raise the crawlers for about 50 mm from the ground.
3. Measure the clearance between the wheel tread of the track roller at centre and the shoulder of the rubber track.

NOTICE: The clearance of 5 to 10 mm indicates the standard tension.

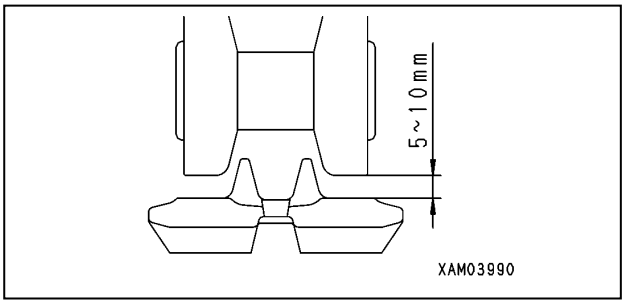

Fig. 5-132

4. If the tension is out of the standard range, see "Tension Adjustment" on page 5-65 to make adjustments.

Tension Adjustment

If the "tension check" of the rubber track found the tension lower than standard tension of the rubber track, make adjustments as described below.

Working with the loose rubber track (the tension of the rubber track at 15 mm or more) will cause run-off or early wear of the core metal.

- **Loose Tension (Increase Tension)**

Have a grease gun (pump) ready.

1. Inject the grease from the grease valve (1) using the grease gun.

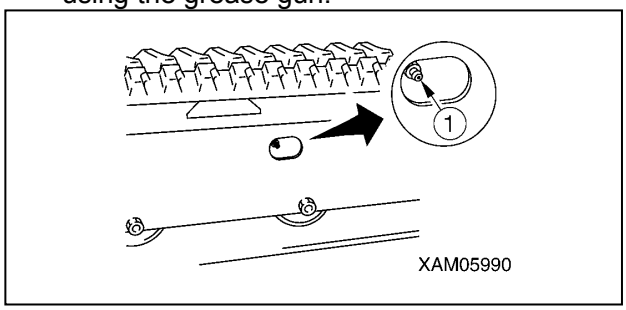

Fig. 5-133

2. Perform the following tasks to verify the proper tension.
   (1) See "OUTRIGGER STOWING" on page 4-45 to stow the outriggers and lower the machine on the ground.
   (2) Move the machine forward/backward.
   (3) See "OUTRIGGER SETTING" on page 4-36 to set the outriggers and raise the crawlers again for about 50 mm from the ground.
3. Perform the "tension check" of the rubber track again.
   If the tension is not appropriate, make another adjustment.
4. See "OUTRIGGER STOWING" on page 4-45 to stow the outriggers and lower the machine on the ground.

https://truckmanualshub.com/

- **Tight Tension (Decrease Tension)**

WARNING! Inside the rubber track tension adjustment device has the grease sealed. The grease is under high pressure due to the tension of the rubber track.

Making adjustments without observing the followings may cause the grease valve to fly away, resulting in serious accidents.
- **Do not loosen the grease valve for tension adjustment for more than 1 turn. The grease valve may pop out.**
- **Do not place yourself right in front of the grease valve when adjusting the tension to avoid any danger.**

1. Slowly loosen the grease valve (1) to drain the grease.

NOTICE: When loosening the grease valve (1), do not loosen more than for one turn.

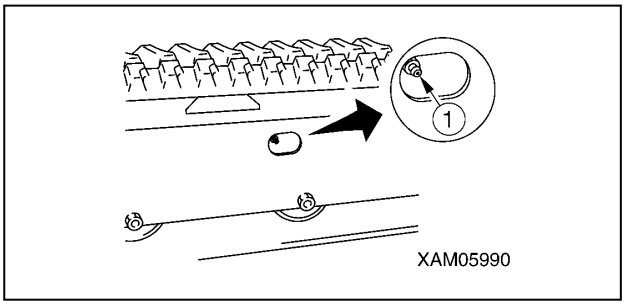

Fig. 5-134

2. If the grease is not drained easily, perform the following to drain the grease.
   (1) See "OUTRIGGER STOWING" on page 4-45 to stow the outriggers and lower the machine on the ground.
   (2) Move the machine forward/backward.
   (3) See "OUTRIGGER SETTING" on page 4-36 to set the outriggers and raise the crawlers again for about 50 mm from the ground.
3. Tighten the grease valve (1).
4. Perform the "tension check" of the rubber track.
   If the tension is not appropriate, make another adjustment.
5. See "OUTRIGGER STOWING" on page 4-45 to stow the outriggers and lower the machine on the ground.

Wire Rope

General Information and Precautions

Contact us or our sales service agency for additional information on replacing and repairing wire rope.

WARNING! Always wear work leather gloves when replacing the wire rope.

CAUTION:
- **A diameter of the wire rope is to be measured at points where the wire repeatedly runs through the sheave. A mean value needs to be determined through three-way measurement. (A measurement should be performed at several points, spacing between the points.)**
- **DO NOT use the old wire rope regardless of the frequency of use.**

Inspecting Wire Rope

A wire rope undergoes wear and tear over time.

Prompt replacement is required if any of the following events appears in the wire rope.

- Broken wire
  In running rope, six randomly distributed broken wires in one lay or three broken wires in one strand in one lay.

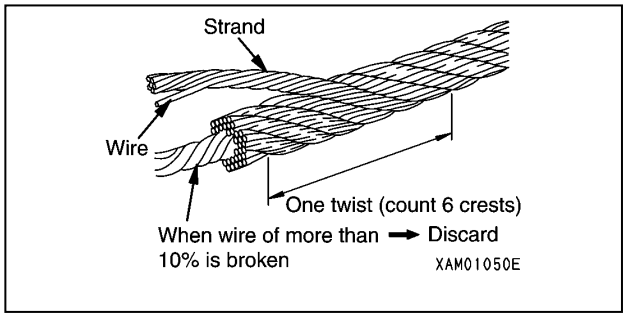

Fig. 5-135

- Kinking, crushing, bird-caging, or any other damage resulting in distortion of the rope structure.
- Evidence of any heat damage from any cause.

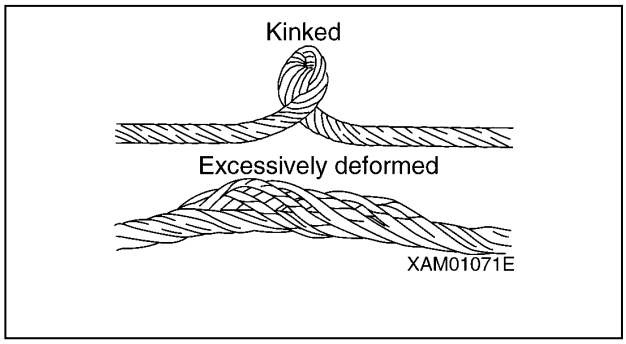

Fig. 5-136

https://truckmanualshub.com/

- Reduction from normal diameter of more than the following:
  0.4mm for diameters up to and inching 8.0mm.

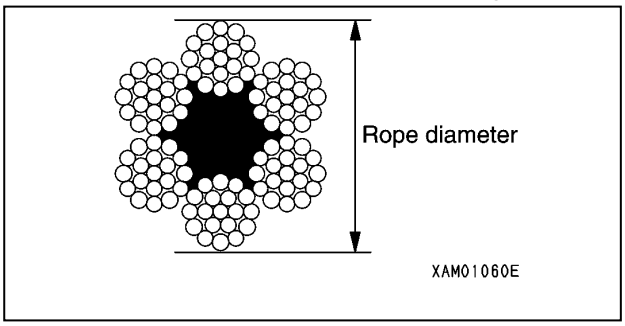

Fig. 5-137

Winch Wire Rope - Correcting Twisted Rope

WARNING! Be sure to wear a pair of thick leather working gloves when handling wire ropes.

CAUTION: Change the hooking direction of the wire rope (inverse the hook block side and winch drum side) from time to time to extend the life of the wire rope.

When the wire rope gets twisted, straighten the twist with the following procedure.

1. With the hook in normal condition, check the twisting direction and how many times the rope is twisted.

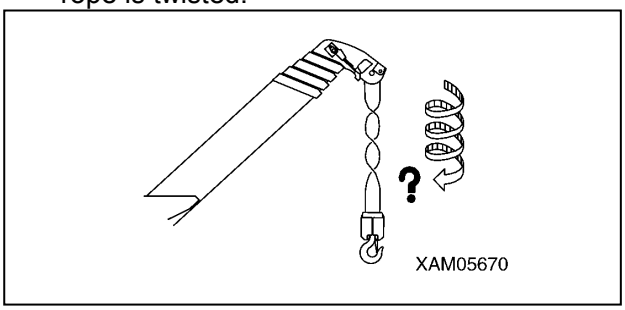

Fig. 5-138

2. Move the winch lever to LOWER (push forward) to lower the hook block until just before it makes contact with the ground. Lower the hook block by either moving the boom lifting lever to LOWER (push forward) to lower the boom or by moving the boom telescoping lever to RETRACT (pull toward you) to retract the boom.
3. Turn the starter switch to the "OFF" position to stop the engine.

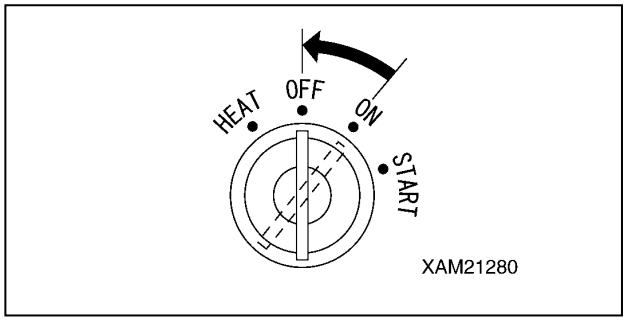

Fig. 5-139

4. Remove the wedge socket pin securing bolt (1) to remove the wedge socket (2).

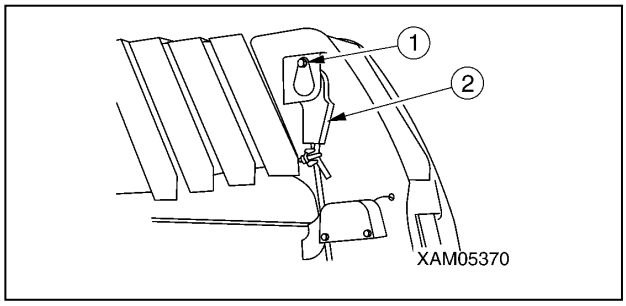

Fig. 5-140

5. Force to twist the end of the wire for "n" (number of wire falls) times of the number hook is twisted for in the opposite direction from the direction the hook block is twisted to and which you checked in the step 1 (opposite direction from the one the wire rope tries to go back to naturally when you release your hand from the wedge socket) and install the wire rope.

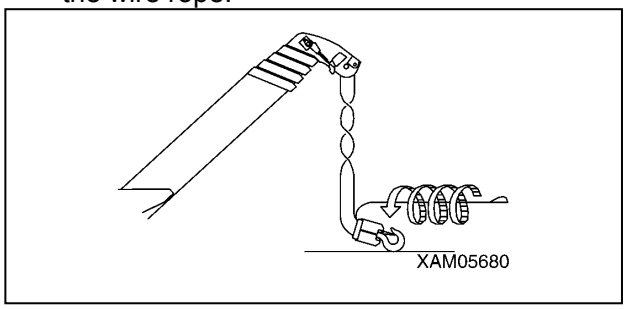

Fig. 5-141

6. Start the engine and operate the boom derricking lever to the "RAISE" (pull toward you) side to increase the boom angle to its maximum.
7. Operate the boom telescoping lever to the "EXTEND" (push forward) side to extend the boom to its maximum.
8. Operate the winch lever to repeat raising/lowering the hook block for several times.

https://truckmanualshub.com/

9. Tidily spool up the wire rope into the winch drum with some tension applied to the rope.
10. Repeat the above procedure until the hook is no more twisted.

If the wire rope is still twisted after performing the procedure above, change with a new wire rope.

Winch Wire Rope - Removal

Use the following procedure to remove the wire rope.

1. Place the machine on a level and firm surface.
2. Place the boom telescoping lever in the "Extend" position (push it toward the front) to extend the boom slightly.
3. Move the winch lever to LOWER (push forward) to lower the hook block until just before it makes contact with the ground. Lower the hook block by either moving the boom lifting lever to LOWER (push forward) to lower the boom or by moving the boom telescoping lever to RETRACT (pull toward you) to retract the boom.
4. Undo the wedge socket fixing bolt (2). Remove the wedge socket pin (1) and remove the wedge socket (3).
5. Remove the wire clip (4).

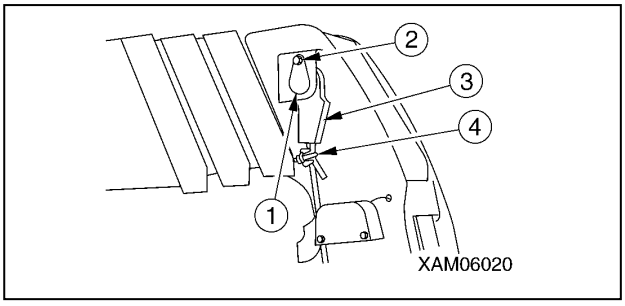

Fig. 5-142

6. Pull the wire rope (5) out of the wedge socket (3), following the procedure provided below.
   (1) Bring a 4 to 6mm round bar (6) into contact with the rope wedge (7).
   (2) Remove the rope wedge (7), lightly tapping the round bar (6) with a hammer in the direction indicated by the arrow (a).

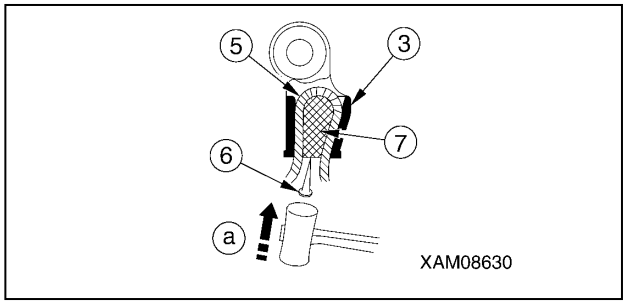

Fig. 5-143

7. Place the winch lever in the "Down" position (push it toward the front) to wind up the wire rope (5) from the winch drum.
8. With the wire rope winded up from the winch drum, detach the end of the wire rope (5) from the winch drum (8) by following the procedure provided below.
   (1) Bring a 4 to 6mm round bar (6) into contact with the rope wedge (9).
   (2) Remove the rope wedge (9), lightly tapping the round bar (6) with a hammer in the direction indicated by the arrow (b).

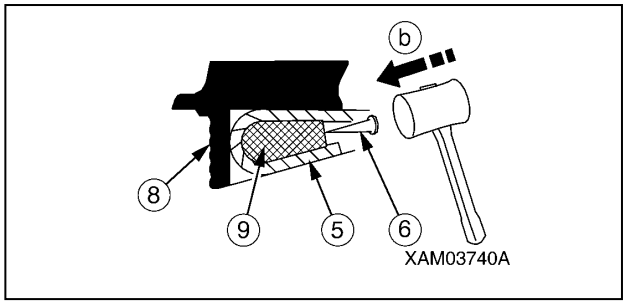

Fig. 5-144

9. Wind up the remaining wire rope (5) completely.

Removal of the winch wire rope is completed.

https://truckmanualshub.com/

Winch Wire Rope - Installation

WARNING! Be sure to attach the rope wedge properly to secure the wire rope. Potential serious accident may occur due to detachment of the wire rope during crane operation if disregarded.

CAUTION:

- **Avoid irregular winding of the wire rope in the winch drum.**
- **Always hoist an object 2.9 to 4.9KN (300 to 500kg) with the boom extended and raised fully immediately after attaching a new rope. Repeat raising and lowering the hook several times until the new rope conforms.**
- **The wire rope is coiled. Exercise caution not to form a kink in the rope when winding it up. Be sure to unrope by rotating the rope to pull it out of the winch drum.**

Use the following procedure to attach the wire rope.

1. With the end of the wire rope held, draw the wire rope (5) through the weight of the over winding detector, load sheave (1) at the boom end, wire guide (2) of No.2, 3, and 4 boom, snap sheave (3), and idler sheave (4).

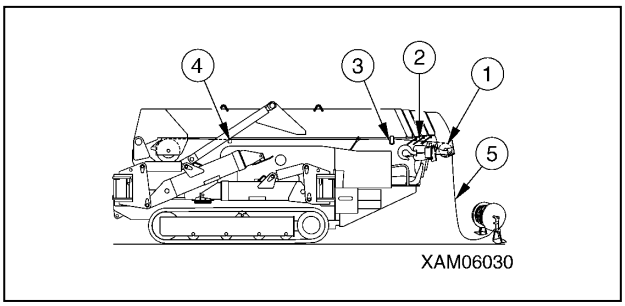

Fig. 5-145

2. Draw the wire rope (5) through the attachment hole of the winch drum (8). Secure the wire rope (5) to the winch drum (8)., following the procedure provided below.
   (1) Draw the wire rope (5) through the winch drum (8). with the rope loose.
   (2) The rope wedge (9) should be in position (a). Pass the wire rope (5) around the rope wedge and yank at the rope in the direction indicated by the arrow. Adjust the length of the wire rope (5) to keep the end of the wire rope from protruding from the narrow hole in the winch drum (8).

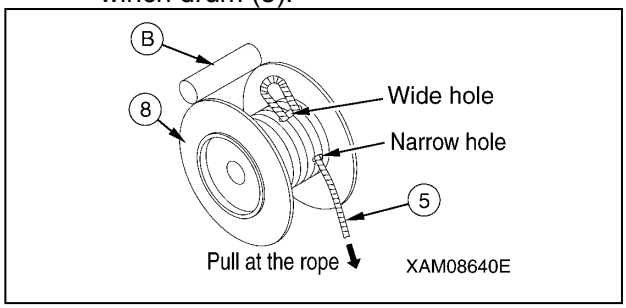

Fig. 5-146

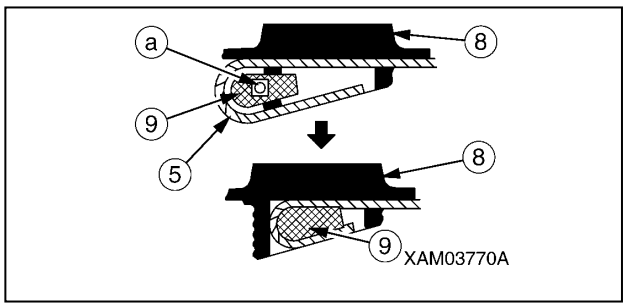

Fig. 5-147

3. Place the winch lever in the "Up" position (pull it toward you) slowly to wind up the wire rope (5) in the winch drum (8).
   Ensure that the wire rope is coiled between the irregular winding protective roller (B) and winch drum. The wire rope needs to jut out the boom end (approx. 10m).

https://truckmanualshub.com/

4. In response to the number of falls, draw the wire rope through the load sheave at the boom end, hook block sheave, guide sheave, and retraction cam.

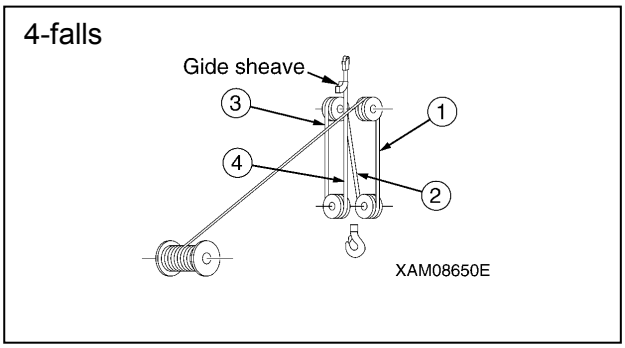

Fig. 5-148

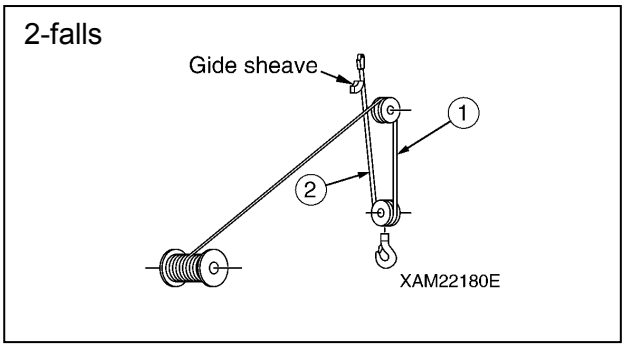

Fig. 5-149

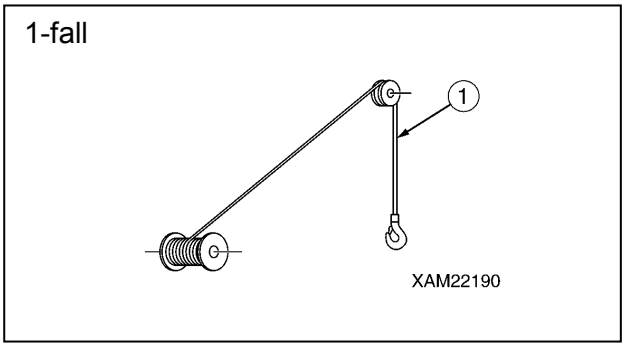

Fig. 5-150

5. Secure the end of the wire rope (5) to the wedge socket (3), following the procedure provided below.
   (1) Draw the wire rope (5) through the wedge socket (3) as shown in the figure.
   (2) With the rope wedge (7) in position (a), yank at the wire rope (5) in the direction indicated by the arrow.

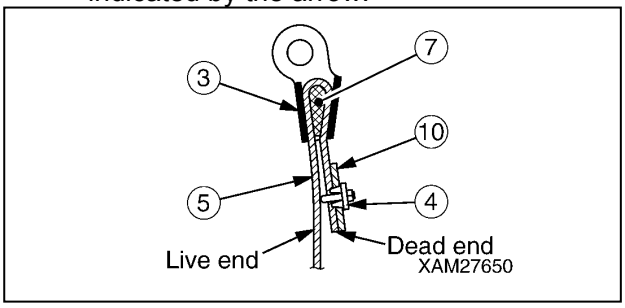

Fig. 5-151

6. Fasten the rope (10) together with the rope clip (4) to the dead end of the wire rope (5).

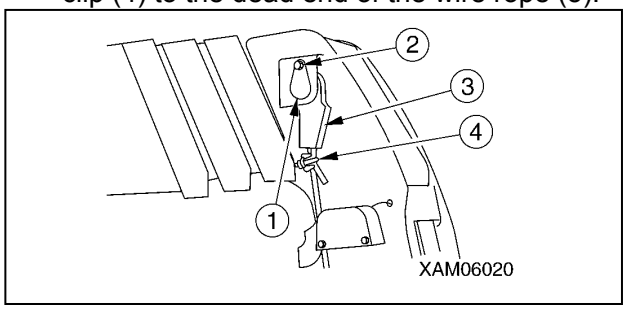

Fig. 5-152

7. Secure the wedge socket (3) to the boom with the wedge socket pin (1), and tighten the wedge socket fixing bolt (2).
8. Place the boom derricking lever in the "Raise" position (pull it toward you) or the boom telescoping lever in the "Extend" position (pull it toward you) to raise the hook block.

NOTICE: Winch operation is allowed only after the hook block is raised.

9. With the boom extended and raised fully, place the winch lever in the "Down" position (push it toward the front) to adjust the wire rope (5) until 3 to 4 turns of wire are left in the winch drum (8).
10. With the wire rope (5) held under tension, place the winch lever in the "Up" position (pull it toward you) to wind up the wire rope (5) in the winch drum (8).

https://truckmanualshub.com/

Check / Adjust Boom Telescoping Wire Rope

Checking Boom Telescoping Wire Rope

Prompt adjustment is required if the following event appears in the boom extending wire rope.

1. Retract the boom completely.
2. Remove three mounting bolts (1) at the boom end and remove the cover (2).

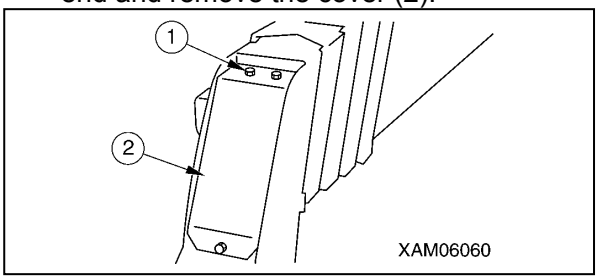

Fig. 5-153

3. Remove lock bolt (6) at the boom telescoping cylinder top, and turn adjustment bolt (9) of the boom extending wire clockwise (right).
   The boom extending wire rope (8) is adjusted to the correct tension if boom No.5 extends upon rotating the adjusting bolt (9).
   If boom No.5 remains retracted, perform proper adjustment according to "Adjustment of boom telescoping wire rope".

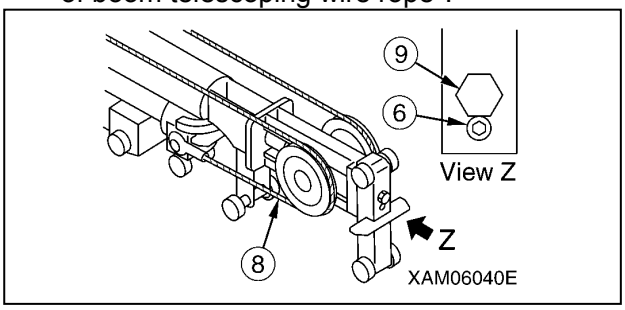

Fig. 5-154

4. Check that 5mm clearance is formed between booms No.4 and No.5, clearance (a) shown in the figure, with the booms retracted in a horizontal position.
   If check finds clearance of 5mm or more, perform proper adjustment according to "Adjustment of boom telescoping wire rope" on page 5-72.

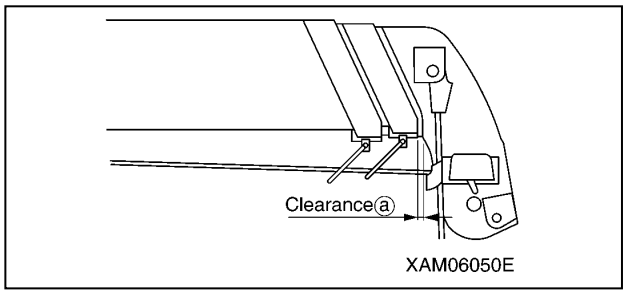

Fig. 5-155

https://truckmanualshub.com/

Adjustment of Boom Telescoping Wire Rope

CAUTION: The wire ropes must be adjusted to the correct tightness.

A boom extending wire rope (1 piece) and retracting wire rope (1 piece) are used in this machine.
Adjustment of these wire ropes must conform to the specified procedure. Use the following procedure for wire rope adjustment.

1. With the booms retracted in a horizontal position, extend the telescoping booms approx. 2m.

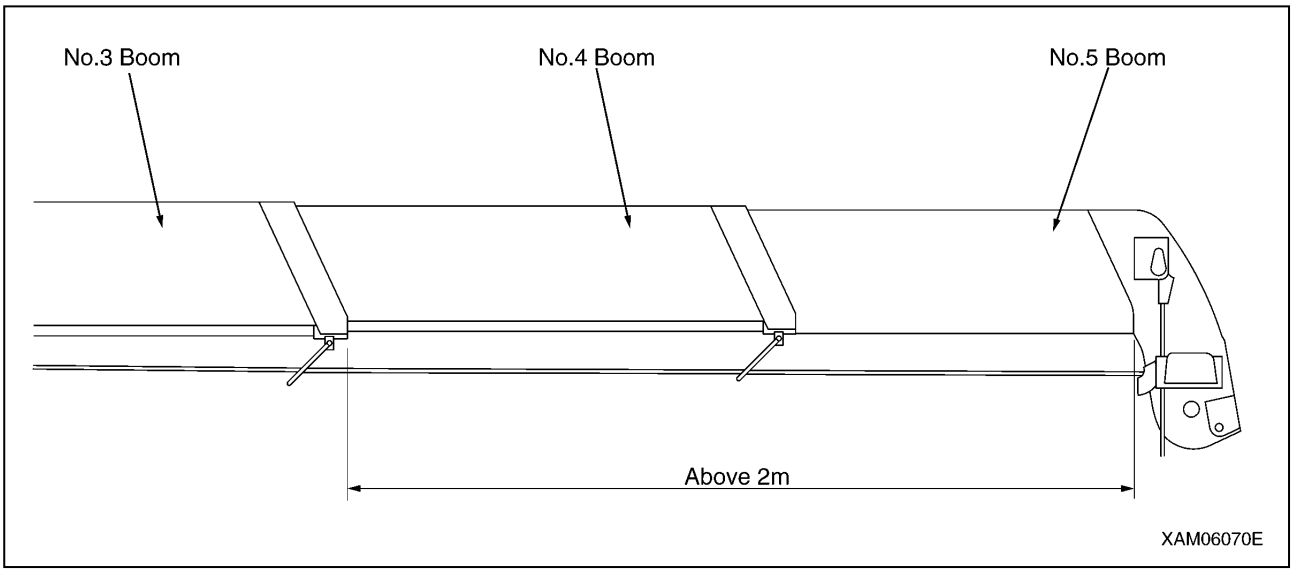

Fig. 5-156

2. Retract the booms completely. Slow boom stowing is required.
   Measure clearance (a) to check the following for proper adjustment.
   - If 5mm or more clearance is formed, adjust the retracting wire rope (5) of boom No.5.
   - If no clearance is formed, perform wire rope adjustment from section 5 "Adjustment of boom No.5 extending wire rope (8)".

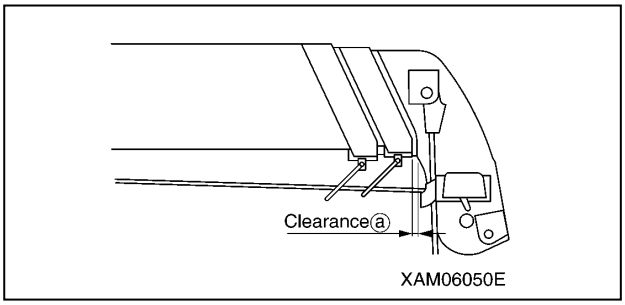

Fig. 5-157

3. Remove the three mounting bolts (1) at the boom end and remove the cover (1).
   If sag is developed in the wire rope, adjust the wire rope according to "Adjustment of wire rope".

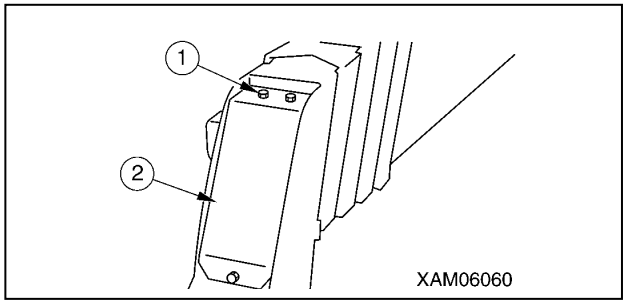

Fig. 5-158

https://truckmanualshub.com/

4. Adjustment of boom No.5 retracting wire rope (5)
   (1) With the lock nut (3) loose, turn the adjusting nut (4) in the direction that the retracting wire rope (5) becomes tight (clockwise (right)) to provide laterally even tightening until clearance (a) is bridged.
   (2) If the retracting wire rope remains sagging or 5mm or more clearance remains present after performing steps 1 and 2, readjustment is required.

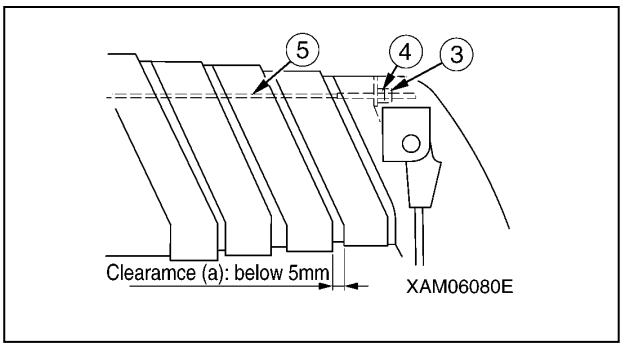

Fig. 5-159

5. Adjustment of boom No.5 extending wire rope (8).
   (1) Remove the lock bolt (6). Turn the adjusting bolt (9) in the direction that the extending wire rope (8) of boom No.5 becomes tight (clockwise (right)) to provide tightening to the verge of the extension of boom No.5.
   (2) Provide retightening to both adjusting nuts (4) of the boom No.5 retracting wire rope (5) two turns each.
   (3) Secure the adjusting nuts (4) of the boom No.5 retracting wire rope (5) with the lock nut (3).
   (4) Provide retightening to both adjusting bolt (9) of the boom No.5 extending wire rope (8), and secure it with the lock bolt (6).

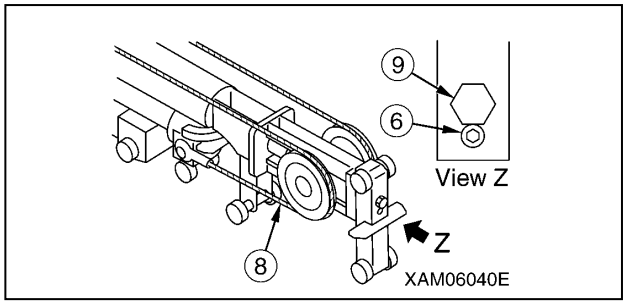

Fig. 5-160

6. Install the cover (2) to the boom end with the three mounting bolts (1) upon completion of adjustment.

https://truckmanualshub.com/

LONG-TERM STORAGE

Before Storing Machine

CAUTION: The machine shall take the posture shown in the figure during the long-term storage to protect the cylinder rod. For more information on travelling posture, see "TRAVELLING POSITION" on page 4-21. (To prevent rust on the cylinder rod)

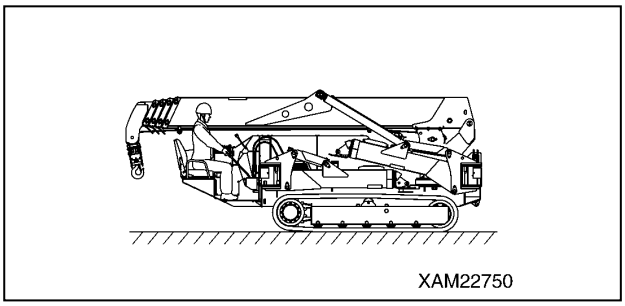

Fig. 5-161

Store the machine as described below for long-term storage.

- Wash and clean each section of the machine and store indoor.
  If you absolutely have to leave it outdoor, select a flat location where the machine is not likely to be exposed to flood or other disasters and cover the machine.
- Refuel, grease, and change the oil without fail.
- Disconnect the negative terminal of the battery and cover, or dismount the battery from the machine for storage.
- If the temperature will go down to 0 degree or below, add antifreezing fluid. Contact us or our sales service agency for the mixing quantity of the antifreezing fluid.

During Storage

WARNING! If you have to perform antirust operation indoor, open the window and entrance for better ventilation to prevent gas poisoning.

Be sure to operate the machine once a month during the storage to maintain the oil film at lubricating section. Charge the battery at the same time.

After Storage

WARNING! If you did not perform antirust operation monthly during the long-term storage, contact us or our sales service agency before using the machine.

Perform the followings before using the machine after the long-term storage.

- Refuel, grease, and change the oil without fail.
- Remove the cover over the battery (install the battery to the machine if dismounted for storage).

Check the electrolyte level and specific gravity, and then connect the battery cable from the positive side.

- Remove the drain plug of the fuel tank, operation oil tank, and engine oil pan to drain the water mixed in.
- Carefully perform the check before starting operation and warm-up operation.

Carefully check the various parts of the machine.

For Electric Motor

Use the following procedure for storing the machine for 6 months or longer (3 months or longer if stored in hot and humid surroundings).

- Cover the electric motor and hydraulic pump of the power unit with a plastic sheet. Keep the machine dry with a dehumidifying agent in the covered sheet.
- Conduct 5-minute idling of engine quarterly during long-term storage.

CAUTION:

- **Quarterly insulation resistance test of electric motor wiring is required during long-term storage.**
  Contact us or our sales service agency in the above event.
- **Insulation resistance test of electric motor wiring is required before resuming the machine after long-term storage.**
  Contact us or our sales service agency in the above event.

https://truckmanualshub.com/

COLD TEMPERATURE PREPARATION

When the temperature goes down, the machine starts to have some difficulty in starting. Take the following actions.

Lubrication

Change the oil to the one with low viscosity. See "LUBRICATING OIL" on page 5-14 for the specified viscosity.

Coolant

WARNING! The antifreezing fluid is inflammable. Do not put the fluid close to fire and do not smoke while handling the fluid. Do not smoke when handling the antifreezing fluid.

CAUTION: Never use antifreezing fluid with methanol, ethanol, and propanol.

For more information on the coolant replacement period and mixing rate of antifreezing fluid, see "Coolant Replacement and Internal Cleaning" on page 5-49.

Battery

WARNING!

- **The battery produces combustible gas and can be explosive. Do not put fire close to the battery.**
- **The battery fluid is a harmful substance. Keep it away from your eyes and skin. Should it come into contact with your eye or skin, wash the affected area with plenty of water and consult a physician immediately.**

The battery capacity drops when the temperature goes down.

In this condition, the battery fluid can freeze with low battery charging rate. Keep the charging rate as close to as 100 %. Keep the battery warm in order to start the engine next morning.

NOTICE: Measure the specific gravity of the battery fluid and convert it into the charging rate using the chart below.

		Fluid Temperature (°C)			
		20	0	-10	-20
Charging Rate (%)	100	1.28	1.29	1.30	1.31
	90	1.26	1.27	1.28	1.29
	80	1.24	1.25	1.26	1.27
	75	1.23	1.24	1.25	1.26

https://truckmanualshub.com/

Cautions after Completing the Operation

Observe the followings to prevent the machine from not being able to function the next morning because of deposits such as dirt and water and materials around the feet frozen.

- Remove the dirt and water on the machine. Keep the hydraulic cylinder rod surface especially clean to prevent seal from being damaged with the dirt coming into the seal together with the water drops.
- Park the machine on the solid and dry ground. If there is no such location to park, place a board on the ground to park the machine on the board. This prevents the ground and around the feet of the machine from freezing and allows the machine to start moving next morning.
- Remove the drain plug to drain the water in the fuel system to prevent the water from freezing.
- The battery ability remarkably drops at low temperature.
  Cover the battery or remove the battery from the machine and keep it at warm place to be installed next morning.
- If the electrolyte level is low, refill with distilled water next morning before starting the operation. Do not refill after the operation in order to prevent the water from freezing during the night.

After the Cold Weather Is Gone

When the season changed and it started to get warm, take the following action.

- See "LUBRICATING OIL" on page 5-14 to change the oil in the system to the one with specified viscosity.

850 kg SEARCHER HOOK INSPECTION AND MAINTENANCE

Legal Inspection

If a periodic safety inspection is required by the laws and regulations of your country, perform that inspection in addition to the inspection items listed below.

1. Verify that all safety devices are operating properly.
2. Check the hoist accessories, including the hook block, for problems or damage.
3. Check the structural parts of the machine, including the frame and boom, for cracks, deformation and damage.
4. Check for loose or missing mounting bolts and joints.
5. Verify that the boom operates properly by stopping, extending, retracting, raising, lowering and slewing the boom.

Contact us or our sales service agency to request inspection and repair service as needed.

https://truckmanualshub.com/

Consumables

Parts for mounting searcher hook are consumable items. Replace them at periodic inspection or before they reach abrasion limits. Replace consumable items regularly, which will produce economical use of this machine. Always replace with a Maeda genuine item. Check parts catalogue for correct part number for parts request.

List of Consumables	
Item	**Replacement cycle**
Searcher hook fix bolt M12x35L strength 10.9 (8pcs)	Every 6 months or when damage, crack, or squash is found
Searcher hook fix bolt M8x16L strength 10.9 (1pcs)	Every 6 months or when damage, crack, or squash is found
Searcher hook fix nut M12x1grade (8pcs)	Every 6 months or when damage, crack, or squash is found
Searcher hook fix washer M12x3.2t (high tension) (8pcs)	Every 6 months or when damage, crack, or squash is found

Items include a halt period. Contact us or our sales service agency for part replacement information.

https://truckmanualshub.com/

Inspection and Maintenance List

The following only covers the searcher hook kit. For the machine body, see "INSPECTION" on page 5-21 and follow its precautions.

Maintain in accordance with the laws and regulations of the relevant country and region.

Inspection Item	Reference
Pre-Start Visible Checks	See "Pre-Start Visible Checks" on page 5-22.
Pre-Start – Before Starting Engine	
Check E-Boom, Frame and Hook	See "E-Boom, Frame And Hook" on page 5-79.
Check Greasing	See "Greasing" on page 5-79.
Check Searcher Hook Fix Bolts	See "Searcher Hook Fix Bolts" on page 5-79.
Installation Check of Position Pin and Lynch Pin	See "Position Pin and Lynch Pin" on page 5-79.
Post-Start – After Starting Engine	
Check Moment Limiter for Operation (850 kg Searcher Hook Mode)	See "Moment Limiter for Operation (850 kg Searcher Hook Mode)" on page 5-80.

https://truckmanualshub.com/

Visible Checks

1. Check that there are no abnormalities with the safety equipment.
2. Check that there are no abnormalities with the hooks or other lifting equipment.
3. Check that there is no cracking or deformation on the booms or other structural parts.
4. Check that the specified mounting bolts and nuts are used and that they are not loose or missing.
5. Operate the boom and check that it moves and stops correctly.

Contact our sales service agency if abnormalities are discovered during inspection.

Pre-Start – Before Starting Engine

Check the following in this section without starting the engine and before starting work every day.

E-Boom, Frame and Hook

- Check each part of the E-Boom, frame and Hook for cracks, excessive deformation and contamination etc. In addition, check bolts, nuts and pins for any looseness, drop and damage etc. If you find any abnormality, repair.
  Check hook for deformation, abnormal noise from bearing and correct function of wire rope latch (1).

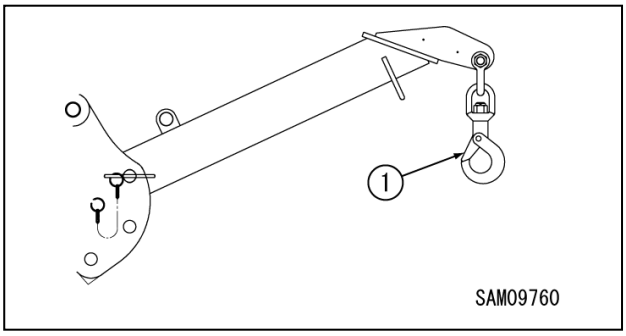

Fig. 5-162

Greasing

- Wipe off and clean old grease from contact point (3) of shackle (2) and E-boom hole, and contact point (4) of hook (1) and shackle (2), then apply new lithium grease.

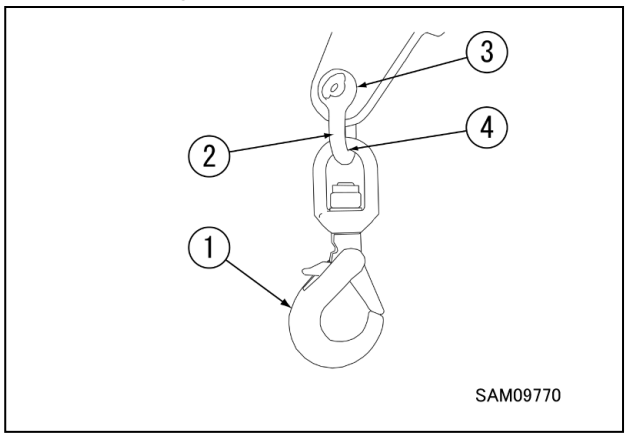

Fig. 5-163

Searcher Hook Fix Bolts

DANGER! If any damage is found on searcher hook fixing bolts, please exchange for new one's right away.

Breakage of bolts will cause the searcher hook to fall off.

- Check if bolts used are the designated type. Also check if there are cracks, damage, squashing, heavy dirt, or rust on bolt.
  If any abnormality is found, change the bolt for a new one even it is earlier than expected bolt life.

Position Pin and Lynch Pin

- Check if position pin is surely secured with lynch pin.

https://truckmanualshub.com/

Post-Start – After Starting Engine

CAUTION: The checkups described in this section should be carried out after starting the machine.
See "STARTING ENGINE" on page 4-15 and later to execute the engine startup, travelling operations, outrigger operations and crane operations.

Moment Limiter for Operation (850 kg Searcher Hook Mode)

WARNING! If you find any abnormality with the moment limiter, immediately contact us or our sales service agency.

1. Turn the starter switch to the "ON" position.
2. Check with the working status lamp. The red of the lamp lights up for 2 seconds and then the green lights up.
3. Check the moment limiter display unit.
   Verify that no error code is displayed at the "RATED TOTAL LOAD" display on the display panel.
   Check if moment limiter is set as 850 kg searcher hook mode, and display in boom length matches actual searcher hook offset position.
   For correct setting, see "Searcher Hook offset position and mode display in boom length window" on page 4-131.
4. Shift the fall mode selector switch on moment limiter display unit to "850 kg Searcher hook mode".
5. Start the engine and operate the crane as follows to verify if the moment limiter properly displays the value.

Crane Operation and Displayed Parameter	Value Displayed on Moment Limiter
Displayed "boom length" with the boom length at minimum	3.7 m
Displayed "boom length" with the boom length at maximum	12.5 m
Displayed "working radius" with the boom length of 5.9m and boom angle of 25°"	SH1 5.7 ± 0.1 m
	SH2 6.1 ± 0.1 m
	SH3 5.8 ± 0.1 m

6. Check if displayed actual load value is equal to the total weight of the load + the hoisting accessory, when the weight of the known load is hoisted. There may be slight error in accuracy depending on boom condition.
7. Operate the crane until the moment limiter display indicates the boom length is 5.9m and boom angle is "25 degrees", then measure the "boom angle" and "working radius".
   If the measured value(s) differ from the moment limiter display value, contact MAEDA or MAEDA sales agency.
8. Lift up load and check if boom extending or boom lowering operation is auto-stopped when overloaded. If the operation is not auto-stopped in overloaded condition, stop using the machine and contact us or our sales service agency.
   This checking operation must be operated slowly, and if machine does not auto-stop by overloading, immediately stop the operation, and perform recovery operation caused by overloading.

NOTICE: When measuring actual working radius, measure from hook offset position of searcher hook

https://truckmanualshub.com/

TROUBLESHOOTING

General

- Make sure that you contact us or our sales service agency for the actions indicated in parentheses in the Actions field.
- Contact our sales service agency if you suspect other abnormality or causes than those given below.

Machine Body

Abnormal Phenomenon	Major Cause(s)	Actions
Crane cannot operate but can travel	• Work selector switch not at "Crane"	• Operate the work selector switch to "Crane"
• Travelling speed, boom and hook block operation speed too slow • Abnormal noise from pump	• Insufficient hydraulic oil • Hydraulic oil tank strainer and element clogged	• See "Check / Add Hydraulic Oil" on page 5-30 and refill with hydraulic oil to the specified oil level • See "Periodic Maintenance Procedure" on page 5-37, and clean or replace the filter
Hydraulic oil temperature too high	• Insufficient hydraulic oil • Between cooling fins clogged	• See "Check / Add Hydraulic Oil" on page 5-31 and refill with hydraulic oil to the specified oil level • Clean
• Rubber tracks coming off • Abnormal wear on the sprockets	• Rubber tracks too loose	• See "Check / Adjust Rubber Track Tension" on page 5-64 and adjust the tension
Outriggers cannot operate	• Outrigger rotary not rotated to extension position (outward). • Work selector switch not at "Outrigger"	• Secure the rotary at the extension position • Operate the work selector switch to "Outrigger"
Crane and outriggers cannot operate	• Work selector switch at "Drive"	• Operate the work selector switch to "Outrigger" or "Crane"

https://truckmanualshub.com/

Engine

Abnormal Phenomenon	Major Cause(s)	Actions
Engine does not start even after the starter key is turned	• Insufficient fuel • Insufficient battery charge • Insufficient compression	• See "Check / Add Fuel" on page 5-27 and refuel • Charge the battery (• Check and replace)
Engine starts but stops right away	• Insufficient oil in oil pan	• See "Check / Add Engine Oil" on page 5-26 and adjust oil level to appropriate one • See causes and actions for "Engine does not start"
Engine power is low, the power gradually drops	• Air cleaner element clogged • Radiator fin clogged • Insufficient compression	• See "Inspect / Clean / Replace Air Cleaner" on page 5-44 and clean or replace the parts • Clean (• Check and replace)
Engine water temperature monitor illuminates while the engine is in operation	• Insufficient coolant • Water leakage from the cooling line • Slackened or broken fan belt • Radiator fin clogged	• See "Coolant Replacement and Internal Cleaning" on page 5-49 and refill with coolant (• Check and repair) • See "Check / Adjust Belt Tension" on page 5-42 to check, adjust, or change the belt • Check and clean
Engine oil pressure monitor illuminates while the engine is in operation	• Insufficient engine oil • Engine oil filter clogged • Engine unit in failure	• See "Check / Add Engine Oil" on page 5-26 and adjust oil level to appropriate one • See "Replace Engine Oil and Oil Filter" on page 5-41 to check, adjust, or change the filter (• Check and repair)

https://truckmanualshub.com/

Electrical Components

Abnormal Phenomenon	Major Cause(s)	Actions
Dark light even at highest engine speed	• Defective wiring	(• Check and repair slackened terminals and open circuits)
Light blinks during engine operation	• Defective alternator • Defective wiring	(• Replace) (• Check and repair)
Battery charge monitor remains illuminated even after the engine starts	• Defective alternator • Defective wiring	(• Replace) (• Check and repair)
Abnormal noise from alternator	• Defective alternator	(• Replace)
Starter not rotating even after the starter switch is turned	• Defective wiring • Insufficient battery charge	(• Check and repair) • Charge the battery
Starter pinion going out and in repeatedly (struggling)	• Insufficient battery charge	• Charge the battery
Starter key turning slow	• Insufficient battery charge • Defective starter	• Charge the battery (• Replace)
Starter disengaged before the engine starts	• Defective wiring • Insufficient battery charge	(• Check and repair) • Charge the battery

https://truckmanualshub.com/

Remote Control

While Crane operates perfectly under manual control, a part or whole functions are un-operable by the remote control.

In such event of failure as above, perform the DIAGNOSIS shown in next pages.

CAUTION: First, check in accordance with the table below before you start the diagnosis, based on next pages.

Such an error may be occasionally fixed by simple practice, such as applying another operation procedure or replacing batteries.

Where the checking by the table below and diagnosis in accordance with the process in the next pages fail to fix the errors or faults, contact us or our sales service agency.

When such errors are due to the electrical failure of the remote control devices, the Crane is operable under the manual control from the Crane.

Check Points	Cause and Action
The Crane is operable under the manual control from the Crane.	When the Crane operates, this remote control device has a failure. Otherwise, when the Crane does not operate, perform the diagnosis of the Crane, itself.
Power of the Transmitter and Receiver is ON.	Turn ON the power, when not.
The fuse in the Receiver is blown.	Check whether the fuse is blown or not; check the cause when blown, then replace with a new one.
Indications in the LCD screen of the Transmitter are OK.	Turn ON the power, when not. When the indications are still not available, repair or replace.
The Transmitter enclosure is deformed or damaged.	Where the Transmitter enclosure is deformed or damaged, repair or replace it.
Each operation lever of the Transmitter is in its neutral position. The Accelerator lever is completely returned.	In any event of operation levers and control buttons failure, repair or replace.
Manipulation began just after the Power switch of the Transmitter is turned ON.	Allow 3 to 4 seconds after the Transmitter power is turned ON, with no operations.
The LCD screen in the Transmitter or the Monitor display in the Receiver shows error messages or error codes.	In the event where the error messages or error codes are indicated, once power OFF the Transmitter and turn it ON again.

https://truckmanualshub.com/

- At the error diagnosis, always verify the indications in the Monitor display in the Receiver and the LCD screen in the Transmitter. Then find the suitable error display description in the table below so that the cause is presumed, then, follow the recommended remedy in it.
- First, perform the "Remedy 1" in the table, then continue the "Remedy 2" where the error is not fixed yet.
- Remedies marked with * must inevitably be contacted us or our sales service agency.
- When any other causes are suspected than listed below, contact us or our sales service agency.

Error display		Main cause	Remedy	
Transmitter	**Receiver**		**Remedy 1**	**Remedy 2**
———	——	Receiver printed circuit board (PCB) input voltage dropped. • Relay PCB defective. • Power line wire harness defective between relay PCB and Receiver PCB.	* Maintenance / replace	
		Receiver PCB defective	* Maintenance / replace	
———	E0	Communication error • Relay PCB in the Crane side defective. • Wiring failure between the communication PCB and the Moment limiter display panel. • The Moment limiter display panel defective.	• Power ON again the Transmitter and Receiver • Shut down the electrical power of the Crane, then ON again.	*Maintenance / replace
⊗ STOP	E1	The Transmitter is in emergency stop	• Use the Reset button to release the emergency stop.	*Maintenance / replace
———	E2	The Transmitter defective • The Transmitter power is not ON. • The Transmitter PCB defective. • Wire cut in the Connection cable.	• Power ON again the Transmitter * Maintenance / replace * Maintenance / replace	*Maintenance / replace
		The Receiver defective. • The Receiver PCB defective. • Wiring problem in the Receiver	* Maintenance / replace	
E3	E3	The Transmitter defective • The Transmitter PCB defective. • Voltage dropped in the Transmitter. • Wirings for Accelerator and operation levers cut, or fault of VR.	• Return the Accelerator lever and power ON the Transmitter, again	*Maintenance / replace
———	E4	The Transmitter defective • The Transmitter Accelerator lever position defective.	• Return the Accelerator lever and power ON the Transmitter, again.	*Maintenance / replace
———	E5	The Transmitter defective • The Accelerator lever was pulled, when power was turned ON.	• Return the Accelerator lever and push the Reset button.	*Maintenance / replace
———	E6	The Receiver PCB defective • Data error in the memory.	• Power on the Receiver, again.	*Maintenance / replace
———	E7	The Receiver PCB defective • CPU error	• Power on the Receiver, again.	*Maintenance / replace

https://truckmanualshub.com/

Error display		Main cause	Remedy	
Transmitter	**Receiver**		**Transmitter**	**Receiver**
E9	E9	The Transmitter, internal devices defective. • Operation levers were not in the neutral position, when power was turned ON.	• Return operation levers and push the Reset button.	*Maintenance/replace
———	———	The Transmitter, internal Devices defective. • Data error in the memory.	• Power on the Transmitter, again.	*Maintenance/replace
———	d1	Breaking of wire for telescopic control	*Maintenance/replace	
———	d2	Breaking of wire for hoisting control	*Maintenance/replace	
———	d3	Breaking of wire for derricking control	*Maintenance/replace	
———	d4	Breaking of wire for slewing control	*Maintenance/replace	
———	d5	Breaking of wire for accelerator	*Maintenance/replace	
———	d6	Valve neutral error	*Maintenance/replace	
The Crane operates perfectly under the manual mode but some functions are not available in the remote control mode.		• The Receiver PCB defective. • Wiring failure between the Receiver PCB and the control valve solenoids. • Electromagnetic proportional control reducing valve error.	* Maintenance / replace * Maintenance / replace * Maintenance / replace	

https://truckmanualshub.com/

Moment Limiter Error Causes and Actions to Be Taken

The moment limiter displays an error code at the "rated total load" display section on the display panel to notify the error.

If an error code shown in the table below was displayed, contact us or our sales service agency.

Error Code	Error Details	Actions to Be Taken
E1L 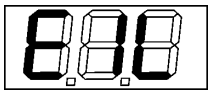	The input to pressure sensor 1 is lower than the specified value.	Check the installation of the pressure sensor 1.
E1H 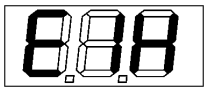	The input to pressure sensor 1 is higher than the specified value.	
E2L	The input to pressure sensor 2 is lower than the specified value.	Check the installation of the pressure sensor 2.
E2H	The input to pressure sensor 2 is higher than the specified value.	
E3L	The input to angle detector is lower than the specified value.	Check the installation of the angle detector.
E3H	The input to angle detector is higher than the specified value.	
E4L 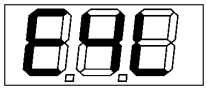	The input to length detector is lower than the specified value.	Check the installation of the length detector.
E4H 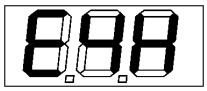	The input to length detector is higher than the specified value.	
EAD 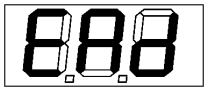	The AD converter at the converter section is not functioning properly.	Turn the starter switch to the "OFF" position and then to the "ON" position again. If an error is displayed again, change the converter.
ERS 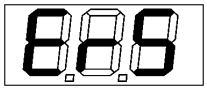	The communication between the converter section and the indicator is not carried out properly.	Check the cable between the indicator and the converter. If the cable is normal, change the converter.
E-E 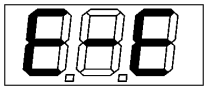	Error with calibration memory. This error is also issued when calibration has not been done yet.	Turn the starter switch to the "OFF" position and then to the "ON" position again. If an error is displayed again, change the indicator.
ER6 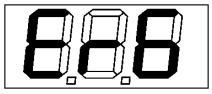	Slewing detection limit switch disconnected or improperly adjusted.	Adjust and check the slewing detection limit switch.
No displayed	---	Check the fuse built-in the display unit.

https://truckmanualshub.com/

Electric Motor

Abnormal Phenomenon	Major Cause(s)	Actions
The motor remains off despite the switch being turned to the "START" position.	• Improper wiring and power supply error • The Inverter unit breakers: OFF • A break in stator winding	• Check wiring, see "ELECTRIC MOTOR OPERATION" on page 4-122. • Turn ON the breakers. (• Inspection, repair, replacement) (• Inspection, repair, replacement)
The motor comes to a stop during use.	• Inverter unit error (Red lamp: ON) • Failure in the Inverter unit • Failure in the power unit	• Check the power supply source (voltage and phase interruption). (• Inspection, repair, replacement) (• Inspection, repair, replacement)
The power output of the motor reaches zero or undergoes gradual decrease.	• Phase interruption in the power source of power supply equipment • Slack in motor wiring	• Check the power source of power supply equipment (voltage and phase interruption). • Inspect connection with the motor Terminal block. (• Inspection, repair, replacement)
The cabtyre cable rises in temperature.	• Considerable voltage drop	• Ensure that the power supply voltage of power supply equipment is at a specified value. • Replace the cabtyre cable with one adhering to specifications.
An abnormal noise and vibration are present in the power unit during operation.	• A break in motor winding • Looseness in the motor and pump fixing bolt • Looseness in the coupling fixing bolt • Impurities on the coupling • Clogging in the hydraulic oil tank strainer and element	• Inspect the motor Terminal block. (• Inspection, repair, replacement) • Perform inspection, repair, and cleaning. See "ELECTRIC MOTOR OPERATION" on page 4-122. (• Replacement) • Clean and replace the strainer and element according to periodic inspection.
The power unit rises in temperature during operation.	• High ambient temperature • Ill-ventilated • Considerable voltage drop • Overload • High number of starts	• Use the power unit in environment compliant with specifications. • Perform inspection and cleaning, See "ELECTRIC MOTOR OPERATION" on page 4-122. • Replace the cabtyre cable with one adhering to specifications. • Reduce loads. • Reduce the number of starts.
The leak detector of the Inverter unit main breaker is tripped.	• High humidity • Presence of water droplets • Ill-grounded • A break in stator winding	• Use the leak detector in environment compliant with specifications. • Attach the cover properly. • Adhere to ground standards. (• Inspection, repair, replacement)
The trouble lamp (red) of the Inverter unit comes on.	• Failure in the Inverter unit	(• Inspection, repair, replacement)

https://truckmanualshub.com/

MAEDA MINI-CRAWLER CRANE MC305C-3 OPERATION MANUAL

Document No. 103ME-OM1903-00
First edition: March 1st, 2019

Maeda Seisakusho Co., Ltd.
1095 Onbegawa, Shinonoi
Nagano, Nagano 388-8522,
Japan

No part of this manual can be reproduced in any form without permission.

https://truckmanualshub.com/

Masuda Seisakusho Co., Ltd