https://truckmanualshub.com/

EN

SISU

https://truckmanualshub.com/

GENUINE
EXCELLENCE

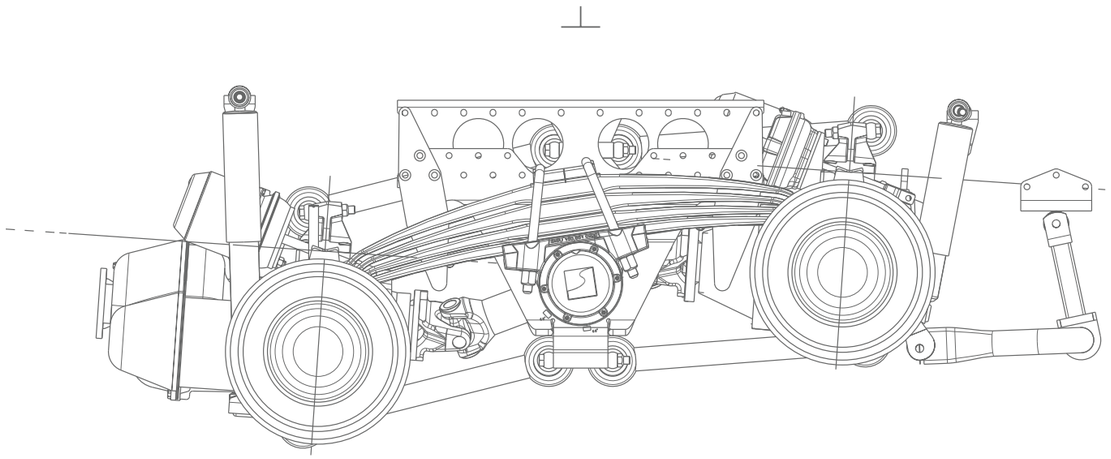

Sisu's core competences are in the product development and production of trucks and military vehicles. In parallel, vehicle technology consulting services, as well as the related design and project management, are also key elements in Sisu's strategy and operations.

Sisu is a pioneer in the Nordic market in the development of heavy duty vehicles. Sisu's strengths, in addition to its know-how, are in its flexibility and Customer service. Continuous staff training and co-operation with educational institutions in the field ensures the competitiveness also in the coming years. Trust gained in the local market creates the conditions for the development and expansion of export operations.
As a result, Sisu is also investing strongly in project planning and services. In order to keep on progressing, we are ready to continue to meet the needs and requirements of our customers.

"WE WANT TO BE A TRUSTWORTHY PARTNER"

Timo Korhonen

SISU POLAR RANGE IS THE CHOICE OF DEMANDING PROFESSIONALS

In designing of vehicles, attention has been paid to the individual needs and requirements of the customers. Carefully thought out and tested details have been adapted cost-effectively to various production stages. As a result, the final product is profitable to the user, as well as being an investment that will retain its value.

As a sole heavy vehicle manufacturer, Sisu Auto can offer its customers a completely equipped and ready-to-use vehicle straight from the factory. For the customer, factory equipped means shorter delivery times, as well as a full guarantee for the entire delivery. A wide service network ensures, in turn, reliable and flexible services.

PURPOSE-SPECIFIC EQUIPMENT

Sisu Polar is a comprehensively planned and optimised structure, in which the vehicle's electronics, hydraulics and bodywork are already connected seamlessly with each other at the factory. Design documentation for the whole delivery content enables a smooth service and guarantees a clear responsibility in warranty issues.

PURPOSE-SPECIFIC SYSTEMS

Sisu Polar has an expandable, clear, and easy to use device control system for specific purposes of use. The system, specified together with customer, guarantees that the user is provided with a vehicle that is of high-quality and ideal for the working needs.

https://truckmanualshub.com/

BASIC COMPONENTS

CAB

At Sisu manufacturing, the Daimler AG supplied cab kit is modified and new forms typical for Sisu are created for the vehicle.

ENGINE

Power sources are new, efficient and low emission Mercedes Benz engines, complying with Euro VI standards.

TRANSMISSIONS

Automated gearbox options are supplied by Daimler AG, and manual transmission by Eaton Fuller.

CORE SYSTEMS

The electrical system is based on Mercedes Benz Arocs technology and electronics, to which we have added other functions and equipment that are required for use in Arctic conditions. Cooperation with Daimler AG brings high standard truck products to Sisu, as well as the perfect compatibility of the engines and accessories.

SISU POLAR'S STRUCTURAL DURABILITY

- Without any additional reinforcements, the Sisu truck design significantly exceeds the maximum weights allowed by legislation. The heavier the work, the more Sisu stands out from the crowd. More productive working hours and shorter servicing periods at the workshop.

SISU POLAR TRUCK RANGE HAS BEEN DESIGNED AND MANUFACTURED TAKING INTO ACCOUNT THE DEMANDING AND CHANGING ARCTIC CONDITIONS. THE VEHICLES COMPRISE THE WORLD'S LEADING COMPONENT MANUFACTURERS AND SISU AUTO'S EXPERTISES. THE PRODUCT DEVELOPMENT RESULTS IN THE DURABLE AND MULTI-OPERATIONAL POLAR RANGE.

SISU POLAR AT ITS BEST IN EXTREME CONDITIONS

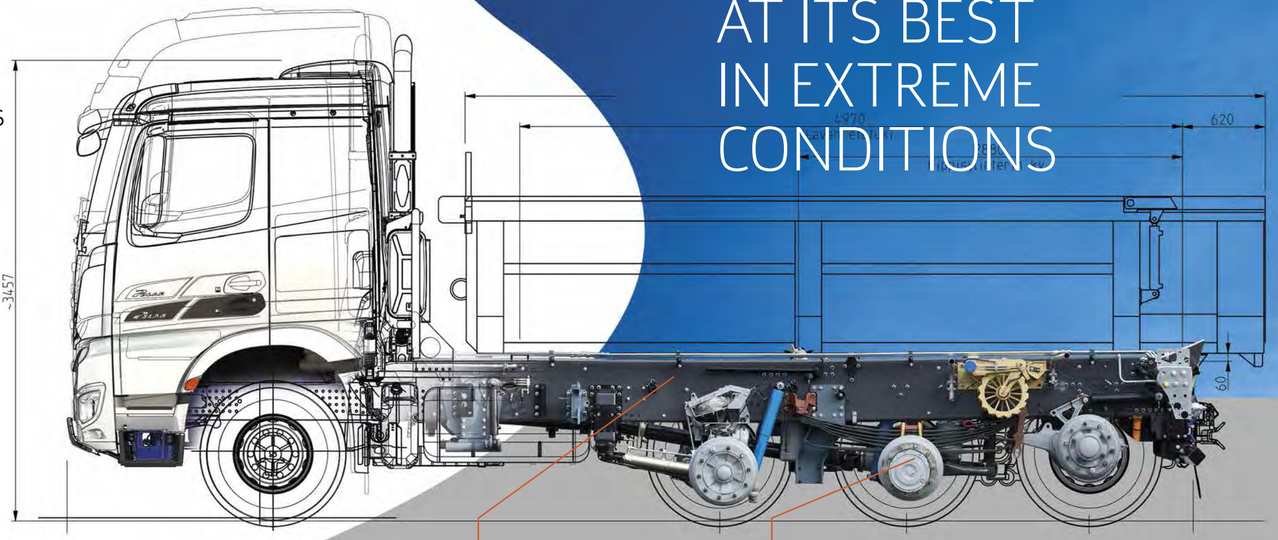

FRAME

The frame of each Sisu Polar is designed and manufactured keeping in mind the purpose of the vehicle. End use specific equipments are integrated into the vehicle frame, thus, forming part of the vehicle body and load-bearing structure. Excess holes in the frame are not required. The result is a strain resistant first-class structure.

SUSPENSION AND AXLES

Sisu is a pioneer and the only manufacturer with a bogie drive, equipped with a drive disconnection switch and hydraulic lift.
The hydraulic lift is integrated into the chassis structure. Therefore, the lifting capacity is also very effective when loaded. Sisu Polar has superior off-road performance in the class of 4 and 5 axle vehicles. The liftable axles also ensure excellent driving characteristics with unloaded vehicles, and are cost-effective, reducing fuel and tyre costs. The Sisu Polar range of 8x2 and 10x2 vehicles are also available with the legendary Sisu bogie lift solution.

SISU POLAR RANGE IS THE CHOICE OF DEMANDING PROFESSIONALS

In designing of vehicles, attention has been paid to the individual needs and requirements of the customers. Carefully thought out and tested details have been adapted cost-effectively to various production stages. As a result, the final product is profitable to the user, as well as being an investment that will retain its value.

As a sole heavy vehicle manufacturer, Sisu Auto can offer its customers a completely equipped and ready-to-use vehicle straight from the factory. For the customer, factory equipped means shorter delivery times, as well as a full guarantee for the entire delivery. A wide service network ensures, in turn, reliable and flexible services.

PURPOSE-SPECIFIC EQUIPMENT

Sisu Polar is a comprehensively planned and optimised structure, in which the vehicle's electronics, hydraulics and bodywork are already connected seamlessly with each other at the factory. Design documentation for the whole delivery content enables a smooth service and guarantees a clear responsibility in warranty issues.

PURPOSE-SPECIFIC SYSTEMS

Sisu Polar has an expandable, clear, and easy to use device control system for specific purposes of use. The system, specified together with customer, guarantees that the user is provided with a vehicle that is of high-quality and ideal for the working needs.

https://truckmanualshub.com/

BASIC COMPONENTS

CAB

At Sisu manufacturing, the Daimler AG supplied cab kit is modified and new forms typical for Sisu are created for the vehicle.

ENGINE

Power sources are new, efficient and low emission Mercedes Benz engines, complying with Euro VI standards.

TRANSMISSIONS

Automated gearbox options are supplied by Daimler AG, and manual transmission by Eaton Fuller.

CORE SYSTEMS

The electrical system is based on Mercedes Benz Arocs technology and electronics, to which we have added other functions and equipment that are required for use in Arctic conditions. Cooperation with Daimler AG brings high standard truck products to Sisu, as well as the perfect compatibility of the engines and accessories.

ROCK

READY FOR USE STRAIGHT FROM THE FACTORY, SISU ROCK IS A PRODUCTIVE AND GUARANTEED CHOICE FOR TRANSPORT COMPANIES.

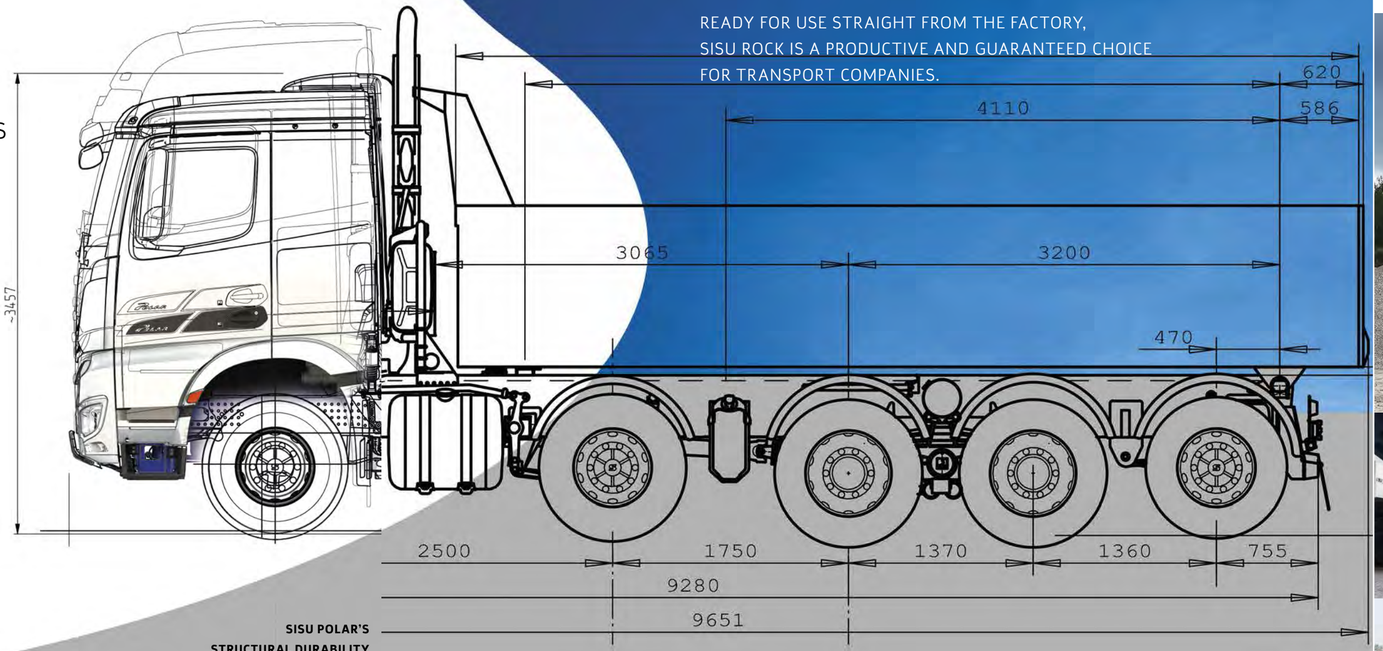

SISU POLAR'S STRUCTURAL DURABILITY

- Without any additional reinforcements, the Sisu truck design significantly exceeds the maximum weights allowed by legislation. The heavier the work, the more Sisu stands out from the crowd. More productive working hours and shorter servicing periods at the workshop.

THE ADVANTAGE OF A HIGH FRAME IS A LIGHTER AND, AT THE SAME TIME, A MORE RIGID CONSTRUCTION, WITHOUT DISCONTINUED SECTIONS OF AUXILIARY FRAME JOINTS OR ADDITIONAL STRENGTHENING JOINTS.

SISU Rock is a powerful, agile and economical choice for earth moving. Special requirements, depending on the use, can be determined by the customer.

The purpose of use is taken into account at the time of dimensioning and positioning cargo platforms on the chassis, whereupon the maximum axle loads can be fully utilised.

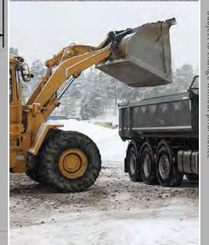

The chassis of SISU gravel truck bodies have been developed to optimise the strength and weight ratios, due to which, separate additional weighty structures are not required. The payload can, therefore, be increased, thus, also increasing the cost-efficiency.

The continual increase in load weights requires effective traction. At the same time, vehicles also require to be agile and light. Sisu's hydraulically liftable bogie, equipped with a drive disconnection switch, meets these requirements. The hydraulic lift is integrated into the chassis structures, therefore, it is strong and has a very powerful lifting capacity. Even when unloaded, the truck must be practical and, primarily, economical to use. The rear axle of the bogie drive can be lifted and the drive disconnected. Unnecessary friction is eliminated and the ride is eased. At the same time, the vehicle becomes agile and fuel consumption is reduced.

Subject to change without prior notice

https://truckmanualshub.com/

BASIC COMPONENTS

CAB

At Sisu manufacturing, the Daimler AG supplied cab kit is modified and new forms typical for Sisu are created for the vehicle.

ENGINE

Power sources are new, efficient and low emission Mercedes Benz engines, complying with Euro VI standards.

TRANSMISSIONS

Automated gearbox options are supplied by Daimler AG, and manual transmission by Eaton Fuller.

CORE SYSTEMS

The electrical system is based on Mercedes Benz Arocs technology and electronics, to which we have added other functions and equipment that are required for use in Arctic conditions. Cooperation with Daimler AG brings high standard truck products to Sisu, as well as the perfect compatibility of the engines and accessories.

TIMBER

READY FOR USE STRAIGHT FROM THE FACTORY,
SISU TIMBER IS A PRODUCTIVE AND GUARANTEED CHOICE
FOR TIMBER TRANSPORTATION.

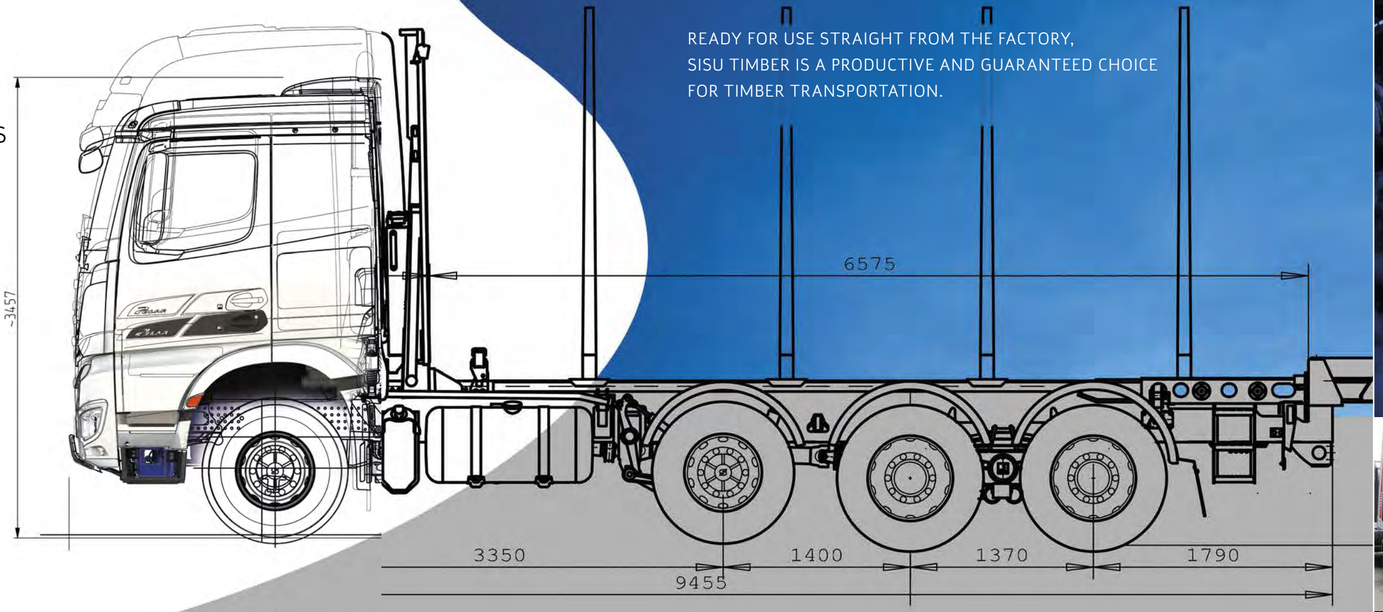

SISU POLAR'S STRUCTURAL DURABILITY

- Without any additional reinforcements, the Sisu truck design significantly exceeds the maximum weights allowed by legislation. The heavier the work, the more Sisu stands out from the crowd. More productive working hours and shorter servicing periods at the workshop.

Ready for use straight from the factory, Sisu Timber is a transportation vehicle that stands out from the crowd for its performance in the particularly harsh arctic conditions. The engine, gearing, axle configurations, wheelbases, reduction gear ratios and cab fittings, as well as the superstructures, can all be selected by the customer. This ensures the best characteristics for the respective purpose of use.

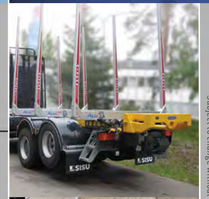

SISU Timber's stiff and strong 460 mm high C profile frame allows for the installation of superstructures without a subframe, minimising the curb weight of the vehicle. Even when moving heavier loads, a rigid chassis ensures improved mobility and driving comfort.

Thanks to the structure, the payload can be increased, thus, improving profitability. Low fuel consumption underlines the value for money. The new low-emission Mercedes -Benz Euro VI engines provide pleasant power on varying and challenging forest roads.

Subject to change without prior notice

https://truckmanualshub.com/

BASIC COMPONENTS

CAB

At Sisu manufacturing, the Daimler AG supplied cab kit is modified and new forms typical for Sisu are created for the vehicle.

ENGINE

Power sources are new, efficient and low emission Mercedes Benz engines, complying with Euro VI standards.

TRANSMISSIONS

Automated gearbox options are supplied by Daimler AG, and manual transmission by Eaton Fuller.

CORE SYSTEMS

The electrical system is based on Mercedes Benz Arocs technology and electronics, to which we have added other functions and equipment that are required for use in Arctic conditions. Cooperation with Daimler AG brings high standard truck products to Sisu, as well as the perfect compatibility of the engines and accessories.

SISU

WORKS

READY FOR USE STRAIGHT FROM THE FACTORY,
SISUWORKS IS A MULTI-PURPOSE AND GUARANTEED CHOICE
FOR ROAD WORKS.

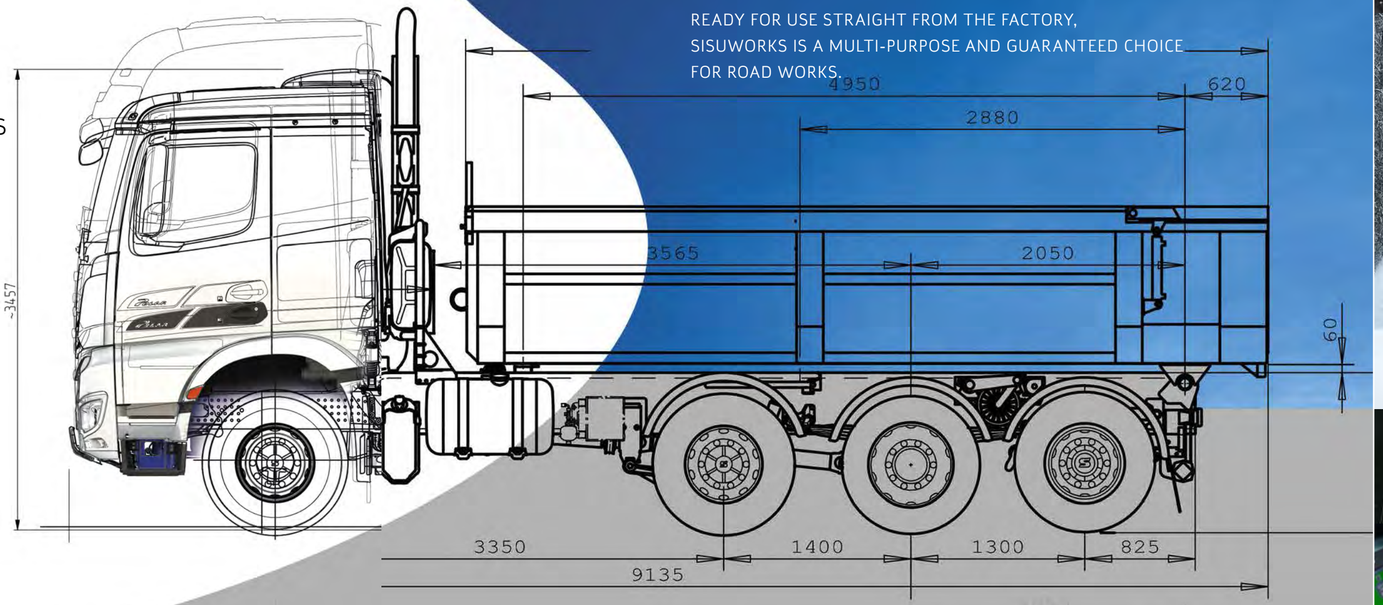

SISU POLAR'S STRUCTURAL DURABILITY

- Without any additional reinforcements, the Sisu truck design significantly exceeds the maximum weights allowed by legislation. The heavier the work, the more Sisu stands out from the crowd. More productive working hours and shorter servicing periods at the workshop.

The customer oriented design of SISU Works road maintenance vehicles ensures operational reliability, starting from the very first kilometres.In accordance with customer needs, a tailored vehicle is fully ready to work immediately; digitally controlled hydraulics, as well as all the accessories, including platforms, ploughs and grader blades are all in place upon delivery.

The hydraulics and related control system developed by Sisu were thoroughly tested and belong to the most versatile ones on the market. In the design of hydraulics, attention is paid to new accessories and their requirements, for which information transfer based on the bus technology enables simple operation with a display screen to guide the driver. As a result, the driver can focus on controlling the vehicle instead of the accessory functions.

The SISU Works chassis is designed from the beginning for road maintenance purposes. The plough bumper, grader blade and cargo platform attachments, as well as hydraulics solutions, are designed and integrated directly into the frame to make the vehicle as stable as possible when ploughing or when driving with the cargo platform raised. The SISU WorksPlus range also has the choice of a factory ready hook unit for demountable platforms.

Subject to change without prior notice

https://truckmanualshub.com/

BASIC COMPONENTS

CAB

At Sisu manufacturing, the Daimler AG supplied cab kit is modified and new forms typical for Sisu are created for the vehicle.

ENGINE

Power sources are new, efficient and low emission Mercedes Benz engines, complying with Euro VI standards.

TRANSMISSIONS

Automated gearbox options are supplied by Daimler AG, and manual transmission by Eaton Fuller.

CORE SYSTEMS

The electrical system is based on Mercedes Benz Arocs technology and electronics, to which we have added other functions and equipment that are required for use in Arctic conditions. Cooperation with Daimler AG brings high standard truck products to Sisu, as well as the perfect compatibility of the engines and accessories.

ROLL

READY FOR USE STRAIGHT FROM THE FACTORY,
SISU ROLL IS A MULTI-PURPOSE CONTAINER TRANSPORTER AND A GUARANTEED CHOICE.

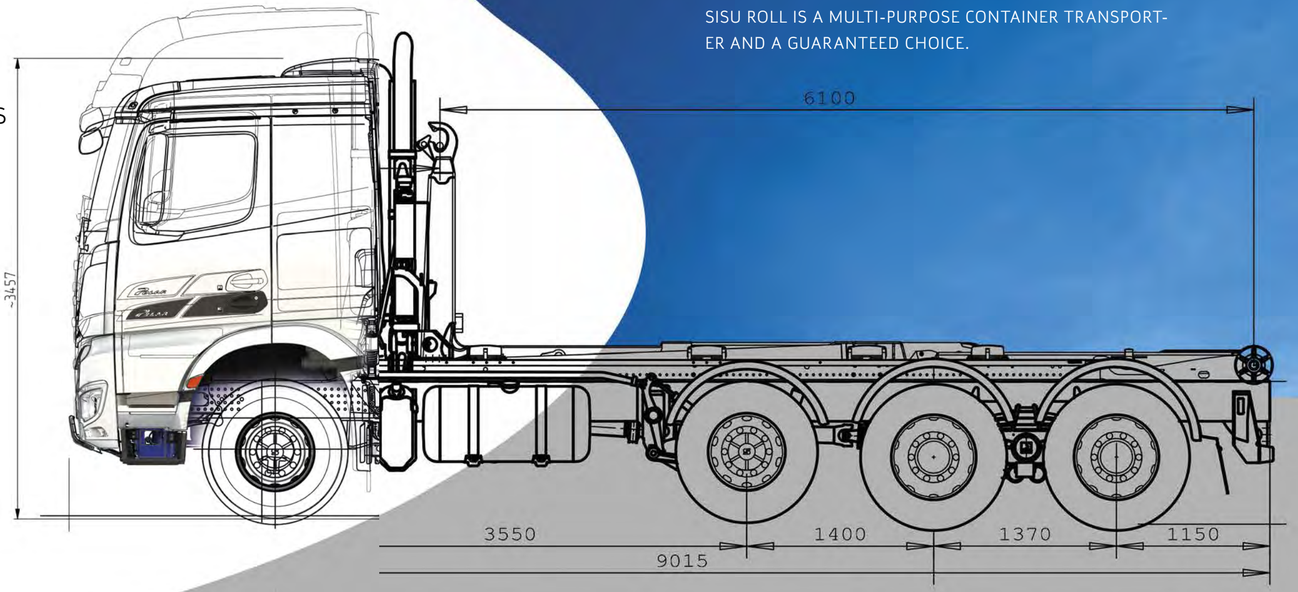

SISU POLAR'S STRUCTURAL DURABILITY

- Without any additional reinforcements, the Sisu truck design significantly exceeds the maximum weights allowed by legislation. The heavier the work, the more Sisu stands out from the crowd. More productive working hours and shorter servicing periods at the workshop.

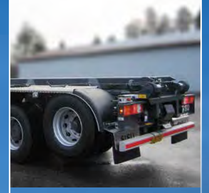

SISU Roll is designed as a seamless combination of the vehicle and a demountable superstructure.

When designing the factory ready vehicle, attention is paid to the demountable equipment attachments and equipment locations. This will result as a functional and durable outcome, either with a cable operated demountable platform or with a hook unit.

Thanks to the frame structure and axle system, the SISU Roll is stable and agile to drive. The liftable axles, combined with good turning ability, make the vehicle excellent to drive.

Roll is a multi-purpose vehicle, for which the engine, axles and fittings can be chosen in accordance to the driving tasks. Roll is agile to drive in a congested city, whilst also being strong and durable in harsh, demanding worksite conditions. Its advanced technical solutions ensure an excellently pleasant working day and productive activities. Sisu Roll is a tool for real professionals, who know what they need and want.

Subject to change without prior notice

https://truckmanualshub.com/

BASIC COMPONENTS

CAB

At Sisu manufacturing, the Daimler AG supplied cab kit is modified and new forms typical for Sisu are created for the vehicle.

ENGINE

Power sources are new, efficient and low emission Mercedes Benz engines, complying with Euro VI standards.

TRANSMISSIONS

Automated gearbox options are supplied by Daimler AG, and manual transmission by Eaton Fuller.

CORE SYSTEMS

The electrical system is based on Mercedes Benz Arocs technology and electronics, to which we have added other functions and equipment that are required for use in Arctic conditions. Cooperation with Daimler AG brings high standard truck products to Sisu, as well as the perfect compatibility of the engines and accessories.

CARRIER

READY FOR USE STRAIGHT FROM THE FACTORY,
SISU CARRIER IS AN ADVANCED AND GUARANTEED CHOICE,
DESIGNED FOR MACHINE TRANSPORTATIONS.

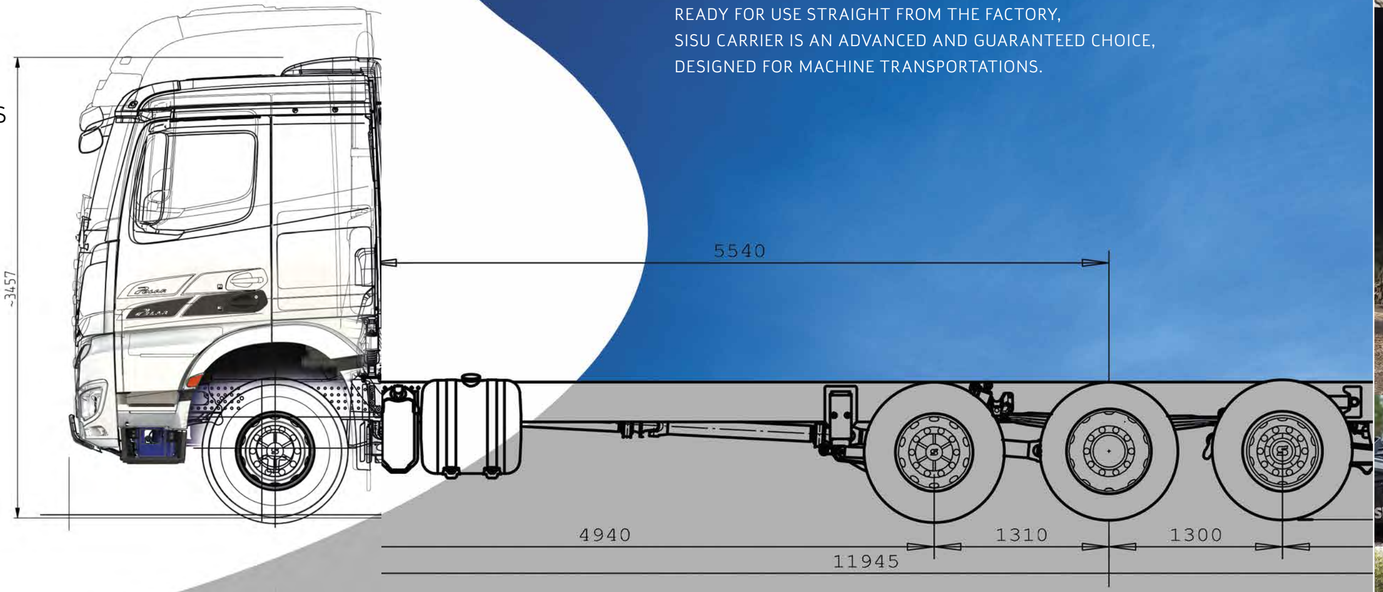

SISU POLAR'S STRUCTURAL DURABILITY

- Without any additional reinforcements, the Sisu truck design significantly exceeds the maximum weights allowed by legislation. The heavier the work, the more Sisu stands out from the crowd. More productive working hours and shorter servicing periods at the workshop.

Ready for use straight from the factory, SISU Carrier is a multi-functional vehicle, manufactured for the transportation of machines. Customer requirements, such as the transportation of heavy machine weights, high equipment utilisation and the great diversity of the conditions of use are addressed. Thanks to the advanced structure, the Carrier is lightweight and has a high payload.

Sisu Carrier has excellent off-road capabilities. The reinforced frame, rigid chassis and robust suspension guarantee a stable drive in all situations, even when the load is heavy and its centre of gravity is high. The Sisu axles, light liftable bogie or driven bogie with drive disconnection switch and hydraulic lift make the Sisu Carrier agile, even in extreme conditions.

The factory build-up frame dimensioning and pre-positioned accessories make the installation of the grid platform easy and quick. Our advanced structural design provides a great deal of free space for the grid platform, whereupon a transported machine can be placed as low and as forward as possible.

As a result of the high permitted bogie and front axle weights, Sisu Carrier can transport even the heaviest machinery, in a steady and a safe way.

Subject to change without prior notice

https://truckmanualshub.com/

BASIC COMPONENTS

CAB

At Sisu manufacturing, the Daimler AG supplied cab kit is modified and new forms typical for Sisu are created for the vehicle.

ENGINE

Power sources are new, efficient and low emission Mercedes Benz engines, complying with Euro VI standards.

TRANSMISSIONS

Automated gearbox options are supplied by Daimler AG, and manual transmission by Eaton Fuller.

CORE SYSTEMS

The electrical system is based on Mercedes Benz Arocs technology and electronics, to which we have added other functions and equipment that are required for use in Arctic conditions. Cooperation with Daimler AG brings high standard truck products to Sisu, as well as the perfect compatibility of the engines and accessories.

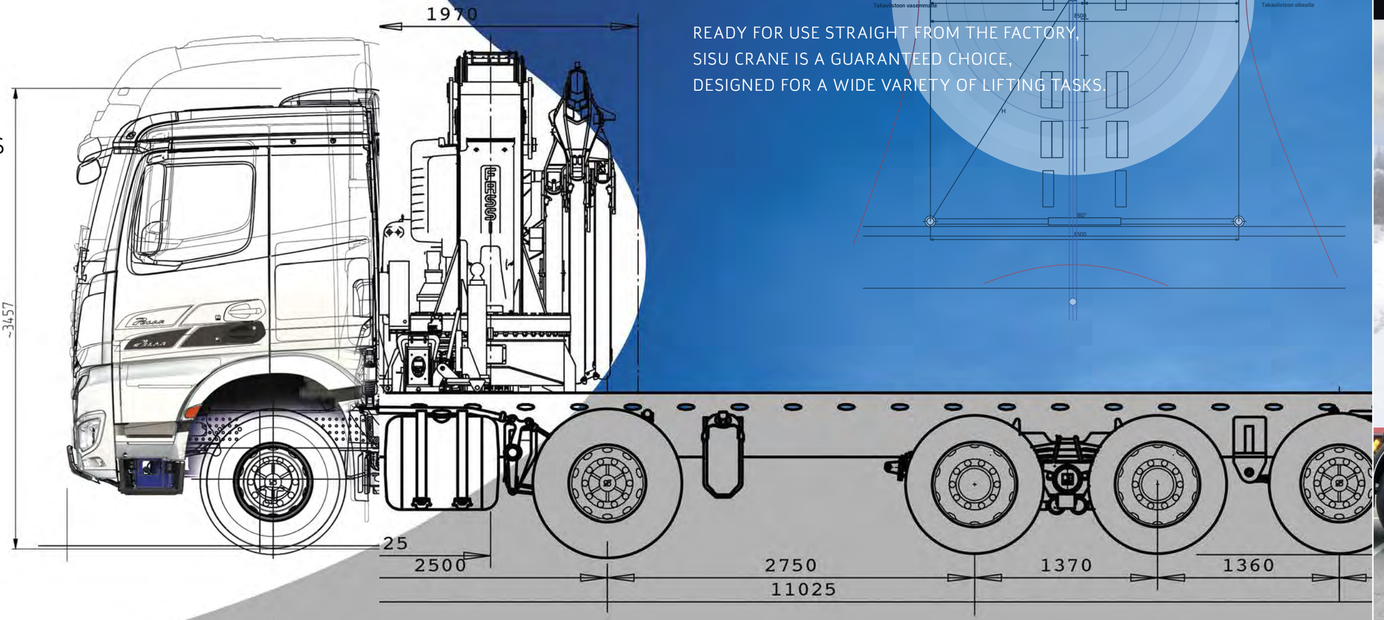

SISU POLAR'S STRUCTURAL DURABILITY

- Without any additional reinforcements, the Sisu truck design significantly exceeds the maximum weights allowed by legislation. The heavier the work, the more Sisu stands out from the crowd. More productive working hours and shorter servicing periods at the workshop.

CRANE

READY FOR USE STRAIGHT FROM THE FACTORY,
SISU CRANE IS A GUARANTEED CHOICE,
DESIGN FOR A WIDE VARIETY OF LIFTING TASKS.

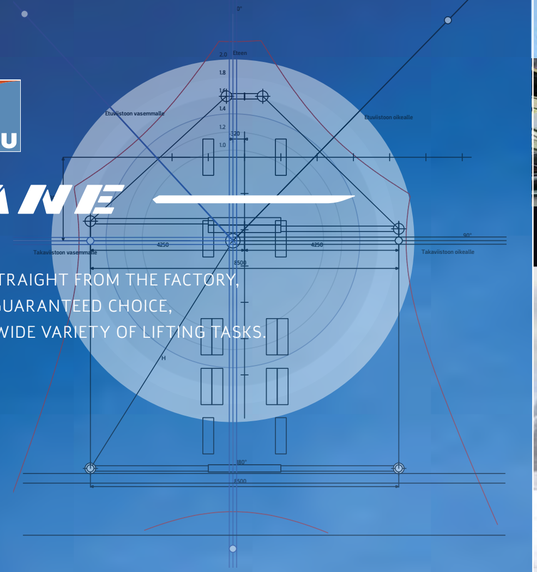

The product development history of the SISU crane vehicles dates back to the 1960s. Decades of research and the demands set for lifting tasks are taken into account in the design to comply with today's needs.

SISU Crane is designed to have the characteristics required to operate in harsh environment, combining driving dynamics and agility of a truck, as well as transportation capacity.

As a result of the good driveability, the SISU Crane's operating range is extensive and thanks to its agility, it is also easy to move in narrow spaces.

At its best, the SISU Crane operates with a 60 -150 ton meter cranes, whereupon the vehicle is already fitted with attachment points during the frame manufacture stage. Also, the support leg mounting plates, the wide range of electrical equipment, superstructure, working and warning lights, as well as remote control of the engine are installed at the factory. Factory build-up provides a 360 degree lifting range, making it suitable for a wide range of lifting tasks.

SISU Crane frame is always designed and manufactured to correspond to the customer's intended use. The result is a strong, rotationally rigid light and high-quality frame that is a reliable and a long-term solution for crane applications.

Subject to change without prior notice

https://truckmanualshub.com/

PLANNING AND PROJECT SERVICES

RESEARCH

Onsite survey to establish the conditions - included in the project service

DESIGN

Cad design
Planning
Design

FIELD TESTING

Development work

PROJECT MANAGEMENT

Project Planning
Quality Planning
Project Execution

VERIFICATIONS

NEW PRODUCT
TestIng
Verifications
Approvals

CUSTOMISED STANDARD PRODUCTS
Truck fine-tuning
Truck test drives
Testing of equipment
Final inspection & reports

CUSTOMER SERVICES

Service training
Driver training

SISU

SUCCESSFUL R&D HAS BEEN STRENGTH OF SISU FOR DECADES. ALONG WITH TECHNOLOGICAL EXPERTISE, INTERNATIONAL PROJECT SERVICES HAVE BECOME PART OF THE BUSINESS OPERATIONS.

COOPERATION NETWORK

The main objective of projects is to work as a link within the existing network and to transfer know-how for local production. Overall management requires strong expertise. Thanks to its long experience in the industry, Sisu has this type of project leadership competence and resources. Because of its own comprehensive technological network, Sisu also has the opportunity to take advantage of the services required for respective projects.

CLOSE COOPERATION WITH LOCAL SUPPLIERS

Product development and design always aim at a profitable and productive manufacturing process, and is applied to available resources. Therefore, Sisu emphasises the importance of the knowledge and skills of local component suppliers.

ON-SITE SURVEYS TO FIND OUT CONDITIONS

Careful research, total project management, and the utilisation of local services are important when requiring skilled partners.

SISU HAS THE ABILITY AND WILLINGNESS TO RESPOND TO THESE CHALLENGES.

https://truckmanualshub.com/

HIGH MOBILITY SISU

Mine and ballistic protected (STANAG 4569)

EXTREME–PERFORMANCE OFF-ROAD TRUCK

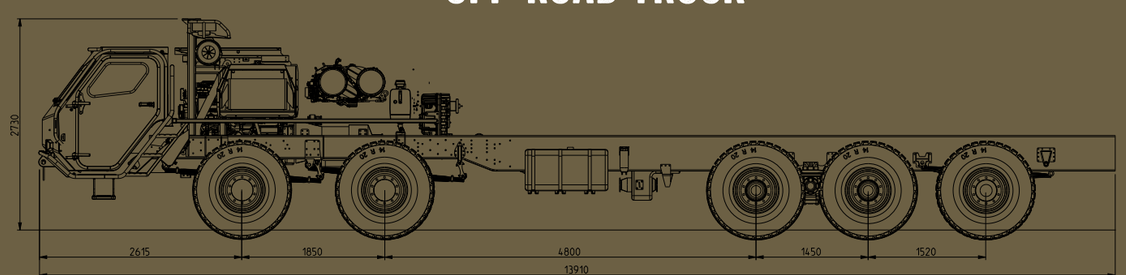

HIGH MOBILITY
4X4
VEHICLE

HIGH MOBILITY
6X6
VEHICLE

HIGH MOBILITY
8X8
VEHICLE

HIGH MOBILITY
10X10
VEHICLE

SISU HIGH MOBILITY TERRAIN VEHICLES

High top speed and average speed in convoys

Designed for transportation with a variety of means, such as boat, train and aircraft (e.g. Hercules C-130)

Performance with extremely demanding loads and transportations

Performance in extremely severe off-road conditions

Favourable life-cycle costs

Can be equipped with readily available add-on armouring kits

Versatile platform, perfect carrier for various logistics and tactical operations

SISU ETP SERIES

SISU off-road trucks are designed for military use, and for operating in particularly severe off-road conditions. Sisu's special expertise in the development of off-road vehicles has resulted in significant benefits by utilising selected civilian truck technologies with military trucks.

Frame solutions, chassis components, as well as power lines, are techniques used in civilian vehicles, which mean significant cost savings to the customers when acquiring the vehicle and spare parts.
In their design, note is taken of the demanding and varying conditions and needs, which require easily adaptable solutions.

Designed to meet with the Customer requirements, SISU off-road trucks stand out with their advantages when reliable mobility, load-bearing capacity and profitability are called for.

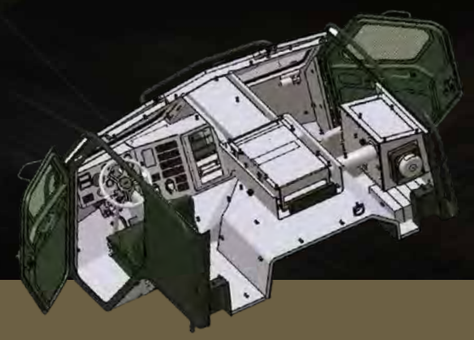

The vehicles developed for military use are also ideally suitable for civil operations, in the case of most challenging tasks. The characteristics of SISU off-road vehicles become particularly important in construction, dismantling and maintenance tasks, when difficult terrain requires robust and agile tools.

Subject to change without prior notice

SISU

https://truckmanualshub.com/

SISU POLAR IS

THE ONLY HEAVY-DUTY VEHICLE RANGE ON THE MARKET

THAT CAN BE DRIVEN DIRECTLY FROM THE FACTORY TO

WORK

Subject to change without prior notice. SISU Polar EN 1/2014

SISU

DESIGNED AND MANUFACTURED FOR EXTREME CONDITIONS
AND CUSTOMISED FOR DEMANDING PROFESSIONALS.

Oy Sisu Auto Ab
Tammisaarentie 45
Karjaa
Finland
Tel. +358 10 2751
fax +358 19 236 044

www.sisuauto.com

TEHTY SUOMESSA
MADE IN FINLAND

DESIGN FROM FINLAND